STATE OF CONNECTICUT

CONNECTICUT SITING COUNCIL

Ten Franklin Square, New Britain, CT 06051
Phone: (860) 827-2935 Fax: (860) 827-2950
E-Mail: siting.council@po.state.ct.us
Web Site: www.ct.gov/csc

March 18, 2004

Christine Farrell
Real Estate and Zoning
T-Mobile
100 Filley Street
Bloomfield, CT 06002

RE: **EM-T-MOBILE-155-040310** – Omnipoint Communications (T-Mobile) notice of intent to modify an existing telecommunications facility located at 3114 Albany Avenue, West Hartford, Connecticut.

Dear Ms. Farrell:

At a public meeting held on March 17, 2004, the Connecticut Siting Council (Council) acknowledged your notice to modify this existing telecommunications facility, pursuant to Section 16-50j-73 of the Regulations of Connecticut State Agencies.

The proposed modifications are to be implemented as specified here and in your notice dated March 10, 2004. The modifications are in compliance with the exception criteria in Section 16-50j-72 (b) of the Regulations of Connecticut State Agencies as changes to an existing facility site that would not increase tower height, extend the boundaries of the tower site, increase noise levels at the tower site boundary by six decibels, and increase the total radio frequencies electromagnetic radiation power density measured at the tower site boundary to or above the standard adopted by the State Department of Environmental Protection pursuant to General Statutes § 22a-162. This facility has also been carefully modeled to ensure that radio frequency emissions are conservatively below State and federal standards applicable to the frequencies now used on this tower.

This decision is under the exclusive jurisdiction of the Council. Any additional change to this facility will require explicit notice to this agency pursuant to Regulations of Connecticut State Agencies Section 16-50j-73. Such notice shall include all relevant information regarding the proposed change with cumulative worst-case modeling of radio frequency exposure at the closest point of uncontrolled access to the tower base, consistent with Federal Communications Commission, Office of Engineering and Technology, Bulletin 65. Any deviation from this format may result in the Council implementing enforcement proceedings pursuant to General Statutes § 16-50u including, without limitation, imposition of expenses resulting from such failure and of civil penalties in an amount not less than one thousand dollars per day for each day of construction or operation in material violation.

Thank you for your attention and cooperation.

Very truly yours,

Pamela B. Katz
Chairman

PBK/cm

c: Honorable Jonathan Harris, Mayor, Town of West Hartford
Mila Limson, Town Planner, Town of West Hartford
Christopher B. Fisher, Esq., Cuddy & Feder LLP
Michele G. Briggs, Southwestern Bell Mobile Systems, LLC
Boyd E. Arnold, Marlin Towers LLC

G:\EM\T-MOBILE\West Hartford\dc031804.doc

CSC
CONNECTICUT SITING COUNCIL

EM-T-MOBILE-155-040310

T-Mobile
Get more from life

100 Filley Street, Bloomfield, CT 06002
860-794-6427 fax 860-692-7159

RECEIVED
MAR 10 2004
CONNECTICUT
SITING COUNCIL

March 10, 2004

Pamela B. Katz, Chairman and
Memebers of the Siting Council
Connecticut Siting Council
10 Franklin Square
New Britain, CT 06051

RE: **Exempt Modification – Existing Wireless Telecommunications Facility**
3114 Albany Avenue, West Hartford, Connecticut
Latitude: 41-47-48" / Longitude: 72-47-49"

Dear Chairman Katz:

Omnipoint Communications, Inc. a.k.a. T-Mobile (formerly Voicestream Wireless Corp.) ("T-Mobile") intends to co-locate antennas on the existing monopole located at 3114 Albany Avenue in West Hartford. The Siting Council has approved the shared use of this facility by AT&T at the 140' level, Cingular at the 115' level and Verizon at the 130' level.

Please accept this letter as notification pursuant to R.C.S.A §16-50j-73, for construction that constitutes an exempt modification pursuant to R.C.S.A §16-50j72(b)(2). In accordance with R.C.S.A. § 16-50j-73, a copy of this letter is being sent to Barry Feldman, Town Manager of West Hartford.

The tower is owned and operated by Marlin Towers LLC ("Marlin"). It's coordinates are N 41° 47' 48" and W 72° 47' 49". The facility consists of a 346' guyed lattice tower on a 12.5 acre parcel owned by Marlin.

The proposed modifications will not result in any substantial adverse environmental affect and therefore fall squarely within the activities explicitly provided for in R.C.S.A. § 16-50j-72(b)(2).

1. The proposed modification will not increase the overall height of the existing tower. T-Mobile's antennas will be mounted with their centerline at the 160' level on the 346' tower. (See Exhibit A, CD's)
2. The proposed installation of nine (9) antennas (6 proposed and 3 future)and 3 equipment cabinets will not require an extension of the site boundaries. (See Exhibit A, CD's)

3. The proposed antenna modification will not increase the noise levels at the facility by six decibels or more.
4. The operation of the antennas will not increase radio frequency (RF) power density levels at the facility at or above the Federal Communications Commission (FCC) adopted safety standard. The worst-case RF density calculations for a point at the base of the tower for T-Mobile antennas would be of the FCC standard. Pursuant to RF Exposure Analysis prepared for Cingular the cumulative worst-case RF power density calculation for all current carriers and T-Mobile would be of the applicable FCC standard. A copy of the report is attached. (See Exhibit B, Power Density Calculations)

Also attached, please find an engineer's certification, verifying that the tower can support the antennas and associated equipment of T-Mobile, AT&T, and Cingular. (See Exhibit C)

For the foregoing reasons, T-Mobile respectfully submits that the proposed antenna installation at the Marlin tower constitutes an exempt modification under R.C.S.A § 16-50j-72(b)(2).

Very Truly Yours

Christine Farrell
T-Mobile Real Estate and Zoning

Attachments

Cc: Barry Feldman, Town Manager, West Hartford

Exhibit A

MARLIN GUYED TOWER

3114 ALBANY AVE.
WEST HARTFORD, CT 06117
CT-11-765A
CO-LOCATION

SAFETY NOTE:
THIS SITE IS LOCATED IN CLOSE PROXIMITY TO AN ACTIVELY TRANSMITTING AM BROADCAST TOWER WHICH CAN POSE ADDITIONAL RF SAFETY HAZARDS TO WORKERS. PRIOR TO START OF CONSTRUCTION, CONTRACTOR SHALL CONSULT WITH QUALIFIED RF SAFETY EXPERTS AND TAKE ALL RECOMMENDED SAFETY PRECAUTIONS TO MINIMIZE THE RISKS ASSOCIATED WITH WORKING IN CLOSE PROXIMITY TO THIS AM BROADCAST TOWER. CONTRACTOR MUST ENSURE THAT ALL SUBCONTRACTORS ARE EQUALLY INFORMED PRIOR TO STARTING WORK AT THIS LOCATION. FOR SITE INFORMATION, THE SITE CONTACT, JOHN RAMSEY, SHOULD BE CONSULTED.

STRUCTURAL NOTE:
NEW CONSTRUCTION REPRESENTED ON THESE PLANS IS PROPOSED PREDICATED ON THE REQUIREMENT THAT A STRUCTURAL ANALYSIS BE PERFORMED BY A LICENSED CONNECTICUT PROFESSIONAL STRUCTURAL ENGINEER AND CERTIFICATION IS GIVEN BY THE ENGINEER THAT THE EXISTING TOWER AND ALL EXISTING AND PROPOSED ANTENNAS AND APPURTENANCES SUPPORTED BY THE TOWER AND ANY REQUIRED IMPROVEMENTS AND REINFORCEMENTS HAVE SUFFICIENT STRUCTURAL CAPACITY AND COMPLY WITH THE CONNECTICUT BUILDING CODE AND ALL APPLICABLE EIA/TIA CRITERIA. NO WORK PROPOSED HEREON SHALL BE PROGRESSED WITHOUT CONFIRMATION OF THIS CERTIFICATION.

GENERAL NOTES

1. THE CONTRACTOR SHALL GIVE ALL NOTICES AND COMPLY WITH ALL LAWS, ORDINANCES, RULES, REGULATIONS AND LAWFUL ORDERS OF ANY PUBLIC AUTHORITY, MUNICIPAL AND UTILITY COMPANY SPECIFICATIONS, AND LOCAL AND STATE JURISDICTIONAL CODES BEARING ON THE PERFORMANCE OF THE WORK. THE WORK PERFORMED ON THE PROJECT AND THE MATERIALS INSTALLED SHALL BE IN STRICT ACCORDANCE WITH ALL APPLICABLE CODES, REGULATIONS, AND ORDINANCES.
2. THE ARCHITECT/ENGINEER HAVE MADE EVERY EFFORT TO SET FORTH IN THE CONSTRUCTION AND CONTRACT DOCUMENTS THE COMPLETE SCOPE OF WORK. THE CONTRACTOR BIDDING THE JOB IS NEVERTHELESS CAUTIONED THAT MINOR OMISSIONS OR ERRORS IN THE DRAWINGS AND OR SPECIFICATIONS SHALL NOT EXCUSE SAID CONTRACTOR FROM COMPLETING THE PROJECT AND IMPROVEMENTS IN ACCORDANCE WITH THE INTENT OF THESE DOCUMENTS.
3. THE CONTRACTOR OR BIDDER SHALL BEAR THE RESPONSIBILITY OF NOTIFYING (IN WRITING) THE LESSEE REPRESENTATIVE OF ANY CONFLICTS, ERRORS, OR OMISSIONS PRIOR TO THE SUBMISSION OF CONTRACTOR'S PROPOSAL OR PERFORMANCE OF WORK. IN THE EVENT OF DISCREPANCIES THE CONTRACTOR SHALL PRICE THE MORE COSTLY OR EXTENSIVE WORK, UNLESS DIRECTED IN WRITING OTHERWISE.
4. THE SCOPE OF WORK SHALL INCLUDE FURNISHING ALL MATERIALS, EQUIPMENT, LABOR AND ALL OTHER MATERIALS AND LABOR DEEMED NECESSARY TO COMPLETE THE WORK/PROJECT AS DESCRIBED HEREIN.
5. THE CONTRACTOR SHALL VISIT THE JOB SITE PRIOR TO THE SUBMISSION OF BIDS OR PERFORMING WORK TO FAMILIARIZE HIMSELF WITH THE FIELD CONDITIONS AND TO VERIFY THAT THE PROJECT CAN BE CONSTRUCTED IN ACCORDANCE WITH THE CONTRACT DOCUMENTS.
6. THE CONTRACTOR SHALL OBTAIN AUTHORIZATION TO PROCEED WITH CONSTRUCTION PRIOR TO STARTING WORK ON ANY ITEM NOT CLEARLY DEFINED BY THE CONSTRUCTION DRAWINGS / CONTRACT DOCUMENTS.
7. THE CONTRACTOR SHALL INSTALL ALL EQUIPMENT AND MATERIALS ACCORDING TO THE MANUFACTURER'S / VENDOR'S SPECIFICATIONS UNLESS NOTED OTHERWISE OR WHERE LOCAL CODES OR ORDINANCES TAKE PRECEDENCE.
8. THE CONTRACTOR SHALL PROVIDE A FULL SET OF CONSTRUCTION DOCUMENTS AT THE SITE UPDATED WITH THE LATEST REVISIONS AND ADDENDUMS OR CLARIFICATIONS AVAILABLE FOR THE USE BY ALL PERSONNEL INVOLVED WITH THE PROJECT.
9. THE CONTRACTOR SHALL SUPERVISE AND DIRECT THE PROJECT DESCRIBED HEREIN. THE CONTRACTOR SHALL BE SOLELY RESPONSIBLE FOR ALL CONSTRUCTION MEANS, METHODS, TECHNIQUES, SEQUENCES AND PROCEDURES AND FOR COORDINATING ALL PORTIONS OF THE WORK UNDER THE CONTRACT.
10. THE CONTRACTOR SHALL BE RESPONSIBLE FOR PROVIDING ALL NECESSARY CONSTRUCTION CONTROL SURVEYS, ESTABLISHING AND MAINTAINING ALL LINES AND GRADES REQUIRED TO CONSTRUCT ALL IMPROVEMENTS AS SHOWN HEREIN.
11. THE CONTRACTOR SHALL BE RESPONSIBLE FOR OBTAINING ALL PERMITS AND INSPECTIONS WHICH MAY BE REQUIRED FOR THE WORK BY THE ARCHITECT/ENGINEER, THE STATE, COUNTY OR LOCAL GOVERNMENT AUTHORITY.
12. THE CONTRACTOR SHALL MAKE NECESSARY PROVISIONS TO PROTECT EXISTING IMPROVEMENTS, EASEMENTS, PAVING, CURBING, ETC. DURING CONSTRUCTION. UPON COMPLETION OF WORK, THE CONTRACTOR SHALL REPAIR ANY DAMAGE THAT MAY HAVE OCCURRED DUE TO CONSTRUCTION ON OR ABOUT THE PROPERTY.
13. THE CONTRACTOR SHALL KEEP THE GENERAL WORK AREA CLEAN AND HAZARD FREE DURING CONSTRUCTION AND DISPOSE OF ALL DIRT, DEBRIS, RUBBISH AND REMOVE EQUIPMENT NOT SPECIFIED AS REMAINING ON THE PROPERTY. PREMISES SHALL BE LEFT IN CLEAN CONDITION AND FREE FROM PAINT SPOTS, DUST, OR SMUDGES OF ANY NATURE.
14. THE CONTRACTOR SHALL COMPLY WITH ALL OSHA REQUIREMENTS AS THEY APPLY TO THIS PROJECT.
15. THE CONTRACTOR SHALL NOTIFY THE LESSEE REPRESENTATIVE WHERE A CONFLICT OCCURS ON ANY OF THE CONTRACT DOCUMENTS. THE CONTRACTOR IS NOT TO ORDER MATERIAL OR CONSTRUCT ANY PORTION OF THE WORK THAT IS IN CONFLICT UNTIL CONFLICT IS RESOLVED BY THE LESSEE REPRESENTATIVE.
16. THE CONTRACTOR SHALL VERIFY ALL DIMENSIONS, ELEVATIONS, PROPERTY LINES, ETC. ON THE JOB.
17. ALL UNDERGROUND UTILITY INFORMATION WAS DETERMINED FROM SURFACE INVESTIGATIONS AND EXISTING PLANS OF RECORD. THE CONTRACTOR SHALL LOCATE ALL UNDERGROUND UTILITIES IN THE FIELD PRIOR TO ANY SITE WORK. CALL THE FOLLOWING FOR ALL PRE-CONSTRUCTION NOTIFICATION 72-HOURS PRIOR TO ANY EXCAVATION ACTIVITY: DIG SAFE SYSTEM (MA, ME, NH, RI, VT): 1-888-344-7233 CALL BEFORE YOU DIG

VICINITY MAP

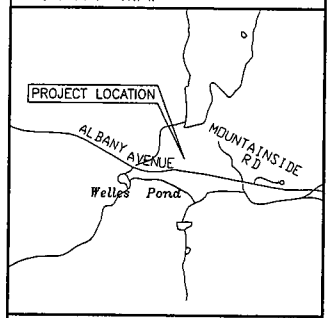

VICINITY MAP
1"=1000'
N

SHEET INDEX

SHT. NO.	DESCRIPTION	REV. NO.
T-1	TITLE SHEET	0
A-1	SITE & COMPOUND PLAN, AND DETAILS	0
A-2	ELEVATION & DETAILS	0
S-1	EQUIPMENT LAYOUT & DETAILS	0
E-1	ELECTRICAL & GROUNDING , AND DETAILS	0

PROJECT SUMMARY

SITE NUMBER:	CT-11-765A
SITE NAME:	MARLIN GUYED TOWER
SITE ADDRESS:	3114 ALBANY AVE. WEST HARTFORD, CT 06117
ASSESSOR'S PARCEL NO.:	MAP# 848-985 J-41 LOT# 985
ZONING DISTRICT:	R-20
CONSTRUCTION TYPE:	CO-LOCATION
STRUCTURE OWNER:	MARLIN TOWER LLC 123 COSTELLO RD NEWINGTON, CT 06111
PROPERTY OWNER:	MARLIN TOWER LLC 123 COSTELLO RD NEWINGTON, CT 06111
APPLICANT:	OMNIPOINT COMMUNICATIONS, INC. 100 FILLEY STREET BLOOMFIELD, CT 06002

THIS DOCUMENT WAS DEVELOPED TO REFLECT A SPECIFIC SITE AND IT'S SITE CONDITIONS AND IS NOT TO BE USED FOR ANOTHER SITE OR WHEN OTHER CONDITIONS PERTAIN. REUSE OF THIS DOCUMENT IS AT THE SOLE RISK OF THE USER.

DO NOT SCALE DRAWINGS

CONTRACTOR SHALL VERIFY ALL PLANS AND EXISTING DIMENSIONS AND CONDITIONS ON THE JOB SITE AND SHALL IMMEDIATELY NOTIFY THE LESSEE REPRESENTATIVE IN WRITING OF DISCREPANCIES BEFORE PROCEEDING WITH THE WORK OR BE RESPONSIBLE FOR SAME.

NOTE:
PRIOR TO START OF CONSTRUCTION, CONTRACTOR SHALL CONTACT, ADAM SULLIVAN @ (401) 588-5691 AT T-MOBILE TO CONFIRM THAT T-MOBILE HAS TAKEN ALL ACTIONS REQUIRED AND RECEIVED ALL NECESSARY APPROVALS BY THE FCC FOR INSTALLATIONS IN CLOSE PROXIMITY TO AM BROADCAST STATIONS.

OMNIPOINT COMMUNICATIONS, INC.
A WHOLLY-OWNED SUBSIDARY OF T-MOBILE USA, INC.
100 FILLEY STREET
BLOOMFIELD, CT 06002
OFFICE: (860) 692-7100
FAX: (860) 692-7159

Dewberry
Dewberry-Goodkind, Inc.
50 ELM STREET
SUITE 101
NEW HAVEN, CT 06510
PHONE: 203.776.2277
FAX: 203.776.2358

STATE OF CONNECTICUT
FRANCIS D. KOBYLENSKI
#10421
REGISTERED PROFESSIONAL ENGINEER

LANDLORD
LEASING
R.F.
ZONING
CONSTRUCTION
A/E

DEWBERRY NO: 3757-02
DRAWN BY: RRC
CHECKED BY: CKD

SUBMITTALS

0	02/23/04	CONSTRUCTION

CT-11-765A
MARLIN GUYED TOWER
3114 ALBANY AVE.
WEST HARTFORD, CT 06117

SHEET TITLE
TITLE PAGE

SHEET NUMBER
T-1

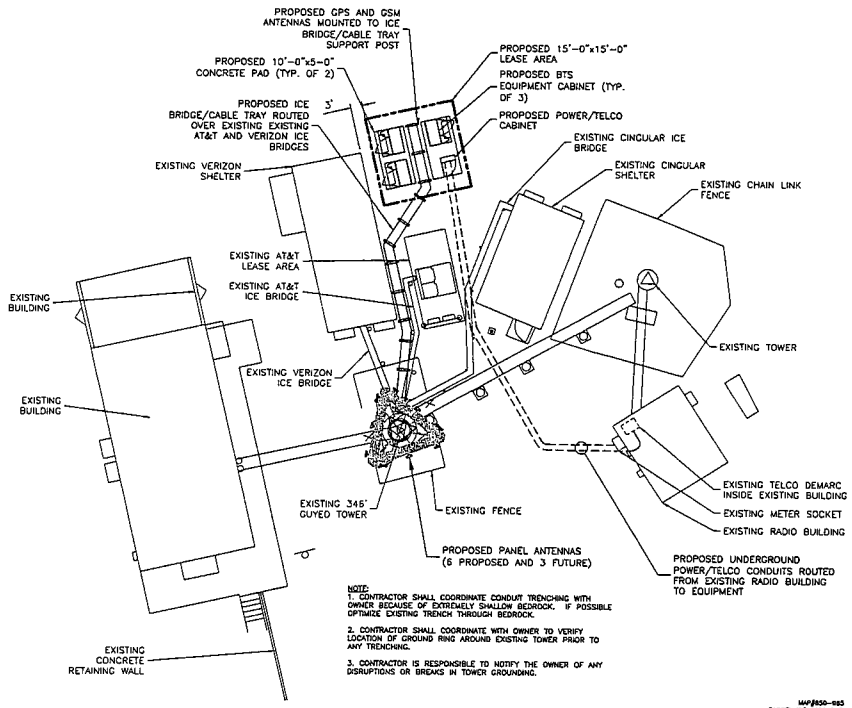

NOTE:
1. CONTRACTOR SHALL COORDINATE CONDUIT TRENCHING WITH OWNER BECAUSE OF EXTREMELY SHALLOW BEDROCK. IF POSSIBLE OPTIMIZE EXISTING TRENCH THROUGH BEDROCK.

2. CONTRACTOR SHALL COORDINATE WITH OWNER TO VERIFY LOCATION OF GROUND RING AROUND EXISTING TOWER PRIOR TO ANY TRENCHING.

3. CONTRACTOR IS RESPONSIBLE TO NOTIFY THE OWNER OF ANY DISRUPTIONS OR BREAKS IN TOWER GROUNDING.

SPECIAL LANDLORD NOTE:
LESSEE/LICENSEE "FUTURE" PANEL ANTENNAS ARE DEPICTED FOR THE PURPOSES OF DETERMINING TOWER/MONOPOLE STRUCTURAL CAPACITY, OBTAINING ZONING APPROVALS AND BUILDING PERMITS. SUBSEQUENT ENDORSEMENT OR ACCEPTANCE OF THIS DRAWING BY TOWER OWNER IS NOT TO BE CONSTRUED AS PERMISSION OR APPROVAL TO INSTALL "FUTURE" ANTENNAS THAT EXCEED "PROPOSED" OR ACTUAL EQUIPMENT LISTED IN THE LESSEE/LICENSEE LEASE AGREEMENT.

COMPOUND PLAN (3)

SCALE: 1/32"=1'-0"

6' 0 6' 12'

GRAPHIC SCALE

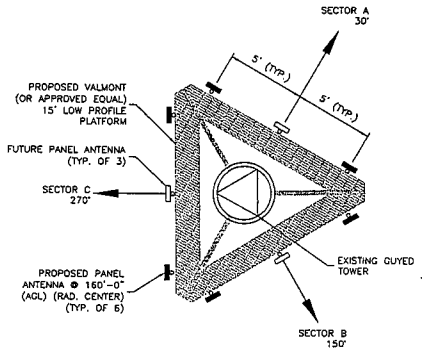

ANTENNA PLATFORM DETAIL (2)

SCALE: NTS

NOTES:

1. ALL DIMENSIONS SHOWN ± ARE APPROXIMATE. THE CONTRACTOR SHALL VERIFY ALL DIMENSIONS AND ELEVATIONS WHICH EFFECT THE CONTRACTORS WORK. CONTRACTOR TO VERIFY ALL DIMENSIONS WITH OWNER PRIOR TO CONSTRUCTION.
2. NORTH ARROW SHOWN ON PLANS REFERS TO TRUE NORTH. CONTRACTOR SHALL VERIFY TRUE NORTH AND INFORM CONSTRUCTION MANAGER OF ANY DISCREPANCIES BEFORE STARTING CONSTRUCTION.
3. THE CONTRACTOR AND OR HIS SUB CONTRACTOR SHALL BE RESPONSIBLE FOR OBTAINING ALL PERMITS AND INSPECTIONS WHICH MAY BE REQUIRED FOR THE WORK BY THE ARCHITECT/ENGINEER, THE STATE, COUNTRY OR LOCAL GOVERNMENT AUTHORITY.
4. ANTENNA INSTALLATION SHALL BE CONDUCTED BY FIELD CREWS EXPERIENCED IN THE ASSEMBLY AND ERECTION OF RADIO ANTENNAS, TRANSMISSION LINES AND SUPPORT STRUCTURES.
5. COAXIAL CABLE CONNECTORS AND TRANSMITTER EQUIPMENT SHALL BE PROVIDED BY THE OWNER AND IS NOT INCLUDED IN THESE CONSTRUCTION DOCUMENTS. A SCHEDULE OF OWNER SUPPLIED MATERIALS IS ATTACHED TO THE BID DOCUMENTS (SEE ATTACHMENT #1). ALL OTHER HARDWARE TO BE PROVIDED BY THE CONTRACTOR. CONNECTION HARDWARE SHALL BE STAINLESS STEEL.
6. ANTENNAS, SUPPORTS AND CABLE MOUNTS SHALL BE PAINTED TO MATCH EXISTING SURFACES TO WHICH IT IS ATTACHED. PAINT SHALL BE SHERWIN WILLIAMS, COROTHAN II, SURFACE PREPARATION AND APPLICATION SHALL BE IN ACCORDANCE WITH MANUFACTURER SPECIFICATIONS AND T-MOBILE GUIDELINES.
7. COORDINATION, LAYOUT, AND FURNISHING OF CONDUIT, CABLE AND ALL APPURTENANCES REQUIRED FOR PROPER INSTALLATION OF ELECTRICAL AND TELECOMMUNICATION SERVICE SHALL BE THE SOLE RESPONSIBILITY OF THE CONTRACTOR.
8. EQUIPMENT WILL BE INDEPENDENTLY POWERED WITH SEPARATE METER.
9. PRIOR TO EXCAVATION NEAR (E) TOWER, CONTRACTOR TO CONTACT AND COORDINATE WITH PROPERTY OWNER.
10. ALL (E) ACTIVE SEWER, WATER, GAS, ELECTRIC, AND OTHER UTILITIES WHERE ENCOUNTERED IN THE WORK, SHALL BE PROTECTED AT ALL TIMES AND WHERE REQUIRED FOR THE PROPER EXECUTION OF THE WORK, SHALL BE RELOCATED AS DIRECTED BY ENGINEERS. EXTREME CAUTION SHOULD BE USED BY THE CONTRACTOR WHEN EXCAVATING OR PER DRILLING AROUND OR NEAR UTILITIES. CONTRACTOR SHALL PROVIDE SAFETY TRAINING FOR THEIR WORKING CREW.
11. ALL (E) INACTIVE SEWER, WATER, GAS, ELECTRIC AND OTHER UTILITIES WHICH INTERFERE WITH THE EXECUTION OF THE WORK, SHALL BE REMOVED AND/OR CAPPED, PLUGGED OR OTHERWISE DISCONTINUED AT POINTS WHICH WILL NOT INTERFERE WITH THE EXECUTION OF THE WORK, SUBJECT TO THE APPROVAL OF UTILITY COMPANY ENGINEERING.
12. THE AREAS OF THE PROPERTY DISTRUBED BY THE WORK AND NOT COVERED BY THE EQUIPMENT, DRIVEWAY OR GRAVEL, SHALL BE GRADED TO A UNIFORM SLOPE, FERTILIZED, SEEDED AND COVERED WITH MULCH.
13. THE CONRACTOR SHALL ESTABLISH AND MAINTAIN SOIL EROSION AND SEDIMENTATION CONTROLS AT ALL TIMES DURING CONSTRUCTION.
14. ALL UTILITY WORK SHALL BE IN ACCORDANCE WITH LOCAL UTILITY COMPANY REQUIREMENTS AND SPECIFICATIONS.
15. PER FCC MANDATE, ENHANCED EMERGENCY (E911) SERVICE IS REQUIRED TO MEET NATIONWIDE STANDARDS FOR WIRELESS COMMUNICATIONS SYSTEMS. T-MOBILE IMPLEMENTATION REQUIRES DEPLOYMENT OF EQUIPMENT AND ANTENNAS GENERALLY DEPICTED ON THIS PLAN, ATTACHED TO OR MOUNTED IN CLOSE PROXIMITY TO THE BTS RADIO CABINETS. T-MOBILE RESERVES THE RIGHT TO MAKE REASONABLE MODIFICATIONS TO E911 EQUIPMENT AND LOCATION AS TECHNOLOGY EVOLVES TO MEET REQUIRED SPECIFICATIONS.

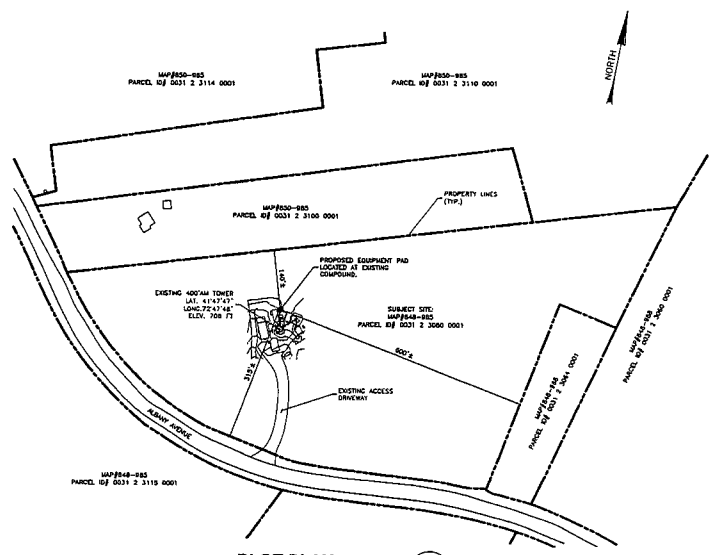

PLOT PLAN (1)

SCALE: 1"=100'-0"

50' 0 50' 100'

DIMENSION ARE APPROXIMATE AS ESTIMATED FROM TAX ASSESSOR MAPS

ABBREVIATIONS

ADJ	ADJUSTABLE	SF	SQUARE FOOT
APPROX	APPROXIMATE	SHT	SHEET
C	CONDUIT	SIM	SIMILAR
CONC	CONCRETE	STL	STEEL
CONT	CONTINUOUS	TOC	TOP OF CONCRETE
CJ	CONSTRUCTION JOINT	TOM	TOP OF MASONRY
DIA	DIAMETER	TYP	TYPICAL
DWG	DRAWING	VF	VERIFY IN FIELD
EGB	EQUIPMENT GROUND BAR	UON	UNLESS OTHERWISE NOTED
EA	EACH	WWF	WELDED WIRE FABRIC
ELEC	ELECTRICAL	W/	WITH
EL	ELEVATION		
EQ	EQUAL	BTS	BASE TRANSMISSION STATION
EQUIP	EQUIPMENT	LNA	LOW NOISE AMPLIFIER
(E)	(E)		
EXT	EXTERIOR	PCS	PERSONAL COMMUNICATIONS SERVICES
FF	FINISHED FLOOR		
FG	FINISHED GRADE		
GA	GAUGE	A-1	ANTENNA MARK NO.
GALV	GALVANIZED		
GC	GENERAL CONTRACTOR	PL	PLATE
LG	LONG	&	AND
MAX	MAXIMUM	@	AT
MECH	MECHANICAL		
MFR	MANUFACTURER		
MGB	MASTER GROUND BAR		
MIN	MINIMUM		
MTL	METAL		
NIC	NOT IN CONTRACT		
NTS	NOT TO SCALE		
OC	ON CENTER		
OPP	OPPOSITE		

SYMBOLS AND MATERIALS

NEW ANTENNA
EXISTING ANTENNAS
ASPHALT
NEW ACCESS EASEMENT
CONCRETE
ELECTRIC BOX
LIGHT POLE
FND. MONUMENT
SPOT ELEVATION
SET POINT
REVISION
GRID REFERENCE
DETAIL REFERENCE (DET. A / SHT. 1)
ELEVATION (D / SH)
SECTIONS & DETAILS (D / SH)

GROUT OR PLASTER
BRICK
MASONRY
CONCRETE
EARTH
GRAVEL
PLYWOOD
SAND
WOOD CONT.
WOOD BLOCKING
STEEL
CENTER LINE
PROPERTY LINE
STEPPED FOOTING
MATCH LINE
WORK POINT
G — GROUND WIRE
COAXIAL CABLE

ANTENNA ORIENTATION KEY

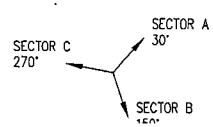

OMNIPOINT COMMUNICATIONS, INC.
A WHOLLY-OWNED SUBSIDIARY OF T-MOBILE USA, INC.
100 FILLEY STREET
BLOOMFIELD, CT 06002
OFFICE: (860) 692-7100
FAX: (860) 692-7159

Dewberry
Dewberry-Goodkind, Inc.
59 ELM STREET
SUITE 101
NEW HAVEN, CT 06510
PHONE: 203.776.2277
FAX: 203.776.2288

STATE OF CONNECTICUT
FRANCIS D. KOBYLENSKI
#10421
REGISTERED PROFESSIONAL ENGINEER

APPROVALS

LANDLORD
LEASING
R.F.
ZONING
CONSTRUCTION
A/E

DEWBERRY NO: 3757-02

DRAWN BY: RRC

CHECKED BY: CKD

SUBMITTALS

0	02/23/04	CONSTRUCTION

CT-11-765A
MARLIN GUYED TOWER
3114 ALBANY AVE.
WEST HARTFORD, CT 06117

SHEET TITLE
SITE & COMPUND PLAN, DETAIL

SHEET NUMBER
A-1

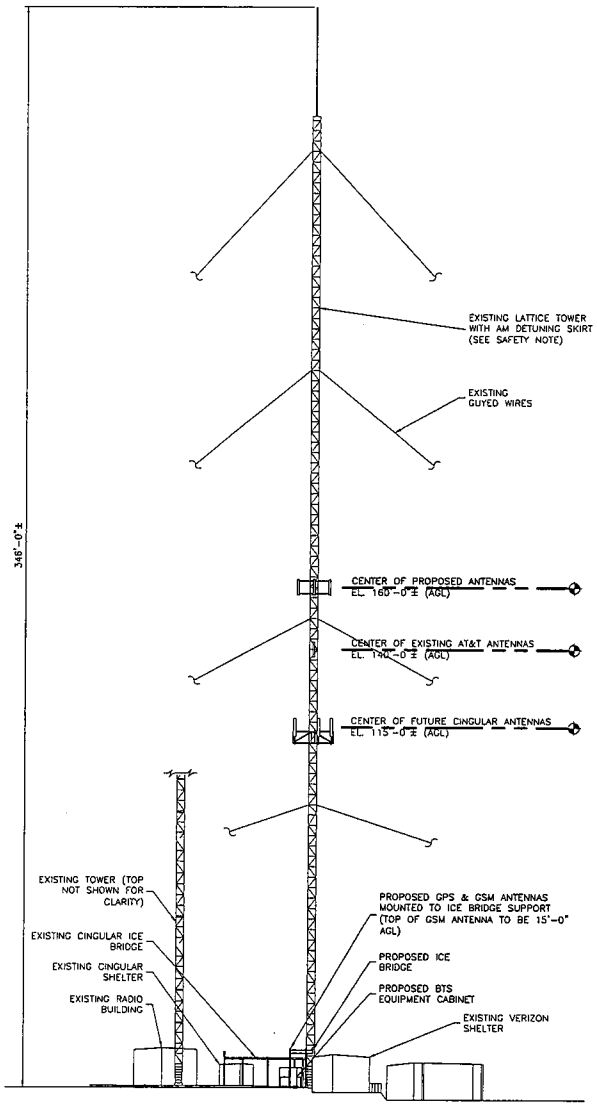

SECTION AT EQUIPMENT PAD (2)

SCALE: 1"=20'-0"

10' 0 10' 20' 30'

GRAPHIC SCALE

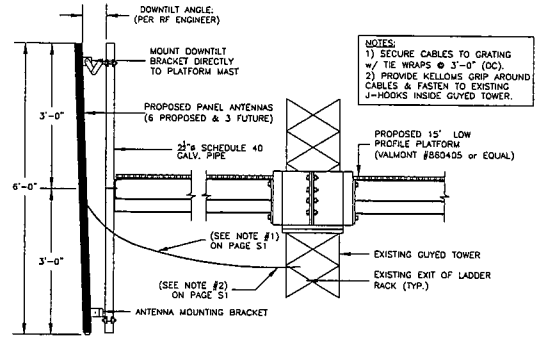

NOTES:
1) SECURE CABLES TO GRATING w/ TIE WRAPS @ 3'-0" (OC).
2) PROVIDE KELLOWS GRIP AROUND CABLES & FASTEN TO EXISTING J-HOOKS INSIDE GUYED TOWER.

ANTENNA MOUNTING DETAIL (3)

SCALE: NTS

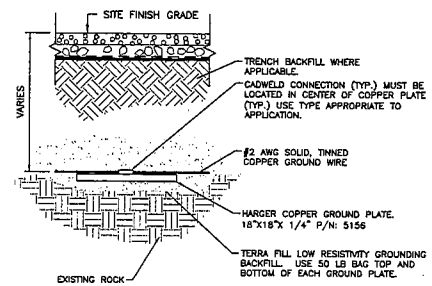

NOTES:

1. ALL GROUNDING SHALL BE INSTALLED IN ACCORDANCE WITH 1999 NEC.

2. GROUND PLATE SHALL BE INSTALLED OVER EXISTING BEDROCK. (48" MAX DEPTH, OTHERWISE)

GROUNDING PLATE DETAIL (4)

SCALE: NTS

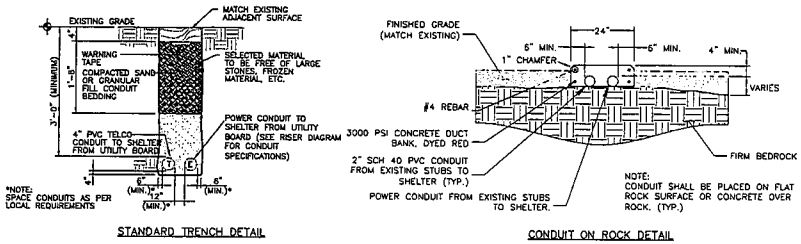

STANDARD TRENCH DETAIL

CONDUIT ON ROCK DETAIL

TRENCH DETAIL (1)

SCALE: NTS

OMNIPOINT COMMUNICATIONS, INC.
A WHOLLY-OWNED SUBSIDIARY OF T-MOBILE USA, INC.
100 FILLEY STREET
BLOOMFIELD, CT 06002
OFFICE: (860) 692-7100
FAX: (860) 692-7159

Dewberry
Dewberry-Goodkind, Inc.
59 ELM STREET
SUITE 101
NEW HAVEN, CT 06510
PHONE 203.776.2277
FAX 203.776.0208

STATE OF CONNECTICUT
FRANCIS D. KOBYLENSKI
#10421
REGISTERED PROFESSIONAL ENGINEER

APPROVALS

LANDLORD _____
LEASING _____
R.F. _____
ZONING _____
CONSTRUCTION _____
A/E _____

DEWBERRY NO: 3757-02

DRAWN BY: RRC

CHECKED BY: CKD

SUBMITTALS

0	02/23/04	CONSTRUCTION

CT-11-765A
MARLIN GUYED TOWER
3114 ALBANY AVE.
WEST HARTFORD, CT 06117

SHEET TITLE

ELEVATION & DETAILS

SHEET NUMBER

A-2

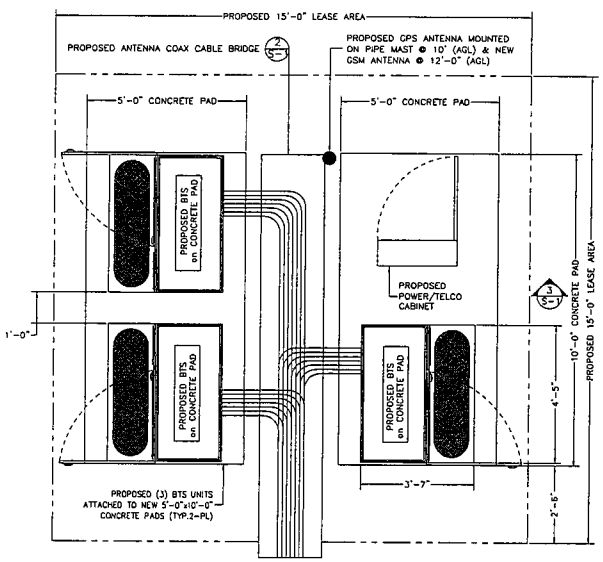

EQUIPMENT PAD LAYOUT (1)

SCALE: 1/2"=1'-0"

1' 0 1' 2'

GRAPHIC SCALE

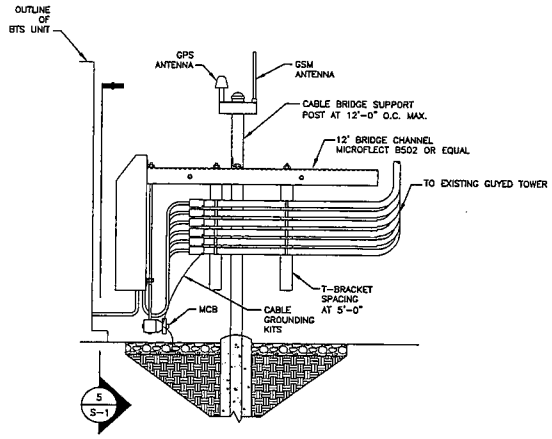

SECTION AT CABLE BRIDGE (4)

SCALE: NTS

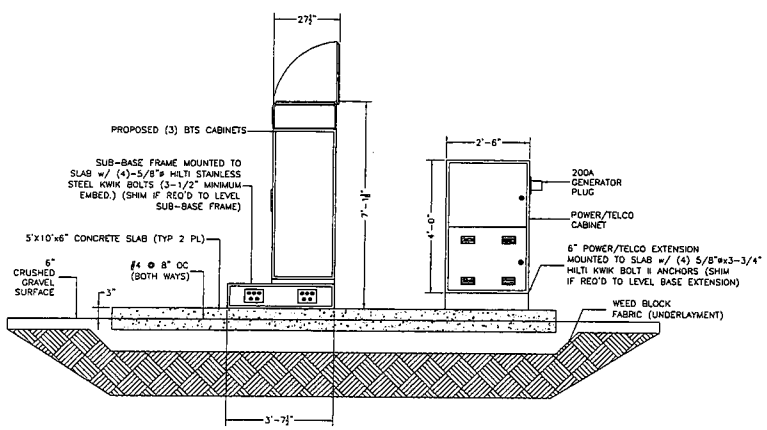

SECTION AT EQUIPMENT PAD (3)

SCALE: 1 1/2"=1'-0"

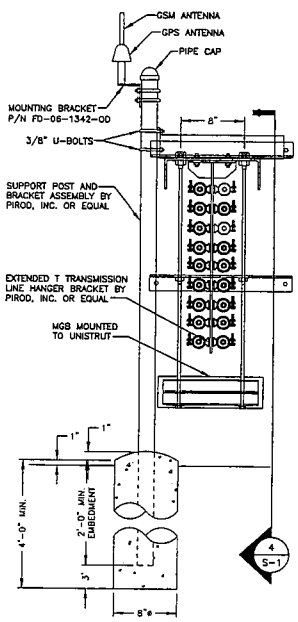

SECTION AT CABLE BRIDGE (5)

SCALE: NTS

STRUCTURAL NOTES:

1. DESIGN REQUIREMENTS ARE PER STATE BUILDING CODE AND APPLICABLE SUPPLEMENTS, ANSI/ASCE7, EIA/TIA-222-F STRUCTURAL STANDARDS FOR STEEL ANTENNA SUPPORTING STRUCTURES.
2. CONTRACTOR SHALL VERIFY ALL DIMENSIONS AND CONDITIONS IN THE FIELD PRIOR TO FABRICATIONA ND ERECTION OF ANY MATERIAL. ANY UNUSUAL CONDITIONS SHALL BE REPORTED TO THE ATTENTION OF THE CONSTRUCTION MANAGER.
3. DESIGN AND CONSTRUCTRUCTION OF STRUCTURAL STEEL HALL CONFORM TO THE AMERICAN INSTITUTE OF STEEL CONSTRUCTION "SPECIFICATION FOR THE DESIGN, FABRICATION AND ERECTION OF STRUCTURAL STEEL FOR BUILDINGS".
4. STRUCTURAL AND MISCELLANEOUS STEEL SHALL CONFORM TO ASTEM A38 STRUCTURAL STEEL UNLESS OTHERWISE INDICATED.
5. STEEL PIPE SHALL CONFORM TO ASTM A500 "COLD-FORMED WELDED & SEAMLESS CARBON STEEL STRUCTURAL TUBING", GRADE A, OR ASTM A53 PIPE STEEL BLACK AND HOT-DIPPED ZINC-COATED WELDED AND SEAMLESS TYPE E OR S, GRADE B. PIPE SIZES INDICATED ARE NOMINAL. ACTUAL OUTSIDE DIAMETER IS LARGER.
6. STRUCTURAL CONNECTION BOLTS SHALL BE HIGH STRENGTH BOLTS (BEARING TYPE AND CONFORM TO ASTM A325 "HIGH STRENGTH BOLTS FOR STRUCTURAL JOINTS, INCLUDING SUITABLE NUTS AND PLAIN HARDENED WASHERS". ALL BOLTS SHALL BE 5/8" DIA UON.
7. ALL STEEL MATERIALS SHALL BE GALVANIZED AFTER FABRICATION IN ACCORDANCE WITH ASTM A123 "ZINC (HOT-DIP GALVANIZED) COATINGS ON IRON AND STEEL PRODUCTS", UNLESS OTHERWISE NOTED.
8. ALL BOLTS, ANCHORS AND MISCELLANEOUS HARDWARE SHALL BE GALVANIZED IN ACCORDANCE WITH ASTM A153 "ZINC-COATING (HOT-DIP) ON IRON AND STEEL HARDWARE", UNLESS OTHERWISE NOTED.
9. FIELD WELDS, DRILL HOLES, SAW CUTS AND ALL DAMAGED GALVANIZED SURFACES SHALL BE REPAIRED WITH AN ORGANIC ZINC REPAIR PAINT COMPLYING WITH REQUIREMENTS OF ASTM A780. GALVANIZING REPAIR PAINT SHALL HAVE 85 PERCENT ZINC BY WEIGHT, ZIRP BY DUNCAN GALVANIZING, GALVA BRIGHT PREMIUM BY CROWN OR EQUAL THICKNESS OF APPLIED GALVANIZING REPAIR PAINT SHALL BE NOT LESS THAN 4 COATS (ALLOW TIME TO DRY BETWEEN COATS) WITH A RESULTING COATING THICKNESS REQUIRED BY ASTM A123 OR A153 AS APPLICABLE.
10. CONTRACTOR SHALL COMPLY WITH AWS CODE FOR PROCEDURES, APPEARANCE AND QUALITY OF WELDS, AND FOR METHODS USED IN CORRECTING WELDING. ALL WELDERS AND WELDING PROCESSES SHALL BE QUALIFIED IN ACCORDANCE WITH AWS "STANDARD QUALIFICATION PROCEDURES". ALL WELDING SHALL BE DONE USING E70XX ELECTRODES AND WELDING SHALL CONFORM TO AISC AND DLL WHERE FILLET WELD SIZES ARE NOT SHOWN, PROVIDE THE MINIMUM SIZE PER TABLE J2.4 IN THE AISC "MANUAL OF STEEL CONSTRUCTION", 8TH EDITION.
11. INCORRECTLY FABRICATED, DAMAGED OR OTHERWISE MISFITTING OR NONCOMFORMING MATERIALS OR CONDITIONS SHALL BE REPORTED TO THE CONSTRUCTION MANAGER PRIOR TO REMEDIAL OR CORRECTIVE ACTION. ANY SUCH ACTION SHALL REQUIRE CONSTRUCTION MANAGER APPROVAL.
12. UNISTRUTS SHALL BE FORMED STEEL CHANNEL STRUT FRAMING AS MANUFACTURED BY UNISTRUT CORP., WAYNE, MI OR EQUAL STRUT MEMBERS SHALL BE 1 5/8" x 1 5/8" x 12 GA, UNLESS OTHERWISE NOTED, AND SHALL BE HOT-DIP GALVANIZED AFTER FABRICATION.
13. EPOXY ANCHOR ASSEMBLY SHALL CONSIST OF 1/2" DIAMETER STAINLESS STEEL ANCHOR ROD WITH NUTS & WASHERS, AN INTERNALLY THREADED INSERT, A SCREEN TUBE AND A EPOXY ADHESIVE. THE ANCHORING SYSTEM SHALL BE THE HILTI-HIT HY-20 AND OR HY-150 SYSTEMS (AS SPECIFIED IN DWG.) OR ENGINEERS APPROVED EQUAL WITH 4-1/4" MIN. EMBEDMENT DEPTH.
15. EXPANSION BOLTS SHALL CONFORM TO FEDERAL SPECIFICATION FF-S-325, GROUP II, TYP 4, CLASS I, HILTI KWIK BOLT II OR APPROVED EQUAL INSTALLATION SHALL BE IN ACCORDANCE WITH THE MANUFACTURER'S RECOMMENDATIONS. MINIMUM EMBEDMENT SHALL BE THREE AND ONE HALF (3 1/2) INCHES.
14. GRAVEL SUB BASE AND CONCRETE SHALL BE PLACED AGAINST UNDISTURBED SOIL.
16. CONCRETE FOR FENCE AND ICE BRIDGE SUPPORT SHALL BE 3000 PSI AIR ENTRAINED (4% - 8%) NORMAL WEIGHT CONCRETE.
17. ALL CAST IN PLACE CONCRETE SHALL BE MIXED AND PLACED IN ACCORDANCE WITH THE REQUIREMENTS OF ACI 318 AND ACI 301.
18. THE FOLLOWING MINIMUM CONCRETE COVER OVER REINFORCING STEEL SHALL BE AS FOLLOWS UNLESS NOTED OTHERWISE:
    CONCRETE CAST AGAINST EARTH - 3 INCHES
    CONCRETE EXPOSED TO EARTH OR WATER

    #6 AND LARGER - 2 INCHES
    #5 AND SMALLER - 1 1/2 INCHES
19. ALL EXPOSED EDGES SHALL BE PROVIDED WITH A 3/4"x3/4" CHAMFER UNLESS NOTED OTHERWISE.

OMNIPOINT COMMUNICATIONS, INC.
A WHOLLY-OWNED SUBSIDARY OF T-MOBILE USA, INC.
100 FILLEY STREET
BLOOMFIELD, CT 06002
OFFICE: (860) 692-7100
FAX: (860) 692-7159

Dewberry
Dewberry-Goodkind, Inc.
68 E. MAIN STREET
SUITE 107
REGISTERED
PROFESSIONAL ENGINEER
#10421

APPROVALS

LANDLORD _____

LEASING _____

R.F. _____

ZONING _____

CONSTRUCTION _____

A/E _____

DEWBERRY NO: J757-02

DRAWN BY: RRC

CHECKED BY: CKD

SUBMITTALS

0	02/23/04	CONSTRUCTION

CT-11-765A
MARLIN GUYED TOWER
3114 ALBANY AVE.
WEST HARTFORD, CT 06117

SHEET TITLE

PLAN, SECTIONS, AND DETAILS

SHEET NUMBER

S-1

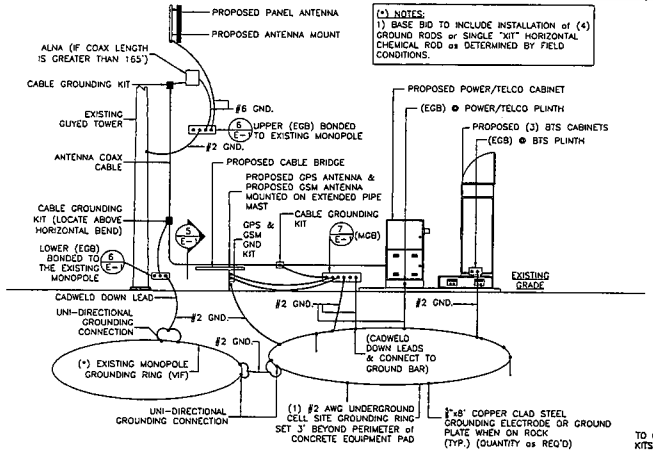

(*) NOTES:
1) BASE BID TO INCLUDE INSTALLATION of (4) GROUND RODS or SINGLE "KIT" HORIZONTAL CHEMICAL ROD as DETERMINED BY FIELD CONDITIONS.

GROUNDING RISER DIAGRAM (1)

SCALE: N.T.S.

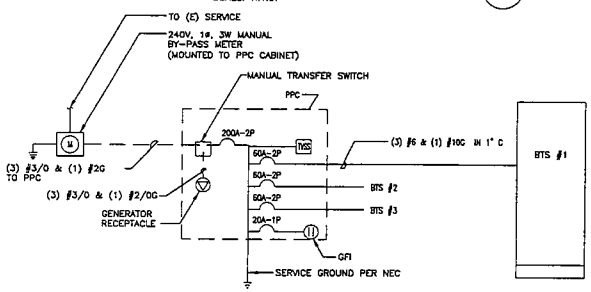

ONE LINE DIAGRAM (3)

SCALE: N.T.S.

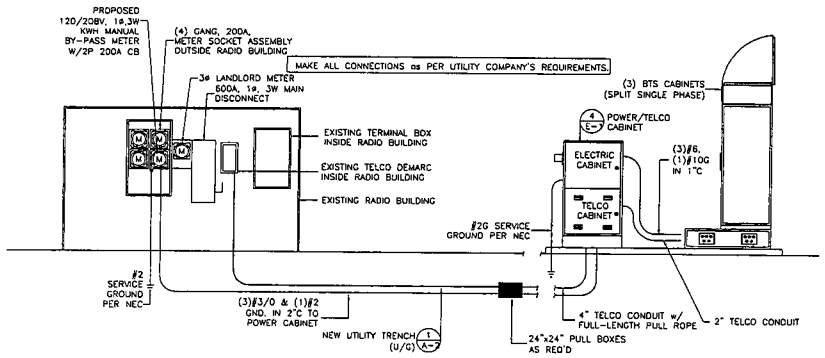

POWER RISER DIAGRAM (2)

SCALE: N.T.S.

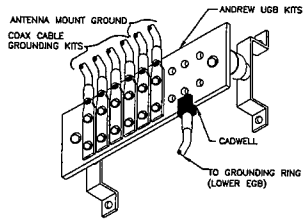

EQUIPMENT GROUND BAR (EGB) (7)

SCALE: N.T.S.

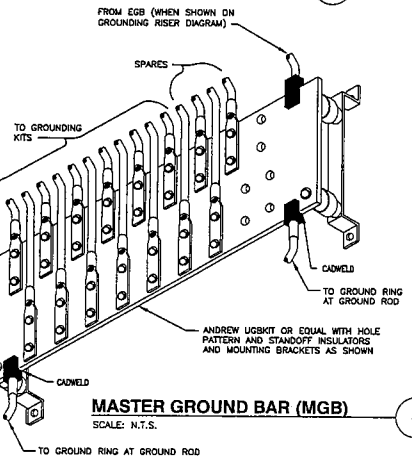

MASTER GROUND BAR (MGB) (6)

SCALE: N.T.S.

ELECTRICAL LEGEND

	NEW PANEL BOARD, SURFACE MOUNTED
	EXISTING PANEL BOARD, SURFACE MOUNTED
T	DRY TYPE TRANSFORMER
M	METER
	CIRCUIT BREAKER
	NON-FUSIBLE DISCONNECT SWITCH, MOUNTED 54" A.F.F.
F	FUSIBLE DISCONNECT SWITCH, MOUNTED 54"A.F.F.
TVSS	TRANSIENT VOLTAGE SURGE SUPPRESSOR WITH BUILT-IN FUSES, SURFACE MOUNTED
	DUPLEX OUTLET, SURFACE MOUNTED, 20 AMPS, 125 VOLTS, SINGLE PHASE
J	JUNCTION BOX, SURFACE MOUNTED 18" A.F.F.
	EXPOSED WIRING
	HOME RUNS, MINIMUM 2#10 + 1#10G IN 3/4" CONDUIT U.O.N.
A.F.F.	ABOVE FINISHED FLOOR
U.O.N.	UNLESS OTHERWISE NOTED
WP	WEATHERPROOF
GFI	GROUND FAULT INTERRUPTER
A	AMPERE
V	VOLT
KWH	KILOWATT – HOUR
C	CONDUIT
G	GROUND
	GROUND
MGB	MASTER GROUND BAR ○MECHANICAL CONNECTION ●CADWELD CONNECTION
EGB	EQUIPMENT GROUND BAR ○MECHANICAL CONNECTION ●CADWELD CONNECTION
—G—	GROUND COPPER WIRE, SIZE AS NOTED
	EXPOSED WIRING
	COAXIAL CABLE
	5/8"x8' COPPER CLAD STEEL GROUND ROD ●EXOTHERMIC (CADWELD) OR ○MECHANICAL (COMPRESSION TYPE) CONNECTION
PPC	POWER PROTECTION CABINET

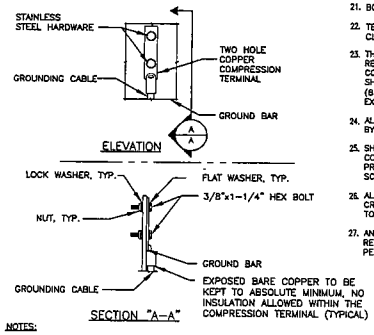

NOTES:
1. "DOUBLING UP" OR "STACKING" OF CONNECTION IS NOT PERMITTED.
2. OXIDE INHIBITING COMPOUND TO BE USED AT ALL LOCATIONS.
3. CADWELD DOWNLEADS FROM UPPER EGB, LOWER EGB, AND MGB.

TYPICAL GROUND BAR CONNECTIONS DETAIL (5)

SCALE: N.T.S.

ELECTRICAL & GROUNDING NOTES

1. ALL ELECTRICAL WORK SHALL CONFORM TO THE REQUIREMENTS OF THE NATIONAL ELECTRICAL CODE (NEC) AS WELL AS APPLICABLE STATE AND LOCAL CODES.
2. ALL ELECTRICAL ITEMS SHALL BE U.L. APPROVED OR LISTED AND PROCURED PER SPECIFICATION REQUIREMENTS.
3. THE ELECTRICAL WORK INCLUDES ALL LABOR AND MATERIAL DESCRIBED BY DRAWINGS AND SPECIFICATION INCLUDING INCIDENTAL WORK TO PROVIDE COMPLETE OPERATING AND APPROVED ELECTRICAL SYSTEM.
4. GENERAL CONTRACTOR SHALL PAY FEES FOR PERMITS, AND IS RESPONSIBLE FOR OBTAINING SAID PERMITS AND COORDINATION OF INSPECTIONS.
5. ELECTRICAL AND TELCO WIRING OUTSIDE A BUILDING AND EXPOSED TO WEATHER SHALL BE IN WATER TIGHT GALVANIZED RIGID STEEL CONDUITS OR SCHEDULE 80 PVC (AS PERMITTED BY CODE) AND WHERE REQUIRED IN LIQUID TIGHT FLEXIBLE METAL OR NONMETALLIC CONDUITS.
6. BURIED CONDUIT SHALL BE SCHEDULE 40 PVC.
7. ELECTRICAL WIRING SHALL BE COPPER WITH TYPE XHHW, THWN, OR THHNINSULATION.
8. RUN ELECTRICAL CONDUIT OR CABLE BETWEEN ELECTRICAL UTILITY DEMARCATION POINT AND T-MOBILE CELL SITE PPC AS INDICATED ON THIS DRAWING. PROVIDE FULL LENGTH PULL ROPE. COORDINATE INSTALLATION WITH UTILITY COMPANY.
9. RUN TELCO CONDUIT OR CABLE BETWEEN TELEPHONE UTILITY DEMARCATION POINT AND T-MOBILE CELL SITE TELCO CABINET AND BTS CABINET AS INDICATED ON THIS DRAWING PROVIDE FULL LENGTH PULL ROPE IN INSTALLED TELCO CONDUIT. PROVIDE GREENLEE CONDUIT MEASURING TAPE AT EACH END.
10. WHERE CONDUIT BETWEEN BTS AND T-MOBILE CELL SITE PPC AND BETWEEN BTS AND T-MOBILE CELL SITE TELCO SERVICE CABINET ARE UNDERGROUND USE PVC, SCHEDULE 40 CONDUIT. ABOVE THE GROUND PORTION OF THESE CONDUITS SHALL BE PVC CONDUIT.
11. ALL EQUIPMENT LOCATED OUTSIDE SHALL HAVE NEMA 3R ENCLOSURE.
12. PPC SUPPLIED BY T-MOBILE.
13. GROUNDING SHALL COMPLY WITH NEC ART. 250.
14. GROUND COAXIAL CABLE SHIELDS MINIMUM AT BOTH ENDS USING MANUFACTURERS COAX CABLE GROUNDING KITS SUPPLIED BY T-MOBILE.
15. USE #6 COPPER STRANDED WIRE WITH GREEN COLOR INSULATION FOR ABOVE GRADE GROUNDING (UNLESS OTHERWISE SPECIFIED) AND #2 SOLID TINNED BARE COPPER WIRE FOR BELOW GRADE GROUNDING AS INDICATED ON THE DRAWING.
16. ALL GROUND CONNECTIONS TO BE BURNDY HYGROUND COMPRESSION TYPE CONNECTORS OR CADWELD EXOTHERMIC WELD. DO NOT ALLOW BARE COPPER WIRE TO BE IN CONTACT WITH GALVANIZED STEEL.
17. ROUTE GROUNDING CONDUCTORS ALONG THE SHORTEST AND STRAIGHTEST PATH POSSIBLE, EXCEPT AS OTHERWISE INDICATED. GROUNDING LEADS SHOULD NEVER BE BENT AT RIGHT ANGLE. ALWAYS MAKE AT LEAST 12" RADIUS BENDS. #6 WIRE CAN BE BENT AT 6" RADIUS WHEN NECESSARY. BOND ANY METAL OBJECTS WITHIN 6 FEET OF T-MOBILE EQUIPMENT OR CABINET TO MASTER GROUND BAR OR GROUNDING RING.
18. CONNECTIONS TO GROUND BARS SHALL BE MADE WITH TWO HOLE COMPRESSION TYPE COPPER LUGS. APPLY OXIDE INHIBITING COMPOUND TO ALL LOCATIONS.
19. APPLY OXIDE INHIBITING COMPOUND TO ALL COMPRESSION TYPE GROUND CONNECTIONS.
20. BOND ANTENNA MOUNTING BRACKETS, COAXIAL CABLE GROUND KITS, AND ALNA TO EGB PLACED NEAR THE ANTENNA LOCATION.
21. BOND ANTENNA EGB'S AND MGB TO GROUND RING.
22. TEST COMPLETED GROUND SYSTEM AND RECORD RESULTS FOR PROJECT CLOSE-OUT DOCUMENTATION. 5 OHMNS MINIMUM RESISTANCE REQUIRED.
23. THIS SITE CONTAINS AN EXTENSIVE BURIED GROUNDING SYSTEM RELATED TO THE EXISTING AM BROADCAST TOWER LOCATED WITHIN THE COMPOUND. PRIOR TO PERFORMING ANY EARTHWORK, CONTRACTOR SHALL COORDINATE WITH JOHN RAMSEY OF MARLIN TOWERS, LLC, AT (860)525-1069 X-143 FOR PROCEDURES FOR WORKING AROUND THE EXISTING GROUNDING SYSTEM.
24. ALL GROUNDING TO BE INSTALLED AT THIS SITE SHALL BE APPROVED BY JOHN RAMSEY OF MARLIN TOWERS, LLC PRIOR TO INSTALLATION.
25. SHELTER GROUND RING SHALL BE INSTALLED BY MARLIN TOWERS, LLC. CONTRACTOR SHALL CONTACT JOHN RAMSEY OF MARLIN TOWERS, LLC PRIOR TO START OF CONSTRUCTION TO COORDINATE INSTALLATION SCHEDULE.
26. ALL TOWER WORK SHALL BE DONE BY LANDLORD APPROVED TOWER CREW. CONTRACTOR SHALL CONTACT JOHN RAMSEY OF MARLIN TOWERS, LLC FOR INFORMATION ON APPROVED TOWER CREW.
27. ANY DAMAGE TO EXISTING GROUNDING SYSTEM SHALL BE IMMEDIATELY REPORTED TO JOHN RAMSEY OF MARLIN TOWERS, LLC AND REPAIRED PER HIS SPECIFICATIONS AT NO ADDITIONAL COST.

OMNIPOINT COMMUNICATIONS, INC.
A WHOLLY-OWNED SUBSIDIARY OF T-MOBILE USA, INC.
100 FILLEY STREET
BLOOMFIELD, CT 06002
OFFICE: (860) 692-7100
FAX: (860) 692-7159

Dewberry
Dewberry-Goodkind, Inc.
59 ELM STREET
SUITE 101
NEW HAVEN, CT 06510
PHONE: 203.776.2277
FAX: 203.776.2288

STATE OF CONNECTICUT
FRANCIS D. KOSYLENSKI
#16421
REGISTERED PROFESSIONAL ENGINEER

APPROVALS

LANDLORD _____
LEASING _____
R.F. _____
ZONING _____
CONSTRUCTION _____
A/E _____

DEWBERRY NO: 3757-02
DRAWN BY: RRC
CHECKED BY: CKD

SUBMITTALS

0	02/23/04	CONSTRUCTION

CT-11-765A
MARLIN GUYED TOWER
3114 ALBANY AVE.
WEST HARTFORD, CT 06117

SHEET TITLE
ELECTRICAL & GROUNDING

SHEET NUMBER
E-1

Exhibit B

PAUL J. FORD AND COMPANY
STRUCTURAL ENGINEERS
250 East Broad Street • Suite 500 • Columbus, Ohio 43215

March 8, 2004

Dewberry
59 Elm Street
New Haven, CT 06510

Mr. Chris Daddi, P.E.

Re: Existing 346-ft. Guyed Tower
Located in West Hartford, Hartford, CT (Marlin CT-11-765A)
PJF Project #34803-061R1; Dewberry #3757-02

Dear Chris:

Paul J. Ford and Company understands that Omnipoint proposes to collocate on the above referenced tower. Paul J. Ford and Company was supplied with the original tower and foundation design drawings by PiRod, Inc. dated 8-4-2000 (PiRod #A117361). The tower was originally designed as an initial 346′ tower extendable to a future height of 670′. The tower has never been extended and remains at the initial height of 346′. The tower was designed for an 80 mph basic wind velocity (69 mph with ½″ ice) for the following antenna loading:

670′ to 723′	TFU-30GTH-RD-TV w/ 6″ line
630′ to 650′	3-Bay FM w/ radomes w/ 3 1/8″ line
600′, 575′, 550′, 525′, 500′, 475′, 450′, 425′	(1) PD220 w/ 6′ sidearm w/ 1 5/8″ line
335′, 310′	(3) PD220 w/ (3) 6′ sidearms w/ (3) 1 5/8″ line
311′ to 346′	3-Bay FM w/ radomes w/ 3 1/8″ line
	1-Bay FM w/ radome w/ 3 1/8″ line
	(4) PD220 w/ (3) 6′ sidearms w/ (4) 7/8″ line
250′, 230′, 210′, 190′, 170′, 150′	(12) ALP9212N w/ T-frame mounts w/ (12) 1 5/8″ line
	(2) Scala PR-950 w/ (2) 7/8″ line

For this structural review, we were provided with antenna information regarding the proposed antennas and an inventory of the existing antennas. Based on information provided, it is our understanding that the following antenna loading is to be considered for this structural review:

Dewberry

Attn Mr. Chris Daddi, P.E.

Re: Existing 346-ft. Guyed Tower
Located in West Hartford, Hartford County, CT (Marlin CT-11-765A)
PJF Project #34803-061R1; Dewberry #3757-02

311' to 346'	3-Bay Fm
285'	ACS #16P4(38)052501 Ch #39
265'	DB420B
235'	Scala PR-450U
201'	DB420B
165'	Shively 6810 (1-Bay FM)
160'	***Proposed Omnipoint (9) EMS DR65-19-XXDPQ w/ (36) 1 5/8" on 15' low profile platform***
145'	AT&T, (3) panel antennas, exact model number unknown
130'	Verizon, (8) Allgon 7129.16 panel antennas
115'	Cingular (12) CSS DUO-1417-8686-40 w/ (12) TMA's and (12) 1 5/8" lines on 15' PiRod low profile platform

For this structural review we have compared design wind areas with wind areas from the existing and proposed antennas. Based on our comparison we have concluded that the existing and proposed antenna wind area will not exceed the wind areas from the original design.

By inspection, we do not believe that a complete structural analysis of this structure is required at this time. The existing tower and foundation system should have sufficient capacity to support proposed loading while maintaining the original design wind and ice requirements.

If you have any questions or concerns regarding the review of this tower structure, please feel free to contact us at (614) 221-6679.

Sincerely,

PAUL J. FORD AND COMPANY

STATE OF CONNECTICUT
KIRK R. HALL
No. PEN.23050
LICENSED
PROFESSIONAL ENGINEER

3-8-04

Kirk R. Hall, P.E.
Project Manager

Exhibit C

T · ·Mobile·

T-Mobile USA Inc.
100 Filley St, Bloomfield, CT 06002-1853
Phone: (860) 692-7100
Fax: (860) 692-7159

Technical Memo

To: Christine Farrell
From: Sumit Nahar - Radio Frequency Engineer
cc: Jason Overbey
Subject: Power Density Report for CT11765A
Date: February 26, 2004

1. Introduction:

This report is the result of an Electromagnetic Field Intensities (EMF - Power Densities) study for the T-Mobile PCS antenna installation on a Guyed Tower at 3114 Albany Ave., West Hartford, CT. This study incorporates the most conservative consideration for determining the practical combined worst case power density levels that would be theoretically encountered from locations surrounding the transmitting location.

2. Discussion:

The following assumptions were used in the calculations:

1) The emissions from T-Mobile transmitters are in the 1935-1945 MHz frequency band.
2) The antenna array consists of two sectors, with 1 antennas per sector.
3) The model number of the antennas are APX15PV-15PV-2
4) The antenna center line height is 160 ft.
5) The maximum transmit power from any sector is 1719.17 Watts Effective Radiated Power (EiRP) assuming 8 channels per sector.
6) All the antennas are simultaneously transmitting and receiving, 24 hours a day.
7) Power levels emitting from the antennas are increased by a factor of 2.56 to account for possible in-phase reflections from the surrounding environment. This is rarely the case, and if so, is never continuous.
8) The average ground level of the studied area does not change significantly with respect to the transmitting location

Equations given in "FCC OET Bulletin 65, Edition 97-01" were then used with the above information to perform the calculations.

3. Conclusion:

Based on the above worst case assumptions, the power density calculation from the T-Mobile PCS antenna installation on a Guyed Tower at 3114 Albany Ave., West Hartford, CT, is 0.0159 mW/cm^2. This value represents 1.59% of the Maximum Permissible Emission (MPE) standard of 1 milliwatt per square centimeter (mW/cm^2) set forth in the FCC/ANSI/IEEE C95.1-1991. Furthermore, the proposed antenna location for T-Mobile will not interfere with existing public safety communications, AM or FM radio broadcasts, TV, Police Communications, HAM Radio communications or any other signals in the area.

The combined Power Density from other carriers is 82.46%. The combined Power Density for the site is 84.05% of the M.P.E. standard.

New England Market

Connecticut

Worst Case Power Density

Site:	**CT11765A**
Site Address:	**3114 Albany Ave.**
Town:	**West Hartford**
Tower Height:	**400 ft.**
Tower Style:	**Guyed Tower**
Base Station TX output	20 W
Number of channels	8
Antenna Model	APX15PV-15PV-2
Cable Size	1 5/8 in.
Cable Length	180 ft.
Antenna Height	160.0 ft.
Ground Reflection	1.6
Frequency	1935.0 MHz
Jumper & Connector loss	4.50 dB
Antenna Gain	16.9 dBi
Cable Loss per foot	0.0116 dB
Total Cable Loss	2.0880 dB
Total Attenuation	6.5880 dB
Total EIRP per Channel	53.32 dBm
(In Watts)	214.90 W
Total EIRP per Sector	62.35 dBm
(In Watts)	1719.17 W
nsg	10.3120
Power Density (S) =	**0.015904 mW/cm^2**
T-Mobile Worst Case % MPE =	**1.5904%**

Equation Used :

$$S = \frac{(1000)(grf)^2(Power)*10^{(nsg/10)}}{4\pi(R)^2}$$

Office of Engineering and Technology (OET) Bulletin 65, Edition 97-01, August 1997

Co-Location Total

Carrier	**% of Standard**
Existing	77.4000 %
Cingular	5.0600 %
Total Excluding T-Mobile	**82.4600 %**
T-Mobile	1.5904
Total % MPE for Site	**84.0504%**

Miscellaneous

T-Mobile
Get more from life

100 Filley Street, Bloomfield, CT 06002
860-794-6427 fax 860-692-7159

Barry Feldman
Town Manager
Town of West Hartford
50 South Main Street
West Hartford, CT 06117

RE: **Exempt Modification – Existing Wireless Telecommunications Facility**
3114 Albany Ave., West Hartford, Connecticut

Dear Mr. Feldman:

Omnipoint Communications, Inc. a.k.a. T-Mobile (formerly Voicestream Wireless Corp.) intends to co-locate antennas on the existing monopole located at 3114 Albany Ave. in West Hartfford. Attached, please find a copy of our application to the CT Siting Council.

If you have any questions or concerns, please feel free to call me at 860-794-6427, or the CT Siting Council.

Very Truly Yours

Christine Farrell
T-Mobile Real Estate and Zoning

Attachments-Application

Cc: CSC