MJ Umali, Site Acquisition Consultant
c/o Cellco Partnership d/b/a Verizon Wireless
Centerline Communications, LLC
750 West Center Street, Floor 3
West Bridgewater, MA 02379
Mobile: (978) 568-7906
MUmali@centerlinecommunications.com

August 11, 2021

Melanie A. Bachman
Acting Executive Director
Connecticut Siting Council
10 Franklin Square
New Britain, CT 06051

RE: Notice of Exempt Modification // Site: WATERFORD REBUILD CT (ATC: 310972)
15 Miner Lane, Waterford, CT, 06385
N 41.3292 // W 72.7371

Dear Ms. Bachman:

Cellco Partnership d/b/a Verizon Wireless currently maintains 6 antennas at the 160-ft level on the existing 180-foot monopole tower, located at 15 Miner Lane, Waterford, CT. The tower is owned by American Tower. The property is owned by the A Meltel, LLC. Verizon Wireless now intends to remove 6 antennas and install 9 new ones for the LTE (3700 MHz) replacements for its 5G upgrade. Additionally, Verizon Wireless will remove 12 Remote Radio Heads (RRHs) and replace them with 6 new ones, remove 2 Hybrid cables and replace with 2 new ones, install 3 mounting kits, and 3 diplexers; altogether updating leased equipment rights, as reflected by the final configuration outlined in the structural analysis and proposed hereby.

Please accept this letter as notification pursuant to Regulations of Connecticut State Agencies §16-50j-73, for construction that constitutes an exempt modification pursuant to R.C.S.A. § 16-50j-72(b)(2). In accordance with R.C.S.A. § 16-50j-73, a copy of this letter is being sent to Robert J. Brule, First Selectman, Jill Pisechko, Zoning Official for Waterford CT, American Tower, the tower owner, and the property owner, A Meltell, LLC.

The planned modifications to the facility fall squarely within those activities explicitly provided for in R.C.S.A. § 16-50j-72(b)(2). Enclosed to accommodate this filing are construction drawings dated July 26, 2021, by RPM Engineering, a structural analysis dated June 4, 2021, by A.T. Engineering, PLLC., and a structural mount analysis by Maser Consulting Connecticut date June 30, 2021, and radio frequency (RF) analysis table showing worst-case RF emission calculation by Verizon Wireless RF Design Engineering.

1. The proposed modifications will not result in an increase in the height of the existing structure.

2. The proposed modifications will not require the extension of the site boundary.

3. The proposed modifications will not increase noise levels at the facility by six decibels or more, or to levels that exceed state and local criteria.

4. The operation of the new antennas will not increase radio frequency emissions at the facility to a level at or above the Federal Communications Commission safety standard.

5. The proposed modifications will not cause a change or alteration in the physical or environmental characteristics of the site.

6. The existing structure and its foundation can support the proposed loading, as shown in the attached structural analysis by A.T. Engineering, PLLC, dated June 4, 2021, and a structural mount analysis by Maser Consulting Connecticut, dated June 30, 2021, pursuant to certain conditions defined therein. Design and engineering are fully illustrated within final construction drawings, signed, and stamped dated July 26, 2021.

For the foregoing reasons, Verizon Wireless respectfully submits that the proposed modifications to the above referenced telecommunications facility constitute an exempt modification under R.C.S.A. § 16-50j-72(b)(2).

Sincerely,

MJ Umali

_____

MJ Umali, Site Acquisition Consultant
c/o Cellco Partnership d/b/a Verizon Wireless
Centerline Communications, LLC
750 West Center Street, Floor 3
West Bridgewater, MA 02379
Mobile: (978) 568-7906
MUmali@centerlinecommunications.com

Attachments

cc: Robert J. Brule, First Selectman - as chief elected official
Jill Pisechko, Zoning Official for Waterford CT - as P&Z official
American Tower Corporation – as the tower owner
A Meltell, LLC – as the ground owner

UPS CampusShip: View/Print Label

1. **Ensure there are no other shipping or tracking labels attached to your package.** Select the Print button on the print dialog box that appears. Note: If your browser does not support this function select Print from the File menu to print the label.

2. **Fold the printed label at the solid line below.** Place the label in a UPS Shipping Pouch. If you do not have a pouch, affix the folded label using clear plastic shipping tape over the entire label.

3. **GETTING YOUR SHIPMENT TO UPS**
   Customers with a Daily Pickup
   Your driver will pickup your shipment(s) as usual.

   Customers without a Daily Pickup
   Take your package to any location of The UPS Store®, UPS Access Point(TM) location, UPS Drop Box, UPS Customer Center, Staples® or Authorized Shipping Outlet near you. Items sent via UPS Return Services(SM) (including via Ground) are also accepted at Drop Boxes. To find the location nearest you, please visit the Resources area of CampusShip and select UPS Locations.
   Schedule a same day or future day Pickup to have a UPS driver pickup all your CampusShip packages.
   Hand the package to any UPS driver in your area.

UPS Access Point™
CVS STORE # 972
555 WASHINGTON ST
SOUTH EASTON ,MA 02375

UPS Access Point™
CVS STORE # 7232
689 DEPOT ST
NORTH EASTON ,MA 02356

UPS Access Point™
TOWN LINE GENERAL STORE
450 E CENTER ST
WEST BRIDGEWATER ,MA 02379

FOLD HERE

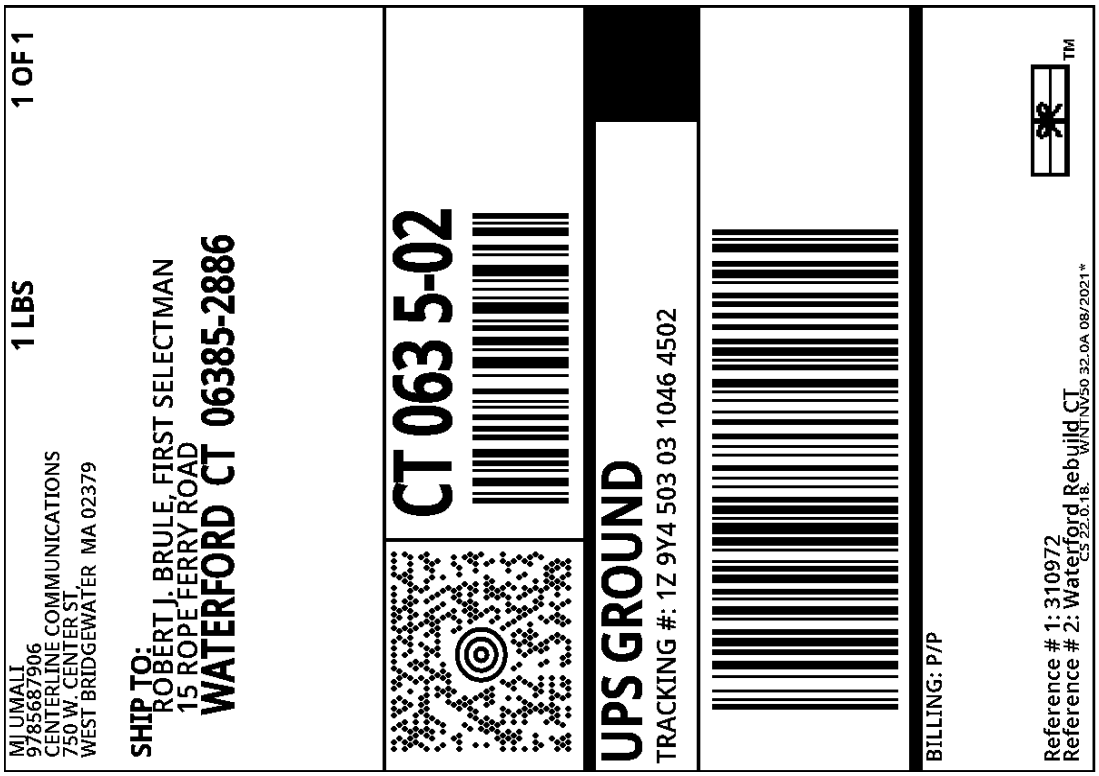

UPS CampusShip: View/Print Label

1. **Ensure there are no other shipping or tracking labels attached to your package.** Select the Print button on the print dialog box that appears. Note: If your browser does not support this function select Print from the File menu to print the label.

2. **Fold the printed label at the solid line below.** Place the label in a UPS Shipping Pouch. If you do not have a pouch, affix the folded label using clear plastic shipping tape over the entire label.

3. **GETTING YOUR SHIPMENT TO UPS**
   Customers with a Daily Pickup
   Your driver will pickup your shipment(s) as usual.

   Customers without a Daily Pickup
   Take your package to any location of The UPS Store®, UPS Access Point(TM) location, UPS Drop Box, UPS Customer Center, Staples® or Authorized Shipping Outlet near you. Items sent via UPS Return Services(SM) (including via Ground) are also accepted at Drop Boxes. To find the location nearest you, please visit the Resources area of CampusShip and select UPS Locations.
   Schedule a same day or future day Pickup to have a UPS driver pickup all your CampusShip packages.
   Hand the package to any UPS driver in your area.

UPS Access Point™
CVS STORE # 972
555 WASHINGTON ST
SOUTH EASTON ,MA 02375

UPS Access Point™
CVS STORE # 7232
689 DEPOT ST
NORTH EASTON ,MA 02356

UPS Access Point™
TOWN LINE GENERAL STORE
450 E CENTER ST
WEST BRIDGEWATER ,MA 02379

FOLD HERE

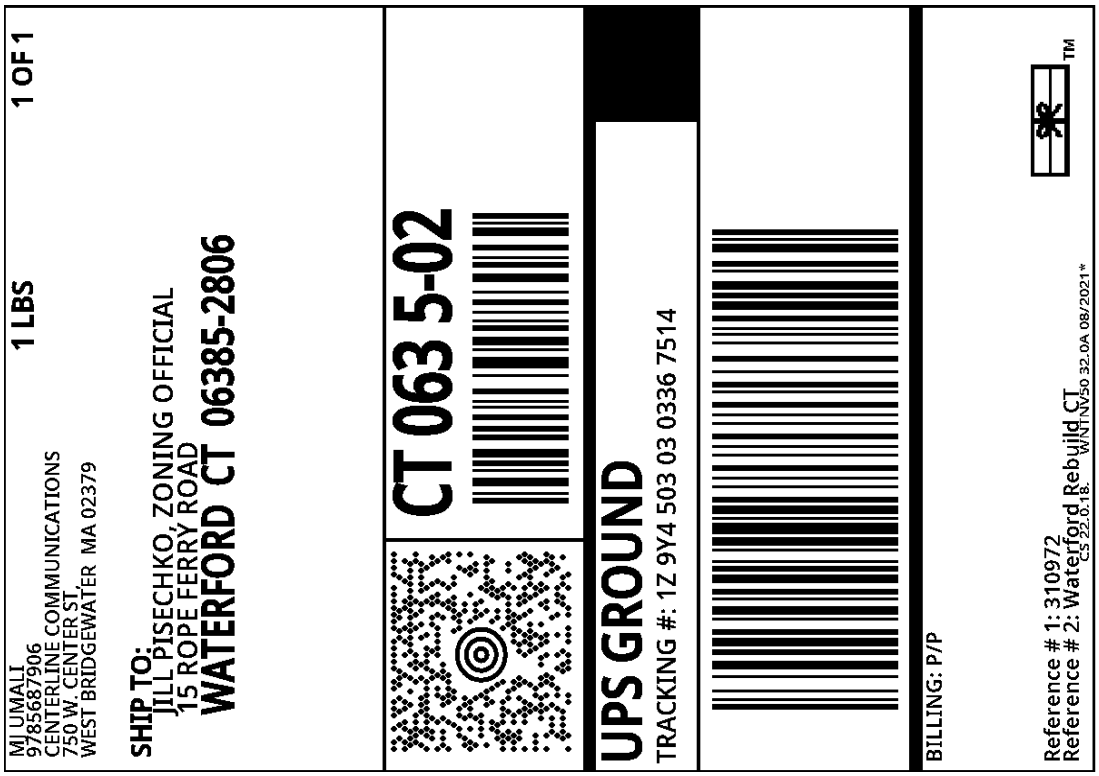

UPS CampusShip: View/Print Label

1. **Ensure there are no other shipping or tracking labels attached to your package.** Select the Print button on the print dialog box that appears. Note: If your browser does not support this function select Print from the File menu to print the label.

2. **Fold the printed label at the solid line below.** Place the label in a UPS Shipping Pouch. If you do not have a pouch, affix the folded label using clear plastic shipping tape over the entire label.

3. **GETTING YOUR SHIPMENT TO UPS**
   Customers with a Daily Pickup
   Your driver will pickup your shipment(s) as usual.

   Customers without a Daily Pickup
   Take your package to any location of The UPS Store®, UPS Access Point(TM) location, UPS Drop Box, UPS Customer Center, Staples® or Authorized Shipping Outlet near you. Items sent via UPS Return Services(SM) (including via Ground) are also accepted at Drop Boxes. To find the location nearest you, please visit the Resources area of CampusShip and select UPS Locations.
   Schedule a same day or future day Pickup to have a UPS driver pickup all your CampusShip packages.
   Hand the package to any UPS driver in your area.

UPS Access Point™
CVS STORE # 972
555 WASHINGTON ST
SOUTH EASTON ,MA 02375

UPS Access Point™
CVS STORE # 7232
689 DEPOT ST
NORTH EASTON ,MA 02356

UPS Access Point™
TOWN LINE GENERAL STORE
450 E CENTER ST
WEST BRIDGEWATER ,MA 02379

FOLD HERE

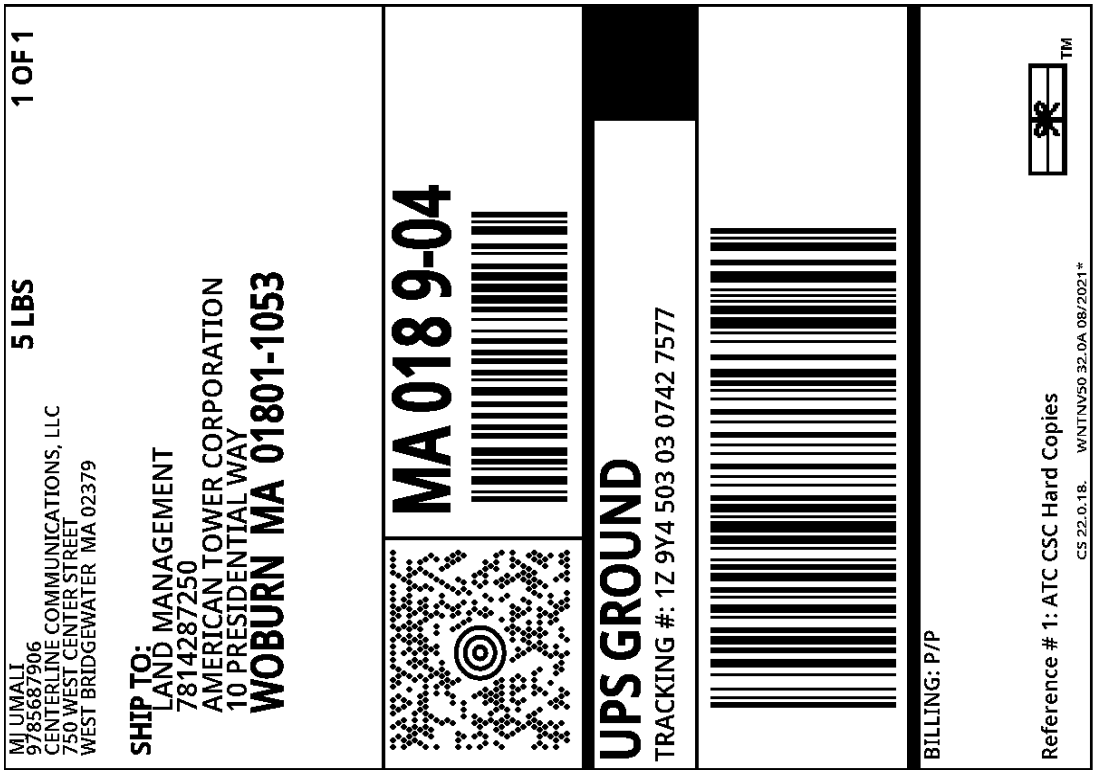

UPS CampusShip: View/Print Label

1. **Ensure there are no other shipping or tracking labels attached to your package.** Select the Print button on the print dialog box that appears. Note: If your browser does not support this function select Print from the File menu to print the label.

2. **Fold the printed label at the solid line below.** Place the label in a UPS Shipping Pouch. If you do not have a pouch, affix the folded label using clear plastic shipping tape over the entire label.

3. **GETTING YOUR SHIPMENT TO UPS**
   Customers with a Daily Pickup
   Your driver will pickup your shipment(s) as usual.

   Customers without a Daily Pickup
   Take your package to any location of The UPS Store®, UPS Access Point(TM) location, UPS Drop Box, UPS Customer Center, Staples® or Authorized Shipping Outlet near you. Items sent via UPS Return Services(SM) (including via Ground) are also accepted at Drop Boxes. To find the location nearest you, please visit the Resources area of CampusShip and select UPS Locations.
   Schedule a same day or future day Pickup to have a UPS driver pickup all your CampusShip packages.
   Hand the package to any UPS driver in your area.

UPS Access Point™
CVS STORE # 972
555 WASHINGTON ST
SOUTH EASTON ,MA 02375

UPS Access Point™
CVS STORE # 7232
689 DEPOT ST
NORTH EASTON ,MA 02356

UPS Access Point™
TOWN LINE GENERAL STORE
450 E CENTER ST
WEST BRIDGEWATER ,MA 02379

FOLD HERE

AMERICAN TOWER®
CORPORATION

Structural Analysis Report

Structure	:	**180 ft Monopole**
ATC Site Name	:	**WATERFORD REBUILD CT, CT**
ATC Asset Number	:	**310972**
Engineering Number	:	**13685301_C3_02**
Proposed Carrier	:	**VERIZON WIRELESS**
Carrier Site Name	:	**WATERFORD SE CT**
Carrier Site Number	:	**469063**
Site Location	:	**15 Miner Lane** **Waterford, CT 06385-3016** **41.329100,-72.124600**
County	:	**New London**
Date	:	**June 4, 2021**
Max Usage	:	**63%**
Result	:	**Pass**

STATE OF CONNECTICUT
ESHA KAUSHAL MODI
32593
LICENSED
PROFESSIONAL ENGINEER

Prepared By:
Hussam Al Tahan
Structural Engineer II

Hussam Al Tahan

Reviewed By:

COA: PEC.0001553

Table of Contents

Introduction 1

Supporting Documents 1

Analysis 1

Conclusion 1

Existing and Reserved Equipment 2

Equipment to be Removed 2

Proposed Equipment 3

Structure Usages 3

Foundations 3

Deflection, Twist, and Sway 3

Standard Conditions 4

Calculations ..... Attached

Introduction

The purpose of this report is to summarize results of a structural analysis performed on the 180 ft monopole to reflect the change in loading by VERIZON WIRELESS.

Supporting Documents

Tower Drawings	FWT Job #23766000, dated July 18, 2001
Foundation Drawing	ATC Job #42693971, dated December 8, 2008
Geotechnical Report	Tower Engineering Professionals Project #082973.01, dated November 7, 2008
Modifications	ATC Job #442108F2, dated November 9, 2009

Analysis

The tower was analyzed using American Tower Corporation's tower analysis software. This program considers an elastic three-dimensional model and second-order effects per ANSI/TIA-222.

Basic Wind Speed:	127 mph (3-Second Gust)
Basic Wind Speed w/ Ice:	50 mph (3-Second Gust) w/ 1" radial ice concurrent
Code:	ANSI/TIA-222-H / 2015 IBC / 2018 Connecticut State Building Code
Exposure Category:	B
Risk Category:	II
Topographic Factor Procedure:	Method 1
Topographic Category:	1
Crest Height (H):	0 ft
Spectral Response:	$Ss = 0.19$, $S_1 = 0.05$
Site Class:	D - Stiff Soil

Conclusion

Based on the analysis results, the structure meets the requirements per the applicable codes listed above. The tower and foundation can support the equipment as described in this report.

If you have any questions or require additional information, please contact American Tower via email at Engineering@americantower.com. Please include the American Tower site name, site number, and engineering number in the subject line for any questions.

Existing and Reserved Equipment

Elev.[1] (ft)	Qty	Equipment	Mount Type	Lines	Carrier
184.0	2	Generic 11' Omni	Triangular Low Profile Platform	(2) 1 5/8" Coax	OTHER
	1	Generic TTA			
170.0	3	KMW HB-X-WM-17-65-00T	Side Arm	(6) 1 5/8" Coax	CLEARWIRE CORPORATION
	3	KMW HB-X-WM-17-65-00T-TTLNA (w/BKT)			
160.0	2	RFS DB-T1-6Z-8AB-0Z	Triangular Platform with Handrails	(2) 1 5/8" (1.63"-41.3mm) Fiber (12) 1 5/8" Coax	VERIZON WIRELESS
153.0	6	Powerwave Allgon LGP17201	- Triangular Platform with Handrails	(1) 3" conduit (3) 0.39" (10mm) Fiber Trunk (6) 0.78" (19.7mm) 8 AWG 6 (12) 1 1/4" Coax (3) 2" conduit	AT&T MOBILITY
	3	Ericsson RRUS 11 (Band 12)			
	3	Ericsson RRUS 32 B66A			
	3	Ericsson RRUS 32 B2			
	3	Powerwave Allgon 7770.00			
	6	Commscope SBNHH-1D65A			
	3	Kathrein Scala 80010965			
	3	Ericsson RRUS 32 B30 (60 lbs)			
	3	Ericsson RRUS 4478 B14 (15")			
	1	Raycap DC6-48-60-18-8F ("Squid")			
	1	Raycap DC6-48-60-18-8F			
	6	CCI TPX-070821			
	6	Powerwave Allgon 7020.00 Dual Band RET			
	1	Raycap DC6-48-60-18-8C			
130.0	3	Ericsson Radio 4449 B71 B85A	Triangular Platform with Handrails (PV-LPPGS-12M-HR2-AP1)	(5) 1 5/8" Hybriflex	T-MOBILE
	3	Ericsson 4424 B25			
	3	Ericsson Air6449 B41			
	3	RFS APX16DWV-16DWVS-E-A20			
	3	RFS APXVAARR24_43-U-NA20			
	3	Ericsson RRUS 4415 B66			

Equipment to be Removed

Elev.[1] (ft)	Qty	Equipment	Mount Type	Lines	Carrier
160.0	3	Alcatel-Lucent RRH 2X60-1900	-	-	VERIZON WIRELESS
	3	Alcatel-Lucent RRH2x60 700			
	3	Amphenol Antel QUAD656C0000X			
	3	Antel BXA-70063/6CF_			
	6	Commscope HBXX-6517DS-A2M			
	3	Alcatel-Lucent B66a RRH4x45 (AWS-3)			

Proposed Equipment

Elev.[1] (ft)	Qty	Equipment	Mount Type	Lines	Carrier
160.0	3	Commscope CBC78T-DS-43-2X	Triangular Platform with Handrails	-	VERIZON WIRELESS
	3	Samsung B2/B66A RRH-BR049			
	3	Samsung B5/B13 RRH-BR04C			
	3	Samsung MT6407-77A			
	6	Commscope JAHH-65B-R3B			

[1] Contracted elevations are shown for appurtenances within contracted installation tolerances. Appurtenances outside of contract limits are shown at installed elevations.

Install proposed coax inside the pole shaft.

Structure Usages

Structural Component	Controlling Usage	Pass/Fail
Anchor Bolts	61%	Pass
Shaft	56%	Pass
Base Plate	11%	Pass
Flange Plate	19%	Pass

Foundations

Reaction Component	Original Design Reactions	Factored Design Reactions*	Analysis Reactions	% of Design
Moment (Kips-Ft)	5,615.0	7,580.3	4,014.8	53%
Shear (Kips)	38.5	52.0	32.9	63%
* The design reactions are factored by 1.35 per ANSI/TIA-222-H, Sec. 15.6.2				

The structure base reactions resulting from this analysis are acceptable when compared to those shown on the original structure drawings, therefore no modification or reinforcement of the foundation will be required.

Deflection and Sway*

Antenna Elevation (ft)	Antenna	Carrier	Deflection (ft)	Sway (Rotation) (°)
160.0	Commscope CBC78T-DS-43-2X	VERIZON WIRELESS	1.237	0.817
	Samsung B2/B66A RRH-BR049			
	Samsung B5/B13 RRH-BR04C			
	Samsung MT6407-77A			
	Commscope JAHH-65B-R3B			

***Deflection and Sway was evaluated considering a design wind speed of 60 mph (3-Second Gust) per ANSI/TIA-222-H**

AMERICAN TOWER®
CORPORATION

Standard Conditions

All engineering services performed by A.T. Engineering Service, PLLC are prepared on the basis that the information used is current and correct. This information may consist of, but is not limited to the following:

- Information supplied by the client regarding antenna, mounts and feed line loading
- Information from drawings, design and analysis documents, and field notes in the possession of A.T. Engineering Service, PLLC

It is the responsibility of the client to ensure that the information provided to A.T. Engineering Service, PLLC and used in the performance of our engineering services is correct and complete.

All assets of American Tower Corporation, its affiliates and subsidiaries (collectively "American Tower") are inspected at regular intervals. Based upon these inspections and in the absence of information to the contrary, American Tower assumes that all structures were constructed in accordance with the drawings and specifications.

Unless explicitly agreed by both the client and A.T. Engineering Service, PLLC, all services will be performed in accordance with the current revision of ANSI/TIA-222.

All services are performed, results obtained, and recommendations made in accordance with generally accepted engineering principles and practices. A.T. Engineering Service, PLLC is not responsible for the conclusions, opinions and recommendations made by others based on the information supplied herein.

© 2007 - 2021 by ATC IP LLC. All rights reserved.

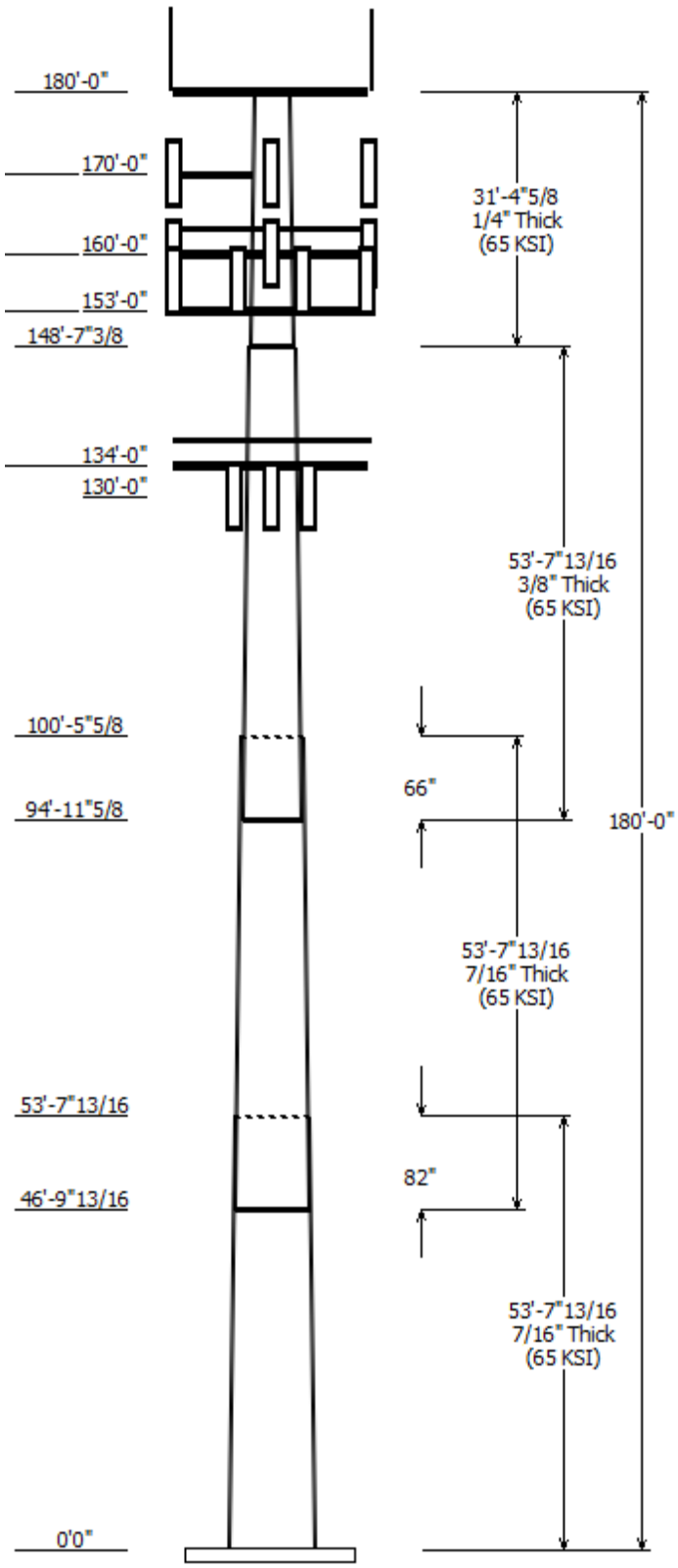

Job Information

Client : VERIZON WIRELESS
Pole : 310972 Code: ANSI/TIA-222-H
Location : WATERFORD REBUILD CT, CT
Description : 180' FWT monopole Risk Category : II
Shape : 18 Sides Exposure : B
Height : 180.00 (ft) Topo Method : Method 1
Base Elev (ft): 0.00 Topographic Category : 1
Taper: 0.228194 (in/ft)

Sections Properties

Shaft Section	Length (ft)	Diameter (in) Accross Flats Top	Bottom	Thick (in)	Joint Type	Overlap Length (in)	Shape	Steel Grade (ksi)
1	53.650	50.17	62.45	0.438		0.000	18 Sides	65
2	53.650	40.34	52.61	0.438	Slip Joint	82.000	18 Sides	65
3	53.650	30.08	42.35	0.375	Slip Joint	66.000	18 Sides	65
4	31.383	23.40	30.57	0.250	Butt Joint	0.000	18 Sides	65

Discrete Appurtenance

Attach Elev (ft)	Force Elev (ft)	Qty	Description
180.000	184.000	2	Generic 11' Omni
180.000	184.000	1	Generic TTA
180.000	180.000	1	Round Low Profile Platform
170.000	170.000	1	Side Arms
170.000	170.000	3	KMW HB-X-WM-17-65-00T
170.000	170.000	3	KMW HB-X-WM-17-65-00T-
160.000	160.000	1	Generic Round Platform with
160.000	160.000	6	Commscope JAHH-65B-R3B
160.000	160.000	3	Samsung MT6407-77A
160.000	160.000	2	RFS DB-T1-6Z-8AB-0Z
160.000	160.000	3	Samsung B5/B13 RRH-BR04C
160.000	160.000	3	Samsung B2/B66A RRH-BR049
160.000	160.000	3	Commscope CBC78T-DS-43-2X
153.000	156.000	3	Kathrein Scala 80010965
153.000	156.000	6	Commscope SBNHH-1D65A
153.000	156.000	3	Powerwave Allgon 7770.00
153.000	156.000	3	Ericsson RRUS 32 B2
153.000	156.000	3	Ericsson RRUS 32 B66A
153.000	156.000	3	Ericsson RRUS 11 (Band 12)
153.000	156.000	1	Raycap DC6-48-60-18-8C
153.000	156.000	6	Powerwave Allgon LGP17201
153.000	156.000	3	Ericsson RRUS 32 B30 (60 lbs)
153.000	156.000	3	Ericsson RRUS 4478 B14 (15")
153.000	153.000	1	Raycap DC6-48-60-18-8F
153.000	156.000	1	Raycap DC6-48-60-18-8F
153.000	153.000	6	CCI TPX-070821
153.000	153.000	6	Powerwave Allgon 7020.00
153.000	153.000	1	Flat Platform w/ Round Handrai
134.000	134.000	1	Perfect Vision PV-LPP12M-HR-
130.000	130.000	3	RFS APXVAARR24_43-U-NA20
130.000	130.000	3	RFS APX16DWV-16DWVS-E-A20
130.000	130.000	3	Ericsson Air6449 B41
130.000	130.000	3	Ericsson 4424 B25
130.000	130.000	3	Ericsson Radio 4449 B71 B85A
130.000	130.000	3	Ericsson RRUS 4415 B66

Linear Appurtenance

Elev (ft) From	To	Description	Exposed To Wind
0.000	130.0	1 5/8" Hybriflex	No
0.000	130.0	1 5/8" Hybriflex	No
0.000	153.0	0.39" (10mm)	No

0.000	153.0	0.78" (19.7mm) 8	No
0.000	153.0	1 1/4" Coax	No
0.000	153.0	2" conduit	No
0.000	156.0	3" conduit	No
0.000	160.0	1 5/8" (1.63"-	No
0.000	160.0	1 5/8" Coax	No
0.000	170.0	1 5/8" Coax	No
0.000	184.0	1 5/8" Coax	No

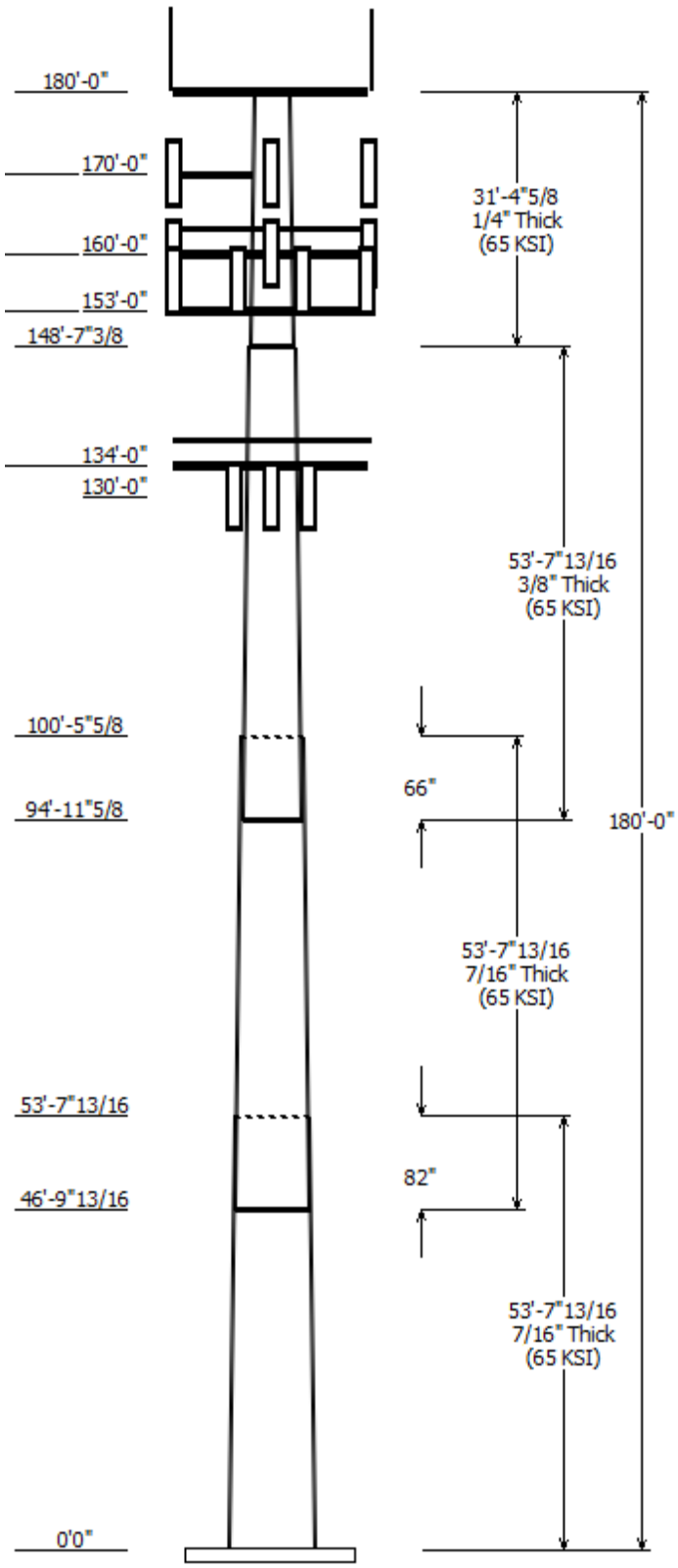

Load Cases

1.2D + 1.0W	127 mph with No Ice
0.9D + 1.0W	127 mph with No Ice (Reduced DL)
1.2D + 1.0Di + 1.0Wi	50 mph with 1.00 in Radial Ice
1.2D + 1.0Ev + 1.0Eh	Seismic
0.9D - 1.0Ev + 1.0Eh	Seismic (Reduced DL)
1.0D + 1.0W	Serviceability 60 mph

Reactions

Load Case	Moment (kip-ft)	Shear (kip)	Axial (kip)
1.2D + 1.0W	4014.82	32.93	69.36
0.9D + 1.0W	3964.58	32.91	52.01
1.2D + 1.0Di + 1.0Wi	969.78	8.02	87.25
1.2D + 1.0Ev + 1.0Eh	247.97	1.74	69.61
0.9D - 1.0Ev + 1.0Eh	244.07	1.74	48.21
1.0D + 1.0W	795.62	6.57	57.83

Dish Deflections

Load Case	Attach Elev (ft)	Deflection (in)	Rotation (deg)
	0.00	0.000	0.000

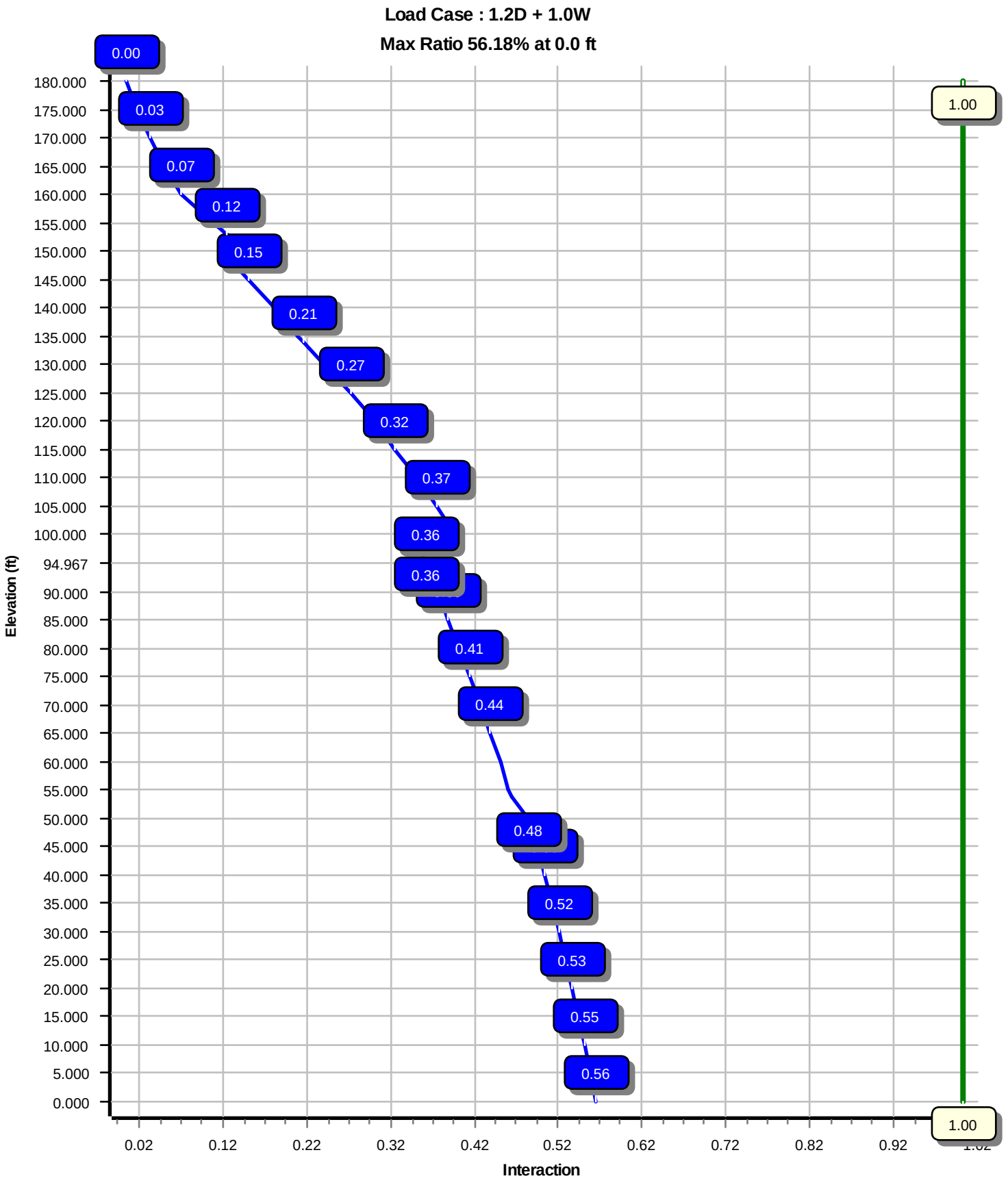
Load Case : 1.2D + 1.0W
Max Ratio 56.18% at 0.0 ft
0.00
0.03
0.07
0.12
0.15
0.21
0.27
0.32
0.37
0.36
0.36
0.41
0.44
0.48
0.52
0.53
0.55
0.56
1.00
1.00
180.000
175.000
170.000
165.000
160.000
155.000
150.000
145.000
140.000
135.000
130.000
125.000
120.000
115.000
110.000
105.000
100.000
94.967
90.000
85.000
80.000
75.000
70.000
65.000
60.000
55.000
50.000
45.000
40.000
35.000
30.000
25.000
20.000
15.000
10.000
5.000
0.000
Elevation (ft)
0.02
0.12
0.22
0.32
0.42
0.52
0.62
0.72
0.82
0.92
Interaction

Site Number: 310972 Code: ANSI/TIA-222-H © 2007 - 2021 by ATC IP LLC. All rights reserved.

Site Name: WATERFORD REBUILD CT, CT Engineering Number:13685301_C3_02 6/4/2021 7:30:40 PM

Customer: VERIZON WIRELESS

Analysis Parameters

Location :	New London County, CT	Height (ft) :	180
Code :	ANSI/TIA-222-H	Base Diameter (in) :	62.45
Shape :	18 Sides	Top Diameter (in) :	23.40
Pole Type :	Custom	Taper (in/ft) :	0.228
Pole Manfacturer :	FWT Inc	Rotation (deg) :	0.00
Kd (non-service) :	0.95	Ke :	1.00

Ice & Wind Parameters

Exposure Category:	B	Design Wind Speed Without Ice:	127 mph
Risk Category:	II	Design Wind Speed With Ice:	50 mph
Topographic Factor Procedure:	Method 1	Operational Wind Speed:	60 mph
Topographic Category:	1	Design Ice Thickness:	1.00 in
Crest Height:	0 ft	HMSL:	94.00 ft

Seismic Parameters

Analysis Method: Equivalent Lateral Force Method

Site Class: D - Stiff Soil

Period Based on Rayleigh Method (sec): 2.62

T_L (sec):	6	p:	1	C_s:	0.030
S_s:	0.191	S_1:	0.052	C_s Max:	0.030
F_a:	1.600	F_v:	2.400	C_s Min:	0.030
S_{ds}:	0.204	S_{d1}:	0.083		

Load Cases

1.2D + 1.0W	127 mph with No Ice
0.9D + 1.0W	127 mph with No Ice (Reduced DL)
1.2D + 1.0Di + 1.0Wi	50 mph with 1.00 in Radial Ice
1.2D + 1.0Ev + 1.0Eh	Seismic
0.9D - 1.0Ev + 1.0Eh	Seismic (Reduced DL)
1.0D + 1.0W	Serviceability 60 mph

 © 2007 - 2021 by ATC IP LLC. All rights reserved.

Shaft Section Properties

Sect Info	Length (ft)	Thick (in)	Fy (ksi)	Joint Type	Slip Joint Len (in)	Weight (lb)	Bottom Dia (in)	Bottom Elev (ft)	Bottom Area (in 2)	Bottom Ix (in4)	Bottom W/t Ratio	Bottom D/t Ratio	Top Dia (in)	Top Elev (ft)	Top Area (in2)	Top Ix (in4)	Top W/t Ratio	Top D/t Ratio	Taper (in/ft)
1-18	53.650	0.4375	65		0.00	14,165	62.45	0.00	86.11	41837.0	23.41	142.74	50.17	53.65	69.07	21590.1	18.46	114.69	0.228740
2-18	53.650	0.4375	65	Slip	82.00	11,672	52.61	46.82	72.45	24923.0	19.44	120.27	40.34	100.47	55.41	11149.7	14.50	92.22	0.228740
3-18	53.650	0.3750	65	Slip	66.00	7,788	42.35	94.97	49.96	11123.0	18.15	112.94	30.08	148.62	35.36	3941.7	12.38	80.21	0.228740
4-18	31.383	0.2500	65	Butt	0.00	2,266	30.57	148.62	24.06	2796.2	19.80	122.31	23.40	180.00	18.37	1244.1	14.74	93.61	0.228623
				Shaft Weight		35,890													

Discrete Appurtenance Properties

Attach Elev (ft)	Description	Qty	Ka	Vert Ecc (ft)	No Ice Weight (lb)	No Ice EPAa (sf)	No Ice Orientation Factor	Ice Weight (lb)	Ice EPAa (sf)	Ice Orientation Factor
180.00	Generic TTA	1	0.80	4.000	10.00	1.200	1.00	34.46	1.693	1.00
180.00	Generic 11' Omni	2	1.00	4.000	40.00	3.300	1.00	96.62	5.982	1.00
180.00	Round Low Profile Platform	1	1.00	0.000	1,500.00	21.700	1.00	1,940.16	34.743	1.00
170.00	KMW HB-X-WM-17-65-00T-	3	0.80	0.000	15.90	0.967	0.50	33.50	1.440	0.50
170.00	KMW HB-X-WM-17-65-00T	3	0.80	0.000	30.00	1.950	1.00	79.10	2.685	1.00
170.00	Side Arms	1	1.00	0.000	560.00	8.500	1.00	876.21	13.300	1.00
160.00	Commscope CBC78T-DS-43-2X	3	0.75	0.000	20.70	0.552	0.50	35.53	0.893	0.50
160.00	Samsung B2/B66A RRH-BR049	3	0.75	0.000	84.40	1.875	0.50	127.23	2.481	0.50
160.00	Samsung B5/B13 RRH-BR04C	3	0.75	0.000	70.30	1.875	0.50	108.70	2.481	0.50
160.00	Samsung MT6407-77A	3	0.75	0.000	81.60	4.709	0.61	150.02	5.729	0.61
160.00	RFS DB-T1-6Z-8AB-0Z	2	0.75	0.000	44.00	4.800	0.72	128.49	5.754	0.72
160.00	Commscope JAHH-65B-R3B	6	0.75	0.000	60.60	9.113	0.69	196.41	10.975	0.69
160.00	Generic Round Platform with	1	1.00	0.000	2,500.00	27.200	1.00	3,587.33	43.609	1.00
153.00	Powerwave Allgon 7020.00 Dual	6	0.75	0.000	2.20	0.339	0.50	9.03	0.613	0.50
153.00	CCI TPX-070821	6	0.75	0.000	7.50	0.469	0.50	15.61	0.789	0.50
153.00	Raycap DC6-48-60-18-8F	1	0.75	3.000	20.00	1.260	0.50	55.21	1.700	0.50
153.00	Raycap DC6-48-60-18-8F	1	0.75	0.000	31.80	1.470	0.50	73.06	1.937	0.50
153.00	Ericsson RRUS 4478 B14 (15")	3	0.75	3.000	59.40	1.650	0.50	92.63	2.217	0.50
153.00	Powerwave Allgon LGP17201	6	0.75	3.000	31.00	1.668	0.50	56.50	2.237	0.50
153.00	Raycap DC6-48-60-18-8C	1	0.75	3.000	16.00	2.030	0.50	54.93	2.538	0.50
153.00	Ericsson RRUS 11 (Band 12)	3	0.75	3.000	50.00	2.566	0.67	95.58	3.266	0.67
153.00	Ericsson RRUS 32 B30 (60 lbs)	3	0.75	3.000	60.00	2.692	0.67	107.52	3.465	0.67
153.00	Ericsson RRUS 32 B66A	3	0.75	3.000	50.70	2.720	0.67	99.71	3.498	0.67
153.00	Ericsson RRUS 32 B2	3	0.75	3.000	53.00	2.743	0.67	102.18	3.525	0.67
153.00	Powerwave Allgon 7770.00	3	0.75	3.000	35.00	5.508	0.65	118.47	6.196	0.65
153.00	Commscope SBNHH-1D65A	6	0.75	3.000	33.50	5.883	0.69	124.02	7.305	0.69
153.00	Kathrein Scala 80010965	3	0.75	3.000	97.60	13.814	0.62	275.88	15.854	0.62
153.00	Flat Platform w/ Round Handrails	1	1.00	0.000	2,000.00	34.800	1.00	2,931.71	51.012	1.00
134.00	Perfect Vision PV-LPP12M-HR-	1	1.00	0.000	2,117.00	34.400	1.00	3,021.63	54.790	1.00
130.00	Ericsson RRUS 4415 B66	3	0.75	0.000	46.00	1.650	0.50	74.46	2.208	0.50
130.00	Ericsson Radio 4449 B71 B85A	3	0.75	0.000	75.00	1.650	0.50	114.53	2.208	0.50
130.00	Ericsson 4424 B25	3	0.75	0.000	86.00	2.052	0.67	133.92	2.672	0.67
130.00	Ericsson Air6449 B41	3	0.75	0.000	104.00	5.682	0.63	193.57	6.725	0.63
130.00	RFS APX16DWV-16DWVS-E-A20	3	0.75	0.000	40.70	6.586	0.60	117.48	8.009	0.60
130.00	RFS APXVAARR24_43-U-NA20	3	0.75	0.000	127.90	20.243	0.63	385.93	22.681	0.63
Totals	Num Loadings:35	100			13,296.20			22,772.17		

Linear Appurtenance Properties

Load Case Azimuth (deg) :

Elev From (ft)	Elev To (ft)	Qty	Description	Coax Dia (in)	Coax Wt (lb/ft)	Flat	Max Coax / Row	Dist Between Rows (in)	Dist Between Cols (in)	Azimuth (deg)	Dist From Face (in)	Exposed To Wind	Carrier
0.00	184.00	2	1 5/8" Coax	1.98	0.82	N	0	0.00	0.00	0	0.00	N	Other
0.00	170.00	6	1 5/8" Coax	1.98	0.82	N	0	0.00	0.00	0	0.00	N	CLEARWIRE

© 2007 - 2021 by ATC IP LLC. All rights reserved.

0.00	160.00	2	1 5/8" (1.63"-41.3mm)	1.63	1.61	N	0	0.00	0.00	0	0.00	N	VERIZON WIRELESS
0.00	160.00	12	1 5/8" Coax	1.98	0.82	N	0	0.00	0.00	0	0.00	N	VERIZON WIRELESS
0.00	156.00	1	3" conduit	3.50	7.58	N	0	0.00	0.00	0	0.00	N	AT&T MOBILITY
0.00	153.00	3	0.39" (10mm) Fiber	0.39	0.06	N	0	0.00	0.00	0	0.00	N	AT&T MOBILITY
0.00	153.00	6	0.78" (19.7mm) 8 AWG	0.78	0.59	N	0	0.00	0.00	0	0.00	N	AT&T MOBILITY
0.00	153.00	12	1 1/4" Coax	1.55	0.63	N	0	0.00	0.00	0	0.00	N	AT&T MOBILITY
0.00	153.00	3	2" conduit	2.38	3.65	N	0	0.00	0.00	0	0.00	N	AT&T MOBILITY
0.00	130.00	2	1 5/8" Hybriflex	1.98	1.30	N	0	0.00	0.00	0	0.00	N	T-MOBILE
0.00	130.00	3	1 5/8" Hybriflex	1.98	1.30	N	0	0.00	0.00	0	0.00	N	T-MOBILE

 © 2007 - 2021 by ATC IP LLC. All rights reserved.

Segment Properties (Max Len : 5. ft)

Seg Top Elev (ft)	Description	Thick (in)	Flat Dia (in)	Area (in^2)	Ix (in^4)	W/t Ratio	D/t Ratio	F'y (ksi)	S (in^3)	Z (in^3)	Weight (lb)
0.00		0.4375	62.450	86.109	41,837.0	23.41	142.74	73.9	1319.	0.0	0.0
5.00		0.4375	61.306	84.521	39,564.6	22.95	140.13	74.4	1271.	0.0	1,451.5
10.00		0.4375	60.163	82.933	37,376.0	22.48	137.51	75.0	1223.	0.0	1,424.5
15.00		0.4375	59.019	81.345	35,269.7	22.02	134.90	75.5	1177.	0.0	1,397.5
20.00		0.4375	57.875	79.757	33,244.0	21.56	132.29	76.0	1131.	0.0	1,370.5
25.00		0.4375	56.731	78.168	31,297.4	21.10	129.67	76.6	1086.	0.0	1,343.5
30.00		0.4375	55.588	76.580	29,428.4	20.64	127.06	77.1	1042.	0.0	1,316.4
35.00		0.4375	54.444	74.992	27,635.2	20.18	124.44	77.7	999.8	0.0	1,289.4
40.00		0.4375	53.300	73.404	25,916.4	19.72	121.83	78.2	957.7	0.0	1,262.4
45.00		0.4375	52.157	71.816	24,270.4	19.26	119.22	78.8	916.5	0.0	1,235.4
46.82	Bot - Section 2	0.4375	51.741	71.239	23,690.1	19.09	118.27	78.9	901.8	0.0	442.2
50.00		0.4375	51.013	70.228	22,695.7	18.80	116.60	79.3	876.3	0.0	1,545.6
53.65	Top - Section 1	0.4375	51.053	70.284	22,749.7	18.81	116.69	79.3	877.7	0.0	1,745.2
55.00		0.4375	50.744	69.855	22,335.9	18.69	115.99	79.4	867.0	0.0	321.9
60.00		0.4375	49.601	68.267	20,846.8	18.23	113.37	80.0	827.8	0.0	1,175.0
65.00		0.4375	48.457	66.679	19,425.5	17.77	110.76	80.5	789.6	0.0	1,148.0
70.00		0.4375	47.313	65.090	18,070.3	17.31	108.14	81.0	752.3	0.0	1,121.0
75.00		0.4375	46.170	63.502	16,779.7	16.84	105.53	81.6	715.8	0.0	1,093.9
80.00		0.4375	45.026	61.914	15,552.0	16.38	102.92	82.1	680.3	0.0	1,066.9
85.00		0.4375	43.882	60.326	14,385.7	15.92	100.30	82.6	645.7	0.0	1,039.9
90.00		0.4375	42.738	58.738	13,279.2	15.46	97.69	82.6	612.0	0.0	1,012.9
94.97	Bot - Section 3	0.4375	41.602	57.160	12,237.7	15.00	95.09	82.6	579.4	0.0	979.4
95.00		0.4375	41.595	57.150	12,230.9	15.00	95.07	82.6	579.2	0.0	12.1
100.0		0.4375	40.451	55.562	11,239.4	14.54	92.46	82.6	547.3	0.0	1,797.1
100.4	Top - Section 2	0.3750	41.094	48.464	10,152.6	17.56	109.58	80.7	486.6	0.0	165.2
105.0		0.3750	40.057	47.230	9,396.5	17.07	106.82	81.3	462.0	0.0	738.1
110.0		0.3750	38.914	45.869	8,607.2	16.53	103.77	82.0	435.7	0.0	792.0
115.0		0.3750	37.770	44.508	7,863.4	16.00	100.72	82.6	410.1	0.0	768.8
120.0		0.3750	36.626	43.146	7,163.8	15.46	97.67	82.6	385.2	0.0	745.7
125.0		0.3750	35.483	41.785	6,506.9	14.92	94.62	82.6	361.2	0.0	722.5
130.0		0.3750	34.339	40.424	5,891.5	14.38	91.57	82.6	337.9	0.0	699.3
134.0		0.3750	33.424	39.335	5,428.1	13.95	89.13	82.6	319.9	0.0	542.8
135.0		0.3750	33.195	39.063	5,316.1	13.85	88.52	82.6	315.4	0.0	133.4
140.0		0.3750	32.051	37.701	4,779.5	13.31	85.47	82.6	293.7	0.0	653.0
145.0		0.3750	30.908	36.340	4,280.3	12.77	82.42	82.6	272.8	0.0	629.9
148.6	Top - Section 3	0.3750	30.080	35.356	3,941.7	12.38	80.21	82.6	258.1	0.0	441.2
148.6	Bot - Section 4	0.2500	30.577	24.064	2,796.2	19.80	122.31	78.1	180.1	0.0	
150.0		0.2500	30.261	23.813	2,709.6	19.58	121.04	78.4	176.4	0.0	112.7
153.0		0.2500	29.575	23.268	2,528.1	19.10	118.30	78.9	168.4	0.0	240.3
155.0		0.2500	29.118	22.906	2,411.6	18.77	116.47	79.3	163.1	0.0	157.1
160.0		0.2500	27.974	21.999	2,136.3	17.97	111.90	80.3	150.4	0.0	382.0
165.0		0.2500	26.831	21.091	1,882.8	17.16	107.33	81.2	138.2	0.0	366.6
170.0		0.2500	25.688	20.184	1,650.2	16.35	102.75	82.2	126.5	0.0	351.1
175.0		0.2500	24.545	19.277	1,437.6	15.55	98.18	82.6	115.4	0.0	335.7
180.0		0.2500	23.402	18.370	1,244.1	14.74	93.61	82.6	104.7	0.0	320.3
											35,889.7

 © 2007 - 2021 by ATC IP LLC. All rights reserved.

Load Case: 1.2D + 1.0W 127 mph with No Ice 24 Iterations

Gust Response Factor :1.10
Dead Load Factor :1.20
Wind Load Factor :1.00

Applied Segment Forces Summary

		Shaft Forces		Discrete Forces				Linear Forces		Sum of Forces			
Seg Elev (ft)	Description	Wind FX (lb)	Dead Load (lb)	Wind FX (lb)	Torsion MY (lb-ft)	Moment MZ (lb-ft)	Dead Load (lb)	Wind FX (lb)	Dead Load (lb)	Wind FX (lb)	Dead Load (lb)	Torsion MY (lb-ft)	Moment MZ (lb)
0.00		287.6	0.0					0.0	0.0	287.6	0.0	0.0	0.0
5.00		570.0	1,741.8					0.0	335.6	570.0	2,077.4	0.0	0.0
10.00		559.3	1,709.4					0.0	335.6	559.3	2,045.0	0.0	0.0
15.00		548.7	1,677.0					0.0	335.6	548.7	2,012.6	0.0	0.0
20.00		538.1	1,644.6					0.0	335.6	538.1	1,980.2	0.0	0.0
25.00		527.4	1,612.2					0.0	335.6	527.4	1,947.7	0.0	0.0
30.00		522.9	1,579.7					0.0	335.6	522.9	1,915.3	0.0	0.0
35.00		529.0	1,547.3					0.0	335.6	529.0	1,882.9	0.0	0.0
40.00		538.1	1,514.9					0.0	335.6	538.1	1,850.5	0.0	0.0
45.00		370.1	1,482.5					0.0	335.6	370.1	1,818.0	0.0	0.0
46.82	Bot - Section 2	276.6	530.6					0.0	121.9	276.6	652.5	0.0	0.0
50.00		381.8	1,854.7					0.0	213.7	381.8	2,068.3	0.0	0.0
53.65	Top - Section 1	280.1	2,094.2					0.0	245.0	280.1	2,339.2	0.0	0.0
55.00		356.9	386.3					0.0	90.6	356.9	476.9	0.0	0.0
60.00		562.4	1,410.0					0.0	335.6	562.4	1,745.6	0.0	0.0
65.00		562.2	1,377.6					0.0	335.6	562.2	1,713.1	0.0	0.0
70.00		560.7	1,345.1					0.0	335.6	560.7	1,680.7	0.0	0.0
75.00		558.0	1,312.7					0.0	335.6	558.0	1,648.3	0.0	0.0
80.00		554.4	1,280.3					0.0	335.6	554.4	1,615.9	0.0	0.0
85.00		549.7	1,247.9					0.0	335.6	549.7	1,583.4	0.0	0.0
90.00		542.4	1,215.4					0.0	335.6	542.4	1,551.0	0.0	0.0
94.97	Bot - Section 3	270.7	1,175.2					0.0	333.3	270.7	1,508.6	0.0	0.0
95.00		274.0	14.6					0.0	2.2	274.0	16.8	0.0	0.0
100.00		297.4	2,156.6					0.0	335.6	297.4	2,492.1	0.0	0.0
100.47	Top - Section 2	268.5	198.2					0.0	31.3	268.5	229.5	0.0	0.0
105.00		507.8	885.7					0.0	304.3	507.8	1,190.0	0.0	0.0
110.00		524.8	950.4					0.0	335.6	524.8	1,286.0	0.0	0.0
115.00		515.9	922.6					0.0	335.6	515.9	1,258.2	0.0	0.0
120.00		506.4	894.8					0.0	335.6	506.4	1,230.4	0.0	0.0
125.00		496.3	867.0					0.0	335.6	496.3	1,202.6	0.0	0.0
130.00	Appurtenance(s)	438.1	839.2	2,402.2	0.0	0.0	1,726.6	0.0	335.6	2,840.3	2,901.4	0.0	0.0
134.00	Appurtenance(s)	240.1	651.4	1,589.3	0.0	0.0	2,540.4	0.0	237.3	1,829.5	3,429.0	0.0	0.0
135.00		282.1	160.1					0.0	59.3	282.1	219.4	0.0	0.0
140.00		463.1	783.6					0.0	296.6	463.1	1,080.2	0.0	0.0
145.00		390.1	755.8					0.0	296.6	390.1	1,052.4	0.0	0.0
148.62	Top - Section 3	223.5	529.4					0.0	214.5	223.5	743.9	0.0	0.0
150.00		194.6	135.2					0.0	82.1	194.6	217.3	0.0	0.0
153.00	Appurtenance(s)	219.8	288.4	5,093.6	0.0	9,930.1	4,476.1	0.0	177.9	5,313.4	4,942.4	0.0	0.0
155.00		300.4	188.5					0.0	65.3	300.4	253.8	0.0	0.0
160.00	Appurtenance(s)	419.9	458.4	3,498.6	0.0	0.0	4,467.1	0.0	126.8	3,918.5	5,052.3	0.0	0.0
165.00		406.3	439.9					0.0	39.4	406.3	479.2	0.0	0.0
170.00	Appurtenance(s)	392.3	421.4	709.2	0.0	0.0	837.2	0.0	39.4	1,101.5	1,298.0	0.0	0.0
175.00		378.0	402.8					0.0	9.8	378.0	412.7	0.0	0.0
180.00	Appurtenance(s)	185.4	384.3	1,473.2	0.0	1,529.6	1,908.0	0.0	9.8	1,658.6	2,302.2	0.0	0.0
									Totals:	33,138.0	69,402.9	0.00	0.00

© 2007 - 2021 by ATC IP LLC. All rights reserved.

Load Case: 1.2D + 1.0W 127 mph with No Ice 24 Iterations

Gust Response Factor :1.10
Dead Load Factor :1.20
Wind Load Factor :1.00

Calculated Forces

Seg Elev (ft)	Pu FY (-) (kips)	Vu FX (-) (kips)	Tu MY (ft-kips)	Mu MZ (ft-kips)	Mu MX (ft-kips)	Resultant Moment (ft-kips)	phi Pn (kips)	phi Vn (kips)	phi Tn (ft-kips)	phi Mn (ft-kips)	Total Deflect (in)	Rotation (deg)	Ratio
0.00	-69.36	-32.93	0.00	-4,014.82	0.00	4,014.82	5,724.86	1,511.21	8,464.29	7,310.45	0.00	0.00	0.562
5.00	-67.21	-32.52	0.00	-3,850.16	0.00	3,850.16	5,660.51	1,483.34	8,154.99	7,094.04	0.07	-0.13	0.555
10.00	-65.09	-32.11	0.00	-3,687.57	0.00	3,687.57	5,594.62	1,455.47	7,851.45	6,878.77	0.29	-0.27	0.548
15.00	-63.01	-31.70	0.00	-3,527.04	0.00	3,527.04	5,527.18	1,427.60	7,553.66	6,664.77	0.64	-0.41	0.541
20.00	-60.95	-31.29	0.00	-3,368.55	0.00	3,368.55	5,458.18	1,399.73	7,261.62	6,452.13	1.14	-0.55	0.534
25.00	-58.94	-30.89	0.00	-3,212.09	0.00	3,212.09	5,387.64	1,371.86	6,975.35	6,240.97	1.79	-0.69	0.526
30.00	-56.95	-30.48	0.00	-3,057.65	0.00	3,057.65	5,315.55	1,343.98	6,694.83	6,031.39	2.58	-0.83	0.518
35.00	-55.00	-30.07	0.00	-2,905.23	0.00	2,905.23	5,241.91	1,316.11	6,420.07	5,823.52	3.53	-0.97	0.510
40.00	-53.09	-29.63	0.00	-2,754.90	0.00	2,754.90	5,166.71	1,288.24	6,151.07	5,617.45	4.63	-1.12	0.501
45.00	-51.22	-29.31	0.00	-2,606.76	0.00	2,606.76	5,089.97	1,260.37	5,887.82	5,413.30	5.88	-1.27	0.492
46.82	-50.54	-29.09	0.00	-2,553.52	0.00	2,553.52	5,061.71	1,250.24	5,793.60	5,339.62	6.37	-1.32	0.489
50.00	-48.43	-28.74	0.00	-2,460.93	0.00	2,460.93	5,011.68	1,232.50	5,630.33	5,211.18	7.28	-1.42	0.482
53.65	-46.06	-28.46	0.00	-2,356.02	0.00	2,356.02	5,014.45	1,233.48	5,639.26	5,218.23	8.41	-1.53	0.461
55.00	-45.55	-28.17	0.00	-2,317.59	0.00	2,317.59	4,993.06	1,225.95	5,570.67	5,164.00	8.85	-1.57	0.458
60.00	-43.75	-27.66	0.00	-2,176.76	0.00	2,176.76	4,912.86	1,198.08	5,320.29	4,964.54	10.57	-1.71	0.448
65.00	-41.99	-27.16	0.00	-2,038.44	0.00	2,038.44	4,831.10	1,170.21	5,075.66	4,767.35	12.44	-1.86	0.437
70.00	-40.26	-26.64	0.00	-1,902.66	0.00	1,902.66	4,747.80	1,142.34	4,836.80	4,572.55	14.46	-2.00	0.425
75.00	-38.57	-26.12	0.00	-1,769.47	0.00	1,769.47	4,662.94	1,114.47	4,603.69	4,380.25	16.63	-2.14	0.413
80.00	-36.91	-25.60	0.00	-1,638.87	0.00	1,638.87	4,576.54	1,086.59	4,376.33	4,190.55	18.95	-2.29	0.400
85.00	-35.29	-25.07	0.00	-1,510.89	0.00	1,510.89	4,481.93	1,058.72	4,154.74	3,997.63	21.43	-2.43	0.386
90.00	-33.70	-24.54	0.00	-1,385.54	0.00	1,385.54	4,363.94	1,030.85	3,938.90	3,788.90	24.05	-2.58	0.374
94.97	-32.18	-24.24	0.00	-1,263.64	0.00	1,263.64	4,246.74	1,003.17	3,730.20	3,587.10	26.81	-2.72	0.360
95.00	-32.14	-24.01	0.00	-1,262.83	0.00	1,262.83	4,245.95	1,002.98	3,728.82	3,585.76	26.83	-2.72	0.360
100.00	-29.64	-23.63	0.00	-1,142.79	0.00	1,142.79	4,127.96	975.11	3,524.49	3,388.23	29.75	-2.86	0.345
100.47	-29.39	-23.39	0.00	-1,131.76	0.00	1,131.76	3,522.04	850.55	3,128.34	2,946.90	30.03	-2.87	0.393
105.00	-28.18	-22.89	0.00	-1,025.74	0.00	1,025.74	3,456.72	828.89	2,971.06	2,817.93	32.81	-3.00	0.373
110.00	-26.86	-22.36	0.00	-911.32	0.00	911.32	3,383.20	805.00	2,802.29	2,677.76	36.03	-3.14	0.349
115.00	-25.58	-21.84	0.00	-799.52	0.00	799.52	3,306.70	781.11	2,638.45	2,538.79	39.40	-3.28	0.323
120.00	-24.34	-21.31	0.00	-690.34	0.00	690.34	3,205.56	757.22	2,479.56	2,385.12	42.91	-3.42	0.298
125.00	-23.12	-20.80	0.00	-583.77	0.00	583.77	3,104.43	733.33	2,325.59	2,236.25	46.55	-3.55	0.269
130.00	-20.37	-17.81	0.00	-479.79	0.00	479.79	3,003.30	709.44	2,176.56	2,092.18	50.33	-3.66	0.237
134.00	-17.06	-15.78	0.00	-408.54	0.00	408.54	2,922.39	690.33	2,060.89	1,980.38	53.43	-3.75	0.213
135.00	-16.84	-15.50	0.00	-392.76	0.00	392.76	2,902.16	685.55	2,032.46	1,952.91	54.22	-3.77	0.207
140.00	-15.77	-14.99	0.00	-315.24	0.00	315.24	2,801.03	661.66	1,893.30	1,818.43	58.22	-3.86	0.180
145.00	-14.73	-14.55	0.00	-240.27	0.00	240.27	2,699.90	637.77	1,759.08	1,688.75	62.30	-3.95	0.148
148.62	-13.99	-14.28	0.00	-187.65	0.00	187.65	2,626.75	620.49	1,665.06	1,597.93	65.31	-4.00	0.123
148.62	-13.99	-14.28	0.00	-187.65	0.00	187.65	1,691.62	422.31	1,156.82	1,055.16	65.31	-4.00	0.187
150.00	-13.78	-14.08	0.00	-167.89	0.00	167.89	1,679.60	417.91	1,132.82	1,036.65	66.47	-4.01	0.171
153.00	-9.22	-8.44	0.00	-115.72	0.00	115.72	1,653.13	408.36	1,081.64	996.80	69.01	-4.06	0.122
155.00	-8.98	-8.13	0.00	-98.84	0.00	98.84	1,635.17	401.99	1,048.18	970.47	70.72	-4.09	0.108
160.00	-4.22	-3.86	0.00	-58.20	0.00	58.20	1,589.20	386.07	966.82	905.51	75.02	-4.13	0.067
165.00	-3.77	-3.42	0.00	-38.90	0.00	38.90	1,541.67	370.16	888.75	841.89	79.36	-4.16	0.049
170.00	-2.56	-2.23	0.00	-21.79	0.00	21.79	1,492.60	354.24	813.96	779.71	83.73	-4.19	0.030

© 2007 - 2021 by ATC IP LLC. All rights reserved.

Load Case: 1.2D + 1.0W 127 mph with No Ice 24 Iterations

Gust Response Factor :1.10
Dead Load Factor :1.20
Wind Load Factor :1.00

175.00	-2.17	-1.82	0.00	-10.64	0.00	10.64	1,432.22	338.32	742.46	714.22	88.12	-4.20	0.016
180.00	0.00	-1.66	0.00	-1.53	0.00	1.53	1,364.83	322.40	674.25	648.27	92.52	-4.21	0.002

© 2007 - 2021 by ATC IP LLC. All rights reserved.

Load Case: 0.9D + 1.0W 127 mph with No Ice (Reduced DL) 24 Iterations

Gust Response Factor :1.10
Dead Load Factor :0.90
Wind Load Factor :1.00

Applied Segment Forces Summary

Seg Elev (ft)	Description	Shaft Forces Wind FX (lb)	Shaft Forces Dead Load (lb)	Discrete Forces Wind FX (lb)	Discrete Forces Torsion MY (lb-ft)	Discrete Forces Moment MZ (lb-ft)	Discrete Forces Dead Load (lb)	Linear Forces Wind FX (lb)	Linear Forces Dead Load (lb)	Sum of Forces Wind FX (lb)	Sum of Forces Dead Load (lb)	Sum of Forces Torsion MY (lb-ft)	Sum of Forces Moment MZ (lb)
0.00		287.6	0.0					0.0	0.0	287.6	0.0	0.0	0.0
5.00		570.0	1,306.4					0.0	251.7	570.0	1,558.1	0.0	0.0
10.00		559.3	1,282.1					0.0	251.7	559.3	1,533.8	0.0	0.0
15.00		548.7	1,257.7					0.0	251.7	548.7	1,509.4	0.0	0.0
20.00		538.1	1,233.4					0.0	251.7	538.1	1,485.1	0.0	0.0
25.00		527.4	1,209.1					0.0	251.7	527.4	1,460.8	0.0	0.0
30.00		522.9	1,184.8					0.0	251.7	522.9	1,436.5	0.0	0.0
35.00		529.0	1,160.5					0.0	251.7	529.0	1,412.2	0.0	0.0
40.00		538.1	1,136.2					0.0	251.7	538.1	1,387.8	0.0	0.0
45.00		370.1	1,111.8					0.0	251.7	370.1	1,363.5	0.0	0.0
46.82	Bot - Section 2	276.6	397.9					0.0	91.4	276.6	489.4	0.0	0.0
50.00		381.8	1,391.0					0.0	160.2	381.8	1,551.2	0.0	0.0
53.65	Top - Section 1	280.1	1,570.7					0.0	183.7	280.1	1,754.4	0.0	0.0
55.00		356.9	289.7					0.0	68.0	356.9	357.6	0.0	0.0
60.00		562.4	1,057.5					0.0	251.7	562.4	1,309.2	0.0	0.0
65.00		562.2	1,033.2					0.0	251.7	562.2	1,284.9	0.0	0.0
70.00		560.7	1,008.9					0.0	251.7	560.7	1,260.5	0.0	0.0
75.00		558.0	984.5					0.0	251.7	558.0	1,236.2	0.0	0.0
80.00		554.4	960.2					0.0	251.7	554.4	1,211.9	0.0	0.0
85.00		549.7	935.9					0.0	251.7	549.7	1,187.6	0.0	0.0
90.00		542.4	911.6					0.0	251.7	542.4	1,163.3	0.0	0.0
94.97	Bot - Section 3	270.7	881.4					0.0	250.0	270.7	1,131.4	0.0	0.0
95.00		274.0	10.9					0.0	1.7	274.0	12.6	0.0	0.0
100.00		297.4	1,617.4					0.0	251.7	297.4	1,869.1	0.0	0.0
100.47	Top - Section 2	268.5	148.7					0.0	23.5	268.5	172.1	0.0	0.0
105.00		507.8	664.3					0.0	228.2	507.8	892.5	0.0	0.0
110.00		524.8	712.8					0.0	251.7	524.8	964.5	0.0	0.0
115.00		515.9	691.9					0.0	251.7	515.9	943.6	0.0	0.0
120.00		506.4	671.1					0.0	251.7	506.4	922.8	0.0	0.0
125.00		496.3	650.3					0.0	251.7	496.3	901.9	0.0	0.0
130.00	Appurtenance(s)	438.1	629.4	2,402.2	0.0	0.0	1,294.9	0.0	251.7	2,840.3	2,176.0	0.0	0.0
134.00	Appurtenance(s)	240.1	488.5	1,589.3	0.0	0.0	1,905.3	0.0	177.9	1,829.5	2,571.8	0.0	0.0
135.00		282.1	120.0					0.0	44.5	282.1	164.5	0.0	0.0
140.00		463.1	587.7					0.0	222.4	463.1	810.2	0.0	0.0
145.00		390.1	566.9					0.0	222.4	390.1	789.3	0.0	0.0
148.62	Top - Section 3	223.5	397.1					0.0	160.9	223.5	557.9	0.0	0.0
150.00		194.6	101.4					0.0	61.5	194.6	163.0	0.0	0.0
153.00	Appurtenance(s)	219.8	216.3	5,093.6	0.0	9,930.1	3,357.1	0.0	133.5	5,313.4	3,706.8	0.0	0.0
155.00		300.4	141.4					0.0	49.0	300.4	190.4	0.0	0.0
160.00	Appurtenance(s)	419.9	343.8	3,498.6	0.0	0.0	3,350.3	0.0	95.1	3,918.5	3,789.2	0.0	0.0
165.00		406.3	329.9					0.0	29.5	406.3	359.4	0.0	0.0
170.00	Appurtenance(s)	392.3	316.0	709.2	0.0	0.0	627.9	0.0	29.5	1,101.5	973.5	0.0	0.0
175.00		378.0	302.1					0.0	7.4	378.0	309.5	0.0	0.0
180.00	Appurtenance(s)	185.4	288.2	1,473.2	0.0	1,529.6	1,431.0	0.0	7.4	1,658.6	1,726.6	0.0	0.0
									Totals:	33,138.0	52,052.2	0.00	0.00

 © 2007 - 2021 by ATC IP LLC. All rights reserved.

Load Case: 0.9D + 1.0W 127 mph with No Ice (Reduced DL) 24 Iterations

Gust Response Factor :1.10
Dead Load Factor :0.90
Wind Load Factor :1.00

Calculated Forces

Seg Elev (ft)	Pu FY (-) (kips)	Vu FX (-) (kips)	Tu MY (ft-kips)	Mu MZ (ft-kips)	Mu MX (ft-kips)	Resultant Moment (ft-kips)	phi Pn (kips)	phi Vn (kips)	phi Tn (ft-kips)	phi Mn (ft-kips)	Total Deflect (in)	Rotation (deg)	Ratio
0.00	-52.01	-32.91	0.00	-3,964.58	0.00	3,964.58	5,724.86	1,511.21	8,464.29	7,310.45	0.00	0.00	0.552
5.00	-50.38	-32.46	0.00	-3,800.02	0.00	3,800.02	5,660.51	1,483.34	8,154.99	7,094.04	0.07	-0.13	0.545
10.00	-48.77	-32.01	0.00	-3,637.74	0.00	3,637.74	5,594.62	1,455.47	7,851.45	6,878.77	0.28	-0.27	0.538
15.00	-47.19	-31.56	0.00	-3,477.71	0.00	3,477.71	5,527.18	1,427.60	7,553.66	6,664.77	0.63	-0.40	0.531
20.00	-45.64	-31.12	0.00	-3,319.91	0.00	3,319.91	5,458.18	1,399.73	7,261.62	6,452.13	1.13	-0.54	0.523
25.00	-44.11	-30.69	0.00	-3,164.31	0.00	3,164.31	5,387.64	1,371.86	6,975.35	6,240.97	1.77	-0.68	0.516
30.00	-42.60	-30.25	0.00	-3,010.88	0.00	3,010.88	5,315.55	1,343.98	6,694.83	6,031.39	2.55	-0.82	0.508
35.00	-41.13	-29.80	0.00	-2,859.64	0.00	2,859.64	5,241.91	1,316.11	6,420.07	5,823.52	3.48	-0.96	0.499
40.00	-39.67	-29.34	0.00	-2,710.64	0.00	2,710.64	5,166.71	1,288.24	6,151.07	5,617.45	4.56	-1.10	0.491
45.00	-38.27	-29.01	0.00	-2,563.96	0.00	2,563.96	5,089.97	1,260.37	5,887.82	5,413.30	5.80	-1.25	0.482
46.82	-37.75	-28.77	0.00	-2,511.27	0.00	2,511.27	5,061.71	1,250.24	5,793.60	5,339.62	6.28	-1.30	0.478
50.00	-36.16	-28.41	0.00	-2,419.69	0.00	2,419.69	5,011.68	1,232.50	5,630.33	5,211.18	7.18	-1.40	0.472
53.65	-34.37	-28.13	0.00	-2,315.99	0.00	2,315.99	5,014.45	1,233.48	5,639.26	5,218.23	8.29	-1.50	0.451
55.00	-33.98	-27.82	0.00	-2,278.01	0.00	2,278.01	4,993.06	1,225.95	5,570.67	5,164.00	8.72	-1.54	0.448
60.00	-32.62	-27.30	0.00	-2,138.91	0.00	2,138.91	4,912.86	1,198.08	5,320.29	4,964.54	10.42	-1.69	0.438
65.00	-31.29	-26.78	0.00	-2,002.40	0.00	2,002.40	4,831.10	1,170.21	5,075.66	4,767.35	12.26	-1.83	0.427
70.00	-29.98	-26.25	0.00	-1,868.51	0.00	1,868.51	4,747.80	1,142.34	4,836.80	4,572.55	14.25	-1.97	0.415
75.00	-28.70	-25.72	0.00	-1,737.26	0.00	1,737.26	4,662.94	1,114.47	4,603.69	4,380.25	16.38	-2.11	0.403
80.00	-27.45	-25.19	0.00	-1,608.67	0.00	1,608.67	4,576.54	1,086.59	4,376.33	4,190.55	18.67	-2.25	0.390
85.00	-26.23	-24.65	0.00	-1,482.73	0.00	1,482.73	4,481.93	1,058.72	4,154.74	3,997.63	21.11	-2.39	0.377
90.00	-25.03	-24.12	0.00	-1,359.46	0.00	1,359.46	4,363.94	1,030.85	3,938.90	3,788.90	23.69	-2.53	0.365
94.97	-23.88	-23.83	0.00	-1,239.65	0.00	1,239.65	4,246.74	1,003.17	3,730.20	3,587.10	26.40	-2.67	0.352
95.00	-23.85	-23.59	0.00	-1,238.85	0.00	1,238.85	4,245.95	1,002.98	3,728.82	3,585.76	26.42	-2.67	0.352
100.00	-21.97	-23.23	0.00	-1,120.93	0.00	1,120.93	4,127.96	975.11	3,524.49	3,388.23	29.29	-2.81	0.337
100.47	-21.78	-22.98	0.00	-1,110.09	0.00	1,110.09	3,522.04	850.55	3,128.34	2,946.90	29.56	-2.82	0.384
105.00	-20.87	-22.47	0.00	-1,005.93	0.00	1,005.93	3,456.72	828.89	2,971.06	2,817.93	32.30	-2.95	0.364
110.00	-19.88	-21.95	0.00	-893.56	0.00	893.56	3,383.20	805.00	2,802.29	2,677.76	35.47	-3.09	0.340
115.00	-18.91	-21.43	0.00	-783.82	0.00	783.82	3,306.70	781.11	2,638.45	2,538.79	38.78	-3.23	0.315
120.00	-17.97	-20.91	0.00	-676.70	0.00	676.70	3,205.56	757.22	2,479.56	2,385.12	42.23	-3.36	0.290
125.00	-17.06	-20.39	0.00	-572.16	0.00	572.16	3,104.43	733.33	2,325.59	2,236.25	45.82	-3.48	0.262
130.00	-15.03	-17.45	0.00	-470.20	0.00	470.20	3,003.30	709.44	2,176.56	2,092.18	49.53	-3.60	0.230
134.00	-12.57	-15.47	0.00	-400.40	0.00	400.40	2,922.39	690.33	2,060.89	1,980.38	52.58	-3.68	0.207
135.00	-12.41	-15.19	0.00	-384.93	0.00	384.93	2,902.16	685.55	2,032.46	1,952.91	53.35	-3.70	0.202
140.00	-11.61	-14.69	0.00	-308.97	0.00	308.97	2,801.03	661.66	1,893.30	1,818.43	57.28	-3.80	0.175
145.00	-10.83	-14.27	0.00	-235.50	0.00	235.50	2,699.90	637.77	1,759.08	1,688.75	61.29	-3.88	0.144
148.62	-10.28	-14.01	0.00	-183.91	0.00	183.91	2,626.75	620.49	1,665.06	1,597.93	64.25	-3.93	0.120
148.62	-10.28	-14.01	0.00	-183.91	0.00	183.91	1,691.62	422.31	1,156.82	1,055.16	64.25	-3.93	0.181
150.00	-10.12	-13.81	0.00	-164.53	0.00	164.53	1,679.60	417.91	1,132.82	1,036.65	65.39	-3.94	0.166
153.00	-6.79	-8.26	0.00	-113.16	0.00	113.16	1,653.13	408.36	1,081.64	996.80	67.88	-3.99	0.118
155.00	-6.61	-7.95	0.00	-96.65	0.00	96.65	1,635.17	401.99	1,048.18	970.47	69.56	-4.01	0.104
160.00	-3.11	-3.77	0.00	-56.91	0.00	56.91	1,589.20	386.07	966.82	905.51	73.79	-4.06	0.065
165.00	-2.78	-3.35	0.00	-38.04	0.00	38.04	1,541.67	370.16	888.75	841.89	78.05	-4.09	0.047
170.00	-1.88	-2.18	0.00	-21.31	0.00	21.31	1,492.60	354.24	813.96	779.71	82.34	-4.11	0.029

© 2007 - 2021 by ATC IP LLC. All rights reserved.

Load Case: 0.9D + 1.0W 127 mph with No Ice (Reduced DL) 24 Iterations

Gust Response Factor :1.10
Dead Load Factor :0.90
Wind Load Factor :1.00

175.00	-1.60	-1.78	0.00	-10.42	0.00	10.42	1,432.22	338.32	742.46	714.22	86.66	-4.13	0.016
180.00	0.00	-1.66	0.00	-1.53	0.00	1.53	1,364.83	322.40	674.25	648.27	90.98	-4.13	0.002

© 2007 - 2021 by ATC IP LLC. All rights reserved.

Load Case: 1.2D + 1.0Di + 1.0Wi 50 mph with 1.00 in Radial Ice 23 Iterations

Gust Response Factor :1.10 Ice Dead Load Factor :1.00
Dead Load Factor :1.20 Ice Importance Factor :1.00
Wind Load Factor :1.00

Applied Segment Forces Summary

		Shaft Forces		Discrete Forces				Linear Forces		Sum of Forces			
Seg Elev (ft)	Description	Wind FX (lb)	Dead Load (lb)	Wind FX (lb)	Torsion MY (lb-ft)	Moment MZ (lb-ft)	Dead Load (lb)	Wind FX (lb)	Dead Load (lb)	Wind FX (lb)	Dead Load (lb)	Torsion MY (lb-ft)	Moment MZ (lb)
0.00		75.1	0.0					0.0	0.0	75.1	0.0	0.0	0.0
5.00		149.0	2,042.3					0.0	335.6	149.0	2,377.9	0.0	0.0
10.00		146.6	2,039.1					0.0	335.6	146.6	2,374.7	0.0	0.0
15.00		144.1	2,017.7					0.0	335.6	144.1	2,353.3	0.0	0.0
20.00		141.5	1,990.4					0.0	335.6	141.5	2,326.0	0.0	0.0
25.00		138.9	1,960.0					0.0	335.6	138.9	2,295.6	0.0	0.0
30.00		137.9	1,927.7					0.0	335.6	137.9	2,263.3	0.0	0.0
35.00		139.7	1,894.1					0.0	335.6	139.7	2,229.7	0.0	0.0
40.00		142.3	1,859.5					0.0	335.6	142.3	2,195.1	0.0	0.0
45.00		97.9	1,824.2					0.0	335.6	97.9	2,159.7	0.0	0.0
46.82	Bot - Section 2	73.2	654.8					0.0	121.9	73.2	776.7	0.0	0.0
50.00		101.1	2,074.0					0.0	213.7	101.1	2,287.7	0.0	0.0
53.65	Top - Section 1	74.2	2,343.5					0.0	245.0	74.2	2,588.4	0.0	0.0
55.00		94.7	478.3					0.0	90.6	94.7	569.0	0.0	0.0
60.00		149.3	1,745.5					0.0	335.6	149.3	2,081.0	0.0	0.0
65.00		149.5	1,708.3					0.0	335.6	149.5	2,043.8	0.0	0.0
70.00		149.3	1,670.8					0.0	335.6	149.3	2,006.3	0.0	0.0
75.00		148.8	1,633.0					0.0	335.6	148.8	1,968.5	0.0	0.0
80.00		148.0	1,594.9					0.0	335.6	148.0	1,930.5	0.0	0.0
85.00		147.0	1,556.7					0.0	335.6	147.0	1,892.2	0.0	0.0
90.00		145.2	1,518.2					0.0	335.6	145.2	1,853.8	0.0	0.0
94.97	Bot - Section 3	72.5	1,469.9					0.0	333.3	72.5	1,803.2	0.0	0.0
95.00		73.5	16.6					0.0	2.2	73.5	18.8	0.0	0.0
100.00		79.8	2,452.0					0.0	335.6	79.8	2,787.5	0.0	0.0
100.47	Top - Section 2	72.1	225.8					0.0	31.3	72.1	257.1	0.0	0.0
105.00		136.5	1,147.7					0.0	304.3	136.5	1,452.0	0.0	0.0
110.00		141.3	1,232.6					0.0	335.6	141.3	1,568.2	0.0	0.0
115.00		139.2	1,198.1					0.0	335.6	139.2	1,533.6	0.0	0.0
120.00		136.9	1,163.4					0.0	335.6	136.9	1,498.9	0.0	0.0
125.00		134.5	1,128.6					0.0	335.6	134.5	1,464.1	0.0	0.0
130.00	Appurtenance(s)	119.0	1,093.6	436.6	0.0	0.0	2,993.5	0.0	335.6	555.5	4,422.7	0.0	0.0
134.00	Appurtenance(s)	65.3	850.4	392.4	0.0	0.0	3,248.1	0.0	237.3	457.7	4,335.8	0.0	0.0
135.00		76.9	209.6					0.0	59.3	76.9	268.9	0.0	0.0
140.00		126.4	1,023.5					0.0	296.6	126.4	1,320.1	0.0	0.0
145.00		106.7	988.3					0.0	296.6	106.7	1,284.9	0.0	0.0
148.62	Top - Section 3	61.2	693.7					0.0	214.5	61.2	908.2	0.0	0.0
150.00		53.4	198.5					0.0	82.1	53.4	280.6	0.0	0.0
153.00	Appurtenance(s)	60.3	422.9	1,034.4	0.0	1,878.3	7,115.0	0.0	177.9	1,094.7	7,715.8	0.0	0.0
155.00		82.7	277.0					0.0	65.3	82.7	342.3	0.0	0.0
160.00	Appurtenance(s)	115.8	671.8	740.9	0.0	0.0	6,483.3	0.0	126.8	856.7	7,281.9	0.0	0.0
165.00		112.4	645.6					0.0	39.4	112.4	684.9	0.0	0.0
170.00	Appurtenance(s)	109.0	619.3	164.6	0.0	0.0	1,243.8	0.0	39.4	273.6	1,902.4	0.0	0.0
175.00		105.4	592.9					0.0	9.8	105.4	602.8	0.0	0.0
180.00	Appurtenance(s)	51.8	566.5	375.1	0.0	417.7	2,363.8	0.0	9.8	426.9	2,940.1	0.0	0.0
									Totals:	8,070.15	87,248.4	0.00	0.00

 © 2007 - 2021 by ATC IP LLC. All rights reserved.

Load Case: 1.2D + 1.0Di + 1.0Wi 50 mph with 1.00 in Radial Ice 23 Iterations

Gust Response Factor :1.10 Ice Dead Load Factor :1.00
Dead Load Factor :1.20 Ice Importance Factor :1.00
Wind Load Factor :1.00

Calculated Forces

Seg Elev (ft)	Pu FY (-) (kips)	Vu FX (-) (kips)	Tu MY (ft-kips)	Mu MZ (ft-kips)	Mu MX (ft-kips)	Resultant Moment (ft-kips)	phi Pn (kips)	phi Vn (kips)	phi Tn (ft-kips)	phi Mn (ft-kips)	Total Deflect (in)	Rotation (deg)	Ratio
0.00	-87.25	-8.02	0.00	-969.78	0.00	969.78	5,724.86	1,511.21	8,464.29	7,310.45	0.00	0.00	0.148
5.00	-84.86	-7.92	0.00	-929.68	0.00	929.68	5,660.51	1,483.34	8,154.99	7,094.04	0.02	-0.03	0.146
10.00	-82.48	-7.82	0.00	-890.09	0.00	890.09	5,594.62	1,455.47	7,851.45	6,878.77	0.07	-0.07	0.144
15.00	-80.13	-7.72	0.00	-851.01	0.00	851.01	5,527.18	1,427.60	7,553.66	6,664.77	0.15	-0.10	0.142
20.00	-77.80	-7.62	0.00	-812.43	0.00	812.43	5,458.18	1,399.73	7,261.62	6,452.13	0.28	-0.13	0.140
25.00	-75.50	-7.52	0.00	-774.35	0.00	774.35	5,387.64	1,371.86	6,975.35	6,240.97	0.43	-0.17	0.138
30.00	-73.23	-7.41	0.00	-736.78	0.00	736.78	5,315.55	1,343.98	6,694.83	6,031.39	0.62	-0.20	0.136
35.00	-71.00	-7.31	0.00	-699.70	0.00	699.70	5,241.91	1,316.11	6,420.07	5,823.52	0.85	-0.23	0.134
40.00	-68.80	-7.20	0.00	-663.16	0.00	663.16	5,166.71	1,288.24	6,151.07	5,617.45	1.12	-0.27	0.131
45.00	-66.64	-7.12	0.00	-627.16	0.00	627.16	5,089.97	1,260.37	5,887.82	5,413.30	1.42	-0.31	0.129
46.82	-65.86	-7.06	0.00	-614.22	0.00	614.22	5,061.71	1,250.24	5,793.60	5,339.62	1.54	-0.32	0.128
50.00	-63.57	-6.98	0.00	-591.74	0.00	591.74	5,011.68	1,232.50	5,630.33	5,211.18	1.76	-0.34	0.126
53.65	-60.98	-6.91	0.00	-566.28	0.00	566.28	5,014.45	1,233.48	5,639.26	5,218.23	2.03	-0.37	0.121
55.00	-60.41	-6.83	0.00	-556.96	0.00	556.96	4,993.06	1,225.95	5,570.67	5,164.00	2.13	-0.38	0.120
60.00	-58.32	-6.70	0.00	-522.81	0.00	522.81	4,912.86	1,198.08	5,320.29	4,964.54	2.55	-0.41	0.117
65.00	-56.27	-6.57	0.00	-489.30	0.00	489.30	4,831.10	1,170.21	5,075.66	4,767.35	3.00	-0.45	0.114
70.00	-54.27	-6.44	0.00	-456.45	0.00	456.45	4,747.80	1,142.34	4,836.80	4,572.55	3.49	-0.48	0.111
75.00	-52.30	-6.30	0.00	-424.26	0.00	424.26	4,662.94	1,114.47	4,603.69	4,380.25	4.01	-0.52	0.108
80.00	-50.36	-6.17	0.00	-392.74	0.00	392.74	4,576.54	1,086.59	4,376.33	4,190.55	4.57	-0.55	0.105
85.00	-48.47	-6.03	0.00	-361.90	0.00	361.90	4,481.93	1,058.72	4,154.74	3,997.63	5.16	-0.59	0.101
90.00	-46.61	-5.89	0.00	-331.74	0.00	331.74	4,363.94	1,030.85	3,938.90	3,788.90	5.80	-0.62	0.098
94.97	-44.81	-5.82	0.00	-302.47	0.00	302.47	4,246.74	1,003.17	3,730.20	3,587.10	6.46	-0.65	0.095
95.00	-44.79	-5.75	0.00	-302.27	0.00	302.27	4,245.95	1,002.98	3,728.82	3,585.76	6.46	-0.65	0.095
100.00	-42.00	-5.66	0.00	-273.50	0.00	273.50	4,127.96	975.11	3,524.49	3,388.23	7.16	-0.69	0.091
100.47	-41.74	-5.59	0.00	-270.86	0.00	270.86	3,522.04	850.55	3,128.34	2,946.90	7.23	-0.69	0.104
105.00	-40.29	-5.46	0.00	-245.51	0.00	245.51	3,456.72	828.89	2,971.06	2,817.93	7.90	-0.72	0.099
110.00	-38.72	-5.32	0.00	-218.20	0.00	218.20	3,383.20	805.00	2,802.29	2,677.76	8.68	-0.76	0.093
115.00	-37.19	-5.18	0.00	-191.59	0.00	191.59	3,306.70	781.11	2,638.45	2,538.79	9.49	-0.79	0.087
120.00	-35.69	-5.05	0.00	-165.67	0.00	165.67	3,205.56	757.22	2,479.56	2,385.12	10.33	-0.82	0.081
125.00	-34.22	-4.91	0.00	-140.44	0.00	140.44	3,104.43	733.33	2,325.59	2,236.25	11.21	-0.85	0.074
130.00	-29.81	-4.30	0.00	-115.90	0.00	115.90	3,003.30	709.44	2,176.56	2,092.18	12.11	-0.88	0.065
134.00	-25.48	-3.78	0.00	-98.71	0.00	98.71	2,922.39	690.33	2,060.89	1,980.38	12.86	-0.90	0.059
135.00	-25.21	-3.70	0.00	-94.93	0.00	94.93	2,902.16	685.55	2,032.46	1,952.91	13.05	-0.91	0.057
140.00	-23.89	-3.57	0.00	-76.41	0.00	76.41	2,801.03	661.66	1,893.30	1,818.43	14.01	-0.93	0.051
145.00	-22.60	-3.44	0.00	-58.58	0.00	58.58	2,699.90	637.77	1,759.08	1,688.75	14.99	-0.95	0.043
148.62	-21.70	-3.37	0.00	-46.12	0.00	46.12	2,626.75	620.49	1,665.06	1,597.93	15.72	-0.96	0.037
148.62	-21.70	-3.37	0.00	-46.12	0.00	46.12	1,691.62	422.31	1,156.82	1,055.16	15.72	-0.96	0.057
150.00	-21.42	-3.32	0.00	-41.46	0.00	41.46	1,679.60	417.91	1,132.82	1,036.65	16.00	-0.97	0.053
153.00	-13.72	-2.09	0.00	-29.64	0.00	29.64	1,653.13	408.36	1,081.64	996.80	16.61	-0.98	0.038
155.00	-13.38	-2.01	0.00	-25.45	0.00	25.45	1,635.17	401.99	1,048.18	970.47	17.02	-0.98	0.034
160.00	-6.11	-1.03	0.00	-15.42	0.00	15.42	1,589.20	386.07	966.82	905.51	18.06	-1.00	0.021
165.00	-5.43	-0.90	0.00	-10.29	0.00	10.29	1,541.67	370.16	888.75	841.89	19.10	-1.00	0.016
170.00	-3.53	-0.59	0.00	-5.79	0.00	5.79	1,492.60	354.24	813.96	779.71	20.16	-1.01	0.010

© 2007 - 2021 by ATC IP LLC. All rights reserved.

Load Case: 1.2D + 1.0Di + 1.0Wi 50 mph with 1.00 in Radial Ice 23 Iterations

Gust Response Factor :1.10 Ice Dead Load Factor :1.00
Dead Load Factor :1.20 Ice Importance Factor :1.00
Wind Load Factor :1.00

175.00	-2.93	-0.48	0.00	-2.81	0.00	2.81	1,432.22	338.32	742.46	714.22	21.22	-1.01	0.006
180.00	0.00	-0.43	0.00	-0.42	0.00	0.42	1,364.83	322.40	674.25	648.27	22.28	-1.02	0.001

© 2007 - 2021 by ATC IP LLC. All rights reserved.

Load Case: 1.0D + 1.0W Serviceability 60 mph 23 Iterations

Gust Response Factor :1.10
Dead Load Factor :1.00
Wind Load Factor :1.00

Applied Segment Forces Summary

Seg Elev (ft)	Description	Shaft Forces Wind FX (lb)	Shaft Forces Dead Load (lb)	Discrete Forces Wind FX (lb)	Discrete Forces Torsion MY (lb-ft)	Discrete Forces Moment MZ (lb-ft)	Discrete Forces Dead Load (lb)	Linear Forces Wind FX (lb)	Linear Forces Dead Load (lb)	Sum of Forces Wind FX (lb)	Sum of Forces Dead Load (lb)	Sum of Forces Torsion MY (lb-ft)	Sum of Forces Moment MZ (lb)
0.00		57.4	0.0					0.0	0.0	57.4	0.0	0.0	0.0
5.00		113.8	1,451.5					0.0	279.7	113.8	1,731.2	0.0	0.0
10.00		111.7	1,424.5					0.0	279.7	111.7	1,704.2	0.0	0.0
15.00		109.6	1,397.5					0.0	279.7	109.6	1,677.1	0.0	0.0
20.00		107.5	1,370.5					0.0	279.7	107.5	1,650.1	0.0	0.0
25.00		105.3	1,343.5					0.0	279.7	105.3	1,623.1	0.0	0.0
30.00		104.4	1,316.4					0.0	279.7	104.4	1,596.1	0.0	0.0
35.00		105.6	1,289.4					0.0	279.7	105.6	1,569.1	0.0	0.0
40.00		107.5	1,262.4					0.0	279.7	107.5	1,542.0	0.0	0.0
45.00		73.9	1,235.4					0.0	279.7	73.9	1,515.0	0.0	0.0
46.82	Bot - Section 2	55.2	442.2					0.0	101.6	55.2	543.8	0.0	0.0
50.00		76.2	1,545.6					0.0	178.0	76.2	1,723.6	0.0	0.0
53.65	Top - Section 1	55.9	1,745.2					0.0	204.1	55.9	1,949.3	0.0	0.0
55.00		71.3	321.9					0.0	75.5	71.3	397.4	0.0	0.0
60.00		112.3	1,175.0					0.0	279.7	112.3	1,454.6	0.0	0.0
65.00		112.3	1,148.0					0.0	279.7	112.3	1,427.6	0.0	0.0
70.00		112.0	1,121.0					0.0	279.7	112.0	1,400.6	0.0	0.0
75.00		111.4	1,093.9					0.0	279.7	111.4	1,373.6	0.0	0.0
80.00		110.7	1,066.9					0.0	279.7	110.7	1,346.6	0.0	0.0
85.00		109.8	1,039.9					0.0	279.7	109.8	1,319.5	0.0	0.0
90.00		108.3	1,012.9					0.0	279.7	108.3	1,292.5	0.0	0.0
94.97	Bot - Section 3	54.1	979.4					0.0	277.8	54.1	1,257.2	0.0	0.0
95.00		54.7	12.1					0.0	1.9	54.7	14.0	0.0	0.0
100.00		59.4	1,797.1					0.0	279.7	59.4	2,076.8	0.0	0.0
100.47	Top - Section 2	53.6	165.2					0.0	26.1	53.6	191.3	0.0	0.0
105.00		101.4	738.1					0.0	253.5	101.4	991.6	0.0	0.0
110.00		104.8	792.0					0.0	279.7	104.8	1,071.6	0.0	0.0
115.00		103.0	768.8					0.0	279.7	103.0	1,048.5	0.0	0.0
120.00		101.1	745.7					0.0	279.7	101.1	1,025.3	0.0	0.0
125.00		99.1	722.5					0.0	279.7	99.1	1,002.2	0.0	0.0
130.00	Appurtenance(s)	87.5	699.3	479.7	0.0	0.0	1,438.8	0.0	279.7	567.2	2,417.8	0.0	0.0
134.00	Appurtenance(s)	48.0	542.8	317.4	0.0	0.0	2,117.0	0.0	197.7	365.4	2,857.5	0.0	0.0
135.00		56.3	133.4					0.0	49.4	56.3	182.8	0.0	0.0
140.00		92.5	653.0					0.0	247.2	92.5	900.2	0.0	0.0
145.00		77.9	629.9					0.0	247.2	77.9	877.0	0.0	0.0
148.62	Top - Section 3	44.6	441.2					0.0	178.8	44.6	619.9	0.0	0.0
150.00		38.9	112.7					0.0	68.4	38.9	181.1	0.0	0.0
153.00	Appurtenance(s)	43.9	240.3	1,017.2	0.0	1,983.1	3,730.1	0.0	148.3	1,061.1	4,118.7	0.0	0.0
155.00		60.0	157.1					0.0	54.4	60.0	211.5	0.0	0.0
160.00	Appurtenance(s)	83.9	382.0	698.7	0.0	0.0	3,722.6	0.0	105.7	782.5	4,210.3	0.0	0.0
165.00		81.1	366.6					0.0	32.8	81.1	399.4	0.0	0.0
170.00	Appurtenance(s)	78.3	351.1	141.6	0.0	0.0	697.7	0.0	32.8	220.0	1,081.6	0.0	0.0
175.00		75.5	335.7					0.0	8.2	75.5	343.9	0.0	0.0
180.00	Appurtenance(s)	37.0	320.3	294.2	0.0	305.5	1,590.0	0.0	8.2	331.2	1,918.5	0.0	0.0
									Totals:	6,617.86	57,835.7	0.00	0.00

 © 2007 - 2021 by ATC IP LLC. All rights reserved.

Load Case: 1.0D + 1.0W Serviceability 60 mph 23 Iterations

Gust Response Factor :1.10
Dead Load Factor :1.00
Wind Load Factor :1.00

Calculated Forces

Seg Elev (ft)	Pu FY (-) (kips)	Vu FX (-) (kips)	Tu MY (ft-kips)	Mu MZ (ft-kips)	Mu MX (ft-kips)	Resultant Moment (ft-kips)	phi Pn (kips)	phi Vn (kips)	phi Tn (ft-kips)	phi Mn (ft-kips)	Total Deflect (in)	Rotation (deg)	Ratio
0.00	-57.83	-6.57	0.00	-795.62	0.00	795.62	5,724.86	1,511.21	8,464.29	7,310.45	0.00	0.00	0.119
5.00	-56.10	-6.49	0.00	-762.76	0.00	762.76	5,660.51	1,483.34	8,154.99	7,094.04	0.01	-0.03	0.117
10.00	-54.39	-6.40	0.00	-730.33	0.00	730.33	5,594.62	1,455.47	7,851.45	6,878.77	0.06	-0.05	0.116
15.00	-52.71	-6.31	0.00	-698.34	0.00	698.34	5,527.18	1,427.60	7,553.66	6,664.77	0.13	-0.08	0.114
20.00	-51.06	-6.23	0.00	-666.78	0.00	666.78	5,458.18	1,399.73	7,261.62	6,452.13	0.23	-0.11	0.113
25.00	-49.43	-6.14	0.00	-635.65	0.00	635.65	5,387.64	1,371.86	6,975.35	6,240.97	0.35	-0.14	0.111
30.00	-47.84	-6.06	0.00	-604.94	0.00	604.94	5,315.55	1,343.98	6,694.83	6,031.39	0.51	-0.16	0.109
35.00	-46.26	-5.97	0.00	-574.66	0.00	574.66	5,241.91	1,316.11	6,420.07	5,823.52	0.70	-0.19	0.108
40.00	-44.72	-5.88	0.00	-544.81	0.00	544.81	5,166.71	1,288.24	6,151.07	5,617.45	0.92	-0.22	0.106
45.00	-43.20	-5.81	0.00	-515.42	0.00	515.42	5,089.97	1,260.37	5,887.82	5,413.30	1.16	-0.25	0.104
46.82	-42.66	-5.77	0.00	-504.85	0.00	504.85	5,061.71	1,250.24	5,793.60	5,339.62	1.26	-0.26	0.103
50.00	-40.93	-5.70	0.00	-486.50	0.00	486.50	5,011.68	1,232.50	5,630.33	5,211.18	1.44	-0.28	0.102
53.65	-38.98	-5.64	0.00	-465.70	0.00	465.70	5,014.45	1,233.48	5,639.26	5,218.23	1.67	-0.30	0.097
55.00	-38.58	-5.58	0.00	-458.08	0.00	458.08	4,993.06	1,225.95	5,570.67	5,164.00	1.75	-0.31	0.096
60.00	-37.13	-5.48	0.00	-430.18	0.00	430.18	4,912.86	1,198.08	5,320.29	4,964.54	2.09	-0.34	0.094
65.00	-35.70	-5.38	0.00	-402.79	0.00	402.79	4,831.10	1,170.21	5,075.66	4,767.35	2.46	-0.37	0.092
70.00	-34.29	-5.27	0.00	-375.91	0.00	375.91	4,747.80	1,142.34	4,836.80	4,572.55	2.86	-0.40	0.089
75.00	-32.92	-5.17	0.00	-349.56	0.00	349.56	4,662.94	1,114.47	4,603.69	4,380.25	3.29	-0.42	0.087
80.00	-31.57	-5.06	0.00	-323.73	0.00	323.73	4,576.54	1,086.59	4,376.33	4,190.55	3.75	-0.45	0.084
85.00	-30.25	-4.96	0.00	-298.42	0.00	298.42	4,481.93	1,058.72	4,154.74	3,997.63	4.24	-0.48	0.081
90.00	-28.96	-4.85	0.00	-273.65	0.00	273.65	4,363.94	1,030.85	3,938.90	3,788.90	4.76	-0.51	0.079
94.97	-27.70	-4.79	0.00	-249.56	0.00	249.56	4,246.74	1,003.17	3,730.20	3,587.10	5.30	-0.54	0.076
95.00	-27.68	-4.74	0.00	-249.40	0.00	249.40	4,245.95	1,002.98	3,728.82	3,585.76	5.31	-0.54	0.076
100.00	-25.61	-4.67	0.00	-225.69	0.00	225.69	4,127.96	975.11	3,524.49	3,388.23	5.89	-0.57	0.073
100.47	-25.41	-4.62	0.00	-223.51	0.00	223.51	3,522.04	850.55	3,128.34	2,946.90	5.94	-0.57	0.083
105.00	-24.42	-4.52	0.00	-202.56	0.00	202.56	3,456.72	828.89	2,971.06	2,817.93	6.49	-0.59	0.079
110.00	-23.35	-4.42	0.00	-179.95	0.00	179.95	3,383.20	805.00	2,802.29	2,677.76	7.13	-0.62	0.074
115.00	-22.30	-4.31	0.00	-157.87	0.00	157.87	3,306.70	781.11	2,638.45	2,538.79	7.80	-0.65	0.069
120.00	-21.27	-4.21	0.00	-136.31	0.00	136.31	3,205.56	757.22	2,479.56	2,385.12	8.49	-0.68	0.064
125.00	-20.27	-4.11	0.00	-115.26	0.00	115.26	3,104.43	733.33	2,325.59	2,236.25	9.21	-0.70	0.058
130.00	-17.86	-3.52	0.00	-94.73	0.00	94.73	3,003.30	709.44	2,176.56	2,092.18	9.96	-0.72	0.051
134.00	-15.01	-3.12	0.00	-80.67	0.00	80.67	2,922.39	690.33	2,060.89	1,980.38	10.57	-0.74	0.046
135.00	-14.82	-3.06	0.00	-77.55	0.00	77.55	2,902.16	685.55	2,032.46	1,952.91	10.73	-0.74	0.045
140.00	-13.92	-2.96	0.00	-62.25	0.00	62.25	2,801.03	661.66	1,893.30	1,818.43	11.52	-0.76	0.039
145.00	-13.05	-2.87	0.00	-47.45	0.00	47.45	2,699.90	637.77	1,759.08	1,688.75	12.33	-0.78	0.033
148.62	-12.43	-2.82	0.00	-37.05	0.00	37.05	2,626.75	620.49	1,665.06	1,597.93	12.92	-0.79	0.028
148.62	-12.43	-2.82	0.00	-37.05	0.00	37.05	1,691.62	422.31	1,156.82	1,055.16	12.92	-0.79	0.043
150.00	-12.25	-2.78	0.00	-33.15	0.00	33.15	1,679.60	417.91	1,132.82	1,036.65	13.15	-0.79	0.039
153.00	-8.14	-1.66	0.00	-22.82	0.00	22.82	1,653.13	408.36	1,081.64	996.80	13.65	-0.80	0.028
155.00	-7.93	-1.60	0.00	-19.49	0.00	19.49	1,635.17	401.99	1,048.18	970.47	13.99	-0.81	0.025
160.00	-3.73	-0.76	0.00	-11.48	0.00	11.48	1,589.20	386.07	966.82	905.51	14.84	-0.82	0.015
165.00	-3.33	-0.67	0.00	-7.67	0.00	7.67	1,541.67	370.16	888.75	841.89	15.70	-0.82	0.011
170.00	-2.26	-0.44	0.00	-4.30	0.00	4.30	1,492.60	354.24	813.96	779.71	16.56	-0.83	0.007

© 2007 - 2021 by ATC IP LLC. All rights reserved.

Load Case: 1.0D + 1.0W Serviceability 60 mph 23 Iterations

Gust Response Factor :1.10
Dead Load Factor :1.00
Wind Load Factor :1.00

175.00	-1.91	-0.36	0.00	-2.10	0.00	2.10	1,432.22	338.32	742.46	714.22	17.43	-0.83	0.004
180.00	0.00	-0.33	0.00	-0.31	0.00	0.31	1,364.83	322.40	674.25	648.27	18.30	-0.83	0.000

 © 2007 - 2021 by ATC IP LLC. All rights reserved.

Equivalent Lateral Forces Method Analysis

Spectral Response Acceleration for Short Period (S_s):	0.19	
Spectral Response Acceleration at 1.0 Second Period (S_1):	0.05	
Long-Period Transition Period (T_L):	6	
Importance Factor (I_E):	1.00	
Site Coefficient F_a:	1.60	
Site Coeffiecient F_v:	2.40	
Response Modification Coefficient (R):	1.50	
Design Spectral Response Acceleration at Short Period (S_{ds}):	0.20	
Design Spectral Response Acceleration at 1.0 Second Period (S_{d1}):	0.08	
Seismic Response Coefficient (C_s):	0.03	
Upper Limit C_s	0.03	
Lower Limit C_s	0.03	
Period based on Rayleigh Method (sec):	2.62	
Redundancy Factor (p):	1.00	
Seismic Force Distribution Exponent (k):	2.00	
Total Unfactored Dead Load:	57.84	k
Seismic Base Shear (E):	1.74	k

Load Case 1.2D + 1.0Ev + 1.0Eh Seismic

Segment	Height Above Base (ft)	Weight (lb)	W_z (lb-ft)	C_{vx}	Horizontal Force (lb)	Vertical Force (lb)
43	177.50	328	10,349	0.016	28	408
42	172.50	344	10,233	0.016	28	427
41	167.50	384	10,772	0.017	29	476
40	162.50	399	10,546	0.017	29	496
39	157.50	488	12,097	0.019	33	605
38	154.00	212	5,016	0.008	14	262
37	151.50	389	8,919	0.014	24	482
36	149.31	181	4,036	0.006	11	225
35	146.81	620	13,361	0.021	36	769
34	142.50	877	17,809	0.028	48	1,088
33	137.50	900	17,019	0.027	46	1,117
32	134.50	183	3,307	0.005	9	227
31	132.00	741	12,903	0.020	35	919
30	127.50	979	15,915	0.025	43	1,215
29	122.50	1,002	15,039	0.024	41	1,243
28	117.50	1,025	14,156	0.022	38	1,272
27	112.50	1,048	13,270	0.021	36	1,301
26	107.50	1,072	12,384	0.019	34	1,330
25	102.73	992	10,466	0.016	28	1,230
24	100.23	191	1,922	0.003	5	237
23	97.50	2,077	19,742	0.031	54	2,577
22	94.98	14	126	0.000	0	17
21	92.48	1,257	10,753	0.017	29	1,560
20	87.50	1,293	9,896	0.015	27	1,604
19	82.50	1,320	8,981	0.014	24	1,637

 © 2007 - 2021 by ATC IP LLC. All rights reserved.

18	77.50	1,347	8,088	0.013	22	1,671
17	72.50	1,374	7,220	0.011	20	1,704
16	67.50	1,401	6,381	0.010	17	1,738
15	62.50	1,428	5,577	0.009	15	1,771
14	57.50	1,455	4,809	0.008	13	1,805
13	54.33	397	1,173	0.002	3	493
12	51.83	1,949	5,236	0.008	14	2,419
11	48.41	1,724	4,039	0.006	11	2,139
10	45.91	544	1,146	0.002	3	675
9	42.50	1,515	2,737	0.004	7	1,880
8	37.50	1,542	2,169	0.003	6	1,913
7	32.50	1,569	1,657	0.003	5	1,947
6	27.50	1,596	1,207	0.002	3	1,980
5	22.50	1,623	822	0.001	2	2,014
4	17.50	1,650	505	0.001	1	2,047
3	12.50	1,677	262	0.000	1	2,081
2	7.50	1,704	96	0.000	0	2,114
1	2.50	1,731	11	0.000	0	2,148
Generic TTA	180.00	10	324	0.001	1	12
Generic 11' Omni	180.00	80	2,592	0.004	7	99
Round Low Profile Pl	180.00	1,500	48,600	0.076	132	1,861
KMW HB-X-WM-17-65-00	170.00	48	1,379	0.002	4	59
KMW HB-X-WM-17-65-00	170.00	90	2,601	0.004	7	112
Side Arms	170.00	560	16,184	0.025	44	695
Commscope CBC78T-DS-	160.00	62	1,590	0.002	4	77
Samsung B2/B66A RRH-	160.00	253	6,482	0.010	18	314
Samsung B5/B13 RRH-B	160.00	211	5,399	0.008	15	262
Samsung MT6407-77A	160.00	245	6,267	0.010	17	304
RFS DB-T1-6Z-8AB-0Z	160.00	88	2,253	0.004	6	109
Commscope JAHH-65B-R	160.00	364	9,308	0.015	25	451
Generic Round Platfo	160.00	2,500	64,000	0.100	174	3,102
Powerwave Allgon 702	153.00	13	309	0.000	1	16
CCI TPX-070821	153.00	45	1,053	0.002	3	56
Raycap DC6-48-60-18-	153.00	20	468	0.001	1	25
Raycap DC6-48-60-18-	153.00	32	744	0.001	2	39
Ericsson RRUS 4478 B	153.00	178	4,171	0.007	11	221
Powerwave Allgon LGP	153.00	186	4,354	0.007	12	231
Raycap DC6-48-60-18-	153.00	16	375	0.001	1	20
Ericsson RRUS 11 (Ba	153.00	150	3,511	0.005	10	186
Ericsson RRUS 32 B30	153.00	180	4,214	0.007	11	223
Ericsson RRUS 32 B66	153.00	152	3,561	0.006	10	189
Ericsson RRUS 32 B2	153.00	159	3,722	0.006	10	197
Powerwave Allgon 777	153.00	105	2,458	0.004	7	130
Commscope SBNHH-1D65	153.00	201	4,705	0.007	13	249
Kathrein Scala 80010	153.00	293	6,854	0.011	19	363
Flat Platform w/ Rou	153.00	2,000	46,818	0.073	127	2,481
Perfect Vision PV-LP	134.00	2,117	38,013	0.060	103	2,627
Ericsson RRUS 4415 B	130.00	138	2,332	0.004	6	171
Ericsson Radio 4449	130.00	225	3,803	0.006	10	279
Ericsson 4424 B25	130.00	258	4,360	0.007	12	320
Ericsson Air6449 B41	130.00	312	5,273	0.008	14	387
RFS APX16DWV-16DWVS-	130.00	122	2,063	0.003	6	151
RFS APXVAARR24_43-U-	130.00	384	6,485	0.010	18	476
		57,836	638,776	1.000	1,735	71,760

Load Case 0.9D - 1.0Ev + 1.0Eh Seismic (Reduced DL)

Segment	Height Above Base (ft)	Weight (lb)	W_z (lb-ft)	C_{vx}	Horizontal Force (lb)	Vertical Force (lb)
43	177.50	328	10,349	0.016	28	282
42	172.50	344	10,233	0.016	28	295

 © 2007 - 2021 by ATC IP LLC. All rights reserved.

41	167.50	384	10,772	0.017	29	330
40	162.50	399	10,546	0.017	29	343
39	157.50	488	12,097	0.019	33	419
38	154.00	212	5,016	0.008	14	182
37	151.50	389	8,919	0.014	24	334
36	149.31	181	4,036	0.006	11	156
35	146.81	620	13,361	0.021	36	533
34	142.50	877	17,809	0.028	48	754
33	137.50	900	17,019	0.027	46	773
32	134.50	183	3,307	0.005	9	157
31	132.00	741	12,903	0.020	35	636
30	127.50	979	15,915	0.025	43	841
29	122.50	1,002	15,039	0.024	41	861
28	117.50	1,025	14,156	0.022	38	881
27	112.50	1,048	13,270	0.021	36	901
26	107.50	1,072	12,384	0.019	34	921
25	102.73	992	10,466	0.016	28	852
24	100.23	191	1,922	0.003	5	164
23	97.50	2,077	19,742	0.031	54	1,784
22	94.98	14	126	0.000	0	12
21	92.48	1,257	10,753	0.017	29	1,080
20	87.50	1,293	9,896	0.015	27	1,111
19	82.50	1,320	8,981	0.014	24	1,134
18	77.50	1,347	8,088	0.013	22	1,157
17	72.50	1,374	7,220	0.011	20	1,180
16	67.50	1,401	6,381	0.010	17	1,203
15	62.50	1,428	5,577	0.009	15	1,227
14	57.50	1,455	4,809	0.008	13	1,250
13	54.33	397	1,173	0.002	3	341
12	51.83	1,949	5,236	0.008	14	1,675
11	48.41	1,724	4,039	0.006	11	1,481
10	45.91	544	1,146	0.002	3	467
9	42.50	1,515	2,737	0.004	7	1,302
8	37.50	1,542	2,169	0.003	6	1,325
7	32.50	1,569	1,657	0.003	5	1,348
6	27.50	1,596	1,207	0.002	3	1,371
5	22.50	1,623	822	0.001	2	1,395
4	17.50	1,650	505	0.001	1	1,418
3	12.50	1,677	262	0.000	1	1,441
2	7.50	1,704	96	0.000	0	1,464
1	2.50	1,731	11	0.000	0	1,488
Generic TTA	180.00	10	324	0.001	1	9
Generic 11' Omni	180.00	80	2,592	0.004	7	69
Round Low Profile Pl	180.00	1,500	48,600	0.076	132	1,289
KMW HB-X-WM-17-65-00	170.00	48	1,379	0.002	4	41
KMW HB-X-WM-17-65-00	170.00	90	2,601	0.004	7	77
Side Arms	170.00	560	16,184	0.025	44	481
Commscope CBC78T-DS-	160.00	62	1,590	0.002	4	53
Samsung B2/B66A RRH-	160.00	253	6,482	0.010	18	218
Samsung B5/B13 RRH-B	160.00	211	5,399	0.008	15	181
Samsung MT6407-77A	160.00	245	6,267	0.010	17	210
RFS DB-T1-6Z-8AB-0Z	160.00	88	2,253	0.004	6	76
Commscope JAHH-65B-R	160.00	364	9,308	0.015	25	312
Generic Round Platfo	160.00	2,500	64,000	0.100	174	2,148
Powerwave Allgon 702	153.00	13	309	0.000	1	11
CCI TPX-070821	153.00	45	1,053	0.002	3	39
Raycap DC6-48-60-18-	153.00	20	468	0.001	1	17
Raycap DC6-48-60-18-	153.00	32	744	0.001	2	27
Ericsson RRUS 4478 B	153.00	178	4,171	0.007	11	153
Powerwave Allgon LGP	153.00	186	4,354	0.007	12	160
Raycap DC6-48-60-18-	153.00	16	375	0.001	1	14
Ericsson RRUS 11 (Ba	153.00	150	3,511	0.005	10	129
Ericsson RRUS 32 B30	153.00	180	4,214	0.007	11	155
Ericsson RRUS 32 B66	153.00	152	3,561	0.006	10	131

© 2007 - 2021 by ATC IP LLC. All rights reserved.

Ericsson RRUS 32 B2	153.00	159	3,722	0.006	10	137
Powerwave Allgon 777	153.00	105	2,458	0.004	7	90
Commscope SBNHH-1D65	153.00	201	4,705	0.007	13	173
Kathrein Scala 80010	153.00	293	6,854	0.011	19	252
Flat Platform w/ Rou	153.00	2,000	46,818	0.073	127	1,719
Perfect Vision PV-LP	134.00	2,117	38,013	0.060	103	1,819
Ericsson RRUS 4415 B	130.00	138	2,332	0.004	6	119
Ericsson Radio 4449	130.00	225	3,803	0.006	10	193
Ericsson 4424 B25	130.00	258	4,360	0.007	12	222
Ericsson Air6449 B41	130.00	312	5,273	0.008	14	268
RFS APX16DWV-16DWVS-	130.00	122	2,063	0.003	6	105
RFS APXVAARR24_43-U-	130.00	384	6,485	0.010	18	330
		57,836	638,776	1.000	1,735	49,696

 © 2007 - 2021 by ATC IP LLC. All rights reserved.

Load Case 1.2D + 1.0Ev + 1.0Eh Seismic

Calculated Forces

Seg Elev (ft)	Pu FY (-) (kips)	Vu FX (-) (kips)	Tu MY (ft-kips)	Mu MZ (ft-kips)	Mu MX (ft-kips)	Resultant Moment (ft-kips)	phi Pn (kips)	phi Vn (kips)	phi Tn (ft-kips)	phi Mn (ft-kips)	Total Deflect (in)	Rotation (deg)	Ratio
0.00	-69.61	-1.74	0.00	-247.97	0.00	247.97	5,724.86	1,511.21	8,464.29	7,310.45	0.00	0.00	0.046
5.00	-67.50	-1.75	0.00	-239.27	0.00	239.27	5,660.51	1,483.34	8,154.99	7,094.04	0.00	-0.01	0.046
10.00	-65.42	-1.76	0.00	-230.53	0.00	230.53	5,594.62	1,455.47	7,851.45	6,878.77	0.02	-0.02	0.045
15.00	-63.37	-1.77	0.00	-221.74	0.00	221.74	5,527.18	1,427.60	7,553.66	6,664.77	0.04	-0.03	0.045
20.00	-61.35	-1.77	0.00	-212.92	0.00	212.92	5,458.18	1,399.73	7,261.62	6,452.13	0.07	-0.03	0.044
25.00	-59.37	-1.78	0.00	-204.06	0.00	204.06	5,387.64	1,371.86	6,975.35	6,240.97	0.11	-0.04	0.044
30.00	-57.43	-1.78	0.00	-195.18	0.00	195.18	5,315.55	1,343.98	6,694.83	6,031.39	0.16	-0.05	0.043
35.00	-55.51	-1.78	0.00	-186.29	0.00	186.29	5,241.91	1,316.11	6,420.07	5,823.52	0.22	-0.06	0.043
40.00	-53.63	-1.78	0.00	-177.38	0.00	177.38	5,166.71	1,288.24	6,151.07	5,617.45	0.29	-0.07	0.042
45.00	-52.96	-1.78	0.00	-168.49	0.00	168.49	5,089.97	1,260.37	5,887.82	5,413.30	0.37	-0.08	0.042
46.82	-50.82	-1.77	0.00	-165.25	0.00	165.25	5,061.71	1,250.24	5,793.60	5,339.62	0.40	-0.08	0.041
50.00	-48.40	-1.76	0.00	-159.61	0.00	159.61	5,011.68	1,232.50	5,630.33	5,211.18	0.46	-0.09	0.040
53.65	-47.91	-1.76	0.00	-153.19	0.00	153.19	5,014.45	1,233.48	5,639.26	5,218.23	0.53	-0.10	0.039
55.00	-46.10	-1.75	0.00	-150.81	0.00	150.81	4,993.06	1,225.95	5,570.67	5,164.00	0.56	-0.10	0.038
60.00	-44.33	-1.74	0.00	-142.07	0.00	142.07	4,912.86	1,198.08	5,320.29	4,964.54	0.67	-0.11	0.038
65.00	-42.59	-1.72	0.00	-133.39	0.00	133.39	4,831.10	1,170.21	5,075.66	4,767.35	0.79	-0.12	0.037
70.00	-40.89	-1.71	0.00	-124.77	0.00	124.77	4,747.80	1,142.34	4,836.80	4,572.55	0.92	-0.13	0.036
75.00	-39.22	-1.69	0.00	-116.23	0.00	116.23	4,662.94	1,114.47	4,603.69	4,380.25	1.06	-0.14	0.035
80.00	-37.58	-1.67	0.00	-107.80	0.00	107.80	4,576.54	1,086.59	4,376.33	4,190.55	1.20	-0.15	0.034
85.00	-35.98	-1.64	0.00	-99.47	0.00	99.47	4,481.93	1,058.72	4,154.74	3,997.63	1.36	-0.16	0.033
90.00	-34.42	-1.61	0.00	-91.27	0.00	91.27	4,363.94	1,030.85	3,938.90	3,788.90	1.53	-0.17	0.032
94.97	-34.40	-1.61	0.00	-83.26	0.00	83.26	4,246.74	1,003.17	3,730.20	3,587.10	1.71	-0.18	0.031
95.00	-31.82	-1.56	0.00	-83.21	0.00	83.21	4,245.95	1,002.98	3,728.82	3,585.76	1.71	-0.18	0.031
100.00	-31.58	-1.55	0.00	-75.43	0.00	75.43	4,127.96	975.11	3,524.49	3,388.23	1.90	-0.18	0.030
100.47	-30.35	-1.52	0.00	-74.70	0.00	74.70	3,522.04	850.55	3,128.34	2,946.90	1.92	-0.19	0.034
105.00	-29.02	-1.49	0.00	-67.80	0.00	67.80	3,456.72	828.89	2,971.06	2,817.93	2.10	-0.19	0.032
110.00	-27.72	-1.45	0.00	-60.36	0.00	60.36	3,383.20	805.00	2,802.29	2,677.76	2.31	-0.20	0.031
115.00	-26.45	-1.41	0.00	-53.09	0.00	53.09	3,306.70	781.11	2,638.45	2,538.79	2.52	-0.21	0.029
120.00	-25.21	-1.37	0.00	-46.02	0.00	46.02	3,205.56	757.22	2,479.56	2,385.12	2.75	-0.22	0.027
125.00	-23.99	-1.33	0.00	-39.15	0.00	39.15	3,104.43	733.33	2,325.59	2,236.25	2.99	-0.23	0.025
130.00	-21.29	-1.22	0.00	-32.51	0.00	32.51	3,003.30	709.44	2,176.56	2,092.18	3.23	-0.24	0.023
134.00	-18.44	-1.10	0.00	-27.64	0.00	27.64	2,922.39	690.33	2,060.89	1,980.38	3.44	-0.24	0.020
135.00	-17.32	-1.05	0.00	-26.55	0.00	26.55	2,902.16	685.55	2,032.46	1,952.91	3.49	-0.25	0.020
140.00	-16.23	-0.99	0.00	-21.32	0.00	21.32	2,801.03	661.66	1,893.30	1,818.43	3.75	-0.25	0.018
145.00	-15.46	-0.96	0.00	-16.35	0.00	16.35	2,699.90	637.77	1,759.08	1,688.75	4.01	-0.26	0.015
148.62	-15.24	-0.94	0.00	-12.89	0.00	12.89	2,626.75	620.49	1,665.06	1,597.93	4.21	-0.26	0.014
148.62	-15.24	-0.94	0.00	-12.89	0.00	12.89	1,691.62	422.31	1,156.82	1,055.16	4.21	-0.26	0.021
150.00	-14.75	-0.92	0.00	-11.58	0.00	11.58	1,679.60	417.91	1,132.82	1,036.65	4.29	-0.26	0.020
153.00	-9.87	-0.65	0.00	-8.83	0.00	8.83	1,653.13	408.36	1,081.64	996.80	4.45	-0.27	0.015
155.00	-9.26	-0.61	0.00	-7.53	0.00	7.53	1,635.17	401.99	1,048.18	970.47	4.56	-0.27	0.013
160.00	-4.15	-0.30	0.00	-4.48	0.00	4.48	1,589.20	386.07	966.82	905.51	4.84	-0.27	0.008
165.00	-3.67	-0.27	0.00	-2.98	0.00	2.98	1,541.67	370.16	888.75	841.89	5.13	-0.27	0.006
170.00	-2.38	-0.18	0.00	-1.64	0.00	1.64	1,492.60	354.24	813.96	779.71	5.42	-0.27	0.004
175.00	-1.97	-0.15	0.00	-0.75	0.00	0.75	1,432.22	338.32	742.46	714.22	5.70	-0.28	0.002
180.00	0.00	-0.14	0.00	0.00	0.00	0.00	1,364.83	322.40	674.25	648.27	5.99	-0.28	0.000

© 2007 - 2021 by ATC IP LLC. All rights reserved.

 © 2007 - 2021 by ATC IP LLC. All rights reserved.

Load Case 0.9D - 1.0Ev + 1.0Eh Seismic (Reduced DL)

Calculated Forces

Seg Elev (ft)	Pu FY (-) (kips)	Vu FX (-) (kips)	Tu MY (ft-kips)	Mu MZ (ft-kips)	Mu MX (ft-kips)	Resultant Moment (ft-kips)	phi Pn (kips)	phi Vn (kips)	phi Tn (ft-kips)	phi Mn (ft-kips)	Total Deflect (in)	Rotation (deg)	Ratio
0.00	-48.21	-1.74	0.00	-244.07	0.00	244.07	5,724.86	1,511.21	8,464.29	7,310.45	0.00	0.00	0.042
5.00	-46.74	-1.74	0.00	-235.38	0.00	235.38	5,660.51	1,483.34	8,154.99	7,094.04	0.00	-0.01	0.041
10.00	-45.30	-1.75	0.00	-226.65	0.00	226.65	5,594.62	1,455.47	7,851.45	6,878.77	0.02	-0.02	0.041
15.00	-43.88	-1.75	0.00	-217.91	0.00	217.91	5,527.18	1,427.60	7,553.66	6,664.77	0.04	-0.02	0.041
20.00	-42.49	-1.76	0.00	-209.13	0.00	209.13	5,458.18	1,399.73	7,261.62	6,452.13	0.07	-0.03	0.040
25.00	-41.12	-1.76	0.00	-200.34	0.00	200.34	5,387.64	1,371.86	6,975.35	6,240.97	0.11	-0.04	0.040
30.00	-39.77	-1.76	0.00	-191.54	0.00	191.54	5,315.55	1,343.98	6,694.83	6,031.39	0.16	-0.05	0.039
35.00	-38.44	-1.76	0.00	-182.74	0.00	182.74	5,241.91	1,316.11	6,420.07	5,823.52	0.22	-0.06	0.039
40.00	-37.14	-1.76	0.00	-173.94	0.00	173.94	5,166.71	1,288.24	6,151.07	5,617.45	0.29	-0.07	0.038
45.00	-36.67	-1.76	0.00	-165.15	0.00	165.15	5,089.97	1,260.37	5,887.82	5,413.30	0.36	-0.08	0.038
46.82	-35.19	-1.75	0.00	-161.96	0.00	161.96	5,061.71	1,250.24	5,793.60	5,339.62	0.39	-0.08	0.037
50.00	-33.52	-1.73	0.00	-156.40	0.00	156.40	5,011.68	1,232.50	5,630.33	5,211.18	0.45	-0.09	0.037
53.65	-33.18	-1.73	0.00	-150.07	0.00	150.07	5,014.45	1,233.48	5,639.26	5,218.23	0.52	-0.10	0.035
55.00	-31.93	-1.72	0.00	-147.73	0.00	147.73	4,993.06	1,225.95	5,570.67	5,164.00	0.55	-0.10	0.035
60.00	-30.70	-1.71	0.00	-139.12	0.00	139.12	4,912.86	1,198.08	5,320.29	4,964.54	0.66	-0.11	0.034
65.00	-29.50	-1.69	0.00	-130.58	0.00	130.58	4,831.10	1,170.21	5,075.66	4,767.35	0.77	-0.12	0.033
70.00	-28.31	-1.68	0.00	-122.11	0.00	122.11	4,747.80	1,142.34	4,836.80	4,572.55	0.90	-0.13	0.033
75.00	-27.16	-1.66	0.00	-113.72	0.00	113.72	4,662.94	1,114.47	4,603.69	4,380.25	1.04	-0.13	0.032
80.00	-26.02	-1.63	0.00	-105.44	0.00	105.44	4,576.54	1,086.59	4,376.33	4,190.55	1.18	-0.14	0.031
85.00	-24.91	-1.61	0.00	-97.27	0.00	97.27	4,481.93	1,058.72	4,154.74	3,997.63	1.34	-0.15	0.030
90.00	-23.83	-1.58	0.00	-89.23	0.00	89.23	4,363.94	1,030.85	3,938.90	3,788.90	1.50	-0.16	0.029
94.97	-23.82	-1.58	0.00	-81.39	0.00	81.39	4,246.74	1,003.17	3,730.20	3,587.10	1.68	-0.17	0.028
95.00	-22.04	-1.52	0.00	-81.34	0.00	81.34	4,245.95	1,002.98	3,728.82	3,585.76	1.68	-0.17	0.028
100.00	-21.87	-1.52	0.00	-73.72	0.00	73.72	4,127.96	975.11	3,524.49	3,388.23	1.86	-0.18	0.027
100.47	-21.02	-1.49	0.00	-73.01	0.00	73.01	3,522.04	850.55	3,128.34	2,946.90	1.88	-0.18	0.031
105.00	-20.10	-1.46	0.00	-66.25	0.00	66.25	3,456.72	828.89	2,971.06	2,817.93	2.06	-0.19	0.029
110.00	-19.20	-1.42	0.00	-58.97	0.00	58.97	3,383.20	805.00	2,802.29	2,677.76	2.26	-0.20	0.028
115.00	-18.32	-1.38	0.00	-51.87	0.00	51.87	3,306.70	781.11	2,638.45	2,538.79	2.48	-0.21	0.026
120.00	-17.46	-1.34	0.00	-44.95	0.00	44.95	3,205.56	757.22	2,479.56	2,385.12	2.70	-0.22	0.024
125.00	-16.61	-1.30	0.00	-38.25	0.00	38.25	3,104.43	733.33	2,325.59	2,236.25	2.93	-0.23	0.022
130.00	-14.74	-1.19	0.00	-31.77	0.00	31.77	3,003.30	709.44	2,176.56	2,092.18	3.17	-0.23	0.020
134.00	-12.77	-1.07	0.00	-27.01	0.00	27.01	2,922.39	690.33	2,060.89	1,980.38	3.37	-0.24	0.018
135.00	-11.99	-1.02	0.00	-25.94	0.00	25.94	2,902.16	685.55	2,032.46	1,952.91	3.42	-0.24	0.017
140.00	-11.24	-0.97	0.00	-20.83	0.00	20.83	2,801.03	661.66	1,893.30	1,818.43	3.67	-0.25	0.015
145.00	-10.71	-0.93	0.00	-15.98	0.00	15.98	2,699.90	637.77	1,759.08	1,688.75	3.93	-0.25	0.013
148.62	-10.55	-0.92	0.00	-12.60	0.00	12.60	2,626.75	620.49	1,665.06	1,597.93	4.13	-0.26	0.012
148.62	-10.55	-0.92	0.00	-12.60	0.00	12.60	1,691.62	422.31	1,156.82	1,055.16	4.13	-0.26	0.018
150.00	-10.22	-0.90	0.00	-11.32	0.00	11.32	1,679.60	417.91	1,132.82	1,036.65	4.20	-0.26	0.017
153.00	-6.83	-0.63	0.00	-8.63	0.00	8.63	1,653.13	408.36	1,081.64	996.80	4.36	-0.26	0.013
155.00	-6.41	-0.60	0.00	-7.37	0.00	7.37	1,635.17	401.99	1,048.18	970.47	4.47	-0.26	0.012
160.00	-2.87	-0.29	0.00	-4.39	0.00	4.39	1,589.20	386.07	966.82	905.51	4.75	-0.26	0.007
165.00	-2.54	-0.26	0.00	-2.92	0.00	2.92	1,541.67	370.16	888.75	841.89	5.03	-0.27	0.005
170.00	-1.65	-0.18	0.00	-1.61	0.00	1.61	1,492.60	354.24	813.96	779.71	5.31	-0.27	0.003
175.00	-1.37	-0.15	0.00	-0.73	0.00	0.73	1,432.22	338.32	742.46	714.22	5.59	-0.27	0.002
180.00	0.00	-0.14	0.00	0.00	0.00	0.00	1,364.83	322.40	674.25	648.27	5.87	-0.27	0.000

© 2007 - 2021 by ATC IP LLC. All rights reserved.

Analysis Summary

	Reactions						Max Usage	
Load Case	Shear FX (kips)	Shear FZ (kips)	Axial FY (kips)	Moment MX (ft-kips)	Moment MY (ft-kips)	Moment MZ (ft-kips)	Elev (ft)	Interaction Ratio
1.2D + 1.0W	32.93	0.00	69.36	0.00	0.00	4014.82	0.00	0.56
0.9D + 1.0W	32.91	0.00	52.01	0.00	0.00	3964.58	0.00	0.55
1.2D + 1.0Di + 1.0Wi	8.02	0.00	87.25	0.00	0.00	969.78	0.00	0.15
1.2D + 1.0Ev + 1.0Eh	1.74	0.00	69.61	0.00	0.00	247.97	0.00	0.05
0.9D - 1.0Ev + 1.0Eh	1.74	0.00	48.21	0.00	0.00	244.07	0.00	0.04
1.0D + 1.0W	6.57	0.00	57.83	0.00	0.00	795.62	0.00	0.12

Base Plate & Anchor Rod Analysis

Pole Dimensions		
Number of Sides	18	-
Diameter	62.45	in
Thickness	7/16	in
Orientation Offset		°

Base Reactions		
Moment, Mu	4,014.8	k-ft
Axial, Pu	69.4	k
Shear, Vu	32.9	k
Neutral Axis	198	°

Report Capacities		
Component	Capacity	Result
Base Plate	11%	Pass
Anchor Rods	61%	Pass
Dwyidag	-	-

Base Plate		
Shape	Round	-
Diameter, ø	75	in
Thickness	2 3/4	in
Grade	A572-60	
Yield Strength, Fy	60	ksi
Tensile Strength, Fu	75	ksi
Clip	N/A	in
Orientation Offset		°
Anchor Rod Detail	d	η=0.5
Clear Distance	3	in
Applied Moment, Mu	299.7	k
Bending Stress, ϕMn	2835.0	k

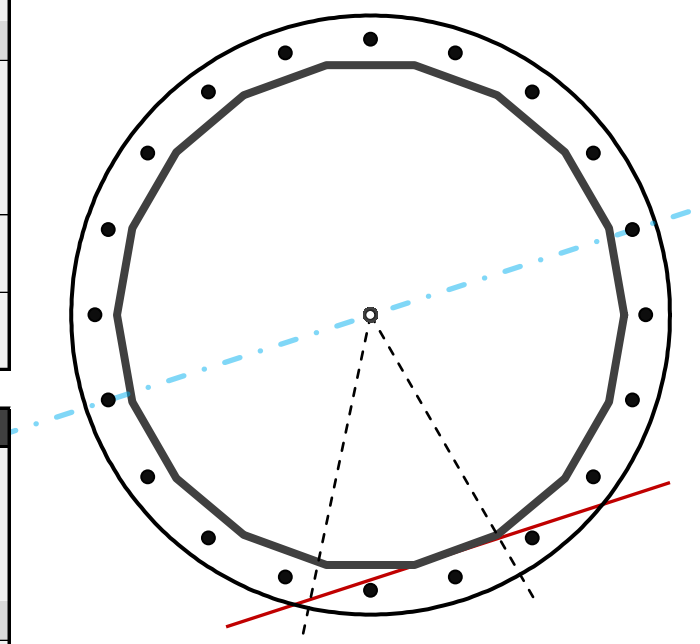

Original Anchor Rods		
Arrangement	Radial	-
Quantity	20	-
Diameter, ø	2 1/4	in
Bolt Circle	69	in
Grade	A615-75	
Yield Strength, Fy	75	ksi
Tensile Strength, Fu	100	ksi
Spacing	10.8	in
Orientation Offset		°
Applied Force, Pu	148.0	k
Anchor Rods, ϕPn	243.6	k

Calculations for Monopole Base Plate & Anchor Rod Analysis

Reaction Distribution

Reaction	Shear Vu	Moment Mu	Factor
-	k	k-ft	-
Base Forces	32.9	4014.8	1.00
Anchor Rod Forces	32.9	4014.8	1.00
Additional Bolt (Grp1) Forces	0.0	0.0	0.00
Additional Bolt (Grp2) Forces	0.0	0.0	0.00
Dywidag Forces	0.0	0.0	0.00
Stiffener Forces	0.0	0.0	0.00

Geometric Properties

Section	Gross Area	Net Area	Individual Inertia	Threads per Inch	Moment of Inertia
-	in^2	in^2	in^4	#	in^4
Pole	84.8008	4.7112	0.3016		40768.65
Bolt	3.9761	3.2477	0.8393	4.5	36057.13
Bolt1	0.0000	0.0000	0.0000	0	0.00
Bolt2	0.0000	0.0000	0.0000	0	0.00
Dywidag	0.0000	0.0000	0.0000		0.00
Stiffener	0.0000	0.0000	0.0000		0.00

Base Plate		
Shape	Round	-
Diameter, D	75	in
Thickness, t	2.75	in
Yield Strength, Fy	60	ksi
Tensile Strength, Fu	75	ksi
Base Plate Chord	41.533	in
Detail Type	d	-
Detail Factor	0.50	-
Clear Distance	3	-

Anchor Rods		
Anchor Rod Quantity, N	20	-
Rod Diameter, d	2.25	in
Bolt Circle, BC	69	in
Yield Strength, Fy	75	ksi
Tensile Strength, Fu	100	ksi
Applied Axial, Pu	148.0	k
Applied Shear, Vu	0.8	k
Compressive Capacity, ϕPn	243.6	k
Tensile Capacity, ϕRnt	0.608	OK
Interaction Capacity	0.614	OK

External Base Plate		
Chord Length AA	34.592	in
Additional AA	5.500	in
Section Modulus, Z	75.799	in^3
Applied Moment, Mu	411.0	k-ft
Bending Capacity, ϕMn	4093.2	k-ft
Capacity, Mu/ϕMn	0.100	OK
Chord Length AB	32.785	in
Additional AB	5.500	in
Section Modulus, Z	72.383	in^3
Applied Moment, Mu	228.3	k-ft
Bending Capacity, ϕMn	3908.7	k-ft
Capacity, Mu/ϕMn	0.058	OK
Bend Line Length	27.768	in
Additional Bend Line	0.000	in
Section Modulus, Z	52.499	in^3
Applied Moment, Mu	299.7	k-ft
Bending Capacity, ϕMn	2835.0	k-ft
Capacity, Mu/ϕMn	0.106	OK

Internal Base Plate		
Arc Length	0.000	in
Section Modulus, Z	0.000	in^3
Moment Arm	0.000	in
Applied Moment, Mu	0.0	k-ft
Bending Capacity, ϕMn	0.0	k-ft
Capacity, Mu/ϕMn		

Flange Plate Analysis

Flange Plate

Plate Type	***Flange***	***@ 149 ft***
Pole Diameter	30.08	in
Pole Thickness	0.25	in
Plate Diameter	37.5	in
Plate Thickness	2	in
Plate Fy	50	ksi
Weld Length	5/16	in
f_s Resistance	177.19	k-in
Applied	13.74	k-in

Code Rev.	***H***
Moment	187.7 k-ft
Axial	14.0 k

Required Flange Thickness:
0.56 in OK

Date	6/4/2021
Engineer	H.Altahan
Site #	310972
Carrier	VZW

Stiffeners

#	

Bolts

#	***24***	
Bolt Circle	34.5	in
(R)adial / (S)quare	R	
Diameter	1	in
Hole Diameter	1 1/8	in
Type	A325	
Fy	92	ksi
Fu	120	ksi
f_s Resistance	54.52	k
Applied	10.29	k

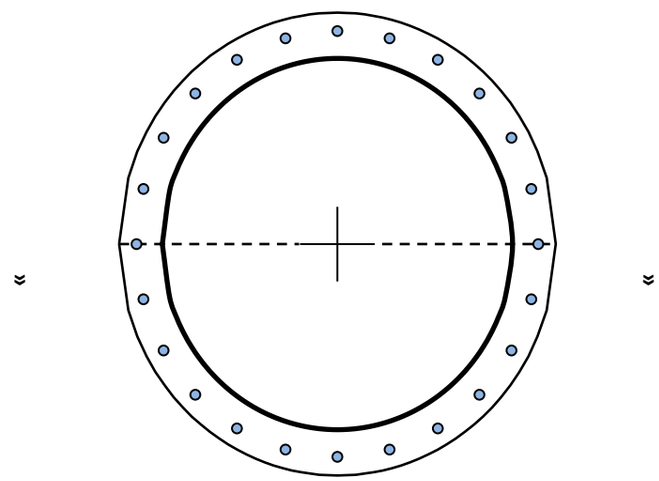

Reinforcement

#	

Plate Stress Ratio:

8% Pass

Bolt Stress Ratio:

19% Pass

Extra Bolts O

#	

Maser Consulting Connecticut
2000 Midlantic Drive, Suite 100
Mt. Laurel, NJ 08054
856.797.0412
Peter.Albano@colliersengineering.com

Post-Mod Antenna Mount Analysis Report and PMI Requirements

Mount Fix

SMART Tool Project #: 10069540
Maser Consulting Connecticut Project #: 21777880A

June 30, 2021

Site Information	*Site ID:*	*469063-VZW / NE WATERFORD SE CT*
	Site Name:	*NE WATERFORD SE CT*
	Carrier Name:	*Verizon Wireless*
	Address:	*15 Miner Lane* *Waterford, Connecticut 06385* *New London County*
	Latitude:	*41.329167°*
	Longitude:	*-72.124444°*
Structure Information	*Tower Type:*	*Monopole*
	Mount Type:	*12.50-Ft Platform*

FUZE ID # 16067742

Analysis Results

Platform: **73.2% Pass**

******Contractor PMI Requirements*:**
Included at the end of this MA report
Available & Submitted via portal at https://pmi.vzwsmart.com
Contractor - Please Review Specific Site PMI Requirements Upon Award
Requirements also Noted on Mount Modification Drawings
Requirements may also be Noted on A & E drawings

Report Prepared By: Selene Chen

STATE OF CONNECTICUT
JUSTIN PETER LINETTE
No. 31965
LICENSED
PROFESSIONAL ENGINEER

Digitally signed by Justin Linette
Date: 2021.07.01 09:52:31-04'00'

Executive Summary:

The objective of this report is to summarize the analysis results of the antenna support mount including the proposed modifications at the subject facility for the final wireless telecommunications configuration, per the applicable codes and standards.

This analysis is inclusive of the mount structure only and does not address the structural capacity of the supporting structure. This mounting frame was not analyzed as an anchor attachment point for fall protection. All climbing activities are required to have a fall protection plan completed by a competent person.

Sources of Information:

Document Type	Remarks
Radio Frequency Data Sheet (RFDS)	*Verizon Wireless, Site ID: 1708491, dated March 22, 2021*
Mount Mapping Report	*HighTower Solutions, Inc., Site #: 469063, dated May 7, 2020*
Mount Analysis Report	*Maser Consulting Connecticut, Project #: 21777880A, dated May 7, 2021*
Mount Modification Drawings	*Maser Consulting Connecticut, Project #: 21777880A, dated June 30, 2021*

Analysis Criteria:

Codes and Standards:	ANSI/TIA-222-H	
Wind Parameters:	Basic Wind Speed (Ultimate 3-sec. Gust), V_{ULT}:	127 mph
	Ice Wind Speed (3-sec. Gust):	50 mph
	Design Ice Thickness:	1.00 in
	Risk Category:	II
	Exposure Category:	C
	Topographic Category:	1
	Topographic Feature Considered:	N/A
	Topographic Method:	N/A
	Ground Elevation Factor, K_e:	0.997
Seismic Parameters:	S_S:	0.191
	S_1:	0.052
Maintenance Parameters:	Wind Speed (3-sec. Gust):	30 mph
	Maintenance Live Load, Lv:	250 lbs.
	Maintenance Live Load, Lm:	500 lbs.
Analysis Software:	RISA-3D (V17)	

Final Loading Configuration:

The following equipment has been considered for the analysis of the mount:

Mount Elevation (ft)	Equipment Elevation (ft)	Quantity	Manufacturer	Model	Status
157.00	160.04	6	Commscope	JAHH-65B-R3B	Added
		3	Samsung	MT6407-77A	
		3	Commscope	CBC78T-DS-43-2X	
		3	Samsung	B2/B66A RRH-BR049	
		3	Samsung	B5/B13 RRH-BR04C	
		2	Raycap	RRFDC-3315-PF-48*	Retained

* Equipment is flush mounted directly to the Monopole. They are not mounted on platform mount and are not included in this mount analysis.

The recent mount mapping reported existing OVP units. It is acceptable to install up to any three (3) of the OVP model numbers listed below as required at any location other than the mount face without affecting the structural capacity of the mount. If OVP units are installed on the mount face, a mount re-analysis may be required unless replacing an existing OVP.

Model Number	Ports	AKA
DB-B1-6C-12AB-0Z	6	OVP-6
RVZDC-6627-PF-48	12	OVP-12

Standard Conditions:

1. All engineering services are performed on the basis that the information provided to Maser Consulting Connecticut and used in this analysis is current and correct. The existing equipment loading has been applied at locations determined from the supplied documentation. Any deviation from the loading locations specified in this report shall be communicated to Maser Consulting Connecticut to verify deviation will not adversely impact the analysis.

2. Mounts are assumed to have been properly fabricated, installed and maintained in good condition, twist free and plumb in accordance with its original design and manufacturer's specifications.

   Obvious safety and structural issues/deficiencies noticed at the time of the mount mapping and reported in the Mount Mapping Report are assumed to be corrected and documented as part of the PMI process and are not considered in the mount analysis.

   The mount analysis and the mount mapping are not a condition assessment of the mount. Proper maintenance and condition assessments are still required post analysis.

3. For mount analyses completed from other data sources (including new replacement mounts) and not specifically mapped by Maser Consulting Connecticut, the mounts are assumed to have been properly fabricated, installed and maintained in good condition, twist free and plumb in accordance with its original design and manufacturer's specifications.

4. All member connections are assumed to have been designed to meet or exceed the load carrying capacity of the connected member unless otherwise specified in this report.

5. The mount was checked up to, and including, the bolts that fasten it to the mount collar/attachment and threaded rod connections in collar members if applicable. Local deformation and interaction between the mount collar/attachment and the supporting tower structure are outside the scope of this analysis.

6. All services are performed, results obtained, and recommendations made in accordance with generally accepted engineering principles and practices. Maser Consulting Connecticut is not responsible for the conclusion, opinions, and recommendations made by others based on the information supplied.

7. Structural Steel Grades have been assumed as follows, if applicable, unless otherwise noted in this analysis:
   - Channel, Solid Round, Angle, Plate — ASTM A36 (Gr. 36)
   - HSS (Rectangular) — ASTM 500 (Gr. B-46)
   - Pipe — ASTM A53 (Gr. B-35)
   - Threaded Rod — F1554 (Gr. 36)
   - Bolts — ASTM A325

8. Any mount modifications listed under Sources of Information are assumed to have been installed per the design specifications.

Discrepancies between in-field conditions and the assumptions listed above may render this analysis invalid unless explicitly approved by Maser Consulting Connecticut.

Analysis Results:

Component	Utilization %	Pass/Fail
Face Horizontal	25.5 %	Pass
Standoff Horizontal	13.3 %	Pass
Platform Crossmember	11.4 %	Pass
Mount Pipe	51.2 %	Pass
Corner Plate	29.2 %	Pass
Grating Support	15.7 %	Pass
Cross Arm Plate	32.5 %	Pass
Support Rail	42.5 %	Pass
Connection Angle	73.2 %	Pass
Kicker	10.4 %	Pass
Mount Connection	25.2 %	Pass

Structure Rating – *(Controlling Utilization of all Components)*	**73.2%**

Recommendation:

The existing mount will be **SUFFICIENT** for the final loading after the proposed modifications are successfully completed.

ANSI/ASSP rigging plan review services compliant with the requirements of ANSI/TIA 322 are available for a Construction Class IV site or other, if required. Separate review fees will apply.

Attachments:

1. Mount Photos
2. Mount Mapping Report (for reference only)
3. Analysis Calculations
4. **Contractor Required PMI Report Deliverables**
5. Antenna Placement Diagrams
6. TIA Adoption and Wind Speed Usage Letter

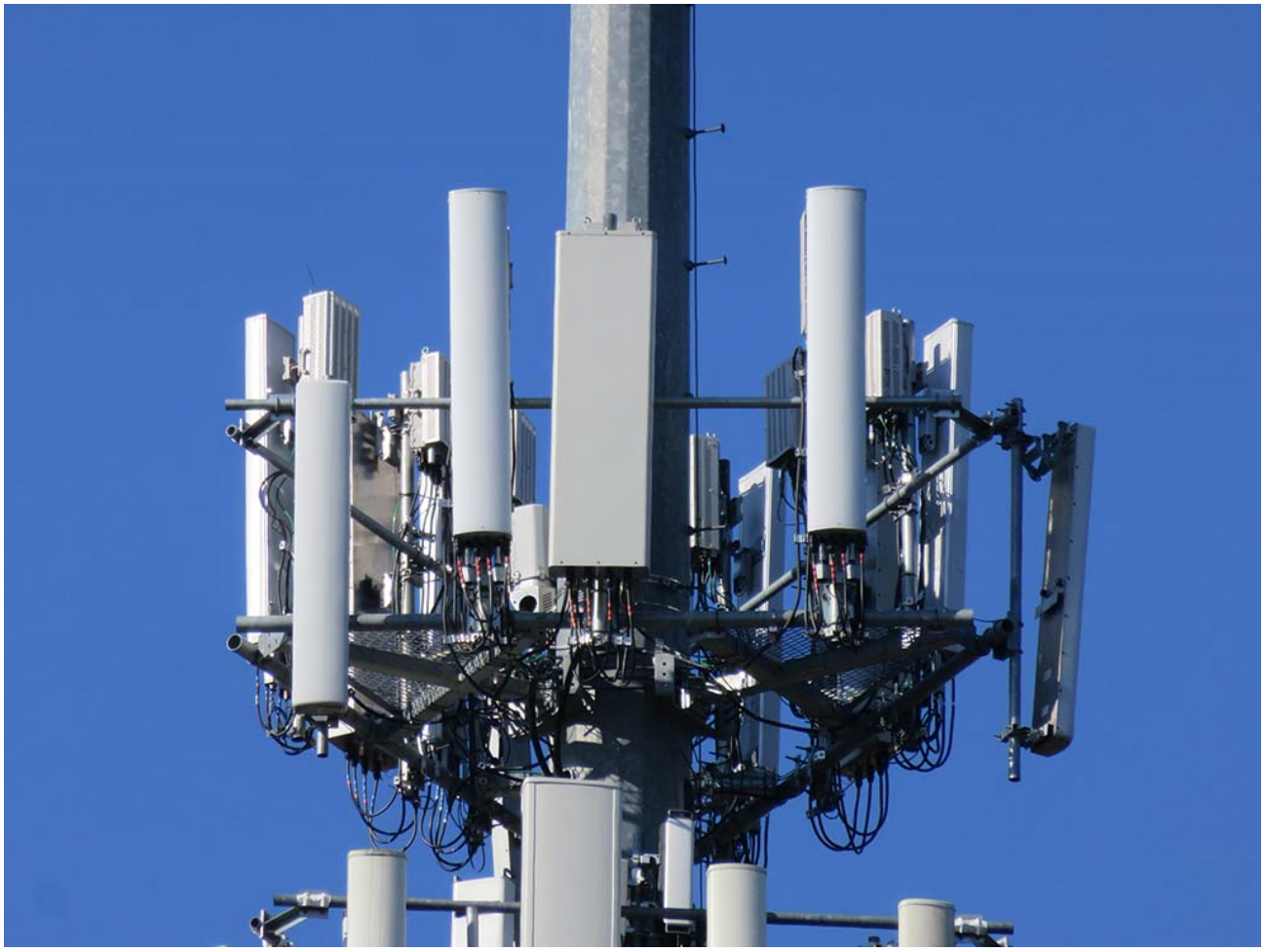

Updated on 3-03-2020

Antenna Mount Mapping Form (PATENT PENDING)

			FCC #
			1268713
Tower Owner:	American Tower Corp.	**Mapping Date:**	5/7/2020
Site Name:	NE WATERFORD SE CT	**Tower Type:**	Monopole
Site Number or ID:	469063	**Tower Height (Ft.):**	N/A
Mapping Contractor:	HighTower Solutions, Inc.	**Mount Elevation (Ft.):**	160'

This antenna mapping form is the property of TES and under **PATENT PENDING**. The formation contained herein is considered confidential in nature and is to be used only for the specific customer it was intended for. Reproduction, transmission, publication, modification or disclosure by any method is prohibited except by express written permission of TES. All means and methods are the responsibility of the contractor and the work shall be compliant with ANSI/ASSE A 10.48, OSHA, FCC, FAA and other safety requirements that may apply. TES is not warrantying the usability of the safety climb as it must be assessed prior to each use in compliance with OSHA requirements.

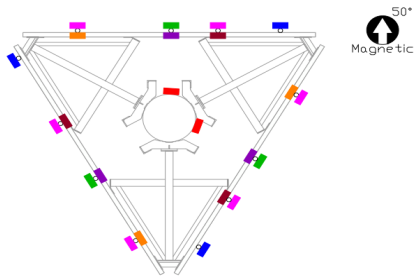

Legend
- Antenna #1
- Antenna #2
- Antenna #3
- Antenna #4
- Antenna #5
- Antenna #6
- Antenna #7

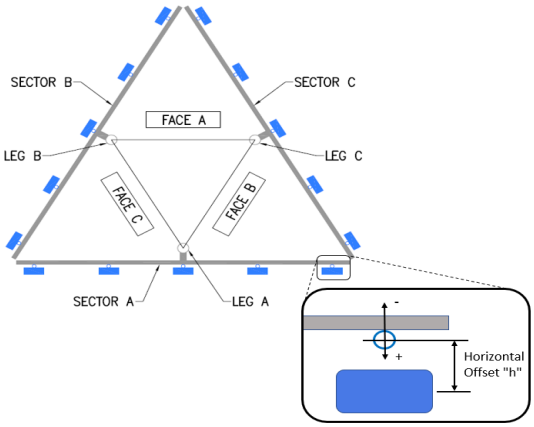

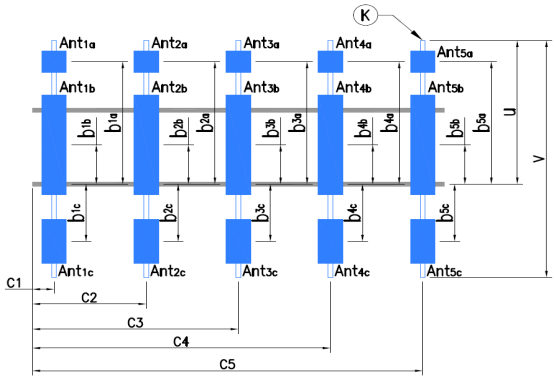

Antenna Layout

Mount Azimuth (Degree) for Each Sector and Climbing Information			
Sector A:	50.00	Deg	
Sector B:	170.00	Deg	
Sector C:	290.00	Deg	
Sector D:		Deg	
Climbing	270.00	Deg	N/A
Climbing Facility	Corrosion Type:		Good condition.
	Access:		Climbing path was obstructed.
	Condition:		N/A

Mount Pipe Configuration and Geometries [Unit = Inches]

Sector / Position	Mount Pipe Size & Length	Vertical Offset Dimension "u"	Horizontal Offset "C1, C2, C3, etc."	Sector / Position	Mount Pipe Size & Length	Vertical Offset Dimension "u"	Horizontal Offset "C1, C2, C3, etc."
A1	7'T/2.38"Dia.Pipe x.15"	53.00	18.00	C1	7'T/2.38"Dia.Pipe x.15"	53.00	5.00
A2	9'T/2.88"Dia.Pipe x.18"	89.50	50.00	C2	9'T/2.88"Dia.Pipe x.18"	87.00	48.50
A3	9'T/2.88"Dia.Pipe x.18"	89.50	74.00	C3	9'T/2.88"Dia.Pipe x.18"	87.00	84.50
A4	9'T/2.88"Dia.Pipe x.18"	89.50	122.00	C4	9'T/2.88"Dia.Pipe x.18"	87.00	125.50
A5				C5			
A6				C6			
B1	7'T/2.38"Dia.Pipe x.15"	54.00	17.00	D1			
B2	9'T/2.88"Dia.Pipe x.18"	87.00	48.50	D2			
B3	9'T/2.88"Dia.Pipe x.18"	87.00	76.50	D3			
B4	9'T/2.88"Dia.Pipe x.18"	87.00	118.50	D4			
B5				D5			
B6				D6			

Distance from top of bottom support rail to lowest tip of ant./eqpt. of Carrier above. (N/A if > 10 ft.)	
Distance from top of bottom support rail to highest tip of ant./eqpt. of Carrier below. (N/A if > 10 ft.)	

Please enter additional infomation or comments below.

There are (2) RFS Squids (RRFDC-3315-PF-48) mounted to the tower at 55° and 155° / Height - 162'6" to Base / Dimensions - 19"Tx16"Wx11"

Tower Face Width at Mount Elev. (ft.):		Tower Leg Size or Pole Shaft Diameter at Mount Elev. (in.):	27.75

	Enter antenna model. If not labled, enter "Unknown".					Mounting Locations [Units are inches and degrees]			Photos of antennas
Ants. Items	Antenna Models if Known	Width (in.)	Depth (in.)	Height (in.)	Coax Size and Qty	Vertical Distances"b_{1a}, b_{2a}, b_{3a}, b_{1b}...." (In.)	Horiz. Offset "h" (Use "-" if Ant. is behind)	Antenna Azimuth (Degrees)	Photo Numbers
Sector A									
Ant_{1a}									
Ant_{1b}	BXA-70063-6CF-EDIN-	11.25	5.25	70.50	N/A	12.00	11.50	50.00	3867
Ant_{1c}									
Ant_{2a}									
Ant_{2b}	HBXX-6517DS-A2M	12.00	6.50	75.00	(2) 1 1/4"	51.00	9.00	50.00	3877
Ant_{2c}	UHFA, B25 RRH 4x30	12.25	7.00	21.00	(2) 1 1/4"	78.00	-7.50		3889
Ant_{3a}									
Ant_{3b}	QUAD656C0000G	20.50	7.25	74.25	(2) 1 1/4"	41.00	10.00	50.00	3872
Ant_{3c}	B13 RRH 4x30	12.00	7.50	21.00	(2) 1 1/4"	78.00	-6.50		3893
Ant_{4a}									
Ant_{4b}	HBXX-6517DS-A2M	12.00	6.50	75.00	(2) 1 1/4"	52.00	9.00	50.00	3877
Ant_{4c}	UHIE, B66a RRH 4x45	11.75	7.25	25.50	(2) 1 1/4"	78.00	-7.50		3885
Ant_{5a}									
Ant_{5b}									
Ant_{5c}									
Sector B									
Ant_{1a}									
Ant_{1b}	BXA-70063-6CF-EDIN-	11.25	5.25	70.50	N/A	12.00	10.50	170.00	3867
Ant_{1c}									
Ant_{2a}									
Ant_{2b}	HBXX-6517DS-A2M	12.00	6.50	75.00	(2) 1 1/4"	51.00	9.50	170.00	3877
Ant_{2c}	UHFA, B25 RRH 4x30	12.25	7.00	21.00	(2) 1 1/4"	78.00	-7.50		3889
Ant_{3a}									
Ant_{3b}	QUAD656C0000G	20.50	7.25	74.25	(2) 1 1/4"	42.00	10.50	170.00	3872
Ant_{3c}	B13 RRH 4x30	12.00	7.50	21.00	(2) 1 1/4"	79.00	-7.00		3893
Ant_{4a}									
Ant_{4b}	HBXX-6517DS-A2M	12.00	6.50	75.00	(2) 1 1/4"	49.00	8.50	170.00	3877
Ant_{4c}	UHIE, B66a RRH 4x45	11.75	7.25	25.50	(2) 1 1/4"	76.00	-7.00		3885
Ant_{5a}									
Ant_{5b}									
Ant_{5c}									

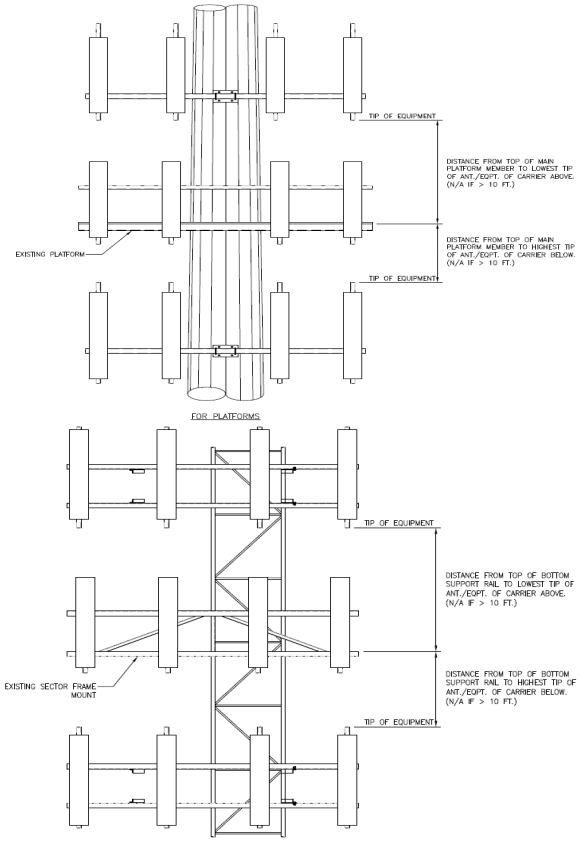

Sector C									
Ant_{1a}									
Ant_{1b}	BXA-70063-6CF-EDIN-	11.25	5.25	70.50	N/A	12.00	11.00	290.00	3867
Ant_{1c}									
Ant_{2a}									
Ant_{2b}	HBXX-6517DS-A2M	12.00	6.50	75.00	(2) 1 1/4"	50.00	8.50	290.00	3877
Ant_{2c}	UHFA, B25 RRH 4x30	12.25	7.00	21.00	(2) 1 1/4"	76.00	-7.50		3889
Ant_{3a}									
Ant_{3b}	QUAD656C0000G	20.50	7.25	74.25	(2) 1 1/4"	42.00	10.50	290.00	3872
Ant_{3c}	B13 RRH 4x30	12.00	7.50	21.00	(2) 1 1/4"	78.00	-7.00		3893
Ant_{4a}									
Ant_{4b}	HBXX-6517DS-A2M	12.00	6.50	75.00	(2) 1 1/4"	49.00	9.00	290.00	3877
Ant_{4c}	UHIE, B66a RRH 4x45	11.75	7.25	25.50	(2) 1 1/4"	76.00	-7.50		3885
Ant_{5a}									
Ant_{5b}									
Ant_{5c}									
Sector D									
Ant_{1a}									
Ant_{1b}									
Ant_{1c}									
Ant_{2a}									
Ant_{2b}									
Ant_{2c}									
Ant_{3a}									
Ant_{3b}									
Ant_{3c}									
Ant_{4a}									
Ant_{4b}									
Ant_{4c}									
Ant_{5a}									
Ant_{5b}									
Ant_{5c}									

Observed Safety and Structural Issues During the Mount Mapping		
Issue #	Description of Issue	Photo #
1		
2		
3		
4		
5		
6		
7	a	
8		

Mapping Notes

1. Please report any visible structural or safety issues observed on the antenna mounts (Damaged members, loose connections, tilting mounts, safety climb issues, etc.)
2. If the thickness of the existing pipes or tubing can't be obtained from a general tool (such as Caliper), please use an ultrasonic measurement tool (thickness gauge) to measure the thickness.
3. Please create all required detail sketches of the mounts and insert them into the "Sketches" tab.
4. Please measure and enter the bolt sizes and types under the Members Box in the spreadsheet of the mount type.
5. Take and label the photos of the tower, mounts, connections, antennas and all measurements. Minimum 50 photos are required.
6. Please measure and report the size and length of all existing antenna mounting pipes.
7. Please measure and report the antenna information for all sectors.
8. Don't delete or rearrange any sheet or contents of any sheet from this mapping form.

Standard Conditions

1. Obvious safety and structural issues/deficiencies noticed at the time of the mount mapping are to be reported in this mapping. However, this mount mapping is not a condition assessment of the mount.

Updated on 3-03-2020

Antenna Mount Mapping Form (PATENT PENDING)

FCC # 1268713

Tower Owner:	American Tower Corp.	**Mapping Date:**	5/7/2020
Site Name:	NE WATERFORD SE CT	**Tower Type:**	Monopole
Site Number or ID:	469063	**Tower Height (Ft.):**	N/A
Mapping Contractor:	HighTower Solutions, Inc.	**Mount Elevation (Ft.):**	160'

This antenna mapping form is the property of TES and under PATENT PENDING. The formation contained herein is considered confidential in nature and is to be used only for the specific customer it was intended for. Reproduction, transmission, publication, modification or disclosure by any method is prohibited except by express written permission of TES. All means and methods are the responsibility of the contractor and the work shall be compliant with ANSI/ASSE A 10.48, OSHA, FCC, FAA and other safety requirements that may apply. TES is not warrantying the usability of the safety climb as it must be assessed prior to each use in compliance with OSHA requirements.

Please Insert Sketches of the Antenna Mount

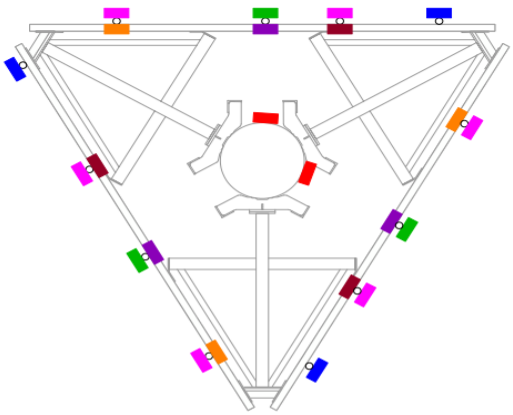

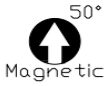

Plan View

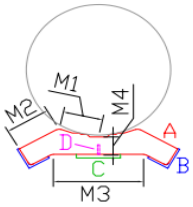

Front Elevation

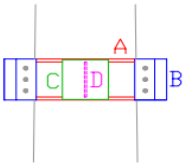

Legend

- Antenna #1
- Antenna #2
- Antenna #3
- Antenna #4
- Antenna #5
- Antenna #6
- Antenna #7

A	.62" Flat	Welded
B	8.50"T/4"x4"x.38" Angle	3-.62" All Thread
C	8.25"Tx8.50"Wx.75" Flat	Welded
D	8.25"Tx2"Wx.38" Flat	Welded
M1	6.75"	
M2	7.50"	
M3	16.50"	
M4	3.25"	
	Measurement of Gap at All Thread	15"

Plan View

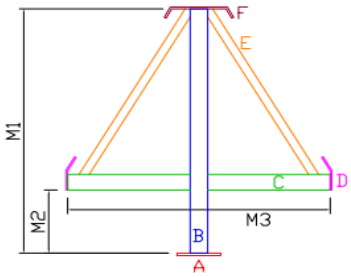

Side Elevation

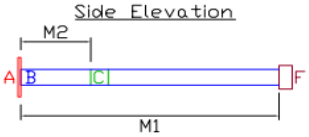

Plan View "D"

Plan View "F"

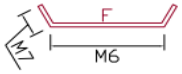

Front Elevation

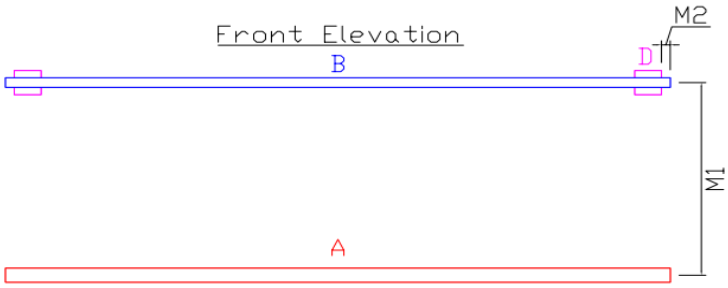

Plan View

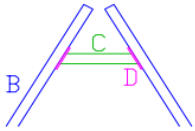

A	8"Tx8"Wx.75"Flat	4-.62"
B	5'2"L/4"Sq.Tube x.237"	Welded
C	2'4.50"L/4"Sq.Tube x.237"	Welded
D	6"Tx.38"	Welded
E	4'4"L/2"x2"x.25" Angle	Welded
F	6"Tx.50"	Welded
M1	5'2"	
M2	16"	
M3	5'1"	
M4	5.25"	
M5	3.50"	
M6	12.75"	
M7	3.25"	

A	12'6"L/3.50"Dia.Pipe x.20"	1-.50" U-Bolt
B	12'6.25"L/2.38"Dia.Pipe x.15"	2-.50" U-Bolt
C	15.50"L/2.50"x2.50"x.22" Angle	Welded
D	6"Tx6"Wx.38"Flat	2-.50" U-Bolt
M1	4'	
M2	2"	

Please Insert Sketches of the Antenna Mount, cont'd

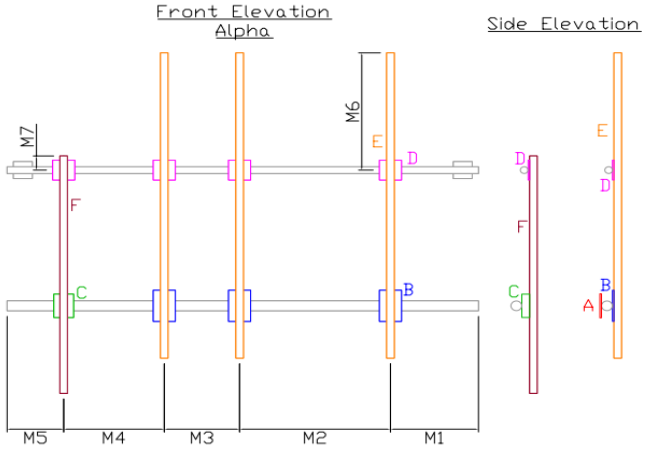

A	8.50"Tx1.50"Wx.38"Flat	2-.50" All Thread
B	11"Tx7"Wx.38" Flat	Sharing A
C	8.25"T/2.50"x6.25"x.32" Channel	2-.50" U-Bolt
D	7"Tx7"Wx.38"Flat	2-.50" U-Bolt
E	9"T/2.88"Dia.Pipe x.18"	2-.50" U-Bolt
F	7"T/2.38"Dia.Pipe x.15"	2-.50" U-Bolt
M1	2'4"	
M2	4'	
M3	2'	
M4	2'8"	
M5	1'6"	
M6	3'5.50"	
M7	5"	

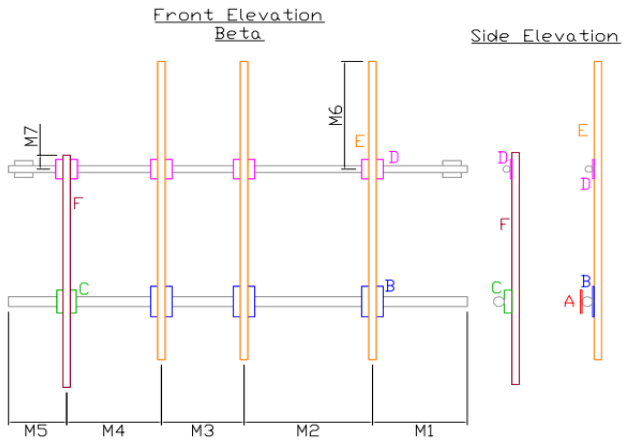

A	8.50"Tx1.50"Wx.38"Flat	2-.50" All Thread
B	11"Tx7"Wx.38" Flat	Sharing A
C	8.25"T/2.50"x6.25"x.32" Channel	2-.50" U-Bolt
D	7"Tx7"Wx.38"Flat	2-.50" U-Bolt
E	9"T/2.88"Dia.Pipe x.18"	2-.50" U-Bolt
F	7"T/2.38"Dia.Pipe x.15"	2-.50" U-Bolt
M1	2'7.5"	
M2	3'6"	
M3	2'4"	
M4	2'7.5"	
M5	1'5"	
M6	3'3"	
M7	6"	

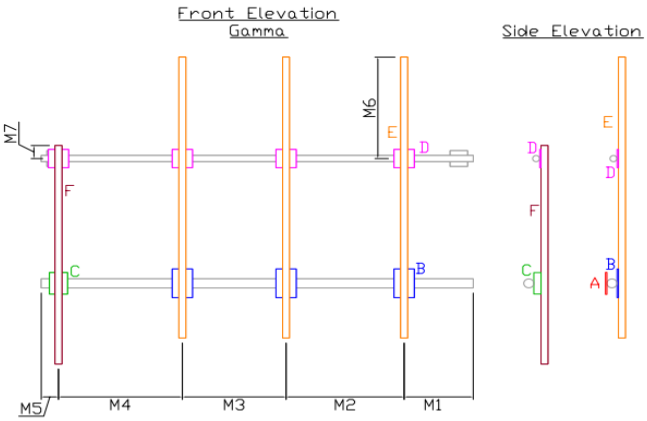

A	8.50"Tx1.50"Wx.38"Flat	2-.50" All Thread
B	11"Tx7"Wx.38" Flat	Sharing A
C	8.25"T/2.50"x6.25"x.32" Channel	2-.50" U-Bolt
D	7"Tx7"Wx.38"Flat	2-.50" U-Bolt
E	9"T/2.88"Dia.Pipe x.18"	2-.50" U-Bolt
F	7"T/2.38"Dia.Pipe x.15"	2-.50" U-Bolt
M1	2'.5"	
M2	3'5"	
M3	3'	
M4	3'7.5"	
M5	5"	
M6	3'3"	
M7	5"	

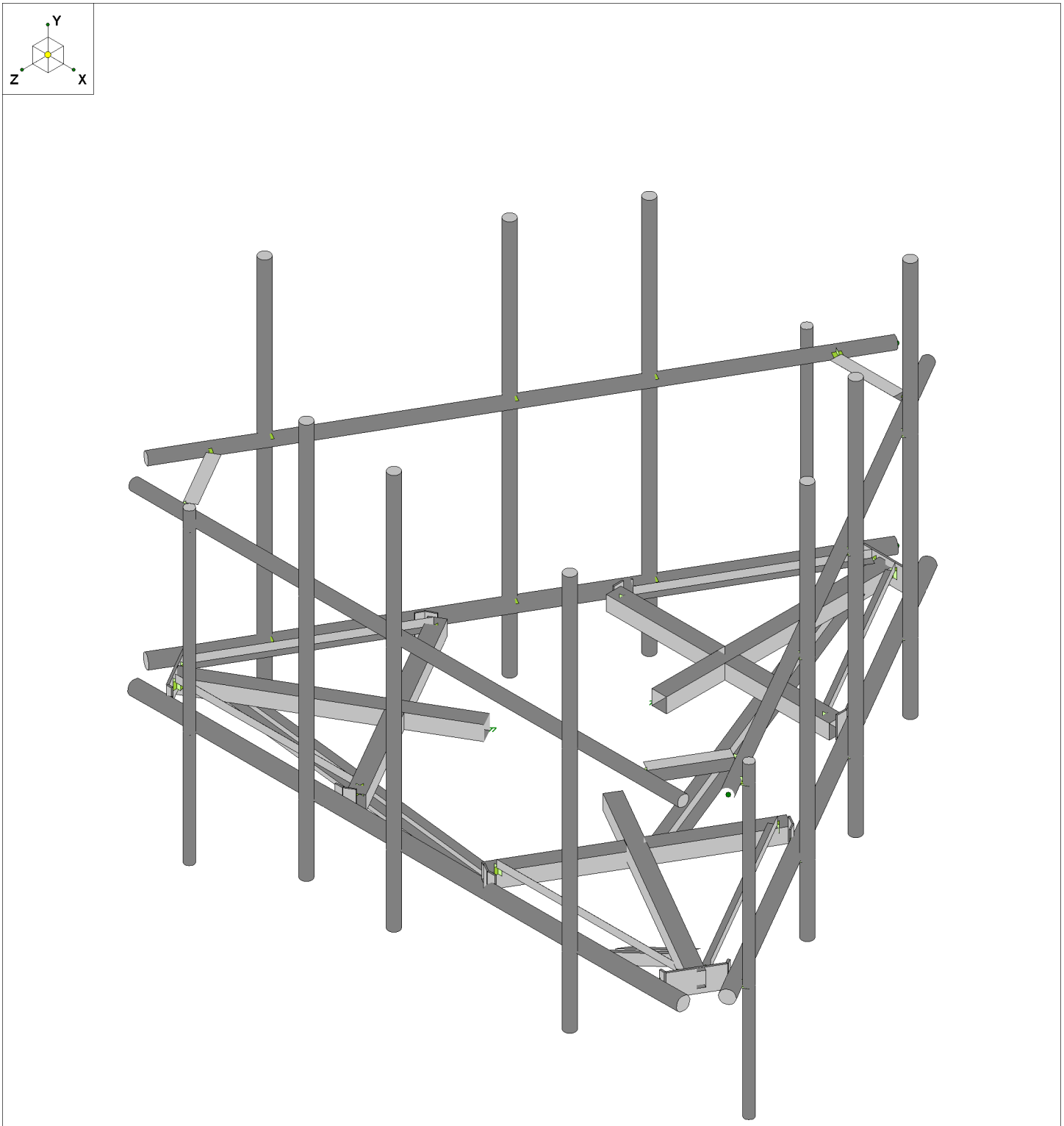

Envelope Only Solution

		SK - 1
		June 30, 2021 at 10:19 AM
		469063-VZW_MT_LO_H - Mod Loa...

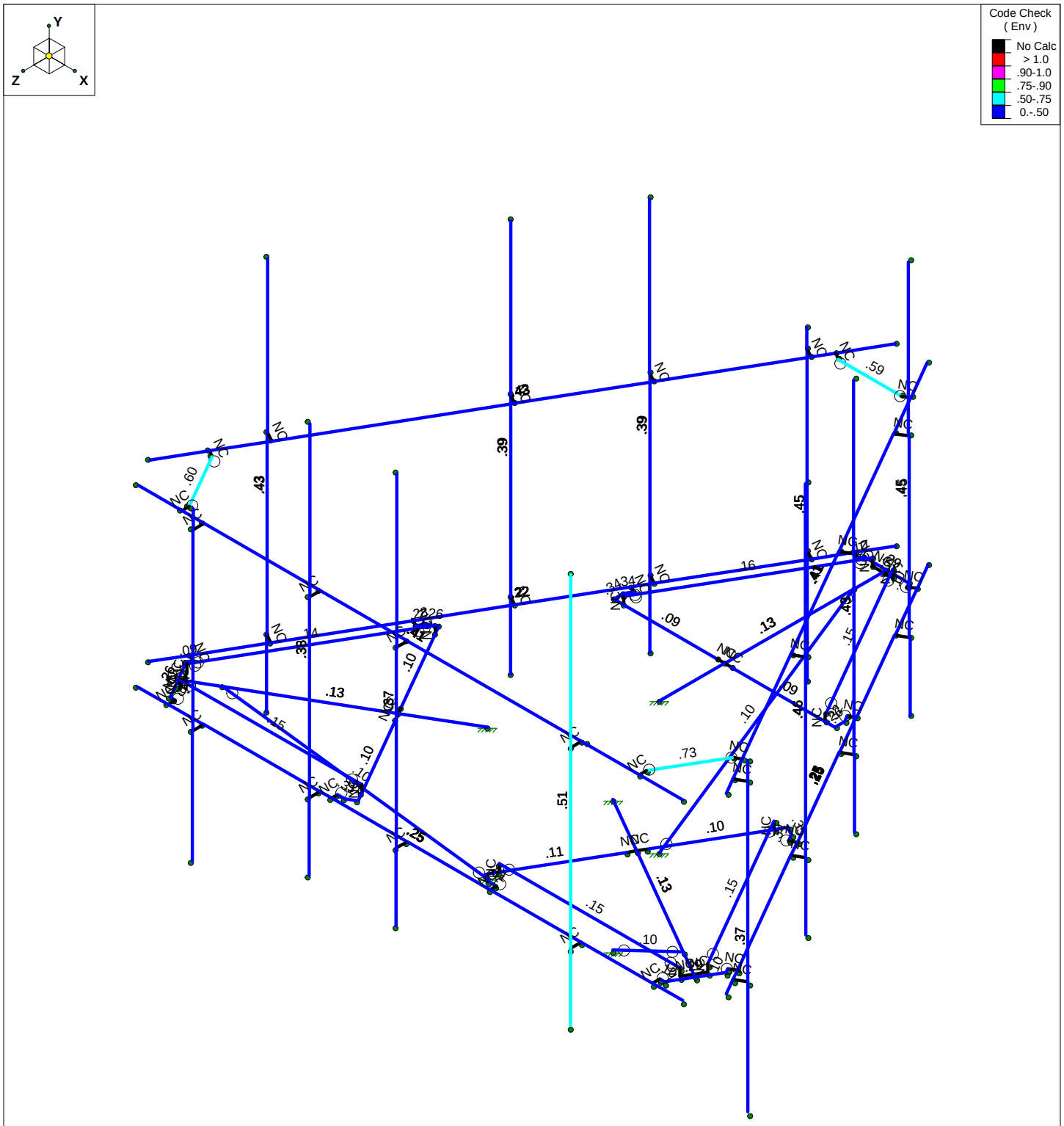

Member Code Checks Displayed (Enveloped)
Envelope Only Solution

		SK - 2
		June 30, 2021 at 10:20 AM
		469063-VZW_MT_LO_H - Mod Loa...

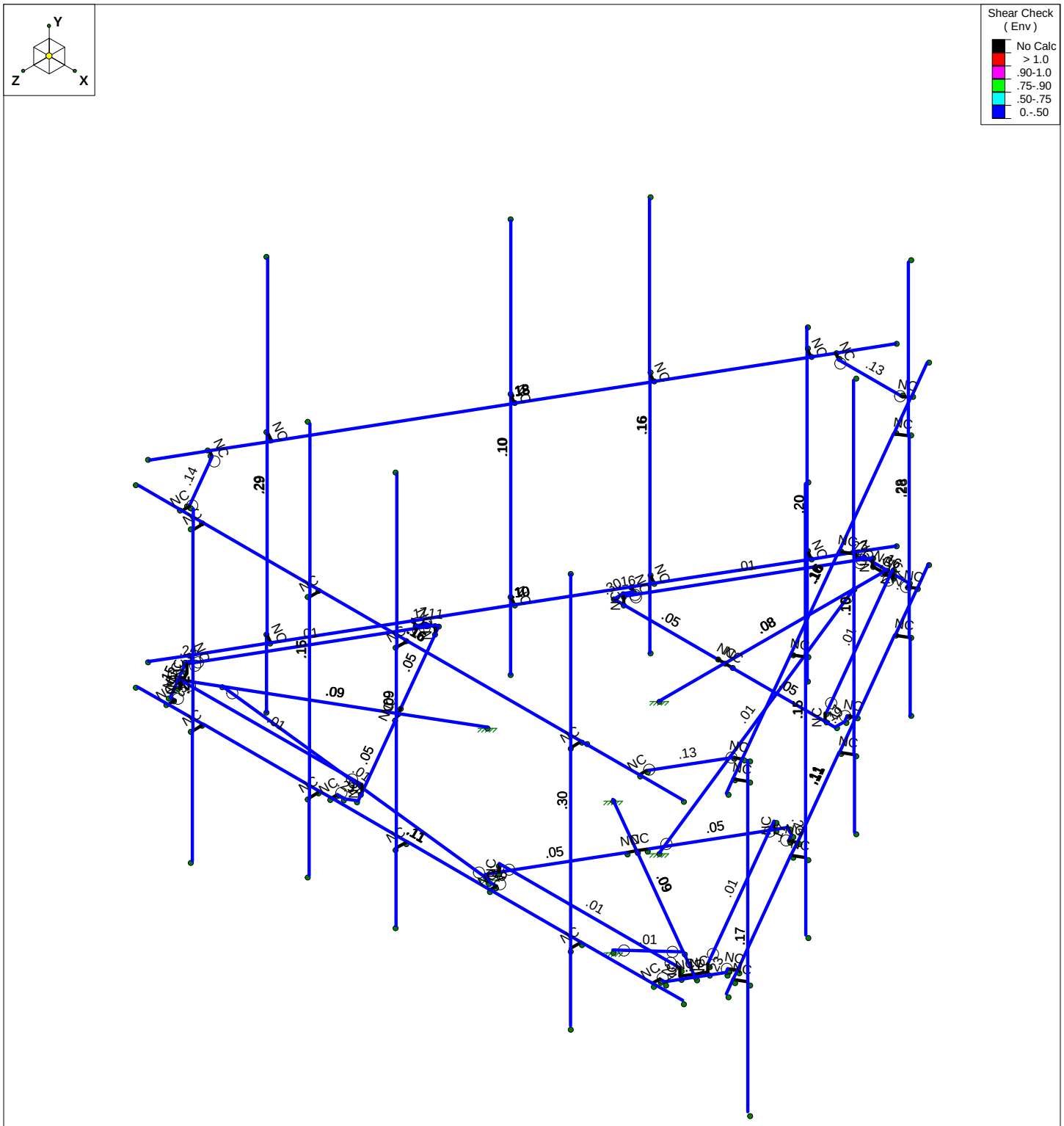

Member Shear Checks Displayed (Enveloped)
Envelope Only Solution

		SK - 3
		June 30, 2021 at 10:20 AM
		469063-VZW_MT_LO_H - Mod Loa...

Basic Load Cases

	BLC Description	Category	X Gravity	Y Gravity	Z Gravity	Joint	Point	Distributed	Area(Me...	Surface(P...
1	Antenna D	None					81			
2	Antenna Di	None					81			
3	Antenna Wo (0 Deg)	None					81			
4	Antenna Wo (30 Deg)	None					81			
5	Antenna Wo (60 Deg)	None					81			
6	Antenna Wo (90 Deg)	None					81			
7	Antenna Wo (120 Deg)	None					81			
8	Antenna Wo (150 Deg)	None					81			
9	Antenna Wo (180 Deg)	None					81			
10	Antenna Wo (210 Deg)	None					81			
11	Antenna Wo (240 Deg)	None					81			
12	Antenna Wo (270 Deg)	None					81			
13	Antenna Wo (300 Deg)	None					81			
14	Antenna Wo (330 Deg)	None					81			
15	Antenna Wi (0 Deg)	None					81			
16	Antenna Wi (30 Deg)	None					81			
17	Antenna Wi (60 Deg)	None					81			
18	Antenna Wi (90 Deg)	None					81			
19	Antenna Wi (120 Deg)	None					81			
20	Antenna Wi (150 Deg)	None					81			
21	Antenna Wi (180 Deg)	None					81			
22	Antenna Wi (210 Deg)	None					81			
23	Antenna Wi (240 Deg)	None					81			
24	Antenna Wi (270 Deg)	None					81			
25	Antenna Wi (300 Deg)	None					81			
26	Antenna Wi (330 Deg)	None					81			
27	Antenna Wm (0 Deg)	None					81			
28	Antenna Wm (30 Deg)	None					81			
29	Antenna Wm (60 Deg)	None					81			
30	Antenna Wm (90 Deg)	None					81			
31	Antenna Wm (120 De...	None					81			
32	Antenna Wm (150 De...	None					81			
33	Antenna Wm (180 De...	None					81			
34	Antenna Wm (210 De...	None					81			
35	Antenna Wm (240 De...	None					81			
36	Antenna Wm (270 De...	None					81			
37	Antenna Wm (300 De...	None					81			
38	Antenna Wm (330 De...	None					81			
39	Structure D	None		-1					3	
40	Structure Di	None						60	3	
41	Structure Wo (0 Deg)	None						120		
42	Structure Wo (30 Deg)	None						120		
43	Structure Wo (60 Deg)	None						120		
44	Structure Wo (90 Deg)	None						120		
45	Structure Wo (120 D...	None						120		
46	Structure Wo (150 D...	None						120		
47	Structure Wo (180 D...	None						120		
48	Structure Wo (210 D...	None						120		
49	Structure Wo (240 D...	None						120		
50	Structure Wo (270 D...	None						120		
51	Structure Wo (300 D...	None						120		

Basic Load Cases (Continued)

	BLC Description	Category	X Gravity	Y Gravity	Z Gravity	Joint	Point	Distributed	Area(Me...	Surface(P...
52	Structure Wo (330 D...	None						120		
53	Structure Wi (0 Deg)	None						120		
54	Structure Wi (30 Deg)	None						120		
55	Structure Wi (60 Deg)	None						120		
56	Structure Wi (90 Deg)	None						120		
57	Structure Wi (120 De...	None						120		
58	Structure Wi (150 De...	None						120		
59	Structure Wi (180 De...	None						120		
60	Structure Wi (210 De...	None						120		
61	Structure Wi (240 De...	None						120		
62	Structure Wi (270 De...	None						120		
63	Structure Wi (300 De...	None						120		
64	Structure Wi (330 De...	None						120		
65	Structure Wm (0 Deg)	None						120		
66	Structure Wm (30 D...	None						120		
67	Structure Wm (60 D...	None						120		
68	Structure Wm (90 D...	None						120		
69	Structure Wm (120 ...	None						120		
70	Structure Wm (150 ...	None						120		
71	Structure Wm (180 ...	None						120		
72	Structure Wm (210 ...	None						120		
73	Structure Wm (240 ...	None						120		
74	Structure Wm (270 ...	None						120		
75	Structure Wm (300 ...	None						120		
76	Structure Wm (330 ...	None						120		
77	Lm1	None					1			
78	Lm2	None					1			
79	Lv1	None					1			
80	Lv2	None					1			
81	BLC 39 Transient Are...	None						30		
82	BLC 40 Transient Are...	None						30		

Load Combinations

	Description	Solve	PDelta	S...	BLC	Fac...	BLC	Fac...	BLC	Fac...	BLC	Fac...	BLC	Fac...	BLC	Fac...	BLC	Fac...	BLC	Fac...	BLC	Fac...	BLC	Fac...
1	1.2D+1.0Wo (0...	Yes	Y		1	1.2	39	1.2	3	1	41	1												
2	1.2D+1.0Wo (3...	Yes	Y		1	1.2	39	1.2	4	1	42	1												
3	1.2D+1.0Wo (6...	Yes	Y		1	1.2	39	1.2	5	1	43	1												
4	1.2D+1.0Wo (9...	Yes	Y		1	1.2	39	1.2	6	1	44	1												
5	1.2D+1.0Wo (1...	Yes	Y		1	1.2	39	1.2	7	1	45	1												
6	1.2D+1.0Wo (1...	Yes	Y		1	1.2	39	1.2	8	1	46	1												
7	1.2D+1.0Wo (1...	Yes	Y		1	1.2	39	1.2	9	1	47	1												
8	1.2D+1.0Wo (2...	Yes	Y		1	1.2	39	1.2	10	1	48	1												
9	1.2D+1.0Wo (2...	Yes	Y		1	1.2	39	1.2	11	1	49	1												
10	1.2D+1.0Wo (2...	Yes	Y		1	1.2	39	1.2	12	1	50	1												
11	1.2D+1.0Wo (3...	Yes	Y		1	1.2	39	1.2	13	1	51	1												
12	1.2D+1.0Wo (3...	Yes	Y		1	1.2	39	1.2	14	1	52	1												
13	1.2D + 1.0Di + ...	Yes	Y		1	1.2	39	1.2	2	1	40	1	15	1	53	1								
14	1.2D + 1.0Di + ...	Yes	Y		1	1.2	39	1.2	2	1	40	1	16	1	54	1								
15	1.2D + 1.0Di + ...	Yes	Y		1	1.2	39	1.2	2	1	40	1	17	1	55	1								
16	1.2D + 1.0Di + ...	Yes	Y		1	1.2	39	1.2	2	1	40	1	18	1	56	1								

Load Combinations (Continued)

	Description	Solve	PDelta	S...	BLC	Fac...	BLC	Fac...	BLC	Fac...	BLC	Fac...	BLC	Fac...	BLC	Fac...	BLC	Fac...	BLC	Fac...	BLC	Fac...	BLC	Fac...
17	1.2D + 1.0Di + ...	Yes	Y		1	1.2	39	1.2	2	1	40	1	19	1	57	1								
18	1.2D + 1.0Di + ...	Yes	Y		1	1.2	39	1.2	2	1	40	1	20	1	58	1								
19	1.2D + 1.0Di + ...	Yes	Y		1	1.2	39	1.2	2	1	40	1	21	1	59	1								
20	1.2D + 1.0Di + ...	Yes	Y		1	1.2	39	1.2	2	1	40	1	22	1	60	1								
21	1.2D + 1.0Di + ...	Yes	Y		1	1.2	39	1.2	2	1	40	1	23	1	61	1								
22	1.2D + 1.0Di + ...	Yes	Y		1	1.2	39	1.2	2	1	40	1	24	1	62	1								
23	1.2D + 1.0Di + ...	Yes	Y		1	1.2	39	1.2	2	1	40	1	25	1	63	1								
24	1.2D + 1.0Di + ...	Yes	Y		1	1.2	39	1.2	2	1	40	1	26	1	64	1								
25	1.2D + 1.5Lm1 ...	Yes	Y		1	1.2	39	1.2	77	1.5	27	1	65	1										
26	1.2D + 1.5Lm1 ...	Yes	Y		1	1.2	39	1.2	77	1.5	28	1	66	1										
27	1.2D + 1.5Lm1 ...	Yes	Y		1	1.2	39	1.2	77	1.5	29	1	67	1										
28	1.2D + 1.5Lm1 ...	Yes	Y		1	1.2	39	1.2	77	1.5	30	1	68	1										
29	1.2D + 1.5Lm1 ...	Yes	Y		1	1.2	39	1.2	77	1.5	31	1	69	1										
30	1.2D + 1.5Lm1 ...	Yes	Y		1	1.2	39	1.2	77	1.5	32	1	70	1										
31	1.2D + 1.5Lm1 ...	Yes	Y		1	1.2	39	1.2	77	1.5	33	1	71	1										
32	1.2D + 1.5Lm1 ...	Yes	Y		1	1.2	39	1.2	77	1.5	34	1	72	1										
33	1.2D + 1.5Lm1 ...	Yes	Y		1	1.2	39	1.2	77	1.5	35	1	73	1										
34	1.2D + 1.5Lm1 ...	Yes	Y		1	1.2	39	1.2	77	1.5	36	1	74	1										
35	1.2D + 1.5Lm1 ...	Yes	Y		1	1.2	39	1.2	77	1.5	37	1	75	1										
36	1.2D + 1.5Lm1 ...	Yes	Y		1	1.2	39	1.2	77	1.5	38	1	76	1										
37	1.2D + 1.5Lm2 ...	Yes	Y		1	1.2	39	1.2	78	1.5	27	1	65	1										
38	1.2D + 1.5Lm2 ...	Yes	Y		1	1.2	39	1.2	78	1.5	28	1	66	1										
39	1.2D + 1.5Lm2 ...	Yes	Y		1	1.2	39	1.2	78	1.5	29	1	67	1										
40	1.2D + 1.5Lm2 ...	Yes	Y		1	1.2	39	1.2	78	1.5	30	1	68	1										
41	1.2D + 1.5Lm2 ...	Yes	Y		1	1.2	39	1.2	78	1.5	31	1	69	1										
42	1.2D + 1.5Lm2 ...	Yes	Y		1	1.2	39	1.2	78	1.5	32	1	70	1										
43	1.2D + 1.5Lm2 ...	Yes	Y		1	1.2	39	1.2	78	1.5	33	1	71	1										
44	1.2D + 1.5Lm2 ...	Yes	Y		1	1.2	39	1.2	78	1.5	34	1	72	1										
45	1.2D + 1.5Lm2 ...	Yes	Y		1	1.2	39	1.2	78	1.5	35	1	73	1										
46	1.2D + 1.5Lm2 ...	Yes	Y		1	1.2	39	1.2	78	1.5	36	1	74	1										
47	1.2D + 1.5Lm2 ...	Yes	Y		1	1.2	39	1.2	78	1.5	37	1	75	1										
48	1.2D + 1.5Lm2 ...	Yes	Y		1	1.2	39	1.2	78	1.5	38	1	76	1										
49	1.2D + 1.5Lv1	Yes	Y		1	1.2	39	1.2	79	1.5														
50	1.2D + 1.5Lv2	Yes	Y		1	1.2	39	1.2	80	1.5														
51	1.4D	Yes	Y		1	1.4	39	1.4																
52	Seismic Mass		Y		1	1	39	1																
53	1.2D + 1.0Ev + ...		Y		1	1.2	39	1.2	SX		SY	1	SZ	-1										
54	1.2D + 1.0Ev + ...		Y		1	1.2	39	1.2	SX	.5	SY	1	SZ	-.866										
55	1.2D + 1.0Ev + ...		Y		1	1.2	39	1.2	SX	.866	SY	1	SZ	-.5										
56	1.2D + 1.0Ev + ...		Y		1	1.2	39	1.2	SX	1	SY	1	SZ											
57	1.2D + 1.0Ev + ...		Y		1	1.2	39	1.2	SX	.866	SY	1	SZ	.5										
58	1.2D + 1.0Ev + ...		Y		1	1.2	39	1.2	SX	.5	SY	1	SZ	.866										
59	1.2D + 1.0Ev + ...		Y		1	1.2	39	1.2	SX		SY	1	SZ	1										
60	1.2D + 1.0Ev + ...		Y		1	1.2	39	1.2	SX	-.5	SY	1	SZ	.866										
61	1.2D + 1.0Ev + ...		Y		1	1.2	39	1.2	SX	-.866	SY	1	SZ	.5										
62	1.2D + 1.0Ev + ...		Y		1	1.2	39	1.2	SX	-1	SY	1	SZ											
63	1.2D + 1.0Ev + ...		Y		1	1.2	39	1.2	SX	-.866	SY	1	SZ	-.5										
64	1.2D + 1.0Ev + ...		Y		1	1.2	39	1.2	SX	-.5	SY	1	SZ	-.866										

Joint Coordinates and Temperatures

	Label	X [ft]	Y [ft]	Z [ft]	Temp [F]	Detach From Diap...
1	N1	6.25	0	4.034498	0	
2	N2	-6.25	0	4.034498	0	
3	N3	-0.	0	-1.656291	0	
4	N5	-2.541667	0	-3.156291	0	
5	N6	2.315104	0.166667	-3.156291	0	
6	N7	-2.315104	0.166667	-3.156291	0	
7	N8	3.916667	0	4.034498	0	
8	N9	3.916667	0	4.284498	0	
9	N10	-4.75	0	4.034498	0	
10	N11	-4.75	0	4.284498	0	
11	N12	-0.083667	0	4.034498	0	
12	N13	-0.083667	0	4.284498	0	
13	N14	-2.0833	0	4.034498	0	
14	N15	-2.0833	0	4.284498	0	
15	N16	-2.0833	-1.54167	4.284498	0	
16	N17	-2.0833	7.45833	4.284498	0	
17	N18	-4.75	-2.583	4.284498	0	
18	N19	-4.75	4.417	4.284498	0	
19	N20	-0.083667	-1.54167	4.284498	0	
20	N21	-0.083667	7.45833	4.284498	0	
21	N22	3.916667	-1.54167	4.284498	0	
22	N23	3.916667	7.45833	4.284498	0	
23	N24	-0.	0	-3.156291	0	
24	N27	-0.	0	-6.843791	0	
25	CP	0	0	0	0	
26	N29	2.315104	0	-3.156291	0	
27	N30	-2.315104	0	-3.156291	0	
28	N101	2.541667	0	-3.156291	0	
29	N102	-0.166667	0	-3.156291	0	
30	N103A	0.166667	0	-3.156291	0	
31	N104A	-2.541667	0	-3.375041	0	
32	N105	2.541667	0	-3.375041	0	
33	N131	2.458333	0	-3.519379	0	
34	N135	0.571615	0	-6.746815	0	
35	N144	-2.458333	0	-3.519379	0	
36	N148	-0.571615	0	-6.746815	0	
37	N86A	2.584629	0	-3.592296	0	
38	N86B	-2.584629	0	-3.592296	0	
39	N86C	-0.515625	0	-6.843791	0	
40	N87A	0.515625	0	-6.843791	0	
41	N86D	0.715429	0	-6.829846	0	
42	N86E	-0.715429	0	-6.829846	0	
43	N88A	-0.	0	-6.760458	0	
44	N87C	0.234238	0.166667	-6.760458	0	
45	N86G	0.234238	0	-6.760458	0	
46	N87B	-0.234238	0.166667	-6.760458	0	
47	N88C	-0.234238	0	-6.760458	0	
48	N52	-1.43439	0	0.828146	0	
49	N53	-1.462595	0	3.779294	0	
50	N54	-3.890981	0.166667	-0.426793	0	
51	N55	-1.575876	0.166667	3.583085	0	

Joint Coordinates and Temperatures (Continued)

	Label	X [ft]	Y [ft]	Z [ft]	Temp [F]	Detach From Diap...
52	N56	-2.733428	0	1.578146	0	
53	N57	-5.926897	0	3.421896	0	
54	N59	-3.890981	0	-0.426793	0	
55	N60	-1.575876	0	3.583085	0	
56	N61	-4.004262	0	-0.623002	0	
57	N62	-2.650095	0	1.722483	0	
58	N63	-2.816762	0	1.433808	0	
59	N64	-1.652038	0	3.888669	0	
60	N65	-4.193705	0	-0.513627	0	
61	N66	-4.277038	0	-0.36929	0	
62	N67	-6.12872	0	2.878375	0	
63	N68	-1.818705	0	3.888669	0	
64	N69	-5.557105	0	3.86844	0	
65	N70	-4.403334	0	-0.442206	0	
66	N71	-1.818705	0	4.034502	0	
67	N72	-5.669085	0	3.86844	0	
68	N73	-6.18471	0	2.975351	0	
69	N74	-6.272534	0	2.795343	0	
70	N75	-5.557105	0	4.034502	0	
71	N76	-5.854728	0	3.380229	0	
72	N77	-5.971847	0.166667	3.177373	0	
73	N78	-5.971847	0	3.177373	0	
74	N79	-5.73761	0.166667	3.583085	0	
75	N80	-5.73761	0	3.583085	0	
76	N81	1.43439	0	0.828146	0	
77	N82	4.004262	0	-0.623002	0	
78	N83	1.575876	0.166667	3.583085	0	
79	N84	3.890981	0.166667	-0.426793	0	
80	N85	2.733428	0	1.578146	0	
81	N86	5.926897	0	3.421896	0	
82	N88	1.575876	0	3.583085	0	
83	N89	3.890981	0	-0.426793	0	
84	N90	1.462595	0	3.779294	0	
85	N91	2.816762	0	1.433808	0	
86	N92	2.650095	0	1.722483	0	
87	N93	4.193705	0	-0.513627	0	
88	N94	1.652038	0	3.888669	0	
89	N95	1.818705	0	3.888669	0	
90	N96	5.557105	0	3.86844	0	
91	N97	4.277038	0	-0.36929	0	
92	N98	6.12872	0	2.878375	0	
93	N99	1.818705	0	4.034502	0	
94	N100	4.403334	0	-0.442207	0	
95	N101A	6.18471	0	2.975351	0	
96	N102A	5.669085	0	3.86844	0	
97	N103	5.557105	0	4.034502	0	
98	N104	6.272534	0	2.795343	0	
99	N105A	5.854728	0	3.380229	0	
100	N106	5.73761	0.166667	3.583085	0	
101	N107	5.73761	0	3.583085	0	
102	N108	5.971847	0.166667	3.177373	0	
103	N109	5.971847	0	3.177373	0	

Joint Coordinates and Temperatures (Continued)

	Label	X [ft]	Y [ft]	Z [ft]	Temp [F]	Detach From Diap...
104	N104B	0.368978	0	-7.429908	0	
105	N105B	6.618978	0	3.39541	0	
106	N106A	1.389645	0	-5.662061	0	
107	N107A	1.606151	0	-5.787061	0	
108	N108A	6.410478	0	3.034277	0	
109	N109A	6.626984	0	2.909277	0	
110	N110	3.098043	0	-2.703029	0	
111	N111	3.314549	0	-2.828029	0	
112	N112	4.598128	0	-0.104805	0	
113	N113	4.814634	0	-0.229805	0	
114	N114	4.814634	-1.54167	-0.229805	0	
115	N115	4.814634	7.45833	-0.229805	0	
116	N116	6.626984	-2.583	2.909277	0	
117	N117	6.626984	4.417	2.909277	0	
118	N118	3.314549	-1.54167	-2.828029	0	
119	N119	3.314549	7.45833	-2.828029	0	
120	N120	1.606151	-1.54167	-5.787061	0	
121	N121	1.606151	7.45833	-5.787061	0	
122	N123	-6.618978	0	3.39541	0	
123	N124	-0.368978	0	-7.429908	0	
124	N125	-5.598311	0	1.627563	0	
125	N126	-5.814818	0	1.502563	0	
126	N127	-1.077478	0	-6.20275	0	
127	N128	-1.293984	0	-6.32775	0	
128	N129	-3.55633	0	-1.909253	0	
129	N130	-3.772836	0	-2.034253	0	
130	N131A	-2.389828	0	-3.929693	0	
131	N132	-2.606334	0	-4.054693	0	
132	N133	-2.606334	-1.54167	-4.054693	0	
133	N134	-2.606334	7.45833	-4.054693	0	
134	N135A	-1.293984	-2.583	-6.32775	0	
135	N136	-1.293984	4.417	-6.32775	0	
136	N137	-3.772836	-1.54167	-2.034253	0	
137	N138	-3.772836	7.45833	-2.034253	0	
138	N139	-5.814818	-1.54167	1.502563	0	
139	N140	-5.814818	7.45833	1.502563	0	
140	N140A	6.25	4	4.034498	0	
141	N141	-6.25	4	4.034498	0	
142	N142	3.916667	4	4.034498	0	
143	N143	3.916667	4	4.284498	0	
144	N144A	-4.75	4	4.034498	0	
145	N145	-4.75	4	4.284498	0	
146	N146	-0.083667	4	4.034498	0	
147	N147	-0.083667	4	4.284498	0	
148	N148A	-2.0833	4	4.034498	0	
149	N149	-2.0833	4	4.284498	0	
150	N151	0.368978	4	-7.429908	0	
151	N152	6.618978	4	3.39541	0	
152	N153	1.389645	4	-5.662061	0	
153	N154	1.606151	4	-5.787061	0	
154	N155	6.410478	4	3.034277	0	
155	N156	6.626984	4	2.909277	0	

Joint Coordinates and Temperatures (Continued)

	Label	X [ft]	Y [ft]	Z [ft]	Temp [F]	Detach From Diap...
156	N157	3.098043	4	-2.703029	0	
157	N158	3.314549	4	-2.828029	0	
158	N159	4.598128	4	-0.104805	0	
159	N160	4.814634	4	-0.229805	0	
160	N162	-6.618978	4	3.39541	0	
161	N163	-0.368978	4	-7.429908	0	
162	N164	-5.598311	4	1.627563	0	
163	N165	-5.814818	4	1.502563	0	
164	N166	-1.077478	4	-6.20275	0	
165	N167	-1.293984	4	-6.32775	0	
166	N168	-3.55633	4	-1.909253	0	
167	N169	-3.772836	4	-2.034253	0	
168	N170	-2.389828	4	-3.929693	0	
169	N171	-2.606334	4	-4.054693	0	
170	N170A	-5.25	4	4.034498	0	
171	N171A	5.25	4	4.034498	0	
172	N172	-5.25	4	3.867498	0	
173	N173	5.25	4	3.867498	0	
174	N175	6.118978	4	2.529384	0	
175	N176	0.868978	4	-6.563882	0	
176	N177	5.974352	4	2.612884	0	
177	N178	0.724352	4	-6.480382	0	
178	N180	-0.868978	4	-6.563882	0	
179	N181	-6.118978	4	2.529384	0	
180	N182	-0.724352	4	-6.480382	0	
181	N183	-5.974352	4	2.612884	0	
182	N182A	-0.	0	-6.093791	0	
183	N183A	-0.	-3	-1.656291	0	
184	N185	-5.277378	0	3.046896	0	
185	N186	-1.43439	-3	0.828146	0	
186	N188	5.277378	0	3.046896	0	
187	N189	1.43439	-3	0.828146	0	

Hot Rolled Steel Section Sets

	Label	Shape	Type	Design List	Material	Design Rul...	A [in2]	Iyy [in4]	Izz [in4]	J [in4]
1	Face Horizontal	PIPE_3.0	Beam	Pipe	A53 Gr.B	Typical	2.07	2.85	2.85	5.69
2	Standoff Horizontal	HSS4X4X4	Beam	SquareTube	A500 Gr.B ...	Typical	3.37	7.8	7.8	12.8
3	Corner Plate	PL1/2X6	Beam	BAR	A36 Gr.36	Typical	3	.063	9	.237
4	Platform Crossmem...	HSS4X4X4	Beam	SquareTube	A500 Gr.B ...	Typical	3.37	7.8	7.8	12.8
5	Grating Support	L2x2x4	Beam	Single Angle	A36 Gr.36	Typical	.944	.346	.346	.021
6	Mount Pipe	PIPE_2.0	Column	Pipe	A53 Gr.B	Typical	1.02	.627	.627	1.25
7	Cross Arm Plate	PL3/8x6	Column	RECT	A36 Gr.36	Typical	2.25	.026	6.75	.101
8	Support Rail	PIPE_2.0	Column	Pipe	A53 Gr.B	Typical	1.02	.627	.627	1.25
9	Connection Angle	L3X3X4	Column	Single Angle	A36 Gr.36	Typical	1.44	1.23	1.23	.031
10	Large Pipe	PIPE_2.5	Column	Pipe	A53 Gr.B	Typical	1.61	1.45	1.45	2.89
11	Mod Support Rail	PIPE_2.5	Column	Pipe	A53 Gr.B	Typical	1.61	1.45	1.45	2.89
12	Kicker	LL3x3x3x6	Column	Double Angle (...	A36 Gr.36	Typical	2.18	4.97	1.9	.027

Hot Rolled Steel Properties

	Label	E [ksi]	G [ksi]	Nu	Therm (/1E...	Density[k/ft...	Yield[ksi]	Ry	Fu[ksi]	Rt
1	A992	29000	11154	.3	.65	.49	50	1.1	65	1.1
2	A36 Gr.36	29000	11154	.3	.65	.49	36	1.5	58	1.2
3	A572 Gr.50	29000	11154	.3	.65	.49	50	1.1	65	1.1
4	A500 Gr.B RND	29000	11154	.3	.65	.527	42	1.4	58	1.3
5	A500 Gr.B Rect	29000	11154	.3	.65	.527	46	1.4	58	1.3
6	A53 Gr.B	29000	11154	.3	.65	.49	35	1.6	60	1.2
7	A1085	29000	11154	.3	.65	.49	50	1.4	65	1.3
8	Q235	29000	11154	.3	.65	.49	35	1.5	58	1.2

Member Primary Data

	Label	I Joint	J Joint	K Joint	Rotate(deg)	Section/Shape	Type	Design List	Material	Design Rules
1	M1	N2	N1			Face Horizontal	Beam	Pipe	A53 Gr.B	Typical
2	M4	N3	N27			Standoff Horiz...	Beam	SquareTube	A500 Gr.B...	Typical
3	M10	N101	N103A			Platform Cross...	Beam	SquareTube	A500 Gr.B...	Typical
4	M19	N8	N9			RIGID	None	None	RIGID	Typical
5	M20	N10	N11			RIGID	None	None	RIGID	Typical
6	M21	N12	N13			RIGID	None	None	RIGID	Typical
7	M22	N14	N15			RIGID	None	None	RIGID	Typical
8	MP3A	N17	N16			Large Pipe	Column	Pipe	A53 Gr.B	Typical
9	MP4A	N19	N18			Mount Pipe	Column	Pipe	A53 Gr.B	Typical
10	MP2A	N21	N20			Large Pipe	Column	Pipe	A53 Gr.B	Typical
11	MP1A	N23	N22			Large Pipe	Column	Pipe	A53 Gr.B	Typical
12	M43	N102	N5			Platform Cross...	Beam	SquareTube	A500 Gr.B...	Typical
13	M46	N86C	N87A			Corner Plate	Beam	BAR	A36 Gr.36	Typical
14	M35A	N7	N30			RIGID	None	None	RIGID	Typical
15	M36A	N6	N29			RIGID	None	None	RIGID	Typical
16	M51B	N87C	N6			Grating Support	Beam	Single Angle	A36 Gr.36	Typical
17	M52B	N7	N87B			Grating Support	Beam	Single Angle	A36 Gr.36	Typical
18	M52	N87B	N88C			RIGID	None	None	RIGID	Typical
19	M58	N102	N24			RIGID	None	None	RIGID	Typical
20	M59	N24	N103A			RIGID	None	None	RIGID	Typical
21	M76	N101	N105			Cross Arm Plate	Column	RECT	A36 Gr.36	Typical
22	M77	N105	N131			Cross Arm Plate	Column	RECT	A36 Gr.36	Typical
23	M79	N131	N86A			RIGID	None	None	RIGID	Typical
24	M80	N87A	N135			Corner Plate	Beam	BAR	A36 Gr.36	Typical
25	M83	N135	N86D			RIGID	None	None	RIGID	Typical
26	M84	N5	N104A			Cross Arm Plate	Column	RECT	A36 Gr.36	Typical
27	M85	N104A	N144			Cross Arm Plate	Column	RECT	A36 Gr.36	Typical
28	M88	N144	N86B			RIGID	None	None	RIGID	Typical
29	M91	N86C	N148			Corner Plate	Beam	BAR	A36 Gr.36	Typical
30	M92	N148	N86E			RIGID	None	None	RIGID	Typical
31	M50	N88C	N88A			RIGID	None	None	RIGID	Typical
32	M51	N88A	N86G			RIGID	None	None	RIGID	Typical
33	M51A	N87C	N86G			RIGID	None	None	RIGID	Typical
34	M34	N52	N57			Standoff Horiz...	Beam	SquareTube	A500 Gr.B...	Typical
35	M35	N61	N63			Platform Cross...	Beam	SquareTube	A500 Gr.B...	Typical
36	M36	N62	N53			Platform Cross...	Beam	SquareTube	A500 Gr.B...	Typical
37	M37	N72	N73			Corner Plate	Beam	BAR	A36 Gr.36	Typical
38	M38	N55	N60			RIGID	None	None	RIGID	Typical

Member Primary Data (Continued)

	Label	I Joint	J Joint	K Joint	Rotate(deg)	Section/Shape	Type	Design List	Material	Design Rules
39	M39	N54	N59			RIGID	None	None	RIGID	Typical
40	M40	N77	N54			Grating Support	Beam	Single Angle	A36 Gr.36	Typical
41	M41	N55	N79			Grating Support	Beam	Single Angle	A36 Gr.36	Typical
42	M42	N79	N80			RIGID	None	None	RIGID	Typical
43	M43A	N62	N56			RIGID	None	None	RIGID	Typical
44	M44	N56	N63			RIGID	None	None	RIGID	Typical
45	M45	N61	N65			Cross Arm Plate	Column	RECT	A36 Gr.36	Typical
46	M46A	N65	N66			Cross Arm Plate	Column	RECT	A36 Gr.36	Typical
47	M47	N66	N70			RIGID	None	None	RIGID	Typical
48	M48	N73	N67			Corner Plate	Beam	BAR	A36 Gr.36	Typical
49	M49	N67	N74			RIGID	None	None	RIGID	Typical
50	M50A	N53	N64			Cross Arm Plate	Column	RECT	A36 Gr.36	Typical
51	M51C	N64	N68			Cross Arm Plate	Column	RECT	A36 Gr.36	Typical
52	M52A	N68	N71			RIGID	None	None	RIGID	Typical
53	M53	N72	N69			Corner Plate	Beam	BAR	A36 Gr.36	Typical
54	M54	N69	N75			RIGID	None	None	RIGID	Typical
55	M55	N80	N76			RIGID	None	None	RIGID	Typical
56	M56	N76	N78			RIGID	None	None	RIGID	Typical
57	M57	N77	N78			RIGID	None	None	RIGID	Typical
58	M58A	N81	N86			Standoff Horiz...	Beam	SquareTube	A500 Gr.B...	Typical
59	M59A	N90	N92			Platform Cross...	Beam	SquareTube	A500 Gr.B...	Typical
60	M60	N91	N82			Platform Cross...	Beam	SquareTube	A500 Gr.B...	Typical
61	M61	N101A	N102A			Corner Plate	Beam	BAR	A36 Gr.36	Typical
62	M62	N84	N89			RIGID	None	None	RIGID	Typical
63	M63	N83	N88			RIGID	None	None	RIGID	Typical
64	M64	N106	N83			Grating Support	Beam	Single Angle	A36 Gr.36	Typical
65	M65	N84	N108			Grating Support	Beam	Single Angle	A36 Gr.36	Typical
66	M66	N108	N109			RIGID	None	None	RIGID	Typical
67	M67	N91	N85			RIGID	None	None	RIGID	Typical
68	M68	N85	N92			RIGID	None	None	RIGID	Typical
69	M69	N90	N94			Cross Arm Plate	Column	RECT	A36 Gr.36	Typical
70	M70	N94	N95			Cross Arm Plate	Column	RECT	A36 Gr.36	Typical
71	M71	N95	N99			RIGID	None	None	RIGID	Typical
72	M72	N102A	N96			Corner Plate	Beam	BAR	A36 Gr.36	Typical
73	M73	N96	N103			RIGID	None	None	RIGID	Typical
74	M74	N82	N93			Cross Arm Plate	Column	RECT	A36 Gr.36	Typical
75	M75	N93	N97			Cross Arm Plate	Column	RECT	A36 Gr.36	Typical
76	M76A	N97	N100			RIGID	None	None	RIGID	Typical
77	M77A	N101A	N98			Corner Plate	Beam	BAR	A36 Gr.36	Typical
78	M78	N98	N104			RIGID	None	None	RIGID	Typical
79	M79A	N109	N105A			RIGID	None	None	RIGID	Typical
80	M80A	N105A	N107			RIGID	None	None	RIGID	Typical
81	M81	N106	N107			RIGID	None	None	RIGID	Typical
82	M82	N104B	N105B			Face Horizontal	Beam	Pipe	A53 Gr.B	Typical
83	M83A	N106A	N107A			RIGID	None	None	RIGID	Typical
84	M84A	N108A	N109A			RIGID	None	None	RIGID	Typical
85	M85A	N110	N111			RIGID	None	None	RIGID	Typical
86	M86	N112	N113			RIGID	None	None	RIGID	Typical
87	MP3C	N115	N114			Large Pipe	Column	Pipe	A53 Gr.B	Typical
88	MP4C	N117	N116			Mount Pipe	Column	Pipe	A53 Gr.B	Typical
89	MP2C	N119	N118			Large Pipe	Column	Pipe	A53 Gr.B	Typical
90	MP1C	N121	N120			Large Pipe	Column	Pipe	A53 Gr.B	Typical

Member Primary Data (Continued)

	Label	I Joint	J Joint	K Joint	Rotate(deg)	Section/Shape	Type	Design List	Material	Design Rules
91	M91A	N123	N124			Face Horizontal	Beam	Pipe	A53 Gr.B	Typical
92	M92A	N125	N126			RIGID	None	None	RIGID	Typical
93	M93	N127	N128			RIGID	None	None	RIGID	Typical
94	M94	N129	N130			RIGID	None	None	RIGID	Typical
95	M95	N131A	N132			RIGID	None	None	RIGID	Typical
96	MP3B	N134	N133			Large Pipe	Column	Pipe	A53 Gr.B	Typical
97	MP4B	N136	N135A			Mount Pipe	Column	Pipe	A53 Gr.B	Typical
98	MP2B	N138	N137			Large Pipe	Column	Pipe	A53 Gr.B	Typical
99	MP1B	N140	N139			Large Pipe	Column	Pipe	A53 Gr.B	Typical
100	M100	N140A	N141			Mod Support ...	Column	Pipe	A53 Gr.B	Typical
101	M101	N142	N143			RIGID	None	None	RIGID	Typical
102	M102	N144A	N145			RIGID	None	None	RIGID	Typical
103	M103	N146	N147			RIGID	None	None	RIGID	Typical
104	M104	N148A	N149			RIGID	None	None	RIGID	Typical
105	M105	N151	N152			Mod Support ...	Column	Pipe	A53 Gr.B	Typical
106	M106	N153	N154			RIGID	None	None	RIGID	Typical
107	M107	N155	N156			RIGID	None	None	RIGID	Typical
108	M108	N157	N158			RIGID	None	None	RIGID	Typical
109	M109	N159	N160			RIGID	None	None	RIGID	Typical
110	M110	N162	N163			Mod Support ...	Column	Pipe	A53 Gr.B	Typical
111	M111	N164	N165			RIGID	None	None	RIGID	Typical
112	M112	N166	N167			RIGID	None	None	RIGID	Typical
113	M113	N168	N169			RIGID	None	None	RIGID	Typical
114	M114	N170	N171			RIGID	None	None	RIGID	Typical
115	M115	N173	N171A			RIGID	None	None	RIGID	Typical
116	M116	N172	N170A			RIGID	None	None	RIGID	Typical
117	M117	N178	N176			RIGID	None	None	RIGID	Typical
118	M118	N177	N175			RIGID	None	None	RIGID	Typical
119	M119	N183	N181			RIGID	None	None	RIGID	Typical
120	M120	N182	N180			RIGID	None	None	RIGID	Typical
121	M121	N172	N183		90	Connection An...	Column	Single Angle	A36 Gr.36	Typical
122	M122	N177	N173		90	Connection An...	Column	Single Angle	A36 Gr.36	Typical
123	M123	N182	N178		90	Connection An...	Column	Single Angle	A36 Gr.36	Typical
124	M124	N182A	N183A			Kicker	Column	Double Angle (...	A36 Gr.36	Typical
125	M125	N185	N186			Kicker	Column	Double Angle (...	A36 Gr.36	Typical
126	M126	N188	N189			Kicker	Column	Double Angle (...	A36 Gr.36	Typical

Member Advanced Data

	Label	I Release	J Release	I Offset[in]	J Offset[in]	T/C Only	Physical	Defl Rat...	Analysis ...	Inactive	Seismic...
1	M1						Yes	Default			None
2	M4						Yes				None
3	M10						Yes	Default			None
4	M19						Yes	** NA **			None
5	M20						Yes	** NA **			None
6	M21						Yes	** NA **			None
7	M22						Yes	** NA **			None
8	MP3A						Yes	** NA **			None
9	MP4A						Yes	** NA **			None
10	MP2A						Yes	** NA **			None
11	MP1A						Yes	** NA **			None

Member Advanced Data (Continued)

	Label	I Release	J Release	I Offset[in]	J Offset[in]	T/C Only	Physical	Defl Rat...	Analysis ...	Inactive	Seismic...
12	M43						Yes	Default			None
13	M46						Yes	Default			None
14	M35A						Yes	** NA **			None
15	M36A						Yes	** NA **			None
16	M51B	OOOOOX	OOOOOX				Yes	Default			None
17	M52B	OOOOOX	OOOOOX				Yes	Default			None
18	M52						Yes	** NA **			None
19	M58						Yes	** NA **			None
20	M59						Yes	** NA **			None
21	M76						Yes	** NA **			None
22	M77						Yes	** NA **			None
23	M79		BenPIN				Yes	** NA **			None
24	M80						Yes				None
25	M83		BenPIN				Yes	** NA **			None
26	M84						Yes	** NA **			None
27	M85						Yes	** NA **			None
28	M88		BenPIN				Yes	** NA **			None
29	M91						Yes				None
30	M92		BenPIN				Yes	** NA **			None
31	M50						Yes	** NA **			None
32	M51						Yes	** NA **			None
33	M51A						Yes	** NA **			None
34	M34						Yes				None
35	M35						Yes	Default			None
36	M36						Yes	Default			None
37	M37						Yes	Default			None
38	M38						Yes	** NA **			None
39	M39						Yes	** NA **			None
40	M40	OOOOOX	OOOOOX				Yes	Default			None
41	M41	OOOOOX	OOOOOX				Yes	Default			None
42	M42						Yes	** NA **			None
43	M43A						Yes	** NA **			None
44	M44						Yes	** NA **			None
45	M45						Yes	** NA **			None
46	M46A						Yes	** NA **			None
47	M47		BenPIN				Yes	** NA **			None
48	M48						Yes				None
49	M49		BenPIN				Yes	** NA **			None
50	M50A						Yes	** NA **			None
51	M51C						Yes	** NA **			None
52	M52A		BenPIN				Yes	** NA **			None
53	M53						Yes				None
54	M54		BenPIN				Yes	** NA **			None
55	M55						Yes	** NA **			None
56	M56						Yes	** NA **			None
57	M57						Yes	** NA **			None
58	M58A						Yes				None
59	M59A						Yes	Default			None
60	M60						Yes	Default			None
61	M61						Yes	Default			None
62	M62						Yes	** NA **			None
63	M63						Yes	** NA **			None

Member Advanced Data (Continued)

	Label	I Release	J Release	I Offset[in]	J Offset[in]	T/C Only	Physical	Defl Rat...	Analysis ...	Inactive	Seismic...
64	M64	OOOOOX	OOOOOX				Yes	Default			None
65	M65	OOOOOX	OOOOOX				Yes	Default			None
66	M66						Yes	** NA **			None
67	M67						Yes	** NA **			None
68	M68						Yes	** NA **			None
69	M69						Yes	** NA **			None
70	M70						Yes	** NA **			None
71	M71		BenPIN				Yes	** NA **			None
72	M72						Yes				None
73	M73		BenPIN				Yes	** NA **			None
74	M74						Yes	** NA **			None
75	M75						Yes	** NA **			None
76	M76A		BenPIN				Yes	** NA **			None
77	M77A						Yes				None
78	M78		BenPIN				Yes	** NA **			None
79	M79A						Yes	** NA **			None
80	M80A						Yes	** NA **			None
81	M81						Yes	** NA **			None
82	M82						Yes	Default			None
83	M83A						Yes	** NA **			None
84	M84A						Yes	** NA **			None
85	M85A						Yes	** NA **			None
86	M86						Yes	** NA **			None
87	MP3C						Yes	** NA **			None
88	MP4C						Yes	** NA **			None
89	MP2C						Yes	** NA **			None
90	MP1C						Yes	** NA **			None
91	M91A						Yes	Default			None
92	M92A						Yes	** NA **			None
93	M93						Yes	** NA **			None
94	M94						Yes	** NA **			None
95	M95						Yes	** NA **			None
96	MP3B						Yes	** NA **			None
97	MP4B						Yes	** NA **			None
98	MP2B						Yes	** NA **			None
99	MP1B						Yes	** NA **			None
100	M100						Yes	** NA **			None
101	M101						Yes	** NA **			None
102	M102						Yes	** NA **			None
103	M103						Yes	** NA **			None
104	M104						Yes	** NA **			None
105	M105						Yes	** NA **			None
106	M106						Yes	** NA **			None
107	M107						Yes	** NA **			None
108	M108						Yes	** NA **			None
109	M109						Yes	** NA **			None
110	M110						Yes	** NA **			None
111	M111						Yes	** NA **			None
112	M112						Yes	** NA **			None
113	M113						Yes	** NA **			None
114	M114						Yes	** NA **			None
115	M115		OOOOOO				Yes	** NA **			None

Member Advanced Data (Continued)

	Label	I Release	J Release	I Offset[in]	J Offset[in]	T/C Only	Physical	Defl Rat...	Analysis ...	Inactive	Seismic...
116	M116		OOOOOO				Yes	** NA **			None
117	M117		OOOOOO				Yes	** NA **			None
118	M118		OOOOOO				Yes	** NA **			None
119	M119		OOOOOO				Yes	** NA **			None
120	M120		OOOOOO				Yes	** NA **			None
121	M121						Yes	** NA **			None
122	M122						Yes	** NA **			None
123	M123						Yes	** NA **			None
124	M124	BenPIN	BenPIN				Yes	** NA **			None
125	M125	BenPIN	BenPIN				Yes	** NA **			None
126	M126	BenPIN	BenPIN				Yes	** NA **			None

Member Point Loads (BLC 1 : Antenna D)

	Member Label	Direction	Magnitude[lb,k-ft]	Location[ft,%]
1	MP1A	Y	-31.65	1.75
2	MP1A	My	-.032	1.75
3	MP1A	Mz	.021	1.75
4	MP1A	Y	-31.65	6.75
5	MP1A	My	-.032	6.75
6	MP1A	Mz	.021	6.75
7	MP1B	Y	-31.65	1.75
8	MP1B	My	.017	1.75
9	MP1B	Mz	-.034	1.75
10	MP1B	Y	-31.65	6.75
11	MP1B	My	.017	6.75
12	MP1B	Mz	-.034	6.75
13	MP1C	Y	-31.65	1.75
14	MP1C	My	.021	1.75
15	MP1C	Mz	.032	1.75
16	MP1C	Y	-31.65	6.75
17	MP1C	My	.021	6.75
18	MP1C	Mz	.032	6.75
19	MP1A	Y	-31.65	1.75
20	MP1A	My	-.032	1.75
21	MP1A	Mz	-.021	1.75
22	MP1A	Y	-31.65	6.75
23	MP1A	My	-.032	6.75
24	MP1A	Mz	-.021	6.75
25	MP1B	Y	-31.65	1.75
26	MP1B	My	.038	1.75
27	MP1B	Mz	.002	1.75
28	MP1B	Y	-31.65	6.75
29	MP1B	My	.038	6.75
30	MP1B	Mz	.002	6.75
31	MP1C	Y	-31.65	1.75
32	MP1C	My	-.021	1.75
33	MP1C	Mz	.032	1.75
34	MP1C	Y	-31.65	6.75
35	MP1C	My	-.021	6.75
36	MP1C	Mz	.032	6.75

Member Point Loads (BLC 1 : Antenna D) (Continued)

	Member Label	Direction	Magnitude[lb,k-ft]	Location[ft,%]
37	MP3A	Y	-43.55	3.25
38	MP3A	My	-.044	3.25
39	MP3A	Mz	0	3.25
40	MP3A	Y	-43.55	5.25
41	MP3A	My	-.044	5.25
42	MP3A	Mz	0	5.25
43	MP3B	Y	-43.55	3.25
44	MP3B	My	.038	3.25
45	MP3B	Mz	-.022	3.25
46	MP3B	Y	-43.55	5.25
47	MP3B	My	.038	5.25
48	MP3B	Mz	-.022	5.25
49	MP3C	Y	-43.55	3.25
50	MP3C	My	0	3.25
51	MP3C	Mz	.044	3.25
52	MP3C	Y	-43.55	5.25
53	MP3C	My	0	5.25
54	MP3C	Mz	.044	5.25
55	MP1A	Y	-10.4	6
56	MP1A	My	.005	6
57	MP1A	Mz	0	6
58	MP1B	Y	-10.4	6
59	MP1B	My	-.005	6
60	MP1B	Mz	.003	6
61	MP1C	Y	-10.4	6
62	MP1C	My	0	6
63	MP1C	Mz	-.005	6
64	MP1A	Y	-84.4	4.5
65	MP1A	My	.042	4.5
66	MP1A	Mz	0	4.5
67	MP1B	Y	-84.4	4.5
68	MP1B	My	-.037	4.5
69	MP1B	Mz	.021	4.5
70	MP1C	Y	-84.4	4.5
71	MP1C	My	0	4.5
72	MP1C	Mz	-.042	4.5
73	MP2A	Y	-70.3	4.5
74	MP2A	My	.035	4.5
75	MP2A	Mz	0	4.5
76	MP2B	Y	-70.3	4.5
77	MP2B	My	-.03	4.5
78	MP2B	Mz	.018	4.5
79	MP2C	Y	-70.3	4.5
80	MP2C	My	0	4.5
81	MP2C	Mz	-.035	4.5

Member Point Loads (BLC 2 : Antenna Di)

	Member Label	Direction	Magnitude[lb,k-ft]	Location[ft,%]
1	MP1A	Y	-70.93	1.75
2	MP1A	My	-.071	1.75
3	MP1A	Mz	.047	1.75

Member Point Loads (BLC 2 : Antenna Di) (Continued)

	Member Label	Direction	Magnitude[lb,k-ft]	Location[ft,%]
4	MP1A	Y	-70.93	6.75
5	MP1A	My	-.071	6.75
6	MP1A	Mz	.047	6.75
7	MP1B	Y	-70.93	1.75
8	MP1B	My	.038	1.75
9	MP1B	Mz	-.076	1.75
10	MP1B	Y	-70.93	6.75
11	MP1B	My	.038	6.75
12	MP1B	Mz	-.076	6.75
13	MP1C	Y	-70.93	1.75
14	MP1C	My	.047	1.75
15	MP1C	Mz	.071	1.75
16	MP1C	Y	-70.93	6.75
17	MP1C	My	.047	6.75
18	MP1C	Mz	.071	6.75
19	MP1A	Y	-70.93	1.75
20	MP1A	My	-.071	1.75
21	MP1A	Mz	-.047	1.75
22	MP1A	Y	-70.93	6.75
23	MP1A	My	-.071	6.75
24	MP1A	Mz	-.047	6.75
25	MP1B	Y	-70.93	1.75
26	MP1B	My	.085	1.75
27	MP1B	Mz	.005	1.75
28	MP1B	Y	-70.93	6.75
29	MP1B	My	.085	6.75
30	MP1B	Mz	.005	6.75
31	MP1C	Y	-70.93	1.75
32	MP1C	My	-.047	1.75
33	MP1C	Mz	.071	1.75
34	MP1C	Y	-70.93	6.75
35	MP1C	My	-.047	6.75
36	MP1C	Mz	.071	6.75
37	MP3A	Y	-36.123	3.25
38	MP3A	My	-.036	3.25
39	MP3A	Mz	0	3.25
40	MP3A	Y	-36.123	5.25
41	MP3A	My	-.036	5.25
42	MP3A	Mz	0	5.25
43	MP3B	Y	-36.123	3.25
44	MP3B	My	.031	3.25
45	MP3B	Mz	-.018	3.25
46	MP3B	Y	-36.123	5.25
47	MP3B	My	.031	5.25
48	MP3B	Mz	-.018	5.25
49	MP3C	Y	-36.123	3.25
50	MP3C	My	0	3.25
51	MP3C	Mz	.036	3.25
52	MP3C	Y	-36.123	5.25
53	MP3C	My	0	5.25
54	MP3C	Mz	.036	5.25
55	MP1A	Y	-10.916	6

Member Point Loads (BLC 2 : Antenna Di) (Continued)

	Member Label	Direction	Magnitude[lb,k-ft]	Location[ft,%]
56	MP1A	My	.005	6
57	MP1A	Mz	0	6
58	MP1B	Y	-10.916	6
59	MP1B	My	-.005	6
60	MP1B	Mz	.003	6
61	MP1C	Y	-10.916	6
62	MP1C	My	0	6
63	MP1C	Mz	-.005	6
64	MP1A	Y	-45.552	4.5
65	MP1A	My	.023	4.5
66	MP1A	Mz	0	4.5
67	MP1B	Y	-45.552	4.5
68	MP1B	My	-.02	4.5
69	MP1B	Mz	.011	4.5
70	MP1C	Y	-45.552	4.5
71	MP1C	My	0	4.5
72	MP1C	Mz	-.023	4.5
73	MP2A	Y	-40.969	4.5
74	MP2A	My	.02	4.5
75	MP2A	Mz	0	4.5
76	MP2B	Y	-40.969	4.5
77	MP2B	My	-.018	4.5
78	MP2B	Mz	.01	4.5
79	MP2C	Y	-40.969	4.5
80	MP2C	My	0	4.5
81	MP2C	Mz	-.02	4.5

Member Point Loads (BLC 3 : Antenna Wo (0 Deg))

	Member Label	Direction	Magnitude[lb,k-ft]	Location[ft,%]
1	MP1A	X	0	1.75
2	MP1A	Z	-223.048	1.75
3	MP1A	Mx	-.149	1.75
4	MP1A	X	0	6.75
5	MP1A	Z	-223.048	6.75
6	MP1A	Mx	-.149	6.75
7	MP1B	X	0	1.75
8	MP1B	Z	-203.91	1.75
9	MP1B	Mx	.22	1.75
10	MP1B	X	0	6.75
11	MP1B	Z	-203.91	6.75
12	MP1B	Mx	.22	6.75
13	MP1C	X	0	1.75
14	MP1C	Z	-146.495	1.75
15	MP1C	Mx	-.146	1.75
16	MP1C	X	0	6.75
17	MP1C	Z	-146.495	6.75
18	MP1C	Mx	-.146	6.75
19	MP1A	X	0	1.75
20	MP1A	Z	-223.048	1.75
21	MP1A	Mx	.149	1.75
22	MP1A	X	0	6.75

Member Point Loads (BLC 3 : Antenna Wo (0 Deg)) (Continued)

	Member Label	Direction	Magnitude[lb,k-ft]	Location[ft,%]
23	MP1A	Z	-223.048	6.75
24	MP1A	Mx	.149	6.75
25	MP1B	X	0	1.75
26	MP1B	Z	-203.91	1.75
27	MP1B	Mx	-.016	1.75
28	MP1B	X	0	6.75
29	MP1B	Z	-203.91	6.75
30	MP1B	Mx	-.016	6.75
31	MP1C	X	0	1.75
32	MP1C	Z	-146.495	1.75
33	MP1C	Mx	-.146	1.75
34	MP1C	X	0	6.75
35	MP1C	Z	-146.495	6.75
36	MP1C	Mx	-.146	6.75
37	MP3A	X	0	3.25
38	MP3A	Z	-115.074	3.25
39	MP3A	Mx	0	3.25
40	MP3A	X	0	5.25
41	MP3A	Z	-115.074	5.25
42	MP3A	Mx	0	5.25
43	MP3B	X	0	3.25
44	MP3B	Z	-97.568	3.25
45	MP3B	Mx	.049	3.25
46	MP3B	X	0	5.25
47	MP3B	Z	-97.568	5.25
48	MP3B	Mx	.049	5.25
49	MP3C	X	0	3.25
50	MP3C	Z	-45.051	3.25
51	MP3C	Mx	-.045	3.25
52	MP3C	X	0	5.25
53	MP3C	Z	-45.051	5.25
54	MP3C	Mx	-.045	5.25
55	MP1A	X	0	6
56	MP1A	Z	-18.118	6
57	MP1A	Mx	0	6
58	MP1B	X	0	6
59	MP1B	Z	-16.722	6
60	MP1B	Mx	-.004	6
61	MP1C	X	0	6
62	MP1C	Z	-12.536	6
63	MP1C	Mx	.006	6
64	MP1A	X	0	4.5
65	MP1A	Z	-91.57	4.5
66	MP1A	Mx	0	4.5
67	MP1B	X	0	4.5
68	MP1B	Z	-83.98	4.5
69	MP1B	Mx	-.021	4.5
70	MP1C	X	0	4.5
71	MP1C	Z	-61.21	4.5
72	MP1C	Mx	.031	4.5
73	MP2A	X	0	4.5
74	MP2A	Z	-91.57	4.5

Member Point Loads (BLC 3 : Antenna Wo (0 Deg)) (Continued)

	Member Label	Direction	Magnitude[lb,k-ft]	Location[ft,%]
75	MP2A	Mx	0	4.5
76	MP2B	X	0	4.5
77	MP2B	Z	-81.072	4.5
78	MP2B	Mx	-.02	4.5
79	MP2C	X	0	4.5
80	MP2C	Z	-49.58	4.5
81	MP2C	Mx	.025	4.5

Member Point Loads (BLC 4 : Antenna Wo (30 Deg))

	Member Label	Direction	Magnitude[lb,k-ft]	Location[ft,%]
1	MP1A	X	101.955	1.75
2	MP1A	Z	-176.591	1.75
3	MP1A	Mx	-.22	1.75
4	MP1A	X	101.955	6.75
5	MP1A	Z	-176.591	6.75
6	MP1A	Mx	-.22	6.75
7	MP1B	X	82.817	1.75
8	MP1B	Z	-143.443	1.75
9	MP1B	Mx	.199	1.75
10	MP1B	X	82.817	6.75
11	MP1B	Z	-143.443	6.75
12	MP1B	Mx	.199	6.75
13	MP1C	X	82.817	1.75
14	MP1C	Z	-143.443	1.75
15	MP1C	Mx	-.088	1.75
16	MP1C	X	82.817	6.75
17	MP1C	Z	-143.443	6.75
18	MP1C	Mx	-.088	6.75
19	MP1A	X	101.955	1.75
20	MP1A	Z	-176.591	1.75
21	MP1A	Mx	.016	1.75
22	MP1A	X	101.955	6.75
23	MP1A	Z	-176.591	6.75
24	MP1A	Mx	.016	6.75
25	MP1B	X	82.817	1.75
26	MP1B	Z	-143.443	1.75
27	MP1B	Mx	.088	1.75
28	MP1B	X	82.817	6.75
29	MP1B	Z	-143.443	6.75
30	MP1B	Mx	.088	6.75
31	MP1C	X	82.817	1.75
32	MP1C	Z	-143.443	1.75
33	MP1C	Mx	-.199	1.75
34	MP1C	X	82.817	6.75
35	MP1C	Z	-143.443	6.75
36	MP1C	Mx	-.199	6.75
37	MP3A	X	48.784	3.25
38	MP3A	Z	-84.497	3.25
39	MP3A	Mx	-.049	3.25
40	MP3A	X	48.784	5.25
41	MP3A	Z	-84.497	5.25

Member Point Loads (BLC 4 : Antenna Wo (30 Deg)) (Continued)

	Member Label	Direction	Magnitude[lb,k-ft]	Location[ft,%]
42	MP3A	Mx	-.049	5.25
43	MP3B	X	31.279	3.25
44	MP3B	Z	-54.176	3.25
45	MP3B	Mx	.054	3.25
46	MP3B	X	31.279	5.25
47	MP3B	Z	-54.176	5.25
48	MP3B	Mx	.054	5.25
49	MP3C	X	31.279	3.25
50	MP3C	Z	-54.176	3.25
51	MP3C	Mx	-.054	3.25
52	MP3C	X	31.279	5.25
53	MP3C	Z	-54.176	5.25
54	MP3C	Mx	-.054	5.25
55	MP1A	X	8.361	6
56	MP1A	Z	-14.482	6
57	MP1A	Mx	.004	6
58	MP1B	X	6.966	6
59	MP1B	Z	-12.065	6
60	MP1B	Mx	-.006	6
61	MP1C	X	6.966	6
62	MP1C	Z	-12.065	6
63	MP1C	Mx	.006	6
64	MP1A	X	41.99	4.5
65	MP1A	Z	-72.728	4.5
66	MP1A	Mx	.021	4.5
67	MP1B	X	34.4	4.5
68	MP1B	Z	-59.582	4.5
69	MP1B	Mx	-.03	4.5
70	MP1C	X	34.4	4.5
71	MP1C	Z	-59.582	4.5
72	MP1C	Mx	.03	4.5
73	MP2A	X	40.536	4.5
74	MP2A	Z	-70.211	4.5
75	MP2A	Mx	.02	4.5
76	MP2B	X	30.039	4.5
77	MP2B	Z	-52.028	4.5
78	MP2B	Mx	-.026	4.5
79	MP2C	X	30.039	4.5
80	MP2C	Z	-52.028	4.5
81	MP2C	Mx	.026	4.5

Member Point Loads (BLC 5 : Antenna Wo (60 Deg))

	Member Label	Direction	Magnitude[lb,k-ft]	Location[ft,%]
1	MP1A	X	143.443	1.75
2	MP1A	Z	-82.817	1.75
3	MP1A	Mx	-.199	1.75
4	MP1A	X	143.443	6.75
5	MP1A	Z	-82.817	6.75
6	MP1A	Mx	-.199	6.75
7	MP1B	X	126.868	1.75
8	MP1B	Z	-73.248	1.75

Member Point Loads (BLC 5 : Antenna Wo (60 Deg)) (Continued)

	Member Label	Direction	Magnitude[lb,k-ft]	Location[ft,%]
9	MP1B	Mx	.146	1.75
10	MP1B	X	126.868	6.75
11	MP1B	Z	-73.248	6.75
12	MP1B	Mx	.146	6.75
13	MP1C	X	176.591	1.75
14	MP1C	Z	-101.955	1.75
15	MP1C	Mx	.016	1.75
16	MP1C	X	176.591	6.75
17	MP1C	Z	-101.955	6.75
18	MP1C	Mx	.016	6.75
19	MP1A	X	143.443	1.75
20	MP1A	Z	-82.817	1.75
21	MP1A	Mx	-.088	1.75
22	MP1A	X	143.443	6.75
23	MP1A	Z	-82.817	6.75
24	MP1A	Mx	-.088	6.75
25	MP1B	X	126.868	1.75
26	MP1B	Z	-73.248	1.75
27	MP1B	Mx	.146	1.75
28	MP1B	X	126.868	6.75
29	MP1B	Z	-73.248	6.75
30	MP1B	Mx	.146	6.75
31	MP1C	X	176.591	1.75
32	MP1C	Z	-101.955	1.75
33	MP1C	Mx	-.22	1.75
34	MP1C	X	176.591	6.75
35	MP1C	Z	-101.955	6.75
36	MP1C	Mx	-.22	6.75
37	MP3A	X	54.176	3.25
38	MP3A	Z	-31.279	3.25
39	MP3A	Mx	-.054	3.25
40	MP3A	X	54.176	5.25
41	MP3A	Z	-31.279	5.25
42	MP3A	Mx	-.054	5.25
43	MP3B	X	39.016	3.25
44	MP3B	Z	-22.526	3.25
45	MP3B	Mx	.045	3.25
46	MP3B	X	39.016	5.25
47	MP3B	Z	-22.526	5.25
48	MP3B	Mx	.045	5.25
49	MP3C	X	84.497	3.25
50	MP3C	Z	-48.784	3.25
51	MP3C	Mx	-.049	3.25
52	MP3C	X	84.497	5.25
53	MP3C	Z	-48.784	5.25
54	MP3C	Mx	-.049	5.25
55	MP1A	X	12.065	6
56	MP1A	Z	-6.966	6
57	MP1A	Mx	.006	6
58	MP1B	X	10.856	6
59	MP1B	Z	-6.268	6
60	MP1B	Mx	-.006	6

Member Point Loads (BLC 5 : Antenna Wo (60 Deg)) (Continued)

	Member Label	Direction	Magnitude[lb,k-ft]	Location[ft,%]
61	MP1C	X	14.482	6
62	MP1C	Z	-8.361	6
63	MP1C	Mx	.004	6
64	MP1A	X	59.582	4.5
65	MP1A	Z	-34.4	4.5
66	MP1A	Mx	.03	4.5
67	MP1B	X	53.009	4.5
68	MP1B	Z	-30.605	4.5
69	MP1B	Mx	-.031	4.5
70	MP1C	X	72.728	4.5
71	MP1C	Z	-41.99	4.5
72	MP1C	Mx	.021	4.5
73	MP2A	X	52.028	4.5
74	MP2A	Z	-30.039	4.5
75	MP2A	Mx	.026	4.5
76	MP2B	X	42.937	4.5
77	MP2B	Z	-24.79	4.5
78	MP2B	Mx	-.025	4.5
79	MP2C	X	70.211	4.5
80	MP2C	Z	-40.536	4.5
81	MP2C	Mx	.02	4.5

Member Point Loads (BLC 6 : Antenna Wo (90 Deg))

	Member Label	Direction	Magnitude[lb,k-ft]	Location[ft,%]
1	MP1A	X	146.495	1.75
2	MP1A	Z	0	1.75
3	MP1A	Mx	-.146	1.75
4	MP1A	X	146.495	6.75
5	MP1A	Z	0	6.75
6	MP1A	Mx	-.146	6.75
7	MP1B	X	165.633	1.75
8	MP1B	Z	0	1.75
9	MP1B	Mx	.088	1.75
10	MP1B	X	165.633	6.75
11	MP1B	Z	0	6.75
12	MP1B	Mx	.088	6.75
13	MP1C	X	223.048	1.75
14	MP1C	Z	0	1.75
15	MP1C	Mx	.149	1.75
16	MP1C	X	223.048	6.75
17	MP1C	Z	0	6.75
18	MP1C	Mx	.149	6.75
19	MP1A	X	146.495	1.75
20	MP1A	Z	0	1.75
21	MP1A	Mx	-.146	1.75
22	MP1A	X	146.495	6.75
23	MP1A	Z	0	6.75
24	MP1A	Mx	-.146	6.75
25	MP1B	X	165.633	1.75
26	MP1B	Z	0	1.75
27	MP1B	Mx	.199	1.75

Member Point Loads (BLC 6 : Antenna Wo (90 Deg)) (Continued)

	Member Label	Direction	Magnitude[lb,k-ft]	Location[ft,%]
28	MP1B	X	165.633	6.75
29	MP1B	Z	0	6.75
30	MP1B	Mx	.199	6.75
31	MP1C	X	223.048	1.75
32	MP1C	Z	0	1.75
33	MP1C	Mx	-.149	1.75
34	MP1C	X	223.048	6.75
35	MP1C	Z	0	6.75
36	MP1C	Mx	-.149	6.75
37	MP3A	X	45.051	3.25
38	MP3A	Z	0	3.25
39	MP3A	Mx	-.045	3.25
40	MP3A	X	45.051	5.25
41	MP3A	Z	0	5.25
42	MP3A	Mx	-.045	5.25
43	MP3B	X	62.557	3.25
44	MP3B	Z	0	3.25
45	MP3B	Mx	.054	3.25
46	MP3B	X	62.557	5.25
47	MP3B	Z	0	5.25
48	MP3B	Mx	.054	5.25
49	MP3C	X	115.074	3.25
50	MP3C	Z	0	3.25
51	MP3C	Mx	0	3.25
52	MP3C	X	115.074	5.25
53	MP3C	Z	0	5.25
54	MP3C	Mx	0	5.25
55	MP1A	X	12.536	6
56	MP1A	Z	0	6
57	MP1A	Mx	.006	6
58	MP1B	X	13.931	6
59	MP1B	Z	0	6
60	MP1B	Mx	-.006	6
61	MP1C	X	18.118	6
62	MP1C	Z	0	6
63	MP1C	Mx	0	6
64	MP1A	X	61.21	4.5
65	MP1A	Z	0	4.5
66	MP1A	Mx	.031	4.5
67	MP1B	X	68.8	4.5
68	MP1B	Z	0	4.5
69	MP1B	Mx	-.03	4.5
70	MP1C	X	91.57	4.5
71	MP1C	Z	0	4.5
72	MP1C	Mx	0	4.5
73	MP2A	X	49.58	4.5
74	MP2A	Z	0	4.5
75	MP2A	Mx	.025	4.5
76	MP2B	X	60.077	4.5
77	MP2B	Z	0	4.5
78	MP2B	Mx	-.026	4.5
79	MP2C	X	91.57	4.5

Member Point Loads (BLC 6 : Antenna Wo (90 Deg)) (Continued)

	Member Label	Direction	Magnitude[lb,k-ft]	Location[ft,%]
80	MP2C	Z	0	4.5
81	MP2C	Mx	0	4.5

Member Point Loads (BLC 7 : Antenna Wo (120 Deg))

	Member Label	Direction	Magnitude[lb,k-ft]	Location[ft,%]
1	MP1A	X	143.443	1.75
2	MP1A	Z	82.817	1.75
3	MP1A	Mx	-.088	1.75
4	MP1A	X	143.443	6.75
5	MP1A	Z	82.817	6.75
6	MP1A	Mx	-.088	6.75
7	MP1B	X	176.591	1.75
8	MP1B	Z	101.955	1.75
9	MP1B	Mx	-.016	1.75
10	MP1B	X	176.591	6.75
11	MP1B	Z	101.955	6.75
12	MP1B	Mx	-.016	6.75
13	MP1C	X	176.591	1.75
14	MP1C	Z	101.955	1.75
15	MP1C	Mx	.22	1.75
16	MP1C	X	176.591	6.75
17	MP1C	Z	101.955	6.75
18	MP1C	Mx	.22	6.75
19	MP1A	X	143.443	1.75
20	MP1A	Z	82.817	1.75
21	MP1A	Mx	-.199	1.75
22	MP1A	X	143.443	6.75
23	MP1A	Z	82.817	6.75
24	MP1A	Mx	-.199	6.75
25	MP1B	X	176.591	1.75
26	MP1B	Z	101.955	1.75
27	MP1B	Mx	.22	1.75
28	MP1B	X	176.591	6.75
29	MP1B	Z	101.955	6.75
30	MP1B	Mx	.22	6.75
31	MP1C	X	176.591	1.75
32	MP1C	Z	101.955	1.75
33	MP1C	Mx	-.016	1.75
34	MP1C	X	176.591	6.75
35	MP1C	Z	101.955	6.75
36	MP1C	Mx	-.016	6.75
37	MP3A	X	54.176	3.25
38	MP3A	Z	31.279	3.25
39	MP3A	Mx	-.054	3.25
40	MP3A	X	54.176	5.25
41	MP3A	Z	31.279	5.25
42	MP3A	Mx	-.054	5.25
43	MP3B	X	84.497	3.25
44	MP3B	Z	48.784	3.25
45	MP3B	Mx	.049	3.25
46	MP3B	X	84.497	5.25

Member Point Loads (BLC 7 : Antenna Wo (120 Deg)) (Continued)

	Member Label	Direction	Magnitude[lb,k-ft]	Location[ft,%]
47	MP3B	Z	48.784	5.25
48	MP3B	Mx	.049	5.25
49	MP3C	X	84.497	3.25
50	MP3C	Z	48.784	3.25
51	MP3C	Mx	.049	3.25
52	MP3C	X	84.497	5.25
53	MP3C	Z	48.784	5.25
54	MP3C	Mx	.049	5.25
55	MP1A	X	12.065	6
56	MP1A	Z	6.966	6
57	MP1A	Mx	.006	6
58	MP1B	X	14.482	6
59	MP1B	Z	8.361	6
60	MP1B	Mx	-.004	6
61	MP1C	X	14.482	6
62	MP1C	Z	8.361	6
63	MP1C	Mx	-.004	6
64	MP1A	X	59.582	4.5
65	MP1A	Z	34.4	4.5
66	MP1A	Mx	.03	4.5
67	MP1B	X	72.728	4.5
68	MP1B	Z	41.99	4.5
69	MP1B	Mx	-.021	4.5
70	MP1C	X	72.728	4.5
71	MP1C	Z	41.99	4.5
72	MP1C	Mx	-.021	4.5
73	MP2A	X	52.028	4.5
74	MP2A	Z	30.039	4.5
75	MP2A	Mx	.026	4.5
76	MP2B	X	70.211	4.5
77	MP2B	Z	40.536	4.5
78	MP2B	Mx	-.02	4.5
79	MP2C	X	70.211	4.5
80	MP2C	Z	40.536	4.5
81	MP2C	Mx	-.02	4.5

Member Point Loads (BLC 8 : Antenna Wo (150 Deg))

	Member Label	Direction	Magnitude[lb,k-ft]	Location[ft,%]
1	MP1A	X	101.955	1.75
2	MP1A	Z	176.591	1.75
3	MP1A	Mx	.016	1.75
4	MP1A	X	101.955	6.75
5	MP1A	Z	176.591	6.75
6	MP1A	Mx	.016	6.75
7	MP1B	X	111.524	1.75
8	MP1B	Z	193.165	1.75
9	MP1B	Mx	-.149	1.75
10	MP1B	X	111.524	6.75
11	MP1B	Z	193.165	6.75
12	MP1B	Mx	-.149	6.75
13	MP1C	X	82.817	1.75

Member Point Loads (BLC 8 : Antenna Wo (150 Deg)) (Continued)

	Member Label	Direction	Magnitude[lb,k-ft]	Location[ft,%]
14	MP1C	Z	143.443	1.75
15	MP1C	Mx	.199	1.75
16	MP1C	X	82.817	6.75
17	MP1C	Z	143.443	6.75
18	MP1C	Mx	.199	6.75
19	MP1A	X	101.955	1.75
20	MP1A	Z	176.591	1.75
21	MP1A	Mx	-.22	1.75
22	MP1A	X	101.955	6.75
23	MP1A	Z	176.591	6.75
24	MP1A	Mx	-.22	6.75
25	MP1B	X	111.524	1.75
26	MP1B	Z	193.165	1.75
27	MP1B	Mx	.149	1.75
28	MP1B	X	111.524	6.75
29	MP1B	Z	193.165	6.75
30	MP1B	Mx	.149	6.75
31	MP1C	X	82.817	1.75
32	MP1C	Z	143.443	1.75
33	MP1C	Mx	.088	1.75
34	MP1C	X	82.817	6.75
35	MP1C	Z	143.443	6.75
36	MP1C	Mx	.088	6.75
37	MP3A	X	48.784	3.25
38	MP3A	Z	84.497	3.25
39	MP3A	Mx	-.049	3.25
40	MP3A	X	48.784	5.25
41	MP3A	Z	84.497	5.25
42	MP3A	Mx	-.049	5.25
43	MP3B	X	57.537	3.25
44	MP3B	Z	99.657	3.25
45	MP3B	Mx	0	3.25
46	MP3B	X	57.537	5.25
47	MP3B	Z	99.657	5.25
48	MP3B	Mx	0	5.25
49	MP3C	X	31.279	3.25
50	MP3C	Z	54.176	3.25
51	MP3C	Mx	.054	3.25
52	MP3C	X	31.279	5.25
53	MP3C	Z	54.176	5.25
54	MP3C	Mx	.054	5.25
55	MP1A	X	8.361	6
56	MP1A	Z	14.482	6
57	MP1A	Mx	.004	6
58	MP1B	X	9.059	6
59	MP1B	Z	15.691	6
60	MP1B	Mx	0	6
61	MP1C	X	6.966	6
62	MP1C	Z	12.065	6
63	MP1C	Mx	-.006	6
64	MP1A	X	41.99	4.5
65	MP1A	Z	72.728	4.5

Member Point Loads (BLC 8 : Antenna Wo (150 Deg)) (Continued)

	Member Label	Direction	Magnitude[lb,k-ft]	Location[ft,%]
66	MP1A	Mx	.021	4.5
67	MP1B	X	45.785	4.5
68	MP1B	Z	79.302	4.5
69	MP1B	Mx	0	4.5
70	MP1C	X	34.4	4.5
71	MP1C	Z	59.582	4.5
72	MP1C	Mx	-.03	4.5
73	MP2A	X	40.536	4.5
74	MP2A	Z	70.211	4.5
75	MP2A	Mx	.02	4.5
76	MP2B	X	45.785	4.5
77	MP2B	Z	79.302	4.5
78	MP2B	Mx	0	4.5
79	MP2C	X	30.039	4.5
80	MP2C	Z	52.028	4.5
81	MP2C	Mx	-.026	4.5

Member Point Loads (BLC 9 : Antenna Wo (180 Deg))

	Member Label	Direction	Magnitude[lb,k-ft]	Location[ft,%]
1	MP1A	X	0	1.75
2	MP1A	Z	223.048	1.75
3	MP1A	Mx	.149	1.75
4	MP1A	X	0	6.75
5	MP1A	Z	223.048	6.75
6	MP1A	Mx	.149	6.75
7	MP1B	X	0	1.75
8	MP1B	Z	203.91	1.75
9	MP1B	Mx	-.22	1.75
10	MP1B	X	0	6.75
11	MP1B	Z	203.91	6.75
12	MP1B	Mx	-.22	6.75
13	MP1C	X	0	1.75
14	MP1C	Z	146.495	1.75
15	MP1C	Mx	.146	1.75
16	MP1C	X	0	6.75
17	MP1C	Z	146.495	6.75
18	MP1C	Mx	.146	6.75
19	MP1A	X	0	1.75
20	MP1A	Z	223.048	1.75
21	MP1A	Mx	-.149	1.75
22	MP1A	X	0	6.75
23	MP1A	Z	223.048	6.75
24	MP1A	Mx	-.149	6.75
25	MP1B	X	0	1.75
26	MP1B	Z	203.91	1.75
27	MP1B	Mx	.016	1.75
28	MP1B	X	0	6.75
29	MP1B	Z	203.91	6.75
30	MP1B	Mx	.016	6.75
31	MP1C	X	0	1.75
32	MP1C	Z	146.495	1.75

Member Point Loads (BLC 9 : Antenna Wo (180 Deg)) (Continued)

	Member Label	Direction	Magnitude[lb,k-ft]	Location[ft,%]
33	MP1C	Mx	.146	1.75
34	MP1C	X	0	6.75
35	MP1C	Z	146.495	6.75
36	MP1C	Mx	.146	6.75
37	MP3A	X	0	3.25
38	MP3A	Z	115.074	3.25
39	MP3A	Mx	0	3.25
40	MP3A	X	0	5.25
41	MP3A	Z	115.074	5.25
42	MP3A	Mx	0	5.25
43	MP3B	X	0	3.25
44	MP3B	Z	97.568	3.25
45	MP3B	Mx	-.049	3.25
46	MP3B	X	0	5.25
47	MP3B	Z	97.568	5.25
48	MP3B	Mx	-.049	5.25
49	MP3C	X	0	3.25
50	MP3C	Z	45.051	3.25
51	MP3C	Mx	.045	3.25
52	MP3C	X	0	5.25
53	MP3C	Z	45.051	5.25
54	MP3C	Mx	.045	5.25
55	MP1A	X	0	6
56	MP1A	Z	18.118	6
57	MP1A	Mx	0	6
58	MP1B	X	0	6
59	MP1B	Z	16.722	6
60	MP1B	Mx	.004	6
61	MP1C	X	0	6
62	MP1C	Z	12.536	6
63	MP1C	Mx	-.006	6
64	MP1A	X	0	4.5
65	MP1A	Z	91.57	4.5
66	MP1A	Mx	0	4.5
67	MP1B	X	0	4.5
68	MP1B	Z	83.98	4.5
69	MP1B	Mx	.021	4.5
70	MP1C	X	0	4.5
71	MP1C	Z	61.21	4.5
72	MP1C	Mx	-.031	4.5
73	MP2A	X	0	4.5
74	MP2A	Z	91.57	4.5
75	MP2A	Mx	0	4.5
76	MP2B	X	0	4.5
77	MP2B	Z	81.072	4.5
78	MP2B	Mx	.02	4.5
79	MP2C	X	0	4.5
80	MP2C	Z	49.58	4.5
81	MP2C	Mx	-.025	4.5

Member Point Loads (BLC 10 : Antenna Wo (210 Deg))

	Member Label	Direction	Magnitude[lb,k-ft]	Location[ft,%]

Member Point Loads (BLC 10 : Antenna Wo (210 Deg)) (Continued)

	Member Label	Direction	Magnitude[lb,k-ft]	Location[ft,%]
1	MP1A	X	-101.955	1.75
2	MP1A	Z	176.591	1.75
3	MP1A	Mx	.22	1.75
4	MP1A	X	-101.955	6.75
5	MP1A	Z	176.591	6.75
6	MP1A	Mx	.22	6.75
7	MP1B	X	-82.817	1.75
8	MP1B	Z	143.443	1.75
9	MP1B	Mx	-.199	1.75
10	MP1B	X	-82.817	6.75
11	MP1B	Z	143.443	6.75
12	MP1B	Mx	-.199	6.75
13	MP1C	X	-82.817	1.75
14	MP1C	Z	143.443	1.75
15	MP1C	Mx	.088	1.75
16	MP1C	X	-82.817	6.75
17	MP1C	Z	143.443	6.75
18	MP1C	Mx	.088	6.75
19	MP1A	X	-101.955	1.75
20	MP1A	Z	176.591	1.75
21	MP1A	Mx	-.016	1.75
22	MP1A	X	-101.955	6.75
23	MP1A	Z	176.591	6.75
24	MP1A	Mx	-.016	6.75
25	MP1B	X	-82.817	1.75
26	MP1B	Z	143.443	1.75
27	MP1B	Mx	-.088	1.75
28	MP1B	X	-82.817	6.75
29	MP1B	Z	143.443	6.75
30	MP1B	Mx	-.088	6.75
31	MP1C	X	-82.817	1.75
32	MP1C	Z	143.443	1.75
33	MP1C	Mx	.199	1.75
34	MP1C	X	-82.817	6.75
35	MP1C	Z	143.443	6.75
36	MP1C	Mx	.199	6.75
37	MP3A	X	-48.784	3.25
38	MP3A	Z	84.497	3.25
39	MP3A	Mx	.049	3.25
40	MP3A	X	-48.784	5.25
41	MP3A	Z	84.497	5.25
42	MP3A	Mx	.049	5.25
43	MP3B	X	-31.279	3.25
44	MP3B	Z	54.176	3.25
45	MP3B	Mx	-.054	3.25
46	MP3B	X	-31.279	5.25
47	MP3B	Z	54.176	5.25
48	MP3B	Mx	-.054	5.25
49	MP3C	X	-31.279	3.25
50	MP3C	Z	54.176	3.25
51	MP3C	Mx	.054	3.25
52	MP3C	X	-31.279	5.25

Member Point Loads (BLC 10 : Antenna Wo (210 Deg)) (Continued)

	Member Label	Direction	Magnitude[lb,k-ft]	Location[ft,%]
53	MP3C	Z	54.176	5.25
54	MP3C	Mx	.054	5.25
55	MP1A	X	-8.361	6
56	MP1A	Z	14.482	6
57	MP1A	Mx	-.004	6
58	MP1B	X	-6.966	6
59	MP1B	Z	12.065	6
60	MP1B	Mx	.006	6
61	MP1C	X	-6.966	6
62	MP1C	Z	12.065	6
63	MP1C	Mx	-.006	6
64	MP1A	X	-41.99	4.5
65	MP1A	Z	72.728	4.5
66	MP1A	Mx	-.021	4.5
67	MP1B	X	-34.4	4.5
68	MP1B	Z	59.582	4.5
69	MP1B	Mx	.03	4.5
70	MP1C	X	-34.4	4.5
71	MP1C	Z	59.582	4.5
72	MP1C	Mx	-.03	4.5
73	MP2A	X	-40.536	4.5
74	MP2A	Z	70.211	4.5
75	MP2A	Mx	-.02	4.5
76	MP2B	X	-30.039	4.5
77	MP2B	Z	52.028	4.5
78	MP2B	Mx	.026	4.5
79	MP2C	X	-30.039	4.5
80	MP2C	Z	52.028	4.5
81	MP2C	Mx	-.026	4.5

Member Point Loads (BLC 11 : Antenna Wo (240 Deg))

	Member Label	Direction	Magnitude[lb,k-ft]	Location[ft,%]
1	MP1A	X	-143.443	1.75
2	MP1A	Z	82.817	1.75
3	MP1A	Mx	.199	1.75
4	MP1A	X	-143.443	6.75
5	MP1A	Z	82.817	6.75
6	MP1A	Mx	.199	6.75
7	MP1B	X	-126.868	1.75
8	MP1B	Z	73.248	1.75
9	MP1B	Mx	-.146	1.75
10	MP1B	X	-126.868	6.75
11	MP1B	Z	73.248	6.75
12	MP1B	Mx	-.146	6.75
13	MP1C	X	-176.591	1.75
14	MP1C	Z	101.955	1.75
15	MP1C	Mx	-.016	1.75
16	MP1C	X	-176.591	6.75
17	MP1C	Z	101.955	6.75
18	MP1C	Mx	-.016	6.75
19	MP1A	X	-143.443	1.75

Member Point Loads (BLC 11 : Antenna Wo (240 Deg)) (Continued)

	Member Label	Direction	Magnitude[lb,k-ft]	Location[ft,%]
20	MP1A	Z	82.817	1.75
21	MP1A	Mx	.088	1.75
22	MP1A	X	-143.443	6.75
23	MP1A	Z	82.817	6.75
24	MP1A	Mx	.088	6.75
25	MP1B	X	-126.868	1.75
26	MP1B	Z	73.248	1.75
27	MP1B	Mx	-.146	1.75
28	MP1B	X	-126.868	6.75
29	MP1B	Z	73.248	6.75
30	MP1B	Mx	-.146	6.75
31	MP1C	X	-176.591	1.75
32	MP1C	Z	101.955	1.75
33	MP1C	Mx	.22	1.75
34	MP1C	X	-176.591	6.75
35	MP1C	Z	101.955	6.75
36	MP1C	Mx	.22	6.75
37	MP3A	X	-54.176	3.25
38	MP3A	Z	31.279	3.25
39	MP3A	Mx	.054	3.25
40	MP3A	X	-54.176	5.25
41	MP3A	Z	31.279	5.25
42	MP3A	Mx	.054	5.25
43	MP3B	X	-39.016	3.25
44	MP3B	Z	22.526	3.25
45	MP3B	Mx	-.045	3.25
46	MP3B	X	-39.016	5.25
47	MP3B	Z	22.526	5.25
48	MP3B	Mx	-.045	5.25
49	MP3C	X	-84.497	3.25
50	MP3C	Z	48.784	3.25
51	MP3C	Mx	.049	3.25
52	MP3C	X	-84.497	5.25
53	MP3C	Z	48.784	5.25
54	MP3C	Mx	.049	5.25
55	MP1A	X	-12.065	6
56	MP1A	Z	6.966	6
57	MP1A	Mx	-.006	6
58	MP1B	X	-10.856	6
59	MP1B	Z	6.268	6
60	MP1B	Mx	.006	6
61	MP1C	X	-14.482	6
62	MP1C	Z	8.361	6
63	MP1C	Mx	-.004	6
64	MP1A	X	-59.582	4.5
65	MP1A	Z	34.4	4.5
66	MP1A	Mx	-.03	4.5
67	MP1B	X	-53.009	4.5
68	MP1B	Z	30.605	4.5
69	MP1B	Mx	.031	4.5
70	MP1C	X	-72.728	4.5
71	MP1C	Z	41.99	4.5

Member Point Loads (BLC 11 : Antenna Wo (240 Deg)) (Continued)

	Member Label	Direction	Magnitude[lb,k-ft]	Location[ft,%]
72	MP1C	Mx	-.021	4.5
73	MP2A	X	-52.028	4.5
74	MP2A	Z	30.039	4.5
75	MP2A	Mx	-.026	4.5
76	MP2B	X	-42.937	4.5
77	MP2B	Z	24.79	4.5
78	MP2B	Mx	.025	4.5
79	MP2C	X	-70.211	4.5
80	MP2C	Z	40.536	4.5
81	MP2C	Mx	-.02	4.5

Member Point Loads (BLC 12 : Antenna Wo (270 Deg))

	Member Label	Direction	Magnitude[lb,k-ft]	Location[ft,%]
1	MP1A	X	-146.495	1.75
2	MP1A	Z	0	1.75
3	MP1A	Mx	.146	1.75
4	MP1A	X	-146.495	6.75
5	MP1A	Z	0	6.75
6	MP1A	Mx	.146	6.75
7	MP1B	X	-165.633	1.75
8	MP1B	Z	0	1.75
9	MP1B	Mx	-.088	1.75
10	MP1B	X	-165.633	6.75
11	MP1B	Z	0	6.75
12	MP1B	Mx	-.088	6.75
13	MP1C	X	-223.048	1.75
14	MP1C	Z	0	1.75
15	MP1C	Mx	-.149	1.75
16	MP1C	X	-223.048	6.75
17	MP1C	Z	0	6.75
18	MP1C	Mx	-.149	6.75
19	MP1A	X	-146.495	1.75
20	MP1A	Z	0	1.75
21	MP1A	Mx	.146	1.75
22	MP1A	X	-146.495	6.75
23	MP1A	Z	0	6.75
24	MP1A	Mx	.146	6.75
25	MP1B	X	-165.633	1.75
26	MP1B	Z	0	1.75
27	MP1B	Mx	-.199	1.75
28	MP1B	X	-165.633	6.75
29	MP1B	Z	0	6.75
30	MP1B	Mx	-.199	6.75
31	MP1C	X	-223.048	1.75
32	MP1C	Z	0	1.75
33	MP1C	Mx	.149	1.75
34	MP1C	X	-223.048	6.75
35	MP1C	Z	0	6.75
36	MP1C	Mx	.149	6.75
37	MP3A	X	-45.051	3.25
38	MP3A	Z	0	3.25

Member Point Loads (BLC 12 : Antenna Wo (270 Deg)) (Continued)

	Member Label	Direction	Magnitude[lb,k-ft]	Location[ft,%]
39	MP3A	Mx	.045	3.25
40	MP3A	X	-45.051	5.25
41	MP3A	Z	0	5.25
42	MP3A	Mx	.045	5.25
43	MP3B	X	-62.557	3.25
44	MP3B	Z	0	3.25
45	MP3B	Mx	-.054	3.25
46	MP3B	X	-62.557	5.25
47	MP3B	Z	0	5.25
48	MP3B	Mx	-.054	5.25
49	MP3C	X	-115.074	3.25
50	MP3C	Z	0	3.25
51	MP3C	Mx	0	3.25
52	MP3C	X	-115.074	5.25
53	MP3C	Z	0	5.25
54	MP3C	Mx	0	5.25
55	MP1A	X	-12.536	6
56	MP1A	Z	0	6
57	MP1A	Mx	-.006	6
58	MP1B	X	-13.931	6
59	MP1B	Z	0	6
60	MP1B	Mx	.006	6
61	MP1C	X	-18.118	6
62	MP1C	Z	0	6
63	MP1C	Mx	0	6
64	MP1A	X	-61.21	4.5
65	MP1A	Z	0	4.5
66	MP1A	Mx	-.031	4.5
67	MP1B	X	-68.8	4.5
68	MP1B	Z	0	4.5
69	MP1B	Mx	.03	4.5
70	MP1C	X	-91.57	4.5
71	MP1C	Z	0	4.5
72	MP1C	Mx	0	4.5
73	MP2A	X	-49.58	4.5
74	MP2A	Z	0	4.5
75	MP2A	Mx	-.025	4.5
76	MP2B	X	-60.077	4.5
77	MP2B	Z	0	4.5
78	MP2B	Mx	.026	4.5
79	MP2C	X	-91.57	4.5
80	MP2C	Z	0	4.5
81	MP2C	Mx	0	4.5

Member Point Loads (BLC 13 : Antenna Wo (300 Deg))

	Member Label	Direction	Magnitude[lb,k-ft]	Location[ft,%]
1	MP1A	X	-143.443	1.75
2	MP1A	Z	-82.817	1.75
3	MP1A	Mx	.088	1.75
4	MP1A	X	-143.443	6.75
5	MP1A	Z	-82.817	6.75

Member Point Loads (BLC 13 : Antenna Wo (300 Deg)) (Continued)

	Member Label	Direction	Magnitude[lb,k-ft]	Location[ft,%]
6	MP1A	Mx	.088	6.75
7	MP1B	X	-176.591	1.75
8	MP1B	Z	-101.955	1.75
9	MP1B	Mx	.016	1.75
10	MP1B	X	-176.591	6.75
11	MP1B	Z	-101.955	6.75
12	MP1B	Mx	.016	6.75
13	MP1C	X	-176.591	1.75
14	MP1C	Z	-101.955	1.75
15	MP1C	Mx	-.22	1.75
16	MP1C	X	-176.591	6.75
17	MP1C	Z	-101.955	6.75
18	MP1C	Mx	-.22	6.75
19	MP1A	X	-143.443	1.75
20	MP1A	Z	-82.817	1.75
21	MP1A	Mx	.199	1.75
22	MP1A	X	-143.443	6.75
23	MP1A	Z	-82.817	6.75
24	MP1A	Mx	.199	6.75
25	MP1B	X	-176.591	1.75
26	MP1B	Z	-101.955	1.75
27	MP1B	Mx	-.22	1.75
28	MP1B	X	-176.591	6.75
29	MP1B	Z	-101.955	6.75
30	MP1B	Mx	-.22	6.75
31	MP1C	X	-176.591	1.75
32	MP1C	Z	-101.955	1.75
33	MP1C	Mx	.016	1.75
34	MP1C	X	-176.591	6.75
35	MP1C	Z	-101.955	6.75
36	MP1C	Mx	.016	6.75
37	MP3A	X	-54.176	3.25
38	MP3A	Z	-31.279	3.25
39	MP3A	Mx	.054	3.25
40	MP3A	X	-54.176	5.25
41	MP3A	Z	-31.279	5.25
42	MP3A	Mx	.054	5.25
43	MP3B	X	-84.497	3.25
44	MP3B	Z	-48.784	3.25
45	MP3B	Mx	-.049	3.25
46	MP3B	X	-84.497	5.25
47	MP3B	Z	-48.784	5.25
48	MP3B	Mx	-.049	5.25
49	MP3C	X	-84.497	3.25
50	MP3C	Z	-48.784	3.25
51	MP3C	Mx	-.049	3.25
52	MP3C	X	-84.497	5.25
53	MP3C	Z	-48.784	5.25
54	MP3C	Mx	-.049	5.25
55	MP1A	X	-12.065	6
56	MP1A	Z	-6.966	6
57	MP1A	Mx	-.006	6

Member Point Loads (BLC 13 : Antenna Wo (300 Deg)) (Continued)

	Member Label	Direction	Magnitude[lb,k-ft]	Location[ft,%]
58	MP1B	X	-14.482	6
59	MP1B	Z	-8.361	6
60	MP1B	Mx	.004	6
61	MP1C	X	-14.482	6
62	MP1C	Z	-8.361	6
63	MP1C	Mx	.004	6
64	MP1A	X	-59.582	4.5
65	MP1A	Z	-34.4	4.5
66	MP1A	Mx	-.03	4.5
67	MP1B	X	-72.728	4.5
68	MP1B	Z	-41.99	4.5
69	MP1B	Mx	.021	4.5
70	MP1C	X	-72.728	4.5
71	MP1C	Z	-41.99	4.5
72	MP1C	Mx	.021	4.5
73	MP2A	X	-52.028	4.5
74	MP2A	Z	-30.039	4.5
75	MP2A	Mx	-.026	4.5
76	MP2B	X	-70.211	4.5
77	MP2B	Z	-40.536	4.5
78	MP2B	Mx	.02	4.5
79	MP2C	X	-70.211	4.5
80	MP2C	Z	-40.536	4.5
81	MP2C	Mx	.02	4.5

Member Point Loads (BLC 14 : Antenna Wo (330 Deg))

	Member Label	Direction	Magnitude[lb,k-ft]	Location[ft,%]
1	MP1A	X	-101.955	1.75
2	MP1A	Z	-176.591	1.75
3	MP1A	Mx	-.016	1.75
4	MP1A	X	-101.955	6.75
5	MP1A	Z	-176.591	6.75
6	MP1A	Mx	-.016	6.75
7	MP1B	X	-111.524	1.75
8	MP1B	Z	-193.165	1.75
9	MP1B	Mx	.149	1.75
10	MP1B	X	-111.524	6.75
11	MP1B	Z	-193.165	6.75
12	MP1B	Mx	.149	6.75
13	MP1C	X	-82.817	1.75
14	MP1C	Z	-143.443	1.75
15	MP1C	Mx	-.199	1.75
16	MP1C	X	-82.817	6.75
17	MP1C	Z	-143.443	6.75
18	MP1C	Mx	-.199	6.75
19	MP1A	X	-101.955	1.75
20	MP1A	Z	-176.591	1.75
21	MP1A	Mx	.22	1.75
22	MP1A	X	-101.955	6.75
23	MP1A	Z	-176.591	6.75
24	MP1A	Mx	.22	6.75

Member Point Loads (BLC 14 : Antenna Wo (330 Deg)) (Continued)

	Member Label	Direction	Magnitude[lb,k-ft]	Location[ft,%]
25	MP1B	X	-111.524	1.75
26	MP1B	Z	-193.165	1.75
27	MP1B	Mx	-.149	1.75
28	MP1B	X	-111.524	6.75
29	MP1B	Z	-193.165	6.75
30	MP1B	Mx	-.149	6.75
31	MP1C	X	-82.817	1.75
32	MP1C	Z	-143.443	1.75
33	MP1C	Mx	-.088	1.75
34	MP1C	X	-82.817	6.75
35	MP1C	Z	-143.443	6.75
36	MP1C	Mx	-.088	6.75
37	MP3A	X	-48.784	3.25
38	MP3A	Z	-84.497	3.25
39	MP3A	Mx	.049	3.25
40	MP3A	X	-48.784	5.25
41	MP3A	Z	-84.497	5.25
42	MP3A	Mx	.049	5.25
43	MP3B	X	-57.537	3.25
44	MP3B	Z	-99.657	3.25
45	MP3B	Mx	0	3.25
46	MP3B	X	-57.537	5.25
47	MP3B	Z	-99.657	5.25
48	MP3B	Mx	0	5.25
49	MP3C	X	-31.279	3.25
50	MP3C	Z	-54.176	3.25
51	MP3C	Mx	-.054	3.25
52	MP3C	X	-31.279	5.25
53	MP3C	Z	-54.176	5.25
54	MP3C	Mx	-.054	5.25
55	MP1A	X	-8.361	6
56	MP1A	Z	-14.482	6
57	MP1A	Mx	-.004	6
58	MP1B	X	-9.059	6
59	MP1B	Z	-15.691	6
60	MP1B	Mx	0	6
61	MP1C	X	-6.966	6
62	MP1C	Z	-12.065	6
63	MP1C	Mx	.006	6
64	MP1A	X	-41.99	4.5
65	MP1A	Z	-72.728	4.5
66	MP1A	Mx	-.021	4.5
67	MP1B	X	-45.785	4.5
68	MP1B	Z	-79.302	4.5
69	MP1B	Mx	0	4.5
70	MP1C	X	-34.4	4.5
71	MP1C	Z	-59.582	4.5
72	MP1C	Mx	.03	4.5
73	MP2A	X	-40.536	4.5
74	MP2A	Z	-70.211	4.5
75	MP2A	Mx	-.02	4.5
76	MP2B	X	-45.785	4.5

Member Point Loads (BLC 14 : Antenna Wo (330 Deg)) (Continued)

	Member Label	Direction	Magnitude[lb,k-ft]	Location[ft,%]
77	MP2B	Z	-79.302	4.5
78	MP2B	Mx	0	4.5
79	MP2C	X	-30.039	4.5
80	MP2C	Z	-52.028	4.5
81	MP2C	Mx	.026	4.5

Member Point Loads (BLC 15 : Antenna Wi (0 Deg))

	Member Label	Direction	Magnitude[lb,k-ft]	Location[ft,%]
1	MP1A	X	0	1.75
2	MP1A	Z	-37.929	1.75
3	MP1A	Mx	-.025	1.75
4	MP1A	X	0	6.75
5	MP1A	Z	-37.929	6.75
6	MP1A	Mx	-.025	6.75
7	MP1B	X	0	1.75
8	MP1B	Z	-34.918	1.75
9	MP1B	Mx	.038	1.75
10	MP1B	X	0	6.75
11	MP1B	Z	-34.918	6.75
12	MP1B	Mx	.038	6.75
13	MP1C	X	0	1.75
14	MP1C	Z	-25.886	1.75
15	MP1C	Mx	-.026	1.75
16	MP1C	X	0	6.75
17	MP1C	Z	-25.886	6.75
18	MP1C	Mx	-.026	6.75
19	MP1A	X	0	1.75
20	MP1A	Z	-37.929	1.75
21	MP1A	Mx	.025	1.75
22	MP1A	X	0	6.75
23	MP1A	Z	-37.929	6.75
24	MP1A	Mx	.025	6.75
25	MP1B	X	0	1.75
26	MP1B	Z	-34.918	1.75
27	MP1B	Mx	-.003	1.75
28	MP1B	X	0	6.75
29	MP1B	Z	-34.918	6.75
30	MP1B	Mx	-.003	6.75
31	MP1C	X	0	1.75
32	MP1C	Z	-25.886	1.75
33	MP1C	Mx	-.026	1.75
34	MP1C	X	0	6.75
35	MP1C	Z	-25.886	6.75
36	MP1C	Mx	-.026	6.75
37	MP3A	X	0	3.25
38	MP3A	Z	-20.18	3.25
39	MP3A	Mx	0	3.25
40	MP3A	X	0	5.25
41	MP3A	Z	-20.18	5.25
42	MP3A	Mx	0	5.25
43	MP3B	X	0	3.25

Member Point Loads (BLC 15 : Antenna Wi (0 Deg)) (Continued)

	Member Label	Direction	Magnitude[lb,k-ft]	Location[ft,%]
44	MP3B	Z	-17.287	3.25
45	MP3B	Mx	.009	3.25
46	MP3B	X	0	5.25
47	MP3B	Z	-17.287	5.25
48	MP3B	Mx	.009	5.25
49	MP3C	X	0	3.25
50	MP3C	Z	-8.605	3.25
51	MP3C	Mx	-.009	3.25
52	MP3C	X	0	5.25
53	MP3C	Z	-8.605	5.25
54	MP3C	Mx	-.009	5.25
55	MP1A	X	0	6
56	MP1A	Z	-4.142	6
57	MP1A	Mx	0	6
58	MP1B	X	0	6
59	MP1B	Z	-3.884	6
60	MP1B	Mx	-.000971	6
61	MP1C	X	0	6
62	MP1C	Z	-3.111	6
63	MP1C	Mx	.002	6
64	MP1A	X	0	4.5
65	MP1A	Z	-17.02	4.5
66	MP1A	Mx	0	4.5
67	MP1B	X	0	4.5
68	MP1B	Z	-15.727	4.5
69	MP1B	Mx	-.004	4.5
70	MP1C	X	0	4.5
71	MP1C	Z	-11.845	4.5
72	MP1C	Mx	.006	4.5
73	MP2A	X	0	4.5
74	MP2A	Z	-17.02	4.5
75	MP2A	Mx	0	4.5
76	MP2B	X	0	4.5
77	MP2B	Z	-15.235	4.5
78	MP2B	Mx	-.004	4.5
79	MP2C	X	0	4.5
80	MP2C	Z	-9.879	4.5
81	MP2C	Mx	.005	4.5

Member Point Loads (BLC 16 : Antenna Wi (30 Deg))

	Member Label	Direction	Magnitude[lb,k-ft]	Location[ft,%]
1	MP1A	X	17.459	1.75
2	MP1A	Z	-30.24	1.75
3	MP1A	Mx	-.038	1.75
4	MP1A	X	17.459	6.75
5	MP1A	Z	-30.24	6.75
6	MP1A	Mx	-.038	6.75
7	MP1B	X	14.448	1.75
8	MP1B	Z	-25.025	1.75
9	MP1B	Mx	.035	1.75
10	MP1B	X	14.448	6.75

Member Point Loads (BLC 16 : Antenna Wi (30 Deg)) (Continued)

	Member Label	Direction	Magnitude[lb,k-ft]	Location[ft,%]
11	MP1B	Z	-25.025	6.75
12	MP1B	Mx	.035	6.75
13	MP1C	X	14.448	1.75
14	MP1C	Z	-25.025	1.75
15	MP1C	Mx	-.015	1.75
16	MP1C	X	14.448	6.75
17	MP1C	Z	-25.025	6.75
18	MP1C	Mx	-.015	6.75
19	MP1A	X	17.459	1.75
20	MP1A	Z	-30.24	1.75
21	MP1A	Mx	.003	1.75
22	MP1A	X	17.459	6.75
23	MP1A	Z	-30.24	6.75
24	MP1A	Mx	.003	6.75
25	MP1B	X	14.448	1.75
26	MP1B	Z	-25.025	1.75
27	MP1B	Mx	.015	1.75
28	MP1B	X	14.448	6.75
29	MP1B	Z	-25.025	6.75
30	MP1B	Mx	.015	6.75
31	MP1C	X	14.448	1.75
32	MP1C	Z	-25.025	1.75
33	MP1C	Mx	-.035	1.75
34	MP1C	X	14.448	6.75
35	MP1C	Z	-25.025	6.75
36	MP1C	Mx	-.035	6.75
37	MP3A	X	8.643	3.25
38	MP3A	Z	-14.971	3.25
39	MP3A	Mx	-.009	3.25
40	MP3A	X	8.643	5.25
41	MP3A	Z	-14.971	5.25
42	MP3A	Mx	-.009	5.25
43	MP3B	X	5.75	3.25
44	MP3B	Z	-9.959	3.25
45	MP3B	Mx	.01	3.25
46	MP3B	X	5.75	5.25
47	MP3B	Z	-9.959	5.25
48	MP3B	Mx	.01	5.25
49	MP3C	X	5.75	3.25
50	MP3C	Z	-9.959	3.25
51	MP3C	Mx	-.01	3.25
52	MP3C	X	5.75	5.25
53	MP3C	Z	-9.959	5.25
54	MP3C	Mx	-.01	5.25
55	MP1A	X	1.942	6
56	MP1A	Z	-3.364	6
57	MP1A	Mx	.000971	6
58	MP1B	X	1.684	6
59	MP1B	Z	-2.917	6
60	MP1B	Mx	-.001	6
61	MP1C	X	1.684	6
62	MP1C	Z	-2.917	6

Member Point Loads (BLC 16 : Antenna Wi (30 Deg)) (Continued)

	Member Label	Direction	Magnitude[lb,k-ft]	Location[ft,%]
63	MP1C	Mx	.001	6
64	MP1A	X	7.863	4.5
65	MP1A	Z	-13.62	4.5
66	MP1A	Mx	.004	4.5
67	MP1B	X	6.57	4.5
68	MP1B	Z	-11.379	4.5
69	MP1B	Mx	-.006	4.5
70	MP1C	X	6.57	4.5
71	MP1C	Z	-11.379	4.5
72	MP1C	Mx	.006	4.5
73	MP2A	X	7.617	4.5
74	MP2A	Z	-13.194	4.5
75	MP2A	Mx	.004	4.5
76	MP2B	X	5.832	4.5
77	MP2B	Z	-10.101	4.5
78	MP2B	Mx	-.005	4.5
79	MP2C	X	5.832	4.5
80	MP2C	Z	-10.101	4.5
81	MP2C	Mx	.005	4.5

Member Point Loads (BLC 17 : Antenna Wi (60 Deg))

	Member Label	Direction	Magnitude[lb,k-ft]	Location[ft,%]
1	MP1A	X	25.025	1.75
2	MP1A	Z	-14.448	1.75
3	MP1A	Mx	-.035	1.75
4	MP1A	X	25.025	6.75
5	MP1A	Z	-14.448	6.75
6	MP1A	Mx	-.035	6.75
7	MP1B	X	22.418	1.75
8	MP1B	Z	-12.943	1.75
9	MP1B	Mx	.026	1.75
10	MP1B	X	22.418	6.75
11	MP1B	Z	-12.943	6.75
12	MP1B	Mx	.026	6.75
13	MP1C	X	30.24	1.75
14	MP1C	Z	-17.459	1.75
15	MP1C	Mx	.003	1.75
16	MP1C	X	30.24	6.75
17	MP1C	Z	-17.459	6.75
18	MP1C	Mx	.003	6.75
19	MP1A	X	25.025	1.75
20	MP1A	Z	-14.448	1.75
21	MP1A	Mx	-.015	1.75
22	MP1A	X	25.025	6.75
23	MP1A	Z	-14.448	6.75
24	MP1A	Mx	-.015	6.75
25	MP1B	X	22.418	1.75
26	MP1B	Z	-12.943	1.75
27	MP1B	Mx	.026	1.75
28	MP1B	X	22.418	6.75
29	MP1B	Z	-12.943	6.75

Member Point Loads (BLC 17 : Antenna Wi (60 Deg)) (Continued)

	Member Label	Direction	Magnitude[lb,k-ft]	Location[ft,%]
30	MP1B	Mx	.026	6.75
31	MP1C	X	30.24	1.75
32	MP1C	Z	-17.459	1.75
33	MP1C	Mx	-.038	1.75
34	MP1C	X	30.24	6.75
35	MP1C	Z	-17.459	6.75
36	MP1C	Mx	-.038	6.75
37	MP3A	X	9.959	3.25
38	MP3A	Z	-5.75	3.25
39	MP3A	Mx	-.01	3.25
40	MP3A	X	9.959	5.25
41	MP3A	Z	-5.75	5.25
42	MP3A	Mx	-.01	5.25
43	MP3B	X	7.453	3.25
44	MP3B	Z	-4.303	3.25
45	MP3B	Mx	.009	3.25
46	MP3B	X	7.453	5.25
47	MP3B	Z	-4.303	5.25
48	MP3B	Mx	.009	5.25
49	MP3C	X	14.971	3.25
50	MP3C	Z	-8.643	3.25
51	MP3C	Mx	-.009	3.25
52	MP3C	X	14.971	5.25
53	MP3C	Z	-8.643	5.25
54	MP3C	Mx	-.009	5.25
55	MP1A	X	2.917	6
56	MP1A	Z	-1.684	6
57	MP1A	Mx	.001	6
58	MP1B	X	2.694	6
59	MP1B	Z	-1.555	6
60	MP1B	Mx	-.002	6
61	MP1C	X	3.364	6
62	MP1C	Z	-1.942	6
63	MP1C	Mx	.000971	6
64	MP1A	X	11.379	4.5
65	MP1A	Z	-6.57	4.5
66	MP1A	Mx	.006	4.5
67	MP1B	X	10.258	4.5
68	MP1B	Z	-5.923	4.5
69	MP1B	Mx	-.006	4.5
70	MP1C	X	13.62	4.5
71	MP1C	Z	-7.863	4.5
72	MP1C	Mx	.004	4.5
73	MP2A	X	10.101	4.5
74	MP2A	Z	-5.832	4.5
75	MP2A	Mx	.005	4.5
76	MP2B	X	8.555	4.5
77	MP2B	Z	-4.939	4.5
78	MP2B	Mx	-.005	4.5
79	MP2C	X	13.194	4.5
80	MP2C	Z	-7.617	4.5
81	MP2C	Mx	.004	4.5

Member Point Loads (BLC 18 : Antenna Wi (90 Deg))

	Member Label	Direction	Magnitude[lb,k-ft]	Location[ft,%]
1	MP1A	X	25.886	1.75
2	MP1A	Z	0	1.75
3	MP1A	Mx	-.026	1.75
4	MP1A	X	25.886	6.75
5	MP1A	Z	0	6.75
6	MP1A	Mx	-.026	6.75
7	MP1B	X	28.896	1.75
8	MP1B	Z	0	1.75
9	MP1B	Mx	.015	1.75
10	MP1B	X	28.896	6.75
11	MP1B	Z	0	6.75
12	MP1B	Mx	.015	6.75
13	MP1C	X	37.929	1.75
14	MP1C	Z	0	1.75
15	MP1C	Mx	.025	1.75
16	MP1C	X	37.929	6.75
17	MP1C	Z	0	6.75
18	MP1C	Mx	.025	6.75
19	MP1A	X	25.886	1.75
20	MP1A	Z	0	1.75
21	MP1A	Mx	-.026	1.75
22	MP1A	X	25.886	6.75
23	MP1A	Z	0	6.75
24	MP1A	Mx	-.026	6.75
25	MP1B	X	28.896	1.75
26	MP1B	Z	0	1.75
27	MP1B	Mx	.035	1.75
28	MP1B	X	28.896	6.75
29	MP1B	Z	0	6.75
30	MP1B	Mx	.035	6.75
31	MP1C	X	37.929	1.75
32	MP1C	Z	0	1.75
33	MP1C	Mx	-.025	1.75
34	MP1C	X	37.929	6.75
35	MP1C	Z	0	6.75
36	MP1C	Mx	-.025	6.75
37	MP3A	X	8.605	3.25
38	MP3A	Z	0	3.25
39	MP3A	Mx	-.009	3.25
40	MP3A	X	8.605	5.25
41	MP3A	Z	0	5.25
42	MP3A	Mx	-.009	5.25
43	MP3B	X	11.499	3.25
44	MP3B	Z	0	3.25
45	MP3B	Mx	.01	3.25
46	MP3B	X	11.499	5.25
47	MP3B	Z	0	5.25
48	MP3B	Mx	.01	5.25
49	MP3C	X	20.18	3.25
50	MP3C	Z	0	3.25
51	MP3C	Mx	0	3.25
52	MP3C	X	20.18	5.25

Member Point Loads (BLC 18 : Antenna Wi (90 Deg)) (Continued)

	Member Label	Direction	Magnitude[lb,k-ft]	Location[ft,%]
53	MP3C	Z	0	5.25
54	MP3C	Mx	0	5.25
55	MP1A	X	3.111	6
56	MP1A	Z	0	6
57	MP1A	Mx	.002	6
58	MP1B	X	3.368	6
59	MP1B	Z	0	6
60	MP1B	Mx	-.001	6
61	MP1C	X	4.142	6
62	MP1C	Z	0	6
63	MP1C	Mx	0	6
64	MP1A	X	11.845	4.5
65	MP1A	Z	0	4.5
66	MP1A	Mx	.006	4.5
67	MP1B	X	13.139	4.5
68	MP1B	Z	0	4.5
69	MP1B	Mx	-.006	4.5
70	MP1C	X	17.02	4.5
71	MP1C	Z	0	4.5
72	MP1C	Mx	0	4.5
73	MP2A	X	9.879	4.5
74	MP2A	Z	0	4.5
75	MP2A	Mx	.005	4.5
76	MP2B	X	11.664	4.5
77	MP2B	Z	0	4.5
78	MP2B	Mx	-.005	4.5
79	MP2C	X	17.02	4.5
80	MP2C	Z	0	4.5
81	MP2C	Mx	0	4.5

Member Point Loads (BLC 19 : Antenna Wi (120 Deg))

	Member Label	Direction	Magnitude[lb,k-ft]	Location[ft,%]
1	MP1A	X	25.025	1.75
2	MP1A	Z	14.448	1.75
3	MP1A	Mx	-.015	1.75
4	MP1A	X	25.025	6.75
5	MP1A	Z	14.448	6.75
6	MP1A	Mx	-.015	6.75
7	MP1B	X	30.24	1.75
8	MP1B	Z	17.459	1.75
9	MP1B	Mx	-.003	1.75
10	MP1B	X	30.24	6.75
11	MP1B	Z	17.459	6.75
12	MP1B	Mx	-.003	6.75
13	MP1C	X	30.24	1.75
14	MP1C	Z	17.459	1.75
15	MP1C	Mx	.038	1.75
16	MP1C	X	30.24	6.75
17	MP1C	Z	17.459	6.75
18	MP1C	Mx	.038	6.75
19	MP1A	X	25.025	1.75

Member Point Loads (BLC 19 : Antenna Wi (120 Deg)) (Continued)

	Member Label	Direction	Magnitude[lb,k-ft]	Location[ft,%]
20	MP1A	Z	14.448	1.75
21	MP1A	Mx	-.035	1.75
22	MP1A	X	25.025	6.75
23	MP1A	Z	14.448	6.75
24	MP1A	Mx	-.035	6.75
25	MP1B	X	30.24	1.75
26	MP1B	Z	17.459	1.75
27	MP1B	Mx	.038	1.75
28	MP1B	X	30.24	6.75
29	MP1B	Z	17.459	6.75
30	MP1B	Mx	.038	6.75
31	MP1C	X	30.24	1.75
32	MP1C	Z	17.459	1.75
33	MP1C	Mx	-.003	1.75
34	MP1C	X	30.24	6.75
35	MP1C	Z	17.459	6.75
36	MP1C	Mx	-.003	6.75
37	MP3A	X	9.959	3.25
38	MP3A	Z	5.75	3.25
39	MP3A	Mx	-.01	3.25
40	MP3A	X	9.959	5.25
41	MP3A	Z	5.75	5.25
42	MP3A	Mx	-.01	5.25
43	MP3B	X	14.971	3.25
44	MP3B	Z	8.643	3.25
45	MP3B	Mx	.009	3.25
46	MP3B	X	14.971	5.25
47	MP3B	Z	8.643	5.25
48	MP3B	Mx	.009	5.25
49	MP3C	X	14.971	3.25
50	MP3C	Z	8.643	3.25
51	MP3C	Mx	.009	3.25
52	MP3C	X	14.971	5.25
53	MP3C	Z	8.643	5.25
54	MP3C	Mx	.009	5.25
55	MP1A	X	2.917	6
56	MP1A	Z	1.684	6
57	MP1A	Mx	.001	6
58	MP1B	X	3.364	6
59	MP1B	Z	1.942	6
60	MP1B	Mx	-.000971	6
61	MP1C	X	3.364	6
62	MP1C	Z	1.942	6
63	MP1C	Mx	-.000971	6
64	MP1A	X	11.379	4.5
65	MP1A	Z	6.57	4.5
66	MP1A	Mx	.006	4.5
67	MP1B	X	13.62	4.5
68	MP1B	Z	7.863	4.5
69	MP1B	Mx	-.004	4.5
70	MP1C	X	13.62	4.5
71	MP1C	Z	7.863	4.5

Member Point Loads (BLC 19 : Antenna Wi (120 Deg)) (Continued)

	Member Label	Direction	Magnitude[lb,k-ft]	Location[ft,%]
72	MP1C	Mx	-.004	4.5
73	MP2A	X	10.101	4.5
74	MP2A	Z	5.832	4.5
75	MP2A	Mx	.005	4.5
76	MP2B	X	13.194	4.5
77	MP2B	Z	7.617	4.5
78	MP2B	Mx	-.004	4.5
79	MP2C	X	13.194	4.5
80	MP2C	Z	7.617	4.5
81	MP2C	Mx	-.004	4.5

Member Point Loads (BLC 20 : Antenna Wi (150 Deg))

	Member Label	Direction	Magnitude[lb,k-ft]	Location[ft,%]
1	MP1A	X	17.459	1.75
2	MP1A	Z	30.24	1.75
3	MP1A	Mx	.003	1.75
4	MP1A	X	17.459	6.75
5	MP1A	Z	30.24	6.75
6	MP1A	Mx	.003	6.75
7	MP1B	X	18.965	1.75
8	MP1B	Z	32.848	1.75
9	MP1B	Mx	-.025	1.75
10	MP1B	X	18.965	6.75
11	MP1B	Z	32.848	6.75
12	MP1B	Mx	-.025	6.75
13	MP1C	X	14.448	1.75
14	MP1C	Z	25.025	1.75
15	MP1C	Mx	.035	1.75
16	MP1C	X	14.448	6.75
17	MP1C	Z	25.025	6.75
18	MP1C	Mx	.035	6.75
19	MP1A	X	17.459	1.75
20	MP1A	Z	30.24	1.75
21	MP1A	Mx	-.038	1.75
22	MP1A	X	17.459	6.75
23	MP1A	Z	30.24	6.75
24	MP1A	Mx	-.038	6.75
25	MP1B	X	18.965	1.75
26	MP1B	Z	32.848	1.75
27	MP1B	Mx	.025	1.75
28	MP1B	X	18.965	6.75
29	MP1B	Z	32.848	6.75
30	MP1B	Mx	.025	6.75
31	MP1C	X	14.448	1.75
32	MP1C	Z	25.025	1.75
33	MP1C	Mx	.015	1.75
34	MP1C	X	14.448	6.75
35	MP1C	Z	25.025	6.75
36	MP1C	Mx	.015	6.75
37	MP3A	X	8.643	3.25
38	MP3A	Z	14.971	3.25

Member Point Loads (BLC 20 : Antenna Wi (150 Deg)) (Continued)

	Member Label	Direction	Magnitude[lb,k-ft]	Location[ft,%]
39	MP3A	Mx	-.009	3.25
40	MP3A	X	8.643	5.25
41	MP3A	Z	14.971	5.25
42	MP3A	Mx	-.009	5.25
43	MP3B	X	10.09	3.25
44	MP3B	Z	17.477	3.25
45	MP3B	Mx	0	3.25
46	MP3B	X	10.09	5.25
47	MP3B	Z	17.477	5.25
48	MP3B	Mx	0	5.25
49	MP3C	X	5.75	3.25
50	MP3C	Z	9.959	3.25
51	MP3C	Mx	.01	3.25
52	MP3C	X	5.75	5.25
53	MP3C	Z	9.959	5.25
54	MP3C	Mx	.01	5.25
55	MP1A	X	1.942	6
56	MP1A	Z	3.364	6
57	MP1A	Mx	.000971	6
58	MP1B	X	2.071	6
59	MP1B	Z	3.587	6
60	MP1B	Mx	0	6
61	MP1C	X	1.684	6
62	MP1C	Z	2.917	6
63	MP1C	Mx	-.001	6
64	MP1A	X	7.863	4.5
65	MP1A	Z	13.62	4.5
66	MP1A	Mx	.004	4.5
67	MP1B	X	8.51	4.5
68	MP1B	Z	14.74	4.5
69	MP1B	Mx	0	4.5
70	MP1C	X	6.57	4.5
71	MP1C	Z	11.379	4.5
72	MP1C	Mx	-.006	4.5
73	MP2A	X	7.617	4.5
74	MP2A	Z	13.194	4.5
75	MP2A	Mx	.004	4.5
76	MP2B	X	8.51	4.5
77	MP2B	Z	14.74	4.5
78	MP2B	Mx	0	4.5
79	MP2C	X	5.832	4.5
80	MP2C	Z	10.101	4.5
81	MP2C	Mx	-.005	4.5

Member Point Loads (BLC 21 : Antenna Wi (180 Deg))

	Member Label	Direction	Magnitude[lb,k-ft]	Location[ft,%]
1	MP1A	X	0	1.75
2	MP1A	Z	37.929	1.75
3	MP1A	Mx	.025	1.75
4	MP1A	X	0	6.75
5	MP1A	Z	37.929	6.75

Member Point Loads (BLC 21 : Antenna Wi (180 Deg)) (Continued)

	Member Label	Direction	Magnitude[lb,k-ft]	Location[ft,%]
6	MP1A	Mx	.025	6.75
7	MP1B	X	0	1.75
8	MP1B	Z	34.918	1.75
9	MP1B	Mx	-.038	1.75
10	MP1B	X	0	6.75
11	MP1B	Z	34.918	6.75
12	MP1B	Mx	-.038	6.75
13	MP1C	X	0	1.75
14	MP1C	Z	25.886	1.75
15	MP1C	Mx	.026	1.75
16	MP1C	X	0	6.75
17	MP1C	Z	25.886	6.75
18	MP1C	Mx	.026	6.75
19	MP1A	X	0	1.75
20	MP1A	Z	37.929	1.75
21	MP1A	Mx	-.025	1.75
22	MP1A	X	0	6.75
23	MP1A	Z	37.929	6.75
24	MP1A	Mx	-.025	6.75
25	MP1B	X	0	1.75
26	MP1B	Z	34.918	1.75
27	MP1B	Mx	.003	1.75
28	MP1B	X	0	6.75
29	MP1B	Z	34.918	6.75
30	MP1B	Mx	.003	6.75
31	MP1C	X	0	1.75
32	MP1C	Z	25.886	1.75
33	MP1C	Mx	.026	1.75
34	MP1C	X	0	6.75
35	MP1C	Z	25.886	6.75
36	MP1C	Mx	.026	6.75
37	MP3A	X	0	3.25
38	MP3A	Z	20.18	3.25
39	MP3A	Mx	0	3.25
40	MP3A	X	0	5.25
41	MP3A	Z	20.18	5.25
42	MP3A	Mx	0	5.25
43	MP3B	X	0	3.25
44	MP3B	Z	17.287	3.25
45	MP3B	Mx	-.009	3.25
46	MP3B	X	0	5.25
47	MP3B	Z	17.287	5.25
48	MP3B	Mx	-.009	5.25
49	MP3C	X	0	3.25
50	MP3C	Z	8.605	3.25
51	MP3C	Mx	.009	3.25
52	MP3C	X	0	5.25
53	MP3C	Z	8.605	5.25
54	MP3C	Mx	.009	5.25
55	MP1A	X	0	6
56	MP1A	Z	4.142	6
57	MP1A	Mx	0	6

Member Point Loads (BLC 21 : Antenna Wi (180 Deg)) (Continued)

	Member Label	Direction	Magnitude[lb,k-ft]	Location[ft,%]
58	MP1B	X	0	6
59	MP1B	Z	3.884	6
60	MP1B	Mx	.000971	6
61	MP1C	X	0	6
62	MP1C	Z	3.111	6
63	MP1C	Mx	-.002	6
64	MP1A	X	0	4.5
65	MP1A	Z	17.02	4.5
66	MP1A	Mx	0	4.5
67	MP1B	X	0	4.5
68	MP1B	Z	15.727	4.5
69	MP1B	Mx	.004	4.5
70	MP1C	X	0	4.5
71	MP1C	Z	11.845	4.5
72	MP1C	Mx	-.006	4.5
73	MP2A	X	0	4.5
74	MP2A	Z	17.02	4.5
75	MP2A	Mx	0	4.5
76	MP2B	X	0	4.5
77	MP2B	Z	15.235	4.5
78	MP2B	Mx	.004	4.5
79	MP2C	X	0	4.5
80	MP2C	Z	9.879	4.5
81	MP2C	Mx	-.005	4.5

Member Point Loads (BLC 22 : Antenna Wi (210 Deg))

	Member Label	Direction	Magnitude[lb,k-ft]	Location[ft,%]
1	MP1A	X	-17.459	1.75
2	MP1A	Z	30.24	1.75
3	MP1A	Mx	.038	1.75
4	MP1A	X	-17.459	6.75
5	MP1A	Z	30.24	6.75
6	MP1A	Mx	.038	6.75
7	MP1B	X	-14.448	1.75
8	MP1B	Z	25.025	1.75
9	MP1B	Mx	-.035	1.75
10	MP1B	X	-14.448	6.75
11	MP1B	Z	25.025	6.75
12	MP1B	Mx	-.035	6.75
13	MP1C	X	-14.448	1.75
14	MP1C	Z	25.025	1.75
15	MP1C	Mx	.015	1.75
16	MP1C	X	-14.448	6.75
17	MP1C	Z	25.025	6.75
18	MP1C	Mx	.015	6.75
19	MP1A	X	-17.459	1.75
20	MP1A	Z	30.24	1.75
21	MP1A	Mx	-.003	1.75
22	MP1A	X	-17.459	6.75
23	MP1A	Z	30.24	6.75
24	MP1A	Mx	-.003	6.75

Member Point Loads (BLC 22 : Antenna Wi (210 Deg)) (Continued)

	Member Label	Direction	Magnitude[lb,k-ft]	Location[ft,%]
25	MP1B	X	-14.448	1.75
26	MP1B	Z	25.025	1.75
27	MP1B	Mx	-.015	1.75
28	MP1B	X	-14.448	6.75
29	MP1B	Z	25.025	6.75
30	MP1B	Mx	-.015	6.75
31	MP1C	X	-14.448	1.75
32	MP1C	Z	25.025	1.75
33	MP1C	Mx	.035	1.75
34	MP1C	X	-14.448	6.75
35	MP1C	Z	25.025	6.75
36	MP1C	Mx	.035	6.75
37	MP3A	X	-8.643	3.25
38	MP3A	Z	14.971	3.25
39	MP3A	Mx	.009	3.25
40	MP3A	X	-8.643	5.25
41	MP3A	Z	14.971	5.25
42	MP3A	Mx	.009	5.25
43	MP3B	X	-5.75	3.25
44	MP3B	Z	9.959	3.25
45	MP3B	Mx	-.01	3.25
46	MP3B	X	-5.75	5.25
47	MP3B	Z	9.959	5.25
48	MP3B	Mx	-.01	5.25
49	MP3C	X	-5.75	3.25
50	MP3C	Z	9.959	3.25
51	MP3C	Mx	.01	3.25
52	MP3C	X	-5.75	5.25
53	MP3C	Z	9.959	5.25
54	MP3C	Mx	.01	5.25
55	MP1A	X	-1.942	6
56	MP1A	Z	3.364	6
57	MP1A	Mx	-.000971	6
58	MP1B	X	-1.684	6
59	MP1B	Z	2.917	6
60	MP1B	Mx	.001	6
61	MP1C	X	-1.684	6
62	MP1C	Z	2.917	6
63	MP1C	Mx	-.001	6
64	MP1A	X	-7.863	4.5
65	MP1A	Z	13.62	4.5
66	MP1A	Mx	-.004	4.5
67	MP1B	X	-6.57	4.5
68	MP1B	Z	11.379	4.5
69	MP1B	Mx	.006	4.5
70	MP1C	X	-6.57	4.5
71	MP1C	Z	11.379	4.5
72	MP1C	Mx	-.006	4.5
73	MP2A	X	-7.617	4.5
74	MP2A	Z	13.194	4.5
75	MP2A	Mx	-.004	4.5
76	MP2B	X	-5.832	4.5

Member Point Loads (BLC 22 : Antenna Wi (210 Deg)) (Continued)

	Member Label	Direction	Magnitude[lb,k-ft]	Location[ft,%]
77	MP2B	Z	10.101	4.5
78	MP2B	Mx	.005	4.5
79	MP2C	X	-5.832	4.5
80	MP2C	Z	10.101	4.5
81	MP2C	Mx	-.005	4.5

Member Point Loads (BLC 23 : Antenna Wi (240 Deg))

	Member Label	Direction	Magnitude[lb,k-ft]	Location[ft,%]
1	MP1A	X	-25.025	1.75
2	MP1A	Z	14.448	1.75
3	MP1A	Mx	.035	1.75
4	MP1A	X	-25.025	6.75
5	MP1A	Z	14.448	6.75
6	MP1A	Mx	.035	6.75
7	MP1B	X	-22.418	1.75
8	MP1B	Z	12.943	1.75
9	MP1B	Mx	-.026	1.75
10	MP1B	X	-22.418	6.75
11	MP1B	Z	12.943	6.75
12	MP1B	Mx	-.026	6.75
13	MP1C	X	-30.24	1.75
14	MP1C	Z	17.459	1.75
15	MP1C	Mx	-.003	1.75
16	MP1C	X	-30.24	6.75
17	MP1C	Z	17.459	6.75
18	MP1C	Mx	-.003	6.75
19	MP1A	X	-25.025	1.75
20	MP1A	Z	14.448	1.75
21	MP1A	Mx	.015	1.75
22	MP1A	X	-25.025	6.75
23	MP1A	Z	14.448	6.75
24	MP1A	Mx	.015	6.75
25	MP1B	X	-22.418	1.75
26	MP1B	Z	12.943	1.75
27	MP1B	Mx	-.026	1.75
28	MP1B	X	-22.418	6.75
29	MP1B	Z	12.943	6.75
30	MP1B	Mx	-.026	6.75
31	MP1C	X	-30.24	1.75
32	MP1C	Z	17.459	1.75
33	MP1C	Mx	.038	1.75
34	MP1C	X	-30.24	6.75
35	MP1C	Z	17.459	6.75
36	MP1C	Mx	.038	6.75
37	MP3A	X	-9.959	3.25
38	MP3A	Z	5.75	3.25
39	MP3A	Mx	.01	3.25
40	MP3A	X	-9.959	5.25
41	MP3A	Z	5.75	5.25
42	MP3A	Mx	.01	5.25
43	MP3B	X	-7.453	3.25

Member Point Loads (BLC 23 : Antenna Wi (240 Deg)) (Continued)

	Member Label	Direction	Magnitude[lb,k-ft]	Location[ft,%]
44	MP3B	Z	4.303	3.25
45	MP3B	Mx	-.009	3.25
46	MP3B	X	-7.453	5.25
47	MP3B	Z	4.303	5.25
48	MP3B	Mx	-.009	5.25
49	MP3C	X	-14.971	3.25
50	MP3C	Z	8.643	3.25
51	MP3C	Mx	.009	3.25
52	MP3C	X	-14.971	5.25
53	MP3C	Z	8.643	5.25
54	MP3C	Mx	.009	5.25
55	MP1A	X	-2.917	6
56	MP1A	Z	1.684	6
57	MP1A	Mx	-.001	6
58	MP1B	X	-2.694	6
59	MP1B	Z	1.555	6
60	MP1B	Mx	.002	6
61	MP1C	X	-3.364	6
62	MP1C	Z	1.942	6
63	MP1C	Mx	-.000971	6
64	MP1A	X	-11.379	4.5
65	MP1A	Z	6.57	4.5
66	MP1A	Mx	-.006	4.5
67	MP1B	X	-10.258	4.5
68	MP1B	Z	5.923	4.5
69	MP1B	Mx	.006	4.5
70	MP1C	X	-13.62	4.5
71	MP1C	Z	7.863	4.5
72	MP1C	Mx	-.004	4.5
73	MP2A	X	-10.101	4.5
74	MP2A	Z	5.832	4.5
75	MP2A	Mx	-.005	4.5
76	MP2B	X	-8.555	4.5
77	MP2B	Z	4.939	4.5
78	MP2B	Mx	.005	4.5
79	MP2C	X	-13.194	4.5
80	MP2C	Z	7.617	4.5
81	MP2C	Mx	-.004	4.5

Member Point Loads (BLC 24 : Antenna Wi (270 Deg))

	Member Label	Direction	Magnitude[lb,k-ft]	Location[ft,%]
1	MP1A	X	-25.886	1.75
2	MP1A	Z	0	1.75
3	MP1A	Mx	.026	1.75
4	MP1A	X	-25.886	6.75
5	MP1A	Z	0	6.75
6	MP1A	Mx	.026	6.75
7	MP1B	X	-28.896	1.75
8	MP1B	Z	0	1.75
9	MP1B	Mx	-.015	1.75
10	MP1B	X	-28.896	6.75

Member Point Loads (BLC 24 : Antenna Wi (270 Deg)) (Continued)

	Member Label	Direction	Magnitude[lb,k-ft]	Location[ft,%]
11	MP1B	Z	0	6.75
12	MP1B	Mx	-.015	6.75
13	MP1C	X	-37.929	1.75
14	MP1C	Z	0	1.75
15	MP1C	Mx	-.025	1.75
16	MP1C	X	-37.929	6.75
17	MP1C	Z	0	6.75
18	MP1C	Mx	-.025	6.75
19	MP1A	X	-25.886	1.75
20	MP1A	Z	0	1.75
21	MP1A	Mx	.026	1.75
22	MP1A	X	-25.886	6.75
23	MP1A	Z	0	6.75
24	MP1A	Mx	.026	6.75
25	MP1B	X	-28.896	1.75
26	MP1B	Z	0	1.75
27	MP1B	Mx	-.035	1.75
28	MP1B	X	-28.896	6.75
29	MP1B	Z	0	6.75
30	MP1B	Mx	-.035	6.75
31	MP1C	X	-37.929	1.75
32	MP1C	Z	0	1.75
33	MP1C	Mx	.025	1.75
34	MP1C	X	-37.929	6.75
35	MP1C	Z	0	6.75
36	MP1C	Mx	.025	6.75
37	MP3A	X	-8.605	3.25
38	MP3A	Z	0	3.25
39	MP3A	Mx	.009	3.25
40	MP3A	X	-8.605	5.25
41	MP3A	Z	0	5.25
42	MP3A	Mx	.009	5.25
43	MP3B	X	-11.499	3.25
44	MP3B	Z	0	3.25
45	MP3B	Mx	-.01	3.25
46	MP3B	X	-11.499	5.25
47	MP3B	Z	0	5.25
48	MP3B	Mx	-.01	5.25
49	MP3C	X	-20.18	3.25
50	MP3C	Z	0	3.25
51	MP3C	Mx	0	3.25
52	MP3C	X	-20.18	5.25
53	MP3C	Z	0	5.25
54	MP3C	Mx	0	5.25
55	MP1A	X	-3.111	6
56	MP1A	Z	0	6
57	MP1A	Mx	-.002	6
58	MP1B	X	-3.368	6
59	MP1B	Z	0	6
60	MP1B	Mx	.001	6
61	MP1C	X	-4.142	6
62	MP1C	Z	0	6

Member Point Loads (BLC 24 : Antenna Wi (270 Deg)) (Continued)

	Member Label	Direction	Magnitude[lb,k-ft]	Location[ft,%]
63	MP1C	Mx	0	6
64	MP1A	X	-11.845	4.5
65	MP1A	Z	0	4.5
66	MP1A	Mx	-.006	4.5
67	MP1B	X	-13.139	4.5
68	MP1B	Z	0	4.5
69	MP1B	Mx	.006	4.5
70	MP1C	X	-17.02	4.5
71	MP1C	Z	0	4.5
72	MP1C	Mx	0	4.5
73	MP2A	X	-9.879	4.5
74	MP2A	Z	0	4.5
75	MP2A	Mx	-.005	4.5
76	MP2B	X	-11.664	4.5
77	MP2B	Z	0	4.5
78	MP2B	Mx	.005	4.5
79	MP2C	X	-17.02	4.5
80	MP2C	Z	0	4.5
81	MP2C	Mx	0	4.5

Member Point Loads (BLC 25 : Antenna Wi (300 Deg))

	Member Label	Direction	Magnitude[lb,k-ft]	Location[ft,%]
1	MP1A	X	-25.025	1.75
2	MP1A	Z	-14.448	1.75
3	MP1A	Mx	.015	1.75
4	MP1A	X	-25.025	6.75
5	MP1A	Z	-14.448	6.75
6	MP1A	Mx	.015	6.75
7	MP1B	X	-30.24	1.75
8	MP1B	Z	-17.459	1.75
9	MP1B	Mx	.003	1.75
10	MP1B	X	-30.24	6.75
11	MP1B	Z	-17.459	6.75
12	MP1B	Mx	.003	6.75
13	MP1C	X	-30.24	1.75
14	MP1C	Z	-17.459	1.75
15	MP1C	Mx	-.038	1.75
16	MP1C	X	-30.24	6.75
17	MP1C	Z	-17.459	6.75
18	MP1C	Mx	-.038	6.75
19	MP1A	X	-25.025	1.75
20	MP1A	Z	-14.448	1.75
21	MP1A	Mx	.035	1.75
22	MP1A	X	-25.025	6.75
23	MP1A	Z	-14.448	6.75
24	MP1A	Mx	.035	6.75
25	MP1B	X	-30.24	1.75
26	MP1B	Z	-17.459	1.75
27	MP1B	Mx	-.038	1.75
28	MP1B	X	-30.24	6.75
29	MP1B	Z	-17.459	6.75

Member Point Loads (BLC 25 : Antenna Wi (300 Deg)) (Continued)

	Member Label	Direction	Magnitude[lb,k-ft]	Location[ft,%]
30	MP1B	Mx	-.038	6.75
31	MP1C	X	-30.24	1.75
32	MP1C	Z	-17.459	1.75
33	MP1C	Mx	.003	1.75
34	MP1C	X	-30.24	6.75
35	MP1C	Z	-17.459	6.75
36	MP1C	Mx	.003	6.75
37	MP3A	X	-9.959	3.25
38	MP3A	Z	-5.75	3.25
39	MP3A	Mx	.01	3.25
40	MP3A	X	-9.959	5.25
41	MP3A	Z	-5.75	5.25
42	MP3A	Mx	.01	5.25
43	MP3B	X	-14.971	3.25
44	MP3B	Z	-8.643	3.25
45	MP3B	Mx	-.009	3.25
46	MP3B	X	-14.971	5.25
47	MP3B	Z	-8.643	5.25
48	MP3B	Mx	-.009	5.25
49	MP3C	X	-14.971	3.25
50	MP3C	Z	-8.643	3.25
51	MP3C	Mx	-.009	3.25
52	MP3C	X	-14.971	5.25
53	MP3C	Z	-8.643	5.25
54	MP3C	Mx	-.009	5.25
55	MP1A	X	-2.917	6
56	MP1A	Z	-1.684	6
57	MP1A	Mx	-.001	6
58	MP1B	X	-3.364	6
59	MP1B	Z	-1.942	6
60	MP1B	Mx	.000971	6
61	MP1C	X	-3.364	6
62	MP1C	Z	-1.942	6
63	MP1C	Mx	.000971	6
64	MP1A	X	-11.379	4.5
65	MP1A	Z	-6.57	4.5
66	MP1A	Mx	-.006	4.5
67	MP1B	X	-13.62	4.5
68	MP1B	Z	-7.863	4.5
69	MP1B	Mx	.004	4.5
70	MP1C	X	-13.62	4.5
71	MP1C	Z	-7.863	4.5
72	MP1C	Mx	.004	4.5
73	MP2A	X	-10.101	4.5
74	MP2A	Z	-5.832	4.5
75	MP2A	Mx	-.005	4.5
76	MP2B	X	-13.194	4.5
77	MP2B	Z	-7.617	4.5
78	MP2B	Mx	.004	4.5
79	MP2C	X	-13.194	4.5
80	MP2C	Z	-7.617	4.5
81	MP2C	Mx	.004	4.5

Member Point Loads (BLC 26 : Antenna Wi (330 Deg))

	Member Label	Direction	Magnitude[lb,k-ft]	Location[ft,%]
1	MP1A	X	-17.459	1.75
2	MP1A	Z	-30.24	1.75
3	MP1A	Mx	-.003	1.75
4	MP1A	X	-17.459	6.75
5	MP1A	Z	-30.24	6.75
6	MP1A	Mx	-.003	6.75
7	MP1B	X	-18.965	1.75
8	MP1B	Z	-32.848	1.75
9	MP1B	Mx	.025	1.75
10	MP1B	X	-18.965	6.75
11	MP1B	Z	-32.848	6.75
12	MP1B	Mx	.025	6.75
13	MP1C	X	-14.448	1.75
14	MP1C	Z	-25.025	1.75
15	MP1C	Mx	-.035	1.75
16	MP1C	X	-14.448	6.75
17	MP1C	Z	-25.025	6.75
18	MP1C	Mx	-.035	6.75
19	MP1A	X	-17.459	1.75
20	MP1A	Z	-30.24	1.75
21	MP1A	Mx	.038	1.75
22	MP1A	X	-17.459	6.75
23	MP1A	Z	-30.24	6.75
24	MP1A	Mx	.038	6.75
25	MP1B	X	-18.965	1.75
26	MP1B	Z	-32.848	1.75
27	MP1B	Mx	-.025	1.75
28	MP1B	X	-18.965	6.75
29	MP1B	Z	-32.848	6.75
30	MP1B	Mx	-.025	6.75
31	MP1C	X	-14.448	1.75
32	MP1C	Z	-25.025	1.75
33	MP1C	Mx	-.015	1.75
34	MP1C	X	-14.448	6.75
35	MP1C	Z	-25.025	6.75
36	MP1C	Mx	-.015	6.75
37	MP3A	X	-8.643	3.25
38	MP3A	Z	-14.971	3.25
39	MP3A	Mx	.009	3.25
40	MP3A	X	-8.643	5.25
41	MP3A	Z	-14.971	5.25
42	MP3A	Mx	.009	5.25
43	MP3B	X	-10.09	3.25
44	MP3B	Z	-17.477	3.25
45	MP3B	Mx	0	3.25
46	MP3B	X	-10.09	5.25
47	MP3B	Z	-17.477	5.25
48	MP3B	Mx	0	5.25
49	MP3C	X	-5.75	3.25
50	MP3C	Z	-9.959	3.25
51	MP3C	Mx	-.01	3.25
52	MP3C	X	-5.75	5.25

Member Point Loads (BLC 26 : Antenna Wi (330 Deg)) (Continued)

	Member Label	Direction	Magnitude[lb,k-ft]	Location[ft,%]
53	MP3C	Z	-9.959	5.25
54	MP3C	Mx	-.01	5.25
55	MP1A	X	-1.942	6
56	MP1A	Z	-3.364	6
57	MP1A	Mx	-.000971	6
58	MP1B	X	-2.071	6
59	MP1B	Z	-3.587	6
60	MP1B	Mx	0	6
61	MP1C	X	-1.684	6
62	MP1C	Z	-2.917	6
63	MP1C	Mx	.001	6
64	MP1A	X	-7.863	4.5
65	MP1A	Z	-13.62	4.5
66	MP1A	Mx	-.004	4.5
67	MP1B	X	-8.51	4.5
68	MP1B	Z	-14.74	4.5
69	MP1B	Mx	0	4.5
70	MP1C	X	-6.57	4.5
71	MP1C	Z	-11.379	4.5
72	MP1C	Mx	.006	4.5
73	MP2A	X	-7.617	4.5
74	MP2A	Z	-13.194	4.5
75	MP2A	Mx	-.004	4.5
76	MP2B	X	-8.51	4.5
77	MP2B	Z	-14.74	4.5
78	MP2B	Mx	0	4.5
79	MP2C	X	-5.832	4.5
80	MP2C	Z	-10.101	4.5
81	MP2C	Mx	.005	4.5

Member Point Loads (BLC 27 : Antenna Wm (0 Deg))

	Member Label	Direction	Magnitude[lb,k-ft]	Location[ft,%]
1	MP1A	X	0	1.75
2	MP1A	Z	-12.446	1.75
3	MP1A	Mx	-.008	1.75
4	MP1A	X	0	6.75
5	MP1A	Z	-12.446	6.75
6	MP1A	Mx	-.008	6.75
7	MP1B	X	0	1.75
8	MP1B	Z	-11.378	1.75
9	MP1B	Mx	.012	1.75
10	MP1B	X	0	6.75
11	MP1B	Z	-11.378	6.75
12	MP1B	Mx	.012	6.75
13	MP1C	X	0	1.75
14	MP1C	Z	-8.174	1.75
15	MP1C	Mx	-.008	1.75
16	MP1C	X	0	6.75
17	MP1C	Z	-8.174	6.75
18	MP1C	Mx	-.008	6.75
19	MP1A	X	0	1.75

Member Point Loads (BLC 27 : Antenna Wm (0 Deg)) (Continued)

	Member Label	Direction	Magnitude[lb,k-ft]	Location[ft,%]
20	MP1A	Z	-12.446	1.75
21	MP1A	Mx	.008	1.75
22	MP1A	X	0	6.75
23	MP1A	Z	-12.446	6.75
24	MP1A	Mx	.008	6.75
25	MP1B	X	0	1.75
26	MP1B	Z	-11.378	1.75
27	MP1B	Mx	-.00088	1.75
28	MP1B	X	0	6.75
29	MP1B	Z	-11.378	6.75
30	MP1B	Mx	-.00088	6.75
31	MP1C	X	0	1.75
32	MP1C	Z	-8.174	1.75
33	MP1C	Mx	-.008	1.75
34	MP1C	X	0	6.75
35	MP1C	Z	-8.174	6.75
36	MP1C	Mx	-.008	6.75
37	MP3A	X	0	3.25
38	MP3A	Z	-6.421	3.25
39	MP3A	Mx	0	3.25
40	MP3A	X	0	5.25
41	MP3A	Z	-6.421	5.25
42	MP3A	Mx	0	5.25
43	MP3B	X	0	3.25
44	MP3B	Z	-5.444	3.25
45	MP3B	Mx	.003	3.25
46	MP3B	X	0	5.25
47	MP3B	Z	-5.444	5.25
48	MP3B	Mx	.003	5.25
49	MP3C	X	0	3.25
50	MP3C	Z	-2.514	3.25
51	MP3C	Mx	-.003	3.25
52	MP3C	X	0	5.25
53	MP3C	Z	-2.514	5.25
54	MP3C	Mx	-.003	5.25
55	MP1A	X	0	6
56	MP1A	Z	-1.011	6
57	MP1A	Mx	0	6
58	MP1B	X	0	6
59	MP1B	Z	-.933	6
60	MP1B	Mx	-.000233	6
61	MP1C	X	0	6
62	MP1C	Z	-.699	6
63	MP1C	Mx	.00035	6
64	MP1A	X	0	4.5
65	MP1A	Z	-5.11	4.5
66	MP1A	Mx	0	4.5
67	MP1B	X	0	4.5
68	MP1B	Z	-4.686	4.5
69	MP1B	Mx	-.001	4.5
70	MP1C	X	0	4.5
71	MP1C	Z	-3.416	4.5

Member Point Loads (BLC 27 : Antenna Wm (0 Deg)) (Continued)

	Member Label	Direction	Magnitude[lb,k-ft]	Location[ft,%]
72	MP1C	Mx	.002	4.5
73	MP2A	X	0	4.5
74	MP2A	Z	-5.11	4.5
75	MP2A	Mx	0	4.5
76	MP2B	X	0	4.5
77	MP2B	Z	-4.524	4.5
78	MP2B	Mx	-.001	4.5
79	MP2C	X	0	4.5
80	MP2C	Z	-2.767	4.5
81	MP2C	Mx	.001	4.5

Member Point Loads (BLC 28 : Antenna Wm (30 Deg))

	Member Label	Direction	Magnitude[lb,k-ft]	Location[ft,%]
1	MP1A	X	5.689	1.75
2	MP1A	Z	-9.854	1.75
3	MP1A	Mx	-.012	1.75
4	MP1A	X	5.689	6.75
5	MP1A	Z	-9.854	6.75
6	MP1A	Mx	-.012	6.75
7	MP1B	X	4.621	1.75
8	MP1B	Z	-8.004	1.75
9	MP1B	Mx	.011	1.75
10	MP1B	X	4.621	6.75
11	MP1B	Z	-8.004	6.75
12	MP1B	Mx	.011	6.75
13	MP1C	X	4.621	1.75
14	MP1C	Z	-8.004	1.75
15	MP1C	Mx	-.005	1.75
16	MP1C	X	4.621	6.75
17	MP1C	Z	-8.004	6.75
18	MP1C	Mx	-.005	6.75
19	MP1A	X	5.689	1.75
20	MP1A	Z	-9.854	1.75
21	MP1A	Mx	.00088	1.75
22	MP1A	X	5.689	6.75
23	MP1A	Z	-9.854	6.75
24	MP1A	Mx	.00088	6.75
25	MP1B	X	4.621	1.75
26	MP1B	Z	-8.004	1.75
27	MP1B	Mx	.005	1.75
28	MP1B	X	4.621	6.75
29	MP1B	Z	-8.004	6.75
30	MP1B	Mx	.005	6.75
31	MP1C	X	4.621	1.75
32	MP1C	Z	-8.004	1.75
33	MP1C	Mx	-.011	1.75
34	MP1C	X	4.621	6.75
35	MP1C	Z	-8.004	6.75
36	MP1C	Mx	-.011	6.75
37	MP3A	X	2.722	3.25
38	MP3A	Z	-4.715	3.25

Member Point Loads (BLC 28 : Antenna Wm (30 Deg)) (Continued)

	Member Label	Direction	Magnitude[lb,k-ft]	Location[ft,%]
39	MP3A	Mx	-.003	3.25
40	MP3A	X	2.722	5.25
41	MP3A	Z	-4.715	5.25
42	MP3A	Mx	-.003	5.25
43	MP3B	X	1.745	3.25
44	MP3B	Z	-3.023	3.25
45	MP3B	Mx	.003	3.25
46	MP3B	X	1.745	5.25
47	MP3B	Z	-3.023	5.25
48	MP3B	Mx	.003	5.25
49	MP3C	X	1.745	3.25
50	MP3C	Z	-3.023	3.25
51	MP3C	Mx	-.003	3.25
52	MP3C	X	1.745	5.25
53	MP3C	Z	-3.023	5.25
54	MP3C	Mx	-.003	5.25
55	MP1A	X	.467	6
56	MP1A	Z	-.808	6
57	MP1A	Mx	.000234	6
58	MP1B	X	.389	6
59	MP1B	Z	-.673	6
60	MP1B	Mx	-.000337	6
61	MP1C	X	.389	6
62	MP1C	Z	-.673	6
63	MP1C	Mx	.000337	6
64	MP1A	X	2.343	4.5
65	MP1A	Z	-4.058	4.5
66	MP1A	Mx	.001	4.5
67	MP1B	X	1.92	4.5
68	MP1B	Z	-3.325	4.5
69	MP1B	Mx	-.002	4.5
70	MP1C	X	1.92	4.5
71	MP1C	Z	-3.325	4.5
72	MP1C	Mx	.002	4.5
73	MP2A	X	2.262	4.5
74	MP2A	Z	-3.918	4.5
75	MP2A	Mx	.001	4.5
76	MP2B	X	1.676	4.5
77	MP2B	Z	-2.903	4.5
78	MP2B	Mx	-.001	4.5
79	MP2C	X	1.676	4.5
80	MP2C	Z	-2.903	4.5
81	MP2C	Mx	.001	4.5

Member Point Loads (BLC 29 : Antenna Wm (60 Deg))

	Member Label	Direction	Magnitude[lb,k-ft]	Location[ft,%]
1	MP1A	X	8.004	1.75
2	MP1A	Z	-4.621	1.75
3	MP1A	Mx	-.011	1.75
4	MP1A	X	8.004	6.75
5	MP1A	Z	-4.621	6.75

Member Point Loads (BLC 29 : Antenna Wm (60 Deg)) (Continued)

	Member Label	Direction	Magnitude[lb,k-ft]	Location[ft,%]
6	MP1A	Mx	-.011	6.75
7	MP1B	X	7.079	1.75
8	MP1B	Z	-4.087	1.75
9	MP1B	Mx	.008	1.75
10	MP1B	X	7.079	6.75
11	MP1B	Z	-4.087	6.75
12	MP1B	Mx	.008	6.75
13	MP1C	X	9.854	1.75
14	MP1C	Z	-5.689	1.75
15	MP1C	Mx	.00088	1.75
16	MP1C	X	9.854	6.75
17	MP1C	Z	-5.689	6.75
18	MP1C	Mx	.00088	6.75
19	MP1A	X	8.004	1.75
20	MP1A	Z	-4.621	1.75
21	MP1A	Mx	-.005	1.75
22	MP1A	X	8.004	6.75
23	MP1A	Z	-4.621	6.75
24	MP1A	Mx	-.005	6.75
25	MP1B	X	7.079	1.75
26	MP1B	Z	-4.087	1.75
27	MP1B	Mx	.008	1.75
28	MP1B	X	7.079	6.75
29	MP1B	Z	-4.087	6.75
30	MP1B	Mx	.008	6.75
31	MP1C	X	9.854	1.75
32	MP1C	Z	-5.689	1.75
33	MP1C	Mx	-.012	1.75
34	MP1C	X	9.854	6.75
35	MP1C	Z	-5.689	6.75
36	MP1C	Mx	-.012	6.75
37	MP3A	X	3.023	3.25
38	MP3A	Z	-1.745	3.25
39	MP3A	Mx	-.003	3.25
40	MP3A	X	3.023	5.25
41	MP3A	Z	-1.745	5.25
42	MP3A	Mx	-.003	5.25
43	MP3B	X	2.177	3.25
44	MP3B	Z	-1.257	3.25
45	MP3B	Mx	.003	3.25
46	MP3B	X	2.177	5.25
47	MP3B	Z	-1.257	5.25
48	MP3B	Mx	.003	5.25
49	MP3C	X	4.715	3.25
50	MP3C	Z	-2.722	3.25
51	MP3C	Mx	-.003	3.25
52	MP3C	X	4.715	5.25
53	MP3C	Z	-2.722	5.25
54	MP3C	Mx	-.003	5.25
55	MP1A	X	.673	6
56	MP1A	Z	-.389	6
57	MP1A	Mx	.000337	6

Member Point Loads (BLC 29 : Antenna Wm (60 Deg)) (Continued)

	Member Label	Direction	Magnitude[lb,k-ft]	Location[ft,%]
58	MP1B	X	.606	6
59	MP1B	Z	-.35	6
60	MP1B	Mx	-.00035	6
61	MP1C	X	.808	6
62	MP1C	Z	-.467	6
63	MP1C	Mx	.000234	6
64	MP1A	X	3.325	4.5
65	MP1A	Z	-1.92	4.5
66	MP1A	Mx	.002	4.5
67	MP1B	X	2.958	4.5
68	MP1B	Z	-1.708	4.5
69	MP1B	Mx	-.002	4.5
70	MP1C	X	4.058	4.5
71	MP1C	Z	-2.343	4.5
72	MP1C	Mx	.001	4.5
73	MP2A	X	2.903	4.5
74	MP2A	Z	-1.676	4.5
75	MP2A	Mx	.001	4.5
76	MP2B	X	2.396	4.5
77	MP2B	Z	-1.383	4.5
78	MP2B	Mx	-.001	4.5
79	MP2C	X	3.918	4.5
80	MP2C	Z	-2.262	4.5
81	MP2C	Mx	.001	4.5

Member Point Loads (BLC 30 : Antenna Wm (90 Deg))

	Member Label	Direction	Magnitude[lb,k-ft]	Location[ft,%]
1	MP1A	X	8.174	1.75
2	MP1A	Z	0	1.75
3	MP1A	Mx	-.008	1.75
4	MP1A	X	8.174	6.75
5	MP1A	Z	0	6.75
6	MP1A	Mx	-.008	6.75
7	MP1B	X	9.242	1.75
8	MP1B	Z	0	1.75
9	MP1B	Mx	.005	1.75
10	MP1B	X	9.242	6.75
11	MP1B	Z	0	6.75
12	MP1B	Mx	.005	6.75
13	MP1C	X	12.446	1.75
14	MP1C	Z	0	1.75
15	MP1C	Mx	.008	1.75
16	MP1C	X	12.446	6.75
17	MP1C	Z	0	6.75
18	MP1C	Mx	.008	6.75
19	MP1A	X	8.174	1.75
20	MP1A	Z	0	1.75
21	MP1A	Mx	-.008	1.75
22	MP1A	X	8.174	6.75
23	MP1A	Z	0	6.75
24	MP1A	Mx	-.008	6.75

Member Point Loads (BLC 30 : Antenna Wm (90 Deg)) (Continued)

	Member Label	Direction	Magnitude[lb,k-ft]	Location[ft,%]
25	MP1B	X	9.242	1.75
26	MP1B	Z	0	1.75
27	MP1B	Mx	.011	1.75
28	MP1B	X	9.242	6.75
29	MP1B	Z	0	6.75
30	MP1B	Mx	.011	6.75
31	MP1C	X	12.446	1.75
32	MP1C	Z	0	1.75
33	MP1C	Mx	-.008	1.75
34	MP1C	X	12.446	6.75
35	MP1C	Z	0	6.75
36	MP1C	Mx	-.008	6.75
37	MP3A	X	2.514	3.25
38	MP3A	Z	0	3.25
39	MP3A	Mx	-.003	3.25
40	MP3A	X	2.514	5.25
41	MP3A	Z	0	5.25
42	MP3A	Mx	-.003	5.25
43	MP3B	X	3.491	3.25
44	MP3B	Z	0	3.25
45	MP3B	Mx	.003	3.25
46	MP3B	X	3.491	5.25
47	MP3B	Z	0	5.25
48	MP3B	Mx	.003	5.25
49	MP3C	X	6.421	3.25
50	MP3C	Z	0	3.25
51	MP3C	Mx	0	3.25
52	MP3C	X	6.421	5.25
53	MP3C	Z	0	5.25
54	MP3C	Mx	0	5.25
55	MP1A	X	.699	6
56	MP1A	Z	0	6
57	MP1A	Mx	.00035	6
58	MP1B	X	.777	6
59	MP1B	Z	0	6
60	MP1B	Mx	-.000336	6
61	MP1C	X	1.011	6
62	MP1C	Z	0	6
63	MP1C	Mx	0	6
64	MP1A	X	3.416	4.5
65	MP1A	Z	0	4.5
66	MP1A	Mx	.002	4.5
67	MP1B	X	3.839	4.5
68	MP1B	Z	0	4.5
69	MP1B	Mx	-.002	4.5
70	MP1C	X	5.11	4.5
71	MP1C	Z	0	4.5
72	MP1C	Mx	0	4.5
73	MP2A	X	2.767	4.5
74	MP2A	Z	0	4.5
75	MP2A	Mx	.001	4.5
76	MP2B	X	3.352	4.5

Member Point Loads (BLC 30 : Antenna Wm (90 Deg)) (Continued)

	Member Label	Direction	Magnitude[lb,k-ft]	Location[ft,%]
77	MP2B	Z	0	4.5
78	MP2B	Mx	-.001	4.5
79	MP2C	X	5.11	4.5
80	MP2C	Z	0	4.5
81	MP2C	Mx	0	4.5

Member Point Loads (BLC 31 : Antenna Wm (120 Deg))

	Member Label	Direction	Magnitude[lb,k-ft]	Location[ft,%]
1	MP1A	X	8.004	1.75
2	MP1A	Z	4.621	1.75
3	MP1A	Mx	-.005	1.75
4	MP1A	X	8.004	6.75
5	MP1A	Z	4.621	6.75
6	MP1A	Mx	-.005	6.75
7	MP1B	X	9.854	1.75
8	MP1B	Z	5.689	1.75
9	MP1B	Mx	-.00088	1.75
10	MP1B	X	9.854	6.75
11	MP1B	Z	5.689	6.75
12	MP1B	Mx	-.00088	6.75
13	MP1C	X	9.854	1.75
14	MP1C	Z	5.689	1.75
15	MP1C	Mx	.012	1.75
16	MP1C	X	9.854	6.75
17	MP1C	Z	5.689	6.75
18	MP1C	Mx	.012	6.75
19	MP1A	X	8.004	1.75
20	MP1A	Z	4.621	1.75
21	MP1A	Mx	-.011	1.75
22	MP1A	X	8.004	6.75
23	MP1A	Z	4.621	6.75
24	MP1A	Mx	-.011	6.75
25	MP1B	X	9.854	1.75
26	MP1B	Z	5.689	1.75
27	MP1B	Mx	.012	1.75
28	MP1B	X	9.854	6.75
29	MP1B	Z	5.689	6.75
30	MP1B	Mx	.012	6.75
31	MP1C	X	9.854	1.75
32	MP1C	Z	5.689	1.75
33	MP1C	Mx	-.00088	1.75
34	MP1C	X	9.854	6.75
35	MP1C	Z	5.689	6.75
36	MP1C	Mx	-.00088	6.75
37	MP3A	X	3.023	3.25
38	MP3A	Z	1.745	3.25
39	MP3A	Mx	-.003	3.25
40	MP3A	X	3.023	5.25
41	MP3A	Z	1.745	5.25
42	MP3A	Mx	-.003	5.25
43	MP3B	X	4.715	3.25

Member Point Loads (BLC 31 : Antenna Wm (120 Deg)) (Continued)

	Member Label	Direction	Magnitude[lb,k-ft]	Location[ft,%]
44	MP3B	Z	2.722	3.25
45	MP3B	Mx	.003	3.25
46	MP3B	X	4.715	5.25
47	MP3B	Z	2.722	5.25
48	MP3B	Mx	.003	5.25
49	MP3C	X	4.715	3.25
50	MP3C	Z	2.722	3.25
51	MP3C	Mx	.003	3.25
52	MP3C	X	4.715	5.25
53	MP3C	Z	2.722	5.25
54	MP3C	Mx	.003	5.25
55	MP1A	X	.673	6
56	MP1A	Z	.389	6
57	MP1A	Mx	.000337	6
58	MP1B	X	.808	6
59	MP1B	Z	.467	6
60	MP1B	Mx	-.000233	6
61	MP1C	X	.808	6
62	MP1C	Z	.467	6
63	MP1C	Mx	-.000234	6
64	MP1A	X	3.325	4.5
65	MP1A	Z	1.92	4.5
66	MP1A	Mx	.002	4.5
67	MP1B	X	4.058	4.5
68	MP1B	Z	2.343	4.5
69	MP1B	Mx	-.001	4.5
70	MP1C	X	4.058	4.5
71	MP1C	Z	2.343	4.5
72	MP1C	Mx	-.001	4.5
73	MP2A	X	2.903	4.5
74	MP2A	Z	1.676	4.5
75	MP2A	Mx	.001	4.5
76	MP2B	X	3.918	4.5
77	MP2B	Z	2.262	4.5
78	MP2B	Mx	-.001	4.5
79	MP2C	X	3.918	4.5
80	MP2C	Z	2.262	4.5
81	MP2C	Mx	-.001	4.5

Member Point Loads (BLC 32 : Antenna Wm (150 Deg))

	Member Label	Direction	Magnitude[lb,k-ft]	Location[ft,%]
1	MP1A	X	5.689	1.75
2	MP1A	Z	9.854	1.75
3	MP1A	Mx	.00088	1.75
4	MP1A	X	5.689	6.75
5	MP1A	Z	9.854	6.75
6	MP1A	Mx	.00088	6.75
7	MP1B	X	6.223	1.75
8	MP1B	Z	10.779	1.75
9	MP1B	Mx	-.008	1.75
10	MP1B	X	6.223	6.75

Member Point Loads (BLC 32 : Antenna Wm (150 Deg)) (Continued)

	Member Label	Direction	Magnitude[lb,k-ft]	Location[ft,%]
11	MP1B	Z	10.779	6.75
12	MP1B	Mx	-.008	6.75
13	MP1C	X	4.621	1.75
14	MP1C	Z	8.004	1.75
15	MP1C	Mx	.011	1.75
16	MP1C	X	4.621	6.75
17	MP1C	Z	8.004	6.75
18	MP1C	Mx	.011	6.75
19	MP1A	X	5.689	1.75
20	MP1A	Z	9.854	1.75
21	MP1A	Mx	-.012	1.75
22	MP1A	X	5.689	6.75
23	MP1A	Z	9.854	6.75
24	MP1A	Mx	-.012	6.75
25	MP1B	X	6.223	1.75
26	MP1B	Z	10.779	1.75
27	MP1B	Mx	.008	1.75
28	MP1B	X	6.223	6.75
29	MP1B	Z	10.779	6.75
30	MP1B	Mx	.008	6.75
31	MP1C	X	4.621	1.75
32	MP1C	Z	8.004	1.75
33	MP1C	Mx	.005	1.75
34	MP1C	X	4.621	6.75
35	MP1C	Z	8.004	6.75
36	MP1C	Mx	.005	6.75
37	MP3A	X	2.722	3.25
38	MP3A	Z	4.715	3.25
39	MP3A	Mx	-.003	3.25
40	MP3A	X	2.722	5.25
41	MP3A	Z	4.715	5.25
42	MP3A	Mx	-.003	5.25
43	MP3B	X	3.211	3.25
44	MP3B	Z	5.561	3.25
45	MP3B	Mx	0	3.25
46	MP3B	X	3.211	5.25
47	MP3B	Z	5.561	5.25
48	MP3B	Mx	0	5.25
49	MP3C	X	1.745	3.25
50	MP3C	Z	3.023	3.25
51	MP3C	Mx	.003	3.25
52	MP3C	X	1.745	5.25
53	MP3C	Z	3.023	5.25
54	MP3C	Mx	.003	5.25
55	MP1A	X	.467	6
56	MP1A	Z	.808	6
57	MP1A	Mx	.000234	6
58	MP1B	X	.505	6
59	MP1B	Z	.876	6
60	MP1B	Mx	0	6
61	MP1C	X	.389	6
62	MP1C	Z	.673	6

Member Point Loads (BLC 32 : Antenna Wm (150 Deg)) (Continued)

	Member Label	Direction	Magnitude[lb,k-ft]	Location[ft,%]
63	MP1C	Mx	-.000337	6
64	MP1A	X	2.343	4.5
65	MP1A	Z	4.058	4.5
66	MP1A	Mx	.001	4.5
67	MP1B	X	2.555	4.5
68	MP1B	Z	4.425	4.5
69	MP1B	Mx	0	4.5
70	MP1C	X	1.92	4.5
71	MP1C	Z	3.325	4.5
72	MP1C	Mx	-.002	4.5
73	MP2A	X	2.262	4.5
74	MP2A	Z	3.918	4.5
75	MP2A	Mx	.001	4.5
76	MP2B	X	2.555	4.5
77	MP2B	Z	4.425	4.5
78	MP2B	Mx	0	4.5
79	MP2C	X	1.676	4.5
80	MP2C	Z	2.903	4.5
81	MP2C	Mx	-.001	4.5

Member Point Loads (BLC 33 : Antenna Wm (180 Deg))

	Member Label	Direction	Magnitude[lb,k-ft]	Location[ft,%]
1	MP1A	X	0	1.75
2	MP1A	Z	12.446	1.75
3	MP1A	Mx	.008	1.75
4	MP1A	X	0	6.75
5	MP1A	Z	12.446	6.75
6	MP1A	Mx	.008	6.75
7	MP1B	X	0	1.75
8	MP1B	Z	11.378	1.75
9	MP1B	Mx	-.012	1.75
10	MP1B	X	0	6.75
11	MP1B	Z	11.378	6.75
12	MP1B	Mx	-.012	6.75
13	MP1C	X	0	1.75
14	MP1C	Z	8.174	1.75
15	MP1C	Mx	.008	1.75
16	MP1C	X	0	6.75
17	MP1C	Z	8.174	6.75
18	MP1C	Mx	.008	6.75
19	MP1A	X	0	1.75
20	MP1A	Z	12.446	1.75
21	MP1A	Mx	-.008	1.75
22	MP1A	X	0	6.75
23	MP1A	Z	12.446	6.75
24	MP1A	Mx	-.008	6.75
25	MP1B	X	0	1.75
26	MP1B	Z	11.378	1.75
27	MP1B	Mx	.00088	1.75
28	MP1B	X	0	6.75
29	MP1B	Z	11.378	6.75

Member Point Loads (BLC 33 : Antenna Wm (180 Deg)) (Continued)

	Member Label	Direction	Magnitude[lb,k-ft]	Location[ft,%]
30	MP1B	Mx	.00088	6.75
31	MP1C	X	0	1.75
32	MP1C	Z	8.174	1.75
33	MP1C	Mx	.008	1.75
34	MP1C	X	0	6.75
35	MP1C	Z	8.174	6.75
36	MP1C	Mx	.008	6.75
37	MP3A	X	0	3.25
38	MP3A	Z	6.421	3.25
39	MP3A	Mx	0	3.25
40	MP3A	X	0	5.25
41	MP3A	Z	6.421	5.25
42	MP3A	Mx	0	5.25
43	MP3B	X	0	3.25
44	MP3B	Z	5.444	3.25
45	MP3B	Mx	-.003	3.25
46	MP3B	X	0	5.25
47	MP3B	Z	5.444	5.25
48	MP3B	Mx	-.003	5.25
49	MP3C	X	0	3.25
50	MP3C	Z	2.514	3.25
51	MP3C	Mx	.003	3.25
52	MP3C	X	0	5.25
53	MP3C	Z	2.514	5.25
54	MP3C	Mx	.003	5.25
55	MP1A	X	0	6
56	MP1A	Z	1.011	6
57	MP1A	Mx	0	6
58	MP1B	X	0	6
59	MP1B	Z	.933	6
60	MP1B	Mx	.000233	6
61	MP1C	X	0	6
62	MP1C	Z	.699	6
63	MP1C	Mx	-.00035	6
64	MP1A	X	0	4.5
65	MP1A	Z	5.11	4.5
66	MP1A	Mx	0	4.5
67	MP1B	X	0	4.5
68	MP1B	Z	4.686	4.5
69	MP1B	Mx	.001	4.5
70	MP1C	X	0	4.5
71	MP1C	Z	3.416	4.5
72	MP1C	Mx	-.002	4.5
73	MP2A	X	0	4.5
74	MP2A	Z	5.11	4.5
75	MP2A	Mx	0	4.5
76	MP2B	X	0	4.5
77	MP2B	Z	4.524	4.5
78	MP2B	Mx	.001	4.5
79	MP2C	X	0	4.5
80	MP2C	Z	2.767	4.5
81	MP2C	Mx	-.001	4.5

Member Point Loads (BLC 34 : Antenna Wm (210 Deg))

	Member Label	Direction	Magnitude[lb,k-ft]	Location[ft,%]
1	MP1A	X	-5.689	1.75
2	MP1A	Z	9.854	1.75
3	MP1A	Mx	.012	1.75
4	MP1A	X	-5.689	6.75
5	MP1A	Z	9.854	6.75
6	MP1A	Mx	.012	6.75
7	MP1B	X	-4.621	1.75
8	MP1B	Z	8.004	1.75
9	MP1B	Mx	-.011	1.75
10	MP1B	X	-4.621	6.75
11	MP1B	Z	8.004	6.75
12	MP1B	Mx	-.011	6.75
13	MP1C	X	-4.621	1.75
14	MP1C	Z	8.004	1.75
15	MP1C	Mx	.005	1.75
16	MP1C	X	-4.621	6.75
17	MP1C	Z	8.004	6.75
18	MP1C	Mx	.005	6.75
19	MP1A	X	-5.689	1.75
20	MP1A	Z	9.854	1.75
21	MP1A	Mx	-.00088	1.75
22	MP1A	X	-5.689	6.75
23	MP1A	Z	9.854	6.75
24	MP1A	Mx	-.00088	6.75
25	MP1B	X	-4.621	1.75
26	MP1B	Z	8.004	1.75
27	MP1B	Mx	-.005	1.75
28	MP1B	X	-4.621	6.75
29	MP1B	Z	8.004	6.75
30	MP1B	Mx	-.005	6.75
31	MP1C	X	-4.621	1.75
32	MP1C	Z	8.004	1.75
33	MP1C	Mx	.011	1.75
34	MP1C	X	-4.621	6.75
35	MP1C	Z	8.004	6.75
36	MP1C	Mx	.011	6.75
37	MP3A	X	-2.722	3.25
38	MP3A	Z	4.715	3.25
39	MP3A	Mx	.003	3.25
40	MP3A	X	-2.722	5.25
41	MP3A	Z	4.715	5.25
42	MP3A	Mx	.003	5.25
43	MP3B	X	-1.745	3.25
44	MP3B	Z	3.023	3.25
45	MP3B	Mx	-.003	3.25
46	MP3B	X	-1.745	5.25
47	MP3B	Z	3.023	5.25
48	MP3B	Mx	-.003	5.25
49	MP3C	X	-1.745	3.25
50	MP3C	Z	3.023	3.25
51	MP3C	Mx	.003	3.25
52	MP3C	X	-1.745	5.25

Member Point Loads (BLC 34 : Antenna Wm (210 Deg)) (Continued)

	Member Label	Direction	Magnitude[lb,k-ft]	Location[ft,%]
53	MP3C	Z	3.023	5.25
54	MP3C	Mx	.003	5.25
55	MP1A	X	-.467	6
56	MP1A	Z	.808	6
57	MP1A	Mx	-.000234	6
58	MP1B	X	-.389	6
59	MP1B	Z	.673	6
60	MP1B	Mx	.000337	6
61	MP1C	X	-.389	6
62	MP1C	Z	.673	6
63	MP1C	Mx	-.000337	6
64	MP1A	X	-2.343	4.5
65	MP1A	Z	4.058	4.5
66	MP1A	Mx	-.001	4.5
67	MP1B	X	-1.92	4.5
68	MP1B	Z	3.325	4.5
69	MP1B	Mx	.002	4.5
70	MP1C	X	-1.92	4.5
71	MP1C	Z	3.325	4.5
72	MP1C	Mx	-.002	4.5
73	MP2A	X	-2.262	4.5
74	MP2A	Z	3.918	4.5
75	MP2A	Mx	-.001	4.5
76	MP2B	X	-1.676	4.5
77	MP2B	Z	2.903	4.5
78	MP2B	Mx	.001	4.5
79	MP2C	X	-1.676	4.5
80	MP2C	Z	2.903	4.5
81	MP2C	Mx	-.001	4.5

Member Point Loads (BLC 35 : Antenna Wm (240 Deg))

	Member Label	Direction	Magnitude[lb,k-ft]	Location[ft,%]
1	MP1A	X	-8.004	1.75
2	MP1A	Z	4.621	1.75
3	MP1A	Mx	.011	1.75
4	MP1A	X	-8.004	6.75
5	MP1A	Z	4.621	6.75
6	MP1A	Mx	.011	6.75
7	MP1B	X	-7.079	1.75
8	MP1B	Z	4.087	1.75
9	MP1B	Mx	-.008	1.75
10	MP1B	X	-7.079	6.75
11	MP1B	Z	4.087	6.75
12	MP1B	Mx	-.008	6.75
13	MP1C	X	-9.854	1.75
14	MP1C	Z	5.689	1.75
15	MP1C	Mx	-.00088	1.75
16	MP1C	X	-9.854	6.75
17	MP1C	Z	5.689	6.75
18	MP1C	Mx	-.00088	6.75
19	MP1A	X	-8.004	1.75

Member Point Loads (BLC 35 : Antenna Wm (240 Deg)) (Continued)

	Member Label	Direction	Magnitude[lb,k-ft]	Location[ft,%]
20	MP1A	Z	4.621	1.75
21	MP1A	Mx	.005	1.75
22	MP1A	X	-8.004	6.75
23	MP1A	Z	4.621	6.75
24	MP1A	Mx	.005	6.75
25	MP1B	X	-7.079	1.75
26	MP1B	Z	4.087	1.75
27	MP1B	Mx	-.008	1.75
28	MP1B	X	-7.079	6.75
29	MP1B	Z	4.087	6.75
30	MP1B	Mx	-.008	6.75
31	MP1C	X	-9.854	1.75
32	MP1C	Z	5.689	1.75
33	MP1C	Mx	.012	1.75
34	MP1C	X	-9.854	6.75
35	MP1C	Z	5.689	6.75
36	MP1C	Mx	.012	6.75
37	MP3A	X	-3.023	3.25
38	MP3A	Z	1.745	3.25
39	MP3A	Mx	.003	3.25
40	MP3A	X	-3.023	5.25
41	MP3A	Z	1.745	5.25
42	MP3A	Mx	.003	5.25
43	MP3B	X	-2.177	3.25
44	MP3B	Z	1.257	3.25
45	MP3B	Mx	-.003	3.25
46	MP3B	X	-2.177	5.25
47	MP3B	Z	1.257	5.25
48	MP3B	Mx	-.003	5.25
49	MP3C	X	-4.715	3.25
50	MP3C	Z	2.722	3.25
51	MP3C	Mx	.003	3.25
52	MP3C	X	-4.715	5.25
53	MP3C	Z	2.722	5.25
54	MP3C	Mx	.003	5.25
55	MP1A	X	-.673	6
56	MP1A	Z	.389	6
57	MP1A	Mx	-.000337	6
58	MP1B	X	-.606	6
59	MP1B	Z	.35	6
60	MP1B	Mx	.00035	6
61	MP1C	X	-.808	6
62	MP1C	Z	.467	6
63	MP1C	Mx	-.000234	6
64	MP1A	X	-3.325	4.5
65	MP1A	Z	1.92	4.5
66	MP1A	Mx	-.002	4.5
67	MP1B	X	-2.958	4.5
68	MP1B	Z	1.708	4.5
69	MP1B	Mx	.002	4.5
70	MP1C	X	-4.058	4.5
71	MP1C	Z	2.343	4.5

Member Point Loads (BLC 35 : Antenna Wm (240 Deg)) (Continued)

	Member Label	Direction	Magnitude[lb,k-ft]	Location[ft,%]
72	MP1C	Mx	-.001	4.5
73	MP2A	X	-2.903	4.5
74	MP2A	Z	1.676	4.5
75	MP2A	Mx	-.001	4.5
76	MP2B	X	-2.396	4.5
77	MP2B	Z	1.383	4.5
78	MP2B	Mx	.001	4.5
79	MP2C	X	-3.918	4.5
80	MP2C	Z	2.262	4.5
81	MP2C	Mx	-.001	4.5

Member Point Loads (BLC 36 : Antenna Wm (270 Deg))

	Member Label	Direction	Magnitude[lb,k-ft]	Location[ft,%]
1	MP1A	X	-8.174	1.75
2	MP1A	Z	0	1.75
3	MP1A	Mx	.008	1.75
4	MP1A	X	-8.174	6.75
5	MP1A	Z	0	6.75
6	MP1A	Mx	.008	6.75
7	MP1B	X	-9.242	1.75
8	MP1B	Z	0	1.75
9	MP1B	Mx	-.005	1.75
10	MP1B	X	-9.242	6.75
11	MP1B	Z	0	6.75
12	MP1B	Mx	-.005	6.75
13	MP1C	X	-12.446	1.75
14	MP1C	Z	0	1.75
15	MP1C	Mx	-.008	1.75
16	MP1C	X	-12.446	6.75
17	MP1C	Z	0	6.75
18	MP1C	Mx	-.008	6.75
19	MP1A	X	-8.174	1.75
20	MP1A	Z	0	1.75
21	MP1A	Mx	.008	1.75
22	MP1A	X	-8.174	6.75
23	MP1A	Z	0	6.75
24	MP1A	Mx	.008	6.75
25	MP1B	X	-9.242	1.75
26	MP1B	Z	0	1.75
27	MP1B	Mx	-.011	1.75
28	MP1B	X	-9.242	6.75
29	MP1B	Z	0	6.75
30	MP1B	Mx	-.011	6.75
31	MP1C	X	-12.446	1.75
32	MP1C	Z	0	1.75
33	MP1C	Mx	.008	1.75
34	MP1C	X	-12.446	6.75
35	MP1C	Z	0	6.75
36	MP1C	Mx	.008	6.75
37	MP3A	X	-2.514	3.25
38	MP3A	Z	0	3.25

Member Point Loads (BLC 36 : Antenna Wm (270 Deg)) (Continued)

	Member Label	Direction	Magnitude[lb,k-ft]	Location[ft,%]
39	MP3A	Mx	.003	3.25
40	MP3A	X	-2.514	5.25
41	MP3A	Z	0	5.25
42	MP3A	Mx	.003	5.25
43	MP3B	X	-3.491	3.25
44	MP3B	Z	0	3.25
45	MP3B	Mx	-.003	3.25
46	MP3B	X	-3.491	5.25
47	MP3B	Z	0	5.25
48	MP3B	Mx	-.003	5.25
49	MP3C	X	-6.421	3.25
50	MP3C	Z	0	3.25
51	MP3C	Mx	0	3.25
52	MP3C	X	-6.421	5.25
53	MP3C	Z	0	5.25
54	MP3C	Mx	0	5.25
55	MP1A	X	-.699	6
56	MP1A	Z	0	6
57	MP1A	Mx	-.00035	6
58	MP1B	X	-.777	6
59	MP1B	Z	0	6
60	MP1B	Mx	.000336	6
61	MP1C	X	-1.011	6
62	MP1C	Z	0	6
63	MP1C	Mx	0	6
64	MP1A	X	-3.416	4.5
65	MP1A	Z	0	4.5
66	MP1A	Mx	-.002	4.5
67	MP1B	X	-3.839	4.5
68	MP1B	Z	0	4.5
69	MP1B	Mx	.002	4.5
70	MP1C	X	-5.11	4.5
71	MP1C	Z	0	4.5
72	MP1C	Mx	0	4.5
73	MP2A	X	-2.767	4.5
74	MP2A	Z	0	4.5
75	MP2A	Mx	-.001	4.5
76	MP2B	X	-3.352	4.5
77	MP2B	Z	0	4.5
78	MP2B	Mx	.001	4.5
79	MP2C	X	-5.11	4.5
80	MP2C	Z	0	4.5
81	MP2C	Mx	0	4.5

Member Point Loads (BLC 37 : Antenna Wm (300 Deg))

	Member Label	Direction	Magnitude[lb,k-ft]	Location[ft,%]
1	MP1A	X	-8.004	1.75
2	MP1A	Z	-4.621	1.75
3	MP1A	Mx	.005	1.75
4	MP1A	X	-8.004	6.75
5	MP1A	Z	-4.621	6.75

Member Point Loads (BLC 37 : Antenna Wm (300 Deg)) (Continued)

	Member Label	Direction	Magnitude[lb,k-ft]	Location[ft,%]
6	MP1A	Mx	.005	6.75
7	MP1B	X	-9.854	1.75
8	MP1B	Z	-5.689	1.75
9	MP1B	Mx	.00088	1.75
10	MP1B	X	-9.854	6.75
11	MP1B	Z	-5.689	6.75
12	MP1B	Mx	.00088	6.75
13	MP1C	X	-9.854	1.75
14	MP1C	Z	-5.689	1.75
15	MP1C	Mx	-.012	1.75
16	MP1C	X	-9.854	6.75
17	MP1C	Z	-5.689	6.75
18	MP1C	Mx	-.012	6.75
19	MP1A	X	-8.004	1.75
20	MP1A	Z	-4.621	1.75
21	MP1A	Mx	.011	1.75
22	MP1A	X	-8.004	6.75
23	MP1A	Z	-4.621	6.75
24	MP1A	Mx	.011	6.75
25	MP1B	X	-9.854	1.75
26	MP1B	Z	-5.689	1.75
27	MP1B	Mx	-.012	1.75
28	MP1B	X	-9.854	6.75
29	MP1B	Z	-5.689	6.75
30	MP1B	Mx	-.012	6.75
31	MP1C	X	-9.854	1.75
32	MP1C	Z	-5.689	1.75
33	MP1C	Mx	.00088	1.75
34	MP1C	X	-9.854	6.75
35	MP1C	Z	-5.689	6.75
36	MP1C	Mx	.00088	6.75
37	MP3A	X	-3.023	3.25
38	MP3A	Z	-1.745	3.25
39	MP3A	Mx	.003	3.25
40	MP3A	X	-3.023	5.25
41	MP3A	Z	-1.745	5.25
42	MP3A	Mx	.003	5.25
43	MP3B	X	-4.715	3.25
44	MP3B	Z	-2.722	3.25
45	MP3B	Mx	-.003	3.25
46	MP3B	X	-4.715	5.25
47	MP3B	Z	-2.722	5.25
48	MP3B	Mx	-.003	5.25
49	MP3C	X	-4.715	3.25
50	MP3C	Z	-2.722	3.25
51	MP3C	Mx	-.003	3.25
52	MP3C	X	-4.715	5.25
53	MP3C	Z	-2.722	5.25
54	MP3C	Mx	-.003	5.25
55	MP1A	X	-.673	6
56	MP1A	Z	-.389	6
57	MP1A	Mx	-.000337	6

Member Point Loads (BLC 37 : Antenna Wm (300 Deg)) (Continued)

	Member Label	Direction	Magnitude[lb,k-ft]	Location[ft,%]
58	MP1B	X	-.808	6
59	MP1B	Z	-.467	6
60	MP1B	Mx	.000233	6
61	MP1C	X	-.808	6
62	MP1C	Z	-.467	6
63	MP1C	Mx	.000234	6
64	MP1A	X	-3.325	4.5
65	MP1A	Z	-1.92	4.5
66	MP1A	Mx	-.002	4.5
67	MP1B	X	-4.058	4.5
68	MP1B	Z	-2.343	4.5
69	MP1B	Mx	.001	4.5
70	MP1C	X	-4.058	4.5
71	MP1C	Z	-2.343	4.5
72	MP1C	Mx	.001	4.5
73	MP2A	X	-2.903	4.5
74	MP2A	Z	-1.676	4.5
75	MP2A	Mx	-.001	4.5
76	MP2B	X	-3.918	4.5
77	MP2B	Z	-2.262	4.5
78	MP2B	Mx	.001	4.5
79	MP2C	X	-3.918	4.5
80	MP2C	Z	-2.262	4.5
81	MP2C	Mx	.001	4.5

Member Point Loads (BLC 38 : Antenna Wm (330 Deg))

	Member Label	Direction	Magnitude[lb,k-ft]	Location[ft,%]
1	MP1A	X	-5.689	1.75
2	MP1A	Z	-9.854	1.75
3	MP1A	Mx	-.00088	1.75
4	MP1A	X	-5.689	6.75
5	MP1A	Z	-9.854	6.75
6	MP1A	Mx	-.00088	6.75
7	MP1B	X	-6.223	1.75
8	MP1B	Z	-10.779	1.75
9	MP1B	Mx	.008	1.75
10	MP1B	X	-6.223	6.75
11	MP1B	Z	-10.779	6.75
12	MP1B	Mx	.008	6.75
13	MP1C	X	-4.621	1.75
14	MP1C	Z	-8.004	1.75
15	MP1C	Mx	-.011	1.75
16	MP1C	X	-4.621	6.75
17	MP1C	Z	-8.004	6.75
18	MP1C	Mx	-.011	6.75
19	MP1A	X	-5.689	1.75
20	MP1A	Z	-9.854	1.75
21	MP1A	Mx	.012	1.75
22	MP1A	X	-5.689	6.75
23	MP1A	Z	-9.854	6.75
24	MP1A	Mx	.012	6.75

Member Point Loads (BLC 38 : Antenna Wm (330 Deg)) (Continued)

	Member Label	Direction	Magnitude[lb,k-ft]	Location[ft,%]
25	MP1B	X	-6.223	1.75
26	MP1B	Z	-10.779	1.75
27	MP1B	Mx	-.008	1.75
28	MP1B	X	-6.223	6.75
29	MP1B	Z	-10.779	6.75
30	MP1B	Mx	-.008	6.75
31	MP1C	X	-4.621	1.75
32	MP1C	Z	-8.004	1.75
33	MP1C	Mx	-.005	1.75
34	MP1C	X	-4.621	6.75
35	MP1C	Z	-8.004	6.75
36	MP1C	Mx	-.005	6.75
37	MP3A	X	-2.722	3.25
38	MP3A	Z	-4.715	3.25
39	MP3A	Mx	.003	3.25
40	MP3A	X	-2.722	5.25
41	MP3A	Z	-4.715	5.25
42	MP3A	Mx	.003	5.25
43	MP3B	X	-3.211	3.25
44	MP3B	Z	-5.561	3.25
45	MP3B	Mx	0	3.25
46	MP3B	X	-3.211	5.25
47	MP3B	Z	-5.561	5.25
48	MP3B	Mx	0	5.25
49	MP3C	X	-1.745	3.25
50	MP3C	Z	-3.023	3.25
51	MP3C	Mx	-.003	3.25
52	MP3C	X	-1.745	5.25
53	MP3C	Z	-3.023	5.25
54	MP3C	Mx	-.003	5.25
55	MP1A	X	-.467	6
56	MP1A	Z	-.808	6
57	MP1A	Mx	-.000234	6
58	MP1B	X	-.505	6
59	MP1B	Z	-.876	6
60	MP1B	Mx	0	6
61	MP1C	X	-.389	6
62	MP1C	Z	-.673	6
63	MP1C	Mx	.000337	6
64	MP1A	X	-2.343	4.5
65	MP1A	Z	-4.058	4.5
66	MP1A	Mx	-.001	4.5
67	MP1B	X	-2.555	4.5
68	MP1B	Z	-4.425	4.5
69	MP1B	Mx	0	4.5
70	MP1C	X	-1.92	4.5
71	MP1C	Z	-3.325	4.5
72	MP1C	Mx	.002	4.5
73	MP2A	X	-2.262	4.5
74	MP2A	Z	-3.918	4.5
75	MP2A	Mx	-.001	4.5
76	MP2B	X	-2.555	4.5

Member Point Loads (BLC 38 : Antenna Wm (330 Deg)) (Continued)

	Member Label	Direction	Magnitude[lb,k-ft]	Location[ft,%]
77	MP2B	Z	-4.425	4.5
78	MP2B	Mx	0	4.5
79	MP2C	X	-1.676	4.5
80	MP2C	Z	-2.903	4.5
81	MP2C	Mx	.001	4.5

Member Point Loads (BLC 77 : Lm1)

	Member Label	Direction	Magnitude[lb,k-ft]	Location[ft,%]
1	M1	Y	-500	%81

Member Point Loads (BLC 78 : Lm2)

	Member Label	Direction	Magnitude[lb,k-ft]	Location[ft,%]
1	M1	Y	-500	%33

Member Point Loads (BLC 79 : Lv1)

	Member Label	Direction	Magnitude[lb,k-ft]	Location[ft,%]
1	M1	Y	-250	0

Member Point Loads (BLC 80 : Lv2)

	Member Label	Direction	Magnitude[lb,k-ft]	Location[ft,%]
1	M1	Y	-250	%50

Member Distributed Loads (BLC 40 : Structure Di)

	Member Label	Direction	Start Magnitude[lb/ft,...	End Magnitude[lb/ft,F...	Start Location[ft,%]	End Location[ft,%]
1	M1	Y	-6.667	-6.667	0	%100
2	M4	Y	-9.747	-9.747	0	%100
3	M10	Y	-9.747	-9.747	0	%100
4	MP3A	Y	-5.774	-5.774	0	%100
5	MP4A	Y	-5.06	-5.06	0	%100
6	MP2A	Y	-5.774	-5.774	0	%100
7	MP1A	Y	-5.774	-5.774	0	%100
8	M43	Y	-9.747	-9.747	0	%100
9	M46	Y	-10.266	-10.266	0	%100
10	M51B	Y	-5.708	-5.708	0	%100
11	M52B	Y	-5.708	-5.708	0	%100
12	M76	Y	-10.253	-10.253	0	%100
13	M77	Y	-10.253	-10.253	0	%100
14	M80	Y	-10.266	-10.266	0	%100
15	M84	Y	-10.253	-10.253	0	%100
16	M85	Y	-10.253	-10.253	0	%100
17	M91	Y	-10.266	-10.266	0	%100
18	M34	Y	-9.747	-9.747	0	%100
19	M35	Y	-9.747	-9.747	0	%100
20	M36	Y	-9.747	-9.747	0	%100
21	M37	Y	-10.266	-10.266	0	%100
22	M40	Y	-5.708	-5.708	0	%100
23	M41	Y	-5.708	-5.708	0	%100
24	M45	Y	-10.253	-10.253	0	%100

Member Distributed Loads (BLC 40 : Structure Di) (Continued)

	Member Label	Direction	Start Magnitude[lb/ft,...	End Magnitude[lb/ft,F...	Start Location[ft,%]	End Location[ft,%]
25	M46A	Y	-10.253	-10.253	0	%100
26	M48	Y	-10.266	-10.266	0	%100
27	M50A	Y	-10.253	-10.253	0	%100
28	M51C	Y	-10.253	-10.253	0	%100
29	M53	Y	-10.266	-10.266	0	%100
30	M58A	Y	-9.747	-9.747	0	%100
31	M59A	Y	-9.747	-9.747	0	%100
32	M60	Y	-9.747	-9.747	0	%100
33	M61	Y	-10.266	-10.266	0	%100
34	M64	Y	-5.708	-5.708	0	%100
35	M65	Y	-5.708	-5.708	0	%100
36	M69	Y	-10.253	-10.253	0	%100
37	M70	Y	-10.253	-10.253	0	%100
38	M72	Y	-10.266	-10.266	0	%100
39	M74	Y	-10.253	-10.253	0	%100
40	M75	Y	-10.253	-10.253	0	%100
41	M77A	Y	-10.266	-10.266	0	%100
42	M82	Y	-6.667	-6.667	0	%100
43	MP3C	Y	-5.774	-5.774	0	%100
44	MP4C	Y	-5.06	-5.06	0	%100
45	MP2C	Y	-5.774	-5.774	0	%100
46	MP1C	Y	-5.774	-5.774	0	%100
47	M91A	Y	-6.667	-6.667	0	%100
48	MP3B	Y	-5.774	-5.774	0	%100
49	MP4B	Y	-5.06	-5.06	0	%100
50	MP2B	Y	-5.774	-5.774	0	%100
51	MP1B	Y	-5.774	-5.774	0	%100
52	M100	Y	-5.774	-5.774	0	%100
53	M105	Y	-5.774	-5.774	0	%100
54	M110	Y	-5.774	-5.774	0	%100
55	M121	Y	-7.727	-7.727	0	%100
56	M122	Y	-7.727	-7.727	0	%100
57	M123	Y	-7.727	-7.727	0	%100
58	M124	Y	-10.772	-10.772	0	%100
59	M125	Y	-10.772	-10.772	0	%100
60	M126	Y	-10.772	-10.772	0	%100

Member Distributed Loads (BLC 41 : Structure Wo (0 Deg))

	Member Label	Direction	Start Magnitude[lb/ft,...	End Magnitude[lb/ft,F...	Start Location[ft,%]	End Location[ft,%]
1	M1	X	0	0	0	%100
2	M1	Z	-15.322	-15.322	0	%100
3	M4	X	0	0	0	%100
4	M4	Z	0	0	0	%100
5	M10	X	0	0	0	%100
6	M10	Z	-14.73	-14.73	0	%100
7	MP3A	X	0	0	0	%100
8	MP3A	Z	-14.078	-14.078	0	%100
9	MP4A	X	0	0	0	%100
10	MP4A	Z	-11.63	-11.63	0	%100
11	MP2A	X	0	0	0	%100
12	MP2A	Z	-14.078	-14.078	0	%100

Member Distributed Loads (BLC 41 : Structure Wo (0 Deg)) (Continued)

	Member Label	Direction	Start Magnitude[lb/ft,...	End Magnitude[lb/ft,F...	Start Location[ft,%]	End Location[ft,%]
13	MP1A	X	0	0	0	%100
14	MP1A	Z	-14.078	-14.078	0	%100
15	M43	X	0	0	0	%100
16	M43	Z	-14.73	-14.73	0	%100
17	M46	X	0	0	0	%100
18	M46	Z	-29.381	-29.381	0	%100
19	M51B	X	0	0	0	%100
20	M51B	Z	-4.079	-4.079	0	%100
21	M52B	X	0	0	0	%100
22	M52B	Z	-4.079	-4.079	0	%100
23	M76	X	0	0	0	%100
24	M76	Z	0	0	0	%100
25	M77	X	0	0	0	%100
26	M77	Z	-7.481	-7.481	0	%100
27	M80	X	0	0	0	%100
28	M80	Z	-7.88	-7.88	0	%100
29	M84	X	0	0	0	%100
30	M84	Z	0	0	0	%100
31	M85	X	0	0	0	%100
32	M85	Z	-7.481	-7.481	0	%100
33	M91	X	0	0	0	%100
34	M91	Z	-7.88	-7.88	0	%100
35	M34	X	0	0	0	%100
36	M34	Z	-13.056	-13.056	0	%100
37	M35	X	0	0	0	%100
38	M35	Z	-3.682	-3.682	0	%100
39	M36	X	0	0	0	%100
40	M36	Z	-3.682	-3.682	0	%100
41	M37	X	0	0	0	%100
42	M37	Z	-7.345	-7.345	0	%100
43	M40	X	0	0	0	%100
44	M40	Z	-4.079	-4.079	0	%100
45	M41	X	0	0	0	%100
46	M41	Z	-16.315	-16.315	0	%100
47	M45	X	0	0	0	%100
48	M45	Z	-22.035	-22.035	0	%100
49	M46A	X	0	0	0	%100
50	M46A	Z	-7.481	-7.481	0	%100
51	M48	X	0	0	0	%100
52	M48	Z	-7.88	-7.88	0	%100
53	M50A	X	0	0	0	%100
54	M50A	Z	-22.035	-22.035	0	%100
55	M51C	X	0	0	0	%100
56	M51C	Z	-29.925	-29.925	0	%100
57	M53	X	0	0	0	%100
58	M53	Z	-31.519	-31.519	0	%100
59	M58A	X	0	0	0	%100
60	M58A	Z	-13.056	-13.056	0	%100
61	M59A	X	0	0	0	%100
62	M59A	Z	-3.682	-3.682	0	%100
63	M60	X	0	0	0	%100
64	M60	Z	-3.682	-3.682	0	%100

Member Distributed Loads (BLC 41 : Structure Wo (0 Deg)) (Continued)

	Member Label	Direction	Start Magnitude[lb/ft,...	End Magnitude[lb/ft,F...	Start Location[ft,%]	End Location[ft,%]
65	M61	X	0	0	0	%100
66	M61	Z	-7.345	-7.345	0	%100
67	M64	X	0	0	0	%100
68	M64	Z	-16.315	-16.315	0	%100
69	M65	X	0	0	0	%100
70	M65	Z	-4.079	-4.079	0	%100
71	M69	X	0	0	0	%100
72	M69	Z	-22.035	-22.035	0	%100
73	M70	X	0	0	0	%100
74	M70	Z	-29.925	-29.925	0	%100
75	M72	X	0	0	0	%100
76	M72	Z	-31.519	-31.519	0	%100
77	M74	X	0	0	0	%100
78	M74	Z	-22.035	-22.035	0	%100
79	M75	X	0	0	0	%100
80	M75	Z	-7.481	-7.481	0	%100
81	M77A	X	0	0	0	%100
82	M77A	Z	-7.88	-7.88	0	%100
83	M82	X	0	0	0	%100
84	M82	Z	-3.83	-3.83	0	%100
85	MP3C	X	0	0	0	%100
86	MP3C	Z	-14.078	-14.078	0	%100
87	MP4C	X	0	0	0	%100
88	MP4C	Z	-11.63	-11.63	0	%100
89	MP2C	X	0	0	0	%100
90	MP2C	Z	-14.078	-14.078	0	%100
91	MP1C	X	0	0	0	%100
92	MP1C	Z	-14.078	-14.078	0	%100
93	M91A	X	0	0	0	%100
94	M91A	Z	-3.83	-3.83	0	%100
95	MP3B	X	0	0	0	%100
96	MP3B	Z	-14.078	-14.078	0	%100
97	MP4B	X	0	0	0	%100
98	MP4B	Z	-11.63	-11.63	0	%100
99	MP2B	X	0	0	0	%100
100	MP2B	Z	-14.078	-14.078	0	%100
101	MP1B	X	0	0	0	%100
102	MP1B	Z	-14.078	-14.078	0	%100
103	M100	X	0	0	0	%100
104	M100	Z	-14.078	-14.078	0	%100
105	M105	X	0	0	0	%100
106	M105	Z	-3.52	-3.52	0	%100
107	M110	X	0	0	0	%100
108	M110	Z	-3.52	-3.52	0	%100
109	M121	X	0	0	0	%100
110	M121	Z	-4.121	-4.121	0	%100
111	M122	X	0	0	0	%100
112	M122	Z	-4.121	-4.121	0	%100
113	M123	X	0	0	0	%100
114	M123	Z	-16.483	-16.483	0	%100
115	M124	X	0	0	0	%100
116	M124	Z	-12.263	-12.263	0	%100

Member Distributed Loads (BLC 41 : Structure Wo (0 Deg)) (Continued)

	Member Label	Direction	Start Magnitude[lb/ft,...	End Magnitude[lb/ft,F...	Start Location[ft,%]	End Location[ft,%]
117	M125	X	0	0	0	%100
118	M125	Z	-20.335	-20.335	0	%100
119	M126	X	0	0	0	%100
120	M126	Z	-20.335	-20.335	0	%100

Member Distributed Loads (BLC 42 : Structure Wo (30 Deg))

	Member Label	Direction	Start Magnitude[lb/ft,...	End Magnitude[lb/ft,F...	Start Location[ft,%]	End Location[ft,%]
1	M1	X	5.746	5.746	0	%100
2	M1	Z	-9.952	-9.952	0	%100
3	M4	X	2.176	2.176	0	%100
4	M4	Z	-3.769	-3.769	0	%100
5	M10	X	5.524	5.524	0	%100
6	M10	Z	-9.567	-9.567	0	%100
7	MP3A	X	7.039	7.039	0	%100
8	MP3A	Z	-12.192	-12.192	0	%100
9	MP4A	X	5.815	5.815	0	%100
10	MP4A	Z	-10.072	-10.072	0	%100
11	MP2A	X	7.039	7.039	0	%100
12	MP2A	Z	-12.192	-12.192	0	%100
13	MP1A	X	7.039	7.039	0	%100
14	MP1A	Z	-12.192	-12.192	0	%100
15	M43	X	5.524	5.524	0	%100
16	M43	Z	-9.567	-9.567	0	%100
17	M46	X	11.018	11.018	0	%100
18	M46	Z	-19.083	-19.083	0	%100
19	M51B	X	6.118	6.118	0	%100
20	M51B	Z	-10.597	-10.597	0	%100
21	M52B	X	0	0	0	%100
22	M52B	Z	0	0	0	%100
23	M76	X	3.673	3.673	0	%100
24	M76	Z	-6.361	-6.361	0	%100
25	M77	X	11.222	11.222	0	%100
26	M77	Z	-19.437	-19.437	0	%100
27	M80	X	11.82	11.82	0	%100
28	M80	Z	-20.472	-20.472	0	%100
29	M84	X	3.673	3.673	0	%100
30	M84	Z	-6.361	-6.361	0	%100
31	M85	X	0	0	0	%100
32	M85	Z	0	0	0	%100
33	M91	X	0	0	0	%100
34	M91	Z	0	0	0	%100
35	M34	X	2.176	2.176	0	%100
36	M34	Z	-3.769	-3.769	0	%100
37	M35	X	5.524	5.524	0	%100
38	M35	Z	-9.567	-9.567	0	%100
39	M36	X	5.524	5.524	0	%100
40	M36	Z	-9.567	-9.567	0	%100
41	M37	X	11.018	11.018	0	%100
42	M37	Z	-19.083	-19.083	0	%100
43	M40	X	0	0	0	%100
44	M40	Z	0	0	0	%100

Member Distributed Loads (BLC 42 : Structure Wo (30 Deg)) (Continued)

	Member Label	Direction	Start Magnitude[lb/ft,...	End Magnitude[lb/ft,F...	Start Location[ft,%]	End Location[ft,%]
45	M41	X	6.118	6.118	0	%100
46	M41	Z	-10.597	-10.597	0	%100
47	M45	X	3.673	3.673	0	%100
48	M45	Z	-6.361	-6.361	0	%100
49	M46A	X	0	0	0	%100
50	M46A	Z	0	0	0	%100
51	M48	X	0	0	0	%100
52	M48	Z	0	0	0	%100
53	M50A	X	3.673	3.673	0	%100
54	M50A	Z	-6.361	-6.361	0	%100
55	M51C	X	11.222	11.222	0	%100
56	M51C	Z	-19.437	-19.437	0	%100
57	M53	X	11.82	11.82	0	%100
58	M53	Z	-20.472	-20.472	0	%100
59	M58A	X	8.704	8.704	0	%100
60	M58A	Z	-15.076	-15.076	0	%100
61	M59A	X	0	0	0	%100
62	M59A	Z	0	0	0	%100
63	M60	X	0	0	0	%100
64	M60	Z	0	0	0	%100
65	M61	X	0	0	0	%100
66	M61	Z	0	0	0	%100
67	M64	X	6.118	6.118	0	%100
68	M64	Z	-10.597	-10.597	0	%100
69	M65	X	6.118	6.118	0	%100
70	M65	Z	-10.597	-10.597	0	%100
71	M69	X	14.69	14.69	0	%100
72	M69	Z	-25.444	-25.444	0	%100
73	M70	X	11.222	11.222	0	%100
74	M70	Z	-19.437	-19.437	0	%100
75	M72	X	11.82	11.82	0	%100
76	M72	Z	-20.472	-20.472	0	%100
77	M74	X	14.69	14.69	0	%100
78	M74	Z	-25.444	-25.444	0	%100
79	M75	X	11.222	11.222	0	%100
80	M75	Z	-19.437	-19.437	0	%100
81	M77A	X	11.82	11.82	0	%100
82	M77A	Z	-20.472	-20.472	0	%100
83	M82	X	5.746	5.746	0	%100
84	M82	Z	-9.952	-9.952	0	%100
85	MP3C	X	7.039	7.039	0	%100
86	MP3C	Z	-12.192	-12.192	0	%100
87	MP4C	X	5.815	5.815	0	%100
88	MP4C	Z	-10.072	-10.072	0	%100
89	MP2C	X	7.039	7.039	0	%100
90	MP2C	Z	-12.192	-12.192	0	%100
91	MP1C	X	7.039	7.039	0	%100
92	MP1C	Z	-12.192	-12.192	0	%100
93	M91A	X	0	0	0	%100
94	M91A	Z	0	0	0	%100
95	MP3B	X	7.039	7.039	0	%100
96	MP3B	Z	-12.192	-12.192	0	%100

Member Distributed Loads (BLC 42 : Structure Wo (30 Deg)) (Continued)

	Member Label	Direction	Start Magnitude[lb/ft,...	End Magnitude[lb/ft,F...	Start Location[ft,%]	End Location[ft,%]
97	MP4B	X	5.815	5.815	0	%100
98	MP4B	Z	-10.072	-10.072	0	%100
99	MP2B	X	7.039	7.039	0	%100
100	MP2B	Z	-12.192	-12.192	0	%100
101	MP1B	X	7.039	7.039	0	%100
102	MP1B	Z	-12.192	-12.192	0	%100
103	M100	X	5.279	5.279	0	%100
104	M100	Z	-9.144	-9.144	0	%100
105	M105	X	5.279	5.279	0	%100
106	M105	Z	-9.144	-9.144	0	%100
107	M110	X	0	0	0	%100
108	M110	Z	0	0	0	%100
109	M121	X	6.181	6.181	0	%100
110	M121	Z	-10.706	-10.706	0	%100
111	M122	X	0	0	0	%100
112	M122	Z	0	0	0	%100
113	M123	X	6.181	6.181	0	%100
114	M123	Z	-10.706	-10.706	0	%100
115	M124	X	7.477	7.477	0	%100
116	M124	Z	-12.95	-12.95	0	%100
117	M125	X	7.477	7.477	0	%100
118	M125	Z	-12.95	-12.95	0	%100
119	M126	X	11.513	11.513	0	%100
120	M126	Z	-19.941	-19.941	0	%100

Member Distributed Loads (BLC 43 : Structure Wo (60 Deg))

	Member Label	Direction	Start Magnitude[lb/ft,...	End Magnitude[lb/ft,F...	Start Location[ft,%]	End Location[ft,%]
1	M1	X	3.317	3.317	0	%100
2	M1	Z	-1.915	-1.915	0	%100
3	M4	X	11.307	11.307	0	%100
4	M4	Z	-6.528	-6.528	0	%100
5	M10	X	3.189	3.189	0	%100
6	M10	Z	-1.841	-1.841	0	%100
7	MP3A	X	12.192	12.192	0	%100
8	MP3A	Z	-7.039	-7.039	0	%100
9	MP4A	X	10.072	10.072	0	%100
10	MP4A	Z	-5.815	-5.815	0	%100
11	MP2A	X	12.192	12.192	0	%100
12	MP2A	Z	-7.039	-7.039	0	%100
13	MP1A	X	12.192	12.192	0	%100
14	MP1A	Z	-7.039	-7.039	0	%100
15	M43	X	3.189	3.189	0	%100
16	M43	Z	-1.841	-1.841	0	%100
17	M46	X	6.361	6.361	0	%100
18	M46	Z	-3.673	-3.673	0	%100
19	M51B	X	14.129	14.129	0	%100
20	M51B	Z	-8.157	-8.157	0	%100
21	M52B	X	3.532	3.532	0	%100
22	M52B	Z	-2.039	-2.039	0	%100
23	M76	X	19.083	19.083	0	%100
24	M76	Z	-11.018	-11.018	0	%100

Member Distributed Loads (BLC 43 : Structure Wo (60 Deg)) (Continued)

	Member Label	Direction	Start Magnitude[lb/ft,...	End Magnitude[lb/ft,F...	Start Location[ft,%]	End Location[ft,%]
25	M77	X	25.916	25.916	0	%100
26	M77	Z	-14.962	-14.962	0	%100
27	M80	X	27.296	27.296	0	%100
28	M80	Z	-15.76	-15.76	0	%100
29	M84	X	19.083	19.083	0	%100
30	M84	Z	-11.018	-11.018	0	%100
31	M85	X	6.479	6.479	0	%100
32	M85	Z	-3.741	-3.741	0	%100
33	M91	X	6.824	6.824	0	%100
34	M91	Z	-3.94	-3.94	0	%100
35	M34	X	0	0	0	%100
36	M34	Z	0	0	0	%100
37	M35	X	12.757	12.757	0	%100
38	M35	Z	-7.365	-7.365	0	%100
39	M36	X	12.757	12.757	0	%100
40	M36	Z	-7.365	-7.365	0	%100
41	M37	X	25.444	25.444	0	%100
42	M37	Z	-14.69	-14.69	0	%100
43	M40	X	3.532	3.532	0	%100
44	M40	Z	-2.039	-2.039	0	%100
45	M41	X	3.532	3.532	0	%100
46	M41	Z	-2.039	-2.039	0	%100
47	M45	X	0	0	0	%100
48	M45	Z	0	0	0	%100
49	M46A	X	6.479	6.479	0	%100
50	M46A	Z	-3.741	-3.741	0	%100
51	M48	X	6.824	6.824	0	%100
52	M48	Z	-3.94	-3.94	0	%100
53	M50A	X	0	0	0	%100
54	M50A	Z	0	0	0	%100
55	M51C	X	6.479	6.479	0	%100
56	M51C	Z	-3.741	-3.741	0	%100
57	M53	X	6.824	6.824	0	%100
58	M53	Z	-3.94	-3.94	0	%100
59	M58A	X	11.307	11.307	0	%100
60	M58A	Z	-6.528	-6.528	0	%100
61	M59A	X	3.189	3.189	0	%100
62	M59A	Z	-1.841	-1.841	0	%100
63	M60	X	3.189	3.189	0	%100
64	M60	Z	-1.841	-1.841	0	%100
65	M61	X	6.361	6.361	0	%100
66	M61	Z	-3.673	-3.673	0	%100
67	M64	X	3.532	3.532	0	%100
68	M64	Z	-2.039	-2.039	0	%100
69	M65	X	14.129	14.129	0	%100
70	M65	Z	-8.157	-8.157	0	%100
71	M69	X	19.083	19.083	0	%100
72	M69	Z	-11.018	-11.018	0	%100
73	M70	X	6.479	6.479	0	%100
74	M70	Z	-3.741	-3.741	0	%100
75	M72	X	6.824	6.824	0	%100
76	M72	Z	-3.94	-3.94	0	%100

Member Distributed Loads (BLC 43 : Structure Wo (60 Deg)) (Continued)

	Member Label	Direction	Start Magnitude[lb/ft,...	End Magnitude[lb/ft,F...	Start Location[ft,%]	End Location[ft,%]
77	M74	X	19.083	19.083	0	%100
78	M74	Z	-11.018	-11.018	0	%100
79	M75	X	25.916	25.916	0	%100
80	M75	Z	-14.962	-14.962	0	%100
81	M77A	X	27.296	27.296	0	%100
82	M77A	Z	-15.76	-15.76	0	%100
83	M82	X	13.269	13.269	0	%100
84	M82	Z	-7.661	-7.661	0	%100
85	MP3C	X	12.192	12.192	0	%100
86	MP3C	Z	-7.039	-7.039	0	%100
87	MP4C	X	10.072	10.072	0	%100
88	MP4C	Z	-5.815	-5.815	0	%100
89	MP2C	X	12.192	12.192	0	%100
90	MP2C	Z	-7.039	-7.039	0	%100
91	MP1C	X	12.192	12.192	0	%100
92	MP1C	Z	-7.039	-7.039	0	%100
93	M91A	X	3.317	3.317	0	%100
94	M91A	Z	-1.915	-1.915	0	%100
95	MP3B	X	12.192	12.192	0	%100
96	MP3B	Z	-7.039	-7.039	0	%100
97	MP4B	X	10.072	10.072	0	%100
98	MP4B	Z	-5.815	-5.815	0	%100
99	MP2B	X	12.192	12.192	0	%100
100	MP2B	Z	-7.039	-7.039	0	%100
101	MP1B	X	12.192	12.192	0	%100
102	MP1B	Z	-7.039	-7.039	0	%100
103	M100	X	3.048	3.048	0	%100
104	M100	Z	-1.76	-1.76	0	%100
105	M105	X	12.192	12.192	0	%100
106	M105	Z	-7.039	-7.039	0	%100
107	M110	X	3.048	3.048	0	%100
108	M110	Z	-1.76	-1.76	0	%100
109	M121	X	14.275	14.275	0	%100
110	M121	Z	-8.241	-8.241	0	%100
111	M122	X	3.569	3.569	0	%100
112	M122	Z	-2.06	-2.06	0	%100
113	M123	X	3.569	3.569	0	%100
114	M123	Z	-2.06	-2.06	0	%100
115	M124	X	17.61	17.61	0	%100
116	M124	Z	-10.167	-10.167	0	%100
117	M125	X	10.62	10.62	0	%100
118	M125	Z	-6.131	-6.131	0	%100
119	M126	X	17.61	17.61	0	%100
120	M126	Z	-10.167	-10.167	0	%100

Member Distributed Loads (BLC 44 : Structure Wo (90 Deg))

	Member Label	Direction	Start Magnitude[lb/ft,...	End Magnitude[lb/ft,F...	Start Location[ft,%]	End Location[ft,%]
1	M1	X	0	0	0	%100
2	M1	Z	0	0	0	%100
3	M4	X	17.408	17.408	0	%100
4	M4	Z	0	0	0	%100

Member Distributed Loads (BLC 44 : Structure Wo (90 Deg)) (Continued)

	Member Label	Direction	Start Magnitude[lb/ft,...	End Magnitude[lb/ft,F...	Start Location[ft,%]	End Location[ft,%]
5	M10	X	0	0	0	%100
6	M10	Z	0	0	0	%100
7	MP3A	X	14.078	14.078	0	%100
8	MP3A	Z	0	0	0	%100
9	MP4A	X	11.63	11.63	0	%100
10	MP4A	Z	0	0	0	%100
11	MP2A	X	14.078	14.078	0	%100
12	MP2A	Z	0	0	0	%100
13	MP1A	X	14.078	14.078	0	%100
14	MP1A	Z	0	0	0	%100
15	M43	X	0	0	0	%100
16	M43	Z	0	0	0	%100
17	M46	X	0	0	0	%100
18	M46	Z	0	0	0	%100
19	M51B	X	12.236	12.236	0	%100
20	M51B	Z	0	0	0	%100
21	M52B	X	12.236	12.236	0	%100
22	M52B	Z	0	0	0	%100
23	M76	X	29.381	29.381	0	%100
24	M76	Z	0	0	0	%100
25	M77	X	22.444	22.444	0	%100
26	M77	Z	0	0	0	%100
27	M80	X	23.639	23.639	0	%100
28	M80	Z	0	0	0	%100
29	M84	X	29.381	29.381	0	%100
30	M84	Z	0	0	0	%100
31	M85	X	22.444	22.444	0	%100
32	M85	Z	0	0	0	%100
33	M91	X	23.639	23.639	0	%100
34	M91	Z	0	0	0	%100
35	M34	X	4.352	4.352	0	%100
36	M34	Z	0	0	0	%100
37	M35	X	11.047	11.047	0	%100
38	M35	Z	0	0	0	%100
39	M36	X	11.047	11.047	0	%100
40	M36	Z	0	0	0	%100
41	M37	X	22.035	22.035	0	%100
42	M37	Z	0	0	0	%100
43	M40	X	12.236	12.236	0	%100
44	M40	Z	0	0	0	%100
45	M41	X	0	0	0	%100
46	M41	Z	0	0	0	%100
47	M45	X	7.345	7.345	0	%100
48	M45	Z	0	0	0	%100
49	M46A	X	22.444	22.444	0	%100
50	M46A	Z	0	0	0	%100
51	M48	X	23.639	23.639	0	%100
52	M48	Z	0	0	0	%100
53	M50A	X	7.345	7.345	0	%100
54	M50A	Z	0	0	0	%100
55	M51C	X	0	0	0	%100
56	M51C	Z	0	0	0	%100

Member Distributed Loads (BLC 44 : Structure Wo (90 Deg)) (Continued)

	Member Label	Direction	Start Magnitude[lb/ft,...	End Magnitude[lb/ft,F...	Start Location[ft,%]	End Location[ft,%]
57	M53	X	0	0	0	%100
58	M53	Z	0	0	0	%100
59	M58A	X	4.352	4.352	0	%100
60	M58A	Z	0	0	0	%100
61	M59A	X	11.047	11.047	0	%100
62	M59A	Z	0	0	0	%100
63	M60	X	11.047	11.047	0	%100
64	M60	Z	0	0	0	%100
65	M61	X	22.035	22.035	0	%100
66	M61	Z	0	0	0	%100
67	M64	X	0	0	0	%100
68	M64	Z	0	0	0	%100
69	M65	X	12.236	12.236	0	%100
70	M65	Z	0	0	0	%100
71	M69	X	7.345	7.345	0	%100
72	M69	Z	0	0	0	%100
73	M70	X	0	0	0	%100
74	M70	Z	0	0	0	%100
75	M72	X	0	0	0	%100
76	M72	Z	0	0	0	%100
77	M74	X	7.345	7.345	0	%100
78	M74	Z	0	0	0	%100
79	M75	X	22.444	22.444	0	%100
80	M75	Z	0	0	0	%100
81	M77A	X	23.639	23.639	0	%100
82	M77A	Z	0	0	0	%100
83	M82	X	11.491	11.491	0	%100
84	M82	Z	0	0	0	%100
85	MP3C	X	14.078	14.078	0	%100
86	MP3C	Z	0	0	0	%100
87	MP4C	X	11.63	11.63	0	%100
88	MP4C	Z	0	0	0	%100
89	MP2C	X	14.078	14.078	0	%100
90	MP2C	Z	0	0	0	%100
91	MP1C	X	14.078	14.078	0	%100
92	MP1C	Z	0	0	0	%100
93	M91A	X	11.491	11.491	0	%100
94	M91A	Z	0	0	0	%100
95	MP3B	X	14.078	14.078	0	%100
96	MP3B	Z	0	0	0	%100
97	MP4B	X	11.63	11.63	0	%100
98	MP4B	Z	0	0	0	%100
99	MP2B	X	14.078	14.078	0	%100
100	MP2B	Z	0	0	0	%100
101	MP1B	X	14.078	14.078	0	%100
102	MP1B	Z	0	0	0	%100
103	M100	X	0	0	0	%100
104	M100	Z	0	0	0	%100
105	M105	X	10.559	10.559	0	%100
106	M105	Z	0	0	0	%100
107	M110	X	10.559	10.559	0	%100
108	M110	Z	0	0	0	%100

Member Distributed Loads (BLC 44 : Structure Wo (90 Deg)) (Continued)

	Member Label	Direction	Start Magnitude[lb/ft,...	End Magnitude[lb/ft,F...	Start Location[ft,%]	End Location[ft,%]
109	M121	X	12.362	12.362	0	%100
110	M121	Z	0	0	0	%100
111	M122	X	12.362	12.362	0	%100
112	M122	Z	0	0	0	%100
113	M123	X	0	0	0	%100
114	M123	Z	0	0	0	%100
115	M124	X	23.025	23.025	0	%100
116	M124	Z	0	0	0	%100
117	M125	X	14.953	14.953	0	%100
118	M125	Z	0	0	0	%100
119	M126	X	14.953	14.953	0	%100
120	M126	Z	0	0	0	%100

Member Distributed Loads (BLC 45 : Structure Wo (120 Deg))

	Member Label	Direction	Start Magnitude[lb/ft,...	End Magnitude[lb/ft,F...	Start Location[ft,%]	End Location[ft,%]
1	M1	X	3.317	3.317	0	%100
2	M1	Z	1.915	1.915	0	%100
3	M4	X	11.307	11.307	0	%100
4	M4	Z	6.528	6.528	0	%100
5	M10	X	3.189	3.189	0	%100
6	M10	Z	1.841	1.841	0	%100
7	MP3A	X	12.192	12.192	0	%100
8	MP3A	Z	7.039	7.039	0	%100
9	MP4A	X	10.072	10.072	0	%100
10	MP4A	Z	5.815	5.815	0	%100
11	MP2A	X	12.192	12.192	0	%100
12	MP2A	Z	7.039	7.039	0	%100
13	MP1A	X	12.192	12.192	0	%100
14	MP1A	Z	7.039	7.039	0	%100
15	M43	X	3.189	3.189	0	%100
16	M43	Z	1.841	1.841	0	%100
17	M46	X	6.361	6.361	0	%100
18	M46	Z	3.673	3.673	0	%100
19	M51B	X	3.532	3.532	0	%100
20	M51B	Z	2.039	2.039	0	%100
21	M52B	X	14.129	14.129	0	%100
22	M52B	Z	8.157	8.157	0	%100
23	M76	X	19.083	19.083	0	%100
24	M76	Z	11.018	11.018	0	%100
25	M77	X	6.479	6.479	0	%100
26	M77	Z	3.741	3.741	0	%100
27	M80	X	6.824	6.824	0	%100
28	M80	Z	3.94	3.94	0	%100
29	M84	X	19.083	19.083	0	%100
30	M84	Z	11.018	11.018	0	%100
31	M85	X	25.916	25.916	0	%100
32	M85	Z	14.962	14.962	0	%100
33	M91	X	27.296	27.296	0	%100
34	M91	Z	15.76	15.76	0	%100
35	M34	X	11.307	11.307	0	%100
36	M34	Z	6.528	6.528	0	%100

Member Distributed Loads (BLC 45 : Structure Wo (120 Deg)) (Continued)

	Member Label	Direction	Start Magnitude[lb/ft,...	End Magnitude[lb/ft,F...	Start Location[ft,%]	End Location[ft,%]
37	M35	X	3.189	3.189	0	%100
38	M35	Z	1.841	1.841	0	%100
39	M36	X	3.189	3.189	0	%100
40	M36	Z	1.841	1.841	0	%100
41	M37	X	6.361	6.361	0	%100
42	M37	Z	3.673	3.673	0	%100
43	M40	X	14.129	14.129	0	%100
44	M40	Z	8.157	8.157	0	%100
45	M41	X	3.532	3.532	0	%100
46	M41	Z	2.039	2.039	0	%100
47	M45	X	19.083	19.083	0	%100
48	M45	Z	11.018	11.018	0	%100
49	M46A	X	25.916	25.916	0	%100
50	M46A	Z	14.962	14.962	0	%100
51	M48	X	27.296	27.296	0	%100
52	M48	Z	15.76	15.76	0	%100
53	M50A	X	19.083	19.083	0	%100
54	M50A	Z	11.018	11.018	0	%100
55	M51C	X	6.479	6.479	0	%100
56	M51C	Z	3.741	3.741	0	%100
57	M53	X	6.824	6.824	0	%100
58	M53	Z	3.94	3.94	0	%100
59	M58A	X	0	0	0	%100
60	M58A	Z	0	0	0	%100
61	M59A	X	12.757	12.757	0	%100
62	M59A	Z	7.365	7.365	0	%100
63	M60	X	12.757	12.757	0	%100
64	M60	Z	7.365	7.365	0	%100
65	M61	X	25.444	25.444	0	%100
66	M61	Z	14.69	14.69	0	%100
67	M64	X	3.532	3.532	0	%100
68	M64	Z	2.039	2.039	0	%100
69	M65	X	3.532	3.532	0	%100
70	M65	Z	2.039	2.039	0	%100
71	M69	X	0	0	0	%100
72	M69	Z	0	0	0	%100
73	M70	X	6.479	6.479	0	%100
74	M70	Z	3.741	3.741	0	%100
75	M72	X	6.824	6.824	0	%100
76	M72	Z	3.94	3.94	0	%100
77	M74	X	0	0	0	%100
78	M74	Z	0	0	0	%100
79	M75	X	6.479	6.479	0	%100
80	M75	Z	3.741	3.741	0	%100
81	M77A	X	6.824	6.824	0	%100
82	M77A	Z	3.94	3.94	0	%100
83	M82	X	3.317	3.317	0	%100
84	M82	Z	1.915	1.915	0	%100
85	MP3C	X	12.192	12.192	0	%100
86	MP3C	Z	7.039	7.039	0	%100
87	MP4C	X	10.072	10.072	0	%100
88	MP4C	Z	5.815	5.815	0	%100

Member Distributed Loads (BLC 45 : Structure Wo (120 Deg)) (Continued)

	Member Label	Direction	Start Magnitude[lb/ft,...	End Magnitude[lb/ft,F...	Start Location[ft,%]	End Location[ft,%]
89	MP2C	X	12.192	12.192	0	%100
90	MP2C	Z	7.039	7.039	0	%100
91	MP1C	X	12.192	12.192	0	%100
92	MP1C	Z	7.039	7.039	0	%100
93	M91A	X	13.269	13.269	0	%100
94	M91A	Z	7.661	7.661	0	%100
95	MP3B	X	12.192	12.192	0	%100
96	MP3B	Z	7.039	7.039	0	%100
97	MP4B	X	10.072	10.072	0	%100
98	MP4B	Z	5.815	5.815	0	%100
99	MP2B	X	12.192	12.192	0	%100
100	MP2B	Z	7.039	7.039	0	%100
101	MP1B	X	12.192	12.192	0	%100
102	MP1B	Z	7.039	7.039	0	%100
103	M100	X	3.048	3.048	0	%100
104	M100	Z	1.76	1.76	0	%100
105	M105	X	3.048	3.048	0	%100
106	M105	Z	1.76	1.76	0	%100
107	M110	X	12.192	12.192	0	%100
108	M110	Z	7.039	7.039	0	%100
109	M121	X	3.569	3.569	0	%100
110	M121	Z	2.06	2.06	0	%100
111	M122	X	14.275	14.275	0	%100
112	M122	Z	8.241	8.241	0	%100
113	M123	X	3.569	3.569	0	%100
114	M123	Z	2.06	2.06	0	%100
115	M124	X	17.61	17.61	0	%100
116	M124	Z	10.167	10.167	0	%100
117	M125	X	17.61	17.61	0	%100
118	M125	Z	10.167	10.167	0	%100
119	M126	X	10.62	10.62	0	%100
120	M126	Z	6.131	6.131	0	%100

Member Distributed Loads (BLC 46 : Structure Wo (150 Deg))

	Member Label	Direction	Start Magnitude[lb/ft,...	End Magnitude[lb/ft,F...	Start Location[ft,%]	End Location[ft,%]
1	M1	X	5.746	5.746	0	%100
2	M1	Z	9.952	9.952	0	%100
3	M4	X	2.176	2.176	0	%100
4	M4	Z	3.769	3.769	0	%100
5	M10	X	5.524	5.524	0	%100
6	M10	Z	9.567	9.567	0	%100
7	MP3A	X	7.039	7.039	0	%100
8	MP3A	Z	12.192	12.192	0	%100
9	MP4A	X	5.815	5.815	0	%100
10	MP4A	Z	10.072	10.072	0	%100
11	MP2A	X	7.039	7.039	0	%100
12	MP2A	Z	12.192	12.192	0	%100
13	MP1A	X	7.039	7.039	0	%100
14	MP1A	Z	12.192	12.192	0	%100
15	M43	X	5.524	5.524	0	%100
16	M43	Z	9.567	9.567	0	%100

Member Distributed Loads (BLC 46 : Structure Wo (150 Deg)) (Continued)

	Member Label	Direction	Start Magnitude[lb/ft,...	End Magnitude[lb/ft,F...	Start Location[ft,%]	End Location[ft,%]
17	M46	X	11.018	11.018	0	%100
18	M46	Z	19.083	19.083	0	%100
19	M51B	X	0	0	0	%100
20	M51B	Z	0	0	0	%100
21	M52B	X	6.118	6.118	0	%100
22	M52B	Z	10.597	10.597	0	%100
23	M76	X	3.673	3.673	0	%100
24	M76	Z	6.361	6.361	0	%100
25	M77	X	0	0	0	%100
26	M77	Z	0	0	0	%100
27	M80	X	0	0	0	%100
28	M80	Z	0	0	0	%100
29	M84	X	3.673	3.673	0	%100
30	M84	Z	6.361	6.361	0	%100
31	M85	X	11.222	11.222	0	%100
32	M85	Z	19.437	19.437	0	%100
33	M91	X	11.82	11.82	0	%100
34	M91	Z	20.472	20.472	0	%100
35	M34	X	8.704	8.704	0	%100
36	M34	Z	15.076	15.076	0	%100
37	M35	X	0	0	0	%100
38	M35	Z	0	0	0	%100
39	M36	X	0	0	0	%100
40	M36	Z	0	0	0	%100
41	M37	X	0	0	0	%100
42	M37	Z	0	0	0	%100
43	M40	X	6.118	6.118	0	%100
44	M40	Z	10.597	10.597	0	%100
45	M41	X	6.118	6.118	0	%100
46	M41	Z	10.597	10.597	0	%100
47	M45	X	14.69	14.69	0	%100
48	M45	Z	25.444	25.444	0	%100
49	M46A	X	11.222	11.222	0	%100
50	M46A	Z	19.437	19.437	0	%100
51	M48	X	11.82	11.82	0	%100
52	M48	Z	20.472	20.472	0	%100
53	M50A	X	14.69	14.69	0	%100
54	M50A	Z	25.444	25.444	0	%100
55	M51C	X	11.222	11.222	0	%100
56	M51C	Z	19.437	19.437	0	%100
57	M53	X	11.82	11.82	0	%100
58	M53	Z	20.472	20.472	0	%100
59	M58A	X	2.176	2.176	0	%100
60	M58A	Z	3.769	3.769	0	%100
61	M59A	X	5.524	5.524	0	%100
62	M59A	Z	9.567	9.567	0	%100
63	M60	X	5.524	5.524	0	%100
64	M60	Z	9.567	9.567	0	%100
65	M61	X	11.018	11.018	0	%100
66	M61	Z	19.083	19.083	0	%100
67	M64	X	6.118	6.118	0	%100
68	M64	Z	10.597	10.597	0	%100

Member Distributed Loads (BLC 46 : Structure Wo (150 Deg)) (Continued)

	Member Label	Direction	Start Magnitude[lb/ft,...	End Magnitude[lb/ft,F...	Start Location[ft,%]	End Location[ft,%]
69	M65	X	0	0	0	%100
70	M65	Z	0	0	0	%100
71	M69	X	3.673	3.673	0	%100
72	M69	Z	6.361	6.361	0	%100
73	M70	X	11.222	11.222	0	%100
74	M70	Z	19.437	19.437	0	%100
75	M72	X	11.82	11.82	0	%100
76	M72	Z	20.472	20.472	0	%100
77	M74	X	3.673	3.673	0	%100
78	M74	Z	6.361	6.361	0	%100
79	M75	X	0	0	0	%100
80	M75	Z	0	0	0	%100
81	M77A	X	0	0	0	%100
82	M77A	Z	0	0	0	%100
83	M82	X	0	0	0	%100
84	M82	Z	0	0	0	%100
85	MP3C	X	7.039	7.039	0	%100
86	MP3C	Z	12.192	12.192	0	%100
87	MP4C	X	5.815	5.815	0	%100
88	MP4C	Z	10.072	10.072	0	%100
89	MP2C	X	7.039	7.039	0	%100
90	MP2C	Z	12.192	12.192	0	%100
91	MP1C	X	7.039	7.039	0	%100
92	MP1C	Z	12.192	12.192	0	%100
93	M91A	X	5.746	5.746	0	%100
94	M91A	Z	9.952	9.952	0	%100
95	MP3B	X	7.039	7.039	0	%100
96	MP3B	Z	12.192	12.192	0	%100
97	MP4B	X	5.815	5.815	0	%100
98	MP4B	Z	10.072	10.072	0	%100
99	MP2B	X	7.039	7.039	0	%100
100	MP2B	Z	12.192	12.192	0	%100
101	MP1B	X	7.039	7.039	0	%100
102	MP1B	Z	12.192	12.192	0	%100
103	M100	X	5.279	5.279	0	%100
104	M100	Z	9.144	9.144	0	%100
105	M105	X	0	0	0	%100
106	M105	Z	0	0	0	%100
107	M110	X	5.279	5.279	0	%100
108	M110	Z	9.144	9.144	0	%100
109	M121	X	0	0	0	%100
110	M121	Z	0	0	0	%100
111	M122	X	6.181	6.181	0	%100
112	M122	Z	10.706	10.706	0	%100
113	M123	X	6.181	6.181	0	%100
114	M123	Z	10.706	10.706	0	%100
115	M124	X	7.477	7.477	0	%100
116	M124	Z	12.95	12.95	0	%100
117	M125	X	11.513	11.513	0	%100
118	M125	Z	19.941	19.941	0	%100
119	M126	X	7.477	7.477	0	%100
120	M126	Z	12.95	12.95	0	%100

Member Distributed Loads (BLC 47 : Structure Wo (180 Deg))

	Member Label	Direction	Start Magnitude[lb/ft,...	End Magnitude[lb/ft,F...	Start Location[ft,%]	End Location[ft,%]
1	M1	X	0	0	0	%100
2	M1	Z	15.322	15.322	0	%100
3	M4	X	0	0	0	%100
4	M4	Z	0	0	0	%100
5	M10	X	0	0	0	%100
6	M10	Z	14.73	14.73	0	%100
7	MP3A	X	0	0	0	%100
8	MP3A	Z	14.078	14.078	0	%100
9	MP4A	X	0	0	0	%100
10	MP4A	Z	11.63	11.63	0	%100
11	MP2A	X	0	0	0	%100
12	MP2A	Z	14.078	14.078	0	%100
13	MP1A	X	0	0	0	%100
14	MP1A	Z	14.078	14.078	0	%100
15	M43	X	0	0	0	%100
16	M43	Z	14.73	14.73	0	%100
17	M46	X	0	0	0	%100
18	M46	Z	29.381	29.381	0	%100
19	M51B	X	0	0	0	%100
20	M51B	Z	4.079	4.079	0	%100
21	M52B	X	0	0	0	%100
22	M52B	Z	4.079	4.079	0	%100
23	M76	X	0	0	0	%100
24	M76	Z	0	0	0	%100
25	M77	X	0	0	0	%100
26	M77	Z	7.481	7.481	0	%100
27	M80	X	0	0	0	%100
28	M80	Z	7.88	7.88	0	%100
29	M84	X	0	0	0	%100
30	M84	Z	0	0	0	%100
31	M85	X	0	0	0	%100
32	M85	Z	7.481	7.481	0	%100
33	M91	X	0	0	0	%100
34	M91	Z	7.88	7.88	0	%100
35	M34	X	0	0	0	%100
36	M34	Z	13.056	13.056	0	%100
37	M35	X	0	0	0	%100
38	M35	Z	3.682	3.682	0	%100
39	M36	X	0	0	0	%100
40	M36	Z	3.682	3.682	0	%100
41	M37	X	0	0	0	%100
42	M37	Z	7.345	7.345	0	%100
43	M40	X	0	0	0	%100
44	M40	Z	4.079	4.079	0	%100
45	M41	X	0	0	0	%100
46	M41	Z	16.315	16.315	0	%100
47	M45	X	0	0	0	%100
48	M45	Z	22.035	22.035	0	%100
49	M46A	X	0	0	0	%100
50	M46A	Z	7.481	7.481	0	%100
51	M48	X	0	0	0	%100
52	M48	Z	7.88	7.88	0	%100

Member Distributed Loads (BLC 47 : Structure Wo (180 Deg)) (Continued)

	Member Label	Direction	Start Magnitude[lb/ft,...	End Magnitude[lb/ft,F...	Start Location[ft,%]	End Location[ft,%]
53	M50A	X	0	0	0	%100
54	M50A	Z	22.035	22.035	0	%100
55	M51C	X	0	0	0	%100
56	M51C	Z	29.925	29.925	0	%100
57	M53	X	0	0	0	%100
58	M53	Z	31.519	31.519	0	%100
59	M58A	X	0	0	0	%100
60	M58A	Z	13.056	13.056	0	%100
61	M59A	X	0	0	0	%100
62	M59A	Z	3.682	3.682	0	%100
63	M60	X	0	0	0	%100
64	M60	Z	3.682	3.682	0	%100
65	M61	X	0	0	0	%100
66	M61	Z	7.345	7.345	0	%100
67	M64	X	0	0	0	%100
68	M64	Z	16.315	16.315	0	%100
69	M65	X	0	0	0	%100
70	M65	Z	4.079	4.079	0	%100
71	M69	X	0	0	0	%100
72	M69	Z	22.035	22.035	0	%100
73	M70	X	0	0	0	%100
74	M70	Z	29.925	29.925	0	%100
75	M72	X	0	0	0	%100
76	M72	Z	31.519	31.519	0	%100
77	M74	X	0	0	0	%100
78	M74	Z	22.035	22.035	0	%100
79	M75	X	0	0	0	%100
80	M75	Z	7.481	7.481	0	%100
81	M77A	X	0	0	0	%100
82	M77A	Z	7.88	7.88	0	%100
83	M82	X	0	0	0	%100
84	M82	Z	3.83	3.83	0	%100
85	MP3C	X	0	0	0	%100
86	MP3C	Z	14.078	14.078	0	%100
87	MP4C	X	0	0	0	%100
88	MP4C	Z	11.63	11.63	0	%100
89	MP2C	X	0	0	0	%100
90	MP2C	Z	14.078	14.078	0	%100
91	MP1C	X	0	0	0	%100
92	MP1C	Z	14.078	14.078	0	%100
93	M91A	X	0	0	0	%100
94	M91A	Z	3.83	3.83	0	%100
95	MP3B	X	0	0	0	%100
96	MP3B	Z	14.078	14.078	0	%100
97	MP4B	X	0	0	0	%100
98	MP4B	Z	11.63	11.63	0	%100
99	MP2B	X	0	0	0	%100
100	MP2B	Z	14.078	14.078	0	%100
101	MP1B	X	0	0	0	%100
102	MP1B	Z	14.078	14.078	0	%100
103	M100	X	0	0	0	%100
104	M100	Z	14.078	14.078	0	%100

Member Distributed Loads (BLC 47 : Structure Wo (180 Deg)) (Continued)

	Member Label	Direction	Start Magnitude[lb/ft,...	End Magnitude[lb/ft,F...	Start Location[ft,%]	End Location[ft,%]
105	M105	X	0	0	0	%100
106	M105	Z	3.52	3.52	0	%100
107	M110	X	0	0	0	%100
108	M110	Z	3.52	3.52	0	%100
109	M121	X	0	0	0	%100
110	M121	Z	4.121	4.121	0	%100
111	M122	X	0	0	0	%100
112	M122	Z	4.121	4.121	0	%100
113	M123	X	0	0	0	%100
114	M123	Z	16.483	16.483	0	%100
115	M124	X	0	0	0	%100
116	M124	Z	12.263	12.263	0	%100
117	M125	X	0	0	0	%100
118	M125	Z	20.335	20.335	0	%100
119	M126	X	0	0	0	%100
120	M126	Z	20.335	20.335	0	%100

Member Distributed Loads (BLC 48 : Structure Wo (210 Deg))

	Member Label	Direction	Start Magnitude[lb/ft,...	End Magnitude[lb/ft,F...	Start Location[ft,%]	End Location[ft,%]
1	M1	X	-5.746	-5.746	0	%100
2	M1	Z	9.952	9.952	0	%100
3	M4	X	-2.176	-2.176	0	%100
4	M4	Z	3.769	3.769	0	%100
5	M10	X	-5.524	-5.524	0	%100
6	M10	Z	9.567	9.567	0	%100
7	MP3A	X	-7.039	-7.039	0	%100
8	MP3A	Z	12.192	12.192	0	%100
9	MP4A	X	-5.815	-5.815	0	%100
10	MP4A	Z	10.072	10.072	0	%100
11	MP2A	X	-7.039	-7.039	0	%100
12	MP2A	Z	12.192	12.192	0	%100
13	MP1A	X	-7.039	-7.039	0	%100
14	MP1A	Z	12.192	12.192	0	%100
15	M43	X	-5.524	-5.524	0	%100
16	M43	Z	9.567	9.567	0	%100
17	M46	X	-11.018	-11.018	0	%100
18	M46	Z	19.083	19.083	0	%100
19	M51B	X	-6.118	-6.118	0	%100
20	M51B	Z	10.597	10.597	0	%100
21	M52B	X	0	0	0	%100
22	M52B	Z	0	0	0	%100
23	M76	X	-3.673	-3.673	0	%100
24	M76	Z	6.361	6.361	0	%100
25	M77	X	-11.222	-11.222	0	%100
26	M77	Z	19.437	19.437	0	%100
27	M80	X	-11.82	-11.82	0	%100
28	M80	Z	20.472	20.472	0	%100
29	M84	X	-3.673	-3.673	0	%100
30	M84	Z	6.361	6.361	0	%100
31	M85	X	0	0	0	%100
32	M85	Z	0	0	0	%100

Member Distributed Loads (BLC 48 : Structure Wo (210 Deg)) (Continued)

	Member Label	Direction	Start Magnitude[lb/ft,...	End Magnitude[lb/ft,F...	Start Location[ft,%]	End Location[ft,%]
33	M91	X	0	0	0	%100
34	M91	Z	0	0	0	%100
35	M34	X	-2.176	-2.176	0	%100
36	M34	Z	3.769	3.769	0	%100
37	M35	X	-5.524	-5.524	0	%100
38	M35	Z	9.567	9.567	0	%100
39	M36	X	-5.524	-5.524	0	%100
40	M36	Z	9.567	9.567	0	%100
41	M37	X	-11.018	-11.018	0	%100
42	M37	Z	19.083	19.083	0	%100
43	M40	X	0	0	0	%100
44	M40	Z	0	0	0	%100
45	M41	X	-6.118	-6.118	0	%100
46	M41	Z	10.597	10.597	0	%100
47	M45	X	-3.673	-3.673	0	%100
48	M45	Z	6.361	6.361	0	%100
49	M46A	X	0	0	0	%100
50	M46A	Z	0	0	0	%100
51	M48	X	0	0	0	%100
52	M48	Z	0	0	0	%100
53	M50A	X	-3.673	-3.673	0	%100
54	M50A	Z	6.361	6.361	0	%100
55	M51C	X	-11.222	-11.222	0	%100
56	M51C	Z	19.437	19.437	0	%100
57	M53	X	-11.82	-11.82	0	%100
58	M53	Z	20.472	20.472	0	%100
59	M58A	X	-8.704	-8.704	0	%100
60	M58A	Z	15.076	15.076	0	%100
61	M59A	X	0	0	0	%100
62	M59A	Z	0	0	0	%100
63	M60	X	0	0	0	%100
64	M60	Z	0	0	0	%100
65	M61	X	0	0	0	%100
66	M61	Z	0	0	0	%100
67	M64	X	-6.118	-6.118	0	%100
68	M64	Z	10.597	10.597	0	%100
69	M65	X	-6.118	-6.118	0	%100
70	M65	Z	10.597	10.597	0	%100
71	M69	X	-14.69	-14.69	0	%100
72	M69	Z	25.444	25.444	0	%100
73	M70	X	-11.222	-11.222	0	%100
74	M70	Z	19.437	19.437	0	%100
75	M72	X	-11.82	-11.82	0	%100
76	M72	Z	20.472	20.472	0	%100
77	M74	X	-14.69	-14.69	0	%100
78	M74	Z	25.444	25.444	0	%100
79	M75	X	-11.222	-11.222	0	%100
80	M75	Z	19.437	19.437	0	%100
81	M77A	X	-11.82	-11.82	0	%100
82	M77A	Z	20.472	20.472	0	%100
83	M82	X	-5.746	-5.746	0	%100
84	M82	Z	9.952	9.952	0	%100

Member Distributed Loads (BLC 48 : Structure Wo (210 Deg)) (Continued)

	Member Label	Direction	Start Magnitude[lb/ft,...	End Magnitude[lb/ft,F...	Start Location[ft,%]	End Location[ft,%]
85	MP3C	X	-7.039	-7.039	0	%100
86	MP3C	Z	12.192	12.192	0	%100
87	MP4C	X	-5.815	-5.815	0	%100
88	MP4C	Z	10.072	10.072	0	%100
89	MP2C	X	-7.039	-7.039	0	%100
90	MP2C	Z	12.192	12.192	0	%100
91	MP1C	X	-7.039	-7.039	0	%100
92	MP1C	Z	12.192	12.192	0	%100
93	M91A	X	0	0	0	%100
94	M91A	Z	0	0	0	%100
95	MP3B	X	-7.039	-7.039	0	%100
96	MP3B	Z	12.192	12.192	0	%100
97	MP4B	X	-5.815	-5.815	0	%100
98	MP4B	Z	10.072	10.072	0	%100
99	MP2B	X	-7.039	-7.039	0	%100
100	MP2B	Z	12.192	12.192	0	%100
101	MP1B	X	-7.039	-7.039	0	%100
102	MP1B	Z	12.192	12.192	0	%100
103	M100	X	-5.279	-5.279	0	%100
104	M100	Z	9.144	9.144	0	%100
105	M105	X	-5.279	-5.279	0	%100
106	M105	Z	9.144	9.144	0	%100
107	M110	X	0	0	0	%100
108	M110	Z	0	0	0	%100
109	M121	X	-6.181	-6.181	0	%100
110	M121	Z	10.706	10.706	0	%100
111	M122	X	0	0	0	%100
112	M122	Z	0	0	0	%100
113	M123	X	-6.181	-6.181	0	%100
114	M123	Z	10.706	10.706	0	%100
115	M124	X	-7.477	-7.477	0	%100
116	M124	Z	12.95	12.95	0	%100
117	M125	X	-7.477	-7.477	0	%100
118	M125	Z	12.95	12.95	0	%100
119	M126	X	-11.513	-11.513	0	%100
120	M126	Z	19.941	19.941	0	%100

Member Distributed Loads (BLC 49 : Structure Wo (240 Deg))

	Member Label	Direction	Start Magnitude[lb/ft,...	End Magnitude[lb/ft,F...	Start Location[ft,%]	End Location[ft,%]
1	M1	X	-3.317	-3.317	0	%100
2	M1	Z	1.915	1.915	0	%100
3	M4	X	-11.307	-11.307	0	%100
4	M4	Z	6.528	6.528	0	%100
5	M10	X	-3.189	-3.189	0	%100
6	M10	Z	1.841	1.841	0	%100
7	MP3A	X	-12.192	-12.192	0	%100
8	MP3A	Z	7.039	7.039	0	%100
9	MP4A	X	-10.072	-10.072	0	%100
10	MP4A	Z	5.815	5.815	0	%100
11	MP2A	X	-12.192	-12.192	0	%100
12	MP2A	Z	7.039	7.039	0	%100

Member Distributed Loads (BLC 49 : Structure Wo (240 Deg)) (Continued)

	Member Label	Direction	Start Magnitude[lb/ft,...	End Magnitude[lb/ft,F...	Start Location[ft,%]	End Location[ft,%]
13	MP1A	X	-12.192	-12.192	0	%100
14	MP1A	Z	7.039	7.039	0	%100
15	M43	X	-3.189	-3.189	0	%100
16	M43	Z	1.841	1.841	0	%100
17	M46	X	-6.361	-6.361	0	%100
18	M46	Z	3.673	3.673	0	%100
19	M51B	X	-14.129	-14.129	0	%100
20	M51B	Z	8.157	8.157	0	%100
21	M52B	X	-3.532	-3.532	0	%100
22	M52B	Z	2.039	2.039	0	%100
23	M76	X	-19.083	-19.083	0	%100
24	M76	Z	11.018	11.018	0	%100
25	M77	X	-25.916	-25.916	0	%100
26	M77	Z	14.962	14.962	0	%100
27	M80	X	-27.296	-27.296	0	%100
28	M80	Z	15.76	15.76	0	%100
29	M84	X	-19.083	-19.083	0	%100
30	M84	Z	11.018	11.018	0	%100
31	M85	X	-6.479	-6.479	0	%100
32	M85	Z	3.741	3.741	0	%100
33	M91	X	-6.824	-6.824	0	%100
34	M91	Z	3.94	3.94	0	%100
35	M34	X	0	0	0	%100
36	M34	Z	0	0	0	%100
37	M35	X	-12.757	-12.757	0	%100
38	M35	Z	7.365	7.365	0	%100
39	M36	X	-12.757	-12.757	0	%100
40	M36	Z	7.365	7.365	0	%100
41	M37	X	-25.444	-25.444	0	%100
42	M37	Z	14.69	14.69	0	%100
43	M40	X	-3.532	-3.532	0	%100
44	M40	Z	2.039	2.039	0	%100
45	M41	X	-3.532	-3.532	0	%100
46	M41	Z	2.039	2.039	0	%100
47	M45	X	0	0	0	%100
48	M45	Z	0	0	0	%100
49	M46A	X	-6.479	-6.479	0	%100
50	M46A	Z	3.741	3.741	0	%100
51	M48	X	-6.824	-6.824	0	%100
52	M48	Z	3.94	3.94	0	%100
53	M50A	X	0	0	0	%100
54	M50A	Z	0	0	0	%100
55	M51C	X	-6.479	-6.479	0	%100
56	M51C	Z	3.741	3.741	0	%100
57	M53	X	-6.824	-6.824	0	%100
58	M53	Z	3.94	3.94	0	%100
59	M58A	X	-11.307	-11.307	0	%100
60	M58A	Z	6.528	6.528	0	%100
61	M59A	X	-3.189	-3.189	0	%100
62	M59A	Z	1.841	1.841	0	%100
63	M60	X	-3.189	-3.189	0	%100
64	M60	Z	1.841	1.841	0	%100

Member Distributed Loads (BLC 49 : Structure Wo (240 Deg)) (Continued)

	Member Label	Direction	Start Magnitude[lb/ft,...	End Magnitude[lb/ft,F...	Start Location[ft,%]	End Location[ft,%]
65	M61	X	-6.361	-6.361	0	%100
66	M61	Z	3.673	3.673	0	%100
67	M64	X	-3.532	-3.532	0	%100
68	M64	Z	2.039	2.039	0	%100
69	M65	X	-14.129	-14.129	0	%100
70	M65	Z	8.157	8.157	0	%100
71	M69	X	-19.083	-19.083	0	%100
72	M69	Z	11.018	11.018	0	%100
73	M70	X	-6.479	-6.479	0	%100
74	M70	Z	3.741	3.741	0	%100
75	M72	X	-6.824	-6.824	0	%100
76	M72	Z	3.94	3.94	0	%100
77	M74	X	-19.083	-19.083	0	%100
78	M74	Z	11.018	11.018	0	%100
79	M75	X	-25.916	-25.916	0	%100
80	M75	Z	14.962	14.962	0	%100
81	M77A	X	-27.296	-27.296	0	%100
82	M77A	Z	15.76	15.76	0	%100
83	M82	X	-13.269	-13.269	0	%100
84	M82	Z	7.661	7.661	0	%100
85	MP3C	X	-12.192	-12.192	0	%100
86	MP3C	Z	7.039	7.039	0	%100
87	MP4C	X	-10.072	-10.072	0	%100
88	MP4C	Z	5.815	5.815	0	%100
89	MP2C	X	-12.192	-12.192	0	%100
90	MP2C	Z	7.039	7.039	0	%100
91	MP1C	X	-12.192	-12.192	0	%100
92	MP1C	Z	7.039	7.039	0	%100
93	M91A	X	-3.317	-3.317	0	%100
94	M91A	Z	1.915	1.915	0	%100
95	MP3B	X	-12.192	-12.192	0	%100
96	MP3B	Z	7.039	7.039	0	%100
97	MP4B	X	-10.072	-10.072	0	%100
98	MP4B	Z	5.815	5.815	0	%100
99	MP2B	X	-12.192	-12.192	0	%100
100	MP2B	Z	7.039	7.039	0	%100
101	MP1B	X	-12.192	-12.192	0	%100
102	MP1B	Z	7.039	7.039	0	%100
103	M100	X	-3.048	-3.048	0	%100
104	M100	Z	1.76	1.76	0	%100
105	M105	X	-12.192	-12.192	0	%100
106	M105	Z	7.039	7.039	0	%100
107	M110	X	-3.048	-3.048	0	%100
108	M110	Z	1.76	1.76	0	%100
109	M121	X	-14.275	-14.275	0	%100
110	M121	Z	8.241	8.241	0	%100
111	M122	X	-3.569	-3.569	0	%100
112	M122	Z	2.06	2.06	0	%100
113	M123	X	-3.569	-3.569	0	%100
114	M123	Z	2.06	2.06	0	%100
115	M124	X	-17.61	-17.61	0	%100
116	M124	Z	10.167	10.167	0	%100

Member Distributed Loads (BLC 49 : Structure Wo (240 Deg)) (Continued)

	Member Label	Direction	Start Magnitude[lb/ft,...	End Magnitude[lb/ft,F...	Start Location[ft,%]	End Location[ft,%]
117	M125	X	-10.62	-10.62	0	%100
118	M125	Z	6.131	6.131	0	%100
119	M126	X	-17.61	-17.61	0	%100
120	M126	Z	10.167	10.167	0	%100

Member Distributed Loads (BLC 50 : Structure Wo (270 Deg))

	Member Label	Direction	Start Magnitude[lb/ft,...	End Magnitude[lb/ft,F...	Start Location[ft,%]	End Location[ft,%]
1	M1	X	0	0	0	%100
2	M1	Z	0	0	0	%100
3	M4	X	-17.408	-17.408	0	%100
4	M4	Z	0	0	0	%100
5	M10	X	0	0	0	%100
6	M10	Z	0	0	0	%100
7	MP3A	X	-14.078	-14.078	0	%100
8	MP3A	Z	0	0	0	%100
9	MP4A	X	-11.63	-11.63	0	%100
10	MP4A	Z	0	0	0	%100
11	MP2A	X	-14.078	-14.078	0	%100
12	MP2A	Z	0	0	0	%100
13	MP1A	X	-14.078	-14.078	0	%100
14	MP1A	Z	0	0	0	%100
15	M43	X	0	0	0	%100
16	M43	Z	0	0	0	%100
17	M46	X	0	0	0	%100
18	M46	Z	0	0	0	%100
19	M51B	X	-12.236	-12.236	0	%100
20	M51B	Z	0	0	0	%100
21	M52B	X	-12.236	-12.236	0	%100
22	M52B	Z	0	0	0	%100
23	M76	X	-29.381	-29.381	0	%100
24	M76	Z	0	0	0	%100
25	M77	X	-22.444	-22.444	0	%100
26	M77	Z	0	0	0	%100
27	M80	X	-23.639	-23.639	0	%100
28	M80	Z	0	0	0	%100
29	M84	X	-29.381	-29.381	0	%100
30	M84	Z	0	0	0	%100
31	M85	X	-22.444	-22.444	0	%100
32	M85	Z	0	0	0	%100
33	M91	X	-23.639	-23.639	0	%100
34	M91	Z	0	0	0	%100
35	M34	X	-4.352	-4.352	0	%100
36	M34	Z	0	0	0	%100
37	M35	X	-11.047	-11.047	0	%100
38	M35	Z	0	0	0	%100
39	M36	X	-11.047	-11.047	0	%100
40	M36	Z	0	0	0	%100
41	M37	X	-22.035	-22.035	0	%100
42	M37	Z	0	0	0	%100
43	M40	X	-12.236	-12.236	0	%100
44	M40	Z	0	0	0	%100

Member Distributed Loads (BLC 50 : Structure Wo (270 Deg)) (Continued)

	Member Label	Direction	Start Magnitude[lb/ft,...	End Magnitude[lb/ft,F...	Start Location[ft,%]	End Location[ft,%]
45	M41	X	0	0	0	%100
46	M41	Z	0	0	0	%100
47	M45	X	-7.345	-7.345	0	%100
48	M45	Z	0	0	0	%100
49	M46A	X	-22.444	-22.444	0	%100
50	M46A	Z	0	0	0	%100
51	M48	X	-23.639	-23.639	0	%100
52	M48	Z	0	0	0	%100
53	M50A	X	-7.345	-7.345	0	%100
54	M50A	Z	0	0	0	%100
55	M51C	X	0	0	0	%100
56	M51C	Z	0	0	0	%100
57	M53	X	0	0	0	%100
58	M53	Z	0	0	0	%100
59	M58A	X	-4.352	-4.352	0	%100
60	M58A	Z	0	0	0	%100
61	M59A	X	-11.047	-11.047	0	%100
62	M59A	Z	0	0	0	%100
63	M60	X	-11.047	-11.047	0	%100
64	M60	Z	0	0	0	%100
65	M61	X	-22.035	-22.035	0	%100
66	M61	Z	0	0	0	%100
67	M64	X	0	0	0	%100
68	M64	Z	0	0	0	%100
69	M65	X	-12.236	-12.236	0	%100
70	M65	Z	0	0	0	%100
71	M69	X	-7.345	-7.345	0	%100
72	M69	Z	0	0	0	%100
73	M70	X	0	0	0	%100
74	M70	Z	0	0	0	%100
75	M72	X	0	0	0	%100
76	M72	Z	0	0	0	%100
77	M74	X	-7.345	-7.345	0	%100
78	M74	Z	0	0	0	%100
79	M75	X	-22.444	-22.444	0	%100
80	M75	Z	0	0	0	%100
81	M77A	X	-23.639	-23.639	0	%100
82	M77A	Z	0	0	0	%100
83	M82	X	-11.491	-11.491	0	%100
84	M82	Z	0	0	0	%100
85	MP3C	X	-14.078	-14.078	0	%100
86	MP3C	Z	0	0	0	%100
87	MP4C	X	-11.63	-11.63	0	%100
88	MP4C	Z	0	0	0	%100
89	MP2C	X	-14.078	-14.078	0	%100
90	MP2C	Z	0	0	0	%100
91	MP1C	X	-14.078	-14.078	0	%100
92	MP1C	Z	0	0	0	%100
93	M91A	X	-11.491	-11.491	0	%100
94	M91A	Z	0	0	0	%100
95	MP3B	X	-14.078	-14.078	0	%100
96	MP3B	Z	0	0	0	%100

Member Distributed Loads (BLC 50 : Structure Wo (270 Deg)) (Continued)

	Member Label	Direction	Start Magnitude[lb/ft,...	End Magnitude[lb/ft,F...	Start Location[ft,%]	End Location[ft,%]
97	MP4B	X	-11.63	-11.63	0	%100
98	MP4B	Z	0	0	0	%100
99	MP2B	X	-14.078	-14.078	0	%100
100	MP2B	Z	0	0	0	%100
101	MP1B	X	-14.078	-14.078	0	%100
102	MP1B	Z	0	0	0	%100
103	M100	X	0	0	0	%100
104	M100	Z	0	0	0	%100
105	M105	X	-10.559	-10.559	0	%100
106	M105	Z	0	0	0	%100
107	M110	X	-10.559	-10.559	0	%100
108	M110	Z	0	0	0	%100
109	M121	X	-12.362	-12.362	0	%100
110	M121	Z	0	0	0	%100
111	M122	X	-12.362	-12.362	0	%100
112	M122	Z	0	0	0	%100
113	M123	X	0	0	0	%100
114	M123	Z	0	0	0	%100
115	M124	X	-23.025	-23.025	0	%100
116	M124	Z	0	0	0	%100
117	M125	X	-14.953	-14.953	0	%100
118	M125	Z	0	0	0	%100
119	M126	X	-14.953	-14.953	0	%100
120	M126	Z	0	0	0	%100

Member Distributed Loads (BLC 51 : Structure Wo (300 Deg))

	Member Label	Direction	Start Magnitude[lb/ft,...	End Magnitude[lb/ft,F...	Start Location[ft,%]	End Location[ft,%]
1	M1	X	-3.317	-3.317	0	%100
2	M1	Z	-1.915	-1.915	0	%100
3	M4	X	-11.307	-11.307	0	%100
4	M4	Z	-6.528	-6.528	0	%100
5	M10	X	-3.189	-3.189	0	%100
6	M10	Z	-1.841	-1.841	0	%100
7	MP3A	X	-12.192	-12.192	0	%100
8	MP3A	Z	-7.039	-7.039	0	%100
9	MP4A	X	-10.072	-10.072	0	%100
10	MP4A	Z	-5.815	-5.815	0	%100
11	MP2A	X	-12.192	-12.192	0	%100
12	MP2A	Z	-7.039	-7.039	0	%100
13	MP1A	X	-12.192	-12.192	0	%100
14	MP1A	Z	-7.039	-7.039	0	%100
15	M43	X	-3.189	-3.189	0	%100
16	M43	Z	-1.841	-1.841	0	%100
17	M46	X	-6.361	-6.361	0	%100
18	M46	Z	-3.673	-3.673	0	%100
19	M51B	X	-3.532	-3.532	0	%100
20	M51B	Z	-2.039	-2.039	0	%100
21	M52B	X	-14.129	-14.129	0	%100
22	M52B	Z	-8.157	-8.157	0	%100
23	M76	X	-19.083	-19.083	0	%100
24	M76	Z	-11.018	-11.018	0	%100

Member Distributed Loads (BLC 51 : Structure Wo (300 Deg)) (Continued)

	Member Label	Direction	Start Magnitude[lb/ft,...	End Magnitude[lb/ft,F...	Start Location[ft,%]	End Location[ft,%]
25	M77	X	-6.479	-6.479	0	%100
26	M77	Z	-3.741	-3.741	0	%100
27	M80	X	-6.824	-6.824	0	%100
28	M80	Z	-3.94	-3.94	0	%100
29	M84	X	-19.083	-19.083	0	%100
30	M84	Z	-11.018	-11.018	0	%100
31	M85	X	-25.916	-25.916	0	%100
32	M85	Z	-14.962	-14.962	0	%100
33	M91	X	-27.296	-27.296	0	%100
34	M91	Z	-15.76	-15.76	0	%100
35	M34	X	-11.307	-11.307	0	%100
36	M34	Z	-6.528	-6.528	0	%100
37	M35	X	-3.189	-3.189	0	%100
38	M35	Z	-1.841	-1.841	0	%100
39	M36	X	-3.189	-3.189	0	%100
40	M36	Z	-1.841	-1.841	0	%100
41	M37	X	-6.361	-6.361	0	%100
42	M37	Z	-3.673	-3.673	0	%100
43	M40	X	-14.129	-14.129	0	%100
44	M40	Z	-8.157	-8.157	0	%100
45	M41	X	-3.532	-3.532	0	%100
46	M41	Z	-2.039	-2.039	0	%100
47	M45	X	-19.083	-19.083	0	%100
48	M45	Z	-11.018	-11.018	0	%100
49	M46A	X	-25.916	-25.916	0	%100
50	M46A	Z	-14.962	-14.962	0	%100
51	M48	X	-27.296	-27.296	0	%100
52	M48	Z	-15.76	-15.76	0	%100
53	M50A	X	-19.083	-19.083	0	%100
54	M50A	Z	-11.018	-11.018	0	%100
55	M51C	X	-6.479	-6.479	0	%100
56	M51C	Z	-3.741	-3.741	0	%100
57	M53	X	-6.824	-6.824	0	%100
58	M53	Z	-3.94	-3.94	0	%100
59	M58A	X	0	0	0	%100
60	M58A	Z	0	0	0	%100
61	M59A	X	-12.757	-12.757	0	%100
62	M59A	Z	-7.365	-7.365	0	%100
63	M60	X	-12.757	-12.757	0	%100
64	M60	Z	-7.365	-7.365	0	%100
65	M61	X	-25.444	-25.444	0	%100
66	M61	Z	-14.69	-14.69	0	%100
67	M64	X	-3.532	-3.532	0	%100
68	M64	Z	-2.039	-2.039	0	%100
69	M65	X	-3.532	-3.532	0	%100
70	M65	Z	-2.039	-2.039	0	%100
71	M69	X	0	0	0	%100
72	M69	Z	0	0	0	%100
73	M70	X	-6.479	-6.479	0	%100
74	M70	Z	-3.741	-3.741	0	%100
75	M72	X	-6.824	-6.824	0	%100
76	M72	Z	-3.94	-3.94	0	%100

Member Distributed Loads (BLC 51 : Structure Wo (300 Deg)) (Continued)

	Member Label	Direction	Start Magnitude[lb/ft,...	End Magnitude[lb/ft,F...	Start Location[ft,%]	End Location[ft,%]
77	M74	X	0	0	0	%100
78	M74	Z	0	0	0	%100
79	M75	X	-6.479	-6.479	0	%100
80	M75	Z	-3.741	-3.741	0	%100
81	M77A	X	-6.824	-6.824	0	%100
82	M77A	Z	-3.94	-3.94	0	%100
83	M82	X	-3.317	-3.317	0	%100
84	M82	Z	-1.915	-1.915	0	%100
85	MP3C	X	-12.192	-12.192	0	%100
86	MP3C	Z	-7.039	-7.039	0	%100
87	MP4C	X	-10.072	-10.072	0	%100
88	MP4C	Z	-5.815	-5.815	0	%100
89	MP2C	X	-12.192	-12.192	0	%100
90	MP2C	Z	-7.039	-7.039	0	%100
91	MP1C	X	-12.192	-12.192	0	%100
92	MP1C	Z	-7.039	-7.039	0	%100
93	M91A	X	-13.269	-13.269	0	%100
94	M91A	Z	-7.661	-7.661	0	%100
95	MP3B	X	-12.192	-12.192	0	%100
96	MP3B	Z	-7.039	-7.039	0	%100
97	MP4B	X	-10.072	-10.072	0	%100
98	MP4B	Z	-5.815	-5.815	0	%100
99	MP2B	X	-12.192	-12.192	0	%100
100	MP2B	Z	-7.039	-7.039	0	%100
101	MP1B	X	-12.192	-12.192	0	%100
102	MP1B	Z	-7.039	-7.039	0	%100
103	M100	X	-3.048	-3.048	0	%100
104	M100	Z	-1.76	-1.76	0	%100
105	M105	X	-3.048	-3.048	0	%100
106	M105	Z	-1.76	-1.76	0	%100
107	M110	X	-12.192	-12.192	0	%100
108	M110	Z	-7.039	-7.039	0	%100
109	M121	X	-3.569	-3.569	0	%100
110	M121	Z	-2.06	-2.06	0	%100
111	M122	X	-14.275	-14.275	0	%100
112	M122	Z	-8.241	-8.241	0	%100
113	M123	X	-3.569	-3.569	0	%100
114	M123	Z	-2.06	-2.06	0	%100
115	M124	X	-17.61	-17.61	0	%100
116	M124	Z	-10.167	-10.167	0	%100
117	M125	X	-17.61	-17.61	0	%100
118	M125	Z	-10.167	-10.167	0	%100
119	M126	X	-10.62	-10.62	0	%100
120	M126	Z	-6.131	-6.131	0	%100

Member Distributed Loads (BLC 52 : Structure Wo (330 Deg))

	Member Label	Direction	Start Magnitude[lb/ft,...	End Magnitude[lb/ft,F...	Start Location[ft,%]	End Location[ft,%]
1	M1	X	-5.746	-5.746	0	%100
2	M1	Z	-9.952	-9.952	0	%100
3	M4	X	-2.176	-2.176	0	%100
4	M4	Z	-3.769	-3.769	0	%100

Member Distributed Loads (BLC 52 : Structure Wo (330 Deg)) (Continued)

	Member Label	Direction	Start Magnitude[lb/ft,...	End Magnitude[lb/ft,F...	Start Location[ft,%]	End Location[ft,%]
5	M10	X	-5.524	-5.524	0	%100
6	M10	Z	-9.567	-9.567	0	%100
7	MP3A	X	-7.039	-7.039	0	%100
8	MP3A	Z	-12.192	-12.192	0	%100
9	MP4A	X	-5.815	-5.815	0	%100
10	MP4A	Z	-10.072	-10.072	0	%100
11	MP2A	X	-7.039	-7.039	0	%100
12	MP2A	Z	-12.192	-12.192	0	%100
13	MP1A	X	-7.039	-7.039	0	%100
14	MP1A	Z	-12.192	-12.192	0	%100
15	M43	X	-5.524	-5.524	0	%100
16	M43	Z	-9.567	-9.567	0	%100
17	M46	X	-11.018	-11.018	0	%100
18	M46	Z	-19.083	-19.083	0	%100
19	M51B	X	0	0	0	%100
20	M51B	Z	0	0	0	%100
21	M52B	X	-6.118	-6.118	0	%100
22	M52B	Z	-10.597	-10.597	0	%100
23	M76	X	-3.673	-3.673	0	%100
24	M76	Z	-6.361	-6.361	0	%100
25	M77	X	0	0	0	%100
26	M77	Z	0	0	0	%100
27	M80	X	0	0	0	%100
28	M80	Z	0	0	0	%100
29	M84	X	-3.673	-3.673	0	%100
30	M84	Z	-6.361	-6.361	0	%100
31	M85	X	-11.222	-11.222	0	%100
32	M85	Z	-19.437	-19.437	0	%100
33	M91	X	-11.82	-11.82	0	%100
34	M91	Z	-20.472	-20.472	0	%100
35	M34	X	-8.704	-8.704	0	%100
36	M34	Z	-15.076	-15.076	0	%100
37	M35	X	0	0	0	%100
38	M35	Z	0	0	0	%100
39	M36	X	0	0	0	%100
40	M36	Z	0	0	0	%100
41	M37	X	0	0	0	%100
42	M37	Z	0	0	0	%100
43	M40	X	-6.118	-6.118	0	%100
44	M40	Z	-10.597	-10.597	0	%100
45	M41	X	-6.118	-6.118	0	%100
46	M41	Z	-10.597	-10.597	0	%100
47	M45	X	-14.69	-14.69	0	%100
48	M45	Z	-25.444	-25.444	0	%100
49	M46A	X	-11.222	-11.222	0	%100
50	M46A	Z	-19.437	-19.437	0	%100
51	M48	X	-11.82	-11.82	0	%100
52	M48	Z	-20.472	-20.472	0	%100
53	M50A	X	-14.69	-14.69	0	%100
54	M50A	Z	-25.444	-25.444	0	%100
55	M51C	X	-11.222	-11.222	0	%100
56	M51C	Z	-19.437	-19.437	0	%100

Member Distributed Loads (BLC 52 : Structure Wo (330 Deg)) (Continued)

	Member Label	Direction	Start Magnitude[lb/ft,...	End Magnitude[lb/ft,F...	Start Location[ft,%]	End Location[ft,%]
57	M53	X	-11.82	-11.82	0	%100
58	M53	Z	-20.472	-20.472	0	%100
59	M58A	X	-2.176	-2.176	0	%100
60	M58A	Z	-3.769	-3.769	0	%100
61	M59A	X	-5.524	-5.524	0	%100
62	M59A	Z	-9.567	-9.567	0	%100
63	M60	X	-5.524	-5.524	0	%100
64	M60	Z	-9.567	-9.567	0	%100
65	M61	X	-11.018	-11.018	0	%100
66	M61	Z	-19.083	-19.083	0	%100
67	M64	X	-6.118	-6.118	0	%100
68	M64	Z	-10.597	-10.597	0	%100
69	M65	X	0	0	0	%100
70	M65	Z	0	0	0	%100
71	M69	X	-3.673	-3.673	0	%100
72	M69	Z	-6.361	-6.361	0	%100
73	M70	X	-11.222	-11.222	0	%100
74	M70	Z	-19.437	-19.437	0	%100
75	M72	X	-11.82	-11.82	0	%100
76	M72	Z	-20.472	-20.472	0	%100
77	M74	X	-3.673	-3.673	0	%100
78	M74	Z	-6.361	-6.361	0	%100
79	M75	X	0	0	0	%100
80	M75	Z	0	0	0	%100
81	M77A	X	0	0	0	%100
82	M77A	Z	0	0	0	%100
83	M82	X	0	0	0	%100
84	M82	Z	0	0	0	%100
85	MP3C	X	-7.039	-7.039	0	%100
86	MP3C	Z	-12.192	-12.192	0	%100
87	MP4C	X	-5.815	-5.815	0	%100
88	MP4C	Z	-10.072	-10.072	0	%100
89	MP2C	X	-7.039	-7.039	0	%100
90	MP2C	Z	-12.192	-12.192	0	%100
91	MP1C	X	-7.039	-7.039	0	%100
92	MP1C	Z	-12.192	-12.192	0	%100
93	M91A	X	-5.746	-5.746	0	%100
94	M91A	Z	-9.952	-9.952	0	%100
95	MP3B	X	-7.039	-7.039	0	%100
96	MP3B	Z	-12.192	-12.192	0	%100
97	MP4B	X	-5.815	-5.815	0	%100
98	MP4B	Z	-10.072	-10.072	0	%100
99	MP2B	X	-7.039	-7.039	0	%100
100	MP2B	Z	-12.192	-12.192	0	%100
101	MP1B	X	-7.039	-7.039	0	%100
102	MP1B	Z	-12.192	-12.192	0	%100
103	M100	X	-5.279	-5.279	0	%100
104	M100	Z	-9.144	-9.144	0	%100
105	M105	X	0	0	0	%100
106	M105	Z	0	0	0	%100
107	M110	X	-5.279	-5.279	0	%100
108	M110	Z	-9.144	-9.144	0	%100

Member Distributed Loads (BLC 52 : Structure Wo (330 Deg)) (Continued)

	Member Label	Direction	Start Magnitude[lb/ft,...	End Magnitude[lb/ft,F...	Start Location[ft,%]	End Location[ft,%]
109	M121	X	0	0	0	%100
110	M121	Z	0	0	0	%100
111	M122	X	-6.181	-6.181	0	%100
112	M122	Z	-10.706	-10.706	0	%100
113	M123	X	-6.181	-6.181	0	%100
114	M123	Z	-10.706	-10.706	0	%100
115	M124	X	-7.477	-7.477	0	%100
116	M124	Z	-12.95	-12.95	0	%100
117	M125	X	-11.513	-11.513	0	%100
118	M125	Z	-19.941	-19.941	0	%100
119	M126	X	-7.477	-7.477	0	%100
120	M126	Z	-12.95	-12.95	0	%100

Member Distributed Loads (BLC 53 : Structure Wi (0 Deg))

	Member Label	Direction	Start Magnitude[lb/ft,...	End Magnitude[lb/ft,F...	Start Location[ft,%]	End Location[ft,%]
1	M1	X	0	0	0	%100
2	M1	Z	-4.431	-4.431	0	%100
3	M4	X	0	0	0	%100
4	M4	Z	0	0	0	%100
5	M10	X	0	0	0	%100
6	M10	Z	-3.637	-3.637	0	%100
7	MP3A	X	0	0	0	%100
8	MP3A	Z	-3.956	-3.956	0	%100
9	MP4A	X	0	0	0	%100
10	MP4A	Z	-3.577	-3.577	0	%100
11	MP2A	X	0	0	0	%100
12	MP2A	Z	-3.956	-3.956	0	%100
13	MP1A	X	0	0	0	%100
14	MP1A	Z	-3.956	-3.956	0	%100
15	M43	X	0	0	0	%100
16	M43	Z	-3.637	-3.637	0	%100
17	M46	X	0	0	0	%100
18	M46	Z	-5.681	-5.681	0	%100
19	M51B	X	0	0	0	%100
20	M51B	Z	-1.046	-1.046	0	%100
21	M52B	X	0	0	0	%100
22	M52B	Z	-1.046	-1.046	0	%100
23	M76	X	0	0	0	%100
24	M76	Z	0	0	0	%100
25	M77	X	0	0	0	%100
26	M77	Z	-1.418	-1.418	0	%100
27	M80	X	0	0	0	%100
28	M80	Z	-1.48	-1.48	0	%100
29	M84	X	0	0	0	%100
30	M84	Z	0	0	0	%100
31	M85	X	0	0	0	%100
32	M85	Z	-1.418	-1.418	0	%100
33	M91	X	0	0	0	%100
34	M91	Z	-1.48	-1.48	0	%100
35	M34	X	0	0	0	%100
36	M34	Z	-3.354	-3.354	0	%100

Member Distributed Loads (BLC 53 : Structure Wi (0 Deg)) (Continued)

	Member Label	Direction	Start Magnitude[lb/ft,...	End Magnitude[lb/ft,F...	Start Location[ft,%]	End Location[ft,%]
37	M35	X	0	0	0	%100
38	M35	Z	-.909	-.909	0	%100
39	M36	X	0	0	0	%100
40	M36	Z	-.909	-.909	0	%100
41	M37	X	0	0	0	%100
42	M37	Z	-1.42	-1.42	0	%100
43	M40	X	0	0	0	%100
44	M40	Z	-1.046	-1.046	0	%100
45	M41	X	0	0	0	%100
46	M41	Z	-4.184	-4.184	0	%100
47	M45	X	0	0	0	%100
48	M45	Z	-4.192	-4.192	0	%100
49	M46A	X	0	0	0	%100
50	M46A	Z	-1.418	-1.418	0	%100
51	M48	X	0	0	0	%100
52	M48	Z	-1.48	-1.48	0	%100
53	M50A	X	0	0	0	%100
54	M50A	Z	-4.192	-4.192	0	%100
55	M51C	X	0	0	0	%100
56	M51C	Z	-5.673	-5.673	0	%100
57	M53	X	0	0	0	%100
58	M53	Z	-5.92	-5.92	0	%100
59	M58A	X	0	0	0	%100
60	M58A	Z	-3.354	-3.354	0	%100
61	M59A	X	0	0	0	%100
62	M59A	Z	-.909	-.909	0	%100
63	M60	X	0	0	0	%100
64	M60	Z	-.909	-.909	0	%100
65	M61	X	0	0	0	%100
66	M61	Z	-1.42	-1.42	0	%100
67	M64	X	0	0	0	%100
68	M64	Z	-4.184	-4.184	0	%100
69	M65	X	0	0	0	%100
70	M65	Z	-1.046	-1.046	0	%100
71	M69	X	0	0	0	%100
72	M69	Z	-4.192	-4.192	0	%100
73	M70	X	0	0	0	%100
74	M70	Z	-5.673	-5.673	0	%100
75	M72	X	0	0	0	%100
76	M72	Z	-5.92	-5.92	0	%100
77	M74	X	0	0	0	%100
78	M74	Z	-4.192	-4.192	0	%100
79	M75	X	0	0	0	%100
80	M75	Z	-1.418	-1.418	0	%100
81	M77A	X	0	0	0	%100
82	M77A	Z	-1.48	-1.48	0	%100
83	M82	X	0	0	0	%100
84	M82	Z	-1.108	-1.108	0	%100
85	MP3C	X	0	0	0	%100
86	MP3C	Z	-3.956	-3.956	0	%100
87	MP4C	X	0	0	0	%100
88	MP4C	Z	-3.577	-3.577	0	%100

Member Distributed Loads (BLC 53 : Structure Wi (0 Deg)) (Continued)

	Member Label	Direction	Start Magnitude[lb/ft,...	End Magnitude[lb/ft,F...	Start Location[ft,%]	End Location[ft,%]
89	MP2C	X	0	0	0	%100
90	MP2C	Z	-3.956	-3.956	0	%100
91	MP1C	X	0	0	0	%100
92	MP1C	Z	-3.956	-3.956	0	%100
93	M91A	X	0	0	0	%100
94	M91A	Z	-1.108	-1.108	0	%100
95	MP3B	X	0	0	0	%100
96	MP3B	Z	-3.956	-3.956	0	%100
97	MP4B	X	0	0	0	%100
98	MP4B	Z	-3.577	-3.577	0	%100
99	MP2B	X	0	0	0	%100
100	MP2B	Z	-3.956	-3.956	0	%100
101	MP1B	X	0	0	0	%100
102	MP1B	Z	-3.956	-3.956	0	%100
103	M100	X	0	0	0	%100
104	M100	Z	-3.956	-3.956	0	%100
105	M105	X	0	0	0	%100
106	M105	Z	-.989	-.989	0	%100
107	M110	X	0	0	0	%100
108	M110	Z	-.989	-.989	0	%100
109	M121	X	0	0	0	%100
110	M121	Z	-.938	-.938	0	%100
111	M122	X	0	0	0	%100
112	M122	Z	-.938	-.938	0	%100
113	M123	X	0	0	0	%100
114	M123	Z	-3.752	-3.752	0	%100
115	M124	X	0	0	0	%100
116	M124	Z	-2.457	-2.457	0	%100
117	M125	X	0	0	0	%100
118	M125	Z	-4.622	-4.622	0	%100
119	M126	X	0	0	0	%100
120	M126	Z	-4.622	-4.622	0	%100

Member Distributed Loads (BLC 54 : Structure Wi (30 Deg))

	Member Label	Direction	Start Magnitude[lb/ft,...	End Magnitude[lb/ft,F...	Start Location[ft,%]	End Location[ft,%]
1	M1	X	1.662	1.662	0	%100
2	M1	Z	-2.878	-2.878	0	%100
3	M4	X	.559	.559	0	%100
4	M4	Z	-.968	-.968	0	%100
5	M10	X	1.364	1.364	0	%100
6	M10	Z	-2.362	-2.362	0	%100
7	MP3A	X	1.978	1.978	0	%100
8	MP3A	Z	-3.426	-3.426	0	%100
9	MP4A	X	1.788	1.788	0	%100
10	MP4A	Z	-3.098	-3.098	0	%100
11	MP2A	X	1.978	1.978	0	%100
12	MP2A	Z	-3.426	-3.426	0	%100
13	MP1A	X	1.978	1.978	0	%100
14	MP1A	Z	-3.426	-3.426	0	%100
15	M43	X	1.364	1.364	0	%100
16	M43	Z	-2.362	-2.362	0	%100

Member Distributed Loads (BLC 54 : Structure Wi (30 Deg)) (Continued)

	Member Label	Direction	Start Magnitude[lb/ft,...	End Magnitude[lb/ft,F...	Start Location[ft,%]	End Location[ft,%]
17	M46	X	2.13	2.13	0	%100
18	M46	Z	-3.69	-3.69	0	%100
19	M51B	X	1.569	1.569	0	%100
20	M51B	Z	-2.717	-2.717	0	%100
21	M52B	X	0	0	0	%100
22	M52B	Z	0	0	0	%100
23	M76	X	.699	.699	0	%100
24	M76	Z	-1.21	-1.21	0	%100
25	M77	X	2.127	2.127	0	%100
26	M77	Z	-3.685	-3.685	0	%100
27	M80	X	2.22	2.22	0	%100
28	M80	Z	-3.845	-3.845	0	%100
29	M84	X	.699	.699	0	%100
30	M84	Z	-1.21	-1.21	0	%100
31	M85	X	0	0	0	%100
32	M85	Z	0	0	0	%100
33	M91	X	0	0	0	%100
34	M91	Z	0	0	0	%100
35	M34	X	.559	.559	0	%100
36	M34	Z	-.968	-.968	0	%100
37	M35	X	1.364	1.364	0	%100
38	M35	Z	-2.362	-2.362	0	%100
39	M36	X	1.364	1.364	0	%100
40	M36	Z	-2.362	-2.362	0	%100
41	M37	X	2.13	2.13	0	%100
42	M37	Z	-3.69	-3.69	0	%100
43	M40	X	0	0	0	%100
44	M40	Z	0	0	0	%100
45	M41	X	1.569	1.569	0	%100
46	M41	Z	-2.717	-2.717	0	%100
47	M45	X	.699	.699	0	%100
48	M45	Z	-1.21	-1.21	0	%100
49	M46A	X	0	0	0	%100
50	M46A	Z	0	0	0	%100
51	M48	X	0	0	0	%100
52	M48	Z	0	0	0	%100
53	M50A	X	.699	.699	0	%100
54	M50A	Z	-1.21	-1.21	0	%100
55	M51C	X	2.127	2.127	0	%100
56	M51C	Z	-3.685	-3.685	0	%100
57	M53	X	2.22	2.22	0	%100
58	M53	Z	-3.845	-3.845	0	%100
59	M58A	X	2.236	2.236	0	%100
60	M58A	Z	-3.873	-3.873	0	%100
61	M59A	X	0	0	0	%100
62	M59A	Z	0	0	0	%100
63	M60	X	0	0	0	%100
64	M60	Z	0	0	0	%100
65	M61	X	0	0	0	%100
66	M61	Z	0	0	0	%100
67	M64	X	1.569	1.569	0	%100
68	M64	Z	-2.717	-2.717	0	%100

Member Distributed Loads (BLC 54 : Structure Wi (30 Deg)) (Continued)

	Member Label	Direction	Start Magnitude[lb/ft,...	End Magnitude[lb/ft,F...	Start Location[ft,%]	End Location[ft,%]
69	M65	X	1.569	1.569	0	%100
70	M65	Z	-2.717	-2.717	0	%100
71	M69	X	2.794	2.794	0	%100
72	M69	Z	-4.84	-4.84	0	%100
73	M70	X	2.127	2.127	0	%100
74	M70	Z	-3.685	-3.685	0	%100
75	M72	X	2.22	2.22	0	%100
76	M72	Z	-3.845	-3.845	0	%100
77	M74	X	2.794	2.794	0	%100
78	M74	Z	-4.84	-4.84	0	%100
79	M75	X	2.127	2.127	0	%100
80	M75	Z	-3.685	-3.685	0	%100
81	M77A	X	2.22	2.22	0	%100
82	M77A	Z	-3.845	-3.845	0	%100
83	M82	X	1.662	1.662	0	%100
84	M82	Z	-2.878	-2.878	0	%100
85	MP3C	X	1.978	1.978	0	%100
86	MP3C	Z	-3.426	-3.426	0	%100
87	MP4C	X	1.788	1.788	0	%100
88	MP4C	Z	-3.098	-3.098	0	%100
89	MP2C	X	1.978	1.978	0	%100
90	MP2C	Z	-3.426	-3.426	0	%100
91	MP1C	X	1.978	1.978	0	%100
92	MP1C	Z	-3.426	-3.426	0	%100
93	M91A	X	0	0	0	%100
94	M91A	Z	0	0	0	%100
95	MP3B	X	1.978	1.978	0	%100
96	MP3B	Z	-3.426	-3.426	0	%100
97	MP4B	X	1.788	1.788	0	%100
98	MP4B	Z	-3.098	-3.098	0	%100
99	MP2B	X	1.978	1.978	0	%100
100	MP2B	Z	-3.426	-3.426	0	%100
101	MP1B	X	1.978	1.978	0	%100
102	MP1B	Z	-3.426	-3.426	0	%100
103	M100	X	1.484	1.484	0	%100
104	M100	Z	-2.57	-2.57	0	%100
105	M105	X	1.484	1.484	0	%100
106	M105	Z	-2.57	-2.57	0	%100
107	M110	X	0	0	0	%100
108	M110	Z	0	0	0	%100
109	M121	X	1.407	1.407	0	%100
110	M121	Z	-2.437	-2.437	0	%100
111	M122	X	0	0	0	%100
112	M122	Z	0	0	0	%100
113	M123	X	1.407	1.407	0	%100
114	M123	Z	-2.437	-2.437	0	%100
115	M124	X	1.589	1.589	0	%100
116	M124	Z	-2.753	-2.753	0	%100
117	M125	X	1.589	1.589	0	%100
118	M125	Z	-2.753	-2.753	0	%100
119	M126	X	2.672	2.672	0	%100
120	M126	Z	-4.627	-4.627	0	%100

Member Distributed Loads (BLC 55 : Structure Wi (60 Deg))

	Member Label	Direction	Start Magnitude[lb/ft,...	End Magnitude[lb/ft,F...	Start Location[ft,%]	End Location[ft,%]
1	M1	X	.959	.959	0	%100
2	M1	Z	-.554	-.554	0	%100
3	M4	X	2.905	2.905	0	%100
4	M4	Z	-1.677	-1.677	0	%100
5	M10	X	.787	.787	0	%100
6	M10	Z	-.455	-.455	0	%100
7	MP3A	X	3.426	3.426	0	%100
8	MP3A	Z	-1.978	-1.978	0	%100
9	MP4A	X	3.098	3.098	0	%100
10	MP4A	Z	-1.788	-1.788	0	%100
11	MP2A	X	3.426	3.426	0	%100
12	MP2A	Z	-1.978	-1.978	0	%100
13	MP1A	X	3.426	3.426	0	%100
14	MP1A	Z	-1.978	-1.978	0	%100
15	M43	X	.787	.787	0	%100
16	M43	Z	-.455	-.455	0	%100
17	M46	X	1.23	1.23	0	%100
18	M46	Z	-.71	-.71	0	%100
19	M51B	X	3.623	3.623	0	%100
20	M51B	Z	-2.092	-2.092	0	%100
21	M52B	X	.906	.906	0	%100
22	M52B	Z	-.523	-.523	0	%100
23	M76	X	3.63	3.63	0	%100
24	M76	Z	-2.096	-2.096	0	%100
25	M77	X	4.913	4.913	0	%100
26	M77	Z	-2.837	-2.837	0	%100
27	M80	X	5.127	5.127	0	%100
28	M80	Z	-2.96	-2.96	0	%100
29	M84	X	3.63	3.63	0	%100
30	M84	Z	-2.096	-2.096	0	%100
31	M85	X	1.228	1.228	0	%100
32	M85	Z	-.709	-.709	0	%100
33	M91	X	1.282	1.282	0	%100
34	M91	Z	-.74	-.74	0	%100
35	M34	X	0	0	0	%100
36	M34	Z	0	0	0	%100
37	M35	X	3.149	3.149	0	%100
38	M35	Z	-1.818	-1.818	0	%100
39	M36	X	3.149	3.149	0	%100
40	M36	Z	-1.818	-1.818	0	%100
41	M37	X	4.92	4.92	0	%100
42	M37	Z	-2.84	-2.84	0	%100
43	M40	X	.906	.906	0	%100
44	M40	Z	-.523	-.523	0	%100
45	M41	X	.906	.906	0	%100
46	M41	Z	-.523	-.523	0	%100
47	M45	X	0	0	0	%100
48	M45	Z	0	0	0	%100
49	M46A	X	1.228	1.228	0	%100
50	M46A	Z	-.709	-.709	0	%100
51	M48	X	1.282	1.282	0	%100
52	M48	Z	-.74	-.74	0	%100

Member Distributed Loads (BLC 55 : Structure Wi (60 Deg)) (Continued)

	Member Label	Direction	Start Magnitude[lb/ft,...	End Magnitude[lb/ft,F...	Start Location[ft,%]	End Location[ft,%]
53	M50A	X	0	0	0	%100
54	M50A	Z	0	0	0	%100
55	M51C	X	1.228	1.228	0	%100
56	M51C	Z	-.709	-.709	0	%100
57	M53	X	1.282	1.282	0	%100
58	M53	Z	-.74	-.74	0	%100
59	M58A	X	2.905	2.905	0	%100
60	M58A	Z	-1.677	-1.677	0	%100
61	M59A	X	.787	.787	0	%100
62	M59A	Z	-.455	-.455	0	%100
63	M60	X	.787	.787	0	%100
64	M60	Z	-.455	-.455	0	%100
65	M61	X	1.23	1.23	0	%100
66	M61	Z	-.71	-.71	0	%100
67	M64	X	.906	.906	0	%100
68	M64	Z	-.523	-.523	0	%100
69	M65	X	3.623	3.623	0	%100
70	M65	Z	-2.092	-2.092	0	%100
71	M69	X	3.63	3.63	0	%100
72	M69	Z	-2.096	-2.096	0	%100
73	M70	X	1.228	1.228	0	%100
74	M70	Z	-.709	-.709	0	%100
75	M72	X	1.282	1.282	0	%100
76	M72	Z	-.74	-.74	0	%100
77	M74	X	3.63	3.63	0	%100
78	M74	Z	-2.096	-2.096	0	%100
79	M75	X	4.913	4.913	0	%100
80	M75	Z	-2.837	-2.837	0	%100
81	M77A	X	5.127	5.127	0	%100
82	M77A	Z	-2.96	-2.96	0	%100
83	M82	X	3.837	3.837	0	%100
84	M82	Z	-2.215	-2.215	0	%100
85	MP3C	X	3.426	3.426	0	%100
86	MP3C	Z	-1.978	-1.978	0	%100
87	MP4C	X	3.098	3.098	0	%100
88	MP4C	Z	-1.788	-1.788	0	%100
89	MP2C	X	3.426	3.426	0	%100
90	MP2C	Z	-1.978	-1.978	0	%100
91	MP1C	X	3.426	3.426	0	%100
92	MP1C	Z	-1.978	-1.978	0	%100
93	M91A	X	.959	.959	0	%100
94	M91A	Z	-.554	-.554	0	%100
95	MP3B	X	3.426	3.426	0	%100
96	MP3B	Z	-1.978	-1.978	0	%100
97	MP4B	X	3.098	3.098	0	%100
98	MP4B	Z	-1.788	-1.788	0	%100
99	MP2B	X	3.426	3.426	0	%100
100	MP2B	Z	-1.978	-1.978	0	%100
101	MP1B	X	3.426	3.426	0	%100
102	MP1B	Z	-1.978	-1.978	0	%100
103	M100	X	.857	.857	0	%100
104	M100	Z	-.495	-.495	0	%100

Member Distributed Loads (BLC 55 : Structure Wi (60 Deg)) (Continued)

	Member Label	Direction	Start Magnitude[lb/ft,...	End Magnitude[lb/ft,F...	Start Location[ft,%]	End Location[ft,%]
105	M105	X	3.426	3.426	0	%100
106	M105	Z	-1.978	-1.978	0	%100
107	M110	X	.857	.857	0	%100
108	M110	Z	-.495	-.495	0	%100
109	M121	X	3.249	3.249	0	%100
110	M121	Z	-1.876	-1.876	0	%100
111	M122	X	.812	.812	0	%100
112	M122	Z	-.469	-.469	0	%100
113	M123	X	.812	.812	0	%100
114	M123	Z	-.469	-.469	0	%100
115	M124	X	4.003	4.003	0	%100
116	M124	Z	-2.311	-2.311	0	%100
117	M125	X	2.128	2.128	0	%100
118	M125	Z	-1.229	-1.229	0	%100
119	M126	X	4.003	4.003	0	%100
120	M126	Z	-2.311	-2.311	0	%100

Member Distributed Loads (BLC 56 : Structure Wi (90 Deg))

	Member Label	Direction	Start Magnitude[lb/ft,...	End Magnitude[lb/ft,F...	Start Location[ft,%]	End Location[ft,%]
1	M1	X	0	0	0	%100
2	M1	Z	0	0	0	%100
3	M4	X	4.472	4.472	0	%100
4	M4	Z	0	0	0	%100
5	M10	X	0	0	0	%100
6	M10	Z	0	0	0	%100
7	MP3A	X	3.956	3.956	0	%100
8	MP3A	Z	0	0	0	%100
9	MP4A	X	3.577	3.577	0	%100
10	MP4A	Z	0	0	0	%100
11	MP2A	X	3.956	3.956	0	%100
12	MP2A	Z	0	0	0	%100
13	MP1A	X	3.956	3.956	0	%100
14	MP1A	Z	0	0	0	%100
15	M43	X	0	0	0	%100
16	M43	Z	0	0	0	%100
17	M46	X	0	0	0	%100
18	M46	Z	0	0	0	%100
19	M51B	X	3.138	3.138	0	%100
20	M51B	Z	0	0	0	%100
21	M52B	X	3.138	3.138	0	%100
22	M52B	Z	0	0	0	%100
23	M76	X	5.589	5.589	0	%100
24	M76	Z	0	0	0	%100
25	M77	X	4.255	4.255	0	%100
26	M77	Z	0	0	0	%100
27	M80	X	4.44	4.44	0	%100
28	M80	Z	0	0	0	%100
29	M84	X	5.589	5.589	0	%100
30	M84	Z	0	0	0	%100
31	M85	X	4.255	4.255	0	%100
32	M85	Z	0	0	0	%100

Member Distributed Loads (BLC 56 : Structure Wi (90 Deg)) (Continued)

	Member Label	Direction	Start Magnitude[lb/ft,...	End Magnitude[lb/ft,F...	Start Location[ft,%]	End Location[ft,%]
33	M91	X	4.44	4.44	0	%100
34	M91	Z	0	0	0	%100
35	M34	X	1.118	1.118	0	%100
36	M34	Z	0	0	0	%100
37	M35	X	2.727	2.727	0	%100
38	M35	Z	0	0	0	%100
39	M36	X	2.727	2.727	0	%100
40	M36	Z	0	0	0	%100
41	M37	X	4.261	4.261	0	%100
42	M37	Z	0	0	0	%100
43	M40	X	3.138	3.138	0	%100
44	M40	Z	0	0	0	%100
45	M41	X	0	0	0	%100
46	M41	Z	0	0	0	%100
47	M45	X	1.397	1.397	0	%100
48	M45	Z	0	0	0	%100
49	M46A	X	4.255	4.255	0	%100
50	M46A	Z	0	0	0	%100
51	M48	X	4.44	4.44	0	%100
52	M48	Z	0	0	0	%100
53	M50A	X	1.397	1.397	0	%100
54	M50A	Z	0	0	0	%100
55	M51C	X	0	0	0	%100
56	M51C	Z	0	0	0	%100
57	M53	X	0	0	0	%100
58	M53	Z	0	0	0	%100
59	M58A	X	1.118	1.118	0	%100
60	M58A	Z	0	0	0	%100
61	M59A	X	2.727	2.727	0	%100
62	M59A	Z	0	0	0	%100
63	M60	X	2.727	2.727	0	%100
64	M60	Z	0	0	0	%100
65	M61	X	4.261	4.261	0	%100
66	M61	Z	0	0	0	%100
67	M64	X	0	0	0	%100
68	M64	Z	0	0	0	%100
69	M65	X	3.138	3.138	0	%100
70	M65	Z	0	0	0	%100
71	M69	X	1.397	1.397	0	%100
72	M69	Z	0	0	0	%100
73	M70	X	0	0	0	%100
74	M70	Z	0	0	0	%100
75	M72	X	0	0	0	%100
76	M72	Z	0	0	0	%100
77	M74	X	1.397	1.397	0	%100
78	M74	Z	0	0	0	%100
79	M75	X	4.255	4.255	0	%100
80	M75	Z	0	0	0	%100
81	M77A	X	4.44	4.44	0	%100
82	M77A	Z	0	0	0	%100
83	M82	X	3.323	3.323	0	%100
84	M82	Z	0	0	0	%100

Member Distributed Loads (BLC 56 : Structure Wi (90 Deg)) (Continued)

	Member Label	Direction	Start Magnitude[lb/ft,...	End Magnitude[lb/ft,F...	Start Location[ft,%]	End Location[ft,%]
85	MP3C	X	3.956	3.956	0	%100
86	MP3C	Z	0	0	0	%100
87	MP4C	X	3.577	3.577	0	%100
88	MP4C	Z	0	0	0	%100
89	MP2C	X	3.956	3.956	0	%100
90	MP2C	Z	0	0	0	%100
91	MP1C	X	3.956	3.956	0	%100
92	MP1C	Z	0	0	0	%100
93	M91A	X	3.323	3.323	0	%100
94	M91A	Z	0	0	0	%100
95	MP3B	X	3.956	3.956	0	%100
96	MP3B	Z	0	0	0	%100
97	MP4B	X	3.577	3.577	0	%100
98	MP4B	Z	0	0	0	%100
99	MP2B	X	3.956	3.956	0	%100
100	MP2B	Z	0	0	0	%100
101	MP1B	X	3.956	3.956	0	%100
102	MP1B	Z	0	0	0	%100
103	M100	X	0	0	0	%100
104	M100	Z	0	0	0	%100
105	M105	X	2.967	2.967	0	%100
106	M105	Z	0	0	0	%100
107	M110	X	2.967	2.967	0	%100
108	M110	Z	0	0	0	%100
109	M121	X	2.814	2.814	0	%100
110	M121	Z	0	0	0	%100
111	M122	X	2.814	2.814	0	%100
112	M122	Z	0	0	0	%100
113	M123	X	0	0	0	%100
114	M123	Z	0	0	0	%100
115	M124	X	5.343	5.343	0	%100
116	M124	Z	0	0	0	%100
117	M125	X	3.179	3.179	0	%100
118	M125	Z	0	0	0	%100
119	M126	X	3.179	3.179	0	%100
120	M126	Z	0	0	0	%100

Member Distributed Loads (BLC 57 : Structure Wi (120 Deg))

	Member Label	Direction	Start Magnitude[lb/ft,...	End Magnitude[lb/ft,F...	Start Location[ft,%]	End Location[ft,%]
1	M1	X	.959	.959	0	%100
2	M1	Z	.554	.554	0	%100
3	M4	X	2.905	2.905	0	%100
4	M4	Z	1.677	1.677	0	%100
5	M10	X	.787	.787	0	%100
6	M10	Z	.455	.455	0	%100
7	MP3A	X	3.426	3.426	0	%100
8	MP3A	Z	1.978	1.978	0	%100
9	MP4A	X	3.098	3.098	0	%100
10	MP4A	Z	1.788	1.788	0	%100
11	MP2A	X	3.426	3.426	0	%100
12	MP2A	Z	1.978	1.978	0	%100

Member Distributed Loads (BLC 57 : Structure Wi (120 Deg)) (Continued)

	Member Label	Direction	Start Magnitude[lb/ft,...	End Magnitude[lb/ft,F...	Start Location[ft,%]	End Location[ft,%]
13	MP1A	X	3.426	3.426	0	%100
14	MP1A	Z	1.978	1.978	0	%100
15	M43	X	.787	.787	0	%100
16	M43	Z	.455	.455	0	%100
17	M46	X	1.23	1.23	0	%100
18	M46	Z	.71	.71	0	%100
19	M51B	X	.906	.906	0	%100
20	M51B	Z	.523	.523	0	%100
21	M52B	X	3.623	3.623	0	%100
22	M52B	Z	2.092	2.092	0	%100
23	M76	X	3.63	3.63	0	%100
24	M76	Z	2.096	2.096	0	%100
25	M77	X	1.228	1.228	0	%100
26	M77	Z	.709	.709	0	%100
27	M80	X	1.282	1.282	0	%100
28	M80	Z	.74	.74	0	%100
29	M84	X	3.63	3.63	0	%100
30	M84	Z	2.096	2.096	0	%100
31	M85	X	4.913	4.913	0	%100
32	M85	Z	2.837	2.837	0	%100
33	M91	X	5.127	5.127	0	%100
34	M91	Z	2.96	2.96	0	%100
35	M34	X	2.905	2.905	0	%100
36	M34	Z	1.677	1.677	0	%100
37	M35	X	.787	.787	0	%100
38	M35	Z	.455	.455	0	%100
39	M36	X	.787	.787	0	%100
40	M36	Z	.455	.455	0	%100
41	M37	X	1.23	1.23	0	%100
42	M37	Z	.71	.71	0	%100
43	M40	X	3.623	3.623	0	%100
44	M40	Z	2.092	2.092	0	%100
45	M41	X	.906	.906	0	%100
46	M41	Z	.523	.523	0	%100
47	M45	X	3.63	3.63	0	%100
48	M45	Z	2.096	2.096	0	%100
49	M46A	X	4.913	4.913	0	%100
50	M46A	Z	2.837	2.837	0	%100
51	M48	X	5.127	5.127	0	%100
52	M48	Z	2.96	2.96	0	%100
53	M50A	X	3.63	3.63	0	%100
54	M50A	Z	2.096	2.096	0	%100
55	M51C	X	1.228	1.228	0	%100
56	M51C	Z	.709	.709	0	%100
57	M53	X	1.282	1.282	0	%100
58	M53	Z	.74	.74	0	%100
59	M58A	X	0	0	0	%100
60	M58A	Z	0	0	0	%100
61	M59A	X	3.149	3.149	0	%100
62	M59A	Z	1.818	1.818	0	%100
63	M60	X	3.149	3.149	0	%100
64	M60	Z	1.818	1.818	0	%100

Member Distributed Loads (BLC 57 : Structure Wi (120 Deg)) (Continued)

	Member Label	Direction	Start Magnitude[lb/ft,...	End Magnitude[lb/ft,F...	Start Location[ft,%]	End Location[ft,%]
65	M61	X	4.92	4.92	0	%100
66	M61	Z	2.84	2.84	0	%100
67	M64	X	.906	.906	0	%100
68	M64	Z	.523	.523	0	%100
69	M65	X	.906	.906	0	%100
70	M65	Z	.523	.523	0	%100
71	M69	X	0	0	0	%100
72	M69	Z	0	0	0	%100
73	M70	X	1.228	1.228	0	%100
74	M70	Z	.709	.709	0	%100
75	M72	X	1.282	1.282	0	%100
76	M72	Z	.74	.74	0	%100
77	M74	X	0	0	0	%100
78	M74	Z	0	0	0	%100
79	M75	X	1.228	1.228	0	%100
80	M75	Z	.709	.709	0	%100
81	M77A	X	1.282	1.282	0	%100
82	M77A	Z	.74	.74	0	%100
83	M82	X	.959	.959	0	%100
84	M82	Z	.554	.554	0	%100
85	MP3C	X	3.426	3.426	0	%100
86	MP3C	Z	1.978	1.978	0	%100
87	MP4C	X	3.098	3.098	0	%100
88	MP4C	Z	1.788	1.788	0	%100
89	MP2C	X	3.426	3.426	0	%100
90	MP2C	Z	1.978	1.978	0	%100
91	MP1C	X	3.426	3.426	0	%100
92	MP1C	Z	1.978	1.978	0	%100
93	M91A	X	3.837	3.837	0	%100
94	M91A	Z	2.215	2.215	0	%100
95	MP3B	X	3.426	3.426	0	%100
96	MP3B	Z	1.978	1.978	0	%100
97	MP4B	X	3.098	3.098	0	%100
98	MP4B	Z	1.788	1.788	0	%100
99	MP2B	X	3.426	3.426	0	%100
100	MP2B	Z	1.978	1.978	0	%100
101	MP1B	X	3.426	3.426	0	%100
102	MP1B	Z	1.978	1.978	0	%100
103	M100	X	.857	.857	0	%100
104	M100	Z	.495	.495	0	%100
105	M105	X	.857	.857	0	%100
106	M105	Z	.495	.495	0	%100
107	M110	X	3.426	3.426	0	%100
108	M110	Z	1.978	1.978	0	%100
109	M121	X	.812	.812	0	%100
110	M121	Z	.469	.469	0	%100
111	M122	X	3.249	3.249	0	%100
112	M122	Z	1.876	1.876	0	%100
113	M123	X	.812	.812	0	%100
114	M123	Z	.469	.469	0	%100
115	M124	X	4.003	4.003	0	%100
116	M124	Z	2.311	2.311	0	%100

Member Distributed Loads (BLC 57 : Structure Wi (120 Deg)) (Continued)

	Member Label	Direction	Start Magnitude[lb/ft,...	End Magnitude[lb/ft,F...	Start Location[ft,%]	End Location[ft,%]
117	M125	X	4.003	4.003	0	%100
118	M125	Z	2.311	2.311	0	%100
119	M126	X	2.128	2.128	0	%100
120	M126	Z	1.229	1.229	0	%100

Member Distributed Loads (BLC 58 : Structure Wi (150 Deg))

	Member Label	Direction	Start Magnitude[lb/ft,...	End Magnitude[lb/ft,F...	Start Location[ft,%]	End Location[ft,%]
1	M1	X	1.662	1.662	0	%100
2	M1	Z	2.878	2.878	0	%100
3	M4	X	.559	.559	0	%100
4	M4	Z	.968	.968	0	%100
5	M10	X	1.364	1.364	0	%100
6	M10	Z	2.362	2.362	0	%100
7	MP3A	X	1.978	1.978	0	%100
8	MP3A	Z	3.426	3.426	0	%100
9	MP4A	X	1.788	1.788	0	%100
10	MP4A	Z	3.098	3.098	0	%100
11	MP2A	X	1.978	1.978	0	%100
12	MP2A	Z	3.426	3.426	0	%100
13	MP1A	X	1.978	1.978	0	%100
14	MP1A	Z	3.426	3.426	0	%100
15	M43	X	1.364	1.364	0	%100
16	M43	Z	2.362	2.362	0	%100
17	M46	X	2.13	2.13	0	%100
18	M46	Z	3.69	3.69	0	%100
19	M51B	X	0	0	0	%100
20	M51B	Z	0	0	0	%100
21	M52B	X	1.569	1.569	0	%100
22	M52B	Z	2.717	2.717	0	%100
23	M76	X	.699	.699	0	%100
24	M76	Z	1.21	1.21	0	%100
25	M77	X	0	0	0	%100
26	M77	Z	0	0	0	%100
27	M80	X	0	0	0	%100
28	M80	Z	0	0	0	%100
29	M84	X	.699	.699	0	%100
30	M84	Z	1.21	1.21	0	%100
31	M85	X	2.127	2.127	0	%100
32	M85	Z	3.685	3.685	0	%100
33	M91	X	2.22	2.22	0	%100
34	M91	Z	3.845	3.845	0	%100
35	M34	X	2.236	2.236	0	%100
36	M34	Z	3.873	3.873	0	%100
37	M35	X	0	0	0	%100
38	M35	Z	0	0	0	%100
39	M36	X	0	0	0	%100
40	M36	Z	0	0	0	%100
41	M37	X	0	0	0	%100
42	M37	Z	0	0	0	%100
43	M40	X	1.569	1.569	0	%100
44	M40	Z	2.717	2.717	0	%100

Member Distributed Loads (BLC 58 : Structure Wi (150 Deg)) (Continued)

	Member Label	Direction	Start Magnitude[lb/ft,...	End Magnitude[lb/ft,F...	Start Location[ft,%]	End Location[ft,%]
45	M41	X	1.569	1.569	0	%100
46	M41	Z	2.717	2.717	0	%100
47	M45	X	2.794	2.794	0	%100
48	M45	Z	4.84	4.84	0	%100
49	M46A	X	2.127	2.127	0	%100
50	M46A	Z	3.685	3.685	0	%100
51	M48	X	2.22	2.22	0	%100
52	M48	Z	3.845	3.845	0	%100
53	M50A	X	2.794	2.794	0	%100
54	M50A	Z	4.84	4.84	0	%100
55	M51C	X	2.127	2.127	0	%100
56	M51C	Z	3.685	3.685	0	%100
57	M53	X	2.22	2.22	0	%100
58	M53	Z	3.845	3.845	0	%100
59	M58A	X	.559	.559	0	%100
60	M58A	Z	.968	.968	0	%100
61	M59A	X	1.364	1.364	0	%100
62	M59A	Z	2.362	2.362	0	%100
63	M60	X	1.364	1.364	0	%100
64	M60	Z	2.362	2.362	0	%100
65	M61	X	2.13	2.13	0	%100
66	M61	Z	3.69	3.69	0	%100
67	M64	X	1.569	1.569	0	%100
68	M64	Z	2.717	2.717	0	%100
69	M65	X	0	0	0	%100
70	M65	Z	0	0	0	%100
71	M69	X	.699	.699	0	%100
72	M69	Z	1.21	1.21	0	%100
73	M70	X	2.127	2.127	0	%100
74	M70	Z	3.685	3.685	0	%100
75	M72	X	2.22	2.22	0	%100
76	M72	Z	3.845	3.845	0	%100
77	M74	X	.699	.699	0	%100
78	M74	Z	1.21	1.21	0	%100
79	M75	X	0	0	0	%100
80	M75	Z	0	0	0	%100
81	M77A	X	0	0	0	%100
82	M77A	Z	0	0	0	%100
83	M82	X	0	0	0	%100
84	M82	Z	0	0	0	%100
85	MP3C	X	1.978	1.978	0	%100
86	MP3C	Z	3.426	3.426	0	%100
87	MP4C	X	1.788	1.788	0	%100
88	MP4C	Z	3.098	3.098	0	%100
89	MP2C	X	1.978	1.978	0	%100
90	MP2C	Z	3.426	3.426	0	%100
91	MP1C	X	1.978	1.978	0	%100
92	MP1C	Z	3.426	3.426	0	%100
93	M91A	X	1.662	1.662	0	%100
94	M91A	Z	2.878	2.878	0	%100
95	MP3B	X	1.978	1.978	0	%100
96	MP3B	Z	3.426	3.426	0	%100

Member Distributed Loads (BLC 58 : Structure Wi (150 Deg)) (Continued)

	Member Label	Direction	Start Magnitude[lb/ft,...	End Magnitude[lb/ft,F...	Start Location[ft,%]	End Location[ft,%]
97	MP4B	X	1.788	1.788	0	%100
98	MP4B	Z	3.098	3.098	0	%100
99	MP2B	X	1.978	1.978	0	%100
100	MP2B	Z	3.426	3.426	0	%100
101	MP1B	X	1.978	1.978	0	%100
102	MP1B	Z	3.426	3.426	0	%100
103	M100	X	1.484	1.484	0	%100
104	M100	Z	2.57	2.57	0	%100
105	M105	X	0	0	0	%100
106	M105	Z	0	0	0	%100
107	M110	X	1.484	1.484	0	%100
108	M110	Z	2.57	2.57	0	%100
109	M121	X	0	0	0	%100
110	M121	Z	0	0	0	%100
111	M122	X	1.407	1.407	0	%100
112	M122	Z	2.437	2.437	0	%100
113	M123	X	1.407	1.407	0	%100
114	M123	Z	2.437	2.437	0	%100
115	M124	X	1.589	1.589	0	%100
116	M124	Z	2.753	2.753	0	%100
117	M125	X	2.672	2.672	0	%100
118	M125	Z	4.627	4.627	0	%100
119	M126	X	1.589	1.589	0	%100
120	M126	Z	2.753	2.753	0	%100

Member Distributed Loads (BLC 59 : Structure Wi (180 Deg))

	Member Label	Direction	Start Magnitude[lb/ft,...	End Magnitude[lb/ft,F...	Start Location[ft,%]	End Location[ft,%]
1	M1	X	0	0	0	%100
2	M1	Z	4.431	4.431	0	%100
3	M4	X	0	0	0	%100
4	M4	Z	0	0	0	%100
5	M10	X	0	0	0	%100
6	M10	Z	3.637	3.637	0	%100
7	MP3A	X	0	0	0	%100
8	MP3A	Z	3.956	3.956	0	%100
9	MP4A	X	0	0	0	%100
10	MP4A	Z	3.577	3.577	0	%100
11	MP2A	X	0	0	0	%100
12	MP2A	Z	3.956	3.956	0	%100
13	MP1A	X	0	0	0	%100
14	MP1A	Z	3.956	3.956	0	%100
15	M43	X	0	0	0	%100
16	M43	Z	3.637	3.637	0	%100
17	M46	X	0	0	0	%100
18	M46	Z	5.681	5.681	0	%100
19	M51B	X	0	0	0	%100
20	M51B	Z	1.046	1.046	0	%100
21	M52B	X	0	0	0	%100
22	M52B	Z	1.046	1.046	0	%100
23	M76	X	0	0	0	%100
24	M76	Z	0	0	0	%100

Member Distributed Loads (BLC 59 : Structure Wi (180 Deg)) (Continued)

	Member Label	Direction	Start Magnitude[lb/ft,...	End Magnitude[lb/ft,F...	Start Location[ft,%]	End Location[ft,%]
25	M77	X	0	0	0	%100
26	M77	Z	1.418	1.418	0	%100
27	M80	X	0	0	0	%100
28	M80	Z	1.48	1.48	0	%100
29	M84	X	0	0	0	%100
30	M84	Z	0	0	0	%100
31	M85	X	0	0	0	%100
32	M85	Z	1.418	1.418	0	%100
33	M91	X	0	0	0	%100
34	M91	Z	1.48	1.48	0	%100
35	M34	X	0	0	0	%100
36	M34	Z	3.354	3.354	0	%100
37	M35	X	0	0	0	%100
38	M35	Z	.909	.909	0	%100
39	M36	X	0	0	0	%100
40	M36	Z	.909	.909	0	%100
41	M37	X	0	0	0	%100
42	M37	Z	1.42	1.42	0	%100
43	M40	X	0	0	0	%100
44	M40	Z	1.046	1.046	0	%100
45	M41	X	0	0	0	%100
46	M41	Z	4.184	4.184	0	%100
47	M45	X	0	0	0	%100
48	M45	Z	4.192	4.192	0	%100
49	M46A	X	0	0	0	%100
50	M46A	Z	1.418	1.418	0	%100
51	M48	X	0	0	0	%100
52	M48	Z	1.48	1.48	0	%100
53	M50A	X	0	0	0	%100
54	M50A	Z	4.192	4.192	0	%100
55	M51C	X	0	0	0	%100
56	M51C	Z	5.673	5.673	0	%100
57	M53	X	0	0	0	%100
58	M53	Z	5.92	5.92	0	%100
59	M58A	X	0	0	0	%100
60	M58A	Z	3.354	3.354	0	%100
61	M59A	X	0	0	0	%100
62	M59A	Z	.909	.909	0	%100
63	M60	X	0	0	0	%100
64	M60	Z	.909	.909	0	%100
65	M61	X	0	0	0	%100
66	M61	Z	1.42	1.42	0	%100
67	M64	X	0	0	0	%100
68	M64	Z	4.184	4.184	0	%100
69	M65	X	0	0	0	%100
70	M65	Z	1.046	1.046	0	%100
71	M69	X	0	0	0	%100
72	M69	Z	4.192	4.192	0	%100
73	M70	X	0	0	0	%100
74	M70	Z	5.673	5.673	0	%100
75	M72	X	0	0	0	%100
76	M72	Z	5.92	5.92	0	%100

Member Distributed Loads (BLC 59 : Structure Wi (180 Deg)) (Continued)

	Member Label	Direction	Start Magnitude[lb/ft,...	End Magnitude[lb/ft,F...	Start Location[ft,%]	End Location[ft,%]
77	M74	X	0	0	0	%100
78	M74	Z	4.192	4.192	0	%100
79	M75	X	0	0	0	%100
80	M75	Z	1.418	1.418	0	%100
81	M77A	X	0	0	0	%100
82	M77A	Z	1.48	1.48	0	%100
83	M82	X	0	0	0	%100
84	M82	Z	1.108	1.108	0	%100
85	MP3C	X	0	0	0	%100
86	MP3C	Z	3.956	3.956	0	%100
87	MP4C	X	0	0	0	%100
88	MP4C	Z	3.577	3.577	0	%100
89	MP2C	X	0	0	0	%100
90	MP2C	Z	3.956	3.956	0	%100
91	MP1C	X	0	0	0	%100
92	MP1C	Z	3.956	3.956	0	%100
93	M91A	X	0	0	0	%100
94	M91A	Z	1.108	1.108	0	%100
95	MP3B	X	0	0	0	%100
96	MP3B	Z	3.956	3.956	0	%100
97	MP4B	X	0	0	0	%100
98	MP4B	Z	3.577	3.577	0	%100
99	MP2B	X	0	0	0	%100
100	MP2B	Z	3.956	3.956	0	%100
101	MP1B	X	0	0	0	%100
102	MP1B	Z	3.956	3.956	0	%100
103	M100	X	0	0	0	%100
104	M100	Z	3.956	3.956	0	%100
105	M105	X	0	0	0	%100
106	M105	Z	.989	.989	0	%100
107	M110	X	0	0	0	%100
108	M110	Z	.989	.989	0	%100
109	M121	X	0	0	0	%100
110	M121	Z	.938	.938	0	%100
111	M122	X	0	0	0	%100
112	M122	Z	.938	.938	0	%100
113	M123	X	0	0	0	%100
114	M123	Z	3.752	3.752	0	%100
115	M124	X	0	0	0	%100
116	M124	Z	2.457	2.457	0	%100
117	M125	X	0	0	0	%100
118	M125	Z	4.622	4.622	0	%100
119	M126	X	0	0	0	%100
120	M126	Z	4.622	4.622	0	%100

Member Distributed Loads (BLC 60 : Structure Wi (210 Deg))

	Member Label	Direction	Start Magnitude[lb/ft,...	End Magnitude[lb/ft,F...	Start Location[ft,%]	End Location[ft,%]
1	M1	X	-1.662	-1.662	0	%100
2	M1	Z	2.878	2.878	0	%100
3	M4	X	-.559	-.559	0	%100
4	M4	Z	.968	.968	0	%100

Member Distributed Loads (BLC 60 : Structure Wi (210 Deg)) (Continued)

	Member Label	Direction	Start Magnitude[lb/ft,...	End Magnitude[lb/ft,F...	Start Location[ft,%]	End Location[ft,%]
5	M10	X	-1.364	-1.364	0	%100
6	M10	Z	2.362	2.362	0	%100
7	MP3A	X	-1.978	-1.978	0	%100
8	MP3A	Z	3.426	3.426	0	%100
9	MP4A	X	-1.788	-1.788	0	%100
10	MP4A	Z	3.098	3.098	0	%100
11	MP2A	X	-1.978	-1.978	0	%100
12	MP2A	Z	3.426	3.426	0	%100
13	MP1A	X	-1.978	-1.978	0	%100
14	MP1A	Z	3.426	3.426	0	%100
15	M43	X	-1.364	-1.364	0	%100
16	M43	Z	2.362	2.362	0	%100
17	M46	X	-2.13	-2.13	0	%100
18	M46	Z	3.69	3.69	0	%100
19	M51B	X	-1.569	-1.569	0	%100
20	M51B	Z	2.717	2.717	0	%100
21	M52B	X	0	0	0	%100
22	M52B	Z	0	0	0	%100
23	M76	X	-.699	-.699	0	%100
24	M76	Z	1.21	1.21	0	%100
25	M77	X	-2.127	-2.127	0	%100
26	M77	Z	3.685	3.685	0	%100
27	M80	X	-2.22	-2.22	0	%100
28	M80	Z	3.845	3.845	0	%100
29	M84	X	-.699	-.699	0	%100
30	M84	Z	1.21	1.21	0	%100
31	M85	X	0	0	0	%100
32	M85	Z	0	0	0	%100
33	M91	X	0	0	0	%100
34	M91	Z	0	0	0	%100
35	M34	X	-.559	-.559	0	%100
36	M34	Z	.968	.968	0	%100
37	M35	X	-1.364	-1.364	0	%100
38	M35	Z	2.362	2.362	0	%100
39	M36	X	-1.364	-1.364	0	%100
40	M36	Z	2.362	2.362	0	%100
41	M37	X	-2.13	-2.13	0	%100
42	M37	Z	3.69	3.69	0	%100
43	M40	X	0	0	0	%100
44	M40	Z	0	0	0	%100
45	M41	X	-1.569	-1.569	0	%100
46	M41	Z	2.717	2.717	0	%100
47	M45	X	-.699	-.699	0	%100
48	M45	Z	1.21	1.21	0	%100
49	M46A	X	0	0	0	%100
50	M46A	Z	0	0	0	%100
51	M48	X	0	0	0	%100
52	M48	Z	0	0	0	%100
53	M50A	X	-.699	-.699	0	%100
54	M50A	Z	1.21	1.21	0	%100
55	M51C	X	-2.127	-2.127	0	%100
56	M51C	Z	3.685	3.685	0	%100

Member Distributed Loads (BLC 60 : Structure Wi (210 Deg)) (Continued)

	Member Label	Direction	Start Magnitude[lb/ft,...	End Magnitude[lb/ft,F...	Start Location[ft,%]	End Location[ft,%]
57	M53	X	-2.22	-2.22	0	%100
58	M53	Z	3.845	3.845	0	%100
59	M58A	X	-2.236	-2.236	0	%100
60	M58A	Z	3.873	3.873	0	%100
61	M59A	X	0	0	0	%100
62	M59A	Z	0	0	0	%100
63	M60	X	0	0	0	%100
64	M60	Z	0	0	0	%100
65	M61	X	0	0	0	%100
66	M61	Z	0	0	0	%100
67	M64	X	-1.569	-1.569	0	%100
68	M64	Z	2.717	2.717	0	%100
69	M65	X	-1.569	-1.569	0	%100
70	M65	Z	2.717	2.717	0	%100
71	M69	X	-2.794	-2.794	0	%100
72	M69	Z	4.84	4.84	0	%100
73	M70	X	-2.127	-2.127	0	%100
74	M70	Z	3.685	3.685	0	%100
75	M72	X	-2.22	-2.22	0	%100
76	M72	Z	3.845	3.845	0	%100
77	M74	X	-2.794	-2.794	0	%100
78	M74	Z	4.84	4.84	0	%100
79	M75	X	-2.127	-2.127	0	%100
80	M75	Z	3.685	3.685	0	%100
81	M77A	X	-2.22	-2.22	0	%100
82	M77A	Z	3.845	3.845	0	%100
83	M82	X	-1.662	-1.662	0	%100
84	M82	Z	2.878	2.878	0	%100
85	MP3C	X	-1.978	-1.978	0	%100
86	MP3C	Z	3.426	3.426	0	%100
87	MP4C	X	-1.788	-1.788	0	%100
88	MP4C	Z	3.098	3.098	0	%100
89	MP2C	X	-1.978	-1.978	0	%100
90	MP2C	Z	3.426	3.426	0	%100
91	MP1C	X	-1.978	-1.978	0	%100
92	MP1C	Z	3.426	3.426	0	%100
93	M91A	X	0	0	0	%100
94	M91A	Z	0	0	0	%100
95	MP3B	X	-1.978	-1.978	0	%100
96	MP3B	Z	3.426	3.426	0	%100
97	MP4B	X	-1.788	-1.788	0	%100
98	MP4B	Z	3.098	3.098	0	%100
99	MP2B	X	-1.978	-1.978	0	%100
100	MP2B	Z	3.426	3.426	0	%100
101	MP1B	X	-1.978	-1.978	0	%100
102	MP1B	Z	3.426	3.426	0	%100
103	M100	X	-1.484	-1.484	0	%100
104	M100	Z	2.57	2.57	0	%100
105	M105	X	-1.484	-1.484	0	%100
106	M105	Z	2.57	2.57	0	%100
107	M110	X	0	0	0	%100
108	M110	Z	0	0	0	%100

Member Distributed Loads (BLC 60 : Structure Wi (210 Deg)) (Continued)

	Member Label	Direction	Start Magnitude[lb/ft,...	End Magnitude[lb/ft,F...	Start Location[ft,%]	End Location[ft,%]
109	M121	X	-1.407	-1.407	0	%100
110	M121	Z	2.437	2.437	0	%100
111	M122	X	0	0	0	%100
112	M122	Z	0	0	0	%100
113	M123	X	-1.407	-1.407	0	%100
114	M123	Z	2.437	2.437	0	%100
115	M124	X	-1.589	-1.589	0	%100
116	M124	Z	2.753	2.753	0	%100
117	M125	X	-1.589	-1.589	0	%100
118	M125	Z	2.753	2.753	0	%100
119	M126	X	-2.672	-2.672	0	%100
120	M126	Z	4.627	4.627	0	%100

Member Distributed Loads (BLC 61 : Structure Wi (240 Deg))

	Member Label	Direction	Start Magnitude[lb/ft,...	End Magnitude[lb/ft,F...	Start Location[ft,%]	End Location[ft,%]
1	M1	X	-.959	-.959	0	%100
2	M1	Z	.554	.554	0	%100
3	M4	X	-2.905	-2.905	0	%100
4	M4	Z	1.677	1.677	0	%100
5	M10	X	-.787	-.787	0	%100
6	M10	Z	.455	.455	0	%100
7	MP3A	X	-3.426	-3.426	0	%100
8	MP3A	Z	1.978	1.978	0	%100
9	MP4A	X	-3.098	-3.098	0	%100
10	MP4A	Z	1.788	1.788	0	%100
11	MP2A	X	-3.426	-3.426	0	%100
12	MP2A	Z	1.978	1.978	0	%100
13	MP1A	X	-3.426	-3.426	0	%100
14	MP1A	Z	1.978	1.978	0	%100
15	M43	X	-.787	-.787	0	%100
16	M43	Z	.455	.455	0	%100
17	M46	X	-1.23	-1.23	0	%100
18	M46	Z	.71	.71	0	%100
19	M51B	X	-3.623	-3.623	0	%100
20	M51B	Z	2.092	2.092	0	%100
21	M52B	X	-.906	-.906	0	%100
22	M52B	Z	.523	.523	0	%100
23	M76	X	-3.63	-3.63	0	%100
24	M76	Z	2.096	2.096	0	%100
25	M77	X	-4.913	-4.913	0	%100
26	M77	Z	2.837	2.837	0	%100
27	M80	X	-5.127	-5.127	0	%100
28	M80	Z	2.96	2.96	0	%100
29	M84	X	-3.63	-3.63	0	%100
30	M84	Z	2.096	2.096	0	%100
31	M85	X	-1.228	-1.228	0	%100
32	M85	Z	.709	.709	0	%100
33	M91	X	-1.282	-1.282	0	%100
34	M91	Z	.74	.74	0	%100
35	M34	X	0	0	0	%100
36	M34	Z	0	0	0	%100

Member Distributed Loads (BLC 61 : Structure Wi (240 Deg)) (Continued)

	Member Label	Direction	Start Magnitude[lb/ft,...	End Magnitude[lb/ft,F...	Start Location[ft,%]	End Location[ft,%]
37	M35	X	-3.149	-3.149	0	%100
38	M35	Z	1.818	1.818	0	%100
39	M36	X	-3.149	-3.149	0	%100
40	M36	Z	1.818	1.818	0	%100
41	M37	X	-4.92	-4.92	0	%100
42	M37	Z	2.84	2.84	0	%100
43	M40	X	-.906	-.906	0	%100
44	M40	Z	.523	.523	0	%100
45	M41	X	-.906	-.906	0	%100
46	M41	Z	.523	.523	0	%100
47	M45	X	0	0	0	%100
48	M45	Z	0	0	0	%100
49	M46A	X	-1.228	-1.228	0	%100
50	M46A	Z	.709	.709	0	%100
51	M48	X	-1.282	-1.282	0	%100
52	M48	Z	.74	.74	0	%100
53	M50A	X	0	0	0	%100
54	M50A	Z	0	0	0	%100
55	M51C	X	-1.228	-1.228	0	%100
56	M51C	Z	.709	.709	0	%100
57	M53	X	-1.282	-1.282	0	%100
58	M53	Z	.74	.74	0	%100
59	M58A	X	-2.905	-2.905	0	%100
60	M58A	Z	1.677	1.677	0	%100
61	M59A	X	-.787	-.787	0	%100
62	M59A	Z	.455	.455	0	%100
63	M60	X	-.787	-.787	0	%100
64	M60	Z	.455	.455	0	%100
65	M61	X	-1.23	-1.23	0	%100
66	M61	Z	.71	.71	0	%100
67	M64	X	-.906	-.906	0	%100
68	M64	Z	.523	.523	0	%100
69	M65	X	-3.623	-3.623	0	%100
70	M65	Z	2.092	2.092	0	%100
71	M69	X	-3.63	-3.63	0	%100
72	M69	Z	2.096	2.096	0	%100
73	M70	X	-1.228	-1.228	0	%100
74	M70	Z	.709	.709	0	%100
75	M72	X	-1.282	-1.282	0	%100
76	M72	Z	.74	.74	0	%100
77	M74	X	-3.63	-3.63	0	%100
78	M74	Z	2.096	2.096	0	%100
79	M75	X	-4.913	-4.913	0	%100
80	M75	Z	2.837	2.837	0	%100
81	M77A	X	-5.127	-5.127	0	%100
82	M77A	Z	2.96	2.96	0	%100
83	M82	X	-3.837	-3.837	0	%100
84	M82	Z	2.215	2.215	0	%100
85	MP3C	X	-3.426	-3.426	0	%100
86	MP3C	Z	1.978	1.978	0	%100
87	MP4C	X	-3.098	-3.098	0	%100
88	MP4C	Z	1.788	1.788	0	%100

Member Distributed Loads (BLC 61 : Structure Wi (240 Deg)) (Continued)

	Member Label	Direction	Start Magnitude[lb/ft,...	End Magnitude[lb/ft,F...	Start Location[ft,%]	End Location[ft,%]
89	MP2C	X	-3.426	-3.426	0	%100
90	MP2C	Z	1.978	1.978	0	%100
91	MP1C	X	-3.426	-3.426	0	%100
92	MP1C	Z	1.978	1.978	0	%100
93	M91A	X	-.959	-.959	0	%100
94	M91A	Z	.554	.554	0	%100
95	MP3B	X	-3.426	-3.426	0	%100
96	MP3B	Z	1.978	1.978	0	%100
97	MP4B	X	-3.098	-3.098	0	%100
98	MP4B	Z	1.788	1.788	0	%100
99	MP2B	X	-3.426	-3.426	0	%100
100	MP2B	Z	1.978	1.978	0	%100
101	MP1B	X	-3.426	-3.426	0	%100
102	MP1B	Z	1.978	1.978	0	%100
103	M100	X	-.857	-.857	0	%100
104	M100	Z	.495	.495	0	%100
105	M105	X	-3.426	-3.426	0	%100
106	M105	Z	1.978	1.978	0	%100
107	M110	X	-.857	-.857	0	%100
108	M110	Z	.495	.495	0	%100
109	M121	X	-3.249	-3.249	0	%100
110	M121	Z	1.876	1.876	0	%100
111	M122	X	-.812	-.812	0	%100
112	M122	Z	.469	.469	0	%100
113	M123	X	-.812	-.812	0	%100
114	M123	Z	.469	.469	0	%100
115	M124	X	-4.003	-4.003	0	%100
116	M124	Z	2.311	2.311	0	%100
117	M125	X	-2.128	-2.128	0	%100
118	M125	Z	1.229	1.229	0	%100
119	M126	X	-4.003	-4.003	0	%100
120	M126	Z	2.311	2.311	0	%100

Member Distributed Loads (BLC 62 : Structure Wi (270 Deg))

	Member Label	Direction	Start Magnitude[lb/ft,...	End Magnitude[lb/ft,F...	Start Location[ft,%]	End Location[ft,%]
1	M1	X	0	0	0	%100
2	M1	Z	0	0	0	%100
3	M4	X	-4.472	-4.472	0	%100
4	M4	Z	0	0	0	%100
5	M10	X	0	0	0	%100
6	M10	Z	0	0	0	%100
7	MP3A	X	-3.956	-3.956	0	%100
8	MP3A	Z	0	0	0	%100
9	MP4A	X	-3.577	-3.577	0	%100
10	MP4A	Z	0	0	0	%100
11	MP2A	X	-3.956	-3.956	0	%100
12	MP2A	Z	0	0	0	%100
13	MP1A	X	-3.956	-3.956	0	%100
14	MP1A	Z	0	0	0	%100
15	M43	X	0	0	0	%100
16	M43	Z	0	0	0	%100

Member Distributed Loads (BLC 62 : Structure Wi (270 Deg)) (Continued)

	Member Label	Direction	Start Magnitude[lb/ft,...	End Magnitude[lb/ft,F...	Start Location[ft,%]	End Location[ft,%]
17	M46	X	0	0	0	%100
18	M46	Z	0	0	0	%100
19	M51B	X	-3.138	-3.138	0	%100
20	M51B	Z	0	0	0	%100
21	M52B	X	-3.138	-3.138	0	%100
22	M52B	Z	0	0	0	%100
23	M76	X	-5.589	-5.589	0	%100
24	M76	Z	0	0	0	%100
25	M77	X	-4.255	-4.255	0	%100
26	M77	Z	0	0	0	%100
27	M80	X	-4.44	-4.44	0	%100
28	M80	Z	0	0	0	%100
29	M84	X	-5.589	-5.589	0	%100
30	M84	Z	0	0	0	%100
31	M85	X	-4.255	-4.255	0	%100
32	M85	Z	0	0	0	%100
33	M91	X	-4.44	-4.44	0	%100
34	M91	Z	0	0	0	%100
35	M34	X	-1.118	-1.118	0	%100
36	M34	Z	0	0	0	%100
37	M35	X	-2.727	-2.727	0	%100
38	M35	Z	0	0	0	%100
39	M36	X	-2.727	-2.727	0	%100
40	M36	Z	0	0	0	%100
41	M37	X	-4.261	-4.261	0	%100
42	M37	Z	0	0	0	%100
43	M40	X	-3.138	-3.138	0	%100
44	M40	Z	0	0	0	%100
45	M41	X	0	0	0	%100
46	M41	Z	0	0	0	%100
47	M45	X	-1.397	-1.397	0	%100
48	M45	Z	0	0	0	%100
49	M46A	X	-4.255	-4.255	0	%100
50	M46A	Z	0	0	0	%100
51	M48	X	-4.44	-4.44	0	%100
52	M48	Z	0	0	0	%100
53	M50A	X	-1.397	-1.397	0	%100
54	M50A	Z	0	0	0	%100
55	M51C	X	0	0	0	%100
56	M51C	Z	0	0	0	%100
57	M53	X	0	0	0	%100
58	M53	Z	0	0	0	%100
59	M58A	X	-1.118	-1.118	0	%100
60	M58A	Z	0	0	0	%100
61	M59A	X	-2.727	-2.727	0	%100
62	M59A	Z	0	0	0	%100
63	M60	X	-2.727	-2.727	0	%100
64	M60	Z	0	0	0	%100
65	M61	X	-4.261	-4.261	0	%100
66	M61	Z	0	0	0	%100
67	M64	X	0	0	0	%100
68	M64	Z	0	0	0	%100

Member Distributed Loads (BLC 62 : Structure Wi (270 Deg)) (Continued)

	Member Label	Direction	Start Magnitude[lb/ft,...	End Magnitude[lb/ft,F...	Start Location[ft,%]	End Location[ft,%]
69	M65	X	-3.138	-3.138	0	%100
70	M65	Z	0	0	0	%100
71	M69	X	-1.397	-1.397	0	%100
72	M69	Z	0	0	0	%100
73	M70	X	0	0	0	%100
74	M70	Z	0	0	0	%100
75	M72	X	0	0	0	%100
76	M72	Z	0	0	0	%100
77	M74	X	-1.397	-1.397	0	%100
78	M74	Z	0	0	0	%100
79	M75	X	-4.255	-4.255	0	%100
80	M75	Z	0	0	0	%100
81	M77A	X	-4.44	-4.44	0	%100
82	M77A	Z	0	0	0	%100
83	M82	X	-3.323	-3.323	0	%100
84	M82	Z	0	0	0	%100
85	MP3C	X	-3.956	-3.956	0	%100
86	MP3C	Z	0	0	0	%100
87	MP4C	X	-3.577	-3.577	0	%100
88	MP4C	Z	0	0	0	%100
89	MP2C	X	-3.956	-3.956	0	%100
90	MP2C	Z	0	0	0	%100
91	MP1C	X	-3.956	-3.956	0	%100
92	MP1C	Z	0	0	0	%100
93	M91A	X	-3.323	-3.323	0	%100
94	M91A	Z	0	0	0	%100
95	MP3B	X	-3.956	-3.956	0	%100
96	MP3B	Z	0	0	0	%100
97	MP4B	X	-3.577	-3.577	0	%100
98	MP4B	Z	0	0	0	%100
99	MP2B	X	-3.956	-3.956	0	%100
100	MP2B	Z	0	0	0	%100
101	MP1B	X	-3.956	-3.956	0	%100
102	MP1B	Z	0	0	0	%100
103	M100	X	0	0	0	%100
104	M100	Z	0	0	0	%100
105	M105	X	-2.967	-2.967	0	%100
106	M105	Z	0	0	0	%100
107	M110	X	-2.967	-2.967	0	%100
108	M110	Z	0	0	0	%100
109	M121	X	-2.814	-2.814	0	%100
110	M121	Z	0	0	0	%100
111	M122	X	-2.814	-2.814	0	%100
112	M122	Z	0	0	0	%100
113	M123	X	0	0	0	%100
114	M123	Z	0	0	0	%100
115	M124	X	-5.343	-5.343	0	%100
116	M124	Z	0	0	0	%100
117	M125	X	-3.179	-3.179	0	%100
118	M125	Z	0	0	0	%100
119	M126	X	-3.179	-3.179	0	%100
120	M126	Z	0	0	0	%100

Member Distributed Loads (BLC 63 : Structure Wi (300 Deg))

	Member Label	Direction	Start Magnitude[lb/ft,...	End Magnitude[lb/ft,F...	Start Location[ft,%]	End Location[ft,%]
1	M1	X	-.959	-.959	0	%100
2	M1	Z	-.554	-.554	0	%100
3	M4	X	-2.905	-2.905	0	%100
4	M4	Z	-1.677	-1.677	0	%100
5	M10	X	-.787	-.787	0	%100
6	M10	Z	-.455	-.455	0	%100
7	MP3A	X	-3.426	-3.426	0	%100
8	MP3A	Z	-1.978	-1.978	0	%100
9	MP4A	X	-3.098	-3.098	0	%100
10	MP4A	Z	-1.788	-1.788	0	%100
11	MP2A	X	-3.426	-3.426	0	%100
12	MP2A	Z	-1.978	-1.978	0	%100
13	MP1A	X	-3.426	-3.426	0	%100
14	MP1A	Z	-1.978	-1.978	0	%100
15	M43	X	-.787	-.787	0	%100
16	M43	Z	-.455	-.455	0	%100
17	M46	X	-1.23	-1.23	0	%100
18	M46	Z	-.71	-.71	0	%100
19	M51B	X	-.906	-.906	0	%100
20	M51B	Z	-.523	-.523	0	%100
21	M52B	X	-3.623	-3.623	0	%100
22	M52B	Z	-2.092	-2.092	0	%100
23	M76	X	-3.63	-3.63	0	%100
24	M76	Z	-2.096	-2.096	0	%100
25	M77	X	-1.228	-1.228	0	%100
26	M77	Z	-.709	-.709	0	%100
27	M80	X	-1.282	-1.282	0	%100
28	M80	Z	-.74	-.74	0	%100
29	M84	X	-3.63	-3.63	0	%100
30	M84	Z	-2.096	-2.096	0	%100
31	M85	X	-4.913	-4.913	0	%100
32	M85	Z	-2.837	-2.837	0	%100
33	M91	X	-5.127	-5.127	0	%100
34	M91	Z	-2.96	-2.96	0	%100
35	M34	X	-2.905	-2.905	0	%100
36	M34	Z	-1.677	-1.677	0	%100
37	M35	X	-.787	-.787	0	%100
38	M35	Z	-.455	-.455	0	%100
39	M36	X	-.787	-.787	0	%100
40	M36	Z	-.455	-.455	0	%100
41	M37	X	-1.23	-1.23	0	%100
42	M37	Z	-.71	-.71	0	%100
43	M40	X	-3.623	-3.623	0	%100
44	M40	Z	-2.092	-2.092	0	%100
45	M41	X	-.906	-.906	0	%100
46	M41	Z	-.523	-.523	0	%100
47	M45	X	-3.63	-3.63	0	%100
48	M45	Z	-2.096	-2.096	0	%100
49	M46A	X	-4.913	-4.913	0	%100
50	M46A	Z	-2.837	-2.837	0	%100
51	M48	X	-5.127	-5.127	0	%100
52	M48	Z	-2.96	-2.96	0	%100

Member Distributed Loads (BLC 63 : Structure Wi (300 Deg)) (Continued)

	Member Label	Direction	Start Magnitude[lb/ft,...	End Magnitude[lb/ft,F...	Start Location[ft,%]	End Location[ft,%]
53	M50A	X	-3.63	-3.63	0	%100
54	M50A	Z	-2.096	-2.096	0	%100
55	M51C	X	-1.228	-1.228	0	%100
56	M51C	Z	-.709	-.709	0	%100
57	M53	X	-1.282	-1.282	0	%100
58	M53	Z	-.74	-.74	0	%100
59	M58A	X	0	0	0	%100
60	M58A	Z	0	0	0	%100
61	M59A	X	-3.149	-3.149	0	%100
62	M59A	Z	-1.818	-1.818	0	%100
63	M60	X	-3.149	-3.149	0	%100
64	M60	Z	-1.818	-1.818	0	%100
65	M61	X	-4.92	-4.92	0	%100
66	M61	Z	-2.84	-2.84	0	%100
67	M64	X	-.906	-.906	0	%100
68	M64	Z	-.523	-.523	0	%100
69	M65	X	-.906	-.906	0	%100
70	M65	Z	-.523	-.523	0	%100
71	M69	X	0	0	0	%100
72	M69	Z	0	0	0	%100
73	M70	X	-1.228	-1.228	0	%100
74	M70	Z	-.709	-.709	0	%100
75	M72	X	-1.282	-1.282	0	%100
76	M72	Z	-.74	-.74	0	%100
77	M74	X	0	0	0	%100
78	M74	Z	0	0	0	%100
79	M75	X	-1.228	-1.228	0	%100
80	M75	Z	-.709	-.709	0	%100
81	M77A	X	-1.282	-1.282	0	%100
82	M77A	Z	-.74	-.74	0	%100
83	M82	X	-.959	-.959	0	%100
84	M82	Z	-.554	-.554	0	%100
85	MP3C	X	-3.426	-3.426	0	%100
86	MP3C	Z	-1.978	-1.978	0	%100
87	MP4C	X	-3.098	-3.098	0	%100
88	MP4C	Z	-1.788	-1.788	0	%100
89	MP2C	X	-3.426	-3.426	0	%100
90	MP2C	Z	-1.978	-1.978	0	%100
91	MP1C	X	-3.426	-3.426	0	%100
92	MP1C	Z	-1.978	-1.978	0	%100
93	M91A	X	-3.837	-3.837	0	%100
94	M91A	Z	-2.215	-2.215	0	%100
95	MP3B	X	-3.426	-3.426	0	%100
96	MP3B	Z	-1.978	-1.978	0	%100
97	MP4B	X	-3.098	-3.098	0	%100
98	MP4B	Z	-1.788	-1.788	0	%100
99	MP2B	X	-3.426	-3.426	0	%100
100	MP2B	Z	-1.978	-1.978	0	%100
101	MP1B	X	-3.426	-3.426	0	%100
102	MP1B	Z	-1.978	-1.978	0	%100
103	M100	X	-.857	-.857	0	%100
104	M100	Z	-.495	-.495	0	%100

Member Distributed Loads (BLC 63 : Structure Wi (300 Deg)) (Continued)

	Member Label	Direction	Start Magnitude[lb/ft,...	End Magnitude[lb/ft,F...	Start Location[ft,%]	End Location[ft,%]
105	M105	X	-.857	-.857	0	%100
106	M105	Z	-.495	-.495	0	%100
107	M110	X	-3.426	-3.426	0	%100
108	M110	Z	-1.978	-1.978	0	%100
109	M121	X	-.812	-.812	0	%100
110	M121	Z	-.469	-.469	0	%100
111	M122	X	-3.249	-3.249	0	%100
112	M122	Z	-1.876	-1.876	0	%100
113	M123	X	-.812	-.812	0	%100
114	M123	Z	-.469	-.469	0	%100
115	M124	X	-4.003	-4.003	0	%100
116	M124	Z	-2.311	-2.311	0	%100
117	M125	X	-4.003	-4.003	0	%100
118	M125	Z	-2.311	-2.311	0	%100
119	M126	X	-2.128	-2.128	0	%100
120	M126	Z	-1.229	-1.229	0	%100

Member Distributed Loads (BLC 64 : Structure Wi (330 Deg))

	Member Label	Direction	Start Magnitude[lb/ft,...	End Magnitude[lb/ft,F...	Start Location[ft,%]	End Location[ft,%]
1	M1	X	-1.662	-1.662	0	%100
2	M1	Z	-2.878	-2.878	0	%100
3	M4	X	-.559	-.559	0	%100
4	M4	Z	-.968	-.968	0	%100
5	M10	X	-1.364	-1.364	0	%100
6	M10	Z	-2.362	-2.362	0	%100
7	MP3A	X	-1.978	-1.978	0	%100
8	MP3A	Z	-3.426	-3.426	0	%100
9	MP4A	X	-1.788	-1.788	0	%100
10	MP4A	Z	-3.098	-3.098	0	%100
11	MP2A	X	-1.978	-1.978	0	%100
12	MP2A	Z	-3.426	-3.426	0	%100
13	MP1A	X	-1.978	-1.978	0	%100
14	MP1A	Z	-3.426	-3.426	0	%100
15	M43	X	-1.364	-1.364	0	%100
16	M43	Z	-2.362	-2.362	0	%100
17	M46	X	-2.13	-2.13	0	%100
18	M46	Z	-3.69	-3.69	0	%100
19	M51B	X	0	0	0	%100
20	M51B	Z	0	0	0	%100
21	M52B	X	-1.569	-1.569	0	%100
22	M52B	Z	-2.717	-2.717	0	%100
23	M76	X	-.699	-.699	0	%100
24	M76	Z	-1.21	-1.21	0	%100
25	M77	X	0	0	0	%100
26	M77	Z	0	0	0	%100
27	M80	X	0	0	0	%100
28	M80	Z	0	0	0	%100
29	M84	X	-.699	-.699	0	%100
30	M84	Z	-1.21	-1.21	0	%100
31	M85	X	-2.127	-2.127	0	%100
32	M85	Z	-3.685	-3.685	0	%100

Member Distributed Loads (BLC 64 : Structure Wi (330 Deg)) (Continued)

	Member Label	Direction	Start Magnitude[lb/ft,...	End Magnitude[lb/ft,F...	Start Location[ft,%]	End Location[ft,%]
33	M91	X	-2.22	-2.22	0	%100
34	M91	Z	-3.845	-3.845	0	%100
35	M34	X	-2.236	-2.236	0	%100
36	M34	Z	-3.873	-3.873	0	%100
37	M35	X	0	0	0	%100
38	M35	Z	0	0	0	%100
39	M36	X	0	0	0	%100
40	M36	Z	0	0	0	%100
41	M37	X	0	0	0	%100
42	M37	Z	0	0	0	%100
43	M40	X	-1.569	-1.569	0	%100
44	M40	Z	-2.717	-2.717	0	%100
45	M41	X	-1.569	-1.569	0	%100
46	M41	Z	-2.717	-2.717	0	%100
47	M45	X	-2.794	-2.794	0	%100
48	M45	Z	-4.84	-4.84	0	%100
49	M46A	X	-2.127	-2.127	0	%100
50	M46A	Z	-3.685	-3.685	0	%100
51	M48	X	-2.22	-2.22	0	%100
52	M48	Z	-3.845	-3.845	0	%100
53	M50A	X	-2.794	-2.794	0	%100
54	M50A	Z	-4.84	-4.84	0	%100
55	M51C	X	-2.127	-2.127	0	%100
56	M51C	Z	-3.685	-3.685	0	%100
57	M53	X	-2.22	-2.22	0	%100
58	M53	Z	-3.845	-3.845	0	%100
59	M58A	X	-.559	-.559	0	%100
60	M58A	Z	-.968	-.968	0	%100
61	M59A	X	-1.364	-1.364	0	%100
62	M59A	Z	-2.362	-2.362	0	%100
63	M60	X	-1.364	-1.364	0	%100
64	M60	Z	-2.362	-2.362	0	%100
65	M61	X	-2.13	-2.13	0	%100
66	M61	Z	-3.69	-3.69	0	%100
67	M64	X	-1.569	-1.569	0	%100
68	M64	Z	-2.717	-2.717	0	%100
69	M65	X	0	0	0	%100
70	M65	Z	0	0	0	%100
71	M69	X	-.699	-.699	0	%100
72	M69	Z	-1.21	-1.21	0	%100
73	M70	X	-2.127	-2.127	0	%100
74	M70	Z	-3.685	-3.685	0	%100
75	M72	X	-2.22	-2.22	0	%100
76	M72	Z	-3.845	-3.845	0	%100
77	M74	X	-.699	-.699	0	%100
78	M74	Z	-1.21	-1.21	0	%100
79	M75	X	0	0	0	%100
80	M75	Z	0	0	0	%100
81	M77A	X	0	0	0	%100
82	M77A	Z	0	0	0	%100
83	M82	X	0	0	0	%100
84	M82	Z	0	0	0	%100

Member Distributed Loads (BLC 64 : Structure Wi (330 Deg)) (Continued)

	Member Label	Direction	Start Magnitude[lb/ft,...	End Magnitude[lb/ft,F...	Start Location[ft,%]	End Location[ft,%]
85	MP3C	X	-1.978	-1.978	0	%100
86	MP3C	Z	-3.426	-3.426	0	%100
87	MP4C	X	-1.788	-1.788	0	%100
88	MP4C	Z	-3.098	-3.098	0	%100
89	MP2C	X	-1.978	-1.978	0	%100
90	MP2C	Z	-3.426	-3.426	0	%100
91	MP1C	X	-1.978	-1.978	0	%100
92	MP1C	Z	-3.426	-3.426	0	%100
93	M91A	X	-1.662	-1.662	0	%100
94	M91A	Z	-2.878	-2.878	0	%100
95	MP3B	X	-1.978	-1.978	0	%100
96	MP3B	Z	-3.426	-3.426	0	%100
97	MP4B	X	-1.788	-1.788	0	%100
98	MP4B	Z	-3.098	-3.098	0	%100
99	MP2B	X	-1.978	-1.978	0	%100
100	MP2B	Z	-3.426	-3.426	0	%100
101	MP1B	X	-1.978	-1.978	0	%100
102	MP1B	Z	-3.426	-3.426	0	%100
103	M100	X	-1.484	-1.484	0	%100
104	M100	Z	-2.57	-2.57	0	%100
105	M105	X	0	0	0	%100
106	M105	Z	0	0	0	%100
107	M110	X	-1.484	-1.484	0	%100
108	M110	Z	-2.57	-2.57	0	%100
109	M121	X	0	0	0	%100
110	M121	Z	0	0	0	%100
111	M122	X	-1.407	-1.407	0	%100
112	M122	Z	-2.437	-2.437	0	%100
113	M123	X	-1.407	-1.407	0	%100
114	M123	Z	-2.437	-2.437	0	%100
115	M124	X	-1.589	-1.589	0	%100
116	M124	Z	-2.753	-2.753	0	%100
117	M125	X	-2.672	-2.672	0	%100
118	M125	Z	-4.627	-4.627	0	%100
119	M126	X	-1.589	-1.589	0	%100
120	M126	Z	-2.753	-2.753	0	%100

Member Distributed Loads (BLC 65 : Structure Wm (0 Deg))

	Member Label	Direction	Start Magnitude[lb/ft,...	End Magnitude[lb/ft,F...	Start Location[ft,%]	End Location[ft,%]
1	M1	X	0	0	0	%100
2	M1	Z	-.855	-.855	0	%100
3	M4	X	0	0	0	%100
4	M4	Z	0	0	0	%100
5	M10	X	0	0	0	%100
6	M10	Z	-.822	-.822	0	%100
7	MP3A	X	0	0	0	%100
8	MP3A	Z	-.786	-.786	0	%100
9	MP4A	X	0	0	0	%100
10	MP4A	Z	-.649	-.649	0	%100
11	MP2A	X	0	0	0	%100
12	MP2A	Z	-.786	-.786	0	%100

Member Distributed Loads (BLC 65 : Structure Wm (0 Deg)) (Continued)

	Member Label	Direction	Start Magnitude[lb/ft,...	End Magnitude[lb/ft,F...	Start Location[ft,%]	End Location[ft,%]
13	MP1A	X	0	0	0	%100
14	MP1A	Z	-.786	-.786	0	%100
15	M43	X	0	0	0	%100
16	M43	Z	-.822	-.822	0	%100
17	M46	X	0	0	0	%100
18	M46	Z	-1.639	-1.639	0	%100
19	M51B	X	0	0	0	%100
20	M51B	Z	-.228	-.228	0	%100
21	M52B	X	0	0	0	%100
22	M52B	Z	-.228	-.228	0	%100
23	M76	X	0	0	0	%100
24	M76	Z	0	0	0	%100
25	M77	X	0	0	0	%100
26	M77	Z	-.417	-.417	0	%100
27	M80	X	0	0	0	%100
28	M80	Z	-.44	-.44	0	%100
29	M84	X	0	0	0	%100
30	M84	Z	0	0	0	%100
31	M85	X	0	0	0	%100
32	M85	Z	-.417	-.417	0	%100
33	M91	X	0	0	0	%100
34	M91	Z	-.44	-.44	0	%100
35	M34	X	0	0	0	%100
36	M34	Z	-.729	-.729	0	%100
37	M35	X	0	0	0	%100
38	M35	Z	-.205	-.205	0	%100
39	M36	X	0	0	0	%100
40	M36	Z	-.205	-.205	0	%100
41	M37	X	0	0	0	%100
42	M37	Z	-.41	-.41	0	%100
43	M40	X	0	0	0	%100
44	M40	Z	-.228	-.228	0	%100
45	M41	X	0	0	0	%100
46	M41	Z	-.91	-.91	0	%100
47	M45	X	0	0	0	%100
48	M45	Z	-1.23	-1.23	0	%100
49	M46A	X	0	0	0	%100
50	M46A	Z	-.417	-.417	0	%100
51	M48	X	0	0	0	%100
52	M48	Z	-.44	-.44	0	%100
53	M50A	X	0	0	0	%100
54	M50A	Z	-1.23	-1.23	0	%100
55	M51C	X	0	0	0	%100
56	M51C	Z	-1.67	-1.67	0	%100
57	M53	X	0	0	0	%100
58	M53	Z	-1.759	-1.759	0	%100
59	M58A	X	0	0	0	%100
60	M58A	Z	-.729	-.729	0	%100
61	M59A	X	0	0	0	%100
62	M59A	Z	-.205	-.205	0	%100
63	M60	X	0	0	0	%100
64	M60	Z	-.205	-.205	0	%100

Member Distributed Loads (BLC 65 : Structure Wm (0 Deg)) (Continued)

	Member Label	Direction	Start Magnitude[lb/ft,...	End Magnitude[lb/ft,F...	Start Location[ft,%]	End Location[ft,%]
65	M61	X	0	0	0	%100
66	M61	Z	-.41	-.41	0	%100
67	M64	X	0	0	0	%100
68	M64	Z	-.91	-.91	0	%100
69	M65	X	0	0	0	%100
70	M65	Z	-.228	-.228	0	%100
71	M69	X	0	0	0	%100
72	M69	Z	-1.23	-1.23	0	%100
73	M70	X	0	0	0	%100
74	M70	Z	-1.67	-1.67	0	%100
75	M72	X	0	0	0	%100
76	M72	Z	-1.759	-1.759	0	%100
77	M74	X	0	0	0	%100
78	M74	Z	-1.23	-1.23	0	%100
79	M75	X	0	0	0	%100
80	M75	Z	-.417	-.417	0	%100
81	M77A	X	0	0	0	%100
82	M77A	Z	-.44	-.44	0	%100
83	M82	X	0	0	0	%100
84	M82	Z	-.214	-.214	0	%100
85	MP3C	X	0	0	0	%100
86	MP3C	Z	-.786	-.786	0	%100
87	MP4C	X	0	0	0	%100
88	MP4C	Z	-.649	-.649	0	%100
89	MP2C	X	0	0	0	%100
90	MP2C	Z	-.786	-.786	0	%100
91	MP1C	X	0	0	0	%100
92	MP1C	Z	-.786	-.786	0	%100
93	M91A	X	0	0	0	%100
94	M91A	Z	-.214	-.214	0	%100
95	MP3B	X	0	0	0	%100
96	MP3B	Z	-.786	-.786	0	%100
97	MP4B	X	0	0	0	%100
98	MP4B	Z	-.649	-.649	0	%100
99	MP2B	X	0	0	0	%100
100	MP2B	Z	-.786	-.786	0	%100
101	MP1B	X	0	0	0	%100
102	MP1B	Z	-.786	-.786	0	%100
103	M100	X	0	0	0	%100
104	M100	Z	-.786	-.786	0	%100
105	M105	X	0	0	0	%100
106	M105	Z	-.196	-.196	0	%100
107	M110	X	0	0	0	%100
108	M110	Z	-.196	-.196	0	%100
109	M121	X	0	0	0	%100
110	M121	Z	-.23	-.23	0	%100
111	M122	X	0	0	0	%100
112	M122	Z	-.23	-.23	0	%100
113	M123	X	0	0	0	%100
114	M123	Z	-.92	-.92	0	%100
115	M124	X	0	0	0	%100
116	M124	Z	-.684	-.684	0	%100

Member Distributed Loads (BLC 65 : Structure Wm (0 Deg)) (Continued)

	Member Label	Direction	Start Magnitude[lb/ft,...	End Magnitude[lb/ft,F...	Start Location[ft,%]	End Location[ft,%]
117	M125	X	0	0	0	%100
118	M125	Z	-1.135	-1.135	0	%100
119	M126	X	0	0	0	%100
120	M126	Z	-1.135	-1.135	0	%100

Member Distributed Loads (BLC 66 : Structure Wm (30 Deg))

	Member Label	Direction	Start Magnitude[lb/ft,...	End Magnitude[lb/ft,F...	Start Location[ft,%]	End Location[ft,%]
1	M1	X	.321	.321	0	%100
2	M1	Z	-.555	-.555	0	%100
3	M4	X	.121	.121	0	%100
4	M4	Z	-.21	-.21	0	%100
5	M10	X	.308	.308	0	%100
6	M10	Z	-.534	-.534	0	%100
7	MP3A	X	.393	.393	0	%100
8	MP3A	Z	-.68	-.68	0	%100
9	MP4A	X	.324	.324	0	%100
10	MP4A	Z	-.562	-.562	0	%100
11	MP2A	X	.393	.393	0	%100
12	MP2A	Z	-.68	-.68	0	%100
13	MP1A	X	.393	.393	0	%100
14	MP1A	Z	-.68	-.68	0	%100
15	M43	X	.308	.308	0	%100
16	M43	Z	-.534	-.534	0	%100
17	M46	X	.615	.615	0	%100
18	M46	Z	-1.065	-1.065	0	%100
19	M51B	X	.341	.341	0	%100
20	M51B	Z	-.591	-.591	0	%100
21	M52B	X	0	0	0	%100
22	M52B	Z	0	0	0	%100
23	M76	X	.205	.205	0	%100
24	M76	Z	-.355	-.355	0	%100
25	M77	X	.626	.626	0	%100
26	M77	Z	-1.085	-1.085	0	%100
27	M80	X	.66	.66	0	%100
28	M80	Z	-1.142	-1.142	0	%100
29	M84	X	.205	.205	0	%100
30	M84	Z	-.355	-.355	0	%100
31	M85	X	0	0	0	%100
32	M85	Z	0	0	0	%100
33	M91	X	0	0	0	%100
34	M91	Z	0	0	0	%100
35	M34	X	.121	.121	0	%100
36	M34	Z	-.21	-.21	0	%100
37	M35	X	.308	.308	0	%100
38	M35	Z	-.534	-.534	0	%100
39	M36	X	.308	.308	0	%100
40	M36	Z	-.534	-.534	0	%100
41	M37	X	.615	.615	0	%100
42	M37	Z	-1.065	-1.065	0	%100
43	M40	X	0	0	0	%100
44	M40	Z	0	0	0	%100

Member Distributed Loads (BLC 66 : Structure Wm (30 Deg)) (Continued)

	Member Label	Direction	Start Magnitude[lb/ft,...	End Magnitude[lb/ft,F...	Start Location[ft,%]	End Location[ft,%]
45	M41	X	.341	.341	0	%100
46	M41	Z	-.591	-.591	0	%100
47	M45	X	.205	.205	0	%100
48	M45	Z	-.355	-.355	0	%100
49	M46A	X	0	0	0	%100
50	M46A	Z	0	0	0	%100
51	M48	X	0	0	0	%100
52	M48	Z	0	0	0	%100
53	M50A	X	.205	.205	0	%100
54	M50A	Z	-.355	-.355	0	%100
55	M51C	X	.626	.626	0	%100
56	M51C	Z	-1.085	-1.085	0	%100
57	M53	X	.66	.66	0	%100
58	M53	Z	-1.142	-1.142	0	%100
59	M58A	X	.486	.486	0	%100
60	M58A	Z	-.841	-.841	0	%100
61	M59A	X	0	0	0	%100
62	M59A	Z	0	0	0	%100
63	M60	X	0	0	0	%100
64	M60	Z	0	0	0	%100
65	M61	X	0	0	0	%100
66	M61	Z	0	0	0	%100
67	M64	X	.341	.341	0	%100
68	M64	Z	-.591	-.591	0	%100
69	M65	X	.341	.341	0	%100
70	M65	Z	-.591	-.591	0	%100
71	M69	X	.82	.82	0	%100
72	M69	Z	-1.42	-1.42	0	%100
73	M70	X	.626	.626	0	%100
74	M70	Z	-1.085	-1.085	0	%100
75	M72	X	.66	.66	0	%100
76	M72	Z	-1.142	-1.142	0	%100
77	M74	X	.82	.82	0	%100
78	M74	Z	-1.42	-1.42	0	%100
79	M75	X	.626	.626	0	%100
80	M75	Z	-1.085	-1.085	0	%100
81	M77A	X	.66	.66	0	%100
82	M77A	Z	-1.142	-1.142	0	%100
83	M82	X	.321	.321	0	%100
84	M82	Z	-.555	-.555	0	%100
85	MP3C	X	.393	.393	0	%100
86	MP3C	Z	-.68	-.68	0	%100
87	MP4C	X	.324	.324	0	%100
88	MP4C	Z	-.562	-.562	0	%100
89	MP2C	X	.393	.393	0	%100
90	MP2C	Z	-.68	-.68	0	%100
91	MP1C	X	.393	.393	0	%100
92	MP1C	Z	-.68	-.68	0	%100
93	M91A	X	0	0	0	%100
94	M91A	Z	0	0	0	%100
95	MP3B	X	.393	.393	0	%100
96	MP3B	Z	-.68	-.68	0	%100

Member Distributed Loads (BLC 66 : Structure Wm (30 Deg)) (Continued)

	Member Label	Direction	Start Magnitude[lb/ft,...	End Magnitude[lb/ft,F...	Start Location[ft,%]	End Location[ft,%]
97	MP4B	X	.324	.324	0	%100
98	MP4B	Z	-.562	-.562	0	%100
99	MP2B	X	.393	.393	0	%100
100	MP2B	Z	-.68	-.68	0	%100
101	MP1B	X	.393	.393	0	%100
102	MP1B	Z	-.68	-.68	0	%100
103	M100	X	.295	.295	0	%100
104	M100	Z	-.51	-.51	0	%100
105	M105	X	.295	.295	0	%100
106	M105	Z	-.51	-.51	0	%100
107	M110	X	0	0	0	%100
108	M110	Z	0	0	0	%100
109	M121	X	.345	.345	0	%100
110	M121	Z	-.597	-.597	0	%100
111	M122	X	0	0	0	%100
112	M122	Z	0	0	0	%100
113	M123	X	.345	.345	0	%100
114	M123	Z	-.597	-.597	0	%100
115	M124	X	.417	.417	0	%100
116	M124	Z	-.723	-.723	0	%100
117	M125	X	.417	.417	0	%100
118	M125	Z	-.723	-.723	0	%100
119	M126	X	.642	.642	0	%100
120	M126	Z	-1.113	-1.113	0	%100

Member Distributed Loads (BLC 67 : Structure Wm (60 Deg))

	Member Label	Direction	Start Magnitude[lb/ft,...	End Magnitude[lb/ft,F...	Start Location[ft,%]	End Location[ft,%]
1	M1	X	.185	.185	0	%100
2	M1	Z	-.107	-.107	0	%100
3	M4	X	.631	.631	0	%100
4	M4	Z	-.364	-.364	0	%100
5	M10	X	.178	.178	0	%100
6	M10	Z	-.103	-.103	0	%100
7	MP3A	X	.68	.68	0	%100
8	MP3A	Z	-.393	-.393	0	%100
9	MP4A	X	.562	.562	0	%100
10	MP4A	Z	-.324	-.324	0	%100
11	MP2A	X	.68	.68	0	%100
12	MP2A	Z	-.393	-.393	0	%100
13	MP1A	X	.68	.68	0	%100
14	MP1A	Z	-.393	-.393	0	%100
15	M43	X	.178	.178	0	%100
16	M43	Z	-.103	-.103	0	%100
17	M46	X	.355	.355	0	%100
18	M46	Z	-.205	-.205	0	%100
19	M51B	X	.788	.788	0	%100
20	M51B	Z	-.455	-.455	0	%100
21	M52B	X	.197	.197	0	%100
22	M52B	Z	-.114	-.114	0	%100
23	M76	X	1.065	1.065	0	%100
24	M76	Z	-.615	-.615	0	%100

Member Distributed Loads (BLC 67 : Structure Wm (60 Deg)) (Continued)

	Member Label	Direction	Start Magnitude[lb/ft,...	End Magnitude[lb/ft,F...	Start Location[ft,%]	End Location[ft,%]
25	M77	X	1.446	1.446	0	%100
26	M77	Z	-.835	-.835	0	%100
27	M80	X	1.523	1.523	0	%100
28	M80	Z	-.879	-.879	0	%100
29	M84	X	1.065	1.065	0	%100
30	M84	Z	-.615	-.615	0	%100
31	M85	X	.362	.362	0	%100
32	M85	Z	-.209	-.209	0	%100
33	M91	X	.381	.381	0	%100
34	M91	Z	-.22	-.22	0	%100
35	M34	X	0	0	0	%100
36	M34	Z	0	0	0	%100
37	M35	X	.712	.712	0	%100
38	M35	Z	-.411	-.411	0	%100
39	M36	X	.712	.712	0	%100
40	M36	Z	-.411	-.411	0	%100
41	M37	X	1.42	1.42	0	%100
42	M37	Z	-.82	-.82	0	%100
43	M40	X	.197	.197	0	%100
44	M40	Z	-.114	-.114	0	%100
45	M41	X	.197	.197	0	%100
46	M41	Z	-.114	-.114	0	%100
47	M45	X	0	0	0	%100
48	M45	Z	0	0	0	%100
49	M46A	X	.362	.362	0	%100
50	M46A	Z	-.209	-.209	0	%100
51	M48	X	.381	.381	0	%100
52	M48	Z	-.22	-.22	0	%100
53	M50A	X	0	0	0	%100
54	M50A	Z	0	0	0	%100
55	M51C	X	.362	.362	0	%100
56	M51C	Z	-.209	-.209	0	%100
57	M53	X	.381	.381	0	%100
58	M53	Z	-.22	-.22	0	%100
59	M58A	X	.631	.631	0	%100
60	M58A	Z	-.364	-.364	0	%100
61	M59A	X	.178	.178	0	%100
62	M59A	Z	-.103	-.103	0	%100
63	M60	X	.178	.178	0	%100
64	M60	Z	-.103	-.103	0	%100
65	M61	X	.355	.355	0	%100
66	M61	Z	-.205	-.205	0	%100
67	M64	X	.197	.197	0	%100
68	M64	Z	-.114	-.114	0	%100
69	M65	X	.788	.788	0	%100
70	M65	Z	-.455	-.455	0	%100
71	M69	X	1.065	1.065	0	%100
72	M69	Z	-.615	-.615	0	%100
73	M70	X	.362	.362	0	%100
74	M70	Z	-.209	-.209	0	%100
75	M72	X	.381	.381	0	%100
76	M72	Z	-.22	-.22	0	%100

Member Distributed Loads (BLC 67 : Structure Wm (60 Deg)) (Continued)

	Member Label	Direction	Start Magnitude[lb/ft,...	End Magnitude[lb/ft,F...	Start Location[ft,%]	End Location[ft,%]
77	M74	X	1.065	1.065	0	%100
78	M74	Z	-.615	-.615	0	%100
79	M75	X	1.446	1.446	0	%100
80	M75	Z	-.835	-.835	0	%100
81	M77A	X	1.523	1.523	0	%100
82	M77A	Z	-.879	-.879	0	%100
83	M82	X	.74	.74	0	%100
84	M82	Z	-.427	-.427	0	%100
85	MP3C	X	.68	.68	0	%100
86	MP3C	Z	-.393	-.393	0	%100
87	MP4C	X	.562	.562	0	%100
88	MP4C	Z	-.324	-.324	0	%100
89	MP2C	X	.68	.68	0	%100
90	MP2C	Z	-.393	-.393	0	%100
91	MP1C	X	.68	.68	0	%100
92	MP1C	Z	-.393	-.393	0	%100
93	M91A	X	.185	.185	0	%100
94	M91A	Z	-.107	-.107	0	%100
95	MP3B	X	.68	.68	0	%100
96	MP3B	Z	-.393	-.393	0	%100
97	MP4B	X	.562	.562	0	%100
98	MP4B	Z	-.324	-.324	0	%100
99	MP2B	X	.68	.68	0	%100
100	MP2B	Z	-.393	-.393	0	%100
101	MP1B	X	.68	.68	0	%100
102	MP1B	Z	-.393	-.393	0	%100
103	M100	X	.17	.17	0	%100
104	M100	Z	-.098	-.098	0	%100
105	M105	X	.68	.68	0	%100
106	M105	Z	-.393	-.393	0	%100
107	M110	X	.17	.17	0	%100
108	M110	Z	-.098	-.098	0	%100
109	M121	X	.797	.797	0	%100
110	M121	Z	-.46	-.46	0	%100
111	M122	X	.199	.199	0	%100
112	M122	Z	-.115	-.115	0	%100
113	M123	X	.199	.199	0	%100
114	M123	Z	-.115	-.115	0	%100
115	M124	X	.983	.983	0	%100
116	M124	Z	-.567	-.567	0	%100
117	M125	X	.593	.593	0	%100
118	M125	Z	-.342	-.342	0	%100
119	M126	X	.983	.983	0	%100
120	M126	Z	-.567	-.567	0	%100

Member Distributed Loads (BLC 68 : Structure Wm (90 Deg))

	Member Label	Direction	Start Magnitude[lb/ft,...	End Magnitude[lb/ft,F...	Start Location[ft,%]	End Location[ft,%]
1	M1	X	0	0	0	%100
2	M1	Z	0	0	0	%100
3	M4	X	.971	.971	0	%100
4	M4	Z	0	0	0	%100

Member Distributed Loads (BLC 68 : Structure Wm (90 Deg)) (Continued)

	Member Label	Direction	Start Magnitude[lb/ft,...	End Magnitude[lb/ft,F...	Start Location[ft,%]	End Location[ft,%]
5	M10	X	0	0	0	%100
6	M10	Z	0	0	0	%100
7	MP3A	X	.786	.786	0	%100
8	MP3A	Z	0	0	0	%100
9	MP4A	X	.649	.649	0	%100
10	MP4A	Z	0	0	0	%100
11	MP2A	X	.786	.786	0	%100
12	MP2A	Z	0	0	0	%100
13	MP1A	X	.786	.786	0	%100
14	MP1A	Z	0	0	0	%100
15	M43	X	0	0	0	%100
16	M43	Z	0	0	0	%100
17	M46	X	0	0	0	%100
18	M46	Z	0	0	0	%100
19	M51B	X	.683	.683	0	%100
20	M51B	Z	0	0	0	%100
21	M52B	X	.683	.683	0	%100
22	M52B	Z	0	0	0	%100
23	M76	X	1.639	1.639	0	%100
24	M76	Z	0	0	0	%100
25	M77	X	1.252	1.252	0	%100
26	M77	Z	0	0	0	%100
27	M80	X	1.319	1.319	0	%100
28	M80	Z	0	0	0	%100
29	M84	X	1.639	1.639	0	%100
30	M84	Z	0	0	0	%100
31	M85	X	1.252	1.252	0	%100
32	M85	Z	0	0	0	%100
33	M91	X	1.319	1.319	0	%100
34	M91	Z	0	0	0	%100
35	M34	X	.243	.243	0	%100
36	M34	Z	0	0	0	%100
37	M35	X	.616	.616	0	%100
38	M35	Z	0	0	0	%100
39	M36	X	.616	.616	0	%100
40	M36	Z	0	0	0	%100
41	M37	X	1.23	1.23	0	%100
42	M37	Z	0	0	0	%100
43	M40	X	.683	.683	0	%100
44	M40	Z	0	0	0	%100
45	M41	X	0	0	0	%100
46	M41	Z	0	0	0	%100
47	M45	X	.41	.41	0	%100
48	M45	Z	0	0	0	%100
49	M46A	X	1.252	1.252	0	%100
50	M46A	Z	0	0	0	%100
51	M48	X	1.319	1.319	0	%100
52	M48	Z	0	0	0	%100
53	M50A	X	.41	.41	0	%100
54	M50A	Z	0	0	0	%100
55	M51C	X	0	0	0	%100
56	M51C	Z	0	0	0	%100

Member Distributed Loads (BLC 68 : Structure Wm (90 Deg)) (Continued)

	Member Label	Direction	Start Magnitude[lb/ft,...	End Magnitude[lb/ft,F...	Start Location[ft,%]	End Location[ft,%]
57	M53	X	0	0	0	%100
58	M53	Z	0	0	0	%100
59	M58A	X	.243	.243	0	%100
60	M58A	Z	0	0	0	%100
61	M59A	X	.616	.616	0	%100
62	M59A	Z	0	0	0	%100
63	M60	X	.616	.616	0	%100
64	M60	Z	0	0	0	%100
65	M61	X	1.23	1.23	0	%100
66	M61	Z	0	0	0	%100
67	M64	X	0	0	0	%100
68	M64	Z	0	0	0	%100
69	M65	X	.683	.683	0	%100
70	M65	Z	0	0	0	%100
71	M69	X	.41	.41	0	%100
72	M69	Z	0	0	0	%100
73	M70	X	0	0	0	%100
74	M70	Z	0	0	0	%100
75	M72	X	0	0	0	%100
76	M72	Z	0	0	0	%100
77	M74	X	.41	.41	0	%100
78	M74	Z	0	0	0	%100
79	M75	X	1.252	1.252	0	%100
80	M75	Z	0	0	0	%100
81	M77A	X	1.319	1.319	0	%100
82	M77A	Z	0	0	0	%100
83	M82	X	.641	.641	0	%100
84	M82	Z	0	0	0	%100
85	MP3C	X	.786	.786	0	%100
86	MP3C	Z	0	0	0	%100
87	MP4C	X	.649	.649	0	%100
88	MP4C	Z	0	0	0	%100
89	MP2C	X	.786	.786	0	%100
90	MP2C	Z	0	0	0	%100
91	MP1C	X	.786	.786	0	%100
92	MP1C	Z	0	0	0	%100
93	M91A	X	.641	.641	0	%100
94	M91A	Z	0	0	0	%100
95	MP3B	X	.786	.786	0	%100
96	MP3B	Z	0	0	0	%100
97	MP4B	X	.649	.649	0	%100
98	MP4B	Z	0	0	0	%100
99	MP2B	X	.786	.786	0	%100
100	MP2B	Z	0	0	0	%100
101	MP1B	X	.786	.786	0	%100
102	MP1B	Z	0	0	0	%100
103	M100	X	0	0	0	%100
104	M100	Z	0	0	0	%100
105	M105	X	.589	.589	0	%100
106	M105	Z	0	0	0	%100
107	M110	X	.589	.589	0	%100
108	M110	Z	0	0	0	%100

Member Distributed Loads (BLC 68 : Structure Wm (90 Deg)) (Continued)

	Member Label	Direction	Start Magnitude[lb/ft,...	End Magnitude[lb/ft,F...	Start Location[ft,%]	End Location[ft,%]
109	M121	X	.69	.69	0	%100
110	M121	Z	0	0	0	%100
111	M122	X	.69	.69	0	%100
112	M122	Z	0	0	0	%100
113	M123	X	0	0	0	%100
114	M123	Z	0	0	0	%100
115	M124	X	1.285	1.285	0	%100
116	M124	Z	0	0	0	%100
117	M125	X	.834	.834	0	%100
118	M125	Z	0	0	0	%100
119	M126	X	.834	.834	0	%100
120	M126	Z	0	0	0	%100

Member Distributed Loads (BLC 69 : Structure Wm (120 Deg))

	Member Label	Direction	Start Magnitude[lb/ft,...	End Magnitude[lb/ft,F...	Start Location[ft,%]	End Location[ft,%]
1	M1	X	.185	.185	0	%100
2	M1	Z	.107	.107	0	%100
3	M4	X	.631	.631	0	%100
4	M4	Z	.364	.364	0	%100
5	M10	X	.178	.178	0	%100
6	M10	Z	.103	.103	0	%100
7	MP3A	X	.68	.68	0	%100
8	MP3A	Z	.393	.393	0	%100
9	MP4A	X	.562	.562	0	%100
10	MP4A	Z	.324	.324	0	%100
11	MP2A	X	.68	.68	0	%100
12	MP2A	Z	.393	.393	0	%100
13	MP1A	X	.68	.68	0	%100
14	MP1A	Z	.393	.393	0	%100
15	M43	X	.178	.178	0	%100
16	M43	Z	.103	.103	0	%100
17	M46	X	.355	.355	0	%100
18	M46	Z	.205	.205	0	%100
19	M51B	X	.197	.197	0	%100
20	M51B	Z	.114	.114	0	%100
21	M52B	X	.788	.788	0	%100
22	M52B	Z	.455	.455	0	%100
23	M76	X	1.065	1.065	0	%100
24	M76	Z	.615	.615	0	%100
25	M77	X	.362	.362	0	%100
26	M77	Z	.209	.209	0	%100
27	M80	X	.381	.381	0	%100
28	M80	Z	.22	.22	0	%100
29	M84	X	1.065	1.065	0	%100
30	M84	Z	.615	.615	0	%100
31	M85	X	1.446	1.446	0	%100
32	M85	Z	.835	.835	0	%100
33	M91	X	1.523	1.523	0	%100
34	M91	Z	.879	.879	0	%100
35	M34	X	.631	.631	0	%100
36	M34	Z	.364	.364	0	%100

Member Distributed Loads (BLC 69 : Structure Wm (120 Deg)) (Continued)

	Member Label	Direction	Start Magnitude[lb/ft,...	End Magnitude[lb/ft,F...	Start Location[ft,%]	End Location[ft,%]
37	M35	X	.178	.178	0	%100
38	M35	Z	.103	.103	0	%100
39	M36	X	.178	.178	0	%100
40	M36	Z	.103	.103	0	%100
41	M37	X	.355	.355	0	%100
42	M37	Z	.205	.205	0	%100
43	M40	X	.788	.788	0	%100
44	M40	Z	.455	.455	0	%100
45	M41	X	.197	.197	0	%100
46	M41	Z	.114	.114	0	%100
47	M45	X	1.065	1.065	0	%100
48	M45	Z	.615	.615	0	%100
49	M46A	X	1.446	1.446	0	%100
50	M46A	Z	.835	.835	0	%100
51	M48	X	1.523	1.523	0	%100
52	M48	Z	.879	.879	0	%100
53	M50A	X	1.065	1.065	0	%100
54	M50A	Z	.615	.615	0	%100
55	M51C	X	.362	.362	0	%100
56	M51C	Z	.209	.209	0	%100
57	M53	X	.381	.381	0	%100
58	M53	Z	.22	.22	0	%100
59	M58A	X	0	0	0	%100
60	M58A	Z	0	0	0	%100
61	M59A	X	.712	.712	0	%100
62	M59A	Z	.411	.411	0	%100
63	M60	X	.712	.712	0	%100
64	M60	Z	.411	.411	0	%100
65	M61	X	1.42	1.42	0	%100
66	M61	Z	.82	.82	0	%100
67	M64	X	.197	.197	0	%100
68	M64	Z	.114	.114	0	%100
69	M65	X	.197	.197	0	%100
70	M65	Z	.114	.114	0	%100
71	M69	X	0	0	0	%100
72	M69	Z	0	0	0	%100
73	M70	X	.362	.362	0	%100
74	M70	Z	.209	.209	0	%100
75	M72	X	.381	.381	0	%100
76	M72	Z	.22	.22	0	%100
77	M74	X	0	0	0	%100
78	M74	Z	0	0	0	%100
79	M75	X	.362	.362	0	%100
80	M75	Z	.209	.209	0	%100
81	M77A	X	.381	.381	0	%100
82	M77A	Z	.22	.22	0	%100
83	M82	X	.185	.185	0	%100
84	M82	Z	.107	.107	0	%100
85	MP3C	X	.68	.68	0	%100
86	MP3C	Z	.393	.393	0	%100
87	MP4C	X	.562	.562	0	%100
88	MP4C	Z	.324	.324	0	%100

Member Distributed Loads (BLC 69 : Structure Wm (120 Deg)) (Continued)

	Member Label	Direction	Start Magnitude[lb/ft,...	End Magnitude[lb/ft,F...	Start Location[ft,%]	End Location[ft,%]
89	MP2C	X	.68	.68	0	%100
90	MP2C	Z	.393	.393	0	%100
91	MP1C	X	.68	.68	0	%100
92	MP1C	Z	.393	.393	0	%100
93	M91A	X	.74	.74	0	%100
94	M91A	Z	.427	.427	0	%100
95	MP3B	X	.68	.68	0	%100
96	MP3B	Z	.393	.393	0	%100
97	MP4B	X	.562	.562	0	%100
98	MP4B	Z	.324	.324	0	%100
99	MP2B	X	.68	.68	0	%100
100	MP2B	Z	.393	.393	0	%100
101	MP1B	X	.68	.68	0	%100
102	MP1B	Z	.393	.393	0	%100
103	M100	X	.17	.17	0	%100
104	M100	Z	.098	.098	0	%100
105	M105	X	.17	.17	0	%100
106	M105	Z	.098	.098	0	%100
107	M110	X	.68	.68	0	%100
108	M110	Z	.393	.393	0	%100
109	M121	X	.199	.199	0	%100
110	M121	Z	.115	.115	0	%100
111	M122	X	.797	.797	0	%100
112	M122	Z	.46	.46	0	%100
113	M123	X	.199	.199	0	%100
114	M123	Z	.115	.115	0	%100
115	M124	X	.983	.983	0	%100
116	M124	Z	.567	.567	0	%100
117	M125	X	.983	.983	0	%100
118	M125	Z	.567	.567	0	%100
119	M126	X	.593	.593	0	%100
120	M126	Z	.342	.342	0	%100

Member Distributed Loads (BLC 70 : Structure Wm (150 Deg))

	Member Label	Direction	Start Magnitude[lb/ft,...	End Magnitude[lb/ft,F...	Start Location[ft,%]	End Location[ft,%]
1	M1	X	.321	.321	0	%100
2	M1	Z	.555	.555	0	%100
3	M4	X	.121	.121	0	%100
4	M4	Z	.21	.21	0	%100
5	M10	X	.308	.308	0	%100
6	M10	Z	.534	.534	0	%100
7	MP3A	X	.393	.393	0	%100
8	MP3A	Z	.68	.68	0	%100
9	MP4A	X	.324	.324	0	%100
10	MP4A	Z	.562	.562	0	%100
11	MP2A	X	.393	.393	0	%100
12	MP2A	Z	.68	.68	0	%100
13	MP1A	X	.393	.393	0	%100
14	MP1A	Z	.68	.68	0	%100
15	M43	X	.308	.308	0	%100
16	M43	Z	.534	.534	0	%100

Member Distributed Loads (BLC 70 : Structure Wm (150 Deg)) (Continued)

	Member Label	Direction	Start Magnitude[lb/ft,...	End Magnitude[lb/ft,F...	Start Location[ft,%]	End Location[ft,%]
17	M46	X	.615	.615	0	%100
18	M46	Z	1.065	1.065	0	%100
19	M51B	X	0	0	0	%100
20	M51B	Z	0	0	0	%100
21	M52B	X	.341	.341	0	%100
22	M52B	Z	.591	.591	0	%100
23	M76	X	.205	.205	0	%100
24	M76	Z	.355	.355	0	%100
25	M77	X	0	0	0	%100
26	M77	Z	0	0	0	%100
27	M80	X	0	0	0	%100
28	M80	Z	0	0	0	%100
29	M84	X	.205	.205	0	%100
30	M84	Z	.355	.355	0	%100
31	M85	X	.626	.626	0	%100
32	M85	Z	1.085	1.085	0	%100
33	M91	X	.66	.66	0	%100
34	M91	Z	1.142	1.142	0	%100
35	M34	X	.486	.486	0	%100
36	M34	Z	.841	.841	0	%100
37	M35	X	0	0	0	%100
38	M35	Z	0	0	0	%100
39	M36	X	0	0	0	%100
40	M36	Z	0	0	0	%100
41	M37	X	0	0	0	%100
42	M37	Z	0	0	0	%100
43	M40	X	.341	.341	0	%100
44	M40	Z	.591	.591	0	%100
45	M41	X	.341	.341	0	%100
46	M41	Z	.591	.591	0	%100
47	M45	X	.82	.82	0	%100
48	M45	Z	1.42	1.42	0	%100
49	M46A	X	.626	.626	0	%100
50	M46A	Z	1.085	1.085	0	%100
51	M48	X	.66	.66	0	%100
52	M48	Z	1.142	1.142	0	%100
53	M50A	X	.82	.82	0	%100
54	M50A	Z	1.42	1.42	0	%100
55	M51C	X	.626	.626	0	%100
56	M51C	Z	1.085	1.085	0	%100
57	M53	X	.66	.66	0	%100
58	M53	Z	1.142	1.142	0	%100
59	M58A	X	.121	.121	0	%100
60	M58A	Z	.21	.21	0	%100
61	M59A	X	.308	.308	0	%100
62	M59A	Z	.534	.534	0	%100
63	M60	X	.308	.308	0	%100
64	M60	Z	.534	.534	0	%100
65	M61	X	.615	.615	0	%100
66	M61	Z	1.065	1.065	0	%100
67	M64	X	.341	.341	0	%100
68	M64	Z	.591	.591	0	%100

Member Distributed Loads (BLC 70 : Structure Wm (150 Deg)) (Continued)

	Member Label	Direction	Start Magnitude[lb/ft,...	End Magnitude[lb/ft,F...	Start Location[ft,%]	End Location[ft,%]
69	M65	X	0	0	0	%100
70	M65	Z	0	0	0	%100
71	M69	X	.205	.205	0	%100
72	M69	Z	.355	.355	0	%100
73	M70	X	.626	.626	0	%100
74	M70	Z	1.085	1.085	0	%100
75	M72	X	.66	.66	0	%100
76	M72	Z	1.142	1.142	0	%100
77	M74	X	.205	.205	0	%100
78	M74	Z	.355	.355	0	%100
79	M75	X	0	0	0	%100
80	M75	Z	0	0	0	%100
81	M77A	X	0	0	0	%100
82	M77A	Z	0	0	0	%100
83	M82	X	0	0	0	%100
84	M82	Z	0	0	0	%100
85	MP3C	X	.393	.393	0	%100
86	MP3C	Z	.68	.68	0	%100
87	MP4C	X	.324	.324	0	%100
88	MP4C	Z	.562	.562	0	%100
89	MP2C	X	.393	.393	0	%100
90	MP2C	Z	.68	.68	0	%100
91	MP1C	X	.393	.393	0	%100
92	MP1C	Z	.68	.68	0	%100
93	M91A	X	.321	.321	0	%100
94	M91A	Z	.555	.555	0	%100
95	MP3B	X	.393	.393	0	%100
96	MP3B	Z	.68	.68	0	%100
97	MP4B	X	.324	.324	0	%100
98	MP4B	Z	.562	.562	0	%100
99	MP2B	X	.393	.393	0	%100
100	MP2B	Z	.68	.68	0	%100
101	MP1B	X	.393	.393	0	%100
102	MP1B	Z	.68	.68	0	%100
103	M100	X	.295	.295	0	%100
104	M100	Z	.51	.51	0	%100
105	M105	X	0	0	0	%100
106	M105	Z	0	0	0	%100
107	M110	X	.295	.295	0	%100
108	M110	Z	.51	.51	0	%100
109	M121	X	0	0	0	%100
110	M121	Z	0	0	0	%100
111	M122	X	.345	.345	0	%100
112	M122	Z	.597	.597	0	%100
113	M123	X	.345	.345	0	%100
114	M123	Z	.597	.597	0	%100
115	M124	X	.417	.417	0	%100
116	M124	Z	.723	.723	0	%100
117	M125	X	.642	.642	0	%100
118	M125	Z	1.113	1.113	0	%100
119	M126	X	.417	.417	0	%100
120	M126	Z	.723	.723	0	%100

Member Distributed Loads (BLC 71 : Structure Wm (180 Deg))

	Member Label	Direction	Start Magnitude[lb/ft,...	End Magnitude[lb/ft,F...	Start Location[ft,%]	End Location[ft,%]
1	M1	X	0	0	0	%100
2	M1	Z	.855	.855	0	%100
3	M4	X	0	0	0	%100
4	M4	Z	0	0	0	%100
5	M10	X	0	0	0	%100
6	M10	Z	.822	.822	0	%100
7	MP3A	X	0	0	0	%100
8	MP3A	Z	.786	.786	0	%100
9	MP4A	X	0	0	0	%100
10	MP4A	Z	.649	.649	0	%100
11	MP2A	X	0	0	0	%100
12	MP2A	Z	.786	.786	0	%100
13	MP1A	X	0	0	0	%100
14	MP1A	Z	.786	.786	0	%100
15	M43	X	0	0	0	%100
16	M43	Z	.822	.822	0	%100
17	M46	X	0	0	0	%100
18	M46	Z	1.639	1.639	0	%100
19	M51B	X	0	0	0	%100
20	M51B	Z	.228	.228	0	%100
21	M52B	X	0	0	0	%100
22	M52B	Z	.228	.228	0	%100
23	M76	X	0	0	0	%100
24	M76	Z	0	0	0	%100
25	M77	X	0	0	0	%100
26	M77	Z	.417	.417	0	%100
27	M80	X	0	0	0	%100
28	M80	Z	.44	.44	0	%100
29	M84	X	0	0	0	%100
30	M84	Z	0	0	0	%100
31	M85	X	0	0	0	%100
32	M85	Z	.417	.417	0	%100
33	M91	X	0	0	0	%100
34	M91	Z	.44	.44	0	%100
35	M34	X	0	0	0	%100
36	M34	Z	.729	.729	0	%100
37	M35	X	0	0	0	%100
38	M35	Z	.205	.205	0	%100
39	M36	X	0	0	0	%100
40	M36	Z	.205	.205	0	%100
41	M37	X	0	0	0	%100
42	M37	Z	.41	.41	0	%100
43	M40	X	0	0	0	%100
44	M40	Z	.228	.228	0	%100
45	M41	X	0	0	0	%100
46	M41	Z	.91	.91	0	%100
47	M45	X	0	0	0	%100
48	M45	Z	1.23	1.23	0	%100
49	M46A	X	0	0	0	%100
50	M46A	Z	.417	.417	0	%100
51	M48	X	0	0	0	%100
52	M48	Z	.44	.44	0	%100

Member Distributed Loads (BLC 71 : Structure Wm (180 Deg)) (Continued)

	Member Label	Direction	Start Magnitude[lb/ft,...	End Magnitude[lb/ft,F...	Start Location[ft,%]	End Location[ft,%]
53	M50A	X	0	0	0	%100
54	M50A	Z	1.23	1.23	0	%100
55	M51C	X	0	0	0	%100
56	M51C	Z	1.67	1.67	0	%100
57	M53	X	0	0	0	%100
58	M53	Z	1.759	1.759	0	%100
59	M58A	X	0	0	0	%100
60	M58A	Z	.729	.729	0	%100
61	M59A	X	0	0	0	%100
62	M59A	Z	.205	.205	0	%100
63	M60	X	0	0	0	%100
64	M60	Z	.205	.205	0	%100
65	M61	X	0	0	0	%100
66	M61	Z	.41	.41	0	%100
67	M64	X	0	0	0	%100
68	M64	Z	.91	.91	0	%100
69	M65	X	0	0	0	%100
70	M65	Z	.228	.228	0	%100
71	M69	X	0	0	0	%100
72	M69	Z	1.23	1.23	0	%100
73	M70	X	0	0	0	%100
74	M70	Z	1.67	1.67	0	%100
75	M72	X	0	0	0	%100
76	M72	Z	1.759	1.759	0	%100
77	M74	X	0	0	0	%100
78	M74	Z	1.23	1.23	0	%100
79	M75	X	0	0	0	%100
80	M75	Z	.417	.417	0	%100
81	M77A	X	0	0	0	%100
82	M77A	Z	.44	.44	0	%100
83	M82	X	0	0	0	%100
84	M82	Z	.214	.214	0	%100
85	MP3C	X	0	0	0	%100
86	MP3C	Z	.786	.786	0	%100
87	MP4C	X	0	0	0	%100
88	MP4C	Z	.649	.649	0	%100
89	MP2C	X	0	0	0	%100
90	MP2C	Z	.786	.786	0	%100
91	MP1C	X	0	0	0	%100
92	MP1C	Z	.786	.786	0	%100
93	M91A	X	0	0	0	%100
94	M91A	Z	.214	.214	0	%100
95	MP3B	X	0	0	0	%100
96	MP3B	Z	.786	.786	0	%100
97	MP4B	X	0	0	0	%100
98	MP4B	Z	.649	.649	0	%100
99	MP2B	X	0	0	0	%100
100	MP2B	Z	.786	.786	0	%100
101	MP1B	X	0	0	0	%100
102	MP1B	Z	.786	.786	0	%100
103	M100	X	0	0	0	%100
104	M100	Z	.786	.786	0	%100

Member Distributed Loads (BLC 71 : Structure Wm (180 Deg)) (Continued)

	Member Label	Direction	Start Magnitude[lb/ft,...	End Magnitude[lb/ft,F...	Start Location[ft,%]	End Location[ft,%]
105	M105	X	0	0	0	%100
106	M105	Z	.196	.196	0	%100
107	M110	X	0	0	0	%100
108	M110	Z	.196	.196	0	%100
109	M121	X	0	0	0	%100
110	M121	Z	.23	.23	0	%100
111	M122	X	0	0	0	%100
112	M122	Z	.23	.23	0	%100
113	M123	X	0	0	0	%100
114	M123	Z	.92	.92	0	%100
115	M124	X	0	0	0	%100
116	M124	Z	.684	.684	0	%100
117	M125	X	0	0	0	%100
118	M125	Z	1.135	1.135	0	%100
119	M126	X	0	0	0	%100
120	M126	Z	1.135	1.135	0	%100

Member Distributed Loads (BLC 72 : Structure Wm (210 Deg))

	Member Label	Direction	Start Magnitude[lb/ft,...	End Magnitude[lb/ft,F...	Start Location[ft,%]	End Location[ft,%]
1	M1	X	-.321	-.321	0	%100
2	M1	Z	.555	.555	0	%100
3	M4	X	-.121	-.121	0	%100
4	M4	Z	.21	.21	0	%100
5	M10	X	-.308	-.308	0	%100
6	M10	Z	.534	.534	0	%100
7	MP3A	X	-.393	-.393	0	%100
8	MP3A	Z	.68	.68	0	%100
9	MP4A	X	-.324	-.324	0	%100
10	MP4A	Z	.562	.562	0	%100
11	MP2A	X	-.393	-.393	0	%100
12	MP2A	Z	.68	.68	0	%100
13	MP1A	X	-.393	-.393	0	%100
14	MP1A	Z	.68	.68	0	%100
15	M43	X	-.308	-.308	0	%100
16	M43	Z	.534	.534	0	%100
17	M46	X	-.615	-.615	0	%100
18	M46	Z	1.065	1.065	0	%100
19	M51B	X	-.341	-.341	0	%100
20	M51B	Z	.591	.591	0	%100
21	M52B	X	0	0	0	%100
22	M52B	Z	0	0	0	%100
23	M76	X	-.205	-.205	0	%100
24	M76	Z	.355	.355	0	%100
25	M77	X	-.626	-.626	0	%100
26	M77	Z	1.085	1.085	0	%100
27	M80	X	-.66	-.66	0	%100
28	M80	Z	1.142	1.142	0	%100
29	M84	X	-.205	-.205	0	%100
30	M84	Z	.355	.355	0	%100
31	M85	X	0	0	0	%100
32	M85	Z	0	0	0	%100

Member Distributed Loads (BLC 72 : Structure Wm (210 Deg)) (Continued)

	Member Label	Direction	Start Magnitude[lb/ft,...	End Magnitude[lb/ft,F...	Start Location[ft,%]	End Location[ft,%]
33	M91	X	0	0	0	%100
34	M91	Z	0	0	0	%100
35	M34	X	-.121	-.121	0	%100
36	M34	Z	.21	.21	0	%100
37	M35	X	-.308	-.308	0	%100
38	M35	Z	.534	.534	0	%100
39	M36	X	-.308	-.308	0	%100
40	M36	Z	.534	.534	0	%100
41	M37	X	-.615	-.615	0	%100
42	M37	Z	1.065	1.065	0	%100
43	M40	X	0	0	0	%100
44	M40	Z	0	0	0	%100
45	M41	X	-.341	-.341	0	%100
46	M41	Z	.591	.591	0	%100
47	M45	X	-.205	-.205	0	%100
48	M45	Z	.355	.355	0	%100
49	M46A	X	0	0	0	%100
50	M46A	Z	0	0	0	%100
51	M48	X	0	0	0	%100
52	M48	Z	0	0	0	%100
53	M50A	X	-.205	-.205	0	%100
54	M50A	Z	.355	.355	0	%100
55	M51C	X	-.626	-.626	0	%100
56	M51C	Z	1.085	1.085	0	%100
57	M53	X	-.66	-.66	0	%100
58	M53	Z	1.142	1.142	0	%100
59	M58A	X	-.486	-.486	0	%100
60	M58A	Z	.841	.841	0	%100
61	M59A	X	0	0	0	%100
62	M59A	Z	0	0	0	%100
63	M60	X	0	0	0	%100
64	M60	Z	0	0	0	%100
65	M61	X	0	0	0	%100
66	M61	Z	0	0	0	%100
67	M64	X	-.341	-.341	0	%100
68	M64	Z	.591	.591	0	%100
69	M65	X	-.341	-.341	0	%100
70	M65	Z	.591	.591	0	%100
71	M69	X	-.82	-.82	0	%100
72	M69	Z	1.42	1.42	0	%100
73	M70	X	-.626	-.626	0	%100
74	M70	Z	1.085	1.085	0	%100
75	M72	X	-.66	-.66	0	%100
76	M72	Z	1.142	1.142	0	%100
77	M74	X	-.82	-.82	0	%100
78	M74	Z	1.42	1.42	0	%100
79	M75	X	-.626	-.626	0	%100
80	M75	Z	1.085	1.085	0	%100
81	M77A	X	-.66	-.66	0	%100
82	M77A	Z	1.142	1.142	0	%100
83	M82	X	-.321	-.321	0	%100
84	M82	Z	.555	.555	0	%100

Member Distributed Loads (BLC 72 : Structure Wm (210 Deg)) (Continued)

	Member Label	Direction	Start Magnitude[lb/ft,...	End Magnitude[lb/ft,F...	Start Location[ft,%]	End Location[ft,%]
85	MP3C	X	-.393	-.393	0	%100
86	MP3C	Z	.68	.68	0	%100
87	MP4C	X	-.324	-.324	0	%100
88	MP4C	Z	.562	.562	0	%100
89	MP2C	X	-.393	-.393	0	%100
90	MP2C	Z	.68	.68	0	%100
91	MP1C	X	-.393	-.393	0	%100
92	MP1C	Z	.68	.68	0	%100
93	M91A	X	0	0	0	%100
94	M91A	Z	0	0	0	%100
95	MP3B	X	-.393	-.393	0	%100
96	MP3B	Z	.68	.68	0	%100
97	MP4B	X	-.324	-.324	0	%100
98	MP4B	Z	.562	.562	0	%100
99	MP2B	X	-.393	-.393	0	%100
100	MP2B	Z	.68	.68	0	%100
101	MP1B	X	-.393	-.393	0	%100
102	MP1B	Z	.68	.68	0	%100
103	M100	X	-.295	-.295	0	%100
104	M100	Z	.51	.51	0	%100
105	M105	X	-.295	-.295	0	%100
106	M105	Z	.51	.51	0	%100
107	M110	X	0	0	0	%100
108	M110	Z	0	0	0	%100
109	M121	X	-.345	-.345	0	%100
110	M121	Z	.597	.597	0	%100
111	M122	X	0	0	0	%100
112	M122	Z	0	0	0	%100
113	M123	X	-.345	-.345	0	%100
114	M123	Z	.597	.597	0	%100
115	M124	X	-.417	-.417	0	%100
116	M124	Z	.723	.723	0	%100
117	M125	X	-.417	-.417	0	%100
118	M125	Z	.723	.723	0	%100
119	M126	X	-.642	-.642	0	%100
120	M126	Z	1.113	1.113	0	%100

Member Distributed Loads (BLC 73 : Structure Wm (240 Deg))

	Member Label	Direction	Start Magnitude[lb/ft,...	End Magnitude[lb/ft,F...	Start Location[ft,%]	End Location[ft,%]
1	M1	X	-.185	-.185	0	%100
2	M1	Z	.107	.107	0	%100
3	M4	X	-.631	-.631	0	%100
4	M4	Z	.364	.364	0	%100
5	M10	X	-.178	-.178	0	%100
6	M10	Z	.103	.103	0	%100
7	MP3A	X	-.68	-.68	0	%100
8	MP3A	Z	.393	.393	0	%100
9	MP4A	X	-.562	-.562	0	%100
10	MP4A	Z	.324	.324	0	%100
11	MP2A	X	-.68	-.68	0	%100
12	MP2A	Z	.393	.393	0	%100

Member Distributed Loads (BLC 73 : Structure Wm (240 Deg)) (Continued)

	Member Label	Direction	Start Magnitude[lb/ft,...	End Magnitude[lb/ft,F...	Start Location[ft,%]	End Location[ft,%]
13	MP1A	X	-.68	-.68	0	%100
14	MP1A	Z	.393	.393	0	%100
15	M43	X	-.178	-.178	0	%100
16	M43	Z	.103	.103	0	%100
17	M46	X	-.355	-.355	0	%100
18	M46	Z	.205	.205	0	%100
19	M51B	X	-.788	-.788	0	%100
20	M51B	Z	.455	.455	0	%100
21	M52B	X	-.197	-.197	0	%100
22	M52B	Z	.114	.114	0	%100
23	M76	X	-1.065	-1.065	0	%100
24	M76	Z	.615	.615	0	%100
25	M77	X	-1.446	-1.446	0	%100
26	M77	Z	.835	.835	0	%100
27	M80	X	-1.523	-1.523	0	%100
28	M80	Z	.879	.879	0	%100
29	M84	X	-1.065	-1.065	0	%100
30	M84	Z	.615	.615	0	%100
31	M85	X	-.362	-.362	0	%100
32	M85	Z	.209	.209	0	%100
33	M91	X	-.381	-.381	0	%100
34	M91	Z	.22	.22	0	%100
35	M34	X	0	0	0	%100
36	M34	Z	0	0	0	%100
37	M35	X	-.712	-.712	0	%100
38	M35	Z	.411	.411	0	%100
39	M36	X	-.712	-.712	0	%100
40	M36	Z	.411	.411	0	%100
41	M37	X	-1.42	-1.42	0	%100
42	M37	Z	.82	.82	0	%100
43	M40	X	-.197	-.197	0	%100
44	M40	Z	.114	.114	0	%100
45	M41	X	-.197	-.197	0	%100
46	M41	Z	.114	.114	0	%100
47	M45	X	0	0	0	%100
48	M45	Z	0	0	0	%100
49	M46A	X	-.362	-.362	0	%100
50	M46A	Z	.209	.209	0	%100
51	M48	X	-.381	-.381	0	%100
52	M48	Z	.22	.22	0	%100
53	M50A	X	0	0	0	%100
54	M50A	Z	0	0	0	%100
55	M51C	X	-.362	-.362	0	%100
56	M51C	Z	.209	.209	0	%100
57	M53	X	-.381	-.381	0	%100
58	M53	Z	.22	.22	0	%100
59	M58A	X	-.631	-.631	0	%100
60	M58A	Z	.364	.364	0	%100
61	M59A	X	-.178	-.178	0	%100
62	M59A	Z	.103	.103	0	%100
63	M60	X	-.178	-.178	0	%100
64	M60	Z	.103	.103	0	%100

Member Distributed Loads (BLC 73 : Structure Wm (240 Deg)) (Continued)

	Member Label	Direction	Start Magnitude[lb/ft,...	End Magnitude[lb/ft,F...	Start Location[ft,%]	End Location[ft,%]
65	M61	X	-.355	-.355	0	%100
66	M61	Z	.205	.205	0	%100
67	M64	X	-.197	-.197	0	%100
68	M64	Z	.114	.114	0	%100
69	M65	X	-.788	-.788	0	%100
70	M65	Z	.455	.455	0	%100
71	M69	X	-1.065	-1.065	0	%100
72	M69	Z	.615	.615	0	%100
73	M70	X	-.362	-.362	0	%100
74	M70	Z	.209	.209	0	%100
75	M72	X	-.381	-.381	0	%100
76	M72	Z	.22	.22	0	%100
77	M74	X	-1.065	-1.065	0	%100
78	M74	Z	.615	.615	0	%100
79	M75	X	-1.446	-1.446	0	%100
80	M75	Z	.835	.835	0	%100
81	M77A	X	-1.523	-1.523	0	%100
82	M77A	Z	.879	.879	0	%100
83	M82	X	-.74	-.74	0	%100
84	M82	Z	.427	.427	0	%100
85	MP3C	X	-.68	-.68	0	%100
86	MP3C	Z	.393	.393	0	%100
87	MP4C	X	-.562	-.562	0	%100
88	MP4C	Z	.324	.324	0	%100
89	MP2C	X	-.68	-.68	0	%100
90	MP2C	Z	.393	.393	0	%100
91	MP1C	X	-.68	-.68	0	%100
92	MP1C	Z	.393	.393	0	%100
93	M91A	X	-.185	-.185	0	%100
94	M91A	Z	.107	.107	0	%100
95	MP3B	X	-.68	-.68	0	%100
96	MP3B	Z	.393	.393	0	%100
97	MP4B	X	-.562	-.562	0	%100
98	MP4B	Z	.324	.324	0	%100
99	MP2B	X	-.68	-.68	0	%100
100	MP2B	Z	.393	.393	0	%100
101	MP1B	X	-.68	-.68	0	%100
102	MP1B	Z	.393	.393	0	%100
103	M100	X	-.17	-.17	0	%100
104	M100	Z	.098	.098	0	%100
105	M105	X	-.68	-.68	0	%100
106	M105	Z	.393	.393	0	%100
107	M110	X	-.17	-.17	0	%100
108	M110	Z	.098	.098	0	%100
109	M121	X	-.797	-.797	0	%100
110	M121	Z	.46	.46	0	%100
111	M122	X	-.199	-.199	0	%100
112	M122	Z	.115	.115	0	%100
113	M123	X	-.199	-.199	0	%100
114	M123	Z	.115	.115	0	%100
115	M124	X	-.983	-.983	0	%100
116	M124	Z	.567	.567	0	%100

Member Distributed Loads (BLC 73 : Structure Wm (240 Deg)) (Continued)

	Member Label	Direction	Start Magnitude[lb/ft,...	End Magnitude[lb/ft,F...	Start Location[ft,%]	End Location[ft,%]
117	M125	X	-.593	-.593	0	%100
118	M125	Z	.342	.342	0	%100
119	M126	X	-.983	-.983	0	%100
120	M126	Z	.567	.567	0	%100

Member Distributed Loads (BLC 74 : Structure Wm (270 Deg))

	Member Label	Direction	Start Magnitude[lb/ft,...	End Magnitude[lb/ft,F...	Start Location[ft,%]	End Location[ft,%]
1	M1	X	0	0	0	%100
2	M1	Z	0	0	0	%100
3	M4	X	-.971	-.971	0	%100
4	M4	Z	0	0	0	%100
5	M10	X	0	0	0	%100
6	M10	Z	0	0	0	%100
7	MP3A	X	-.786	-.786	0	%100
8	MP3A	Z	0	0	0	%100
9	MP4A	X	-.649	-.649	0	%100
10	MP4A	Z	0	0	0	%100
11	MP2A	X	-.786	-.786	0	%100
12	MP2A	Z	0	0	0	%100
13	MP1A	X	-.786	-.786	0	%100
14	MP1A	Z	0	0	0	%100
15	M43	X	0	0	0	%100
16	M43	Z	0	0	0	%100
17	M46	X	0	0	0	%100
18	M46	Z	0	0	0	%100
19	M51B	X	-.683	-.683	0	%100
20	M51B	Z	0	0	0	%100
21	M52B	X	-.683	-.683	0	%100
22	M52B	Z	0	0	0	%100
23	M76	X	-1.639	-1.639	0	%100
24	M76	Z	0	0	0	%100
25	M77	X	-1.252	-1.252	0	%100
26	M77	Z	0	0	0	%100
27	M80	X	-1.319	-1.319	0	%100
28	M80	Z	0	0	0	%100
29	M84	X	-1.639	-1.639	0	%100
30	M84	Z	0	0	0	%100
31	M85	X	-1.252	-1.252	0	%100
32	M85	Z	0	0	0	%100
33	M91	X	-1.319	-1.319	0	%100
34	M91	Z	0	0	0	%100
35	M34	X	-.243	-.243	0	%100
36	M34	Z	0	0	0	%100
37	M35	X	-.616	-.616	0	%100
38	M35	Z	0	0	0	%100
39	M36	X	-.616	-.616	0	%100
40	M36	Z	0	0	0	%100
41	M37	X	-1.23	-1.23	0	%100
42	M37	Z	0	0	0	%100
43	M40	X	-.683	-.683	0	%100
44	M40	Z	0	0	0	%100

Member Distributed Loads (BLC 74 : Structure Wm (270 Deg)) (Continued)

	Member Label	Direction	Start Magnitude[lb/ft,...	End Magnitude[lb/ft,F...	Start Location[ft,%]	End Location[ft,%]
45	M41	X	0	0	0	%100
46	M41	Z	0	0	0	%100
47	M45	X	-.41	-.41	0	%100
48	M45	Z	0	0	0	%100
49	M46A	X	-1.252	-1.252	0	%100
50	M46A	Z	0	0	0	%100
51	M48	X	-1.319	-1.319	0	%100
52	M48	Z	0	0	0	%100
53	M50A	X	-.41	-.41	0	%100
54	M50A	Z	0	0	0	%100
55	M51C	X	0	0	0	%100
56	M51C	Z	0	0	0	%100
57	M53	X	0	0	0	%100
58	M53	Z	0	0	0	%100
59	M58A	X	-.243	-.243	0	%100
60	M58A	Z	0	0	0	%100
61	M59A	X	-.616	-.616	0	%100
62	M59A	Z	0	0	0	%100
63	M60	X	-.616	-.616	0	%100
64	M60	Z	0	0	0	%100
65	M61	X	-1.23	-1.23	0	%100
66	M61	Z	0	0	0	%100
67	M64	X	0	0	0	%100
68	M64	Z	0	0	0	%100
69	M65	X	-.683	-.683	0	%100
70	M65	Z	0	0	0	%100
71	M69	X	-.41	-.41	0	%100
72	M69	Z	0	0	0	%100
73	M70	X	0	0	0	%100
74	M70	Z	0	0	0	%100
75	M72	X	0	0	0	%100
76	M72	Z	0	0	0	%100
77	M74	X	-.41	-.41	0	%100
78	M74	Z	0	0	0	%100
79	M75	X	-1.252	-1.252	0	%100
80	M75	Z	0	0	0	%100
81	M77A	X	-1.319	-1.319	0	%100
82	M77A	Z	0	0	0	%100
83	M82	X	-.641	-.641	0	%100
84	M82	Z	0	0	0	%100
85	MP3C	X	-.786	-.786	0	%100
86	MP3C	Z	0	0	0	%100
87	MP4C	X	-.649	-.649	0	%100
88	MP4C	Z	0	0	0	%100
89	MP2C	X	-.786	-.786	0	%100
90	MP2C	Z	0	0	0	%100
91	MP1C	X	-.786	-.786	0	%100
92	MP1C	Z	0	0	0	%100
93	M91A	X	-.641	-.641	0	%100
94	M91A	Z	0	0	0	%100
95	MP3B	X	-.786	-.786	0	%100
96	MP3B	Z	0	0	0	%100

Member Distributed Loads (BLC 74 : Structure Wm (270 Deg)) (Continued)

	Member Label	Direction	Start Magnitude[lb/ft,...	End Magnitude[lb/ft,F...	Start Location[ft,%]	End Location[ft,%]
97	MP4B	X	-.649	-.649	0	%100
98	MP4B	Z	0	0	0	%100
99	MP2B	X	-.786	-.786	0	%100
100	MP2B	Z	0	0	0	%100
101	MP1B	X	-.786	-.786	0	%100
102	MP1B	Z	0	0	0	%100
103	M100	X	0	0	0	%100
104	M100	Z	0	0	0	%100
105	M105	X	-.589	-.589	0	%100
106	M105	Z	0	0	0	%100
107	M110	X	-.589	-.589	0	%100
108	M110	Z	0	0	0	%100
109	M121	X	-.69	-.69	0	%100
110	M121	Z	0	0	0	%100
111	M122	X	-.69	-.69	0	%100
112	M122	Z	0	0	0	%100
113	M123	X	0	0	0	%100
114	M123	Z	0	0	0	%100
115	M124	X	-1.285	-1.285	0	%100
116	M124	Z	0	0	0	%100
117	M125	X	-.834	-.834	0	%100
118	M125	Z	0	0	0	%100
119	M126	X	-.834	-.834	0	%100
120	M126	Z	0	0	0	%100

Member Distributed Loads (BLC 75 : Structure Wm (300 Deg))

	Member Label	Direction	Start Magnitude[lb/ft,...	End Magnitude[lb/ft,F...	Start Location[ft,%]	End Location[ft,%]
1	M1	X	-.185	-.185	0	%100
2	M1	Z	-.107	-.107	0	%100
3	M4	X	-.631	-.631	0	%100
4	M4	Z	-.364	-.364	0	%100
5	M10	X	-.178	-.178	0	%100
6	M10	Z	-.103	-.103	0	%100
7	MP3A	X	-.68	-.68	0	%100
8	MP3A	Z	-.393	-.393	0	%100
9	MP4A	X	-.562	-.562	0	%100
10	MP4A	Z	-.324	-.324	0	%100
11	MP2A	X	-.68	-.68	0	%100
12	MP2A	Z	-.393	-.393	0	%100
13	MP1A	X	-.68	-.68	0	%100
14	MP1A	Z	-.393	-.393	0	%100
15	M43	X	-.178	-.178	0	%100
16	M43	Z	-.103	-.103	0	%100
17	M46	X	-.355	-.355	0	%100
18	M46	Z	-.205	-.205	0	%100
19	M51B	X	-.197	-.197	0	%100
20	M51B	Z	-.114	-.114	0	%100
21	M52B	X	-.788	-.788	0	%100
22	M52B	Z	-.455	-.455	0	%100
23	M76	X	-1.065	-1.065	0	%100
24	M76	Z	-.615	-.615	0	%100

Member Distributed Loads (BLC 75 : Structure Wm (300 Deg)) (Continued)

	Member Label	Direction	Start Magnitude[lb/ft,...	End Magnitude[lb/ft,F...	Start Location[ft,%]	End Location[ft,%]
25	M77	X	-.362	-.362	0	%100
26	M77	Z	-.209	-.209	0	%100
27	M80	X	-.381	-.381	0	%100
28	M80	Z	-.22	-.22	0	%100
29	M84	X	-1.065	-1.065	0	%100
30	M84	Z	-.615	-.615	0	%100
31	M85	X	-1.446	-1.446	0	%100
32	M85	Z	-.835	-.835	0	%100
33	M91	X	-1.523	-1.523	0	%100
34	M91	Z	-.879	-.879	0	%100
35	M34	X	-.631	-.631	0	%100
36	M34	Z	-.364	-.364	0	%100
37	M35	X	-.178	-.178	0	%100
38	M35	Z	-.103	-.103	0	%100
39	M36	X	-.178	-.178	0	%100
40	M36	Z	-.103	-.103	0	%100
41	M37	X	-.355	-.355	0	%100
42	M37	Z	-.205	-.205	0	%100
43	M40	X	-.788	-.788	0	%100
44	M40	Z	-.455	-.455	0	%100
45	M41	X	-.197	-.197	0	%100
46	M41	Z	-.114	-.114	0	%100
47	M45	X	-1.065	-1.065	0	%100
48	M45	Z	-.615	-.615	0	%100
49	M46A	X	-1.446	-1.446	0	%100
50	M46A	Z	-.835	-.835	0	%100
51	M48	X	-1.523	-1.523	0	%100
52	M48	Z	-.879	-.879	0	%100
53	M50A	X	-1.065	-1.065	0	%100
54	M50A	Z	-.615	-.615	0	%100
55	M51C	X	-.362	-.362	0	%100
56	M51C	Z	-.209	-.209	0	%100
57	M53	X	-.381	-.381	0	%100
58	M53	Z	-.22	-.22	0	%100
59	M58A	X	0	0	0	%100
60	M58A	Z	0	0	0	%100
61	M59A	X	-.712	-.712	0	%100
62	M59A	Z	-.411	-.411	0	%100
63	M60	X	-.712	-.712	0	%100
64	M60	Z	-.411	-.411	0	%100
65	M61	X	-1.42	-1.42	0	%100
66	M61	Z	-.82	-.82	0	%100
67	M64	X	-.197	-.197	0	%100
68	M64	Z	-.114	-.114	0	%100
69	M65	X	-.197	-.197	0	%100
70	M65	Z	-.114	-.114	0	%100
71	M69	X	0	0	0	%100
72	M69	Z	0	0	0	%100
73	M70	X	-.362	-.362	0	%100
74	M70	Z	-.209	-.209	0	%100
75	M72	X	-.381	-.381	0	%100
76	M72	Z	-.22	-.22	0	%100

Member Distributed Loads (BLC 75 : Structure Wm (300 Deg)) (Continued)

	Member Label	Direction	Start Magnitude[lb/ft,...	End Magnitude[lb/ft,F...	Start Location[ft,%]	End Location[ft,%]
77	M74	X	0	0	0	%100
78	M74	Z	0	0	0	%100
79	M75	X	-.362	-.362	0	%100
80	M75	Z	-.209	-.209	0	%100
81	M77A	X	-.381	-.381	0	%100
82	M77A	Z	-.22	-.22	0	%100
83	M82	X	-.185	-.185	0	%100
84	M82	Z	-.107	-.107	0	%100
85	MP3C	X	-.68	-.68	0	%100
86	MP3C	Z	-.393	-.393	0	%100
87	MP4C	X	-.562	-.562	0	%100
88	MP4C	Z	-.324	-.324	0	%100
89	MP2C	X	-.68	-.68	0	%100
90	MP2C	Z	-.393	-.393	0	%100
91	MP1C	X	-.68	-.68	0	%100
92	MP1C	Z	-.393	-.393	0	%100
93	M91A	X	-.74	-.74	0	%100
94	M91A	Z	-.427	-.427	0	%100
95	MP3B	X	-.68	-.68	0	%100
96	MP3B	Z	-.393	-.393	0	%100
97	MP4B	X	-.562	-.562	0	%100
98	MP4B	Z	-.324	-.324	0	%100
99	MP2B	X	-.68	-.68	0	%100
100	MP2B	Z	-.393	-.393	0	%100
101	MP1B	X	-.68	-.68	0	%100
102	MP1B	Z	-.393	-.393	0	%100
103	M100	X	-.17	-.17	0	%100
104	M100	Z	-.098	-.098	0	%100
105	M105	X	-.17	-.17	0	%100
106	M105	Z	-.098	-.098	0	%100
107	M110	X	-.68	-.68	0	%100
108	M110	Z	-.393	-.393	0	%100
109	M121	X	-.199	-.199	0	%100
110	M121	Z	-.115	-.115	0	%100
111	M122	X	-.797	-.797	0	%100
112	M122	Z	-.46	-.46	0	%100
113	M123	X	-.199	-.199	0	%100
114	M123	Z	-.115	-.115	0	%100
115	M124	X	-.983	-.983	0	%100
116	M124	Z	-.567	-.567	0	%100
117	M125	X	-.983	-.983	0	%100
118	M125	Z	-.567	-.567	0	%100
119	M126	X	-.593	-.593	0	%100
120	M126	Z	-.342	-.342	0	%100

Member Distributed Loads (BLC 76 : Structure Wm (330 Deg))

	Member Label	Direction	Start Magnitude[lb/ft,...	End Magnitude[lb/ft,F...	Start Location[ft,%]	End Location[ft,%]
1	M1	X	-.321	-.321	0	%100
2	M1	Z	-.555	-.555	0	%100
3	M4	X	-.121	-.121	0	%100
4	M4	Z	-.21	-.21	0	%100

Member Distributed Loads (BLC 76 : Structure Wm (330 Deg)) (Continued)

	Member Label	Direction	Start Magnitude[lb/ft,...	End Magnitude[lb/ft,F...	Start Location[ft,%]	End Location[ft,%]
5	M10	X	-.308	-.308	0	%100
6	M10	Z	-.534	-.534	0	%100
7	MP3A	X	-.393	-.393	0	%100
8	MP3A	Z	-.68	-.68	0	%100
9	MP4A	X	-.324	-.324	0	%100
10	MP4A	Z	-.562	-.562	0	%100
11	MP2A	X	-.393	-.393	0	%100
12	MP2A	Z	-.68	-.68	0	%100
13	MP1A	X	-.393	-.393	0	%100
14	MP1A	Z	-.68	-.68	0	%100
15	M43	X	-.308	-.308	0	%100
16	M43	Z	-.534	-.534	0	%100
17	M46	X	-.615	-.615	0	%100
18	M46	Z	-1.065	-1.065	0	%100
19	M51B	X	0	0	0	%100
20	M51B	Z	0	0	0	%100
21	M52B	X	-.341	-.341	0	%100
22	M52B	Z	-.591	-.591	0	%100
23	M76	X	-.205	-.205	0	%100
24	M76	Z	-.355	-.355	0	%100
25	M77	X	0	0	0	%100
26	M77	Z	0	0	0	%100
27	M80	X	0	0	0	%100
28	M80	Z	0	0	0	%100
29	M84	X	-.205	-.205	0	%100
30	M84	Z	-.355	-.355	0	%100
31	M85	X	-.626	-.626	0	%100
32	M85	Z	-1.085	-1.085	0	%100
33	M91	X	-.66	-.66	0	%100
34	M91	Z	-1.142	-1.142	0	%100
35	M34	X	-.486	-.486	0	%100
36	M34	Z	-.841	-.841	0	%100
37	M35	X	0	0	0	%100
38	M35	Z	0	0	0	%100
39	M36	X	0	0	0	%100
40	M36	Z	0	0	0	%100
41	M37	X	0	0	0	%100
42	M37	Z	0	0	0	%100
43	M40	X	-.341	-.341	0	%100
44	M40	Z	-.591	-.591	0	%100
45	M41	X	-.341	-.341	0	%100
46	M41	Z	-.591	-.591	0	%100
47	M45	X	-.82	-.82	0	%100
48	M45	Z	-1.42	-1.42	0	%100
49	M46A	X	-.626	-.626	0	%100
50	M46A	Z	-1.085	-1.085	0	%100
51	M48	X	-.66	-.66	0	%100
52	M48	Z	-1.142	-1.142	0	%100
53	M50A	X	-.82	-.82	0	%100
54	M50A	Z	-1.42	-1.42	0	%100
55	M51C	X	-.626	-.626	0	%100
56	M51C	Z	-1.085	-1.085	0	%100

Member Distributed Loads (BLC 76 : Structure Wm (330 Deg)) (Continued)

	Member Label	Direction	Start Magnitude[lb/ft,...	End Magnitude[lb/ft,F...	Start Location[ft,%]	End Location[ft,%]
57	M53	X	-.66	-.66	0	%100
58	M53	Z	-1.142	-1.142	0	%100
59	M58A	X	-.121	-.121	0	%100
60	M58A	Z	-.21	-.21	0	%100
61	M59A	X	-.308	-.308	0	%100
62	M59A	Z	-.534	-.534	0	%100
63	M60	X	-.308	-.308	0	%100
64	M60	Z	-.534	-.534	0	%100
65	M61	X	-.615	-.615	0	%100
66	M61	Z	-1.065	-1.065	0	%100
67	M64	X	-.341	-.341	0	%100
68	M64	Z	-.591	-.591	0	%100
69	M65	X	0	0	0	%100
70	M65	Z	0	0	0	%100
71	M69	X	-.205	-.205	0	%100
72	M69	Z	-.355	-.355	0	%100
73	M70	X	-.626	-.626	0	%100
74	M70	Z	-1.085	-1.085	0	%100
75	M72	X	-.66	-.66	0	%100
76	M72	Z	-1.142	-1.142	0	%100
77	M74	X	-.205	-.205	0	%100
78	M74	Z	-.355	-.355	0	%100
79	M75	X	0	0	0	%100
80	M75	Z	0	0	0	%100
81	M77A	X	0	0	0	%100
82	M77A	Z	0	0	0	%100
83	M82	X	0	0	0	%100
84	M82	Z	0	0	0	%100
85	MP3C	X	-.393	-.393	0	%100
86	MP3C	Z	-.68	-.68	0	%100
87	MP4C	X	-.324	-.324	0	%100
88	MP4C	Z	-.562	-.562	0	%100
89	MP2C	X	-.393	-.393	0	%100
90	MP2C	Z	-.68	-.68	0	%100
91	MP1C	X	-.393	-.393	0	%100
92	MP1C	Z	-.68	-.68	0	%100
93	M91A	X	-.321	-.321	0	%100
94	M91A	Z	-.555	-.555	0	%100
95	MP3B	X	-.393	-.393	0	%100
96	MP3B	Z	-.68	-.68	0	%100
97	MP4B	X	-.324	-.324	0	%100
98	MP4B	Z	-.562	-.562	0	%100
99	MP2B	X	-.393	-.393	0	%100
100	MP2B	Z	-.68	-.68	0	%100
101	MP1B	X	-.393	-.393	0	%100
102	MP1B	Z	-.68	-.68	0	%100
103	M100	X	-.295	-.295	0	%100
104	M100	Z	-.51	-.51	0	%100
105	M105	X	0	0	0	%100
106	M105	Z	0	0	0	%100
107	M110	X	-.295	-.295	0	%100
108	M110	Z	-.51	-.51	0	%100

Member Distributed Loads (BLC 76 : Structure Wm (330 Deg)) (Continued)

	Member Label	Direction	Start Magnitude[lb/ft,...	End Magnitude[lb/ft,F...	Start Location[ft,%]	End Location[ft,%]
109	M121	X	0	0	0	%100
110	M121	Z	0	0	0	%100
111	M122	X	-.345	-.345	0	%100
112	M122	Z	-.597	-.597	0	%100
113	M123	X	-.345	-.345	0	%100
114	M123	Z	-.597	-.597	0	%100
115	M124	X	-.417	-.417	0	%100
116	M124	Z	-.723	-.723	0	%100
117	M125	X	-.642	-.642	0	%100
118	M125	Z	-1.113	-1.113	0	%100
119	M126	X	-.417	-.417	0	%100
120	M126	Z	-.723	-.723	0	%100

Member Distributed Loads (BLC 81 : BLC 39 Transient Area Loads)

	Member Label	Direction	Start Magnitude[lb/ft,...	End Magnitude[lb/ft,F...	Start Location[ft,%]	End Location[ft,%]
1	M40	Y	-1.661	-4.228	0	.832
2	M40	Y	-4.228	-6.902	.832	1.665
3	M40	Y	-6.902	-8.189	1.665	2.497
4	M40	Y	-8.189	-6.545	2.497	3.329
5	M40	Y	-6.545	-3.463	3.329	4.162
6	M41	Y	-3.462	-6.573	0	.832
7	M41	Y	-6.573	-8.26	.832	1.665
8	M41	Y	-8.26	-7.044	1.665	2.497
9	M41	Y	-7.044	-4.426	2.497	3.329
10	M41	Y	-4.426	-1.884	3.329	4.162
11	M64	Y	-1.879	-4.428	0	.832
12	M64	Y	-4.428	-7.042	.832	1.665
13	M64	Y	-7.042	-8.256	1.665	2.497
14	M64	Y	-8.256	-6.578	2.497	3.329
15	M64	Y	-6.578	-3.47	3.329	4.162
16	M65	Y	-3.463	-6.545	0	.832
17	M65	Y	-6.545	-8.189	.832	1.665
18	M65	Y	-8.189	-6.9	1.665	2.497
19	M65	Y	-6.9	-4.227	2.497	3.329
20	M65	Y	-4.227	-1.665	3.329	4.162
21	M51B	Y	-1.661	-4.228	0	.832
22	M51B	Y	-4.228	-6.902	.832	1.665
23	M51B	Y	-6.902	-8.189	1.665	2.497
24	M51B	Y	-8.189	-6.545	2.497	3.329
25	M51B	Y	-6.545	-3.463	3.329	4.162
26	M52B	Y	-3.462	-6.573	0	.832
27	M52B	Y	-6.573	-8.26	.832	1.665
28	M52B	Y	-8.26	-7.044	1.665	2.497
29	M52B	Y	-7.044	-4.426	2.497	3.329
30	M52B	Y	-4.426	-1.884	3.329	4.162

Member Distributed Loads (BLC 82 : BLC 40 Transient Area Loads)

	Member Label	Direction	Start Magnitude[lb/ft,...	End Magnitude[lb/ft,F...	Start Location[ft,%]	End Location[ft,%]
1	M40	Y	-3.514	-8.944	0	.832
2	M40	Y	-8.944	-14.6	.832	1.665
3	M40	Y	-14.6	-17.322	1.665	2.497

Member Distributed Loads (BLC 82 : BLC 40 Transient Area Loads) (Continued)

	Member Label	Direction	Start Magnitude[lb/ft,...	End Magnitude[lb/ft,F...	Start Location[ft,%]	End Location[ft,%]
4	M40	Y	-17.322	-13.844	2.497	3.329
5	M40	Y	-13.844	-7.326	3.329	4.162
6	M41	Y	-7.323	-13.905	0	.832
7	M41	Y	-13.905	-17.474	.832	1.665
8	M41	Y	-17.474	-14.902	1.665	2.497
9	M41	Y	-14.902	-9.363	2.497	3.329
10	M41	Y	-9.363	-3.986	3.329	4.162
11	M64	Y	-3.976	-9.367	0	.832
12	M64	Y	-9.367	-14.896	.832	1.665
13	M64	Y	-14.896	-17.465	1.665	2.497
14	M64	Y	-17.465	-13.915	2.497	3.329
15	M64	Y	-13.915	-7.34	3.329	4.162
16	M65	Y	-7.325	-13.844	0	.832
17	M65	Y	-13.844	-17.322	.832	1.665
18	M65	Y	-17.322	-14.596	1.665	2.497
19	M65	Y	-14.596	-8.941	2.497	3.329
20	M65	Y	-8.941	-3.523	3.329	4.162
21	M51B	Y	-3.514	-8.944	0	.832
22	M51B	Y	-8.944	-14.6	.832	1.665
23	M51B	Y	-14.6	-17.322	1.665	2.497
24	M51B	Y	-17.322	-13.844	2.497	3.329
25	M51B	Y	-13.844	-7.326	3.329	4.162
26	M52B	Y	-7.323	-13.905	0	.832
27	M52B	Y	-13.905	-17.474	.832	1.665
28	M52B	Y	-17.474	-14.902	1.665	2.497
29	M52B	Y	-14.902	-9.363	2.497	3.329
30	M52B	Y	-9.363	-3.986	3.329	4.162

Member Area Loads (BLC 39 : Structure D)

	Joint A	Joint B	Joint C	Joint D	Direction	Distribution	Magnitude[ksf]
1	N79	N77	N54	N55	Y	Two Way	-.005
2	N83	N84	N108	N106	Y	Two Way	-.005
3	N6	N7	N87B	N87C	Y	Two Way	-.005

Member Area Loads (BLC 40 : Structure Di)

	Joint A	Joint B	Joint C	Joint D	Direction	Distribution	Magnitude[ksf]
1	N79	N77	N54	N55	Y	Two Way	-.011
2	N83	N84	N108	N106	Y	Two Way	-.011
3	N6	N7	N87B	N87C	Y	Two Way	-.011

Envelope AISC 15th(360-16): LRFD Steel Code Checks

	Member	Shape	Code C...	Loc[ft]	LC	Shear ...	Loc[ft]	Dir	LC	phi*Pnc [lb]	phi*Pnt [lb]	phi*Mn y-...	phi*Mn z-...	Cb	Eqn
1	M1	PIPE_3.0	.253	10.286	4	.114	4.167		7	28250.554	65205	5.749	5.749	2....	H1-1b
2	M4	HSS4X4X4	.133	0	10	.082	0	z	10	124657.7...	139518	16.181	16.181	2....	H1-1b
3	M10	HSS4X4X4	.093	2.375	2	.052	.223	z	1	136263.03	139518	16.181	16.181	1....	H1-1b
4	MP3A	PIPE_2.5	.379	7.406	10	.149	7.406		8	26137.193	50715	3.596	3.596	1....	H1-1b
5	MP4A	PIPE_2.0	.437	4.375	10	.218	.438		7	17855.085	32130	1.872	1.872	2....	H1-1b
6	MP2A	PIPE_2.5	.371	7.406	10	.088	4.5		3	26137.193	50715	3.596	3.596	1....	H1-1b

Envelope AISC 15th(360-16): LRFD Steel Code Checks (Continued)

	Member	Shape	Code C...	Loc[ft]	LC	Shear ...	Loc[ft]	Dir	LC	phi*Pnc [lb]	phi*Pnt [lb]	phi*Mn y-...	phi*Mn z-...	Cb	Eqn
7	MP1A	PIPE_2.5	.512	7.406	5	.301	7.406		6	26137.193	50715	3.596	3.596	2....	H3-6
8	M43	HSS4X4X4	.094	0	24	.053	2.152	z	1	136263.03	139518	16.181	16.181	1....	H1-1b
9	M46	PL1/2X6	.292	.516	1	.159	.516	y	12	66009.234	97200	1.012	12.15	1....	H1-1b
10	M51B	L2x2x4	.146	0	2	.009	0	y	17	12728.563	30585.6	.691	1.501	1....	H2-1
11	M52B	L2x2x4	.157	4.162	12	.012	4.162	y	21	12728.563	30585.6	.691	1.495	1....	H2-1
12	M76	PL3/8x6	.259	0	10	.194	0	y	6	70677.939	72900	.57	9.113	1....	H1-1b
13	M77	PL3/8x6	.319	.167	7	.166	0	y	24	71601.728	72900	.57	9.113	1....	H1-1b
14	M80	PL1/2X6	.096	.112	1	.271	0	y	12	96757.507	97200	1.012	12.15	1....	H1-1b
15	M84	PL3/8x6	.344	0	1	.296	0	y	8	70677.939	72900	.57	9.113	1....	H1-1b
16	M85	PL3/8x6	.344	.167	7	.164	0	y	14	71601.728	72900	.57	9.113	1....	H1-1b
17	M91	PL1/2X6	.104	.112	1	.234	0	y	2	96757.507	97200	1.012	12.15	1....	H1-1b
18	M34	HSS4X4X4	.132	0	6	.090	0	z	6	124657.7...	139518	16.181	16.181	2....	H1-1b
19	M35	HSS4X4X4	.103	2.375	10	.046	.223	z	9	136263.03	139518	16.181	16.181	1....	H1-1b
20	M36	HSS4X4X4	.097	0	20	.051	2.152	z	9	136263.03	139518	16.181	16.181	1....	H1-1b
21	M37	PL1/2X6	.260	.516	9	.148	.516	y	8	66009.234	97200	1.012	12.15	1....	H1-1b
22	M40	L2x2x4	.142	0	10	.008	0	y	24	12728.563	30585.6	.691	1.501	1....	H2-1
23	M41	L2x2x4	.149	4.162	8	.012	4.162	y	17	12728.563	30585.6	.691	1.495	1....	H2-1
24	M45	PL3/8x6	.255	0	7	.108	0	y	2	70677.939	72900	.57	9.113	1....	H1-1b
25	M46A	PL3/8x6	.284	.167	3	.171	0	y	20	71601.728	72900	.57	9.113	1....	H1-1b
26	M48	PL1/2X6	.088	.112	9	.238	0	y	8	96757.507	97200	1.012	12.15	1....	H1-1b
27	M50A	PL3/8x6	.315	0	9	.325	0	y	4	70677.939	72900	.57	9.113	1....	H1-1b
28	M51C	PL3/8x6	.314	.167	3	.207	0	y	46	71601.728	72900	.57	9.113	1....	H1-1b
29	M53	PL1/2X6	.093	.112	9	.229	0	y	10	96757.507	97200	1.012	12.15	1....	H1-1b
30	M58A	HSS4X4X4	.125	0	2	.090	0	z	2	124657.7...	139518	16.181	16.181	2....	H1-1b
31	M59A	HSS4X4X4	.114	2.375	5	.054	.223	z	5	136263.03	139518	16.181	16.181	1....	H1-1b
32	M60	HSS4X4X4	.103	0	5	.051	2.152	z	5	136263.03	139518	16.181	16.181	1....	H1-1b
33	M61	PL1/2X6	.286	.516	5	.166	.516	y	6	66009.234	97200	1.012	12.15	1....	H1-1b
34	M64	L2x2x4	.152	0	6	.009	0	y	20	12728.563	30585.6	.691	1.495	1....	H2-1
35	M65	L2x2x4	.148	4.162	4	.012	4.162	y	13	12728.563	30585.6	.691	1.501	1....	H2-1
36	M69	PL3/8x6	.211	0	3	.138	0	y	28	70677.939	72900	.57	9.113	1....	H1-1b
37	M70	PL3/8x6	.315	.167	11	.187	0	y	16	71601.728	72900	.57	9.113	1....	H1-1b
38	M72	PL1/2X6	.096	.112	5	.223	0	y	4	96757.507	97200	1.012	12.15	1....	H1-1b
39	M74	PL3/8x6	.346	0	5	.240	0	y	12	70677.939	72900	.57	9.113	1....	H1-1b
40	M75	PL3/8x6	.336	.167	11	.168	0	y	17	71601.728	72900	.57	9.113	1....	H1-1b
41	M77A	PL1/2X6	.098	.112	5	.231	0	y	6	96757.507	97200	1.012	12.15	1....	H1-1b
42	M82	PIPE_3.0	.255	1.953	12	.108	8.464		3	28250.554	65205	5.749	5.749	2....	H1-1b
43	MP3C	PIPE_2.5	.457	7.406	6	.154	7.406		4	26137.193	50715	3.596	3.596	1....	H1-1b
44	MP4C	PIPE_2.0	.375	4.375	6	.166	.438		2	17855.085	32130	1.872	1.872	2....	H1-1b
45	MP2C	PIPE_2.5	.432	7.406	6	.101	4.5		6	26137.193	50715	3.596	3.596	1....	H1-1b
46	MP1C	PIPE_2.5	.454	7.406	12	.282	7.406		2	26137.193	50715	3.596	3.596	2....	H1-1b
47	M91A	PIPE_3.0	.225	1.953	8	.098	4.427		4	28250.554	65205	5.749	5.749	2....	H1-1b
48	MP3B	PIPE_2.5	.388	7.406	2	.160	7.406		12	26137.193	50715	3.596	3.596	2....	H1-1b
49	MP4B	PIPE_2.0	.454	4.375	1	.205	.438		11	17855.085	32130	1.872	1.872	2....	H1-1b
50	MP2B	PIPE_2.5	.387	7.406	2	.098	7.406		7	26137.193	50715	3.596	3.596	1....	H1-1b
51	MP1B	PIPE_2.5	.428	7.406	8	.293	7.406		10	26137.193	50715	3.596	3.596	2....	H1-1b
52	M100	PIPE_2.5	.405	2.214	7	.161	10.938		8	14558.792	50715	3.596	3.596	2....	H1-1b
53	M105	PIPE_2.5	.413	2.083	5	.158	11.458		4	14558.792	50715	3.596	3.596	2....	H1-1b
54	M110	PIPE_2.5	.425	1.953	12	.177	11.068		12	14558.792	50715	3.596	3.596	1....	H1-1b
55	M121	L3X3X4	.601	0	11	.136	0	y	6	44536.597	46656	1.688	3.756	2....	H2-1
56	M122	L3X3X4	.732	0	7	.131	1.449	y	3	44536.597	46656	1.688	3.756	1....	H2-1
57	M123	L3X3X4	.587	0	3	.128	0	y	10	44536.597	46656	1.688	3.756	2....	H2-1
58	M124	LL3x3x3x6	.104	0	1	.007	0	z	10	46303.111	70632	6.362	3.751	1	H1-1b*

Envelope AISC 15th(360-16): LRFD Steel Code Checks (Continued)

	Member	Shape	Code C...	Loc[ft]	LC	Shear ...	Loc[ft]	Dir	LC	phi*Pnc [lb]	phi*Pnt [lb]	phi*Mn y-...	phi*Mn z-...	Cb	Eqn
59	M125	LL3x3x3x6	.095	0	9	.008	5.356	z	6	46303.111	70632	6.362	3.751	1	H1-1b*
60	M126	LL3x3x3x6	.097	0	5	.007	5.356	z	2	46303.111	70632	6.362	3.751	1	H1-1b*

Envelope Joint Reactions

	Joint		X [lb]	LC	Y [lb]	LC	Z [lb]	LC	MX [k-ft]	LC	MY [k-ft]	LC	MZ [k-ft]	LC
1	N3	max	963.371	10	838.821	19	7110.163	1	.969	19	1.594	4	.784	10
2		min	-967.479	4	123.033	1	-5128.888	7	.142	1	-1.572	10	-.649	4
3	N52	max	5663.207	9	837.498	16	2153.463	3	.486	6	1.55	12	.046	12
4		min	-3976.263	3	247.454	10	-3120.923	9	-.983	48	-1.526	6	-.951	18
5	N81	max	4148.325	11	828.359	13	2600.726	11	.449	8	1.391	8	.762	21
6		min	-5809.422	5	282.762	7	-3560.366	5	-1.106	2	-1.373	2	.025	3
7	N183A	max	60.612	10	2723.174	1	1810.436	7	0	51	0	4	.001	10
8		min	-60.544	4	-1222.749	7	-3962.269	1	0	1	0	10	0	4
9	N186	max	1303.029	3	2489.772	9	1808.562	9	0	6	0	12	0	12
10		min	-3131.958	9	-1015.826	3	-752.167	3	0	12	0	6	0	6
11	N189	max	3182.638	5	2529.263	5	1837.809	5	0	8	0	8	0	8
12		min	-1377.156	11	-1073.738	11	-794.98	11	0	2	0	2	0	2
13	Totals:	max	5842.957	10	6898.71	15	6105.129	1						
14		min	-5842.956	4	3492.602	9	-6105.131	7						

Client:	Verizon Wireless	Date:	6/30/2021
Site Name:	WATERFORD SECT		
Project No.	21777880A		
Title:	Mount Analysis	Page:	1

Version 3.1

I. Mount-to-Tower Connection Check

RISA Model Data

Nodes *(labeled per RISA)*	Orientation *(per graphic of typical platform)*
N3	270
N52	30
N81	150

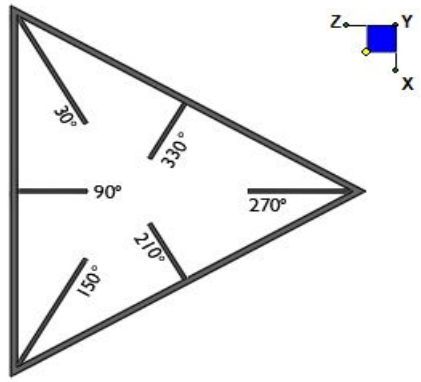

TYPICAL PLATFORM

Tower Connection Bolt Checks

Any moment resistance?:	yes
Bolt Quantity per Reaction:	4
d_x (in) *(Delta X of typ. bolt config. sketch)* :	6
d_y (in) *(Delta Y of typ. bolt config. sketch)* :	6
Bolt Type:	A325N
Bolt Diameter (in):	0.625
Required Tensile Strength (kips):	8.5
Required Shear Strength (kips):	4.7
Tensile Strength / bolt (kips):	20.7
Shear Strength / bolt (kips):	12.4
Tensile Capacity Overall:	**10.3%***
Shear Capacity Overall:	**9.5%**

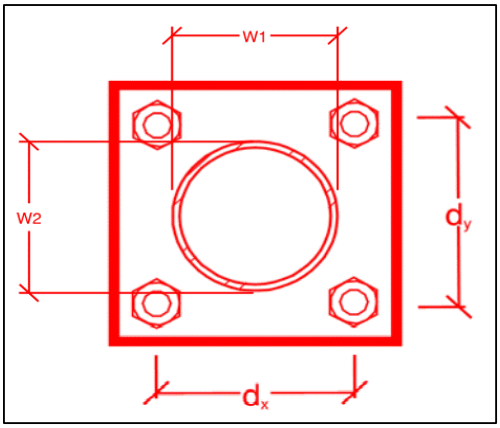

**Note: Tension reduction not required if tension or shear capacity < 30%*

Tower Connection Plate and Weld Check

Connecting Standoff Member Shape:	Rect
Plate Width (in):	8
Plate Height (in):	8
W1 (in):	4
W2 (in):	4
Fy (ksi, plate):	36
t_{Plate} (in):	0.75
Weld Size (1/16 in):	3
Phi*Rn (kip/in):	4.18
Required Weld Strength (kip/in):	1.05
Plate Bending Capacity:	**12.8%**
Weld Capacity:	**25.2%**

Max Plate Bending Strengths

Mu_{xx} *(kip-in)* :	1.5
$Phi*Mn_{xx}$ *(kip-in)* :	36.5
Mu_{yy} *(kip-in)* :	3.2
$Phi*Mn_{yy}$ *(kip-in)* :	36.5

Mount Desktop – Post Modification Inspection (PMI) Report Requirements

Documents & Photos Required from Contractor – Mount Modification

Purpose – to provide Maser Consulting Connecticut the proper documentation in order to complete the required Mount Desktop review of the Post Modification Inspection Report.

- Contractor is responsible for making certain the photos provided as noted below provide confirmation that the modification was completed in accordance with the modification drawings.
- Contractor shall relay any data that can impact the performance of the mount or the mount modification, this includes safety issues.

Base Requirements:

- Any special photos outside of the standard requirements will be indicated on the drawings
- Provide "as built drawings" showing contractor's name, preparer's signature, and date. Any deviations from the drawings (proposed modification) must be shown.
- Notation that all hardware was properly installed, and the existing hardware was inspected for any issues.
- Verification that loading is as communicated in the modification drawings. NOTE If loading is different than what is conveyed in the modification drawing contact Maser Consulting Connecticut immediately.
- Each photo should be time and date stamped
- Photos should be high resolution and submitted in a Zip File and should be organized in the file structure as depicted in Schedule A attached.
- Contractor shall ensure that the safety climb wire rope is supported and not adversely impacted by the install of the modification components. This may involve the install of wire rope guides, or other items to protect the wire rope.
- The photos in the file structure should be uploaded **to** **https://pmi.vzwsmart.com** as depicted on the drawings

Photo Requirements:

- *Base and "During Installation Photos"*
  - Base pictures include
    - Photo of Gate Signs showing the tower owner, site name, and number
    - Photo of carrier shelter showing the carrier site name and number if available
    - Photos of the galvanizing compound and/or paint used (if applicable), clearly showing the label and name
  - "During Installation Photos if provided - must be placed only in this folder
- *Photos taken at ground level*
  - Overall tower structure before and after installation of the modifications
  - Photos of the appropriate mount before and after installation of the modifications; if the mounts are at different rad elevations, pictures must be provided for all elevations that the modifications were installed

- *Photos taken at Mount Elevation*
    - Photos showing each individual sector before and also after installation of modifications. Each entire sector must be in one photo to show in the inter-connection of members.
        - These photos should also certify that the placement and geometry of the equipment on the mount is as depicted on the sketch and table in the mount analysis
    - Close-up photos of each installed modification per the modification drawings; pictures should also include connection hardware (U-bolts, bolts, nuts, all-threaded rods, etc.)
    - Photos showing the measurements of the installed modification member sizes (i.e. lengths, widths, depths, diameters, thicknesses)
    - Photos showing the elevation or distances of the installed modifications from the appropriate reference locations shown in the modification drawings
    - Photos showing the installed modifications onto the tower with tape drop measurements (if applicable) (i.e. ring/collar mounts, tie-backs, V-bracing kits, etc.); if the existing mount elevation needs to be changed according to the modification drawings, a tape drop measurement shall be provided before the elevation change
    - Photos showing the safety climb wire rope above and below the mount prior to modification.
    - Photos showing the climbing facility and safety climb if present.

Material Certification:

- Materials utilized must be as per specification on the drawings or the equivalent as validated by Maser Consulting Connecticut.
    - If the drawings are as specified on the drawings
        - The contractor should provide the packing list or the materials utilized to perform the mount modification
    - If an equivalent is utilized
        - It is required that the Maser Consulting Connecticut certification of such is included in the contractor submission package. There may be an additional charge for this certification if the equivalent submission doesn't meet specifications as prescribed in the drawings.
- The contractor must certify that the materials meet these specifications by one of these methods.

☐ The Material utilized was as specified on the Maser Consulting Connecticut Mount Modification Drawings and included
in the Material certification folder is a packing list or invoice for these materials

☐ The material utilized was an "equivalent" and included as part of the contractor submission is the Maser Consulting Connecticut certification, invoices, or specifications validating accepted status

Certifying Individual: Company _____

Name _____

Signature _____

Antenna & equipment placement and Geometry Confirmation:

- The contractor must certify that the antenna & equipment placement and geometry is in accordance with the antenna placement diagrams as included in this mount analysis.

- ☐ The contractor certifies that the photos support and the equipment on the mount is as depicted on the antenna placement diagrams as included in this mount analysis.

- ☐ The contractor notes that the equipment on the mount is not in accordance with the antenna placement diagrams and has accordingly marked up the diagrams or provided a diagram outlining the differences.

Certifying Individual: Company _____

Name _____

Signature _____

Special Instructions / Validation as required from the MA or Mod Drawings:

Issue:

Contractor shall float mount and secure in new position 6" above existing location following the guidelines below:

- Care shall be taken not to damage existing coax/jumpers.
- Inspect pole and stepbolts for damage beneath where mount was previously located and escalate to engineer of record immediately if any visible damage is present.
- After fully securing collar at new location contractor shall replace all threaded rods on mount collar. Rods shall not be replaced until mount has been fully secured.
- Contractor shall not loosen or replace more than one rod at a time.

Response:

Schedule A – Photo & Document File Structure

- VzW Site Number / Name
  - Base & “During Installation” Photos
  - Pre-Installation Photos
    - Alpha
    - Beta
    - Gamma
    - Ground Level
    - Tape Drop
  - Post-Installation Photos
    - Alpha
    - Beta
    - Gamma
    - Ground Level
    - Tape Drop
    - Photos of climbing facility and safety climb – If Present
  - Certifications – Submission of this document including certifications
  - Specific Required Additional Photos

S r **A**
S r r T M
M E . P

Plan View

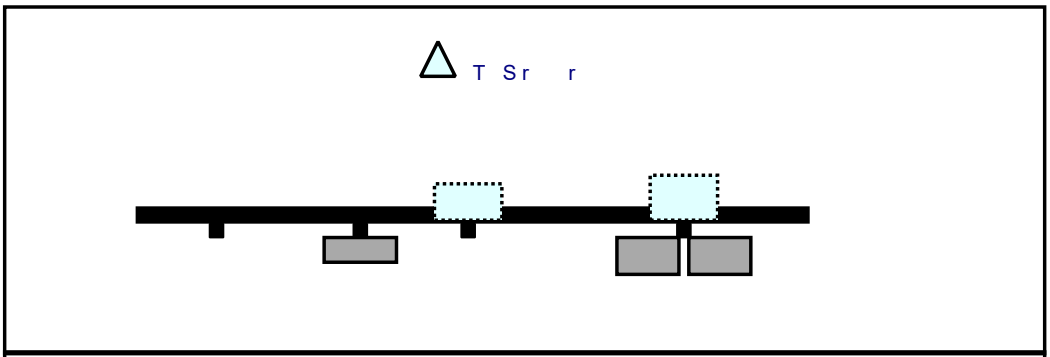

Front View
L Sr r

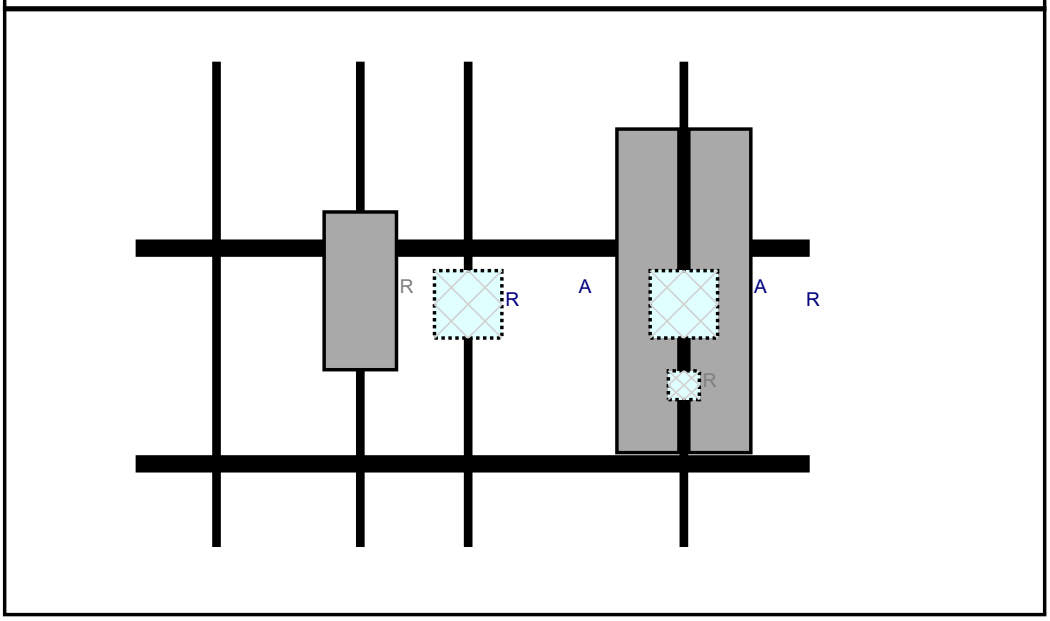

R M d	d D P P A . A A r L. P P r T. O S d
A A B R B	. r Add d
A A B R B	. r Add d
R B T DS	. . B d Add d
R B B A RR BR R D A	B d Add d
R B B RR BR R D A	B d Add d
R MT A	. . r Add d

S r **B**

S r r T M

M E . P

Plan View

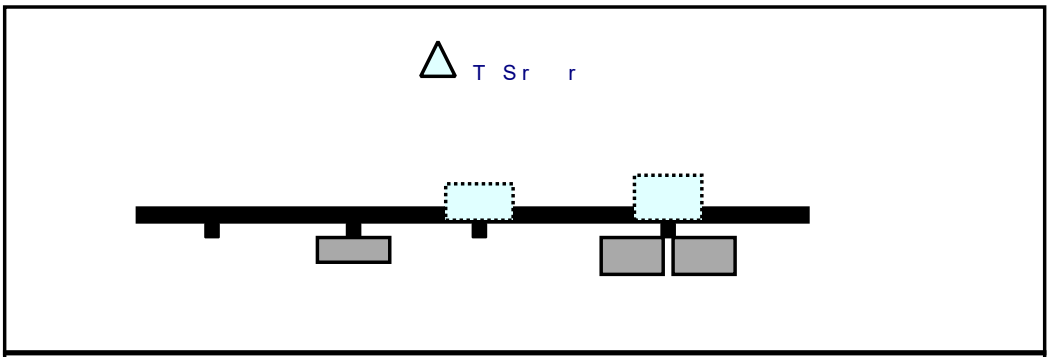

Front View

L Sr r

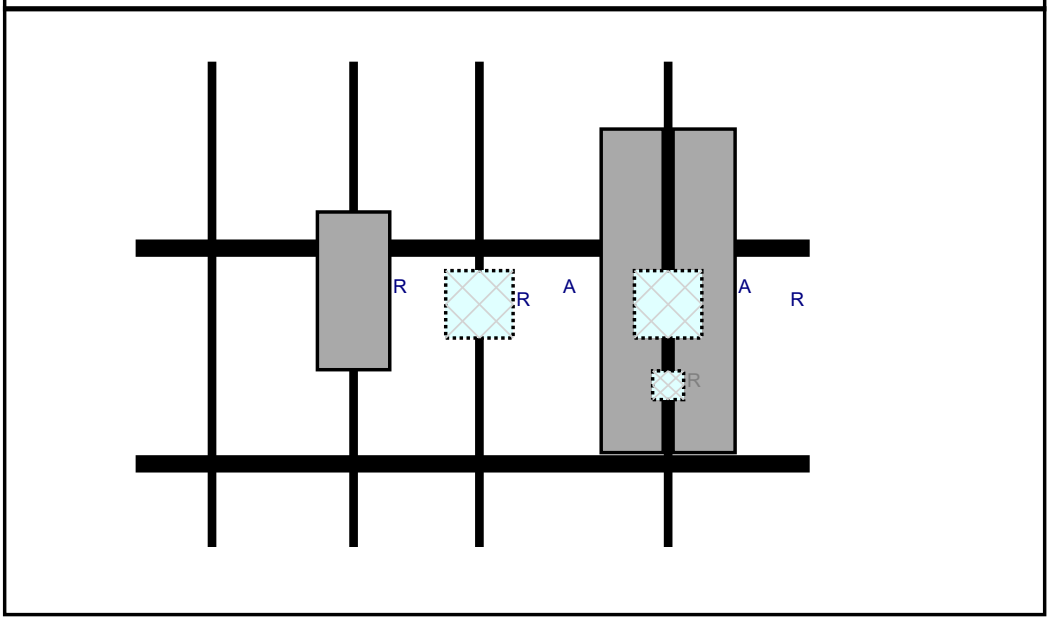

R M d	d D P P A . A A r L. P P r T. O S d
A A B R B	. . r Add d
A A B R B	. . r Add d
R B T DS	. . . B d Add d
R B B A RR BR R D A	. B d Add d
R B B RR BR R D A	. B d Add d
R MT A	. . . r Add d

S r **C**

S r r T M

M E . P

Plan View

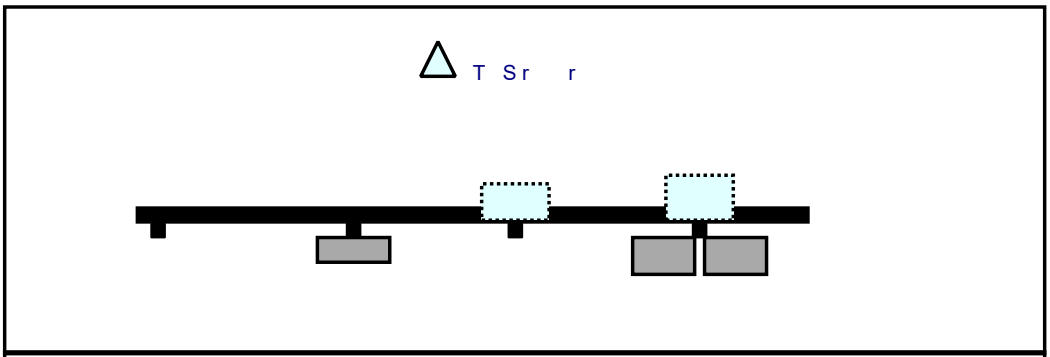

Front View

L Sr r

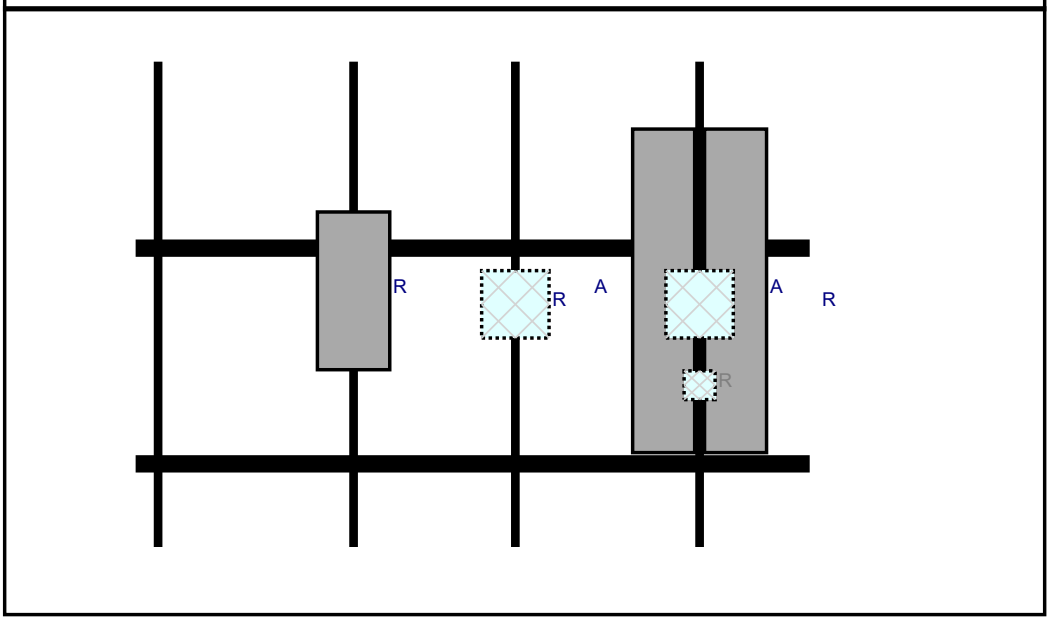

R M d	d D P P A . A A r L. P P r T. O S d
A A B R B	. . r Add d
A A B R B	. . r Add d
R B T DS	. . . B d Add d
R B B A RR BR R D A	. B d Add d
R B B RR BR R D A	. B d Add d
R MT A	. . . r Add d

Maser Consulting Connecticut

Subject	TIA-222-H Usage
Site Information	Site ID: 469063-VZW / NE WATERFORD SE CT Site Name: NE WATERFORD SE CT Carrier Name: Verizon Wireless Address: 15 Miner Lane Waterford, Connecticut 06385 New London County Latitude: 41.329167° Longitude: -72.124444°
Structure Information	Tower Type: Monopole Mount Type: 12.50-Ft Platform

To Whom It May Concern,

We respectfully submit the above referenced Antenna Mount Structural Analysis report in conformance with ANSI/TIA-222-H, Structural Standard for Antenna Supporting Structures and Antennas and Small Wind Turbine Support Structures.

The 2015 International Building Code states that, in Section 3108, telecommunication towers shall be designed and constructed in accordance with the provisions of TIA-222. TIA-222-H is the latest revision of the TIA-222 Standard, effective as of January 01, 2018.

As with all ANSI standards and engineering best practice is to apply the most current revision of the standard. This ensures the engineer is applying all updates. As an example, the TIA-222-H Standard includes updates to bring it in line with the latest AISC and ACI standards and it also incorporates the latest wind speed maps by ASCE 7 based on updated studies of the wind data.

The TIA-222-H standard clarifies these specific requirements for the antenna mount analysis such as modeling methods, seismic analysis, 30-degree increment wind directions and maintenance loading. Therefore, it is our opinion that TIA-222-H is the most appropriate standard for antenna mount structural analysis and is acceptable for use at this site to ensure the engineer is taking into account the most current engineering standard available.

Sincerely,

Justin Linette, PE
Sr. Technical Manager

PROJECT NOTES

1. SEE MODIFICATION NOTES
2. THE CONTRACTOR SHALL COMPLY WITH ALL APPLICABLE CODES, ORDINANCES, LAWS AND REGULATIONS OF ALL MUNICIPALITIES, UTILITY COMPANIES OR OTHER PUBLIC/GOVERNING AUTHORITIES.
3. THE CONTRACTOR SHALL BE RESPONSIBLE FOR OBTAINING ALL PERMITS AND INSPECTIONS THAT MAY BE REQUIRED BY ANY FEDERAL, STATE, COUNTY OR MUNICIPAL AUTHORITIES.
4. THE CONTRACTOR SHALL NOTIFY THE CONSTRUCTION MANAGER, IN WRITING, OF ANY CONFLICTS, ERRORS OR OMISSIONS PRIOR TO THE SUBMISSION OF BIDS OR PERFORMANCE OF WORK.
5. THE CONTRACTOR SHALL BE RESPONSIBLE FOR PROTECTING ALL EXISTING SITE IMPROVEMENTS PRIOR TO COMMENCING CONSTRUCTION. THE CONTRACTOR SHALL REPAIR ANY DAMAGE AS A RESULT OF CONSTRUCTION OF THIS FACILITY AT THE CONTRACTOR'S EXPENSE TO THE SATISFACTION OF THE OWNER.
6. THE SCOPE OF WORK FOR THIS PROJECT SHALL INCLUDE PROVIDING ALL MATERIALS, EQUIPMENT AND LABOR REQUIRED TO COMPLETE THIS PROJECT. ALL EQUIPMENT SHALL BE INSTALLED IN ACCORDANCE WITH MANUFACTURER'S RECOMMENDATIONS.
7. THE CONTRACTOR SHALL VISIT THE PROJECT SITE PRIOR TO SUBMITTING THE BID TO VERIFY THAT THE PROJECT CAN BE CONSTRUCTED IN ACCORDANCE WITH THE CONTRACT DOCUMENTS AND CONSTRUCTION DRAWINGS.
8. THE CONTRACTOR SHALL VERIFY ALL EXISTING DIMENSIONS AND CONDITIONS PRIOR TO COMMENCING ANY WORK. ALL DIMENSIONS OF EXISTING CONSTRUCTION SHOWN ON THESE DRAWINGS MUST BE VERIFIED. THE CONTRACTOR SHALL NOTIFY THE CONSTRUCTION MANAGER OF ANY DISCREPANCIES PRIOR TO ORDERING MATERIAL OR PROCEEDING WITH CONSTRUCTION.
9. SINCE THE CELL SITE MAY BE ACTIVE, ALL SAFETY PRECAUTIONS MUST BE TAKEN WHEN WORKING AROUND HIGH LEVELS OF ELECTROMAGNETIC RADIATION. EQUIPMENT SHOULD BE SHUTDOWN PRIOR TO PERFORMING ANY WORK THAT COULD EXPOSE THE WORKERS TO DANGER. PERSONAL RF EXPOSURE MONITORS ARE REQUIRED TO BE WORN TO ALERT OF ANY POTENTIALLY DANGEROUS EXPOSURE LEVELS.
10. NO NOISE, SMOKE, DUST OR ODOR WILL RESULT FROM THIS FACILITY AS TO CAUSE A NUISANCE.
11. THE FACILITY IS UNMANNED AND NOT FOR HUMAN HABITATION (NO HANDICAP ACCESS IS REQUIRED).

COPYRIGHT ©2021
MASER CONSULTING CONNECTICUT
ALL RIGHTS RESERVED
THIS DRAWING AND ALL THE INFORMATION CONTAINED HEREIN IS AUTHORIZED FOR USE ONLY BY THE PARTY FOR WHOM THE WORK WAS CONTRACTED OR TO WHOM IT IS CERTIFIED. THIS DRAWING MAY NOT BE COPIED, REUSED, DISCLOSED, DISTRIBUTED OR RELIED UPON FOR ANY OTHER PURPOSE WITHOUT THE EXPRESS WRITTEN CONSENT OF MASER CONSULTING CONNECTICUT.

verizon

MOUNT MODIFICATION DRAWINGS
EXISTING 12.50' PLATFORM

SITE NAME: WATERFORD SE CT
SITE NUMBER: 469063

15 MINER LANE
WATERFORD, CT 06385
NEW LONDON COUNTY

PROJECT INFORMATION

SITE INFORMATION

LATITUDE: 41.329167° N
LONGITUDE: 72.124444° W
JURISDICTION: NEW LONDON COUNTY

APPLICANT/LESSEE

COMPANY: VERIZON WIRELESS

CLIENT REPRESENTATIVE

COMPANY: VERIZON WIRELESS
ADDRESS: 118 FLANDERS ROAD, THIRD FLOOR
CITY, STATE, ZIP: WESTBOROUGH, MA 01581
CONTACT: ANDREW CANDIELLO
EMAIL: ANDREW.CANDIELLO@VERIZONWIRELESS.COM

PROJECT MANAGER

COMPANY: MASER CONSULTING CONNECTICUT
CONTACT: PETER ALBANO
PHONE: 856-797-0412
E-MAIL: PETER.ALBANO@COLLIERSENGINEERING.COM

SHEET INDEX

SHEET	DESCRIPTION
T-1	TITLE SHEET
S-1	BILL OF MATERIALS
S-2	MODIFICATION NOTES
S-3	MODIFICATION NOTES
S-4	MODIFICATION DETAILS
S-5	MODIFICATION DETAILS
S-6	MOUNT PHOTOS
	SPECIFICATION SHEETS

CONTRACTOR PMI REQUIREMENTS

PMI LOCATION: HTTPS://PMI.VZWSMART.COM
SMART TOOL PROJECT #: 10069540
VZW LOCATION CODE (PSLC): 469063
FUZE ID: 16067742

PMI REQUIREMENTS EMBEDDED WITHIN MOUNT MODIFICATION REPORT

REFERENCED DOCUMENTS

FAILING MOUNT ANALYSIS REPORT
SMART TOOL PROJECT #: 10009025
MASER CONSULTING CONNECTICUT PROJECT #: 21777880A
ANALYSIS DATE: 5/7/2021

MASER CONSULTING CONNECTICUT
WILL BE KNOWN AS COLLIERS ENGINEERING & DESIGN IN 2021
Customer Loyalty *through* Client Satisfaction
www.maserconsulting.com
Office Locations:
NEW JERSEY, NEW YORK, PENNSYLVANIA, VIRGINIA, FLORIDA, NORTH CAROLINA, SOUTH CAROLINA, NEW MEXICO, MARYLAND, GEORGIA, TEXAS, TENNESSEE, COLORADO

Copyright © 2021. Maser Consulting All Rights Reserved. This drawing and all the information contained herein is authorized for use only by the party for whom the services were contracted or to whom it is certified. This drawing may not be copied, reused, disclosed, distributed or relied upon for any other purpose without the express written consent of Maser Consulting.

verizon

PROTECT YOURSELF
ALL STATES REQUIRE NOTIFICATION OF EXCAVATORS, DESIGNERS, OR ANY PERSON PREPARING TO DISTURB THE EARTH'S SURFACE ANYWHERE IN ANY STATE
811 Know what's below. Call before you dig.
FOR STATE SPECIFIC DIRECT PHONE NUMBERS VISIT: WWW.CALL811.COM

SCALE: AS SHOWN
JOB NUMBER: 21777880A

REV	DATE	DESCRIPTION	DRAWN BY	CHECKED BY
0	6/30/2021	ISSUED FOR CONSTRUCTION	MSG	JPL

STATE OF CONNECTICUT
Justin P. Linette
LICENSED PROFESSIONAL ENGINEER
LICENSE NUMBER: 31965
MASER CONSULTING
C.T. C.O.A. #: PC.0000131
Digitally signed by Justin Peter Linette
Date: 2021.07.01 09:56:35 -04'00'

IT IS A VIOLATION OF LAW FOR ANY PERSON, UNLESS THEY ARE ACTING UNDER THE DIRECTION OF THE RESPONSIBLE LICENSED PROFESSIONAL ENGINEER, TO ALTER THIS DOCUMENT.

SITE NAME:
WATERFORD SE CT
469063
15 MINER LANE
WATERFORD, CT 06385
NEW LONDON COUNTY

NASHVILLE OFFICE
5141 Virginia Way
Suite 420
Brentwood, TN 37027
Phone: 615.686.2575
Fax: 615.523.2456

SHEET TITLE: TITLE SHEET

SHEET NUMBER: T-1

NOTE: DO NOT SCALE DRAWINGS FOR CONSTRUCTION.

AKAdmin 21346.9065 WATERFORD SE CT Mount-Mods.dwg PAGE 2010630.dwgT1-1 By: MDRAHAM

BILL OF MATERIALS

VZWSMART KITS

QUANTITY	MANUFACTURER	PART NUMBER	DESCRIPTION	NOTES
1	VZWSMART	VZWSMART-PLK1	SUPPORT RAIL KIT	CONTRACTOR TO VERIFY THE LENGTH REQUIRED AND TRIM AS NECESSARY IN ACCORDANCE WITH THE 'STRUCTURAL STEEL' NOTES ON SHEET S-2
1		VZWSMART-PLK5	KICKER KIT	CONTRACTOR TO VERIFY THE LENGTH REQUIRED AND TRIM AS NECESSARY IN ACCORDANCE WITH THE 'STRUCTURAL STEEL' NOTES ON SHEET S-2
1		VZWSMART-PLK7	MONOPOLE COLLAR MOUNT ASSEMBLY	

OTHER REQUIRED PARTS

QUANTITY	MANUFACTURER	PART NUMBER	DESCRIPTION	NOTES
-	-	-	48" LONG 5/8" DIA. A193-B7 THREADED ROD	

NOTE: ALL MATERIALS REQUIRED FOR THE DESIGNED MODIFICATIONS BUT NOT LISTED IN THIS SHEET ARE ASSUMED TO BE PROVIDED BY THE CONTRACTOR

VZWSMART KITS - APPROVED VENDORS

COMMSCOPE	
CONTACT	SALVADOR ANGUIANO
PHONE	(817) 304-7492
EMAIL	SALVADOR.ANGUIANO@COMMSCOPE.COM
WEBSITE	WWW.COMMSCOPE.COM
METROSITE FABRICATORS, LLC	
CONTACT	KENT RAMEY
PHONE	(706) 335-7045 (O), (706) 982-9788 (M)
EMAIL	KENT@METROSITELLC.COM
WEBSITE	METROSITEFABRICATORS.COM
PERFECTVISION	
CONTACT	WIRELESS SALES
PHONE	(844) 887-6723
EMAIL	WWW.PERFECT-VISION.COM
WEBSITE	WIRELESSSALES@PERFECT-VISION.COM
SABRE INDUSTRIES, INC.	
CONTACT	ANGIE WELCH
PHONE	(866) 428-6937
EMAIL	AKWELCH@SABREINDUSTRIES.COM
WEBSITE	WWW.SABRESITESOLUTIONS.COM
SITE PRO 1	
CONTACT	PAULA BOSWELL
PHONE	(972) 236-9843
EMAIL	PAULA.BOSWELL@VALMONT.COM
WEBSITE	WWW.SITEPRO1.COM

NOTE: WHEN SPECIFIED, VZWSMART KITS SHALL BE REQUIRED AND WILL BE VERIFIED DURING THE DESKTOP PMI

MASER CONSULTING
CONNECTICUT
WILL BE KNOWN AS COLLIERS ENGINEERING & DESIGN IN 2021
Customer Loyalty *through* Client Satisfaction
www.maserconsulting.com
Office Locations:
- NEW JERSEY
- NEW YORK
- PENNSYLVANIA
- VIRGINIA
- FLORIDA
- NORTH CAROLINA
- SOUTH CAROLINA
- NEW MEXICO
- MARYLAND
- GEORGIA
- TEXAS
- TENNESSEE
- COLORADO

Copyright © 2021. Maser Consulting All Rights Reserved. This drawing and all the information contained herein is authorized for use only by the party for whom the services were contracted or to whom it is certified. This drawing may not be copied, reused, disclosed, distributed or relied upon for any other purpose without the express written consent of Maser Consulting.

verizon

PROTECT YOURSELF
ALL STATES REQUIRE NOTIFICATION OF EXCAVATORS, DESIGNERS, OR ANY PERSON PREPARING TO DISTURB THE EARTH'S SURFACE ANYWHERE IN ANY STATE

811 Know what's below. Call before you dig.

FOR STATE SPECIFIC DIRECT PHONE NUMBERS VISIT:
WWW.CALL811.COM

SCALE : AS SHOWN
JOB NUMBER : 21777880A

REV	DATE	DESCRIPTION	DRAWN BY	CHECKED BY
0	6/30/2021	ISSUED FOR CONSTRUCTION	MSG	JPL

STATE OF CONNECTICUT · LICENSED PROFESSIONAL ENGINEER

Justin P. Linette
CONNECTICUT PROFESSIONAL ENGINEER
LICENSE NUMBER: 31965
MASER CONSULTING
C.T. C.O.A. #: PC.0000131

Digitally Signed by Justin Peter Linette
Date: 2021.07.01 09:57:00-04'00'

IT IS A VIOLATION OF LAW FOR ANY PERSON, UNLESS THEY ARE ACTING UNDER THE DIRECTION OF THE RESPONSIBLE LICENSED PROFESSIONAL ENGINEER, TO ALTER THIS DOCUMENT.

SITE NAME:

WATERFORD SE CT
469063

15 MINER LANE
WATERFORD, CT 06385
NEW LONDON COUNTY

NASHVILLE OFFICE
5141 Virginia Way
Suite 420
Brentwood, TN 37027

Phone: 615.686.2575
Fax: 615.523.2456

SHEET TITLE : BILL OF MATERIALS

SHEET NUMBER : S-1

NOTE: DO NOT SCALE DRAWINGS FOR CONSTRUCTION.

AutoCad: 23.0s(LMS Tech) VZW_WATERFORD SE CT Mount&Ext.dwg PAGE: 20210630 Aug 6:51 By: MGRAHAM

GENERAL NOTES

1. THESE MODIFICATIONS HAVE BEEN DESIGNED IN ACCORDANCE WITH THE GOVERNING PROVISIONS OF THE TELECOMMUNICATIONS INDUSTRY STANDARD TIA-222-H. MATERIALS AND SERVICES PROVIDED BY THE CONTRACTOR SHALL CONFORM TO THE ABOVE MENTIONED CODES.
2. CONTRACTOR SHALL TAKE ALL PRECAUTIONS NECESSARY TO PREVENT DAMAGE TO EXISTING STRUCTURES. ANY DAMAGE TO EXISTING STRUCTURES AS A RESULT OF THE CONTRACTOR'S WORK OR FROM DAMAGE DUE TO OTHER CAUSES SHALL BE REPAIRED AT THE CONTRACTOR'S EXPENSE TO THE SATISFACTION OF THE OWNER.
3. CONTRACTOR SHALL VERIFY ALL DIMENSIONS AND EXISTING CONDITIONS BEFORE BEGINNING WORK, ORDERING MATERIAL, AND PREPARING OF SHOP DRAWINGS. ANY DISCREPANCIES BETWEEN FIELD CONDITIONS AND THE CONTRACT DOCUMENTS SHALL BE BROUGHT TO THE IMMEDIATE ATTENTION OF THE ENGINEER. IF THE CONTRACTOR DISCOVERS ANY EXISTING CONDITIONS THAT ARE NOT REPRESENTED ON THESE DRAWINGS, OR ANY CONDITIONS THAT WOULD INTERFERE WITH THE INSTALLATION OF THE MODIFICATIONS, NOTIFY THE ENGINEER IMMEDIATELY.
4. IT IS ASSUMED THAT ANY STRUCTURAL MODIFICATION WORK SPECIFIED ON THESE PLANS WILL BE ACCOMPLISHED BY KNOWLEDGEABLE WORKMEN WITH TOWER CONSTRUCTION EXPERIENCE.
5. THE CONTRACTOR SHALL SUPERVISE AND DIRECT THE WORK AND SHALL BE SOLELY RESPONSIBLE FOR ALL CONSTRUCTION METHODS, MEANS, TECHNIQUES, SEQUENCES, AND PROCEDURES.
6. ALL CONSTRUCTION MEANS AND METHODS; INCLUDING BUT NOT LIMITED TO, ERECTION PLANS, RIGGING PLANS, CLIMBING PLANS, AND RESCUE PLANS SHALL BE THE RESPONSIBILITY OF THE GENERAL CONTRACTOR RESPONSIBLE FOR THE EXECUTION OF THE WORK CONTAINED HEREIN AND SHALL MEET ANSI/TIA-322 (LATEST EDITION), OSHA, AND GENERAL INDUSTRY STANDARDS. ALL RIGGING PLANS SHALL ADHERE TO ANSI/TIA-322 (LATEST EDITION) INCLUDING THE REQUIRED INVOLVEMENT OF A QUALIFIED ENGINEER FOR CLASS IV CONSTRUCTION.
7. THE CONTRACTOR IS SOLELY RESPONSIBLE FOR INITIATING, MAINTAINING, AND SUPERVISING ALL SAFETY PROGRAMS IN ACCORDANCE WITH APPLICABLE SAFETY CODES.
8. WORK SHALL ONLY BE PERFORMED DURING CALM DRY DAYS (WINDS LESS THAN 30-MPH). THE STRUCTURE SHOWN ON THE DRAWINGS IS STRUCTURALLY SOUND ONLY IN THE COMPLETED FORM. THE CONTRACTOR SHALL BE RESPONSIBLE FOR THE STRENGTH AND STABILITY OF THE STRUCTURE DURING ERECTION. CONTRACTOR SHALL PROVIDE TEMPORARY SUPPORT, SHORING, BRACING AND ANY OTHER STRUCTURAL SYSTEMS AS REQUIRED TO RESIST ALL FORCES THAT MAY OCCUR DURING HANDLING AND ERECTION UNTIL THE STRUCTURE IS FULLY COMPLETED. TEMPORARY SUPPORTS, BRACING AND OTHER STRUCTURAL SYSTEMS REQUIRED DURING CONSTRUCTION SHALL REMAIN THE CONTRACTOR'S PROPERTY AFTER THEIR USE.
9. ALL INSTALLATIONS PERFORMED ON THIS STRUCTURE SHALL BE COMPLETED IN ACCORDANCE WITH THE GOVERNING PROVISIONS OF THE STANDARD FOR INSTALLATION, ALTERATION AND MAINTENANCE OF ANTENNA SUPPORTING STRUCTURES AND ANTENNAS, ANSI/TIA-322.
10. CONTRACTOR SHALL SECURE SITE BACK TO EXISTING CONDITION UNDER SUPERVISION OF OWNER. ALL FENCE, STONE, GEOFABRIC, GROUNDING, AND SURROUNDING GRADE SHALL BE REPLACED AND REPAIRED AS REQUIRED TO ACHIEVE OWNER APPROVAL. POSITIVE DRAINAGE AWAY FROM TOWER SITE SHALL BE MAINTAINED.
11. CONNECTIONS BETWEEN ITEMS SUPPORTED BY THE STRUCTURE AND THE STRUCTURE NOT SPECIFICALLY DETAILED IN THE CONTRACT DOCUMENTS ARE THE RESPONSIBILITY OF THE CONTRACTOR. SUCH CONNECTIONS SHALL BE DESIGNED, COORDINATED AND INSPECTED BY A PROFESSIONAL STRUCTURAL ENGINEER LICENSED IN THE STATE OF THE PROJECT. SUBMIT SIGNED AND SEALED CALCULATIONS DURING SHOP DRAWING REVIEW.
12. DO NOT SCALE DRAWINGS.
13. DO NOT USE THESE DRAWINGS FOR ANY OTHER SITE.
14. ALL MATERIAL UTILIZED FOR THIS PROJECT MUST BE NEW AND FREE OF ANY DEFECTS. ANY MATERIAL SUBSTITUTIONS, INCLUDING BUT NOT LIMITED TO ALTERED SIZE AND/OR STRENGTHS, MUST BE APPROVED BY THE OWNER AND ENGINEER IN WRITING.
15. THE MOUNT UNDER NO CIRCUMSTANCES SHOULD BE USED AS A TIE OFF POINT.

DESIGN LOADS

WIND LOADS

a. BASIC WIND SPEED (3 SECOND GUST), V = 127 MPH

b. EXPOSURE CATEGORY C

c. TOPOGRAPHIC CATEGORY 1

d. MEAN BASE ELEVATION (AMSL) = 92.15'

ICE LOADS

a. ICE WIND SPEED (3 SECOND GUST), V = 50 MPH

b. ICE THICKNESS = 1.00 IN

SEISMIC LOADS

a. SEISMIC DESIGN CATEGORY B

b. SHORT TERM MCER GROUND MOTION, S_S = .191

c. LONG TERM MCER GROUND MOTION, S_1 = .052

STRUCTURAL STEEL

1. DESIGN, DETAILING, FABRICATION AND ERECTION OF STRUCTURAL STEEL SHALL CONFORM TO THE FOLLOWING PUBLICATIONS EXCEPT AS SPECIFICALLY INDICATED IN THE CONTRACT DOCUMENTS.
   a. AMERICAN INSTITUTE OF STEEL CONSTRUCTION (AISC) MANUAL OF STEEL CONSTRUCTION (15TH EDITION)
   b. SPECIFICATION FOR STRUCTURAL JOINTS USING ASTM A325 OR A490 BOLTS
   c. AISC CODE OF STANDARD PRACTICE
2. STRUCTURAL STEEL SHALL CONFORM TO THE FOLLOWING UNLESS OTHERWISE SHOWN:

CHANNELS, ANGLES, PLATES, ETC.	ASTM A36 (GR 36)
STEEL PIPE	ASTM A53 (GR 35)
BOLTS	ASTM A325
NUTS	ASTM A563
LOCK WASHERS	LOCKING STRUCTURAL GRADE

3. ALL SUBSTITUTIONS PROPOSED BY THE CONTRACTOR SHALL BE APPROVED IN WRITING BY THE ENGINEER. CONTRACTOR SHALL PROVIDE DOCUMENTATION TO ENGINEER FOR VERIFYING THE SUBSTITUTE IS SUITABLE FOR USE AND MEETS ORIGINAL DESIGN CRITERIA. DIFFERENCES FROM THE ORIGINAL DESIGN, INCLUDING MAINTENANCE, REPAIR AND REPLACEMENT, SHALL BE NOTED. ESTIMATES OF COSTS/CREDITS ASSOCIATED WITH THE SUBSTITUTION (INCLUDING RE-DESIGN COSTS AND COSTS TO SUB-CONTRACTORS) SHALL BE PROVIDED TO THE ENGINEER. CONTRACTOR SHALL PROVIDE ADDITIONAL DOCUMENTATION AND/OR SPECIFICATIONS TO THE ENGINEER AS REQUESTED.
4. PROVIDE STRUCTURAL STEEL SHOP DRAWINGS TO ENGINEER FOR APPROVAL PRIOR TO FABRICATION.
   a. SUBMIT SHOP DRAWINGS TO PETER.ALBANO@COLLIERSENGINEERING.COM
   b. PROVIDE MASER CONSULTING CONNECTICUT PROJECT # AND MASER CONSULTING CONNECTICUT PROJECT ENGINEER CONTACT IN THE BODY OF THE EMAIL.
5. DRILL NO HOLES IN ANY NEW OR EXISTING STRUCTURAL STEEL MEMBERS OTHER THAN THOSE SHOWN ON STRUCTURAL DRAWINGS WITHOUT THE APPROVAL OF THE ENGINEER OF RECORD.
6. GALVANIZED ASTM A325 BOLTS SHALL NOT BE REUSED.
7. ALL NEW STEEL SHALL BE HOT BE DIPPED GALVANIZED FOR FULL WEATHER PROTECTION. IN ADDITION ALL NEW STEEL SHALL BE PAINTED TO MATCH EXISTING STEEL. CONTRACTOR SHALL OBTAIN WRITTEN PERMISSION TO PROTECT STEEL BY ANY OTHER MEANS.
8. ALL BOLT ASSEMBLIES FOR STRUCTURAL MEMBERS REPRESENTED IN THIS DRAWING REQUIRE LOCKING DEVICES TO BE INSTALLED IN ACCORDANCE WITH TIA-222-H SECTION 4.9.2 REQUIREMENTS.
9. WHERE CONNECTIONS ARE NOT FULLY DETAILED ON THESE DRAWINGS, FABRICATOR SHALL DESIGN CONNECTIONS TO RESIST LOADS AND FORCES WHERE SHOWN ON DRAWINGS AND AS OUTLINED IN SPECIFICATIONS.
10. FOR MEMBERS BEING REPLACED, PROVIDE NEW BOLTS AND MATCH EXISTING SIZE AND GRADE. MAINTAIN AISC REQUIREMENTS FOR MINIMUM BOLT DISTANCE AND SPACING.
11. ALL PROPOSED AND/OR REPLACED BOLTS SHALL BE OF SUFFICIENT LENGTH SUCH THAT THE END OF THE BOLT IS AT LEAST FLUSH WITH THE FACE OF THE NUT. IT IS NOT PERMITTED FOR THE BOLT END TO BE BELOW THE FACE OF THE NUT AFTER TIGHTENING IS COMPLETED.
12. GALVANIZED ASTM A325 BOLTS SHALL NOT BE REUSED.
13. ALL NEW STEEL SHALL BE HOT BE DIPPED GALVANIZED FOR FULL WEATHER PROTECTION. CONTRACTOR SHALL OBTAIN WRITTEN PERMISSION TO PROTECT STEEL BY ANY OTHER MEANS.
14. ALL EXISTING PAINTED/GALVANIZED SURFACES DAMAGED DURING REHAB INCLUDING AREAS UNDER STIFFENER PLATES SHALL BE WIRE BRUSHED CLEAN, REPAIRED BY COLD GALVANIZING (ZINGA OR ZINC COTE), AND REPAINTED TO MATCH THE EXISTING FINISH (IF APPLICABLE).
15. ALL HOLES IN STEEL MEMBERS SHALL BE SIZED 1/16" LARGER THAN THE BOLT DIAMETER. STANDARD HOLES SHALL BE USED UNLESS NOTED OTHERWISE.

MASER CONSULTING CONNECTICUT
WILL BE KNOWN AS COLLIERS ENGINEERING & DESIGN IN 2021
Customer Loyalty *through* Client Satisfaction
www.maserconsulting.com
Office Locations:
■ NEW JERSEY ■ NEW MEXICO
■ NEW YORK ■ MARYLAND
■ PENNSYLVANIA ■ GEORGIA
■ VIRGINIA ■ TEXAS
■ FLORIDA ■ TENNESSEE
■ NORTH CAROLINA ■ COLORADO
■ SOUTH CAROLINA

Copyright © 2021. Maser Consulting All Rights Reserved. This drawing and all the information contained herein is authorized for use only by the party for whom the services were contracted or to whom it is certified. This drawing may not be copied, reused, disclosed, distributed or relied upon for any other purpose without the express written consent of Maser Consulting.

verizon

PROTECT YOURSELF
ALL STATES REQUIRE NOTIFICATION OF EXCAVATORS, DESIGNERS, OR ANY PERSON PREPARING TO DISTURB THE EARTH'S SURFACE ANYWHERE IN ANY STATE
811 Know what's below. Call before you dig.
FOR STATE SPECIFIC DIRECT PHONE NUMBERS VISIT: WWW.CALL811.COM

SCALE: AS SHOWN
JOB NUMBER: 21777880A

REV	DATE	DESCRIPTION	DRAWN BY	CHECKED BY
0	6/30/2021	ISSUED FOR CONSTRUCTION	MSG	JPL

STATE OF CONNECTICUT
Justin P. Linette
CONNECTICUT PROFESSIONAL ENGINEER
LICENSE NUMBER: 31965
MASER CONSULTING
C.T. C.O.A. #: PC.0000131
LICENSED PROFESSIONAL ENGINEER
Digitally Signed by Justin Peter Linette
Date: 2021.07.01 09:57:00-04'00'

IT IS A VIOLATION OF LAW FOR ANY PERSON, UNLESS THEY ARE ACTING UNDER THE DIRECTION OF THE RESPONSIBLE LICENSED PROFESSIONAL ENGINEER, TO ALTER THIS DOCUMENT.

SITE NAME:

WATERFORD SE CT
469063

15 MINER LANE
WATERFORD, CT 06385
NEW LONDON COUNTY

NASHVILLE OFFICE
5141 Virginia Way
Suite 420
Brentwood, TN 37027
Phone: 615.686.2575
Fax: 615.523.2456

SHEET TITLE: MODIFICATION NOTES

SHEET NUMBER: S-2

NOTE: DO NOT SCALE DRAWINGS FOR CONSTRUCTION.

AJAdmin 231446.9063_VZAT_WATERFORD SE CT_Maser\Acad\Drawings\PASS 2021\S001.dwg\S2 By:MGRAHAM

MODIFICATION INSPECTION NOTES

MI CHECKLIST

CONSTRUCTION/ INSTALLATION INSPECTIONS AND TESTING REQUIRED (COMPLETED BY EOR)	REPORT ITEM
PRE-CONSTRUCTION	
X	MI CHECKLIST DRAWING
X	EOR APPROVED SHOP DRAWINGS
NA	FABRICATION INSPECTION
NA	FABRICATOR CERTIFIED WELD INSPECTION
X	MATERIAL TEST REPORT (MTR)
NA	FABRICATOR NDE INSPECTION
X	PACKING SLIPS
ADDITIONAL TESTING AND INSPECTIONS:	
CONSTRUCTION	
X	CONSTRUCTION INSPECTIONS
NA	CONTRACTOR'S CERTIFIED WELD INSPECTION AND NDE REPORTS
X	ON SITE COLD GALVANIZING VERIFICATION
X	GC AS-BUILT DOCUMENTS
ADDITIONAL TESTING AND INSPECTIONS:	
POST-CONSTRUCTION	
X	MI INSPECTOR REDLINE OR RECORD DRAWING(S)
X	VZW PMI DOCUMENTS
X	PHOTOGRAPHS
ADDITIONAL TESTING AND INSPECTIONS:	

NOTE: X DENOTES A DOCUMENT REQUIRED FOR THE MI REPORT
NA DENOTES A DOCUMENT THAT IS NOT REQUIRED FOR THE MI REPORT

THE MODIFICATION INSPECTION (MI) IS A VISUAL INSPECTION OF MODIFICATIONS AND A REVIEW OF CONSTRUCTION INSPECTIONS AND OTHER REPORTS TO ENSURE THE INSTALLATION WAS CONSTRUCTED IN ACCORDANCE WITH THE CONTRACT DOCUMENTS, NAMELY THE MODIFICATION DRAWINGS, AS DESIGNED BY THE ENGINEER OF RECORD (EOR).

THE MI IS TO CONFIRM INSTALLATION CONFIGURATION AND WORKMANSHIP ONLY AND IS NOT A REVIEW OF THE MODIFICATION DESIGN ITSELF, NOR DOES THE MI INSPECTOR TAKE OWNERSHIP OF THE MODIFICATION DESIGN. OWNERSHIP OF THE STRUCTURAL MODIFICATION DESIGN EFFECTIVENESS AND INTEGRITY RESIDES WITH THE EOR AT ALL TIMES.

TO ENSURE THAT THE REQUIREMENTS OF THE MI ARE MET, IT IS VITAL THAT THE GENERAL CONTRACTOR (GC) AND THE MI INSPECTOR BEGIN COMMUNICATING AND COORDINATING AS SOON AS A PURCHASE ORDER (PO) IS RECEIVED. IT IS EXPECTED THAT EACH PARTY WILL BE PROACTIVE IN REACHING OUT TO THE OTHER PARTY.

MI INSPECTOR

THE MI INSPECTOR IS REQUIRED TO CONTACT THE GC AS SOON AS RECEIVING A PO FOR THE MI TO, AT A MINIMUM:

- REVIEW THE REQUIREMENTS OF THE MI CHECKLIST
- WORK WITH THE GC TO DEVELOP A SCHEDULE TO CONDUCT ON-SITE INSPECTIONS

THE MI INSPECTOR IS RESPONSIBLE FOR COLLECTING ALL GC INSPECTION AND TEST REPORTS, REVIEWING THE DOCUMENTS FOR ADHERENCE TO THE CONTRACT DOCUMENTS, CONDUCTING THE IN-FIELD INSPECTIONS, AND SUBMITTING THE MI REPORT TO EOR.

GENERAL CONTRACTOR

THE GC IS REQUIRED TO CONTACT THE MI INSPECTOR AS SOON AS RECEIVING A PO FOR THE MODIFICATION INSTALLATION OR TURNKEY PROJECT TO, AT A MINIMUM:

- REVIEW THE REQUIREMENTS OF THE MI CHECKLIST
- WORK WITH THE MI INSPECTOR TO DEVELOP A SCHEDULE TO CONDUCT ON-SITE MI INSPECTIONS, INCLUDING FOUNDATION INSPECTIONS
- BETTER UNDERSTAND ALL INSPECTION AND TESTING REQUIREMENTS

THE GC SHALL PERFORM AND RECORD THE TEST AND INSPECTION RESULTS IN ACCORDANCE WITH THE REQUIREMENTS OF THE MI CHECKLIST.

RECOMMENDATIONS

THE FOLLOWING RECOMMENDATIONS AND SUGGESTIONS ARE OFFERED TO ENHANCE THE EFFICIENCY AND EFFECTIVENESS OF DELIVERING AN MI REPORT:

- IT IS SUGGESTED THAT THE GC PROVIDE A MINIMUM OF 5 BUSINESS DAYS NOTICE, PREFERABLY 10, TO THE MI INSPECTOR AS TO WHEN THE SITE WILL BE READY FOR THE MI TO BE CONDUCTED.
- THE GC AND MI INSPECTOR COORDINATE CLOSELY THROUGHOUT THE ENTIRE PROJECT.
- WHEN POSSIBLE, IT IS PREFERRED TO HAVE THE GC AND MI INSPECTOR ON-SITE SIMULTANEOUSLY FOR ANY GUY WIRE TENSIONING OR RE-TENSIONING OPERATIONS.
- IT MAY BE BENEFICIAL TO INSTALL ALL MODIFICATIONS PRIOR TO CONDUCTING THE FOUNDATION INSPECTIONS TO ALLOW THE FOUNDATION AND MI INSPECTION(S) TO COMMENCE WITH ONE SITE VISIT.
- WHEN POSSIBLE, IT IS PREFERRED TO HAVE THE GC AND MI INSPECTOR ON-SITE DURING THE MI TO HAVE ANY DEFICIENCIES CORRECTED DURING THE INITIAL MI. THEREFORE, THE GC MAY CHOOSE TO COORDINATE THE MI CAREFULLY TO ENSURE ALL CONSTRUCTION FACILITIES ARE AT THEIR DISPOSAL WHEN THE MI INSPECTOR IS ON SITE.

CORRECTION OF FAILING MI'S

IF THE MODIFICATION INSTALLATION WOULD FAIL THE MI ("FAILED MI"), THE GC SHALL WORK WITH THE OWNER TO COORDINATE A REMEDIATION PLAN:

- CORRECT FAILING ISSUES TO COMPLY WITH THE SPECIFICATIONS CONTAINED IN THE ORIGINAL CONTRACT DOCUMENTS AND COORDINATE A SUPPLEMENT MI.

REQUIRED PHOTOS

BETWEEN THE GC AND THE MI INSPECTOR THE FOLLOWING PHOTOGRAPHS, AT A MINIMUM, ARE TO BE TAKEN AND INCLUDED IN THE MI REPORT:

- PRE-CONSTRUCTION GENERAL SITE CONDITION
- PHOTOGRAPHS DURING THE REINFORCEMENT MODIFICATION CONSTRUCTION/ERECTION AND INSPECTION
  - RAW MATERIALS
  - PHOTOS OF ALL CRITICAL DETAILS
  - FOUNDATION MODIFICATIONS
  - WELD PREPARATION
  - BOLT INSTALLATION
  - FINAL INSTALLED CONDITION
  - SURFACE COATING REPAIR
- POST CONSTRUCTION PHOTOGRAPHS
  - FINAL INFIELD CONDITION

PHOTOS OF ELEVATED MODIFICATIONS TAKEN ONLY FROM THE GROUND SHALL BE CONSIDERED INADEQUATE.

ALLOWABLE COPING

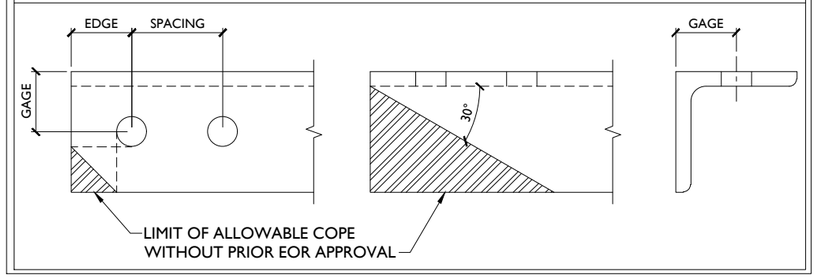

BOLT SCHEDULE (IN.)

BOLT DIAMETER	STANDARD HOLE	SHORT SLOT	MIN. EDGE DISTANCE	SPACING
1/2	9/16	9/16 x 11/16	7/8	1 1/2
5/8	11/16	11/16 x 7/8	1 1/8	1 7/8
3/4	13/16	13/16 x 1	1 1/4	2 1/4
7/8	15/16	15/16 x 1 1/8	1 1/2	2 5/8
1	1 1/16	1 1/16 x 1 5/16	1 3/4	3

WORKABLE GAGES (IN.)

LEG	GAGE
4	2 1/2
3 1/2	2
3	1 3/4
2 1/2	1 3/8
2	1 1/8

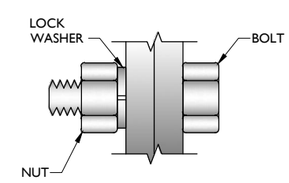

TYP. BOLT ASSEMBLY

NOTES:

1. ALL DIMENSIONS REPRESENTED IN THE ABOVE TABLES ARE AISC MINIMUM REQUIREMENTS. CONTRACTOR SHALL VERIFY EXISTING CONDITIONS IN FIELD AND NOTIFY ENGINEER IF DISTANCES ARE LESS THAN THOSE PROVIDED.
2. THE DIMENSIONS PROVIDED ARE MINIMUM REQUIREMENTS. ACTUAL DIMENSIONS OF PROPOSED MEMBERS WITHIN THESE DRAWINGS MAY VARY FROM THE AISC MINIMUM REQUIREMENTS.
3. SHORT SLOT HOLES SHALL ONLY BE USED WHEN DEPICTED IN THE DRAWINGS
4. MATCH EXISTING GAGES WHEN APPLICABLE, UNLESS MINIMUM EDGE DISTANCES ARE COMPROMISED.

MASER CONSULTING CONNECTICUT
WILL BE KNOWN AS COLLIERS ENGINEERING & DESIGN IN 2021
Customer Loyalty *through* Client Satisfaction
www.maserconsulting.com
Office Locations:
NEW JERSEY · NEW YORK · PENNSYLVANIA · VIRGINIA · FLORIDA · NORTH CAROLINA · SOUTH CAROLINA · NEW MEXICO · MARYLAND · GEORGIA · TEXAS · TENNESSEE · COLORADO

Copyright © 2021. Maser Consulting All Rights Reserved. This drawing and all the information contained herein is authorized for use only by the party for whom the services were contracted or to whom it is certified. This drawing may not be copied, reused, disclosed, distributed or relied upon for any other purpose without the express written consent of Maser Consulting.

verizon

PROTECT YOURSELF
ALL STATES REQUIRE NOTIFICATION OF EXCAVATORS, DESIGNERS, OR ANY PERSON PREPARING TO DISTURB THE EARTH'S SURFACE ANYWHERE IN ANY STATE
811 Know what's below. Call before you dig.
FOR STATE SPECIFIC DIRECT PHONE NUMBERS VISIT: WWW.CALL811.COM

SCALE : AS SHOWN
JOB NUMBER : 21777880A

REV	DATE	DESCRIPTION	DRAWN BY	CHECKED BY
0	6/30/2021	ISSUED FOR CONSTRUCTION	MSG	JPL

STATE OF CONNECTICUT · LICENSED PROFESSIONAL ENGINEER

Justin P. Linette
CONNECTICUT PROFESSIONAL ENGINEER
LICENSE NUMBER: 31965
MASER CONSULTING
C.T. C.O.A. #: PC.0000131

Digitally signed by Justin Peter Linette
Date: 2021.07.01 09:57:28 -04'00'

IT IS A VIOLATION OF LAW FOR ANY PERSON, UNLESS THEY ARE ACTING UNDER THE DIRECTION OF THE RESPONSIBLE LICENSED PROFESSIONAL ENGINEER, TO ALTER THIS DOCUMENT.

SITE NAME:

WATERFORD SE CT
469063
15 MINER LANE
WATERFORD, CT 06385
NEW LONDON COUNTY

NASHVILLE OFFICE
5141 Virginia Way
Suite 420
Brentwood, TN 37027
Phone: 615.686.2575
Fax: 615.523.2456

SHEET TITLE : MODIFICATION NOTES

SHEET NUMBER : S-3

NOTE: DO NOT SCALE DRAWINGS FOR CONSTRUCTION.

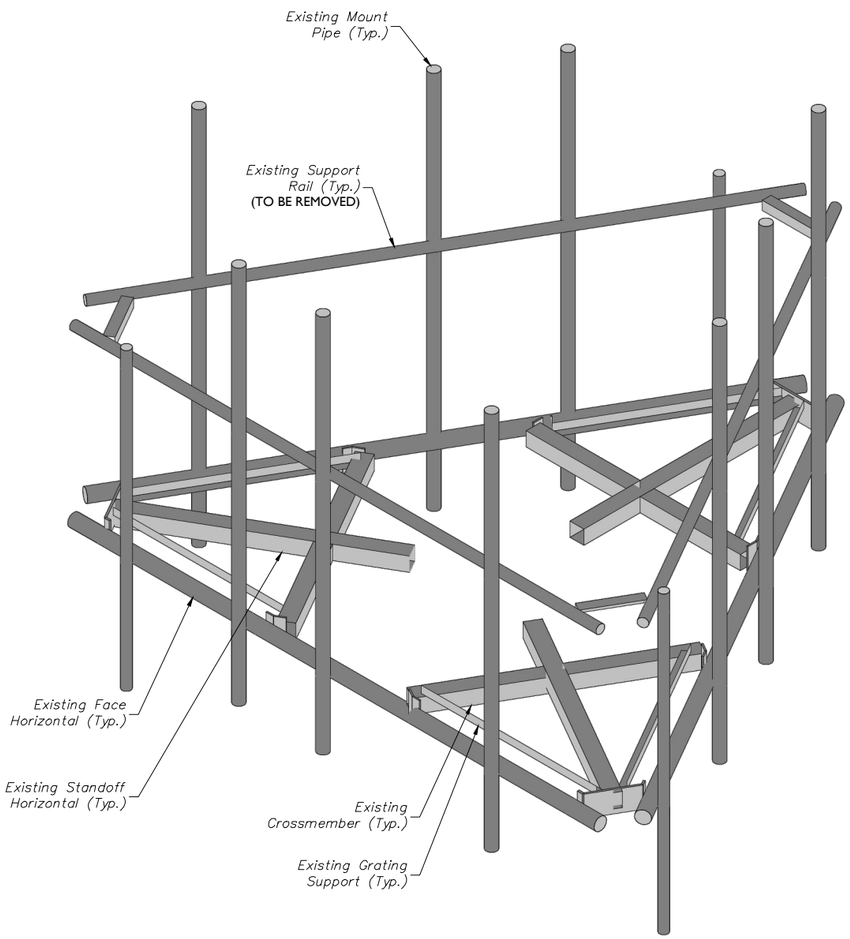

1 EXISTING PLATFORM ISOMETRIC VIEW

SCALE : N.T.S.

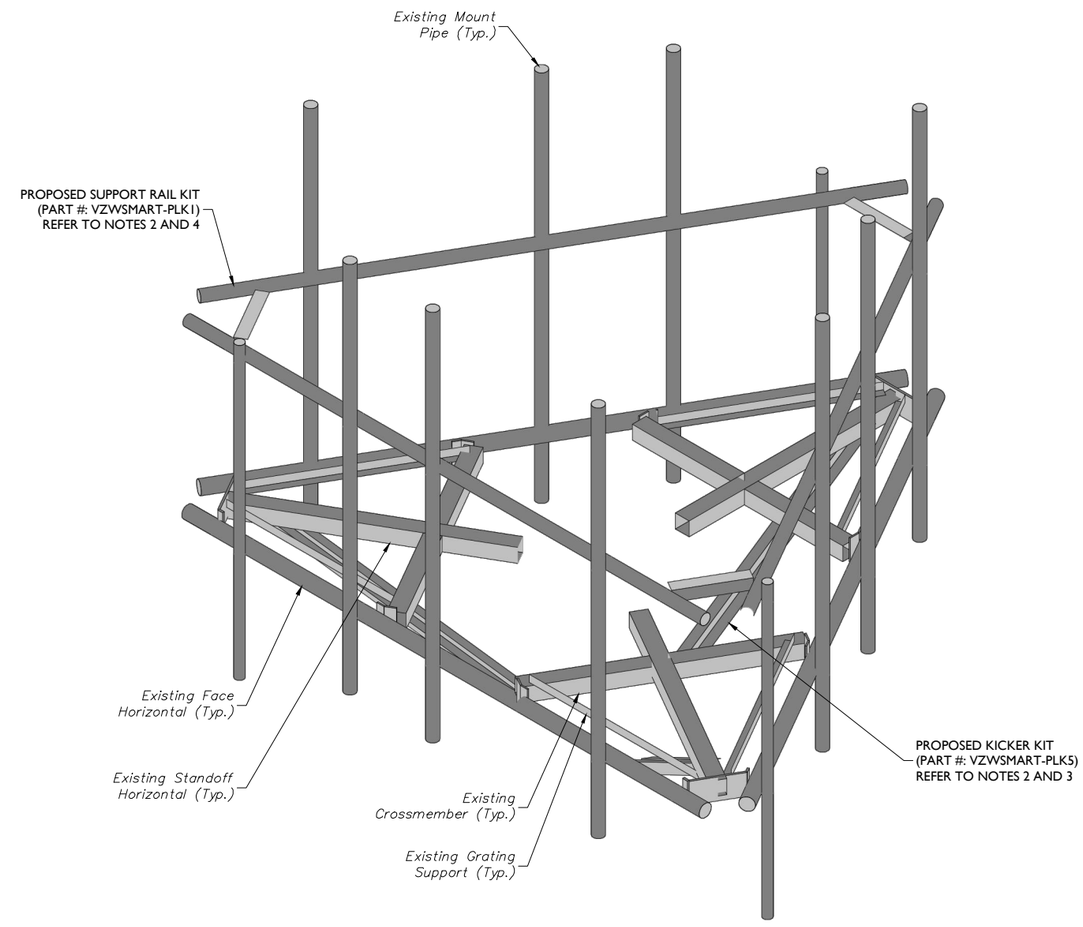

2 PROPOSED PLATFORM ISOMETRIC VIEW

SCALE : N.T.S.

STRUCTURAL NOTES:

1. PER THE MOUNT MAPPING COMPLETED BY HIGH TOWER SOLUTIONS, INC. ON 5/7/2020, THE SAFETY CLIMB AND CLIMBING FACILITIES UP TO THE VERIZON MOUNT ELEVATION (157'-0") ARE IN GOOD CONDITION. MASER DOES NOT WARRANT THIS INFORMATION.

2. INSTALL SHALL NOT CAUSE HARM TO THE STRUCTURE, CLIMBING FACILITY, SAFETY CLIMB, OR ANY SYSTEM INSTALLED ON THE STRUCTURE. TIMELY NOTICE AND DOCUMENTATION SHALL BE PROVIDED BY CONTRACTORS TO THE EOR (OF STRUCTURAL DESIGN) IF AN OBSTRUCTION WAS REQUIRED TO MEET THE RF SYSTEM DESIGN REQUIREMENTS AND PERFORMANCES.

MODIFICATION NOTES:

1. MOUNT MEMBERS NOT SHOWN FOR CLARITY U.N.O.

2. CONTRACTOR TO VERIFY THE LENGTH REQUIRED AND TRIM AS NECESSARY IN ACCORDANCE WITH THE 'STRUCTURAL STEEL' NOTES ON SHEET S-2.

3. CONNECT OTHER END OF KICKER KIT TO MONOPOLE COLLAR MOUNT ASSEMBLY (PART #: VZWSMART-PLK7).

4. RADIO AND/OR TME POSITIONS SHALL BE ADJUSTED VERTICALLY AS NEEDED IN ORDER TO ACHIEVE INSTALLATION OF HORIZONTAL AS SHOWN. EOR SHALL BE NOTIFIED IF EQUIPMENT NEEDS TO BE RELOCATED TO ANOTHER MOUNT PIPE.

5. CONTRACTOR SHALL FLOAT MOUNT AND SECURE IN NEW POSITION 6" ABOVE EXISTING LOCATION FOLLOWING GUIDELINES BELOW:
   - CARE SHALL BE TAKEN NOT TO DAMAGE EXISTING COAX/JUMPERS
   -INSPECT POLE AND STEP BOLTS FOR DAMAGE BENEATH WHERE MOUNT WAS PREVIOUSLY LOCATED AND ESCALATE TO ENGINEER OF RECORD IMMEDIATELY IF ANY VISIBLE DAMAGE IS PRESENT.
   -AFTER FULLY SECURING COLLAR AT NEW LOCATION, CONTRACTOR SHALL REPLACE ALL THREADED RODS ON MOUNT COLLAR. RODS SHALL NOT BE REPLACED UNTIL MOUNT HAS BEEN FULLY SECURED.
   -CONTRACTOR SHALL NOT LOOSEN OR REPLACE MORE THAN ONE ROD AT A TIME.

MASER CONSULTING CONNECTICUT
WILL BE KNOWN AS COLLIERS ENGINEERING & DESIGN IN 2021
Customer Loyalty *through* Client Satisfaction
www.maserconsulting.com
Office Locations:
- NEW JERSEY
- NEW YORK
- PENNSYLVANIA
- VIRGINIA
- FLORIDA
- NORTH CAROLINA
- SOUTH CAROLINA
- NEW MEXICO
- MARYLAND
- GEORGIA
- TEXAS
- TENNESSEE
- COLORADO

Copyright © 2021. Maser Consulting All Rights Reserved. This drawing and all the information contained herein is authorized for use only by the party for whom the services were contracted or to whom it is certified. This drawing may not be copied, reused, disclosed, distributed or relied upon for any other purpose without the express written consent of Maser Consulting.

verizon

PROTECT YOURSELF
ALL STATES REQUIRE NOTIFICATION OF EXCAVATORS, DESIGNERS, OR ANY PERSON PREPARING TO DISTURB THE EARTH'S SURFACE ANYWHERE IN ANY STATE

811 Know what's below. Call before you dig.

FOR STATE SPECIFIC DIRECT PHONE NUMBERS VISIT:
WWW.CALL811.COM

SCALE : AS SHOWN
JOB NUMBER : 21777880A

REV	DATE	DESCRIPTION	DRAWN BY	CHECKED BY
0	6/30/2021	ISSUED FOR CONSTRUCTION	MSG	JPL

STATE OF CONNECTICUT
Justin P. Linette
CONNECTICUT PROFESSIONAL ENGINEER
LICENSE NUMBER: 31865
MASER CONSULTING
C.T. COA #: PC.0000131
LICENSED PROFESSIONAL ENGINEER

Digitally signed by Justin Peter Linette
Date: 2021.07.01 09:57:18-04'00'

IT IS A VIOLATION OF LAW FOR ANY PERSON, UNLESS THEY ARE ACTING UNDER THE DIRECTION OF THE RESPONSIBLE LICENSED PROFESSIONAL ENGINEER, TO ALTER THIS DOCUMENT.

SITE NAME:

WATERFORD SE CT
469063

15 MINER LANE
WATERFORD, CT 06385
NEW LONDON COUNTY

NASHVILLE OFFICE
5141 Virginia Way
Suite 420
Brentwood, TN 37027

Phone: 615.686.2575
Fax: 615.523.2456

SHEET TITLE :
MODIFICATION DETAILS

SHEET NUMBER :
S-4

NOTE: DO NOT SCALE DRAWINGS FOR CONSTRUCTION.

M:\Mobile 3\21846\063_WATERFORD SE CT\Mount\Drawings_RAS\ 2021\06\30 Aug\S-4 By: MGRAHAM

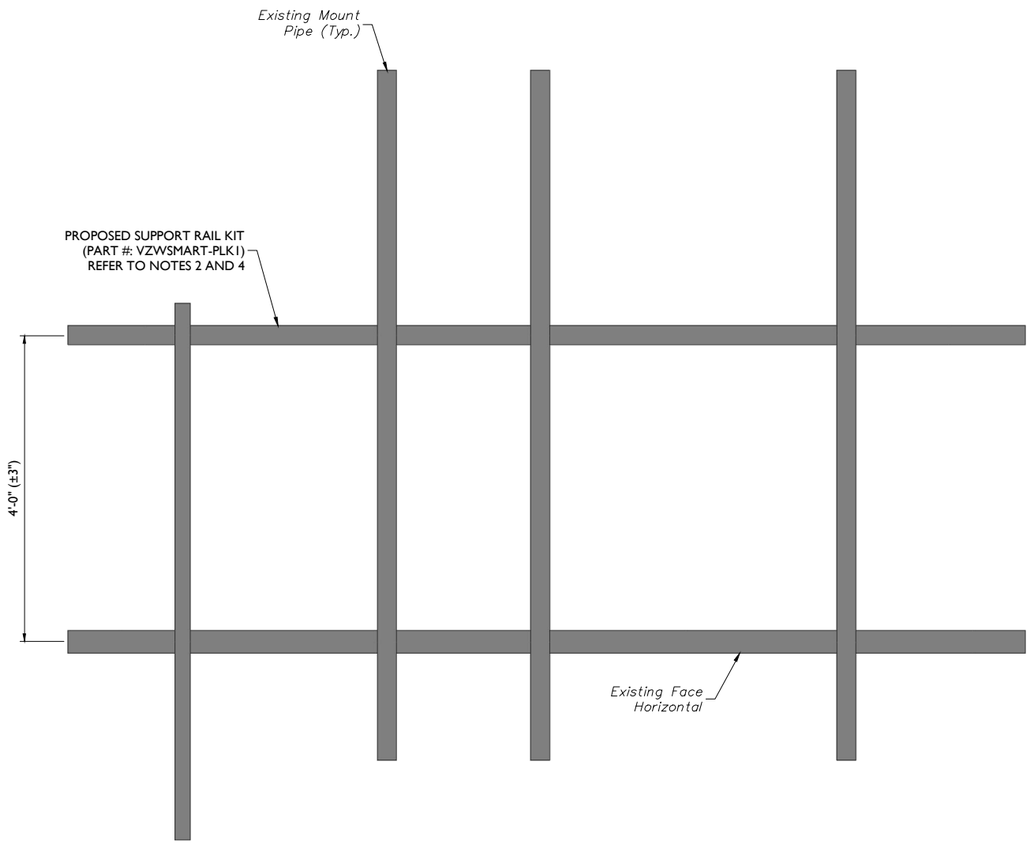

1 PROPOSED FRONT ELEVATION (TYP. ALL SECTORS)

SCALE : N.T.S.

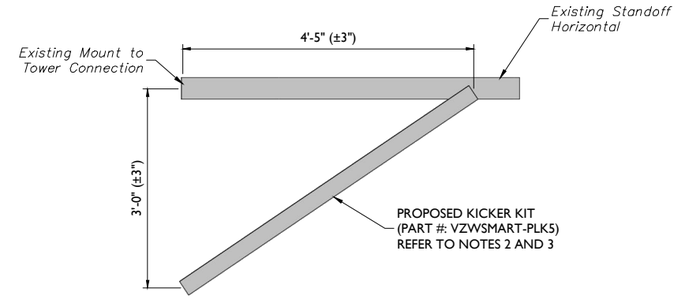

2 PROPOSED SIDE ELEVATION (TYP. ALL SECTORS)

SCALE : N.T.S.

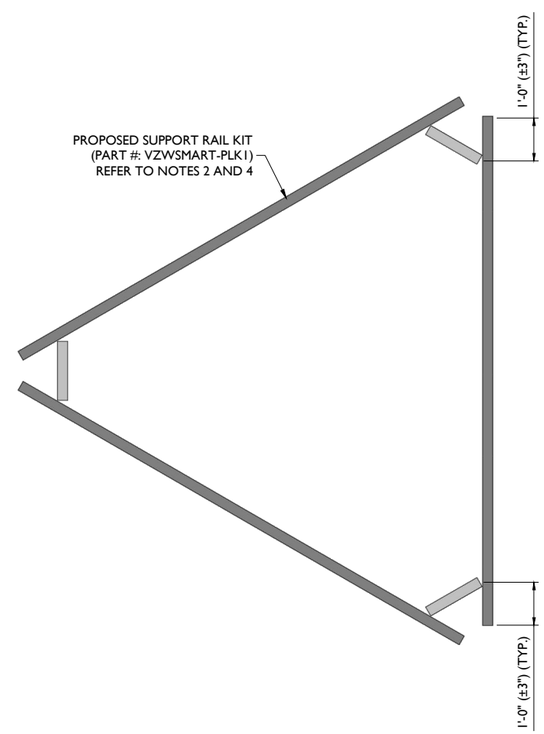

3 PROPOSED PLAN VIEW

SCALE : N.T.S.

MODIFICATION NOTES:

1. MOUNT MEMBERS NOT SHOWN FOR CLARITY U.N.O.
2. CONTRACTOR TO VERIFY THE LENGTH REQUIRED AND TRIM AS NECESSARY IN ACCORDANCE WITH THE 'STRUCTURAL STEEL' NOTES ON SHEET S-2.
3. CONNECT OTHER END OF KICKER KIT TO MONOPOLE COLLAR MOUNT ASSEMBLY (PART #: VZWSMART-PLK7).
4. RADIO AND/OR TME POSITIONS SHALL BE ADJUSTED VERTICALLY AS NEEDED IN ORDER TO ACHIEVE INSTALLATION OF HORIZONTAL AS SHOWN. EOR SHALL BE NOTIFIED IF EQUIPMENT NEEDS TO BE RELOCATED TO ANOTHER MOUNT PIPE.
5. CONTRACTOR SHALL FLOAT MOUNT AND SECURE IN NEW POSITION 6" ABOVE EXISTING LOCATION FOLLOWING GUIDELINES BELOW:
   - CARE SHALL BE TAKEN NOT TO DAMAGE EXISTING COAX/JUMPERS
   -INSPECT POLE AND STEP BOLTS FOR DAMAGE BENEATH WHERE MOUNT WAS PREVIOUSLY LOCATED AND ESCALATE TO ENGINEER OF RECORD IMMEDIATELY IF ANY VISIBLE DAMAGE IS PRESENT.
   -AFTER FULLY SECURING COLLAR AT NEW LOCATION, CONTRACTOR SHALL REPLACE ALL THREADED RODS ON MOUNT COLLAR. RODS SHALL NOT BE REPLACED UNTIL MOUNT HAS BEEN FULLY SECURED.
   -CONTRACTOR SHALL NOT LOOSEN OR REPLACE MORE THAN ONE ROD AT A TIME.

MASER CONSULTING CONNECTICUT
WILL BE KNOWN AS COLLIERS ENGINEERING & DESIGN IN 2021
Customer Loyalty *through* Client Satisfaction
www.maserconsulting.com
Office Locations:
NEW JERSEY, NEW YORK, PENNSYLVANIA, VIRGINIA, FLORIDA, NORTH CAROLINA, SOUTH CAROLINA, NEW MEXICO, MARYLAND, GEORGIA, TEXAS, TENNESSEE, COLORADO
Copyright © 2021. Maser Consulting All Rights Reserved. This drawing and all the information contained herein is authorized for use only by the party for whom the services were contracted or to whom it is certified. This drawing may not be copied, reused, disclosed, distributed or relied upon for any other purpose without the express written consent of Maser Consulting.

verizon

PROTECT YOURSELF
ALL STATES REQUIRE NOTIFICATION OF EXCAVATORS, DESIGNERS, OR ANY PERSON PREPARING TO DISTURB THE EARTH'S SURFACE ANYWHERE IN ANY STATE
811 Know what's below. Call before you dig.
FOR STATE SPECIFIC DIRECT PHONE NUMBERS VISIT: WWW.CALL811.COM

SCALE : AS SHOWN
JOB NUMBER : 21777880A

REV	DATE	DESCRIPTION	DRAWN BY	CHECKED BY
0	6/30/2021	ISSUED FOR CONSTRUCTION	MSG	JPL

Justin P. Linette
SIGNATURE OF CONNECTICUT PROFESSIONAL ENGINEER
LICENSE NUMBER: 31965
MASER CONSULTING
C.T. C.O.A. #: PC.0000131
Digitally Signed by Justin Peter Linette
Date: 2021.07.01 09:57:03-04'00'

IT IS A VIOLATION OF LAW FOR ANY PERSON, UNLESS THEY ARE ACTING UNDER THE DIRECTION OF THE RESPONSIBLE LICENSED PROFESSIONAL ENGINEER, TO ALTER THIS DOCUMENT.

SITE NAME:
WATERFORD SE CT
469063
15 MINER LANE
WATERFORD, CT 06385
NEW LONDON COUNTY

NASHVILLE OFFICE
5141 Virginia Way
Suite 420
Brentwood, TN 37027
Phone: 615.686.2575
Fax: 615.523.2456

SHEET TITLE : MODIFICATION DETAILS

SHEET NUMBER : S-5

NOTE: DO NOT SCALE DRAWINGS FOR CONSTRUCTION.

AcAdmin 22244.MXL WATERFORD SE CT Maser-Mx-CD.mmp PAGE 20210630.Jun25.5 By:HERMANH

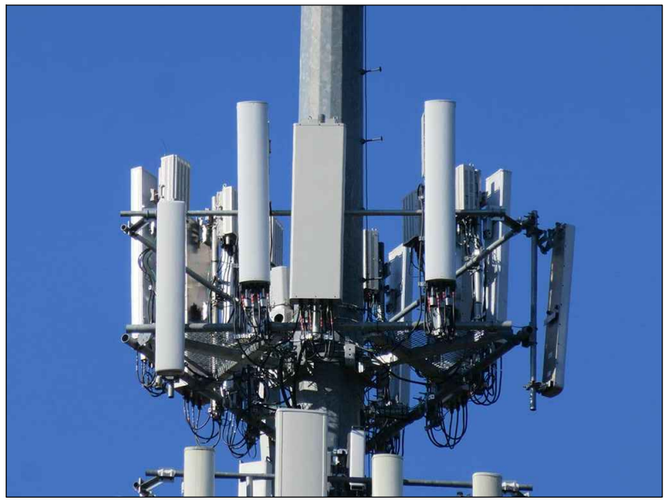

MOUNT PHOTO 1

MOUNT PHOTO 2

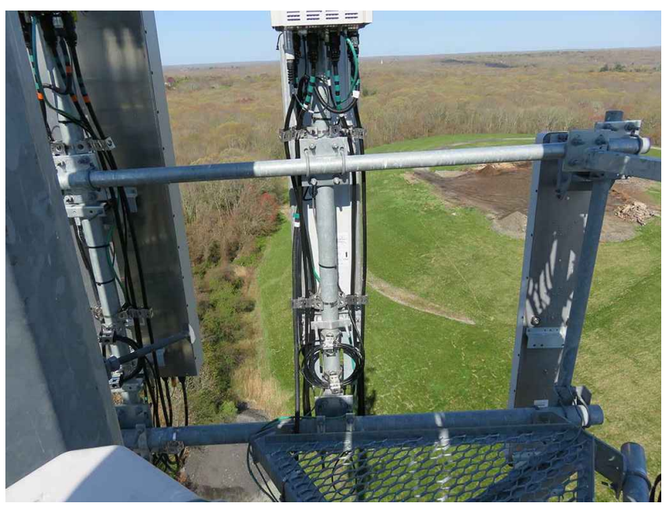

MOUNT PHOTO 3

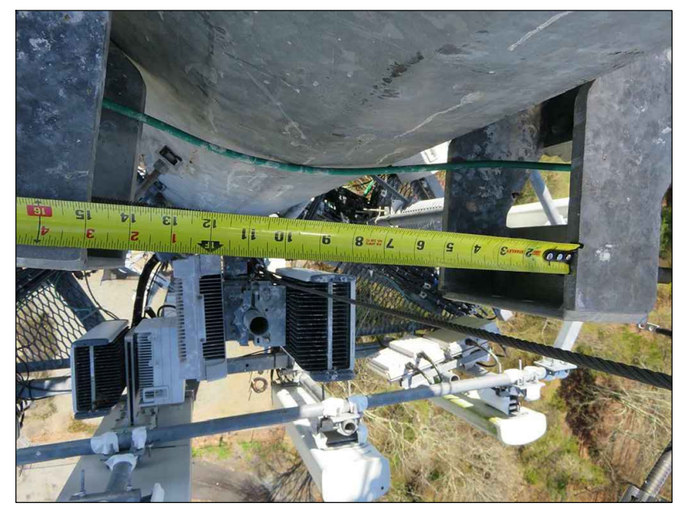

MOUNT PHOTO 4

MASER CONSULTING
CONNECTICUT
WILL BE KNOWN AS COLLIERS ENGINEERING & DESIGN IN 2021
Customer Loyalty *through* Client Satisfaction
www.maserconsulting.com
Office Locations:
- NEW JERSEY
- NEW YORK
- PENNSYLVANIA
- VIRGINIA
- FLORIDA
- NORTH CAROLINA
- SOUTH CAROLINA
- NEW MEXICO
- MARYLAND
- GEORGIA
- TEXAS
- TENNESSEE
- COLORADO

Copyright © 2021. Maser Consulting All Rights Reserved. This drawing and all the information contained herein is authorized for use only by the party for whom the services were contracted or to whom it is certified. This drawing may not be copied, reused, disclosed, distributed or relied upon for any other purpose without the express written consent of Maser Consulting.

verizon

PROTECT YOURSELF
ALL STATES REQUIRE NOTIFICATION OF EXCAVATORS, DESIGNERS, OR ANY PERSON PREPARING TO DISTURB THE EARTH'S SURFACE ANYWHERE IN ANY STATE

811 Know what's below. Call before you dig.

FOR STATE SPECIFIC DIRECT PHONE NUMBERS VISIT: WWW.CALL811.COM

SCALE :	JOB NUMBER :
AS SHOWN	21777880A

REV	DATE	DESCRIPTION	DRAWN BY	CHECKED BY
.	.	.	.	.
.	.	.	.	.
.	.	.	.	.
0	6/30/2021	ISSUED FOR CONSTRUCTION	MSG	JPL

STATE OF CONNECTICUT
Justin P. Linette
CONNECTICUT PROFESSIONAL ENGINEER
LICENSE NUMBER: 31965
MASER CONSULTING
C.T. C.O.A. #: PC.0000131
LICENSED PROFESSIONAL ENGINEER

Digitally Signed by Justin Peter Linette
Date: 2021.07.01 09:57:00-04'00'

IT IS A VIOLATION OF LAW FOR ANY PERSON, UNLESS THEY ARE ACTING UNDER THE DIRECTION OF THE RESPONSIBLE LICENSED PROFESSIONAL ENGINEER, TO ALTER THIS DOCUMENT.

SITE NAME:

WATERFORD SE CT
469063

15 MINER LANE
WATERFORD, CT 06385
NEW LONDON COUNTY

NASHVILLE OFFICE
5141 Virginia Way
Suite 420
Brentwood, TN 37027

Phone: 615.686.2575
Fax: 615.523.2456

SHEET TITLE :
MOUNT PHOTOS

SHEET NUMBER :
S-6

NOTE: DO NOT SCALE DRAWINGS FOR CONSTRUCTION.

AshAdm 23144.9061 VZAT BRFCHD218 CT Hosack-Dr.dwg PAGE 20210630.dwg\S-6 By:HUDAIAH

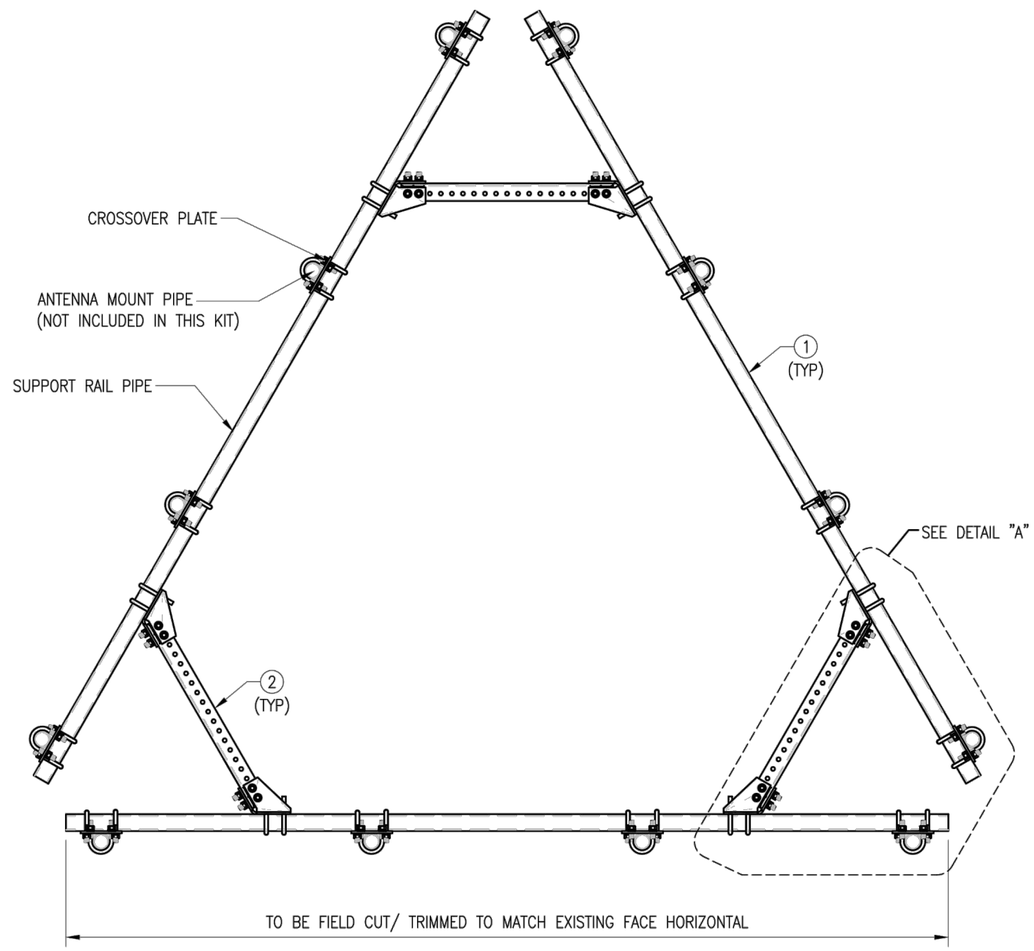

PLAN VIEW

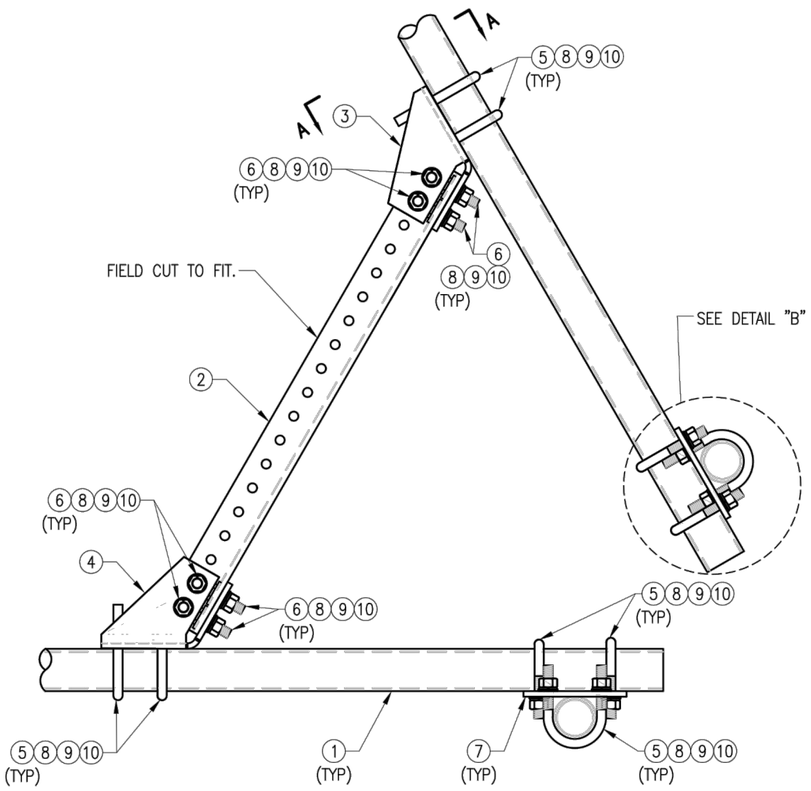

DETAIL "A"

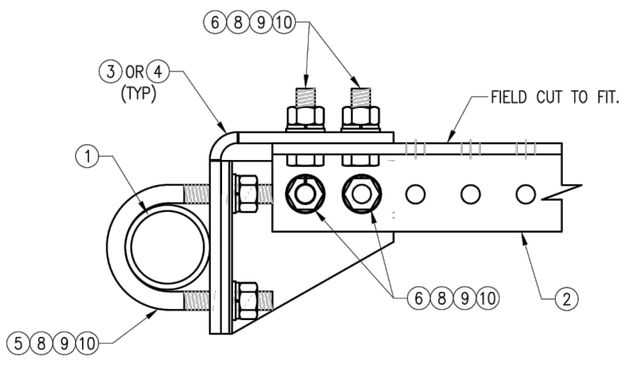

SECTION "A–A"

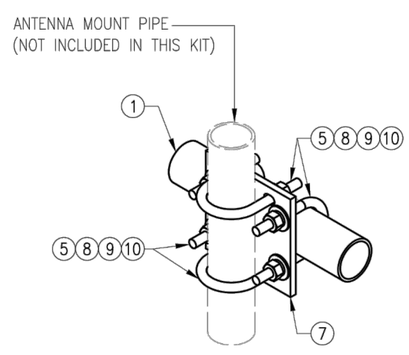

DETAIL "B"

NOTES:
1. HOT–DIPPED GALVANIZED PER ASTM A123.

VZW SMART–PLK1 (SUPPORT RAIL KIT)

ITEM NO.	QTY.	PART NO.	DESCRIPTION	SHEET #	WT
1	3	PST2875–12.5	2.5" PST (2.875" O.D. X 0.203" THK.) X 12'–6" A53 GR–B	PLK1–F1	292
2	3	L33375–3	L 3" X 3" X 3/8" X 3'–0" A36	PLK1–F1	66
3	3	CBP–L	CORNER BENT PLATE BRACKET	PLK1–F2	28
4	3	CBP–R	CORNER BENT PLATE BRACKET	PLK1–F2	28
5	60	MS02–625–300–500	RU–BOLT 5/8" X 3" I.W. X 5" I.L. A36 (OR EQUIV.)	RBC–1	82
6	24	---	BOLT 5/8" X 2" A325	---	9
7	12	PL375–857	PL 3/8" X 8 1/2" X 7'–0" A36	PLK1–F3	77
8	144	FW–625	5/8" HDG USS FLAT WASHER	---	12
9	144	LW–625	5/8" HDG LOCK WASHER	---	3
10	144	NUT–625	5/8" HDG HEX NUT	---	17
				GALVANIZED WT	504

VzW
SMART Tool©
Vendor

verizon

DRAWN BY: H.R | CHECKED BY: HMA

REV.	DESCRIPTION	BY	DATE
0	FIRST ISSUE	H.R	05/08/20

SHEET TITLE:
VZWSMART–PLK1
SUPPORT RAIL KIT

SHEET NUMBER: VZWSMART–PLK1
REV #: 0

NOTE:
THE LOCATION OF KICKER AND EXISTING ANTENNA MOUNT SHOWN ON THE DRAWING IS FOR REPRESENTATION PURPOSE ONLY. SEE INSTALLATION DRAWINGS FOR ACTUAL INSTALLATION OF DETAILS.

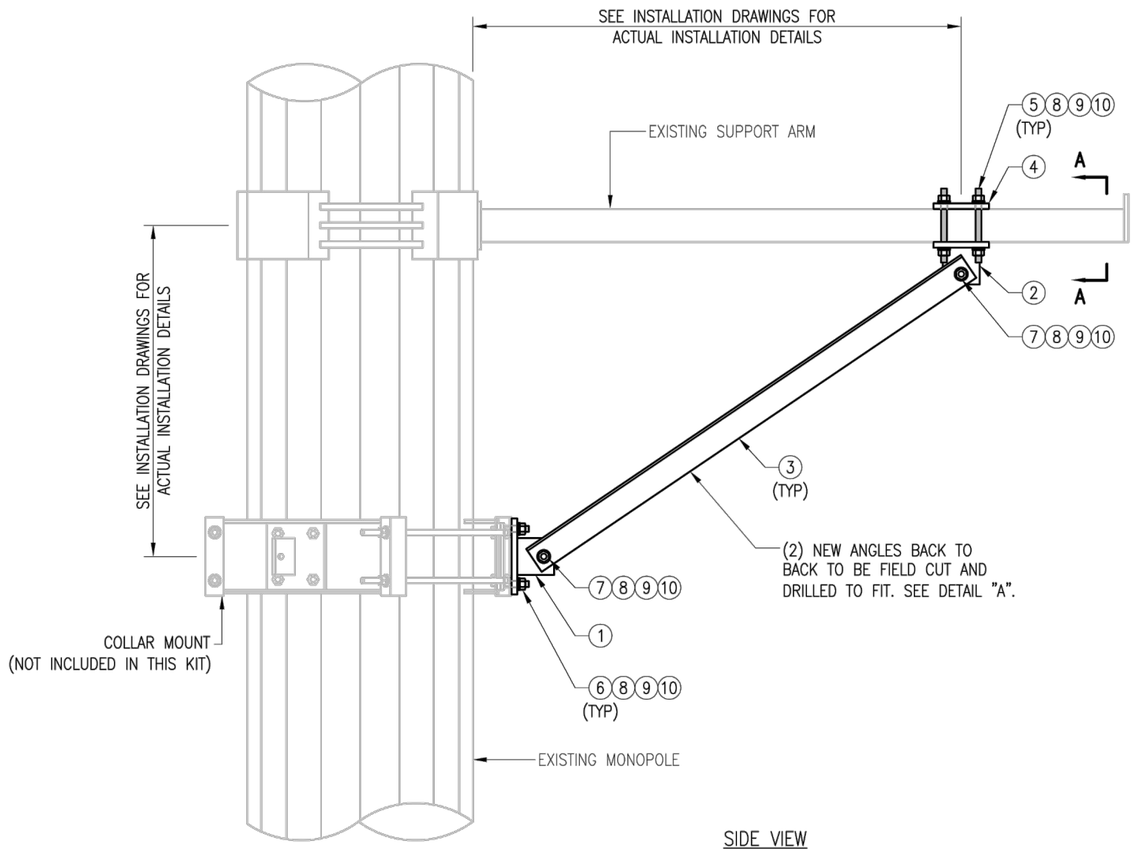

SIDE VIEW
KICKER KIT

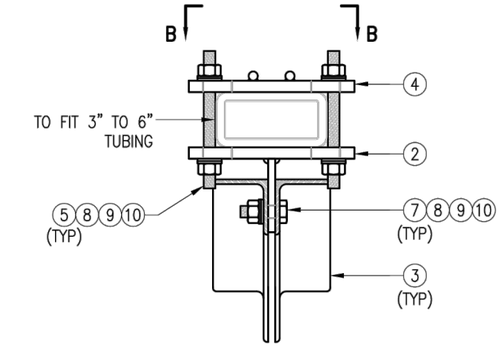

SECTION "A–A"
RECT. HSS MOUNTING

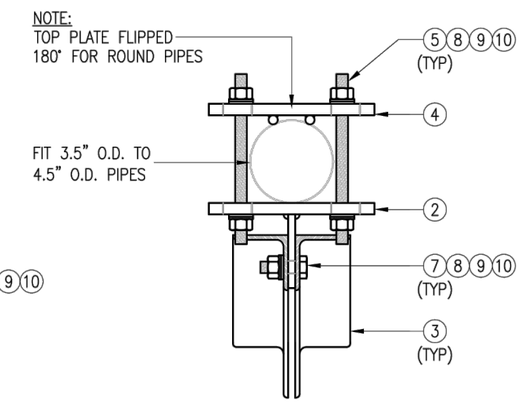

SECTION "A–A"
ROUND PIPE MOUNTING

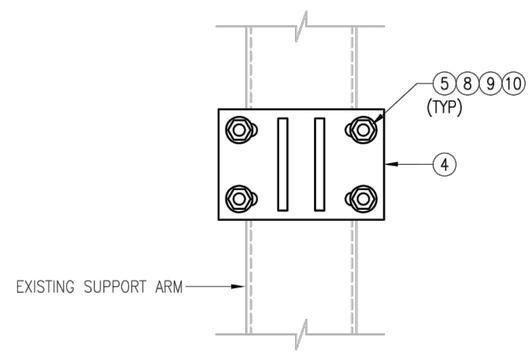

SECTION "B–B"

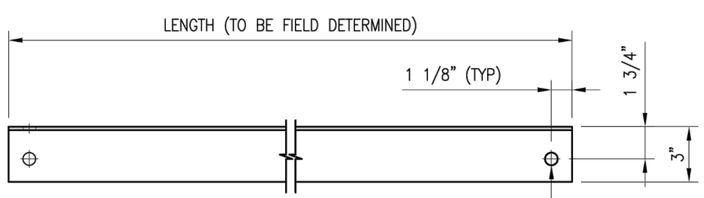

DETAIL "A"

NOTES:
1. ALL HOLES ARE 11/16" DIA. U.N.O
2. HOT–DIPPED GALVANIZED PER ASTM A123.
3. FIT UP TO 6" SQ. TUBING OR 4 1/2" O.D. PIPE

VZWSMART–PLK5 (KICKER KIT)

ITEM NO.	QTY.	PART NO.	DESCRIPTION	SHEET #	WT
1	3	BRKW–XXX	BRACKET WELDMENT A36	PLK5–F3	43.8
2	3	BRKW–XXXX	BRACKET WELDMENT A36	PLK5–F2	35.7
3	6	L331875–8	L 3" X 3" X 3/16" X 8'–0" A36	PLK5–F4	182.9
4	3	PL–KI	PL 5/8" X 6" X 9" A36	PLK5–F1	29.0
5	12	---	THREADED ROD 5/8" DIA. X 1'–0" F1554–36 HDG	---	--
6	6	---	BOLT 5/8" X 2" A325	---	--
7	12	---	BOLT 5/8" X 2 1/2" A325	---	--
8	42	FW–625	5/8" HDG USS FLAT WASHER	---	3
9	42	LW–625	5/8" HDG LOCK WASHER	---	1
10	42	NUT–625	5/8" HDG HEX NUT	---	5
				GALVANIZED WT	291

VzW
SMART Tool©
Vendor

verizon

DRAWN BY: MN | CHECKED BY: HMA/KW

REV.	DESCRIPTION	BY	DATE
0	FIRST ISSUE	MN	05/08/20

SHEET TITLE:
VZWSMART–PLK5
KICKER KIT

SHEET NUMBER: VZWSMART–PLK5
REV #: 0

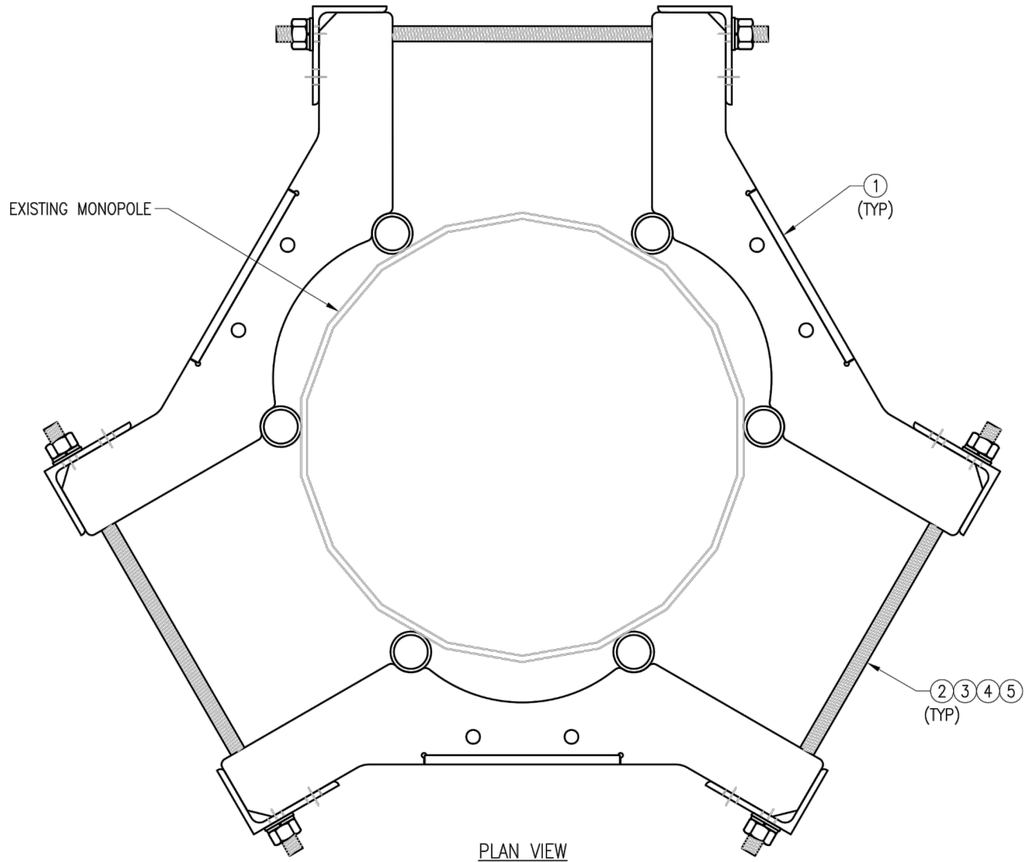

PLAN VIEW
MONOPOLE COLLAR MOUNT ASSEMBLY

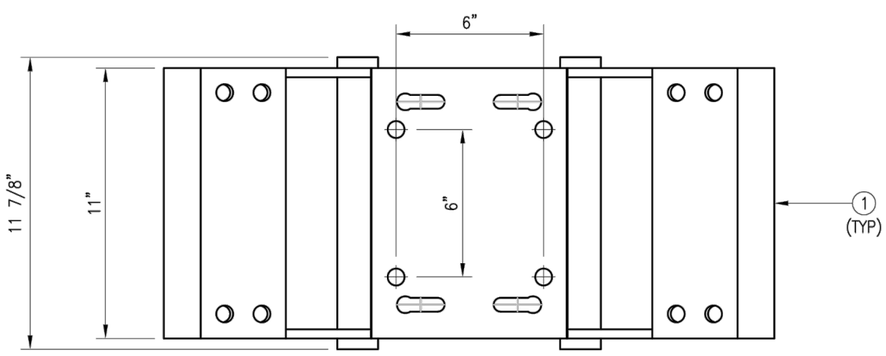

FRONT VIEW

NOTES:
1. FIT 12" TO 45" DIA MONOPOLE.
2. HOT-DIPPED GALVANIZED PER ASTM A123.

VZWSMART-PLK7 (MONOPOLE COLLAR MOUNT ASSEMBLY)

ITEM NO.	QTY.	PART NO.	DESCRIPTION	SHEET #	WT
1	3	CM-1245	COLLAR MOUNT ASSEMBLY	PLK7-F1	147
2	6	---	THREADED ROD 5/8" X 4'-0" A193-B7	---	
3	12	FW-625	5/8" HDG USS FLAT WASHER	---	1
4	12	LW-625	5/8" HDG LOCK WASHER	---	0
5	12	NUT-625	5/8" HDG HEX NUT	---	1
				GALVANIZED WT	150

VzW
SMART Tool©
Vendor

verizon

DRAWN BY: BT | CHECKED BY: HMA/KW

REV.	DESCRIPTION	BY	DATE
0	FIRST ISSUE	BT	05/11/20

SHEET TITLE:
VZWSMART-PLK7
MONOPOLE COLLAR
MOUNT ASSEMBLY

SHEET NUMBER: VZWSMART-PLK7

REV #: 0

Site Name: ***WATERFORD SE CT***
Cumulative Power Density

Operator	Operating Frequency	Number of Trans.	ERP Per Trans.	Total ERP	Distance to Target	Calculated Power Density	Maximum Permissible Exposure*	Fraction of MPE
	(MHz)		(watts)	(watts)	(feet)	(mW/cm^2)	(mW/cm^2)	(%)
VZW 700	751	4	621	2483	160.04	0.0035	0.5007	0.70%
VZW Cellular	872.5	4	38	151	160.04	0.0002	0.5817	0.04%
VZW PCS	1977.5	4	1565	6258	160.04	0.0088	1.0000	0.88%
VZW AWS	2120	4	1633	6534	160.04	0.0092	1.0000	0.92%
VZW CBAND	3730.08	4	6531	26125	160.04	0.0367	1.0000	3.67%
Total Percentage of Maximum Permissible Exposure								6.20%

*Guidelines adopted by the FCC on August 1, 1996, 47 CFR Part 1 based on NCRP Report 86, 1986 and generally on ANSI/IEEE C95.1-1992
**Calculation includes a -10 dB Off Beam Antenna Pattern Adjustment pursuant to Attachments B and C of the Siting Council's November 10, 2015 Memorandum for Exempt Modification filings

MHz = Megahertz
mW/cm^2 = milliwatts per square centimeter
ERP = Effective Radiated Power

Absolute worst case maximum values used.

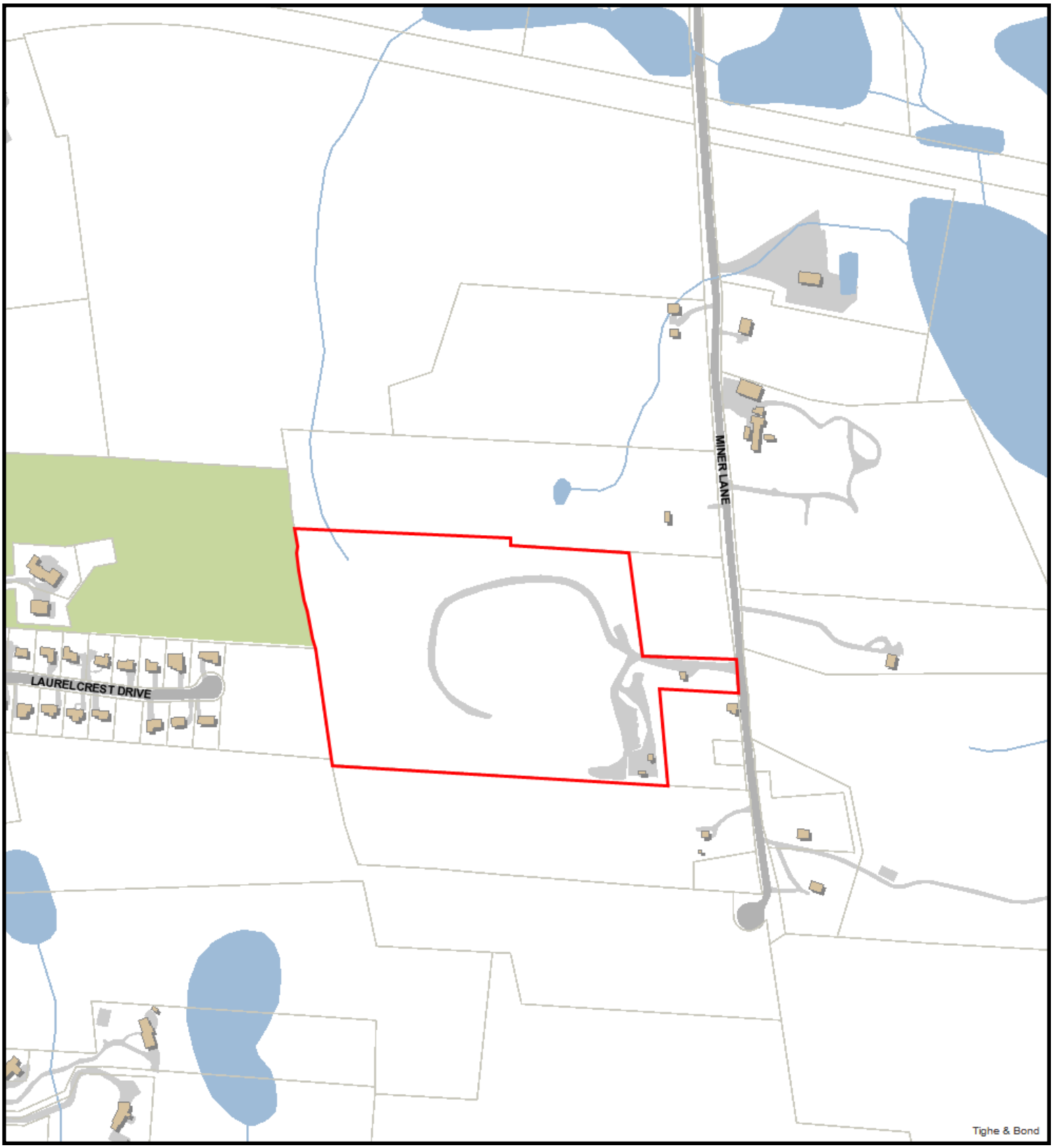

8/13/2021 11:52:34 AM

Scale: 1"=500'

Scale is approximate

The information depicted on this map is for planning purposes only. It is not adequate for legal boundary definition, regulatory interpretation, or parcel-level analyses.

85 MINER LANE

Location	85 MINER LANE	**Mblu**	153/ / 4766/ /
Acct#	00433700	**Owner**	WATERFORD TOWN OF
Assessment	$395,920	**Appraisal**	$565,580
PID	4766	**Building Count**	1

Current Value

Appraisal			
Valuation Year	**Improvements**	**Land**	**Total**
2017	$224,800	$340,780	$565,580
Assessment			
Valuation Year	**Improvements**	**Land**	**Total**
2017	$157,370	$238,550	$395,920

Parcel Addreses

Additional Addresses
No Additional Addresses available for this parcel

Owner of Record

Owner	WATERFORD TOWN OF	**Sale Price**	$0
Co-Owner		**Certificate**	
		Book & Page	0259/0774
		Sale Date	05/14/1981
		Instrument	00

Ownership History

Ownership History					
Owner	**Sale Price**	**Certificate**	**Book & Page**	**Instrument**	**Sale Date**
WATERFORD TOWN OF	$0		0259/0774	00	05/14/1981

Building Information

Building 1 : Section 1

Year Built:
Living Area: 0
Replacement Cost: $0
Building Percent Good:

Building Attributes	
Field	**Description**
Style	Outbuildings
Model	
Grade:	
Stories	
Occupancy	
Exterior Wall 1	
Exterior Wall 2	
Roof Structure	
Roof Cover	
Interior Wall 1	
Interior Wall 2	
Interior Flr 1	
Interior Flr 2	
Heat Fuel	
Heat Type:	
AC Percent	
Total Bedrooms:	
Full Bthrms:	
Half Baths:	
Extra Fixtures	
Total Rooms:	
Bath Style:	
Kitchen Style:	
Num Kitchens	
Fireplace(s)	
Extra Opening(s)	
Gas Fireplace(s)	
% Attic Fin	
LF Dormer	
Foundation	
Bsmt Gar(s)	
Bsmt %	
SF FBM	
SF Rec Rm	

Building Photo

(http://images.vgsi.com/photos/WaterfordCTPhotos//\00\01\65\33.jpg)

Building Layout

Building Layout
(http://images.vgsi.com/photos/WaterfordCTPhotos//Sketches/4766_4766.j

Building Sub-Areas (sq ft)	Legend
No Data for Building Sub-Areas	

Fin Bsmt Qual	
Bsmt Access	
Usrfld 300	
Usrfld 301	

Extra Features

Extra Features	Legend
No Data for Extra Features	

Land

Land Use

Use Code	900
Description	Exempt Vac
Zone	R-40
Neighborhood	1100
Alt Land Appr	No
Category	

Land Line Valuation

Size (Acres)	25.67
Frontage	0
Depth	0
Assessed Value	$238,550
Appraised Value	$340,780

Outbuildings

Outbuildings						Legend
Code	**Description**	**Sub Code**	**Sub Description**	**Size**	**Value**	**Bldg #**
SHD1	Shed	MS	Masonry	400.00 S.F.	$5,760	1
SHD1	Shed	FR	Frame	480.00 S.F.	$10,580	1
MSC14	RADIO TOWER			200.00 UNIT	$200,000	1
FN3	FENCE-6' CHAIN			96.00 L.F.	$580	1
SHP	Work Shop	MS	Masonry	240.00 S.F.	$7,880	1

Valuation History

Appraisal			
Valuation Year	**Improvements**	**Land**	**Total**
2020	$224,800	$340,780	$565,580
4000	$224,800	$340,780	$565,580

Assessment			
Valuation Year	**Improvements**	**Land**	**Total**
2020	$157,370	$238,550	$395,920
4000	$157,370	$238,550	$395,920

(c) 2021 Vision Government Solutions, Inc. All rights reserved.

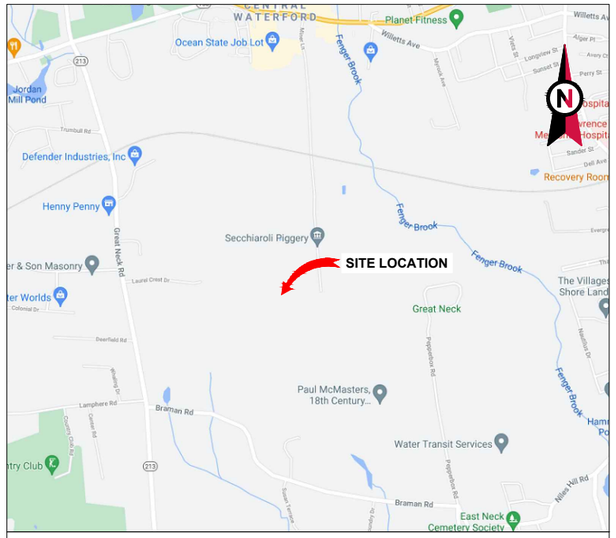

VICINITY MAP

AMERICAN TOWER®

ATC SITE NAME: WATERFORD REBUILD CT
ATC SITE NUMBER: 310972
VERIZON PACE NUMBERS: N/A
VERIZON SITE ID: 1708491
VERIZON FA CODE: N/A
VERIZON SITE NAME: WATERFORD SE CT
SITE ADDRESS: 15 MINER LANE
WATERFORD, CT 06385

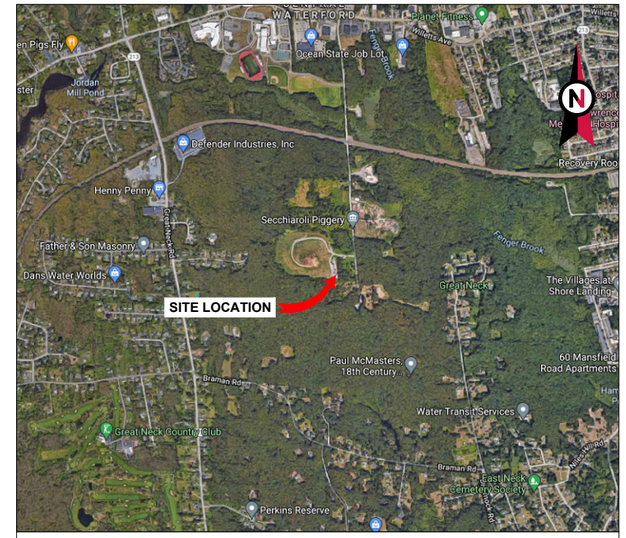

LOCATION MAP

VERIZON WIRELESS
ANTENNA AMENDMENT PLAN

COMPLIANCE CODE

ALL WORK SHALL BE PERFORMED AND MATERIALS INSTALLED IN ACCORDANCE WITH THE CURRENT EDITIONS OF THE FOLLOWING CODES AS ADOPTED BY THE LOCAL GOVERNMENT AUTHORITIES. NOTHING IN THESE PLANS IS TO BE CONSTRUED TO PERMIT WORK NOT CONFORMING TO THESE CODES.

1. 2015 INTERNATIONAL BUILDING CODE (IBC)
2. 2014 NATIONAL ELECTRIC CODE (NEC)
3. LOCAL BUILDING CODE
4. CITY/COUNTY ORDINANCES

UTILITY COMPANIES

POWER COMPANY: UTILITY COMPANY DIRECT
PHONE: TBD
TELEPHONE COMPANY: TBD
PHONE: TBD

Know what's **below.**
Call before you dig.

PROJECT SUMMARY

SITE ADDRESS:

15 MINER LANE

WATERFORD, CT 06385

COUNTY: NEW LONDON

GEOGRAPHIC COORDINATES:

LATITUDE: 41.329167°

LONGITUDE: -72.124444°

GROUND ELEVATION: 94' AMSL

PROJECT TEAM

TOWER OWNER:

AMERICAN TOWER
10 PRESIDENTIAL WAY
WOBURN, MA 01801

ENGINEER:

RPM ENGINEERING LLC
875 KINGS HIGHWAY, SUITE 209
WEST DEPTFORD, NJ 08096

PROPERTY OWNER:

A MELTEL LLC
381 LOVEJOY TRAIL
CULLODEN, WV 25510

APPLICANT:

VERIZON

PROJECT DESCRIPTION

THE PROPOSED PROJECT INCLUDES MODIFYING GROUND BASED AND TOWER MOUNTED EQUIPMENT AS INDICATED PER BELOW:

TOWER WORK:

REMOVE (6) ANTENNA(S), (12) RRU(S), (2) HYBRID CABLE(S)

INSTALL (3) MOUNTING KIT(S), (9) ANTENNA(S), (6) RRU(S), (3) DIPLEXER(S), (2) HYBRID CABLE(S)

EXISTING (6) ANTENNA(S), (12) RRU(S), (2) OVP, (2) HYBRID CABLES

GROUND WORK:

N/A

PROJECT NOTES

1. THE FACILITY IS UNMANNED.
2. A TECHNICIAN WILL VISIT THE SITE APPROXIMATELY ONCE A MONTH FOR ROUTINE INSPECTION AND MAINTENANCE.
3. THE PROJECT WILL NOT RESULT IN ANY SIGNIFICANT LAND DISTURBANCE OR EFFECT OF STORM WATER DRAINAGE.
4. NO SANITARY SEWER, POTABLE WATER OR TRASH DISPOSAL IS REQUIRED.
5. HANDICAP ACCESS IS NOT REQUIRED.

PROJECT LOCATION DIRECTIONS

From Hartford take I-91 South to RT 9 South to I-95 North. Take exit 75 for RT 1 North. Take RT 1 to Miner Lane in Waterford, turn right. Site is towards end of road in Town Landfill on the right.

SHEET INDEX

SHEET NO:	DESCRIPTION:	REV:	D0TE:	BY:
G-001	TITLE SHEET	0	07/26/21	SJP
G-002	GENERAL NOTES	0	07/26/21	SJP
C-101	DETAILED SITE PLAN	0	07/26/21	SJP
C-102	DETAILED SHELTER PLAN	0	07/26/21	SJP
C-201	TOWER ELEVATION	0	07/26/21	SJP
C-401	RF SCHEDULE AND ANTENNA INSTALLATION	0	07/26/21	SJP
C-501	CONSTRUCTION DETAILS	0	07/26/21	SJP
C-505	GENERATOR SPECIFICATIONS	0	07/26/21	SJP
E-501	GROUNDING DETAILS	0	07/26/21	SJP
R-601	SUPPLEMENTAL			
R-602	SUPPLEMENTAL			
R-603	SUPPLEMENTAL			

AMERICAN TOWER®
ATC TOWER SERVICES
3500 REGENCY PARKWAY
SUITE 100
CARY, NC 27518
PHONE: (919) 468-0112
COA: C01229-00

RPM ENGINEERING
With Integrity

REV.	DESCRIPTION	BY	DATE
A	PRELIM	BJC	06/10/21
0	FINAL	SJP	07/26/21

ATC SITE NUMBER:
310972

ATC SITE NAME:
WATERFORD REBUILD CT

VERIZON WIRELESS SITE NAME:
WATERFORD SE CT

SITE ADDRESS:
15 MINER LANE
WATERFORD, CT 06385

SEAL:

verizon

DATE DRAWN:	06/10/21
ATC JOB NO:	13685301
CUSTOMER ID:	469063
CUSTOMER #:	N/A

TITLE SHEET

SHEET NUMBER: G-001

REVISION: A

Copyright © 2021 ATC IP LLC, All Rights Reserved.

GENERAL CONSTRUCTION NOTES:

1. OWNER FURNISHED MATERIALS, VERIZON WIRELESS "THE COMPANY" WILL PROVIDE AND THE CONTRACTOR WILL INSTALL
   - A. BTS EQUIPMENT FRAME (PLATFORM) AND ICEBRIDGE SHELTER (GROUND BUILD/CO-LOCATE ONLY)
   - B. AC/TELCO INTERFACE BOX (PPC)
   - C. ICE BRIDGE (CABLE TRAY WITH COVER) (GROUND BUILD/CO-LOCATE ONLY, GC TO FURNISH AND INSTALL FOR ROOFTOP INSTALLATION)
   - D. TOWERS, MONOPOLES
   - E. TOWER LIGHTING
   - F. GENERATORS & LIQUID PROPANE TANK
   - G. ANTENNA STANDARD BRACKETS, FRAMES AND PIPES FOR MOUNTING
   - H. ANTENNAS (INSTALLED BY OTHERS)
   - I. TRANSMISSION LINE
   - J. TRANSMISSION LINE JUMPERS
   - K. TRANSMISSION LINE CONNECTORS WITH WEATHERPROOFING KITS
   - L. TRANSMISSION LINE GROUND KITS
   - M. HANGERS
   - N. HOISTING GRIPS
   - O. BTS EQUIPMENT
2. THE CONTRACTOR IS RESPONSIBLE TO PROVIDE ALL OTHER MATERIALS FOR THE COMPLETE INSTALLATION OF THE SITE INCLUDING, BUT NOT LIMITED TO, SUCH MATERIALS AS FENCING, STRUCTURAL STEEL SUPPORTING SUB-FRAME FOR PLATFORM, ROOFING LABOR AND MATERIALS, GROUNDING RINGS, GROUNDING WIRES, COPPER-CLAD OR XIT CHEMICAL GROUND ROD(S), BUSS BARS, TRANSFORMERS AND DISCONNECT SWITCHES WHERE APPLICABLE, TEMPORARY ELECTRICAL POWER, CONDUIT, LANDSCAPING COMPOUND STONE, CRANES, CORE DRILLING, SLEEPERS AND RUBBER MATTING, REBAR, CONCRETE CAISSONS, PADS AND/OR AUGER MOUNTS, MISCELLANEOUS FASTENERS, CABLE TRAYS, NON-STANDARD ANTENNA FRAMES AND ALL OTHER MATERIAL AND LABOR REQUIRED TO COMPLETE THE JOB ACCORDING TO THE DRAWINGS AND SPECIFICATIONS. IT IS THE POSITION OF VERIZON WIRELESS TO APPLY FOR PERMITTING AND CONTRACTOR RESPONSIBLE FOR PICKUP AND PAYMENT OF REQUIRED PERMITS.
3. ALL WORK SHALL CONFORM TO ALL CURRENT APPLICABLE FEDERAL, STATE, AND LOCAL CODES, INCLUDING ANSI/EIA/TIA-222, AND COMPLY WITH ATC CONSTRUCTION SPECIFICATIONS.
4. CONTRACTOR SHALL CONTACT LOCAL 811 FOR IDENTIFICATION OF UNDERGROUND UTILITIES PRIOR TO START OF CONSTRUCTION.
5. CONTRACTOR SHALL BE RESPONSIBLE FOR COORDINATING ALL REQUIRED INSPECTIONS.
6. ALL DIMENSIONS TO, OF, AND ON EXISTING BUILDINGS, DRAINAGE STRUCTURES, AND SITE IMPROVEMENTS SHALL BE VERIFIED IN FIELD BY CONTRACTOR WITH ALL DISCREPANCIES REPORTED TO THE ENGINEER.
7. DO NOT CHANGE SIZE OR SPACING OF STRUCTURAL ELEMENTS.
8. DETAILS SHOWN ARE TYPICAL; SIMILAR DETAILS APPLY TO SIMILAR CONDITIONS UNLESS OTHERWISE NOTED.
9. THESE DRAWINGS DO NOT INCLUDE NECESSARY COMPONENTS FOR CONSTRUCTION SAFETY WHICH SHALL BE THE SOLE RESPONSIBILITY OF THE CONTRACTOR.
10. CONTRACTOR SHALL BRACE STRUCTURES UNTIL ALL STRUCTURAL ELEMENTS NEEDED FOR STABILITY ARE INSTALLED. THESE ELEMENTS ARE AS FOLLOWS: LATERAL BRACING, ANCHOR BOLTS, ETC.
11. CONTRACTOR SHALL DETERMINE EXACT LOCATION OF EXISTING UTILITIES, GROUNDS DRAINS, DRAIN PIPES, VENTS, ETC. BEFORE COMMENCING WORK.
12. INCORRECTLY FABRICATED, DAMAGED, OR OTHERWISE MISFITTING OR NONCONFORMING MATERIALS OR CONDITIONS SHALL BE REPORTED TO THE VERIZON WIRELESS REP PRIOR TO REMEDIAL OR CORRECTIVE ACTION. ANY SUCH REMEDIAL ACTION SHALL REQUIRE WRITTEN APPROVAL BY THE VERIZON WIRELESS REP PRIOR TO PROCEEDING.
13. EACH CONTRACTOR SHALL COOPERATE WITH THE VERIZON WIRELESS REP, AND COORDINATE HIS WORK WITH THE WORK OF OTHERS.
14. CONTRACTOR SHALL REPAIR ANY DAMAGE CAUSED BY CONSTRUCTION OF THIS PROJECT TO MATCH EXISTING PRE-CONSTRUCTION CONDITIONS TO THE SATISFACTION OF THE VERIZON WIRELESS CONSTRUCTION MANAGER.
15. ALL CABLE/CONDUIT ENTRY/EXIT PORTS SHALL BE WEATHERPROOFED DURING INSTALLATION USING A SILICONE SEALANT.
16. WHERE EXISTING CONDITIONS DO NOT MATCH THOSE SHOWN IN THIS PLAN SET, CONTRACTOR SHALL NOTIFY THE VERIZON WIRELESS REP AND ENGINEER OF RECORD IMMEDIATELY.
17. CONTRACTOR SHALL ENSURE ALL SUBCONTRACTORS ARE PROVIDED WITH A COMPLETE AND CURRENT SET OF DRAWINGS AND SPECIFICATIONS FOR THIS PROJECT.
18. CONTRACTOR SHALL REMOVE ALL RUBBISH AND DEBRIS FROM THE SITE AT THE END OF EACH DAY.
19. CONTRACTOR SHALL COORDINATE WORK SCHEDULE WITH AMERICAN TOWER CORPORATION (ATC) AND TAKE PRECAUTIONS TO MINIMIZE IMPACT AND DISRUPTION OF OTHER OCCUPANTS OF THE FACILITY.
20. CONTRACTOR SHALL FURNISH VERIZON WIRELESS AND AMERICAN TOWER CORPORATION (ATC) WITH A PDF MARKED UP AS-BUILT SET OF DRAWINGS UPON COMPLETION OF WORK.
21. PRIOR TO SUBMISSION OF BID, CONTRACTOR SHALL COORDINATE WITH VERIZON WIRELESS REP TO DETERMINE WHAT, IF ANY, ITEMS WILL BE PROVIDED. ALL ITEMS NOT PROVIDED SHALL BE PROVIDED AND INSTALLED BY THE CONTRACTOR. CONTRACTOR WILL INSTALL ALL ITEMS PROVIDED.
22. PRIOR TO SUBMISSION OF BID, CONTRACTOR SHALL COORDINATE WITH VERIZON WIRELESS REP TO DETERMINE IF ANY PERMITS WILL BE OBTAINED BY CONTRACTOR. ALL REQUIRED PERMITS NOT OBTAINED BY VERIZON WIRELESS MUST BE OBTAINED, AND PAID FOR, BY THE CONTRACTOR.
23. CONTRACTOR SHALL INSTALL ALL SITE SIGNAGE IN ACCORDANCE WITH VERIZON WIRELESS SPECIFICATIONS AND REQUIREMENTS.
24. CONTRACTOR SHALL SUBMIT ALL SHOP DRAWINGS TO VERIZON WIRELESS FOR REVIEW AND APPROVAL PRIOR TO FABRICATION.
25. ALL EQUIPMENT SHALL BE INSTALLED ACCORDING TO MANUFACTURER'S SPECIFICATIONS AND LOCATED ACCORDING TO VERIZON WIRELESS SPECIFICATIONS, AND AS SHOWN IN THESE PLANS.
26. THE CONTRACTOR SHALL SUPERVISE AND DIRECT THE PROJECT DESCRIBED HEREIN. THE CONTRACTOR SHALL BE SOLELY RESPONSIBLE FOR ALL THE CONSTRUCTION MEANS, METHODS, TECHNIQUES, SEQUENCES AND PROCEDURES AND FOR COORDINATING ALL PORTIONS OF THE WORK UNDER THE CONTRACT.
27. CONTRACTOR SHALL NOTIFY VERIZON WIRELESS REP A MINIMUM OF 48 HOURS IN ADVANCE OF POURING CONCRETE OR BACKFILLING ANY UNDERGROUND UTILITIES, FOUNDATIONS OR SEALING ANY WALL, FLOOR OR ROOF PENETRATIONS FOR ENGINEERING REVIEW AND APPROVAL.
28. CONTRACTOR SHALL BE RESPONSIBLE FOR SITE SAFETY INCLUDING COMPLIANCE WITH ALL APPLICABLE OSHA STANDARDS AND RECOMMENDATIONS AND SHALL PROVIDE ALL NECESSARY SAFETY DEVICES INCLUDING PPE AND PPM AND CONSTRUCTION DEVICES SUCH AS WELDING AND FIRE PREVENTION, TEMPORARY SHORING, SCAFFOLDING, TRENCH BOXES/SLOPING, BARRIERS, ETC.
29. THE CONTRACTOR SHALL PROTECT AT HIS OWN EXPENSE, ALL EXISTING FACILITIES AND SUCH OF HIS NEW WORK LIABLE TO INJURY DURING THE CONSTRUCTION PERIOD. ANY DAMAGE CAUSED BY NEGLECT ON THE PART OF THIS CONTRACTOR OR HIS REPRESENTATIVES, OR BY THE ELEMENTS DUE TO NEGLECT ON THE PART OF THIS CONTRACTOR OR HIS REPRESENTATIVES, EITHER TO THE EXISTING WORK, OR TO HIS WORK OR THE WORK OF ANY OTHER CONTRACTOR, SHALL BE REPAIRED AT HIS EXPENSE TO THE OWNER'S SATISFACTION.
30. ALL WORK SHALL BE INSTALLED IN A FIRST CLASS, NEAT AND WORKMANLIKE MANNER BY MECHANICS SKILLED IN THE TRADE INVOLVED. THE QUALITY OF WORKMANSHIP SHALL BE SUBJECT TO THE APPROVAL OF THE VERIZON WIRELESS REP. ANY WORK FOUND BY THE VERIZON WIRELESS REP TO BE OF INFERIOR QUALITY AND/OR WORKMANSHIP SHALL BE REPLACED AND/OR REWORKED AT CONTRACTOR EXPENSE UNTIL APPROVAL IS OBTAINED.
31. IN ORDER TO ESTABLISH STANDARDS OF QUALITY AND PERFORMANCE, ALL TYPES OF MATERIALS LISTED HEREINAFTER BY MANUFACTURER'S NAMES AND/OR MANUFACTURER'S CATALOG NUMBER SHALL BE PROVIDED BY THESE MANUFACTURERS AS SPECIFIED.
32. VERIZON WIRELESS FURNISHED EQUIPMENT SHALL BE PICKED-UP AT THE VERIZON WIRELESS WAREHOUSE, NO LATER THAN 48HR AFTER BEING NOTIFIED INSURED, STORED, UNCRATE, PROTECTED AND INSTALLED BY THE CONTRACTOR WITH ALL APPURTENANCES REQUIRED TO PLACE THE EQUIPMENT IN OPERATION, READY FOR USE. THE CONTRACTOR SHALL BE RESPONSIBLE FOR THE EQUIPMENT AFTER PICKING IT UP.
33. VERIZON WIRELESS OR HIS ARCHITECT/ENGINEER RESERVES THE RIGHT TO REJECT ANY EQUIPMENT OR MATERIALS WHICH, IN HIS OWN OPINION ARE NOT IN COMPLIANCE WITH THE CONTRACT DOCUMENTS, EITHER BEFORE OR AFTER INSTALLATION AND THE EQUIPMENT SHALL BE REPLACED WITH EQUIPMENT CONFORMING TO THE REQUIREMENTS OF THE CONTRACT DOCUMENTS BY THE CONTRACTOR AT NO COST TO VERIZON WIRELESS OR THEIR ARCHITECT/ENGINEER.

SPECIAL CONSTRUCTION ANTENNA INSTALLATION NOTES:

1. WORK INCLUDED:
   - A. ANTENNA AND COAXIAL CABLES ARE FURNISHED BY VERIZON WIRELESS UNDER A SEPARATE CONTRACT. THE CONTRACTOR SHALL ASSIST ANTENNA INSTALLATION CONTRACTOR IN TERMS OD COORDINATION AND SITE ACCESS. ERECTION SUBCONTRACTOR SHALL BE RESPONSIBLE FOR THE PROTECTION OF PERSONNEL AND
   - B. INSTALL ANTENNA AS INDICATE ON DRAWINGS AND VERIZON WIRELESS SPECIFICATIONS.
   - C. INSTALL GALVANIZED STEEL ANTENNA MOUNTS AS INDICATED ON DRAWINGS
   - D. INSTALL FURNISHED GALVANIZED STEEL OR ALUMINUM WAVEGUIDE.
   - E. CONTRACTOR SHALL PROVIDE FOUR (4) SETS OF SWEEP TESTS USING ANRITZU-PACKARD 8713B RF SCALAR NETWORK ANALYZER. SUBMIT FREQUENCY DOMAIN REFLECTOMETER(FDR) TESTS RESULTS TO THE PROJECT MANAGER. SWEEP TESTS SHALL BE AS PER ATTACHED RFS "MINIMUM FIELD TESTING RECOMMENDED FOR ANTENNA AND HELIAX COAXIAL CABLE SYSTEMS" DATED 10/5/93. TESTING SHALL BE PERFORMED BY AN INDEPENDENT TESTING SERVICE AND BE BOUND AND SUBMITTED WITHIN ONE WEEK OF WORK COMPLETION.
   - F. INSTALL COAXIAL CABLES AND TERMINATING BETWEEN ANTENNAS AND EQUIPMENT PER MANUFACTURER'S RECOMMENDATIONS. WEATHERPROOF ALL CONNECTIONS BETWEEN THE ANTENNA AND EQUIPMENT PER MANUFACTURER'S REQUIREMENTS. TERMINATE ALL COAXIAL CABLE THREE (3) FEET IN EXCESS OF ENTRY PORT LOCATION UNLESS OTHERWISE STATED.
   - G. ANTENNA AND COAXIAL CABLE GROUNDING:
2. ALL EXTERIOR #6 GREED GROUND WIRE "DAISY CHAIN" CONNECTIONS ARE TO BE WEATHER SEALED WITH RFS CONNECTORS/SPLICE WEATHERPROOFING KIT #221213 OR EQUAL.
3. ALL COAXIAL CABLE GROUNDING KITS ARE TO BE INSTALLED ON STRAIGHT RUNS OF COAXIAL CABLE (NOT WITHIN BENDS)

ALL DISCREPANCIES FROM WHAT IS SHOWN ON THESE CONSTRUCTION DRAWINGS SHALL BE COMMUNICATED TO ATC ENGINEERING IMMEDIATELY FOR CORRECTION OR RE-DESIGN. FAILURE TO COMMUNICATE DIRECTLY WITH ATC ENGINEERING OR ANY CHANGES FROM THE DESIGN CONDUCTED WITHOUT PRIOR APPROVAL FROM ATC ENGINEERING SHALL BE THE SOLE RESPONSIBILITY OF THE GENERAL CONTRACTOR.

AMERICAN TOWER®
ATC TOWER SERVICES
3500 REGENCY PARKWAY
SUITE 100
CARY, NC 27518
PHONE: (919) 468-0112
COA: C01229-00

RPM ENGINEERING
With Integrity

REV.	DESCRIPTION	BY	DATE
A	PRELIM	BJC	06/10/21

ATC SITE NUMBER:
310972

ATC SITE NAME:
WATERFORD REBUILD CT

VERIZON WIRELESS SITE NAME:
WATERFORD SE CT

SITE ADDRESS:
15 MINER LANE
WATERFORD, CT 06385

SEAL:

verizon

DATE DRAWN:	06/10/21
ATC JOB NO:	13685301
CUSTOMER ID:	469063
CUSTOMER #:	N/A

GENERAL NOTES

SHEET NUMBER:	REVISION:
G-002	0

Copyright © 2021 ATC IP LLC, All Rights Reserved.

SITE PLAN NOTES:

1. THIS SITE PLAN REPRESENTS THE BEST PRESENT KNOWLEDGE AVAILABLE TO THE ENGINEER AT THE TIME OF THIS DESIGN. THE CONTRACTOR SHALL VISIT THE SITE PRIOR TO CONSTRUCTION AND VERIFY ALL EXISTING CONDITIONS RELATED TO THE SCOPE OF WORK FOR THIS PROJECT.

2. ICE BRIDGE, CABLE LADDER, COAX PORT, AND COAX CABLE ARE SHOWN FOR REFERENCE ONLY. CONTRACTOR SHALL CONFIRM THE EXACT LOCATION OF ALL PROPOSED AND EXISTING EQUIPMENT AND STRUCTURES DEPICTED ON THIS PLAN. BEFORE UTILIZING EXISTING CABLE SUPPORTS, COAX PORTS, INSTALLING NEW PORTS OR ANY OTHER EQUIPMENT, CONTRACTOR SHALL VERIFY ALL ASPECTS OF THE COMPONENTS MEET THE ATC SPECIFICATIONS.

3. THIS PROJECT INCLUDES NO INSTALL OR MODIFICATION AT GRADE.

LEGEND

⊗	GROUNDING TEST WELL
ATS	AUTOMATIC TRANSFER SWITCH
B	BOLLARD
CSC	CELL SITE CABINET
D	DISCONNECT
E	ELECTRICAL
F	FIBER
GEN	GENERATOR
G	GENERATOR RECEPTACAL
HH, V	HAND HOLE, VAULT
IB	ICE BRIDGE
K	KENTROX BOX
LC	LIGHTING CONTROL
M	METER
PB	PULL BOX
PP	POWER POLE
T	TELCO
TRN	TRANSFORMER
—— x ——	CHAINLINK FENCE

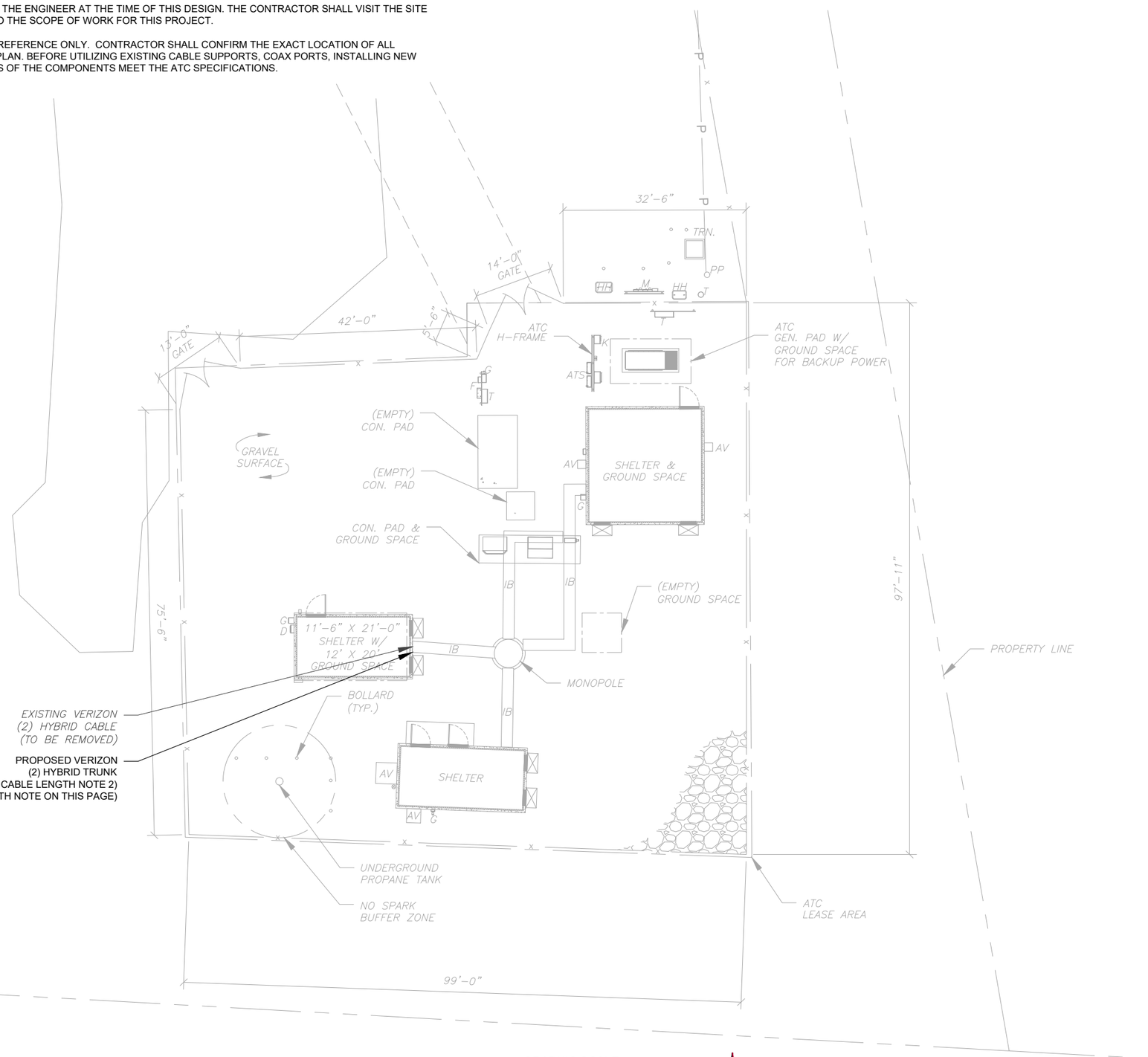

1 DETAILED SITE PLAN

GRAPHIC SCALE
20 0 10 20
(IN FEET)
1 UNIT = 20 FEET

PROPOSED CABLE LENGTH:

1. ESTIMATED LENGTH OF PROPOSED CABLE IS **200'**. ESTIMATED LENGTH OF CABLE WAS PROVIDED BY CUSTOMER OR CALCULATED BY ADDING THE RAD CENTER AND THE DISTANCE FROM THE SHELTER ENTRY PLATE TO THE TOWER (ALONG THE ICE BRIDGE) AND A SAFETY FACTOR MEASUREMENT OF 15% (OF THE TWO PREVIOUS VALUES), CDS DEFER TO GREATEST CABLE LENGTH.
2. ROUTE PROPOSED CABLES ALONG SAME PATH AS EXISTING CABLES AND IN ACCORDANCE WITH STRUCTURAL ANALYSIS. WHERE POSSIBLE UTILIZE EXISTING CABLE SUPPORT STRUCTURES AS PROVIDED FOR CARRIER TO ADEQUATELY SECURE CABLES, USING EITHER APPROPRIATELY SIZED STAINLESS STEEL SNAP-INS OR MOUNTING HARDWARE AND BRACKETS AS SPECIFIED BY CABLE MANUFACTURER. OTHERWISE, ATTACH CABLES TO HORIZONTAL OR DIAGONAL TOWER MEMBERS USING PROPOSED STAINLESS STEEL ADAPTERS (DO NOT ATTACH TO TOWER LEG).

AMERICAN TOWER®
ATC TOWER SERVICES
3500 REGENCY PARKWAY
SUITE 100
CARY, NC 27518
PHONE: (919) 468-0112
COA: C01229-00

RPM ENGINEERING
With Integrity

REV.	DESCRIPTION	BY	DATE
A	PRELIM	BJC	06/10/21

ATC SITE NUMBER:
310972

ATC SITE NAME:
WATERFORD REBUILD CT

VERIZON WIRELESS SITE NAME:
WATERFORD SE CT

SITE ADDRESS:
15 MINER LANE
WATERFORD, CT 06385

SEAL:

STATE OF CONNECTICUT
KELLY M. SHANAHAN
No. 32254
LICENSED PROFESSIONAL ENGINEER

verizon

DATE DRAWN:	06/10/21
ATC JOB NO:	13685301
CUSTOMER ID:	469063
CUSTOMER #:	N/A

DETAILED SITE PLAN

SHEET NUMBER:	REVISION:
C-101	0

Copyright © 2021 ATC IP LLC. All Rights Reserved.

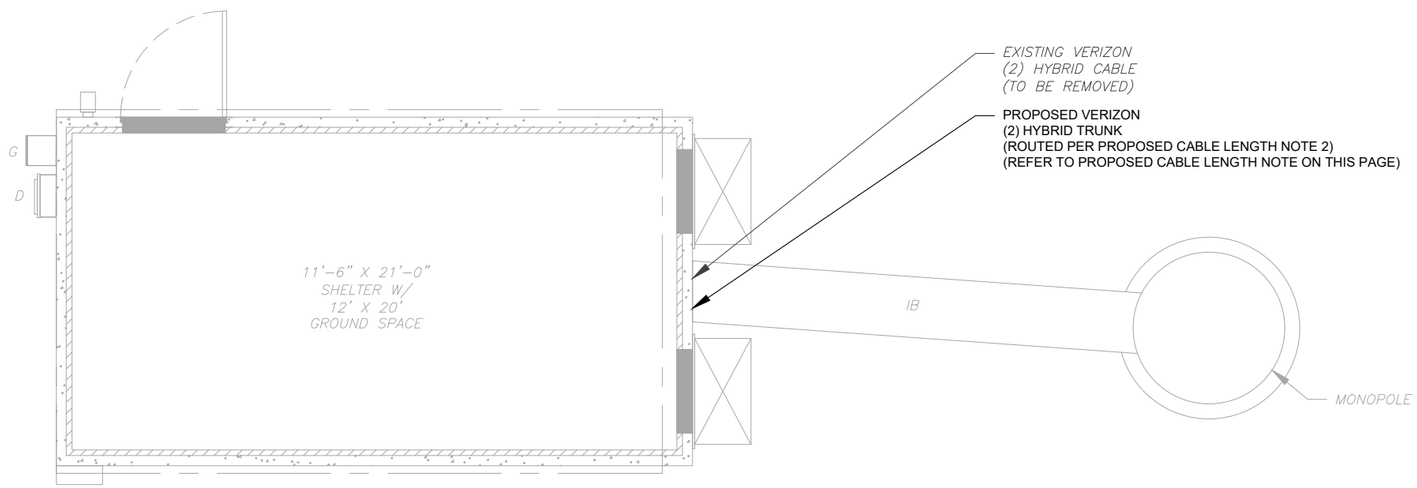

1 DETAILED EQUIPMENT PLAN

0 5' 10'

SCALE: 1"=5' (11X17)
1"=2.5' (22X34)

N

AMERICAN TOWER®
ATC TOWER SERVICES
3500 REGENCY PARKWAY
SUITE 100
CARY, NC 27518
PHONE: (919) 468-0112
COA: C01229-00

RPM ENGINEERING
With Integrity

REV.	DESCRIPTION	BY	DATE
A	PRELIM	BJC	06/10/21

ATC SITE NUMBER:
310972

ATC SITE NAME:
WATERFORD REBUILD CT

VERIZON WIRELESS SITE NAME:
WATERFORD SE CT

SITE ADDRESS:
15 MINER LANE
WATERFORD, CT 06385

SEAL:

STATE OF CONNECTICUT
KELLY M. SHANAHAN
No. 32254
LICENSED
PROFESSIONAL ENGINEER

Kelly Shanahan

verizon

DATE DRAWN:	06/10/21
ATC JOB NO:	13685301
CUSTOMER ID:	469063
CUSTOMER #:	N/A

DETAILED EQUIPMENT LAYOUT

SHEET NUMBER:	REVISION:
C-102	0

Copyright © 2021 ATC IP LLC. All Rights Reserved.

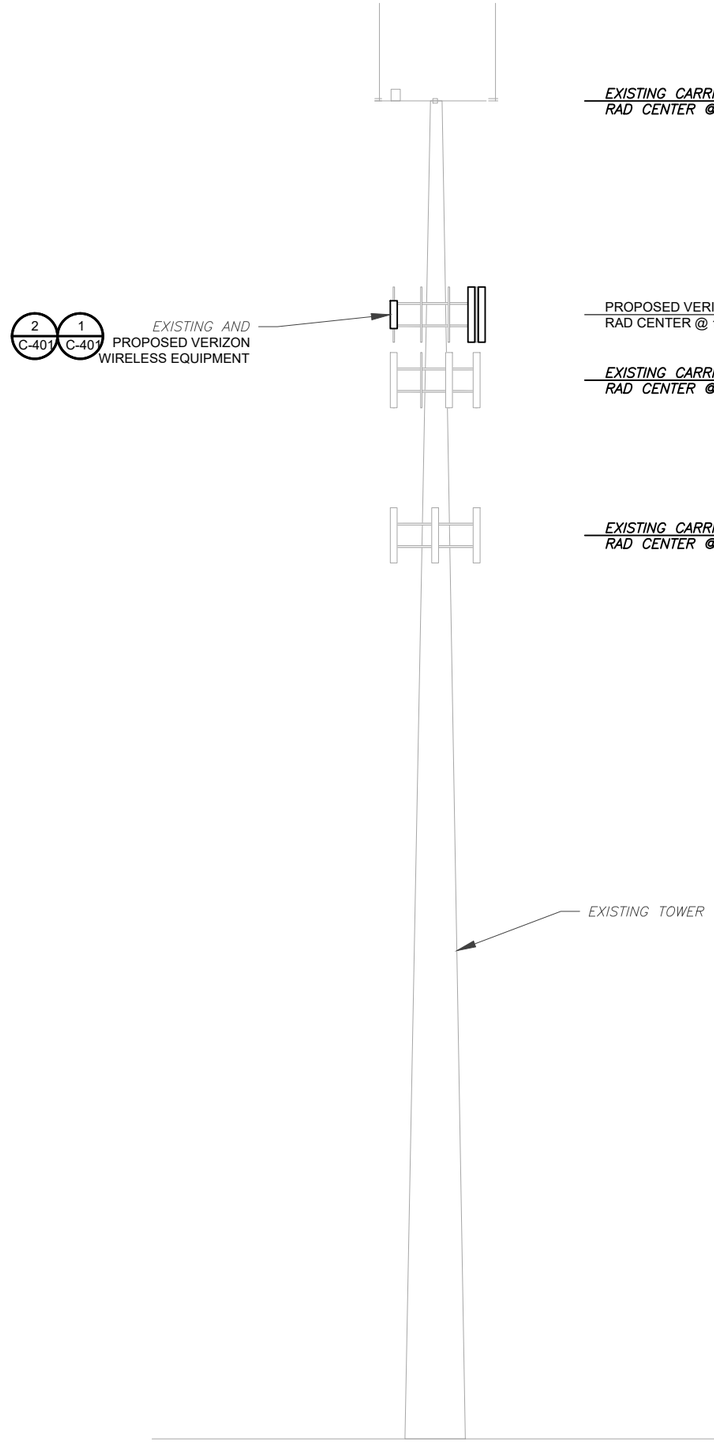

1 TOWER ELEVATION
SCALE: N.T.S.

ATC IS ANALYZING THE ANTENNA MOUNT UNDER A SEPARATE PROJECT. CONSTRUCTION IS NOT TO PROCEED UNTIL THE MOUNT ANALYSIS IS COMPLETE AND INDICATES THE ADDITIONAL LOADING DOES NOT OVERSTRESS THE MOUNT

TOWER NOTE:

1. IT IS THE CONTRACTOR'S RESPONSIBILITY TO CONFIRM WITH THE PROJECT MANAGER THAT THEY HAVE THE MOST RECENT VERSION OF THE STRUCTURAL ANALYSIS BEFORE COMMENCING WORK. EXISTING AND PROPOSED TOWER APPURTENANCES, MOUNTS, AND ANTENNAS ARE SHOWN BASED ON THE STRUCTURAL ANALYSIS.
2. WHERE APPLICABLE, ALL NEW ANTENNAS, EQUIPMENT, MOUNTS, CABLING, ETC. SHALL BE PAINTED/SOCKED TO MATCH EXISTING EQUIPMENT IN ACCORDANCE WITH FAA, JURISDICTION, AND/OR OTHER LOCAL REQUIREMENTS.
3. ROUTE PROPOSED CABLES ALONG SAME PATH AS EXISTING CABLES AND IN ACCORDANCE WITH STRUCTURAL ANALYSIS. IF ADEQUATE SPACE EXISTS, ROUTE CABLES THROUGH ENTRY PORT HOLE, UP INSIDE OF MONOPOLE, AND THROUGH EXIT PORT HOLE. IF ROUTING OUTSIDE THE MONOPOLE, ATTACH CABLES USING STAND-OFF ADAPTERS MOUNTED TO TOWER USING STAINLESS STEEL BANDING. ADEQUATELY SECURE CABLES USING EITHER APPROPRIATELY SIZED STAINLESS STEEL SNAP-INS OR MOUNTING HARDWARE AND BRACKETS AS SPECIFIED BY CABLE MANUFACTURER.
4. TOWER ELEVATIONS ARE MEASURED FROM TOP OF BASE PLATE TO MATCH STRUCTURAL ANALYSIS. ELEVATIONS DO NOT REFLECT TRUE ABOVE GROUND LEVEL (A.G.L.)

AMERICAN TOWER®
ATC TOWER SERVICES
3500 REGENCY PARKWAY
SUITE 100
CARY, NC 27518
PHONE: (919) 468-0112
COA: C01229-00

RPM ENGINEERING
With Integrity

REV.	DESCRIPTION	BY	DATE
A	PRELIM	BJC	06/10/21

ATC SITE NUMBER:
310972

ATC SITE NAME:
WATERFORD REBUILD CT

VERIZON WIRELESS SITE NAME:
WATERFORD SE CT

SITE ADDRESS:
15 MINER LANE
WATERFORD, CT 06385

SEAL:

verizon

DATE DRAWN:	06/10/21
ATC JOB NO:	13685301
CUSTOMER ID:	469063
CUSTOMER #:	N/A

TOWER ELEVATION

SHEET NUMBER:	REVISION:
C-201	A

Copyright © 2021 ATC IP LLC. All Rights Reserved.

EXISTING CONFIGURATIONS ARE BASED ON RFDS. CONTRACTOR TO VERIFY EXISTING CONDITIONS.

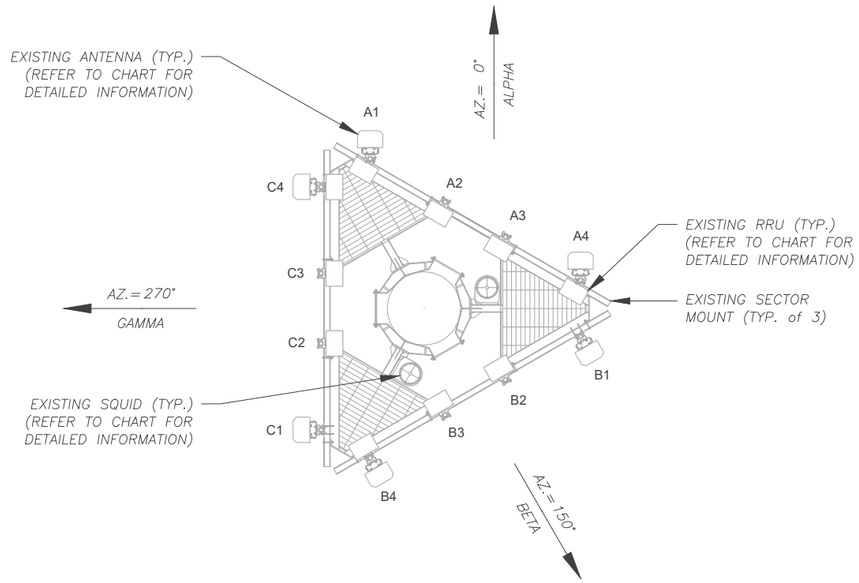

1 CURRENT ANTENNA PLAN

SCALE: N.T.S.

ATC IS ANALYZING THE ANTENNA MOUNT UNDER A SEPARATE PROJECT. CONSTRUCTION IS NOT TO PROCEED UNTIL THE MOUNT ANALYSIS IS COMPLETE AND INDICATES THE ADDITIONAL LOADING DOES NOT OVERSTRESS THE MOUNT

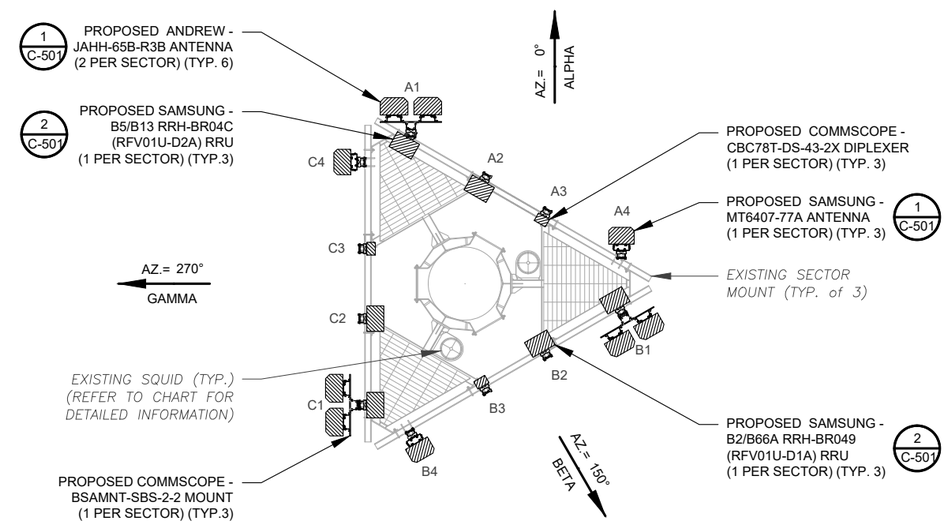

2 FINAL ANTENNA PLAN

SCALE: N.T.S.

EXISTING ANTENNA SCHEDULE

LOCATION			ANTENNA SUMMARY				NON ANTENNA SUMMARY	
SECTOR	RAD	AZ	POS	ANTENNA	BAND	STATUS	ADDITIONAL TOWER MOUNTED EQUIPMENT	STATUS
ALPHA	160'	0°	A1	AMPHENOL – BXA–171063–12CF–EDIN–2	LTE AWS	RMV	(1) RRH 2X40 AWS	RMV
			A2	–	–	–	(1) UHID B4 RRH 2X40	RMV
			A3	–	–	–	(1) UHBB B13 RRH 2X40	RMV
			A4	ANTEL – BXA–70063–6CF–2–750MHZ	LTE 700	RMV	(1) RRH 2X40 700	RMV
BETA	160'	150°	B1	AMPHENOL – BXA–171063–12CF–EDIN–2	LTE AWS	RMV	(1) RRH 2X40 AWS	RMV
			B2	–	–	–	(1) UHID B4 RRH 2X40	RMV
			B3	–	–	–	(1) UHBB B13 RRH 2X40	RMV
			B4	ANTEL – BXA–70063–6CF–2–750MHZ	LTE 700	RMV	(1) RRH 2X40 700	RMV
GAMMA	160'	270°	C1	AMPHENOL – BXA–171063–12CF–EDIN–2	LTE AWS	RMV	(1) RRH 2X40 AWS	RMV
			C2	–	–	–	(1) UHID B4 RRH 2X40	RMV
			C3	–	–	–	(1) UHBB B13 RRH 2X40	RMV
			C4	ANTEL – BXA–70063–6CF–2–750MHZ	LTE 700	RMV	(1) RRH 2X40 700	RMV

NOTES

1. CONFIRM WITH VERIZON WIRELESS REP FOR APPLICABLE UPDATES/REVISIONS AND MOST RECENT RFDS FOR NSN CONFIGURATION (CONFIG). GC TO CAP ALL UNUSED PORTS.
2. CONFIRM SPACING OF PROPOSED EQUIP DOES NOT CAUSE TOWER CONFLICTS NOR IMPEDE TOWER CLIMBING PEGS.
3. THE ANTENNA ORIENTATION PLAN IS A SCHEMATIC. ATC DID NOT CONFIRM EXISTING SITE CONDITIONS INCLUDING, BUT NOT LIMITED TO, ANTENNA AZIMUTHS, MOUNT CONFIGURATIONS AND TOWER ORIENTATION. SCALES SHOWN ARE FOR REFERENCE ONLY AND EXISTING DIMENSIONS ARE APPROXIMATE. THE CONTRACTOR SHALL VERIFY ALL EXISTING CONDITIONS PRIOR TO INSTALLATION AND NOTIFY ATC OF ANY DISCREPANCIES.
4. CONTRACTOR TO ENSURE PROPER SEPARATION IN ACCORDANCE WITH VERIZON'S FIRSTNET REQUIREMENTS (SEE SHEET R-602)

PROPOSED ANTENNA SCHEDULE

LOCATION			ANTENNA SUMMARY				NON ANTENNA SUMMARY	
SECTOR	RAD	AZ	POS	ANTENNA	BAND	STATUS	ADDITIONAL TOWER MOUNTED EQUIPMENT	STATUS
ALPHA	160'	0°	A1	(2) COMMSCOPE - JAHH-65B-R3B	LTE 700, LTE 850, LTE 1900, LTE AWS	ADD	(1) B5/B13 RRH-BR04C (RFV01U-D2A)	ADD
			A2	–	–	–	(1) B2/B66A RRH-BR049 (RFV01U-D1A)	ADD
			A3	–	–	–	(1) CBC78T-DS-43-2X	ADD
			A4	SAMSUNG - MT6407-77A	5G	ADD	–	–
BETA	160'	150°	B1	(2) COMMSCOPE - JAHH-65B-R3B	LTE 700, LTE 850, LTE 1900, LTE AWS	ADD	(1) B5/B13 RRH-BR04C (RFV01U-D2A)	ADD
			B2	–	–	–	(1) B2/B66A RRH-BR049 (RFV01U-D1A)	ADD
			B3	–	–	–	(1) CBC78T-DS-43-2X	ADD
			B4	SAMSUNG - MT6407-77A	5G	ADD	–	–
GAMMA	160'	270°	C1	(2) COMMSCOPE - JAHH-65B-R3B	LTE 700, LTE 850, LTE 1900, LTE AWS	ADD	(1) B5/B13 RRH-BR04C (RFV01U-D2A)	ADD
			C2	–	–	–	(1) B2/B66A RRH-BR049 (RFV01U-D1A)	ADD
			C3	–	–	–	(1) CBC78T-DS-43-2X	ADD
			C4	SAMSUNG - MT6407-77A	5G	ADD	–	–

EXISTING FIBER DISTRIBUTION/SQUID

MODEL NUMBER	STATUS
(2) DB–T1–6Z–8AB–0Z	RMN
–	–
–	–

EXISTING CABLING SUMMARY

COAX	DC	FIBER	STATUS
–	–	–	–
–	–	(2) HYBRID	RMV
–	–	–	–

STATUS ABBREVIATIONS

RMV: TO BE REMOVED
RMN: TO REMAIN
REL: TO BE RELOCATED
ADD: TO BE ADDED

CABLE LENGTHS FOR JUMPERS

JUNCTION BOX TO RRU: 15'
RRU TO ANTENNA: 10'

PROPOSED FIBER DISTRIBUTION/SQUID

MODEL NUMBER	STATUS
(2) DB–T1–6Z–8AB–0Z	RMN
–	–
–	–

PROPOSED CABLING SUMMARY

COAX	DC	FIBER	STATUS
–	–	(2) HYBRID	ADD
–	–	–	–
–	–	–	–

3 EQUIPMENT SCHEDULES

AMERICAN TOWER®
ATC TOWER SERVICES
3500 REGENCY PARKWAY
SUITE 100
CARY, NC 27518
PHONE: (919) 468-0112
COA: C01229-00

RPM ENGINEERING
With Integrity

REV.	DESCRIPTION	BY	DATE
A	PRELIM	BJC	06/10/21

ATC SITE NUMBER:
310972

ATC SITE NAME:
WATERFORD REBUILD CT

VERIZON WIRELESS SITE NAME:
WATERFORD SE CT

SITE ADDRESS:
15 MINER LANE
WATERFORD, CT 06385

SEAL:

verizon

DATE DRAWN:	06/10/21
ATC JOB NO:	13685301
CUSTOMER ID:	469063
CUSTOMER #:	N/A

RF SCHEDULE AND ANTENNA INSTALLATION

SHEET NUMBER: C-401

REVISION: 0

Copyright © 2021 ATC IP LLC, All Rights Reserved.

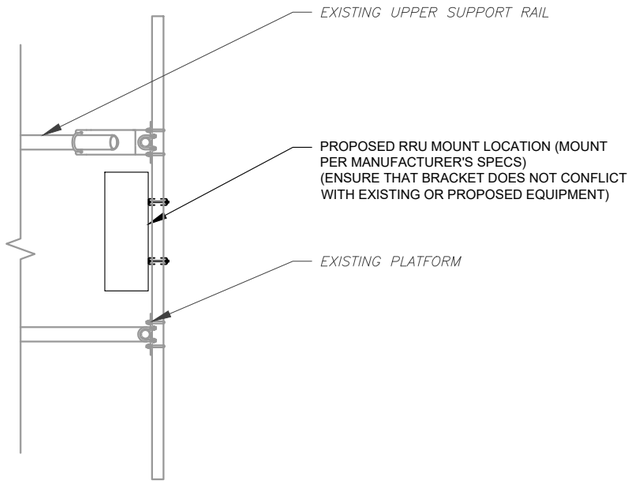

1 PROPOSED RRU MOUNTING DETAIL - TYPICAL

SCALE: N.T.S.

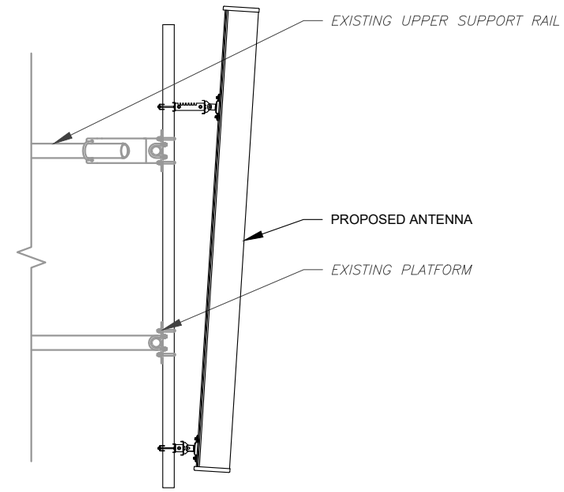

2 PROPOSED ANTENNA MOUNTING DETAIL - TYPICAL

SCALE: N.T.S.

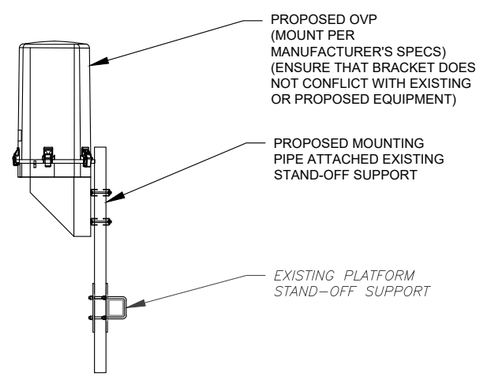

3 PROPOSED OVP MOUNTING

SCALE: N.T.S.

AMERICAN TOWER®
ATC TOWER SERVICES
3500 REGENCY PARKWAY
SUITE 100
CARY, NC 27518
PHONE: (919) 468-0112
COA: C01229-00

RPM ENGINEERING
With Integrity

REV.	DESCRIPTION	BY	DATE
A	PRELIMINARY	GV	04/28/21

ATC SITE NUMBER:
310972

ATC SITE NAME:
WATERFORD REBUILD CT

VERIZON WIRELESS SITE NAME:
WATERFORD SE CT

SITE ADDRESS:
15 MINER LANE
WATERFORD, CT 06385

SEAL:

verizon

DATE DRAWN:	06/10/21
ATC JOB NO:	13685301
CUSTOMER ID:	469063
CUSTOMER #:	N/A

CONSTRUCTION DETAILS

SHEET NUMBER:	REVISION:
C-501	0

Copyright © 2021 ATC IP LLC. All Rights Reserved.

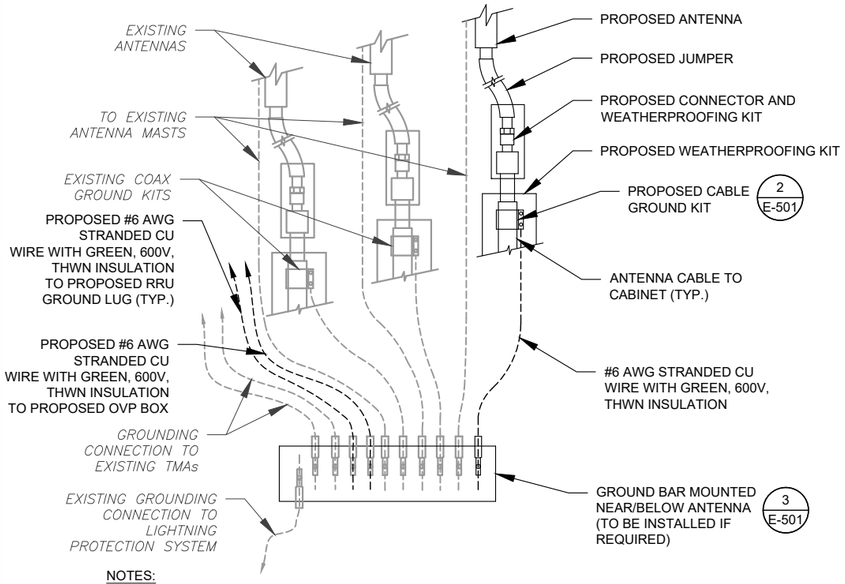

NOTES:

1. THIS DETAIL IS INTENDED TO SHOW THE GENERAL GROUNDING REQUIREMENTS. SLIGHT ADJUSTMENTS MAY BE REQUIRED BASED ON EXISTING SITE CONDITIONS. THE CONTRACTOR SHALL MAKE FIELD ADJUSTMENTS AS NEEDED AND INFORM THE CONSTRUCTION MANAGER OF ANY CONFLICTS.
2. SITE GROUNDING SHALL COMPLY WITH VERIZON WIRELESS GROUNDING STANDARDS, LATEST EDITION, AND COMPLY WITH VERIZON WIRELESS GROUNDING CHECKLIST, LATEST VERSION. WHEN NATIONAL AND LOCAL GROUNDING CODES ARE MORE STRINGENT THEY SHALL GOVERN.

1 TYPICAL ANTENNA GROUNDING DIAGRAM

SCALE: N.T.S.

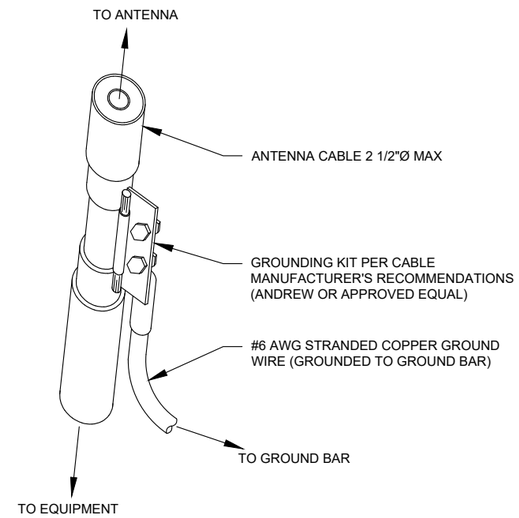

GROUND KIT NOTES:

1. DO NOT INSTALL CABLE GROUND KIT AT A BEND AND ALWAYS DIRECT GROUND WIRE DOWN TO GROUND BAR.
2. CONTRACTOR SHALL PROVIDE WEATHERPROOFING KIT (ANDREW PART NUMBER 221213) AND INSTALL/TAPE PER MANUFACTURER'S SPECIFICATIONS.

2 CABLE GROUND KIT CONNECTION DETAIL

SCALE: N.T.S.

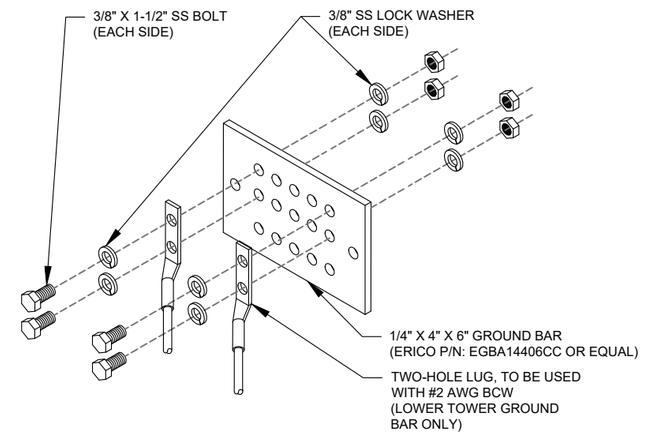

GROUND BAR NOTES:

1. GROUND BAR KITS COME WITH ALL HARDWARE, NUTS, BOLTS, WASHERS, ETC. EXCEPT THE STRUCTURAL MOUNTING MEMBER(S).
2. GROUND BAR TO BE BONDED DIRECTLY TO TOWER.

3 TOWER GROUND BAR DETAIL

SCALE: N.T.S.

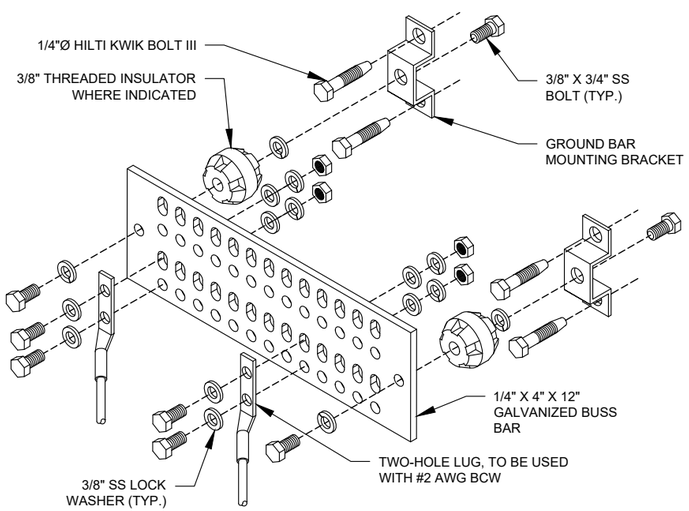

GROUND BAR NOTES

1. GROUND KITS COME WITH ALL HARDWARE, NUTS, BOLTS, WASHERS, ETC. EXCEPT THE STRUCTURAL MOUNTING MEMBER(S).
2. GROUND BAR SHALL BE BOLTED TO STRUCTURAL MEMBER OR ANCHORED TO CONCRETE SLAB W/ HILTI KWIK BOLT III.

4 MAIN GROUND BAR DETAIL

SCALE: N.T.S.

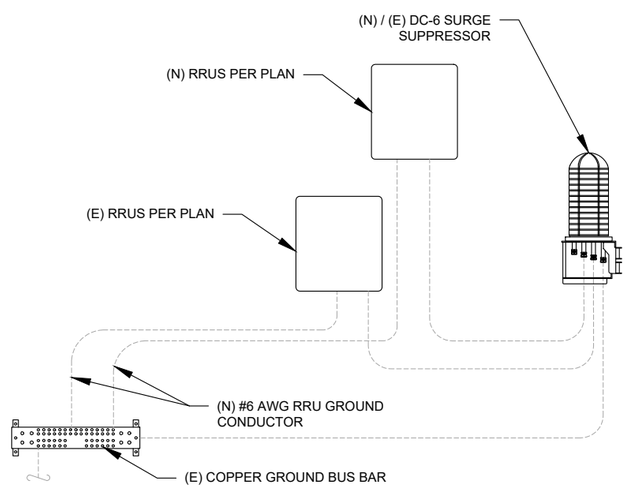

5 RRU GROUNDING

SCALE: N.T.S.

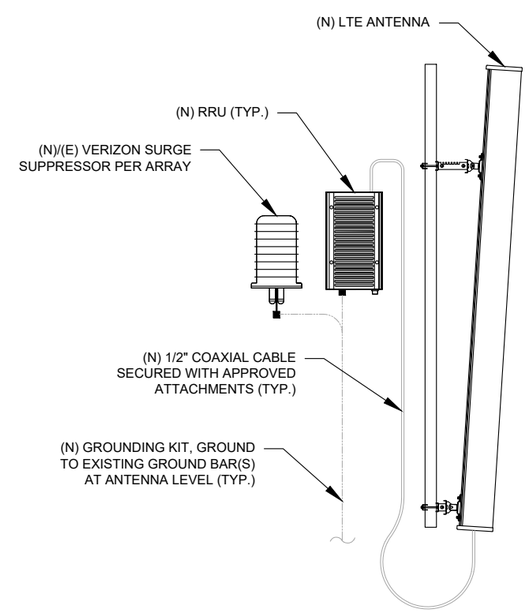

6 ANTENNA/RRU GROUNDING

SCALE: N.T.S.

AMERICAN TOWER®
ATC TOWER SERVICES
3500 REGENCY PARKWAY
SUITE 100
CARY, NC 27518
PHONE: (919) 468-0112
COA: C01229-00

RPM ENGINEERING
With Integrity

REV.	DESCRIPTION	BY	DATE
A	PRELIM	BJC	06/10/21

ATC SITE NUMBER:
310972

ATC SITE NAME:
WATERFORD REBUILD CT

VERIZON WIRELESS SITE NAME:
WATERFORD SE CT

SITE ADDRESS:
15 MINER LANE
WATERFORD, CT 06385

SEAL:

STATE OF CONNECTICUT · KELLY M. SHANAHAN · No. 32254 · LICENSED PROFESSIONAL ENGINEER

verizon

DATE DRAWN:	06/10/21
ATC JOB NO:	13685301
CUSTOMER ID:	469063
CUSTOMER #:	N/A

GROUNDING DETAILS

SHEET NUMBER: E-501

REVISION: 0

Copyright © 2021 ATC IP LLC, All Rights Reserved.

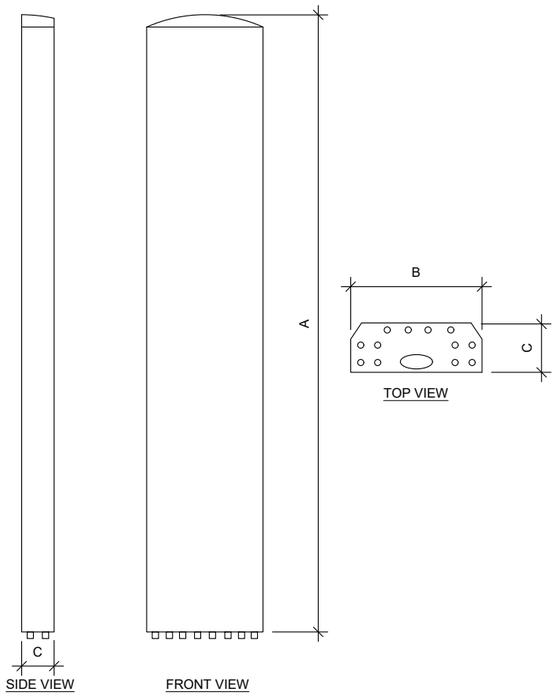

ANTENNA SPECIFICATIONS				
ANTENNA MODEL	A	B	C	WEIGHT (LBS)
MT6407-77A	35.1"	16.1"	5.5"	81.6
JAHH-65B-R3B	72"	13.8"	8.2"	60.6

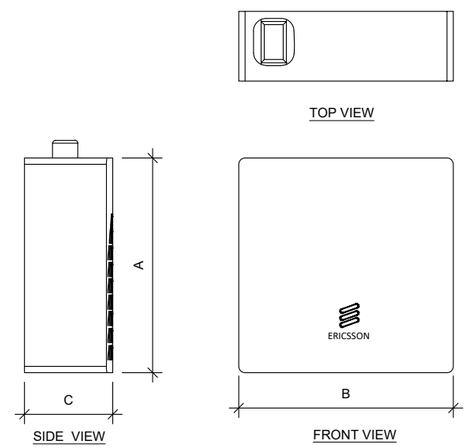

RRU SPECIFICATIONS				
RRU MODEL	A	B	C	WEIGHT (LBS)
B5/B13 RRH-BR04C	15"	15"	8.1"	70.3
B2/B66A RRH-BR049	15"	15"	10"	84.4

1 EQUIPMENT SPECIFICATIONS

SCALE: N.T.S.

SUPPLEMENTAL

SHEET NUMBER: R-601

REVISION: 0

Copyright © 2021 ATC IP LLC. All Rights Reserved.