QC Development
PO Box 916
Storrs, CT 06268
860-670-9068
Mark.Roberts@QCDevelopment.net

January 18, 2017

Melanie A. Bachman
Acting Executive Director
Connecticut Siting Council
10 Franklin Square
New Britain, CT 06051

Notice of Exempt Modification – New Cingular Wireless PCS, LLC (AT&T) – CT1340
10 Blackville Road, Washington, CT 06794
N 41-38-47.52
W 73-18-57.79

Dear Ms. Bachman:

AT&T currently maintains twelve (12 antennas at the 126-foot level of the existing 135-foot Monopine at 10 Blackville Road, Washington, CT. The tower is owned by Insite Towers. The property is owned by the Town of Washington. AT&T now intends to replace three (3) of its existing Ericsson remote radio units (RRUS-12) with three (3) Ericsson RRUS-32 units.

This facility was approved by the Connecticut Siting Council in Docket # 0441 on March 6, 2014. This approval included the condition that the tower height not exceed 135 feet (140 feet with camouflage branches in place). No increase in tower height is proposed, and this modification therefore complies with the aforementioned approval.

Please accept this letter as notification pursuant to Regulations of Connecticut State Agencies § 16-50j-73, for construction that constitutes an exempt modification pursuant to R.C.S.A. § 16-50j-72(b)(2). In accordance with R.C.S.A. § 16-50j-73, a copy of this letter is being sent to Mark Lyon, First Selectman for the Town of Washington and the Washington Land Use Department as well as the property owner and the tower owner.

Power Density

Existing Loading on Tower

Carrier	# of Channels	ERP/Ch (W)	Antenna Centerline Height (ft)	Power Density (mW/cm^2)	Freq. Band (MHz**)	Limit S (mW /cm^2)	%MPE
Other Carriers*							0.0%
AT&T UMTS	2	500	126	0.0250	850	0.5667	0.44%
AT&T UMTS	2	500	126	0.0250	1900	1.0000	0.25%
AT&T LTE	2	500	126	0.0250	700	0.4667	0.54%
AT&T LTE	2	500	126	0.0250	2100	1.0000	0.25%
Site Total							1.48%

*Per CSC Records (available upon request, includes calculation formulas)

** If a range of frequencies are used, such as 880-894, enter the lowest value, i.e. 880

Proposed Loading on Tower

Carrier	# of Channels	ERP/Ch (W)	Antenna Centerline Height (ft)	Power Density (mW/cm^2)	Freq. Band (MHz**)	Limit S (mW /cm^2)	%MPE
Other Carriers*							0.0%
AT&T UMTS	1	500	126	0.0125	850	0.5667	0.22%
AT&T LTE	1	1476	126	0.0369	700	0.4667	0.79%
AT&T LTE	2	2421	126	0.1209	1900	1.0000	1.21%
Site Total							2.22%

*Per CSC Records (available upon request, includes calculation formulas)

** If a range of frequencies are used, such as 880-894, enter the lowest value, i.e. 880

The planned modifications to the facility fall squarely within those activities explicitly provided for in R.C.S.A. § 16-50j-72(b)(2).

1. The proposed modifications will not result in an increase in the height of the existing structure.

2. The proposed modifications will not require the extension of the site boundary.

3. The proposed modifications will not increase noise levels at the facility by six decibels or more, or to levels that exceed state and local criteria.

4. The operation of the replacement antennas will not increase radio frequency emissions at the facility to a level at or above the Federal Communications Commission safety standard.

5. The proposed modifications will not cause a change or alteration in the physical or environmental characteristics of the site.

6. The existing structure and its foundation can support the proposed loading.

For the foregoing reasons, AT&T respectfully submits that the proposed modifications to the above-referenced telecommunications facility constitute an exempt modification under R.C.S.A. § 16-50j-72(b)(2).

Please feel free to call me at (860) 670-9068 with any questions regarding this matter. Thank you for your consideration.

Sincerely,

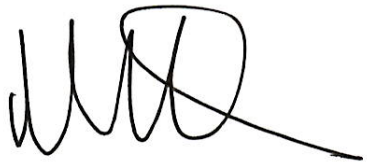

Mark Roberts
QC Development
Consultant for AT&T

Attachments

cc: Mark Lyon - elected official and property owner
Janet Hill – Land Use Administrator
Insite Towers - tower owner (via e-mail)

SITE NAME: WASHINGTON CT17
SITE NUMBER: CT1340
10-12 BLACKVILLE ROAD
WASHINGTON, CT 06794

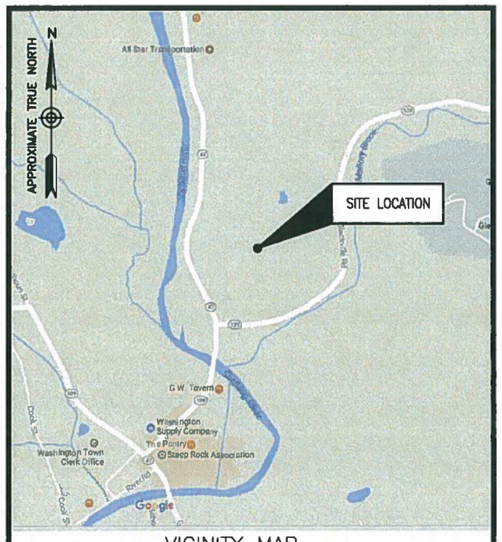

VICINITY MAP

N.T.S.

DIRECTIONS FROM 500 ENTERPRISE DRIVE, ROCKY HILL, CT:

GET ON I-91 S FROM STATE HWY 411. FOLLOW I-91 S, I-691 W AND I-84 TO CT-64 W/CHASE PKWY IN WATERBURY. TAKE EXIT 17 FROM I-84. FOLLOW CT-64 W. TURN RIGHT TO CT-47 N IN WASHINGTON ROAD. TURN LEFT ONTO CT-47 N. TURN RIGHT ONTO CT-109/CT-47 N. SITE WILL BE ON THE LEFT.

SITE COORDINATES:

LATITUDE: N 41° 38' 47.52" (NAD 83)
LONGITUDE: W 73° 18' 57.82" (NAD 83)
(PER GOOGLE EARTH)

ELEVATION DATA

GRADE ELEVATION AT TOWER = 590'± A.M.S.L
(PER GOOGLE EARTH)

SITE INFORMATION

- REPLACE EXISTING AWS RRUS-12+A2 WITH 1900 RRUS-32 B2 (TYP.-1 PER SECTOR) (3 TOTAL)
- ADD XMU

PROJECT DESCRIPTION

SITE NAME:
WASHINGTON CT17

SITE NUMBER:
CT1340

SITE ADDRESS:
10-12 BLACKVILLE ROAD
WASHINGTON, CT 06794
LITCHFIELD COUNTY

TOWER OWNER:
HOMELAND TOWERS
22 SHELTER ROCK LANE
BUILDING C
DANBURY, CT 06810

APPLICANT/LESSEE:
AT&T MOBILITY
500 ENTERPRISE DRIVE, SUITE 3A
ROCKY HILL, CT 06067

PROJECT INFORMATION

THIS DOCUMENT WAS DEVELOPED TO REFLECT A SPECIFIC SITE AND ITS SITE CONDITIONS AND IS NOT TO BE USED FOR ANOTHER SITE OR WHEN OTHER CONDITIONS PERTAIN. REUSE OF THIS DOCUMENT IS AT THE SOLE RISK OF THE USER.

A.D.A. COMPLIANCE:
FACILITY IS UNMANNED AND NOT FOR HUMAN HABITATION.

SHEET NUMBER	DESCRIPTION
T-1	TITLE SHEET
G-1	GENERAL NOTES
C-1	COMPOUND PLAN
C-2	EXISTING & PROPOSED SHELTER LAYOUTS
C-3	ANTENNA LAYOUTS & ELEVATIONS
C-4	CONSTRUCTION DETAILS
E-1	GROUNDING DETAILS

SHEET INDEX

at&t
500 ENTERPRISE DRIVE SUITE 3A
ROCKY HILL, CT 06067

SAI
27 NORTHWESTERN DRIVE
SALEM, NH 03079

CT1340
WASHINGTON CT17

CONSTRUCTION DRAWINGS

1	01/16/17	ISSUED FOR REVIEW
A	01/10/17	ISSUED FOR REVIEW

Dewberry®
Dewberry Engineers Inc.
600 PARSIPPANY ROAD
SUITE 301
PARSIPPANY, NJ 07054
PHONE: 973.739.9400
FAX: 973.739.9710

STATE OF CONNECTICUT
GUANG YU
No. 23222
PROFESSIONAL ENGINEER

GUANG YU NG
CONNECTICUT LICENSE NO. 0023222

IT IS A VIOLATION OF LAW FOR ANY PERSON, UNLESS THEY ARE ACTING UNDER THE DIRECTION OF A LICENSED PROFESSIONAL ENGINEER TO ALTER THIS DOCUMENT.

DRAWN BY:	JC
REVIEWED BY:	DER
CHECKED BY:	GHN
PROJECT NUMBER:	50055106
JOB NUMBER:	50065684
SITE ADDRESS:	

10-12 BLACKVILLE ROAD
WASHINGTON, CT 06794
LITCHFIELD COUNTY

SHEET TITLE

TITLE SHEET

SHEET NUMBER

T-1

GENERAL NOTES:

1. FOR THE PURPOSE OF CONSTRUCTION DRAWING, THE FOLLOWING DEFINITIONS SHALL APPLY:

   PROJECT MANAGEMENT – SAI COMMUNICATIONS, INC.
   CONTRACTOR – GENERAL CONTRACTOR (CONSTRUCTION)
   OWNER – AT&T MOBILITY
   OEM – ORIGINAL EQUIPMENT MANUFACTURER

2. PRIOR TO THE SUBMISSION OF BIDS, THE BIDDING CONTRACTOR SHALL VISIT THE CELL SITE TO FAMILIARIZE WITH THE EXISTING CONDITIONS AND TO CONFIRM THAT THE WORK CAN BE ACCOMPLISHED AS SHOWN ON THE CONSTRUCTION DRAWINGS. ANY DISCREPANCY FOUND SHALL BE BROUGHT TO THE ATTENTION OF PROJECT MANAGEMENT.

3. ALL MATERIALS FURNISHED AND INSTALLED SHALL BE IN STRICT ACCORDANCE WITH ALL APPLICABLE CODES, REGULATIONS, AND ORDINANCES. CONTRACTOR SHALL ISSUE ALL APPROPRIATE NOTICES AND COMPLY WITH ALL LAWS, ORDINANCES, RULES, REGULATIONS, AND LAWFUL ORDERS OF ANY PUBLIC AUTHORITY REGARDING THE PERFORMANCE OF THE WORK.

4. ALL WORK CARRIED OUT SHALL COMPLY WITH ALL APPLICABLE MUNICIPAL AND UTILITY COMPANY SPECIFICATIONS AND LOCAL JURISDICTIONAL CODES, ORDINANCES AND APPLICABLE REGULATIONS.

5. DRAWINGS PROVIDED HERE ARE NOT TO SCALE UNLESS OTHERWISE NOTED AND ARE INTENDED TO SHOW OUTLINE ONLY.

6. UNLESS NOTED OTHERWISE, THE WORK SHALL INCLUDE FURNISHING MATERIALS, EQUIPMENT, APPURTENANCES, AND LABOR NECESSARY TO COMPLETE ALL INSTALLATIONS AS INDICATED ON THE DRAWINGS.

7. THE CONTRACTOR SHALL INSTALL ALL EQUIPMENT AND MATERIALS IN ACCORDANCE WITH MANUFACTURER'S RECOMMENDATIONS UNLESS SPECIFICALLY STATED OTHERWISE.

8. IF THE SPECIFIED EQUIPMENT CANNOT BE INSTALLED AS SHOWN ON THESE DRAWINGS, THE CONTRACTOR SHALL PROPOSE AN ALTERNATIVE INSTALLATION FOR APPROVAL BY PROJECT MANAGEMENT.

9. CONTRACTOR SHALL DETERMINE ACTUAL ROUTING OF CONDUIT, POWER AND T1 CABLES, GROUNDING CABLES AS SHOWN ON THE POWER, GROUNDING AND TELCO PLAN DRAWING. CONTRACTOR SHALL UTILIZE EXISTING TRAYS AND/OR SHALL ADD NEW TRAYS AS NECESSARY. CONTRACTOR SHALL CONFIRM THE ACTUAL ROUTING WITH PROJECT MANAGEMENT.

10. THE CONTRACTOR SHALL PROTECT EXISTING IMPROVEMENTS, PAVEMENTS, CURBS, LANDSCAPING AND STRUCTURES. ANY DAMAGED PART SHALL BE REPAIRED AT CONTRACTOR'S EXPENSE TO THE SATISFACTION OF THE OWNER.

11. CONTRACTOR SHALL LEGALLY AND PROPERLY DISPOSE OF ALL SCRAP MATERIALS SUCH AS COAXIAL CABLES AND OTHER ITEMS REMOVED FROM THE EXISTING FACILITY. ANTENNAS REMOVED SHALL BE RETURNED TO THE OWNER'S DESIGNATED LOCATION.

12. CONTRACTOR SHALL LEAVE PREMISES IN CLEAN CONDITION.

13. THE CONTRACTOR SHALL SUPERVISE AND DIRECT THE PROJECT DESCRIBED HEREIN. THE CONTRACTOR SHALL BE SOLELY RESPONSIBLE FOR ALL CONSTRUCTION MEANS, METHODS, TECHNIQUES, SEQUENCES, AND PROCEDURES AND FOR COORDINATING ALL PORTIONS OF THE WORK UNDER THE CONTRACT.

14. CONTRACTOR SHALL NOTIFY DEWBERRY 48 HOURS IN ADVANCE OF POURING CONCRETE, OR BACKFILLING TRENCHES, SEALING ROOF AND WALL PENETRATIONS & POST DOWNS, FINISHING NEW WALLS OR FINAL ELECTRICAL CONNECTIONS FOR ENGINEER REVIEW.

15. CONTRACTOR SHALL VERIFY ALL EXISTING DIMENSIONS AND CONDITIONS PRIOR TO COMMENCING ANY WORK. ALL DIMENSIONS OF EXISTING CONSTRUCTION SHOWN ON THE DRAWINGS MUST BE VERIFIED. CONTRACTOR SHALL NOTIFY PROJECT MANAGEMENT OF ANY DISCREPANCIES PRIOR TO ORDERING MATERIAL OR PROCEEDING WITH CONSTRUCTION.

16. THE EXISTING CELL SITE IS IN FULL COMMERCIAL OPERATION. ANY CONSTRUCTION WORK BY CONTRACTOR SHALL NOT DISRUPT THE EXISTING NORMAL OPERATION. ANY WORK ON EXISTING EQUIPMENT MUST BE COORDINATED WITH LAND LORD. ALSO, WORK SHOULD BE SCHEDULED FOR AN APPROPRIATE MAINTENANCE WINDOW USUALLY IN LOW TRAFFIC PERIODS AFTER MIDNIGHT.

17. SINCE THE CELL SITE IS ACTIVE, ALL SAFETY PRECAUTIONS MUST BE TAKEN WHEN WORKING AROUND HIGH LEVELS OF ELECTROMAGNETIC RADIATION. EQUIPMENT SHOULD BE SHUTDOWN PRIOR TO PERFORMING ANY WORK THAT COULD EXPOSE THE WORKERS TO DANGER. PERSONAL RF EXPOSURE MONITORS ARE ADVISED TO BE WORN TO ALERT OF ANY DANGEROUS EXPOSURE LEVELS.

SITE WORK GENERAL NOTES:

1. THE CONTRACTOR SHALL CONTACT UTILITY LOCATING SERVICES PRIOR TO THE START OF CONSTRUCTION.

2. ALL EXISTING ACTIVE SEWER, WATER, GAS, ELECTRIC, AND OTHER UTILITIES WHERE ENCOUNTERED IN THE WORK, SHALL BE PROTECTED AT ALL TIMES, AND WHERE REQUIRED FOR THE PROPER EXECUTION OF THE WORK, SHALL BE RELOCATED AS DIRECTED BY CONTRACTOR. EXTREME CAUTION SHOULD BE USED BY THE CONTRACTOR WHEN EXCAVATING OR DRILLING PIERS AROUND OR NEAR UTILITIES. CONTRACTOR SHALL PROVIDE SAFETY TRAINING FOR THE WORKING CREW. THIS WILL INCLUDE BUT NOT BE LIMITED TO:
   A) FALL PROTECTION
   B) CONFINED SPACE
   C) ELECTRICAL SAFETY
   D) TRENCHING & EXCAVATION.

3. ALL SITE WORK SHALL BE AS INDICATED ON THE DRAWINGS AND PROJECT SPECIFICATIONS.

4. IF NECESSARY, RUBBISH, STUMPS, DEBRIS, STICKS, STONES, TOP SOIL AND OTHER REFUSE SHALL BE REMOVED FROM THE SITE AND DISPOSED OF LEGALLY.

5. ALL EXISTING INACTIVE SEWER, WATER, GAS, ELECTRIC AND OTHER UTILITIES, WHICH INTERFERE WITH THE EXECUTION OF THE WORK, SHALL BE REMOVED AND/OR CAPPED, PLUGGED OR OTHERWISE DISCONTINUED AT POINTS WHICH WILL NOT INTERFERE WITH THE EXECUTION OF THE WORK, SUBJECT TO THE APPROVAL OF CONTRACTOR, OWNER AND/OR LOCAL UTILITIES.

6. CONTRACTOR SHALL MINIMIZE DISTURBANCE TO EXISTING SITE DURING CONSTRUCTION.

7. THE CONTRACTOR SHALL PROVIDE SITE SIGNAGE IN ACCORDANCE WITH THE AT&T SPECIFICATION FOR SITE SIGNAGE.

8. THE SITE SHALL BE GRADED TO CAUSE SURFACE WATER TO FLOW AWAY FROM THE TRANSMISSION EQUIPMENT AND TOWER AREAS.

9. NO FILL OR EMBANKMENT MATERIAL SHALL BE PLACED ON FROZEN GROUND. FROZEN MATERIALS, SNOW OR ICE SHALL NOT BE PLACED IN ANY FILL OR EMBANKMENT.

10. THE SUB GRADE SHALL BE COMPACTED AND BROUGHT TO A SMOOTH UNIFORM GRADE PRIOR TO FINISHED SURFACE APPLICATION, SEE SOIL COMPACTION NOTES.

11. THE AREAS OF THE OWNER'S PROPERTY DISTURBED BY THE WORK AND NOT COVERED BY THE TOWER, EQUIPMENT OR DRIVEWAY, SHALL BE GRADED TO A UNIFORM SLOPE, AND STABILIZED TO PREVENT EROSION.

12. EROSION CONTROL MEASURES, IF REQUIRED DURING CONSTRUCTION, SHALL BE IN CONFORMANCE WITH THE LOCAL JURISDICTION'S GUIDELINES FOR EROSION AND SEDIMENT CONTROL.

CONCRETE AND REINFORCING STEEL NOTES:

1. ALL CONCRETE WORK SHALL BE IN ACCORDANCE WITH THE ACI 301, ACI 318, ACI 336, ASTM A184, ASTM A185 AND THE DESIGN AND CONSTRUCTION SPECIFICATION FOR CAST-IN-PLACE CONCRETE.

2. ALL CONCRETE SHALL HAVE A MINIMUM COMPRESSIVE STRENGTH OF 4000 PSI AT 28 DAYS, UNLESS NOTED OTHERWISE. A HIGHER STRENGTH (4000 PSI) MAY BE USED. ALL CONCRETING WORK SHALL BE DONE IN ACCORDANCE WITH ACI 318 CODE REQUIREMENTS.

3. REINFORCING STEEL SHALL CONFORM TO ASTM A 615, GRADE 60, DEFORMED UNLESS NOTED OTHERWISE. WELDED WIRE FABRIC SHALL CONFORM TO ASTM A 185 WELDED STEEL WIRE FABRIC UNLESS NOTED OTHERWISE (UNO). SPLICES SHALL BE CLASS "B" AND ALL HOOKS SHALL BE STANDARD, UNO.

4. THE FOLLOWING MINIMUM CONCRETE COVER SHALL BE PROVIDED FOR REINFORCING STEEL UNLESS SHOWN OTHERWISE ON DRAWINGS:

   CONCRETE CAST AGAINST EARTH.....3 IN.
   CONCRETE EXPOSED TO EARTH OR WEATHER:
   #6 AND LARGER .....2 IN.
   #5 AND SMALLER & WWF.....1 1/2 IN.

   CONCRETE NOT EXPOSED TO EARTH OR WEATHER
   OR NOT CAST AGAINST THE GROUND:
   SLAB AND WALL .....3/4 IN.
   BEAMS AND COLUMNS.....1 1/2 IN.

5. A CHAMFER 3/4" SHALL BE PROVIDED AT ALL EXPOSED EDGES OF CONCRETE, UNO, IN ACCORDANCE WITH ACI 301 SECTION 4.2.4.

6. INSTALLATION OF CONCRETE EXPANSION/WEDGE ANCHOR, SHALL BE PER MANUFACTURER'S WRITTEN RECOMMENDED PROCEDURE. THE ANCHOR BOLT, DOWEL OR ROD SHALL CONFORM TO MANUFACTURER'S RECOMMENDATION FOR EMBEDMENT DEPTH OR AS SHOWN ON THE DRAWINGS. NO REBAR SHALL BE CUT WITHOUT PRIOR CONTRACTOR APPROVAL WHEN DRILLING HOLES IN CONCRETE. SPECIAL INSPECTIONS, REQUIRED BY GOVERNING CODES, SHALL BE PERFORMED IN ORDER TO MAINTAIN MANUFACTURER'S MAXIMUM ALLOWABLE LOADS. ALL EXPANSION/WEDGE ANCHORS SHALL BE STAINLESS STEEL OR HOT DIPPED GALVANIZED. EXPANSION BOLTS SHALL BE PROVIDED BY RAMSET/REDHEAD OR APPROVED EQUAL.

7. CONCRETE CYLINDER TEST IS NOT REQUIRED FOR SLAB ON GRADE WHEN CONCRETE IS LESS THAN 50 CUBIC YARDS (IBC 1905.6.2.3) IN THAT EVENT THE FOLLOWING RECORDS SHALL BE PROVIDED BY THE CONCRETE SUPPLIER;
   (A) RESULTS OF CONCRETE CYLINDER TESTS PERFORMED AT THE SUPPLIER'S PLANT,
   (B) CERTIFICATION OF MINIMUM COMPRESSIVE STRENGTH FOR THE CONCRETE GRADE SUPPLIED.
   FOR GREATER THAN 50 CUBIC YARDS THE GC SHALL PERFORM THE CONCRETE CYLINDER TEST.

8. AS AN ALTERNATIVE TO ITEM 7, TEST CYLINDERS SHALL BE TAKEN INITIALLY AND THEREAFTER FOR EVERY 50 YARDS OF CONCRETE FROM EACH DIFFERENT BATCH PLANT.

9. EQUIPMENT SHALL NOT BE PLACED ON NEW PADS FOR SEVEN DAYS AFTER PAD IS POURED, UNLESS IT IS VERIFIED BY CYLINDER TESTS THAT COMPRESSIVE STRENGTH HAS BEEN ATTAINED.

STRUCTURAL STEEL NOTES:

1. ALL STEEL WORK SHALL BE PAINTED OR GALVANIZED IN ACCORDANCE WITH THE DRAWINGS UNLESS NOTED OTHERWISE. STRUCTURAL STEEL SHALL BE ASTM-A-36 UNLESS OTHERWISE NOTED ON THE SITE SPECIFIC DRAWINGS. STEEL DESIGN, INSTALLATION AND BOLTING SHALL BE PERFORMED IN ACCORDANCE WITH THE AMERICAN INSTITUTE OF STEEL CONSTRUCTION (AISC) "MANUAL OF STEEL CONSTRUCTION".

2. ALL WELDING SHALL BE PERFORMED USING E70XX ELECTRODES AND WELDING SHALL CONFORM TO AISC. WHERE FILLET WELD SIZES ARE NOT SHOWN, PROVIDE THE MINIMUM SIZE PER TABLE J2.4 IN THE AISC "MANUAL OF STEEL CONSTRUCTION". PAINTED SURFACES SHALL BE TOUCHED UP.

3. BOLTED CONNECTIONS SHALL BE ASTM A325 BEARING TYPE (3/4"Ø) CONNECTIONS AND SHALL HAVE MINIMUM OF TWO BOLTS UNLESS NOTED OTHERWISE.

4. NON-STRUCTURAL CONNECTIONS FOR STEEL GRATING MAY USE 5/8" DIA. ASTM A 307 BOLTS UNLESS NOTED OTHERWISE.

5. INSTALLATION OF CONCRETE EXPANSION/WEDGE ANCHOR, SHALL BE PER MANUFACTURER'S WRITTEN RECOMMENDED PROCEDURE. THE ANCHOR BOLT, DOWEL OR ROD SHALL CONFORM TO MANUFACTURER'S RECOMMENDATION FOR EMBEDMENT DEPTH OR AS SHOWN ON THE DRAWINGS. NO REBAR SHALL BE CUT WITHOUT PRIOR CONTRACTOR APPROVAL WHEN DRILLING HOLES IN CONCRETE. SPECIAL INSPECTIONS, REQUIRED BY GOVERNING CODES, SHALL BE PERFORMED IN ORDER TO MAINTAIN MANUFACTURER'S MAXIMUM ALLOWABLE LOADS. ALL EXPANSION/WEDGE ANCHORS SHALL BE STAINLESS STEEL OR HOT DIPPED GALVANIZED. EXPANSION BOLTS SHALL BE PROVIDED BY RAMSET/REDHEAD OR APPROVED EQUAL.

6. CONTRACTOR SHALL SUBMIT SHOP DRAWINGS FOR ENGINEER REVIEW & APPROVAL ON PROJECTS REQUIRING STRUCTURAL STEEL.

7. ALL STRUCTURAL STEEL WORK SHALL BE DONE IN ACCORDANCE WITH AISC SPECIFICATIONS.

SOIL COMPACTION NOTES FOR SLAB ON GRADE:

1. EXCAVATE AS REQUIRED TO REMOVE VEGETATION & TOPSOIL EXPOSE UNDISTURBED NATURAL SUBGRADE AND PLACE CRUSHED STONE AS REQUIRED.

2. COMPACTION CERTIFICATION: AN INSPECTION AND WRITTEN CERTIFICATION BY A QUALIFIED GEOTECHNICAL TECHNICIAN OR ENGINEER IS ACCEPTABLE.

3. AS AN ALTERNATIVE TO INSPECTION AND WRITTEN CERTIFICATION, THE "UNDISTURBED SOIL" BASE SHALL BE COMPACTED WITH "COMPACTION EQUIPMENT", LISTED BELOW, TO AT LEAST 90% MODIFIED PROCTOR MAXIMUM DENSITY PER ASTM D 1557 METHOD C.

4. COMPACTED SUBBASE SHALL BE UNIFORM & LEVELED. PROVIDE 6" MINIMUM CRUSHED STONE OR GRAVEL COMPACTED IN 3" LIFTS ABOVE COMPACTED SOIL. GRAVEL SHALL BE NATURAL OR CRUSHED WITH 100% PASSING 1" SIEVE.

5. AS AN ALTERNATIVE TO ITEMS 2 AND 3 PROOFROLL THE SUBGRADE SOILS WITH 5 PASSES OF A MEDIUM SIZED VIBRATORY PLATE COMPACTOR (SUCH AS BOMAG BPR 30/38) OR HAND-OPERATED SINGLE DRUM VIBRATORY ROLLER (SUCH AS BOMAG BW 55E). ANY SOFT AREAS THAT ARE ENCOUNTERED SHOULD BE REMOVED AND REPLACED WITH A WELL-GRADED GRANULAR FILL, AND COMPACTED AS STATED ABOVE.

COMPACTION EQUIPMENT:

1. HAND OPERATED DOUBLE DRUM, VIBRATORY ROLLER, VIBRATORY PLATE COMPACTOR OR JUMPING JACK COMPACTOR.

CONSTRUCTION NOTES:

1. FIELD VERIFICATION:
   CONTRACTOR SHALL FIELD VERIFY SCOPE OF WORK, AT&T ANTENNA PLATFORM LOCATION AND ANTENNAS TO BE REPLACED.

2. COORDINATION OF WORK:
   CONTRACTOR SHALL COORDINATE RF WORK AND PROCEDURES WITH PROJECT MANAGEMENT.

3. CABLE LADDER RACK:
   CONTRACTOR SHALL FURNISH AND INSTALL CABLE LADDER RACK, CABLE TRAY, AND CONDUIT AS REQUIRED TO SUPPORT CABLES TO THE NEW BTS LOCATION.

ELECTRICAL INSTALLATION NOTES:

1. ALL ELECTRICAL WORK SHALL BE PERFORMED IN ACCORDANCE WITH THE PROJECT SPECIFICATIONS, NEC AND ALL APPLICABLE LOCAL CODES.

2. CONTRACTOR SHALL MODIFY EXISTING CABLE TRAY SYSTEM AS REQUIRED TO SUPPORT RF AND TRANSPORT CABLING TO THE NEW BTS EQUIPMENT. CONTRACTOR SHALL SUBMIT MODIFICATIONS TO PROJECT MANAGEMENT FOR APPROVAL.

3. CONDUIT ROUTINGS ARE SCHEMATIC. CONTRACTOR SHALL INSTALL CONDUITS SO THAT ACCESS TO EQUIPMENT IS NOT BLOCKED.

4. WIRING, RACEWAY AND SUPPORT METHODS AND MATERIALS SHALL COMPLY WITH THE REQUIREMENTS OF THE NEC.

5. ALL CIRCUITS SHALL BE SEGREGATED AND MAINTAIN MINIMUM CABLE SEPARATION AS REQUIRED BY THE NEC.

6. CABLES SHALL NOT BE ROUTED THROUGH LADDER-STYLE CABLE TRAY RUNGS.

7. EACH END OF EVERY POWER, POWER PHASE CONDUCTOR (I.E., HOTS), GROUNDING, AND T1 CONDUCTOR AND CABLE SHALL BE LABELED WITH COLOR-CODED INSULATION OR ELECTRICAL TAPE (3M BRAND, 1/2 INCH PLASTIC ELECTRICAL TAPE WITH UV PROTECTION, OR EQUAL). THE IDENTIFICATION METHOD SHALL CONFORM WITH NEC & OSHA, AND MATCH EXISTING INSTALLATION REQUIREMENTS.

8. ALL ELECTRICAL COMPONENTS SHALL BE CLEARLY LABELED WITH ENGRAVED LAMACOID PLASTIC LABELS. ALL EQUIPMENT SHALL BE LABELED WITH THEIR VOLTAGE RATING, PHASE CONFIGURATION, WIRE CONFIGURATION, POWER OR AMPACITY RATING, AND BRANCH CIRCUIT ID NUMBERS (I.E., PANELBOARD AND CIRCUIT ID'S).

9. PANELBOARDS (ID NUMBERS) AND INTERNAL CIRCUIT BREAKERS (CIRCUIT ID NUMBERS) SHALL BE CLEARLY LABELED WITH ENGRAVED LAMACOID PLASTIC LABELS.

10. ALL TIE WRAPS SHALL BE CUT FLUSH WITH APPROVED CUTTING TOOL TO REMOVE SHARP EDGES.

11. POWER, CONTROL, AND EQUIPMENT GROUND WIRING IN TUBING OR CONDUIT SHALL BE SINGLE CONDUCTOR (SIZE 14 AWG OR LARGER), 600V, OIL RESISTANT THHN OR THWN-2, CLASS B STRANDED COPPER CABLE RATED FOR 90 °C (WET AND DRY) OPERATION; LISTED OR LABELED FOR THE LOCATION AND RACEWAY SYSTEM USED, UNLESS OTHERWISE SPECIFIED.

12. POWER PHASE CONDUCTORS (I.E., HOTS) SHALL BE LABELED WITH COLOR-CODED INSULATION OR ELECTRICAL TAPE (3M BRAND, 1/2 INCH PLASTIC ELECTRICAL TAPE WITH UV PROTECTION, OR EQUAL.) PHASE CONDUCTOR COLOR CODES SHALL CONFORM WITH THE NEC & OSHA AND MATCH EXISTING INSTALLATION REQUIREMENTS.

13. SUPPLEMENTAL EQUIPMENT GROUND WIRING LOCATED INDOORS SHALL BE SINGLE CONDUCTOR (SIZE 6 AWG OR LARGER), 600V, OIL RESISTANT THHN OR THWN-2 GREEN INSULATION, CLASS B STRANDED COPPER CABLE RATED FOR 90°C (WET AND DRY) OPERATION; LISTED OR LABELED FOR THE LOCATION AND RACEWAY SYSTEM USED, UNLESS OTHERWISE SPECIFIED.

14. SUPPLEMENTAL EQUIPMENT GROUND WIRING LOCATED OUTDOORS, OR BELOW GRADE, SHALL BE SINGLE CONDUCTOR #2 AWG SOLID TINNED COPPER CABLE, UNLESS OTHERWISE SPECIFIED.

15. POWER AND CONTROL WIRING, NOT IN TUBING OR CONDUIT, SHALL BE MULTI-CONDUCTOR, TYPE TC CABLE (SIZE 14 AWG OR LARGER), 600V, OIL RESISTANT THHN OR THWN-2, CLASS B STRANDED COPPER CABLE RATED FOR 90°C (WET AND DRY) OPERATION; WITH OUTER JACKET; LISTED OR LABELED FOR THE LOCATION USED, UNLESS OTHERWISE SPECIFIED.

16. ALL POWER AND POWER GROUNDING CONNECTIONS SHALL BE CRIMP-STYLE, COMPRESSION WIRE LUGS AND WIRENUTS BY THOMAS AND BETTS (OR EQUAL). LUGS AND WIRENUTS SHALL BE RATED FOR OPERATION AT NO LESS THAN 75°C (90°C IF AVAILABLE).

17. RACEWAY AND CABLE TRAY SHALL BE LISTED OR LABELED FOR ELECTRICAL USE IN ACCORDANCE WITH NEMA, UL, ANSI/IEEE, AND NEC.

18. NEW RACEWAY OR CABLE TRAY WILL MATCH THE EXISTING INSTALLATION WHERE POSSIBLE.

19. ELECTRICAL METALLIC TUBING (EMT) OR RIGID NONMETALLIC CONDUIT (I.E., RIGID PVC SCHEDULE 40, OR RIGID PVC SCHEDULE 80 FOR LOCATIONS SUBJECT TO PHYSICAL DAMAGE) SHALL BE USED FOR EXPOSED INDOOR LOCATIONS.

20. ELECTRICAL METALLIC TUBING (EMT), ELECTRICAL NONMETALLIC TUBING (ENT), OR RIGID NONMETALLIC CONDUIT (RIGID PVC, SCHEDULE 40) SHALL BE USED FOR CONCEALED INDOOR LOCATIONS.

21. GALVANIZED STEEL INTERMEDIATE METALLIC CONDUIT (IMC) SHALL BE USED FOR OUTDOOR LOCATIONS ABOVE GRADE.

22. RIGID NONMETALLIC CONDUIT (I.E., RIGID PVC SCHEDULE 40 OR RIGID PVC SCHEDULE 80) SHALL BE USED UNDERGROUND; DIRECT BURIED, IN AREAS OF OCCASIONAL LIGHT VEHICLE TRAFFIC OR ENCASED IN REINFORCED CONCRETE IN AREAS OF HEAVY VEHICLE TRAFFIC.

23. LIQUID-TIGHT FLEXIBLE METALLIC CONDUIT (LIQUID-TITE FLEX) SHALL BE USED INDOORS AND OUTDOORS, WHERE VIBRATION OCCURS OR FLEXIBILITY IS NEEDED.

24. CONDUIT AND TUBING FITTINGS SHALL BE THREADED OR COMPRESSION-TYPE AND APPROVED FOR THE LOCATION USED. SETSCREW FITTINGS ARE NOT ACCEPTABLE.

25. CABINETS, BOXES, AND WIREWAYS SHALL BE LISTED OR LABELED FOR ELECTRICAL USE IN ACCORDANCE WITH NEMA, UL, ANSI/IEEE, AND NEC.

26. CABINETS, BOXES, AND WIREWAYS TO MATCH THE EXISTING INSTALLATION WHERE POSSIBLE.

27. WIREWAYS SHALL BE EPOXY-COATED (GRAY) AND INCLUDE A HINGED COVER, DESIGNED TO SWING OPEN DOWNWARD; SHALL BE PANDUIT TYPE E (OR EQUAL); AND RATED NEMA 1 (OR BETTER) INDOORS, OR NEMA 3R (OR BETTER) OUTDOORS.

28. EQUIPMENT CABINETS, TERMINAL BOXES, JUNCTION BOXES, AND PULL BOXES SHALL BE GALVANIZED OR EPOXY-COATED SHEET STEEL, SHALL MEET OR EXCEED UL 50, AND RATED NEMA 1 (OR BETTER) INDOORS, OR NEMA 3R (OR BETTER) OUTDOORS.

29. METAL RECEPTACLE, SWITCH, AND DEVICE BOXES SHALL BE GALVANIZED, EPOXY-COATED, OR NON-CORRODING; SHALL MEET OR EXCEED UL 514A AND NEMA OS 1; AND RATED NEMA 1 (OR BETTER) INDOORS, OR WEATHER PROTECTED (WP OR BETTER) OUTDOORS.

30. NONMETALLIC RECEPTACLE, SWITCH, AND DEVICE BOXES SHALL MEET OR EXCEED NEMA OS 2; AND RATED NEMA 1 (OR BETTER) INDOORS, OR WEATHER PROTECTED (WP OR BETTER) OUTDOORS.

31. THE CONTRACTOR SHALL NOTIFY AND OBTAIN NECESSARY AUTHORIZATION FROM PROJECT MANAGEMENT BEFORE COMMENCING WORK ON THE AC POWER DISTRIBUTION PANELS.

32. THE CONTRACTOR SHALL PROVIDE NECESSARY TAGGING ON THE BREAKERS, CABLES AND DISTRIBUTION PANELS IN ACCORDANCE WITH THE APPLICABLE CODES AND STANDARDS TO SAFEGUARD AGAINST LIFE AND PROPERTY.

at&t
500 ENTERPRISE DRIVE SUITE 3A
ROCKY HILL, CT 06067

SAI
27 NORTHWESTERN DRIVE
SALEM, NH 03079

CT1340
WASHINGTON CT17

CONSTRUCTION DRAWINGS		
1	01/16/17	ISSUED FOR REVIEW
A	01/10/17	ISSUED FOR REVIEW

Dewberry®
Dewberry Engineers Inc.
600 PARSIPPANY ROAD
SUITE 301
PARSIPPANY, NJ 07054
PHONE: 973.739.9400
FAX: 973.739.9710

STATE OF CONNECTICUT
JIANG YU
No. 23222
PROFESSIONAL ENGINEER
JIANG YU
CONNECTICUT LICENSE NO. 23222
IT IS A VIOLATION OF LAW FOR ANY PERSON, UNLESS THEY ARE ACTING UNDER THE DIRECTION OF A LICENSED PROFESSIONAL ENGINEER TO ALTER THIS DOCUMENT.

DRAWN BY:	JC
REVIEWED BY:	DER
CHECKED BY:	GHN
PROJECT NUMBER:	50055106
JOB NUMBER:	50065684
SITE ADDRESS:	

10-12 BLACKVILLE ROAD
WASHINGTON, CT 06794
LITCHFIELD COUNTY

SHEET TITLE

GENERAL NOTES

SHEET NUMBER

G-1

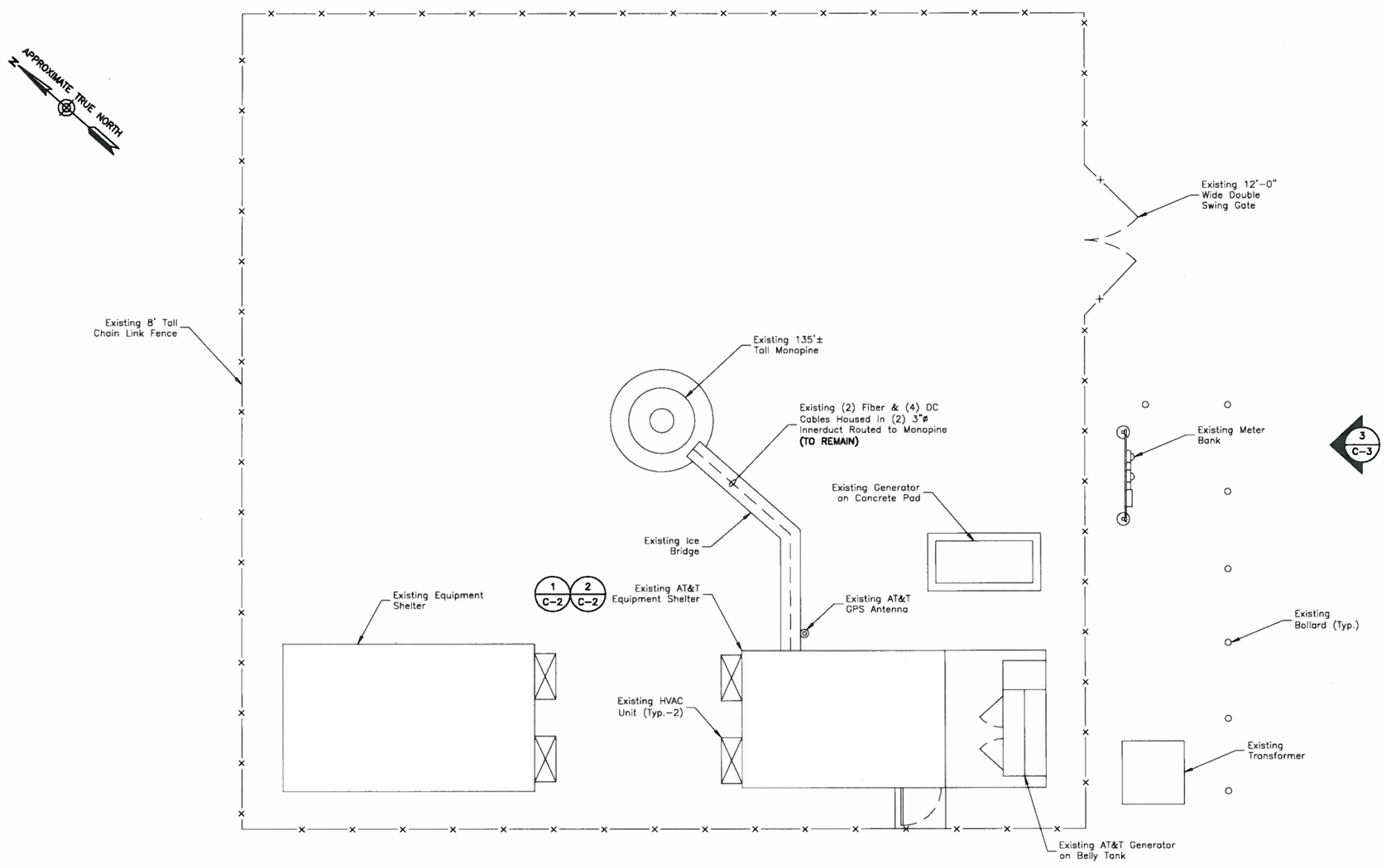

COMPOUND PLAN (1)

SCALE: 1"=10' FOR 11"x17"
1"=5' FOR 22"x34"

0' 5' 10'

NOTES:

1. NORTH SHOWN AS APPROXIMATE.
2. MOUNT ALL ANTENNAS, COAX, SURGE ARRESTORS, RRUS, ETC. IN ACCORDANCE WITH STRUCTURAL ANALYSIS.
3. NOT ALL INFORMATION IS SHOWN FOR CLARITY.

at&t
500 ENTERPRISE DRIVE SUITE 3A
ROCKY HILL, CT 06067

SAI
27 NORTHWESTERN DRIVE
SALEM, NH 03079

CT1340
WASHINGTON CT17

CONSTRUCTION DRAWINGS

1	01/16/17	ISSUED FOR REVIEW
A	01/10/17	ISSUED FOR REVIEW

Dewberry®
Dewberry Engineers Inc.
600 PARSIPPANY ROAD
SUITE 301
PARSIPPANY, NJ 07054
PHONE: 973.739.9400
FAX: 973.739.9710

STATE OF CONNECTICUT
JIANG YU
No. 23222
LICENSED
PROFESSIONAL ENGINEER

JIANG YU, P.E.
CONNECTICUT LICENSE NO. 0023222

IT IS A VIOLATION OF LAW FOR ANY PERSON, UNLESS THEY ARE ACTING UNDER THE DIRECTION OF A LICENSED PROFESSIONAL ENGINEER TO ALTER THIS DOCUMENT.

DRAWN BY:	JC
REVIEWED BY:	DER
CHECKED BY:	GHN
PROJECT NUMBER:	50055106
JOB NUMBER:	50065684

SITE ADDRESS:

10-12 BLACKVILLE ROAD
WASHINGTON, CT 06794
LITCHFIELD COUNTY

SHEET TITLE

COMPOUND PLAN

SHEET NUMBER

C-1

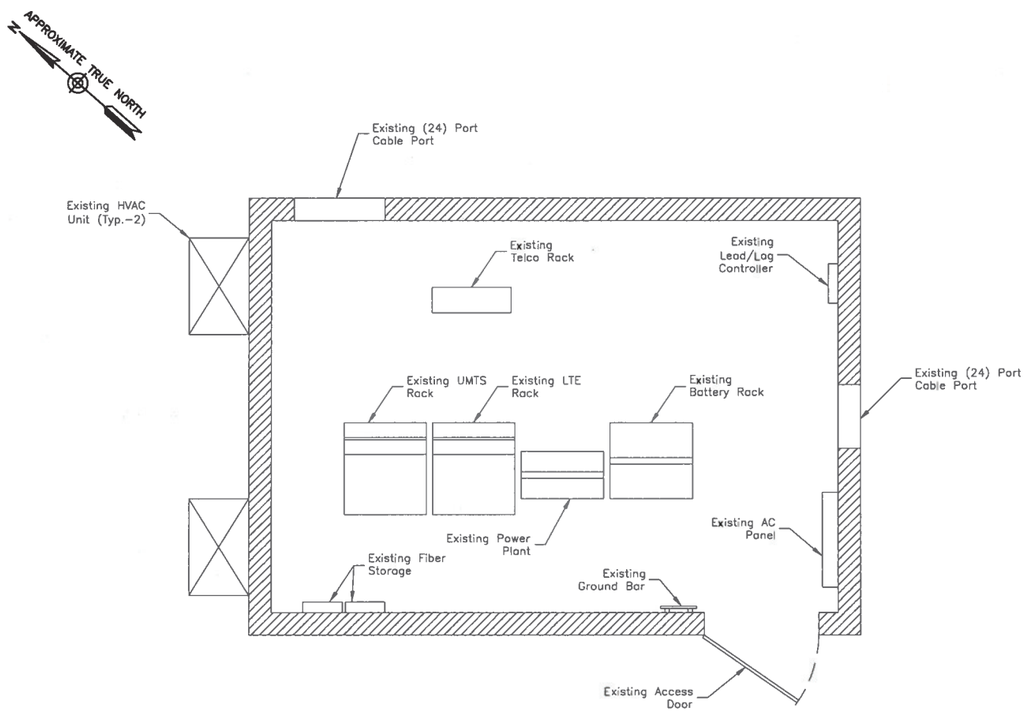

EXISTING SHELTER LAYOUT (1)

SCALE: 1/4"=1' FOR 11"x17"
1/2"=1' FOR 22"x34"

0' 1' 2' 4'

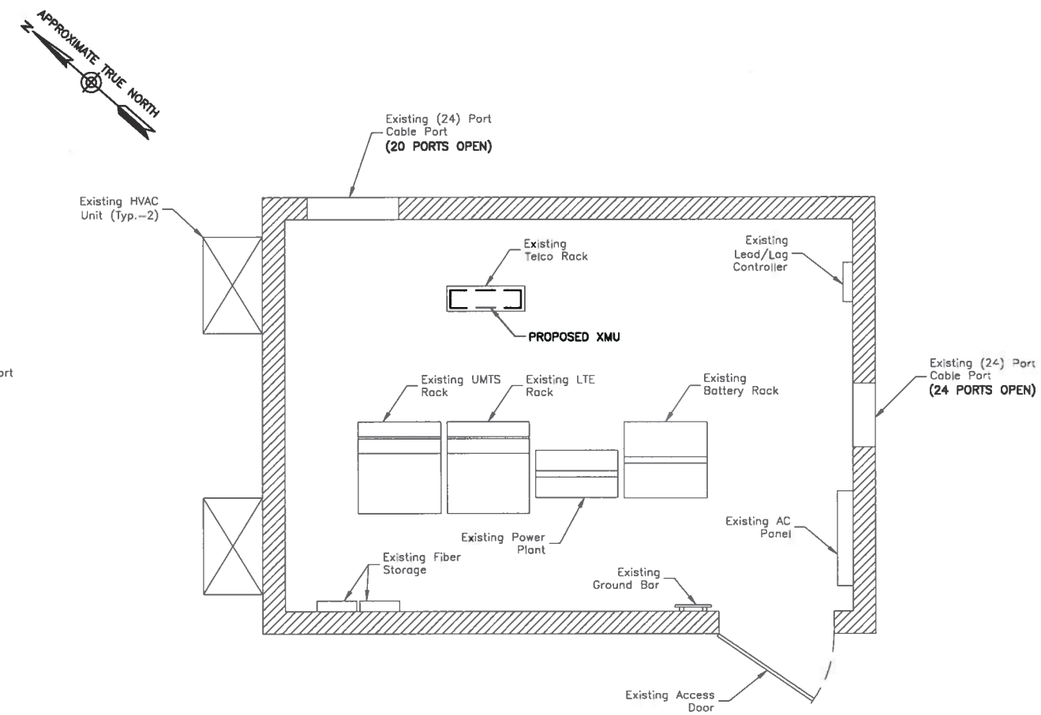

PROPOSED SHELTER LAYOUT (2)

SCALE: 1/4"=1' FOR 11"x17"
1/2"=1' FOR 22"x34"

0' 1' 2' 4'

at&t
500 ENTERPRISE DRIVE SUITE 3A
ROCKY HILL, CT 06067

SAI
27 NORTHWESTERN DRIVE
SALEM, NH 03079

CT1340
WASHINGTON CT17

CONSTRUCTION DRAWINGS

1	01/16/17	ISSUED FOR REVIEW
A	01/10/17	ISSUED FOR REVIEW

Dewberry®
Dewberry Engineers Inc.
600 PARSIPPANY ROAD
SUITE 301
PARSIPPANY, NJ 07054
PHONE: 973.739.9400
FAX: 973.739.9710

STATE OF CONNECTICUT
JIANG YU
No. 23222
LICENSED
PROFESSIONAL ENGINEER
JIANG YU
CONNECTICUT LICENSE NO. 0023222

IT IS A VIOLATION OF LAW FOR ANY PERSON, UNLESS THEY ARE ACTING UNDER THE DIRECTION OF A LICENSED PROFESSIONAL ENGINEER TO ALTER THIS DOCUMENT.

DRAWN BY:	JC
REVIEWED BY:	DER
CHECKED BY:	GHN
PROJECT NUMBER:	50055106
JOB NUMBER:	50065684
SITE ADDRESS:	

10-12 BLACKVILLE ROAD
WASHINGTON, CT 06794
LITCHFIELD COUNTY

SHEET TITLE

EXISTING & PROPOSED SHELTER LAYOUT

SHEET NUMBER

C-2

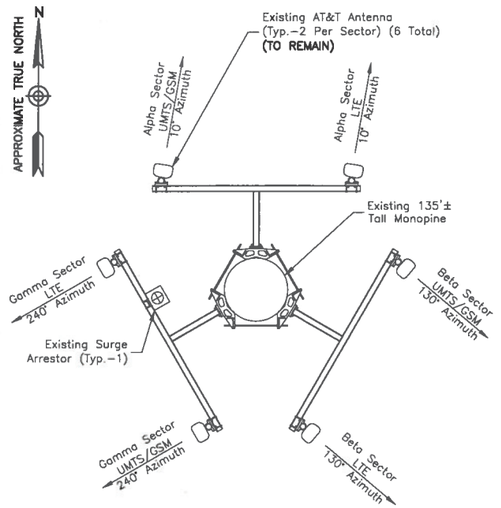

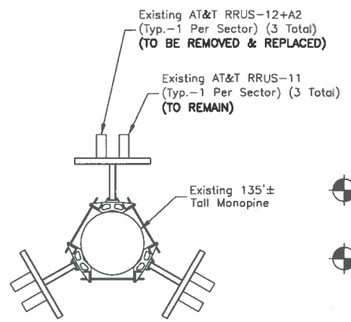

NOTES:

1. EXISTING TMA'S NOT SHOWN FOR CLARITY.
2. ALL EXISTING TMA'S ARE TO REMAIN.

EXISTING ANTENNA LAYOUT (1)

SCALE: N.T.S.

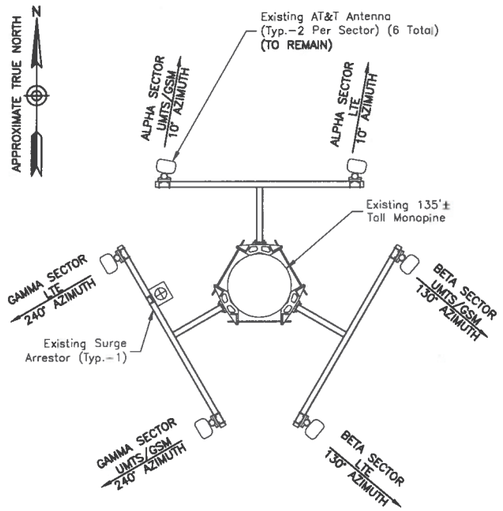

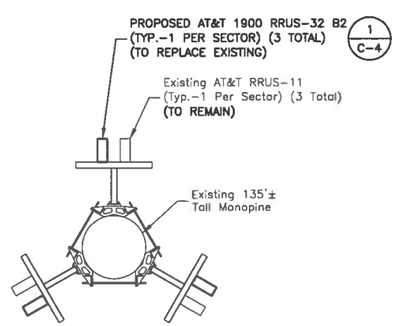

NOTES:

1. EXISTING TMA'S NOT SHOWN FOR CLARITY.
2. ALL EXISTING TMA'S ARE TO REMAIN.

PROPOSED ANTENNA LAYOUT (2)

SCALE: N.T.S.

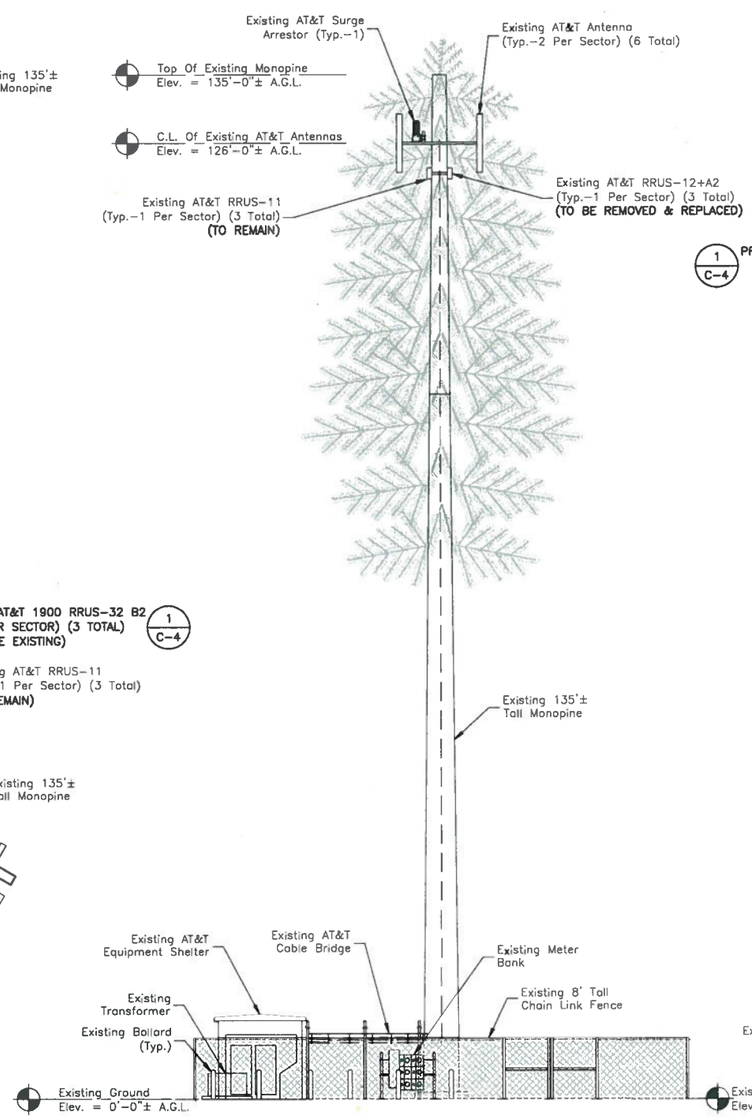

EXISTING ELEVATION (3)

SCALE: 1"=20' FOR 11"x17"
1"=10' FOR 22"x34"

0' 10' 20'

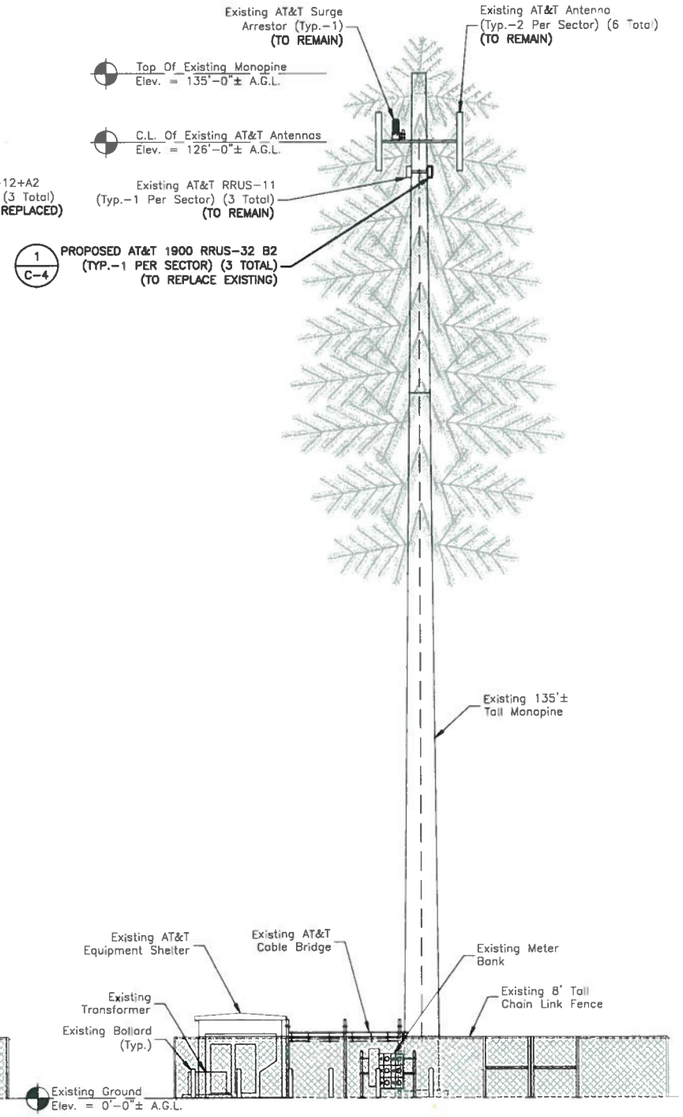

PROPOSED ELEVATION (4)

SCALE: 1"=20' FOR 11"x17"
1"=10' FOR 22"x34"

0' 10' 20'

at&t
500 ENTERPRISE DRIVE SUITE 3A
ROCKY HILL, CT 06067

SAI
27 NORTHWESTERN DRIVE
SALEM, NH 03079

CT1340
WASHINGTON CT17

CONSTRUCTION DRAWINGS		
1	01/16/17	ISSUED FOR REVIEW
A	01/10/17	ISSUED FOR REVIEW

Dewberry®
Dewberry Engineers Inc.
600 PARSIPPANY ROAD
SUITE 301
PARSIPPANY, NJ 07054
PHONE: 973.739.9400
FAX: 973.739.9710

STATE OF CONNECTICUT
JIANG YU
No. 28222
LICENSED
PROFESSIONAL ENGINEER
CONNECTICUT LICENSE NO. 0023222

IT IS A VIOLATION OF LAW FOR ANY PERSON, UNLESS THEY ARE ACTING UNDER THE DIRECTION OF A LICENSED PROFESSIONAL ENGINEER TO ALTER THIS DOCUMENT.

DRAWN BY:	JC
REVIEWED BY:	DER
CHECKED BY:	GHN
PROJECT NUMBER:	50055106
JOB NUMBER:	50065684
SITE ADDRESS:	

10-12 BLACKVILLE ROAD
WASHINGTON, CT 06794
LITCHFIELD COUNTY

SHEET TITLE

ANTENNA LAYOUTS
& ELEVATIONS

SHEET NUMBER

C-3

EXISTING/PROPOSED RRUS SCHEDULE

SECTOR	MAKE	MODEL#	SIZE (INCHES)
ALPHA:	ERICSSON	RRUS-11	19.7x17.0x7.2
	ERICSSON	RRUS-32 B2	27.2x12.1x7.0
BETA:	ERICSSON	RRUS-11	19.7x17.0x7.2
	ERICSSON	RRUS-32 B2	27.2x12.1x7.0
GAMMA:	ERICSSON	RRUS-11	19.7x17.0x7.2
	ERICSSON	RRUS-32 B2	27.2x12.1x7.0

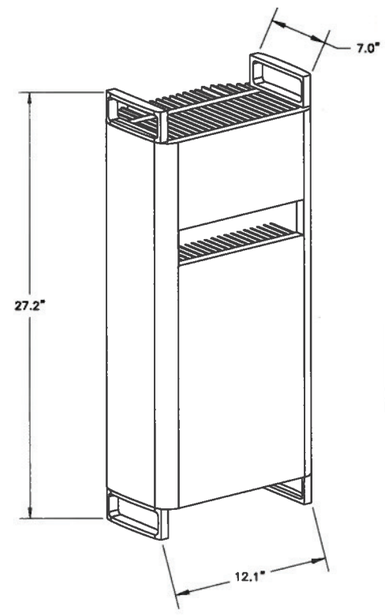

ERICSSON RRUS-32 B2

SPECIFICATIONS:

HEIGHT: 27.2"
WIDTH: 12.1"
DEPTH: 7.0"
WEIGHT: 53.0 LBS

RRU NOTES:

1. MOUNT EQUIPMENT PER MANUFACTURER'S RECOMMENDATIONS.
2. GROUND EQUIPMENT AND MOUNTS PER MANUFACTURER'S RECOMMENDATIONS AND AT&T STANDARDS.
3. CONFIRM REQUIRED EQUIPMENT WITH THE LATEST RFDS.

RRUS-32 B2 REMOTE RADIO UNIT (1)

SCALE: N.T.S.

at&t
500 ENTERPRISE DRIVE SUITE 3A
ROCKY HILL, CT 06067

SAI
27 NORTHWESTERN DRIVE
SALEM, NH 03079

CT1340
WASHINGTON CT17

CONSTRUCTION DRAWINGS

1	01/16/17	ISSUED FOR REVIEW
A	01/10/17	ISSUED FOR REVIEW

Dewberry®
Dewberry Engineers Inc.
600 PARSIPPANY ROAD
SUITE 301
PARSIPPANY, NJ 07054
PHONE: 973.739.9400
FAX: 973.739.9710

STATE OF CONNECTICUT
JIANG YU
No. 23222
LICENSED
PROFESSIONAL ENGINEER

JIANG YU, P.E.
CONNECTICUT LICENSE NO. 0023222

IT IS A VIOLATION OF LAW FOR ANY PERSON, UNLESS THEY ARE ACTING UNDER THE DIRECTION OF A LICENSED PROFESSIONAL ENGINEER TO ALTER THIS DOCUMENT.

DRAWN BY:	JC
REVIEWED BY:	DER
CHECKED BY:	GHN
PROJECT NUMBER:	50055106
JOB NUMBER:	50065684

SITE ADDRESS:

10-12 BLACKVILLE ROAD
WASHINGTON, CT 06794
LITCHFIELD COUNTY

SHEET TITLE

CONSTRUCTION DETAILS

SHEET NUMBER

C-4

GROUNDING NOTES:

1. THE CONTRACTOR SHALL REVIEW AND INSPECT THE EXISTING FACILITY GROUNDING SYSTEM AND LIGHTNING PROTECTION SYSTEM (AS DESIGNED AND INSTALLED) FOR STRICT COMPLIANCE WITH THE NEC (AS ADOPTED BY THE AHJ). THE SITE-SPECIFIC (UL, LPI, OR NFPA) LIGHTING PROTECTION CODE, AND GENERAL COMPLIANCE WITH TELCORDIA AND TIA GROUNDING STANDARDS. THE CONTRACTOR SHALL REPORT ANY VIOLATIONS OR ADVERSE FINDINGS TO THE ENGINEER FOR RESOLUTION.
2. ALL GROUND ELECTRODE SYSTEMS (INCLUDING TELECOMMUNICATION, RADIO, LIGHTNING PROTECTION, AND AC POWER GES'S) SHALL BE BONDED TOGETHER, AT OR BELOW GRADE, BY TWO OR MORE COPPER BONDING CONDUCTORS. ALL AVAILABLE GROUNDING ELECTRODES SHALL BE CONNECTED TOGETHER IN ACCORDANCE WITH THE NEC.
3. THE CONTRACTOR SHALL PERFORM IEEE FALL-OF-POTENTIAL RESISTANCE TO EARTH TESTING (PER IEEE 1100 AND 81) FOR GROUND ELECTRODE SYSTEMS. USE OF OTHER METHODS MUST BE PRE-APPROVED BY THE ENGINEER IN WRITING.
4. THE CONTRACTOR SHALL FURNISH AND INSTALL SUPPLEMENTAL GROUND ELECTRODES AS NEEDED TO ACHIEVE A TEST RESULT OF 5 OHMS OR LESS ON TOWER SITES AND 10 OHMS OR LESS ON ROOFTOP SITES. WHEN ADDING ELECTRODES, CONTRACTOR SHALL MAINTAIN A MINIMUM DISTANCE BETWEEN THE ADDED ELECTRODE AND ANY OTHER EXISTING ELECTRODE EQUAL TO THE BURIED LENGTH OF THE ROD. IDEALLY, CONTRACTOR SHALL STRIVE TO KEEP THE SEPARATION DISTANCE EQUAL TO TWICE THE BURIED LENGTH OF THE RODS.
5. THE CONTRACTOR IS RESPONSIBLE FOR PROPERLY SEQUENCING GROUNDING AND UNDERGROUND CONDUIT INSTALLATION AS TO PREVENT ANY LOSS OF CONTINUITY IN THE GROUNDING SYSTEM OR DAMAGE TO THE CONDUIT.
6. METAL CONDUIT AND TRAY SHALL BE GROUNDED AND MADE ELECTRICALLY CONTINUOUS WITH LISTED BONDING FITTINGS OR BY BONDING ACROSS THE DISCONTINUITY WITH 6 AWG COPPER WIRE AND UL APPROVED GROUNDING TYPE CONDUIT CLAMPS.
7. METAL RACEWAY SHALL NOT BE USED AS THE NEC REQUIRED EQUIPMENT GROUND CONDUCTOR. STRANDED COPPER CONDUCTORS WITH GREEN INSULATION, SIZED IN ACCORDANCE WITH THE NEC, SHALL BE FURNISHED AND INSTALLED WITH THE POWER CIRCUITS TO TRANSMISSION EQUIPMENT.
8. CONNECTIONS TO THE GROUND BUS SHALL NOT BE DOUBLED UP OR STACKED. BACK-TO-BACK CONNECTIONS ON OPPOSITE SIDES OF THE GROUND BUS ARE PERMITTED.
9. ALUMINUM CONDUCTOR OR COPPER CLAD STEEL CONDUCTOR SHALL NOT BE USED FOR GROUNDING CONNECTIONS.
10. USE OF 90° BENDS IN THE PROTECTION GROUNDING CONDUCTORS SHALL BE AVOIDED WHEN 45° BENDS CAN BE ADEQUATELY SUPPORTED. IN ALL CASES, BENDS SHALL BE MADE WITH A MINIMUM BEND RADIUS OF 8 INCHES.
11. EACH INTERIOR TRANSMISSION CABINET FRAME/PLINTH SHALL BE DIRECTLY CONNECTED TO THE MASTER GROUND BAR WITH 6 AWG STRANDED, GREEN INSULATED SUPPLEMENTAL EQUIPMENT GROUND WIRE UNLESS NOTED OTHERWISE IN THE DETAILS. EACH OUTDOOR CABINET FRAME/PLINTH SHALL BE DIRECTLY CONNECTED TO THE BURIED GROUND RING WITH 2 AWG SOLID TIN-PLATED COPPER WIRE UNLESS NOTED OTHERWISE IN THE DETAILS.
12. ALL EXTERIOR GROUND CONDUCTORS BETWEEN EQUIPMENT/GROUND BARS AND THE GROUND RING, SHALL BE 2 AWG SOLID TIN-PLATED COPPER UNLESS OTHERWISE INDICATED.
13. EXOTHERMIC WELDS SHALL BE USED FOR ALL GROUNDING CONNECTIONS BELOW GRADE. CONNECTIONS TO ABOVE GRADE UNITS SHALL BE MADE WITH EXOTHERMIC WELDS WHERE PRACTICAL OR WITH 2 HOLE MECHANICAL TYPE BRASS CONNECTORS WITH STAINLESS STEEL HARDWARE, INCLUDING SET SCREWS. HIGH PRESSURE CRIMP CONNECTORS MAY ONLY BE USED WITH WRITTEN PERMISSION FROM SAI MARKET REPRESENTATIVE.
14. EXOTHERMIC WELDS SHALL BE PERMITTED ON TOWERS ONLY WITH THE EXPRESS APPROVAL OF THE TOWER MANUFACTURER OR THE CONTRACTORS STRUCTURAL ENGINEER.
15. ALL WIRE TO WIRE GROUND CONNECTIONS TO THE INTERIOR GROUND RING SHALL BE FORMED USING HIGH PRESS CRIMPS OR SPLIT BOLT CONNECTORS WHERE INDICATED IN THE DETAILS.
16. ON ROOFTOP SITES WHERE EXOTHERMIC WELDS ARE A FIRE HAZARD COPPER COMPRESSION CAP CONNECTORS MAY BE USED FOR WIRE TO WIRE CONNECTORS. 2 HOLE MECHANICAL TYPE BRASS CONNECTORS WITH STAINLESS STEEL HARDWARE, INCLUDING SET SCREWS SHALL BE USED FOR CONNECTION TO ALL ROOFTOP TRANSMISSION EQUIPMENT AND STRUCTURAL STEEL.
17. COAX BRIDGE BONDING CONDUCTORS SHALL BE EXOTHERMICALLY BONDED OR BOLTED TO THE BRIDGE AND THE TOWER GROUND BAR USING TWO-HOLE MECHANICAL TYPE BRASS CONNECTORS AND STAINLESS STEEL HARDWARE.
18. APPROVED ANTIOXIDANT COATINGS (I.E., CONDUCTIVE GEL OR PASTE) SHALL BE USED ON ALL COMPRESSION AND BOLTED GROUND CONNECTIONS.
19. ALL EXTERIOR GROUND CONNECTIONS SHALL BE COATED WITH A CORROSION RESISTANT MATERIAL.
20. MISCELLANEOUS ELECTRICAL AND NON-ELECTRICAL METAL BOXES, FRAMES AND SUPPORTS SHALL BE BONDED TO THE GROUND RING, IN ACCORDANCE WITH THE NEC.
21. BOND ALL METALLIC OBJECTS WITHIN 6 FT OF THE BURIED GROUND RING WITH 2 AWG SOLID TIN-PLATED COPPER GROUND CONDUCTOR. DURING EXCAVATION FOR NEW GROUND CONDUCTORS, IF EXISTING GROUND CONDUCTORS ARE ENCOUNTERED, BOND EXISTING GROUND CONDUCTORS TO NEW CONDUCTORS.
22. GROUND CONDUCTORS USED IN THE FACILITY GROUND AND LIGHTNING PROTECTION SYSTEMS SHALL NOT BE ROUTED THROUGH METALLIC OBJECTS THAT FORM A RING AROUND THE CONDUCTOR, SUCH AS METALLIC CONDUITS, METAL SUPPORT CLIPS OR SLEEVES THROUGH WALLS OR FLOORS. WHEN IT IS REQUIRED TO BE HOUSED IN CONDUIT TO MEET CODE REQUIREMENTS OR LOCAL CONDITIONS, NON-METALLIC MATERIAL SUCH AS PVC PLASTIC CONDUIT SHALL BE USED. WHERE USE OF METAL CONDUIT IS UNAVOIDABLE (E.G., NON-METALLIC CONDUIT PROHIBITED BY LOCAL CODE) THE GROUND CONDUCTOR SHALL BE BONDED TO EACH END OF THE METAL CONDUIT WITH LISTED BONDING FITTINGS.

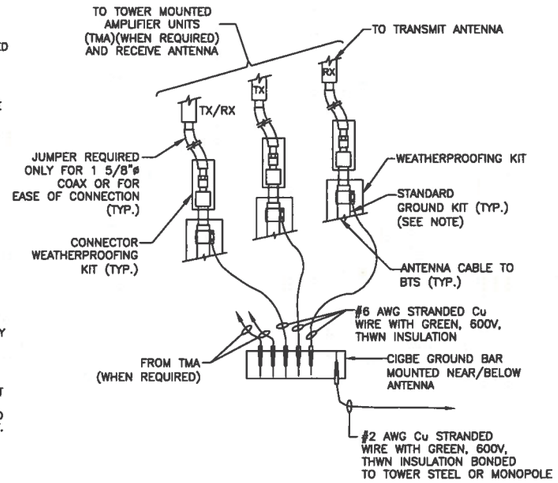

NOTE:

1. DO NOT INSTALL CABLE GROUND KIT AT A BEND AND ALWAYS DIRECT GROUND WIRE DOWN TO CIGBE.

CONNECTION OF GROUND WIRES TO GROUNDING BAR (CIGBE) — 1

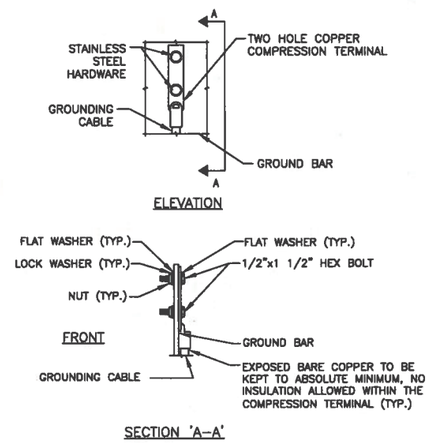

NOTES:

1. DOUBLING UP OR STACKING OF CONNECTIONS IS NOT PERMITTED.
2. OXIDE INHIBITING COMPOUND TO BE USED AT ALL LOCATIONS.

TYPICAL GROUND BAR MECHANICAL CONNECTION DETAIL — 2

SCALE: N.T.S.

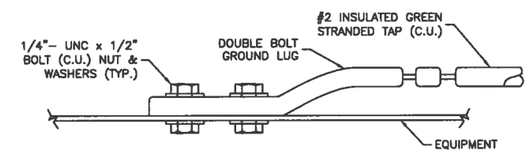

CONNECTION TO EQUIPMENT DETAIL — 3

SCALE: N.T.S.

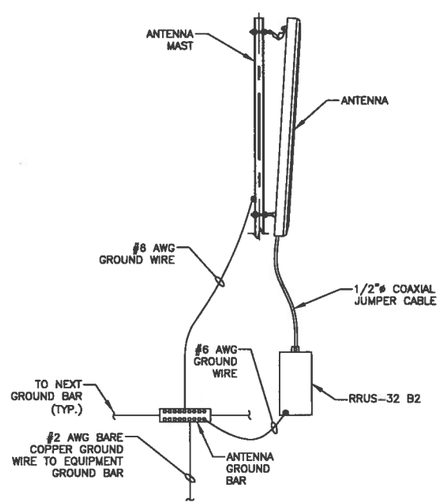

TYPICAL ANTENNA GROUNDING DETAIL — 4

SCALE: N.T.S

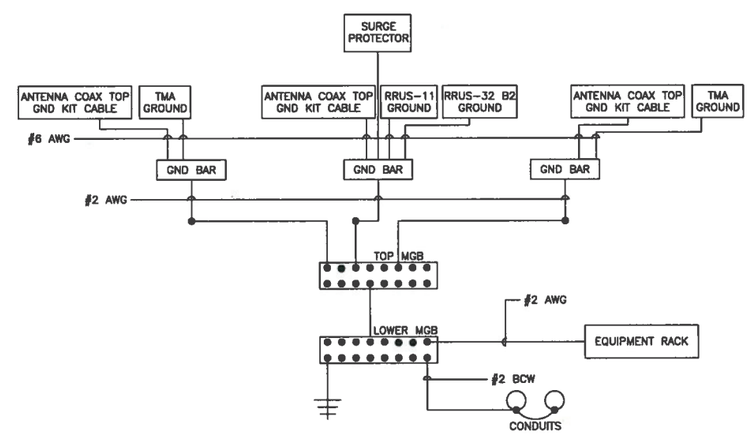

NOTES:

1. BOND ANTENNA GROUNDING KIT CABLE TO TOP CIGBE
2. BOND ANTENNA GROUNDING KIT CABLE TO BOTTOM CIGBE.
3. SCHEMATIC GROUNDING DIAGRAM IS TYPICAL FOR EACH SECTOR.
4. GROUND ALL EQUIPMENT PER MANUFACTURER RECOMMENDATIONS.

SCHEMATIC GROUNDING DIAGRAM — 5

SCALE: N.T.S.

at&t
500 ENTERPRISE DRIVE SUITE 3A
ROCKY HILL, CT 06067

SAI
27 NORTHWESTERN DRIVE
SALEM, NH 03079

CT1340
WASHINGTON CT17

CONSTRUCTION DRAWINGS		
1	01/16/17	ISSUED FOR REVIEW
A	01/10/17	ISSUED FOR REVIEW

Dewberry®
Dewberry Engineers Inc.
600 PARSIPPANY ROAD
SUITE 301
PARSIPPANY, NJ 07054
PHONE: 973.739.9400
FAX: 973.739.9710

STATE OF CONNECTICUT
JIANG YU
No. 23222
LICENSED
PROFESSIONAL ENGINEER
JIANG YU, P.E.
CONNECTICUT LICENSE NO. 0023222

IT IS A VIOLATION OF LAW FOR ANY PERSON, UNLESS THEY ARE ACTING UNDER THE DIRECTION OF A LICENSED PROFESSIONAL ENGINEER TO ALTER THIS DOCUMENT.

DRAWN BY:	JC
REVIEWED BY:	DER
CHECKED BY:	GHN
PROJECT NUMBER:	50055106
JOB NUMBER:	50065684
SITE ADDRESS:	

10-12 BLACKVILLE ROAD
WASHINGTON, CT 06794
LITCHFIELD COUNTY

SHEET TITLE

GROUNDING NOTES & DETAILS

SHEET NUMBER

E-1

The Assessor's office is responsible for the maintenance of records on the ownership of properties. Assessments are computed at 70% of the estimated market value of real property at the time of the last revaluation which was 2013.

Information on the Property Records for the Municipality of Washington was last updated on 1/18/2017.

Property Summary Information

Parcel Data And Values | Outbuildings | Google Map

Parcel Information

Location:	10A BLACKVILLE RD	Property Use:	Vacant Land	Primary Use:	Commercial Vacant Land
Unique ID:	3175	Map Block Lot:	08-07-23A	Acres:	1.00
490 Acres:	0.00	Zone:	B-2	Volume / Page:	0130/0425
Developers Map / Lot:		Census:			

Value Information

	Appraised Value	70% Assessed Value
Land	140,000	98,000
Buildings	0	0
Detached Outbuildings	284,100	198,870
Total	424,100	296,870

Owner's Information

Owner's Data
WASHINGTON TOWN OF RYAN LLC % MICHELLE GALLO ESQ PO BOX 460389 2800 POST OAK BLVD STE 2500

Back To Search (JavaScript:window.history.back(1);)

Print View (PrintPage.aspx?towncode=150&uniqueid=3175)

Information Published With Permission From The Assessor

The Assessor's office is responsible for the maintenance of records on the ownership of properties. Assessments are computed at 70% of the estimated market value of real property at the time of the last revaluation which was 2013.

Information on the Property Records for the Municipality of Washington was last updated on 1/18/2017.

Property Summary Information

Parcel Data And Values | Outbuildings | Google Map

Google Map

Unique Id:	3175
Location:	10A Bl
MBL:	08-07-
Primary Use:	Comm
Zone:	B-2
Acres:	1.00
Appraised Value:	$424,1
Assessed Value:	$296,8

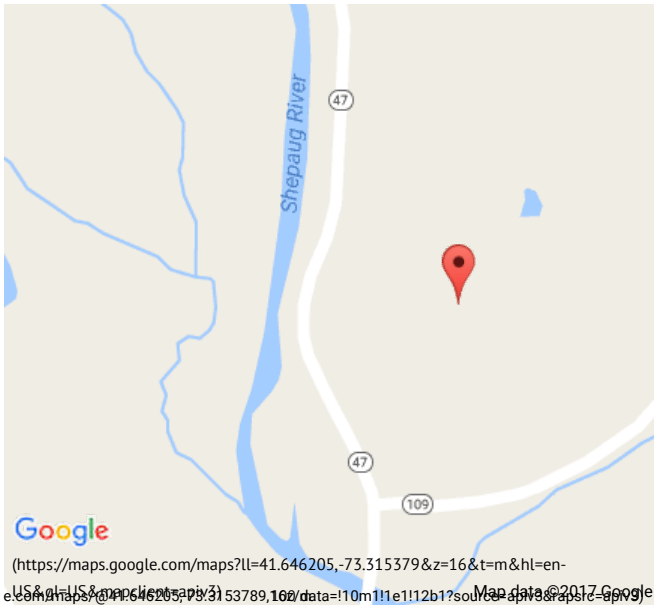

(https://maps.google.com/maps?ll=41.646205,-73.315379&z=16&t=m&hl=en-US&gl=US&mapclient=apiv3)

e.com/maps/@41.646205,-73.315379,162/data=!10m1!1e1!12b1?source=apiv3&apsrc=apiv3)

Back To Search (JavaScript:window.history.back(1);)

Print View (PrintPage.aspx?towncode=150&uniqueid=3175)