Sabre Industries™
Towers and Poles

Date: **January 20, 2015**

Christian Carmody
Insite Towers LLC
(617) 426-3070

Subject: **Structural Analysis Report - Sabre Sales Order #116883**

Site Data:	**Site Name:**	**Washington, CT**
	Site Number:	**CT112**
	Latitude	**41° 38' 47.52"**
	Longitude	**-73° 18' 57.79"**
	Tower Type:	**Monopine**
	Tower Height:	**135' extendable to 145'**
	Tower Manufacturer:	**Sabre Towers & Poles**

Dear Christian Carmody,

Sabre is pleased to submit this Structural Analysis Report to determine the structural integrity of the above mentioned tower.

The purpose of the analysis is to determine acceptability of the tower to support specified equipment. Based on our analysis we have determined the tower stress level for the structure and foundation, under the following load cases, to be:

Proposed + Future Equipment — Sufficient Capacity
Note: See Table I for the proposed and future loading.

The analysis has been performed in accordance with the ANSI/TIA-222-G standard, for a 3-second gust basic wind speed of 95 with no ice and 40 mph with 1" ice, Structure Class II, Exposure Category C with Topographic Category 1.

We at Sabre Towers and Poles appreciate the opportunity of providing our continuing professional services to you. If you have any questions or need further assistance on this or any other projects please give us a call.

Respectfully submitted by:

STATE OF CONNECTICUT
KEITH J. TINDALL
No. 21551
LICENSED PROFESSIONAL ENGINEER

1/20/15

TABLE OF CONTENTS

1) INTRODUCTION

2) ANALYSIS CRITERIA
Table 1 – Proposed and Future Antenna and Cable Information

3) ANALYSIS PROCEDURE
Table 2 – Referenced Documents
3.1) Analysis Method
3.2) Assumptions

4) ANALYSIS RESULTS
Table 3 – Tower Component Stresses vs. Capacity
4.1) Recommendations

5) APPENDIX A
Structural Analysis Output

1) INTRODUCTION

This tower is a 135' extendable to 145' (Monopine) tower designed by Sabre Towers & Poles, Job #104570, dated 5/27/2014.

2) ANALYSIS CRITERIA

The structural analysis was performed for this tower in accordance with the requirements of ANSI/TIA-222-G Structural Standard for Antenna Supporting Structures and Antennas using a 3-second gust basic wind speed of 95 mph with no ice, 40 mph with 1" ice thickness and 60 mph under service loads with the following design criteria:

1) Type of Analysis: Rigorous Structural Analysis
2) Structure Classification: II
3) Exposure Category: C
4) Topographic Category: 1

Table 1 – Proposed & Future Antenna and Cable Information

Mounting Level (ft)	Center Line Elevation (ft)	Number of Antennas	Antenna Manufacturer	Antenna Model	Number of Feed Lines	Feed Line Size (in)	E/P/F
142	146	2	OTHER	8' x 3in Omni	2	7/8	F
140	140	9	OTHER	8' X 1' X 6IN	12	1 5/8	F
140	140	12	ALCATEL	9442 RRHX			F
135/132	139/136	2	OTHER	8' x 3in Omni	2	7/8	F
126	126	12	CCI	HPA-65R-BUU-H8	8	3/4	P
126	126	4	RAYCAP	DC6-48-60-18-8F	5	1/2	P
122	122	9	ERICSSON	RRUS 11			P
122	122	6	ERICSSON	RRUS 12			P
122	122	3	ERICSSON	RRUS 32			P
122	122	3	Alcatel Lucent	RRUS E2			P
122	122	6	ERICSSON	RRUS A2			P
116	116	12	OTHER	8' x 1' x 7in Panel	12	1 5/8	F
116	116	4	PCTEL	GPS-TMG-HR-26N	2	1/2	F
116	116	6	RFS	FD9R6004			F
116	116	6	Alcatel Lucent	RRH AWS (24.4" x 9.05" x 10.6")	6	1	F
116	116	1	Raycap	DC2-48-60-0-9E			F
106	106	12	OTHER	8' X 1' X 6IN	12	1 5/8	F
106	106	12	RFS	FD9R6004			F
106	106	12	WESTELL ANTONE	AWC-TMA-DD-1700-FB AISG			F
96	96	9	OTHER	8' X 1' X 6IN	12	1 5/8	F
96	96	12	ALCATEL	9442 RRHX			F
76	78.5	1	OTHER	5' x 3in Omni	1	7/8	F

3) ANALYSIS PROCEDURE

Table 2 – Referenced Documents

Document	Reference
Structural Design Report	Sabre Job# 104570, Dated 05/27/2014
Geotechnical Report	Terracon Project # J2145120, Dated 3/20/14

3.1) Analysis Method

A customized monopole computer program is utilized by Sabre Towers and Poles to perform the structural analysis and design of monopoles.

The basic criteria for designing a monopole such as wind speed, effective areas of monopole sections, factored resistances, allowable rigidity and foundation requirements are based on ANSI/TIA Standard 222-G.

A monopole is treated as a cantilevered beam with a fixed base support. Wind, ice and weight are the major design loads considered in the static analysis. Effects due to eccentric moments, torques, slopes and deflections are included in the computer program.

After all the necessary input data is entered, the program will compute the effective area of each monopole section, the wind loads at each elevation, and the factored resistance of each section. The total weight, wind shear, overturning moment and torque are calculated at each elevation, in order to determine loads in each section of the monopole. The factored loads are then compared with the factored resistances to determine the adequacy and/or required sizes.
Selected output from the analysis is included in Appendix A.

3.2) Assumptions

1) Tower and structures were built in accordance with the manufacturer's specifications.
2) The tower and structures have been maintained in accordance with the manufacturer's specification.
3) The configuration of antennas, transmission cables, mounts and other appurtenances are as specified in Table 1 and the referenced drawings.

4) ANALYSIS RESULTS

Table 3 - Component Stresses vs. Capacity

Component	Elevation (ft)	% Capacity	Sufficient/Insufficient
Anchor Rods	BASE	96%	Sufficient
Base Plate	BASE	88%	Sufficient
Base Foundation (Mat)	BASE	98%	Sufficient
Base Foundation Soil Interaction (Mat)	BASE	89%	Sufficient
Base Foundation (Caisson)	BASE	81%	Sufficient
Flange Plate	134'	21%	Sufficient
Flange Bolts	134'	45%	Sufficient
Pole Shaft	99.5'	100%	Sufficient

Structure Rating (max from all components) =	100%

Notes:
1) See additional documentation in "Appendix A" for output supporting the % capacity.
2) A structure ratio of 105% or less is within engineering tolerances and considered acceptable.
3) A foundation-soil interaction ratio of 110% or less is within engineering tolerances for foundations and is considered acceptable.

4.1) Recommendations

The tower and its base and foundations have sufficient capacity to carry the proposed and future loads. No modifications are required at this time.

APPENDIX A

STRUCTURAL ANALYSIS OUTPUT

Section	1	2	3	4
Length (ft)	10' - 0"	39' - 6"	53' - 6"	53' - 3"
Number Of Sides	18			
Thickness (in)	1/4"		7/16"	1/2"
Lap Splice (ft)		5' - 0"	7' - 3"	
Top Diameter (in)	19"	22.39"	33.54"	48.31"
Bottom Diameter (in)	22.38"	35.74"	51.63"	66.31"
Taper (in/ft)	0.3381			
Grade	A572-65			
Weight (lbs)	897	3783	11516	19834

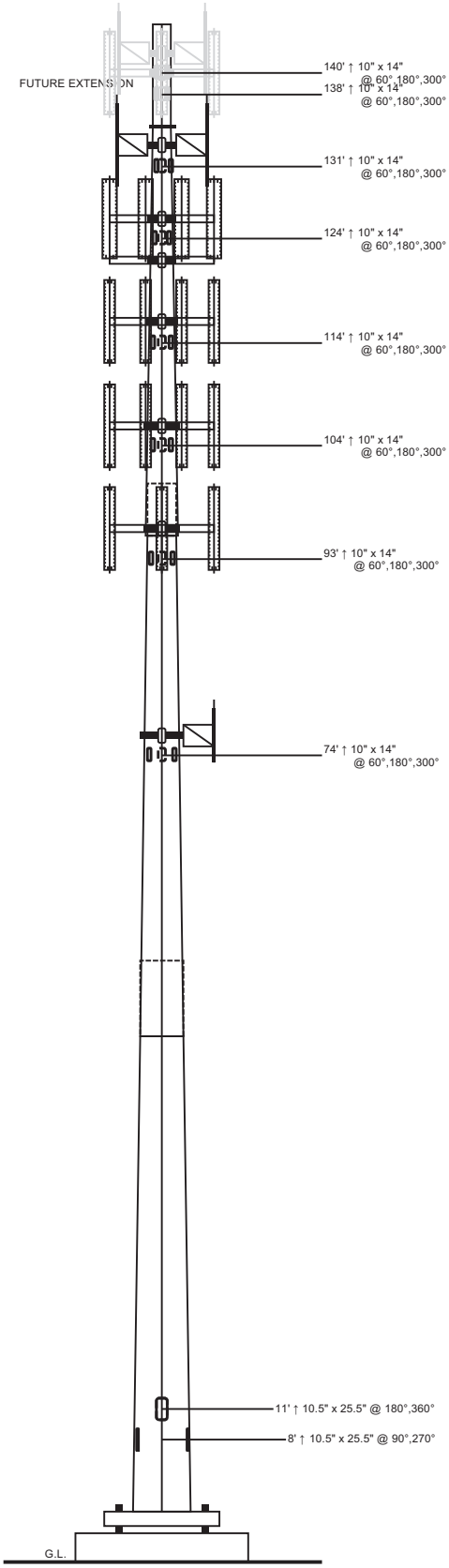

Designed Appurtenance Loading

Elev	Description	Tx-Line
146***	(2) 8' x 3in Omnis	(2) 7/8"
142***	(2) 3ft Sidearms	
140***	3T-Arm - 10' Face - 3' Standoff	
140***	(12) 9442 RRHXs	
140***	(9) 8' X 1' X 6INs	(12) 1 5/8"
139/136	(2) 8' x 3in Omnis	(2) 7/8"
135/132	(2) 3ft Sidearms	
126	3T-Arm - 10' Face - 3' Standoff	
126	(12) HPA-65R-BUU-H8s	(8) 3/4"
126	(4) DC6-48-60-18-8Fs	(5) 1/2"
122	(3) 2' Standoff w/ Dual Antenna & (9) RRU Mounts	
122	(3) RRUS E2s	
122	(6) RRUS 12s	
122	(9) RRUS 11s	
122	(3) RRUS 32s	
122	(6) RRUS A2s	
116	3T-Arm - 10' Face - 3' Standoff	
116	(4) GPS-TMG-HR-26Ns	(2) 1/2"
116	(6) RRH AWS (24.4" x 9.05" x 10.6")s	(6) 1"
116	(6) FD9R6004s	
116	(12) 8' x 1' x 7in Panels	(12) 1 5/8"
116	(1) DC2-48-60-0-9E	
106	3T-Arm - 10' Face - 3' Standoff	
106	(12) FD9R6004s	
106	(12) 8' X 1' X 6INs	(12) 1 5/8"
106	(12) AWC-TMA-DD-1700-FB AISGs	
96	3T-Arm - 10' Face - 3' Standoff	
96	(9) 8' X 1' X 6INs	(12) 1 5/8"
96	(12) 9442 RRHXs	
78.5	(1) 5' x 3in Omni	(1) 7/8"
76	3ft Sidearm	

Load Case Reactions

Description	Axial (kips)	Shear (kips)	Moment (ft-k)	Deflection (ft)	Sway (deg)
3s Gusted Wind	70.3	90	9467	10.8	8.07
3s Gusted Wind 0.9 Dead	52.9	90	9392	10.7	7.96
3s Gusted Wind&Ice	86.5	12.3	1248	1.4	1.05
Service Loads	57.8	20.1	2108	2.4	1.8

Base Plate Dimensions

Shape	Diameter	Thickness	Bolt Circle	Bolt Qty	Bolt Diameter
Round	79.25"	3"	73.25"	26	2.25"

Anchor Bolt Dimensions

Length	Diameter	Hole Diameter	Weight	Type	Finish
84"	2.25"	2.625"	3530	A615-75	Galv-18"

Notes

1) Antenna Feed Lines Run Inside Pole
2) All dimensions are above ground level, unless otherwise specified.
3) Weights shown are estimates. Final weights may vary.
4) The Monopole was designed for a basic wind speed of 95 mph with 0" of radial ice, and 40 mph with 1" of radial ice, in accordance with ANSI/TIA-222-G-2 (2009), Structure Class II, Exposure Category C, Topographic Category 1.
5) Full Height Step Bolts
6) This structure has been designed to support pine tree branches starting at the 75' elevation to an overall height of 150'.

*** These Appurtenances cannot be installed until the Monopole has been extended.

Sabre Industries™ Towers and Poles

Sabre Communications Corporation
7101 Southbridge Drive
P.O. Box 658
Sioux City, IA 51102-0658
Phone: (712) 258-6690
Fax: (712) 279-0814

Information contained herein is the sole property of Sabre Communications Corporation, constitutes a trade secret as defined by Iowa Code Ch. 550 and shall not be reproduced, copied or used in whole or part for any purpose whatsoever without the prior written consent of Sabre Communications Corporation.

Job:	**116883**
Customer:	INSITE TOWERS LLC
Site Name:	Washington, CT CT112
Description:	135' ext. 145' Monopine
Date:	1/20/2015 By: JLG

SABRE COMMUNICATIONS CORP	JOB: 00-11688	20-Jan-15 13:39
2101 Murray Street	**Insite Towers LLC**	Ph 712.258.6690
Sioux City, IA 51101	**Washington, CT**	Fx 712.258.8250

TOP	DIAMETER	19.00 in.	[19.29 in. Point-Point]
BOTTOM	DIAMETER	66.31 in.	[67.33 in. Point-Point]
POLE	HEIGHT	144.00 ft.	18 SIDED FLAT ORIENTATION
BASE	HEIGHT	1.00 ft.	ABOVE GROUND
E-MODULUS		29000 ksi	[12000 ksi SHEAR MODULUS]

APPURTENANCES

ATTACH POINTS:

NO.	X,ft	Qty	Description	Status
1	144.00	1	User Defined Loading	Future Appurt
2	141.00	1	User Defined Loading	Future Appurt
3	139.00	1	User Defined Loading	Future Appurt
4	132.00	1	User Defined Loading	Future Appurt
5	126.50	1	User Defined Loading	Future Appurt
6	125.00	1	User Defined Loading	Future Appurt
7	121.00	1	User Defined Loading	Future Appurt
8	120.90	1	User Defined Loading	Future Appurt
9	115.00	1	User Defined Loading	Future Appurt
10	114.90	1	User Defined Loading	Future Appurt
11	111.50	1	User Defined Loading	Future Appurt
12	105.00	1	User Defined Loading	Future Appurt
13	96.50	1	User Defined Loading	Future Appurt
14	95.00	1	User Defined Loading	Future Appurt
15	81.50	1	User Defined Loading	Future Appurt
16	75.00	1	User Defined Loading	Future Appurt
17	75.75	1	User Defined Loading	Future Appurt

Some wind forces may have been derived from full-scale wind tunnel tests.

Pole Section	Bottom X,ft.	Thick in.	Connect Type	LAP in.	Taper in/ft	Length ft.	Weight lbs	Steel Spec	Pole Finish
1	10.00	.25000	FLANGE-X		.3381	10.00	551	A572-65	GALV/PAINT
2	49.50	.25000	SLIP-JNT	60.	.3381	39.50	3072	A572-65	GALV/PAINT
3	98.00	.43750	SLIP-JNT	87.	.3381	53.50	10655	A572-65	GALV/PAINT
4	144.00	.50000	C-WELD		.3381	53.25	16335	A572-65	GALV/PAINT

SECTION PROPERTIES

X,ft	UP,ft	D,in	T,in	Area in^2	Iz in^4	IxIy in^4	SxSy in^3	w/t	d/t	F_y(ksi)	
144.00	.00	19.00	.2500	14.88	1320	660	68.4	11.64	76.0	65.00	TOP P01
141.00	3.00	20.01	.2500	15.68	1546	773	76.1	12.35	80.1	65.00	P02
139.00	5.00	20.69	.2500	16.22	1712	856	81.5	12.83	82.8	65.00	P03
134.00	10.00	22.38	.2500	17.56	2174	1087	95.7	14.02	89.5	65.00	Flng-T02
132.00	12.00	23.06	.2500	18.10	2378	1189	101.6	14.50	92.2	65.00	P04
127.00	17.00	24.75	.2500	19.44	2948	1474	117.3	15.69	99.0	65.00	
126.50	17.50	24.92	.2500	19.57	3008	1504	118.9	15.81	99.7	65.00	P05
125.00	19.00	25.42	.2500	19.97	3198	1599	123.9	16.17	101.7	65.00	P06
121.00	23.00	26.78	.2500	21.05	3740	1870	137.6	17.12	107.1	65.00	P07
120.90	23.10	26.81	.2500	21.07	3756	1878	138.0	17.15	107.2	65.00	P08
115.90	28.10	28.50	.2500	22.42	4520	2260	156.2	18.34	114.0	65.00	
115.00	29.00	28.80	.2500	22.66	4666	2333	159.5	18.55	115.2	65.00	P09
114.90	29.10	28.84	.2500	22.68	4684	2342	160.0	18.58	115.4	65.00	P10
111.50	32.50	29.99	.2500	23.60	5272	2636	173.1	19.39	120.0	65.00	P11
106.50	37.50	31.68	.2500	24.94	6222	3111	193.4	20.58	126.7	65.00	
105.00	39.00	32.19	.2500	25.34	6528	3264	199.7	20.94	128.7	65.00	P12
100.00	44.00	33.88	.2500	26.68	7620	3810	221.5	22.13	135.5	65.00	
99.50	44.50	34.05	.2500	26.82	7738	3869	223.8	22.25	136.2	65.00	Slip-B02
96.50	47.50	34.56	.4375	47.38	13936	6968	397.1	12.17	79.0	65.00	P13
95.00	49.00	35.07	.4375	48.09	14568	7284	409.1	12.37	80.2	65.00	P14
94.50	49.50	35.24	.4375	48.32	14782	7391	413.1	12.44	80.5	65.00	Slip-T03
89.50	54.50	36.93	.4375	50.67	17042	8521	454.5	13.12	84.4	65.00	
84.50	59.50	38.62	.4375	53.02	19522	9761	497.8	13.80	88.3	65.00	
81.50	62.50	39.63	.4375	54.42	21120	10560	524.8	14.21	90.6	65.00	P15
76.50	67.50	41.32	.4375	56.77	23972	11986	571.3	14.89	94.4	65.00	
75.00	69.00	41.83	.4375	57.47	24874	12437	585.6	15.10	95.6	65.00	P16
75.75	68.25	41.58	.4375	57.12	24422	12211	578.5	14.99	95.0	65.00	P17
70.75	73.25	43.27	.4375	59.47	27558	13779	627.3	15.67	98.9	65.00	
65.75	78.25	44.96	.4375	61.82	30950	15475	678.0	16.36	102.8	65.00	
60.75	83.25	46.65	.4375	64.17	34610	17305	730.7	17.04	106.6	65.00	
55.75	88.25	48.34	.4375	66.51	38550	19275	785.4	17.72	110.5	65.00	
53.25	90.75	49.18	.4375	67.69	40628	20314	813.5	18.06	112.4	65.00	Slip-B03
48.25	95.75	50.00	.5000	78.55	48618	24309	957.6	15.87	100.0	65.00	
46.00	98.00	50.76	.5000	79.76	50892	25446	987.4	16.14	101.5	65.00	Slip-T04

SABRE COMMUNICATIONS CORP	JOB: 00-11688	20-Jan-15 13:39
2101 Murray Street	**Insite Towers LLC**	Ph 712.258.6690
Sioux City, IA 51101	**Washington, CT**	Fx 712.258.8250

41.00	103.00	52.45	.5000	82.44	56204	28102	1055.3	16.73	104.9	65.00	
36.00	108.00	54.14	.5000	85.12	61870	30935	1125.4	17.33	108.3	65.00	
31.00	113.00	55.83	.5000	87.81	67906	33953	1197.8	17.93	111.7	65.00	
26.00	118.00	57.52	.5000	90.49	74320	37160	1272.4	18.52	115.0	65.00	
21.00	123.00	59.21	.5000	93.17	81128	40564	1349.3	19.12	118.4	65.00	
16.00	128.00	60.90	.5000	95.85	88340	44170	1428.5	19.71	121.8	65.00	
11.00	133.00	62.59	.5000	98.54	95968	47984	1509.9	20.31	125.2	65.00	
6.00	138.00	64.28	.5000	101.22	104020	52010	1593.6	20.91	128.6	65.00	
1.00	143.00	65.97	.5000	103.90	112512	56256	1679.5	21.50	131.9	65.00	
.00	144.00	66.31	.5000	104.44	114264	57132	1697.0	21.62	132.6	65.00	BASE

SABRE COMMUNICATIONS CORP	JOB: 00-11688	20-Jan-15 13:39
2101 Murray Street	**Insite Towers LLC**	Ph 712.258.6690
Sioux City, IA 51101	**Washington, CT**	Fx 712.258.8250

CASE - 1: 3s Gusted Wind — **ANSI-TIA-222-G**

WIND OLF	1.60		GUSTED WIND (3sec)	95.0 mph 152.9 kph
VERTICAL OLF	1.20		EXP-CAT/STRUC_CLASS	C-II
DESIGN ICE	.00	in	EXP-POWER COEFF.	.2105
GUST FACTOR (Gh)	1.10		REFERENCE HEIGHT	900.0 ft
FORCE COEFF (Cf)	.65		PRESSURE @ 32.7 ft	38.6 psf 1848.5 Pa
IMPORTANCE FAC (I)	1.00		BASE ABOVE Grd	1.0
DIRECTION FAC (Kd)	.95		CREST HEIGHT	.0 ft
TOPOGRAPHIC CAT	1			

APPURTENANCES — **Sabre Areas**

#	Qty	Description	Center Line Elev-Ft	WEIGHT each Lbs	AREA each Ft^2	Tx-CABLE Type	Qty	#/Ft	WIND Psf	FORCES Tra-Y Kips	Ax-Z Kips	MOM. Lg-X Ft-K
1	1	User Defined Loading	144.0	5	.1				52.9	.01	.0	.0
	1	TOP BRANCHES	146.5	250	25.0	None	1	.00	53.1	1.33	-.3	-3.3
	1	TOP BRANCHES	141.5	250	25.0	None	1	.00	52.7	1.32	-.3	
	1	BRANCHES (9' MAX.)	136.5	500	50.0	None	1	.00	52.3	2.61	-.6	
2	1	User Defined Loading	141.0	286	18.0				52.6	.94	-.3	.0
	2	8' X 3IN OMNI	145.0	12	.0	7/8"	2	.54	52.9	.00	-.2	
3	1	User Defined Loading	139.0	735	83.3				52.5	4.37	-.9	-.2
	9	8' X 1' X 6IN	139.0	42	.0	1 5/8"	12	1.04	52.5	.00	-2.5	
	12	9442 RRHX	139.0	50	.0	None	1	.00	52.5	.00	-.7	
4	1	User Defined Loading	132.0	286	17.2				51.9	.89	-.3	.0
	2	8' X 3IN OMNI	138.0	12	.0	7/8"	2	.54	52.4	.00	-.2	
5	1	User Defined Loading	126.5	5	.1				51.5	.01	.0	.0
	1	BRANCHES (9' MAX.)	131.5	500	50.0	None	1	.00	51.9	2.59	-.6	-13.0
	1	BRANCHES (9' MAX.)	126.5	500	50.0	None	1	.00	51.5	2.57	-.6	
	1	BRANCHES (10' MAX.)	121.5	500	55.6	None	1	.00	51.0	2.83	-.6	
6	1	User Defined Loading	125.0	735	99.8				51.3	5.12	-.9	-.3
	12	HPA-65R-BUU-H8-K	125.0	68	.0	3/4"	8	.50	51.3	.00	-1.6	
	4	DC6-48-60-18-8F	125.0	20	.0	1/2"	5	.40	51.3	.00	-.4	
7	1	User Defined Loading	121.0	735	80.1				51.0	4.09	-.9	-.2
	9	RRUS 11	121.0	55	.0	None	1	.00	51.0	.00	-.6	
	6	RRUS 12	121.0	58	.0	None	1	.00	51.0	.00	-.4	
	3	RRUS-32B30	121.0	77	.0	None	1	.00	51.0	.00	-.3	
8	1	User Defined Loading	120.9	5	.1				51.0	.01	.0	.0
	3	RRUS-E2 B29	121.0	71	.0	None	1	.00	51.0	.00	-.3	
	6	RRUS A2 MODULE	121.0	22	.0	None	1	.00	51.0	.00	-.2	
9	1	User Defined Loading	115.0	735	111.5				50.4	5.62	-.9	-.3
	12	8' X 1' X 7IN PANEL	115.0	51	.0	1 5/8"	12	1.04	50.4	.00	-2.5	
	4	GPS-TMG-HR-26N	115.0	0	.0	1/2"	2	.40	50.4	.00	-.1	
	6	FD9R6004	115.0	10	.0	None	1	.00	50.4	.00	-.1	
10	1	User Defined Loading	114.9	5	.1				50.4	.01	.0	.0
	6	RRH AWS (24.4" X 9.05" X	115.0	43	.0	1"	6	.54	50.4	.00	-.8	
	1	DC2-48-60-0-9E	115.0	15	.0	None	1	.00	50.4	.00	.0	
11	1	User Defined Loading	111.5	5	.1				50.1	.01	.0	.0
	1	BRANCHES (10' MAX.)	116.5	500	55.6	None	1	.00	50.6	2.81	-.6	-14.1
	1	BRANCHES (10' MAX.)	111.5	500	55.6	None	1	.00	50.1	2.78	-.6	
	1	BRANCHES (11' MAX.)	106.5	550	61.1	None	1	.00	49.6	3.03	-.7	
12	1	User Defined Loading	105.0	735	98.4				49.5	4.87	-.9	-.2
	12	8' X 1' X 6IN	105.0	42	.0	1 5/8"	12	1.04	49.5	.00	-2.2	
	12	FD9R6004	105.0	10	.0	None	1	.00	49.5	.00	-.1	
	12	AWC-TMA-DD-1700-FB AISG	105.0	6	.0	None	1	.00	49.5	.00	-.1	
13	1	User Defined Loading	96.5	5	.1				48.6	.00	.0	.0
	1	BRANCHES (11' MAX.)	101.5	550	61.1	None	1	.00	49.1	3.00	-.7	-15.0
	1	BRANCHES (12' MAX.)	96.5	600	66.7	None	1	.00	48.6	3.24	-.7	
	1	BRANCHES (12' MAX.)	91.5	600	66.7	None	1	.00	48.1	3.21	-.7	
14	1	User Defined Loading	95.0	735	83.3				48.5	4.04	-.9	-.2
	9	8' X 1' X 6IN	95.0	42	.0	1 5/8"	12	1.04	48.5	.00	-1.9	
	12	9442 RRHX	95.0	50	.0	None	1	.00	48.5	.00	-.7	
15	1	User Defined Loading	81.5	5	.1				47.0	.00	.0	.0
	1	BRANCHES (12' MAX.)	86.5	600	66.7	None	1	.00	47.5	3.17	-.7	-15.8
	1	BRANCHES (13' MAX.)	81.5	650	72.2	None	1	.00	47.0	3.39	-.8	
	1	BRANCHES (13' MAX.)	76.5	650	72.2	None	1	.00	46.3	3.35	-.8	
16	1	User Defined Loading	75.0	143	7.7				46.2	.35	-.2	.0
	1	5' X 3IN OMNI	77.5	5	.0	7/8"	1	.54	46.5	.00	-.1	
17	1	User Defined Loading	75.8	5	.1				46.2	.00	.0	.0
	1	BRANCHES (14' MAX.)	75.8	700	77.8	None	1	.00	46.2	3.60	-.8	

RESULTS

X, ft	Kzt	WIND psf	ICE in	:--- FORCES,kips ---: ShearX	ShearY	AxiaZ|	---MOMENTS,ft-kips---: BendX	BendY	TorqZ|	F'y ksi	Inter 4.8.2
144.00	1.00	34.36	.00	.0	5.39	-.5	19.6	.0	.0	82.55	.047

SABRE COMMUNICATIONS CORP	JOB: 00-11688	20-Jan-15 13:39
2101 Murray Street	**Insite Towers LLC**	Ph 712.258.6690
Sioux City, IA 51101	**Washington, CT**	Fx 712.258.8250

141.00	1.00	34.21	.00	.0	6.57	-1.1	3.1	.0	.0	82.55	.008
139.00	1.00	34.11	.00	.0	11.80	-4.9	-10.4	.0	.0	82.55	.025
134.00	1.00	33.85	.00	.0	12.05	-5.1	-69.4	.0	.0	82.55	.121
132.00	1.00	33.75	.00	.0	13.27	-5.8	-93.6	.0	.0	82.55	.154
127.00	1.00	33.47	.00	.0	13.47	-6.0	-159.9	.0	.0	82.55	.225
126.50	1.00	33.45	.00	.0	21.73	-6.8	-165.4	.0	.0	82.55	.230
125.00	1.00	33.36	.00	.0	27.40	-9.2	-198.3	.0	.0	82.37	.267
121.00	1.00	33.14	.00	.0	31.90	-11.1	-308.1	.0	.0	81.24	.376
120.90	1.00	33.13	.00	.0	32.16	-11.8	-311.3	.0	.0	81.22	.380
115.90	1.00	32.84	.00	.0	32.38	-12.1	-472.1	.0	.0	79.81	.514
115.00	1.00	32.79	.00	.0	38.44	-15.0	-501.5	.0	.0	79.56	.538
114.90	1.00	32.78	.00	.0	38.68	-16.0	-505.3	.0	.0	79.53	.542
111.50	1.00	32.58	.00	.0	47.79	-17.4	-635.8	.0	.0	78.58	.637
106.50	1.00	32.27	.00	.0	48.02	-17.9	-875.0	.0	.0	77.17	.795
105.00	1.00	32.17	.00	.0	53.46	-21.2	-946.7	.0	.0	76.75	.839
100.00	1.00	31.85	.00	.0	53.64	-21.8	-1214.2	.0	.0	75.35	.985
99.50	1.00	31.81	.00	.0	53.79	-22.2	-1240.8	.0	.0	75.21	.999
96.50	1.00	31.61	.00	.0	63.61	-24.0	-1401.7	.0	.0	82.55	.578
95.00	1.00	31.51	.00	.0	68.06	-27.3	-1496.7	.0	.0	82.55	.600
94.50	1.00	31.47	.00	.0	68.33	-28.3	-1530.8	.0	.0	82.55	.608
89.50	1.00	31.12	.00	.0	68.77	-30.0	-1872.5	.0	.0	82.55	.675
84.50	1.00	30.75	.00	.0	69.11	-31.1	-2216.7	-.1	.0	82.55	.728
81.50	1.00	30.52	.00	.0	79.52	-33.8	-2423.3	-.1	.0	82.55	.756
76.50	1.00	30.12	.00	.0	79.78	-34.8	-2820.8	-.1	.0	82.55	.807
75.00	1.00	29.99	.00	.0	80.24	35.4	2940.0	.1	.0	82.55	.821
75.75	1.00	30.06	.00	.0	84.14	-36.9	-2880.0	-.1	.0	82.55	.814
70.75	1.00	29.63	.00	.0	84.54	-38.6	-3300.8	-.1	.0	82.55	.860
65.75	1.00	29.19	.00	.0	84.94	-40.4	-3723.3	-.1	.0	82.15	.902
60.75	1.00	28.71	.00	.0	85.34	-42.2	-4148.3	-.1	.0	81.34	.941
55.75	1.00	28.21	.00	.0	85.64	-43.8	-4575.0	-.1	.0	80.54	.975
53.25	1.00	27.94	.00	.0	85.97	-45.8	-4789.2	-.1	.0	80.14	.990
48.25	1.00	27.38	.00	.0	86.28	-47.7	-5218.3	-.1	.0	82.55	.889
46.00	1.00	27.11	.00	.0	86.59	-49.8	-5412.5	-.1	.0	82.40	.896
41.00	1.00	26.47	.00	.0	86.99	-52.4	-5845.8	-.1	.0	81.70	.913
36.00	1.00	25.78	.00	.0	87.37	-54.6	-6280.8	-.2	.0	81.00	.928
31.00	1.00	25.00	.00	.0	87.74	-56.8	-6717.5	-.2	.0	80.30	.941
26.00	1.00	24.12	.00	.0	88.12	-59.0	-7156.7	-.2	.0	79.60	.952
21.00	1.00	23.10	.00	.0	88.50	-61.4	-7596.7	-.2	.0	78.89	.961
16.00	1.00	21.88	.00	.0	88.90	-63.7	-8039.2	-.2	.0	78.19	.970
11.00	1.00	21.34	.00	.0	89.30	-66.1	-8483.3	-.2	.0	77.49	.977
6.00	1.00	21.34	.00	.0	89.70	-68.6	-8933.3	-.2	.0	76.79	.984
1.00	1.00	21.34	.00	.0	89.94	-70.1	-9375.0	-.2	.0	76.09	.989
.00	1.00	21.34	.00	.0	90.00	-70.3	9466.7	.2	.0	75.95	.990

DISPLACEMENTS

ELEV	DEFLECTION feet				ROTATION, degrees			
X, ft	X	Y	Z	XY-Result	X	Y	Z	XY-Result
144.00	.00	10.75	-.56	10.75< 7.47%>	-8.07	.00	.00	8.07

SABRE COMMUNICATIONS CORP	JOB: 00-11688	20-Jan-15 13:39
2101 Murray Street	**Insite Towers LLC**	Ph 712.258.6690
Sioux City, IA 51101	**Washington, CT**	Fx 712.258.8250

CASE - 2: 3s Gusted Wind 0.9 Dead — **ANSI-TIA-222-G**

WIND OLF	1.60		GUSTED WIND (3sec)	95.0 mph 152.9 kph
VERTICAL OLF	.90		EXP-CAT/STRUC_CLASS	C-II
DESIGN ICE	.00	in	EXP-POWER COEFF.	.2105
GUST FACTOR (Gh)	1.10		REFERENCE HEIGHT	900.0 ft
FORCE COEFF (Cf)	.65		PRESSURE @ 32.7 ft	38.6 psf 1848.5 Pa
IMPORTANCE FAC (I)	1.00		BASE ABOVE Grd	1.0
DIRECTION FAC (Kd)	.95		CREST HEIGHT	.0 ft
TOPOGRAPHIC CAT	1			

APPURTENANCES — **Sabre Areas**

#	Qty	Description	Center Line Elev-Ft	WEIGHT each Lbs	AREA each Ft^2	Tx-CABLE Type	Qty	#/Ft	WIND Psf	FORCES Tra-Y Kips	Ax-Z Kips	MOM. Lg-X Ft-K
1	1	User Defined Loading	144.0	5	.1				52.9	.01	.0	.0
	1	TOP BRANCHES	146.5	250	25.0	None	1	.00	53.1	1.33	-.2	-3.3
	1	TOP BRANCHES	141.5	250	25.0	None	1	.00	52.7	1.32	-.2	
	1	BRANCHES (9' MAX.)	136.5	500	50.0	None	1	.00	52.3	2.61	-.5	
2	1	User Defined Loading	141.0	286	18.0				52.6	.94	-.3	.0
	2	8' X 3IN OMNI	145.0	12	.0	7/8"	2	.54	52.9	.00	-.2	
3	1	User Defined Loading	139.0	735	83.3				52.5	4.37	-.7	-.2
	9	8' X 1' X 6IN	139.0	42	.0	1 5/8"	12	1.04	52.5	.00	-1.9	
	12	9442 RRHX	139.0	50	.0	None	1	.00	52.5	.00	-.5	
4	1	User Defined Loading	132.0	286	17.2				51.9	.89	-.3	.0
	2	8' X 3IN OMNI	138.0	12	.0	7/8"	2	.54	52.4	.00	-.1	
5	1	User Defined Loading	126.5	5	.1				51.5	.01	.0	.0
	1	BRANCHES (9' MAX.)	131.5	500	50.0	None	1	.00	51.9	2.59	-.5	-13.0
	1	BRANCHES (9' MAX.)	126.5	500	50.0	None	1	.00	51.5	2.57	-.5	
	1	BRANCHES (10' MAX.)	121.5	500	55.6	None	1	.00	51.0	2.83	-.5	
6	1	User Defined Loading	125.0	735	99.8				51.3	5.12	-.7	-.3
	12	HPA-65R-BUU-H8-K	125.0	68	.0	3/4"	8	.50	51.3	.00	-1.2	
	4	DC6-48-60-18-8F	125.0	20	.0	1/2"	5	.40	51.3	.00	-.3	
7	1	User Defined Loading	121.0	735	80.1				51.0	4.09	-.7	-.2
	9	RRUS 11	121.0	55	.0	None	1	.00	51.0	.00	-.4	
	6	RRUS 12	121.0	58	.0	None	1	.00	51.0	.00	-.3	
	3	RRUS-32B30	121.0	77	.0	None	1	.00	51.0	.00	-.2	
8	1	User Defined Loading	120.9	5	.1				51.0	.01	.0	.0
	3	RRUS-E2 B29	121.0	71	.0	None	1	.00	51.0	.00	-.2	
	6	RRUS A2 MODULE	121.0	22	.0	None	1	.00	51.0	.00	-.1	
9	1	User Defined Loading	115.0	735	111.5				50.4	5.62	-.7	-.3
	12	8' X 1' X 7IN PANEL	115.0	51	.0	1 5/8"	12	1.04	50.4	.00	-1.8	
	4	GPS-TMG-HR-26N	115.0	0	.0	1/2"	2	.40	50.4	.00	-.1	
	6	FD9R6004	115.0	10	.0	None	1	.00	50.4	.00	-.1	
10	1	User Defined Loading	114.9	5	.1				50.4	.01	.0	.0
	6	RRH AWS (24.4" X 9.05" X	115.0	43	.0	1"	6	.54	50.4	.00	-.6	
	1	DC2-48-60-0-9E	115.0	15	.0	None	1	.00	50.4	.00	.0	
11	1	User Defined Loading	111.5	5	.1				50.1	.01	.0	.0
	1	BRANCHES (10' MAX.)	116.5	500	55.6	None	1	.00	50.6	2.81	-.5	-14.1
	1	BRANCHES (10' MAX.)	111.5	500	55.6	None	1	.00	50.1	2.78	-.5	
	1	BRANCHES (11' MAX.)	106.5	550	61.1	None	1	.00	49.6	3.03	-.5	
12	1	User Defined Loading	105.0	735	98.4				49.5	4.87	-.7	-.2
	12	8' X 1' X 6IN	105.0	42	.0	1 5/8"	12	1.04	49.5	.00	-1.6	
	12	FD9R6004	105.0	10	.0	None	1	.00	49.5	.00	-.1	
	12	AWC-TMA-DD-1700-FB AISG	105.0	6	.0	None	1	.00	49.5	.00	-.1	
13	1	User Defined Loading	96.5	5	.1				48.6	.00	.0	.0
	1	BRANCHES (11' MAX.)	101.5	550	61.1	None	1	.00	49.1	3.00	-.5	-15.0
	1	BRANCHES (12' MAX.)	96.5	600	66.7	None	1	.00	48.6	3.24	-.5	
	1	BRANCHES (12' MAX.)	91.5	600	66.7	None	1	.00	48.1	3.21	-.5	
14	1	User Defined Loading	95.0	735	83.3				48.5	4.04	-.7	-.2
	9	8' X 1' X 6IN	95.0	42	.0	1 5/8"	12	1.04	48.5	.00	-1.4	
	12	9442 RRHX	95.0	50	.0	None	1	.00	48.5	.00	-.5	
15	1	User Defined Loading	81.5	5	.1				47.0	.00	.0	.0
	1	BRANCHES (12' MAX.)	86.5	600	66.7	None	1	.00	47.5	3.17	-.5	-15.8
	1	BRANCHES (13' MAX.)	81.5	650	72.2	None	1	.00	47.0	3.39	-.6	
	1	BRANCHES (13' MAX.)	76.5	650	72.2	None	1	.00	46.3	3.35	-.6	
16	1	User Defined Loading	75.0	143	7.7				46.2	.35	-.1	.0
	1	5' X 3IN OMNI	77.5	5	.0	7/8"	1	.54	46.5	.00	.0	
17	1	User Defined Loading	75.8	5	.1				46.2	.00	.0	.0
	1	BRANCHES (14' MAX.)	75.8	700	77.8	None	1	.00	46.2	3.60	-.6	

RESULTS

X, ft	Kzt	WIND psf	ICE in	:--- FORCES,kips ---: ShearX	ShearY	AxiaZ|	---MOMENTS,ft-kips---: BendX	BendY	TorqZ|	F'y ksi	Inter 4.8.2
144.00	1.00	34.36	.00	.0	5.35	-.2	19.6	.0	.0	82.55	.047

SABRE COMMUNICATIONS CORP	JOB: 00-11688	20-Jan-15 13:39
2101 Murray Street	**Insite Towers LLC**	Ph 712.258.6690
Sioux City, IA 51101	**Washington, CT**	Fx 712.258.8250

141.00	1.00	34.21	.00	.0	6.50	-.6	3.2	.0	.0	82.55	.008
139.00	1.00	34.11	.00	.0	11.57	-3.3	-10.1	.0	.0	82.55	.023
134.00	1.00	33.85	.00	.0	11.81	-3.5	-68.0	.0	.0	82.55	.118
132.00	1.00	33.75	.00	.0	13.00	-4.0	-91.7	.0	.0	82.55	.149
127.00	1.00	33.47	.00	.0	13.20	-4.2	-156.7	.0	.0	82.55	.219
126.50	1.00	33.45	.00	.0	21.40	-4.5	-162.1	.0	.0	82.55	.224
125.00	1.00	33.36	.00	.0	26.97	-6.1	-194.4	.0	.0	82.37	.260
121.00	1.00	33.14	.00	.0	31.39	-7.4	-302.5	.0	.0	81.24	.367
120.90	1.00	33.13	.00	.0	31.63	-7.9	-305.7	.0	.0	81.22	.371
115.90	1.00	32.84	.00	.0	31.86	-8.2	-463.8	.0	.0	79.81	.503
115.00	1.00	32.79	.00	.0	37.81	-10.2	-492.8	.0	.0	79.56	.526
114.90	1.00	32.78	.00	.0	38.02	-11.0	-496.6	.0	.0	79.53	.529
111.50	1.00	32.58	.00	.0	47.09	-11.8	-624.8	.0	.0	78.58	.623
106.50	1.00	32.27	.00	.0	47.34	-12.3	-860.0	.0	.0	77.17	.778
105.00	1.00	32.17	.00	.0	52.70	-14.7	-931.7	.0	.0	76.75	.822
100.00	1.00	31.85	.00	.0	52.91	-15.1	-1195.0	.0	.0	75.35	.966
99.50	1.00	31.81	.00	.0	53.06	-15.5	-1221.7	.0	.0	75.21	.980
96.50	1.00	31.61	.00	.0	62.83	-16.6	-1379.2	.0	.0	82.55	.567
95.00	1.00	31.51	.00	.0	67.20	-19.0	-1474.2	.0	.0	82.55	.589
94.50	1.00	31.47	.00	.0	67.46	-19.8	-1507.5	.0	.0	82.55	.596
89.50	1.00	31.12	.00	.0	67.93	-21.2	-1845.0	.0	.0	82.55	.663
84.50	1.00	30.75	.00	.0	68.28	-22.1	-2184.2	-.1	.0	82.55	.715
81.50	1.00	30.52	.00	.0	78.67	-24.0	-2388.3	-.1	.0	82.55	.742
76.50	1.00	30.12	.00	.0	78.96	-24.8	-2781.7	-.1	.0	82.55	.794
75.00	1.00	29.99	.00	.0	79.42	25.3	2900.0	.1	.0	82.55	.807
75.75	1.00	30.06	.00	.0	83.32	-26.4	-2840.8	-.1	.0	82.55	.801
70.75	1.00	29.63	.00	.0	83.77	-27.8	-3257.5	-.1	.0	82.55	.847
65.75	1.00	29.19	.00	.0	84.22	-29.2	-3675.8	-.1	.0	82.15	.888
60.75	1.00	28.71	.00	.0	84.66	-30.7	-4097.5	-.1	.0	81.34	.927
55.75	1.00	28.21	.00	.0	85.00	-32.0	-4520.8	-.1	.0	80.54	.961
53.25	1.00	27.94	.00	.0	85.36	-33.5	-4733.3	-.1	.0	80.14	.976
48.25	1.00	27.38	.00	.0	85.70	-35.1	-5160.0	-.1	.0	82.55	.877
46.00	1.00	27.11	.00	.0	86.04	-36.8	-5352.5	-.1	.0	82.40	.884
41.00	1.00	26.47	.00	.0	86.50	-38.8	-5782.5	-.1	.0	81.70	.901
36.00	1.00	25.78	.00	.0	86.93	-40.5	-6215.0	-.2	.0	81.00	.916
31.00	1.00	25.00	.00	.0	87.36	-42.3	-6650.0	-.2	.0	80.30	.929
26.00	1.00	24.12	.00	.0	87.80	-44.1	-7086.7	-.2	.0	79.60	.940
21.00	1.00	23.10	.00	.0	88.25	-45.9	-7525.8	-.2	.0	78.89	.950
16.00	1.00	21.88	.00	.0	88.71	-47.8	-7966.7	-.2	.0	78.19	.959
11.00	1.00	21.34	.00	.0	89.18	-49.7	-8408.3	-.2	.0	77.49	.966
6.00	1.00	21.34	.00	.0	89.65	-51.6	-8858.3	-.2	.0	76.79	.973
1.00	1.00	21.34	.00	.0	89.94	-52.8	-9308.3	-.2	.0	76.09	.979
.00	1.00	21.34	.00	.0	90.00	-52.9	9391.7	.2	.0	75.95	.980

DISPLACEMENTS

ELEV	DEFLECTION feet				ROTATION, degrees			
X, ft	X	Y	Z	XY-Result	X	Y	Z	XY-Result
144.00	.00	10.63	-.54	10.63< 7.38%>	-7.96	.00	.00	7.96

SABRE COMMUNICATIONS CORP	JOB: 00-11688	20-Jan-15 13:39
2101 Murray Street	**Insite Towers LLC**	Ph 712.258.6690
Sioux City, IA 51101	**Washington, CT**	Fx 712.258.8250

CASE - 3: 3s Gusted Wind&Ice — **ANSI-TIA-222-G**

WIND OLF	1.00		GUSTED WIND (3sec)	40.0 mph	64.4 kph
VERTICAL OLF	1.20		EXP-CAT/STRUC_CLASS	C-II	
DESIGN ICE	1.00	in	EXP-POWER COEFF.	.2105	
GUST FACTOR (Gh)	1.10		REFERENCE HEIGHT	900.0 ft	
FORCE COEFF (Cf)	1.20		PRESSURE @ 32.7 ft	4.3 psf	204.8 Pa
IMPORTANCE FAC (I)	1.00		BASE ABOVE Grd	1.0	
DIRECTION FAC (Kd)	.95		CREST HEIGHT	.0 ft	
TOPOGRAPHIC CAT	1				

APPURTENANCES — **Sabre Areas**

#	Qty	Description	Center Line Elev-Ft	WEIGHT each Lbs	AREA each Ft^2	Tx-CABLE Type	Qty	#/Ft	WIND Psf	FORCES Tra-Y Kips	Ax-Z Kips	MOM. Lg-X Ft-K
1	1	User Defined Loading	144.0	5	.1				5.9	.00	.0	.0
	1	TOP BRANCHES	146.5	250	26.5	None	1	.00	5.9	.16	-.3	-.4
	1	TOP BRANCHES	141.5	250	26.5	None	1	.00	5.8	.15	-.3	
	1	BRANCHES (9' MAX.)	136.5	500	52.9	None	1	.00	5.8	.31	-.6	
2	1	User Defined Loading	141.0	314	19.7				5.8	.12	-.4	.0
	2	8' X 3IN OMNI	145.0	34	.0	7/8"	2	.54	5.9	.00	-.2	
3	1	User Defined Loading	139.0	808	91.6				5.8	.53	-1.0	.0
	9	8' X 1' X 6IN	139.0	103	.0	1 5/8"	12	1.04	5.8	.00	-2.5	
	12	9442 RRHX	139.0	67	.0	None	1	.00	5.8	.00	-.7	
4	1	User Defined Loading	132.0	314	19.0				5.8	.11	-.4	.0
	2	8' X 3IN OMNI	138.0	34	.0	7/8"	2	.54	5.8	.00	-.2	
5	1	User Defined Loading	126.5	5	.1				5.7	.00	.0	.0
	1	BRANCHES (9' MAX.)	131.5	500	52.9	None	1	.00	5.7	.30	-.6	-1.5
	1	BRANCHES (9' MAX.)	126.5	500	52.9	None	1	.00	5.7	.30	-.6	
	1	BRANCHES (10' MAX.)	121.5	500	58.8	None	1	.00	5.7	.33	-.6	
6	1	User Defined Loading	125.0	808	109.8				5.7	.62	-1.0	.0
	12	HPA-65R-BUU-H8-K	125.0	141	.0	3/4"	8	.50	5.7	.00	-1.6	
	4	DC6-48-60-18-8F	125.0	39	.0	1/2"	5	.40	5.7	.00	-.4	
7	1	User Defined Loading	121.0	808	88.2				5.6	.50	-1.0	.0
	9	RRUS 11	121.0	74	.0	None	1	.00	5.6	.00	-.6	
	6	RRUS 12	121.0	81	.0	None	1	.00	5.6	.00	-.4	
	3	RRUS-32B30	121.0	104	.0	None	1	.00	5.6	.00	-.3	
8	1	User Defined Loading	120.9	5	.1				5.6	.00	.0	.0
	3	RRUS-E2 B29	121.0	98	.0	None	1	.00	5.6	.00	-.3	
	6	RRUS A2 MODULE	121.0	32	.0	None	1	.00	5.6	.00	-.2	
9	1	User Defined Loading	115.0	808	122.6				5.6	.69	-1.0	.0
	12	8' X 1' X 7IN PANEL	115.0	116	.0	1 5/8"	12	1.04	5.6	.00	-2.5	
	4	GPS-TMG-HR-26N	115.0	0	.0	1/2"	2	.40	5.6	.00	-.1	
	6	FD9R6004	115.0	12	.0	None	1	.00	5.6	.00	-.1	
10	1	User Defined Loading	114.9	5	.1				5.6	.00	.0	.0
	6	RRH AWS (24.4" X 9.05" X	115.0	63	.0	1"	6	.54	5.6	.00	-.8	
	1	DC2-48-60-0-9E	115.0	24	.0	None	1	.00	5.6	.00	.0	
11	1	User Defined Loading	111.5	5	.1				5.6	.00	.0	.0
	1	BRANCHES (10' MAX.)	116.5	500	58.8	None	1	.00	5.6	.33	-.6	-1.6
	1	BRANCHES (10' MAX.)	111.5	500	58.8	None	1	.00	5.6	.33	-.6	
	1	BRANCHES (11' MAX.)	106.5	550	64.6	None	1	.00	5.5	.36	-.7	
12	1	User Defined Loading	105.0	808	108.2				5.5	.59	-1.0	.0
	12	8' X 1' X 6IN	105.0	103	.0	1 5/8"	12	1.04	5.5	.00	-2.2	
	12	FD9R6004	105.0	12	.0	None	1	.00	5.5	.00	-.1	
	12	AWC-TMA-DD-1700-FB AISG	105.0	9	.0	None	1	.00	5.5	.00	-.1	
13	1	User Defined Loading	96.5	5	.1				5.4	.00	.0	.0
	1	BRANCHES (11' MAX.)	101.5	550	64.6	None	1	.00	5.4	.35	-.7	-1.8
	1	BRANCHES (12' MAX.)	96.5	600	70.5	None	1	.00	5.4	.38	-.7	
	1	BRANCHES (12' MAX.)	91.5	600	70.5	None	1	.00	5.3	.38	-.7	
14	1	User Defined Loading	95.0	808	91.6				5.4	.49	-1.0	.0
	9	8' X 1' X 6IN	95.0	103	.0	1 5/8"	12	1.04	5.4	.00	-1.9	
	12	9442 RRHX	95.0	67	.0	None	1	.00	5.4	.00	-.7	
15	1	User Defined Loading	81.5	5	.1				5.2	.00	.0	.0
	1	BRANCHES (12' MAX.)	86.5	600	70.5	None	1	.00	5.3	.37	-.7	-1.9
	1	BRANCHES (13' MAX.)	81.5	650	76.4	None	1	.00	5.2	.40	-.8	
	1	BRANCHES (13' MAX.)	76.5	650	76.4	None	1	.00	5.1	.39	-.8	
16	1	User Defined Loading	75.0	157	8.4				5.1	.04	-.2	.0
	1	5' X 3IN OMNI	77.5	19	.0	7/8"	1	.54	5.1	.00	-.1	
17	1	User Defined Loading	75.8	5	.1				5.1	.00	.0	.0
	1	BRANCHES (14' MAX.)	75.8	700	82.2	None	1	.00	5.1	.42	-.8	

RESULTS

X, ft	Kzt	WIND psf	ICE in	:--- FORCES,kips ---: ShearX	ShearY	AxiaZ|	---MOMENTS,ft-kips---: BendX	BendY	TorqZ|	F'y ksi	Inter 4.8.2
144.00	1.00	7.03	2.32	.0	.65	-1.4	2.3	.0	.0	82.55	.007

SABRE COMMUNICATIONS CORP	JOB: 00-11688	20-Jan-15 13:39
2101 Murray Street	**Insite Towers LLC**	Ph 712.258.6690
Sioux City, IA 51101	**Washington, CT**	Fx 712.258.8250

141.00	1.00	7.00	2.31	.0	.81	-2.3	.3	.0	.0	82.55	.003
139.00	1.00	6.98	2.31	.0	1.50	-7.0	-1.4	.0	.0	82.55	.009
134.00	1.00	6.92	2.30	.0	1.57	-7.5	-8.9	.0	.0	82.55	.021
132.00	1.00	6.90	2.30	.0	1.75	-8.5	-12.1	.0	.0	82.55	.026
127.00	1.00	6.85	2.29	.0	1.80	-9.0	-20.8	.0	.0	82.55	.035
126.50	1.00	6.84	2.29	.0	2.79	-10.9	-21.6	.0	.0	82.55	.037
125.00	1.00	6.82	2.29	.0	3.52	-14.3	-25.8	.0	.0	82.37	.043
121.00	1.00	6.78	2.28	.0	4.10	-16.9	-39.9	.0	.0	81.24	.059
120.90	1.00	6.78	2.28	.0	4.15	-17.7	-40.3	.0	.0	81.22	.059
115.90	1.00	6.72	2.27	.0	4.21	-18.2	-61.0	.0	.0	79.81	.077
115.00	1.00	6.71	2.27	.0	4.96	-21.9	-64.9	.0	.0	79.56	.082
114.90	1.00	6.71	2.27	.0	5.01	-23.0	-65.4	.0	.0	79.53	.083
111.50	1.00	6.66	2.26	.0	6.13	-25.7	-82.3	.0	.0	78.58	.096
106.50	1.00	6.60	2.25	.0	6.19	-26.3	-112.9	.0	.0	77.17	.116
105.00	1.00	6.58	2.25	.0	6.89	-30.3	-122.3	.0	.0	76.75	.124
100.00	1.00	6.51	2.24	.0	6.94	-30.9	-156.7	.0	.0	75.35	.142
99.50	1.00	6.51	2.24	.0	6.98	-31.4	-160.2	.0	.0	75.21	.144
96.50	1.00	6.47	2.23	.0	8.16	-34.2	-181.0	.0	.0	82.55	.083
95.00	1.00	6.45	2.23	.0	8.72	-38.1	-193.3	.0	.0	82.55	.087
94.50	1.00	6.44	2.22	.0	8.78	-39.2	-197.6	.0	.0	82.55	.088
89.50	1.00	6.37	2.21	.0	8.88	-41.0	-241.5	.0	.0	82.55	.097
84.50	1.00	6.29	2.20	.0	8.97	-42.3	-285.9	.0	.0	82.55	.104
81.50	1.00	6.24	2.19	.0	10.23	-45.9	-312.7	.0	.0	82.55	.108
76.50	1.00	6.16	2.18	.0	10.30	-47.1	-363.8	.0	.0	82.55	.114
75.00	1.00	6.14	2.17	.0	10.37	47.7	379.3	.0	.0	82.55	.116
75.75	1.00	6.15	2.18	.0	10.86	-49.6	-371.5	.0	.0	82.55	.115
70.75	1.00	6.06	2.16	.0	10.96	-51.4	-425.8	.0	.0	82.55	.121
65.75	1.00	5.97	2.15	.0	11.06	-53.3	-480.6	.0	.0	82.15	.127
60.75	1.00	5.87	2.13	.0	11.16	-55.2	-535.9	.0	.0	81.34	.132
55.75	1.00	5.77	2.11	.0	11.23	-56.9	-591.7	.0	.0	80.54	.137
53.25	1.00	5.72	2.10	.0	11.31	-59.0	-619.8	.0	.0	80.14	.139
48.25	1.00	5.60	2.08	.0	11.39	-61.2	-676.3	.0	.0	82.55	.125
46.00	1.00	5.55	2.07	.0	11.46	-63.4	-701.9	.0	.0	82.40	.126
41.00	1.00	5.42	2.05	.0	11.56	-66.2	-759.3	.0	.0	81.70	.128
36.00	1.00	5.27	2.02	.0	11.66	-68.7	-817.1	.0	.0	81.00	.131
31.00	1.00	5.11	1.99	.0	11.75	-71.2	-875.0	.0	.0	80.30	.133
26.00	1.00	4.93	1.96	.0	11.85	-73.8	-934.2	.0	.0	79.60	.134
21.00	1.00	4.73	1.92	.0	11.95	-76.4	-993.3	.0	.0	78.89	.136
16.00	1.00	4.48	1.87	.0	12.05	-79.1	-1053.3	.0	.0	78.19	.137
11.00	1.00	4.37	1.81	.0	12.15	-81.8	-1113.3	.0	.0	77.49	.139
6.00	1.00	4.37	1.71	.0	12.25	-84.6	-1174.2	.0	.0	76.79	.140
1.00	1.00	4.37	1.51	.0	12.31	-86.3	-1235.0	.0	.0	76.09	.141
.00	1.00	4.37	1.41	.0	12.32	-86.5	1247.5	.0	.0	75.95	.141

DISPLACEMENTS

ELEV	DEFLECTION feet					ROTATION, degrees			
X, ft	X	Y	Z	XY-Result		X	Y	Z	XY-Result
144.00	.00	1.40	-.01	1.40<	.97%>	-1.05	.00	.00	1.05

SABRE COMMUNICATIONS CORP	JOB: 00-11688	20-Jan-15 13:39
2101 Murray Street	**Insite Towers LLC**	Ph 712.258.6690
Sioux City, IA 51101	**Washington, CT**	Fx 712.258.8250

CASE - 4: Service Loads — **ANSI-TIA-222-G**

WIND OLF	1.00		GUSTED WIND (3sec)	60.0 mph	96.6 kph
VERTICAL OLF	1.00		EXP-CAT/STRUC_CLASS	C-II	
DESIGN ICE	.00	in	EXP-POWER COEFF.	.2105	
GUST FACTOR (Gh)	1.10		REFERENCE HEIGHT	900.0 ft	
FORCE COEFF (Cf)	.65		PRESSURE @ 32.7 ft	8.6 psf	412.3 Pa
IMPORTANCE FAC (I)	1.00		BASE ABOVE Grd	1.0	
DIRECTION FAC (Kd)	.85		CREST HEIGHT	.0 ft	
TOPOGRAPHIC CAT	1				

APPURTENANCES — **Sabre Areas**

#	Qty	Description	Center Line Elev-Ft	WEIGHT each Lbs	AREA each Ft^2	Tx-CABLE Type	Qty	#/Ft	WIND Psf	FORCES Tra-Y Kips	Ax-Z Kips	MOM. Lg-X Ft-K
1	1	User Defined Loading	144.0	5	.1				11.8	.00	.0	.0
	1	TOP BRANCHES	146.5	250	25.0	None	1	.00	11.8	.30	-.3	-.7
	1	TOP BRANCHES	141.5	250	25.0	None	1	.00	11.8	.29	-.3	
	1	BRANCHES (9' MAX.)	136.5	500	50.0	None	1	.00	11.7	.58	-.5	
2	1	User Defined Loading	141.0	286	18.0				11.7	.21	-.3	.0
	2	8' X 3IN OMNI	145.0	12	.0	7/8"	2	.54	11.8	.00	-.2	
3	1	User Defined Loading	139.0	735	83.3				11.7	.97	-.7	.0
	9	8' X 1' X 6IN	139.0	42	.0	1 5/8"	12	1.04	11.7	.00	-2.1	
	12	9442 RRHX	139.0	50	.0	None	1	.00	11.7	.00	-.6	
4	1	User Defined Loading	132.0	286	17.2				11.6	.20	-.3	.0
	2	8' X 3IN OMNI	138.0	12	.0	7/8"	2	.54	11.7	.00	-.2	
5	1	User Defined Loading	126.5	5	.1				11.5	.00	.0	.0
	1	BRANCHES (9' MAX.)	131.5	500	50.0	None	1	.00	11.6	.58	-.5	-2.9
	1	BRANCHES (9' MAX.)	126.5	500	50.0	None	1	.00	11.5	.57	-.5	
	1	BRANCHES (10' MAX.)	121.5	500	55.6	None	1	.00	11.4	.63	-.5	
6	1	User Defined Loading	125.0	735	99.8				11.5	1.14	-.7	-.1
	12	HPA-65R-BUU-H8-K	125.0	68	.0	3/4"	8	.50	11.4	.00	-1.3	
	4	DC6-48-60-18-8F	125.0	20	.0	1/2"	5	.40	11.4	.00	-.3	
7	1	User Defined Loading	121.0	735	80.1				11.4	.91	-.7	.0
	9	RRUS 11	121.0	55	.0	None	1	.00	11.4	.00	-.5	
	6	RRUS 12	121.0	58	.0	None	1	.00	11.4	.00	-.3	
	3	RRUS-32B30	121.0	77	.0	None	1	.00	11.4	.00	-.2	
8	1	User Defined Loading	120.9	5	.1				11.4	.00	.0	.0
	3	RRUS-E2 B29	121.0	71	.0	None	1	.00	11.4	.00	-.2	
	6	RRUS A2 MODULE	121.0	22	.0	None	1	.00	11.4	.00	-.1	
9	1	User Defined Loading	115.0	735	111.5				11.3	1.25	-.7	-.1
	12	8' X 1' X 7IN PANEL	115.0	51	.0	1 5/8"	12	1.04	11.3	.00	-2.0	
	4	GPS-TMG-HR-26N	115.0	0	.0	1/2"	2	.40	11.3	.00	-.1	
	6	FD9R6004	115.0	10	.0	None	1	.00	11.3	.00	-.1	
10	1	User Defined Loading	114.9	5	.1				11.3	.00	.0	.0
	6	RRH AWS (24.4" X 9.05" X	115.0	43	.0	1"	6	.54	11.3	.00	-.6	
	1	DC2-48-60-0-9E	115.0	15	.0	None	1	.00	11.3	.00	.0	
11	1	User Defined Loading	111.5	5	.1				11.2	.00	.0	.0
	1	BRANCHES (10' MAX.)	116.5	500	55.6	None	1	.00	11.3	.63	-.5	-3.1
	1	BRANCHES (10' MAX.)	111.5	500	55.6	None	1	.00	11.2	.62	-.5	
	1	BRANCHES (11' MAX.)	106.5	550	61.1	None	1	.00	11.1	.68	-.6	
12	1	User Defined Loading	105.0	735	98.4				11.0	1.09	-.7	-.1
	12	8' X 1' X 6IN	105.0	42	.0	1 5/8"	12	1.04	11.0	.00	-1.8	
	12	FD9R6004	105.0	10	.0	None	1	.00	11.0	.00	-.1	
	12	AWC-TMA-DD-1700-FB AISG	105.0	6	.0	None	1	.00	11.0	.00	-.1	
13	1	User Defined Loading	96.5	5	.1				10.8	.00	.0	.0
	1	BRANCHES (11' MAX.)	101.5	550	61.1	None	1	.00	11.0	.67	-.6	-3.3
	1	BRANCHES (12' MAX.)	96.5	600	66.7	None	1	.00	10.8	.72	-.6	
	1	BRANCHES (12' MAX.)	91.5	600	66.7	None	1	.00	10.7	.72	-.6	
14	1	User Defined Loading	95.0	735	83.3				10.8	.90	-.7	.0
	9	8' X 1' X 6IN	95.0	42	.0	1 5/8"	12	1.04	10.8	.00	-1.6	
	12	9442 RRHX	95.0	50	.0	None	1	.00	10.8	.00	-.6	
15	1	User Defined Loading	81.5	5	.1				10.5	.00	.0	.0
	1	BRANCHES (12' MAX.)	86.5	600	66.7	None	1	.00	10.6	.71	-.6	-3.5
	1	BRANCHES (13' MAX.)	81.5	650	72.2	None	1	.00	10.5	.76	-.7	
	1	BRANCHES (13' MAX.)	76.5	650	72.2	None	1	.00	10.3	.75	-.7	
16	1	User Defined Loading	75.0	143	7.7				10.3	.08	-.1	.0
	1	5' X 3IN OMNI	77.5	5	.0	7/8"	1	.54	10.4	.00	.0	
17	1	User Defined Loading	75.8	5	.1				10.3	.00	.0	.0
	1	BRANCHES (14' MAX.)	75.8	700	77.8	None	1	.00	10.3	.80	-.7	

RESULTS

X, ft	Kzt	WIND psf	ICE in	:--- FORCES,kips ---: ShearX	ShearY	AxiaZ|	---MOMENTS,ft-kips---: BendX	BendY	TorqZ|	F'y ksi	Inter 4.8.2
144.00	1.00	7.67	.00	.0	1.21	-1.0	4.4	.0	.0	82.55	.011

SABRE COMMUNICATIONS CORP	JOB: 00-11688	20-Jan-15 13:39
2101 Murray Street	**Insite Towers LLC**	Ph 712.258.6690
Sioux City, IA 51101	**Washington, CT**	Fx 712.258.8250

141.00	1.00	7.63	.00	.0	1.47	-1.6	.7	.0	.0	82.55	.003
139.00	1.00	7.61	.00	.0	2.62	-5.3	-2.3	.0	.0	82.55	.009
134.00	1.00	7.55	.00	.0	2.68	-5.5	-15.5	.0	.0	82.55	.030
132.00	1.00	7.53	.00	.0	2.95	-6.1	-20.8	.0	.0	82.55	.038
127.00	1.00	7.47	.00	.0	2.99	-6.3	-35.6	.0	.0	82.55	.053
126.50	1.00	7.46	.00	.0	4.84	-7.8	-36.8	.0	.0	82.55	.055
125.00	1.00	7.44	.00	.0	6.10	-10.4	-44.1	.0	.0	82.37	.065
121.00	1.00	7.39	.00	.0	7.10	-12.3	-68.6	.0	.0	81.24	.090
120.90	1.00	7.39	.00	.0	7.16	-12.8	-69.3	.0	.0	81.22	.091
115.90	1.00	7.33	.00	.0	7.20	-13.1	-105.1	.0	.0	79.81	.121
115.00	1.00	7.31	.00	.0	8.55	-16.0	-111.6	.0	.0	79.56	.127
114.90	1.00	7.31	.00	.0	8.60	-16.8	-112.4	.0	.0	79.53	.128
111.50	1.00	7.27	.00	.0	10.63	-18.6	-141.4	.0	.0	78.58	.150
106.50	1.00	7.20	.00	.0	10.68	-18.9	-194.6	.0	.0	77.17	.185
105.00	1.00	7.18	.00	.0	11.89	-21.9	-210.7	.0	.0	76.75	.196
100.00	1.00	7.10	.00	.0	11.93	-22.2	-270.1	.0	.0	75.35	.228
99.50	1.00	7.10	.00	.0	11.96	-22.5	-276.1	.0	.0	75.21	.231
96.50	1.00	7.05	.00	.0	14.15	-24.6	-311.8	.0	.0	82.55	.134
95.00	1.00	7.03	.00	.0	15.13	-27.7	-333.0	.0	.0	82.55	.139
94.50	1.00	7.02	.00	.0	15.19	-28.4	-340.6	.0	.0	82.55	.141
89.50	1.00	6.94	.00	.0	15.29	-29.4	-416.5	.0	.0	82.55	.156
84.50	1.00	6.86	.00	.0	15.36	-30.2	-492.9	.0	.0	82.55	.168
81.50	1.00	6.81	.00	.0	17.68	-32.8	-538.8	.0	.0	82.55	.174
76.50	1.00	6.72	.00	.0	17.74	-33.4	-627.3	.0	.0	82.55	.185
75.00	1.00	6.69	.00	.0	17.84	33.9	653.8	.0	.0	82.55	.188
75.75	1.00	6.70	.00	.0	18.71	-35.1	-640.4	.0	.0	82.55	.187
70.75	1.00	6.61	.00	.0	18.80	-36.2	-734.0	.0	.0	82.55	.197
65.75	1.00	6.51	.00	.0	18.89	-37.2	-828.0	.0	.0	82.15	.206
60.75	1.00	6.40	.00	.0	18.98	-38.4	-922.5	.0	.0	81.34	.215
55.75	1.00	6.29	.00	.0	19.05	-39.4	-1017.5	.0	.0	80.54	.223
53.25	1.00	6.23	.00	.0	19.13	-40.7	-1065.0	.0	.0	80.14	.226
48.25	1.00	6.11	.00	.0	19.20	-42.1	-1160.8	.0	.0	82.55	.203
46.00	1.00	6.05	.00	.0	19.27	-43.6	-1204.2	.0	.0	82.40	.205
41.00	1.00	5.91	.00	.0	19.36	-45.4	-1300.0	.0	.0	81.70	.209
36.00	1.00	5.75	.00	.0	19.45	-46.8	-1396.7	.0	.0	81.00	.212
31.00	1.00	5.58	.00	.0	19.55	-48.3	-1494.2	.0	.0	80.30	.215
26.00	1.00	5.38	.00	.0	19.64	-49.9	-1591.7	.0	.0	79.60	.217
21.00	1.00	5.15	.00	.0	19.73	-51.5	-1690.0	.0	.0	78.89	.219
16.00	1.00	4.88	.00	.0	19.83	-53.2	-1789.2	.0	.0	78.19	.221
11.00	1.00	4.76	.00	.0	19.93	-54.9	-1888.3	.0	.0	77.49	.223
6.00	1.00	4.76	.00	.0	20.03	-56.6	-1987.5	.0	.0	76.79	.225
1.00	1.00	4.76	.00	.0	20.09	-57.7	-2087.5	.0	.0	76.09	.226
.00	1.00	4.76	.00	.0	20.10	-57.8	2107.5	.0	.0	75.95	.226

DISPLACEMENTS

ELEV	DEFLECTION feet				ROTATION, degrees				MicroW
X, ft	X	Y	Z	XY-Result	X	Y	Z	XY-Result	AlloW
144.00	.00	2.39	-.03	2.39< 1.66%>	-1.80	.00	.00	1.80	

SABRE COMMUNICATIONS CORP	JOB: 00-11688	20-Jan-15 13:39
2101 Murray Street	**Insite Towers LLC**	Ph 712.258.6690
Sioux City, IA 51101	**Washington, CT**	Fx 712.258.8250

```
FLANGE DESIGN at:   134.0 ft from BASE of POLE [  10.0 ft from TOP]
           SHAPE:    18   SIDED POLYGON
POLE ORIENTATION:   FLAT-FLAT
LOAD ORIENTATION:  ANY LOAD DIRECTION
```

DESIGN CASE = 2 3s Gusted Wind 0.9 Dead

```
DIAMETER #1=    22.38 in.    AXIAL FORCE=    -3.5 kips
PLATE    #1=    .2500 in.    SHEAR X    =      .0 kips
DIAMETER #2=    22.38 in.    SHEAR Y    =    11.8 kips
PLATE    #2=    .2500 in.    X-AXIS MOM =   -68.0 ft-kips
                             Y-AXIS MOM =      .0 ft-kips
                             Z-AXIS MOM =      .0 ft-kips
```

FLANGE BOLTS: **EXTERNAL BC MODEL**

```
AXIAL  Stress         =    28.36 ksi
SHEAR  Stress         =     1.92 ksi
BOLT   AREA (Tension) =      .61 in^2
MOMENT of INERTIA     =      331 in^4
                   CSR =      .451

ALLOW  TENSION Stress =    69.00 ksi [  .75 x Fy]
       SHEAR   Stress =    48.30 ksi [  .75 x Fy x 0.70]
```

A-325 ::: BOLT DESIGN USED			
8 Bolts	1.00	in.	BOLT DIAMETER
	92.00	ksi	Fy YIELD STRENGTH
	120.00	ksi	Fu ULTIMATE STRENGTH
	23.375	in.	BOLT CIRCLE — SHIP
	8.95	in.	CHORD LENGTH — WEIGHT
	45.00°		ARC ANGLE — 8 lbs

PLATE DESIGN

```
                                Upper-PL   Lower-PL
THICKNESS   Reqd      =            .34        .34 in.
BENDING   Stress      =           8.27       8.27 ksi
TENSION   Stress      =            .80        .80 ksi
COMBINED  Ratio       =            .21        .21
ALLOWABLE Stress (Fa) =          45.00      45.00 ksi  [Fy x  .90]
```

:: FLANGE PLATE DESIGN USED		
.750	in.	THICK
29.625	in.	OUTSIDE ROUND
50.00	ksi	YIELD STRENGTH
17.000	in.	CENTER HOLE
192	lbs.	SHIP WEIGHT (both)

LOAD CASE SUMMARY

	RESULTANTS				BOLT STRESS		Flange-UP Stress		Flange-DW Stress	
Case	Axial kips	Shear kips	Moment ft-kips	Torq-Z ft-kips	Actual CSR	Allow ksi	Actual ksi	Allow ksi	Actual ksi	Allow ksi
1	-5.11	12.05	69.4	.0	.451	69.00	9.24	45.00	9.24	45.00
2	-3.48	11.81	68.0	.0	.446	69.00	9.07	45.00	9.07	45.00
3	-7.45	1.57	8.9	.0	.038	69.00	1.88	45.00	1.88	45.00
4	-5.46	2.68	15.5	.0	.087	69.00	2.68	45.00	2.68	45.00

SABRE COMMUNICATIONS CORP	JOB: 00-11688	20-Jan-15 13:39
2101 Murray Street	**Insite Towers LLC**	Ph 712.258.6690
Sioux City, IA 51101	**Washington, CT**	Fx 712.258.8250

```
SHAPE: 18 SIDED POLYGON with  FLAT-FLAT  ORIENTATION
BOLTS:  EVENLY  SPACED BOLTS    8.83 in. ON CENTER
LOCATE:
```

POLE DATA

```
DIAMETER =   66.31 in.      BASE      AXIAL FORCE=   -70.3 kips    Vert
PLATE    =   .5000 in.      ACTIONS   SHEAR X    =    90.0 kips    Long
TAPER    =   .3381 in/ft              SHEAR Y    =       .0 kips    Tran
POLE Fy  =   65.00 ksi                X-AXIS MOM =  6692.9 ft-kips Tran
                                      Y-Axis MOM =  6692.9 ft-kips Long
                                      Z-Axis MOM =      .0 ft-kips Vert
```

DESIGN CASE = 1 3s Gusted Wind

Design: ANY Orientation Reactions at 45.00 deg to X-AXIS

BOLT LOADS

```
                AXIAL - COMPRESSION       = 241.30 kips
                AXIAL - TENSION           = 235.89 kips
                SHEAR                     =   3.46 kips
        AXIAL   STRESS                    =  74.24 ksi
        SHEAR   STRESS                    =   1.13 ksi
        YIELD   STRENGTH Fy               =  75.00 ksi
         ULT.   STRENGTH Fu               = 100.00 ksi      Interaction
        ALLOW   STRESS   Fa [ .80 x 1.00] =  80.00 ksi     .956  TIA-G
                SHEAR    Fv [ .80 x  .40] =  32.00 ksi

                TENSION AREA REQUIRED     =   3.02 in^2
                TENSION AREA FURNISHED    =   3.25 in^2
                ROOT    AREA FURNISHED    =   3.07 in^2
```

A615 ::: ANCHOR BOLT DESIGN USED					
26	Bolts on a	73.250	in.	Bolt Circle	SHIP
2.250	in. Diameter	67.13	in.	Embedded	(lbs)
12.00	in. Exposed	84.00	in.	Total Length	3456

CONCRETE - Fc= 4000 psi

ANCHOR BOLTS are STRAIGHT w\ UPLIFT NUT

BASE PLATE

```
[Bend Model:  1/4 Circ ]
YIELD STRENGTH   =    50.0 ksi
BEND LINE WIDTH  =    48.6 in.
PLATE MOMENT     =  4334.5 in-k
  THICKNESS REQD =   2.817 in.
  BENDING STRESS =    39.7 ksi
ALLOWABLE STRESS =    45.0 ksi
       [Fy x  .90 x 1.00]
```

BASE PLATE USED			
3.00	in.	THICK	SHIP
79.25	in.	ROUND	(lbs)
53.75	in.	CENTER HOLE	2137

LOAD CASE SUMMARY

	FORCES-(kips)			MOMENTS-(ft-k)			ABolt-Str	Allow	Plate-Str Actual	Allow	Design
LC	Axial	ShearX	ShearY	X-axis	Y-axis	TorQ	CSR	ksi	ksi	ksi	Code
1	70.3	90.0	.0	9466	0	0	.956	75.00	39.66	45.00	TIA-G
2	52.9	90.0	.0	9391	0	0	.946	75.00	39.23	45.00	TIA-G
3	86.5	12.3	.0	1247	0	0	.138	75.00	5.76	45.00	TIA-G
4	57.8	20.1	.0	2107	0	0	.219	75.00	9.12	45.00	TIA-G