PROJECT NARRATIVE

October 25, 2021

Melanie A. Bachman
Executive Director
Connecticut Siting Council
10 Franklin Square
New Britain, CT 06051

Re: Request of DISH Wireless LLC for an Order to Approve the Shared Use of an Existing Tower
777 Talcotville Road Vernon Rockville, CT 06066
Latitude: 41'51'48.4" / Longitude: -72'28'59.8"

Dear Ms. Bachman:

Pursuant to Connecticut General Statutes ("C.G.S.") §16-50aa, as amended, DISH Wireless LLC ("DISH") hereby requests an order from the Connecticut Siting Council ("Council") to approve the shared use by DISH of an existing telecommunication tower at 777 Talcotville Road in Vernon Rockville (the "Property"). The existing 160-foot monopole tower is owned by American Tower Corporation ("ATC"). The underlying property is owned by 777 Realty LLC. DISH requests that the Council find that the proposed shared use of the ATC tower satisfies the criteria of C.G.S. §16-50aa and issue an order approving the proposed shared use. A copy of this filing is being sent to Daniel A. Champagne, Mayor for the Town of Vernon, Steven Prattson, Town of Vernon Building Official & 777 Realty LLC as the property owner.

Background

The existing ATC facility consists of a 160-foot monopole tower located within an existing leased area. Verizon Wireless currently maintains antennas at the 150-foot level. AT&T Mobility currently maintains antennas at the 142-foot level. Sprint/Nextel currently maintains antennas at the 130-foot level. Metro PCS currently maintains antennas at the 120-foot level. Equipment associated with these antennas are located at various positions within the tower and compound.

DISH is licensed by the Federal Communications Commission ("FCC") to provide wireless services throughout the State of Connecticut. DISH and Crown Castle have agreed to the proposed shared use of the 777 Talcotville Road tower pursuant to mutually acceptable terms and conditions. Likewise, DISH and ATC have agreed to the proposed installation of equipment cabinets on the ground on the south side of the tower within the existing compound. ATC has authorized DISH to apply for all necessary permits and approvals that may be required to share the existing tower. (See attached Letter of Authorization)

DISH proposes to install three (3) antennas, (1) Tower platform mount, (6) Remote radio units at the 107-foot level along with, (1) over voltage protection device (OVP) and (1) Hybrid cable. DISH will install an equipment cabinet on a 5'x7' equipment platform. DISH's Construction Drawings provide project specifications for all proposed site improvement locations.
The construction drawings also include specifications for DISH's proposed antenna and groundwork.

C.G.S. § 16-50aa(c)(1) provides that, upon written request for approval of a proposed shared use, "if the Council finds that the proposed shared use of the facility is technically, legally, environmentally and economically feasible and meets public safety concerns, the council shall issue an order approving such a shared use." DISH respectfully submits that the shared use of the tower satisfies these criteria.

A. Technical Feasibility. The existing ATC tower is structurally capable of supporting DISH's proposed improvements. The proposed shared use of this tower is, therefore, technically feasible. A Feasibility Structural Analysis Report ("Structural Report") prepared for this project confirms that this tower can support DISH's proposed loading. A copy of the Structural Report has been included in this application.

B. Legal Feasibility. Under C.G.S. § 16-50aa, the Council has been authorized to issue order approving the shared use of an existing tower such as the ATC tower. This authority complements the Council's prior-existing authority under C.G.S. § 16-50p to issue orders approving the construction of new towers that are subject to the Council's jurisdiction. In addition, § 16-50x(a) directs the Council to "give such consideration to the other state laws and municipal regulations as it shall deem appropriate" in ruling on requests for the shared use of existing tower facilities. Under the statutory authority vested in the Council, an order by the Council approving the requested shared use would permit the Applicant to obtain a building permit for the proposed installations.

C. Environmental Feasibility. The proposed shared use of the ATC tower would have a minimal environmental effect for the following reasons:

1. The proposed installation will have no visual impact on the area of the tower. DISH's equipment cabinet would be installed within the existing facility compound. DISH's shared use of this tower therefore will not cause any significant change or alteration in the physical or environmental characteristics of the existing site.

2. Operation of DISH's antennas at this site would not exceed the RF emissions standard adopted by the Federal Communications Commission ("FCC"). Included in the EME report of this filing are the approximation tables that demonstrate that DISH's proposed facility will operate well within the FCC RF emissions safety standards.

3. Under ordinary operating conditions, the proposed installation would not require the use of any water or sanitary facilities and would not generate air emissions or discharges to water bodies or sanitary facilities. After construction is complete the proposed installations would not generate any increased traffic to the ATC facility other than periodic maintenance. The proposed shared use of the ATC tower, would, therefore, have a minimal environmental effect, and is environmentally feasible.

D. **Economic Feasibility**. As previously mentioned, DISH has entered into an agreement with ATC for the shared use of the existing facility subject to mutually agreeable terms. The proposed tower sharing is, therefore, economically feasible.

E. **Public Safety Concerns**. As discussed above, the tower is structurally capable of supporting DISH's full array of three (3) antennas, (1) Tower platform mount, (6) Remote radio units, (1) over voltage protection device (OVP) and (1) Hybrid cable and all related equipment. DISH is not aware of any public safety concerns relative to the proposed sharing of the existing ATC tower

Conclusion

For the reasons discussed above, the proposed shared use of the existing ATC tower at 777 Talcotville Road satisfies the criteria stated in C.G.S. §16-50aa and advances the Council's goal of preventing the unnecessary proliferation of towers in Connecticut. The Applicant, therefore, respectfully requests that the Council issue an order approving the prosed shared use.

Sincerely,

David Hoogasian

David Hoogasian
Project Manager

LETTER OF AUTHORIZATION

AMERICAN TOWER®
CORPORATION

LETTER OF AUTHORIZATION
LICENSEE: DISH WIRELESS L.L.C.

I, Margaret Robinson, Senior Counsel for American Tower*, owner/operator of the tower facility located at the address identified above (the "Tower Facility"), do hereby authorize DISH WIRELESS L.L.C., its successors and assigns, and/or its agent, (collectively, the "Licensee") to act as American Tower's non-exclusive agent for the sole purpose of filing and consummating any land-use or building permit application(s) as may be required by the applicable permitting authorities for Licensee's telecommunications' installation.

We understand that this application may be denied, modified or approved with conditions. The above authorization is limited to the acceptance by Licensee only of conditions related to Licensee's installation and any such conditions of approval or modifications will be Licensee's sole responsibility.

*American Tower includes all affiliates and subsidiaries of American Tower Corporation.

Project #	ATC Site #	ATC Site Name	ATC Site Address
13688133	208450	Enfield	1A Ecology Drive, Enfield CT
13700322	209115	Ridgefield 2	320 Old Stagecoach Road, Ridgefield, CT
13688136	209185	Burlington 2	87 Monce Road, Burlington CT
13700320	209271	Brookfield 2	100 Pocono Road, Brookfield CT
13693702	243036	WEST HAVEN & RT 162 CT	668 Jones Hill Road, West Haven CT
13693677	280501	ROXBURY CT	377 Southbury Road, Roxbury CT
13685406	281416	WILLINGTON CT	196 Tolland Turnpike, Willington CT
13709418	281862	BRIDGEWATER CT	111 SECOND HILL RD, Bridgewater CT
13693659	283418	NORTH HAVEN CT	50 Devine Street, North Haven CT
13694329	283419	PINE ORCHARD BRANFORD CT	123 Pine Orchard Road, Branford CT
13694332	283422	SHORT BEACH BRANFORD CT	171 Short Beach Road, Branford CT
13698427	283423	NAUGATUCK CT	880 Andrew Mountain Road, Naugatuck CT
13685464	283563	MANSFIELD CT	343 Daleville Road, Willington CT
13692735	284983	OLD LYME CT	61-1 Buttonball Road, Old Lyme CT
13693120	284984	PAWCATUCK CT	166 Pawcatuck Ave, Pawcatuck CT
13693144	284988	GUILFORD CT	Moose Hill Road, Guilford CT
13694582	302465	Colchester CT 6	355 Route 85, Colchester CT
13683501	302468	Petro Lock	99 Meadow St, Hartford CT
13685427	302469	Bridgeport CT 2	1069 Connecticut Avenue, Bridgeport CT
13683503	302472	Andover-bunker Hill Road	104 Bunker Hill Road, Andover CT
13683507	302473	E H F R - Prestige Park	310 Prestige Park Road, East Hartford CT

AMERICAN TOWER®
CORPORATION

Project #	ATC Site #	ATC Site Name	ATC Site Address
13683510	302474	South Windsor	391 Niederwerfer Road, South Windsor CT
13683513	302483	Brln - Berlin	286 Beckley Road, Berlin CT
13692185	302488	Cntn - Canton	4 Hoffmann Road, Canton CT
13692173	302495	Tolland CT	56 Ruops Road, Tolland CT
13694579	302496	Clch - Colchester	Chestnut Hill Road, Colchester CT
13701212	302501	Plymouth CT 3	297 North Street, Plymouth CT
13685414	302515	SMFR - North	5 High Ridge Park Road, Stamford CT
13702496	302516	Mlfd - Milford	438 Bridgeport Ave, Milford CT
13688395	302518	Newtown CT 3	25 Meridian Ridge Drive, Newton CT
13692174	302529	Vernon CT 6	777 Talcotville Road, Vernon Rockville CT
13693124	311014	NORWICH CT	202 N Wawecus Hill Rd, Norwich CT
13702522	311305	GLFD-GUILFORD REBUILD CT	10 Tanner Marsh Road, Guilford CT
13693127	370623	MONTVILLE CT	139 Sharp Hill Road, Uncasville CT
13681964	370625	Old Saybrook	77 Springbrook Road, Old Saybrook CT
13702535	383660	North Madison Volunteer FD	864 Opening Hill Road, Madison CT
13702538	411180	Good Hill CT	481 GOOD HILL ROAD, Woodbury CT
13693709	411182	Nepaug CT	20 Antolini Road, New Hartford CT
13693131	411183	WATERFORD CT	53 Dayton Rd., Waterford CT
13693135	411184	SALEM CT SQA	399 West Road, Salem CT
13692177	411186	West Granby, CT CT	207 West Granby Road, Granby CT
13692178	411187	Hartford North 2 CT	811 Blue Hills Avenue, Bloomfield CT
13693705	411188	Southbury CT	111 Upper Fishrock Road, Southbury CT
13692179	411256	CANTON CT	14 CANTON SPRINGS ROAD, Canton CT
13681988	411257	Middle Haddam Road-CROWN CT	191 Middle Haddam Rd, Portland CT
13692180	411258	Farmington North 2 CT	199 Town Farm Road, Farmington CT
13692182	411259	CT Collinsville CAC 802816 CT	650 Albany Turnpike, Collinsville CT
13692184	416862	SUFFIELD SW CT CT	106 South Grand St., West Suffield CT
13694578	6260	NORTH STONINGTON CT	118C Wintechog Hill Rd., off of Rt. 2, North Stonington CT
13681397	88013	Killingworth	131 Little City Road, Killingworth CT

Signature:

Print Name: Margaret Robinson
Senior Counsel
American Tower*

AMERICAN TOWER®
CORPORATION

LETTER OF AUTHORIZATION
LICENSEE: DISH WIRELESS L.L.C.

NOTARY BLOCK

Commonwealth of MASSACHUSETTS
County of Middlesex

This instrument was acknowledged before me by Margaret Robinson, Senior Counsel for American Tower*, personally known to me (or proved to me on the basis of satisfactory evidence) to be the person whose name is subscribed to the within instrument and acknowledged to me that he executed the same.

WITNESS my hand and official seal, this 10th day of September 2021.

NOTARY SEAL

MELISSA ANN METZLER
Notary Public
Commonwealth of Massachusetts
My Commission Expires March 14, 2025

Notary Public _____
My Commission Expires: March 14, 2025

ENGINEERING DRAWINGS

DISH WIRELESS, LLC. SITE ID:

BOBDL00017A

DISH WIRELESS, LLC. SITE ADDRESS:

777 TALCOTVILLE ROAD
VERNONROCKVILLE,CT 06066

SCOPE OF WORK

THIS IS NOT AN ALL INCLUSIVE LIST. CONTRACTOR SHALL UTILIZE SPECIFIED EQUIPMENT PART OR ENGINEER APPROVED EQUIVALENT. CONTRACTOR SHALL VERIFY ALL NEEDED EQUIPMENT TO PROVIDE A FUNCTIONAL SITE. THE PROJECT GENERALLY CONSISTS OF THE FOLLOWING:

TOWER SCOPE OF WORK:
- INSTALL (3) PROPOSED PANEL ANTENNAS (1 PER SECTOR)
- INSTALL (1) PROPOSED ANTENNA PLATFORM MOUNT
- INSTALL PROPOSED JUMPERS
- INSTALL (6) PROPOSED RRUs (2 PER SECTOR)
- INSTALL (1) PROPOSED OVER VOLTAGE PROTECTION DEVICE (OVP)
- INSTALL (1) PROPOSED HYBRID CABLE (LENGTH: 120'-0")

GROUND SCOPE OF WORK:
- INSTALL (1) PROPOSED STEEL PLATFORM
- INSTALL (1) PROPOSED ICE BRIDGE
- INSTALL (1) PROPOSED PPC CABINET
- INSTALL (1) PROPOSED EQUIPMENT CABINET
- INSTALL (1) PROPOSED POWER CONDUIT
- INSTALL (1) PROPOSED TELCO CONDUIT
- INSTALL (1) PROPOSED TELCO-FIBER BOX
- INSTALL (1) PROPOSED GPS UNIT
- INSTALL (1) PROPOSED SAFETY SWITCH (IF REQUIRED)
- INSTALL (1) PROPOSED CIENA BOX (IF REQUIRED)

SITE INFORMATION

PROPERTY OWNER:	777 REALTY LLC
ADDRESS:	777 TALCOTVILLE ROAD VERNONROCKVILLE, CT 06066
TOWER TYPE:	MONOPOLE
TOWER CO SITE ID:	302529
TOWER APP NUMBER:	13692174_D2
COUNTY:	TOLLAND
LATITUDE (NAD 83):	41°51'48.4"N 41.863453
LONGITUDE (NAD 83):	72°28'59.8"W -72.483283
ZONING JURISDICTION:	CITY OF VERNON
ZONING DISTRICT:	I
PARCEL NUMBER:	07000200078
OCCUPANCY GROUP:	U
CONSTRUCTION TYPE:	V-B
POWER COMPANY:	EVERSOURCE
TELEPHONE COMPANY:	FRONTIER COMMUNICATIONS

PROJECT DIRECTORY

APPLICANT:	DISH WIRELESS, LLC. 5701 SOUTH SANTA FE DRIVE LITTLETON, CO 80120
TOWER OWNER:	AMERICAN TOWER 10 PRESIDENTIAL WAY WOBURN, MA 01801
SITE DESIGNER:	FULLERTON ENGINEERING 1100 E WOODFIELD, STE 500 SCHAUMBURG, IL 60173 (847) 908-8400
SITE ACQUISITION:	APRIL PARROTT
CONSTRUCTION MANAGER:	JAVIER SOTO javier.soto@dish.com
RF ENGINEER:	BOSSENER CHARLES bossener.charles@dish.com

CODE COMPLIANCE

ALL WORK SHALL BE PERFORMED AND MATERIALS INSTALLED IN ACCORDANCE WITH THE CURRENT EDITIONS OF THE FOLLOWING CODES AS ADOPTED BY THE LOCAL GOVERNING AUTHORITIES. NOTHING IN THESE PLANS IS TO BE CONSTRUED TO PERMIT WORK NOT CONFORMING TO THESE CODES:

CODE TYPE	CODE
BUILDING	2018 CT STATE BUILDING CODE/2015 IBC W/ CT AMENDMENTS
MECHANICAL	2018 CT STATE BUILDING CODE/2015 IMC W/ CT AMENDMENTS
ELECTRICAL	2018 CT STATE BUILDING CODE/2017 NEC W/ CT AMENDMENTS

SITE PHOTO

DIRECTIONS

DIRECTIONS FROM BRADLEY INTERNATIONAL AIRPORT:

CONTINUE TO BRADLEY INTERNATIONAL AIRPORT CON
TAKE CT-20 E AND I-91 N TO TROMLEY RD IN EAST WINDSOR
CONTINUE ON TROMLEY RD. TAKE APOTHECARIES HALL RD TO WAPPING RD
TAKE ROCKVILLE RD AND WINDSORVILLE RD TO VERNON GARDENS DR IN VERNON
FOLLOW VERNON GARDENS DR TO YOUR DESTINATION

SHEET INDEX

SHEET NO.	SHEET TITLE
T-1	TITLE SHEET
LS1	SITE SURVEY
A-1	OVERALL AND ENLARGED SITE PLAN
A-2	ELEVATION, ANTENNA LAYOUT AND SCHEDULE
A-3	EQUIPMENT PLATFORM AND H-FRAME DETAILS
A-4	EQUIPMENT DETAILS
A-5	EQUIPMENT DETAILS
A-6	EQUIPMENT DETAILS
E-1	ELECTRICAL/FIBER ROUTE PLAN AND NOTES
E-2	ELECTRICAL DETAILS
E-3	ELECTRICAL ONE-LINE, FAULT CALCS, & PANEL SCHEDULE
G-1	GROUNDING PLANS AND NOTES
G-2	GROUNDING DETAILS
G-3	GROUNDING DETAILS
RF-1	RF CABLE COLOR CODE
GN-1	LEGEND AND ABBREVIATIONS
GN-2	GENERAL NOTES
GN-3	GENERAL NOTES
GN-4	GENERAL NOTES

UNDERGROUND SERVICE ALERT CBYD 811
UTILITY NOTIFICATION CENTER OF CONNECTICUT
(800) 922-4455
WWW.CBYD.COM

CALL 2 WORKING DAYS UTILITY NOTIFICATION PRIOR TO CONSTRUCTION

811

GENERAL NOTES

THE FACILITY IS UNMANNED AND NOT FOR HUMAN HABITATION. A TECHNICIAN WILL VISIT THE SITE AS REQUIRED FOR ROUTINE MAINTENANCE. THE PROJECT WILL NOT RESULT IN ANY SIGNIFICANT DISTURBANCE OR EFFECT ON DRAINAGE. NO SANITARY SEWER SERVICE, POTABLE WATER, OR TRASH DISPOSAL IS REQUIRED AND NO COMMERCIAL SIGNAGE IS PROPOSED.

11"x17" PLOT WILL BE HALF SCALE UNLESS OTHERWISE NOTED

CONTRACTOR SHALL VERIFY ALL PLANS, EXISTING DIMENSIONS, AND CONDITIONS ON THE JOB SITE, AND SHALL IMMEDIATELY NOTIFY THE ENGINEER IN WRITING OF ANY DISCREPANCIES BEFORE PROCEEDING WITH THE WORK.

VICINITY MAP

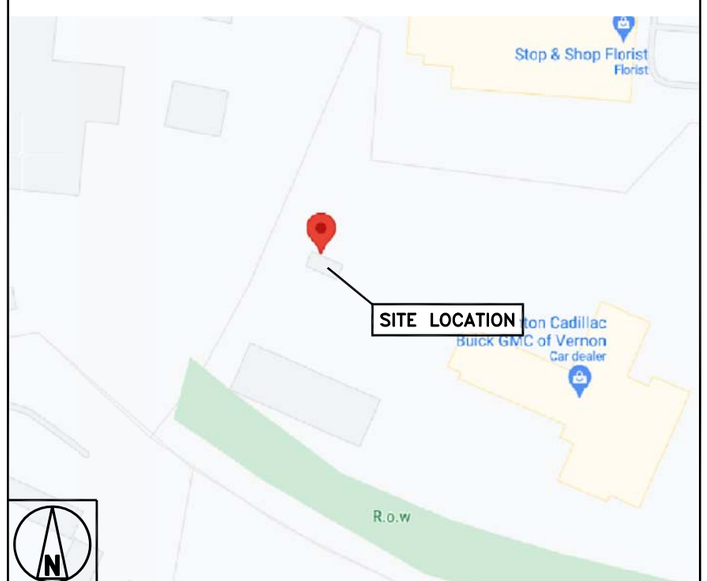

NO SCALE

5701 SOUTH SANTA FE DRIVE
LITTLETON, CO 80120

FULLERTON
ENGINEERING · DESIGN

1100 E. WOODFIELD ROAD, SUITE 500
SCHAUMBURG, ILLINOIS 60173
TEL: 847-908-8400
COA# E-2488
www.FullertonEngineering.com

IT IS A VIOLATION OF LAW FOR ANY PERSON, UNLESS THEY ARE ACTING UNDER THE DIRECTION OF A LICENSED PROFESSIONAL ENGINEER, TO ALTER THIS DOCUMENT.

DRAWN BY:	CHECKED BY:	APPROVED BY:
KB	KR	DS

RFDS REV #: ---

CONSTRUCTION DOCUMENTS

SUBMITTALS

REV	DATE	DESCRIPTION
A	07/27/2021	ISSUED FOR REVIEW
0	09/09/2021	ISSUED FOR CONSTRUCTION

A&E PROJECT NUMBER
2021.0102.0162

DISH WIRELESS, LLC.
PROJECT INFORMATION
BOBDL00017A
777 TALCOTVILLE ROAD
VERNONROCKVILLE,CT 06066

SHEET TITLE
TITLE SHEET

SHEET NUMBER
T-1

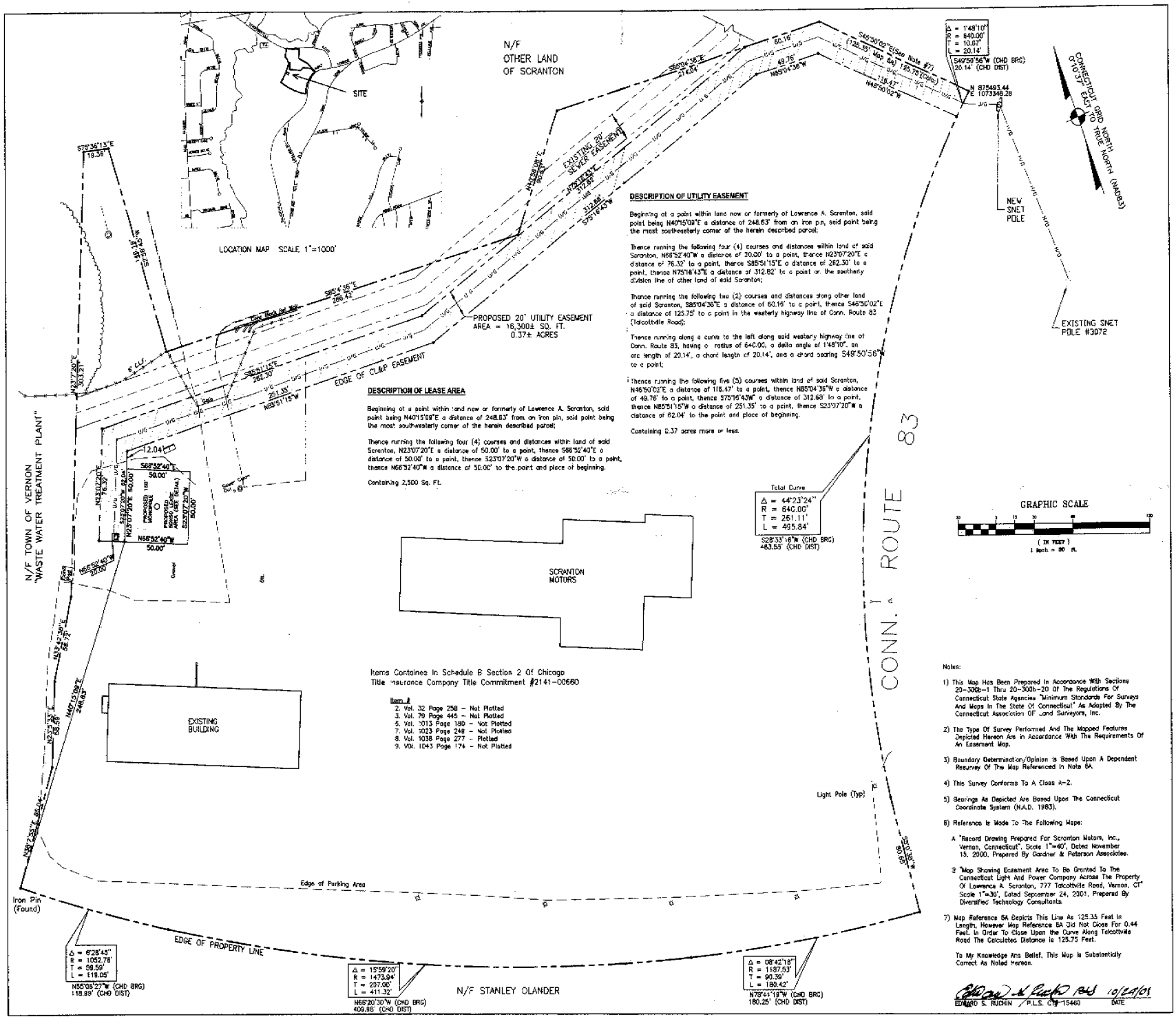

DESCRIPTION OF UTILITY EASEMENT

Beginning at a point within land now or formerly of Lawrence A. Scranton, said point being N40°15'09"E a distance of 248.63' from an iron pin, said point being the most southeasterly corner of the herein described parcel;

Thence running the following four (4) courses and distances within land of said Scranton, N66°52'40"W a distance of 20.00' to a point, thence N23°07'20"E a distance of 76.32' to a point, thence S85°51'15"E a distance of 282.30' to a point, thence N75°16'43"E a distance of 312.82' to a point on the southerly division line of other land of said Scranton;

Thence running the following two (2) courses and distances along other land of said Scranton, S85°04'36"E a distance of 60.16' to a point, thence S46°50'02"E a distance of 125.75' to a point in the westerly highway line of Conn. Route 83 (Talcottville Road);

Thence running along a curve to the left along said westerly highway line of Conn. Route 83, having a radius of 640.00, a delta angle of 1°48'10", an arc length of 20.14', a chord length of 20.14', and a chord bearing S49°50'56"W to a point;

Thence running the following five (5) courses within land of said Scranton, N46°50'02"E a distance of 116.47' to a point, thence N85°04'36"W a distance of 49.76' to a point, thence S75°16'43"W a distance of 312.68' to a point, thence N85°51'15"W a distance of 251.35' to a point, thence S23°07'20"W a distance of 62.04' to the point and place of beginning.

Containing 0.37 acres more or less.

DESCRIPTION OF LEASE AREA

Beginning at a point within land now or formerly of Lawrence A. Scranton, said point being N40°15'09"E a distance of 248.63' from an iron pin, said point being the most southwesterly corner of the herein described parcel;

Thence running the following four (4) courses and distances within land of said Scranton, N23°07'20"E a distance of 50.00' to a point, thence S66°52'40"E a distance of 50.00' to a point, thence S23°07'20"W a distance of 50.00' to a point, thence N66°52'40"W a distance of 50.00' to the point and place of beginning.

Containing 2,500 Sq. Ft.

Items Contained In Schedule B Section 2 Of Chicago Title Insurance Company Title Commitment #2141-00660

Item #
2. Vol. 32 Page 258 - Not Plotted
3. Vol. 79 Page 445 - Not Plotted
6. Vol. 1013 Page 180 - Not Plotted
7. Vol. 1023 Page 248 - Not Plotted
8. Vol. 1038 Page 277 - Plotted
9. Vol. 1043 Page 174 - Not Plotted

Notes:

1) This Map Has Been Prepared In Accordance With Sections 20-300b-1 Thru 20-300b-20 Of The Regulations Of Connecticut State Agencies "Minimum Standards For Surveys And Maps In The State Of Connecticut" As Adopted By The Connecticut Association Of Land Surveyors, Inc.

2) The Type Of Survey Performed And The Mapped Features Depicted Hereon Are In Accordance With The Requirements Of An Easement Map.

3) Boundary Determination/Opinion Is Based Upon A Dependent Resurvey Of The Map Referenced In Note 6A.

4) This Survey Conforms To A Class A-2.

5) Bearings As Depicted Are Based Upon The Connecticut Coordinate System (N.A.D. 1983).

6) Reference Is Made To The Following Maps:

A "Record Drawing Prepared For Scranton Motors, Inc., Vernon, Connecticut", Scale 1"=40', Dated November 15, 2000, Prepared By Gardner & Peterson Associates.

B "Map Showing Easement Area To Be Granted To The Connecticut Light And Power Company Across The Property Of Lawrence A. Scranton, 777 Talcottville Road, Vernon, CT" Scale 1"=30', Dated September 24, 2001, Prepared By Diversified Technology Consultants.

7) Map Reference 6A Depicts This Line As 125.35 Feet In Length, However Map Reference 6A Did Not Close For 0.44 Feet. In Order To Close Upon the Curve Along Talcottville Road The Calculated Distance Is 125.75 Feet.

To My Knowledge And Belief, This Map Is Substantially Correct As Noted Hereon.

EDWARD S. RUCHIN / P.L.S. CT# 15460 — DATE 10/24/01

NOTES

REVISIONS

DIVERSIFIED TECHNOLOGY CONSULTANTS
888 WASHINGTON AVENUE, NORTH HAVEN, CT 06473
203.234.0201 203.234.1376 FAX

TITLE REPORT MAP
PORTION OF PROPERTY
OF
LAWRENCE A.
SCRANTON
777 TALCOTTVILLE RD
VERNON, CT

EASEMENT MAP

PREPARED FOR NEXTEL COMMUNICATIONS

NEXTEL SPECTRA SITE
DWG. NAME: 88403-NEXTEL.DWG

SCALE: 1"=30'	DRAWN BY: MAA
DATE: 10-23-01	CHECKED BY: ESR

STATE OF CONNECTICUT — EDWARD S. RUCHIN — LICENSED — LAND SURVEYOR

SHEET: 1 OF 1

NOTES

1. CONTRACTOR SHALL FIELD VERIFY ALL DIMENSIONS.
2. ANTENNAS AND MOUNTS OMITTED FOR CLARITY.

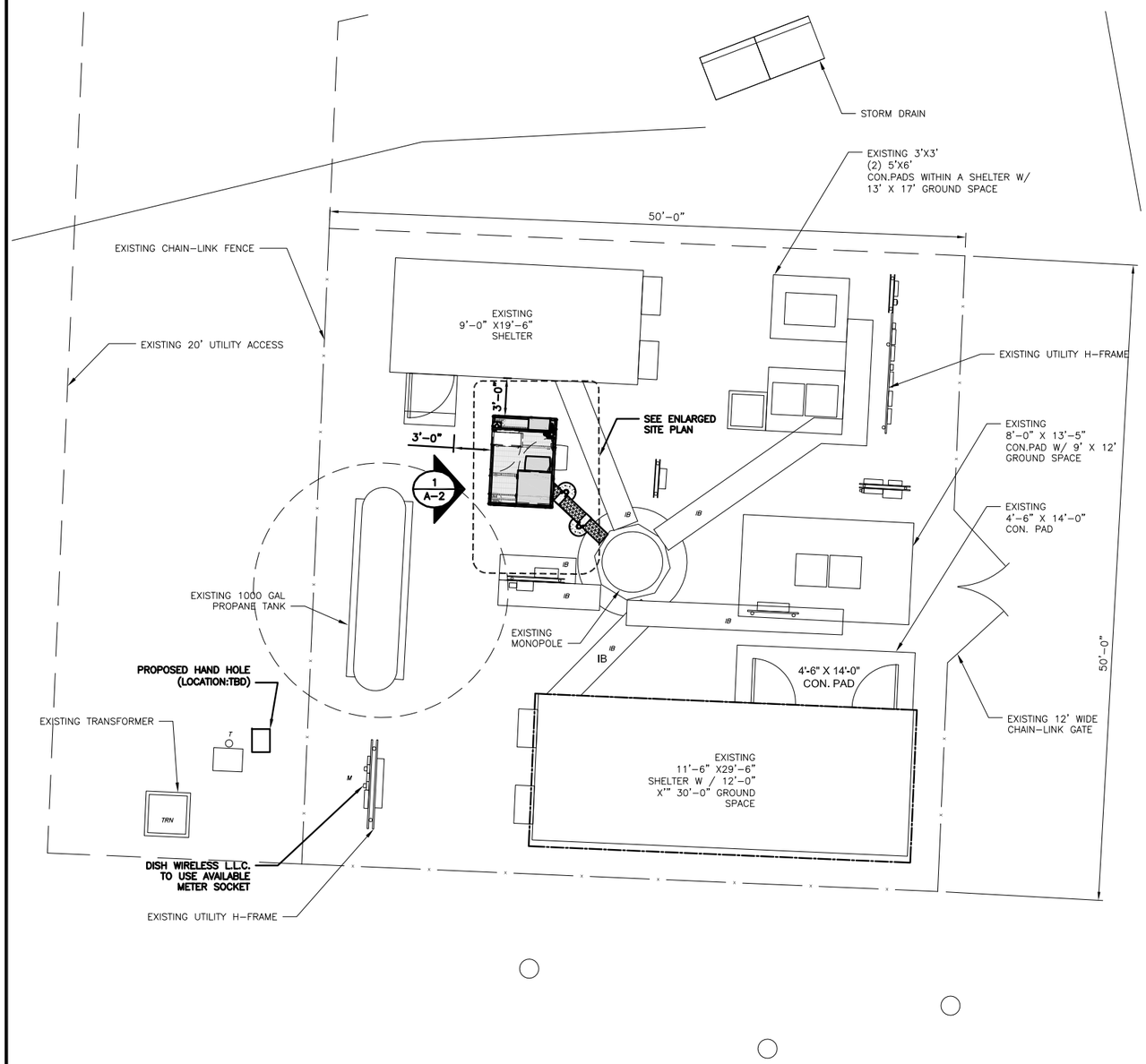

SITE PLAN

6' 4' 2' 0 5' 10'
3/16"=1'-0"

1

NOTES

1. CONTRACTOR SHALL FIELD VERIFY ALL DIMENSIONS.
2. CONTRACTOR SHALL MAINTAIN A 10'-0" MINIMUM SEPARATION BETWEEN THE PROPOSED GPS UNIT, TRANSMITTING ANTENNAS AND EXISTING GPS UNITS.
3. ANTENNAS AND MOUNTS OMITTED FOR CLARITY.

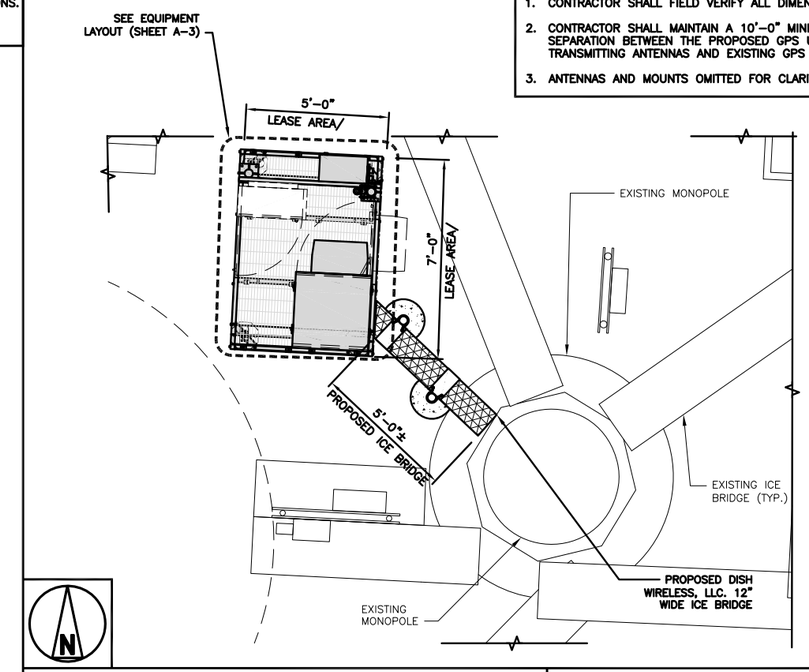

ENLARGED SITE PLAN

12" 6" 0 1' 2' 3' 4' 5' 6' 7'
3/8"=1'-0"

2

OVERALL SITE PLAN

NO SCALE

3

dish wireless.

5701 SOUTH SANTA FE DRIVE
LITTLETON, CO 80120

FULLERTON
ENGINEERING · DESIGN

1100 E. WOODFIELD ROAD, SUITE 500
SCHAUMBURG, ILLINOIS 60173
TEL: 847-908-8400
COA# E-2488
www.FullertonEngineering.com

IT IS A VIOLATION OF LAW FOR ANY PERSON, UNLESS THEY ARE ACTING UNDER THE DIRECTION OF A LICENSED PROFESSIONAL ENGINEER, TO ALTER THIS DOCUMENT.

DRAWN BY:	CHECKED BY:	APPROVED BY:
KB	KR	DS

RFDS REV #: ---

CONSTRUCTION DOCUMENTS

SUBMITTALS

REV	DATE	DESCRIPTION
A	07/27/2021	ISSUED FOR REVIEW
0	09/09/2021	ISSUED FOR CONSTRUCTION

A&E PROJECT NUMBER
2021.0102.0162

DISH WIRELESS, LLC.
PROJECT INFORMATION

BOBDL00017A
777 TALCOTVILLE ROAD
VERNONROCKVILLE,CT 06066

SHEET TITLE
OVERALL AND ENLARGED SITE PLAN

SHEET NUMBER
A-1

NOTES

1. CONTRACTOR SHALL FIELD VERIFY ALL DIMENSIONS.
2. ANTENNA AND MW DISH SPECIFICATIONS REFER TO ANTENNA SCHEDULE AND TO FINAL CONSTRUCTION RFDS FOR ALL RF DETAILS
3. EXISTING EQUIPMENT AND FENCE OMITTED FOR CLARITY.

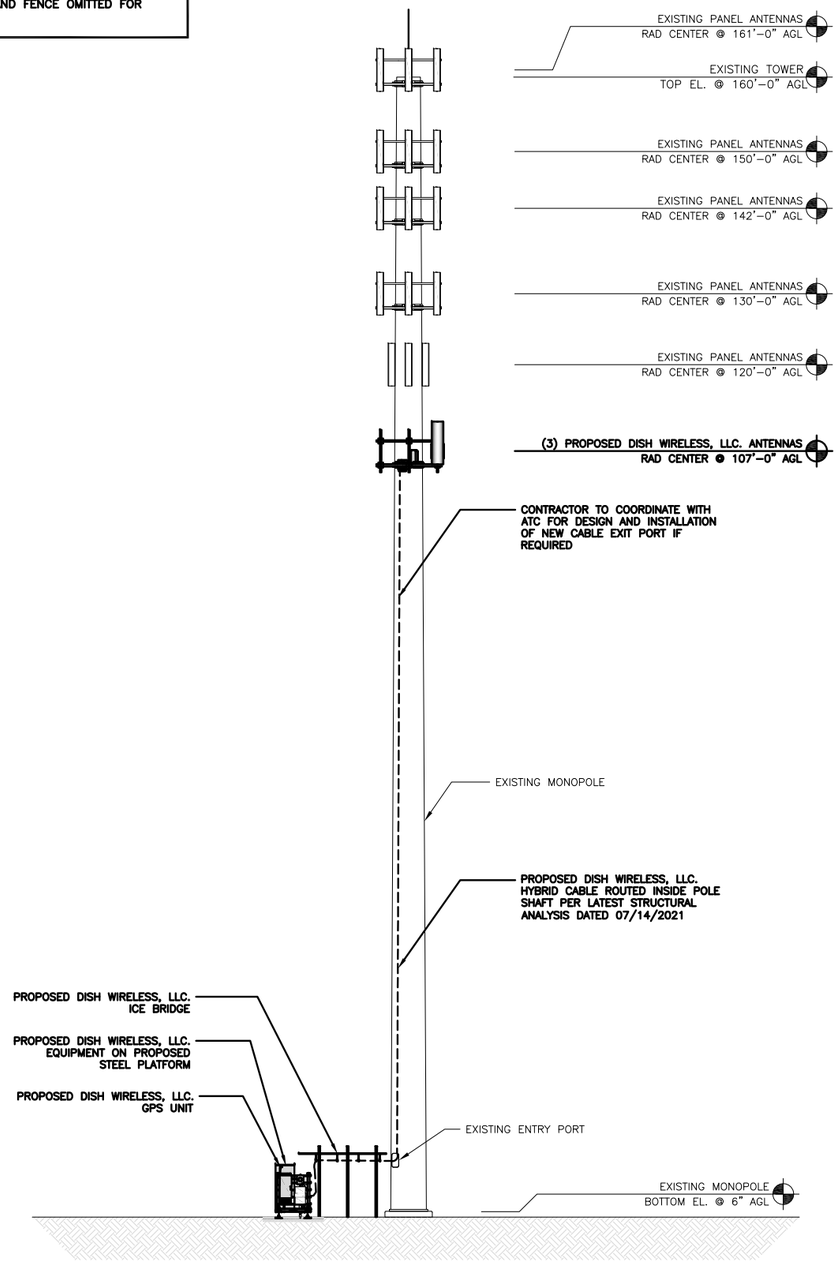

PROPOSED WEST ELEVATION

12' 8' 4' 0 10' 20'
3/32"=1'-0"

1

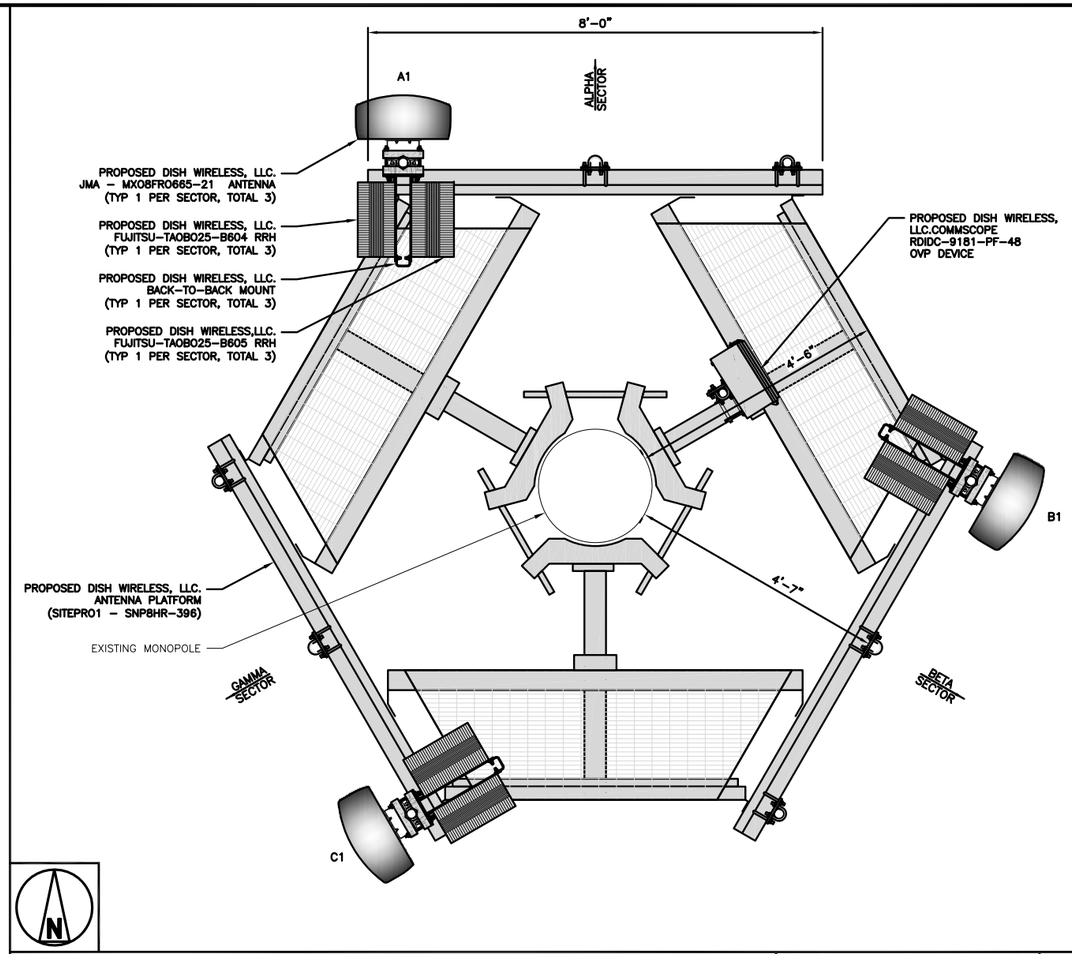

ANTENNA LAYOUT

12" 6" 0 1' 2' 3'
3/4"=1'-0"

2

SECTOR	POSITION	ANTENNA						TRANSMISSION CABLE
		EXISTING OR PROPOSED	MANUFACTURER – MODEL NUMBER	TECHNOLOGY	SIZE (HxW)	AZIMUTH	RAD CENTER	FEED LINE TYPE AND LENGTH
ALPHA	A1	PROPOSED	JMA – MX08FRO665-21	5G	72.0" x 20.0"	0	107'-0"	(1) HIGH-CAPACITY HYBRID CABLE (120' LONG)
BETA	B1	PROPOSED	JMA – MX08FRO665-21	5G	72.0" x 20.0"	120	107'-0"	
GAMMA	C1	PROPOSED	JMA – MX08FRO665-21	5G	72.0" x 20.0"	240	107'-0"	

SECTOR	POSITION	RRH	
		MANUFACTURER – MODEL NUMBER	TECHNOLOGY
ALPHA	A1	FUJITSU – TA08025-B604	N66, N70
	A2	FUJITSU – TA08025-B605	N29, N71
BETA	B1	FUJITSU – TA08025-B604	N66, N70
	B2	FUJITSU – TA08025-B605	N29, N71
GAMMA	C1	FUJITSU – TA08025-B604	N66, N70
	C2	FUJITSU – TA08025-B605	N29, N71

NOTES

1. CONTRACTOR TO REFER TO FINAL CONSTRUCTION RFDS FOR ALL RF DETAILS.
2. ANTENNA AND RRH MODELS MAY CHANGE DUE TO EQUIPMENT AVAILABILITY. ALL EQUIPMENT CHANGES MUST BE APPROVED AND REMAIN IN COMPLIANCE WITH THE PROPOSED DESIGN AND STRUCTURAL ANALYSES.
3. VERIFY AZIMUTHS WITH LATEST DISH RFDS PRIOR TO INSTALLATION.

ANTENNA SCHEDULE

NO SCALE

3

dish wireless.
5701 SOUTH SANTA FE DRIVE
LITTLETON, CO 80120

FULLERTON ENGINEERING·DESIGN
1100 E. WOODFIELD ROAD, SUITE 500
SCHAUMBURG, ILLINOIS 60173
TEL: 847-908-8400
COA# E-2488
www.FullertonEngineering.com

IT IS A VIOLATION OF LAW FOR ANY PERSON, UNLESS THEY ARE ACTING UNDER THE DIRECTION OF A LICENSED PROFESSIONAL ENGINEER, TO ALTER THIS DOCUMENT.

DRAWN BY:	CHECKED BY:	APPROVED BY:
KB	KR	DS

RFDS REV #: ---

CONSTRUCTION DOCUMENTS

SUBMITTALS

REV	DATE	DESCRIPTION
A	07/27/2021	ISSUED FOR REVIEW
0	09/09/2021	ISSUED FOR CONSTRUCTION

A&E PROJECT NUMBER
2021.0102.0162

DISH WIRELESS, LLC.
PROJECT INFORMATION
BOBDL00017A
777 TALCOTVILLE ROAD
VERNONROCKVILLE,CT 06066

SHEET TITLE
ELEVATION, ANTENNA LAYOUT AND SCHEDULE

SHEET NUMBER
A-2

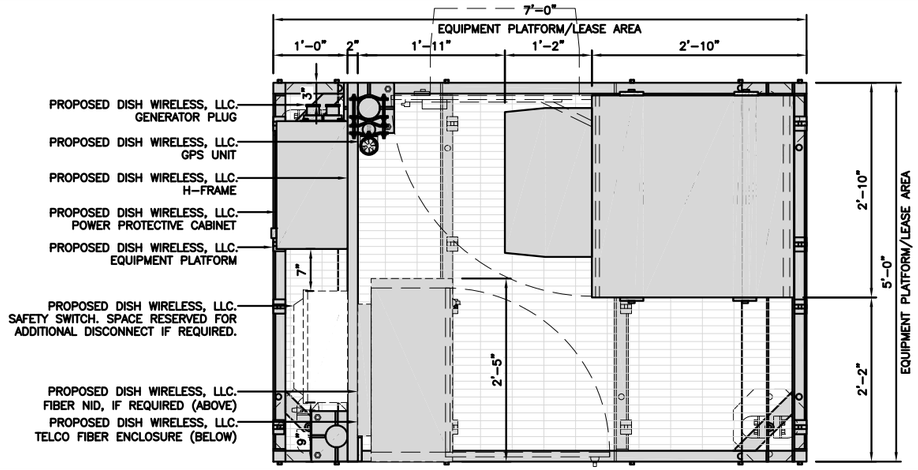

PLATFORM EQUIPMENT PLAN

12" 9" 6" 3" 0 1' 2'
1"=1'-0"

1

COMMSCOPE MTC4045LP 5X7 PLATFORM	
DIMENSIONS (HxWxD)	16"x84"x60"
TOTAL WEIGHT	423 LBS

NOTE:
GC TO PROVIDE EXTENDED THREAD FOR PLATFORM IF REQUIRED HEIGHT EXCEEDS 17"

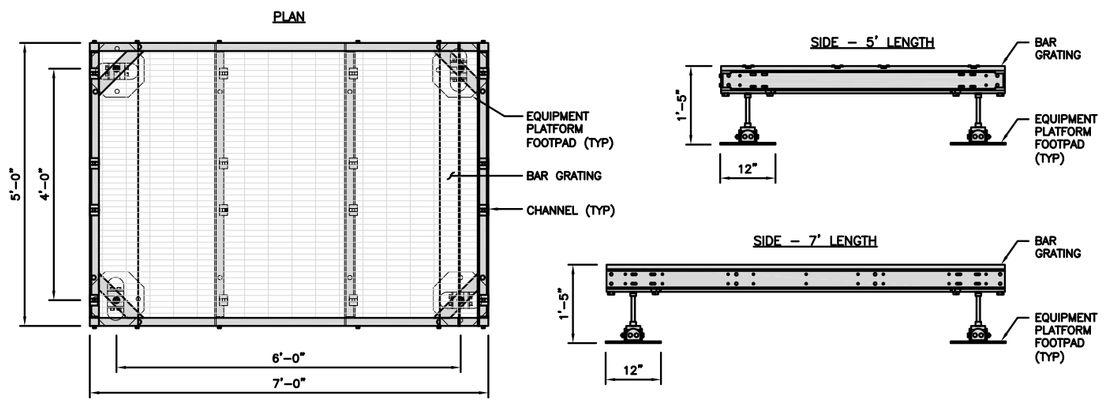

PLATFORM DETAIL

NO SCALE

2

KENWOOD T1701KT5-5S H-FRAME	
UNISTRUT/SUPPORT RAIL	5
WEIGHT/ VOLUME	173.6 LBS

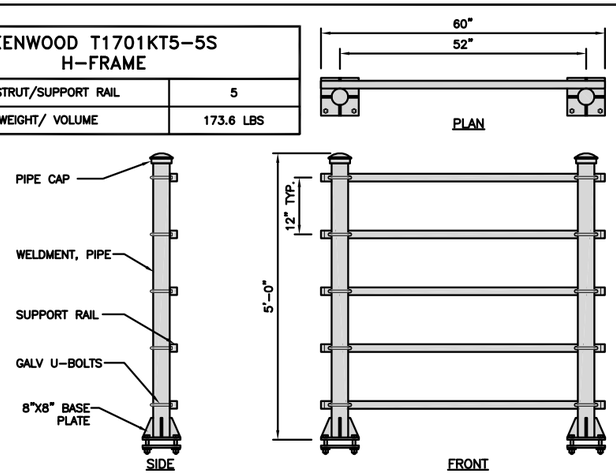

H-FRAME DETAIL

NO SCALE

3

NOT USED

NO SCALE

4

NOTES

1. CONTRACTOR TO BURY PLATFORM FEET WITH A MINIMUM OF 2" OF FILL PER EXISTING SITE SURFACE.
2. WEED BARRIER FABRIC TO BE ADDED AT DISCRETION OF DISH WIRELESS, LLC. CONSTRUCTION MANAGER AT TIME OF CONSTRUCTION. ONE SHEET 8'x8' INSTALLED UNDER ALL FOUR FEET OF THE PLATFORM (4 MIL BLACK PLASTIC).
3. EQUIPMENT CABINET OMITTED FOR CLARITY.

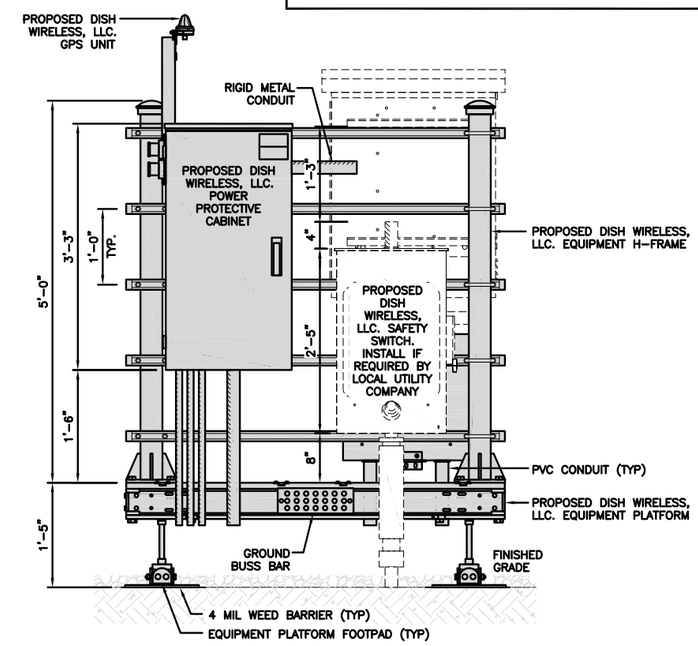

FRONT ELEVATION

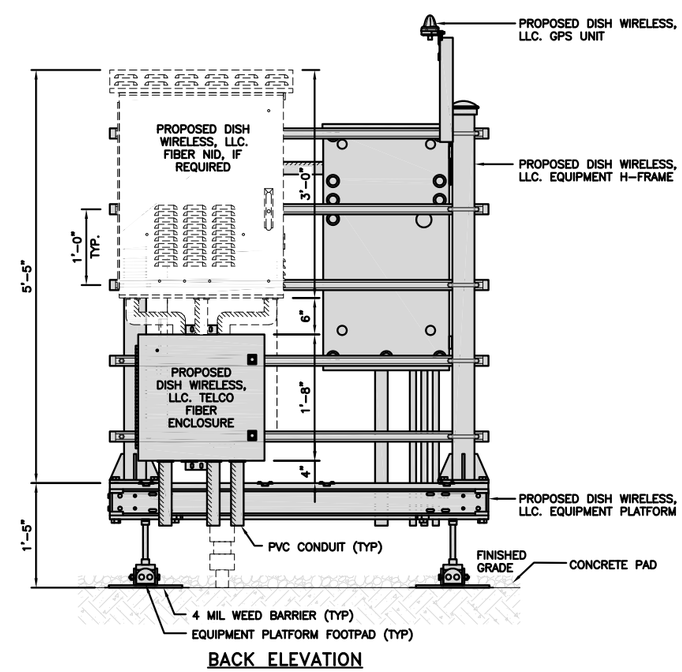

BACK ELEVATION

H-FRAME EQUIPMENT ELEVATION

12" 9" 6" 3" 0 1' 2'
1"=1'-0"

5

dish wireless.

5701 SOUTH SANTA FE DRIVE
LITTLETON, CO 80120

FULLERTON ENGINEERING · DESIGN

1100 E. WOODFIELD ROAD, SUITE 500
SCHAUMBURG, ILLINOIS 60173
TEL: 847-908-8400
COA# E-2488
www.FullertonEngineering.com

NOT TO BE USED FOR CONSTRUCTION

IT IS A VIOLATION OF LAW FOR ANY PERSON, UNLESS THEY ARE ACTING UNDER THE DIRECTION OF A LICENSED PROFESSIONAL ENGINEER, TO ALTER THIS DOCUMENT.

DRAWN BY:	CHECKED BY:	APPROVED BY:
KB	KR	DS

RFDS REV #: ---

PRELIMINARY DOCUMENTS

SUBMITTALS

REV	DATE	DESCRIPTION
A	07/27/2021	ISSUED FOR REVIEW

A&E PROJECT NUMBER
2021.0102.0162

DISH WIRELESS, LLC.
PROJECT INFORMATION

BOBDL00017A
777 TALCOTVILLE ROAD
VERNONROCKVILLE,CT 06066

SHEET TITLE
EQUIPMENT PLATFORM AND H-FRAME DETAILS

SHEET NUMBER
A-3

CHARLES INDUSTRY HVAC CUBE-PM63915IN4	
DIMENSIONS (HxWxD):	74"x32"x32"
POWER PLANT:	-48VDC ABB/600W
TOTAL WEIGHT (EMPTY)	383 LBS

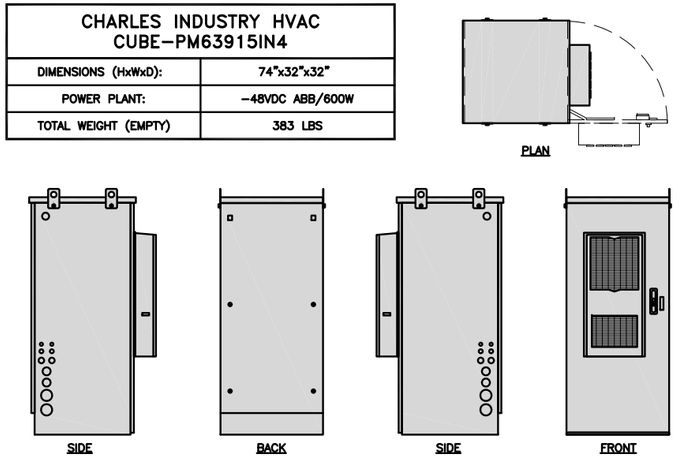

CABINET DETAIL — NO SCALE — 1

RAYCAP PPC RDIAC-2465-P-240-MTS	
ENCLOSURE DIMENSIONS (HxWxD):	39"x22.855"x12.593
WEIGHT:	80 lbs
OPERATING AC VOLTAGE	240/120 1 PHASE 3W+G

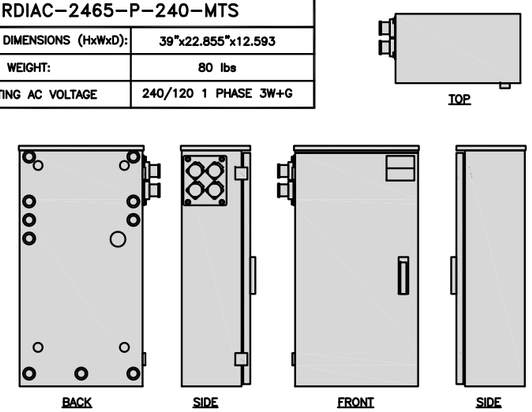

POWER PROTECTION CABINET (PPC) DETAIL — NO SCALE — 2

SQUARE D SAFETY SWITCHES D224NRB	
ENCLOSURE DIM (HxWxD)	29.25"x19.00"x8.50"
ENCLOSURE TYPE	NEMA 3R RAINPROOF
UL LISTED	FILE E-2875

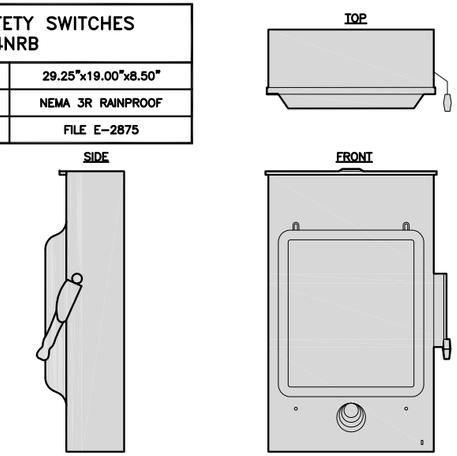

SAFETY SWITCH DETAIL — NO SCALE — 3

NOT USED — NO SCALE — 4

ZAYO 5RU CABINET ("LIT" SITES)	
DIMENSIONS (HxWxD)	36.115"x29"x12.9"
WEIGHT	85 LBS
POWER INPUT	20A, -48VDC

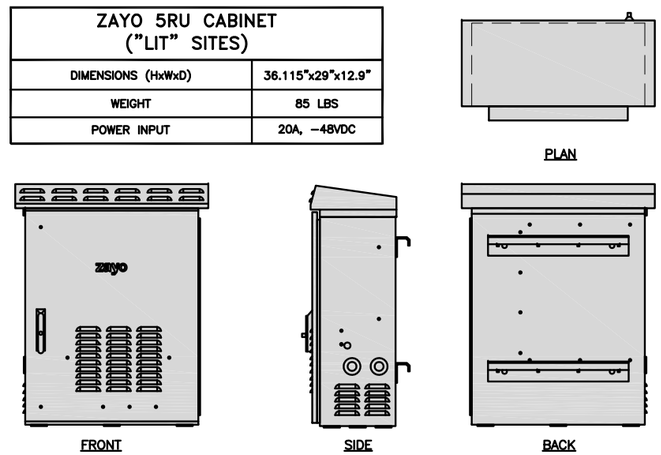

NETWORK INTERFACE UNIT DETAIL — NO SCALE — 5

CHARLES CFIT-PF2020DSH1 FIBER TELCO ENCLOSURE	
ENCLOSURE DIMS (HxWxD)	20"x20"x9"
ENCLOSURE WEIGHT	20 lbs
MOUNTING	WALL
COMPLIANCE	TYPE 4

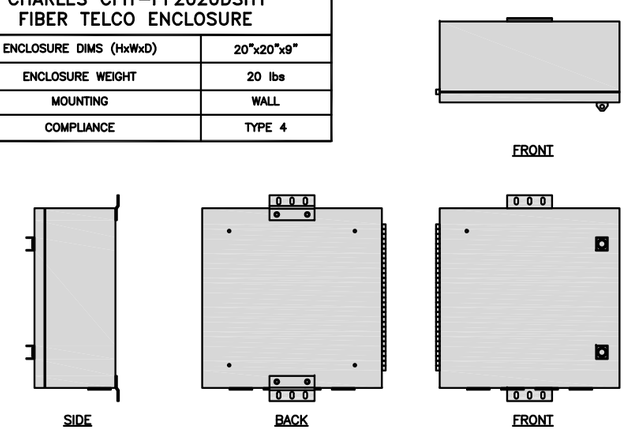

FIBER TELCO ENCLOSURE DETAIL — NO SCALE — 6

COMMSCOPE WB-K110-B WAVEGUIDE BRIDGE KIT	
DIMENSIONS (HxL)	160"x10'
WEIGHT/ VOLUME	325.0 LBS
CABLE RUN (QTY)	12

INCLUDED PRODUCTS:	
	WB-T12-3 TRAPEZE KIT, 3 RUNGS
	WB-LB12-3 SUPPORT BRACKET
	MF-130 DIRECT BURIAL PIPE COLUMN, 13'-4"

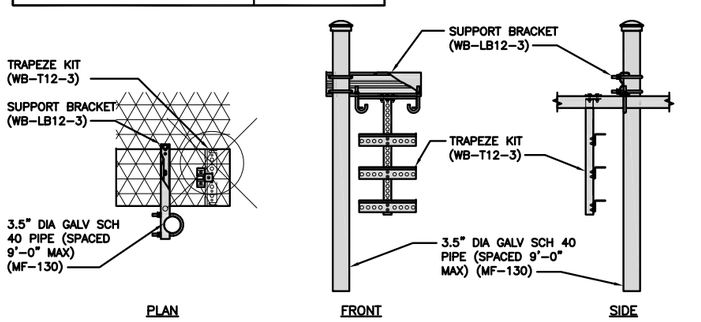

ICE BRIDGE DETAIL — NO SCALE — 7

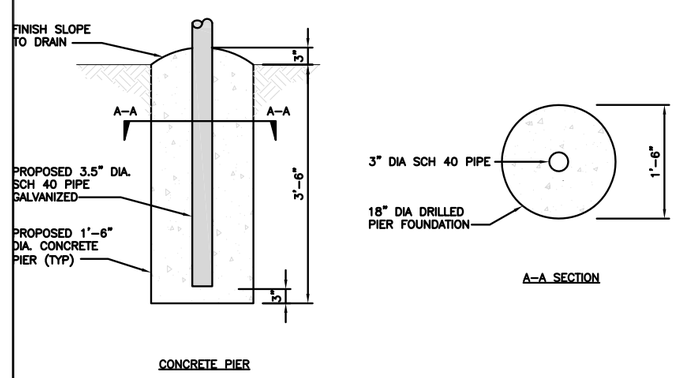

TYPICAL ICE BRIDGE CONCRETE PIER DETAIL — NO SCALE — 8

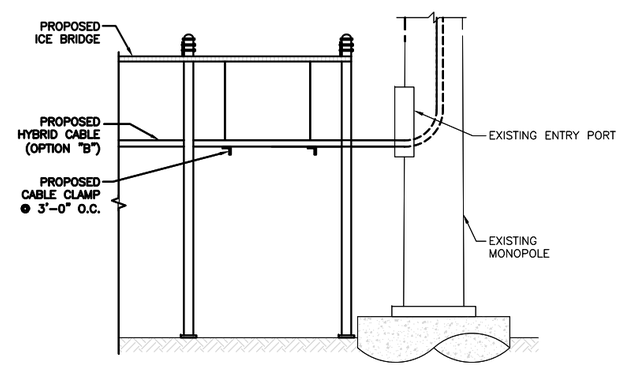

HYBRID CABLE RUN — NO SCALE — 9

dish wireless.

5701 SOUTH SANTA FE DRIVE
LITTLETON, CO 80120

FULLERTON ENGINEERING · DESIGN

1100 E. WOODFIELD ROAD, SUITE 500
SCHAUMBURG, ILLINOIS 60173
TEL: 847-908-8400
COA# E-2488
www.FullertonEngineering.com

IT IS A VIOLATION OF LAW FOR ANY PERSON, UNLESS THEY ARE ACTING UNDER THE DIRECTION OF A LICENSED PROFESSIONAL ENGINEER, TO ALTER THIS DOCUMENT.

DRAWN BY:	CHECKED BY:	APPROVED BY:
KB	KR	DS

RFDS REV #: ---

CONSTRUCTION DOCUMENTS

SUBMITTALS

REV	DATE	DESCRIPTION
A	07/27/2021	ISSUED FOR REVIEW
0	09/09/2021	ISSUED FOR CONSTRUCTION

A&E PROJECT NUMBER
2021.0102.0162

DISH WIRELESS, LLC.
PROJECT INFORMATION

BOBDL00017A
777 TALCOTVILLE ROAD
VERNONROCKVILLE,CT 06066

SHEET TITLE
EQUIPMENT DETAILS

SHEET NUMBER
A-4

ROSENBERGER GPSGLONASS-36-N-S	
DIMENSION (DIA x H)	69mm x 98.5mm
WEIGHT (WITH ACCESSORIES)	515.74g
CONNECTOR	N-FEMALE
FREQUENCY RANGE	1559 MHz ~ 1610.5MHz

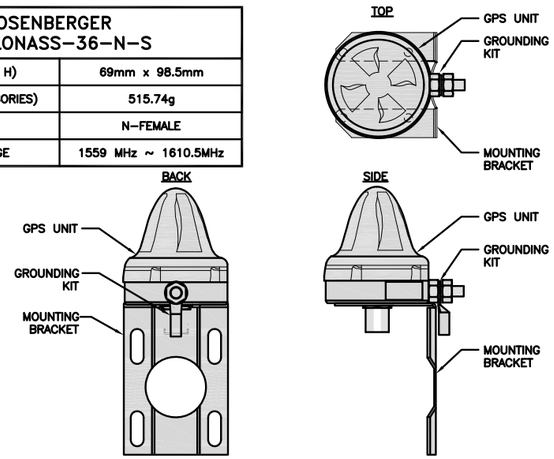

GPS ANTENNA DETAIL | NO SCALE | 1

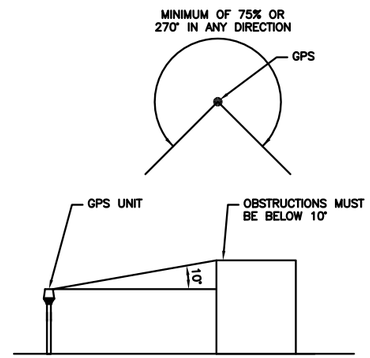

GPS MINIMUM SKY VIEW REQUIREMENTS | NO SCALE | 2

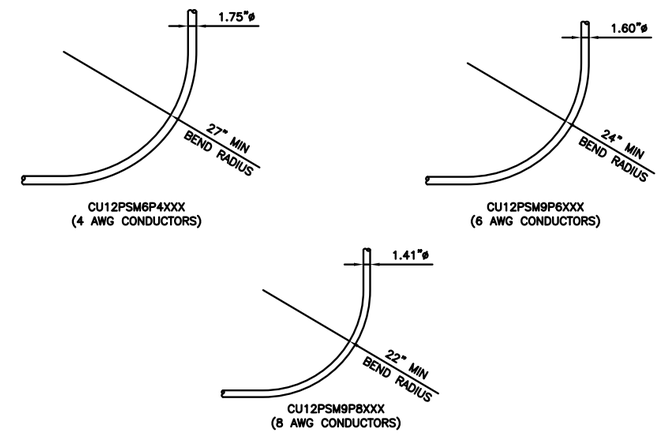

CABLES UNLIMITED HYBRID CABLE MINIMUM BEND RADIUSES | NO SCALE | 3

NOT USED | NO SCALE | 4

NOT USED | NO SCALE | 5

NOT USED | NO SCALE | 6

NOT USED | NO SCALE | 7

NOT USED | NO SCALE | 8

NOT USED | NO SCALE | 9

dish wireless.
5701 SOUTH SANTA FE DRIVE
LITTLETON, CO 80120

FULLERTON ENGINEERING·DESIGN
1100 E. WOODFIELD ROAD, SUITE 500
SCHAUMBURG, ILLINOIS 60173
TEL: 847-908-8400
COA# E-2488
www.FullertonEngineering.com

IT IS A VIOLATION OF LAW FOR ANY PERSON, UNLESS THEY ARE ACTING UNDER THE DIRECTION OF A LICENSED PROFESSIONAL ENGINEER, TO ALTER THIS DOCUMENT.

DRAWN BY:	CHECKED BY:	APPROVED BY:
KB	KR	DS

RFDS REV #: ---

CONSTRUCTION DOCUMENTS

SUBMITTALS

REV	DATE	DESCRIPTION
A	07/27/2021	ISSUED FOR REVIEW
0	09/09/2021	ISSUED FOR CONSTRUCTION

A&E PROJECT NUMBER
2021.0102.0162

DISH WIRELESS, LLC.
PROJECT INFORMATION

BOBDL00017A
777 TALCOTVILLE ROAD
VERNONROCKVILLE,CT 06066

SHEET TITLE
EQUIPMENT DETAILS

SHEET NUMBER
A-5

FUJITSU TA08025-B604 RRH	
DIMENSIONS (HxWxD) (KG/IN)	380x400x200/14.9"x15.7"x7.8"
WEIGHT(KG,LB)/ VOLUME	29kg,63.9lb/ 30L
POWER SUPPLY	DC-58~-36V

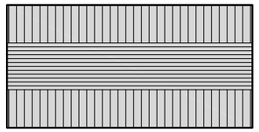

PLAN

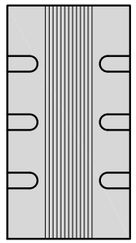

SIDE

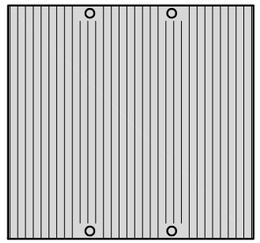

FRONT

REMOTE RADIO HEAD DETAIL | NO SCALE | 1

FUJITSU TA08025-B605 RRH	
DIMENSIONS (HxWxD) (KG/IN)	380x400x230/14.9"x15.7"x9.0"
WEIGHT(KG,LB)/ VOLUME	34kg,74.9lb/ 35L
POWER SUPPLY	DC-58~-36V

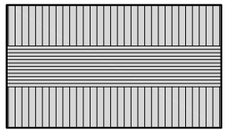

PLAN

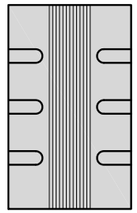

SIDE

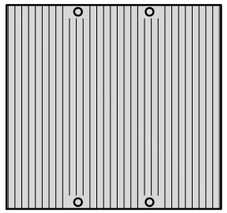

FRONT

REMOTE RADIO HEAD DETAIL | NO SCALE | 2

SABRE SINGLE Z-BRACKET C10123151	
DIMENSIONS (HxWxD) (1 BRACKET)	5"x20"x1-13/16"
WEIGHT (FULL ASSEMBLY)	13.41 lbs
PACKAGE QUANTITY	2

#	DESCRIPTION
1	RRH Z BRACKET, 3/16"
2	U-BOLT ASSEMBLY, 1/2" FOR 2-7/8" PIPE

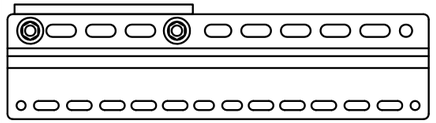

NOTE:
OR DISH Wireless L.L.C.
APPROVED EQUIVALENT

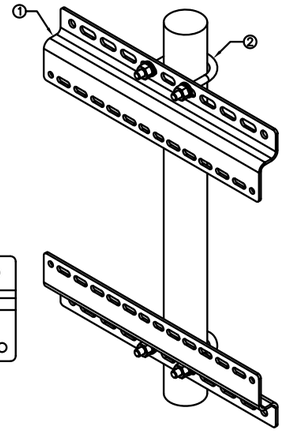

RRH MOUNT DETAIL | NO SCALE | 3

RAYCAP RDIDC-9181-PF-48 DC SURGE PROTECTION (OVP)	
DIMENSIONS (HxWxD)	18.98"x14.39"x8.15"
WEIGHT	21.82 LBS

PLAN

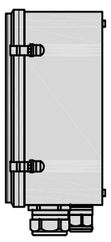

SIDE

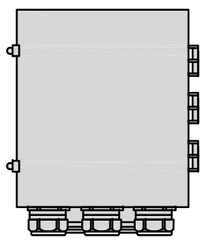

BACK

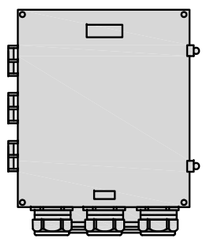

FRONT

SURGE SUPPRESSION DETAIL (OVP) | NO SCALE | 4

JMA WIRELESS MX08FRO665-21 ANTENNA	
DIMENSIONS (HxWxD)	72.0"x20.0"x8.0"
TOTAL WEIGHT	64.5 LB
RF PORTS, CONNECTOR TYPE	8 x 4.3-10 FEMALE

PLAN

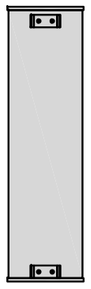

BACK

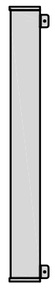

SIDE

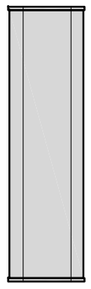

FRONT

ANTENNA DETAIL | NO SCALE | 5

JMA ANTENNA MOUNTING BRACKET #91900318	
TOTAL WEIGHT (WITH BRACKETS)	18 lbs (8.18 Kg)
POLE DIAMETER RANGE	2.5 TO 4.5 INCHES

NOTE:
KIT #91900318: TOP AND BOTTOM BRACKETS FOR 4-,6-, AND 8-FOOT ANTENNAS

ANTENNA BRACKET NOT PART OF KIT

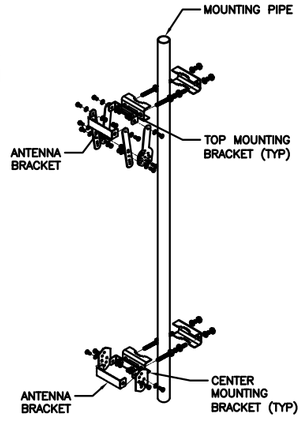

ANTENNA BRACKET DETAIL | NO SCALE | 6

NOT USED | NO SCALE | 7

SITE-PRO 1 T600	
90° ANGLE LEG ALLOWANCE	2.5" TO 5"
ROUND MEMBER ALLOWANCE	1.5" TO 6"
WEIGHT	5.6 lbs

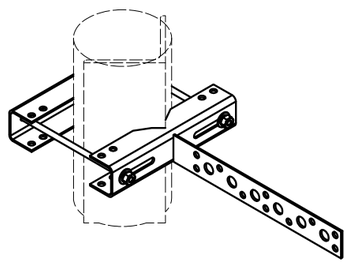

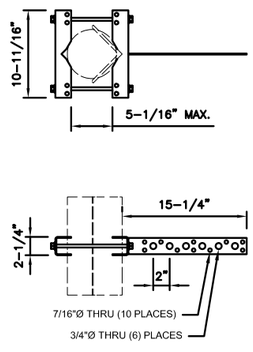

UNIVERSAL T-BRACKET DETAIL | NO SCALE | 8

SITEPRO1 SNP8HR-396 SNUB-NOSE PLATFORM	
FACE SIZE	8'-0"
WEIGHT	1786.28 LB
ANTENNA PIPE MOUNTS	(9) 2-3/8" O.D.

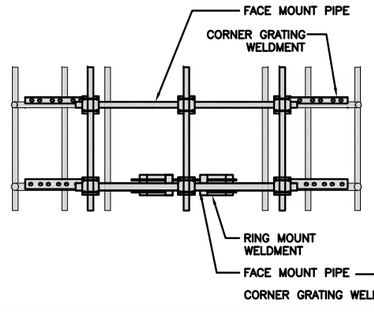

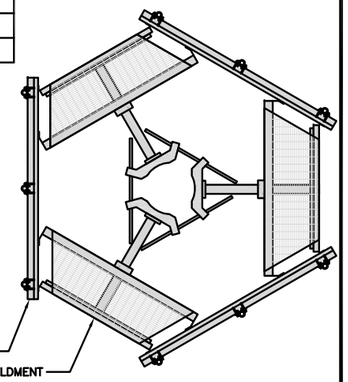

ANTENNA PLATFORM DETAIL | NO SCALE | 9

dish wireless.
5701 SOUTH SANTA FE DRIVE
LITTLETON, CO 80120

FULLERTON ENGINEERING · DESIGN
1100 E. WOODFIELD ROAD, SUITE 500
SCHAUMBURG, ILLINOIS 60173
TEL: 847-908-8400
COA# E-2488
www.FullertonEngineering.com

IT IS A VIOLATION OF LAW FOR ANY PERSON, UNLESS THEY ARE ACTING UNDER THE DIRECTION OF A LICENSED PROFESSIONAL ENGINEER, TO ALTER THIS DOCUMENT.

DRAWN BY:	CHECKED BY:	APPROVED BY:
KB	KR	DS

RFDS REV #: ---

CONSTRUCTION DOCUMENTS

SUBMITTALS

REV	DATE	DESCRIPTION
A	07/27/2021	ISSUED FOR REVIEW
0	09/09/2021	ISSUED FOR CONSTRUCTION

A&E PROJECT NUMBER
2021.0102.0162

DISH WIRELESS, LLC.
PROJECT INFORMATION
BOBDL00017A
777 TALCOTVILLE ROAD
VERNONROCKVILLE,CT 06066

SHEET TITLE
EQUIPMENT DETAILS

SHEET NUMBER
A-6

NOTES

CONSTTRUCTION CONTRACTOR MUST FIELD VERIFY THAT THE PROPOSED UTILITY ROUTES ARE WITHIN ATC'S EASEMENT

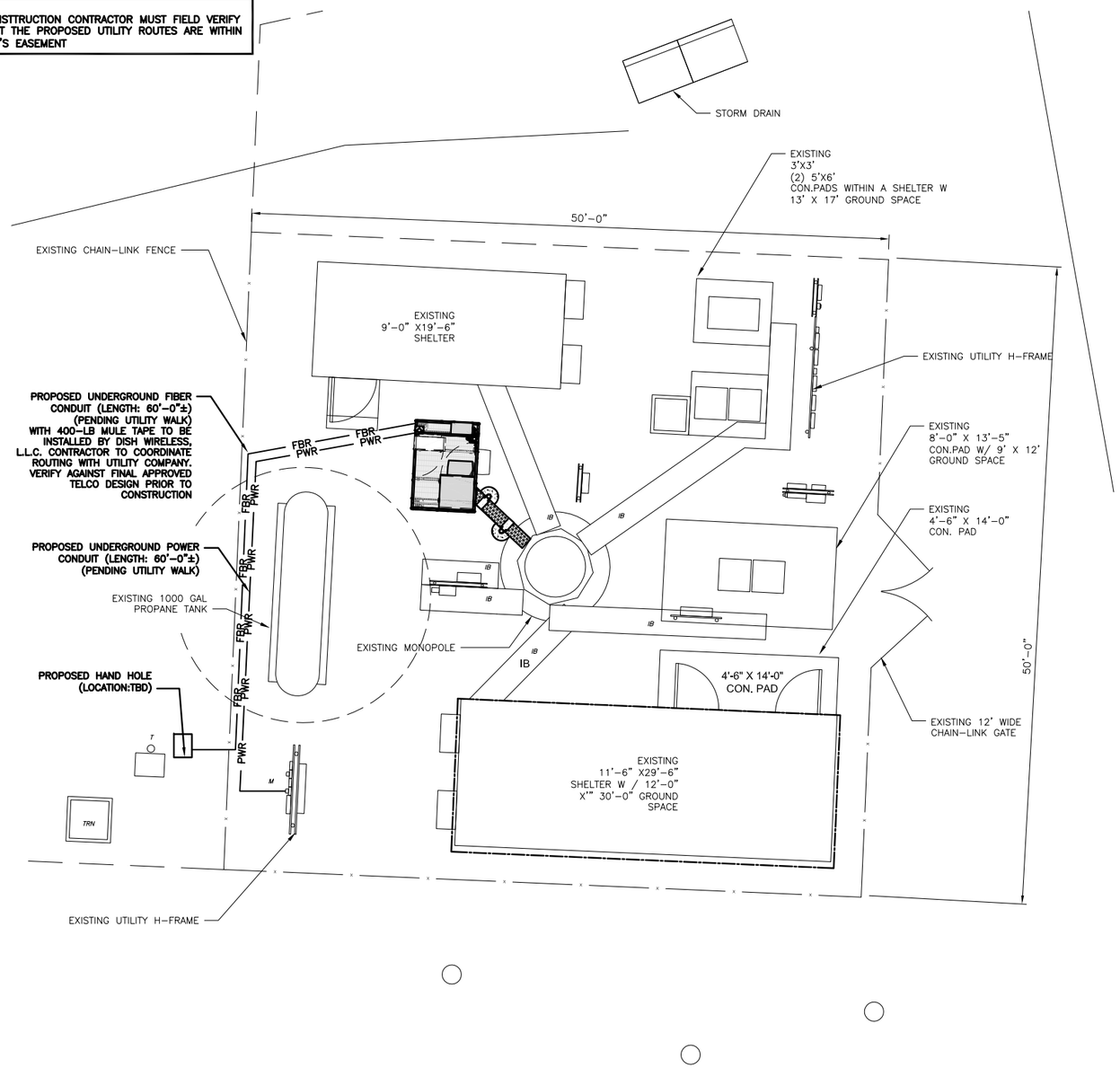

UTILITY ROUTE PLAN

6' 4' 2' 0 5' 10
3/16"=1'-0"

1

DC POWER WIRING SHALL BE COLOR CODED AT EACH END FOR IDENTIFYING +24V AND −48V CONDUCTORS. RED MARKINGS SHALL IDENTIFY +24V AND BLUE MARKINGS SHALL IDENTIFY −48V.

1. CONTRACTOR SHALL INSPECT THE EXISTING CONDITIONS PRIOR TO SUBMITTING A BID. ANY QUESTIONS ARISING DURING THE BID PERIOD IN REGARDS TO THE CONTRACTOR'S FUNCTIONS, THE SCOPE OF WORK, OR ANY OTHER ISSUE RELATED TO THIS PROJECT SHALL BE BROUGHT UP DURING THE BID PERIOD WITH THE PROJECT MANAGER FOR CLARIFICATION, NOT AFTER THE CONTRACT HAS BEEN AWARDED.
2. ALL ELECTRICAL WORK SHALL BE DONE IN ACCORDANCE WITH CURRENT NATIONAL ELECTRICAL CODES AND ALL STATE AND LOCAL CODES, LAWS, AND ORDINANCES. PROVIDE ALL COMPONENTS AND WIRING SIZES AS REQUIRED TO MEET NEC STANDARDS.
3. LOCATION OF EQUIPMENT, CONDUIT AND DEVICES SHOWN ON THE DRAWINGS ARE APPROXIMATE AND SHALL BE COORDINATED WITH FIELD CONDITIONS PRIOR TO CONSTRUCTION.
4. CONDUIT ROUGH-IN SHALL BE COORDINATED WITH THE MECHANICAL EQUIPMENT TO AVOID LOCATION CONFLICTS. VERIFY WITH THE MECHANICAL EQUIPMENT CONTRACTOR AND COMPLY AS REQUIRED.
5. CONTRACTOR SHALL PROVIDE ALL BREAKERS, CONDUITS AND CIRCUITS AS REQUIRED FOR A COMPLETE SYSTEM.
6. CONTRACTOR SHALL PROVIDE PULL BOXES AND JUNCTION BOXES AS REQUIRED BY THE NEC ARTICLE 314.
7. CONTRACTOR SHALL PROVIDE ALL STRAIN RELIEF AND CABLE SUPPORTS FOR ALL CABLE ASSEMBLIES. INSTALLATION SHALL BE IN ACCORDANCE WITH MANUFACTURER'S SPECIFICATIONS AND RECOMMENDATIONS.
8. ALL DISCONNECTS AND CONTROLLING DEVICES SHALL BE PROVIDED WITH ENGRAVED PHENOLIC NAMEPLATES INDICATING EQUIPMENT CONTROLLED, BRANCH CIRCUITS INSTALLED ON, AND PANEL FIELD LOCATIONS FED FROM.
9. INSTALL AN EQUIPMENT GROUNDING CONDUCTOR IN ALL CONDUITS PER THE SPECIFICATIONS AND NEC 250. THE EQUIPMENT GROUNDING CONDUCTORS SHALL BE BONDED AT ALL JUNCTION BOXES, PULL BOXES, AND ALL DISCONNECT SWITCHES, AND EQUIPMENT CABINETS.
10. ALL NEW MATERIAL SHALL HAVE A U.L. LABEL.
11. PANEL SCHEDULE LOADING AND CIRCUIT ARRANGEMENTS REFLECT POST-CONSTRUCTION EQUIPMENT.
12. CONTRACTOR SHALL BE RESPONSIBLE FOR AS-BUILT PANEL SCHEDULE AND SITE DRAWINGS.

ELECTRICAL NOTES

NO SCALE

2

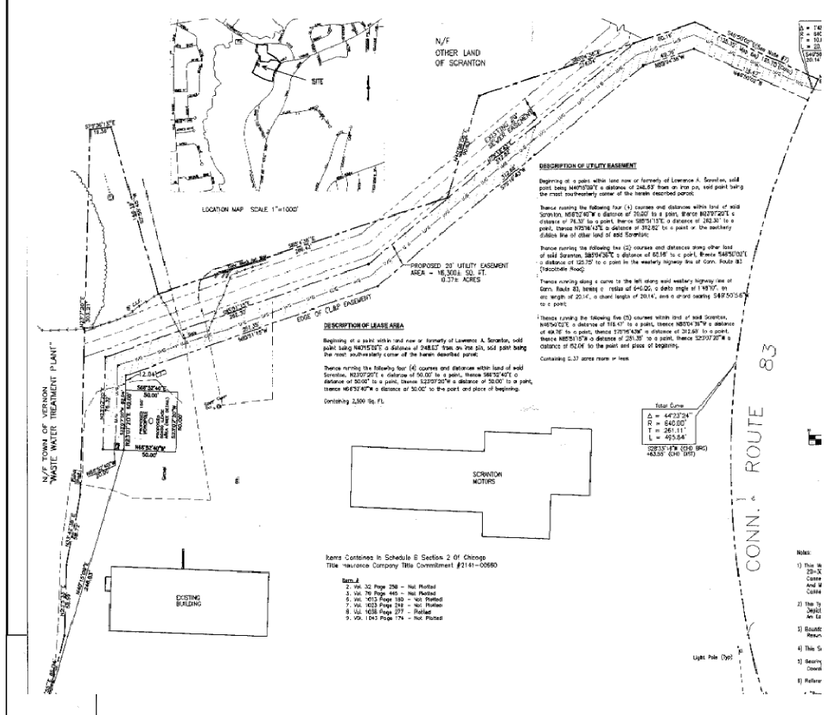

UTILITY ROUTE PLAN (OVERALL)

NO SCALE

3

dish wireless.

5701 SOUTH SANTA FE DRIVE
LITTLETON, CO 80120

FULLERTON ENGINEERING · DESIGN

1100 E. WOODFIELD ROAD, SUITE 500
SCHAUMBURG, ILLINOIS 60173
TEL: 847-908-8400
COA# E-2488
www.FullertonEngineering.com

IT IS A VIOLATION OF LAW FOR ANY PERSON, UNLESS THEY ARE ACTING UNDER THE DIRECTION OF A LICENSED PROFESSIONAL ENGINEER, TO ALTER THIS DOCUMENT.

DRAWN BY:	CHECKED BY:	APPROVED BY:
KB	KR	DS

RFDS REV #: ---

CONSTRUCTION DOCUMENTS

SUBMITTALS

REV	DATE	DESCRIPTION
A	07/27/2021	ISSUED FOR REVIEW
0	09/09/2021	ISSUED FOR CONSTRUCTION

A&E PROJECT NUMBER

2021.0102.0162

DISH WIRELESS, LLC.
PROJECT INFORMATION

BOBDL00017A
777 TALCOTVILLE ROAD
VERNONROCKVILLE,CT 06066

SHEET TITLE

ELECTRICAL/FIBER ROUTE PLAN AND NOTES

SHEET NUMBER

E-1

CARLON EXPANSION FITTINGS

COUPLING END PART#	MALE TERMINAL ADAPTER END PART#	SIZE	STD CTN QTY.	TRAVEL LENGTH
E945D	E945DX	1/2"	20	4"
E945E	E945EX	3/4"	15	4"
E945F	E945FX	1"	10	4"
E945G	E945GX	1 1/4"	5	4"
E945H	E945HX	1 1/2"	5	4"
E945J	E945JX	2"	15	8"
E945K	E945KX	2 1/2"	10	8"
E945L	E945LX	3"	10	8"
E945M	E945MX	3 1/2"	5	8"
E945N	E945NX	4"	5	8"
E945P	E945PX	5"	1	8"
E945R	E945RX	6"	1	8"

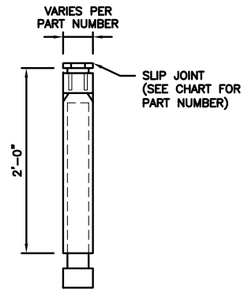

NOTE:
CONTRACTOR TO INSTALL EXPANSION FITTING SLIP JOINT AT METER CENTER CONDUIT TERMINATION, AS PER LOCAL UTILITY POLICY, ORDINANCE AND/OR SPECIFIED REQUIREMENT.

EXPANSION JOINT DETAIL | NO SCALE | 1

TRENCHING NOTES

1. CONTRACTOR SHALL RESTORE THE TRENCH TO ITS ORIGINAL CONDITIONS BY EITHER SEEDING OR SODDING GRASS AREAS, OR REPLACING ASPHALT OR CONCRETE AREAS TO ITS ORIGINAL CROSS SECTION.
2. TRENCHING SAFETY; INCLUDING, BUT NOT LIMITED TO SOIL CLASSIFICATION, SLOPING, AND SHORING, SHALL BE GOVERNED BY THE CURRENT OSHA TRENCHING AND EXCAVATION SAFETY STANDARDS.
3. ALL CONDUITS SHALL BE INSTALLED IN COMPLIANCE WITH THE CURRENT NATIONAL ELECTRIC CODE (NEC) OR AS REQUIRED BY THE LOCAL JURISDICTION, WHICHEVER IS THE MOST STRINGENT.

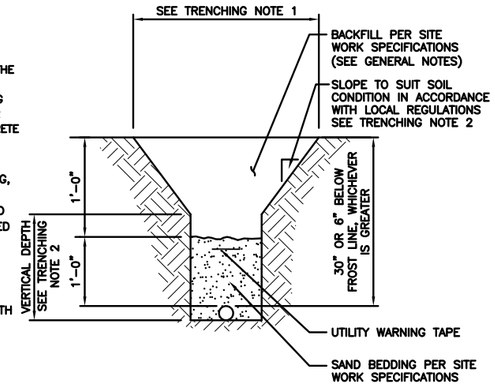

TYPICAL UNDERGROUND TRENCH DETAIL | NO SCALE | 2

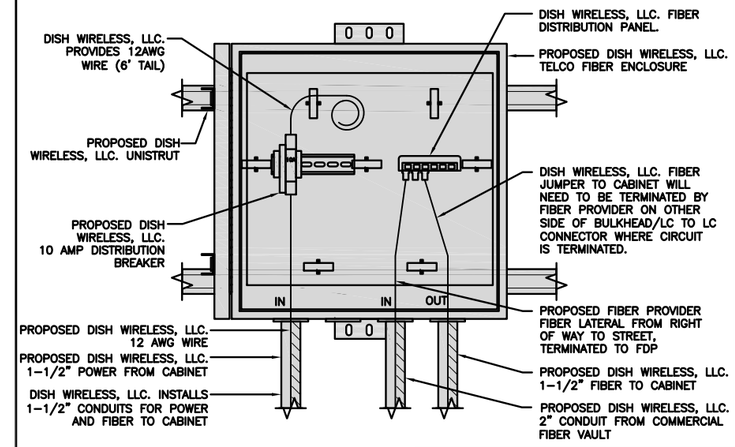

DARK TELCO BOX – INTERIOR WIRING LAYOUT | NO SCALE | 3

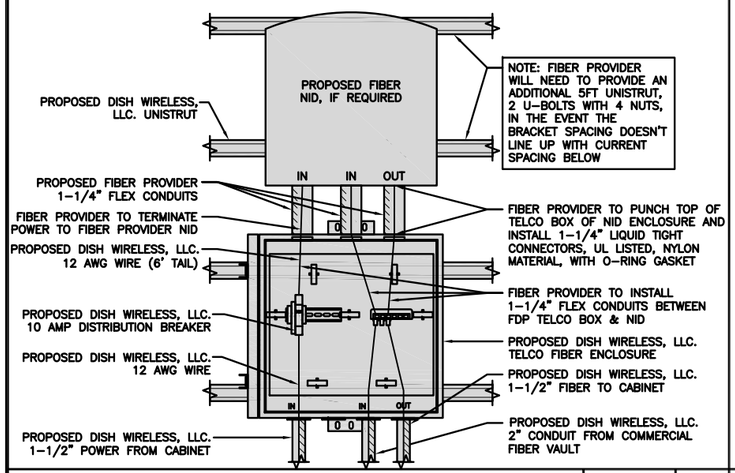

LIT TELCO BOX – INTERIOR WIRING LAYOUT (OPTIONAL) | NO SCALE | 4

NOT USED | NO SCALE | 5

NOT USED | NO SCALE | 6

NOT USED | NO SCALE | 7

NOT USED | NO SCALE | 8

NOT USED | NO SCALE | 9

dish wireless.
5701 SOUTH SANTA FE DRIVE
LITTLETON, CO 80120

FULLERTON ENGINEERING · DESIGN
1100 E. WOODFIELD ROAD, SUITE 500
SCHAUMBURG, ILLINOIS 60173
TEL: 847-908-8400
COA# E-2488
www.FullertonEngineering.com

IT IS A VIOLATION OF LAW FOR ANY PERSON, UNLESS THEY ARE ACTING UNDER THE DIRECTION OF A LICENSED PROFESSIONAL ENGINEER, TO ALTER THIS DOCUMENT.

DRAWN BY:	CHECKED BY:	APPROVED BY:
KB	KR	DS

RFDS REV #: ---

CONSTRUCTION DOCUMENTS

SUBMITTALS

REV	DATE	DESCRIPTION
A	07/27/2021	ISSUED FOR REVIEW
0	09/09/2021	ISSUED FOR CONSTRUCTION

A&E PROJECT NUMBER
2021.0102.0162

DISH WIRELESS, LLC.
PROJECT INFORMATION
BOBDL00017A
777 TALCOTVILLE ROAD
VERNONROCKVILLE,CT 06066

SHEET TITLE
ELECTRICAL DETAILS

SHEET NUMBER
E-2

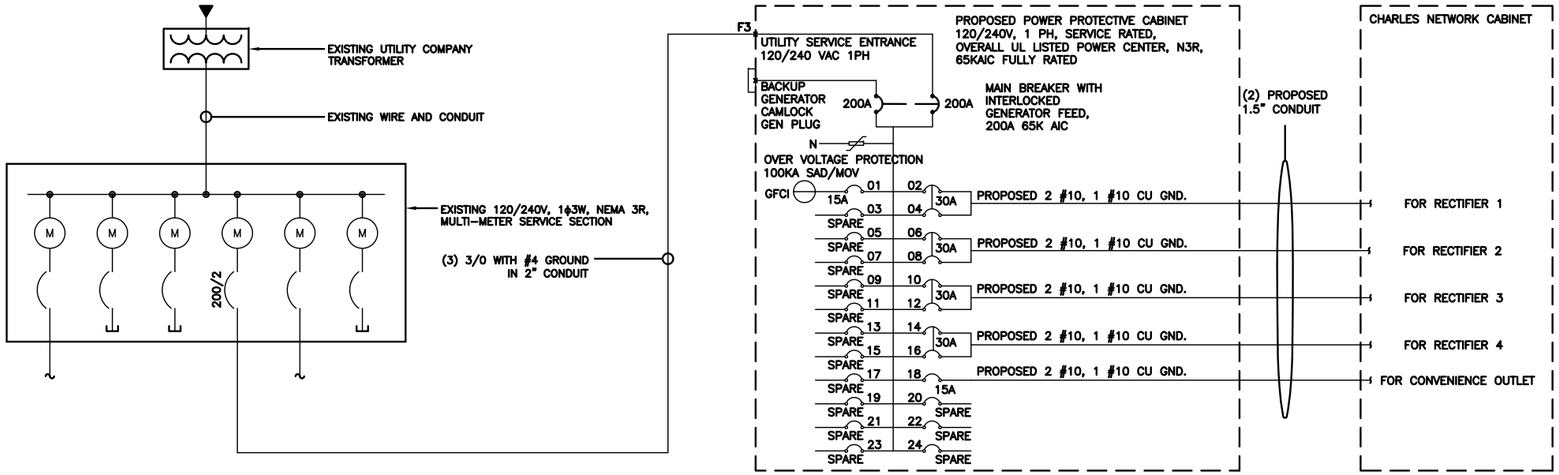

NOTES

THE (2) CONDUITS WITH (4) CURRENT CARRYING CONDUCTORS EACH, SHALL APPLY THE ADJUSTMENT FACTOR OF 80% PER 2014/17 NEC TABLE 310.15(B)(3)(a) OR 2020 NEC TABLE 310.15(C)(1).

#12 FOR 15A–20A/1P BREAKER: 0.8 x 25A = 20.0A
#10 FOR 25A–30A/2P BREAKER: 0.8 x 35A = 28.0A
#8 FOR 35A–40A/2P BREAKER: 0.8 x 50A = 40.0A
#6 FOR 45A–60A/2P BREAKER: 0.8 x 65A = 52.0A

CONDUIT SIZING: AT 40% FILL PER NEC CHAPTER 9, TABLE 4, ARTICLE 358.
0.75" CONDUIT – 0.213 SQ. IN AREA

CONDUIT SIZING: AT 40% FILL PER NEC CHAPTER 9, TABLE 4, ARTICLE 353.
2.0" CONDUIT – 1.316 SQ. IN AREA
3.0" CONDUIT – 2.907 SQ. IN AREA

[RECTIFIER 1 & 2 CONDUCTORS (1 CONDUIT)], AND
[CABINET CONVENIENCE OUTLET CONDUCTORS (1 CONDUIT)]: USING THWN–2, CU.

#6 – 0.0507 SQ. IN X 2 = 0.1014 SQ. IN
#6 – 0.0507 SQ. IN X 1 = 0.0507 SQ. IN <GROUND
TOTAL = 0.1521 SQ. IN

0.75" EMT CONDUIT IS ADEQUATE TO HANDLE THE TOTAL OF (3) WIRES, INCLUDING GROUND WIRE, AS INDICATED ABOVE.

RECTIFIER 3, 4, & 5 CONDUCTORS (1 CONDUIT): USING THWN–2, CU.

#6 – 0.0507 SQ. IN X 4 = 0.2028 SQ. IN
#6 – 0.0507 SQ. IN X 1 = 0.0507 SQ. IN <GROUND
TOTAL = 0.2535 SQ. IN

0.75" EMT CONDUIT IS ADEQUATE TO HANDLE THE TOTAL OF (5) WIRES, INCLUDING GROUND WIRE, AS INDICATED ABOVE.

PPC FEED CONDUCTORS (1 CONDUIT): USING THWN–2, CU.

#3/0 – 0.2679 SQ. IN X 3 = 0.8037 SQ. IN
#4 – 0.0824 SQ. IN X 1 = 0.0824 SQ. IN <GROUND
TOTAL = 0.8861 SQ. IN

2.0" SCH 40 PVC CONDUIT IS ADEQUATE TO HANDLE THE TOTAL OF (4) WIRES, INCLUDING GROUND WIRE, AS INDICATED ABOVE.

DUE TO INCREASED SIZE OF CONDUCTORS, CONTRACTOR IS TO UTILIZE CORRECTLY SIZED JUMPERS AT TERMINATIONS OF RECEPTACLE. CONTRACTOR IS TO USE BURNDY AMSO TYPE MECHANICAL SPLICES WITH HEAT SHRINK TUBE INSULATION AT SPLICES BETWEEN JUMPERS AND OVERSIZED CONDUCTORS. 20A BREAKERS TO BE RATED TO ACCEPT #6 CONDUCTORS (SQUARE D BREAKERS Q01205219 AND Q02205219).

(CHARLES ABB GE INFINITY) WITH STAND ALONE METER 120V240V 1PH SOURCE — NO SCALE — 1

PROPOSED PANEL SCHEDULE

LOAD SERVED	VOLT AMPS (WATTS) L1	VOLT AMPS (WATTS) L2	TRIP	CKT #	PHASE		CKT #	TRIP	VOLT AMPS (WATTS) L1	VOLT AMPS (WATTS) L2	LOAD SERVED
GFCI IN PPC CAB.	1440A		15A	1	A		2	30A	2880		ABB/GE INFINITY RECTIFIER 1
–SPARE–				3	B		4			2880	
–SPARE–				5	A		6	30A	2880		ABB/GE INFINITY RECTIFIER 2
–SPARE–				7	B		8			2880	
–SPARE–				9	A		10	30A	2880		ABB/GE INFINITY RECTIFIER 3
–SPARE–				11	B		12			2880	
–SPARE–				13	A		14	30A	2880		ABB/GE INFINITY RECTIFIER 4
–SPARE–				15	B		16			2880	
–SPARE–				17	A		18	15A	1920		CHARLES GFCI OUTLET
–SPARE–				19	B		20				–SPARE–
–SPARE–				21	A		22				–SPARE–
–SPARE–				23	B		24				–SPARE–
VOLT AMPS	1440								12960A	11520	
200A MCB, 1ϕ, 3W, 120/240V			L1		L2						
MB RATING: 65,000 AIC			14400		11520		VOLT AMPS				
			120		96		AMPS				
			120				MAX AMPS				
			150				MAX 125%				

PANEL SCHEDULE
(CHARLES ABB GE INFINITY) WITH STAND ALONE METER 120V240V 1PH SOURCE — NO SCALE — 2

NOT USED — NO SCALE — 3

dish wireless.
5701 SOUTH SANTA FE DRIVE
LITTLETON, CO 80120

FULLERTON ENGINEERING · DESIGN
1100 E. WOODFIELD ROAD, SUITE 500
SCHAUMBURG, ILLINOIS 60173
TEL: 847-908-8400
COA# E-2488
www.FullertonEngineering.com

IT IS A VIOLATION OF LAW FOR ANY PERSON, UNLESS THEY ARE ACTING UNDER THE DIRECTION OF A LICENSED PROFESSIONAL ENGINEER, TO ALTER THIS DOCUMENT.

DRAWN BY:	CHECKED BY:	APPROVED BY:
KB	KR	DS

RFDS REV #: ---

CONSTRUCTION DOCUMENTS

SUBMITTALS

REV	DATE	DESCRIPTION
A	07/27/2021	ISSUED FOR REVIEW
0	09/09/2021	ISSUED FOR CONSTRUCTION

A&E PROJECT NUMBER
2021.0102.0162

DISH WIRELESS, LLC.
PROJECT INFORMATION
BOBDL00017A
777 TALCOTVILLE ROAD
VERNONROCKVILLE,CT 06066

SHEET TITLE
ELECTRICAL ONE–LINE, FAULT CALCS & PANEL SCHEDULE

SHEET NUMBER
E-3

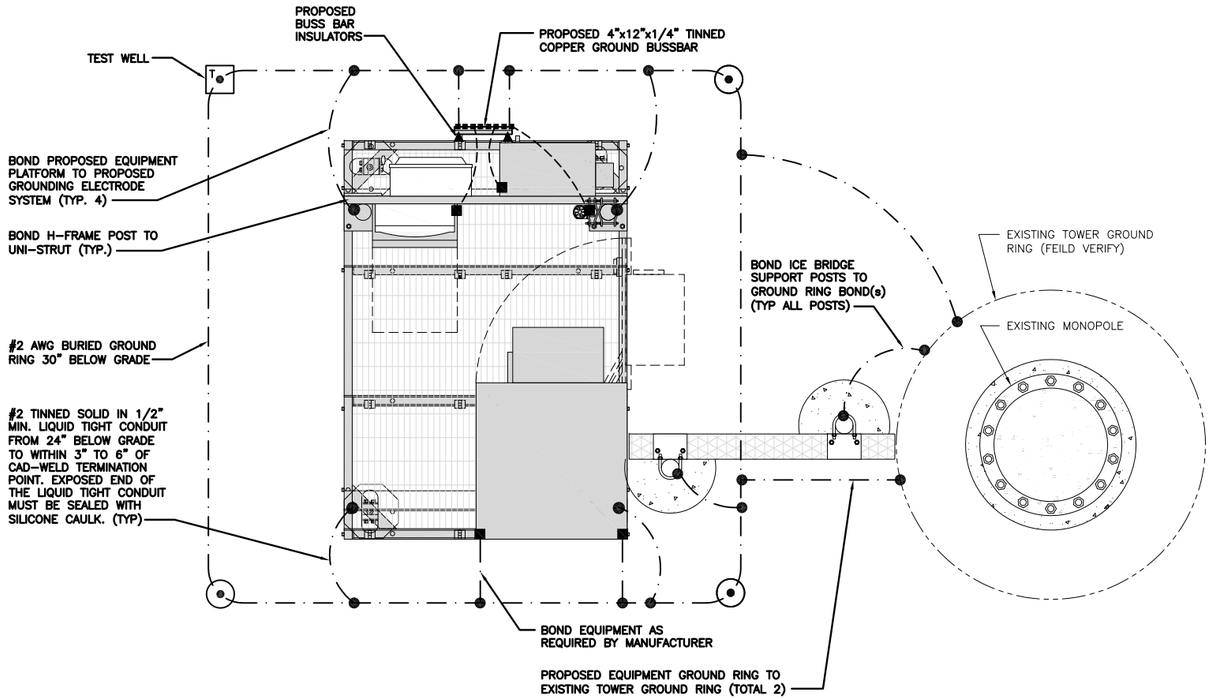

TYPICAL EQUIPMENT GROUNDING PLAN

NO SCALE | 1

NOTES

1. ANTENNAS AND OVP SHOWN ARE GENERIC AND NOT REFERENCING TO A SPECIFIC MANUFACTURER. THIS LAYOUT IS FOR REFERENCE ONLY

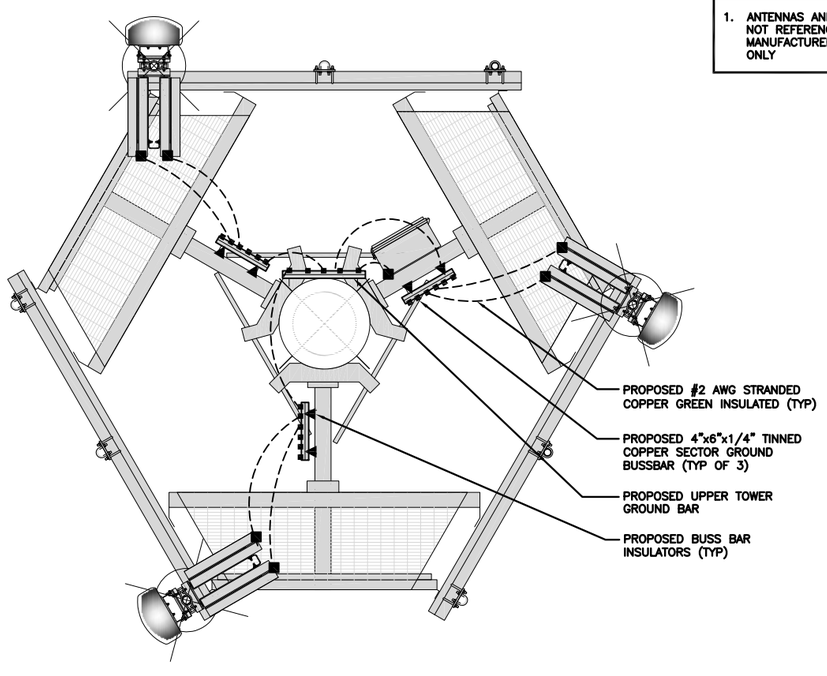

TYPICAL ANTENNA GROUNDING PLAN

NO SCALE | 2

MECHANICAL CONNECTION
GROUND BUS BAR
GROUND ROD
TEST GROUND ROD WITH INSPECTION SLEEVE
#6 AWG STRANDED & INSULATED
#2 AWG SOLID COPPER TINNED
BUSS BAR INSULATOR

GROUNDING LEGEND

1. GROUNDING IS SHOWN DIAGRAMMATICALLY ONLY.
2. CONTRACTOR SHALL GROUND ALL EQUIPMENT AS A COMPLETE SYSTEM. GROUNDING SHALL BE IN COMPLIANCE WITH NEC SECTION 250 AND DISH WIRELESS, L.L.C. GROUNDING AND BONDING REQUIREMENTS AND MANUFACTURER'S SPECIFICATIONS.
3. ALL GROUND CONDUCTORS SHALL BE COPPER; NO ALUMINUM CONDUCTORS SHALL BE USED.

GROUNDING KEY NOTES

(A) EXTERIOR GROUND RING: #2 AWG SOLID COPPER, BURIED AT A DEPTH OF AT LEAST 30 INCHES BELOW GRADE, OR 6 INCHES BELOW THE FROST LINE AND APPROXIMATELY 24 INCHES FROM THE EXTERIOR WALL OR FOOTING.

(B) TOWER GROUND RING: THE GROUND RING SYSTEM SHALL BE INSTALLED AROUND AN ANTENNA TOWER'S LEGS, AND/OR GUY ANCHORS. WHERE SEPARATE SYSTEMS HAVE BEEN PROVIDED FOR THE TOWER AND THE BUILDING, AT LEAST TWO BONDS SHALL BE MADE BETWEEN THE TOWER RING GROUND SYSTEM AND THE BUILDING RING GROUND SYSTEM USING MINIMUM #2 AWG SOLID COPPER CONDUCTORS.

(C) INTERIOR GROUND RING: #2 AWG STRANDED GREEN INSULATED COPPER CONDUCTOR EXTENDED AROUND THE PERIMETER OF THE EQUIPMENT AREA. ALL NON-TELECOMMUNICATIONS RELATED METALLIC OBJECTS FOUND WITHIN A SITE SHALL BE GROUNDED TO THE INTERIOR GROUND RING WITH #6 AWG STRANDED GREEN INSULATED CONDUCTOR.

(D) BOND TO INTERIOR GROUND RING: #2 AWG SOLID TINNED COPPER WIRE PRIMARY BONDS SHALL BE PROVIDED AT LEAST AT FOUR POINTS ON THE INTERIOR GROUND RING, LOCATED AT THE CORNERS OF THE BUILDING.

(E) GROUND ROD: UL LISTED COPPER CLAD STEEL. MINIMUM 5/8" DIAMETER BY EIGHT FEET LONG. GROUND RODS SHALL BE INSTALLED WITH INSPECTION SLEEVES. GROUND RODS SHALL BE DRIVEN TO THE DEPTH OF GROUND RING CONDUCTOR.

(F) CELL REFERENCE GROUND BAR: POINT OF GROUND REFERENCE FOR ALL COMMUNICATIONS EQUIPMENT FRAMES. ALL BONDS ARE MADE WITH #2 AWG UNLESS NOTED OTHERWISE STRANDED GREEN INSULATED COPPER CONDUCTORS. BOND TO GROUND RING WITH (2) #2 SOLID TINNED COPPER CONDUCTORS.

(G) HATCH PLATE GROUND BAR: BOND TO THE INTERIOR GROUND RING WITH TWO #2 AWG STRANDED GREEN INSULATED COPPER CONDUCTORS. WHEN A HATCH-PLATE AND A CELL REFERENCE GROUND BAR ARE BOTH PRESENT, THE CRGB MUST BE CONNECTED TO THE HATCH-PLATE AND TO THE INTERIOR GROUND RING USING (2) TWO #2 AWG STRANDED GREEN INSULATED COPPER CONDUCTORS EACH.

(H) EXTERIOR CABLE ENTRY PORT GROUND BARS: LOCATED AT THE ENTRANCE TO THE CELL SITE BUILDING. BOND TO GROUND RING WITH A #2 AWG SOLID TINNED COPPER CONDUCTORS WITH AN EXOTHERMIC WELD AND INSPECTION SLEEVE.

(J) TELCO GROUND BAR: BOND TO BOTH CELL REFERENCE GROUND BAR OR EXTERIOR GROUND RING.

(K) FRAME BONDING: THE BONDING POINT FOR TELECOM EQUIPMENT FRAMES SHALL BE THE GROUND BUS THAT IS NOT ISOLATED FROM THE EQUIPMENTS METAL FRAMEWORK.

(L) INTERIOR UNIT BONDS: METAL FRAMES, CABINETS AND INDIVIDUAL METALLIC UNITS LOCATED WITH THE AREA OF THE INTERIOR GROUND RING REQUIRE A #6 AWG STRANDED GREEN INSULATED COPPER BOND TO THE INTERIOR GROUND RING.

(M) FENCE AND GATE GROUNDING: METAL FENCES WITHIN 7 FEET OF THE EXTERIOR GROUND RING OR OBJECTS BONDED TO THE EXTERIOR GROUND RING SHALL BE BONDED TO THE GROUND RING WITH A #2 AWG SOLID TINNED COPPER CONDUCTOR AT AN INTERVAL NOT EXCEEDING 25 FEET. BONDS SHALL BE MADE AT EACH GATE POST AND ACROSS GATE OPENINGS.

(N) EXTERIOR UNIT BONDS: METALLIC OBJECTS, EXTERNAL TO OR MOUNTED TO THE BUILDING, SHALL BE BONDED TO THE EXTERIOR GROUND RING. USING #2 TINNED SOLID COPPER WIRE

(P) ICE BRIDGE SUPPORTS: EACH ICE BRIDGE LEG SHALL BE BONDED TO THE GROUND RING WITH #2 AWG BARE TINNED COPPER CONDUCTOR. PROVIDE EXOTHERMIC WELDS AT BOTH THE ICE BRIDGE LEG AND BURIED GROUND RING.

(Q) DURING ALL DC POWER SYSTEM CHANGES INCLUDING DC SYSTEM CHANGE OUTS, RECTIFIER REPLACEMENTS OR ADDITIONS, BREAKER DISTRIBUTION CHANGES, BATTERY ADDITIONS, BATTERY REPLACEMENTS AND INSTALLATIONS OR CHANGES TO DC CONVERTER SYSTEMS IT SHALL BE REQUIRED THAT SERVICE CONTRACTORS VERIFY ALL DC POWER SYSTEMS ARE EQUIPPED WITH A MASTER DC SYSTEM RETURN GROUND CONDUCTOR FROM THE DC POWER SYSTEM COMMON RETURN BUS DIRECTLY CONNECTED TO THE CELL SITE REFERENCE GROUND BAR

(R) TOWER TOP COLLECTOR BUSS BAR IS TO BE MECHANICALLY BONDED TO PROPOSED ANTENNA MOUNT COLLAR.

REFER TO DISH WIRELESS, L.L.C. GROUNDING NOTES.

GROUNDING KEY NOTES

NO SCALE | 3

dish wireless.
5701 SOUTH SANTA FE DRIVE
LITTLETON, CO 80120

FULLERTON ENGINEERING·DESIGN
1100 E. WOODFIELD ROAD, SUITE 500
SCHAUMBURG, ILLINOIS 60173
TEL: 847-908-8400
COA# E-2488
www.FullertonEngineering.com

IT IS A VIOLATION OF LAW FOR ANY PERSON, UNLESS THEY ARE ACTING UNDER THE DIRECTION OF A LICENSED PROFESSIONAL ENGINEER, TO ALTER THIS DOCUMENT.

DRAWN BY:	CHECKED BY:	APPROVED BY:
KB	KR	DS

RFDS REV #: ---

CONSTRUCTION DOCUMENTS

SUBMITTALS

REV	DATE	DESCRIPTION
A	07/27/2021	ISSUED FOR REVIEW
0	09/09/2021	ISSUED FOR CONSTRUCTION

A&E PROJECT NUMBER
2021.0102.0162

DISH WIRELESS, LLC.
PROJECT INFORMATION
BOBDL00017A
777 TALCOTVILLE ROAD
VERNONROCKVILLE,CT 06066

SHEET TITLE
GROUNDING PLANS AND NOTES

SHEET NUMBER
G-1

NOTES

EQUIPMENT CABINET OMITTED FOR CLARITY

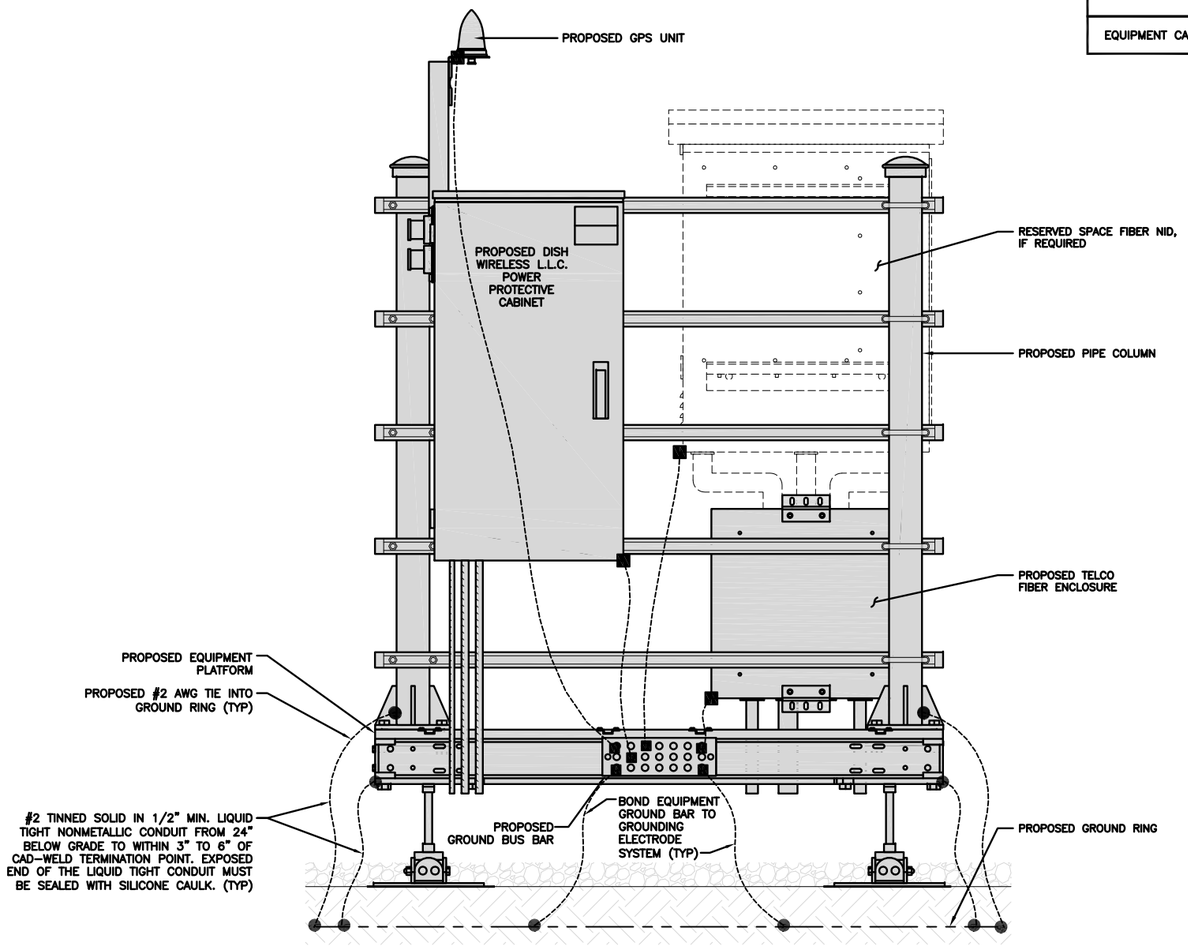

H-FRAME GROUNDING DETAIL | NO SCALE | 1

NOTES

CABLE GROUNDING NOT REQUIRED WHEN ANTENNA IS LESS THAN 10' FROM CABINET

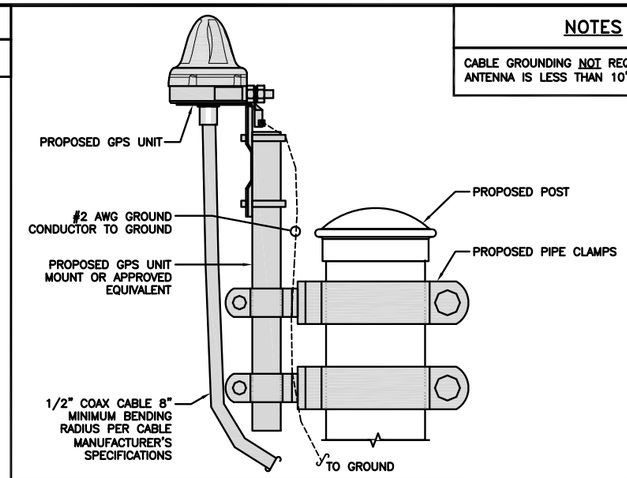

TYPICAL GPS UNIT GROUNDING | NO SCALE | 2

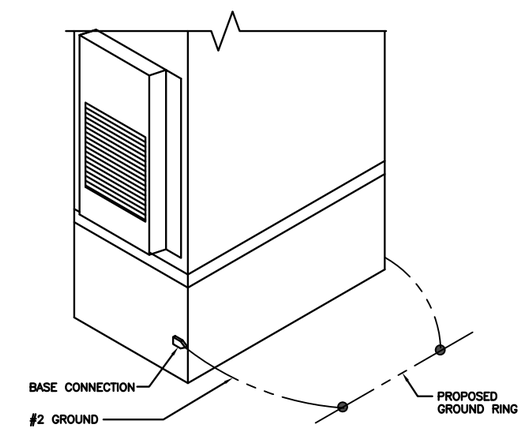

OUTDOOR CABINET GROUNDING | NO SCALE | 3

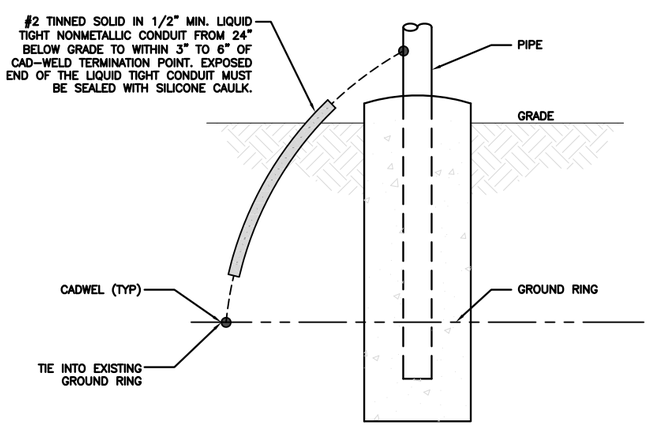

TRANSITIONING GROUND DETAIL | NO SCALE | 4

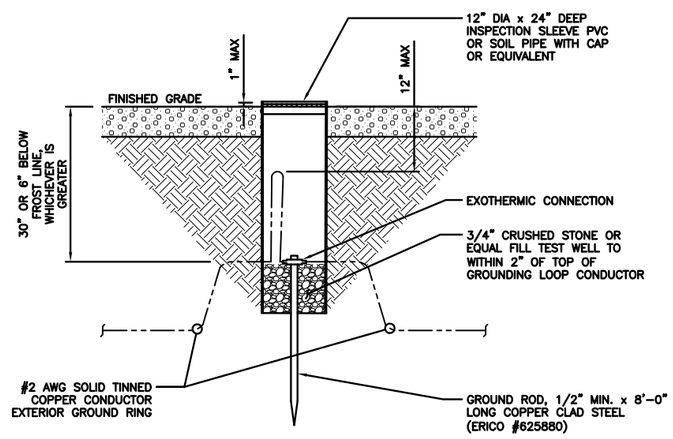

TYPICAL TEST GROUND ROD WITH INSPECTION SLEEVE | NO SCALE | 5

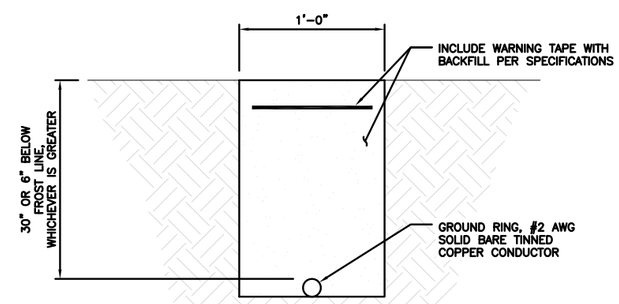

TYPICAL GROUND RING TRENCH | NO SCALE | 6

dish wireless.

5701 SOUTH SANTA FE DRIVE
LITTLETON, CO 80120

FULLERTON ENGINEERING·DESIGN

1100 E. WOODFIELD ROAD, SUITE 500
SCHAUMBURG, ILLINOIS 60173
TEL: 847-908-8400
COA# E-2488
www.FullertonEngineering.com

IT IS A VIOLATION OF LAW FOR ANY PERSON, UNLESS THEY ARE ACTING UNDER THE DIRECTION OF A LICENSED PROFESSIONAL ENGINEER, TO ALTER THIS DOCUMENT.

DRAWN BY:	CHECKED BY:	APPROVED BY:
KB	KR	DS

RFDS REV #: ---

CONSTRUCTION DOCUMENTS

SUBMITTALS

REV	DATE	DESCRIPTION
A	07/27/2021	ISSUED FOR REVIEW
0	09/09/2021	ISSUED FOR CONSTRUCTION

A&E PROJECT NUMBER
2021.0102.0162

DISH WIRELESS, LLC.
PROJECT INFORMATION

BOBDL00017A
777 TALCOTVILLE ROAD
VERNONROCKVILLE,CT 06066

SHEET TITLE
GROUNDING DETAILS

SHEET NUMBER
G-2

1. EXOTHERMIC WELD (2) TWO, #2 AWG BARE TINNED SOLID COPPER CONDUCTORS TO GROUND BAR. ROUTE CONDUCTORS TO BURIED GROUND RING AND PROVIDE PARALLEL EXOTHERMIC WELD.
2. ALL EXTERIOR GROUNDING HARDWARE SHALL BE STAINLESS STEEL 3/8" DIAMETER OR LARGER. ALL HARDWARE 18-8 STAINLESS STEEL INCLUDING LOCK WASHERS, COAT ALL SURFACES WITH AN ANTI-OXIDANT COMPOUND BEFORE MATING.
3. FOR GROUND BOND TO STEEL ONLY: COAT ALL SURFACES WITH AN ANTI-OXIDANT COMPOUND BEFORE MATING.
4. DO NOT INSTALL CABLE GROUNDING KIT AT A BEND AND ALWAYS DIRECT GROUND CONDUCTOR DOWN TO GROUNDING BUS.
5. NUT & WASHER SHALL BE PLACED ON THE FRONT SIDE OF THE GROUND BAR AND BOLTED ON THE BACK SIDE.
6. ALL GROUNDING PARTS AND EQUIPMENT TO BE SUPPLIED AND INSTALLED BY CONTRACTOR.
7. THE CONTRACTOR SHALL BE RESPONSIBLE FOR INSTALLING ADDITIONAL GROUND BAR AS REQUIRED.
8. ENSURE THE WIRE INSULATION TERMINATION IS WITHIN 1/8" OF THE BARREL (NO SHINERS).

TYPICAL GROUNDING NOTES | NO SCALE | 1

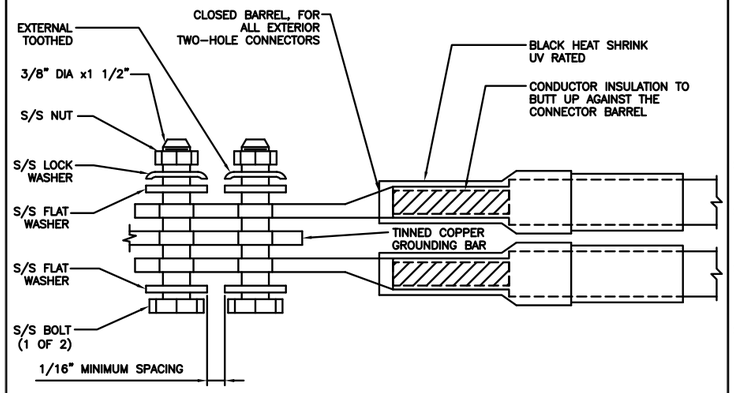

TYPICAL EXTERIOR TWO HOLE LUG | NO SCALE | 2

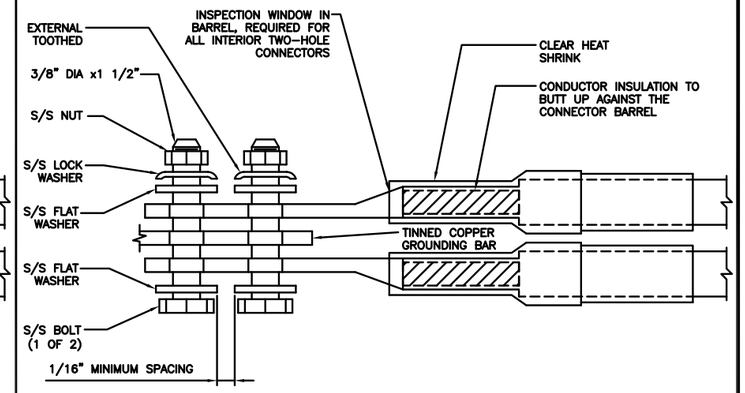

TYPICAL INTERIOR TWO HOLE LUG | NO SCALE | 3

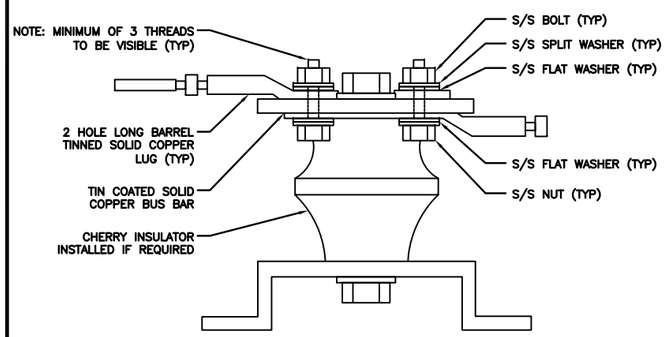

LUG DETAIL | NO SCALE | 4

NOT USED | NO SCALE | 5

NOT USED | NO SCALE | 6

NOT USED | NO SCALE | 7

NOT USED | NO SCALE | 8

NOT USED | NO SCALE | 9

dish wireless.

5701 SOUTH SANTA FE DRIVE
LITTLETON, CO 80120

FULLERTON
ENGINEERING · DESIGN

1100 E. WOODFIELD ROAD, SUITE 500
SCHAUMBURG, ILLINOIS 60173
TEL: 847-908-8400
COA# E-2488
www.FullertonEngineering.com

IT IS A VIOLATION OF LAW FOR ANY PERSON, UNLESS THEY ARE ACTING UNDER THE DIRECTION OF A LICENSED PROFESSIONAL ENGINEER, TO ALTER THIS DOCUMENT.

DRAWN BY:	CHECKED BY:	APPROVED BY:
KB	KR	DS

RFDS REV #: ---

CONSTRUCTION DOCUMENTS

SUBMITTALS

REV	DATE	DESCRIPTION
A	07/27/2021	ISSUED FOR REVIEW
0	09/09/2021	ISSUED FOR CONSTRUCTION

A&E PROJECT NUMBER
2021.0102.0162

DISH WIRELESS, LLC.
PROJECT INFORMATION

BOBDL00017A
777 TALCOTVILLE ROAD
VERNONROCKVILLE,CT 06066

SHEET TITLE
GROUNDING DETAILS

SHEET NUMBER
G-3

RF CABLE COLOR CODES | NO SCALE | 1

LOW BANDS (N71–N28)
OPTIONAL – (N29)
ORANGE

AWS
(N65+N70+H–BLOCK)
PURPLE

CBRS TECH
(3 GHz)
YELLOW

NEGATIVE SLANT PORT
ON ANTRRH
WHITE

ALPHA SECTOR
RED

BETA SECTOR
BLUE

GAMMA SECTOR
GREEN

COLOR IDENTIFIER | NO SCALE | 2

NOT USED | NO SCALE | 3

NOT USED | NO SCALE | 4

dish wireless.
5701 SOUTH SANTA FE DRIVE
LITTLETON, CO 80120

FULLERTON
ENGINEERING · DESIGN
1100 E. WOODFIELD ROAD, SUITE 500
SCHAUMBURG, ILLINOIS 60173
TEL: 847-908-8400
COA# E-2488
www.FullertonEngineering.com

IT IS A VIOLATION OF LAW FOR ANY PERSON, UNLESS THEY ARE ACTING UNDER THE DIRECTION OF A LICENSED PROFESSIONAL ENGINEER, TO ALTER THIS DOCUMENT.

DRAWN BY:	CHECKED BY:	APPROVED BY:
KB	KR	DS

RFDS REV #: ---

CONSTRUCTION DOCUMENTS

SUBMITTALS

REV	DATE	DESCRIPTION
A	07/27/2021	ISSUED FOR REVIEW
0	09/09/2021	ISSUED FOR CONSTRUCTION

A&E PROJECT NUMBER
2021.0102.0162

DISH WIRELESS, LLC.
PROJECT INFORMATION
BOBDL00017A
777 TALCOTVILLE ROAD
VERNONROCKVILLE,CT 06066

SHEET TITLE
RF
CABLE COLOR CODE

SHEET NUMBER
RF-1

EXOTHERMIC CONNECTION

MECHANICAL CONNECTION

BUSS BAR INSULATOR

CHEMICAL ELECTROLYTIC GROUNDING SYSTEM

TEST CHEMICAL ELECTROLYTIC GROUNDING SYSTEM — T

EXOTHERMIC WITH INSPECTION SLEEVE

GROUNDING BAR

GROUND ROD

TEST GROUND ROD WITH INSPECTION SLEEVE — T

SINGLE POLE SWITCH — $

DUPLEX RECEPTACLE

DUPLEX GFCI RECEPTACLE — GFCI

FLUORESCENT LIGHTING FIXTURE (2) TWO LAMPS 48–T8 — F

SMOKE DETECTION (DC) — SD

EMERGENCY LIGHTING (DC)

SECURITY LIGHT W/PHOTOCELL LITHONIA ALXW LED–1–25A400/51K–SR4–120–PE–DDBTXD

CHAIN LINK FENCE — X

WOOD/WROUGHT IRON FENCE

WALL STRUCTURE

LEASE AREA

PROPERTY LINE (PL)

SETBACKS

ICE BRIDGE

CABLE TRAY

WATER LINE — W

UNDERGROUND POWER — UGP

UNDERGROUND TELCO — UGT

OVERHEAD POWER — OHP

OVERHEAD TELCO — OHT

UNDERGROUND TELCO/POWER — UGT/P

ABOVE GROUND POWER — AGP

ABOVE GROUND TELCO — AGT

ABOVE GROUND TELCO/POWER — AGT/P

WORKPOINT — W.P.

SECTION REFERENCE — XX / X–X

DETAIL REFERENCE — XX / X–X

LEGEND

AB	ANCHOR BOLT
ABV	ABOVE
AC	ALTERNATING CURRENT
ADDL	ADDITIONAL
AFF	ABOVE FINISHED FLOOR
AFG	ABOVE FINISHED GRADE
AGL	ABOVE GROUND LEVEL
AIC	AMPERAGE INTERRUPTION CAPACITY
ALUM	ALUMINUM
ALT	ALTERNATE
ANT	ANTENNA
APPROX	APPROXIMATE
ARCH	ARCHITECTURAL
ATS	AUTOMATIC TRANSFER SWITCH
AWG	AMERICAN WIRE GAUGE
BATT	BATTERY
BLDG	BUILDING
BLK	BLOCK
BLKG	BLOCKING
BM	BEAM
BTC	BARE TINNED COPPER CONDUCTOR
BOF	BOTTOM OF FOOTING
CAB	CABINET
CANT	CANTILEVERED
CHG	CHARGING
CLG	CEILING
CLR	CLEAR
COL	COLUMN
COMM	COMMON
CONC	CONCRETE
CONSTR	CONSTRUCTION
DBL	DOUBLE
DC	DIRECT CURRENT
DEPT	DEPARTMENT
DF	DOUGLAS FIR
DIA	DIAMETER
DIAG	DIAGONAL
DIM	DIMENSION
DWG	DRAWING
DWL	DOWEL
EA	EACH
EC	ELECTRICAL CONDUCTOR
EL.	ELEVATION
ELEC	ELECTRICAL
EMT	ELECTRICAL METALLIC TUBING
ENG	ENGINEER
EQ	EQUAL
EXP	EXPANSION
EXT	EXTERIOR
EW	EACH WAY
FAB	FABRICATION
FF	FINISH FLOOR
FG	FINISH GRADE
FIF	FACILITY INTERFACE FRAME
FIN	FINISH(ED)
FLR	FLOOR
FDN	FOUNDATION
FOC	FACE OF CONCRETE
FOM	FACE OF MASONRY
FOS	FACE OF STUD
FOW	FACE OF WALL
FS	FINISH SURFACE
FT	FOOT
FTG	FOOTING
GA	GAUGE
GEN	GENERATOR
GFCI	GROUND FAULT CIRCUIT INTERRUPTER
GLB	GLUE LAMINATED BEAM
GLV	GALVANIZED
GPS	GLOBAL POSITIONING SYSTEM
GND	GROUND
GSM	GLOBAL SYSTEM FOR MOBILE
HDG	HOT DIPPED GALVANIZED
HDR	HEADER
HGR	HANGER
HVAC	HEAT/VENTILATION/AIR CONDITIONING
HT	HEIGHT
IGR	INTERIOR GROUND RING
IN	INCH
INT	INTERIOR
LB(S)	POUND(S)
LF	LINEAR FEET
LTE	LONG TERM EVOLUTION
MAS	MASONRY
MAX	MAXIMUM
MB	MACHINE BOLT
MECH	MECHANICAL
MFR	MANUFACTURER
MGB	MASTER GROUND BAR
MIN	MINIMUM
MISC	MISCELLANEOUS
MTL	METAL
MTS	MANUAL TRANSFER SWITCH
MW	MICROWAVE
NEC	NATIONAL ELECTRIC CODE
NM	NEWTON METERS
NO.	NUMBER
#	NUMBER
NTS	NOT TO SCALE
OC	ON–CENTER
OSHA	OCCUPATIONAL SAFETY AND HEALTH ADMINISTRATION
OPNG	OPENING
P/C	PRECAST CONCRETE
PCS	PERSONAL COMMUNICATION SERVICES
PCU	PRIMARY CONTROL UNIT
PRC	PRIMARY RADIO CABINET
PP	POLARIZING PRESERVING
PSF	POUNDS PER SQUARE FOOT
PSI	POUNDS PER SQUARE INCH
PT	PRESSURE TREATED
PWR	POWER CABINET
QTY	QUANTITY
RAD	RADIUS
RECT	RECTIFIER
REF	REFERENCE
REINF	REINFORCEMENT
REQ'D	REQUIRED
RET	REMOTE ELECTRIC TILT
RF	RADIO FREQUENCY
RMC	RIGID METALLIC CONDUIT
RRH	REMOTE RADIO HEAD
RRU	REMOTE RADIO UNIT
RWY	RACEWAY
SCH	SCHEDULE
SHT	SHEET
SIAD	SMART INTEGRATED ACCESS DEVICE
SIM	SIMILAR
SPEC	SPECIFICATION
SQ	SQUARE
SS	STAINLESS STEEL
STD	STANDARD
STL	STEEL
TEMP	TEMPORARY
THK	THICKNESS
TMA	TOWER MOUNTED AMPLIFIER
TN	TOE NAIL
TOA	TOP OF ANTENNA
TOC	TOP OF CURB
TOF	TOP OF FOUNDATION
TOP	TOP OF PLATE (PARAPET)
TOS	TOP OF STEEL
TOW	TOP OF WALL
TVSS	TRANSIENT VOLTAGE SURGE SUPPRESSION
TYP	TYPICAL
UG	UNDERGROUND
UL	UNDERWRITERS LABORATORY
UNO	UNLESS NOTED OTHERWISE
UMTS	UNIVERSAL MOBILE TELECOMMUNICATIONS SYSTEM
UPS	UNITERRUPTIBLE POWER SYSTEM (DC POWER PLANT)
VIF	VERIFIED IN FIELD
W	WIDE
W/	WITH
WD	WOOD
WP	WEATHERPROOF
WT	WEIGHT

ABBREVIATIONS

dish wireless.

5701 SOUTH SANTA FE DRIVE
LITTLETON, CO 80120

FULLERTON ENGINEERING · DESIGN

1100 E. WOODFIELD ROAD, SUITE 500
SCHAUMBURG, ILLINOIS 60173
TEL: 847-908-8400
COA# E-2488
www.FullertonEngineering.com

IT IS A VIOLATION OF LAW FOR ANY PERSON, UNLESS THEY ARE ACTING UNDER THE DIRECTION OF A LICENSED PROFESSIONAL ENGINEER, TO ALTER THIS DOCUMENT.

DRAWN BY:	CHECKED BY:	APPROVED BY:
KB	KR	DS

RFDS REV #: ---

CONSTRUCTION DOCUMENTS

SUBMITTALS

REV	DATE	DESCRIPTION
A	07/27/2021	ISSUED FOR REVIEW
0	09/09/2021	ISSUED FOR CONSTRUCTION

A&E PROJECT NUMBER
2021.0102.0162

DISH WIRELESS, LLC.
PROJECT INFORMATION

BOBDL00017A
777 TALCOTVILLE ROAD
VERNONROCKVILLE,CT 06066

SHEET TITLE
LEGEND AND ABBREVIATIONS

SHEET NUMBER
GN-1

SITE ACTIVITY REQUIREMENTS:

1. NOTICE TO PROCEED – NO WORK SHALL COMMENCE PRIOR TO CONTRACTOR RECEIVING A WRITTEN NOTICE TO PROCEED (NTP) AND THE ISSUANCE OF A PURCHASE ORDER. PRIOR TO ACCESSING/ENTERING THE SITE YOU MUST CONTACT THE DISH WIRELESS, LLC. AND TOWER OWNER NOC & THE DISH WIRELESS, LLC. AND TOWER OWNER CONSTRUCTION MANAGER.

2. "LOOK UP" – DISH WIRELESS, LLC. AND TOWER OWNER SAFETY CLIMB REQUIREMENT:

THE INTEGRITY OF THE SAFETY CLIMB AND ALL COMPONENTS OF THE CLIMBING FACILITY SHALL BE CONSIDERED DURING ALL STAGES OF DESIGN, INSTALLATION, AND INSPECTION. TOWER MODIFICATION, MOUNT REINFORCEMENTS, AND/OR EQUIPMENT INSTALLATIONS SHALL NOT COMPROMISE THE INTEGRITY OR FUNCTIONAL USE OF THE SAFETY CLIMB OR ANY COMPONENTS OF THE CLIMBING FACILITY ON THE STRUCTURE. THIS SHALL INCLUDE, BUT NOT BE LIMITED TO: PINCHING OF THE WIRE ROPE, BENDING OF THE WIRE ROPE FROM ITS SUPPORTS, DIRECT CONTACT OR CLOSE PROXIMITY TO THE WIRE ROPE WHICH MAY CAUSE FRICTIONAL WEAR, IMPACT TO THE ANCHORAGE POINTS IN ANY WAY, OR TO IMPEDE/BLOCK ITS INTENDED USE. ANY COMPROMISED SAFETY CLIMB, INCLUDING EXISTING CONDITIONS MUST BE TAGGED OUT AND REPORTED TO YOUR DISH WIRELESS, LLC. AND DISH WIRELESS, LLC. AND TOWER OWNER POC OR CALL THE NOC TO GENERATE A SAFETY CLIMB MAINTENANCE AND CONTRACTOR NOTICE TICKET.

3. PRIOR TO THE START OF CONSTRUCTION, ALL REQUIRED JURISDICTIONAL PERMITS SHALL BE OBTAINED. THIS INCLUDES, BUT IS NOT LIMITED TO, BUILDING, ELECTRICAL, MECHANICAL, FIRE, FLOOD ZONE, ENVIRONMENTAL, AND ZONING. AFTER ONSITE ACTIVITIES AND CONSTRUCTION ARE COMPLETED, ALL REQUIRED PERMITS SHALL BE SATISFIED AND CLOSED OUT ACCORDING TO LOCAL JURISDICTIONAL REQUIREMENTS.

4. ALL CONSTRUCTION MEANS AND METHODS; INCLUDING BUT NOT LIMITED TO, ERECTION PLANS, RIGGING PLANS, CLIMBING PLANS, AND RESCUE PLANS SHALL BE THE RESPONSIBILITY OF THE GENERAL CONTRACTOR RESPONSIBLE FOR THE EXECUTION OF THE WORK CONTAINED HEREIN, AND SHALL MEET ANSI/ASSE A10.48 (LATEST EDITION); FEDERAL, STATE, AND LOCAL REGULATIONS; AND ANY APPLICABLE INDUSTRY CONSENSUS STANDARDS RELATED TO THE CONSTRUCTION ACTIVITIES BEING PERFORMED. ALL RIGGING PLANS SHALL ADHERE TO ANSI/ASSE A10.48 (LATEST EDITION) AND DISH WIRELESS, LLC. AND TOWER OWNER STANDARDS, INCLUDING THE REQUIRED INVOLVEMENT OF A QUALIFIED ENGINEER FOR CLASS IV CONSTRUCTION, TO CERTIFY THE SUPPORTING STRUCTURE(S) IN ACCORDANCE WITH ANSI/TIA–322 (LATEST EDITION).

5. ALL SITE WORK TO COMPLY WITH DISH WIRELESS, LLC. AND TOWER OWNER INSTALLATION STANDARDS FOR CONSTRUCTION ACTIVITIES ON DISH WIRELESS, LLC. AND TOWER OWNER TOWER SITE AND LATEST VERSION OF ANSI/TIA–1019–A–2012 "STANDARD FOR INSTALLATION, ALTERATION, AND MAINTENANCE OF ANTENNA SUPPORTING STRUCTURES AND ANTENNAS."

6. IF THE SPECIFIED EQUIPMENT CAN NOT BE INSTALLED AS SHOWN ON THESE DRAWINGS, THE CONTRACTOR SHALL PROPOSE AN ALTERNATIVE INSTALLATION FOR APPROVAL BY DISH WIRELESS, LLC. AND TOWER OWNER PRIOR TO PROCEEDING WITH ANY SUCH CHANGE OF INSTALLATION.

7. ALL MATERIALS FURNISHED AND INSTALLED SHALL BE IN STRICT ACCORDANCE WITH ALL APPLICABLE CODES, REGULATIONS AND ORDINANCES. CONTRACTOR SHALL ISSUE ALL APPROPRIATE NOTICES AND COMPLY WITH ALL LAWS, ORDINANCES, RULES, REGULATIONS AND LAWFUL ORDERS OF ANY PUBLIC AUTHORITY REGARDING THE PERFORMANCE OF THE WORK. ALL WORK CARRIED OUT SHALL COMPLY WITH ALL APPLICABLE MUNICIPAL AND UTILITY COMPANY SPECIFICATIONS AND LOCAL JURISDICTIONAL CODES, ORDINANCES AND APPLICABLE REGULATIONS.

8. THE CONTRACTOR SHALL INSTALL ALL EQUIPMENT AND MATERIALS IN ACCORDANCE WITH MANUFACTURER'S RECOMMENDATIONS UNLESS SPECIFICALLY STATED OTHERWISE.

9. THE CONTRACTOR SHALL CONTACT UTILITY LOCATING SERVICES INCLUDING PRIVATE LOCATES SERVICES PRIOR TO THE START OF CONSTRUCTION.

10. ALL EXISTING ACTIVE SEWER, WATER, GAS, ELECTRIC AND OTHER UTILITIES WHERE ENCOUNTERED IN THE WORK, SHALL BE PROTECTED AT ALL TIMES AND WHERE REQUIRED FOR THE PROPER EXECUTION OF THE WORK, SHALL BE RELOCATED AS DIRECTED BY CONTRACTOR. EXTREME CAUTION SHOULD BE USED BY THE CONTRACTOR WHEN EXCAVATING OR DRILLING PIERS AROUND OR NEAR UTILITIES. CONTRACTOR SHALL PROVIDE SAFETY TRAINING FOR THE WORKING CREW. THIS WILL INCLUDE BUT NOT BE LIMITED TO A) FALL PROTECTION B) CONFINED SPACE C) ELECTRICAL SAFETY D) TRENCHING AND EXCAVATION E) CONSTRUCTION SAFETY PROCEDURES.

11. ALL SITE WORK SHALL BE AS INDICATED ON THE STAMPED CONSTRUCTION DRAWINGS AND DISH PROJECT SPECIFICATIONS, LATEST APPROVED REVISION.

12. CONTRACTOR SHALL KEEP THE SITE FREE FROM ACCUMULATING WASTE MATERIAL, DEBRIS, AND TRASH AT THE COMPLETION OF THE WORK. IF NECESSARY, RUBBISH, STUMPS, DEBRIS, STICKS, STONES AND OTHER REFUSE SHALL BE REMOVED FROM THE SITE AND DISPOSED OF LEGALLY.

13. ALL EXISTING INACTIVE SEWER, WATER, GAS, ELECTRIC AND OTHER UTILITIES, WHICH INTERFERE WITH THE EXECUTION OF THE WORK, SHALL BE REMOVED AND/OR CAPPED, PLUGGED OR OTHERWISE DISCONTINUED AT POINTS WHICH WILL NOT INTERFERE WITH THE EXECUTION OF THE WORK, SUBJECT TO THE APPROVAL OF DISH WIRELESS, LLC. AND TOWER OWNER, AND/OR LOCAL UTILITIES.

14. THE CONTRACTOR SHALL PROVIDE SITE SIGNAGE IN ACCORDANCE WITH THE TECHNICAL SPECIFICATION FOR SITE SIGNAGE REQUIRED BY LOCAL JURISDICTION AND SIGNAGE REQUIRED ON INDIVIDUAL PIECES OF EQUIPMENT, ROOMS, AND SHELTERS.

15. THE SITE SHALL BE GRADED TO CAUSE SURFACE WATER TO FLOW AWAY FROM THE CARRIER'S EQUIPMENT AND TOWER AREAS.

16. THE SUB GRADE SHALL BE COMPACTED AND BROUGHT TO A SMOOTH UNIFORM GRADE PRIOR TO FINISHED SURFACE APPLICATION.

17. THE AREAS OF THE OWNERS PROPERTY DISTURBED BY THE WORK AND NOT COVERED BY THE TOWER, EQUIPMENT OR DRIVEWAY, SHALL BE GRADED TO A UNIFORM SLOPE, AND STABILIZED TO PREVENT EROSION AS SPECIFIED ON THE CONSTRUCTION DRAWINGS AND/OR PROJECT SPECIFICATIONS.

18. CONTRACTOR SHALL MINIMIZE DISTURBANCE TO EXISTING SITE DURING CONSTRUCTION. EROSION CONTROL MEASURES, IF REQUIRED DURING CONSTRUCTION, SHALL BE IN CONFORMANCE WITH THE LOCAL GUIDELINES FOR EROSION AND SEDIMENT CONTROL.

19. THE CONTRACTOR SHALL PROTECT EXISTING IMPROVEMENTS, PAVEMENTS, CURBS, LANDSCAPING AND STRUCTURES. ANY DAMAGED PART SHALL BE REPAIRED AT CONTRACTOR'S EXPENSE TO THE SATISFACTION OF OWNER.

20. CONTRACTOR SHALL LEGALLY AND PROPERLY DISPOSE OF ALL SCRAP MATERIALS SUCH AS COAXIAL CABLES AND OTHER ITEMS REMOVED FROM THE EXISTING FACILITY. ANTENNAS AND RADIOS REMOVED SHALL BE RETURNED TO THE OWNER'S DESIGNATED LOCATION.

21. CONTRACTOR SHALL LEAVE PREMISES IN CLEAN CONDITION. TRASH AND DEBRIS SHOULD BE REMOVED FROM SITE ON A DAILY BASIS.

22. NO FILL OR EMBANKMENT MATERIAL SHALL BE PLACED ON FROZEN GROUND. FROZEN MATERIALS, SNOW OR ICE SHALL NOT BE PLACED IN ANY FILL OR EMBANKMENT.

GENERAL NOTES:

1.FOR THE PURPOSE OF CONSTRUCTION DRAWING, THE FOLLOWING DEFINITIONS SHALL APPLY:

CONTRACTOR:GENERAL CONTRACTOR RESPONSIBLE FOR CONSTRUCTION

CARRIER:DISH WIRELESS, LLC.

TOWER OWNER:TOWER OWNER

2. THESE DRAWINGS HAVE BEEN PREPARED USING STANDARDS OF PROFESSIONAL CARE AND COMPLETENESS NORMALLY EXERCISED UNDER SIMILAR CIRCUMSTANCES BY REPUTABLE ENGINEERS IN THIS OR SIMILAR LOCALITIES. IT IS ASSUMED THAT THE WORK DEPICTED WILL BE PERFORMED BY AN EXPERIENCED CONTRACTOR AND/OR WORKPEOPLE WHO HAVE A WORKING KNOWLEDGE OF THE APPLICABLE CODE STANDARDS AND REQUIREMENTS AND OF INDUSTRY ACCEPTED STANDARD GOOD PRACTICE. AS NOT EVERY CONDITION OR ELEMENT IS (OR CAN BE) EXPLICITLY SHOWN ON THESE DRAWINGS, THE CONTRACTOR SHALL USE INDUSTRY ACCEPTED STANDARD GOOD PRACTICE FOR MISCELLANEOUS WORK NOT EXPLICITLY SHOWN.

3. THESE DRAWINGS REPRESENT THE FINISHED STRUCTURE. THEY DO NOT INDICATE THE MEANS OR METHODS OF CONSTRUCTION. THE CONTRACTOR SHALL BE SOLELY RESPONSIBLE FOR THE CONSTRUCTION MEANS, METHODS, TECHNIQUES, SEQUENCES, AND PROCEDURES. THE CONTRACTOR SHALL PROVIDE ALL MEASURES NECESSARY FOR PROTECTION OF LIFE AND PROPERTY DURING CONSTRUCTION. SUCH MEASURES SHALL INCLUDE, BUT NOT BE LIMITED TO, BRACING, FORMWORK, SHORING, ETC. SITE VISITS BY THE ENGINEER OR HIS REPRESENTATIVE WILL NOT INCLUDE INSPECTION OF THESE ITEMS AND IS FOR STRUCTURAL OBSERVATION OF THE FINISHED STRUCTURE ONLY.

4. NOTES AND DETAILS IN THE CONSTRUCTION DRAWINGS SHALL TAKE PRECEDENCE OVER GENERAL NOTES AND TYPICAL DETAILS. WHERE NO DETAILS ARE SHOWN, CONSTRUCTION SHALL CONFORM TO SIMILAR WORK ON THE PROJECT, AND/OR AS PROVIDED FOR IN THE CONTRACT DOCUMENTS. WHERE DISCREPANCIES OCCUR BETWEEN PLANS, DETAILS, GENERAL NOTES, AND SPECIFICATIONS, THE GREATER, MORE STRICT REQUIREMENTS, SHALL GOVERN. IF FURTHER CLARIFICATION IS REQUIRED CONTACT THE ENGINEER OF RECORD.

5. SUBSTANTIAL EFFORT HAS BEEN MADE TO PROVIDE ACCURATE DIMENSIONS AND MEASUREMENTS ON THE DRAWINGS TO ASSIST IN THE FABRICATION AND/OR PLACEMENT OF CONSTRUCTION ELEMENTS BUT IT IS THE SOLE RESPONSIBILITY OF THE CONTRACTOR TO FIELD VERIFY THE DIMENSIONS, MEASUREMENTS, AND/OR CLEARANCES SHOWN IN THE CONSTRUCTION DRAWINGS PRIOR TO FABRICATION OR CUTTING OF ANY NEW OR EXISTING CONSTRUCTION ELEMENTS. IF IT IS DETERMINED THAT THERE ARE DISCREPANCIES AND/OR CONFLICTS WITH THE CONSTRUCTION DRAWINGS THE ENGINEER OF RECORD IS TO BE NOTIFIED AS SOON AS POSSIBLE.

6. PRIOR TO THE SUBMISSION OF BIDS, THE BIDDING CONTRACTOR SHALL VISIT THE CELL SITE TO FAMILIARIZE WITH THE EXISTING CONDITIONS AND TO CONFIRM THAT THE WORK CAN BE ACCOMPLISHED AS SHOWN ON THE CONSTRUCTION DRAWINGS. ANY DISCREPANCY FOUND SHALL BE BROUGHT TO THE ATTENTION OF CARRIER POC AND TOWER OWNER.

7. ALL MATERIALS FURNISHED AND INSTALLED SHALL BE IN STRICT ACCORDANCE WITH ALL APPLICABLE CODES, REGULATIONS AND ORDINANCES. CONTRACTOR SHALL ISSUE ALL APPROPRIATE NOTICES AND COMPLY WITH ALL LAWS, ORDINANCES, RULES, REGULATIONS AND LAWFUL ORDERS OF ANY PUBLIC AUTHORITY REGARDING THE PERFORMANCE OF THE WORK. ALL WORK CARRIED OUT SHALL COMPLY WITH ALL APPLICABLE MUNICIPAL AND UTILITY COMPANY SPECIFICATIONS AND LOCAL JURISDICTIONAL CODES, ORDINANCES AND APPLICABLE REGULATIONS.

8. UNLESS NOTED OTHERWISE, THE WORK SHALL INCLUDE FURNISHING MATERIALS, EQUIPMENT, APPURTENANCES AND LABOR NECESSARY TO COMPLETE ALL INSTALLATIONS AS INDICATED ON THE DRAWINGS.

9. THE CONTRACTOR SHALL INSTALL ALL EQUIPMENT AND MATERIALS IN ACCORDANCE WITH MANUFACTURER'S RECOMMENDATIONS UNLESS SPECIFICALLY STATED OTHERWISE.

10. IF THE SPECIFIED EQUIPMENT CAN NOT BE INSTALLED AS SHOWN ON THESE DRAWINGS, THE CONTRACTOR SHALL PROPOSE AN ALTERNATIVE INSTALLATION FOR APPROVAL BY THE CARRIER AND TOWER OWNER PRIOR TO PROCEEDING WITH ANY SUCH CHANGE OF INSTALLATION.

11. CONTRACTOR IS TO PERFORM A SITE INVESTIGATION, BEFORE SUBMITTING BIDS, TO DETERMINE THE BEST ROUTING OF ALL CONDUITS FOR POWER, AND TELCO AND FOR GROUNDING CABLES AS SHOWN IN THE POWER, TELCO, AND GROUNDING PLAN DRAWINGS.

12. THE CONTRACTOR SHALL PROTECT EXISTING IMPROVEMENTS, PAVEMENTS, CURBS, LANDSCAPING AND STRUCTURES. ANY DAMAGED PART SHALL BE REPAIRED AT CONTRACTOR'S EXPENSE TO THE SATISFACTION OF DISH WIRELESS, LLC. AND TOWER OWNER

13. CONTRACTOR SHALL LEGALLY AND PROPERLY DISPOSE OF ALL SCRAP MATERIALS SUCH AS COAXIAL CABLES AND OTHER ITEMS REMOVED FROM THE EXISTING FACILITY. ANTENNAS REMOVED SHALL BE RETURNED TO THE OWNER'S DESIGNATED LOCATION.

14. CONTRACTOR SHALL LEAVE PREMISES IN CLEAN CONDITION. TRASH AND DEBRIS SHOULD BE REMOVED FROM SITE ON A DAILY BASIS.

dish wireless.

5701 SOUTH SANTA FE DRIVE
LITTLETON, CO 80120

FULLERTON
ENGINEERING · DESIGN

1100 E. WOODFIELD ROAD, SUITE 500
SCHAUMBURG, ILLINOIS 60173
TEL: 847-908-8400
COA# E-2488
www.FullertonEngineering.com

IT IS A VIOLATION OF LAW FOR ANY PERSON, UNLESS THEY ARE ACTING UNDER THE DIRECTION OF A LICENSED PROFESSIONAL ENGINEER, TO ALTER THIS DOCUMENT.

DRAWN BY:	CHECKED BY:	APPROVED BY:
KB	KR	DS

RFDS REV #: ---

CONSTRUCTION DOCUMENTS

SUBMITTALS

REV	DATE	DESCRIPTION
A	07/27/2021	ISSUED FOR REVIEW
0	09/09/2021	ISSUED FOR CONSTRUCTION

A&E PROJECT NUMBER

2021.0102.0162

DISH WIRELESS, LLC.
PROJECT INFORMATION

BOBDL00017A
777 TALCOTVILLE ROAD
VERNONROCKVILLE,CT 06066

SHEET TITLE

GENERAL NOTES

SHEET NUMBER

GN-2

CONCRETE, FOUNDATIONS, AND REINFORCING STEEL:

1. ALL CONCRETE WORK SHALL BE IN ACCORDANCE WITH THE ACI 301, ACI 318, ACI 336, ASTM A184, ASTM A185 AND THE DESIGN AND CONSTRUCTION SPECIFICATION FOR CAST-IN-PLACE CONCRETE.

2. UNLESS NOTED OTHERWISE, SOIL BEARING PRESSURE USED FOR DESIGN OF SLABS AND FOUNDATIONS IS ASSUMED TO BE 1000 psf.

3. ALL CONCRETE SHALL HAVE A MINIMUM COMPRESSIVE STRENGTH (f'c) OF 3000 psi AT 28 DAYS, UNLESS NOTED OTHERWISE. NO MORE THAN 90 MINUTES SHALL ELAPSE FROM BATCH TIME TO TIME OF PLACEMENT UNLESS APPROVED BY THE ENGINEER OF RECORD. TEMPERATURE OF CONCRETE SHALL NOT EXCEED 90°f AT TIME OF PLACEMENT.

4. CONCRETE EXPOSED TO FREEZE-THAW CYCLES SHALL CONTAIN AIR ENTRAINING ADMIXTURES. AMOUNT OF AIR ENTRAINMENT TO BE BASED ON SIZE OF AGGREGATE AND F3 CLASS EXPOSURE (VERY SEVERE). CEMENT USED TO BE TYPE II PORTLAND CEMENT WITH A MAXIMUM WATER-TO-CEMENT RATIO (W/C) OF 0.45.

5. ALL STEEL REINFORCING SHALL CONFORM TO ASTM A615. ALL WELDED WIRE FABRIC (WWF) SHALL CONFORM TO ASTM A185. ALL SPLICES SHALL BE CLASS "B" TENSION SPLICES, UNLESS NOTED OTHERWISE. ALL HOOKS SHALL BE STANDARD 90 DEGREE HOOKS, UNLESS NOTED OTHERWISE. YIELD STRENGTH (Fy) OF STANDARD DEFORMED BARS ARE AS FOLLOWS:

#4 BARS AND SMALLER 40 ksi

#5 BARS AND LARGER 60 ksi

6. THE FOLLOWING MINIMUM CONCRETE COVER SHALL BE PROVIDED FOR REINFORCING STEEL UNLESS SHOWN OTHERWISE ON DRAWINGS:

- CONCRETE CAST AGAINST AND PERMANENTLY EXPOSED TO EARTH 3"
- CONCRETE EXPOSED TO EARTH OR WEATHER:
- #6 BARS AND LARGER 2"
- #5 BARS AND SMALLER 1-1/2"
- CONCRETE NOT EXPOSED TO EARTH OR WEATHER:
- SLAB AND WALLS 3/4"
- BEAMS AND COLUMNS 1-1/2"

7. A TOOLED EDGE OR A 3/4" CHAMFER SHALL BE PROVIDED AT ALL EXPOSED EDGES OF CONCRETE, UNLESS NOTED OTHERWISE, IN ACCORDANCE WITH ACI 301 SECTION 4.2.4.

ELECTRICAL INSTALLATION NOTES:

1. ALL ELECTRICAL WORK SHALL BE PERFORMED IN ACCORDANCE WITH THE PROJECT SPECIFICATIONS, NEC AND ALL APPLICABLE FEDERAL, STATE, AND LOCAL CODES/ORDINANCES.

2. CONDUIT ROUTINGS ARE SCHEMATIC. CONTRACTOR SHALL INSTALL CONDUITS SO THAT ACCESS TO EQUIPMENT IS NOT BLOCKED AND TRIP HAZARDS ARE ELIMINATED.

3. WIRING, RACEWAY AND SUPPORT METHODS AND MATERIALS SHALL COMPLY WITH THE REQUIREMENTS OF THE NEC.

4. ALL CIRCUITS SHALL BE SEGREGATED AND MAINTAIN MINIMUM CABLE SEPARATION AS REQUIRED BY THE NEC.

4.1. ALL EQUIPMENT SHALL BEAR THE UNDERWRITERS LABORATORIES LABEL OF APPROVAL, AND SHALL CONFORM TO REQUIREMENT OF THE NATIONAL ELECTRICAL CODE.

4.2. ALL OVERCURRENT DEVICES SHALL HAVE AN INTERRUPTING CURRENT RATING THAT SHALL BE GREATER THAN THE SHORT CIRCUIT CURRENT TO WHICH THEY ARE SUBJECTED, 22,000 AIC MINIMUM. VERIFY AVAILABLE SHORT CIRCUIT CURRENT DOES NOT EXCEED THE RATING OF ELECTRICAL EQUIPMENT IN ACCORDANCE WITH ARTICLE 110.24 NEC OR THE MOST CURRENT ADOPTED CODE PRE THE GOVERNING JURISDICTION.

5. EACH END OF EVERY POWER PHASE CONDUCTOR, GROUNDING CONDUCTOR, AND TELCO CONDUCTOR OR CABLE SHALL BE LABELED WITH COLOR-CODED INSULATION OR ELECTRICAL TAPE (3M BRAND, 1/2" PLASTIC ELECTRICAL TAPE WITH UV PROTECTION, OR EQUAL). THE IDENTIFICATION METHOD SHALL CONFORM WITH NEC AND OSHA.

6. ALL ELECTRICAL COMPONENTS SHALL BE CLEARLY LABELED WITH LAMICOID TAGS SHOWING THEIR RATED VOLTAGE, PHASE CONFIGURATION, WIRE CONFIGURATION, POWER OR AMPACITY RATING AND BRANCH CIRCUIT ID NUMBERS (i.e. PANEL BOARD AND CIRCUIT ID'S).

7. PANEL BOARDS (ID NUMBERS) SHALL BE CLEARLY LABELED WITH PLASTIC LABELS.

8. TIE WRAPS ARE NOT ALLOWED.

9. ALL POWER AND EQUIPMENT GROUND WIRING IN TUBING OR CONDUIT SHALL BE SINGLE COPPER CONDUCTOR (#14 OR LARGER) WITH TYPE THHW, THWN, THWN-2, XHHW, XHHW-2, THW, THW-2, RHW, OR RHW-2 INSULATION UNLESS OTHERWISE SPECIFIED.

10. SUPPLEMENTAL EQUIPMENT GROUND WIRING LOCATED INDOORS SHALL BE SINGLE COPPER CONDUCTOR (#6 OR LARGER) WITH TYPE THHW, THWN, THWN-2, XHHW, XHHW-2, THW, THW-2, RHW, OR RHW-2 INSULATION UNLESS OTHERWISE SPECIFIED.

11. POWER AND CONTROL WIRING IN FLEXIBLE CORD SHALL BE MULTI-CONDUCTOR, TYPE SOOW CORD (#14 OR LARGER) UNLESS OTHERWISE SPECIFIED.

12. POWER AND CONTROL WIRING FOR USE IN CABLE TRAY SHALL BE MULTI-CONDUCTOR, TYPE TC CABLE (#14 OR LARGER), WITH TYPE THHW, THWN, THWN-2, XHHW, XHHW-2, THW, THW-2, RHW, OR RHW-2 INSULATION UNLESS OTHERWISE SPECIFIED.

13. ALL POWER AND GROUNDING CONNECTIONS SHALL BE CRIMP-STYLE, COMPRESSION WIRE LUGS AND WIRE NUTS BY THOMAS AND BETTS (OR EQUAL). LUGS AND WIRE NUTS SHALL BE RATED FOR OPERATION NOT LESS THAN 75° C (90° C IF AVAILABLE).

14. RACEWAY AND CABLE TRAY SHALL BE LISTED OR LABELED FOR ELECTRICAL USE IN ACCORDANCE WITH NEMA, UL, ANSI/IEEE AND NEC.

15. ELECTRICAL METALLIC TUBING (EMT), INTERMEDIATE METAL CONDUIT (IMC), OR RIGID METAL CONDUIT (RMC) SHALL BE USED FOR EXPOSED INDOOR LOCATIONS.

16. ELECTRICAL METALLIC TUBING (EMT) OR METAL-CLAD CABLE (MC) SHALL BE USED FOR CONCEALED INDOOR LOCATIONS.

17. SCHEDULE 40 PVC UNDERGROUND ON STRAIGHTS AND SCHEDULE 80 PVC FOR ALL ELBOWS/90s AND ALL APPROVED ABOVE GRADE PVC CONDUIT.

18. LIQUID-TIGHT FLEXIBLE METALLIC CONDUIT (LIQUID-TITE FLEX) SHALL BE USED INDOORS AND OUTDOORS, WHERE VIBRATION OCCURS OR FLEXIBILITY IS NEEDED.

19. CONDUIT AND TUBING FITTINGS SHALL BE THREADED OR COMPRESSION-TYPE AND APPROVED FOR THE LOCATION USED. SET SCREW FITTINGS ARE NOT ACCEPTABLE.

20. CABINETS, BOXES AND WIRE WAYS SHALL BE LABELED FOR ELECTRICAL USE IN ACCORDANCE WITH NEMA, UL, ANSI/IEEE AND THE NEC.

21. WIREWAYS SHALL BE METAL WITH AN ENAMEL FINISH AND INCLUDE A HINGED COVER, DESIGNED TO SWING OPEN DOWNWARDS (WIREMOLD SPECMATE WIREWAY).

22. SLOTTED WIRING DUCT SHALL BE PVC AND INCLUDE COVER (PANDUIT TYPE E OR EQUAL).

23. CONDUITS SHALL BE FASTENED SECURELY IN PLACE WITH APPROVED NON-PERFORATED STRAPS AND HANGERS. EXPLOSIVE DEVICES (i.e. POWDER-ACTUATED) FOR ATTACHING HANGERS TO STRUCTURE WILL NOT BE PERMITTED. CLOSELY FOLLOW THE LINES OF THE STRUCTURE, MAINTAIN CLOSE PROXIMITY TO THE STRUCTURE AND KEEP CONDUITS IN TIGHT ENVELOPES. CHANGES IN DIRECTION TO ROUTE AROUND OBSTACLES SHALL BE MADE WITH CONDUIT OUTLET BODIES. CONDUIT SHALL BE INSTALLED IN A NEAT AND WORKMANLIKE MANNER. PARALLEL AND PERPENDICULAR TO STRUCTURE WALL AND CEILING LINES. ALL CONDUIT SHALL BE FISHED TO CLEAR OBSTRUCTIONS. ENDS OF CONDUITS SHALL BE TEMPORARILY CAPPED FLUSH TO FINISH GRADE TO PREVENT CONCRETE, PLASTER OR DIRT FROM ENTERING. CONDUITS SHALL BE RIGIDLY CLAMPED TO BOXES BY GALVANIZED MALLEABLE IRON BUSHING ON INSIDE AND GALVANIZED MALLEABLE IRON LOCKNUT ON OUTSIDE AND INSIDE.

24. EQUIPMENT CABINETS, TERMINAL BOXES, JUNCTION BOXES AND PULL BOXES SHALL BE GALVANIZED OR EPOXY-COATED SHEET STEEL. SHALL MEET OR EXCEED UL 50 AND BE RATED NEMA 1 (OR BETTER) FOR INTERIOR LOCATIONS AND NEMA 3 (OR BETTER) FOR EXTERIOR LOCATIONS.

25. METAL RECEPTACLE, SWITCH AND DEVICE BOXES SHALL BE GALVANIZED, EPOXY-COATED OR NON-CORRODING; SHALL MEET OR EXCEED UL 514A AND NEMA OS 1 AND BE RATED NEMA 1 (OR BETTER) FOR INTERIOR LOCATIONS AND WEATHER PROTECTED (WP OR BETTER) FOR EXTERIOR LOCATIONS.

26. NONMETALLIC RECEPTACLE, SWITCH AND DEVICE BOXES SHALL MEET OR EXCEED NEMA OS 2 (NEWEST REVISION) AND BE RATED NEMA 1 (OR BETTER) FOR INTERIOR LOCATIONS AND WEATHER PROTECTED (WP OR BETTER) FOR EXTERIOR LOCATIONS.

27. THE CONTRACTOR SHALL NOTIFY AND OBTAIN NECESSARY AUTHORIZATION FROM THE CARRIER AND/OR DISH WIRELESS, LLC. AND TOWER OWNER BEFORE COMMENCING WORK ON THE AC POWER DISTRIBUTION PANELS.

28. THE CONTRACTOR SHALL PROVIDE NECESSARY TAGGING ON THE BREAKERS, CABLES AND DISTRIBUTION PANELS IN ACCORDANCE WITH THE APPLICABLE CODES AND STANDARDS TO SAFEGUARD LIFE AND PROPERTY.

29. INSTALL LAMICOID LABEL ON THE METER CENTER TO SHOW "DISH WIRELESS, LLC.".

30. ALL EMPTY/SPARE CONDUITS THAT ARE INSTALLED ARE TO HAVE A METERED MULE TAPE PULL CORD INSTALLED.

dish wireless.

5701 SOUTH SANTA FE DRIVE
LITTLETON, CO 80120

FULLERTON
ENGINEERING · DESIGN

1100 E. WOODFIELD ROAD, SUITE 500
SCHAUMBURG, ILLINOIS 60173
TEL: 847-908-8400
COA# E-2488
www.FullertonEngineering.com

IT IS A VIOLATION OF LAW FOR ANY PERSON, UNLESS THEY ARE ACTING UNDER THE DIRECTION OF A LICENSED PROFESSIONAL ENGINEER, TO ALTER THIS DOCUMENT.

DRAWN BY:	CHECKED BY:	APPROVED BY:
KB	KR	DS

RFDS REV #: ---

CONSTRUCTION DOCUMENTS

SUBMITTALS

REV	DATE	DESCRIPTION
A	07/27/2021	ISSUED FOR REVIEW
0	09/09/2021	ISSUED FOR CONSTRUCTION

A&E PROJECT NUMBER
2021.0102.0162

DISH WIRELESS, LLC.
PROJECT INFORMATION

BOBDL00017A
777 TALCOTVILLE ROAD
VERNONROCKVILLE,CT 06066

SHEET TITLE
GENERAL NOTES

SHEET NUMBER
GN-3

GROUNDING NOTES:

1. ALL GROUND ELECTRODE SYSTEMS (INCLUDING TELECOMMUNICATION, RADIO, LIGHTNING PROTECTION AND AC POWER GES'S) SHALL BE BONDED TOGETHER AT OR BELOW GRADE, BY TWO OR MORE COPPER BONDING CONDUCTORS IN ACCORDANCE WITH THE NEC.

2. THE CONTRACTOR SHALL PERFORM IEEE FALL-OF-POTENTIAL RESISTANCE TO EARTH TESTING (PER IEEE 1100 AND 81) FOR GROUND ELECTRODE SYSTEMS, THE CONTRACTOR SHALL FURNISH AND INSTALL SUPPLEMENTAL GROUND ELECTRODES AS NEEDED TO ACHIEVE A TEST RESULT OF 5 OHMS OR LESS.

3. THE CONTRACTOR IS RESPONSIBLE FOR PROPERLY SEQUENCING GROUNDING AND UNDERGROUND CONDUIT INSTALLATION AS TO PREVENT ANY LOSS OF CONTINUITY IN THE GROUNDING SYSTEM OR DAMAGE TO THE CONDUIT AND PROVIDE TESTING RESULTS.

4. METAL CONDUIT AND TRAY SHALL BE GROUNDED AND MADE ELECTRICALLY CONTINUOUS WITH LISTED BONDING FITTINGS OR BY BONDING ACROSS THE DISCONTINUITY WITH #6 COPPER WIRE UL APPROVED GROUNDING TYPE CONDUIT CLAMPS.

5. METAL RACEWAY SHALL NOT BE USED AS THE NEC REQUIRED EQUIPMENT GROUND CONDUCTOR. STRANDED COPPER CONDUCTORS WITH GREEN INSULATION, SIZED IN ACCORDANCE WITH THE NEC, SHALL BE FURNISHED AND INSTALLED WITH THE POWER CIRCUITS TO BTS EQUIPMENT.

6. EACH CABINET FRAME SHALL BE DIRECTLY CONNECTED TO THE MASTER GROUND BAR WITH GREEN INSULATED SUPPLEMENTAL EQUIPMENT GROUND WIRES, #6 STRANDED COPPER OR LARGER FOR INDOOR BTS; #2 BARE SOLID TINNED COPPER FOR OUTDOOR BTS.

7. CONNECTIONS TO THE GROUND BUS SHALL NOT BE DOUBLED UP OR STACKED BACK TO BACK CONNECTIONS ON OPPOSITE SIDE OF THE GROUND BUS ARE PERMITTED.

8. ALL EXTERIOR GROUND CONDUCTORS BETWEEN EQUIPMENT/GROUND BARS AND THE GROUND RING SHALL BE #2 SOLID TINNED COPPER UNLESS OTHERWISE INDICATED.

9. ALUMINUM CONDUCTOR OR COPPER CLAD STEEL CONDUCTOR SHALL NOT BE USED FOR GROUNDING CONNECTIONS.

10. USE OF 90° BENDS IN THE PROTECTION GROUNDING CONDUCTORS SHALL BE AVOIDED WHEN 45° BENDS CAN BE ADEQUATELY SUPPORTED.

11. EXOTHERMIC WELDS SHALL BE USED FOR ALL GROUNDING CONNECTIONS BELOW GRADE.

12. ALL GROUND CONNECTIONS ABOVE GRADE (INTERIOR AND EXTERIOR) SHALL BE FORMED USING HIGH PRESS CRIMPS.

13. COMPRESSION GROUND CONNECTIONS MAY BE REPLACED BY EXOTHERMIC WELD CONNECTIONS.

14. ICE BRIDGE BONDING CONDUCTORS SHALL BE EXOTHERMICALLY BONDED OR BOLTED TO THE BRIDGE AND THE TOWER GROUND BAR.

15. APPROVED ANTIOXIDANT COATINGS (i.e. CONDUCTIVE GEL OR PASTE) SHALL BE USED ON ALL COMPRESSION AND BOLTED GROUND CONNECTIONS.

16. ALL EXTERIOR GROUND CONNECTIONS SHALL BE COATED WITH A CORROSION RESISTANT MATERIAL.

17. MISCELLANEOUS ELECTRICAL AND NON-ELECTRICAL METAL BOXES, FRAMES AND SUPPORTS SHALL BE BONDED TO THE GROUND RING, IN ACCORDANCE WITH THE NEC.

18. BOND ALL METALLIC OBJECTS WITHIN 6 ft OF MAIN GROUND RING WITH (1) #2 BARE SOLID TINNED COPPER GROUND CONDUCTOR.

19. GROUND CONDUCTORS USED FOR THE FACILITY GROUNDING AND LIGHTNING PROTECTION SYSTEMS SHALL NOT BE ROUTED THROUGH METALLIC OBJECTS THAT FORM A RING AROUND THE CONDUCTOR, SUCH AS METALLIC CONDUITS, METAL SUPPORT CLIPS OR SLEEVES THROUGH WALLS OR FLOORS. WHEN IT IS REQUIRED TO BE HOUSED IN CONDUIT TO MEET CODE REQUIREMENTS OR LOCAL CONDITIONS, NON-METALLIC MATERIAL SUCH AS PVC CONDUIT SHALL BE USED. WHERE USE OF METAL CONDUIT IS UNAVOIDABLE (i.e., NONMETALLIC CONDUIT PROHIBITED BY LOCAL CODE) THE GROUND CONDUCTOR SHALL BE BONDED TO EACH END OF THE METAL CONDUIT.

20. ALL GROUNDS THAT TRANSITION FROM BELOW GRADE TO ABOVE GRADE MUST BE #2 BARE SOLID TINNED COPPER IN 3/4" NON-METALLIC, FLEXIBLE CONDUIT FROM 24" BELOW GRADE TO WITHIN 3" TO 6" OF CAD-WELD TERMINATION POINT. THE EXPOSED END OF THE CONDUIT MUST BE SEALED WITH SILICONE CAULK. (ADD TRANSITIONING GROUND STANDARD DETAIL AS WELL).

21. BUILDINGS WHERE THE MAIN GROUNDING CONDUCTORS ARE REQUIRED TO BE ROUTED TO GRADE, THE CONTRACTOR SHALL ROUTE TWO GROUNDING CONDUCTORS FROM THE ROOFTOP, TOWERS, AND WATER TOWERS GROUNDING RING, TO THE EXISTING GROUNDING SYSTEM, THE GROUNDING CONDUCTORS SHALL NOT BE SMALLER THAN 2/0 COPPER. ROOFTOP GROUNDING RING SHALL BE BONDED TO THE EXISTING GROUNDING SYSTEM, THE BUILDING STEEL COLUMNS, LIGHTNING PROTECTION SYSTEM, AND BUILDING MAIN WATER LINE (FERROUS OR NONFERROUS METAL PIPING ONLY). DO NOT ATTACH GROUNDING TO FIRE SPRINKLER SYSTEM PIPES.

dish wireless.

5701 SOUTH SANTA FE DRIVE
LITTLETON, CO 80120

FULLERTON
ENGINEERING · DESIGN

1100 E. WOODFIELD ROAD, SUITE 500
SCHAUMBURG, ILLINOIS 60173
TEL: 847-908-8400
COA# E-2488
www.FullertonEngineering.com

IT IS A VIOLATION OF LAW FOR ANY PERSON, UNLESS THEY ARE ACTING UNDER THE DIRECTION OF A LICENSED PROFESSIONAL ENGINEER, TO ALTER THIS DOCUMENT.

DRAWN BY:	CHECKED BY:	APPROVED BY:
KB	KR	DS

RFDS REV #: ---

CONSTRUCTION DOCUMENTS

SUBMITTALS

REV	DATE	DESCRIPTION
A	07/27/2021	ISSUED FOR REVIEW
0	09/09/2021	ISSUED FOR CONSTRUCTION

A&E PROJECT NUMBER

2021.0102.0162

DISH WIRELESS, LLC.
PROJECT INFORMATION

BOBDL00017A
777 TALCOTVILLE ROAD
VERNONROCKVILLE,CT 06066

SHEET TITLE

GENERAL NOTES

SHEET NUMBER

GN-4

ENGINEERING:

STRUCTURAL ANALYSIS

MOUNT ANALYSIS

AMERICAN TOWER®
CORPORATION

AIROSMITH
ENGINEERING

Structural Analysis Report

Structure	:	**160 ft Monopole**
ATC Site Name	:	**Vernon CT 6, CT**
ATC Asset Number	:	**302529**
Engineering Number	:	**13692174_C3_06**
Proposed Carrier	:	**DISH WIRELESS L.L.C.**
Carrier Site Name	:	**BOBDL00017A**
Carrier Site Number	:	**BOBDL00017A**
Site Location	:	**777 Talcotville Road** **Vernon Rockville, CT 06066-2318** **41.863500,-72.483300**
County	:	**Tolland**
Date	:	**July 14, 2021**
Max Usage	:	**33%**
Result	:	**Pass**

Prepared By:
Jacqueline Budka
Airosmith Engineering

Reviewed By:

STATE OF CONNECTICUT
JOSEPH R. JOHNSTON
29460
LICENSED
PROFESSIONAL ENGINEER

7/14/21

COA: PEC.0001553

Table of Contents

Introduction 1

Supporting Documents 1

Analysis 1

Conclusion 1

Existing and Reserved Equipment 2

Equipment to be Removed 2

Proposed Equipment 2

Structure Usages 3

Foundations 3

Deflection, Twist, and Sway 3

Standard Conditions 4

Calculations ..... Attached

Introduction

The purpose of this report is to summarize results of a structural analysis performed on the 160 ft monopole to reflect the change in loading by DISH WIRELESS L.L.C..

Supporting Documents

Tower Drawings	Summit, PJF Job #29201-0893, dated July 26, 2001
Foundation Drawing	Summit, PJF Job #29201-0893, dated September 21, 2001
Geotechnical Report	Dr. Clarence Welti Geotechnical Engineering Job #CT-1065, dated January 2, 2001

Analysis

The tower was analyzed using American Tower Corporation's tower analysis software. This program considers an elastic three-dimensional model and second-order effects per ANSI/TIA-222.

Basic Wind Speed:	118 mph (3-Second Gust)
Basic Wind Speed w/ Ice:	50 mph (3-Second Gust) w/ 1 1/2" radial ice concurrent
Code:	ANSI/TIA-222-H / 2015 IBC / 2018 Connecticut State Building Code
Exposure Category:	B
Risk Category:	II
Topographic Factor Procedure:	Method 1
Topographic Category:	1
Crest Height (H):	0 ft
Spectral Response:	Ss = 0.18, S_1 = 0.05
Site Class:	D - Stiff Soil

Conclusion

Based on the analysis results, the structure meets the requirements per the applicable codes listed above. The tower and foundation can support the equipment as described in this report.

If you have any questions or require additional information, please contact American Tower via email at Engineering@americantower.com. Please include the American Tower site name, site number, and engineering number in the subject line for any questions.

Existing and Reserved Equipment

Elev.[1] (ft)	Qty	Equipment	Mount Type	Lines	Carrier
161.0	12	Decibel DB844H90E-XY	Low Profile Platform	(12) 1 1/4" Coax	SPRINT NEXTEL
150.0	3	Samsung Outdoor CBRS 20W RRH –Clip-on Antenna	Low Profile Platform	(6) 1 5/8" Coax (2) 1 5/8" Hybriflex	VERIZON WIRELESS
	3	Samsung B2/B66A RRH-BR049			
	6	Andrew SBNHH-1D65B			
	2	Raycap RRFDC-3315-PF-48			
	3	Samsung MT6407-77A			
	3	Andrew LNX-6514DS-A1M			
	3	Samsung RT4401-48A			
	3	Samsung B5/B13 RRH-BR04C			
142.0	1	Raycap DC6-48-60-18-8F ("Squid")	T-Arm	(1) 0.39" (10mm) Fiber Trunk (1) 0.39" (9.8mm) Cable (4) 0.78" (19.7mm) 8 AWG 6 (6) 1 1/4" Coax (2) 3" conduit (3) 3/8" (0.38"-9.5mm) RET Control Cable	AT&T MOBILITY
	1	Raycap DC6-48-60-18-8F (23.5" Height)			
	6	Powerwave Allgon LGP21401			
	3	Ericsson RRUS 4478 B14			
	3	Powerwave Allgon 7770.00			
	3	Ericsson RRUS 32 B2			
	3	Ericsson RRUS 32 (50.8 lbs)			
	6	CCI HPA-65R-BUU-H6			
	3	Ericsson RRUS-11 (50 lbs.)			
130.0	3	RFS APX16DWV-16DWVS-E-A20	Low Profile Platform	(3) 1 5/8" Hybriflex	SPRINT NEXTEL
	3	Ericsson Air6449 B41			
	3	Ericsson 4424 B25			
	3	Ericsson Radio 4449 B71 B85A			
	3	Ericsson RRUS 4415 B66			
	3	RFS APXVAALL24 43-U-NA20			
120.0	3	RFS APXV18-206517S-C	Flush	(6) 1 5/8" Coax	METRO PCS INC

Equipment to be Removed

Elev.[1] (ft)	Qty	Equipment	Mount Type	Lines	Carrier
No loading was considered as removed as part of this analysis.					

Proposed Equipment

Elev.[1] (ft)	Qty	Equipment	Mount Type	Lines	Carrier
107.0	1	Commscope RDIDC-9181-PF-48	Platform with Handrails	(1) 1.60" (40.6mm) Hybrid	DISH WIRELESS L.L.C.
	3	Fujitsu TA08025-B605			
	3	Fujitsu TA08025-B604			
	3	JMA Wireless MX08FRO665-21			

[1]Mount elevation is defined as height above bottom of steel structure to the bottom of mount, RAD elevation is defined as center of antenna above ground level (AGL).

Install proposed coax inside the pole shaft.

Structure Usages

Structural Component	Controlling Usage	Pass/Fail
Anchor Bolts	33%	Pass
Shaft	31%	Pass
Base Plate	20%	Pass

Foundations

Reaction Component	Original Design Reactions	Factored Design Reactions*	Analysis Reactions	% of Design
Moment (Kips-Ft)	8,100.0	10,935.0	3,549.0	32%
Shear (Kips)	61.0	82.4	32.4	39%
* The design reactions are factored by 1.35 per ANSI/TIA-222-H, Sec. 15.6.2				

The structure base reactions resulting from this analysis are acceptable when compared to those shown on the original structure drawings, therefore no modification or reinforcement of the foundation will be required.

Deflection and Sway*

Antenna Elevation (ft)	Antenna	Carrier	Deflection (ft)	Sway (Rotation) (°)
107.0	Commscope RDIDC-9181-PF-48	DISH WIRELESS L.L.C.	0.294	0.322
	Fujitsu TA08025-B605			
	Fujitsu TA08025-B604			
	JMA Wireless MX08FRO665-21			

***Deflection and Sway was evaluated considering a design wind speed of 60 mph (3-Second Gust) per ANSI/TIA-222-H**

AMERICAN TOWER®
CORPORATION

Standard Conditions

All engineering services performed by A.T. Engineering Service, PLLC are prepared on the basis that the information used is current and correct. This information may consist of, but is not limited to the following:

- Information supplied by the client regarding antenna, mounts and feed line loading
- Information from drawings, design and analysis documents, and field notes in the possession of A.T. Engineering Service, PLLC

It is the responsibility of the client to ensure that the information provided to A.T. Engineering Service, PLLC and used in the performance of our engineering services is correct and complete.

All assets of American Tower Corporation, its affiliates and subsidiaries (collectively "American Tower") are inspected at regular intervals. Based upon these inspections and in the absence of information to the contrary, American Tower assumes that all structures were constructed in accordance with the drawings and specifications.

Unless explicitly agreed by both the client and A.T. Engineering Service, PLLC, all services will be performed in accordance with the current revision of ANSI/TIA-222.

All services are performed, results obtained, and recommendations made in accordance with generally accepted engineering principles and practices. A.T. Engineering Service, PLLC is not responsible for the conclusions, opinions and recommendations made by others based on the information supplied herein.

© 2007 - 2021 by ATC IP LLC. All rights reserved.

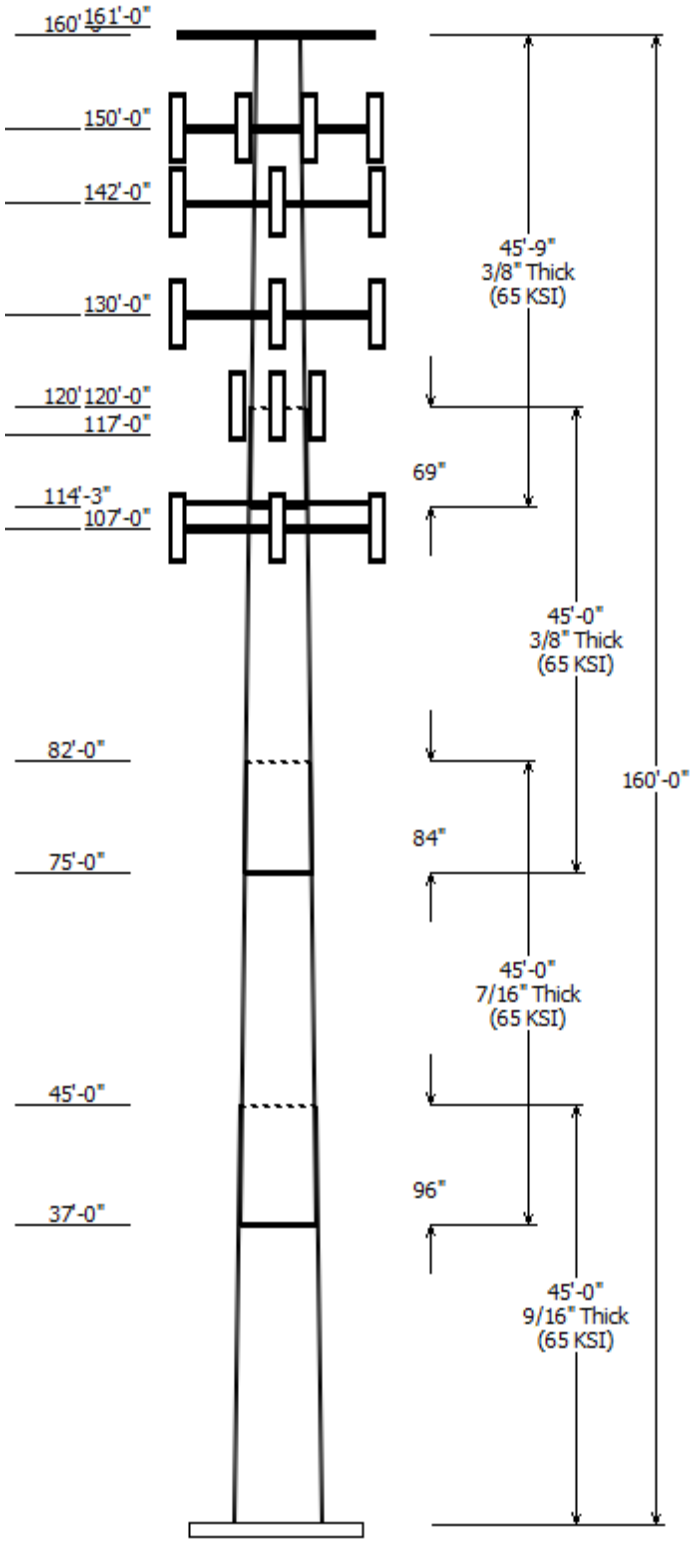

Job Information

Client :	DISH WIRELESS L.L.C.		
Pole :	302529	Code:	ANSI/TIA-222-H
Location :	Vernon CT 6, CT		
Description :	160 ft Monopole	Risk Category :	II
Shape :	18 Sides	Exposure :	B
Height :	160.00 (ft)	Topo Method :	Method 1
Base Elev (ft):	0.00	Topographic Category :	1
Taper:	0.251317 (in/ft)		

Sections Properties

Shaft Section	Length (ft)	Diameter (in) Accross Flats Top	Bottom	Thick (in)	Joint Type	Overlap Length (in)	Shape	Steel Grade (ksi)
1	45.000	60.82	72.13	0.563		0.000	18 Sides	65
2	45.000	52.39	63.70	0.438	Slip Joint	96.000	18 Sides	65
3	45.000	43.59	54.90	0.375	Slip Joint	84.000	18 Sides	65
4	45.750	34.29	45.79	0.375	Slip Joint	69.000	18 Sides	65

Discrete Appurtenance

Attach Elev (ft)	Force Elev (ft)	Qty	Description
161.000	162.000	12	Decibel DB844H90E-XY
160.000	160.000	1	Flat Low Profile Platform
150.000	150.000	6	Andrew SBNHH-1D65B
150.000	150.000	3	Andrew LNX-6514DS-A1M
150.000	150.000	3	Samsung MT6407-77A
150.000	150.000	2	Raycap RRFDC-3315-PF-48
150.000	150.000	3	Samsung B5/B13 RRH-BR04C
150.000	150.000	3	Samsung B2/B66A RRH-BR049
150.000	150.000	3	Samsung RT4401-48A
150.000	150.000	3	Samsung Outdoor CBRS 20W
150.000	150.000	1	Round Low Profile Platform
142.000	142.000	3	Powerwave Allgon 7770.00
142.000	142.000	3	Ericsson RRUS 32 B2
142.000	142.000	3	Ericsson RRUS 32 (50.8 lbs)
142.000	142.000	6	CCI HPA-65R-BUU-H6
142.000	142.000	3	Ericsson RRUS-11 (50 lbs.)
142.000	142.000	3	Ericsson RRUS 4478 B14
142.000	142.000	1	Raycap DC6-48-60-18-8F
142.000	142.000	1	Raycap DC6-48-60-18-8F (23.5"
142.000	142.000	6	Powerwave Allgon LGP21401
142.000	142.000	3	Round T-Arm
130.000	130.000	3	Ericsson Air6449 B41
130.000	130.000	3	Ericsson 4424 B25
130.000	130.000	3	Ericsson Radio 4449 B71 B85A
130.000	130.000	3	Ericsson RRUS 4415 B66
130.000	130.000	1	Round Low Profile Platform
130.000	130.000	3	RFS APXVAALL24 43-U-NA20
130.000	130.000	3	RFS APX16DWV-16DWVS-E-A20
120.000	120.000	3	RFS APXV18-206517S-C
117.000	117.000	3	Flush Mounts
107.000	107.000	1	Generic Flat Platform with Han
107.000	107.000	3	JMA Wireless MX08FRO665-21
107.000	107.000	3	Fujitsu TA08025-B604
107.000	107.000	3	Fujitsu TA08025-B605
107.000	107.000	1	Commscope RDIDC-9181-PF-48

Linear Appurtenance

Elev (ft) From	To	Description	Exposed To Wind
0.000	107.0	1.60" (40.6mm)	No
0.000	120.0	1 5/8" Coax	No
0.000	130.0	1 5/8" Hybriflex	No

0.000	142.0	0.39" (10mm)	No
0.000	142.0	0.39" (9.8mm)	No
0.000	142.0	0.78" (19.7mm) 8	No
0.000	142.0	1 1/4" Coax	No
0.000	142.0	3" conduit	No
0.000	142.0	3" conduit	No
0.000	142.0	3/8" (0.38"-	No
0.000	150.0	1 5/8" Coax	No
0.000	150.0	1 5/8" Hybriflex	No
0.000	161.0	1 1/4" Coax	No

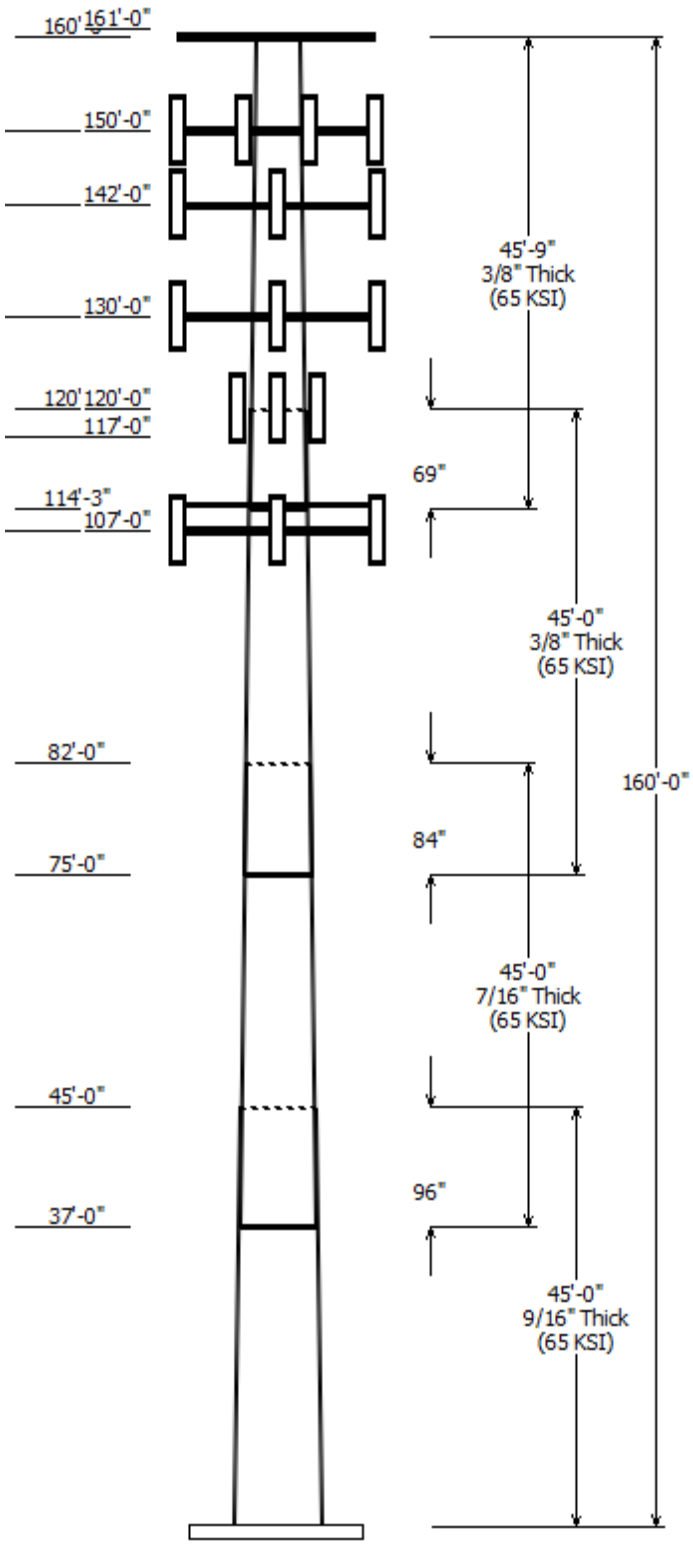

Load Cases

1.2D + 1.0W	118 mph with No Ice
0.9D + 1.0W	118 mph with No Ice (Reduced DL)
1.2D + 1.0Di + 1.0Wi	50 mph with 1.50 in Radial Ice
1.2D + 1.0Ev + 1.0Eh	Seismic
0.9D - 1.0Ev + 1.0Eh	Seismic (Reduced DL)
1.0D + 1.0W	Serviceability 60 mph

Reactions

Load Case	Moment (kip-ft)	Shear (kip)	Axial (kip)
1.2D + 1.0W	3548.96	32.36	79.23
0.9D + 1.0W	3529.70	32.35	59.42
1.2D + 1.0Di + 1.0Wi	1007.02	9.29	109.55
1.2D + 1.0Ev + 1.0Eh	278.66	2.36	78.85
0.9D - 1.0Ev + 1.0Eh	276.86	2.36	54.81
1.0D + 1.0W	818.07	7.48	66.04

Dish Deflections

Load Case	Attach Elev (ft)	Deflection (in)	Rotation (deg)
	0.00	0.000	0.000

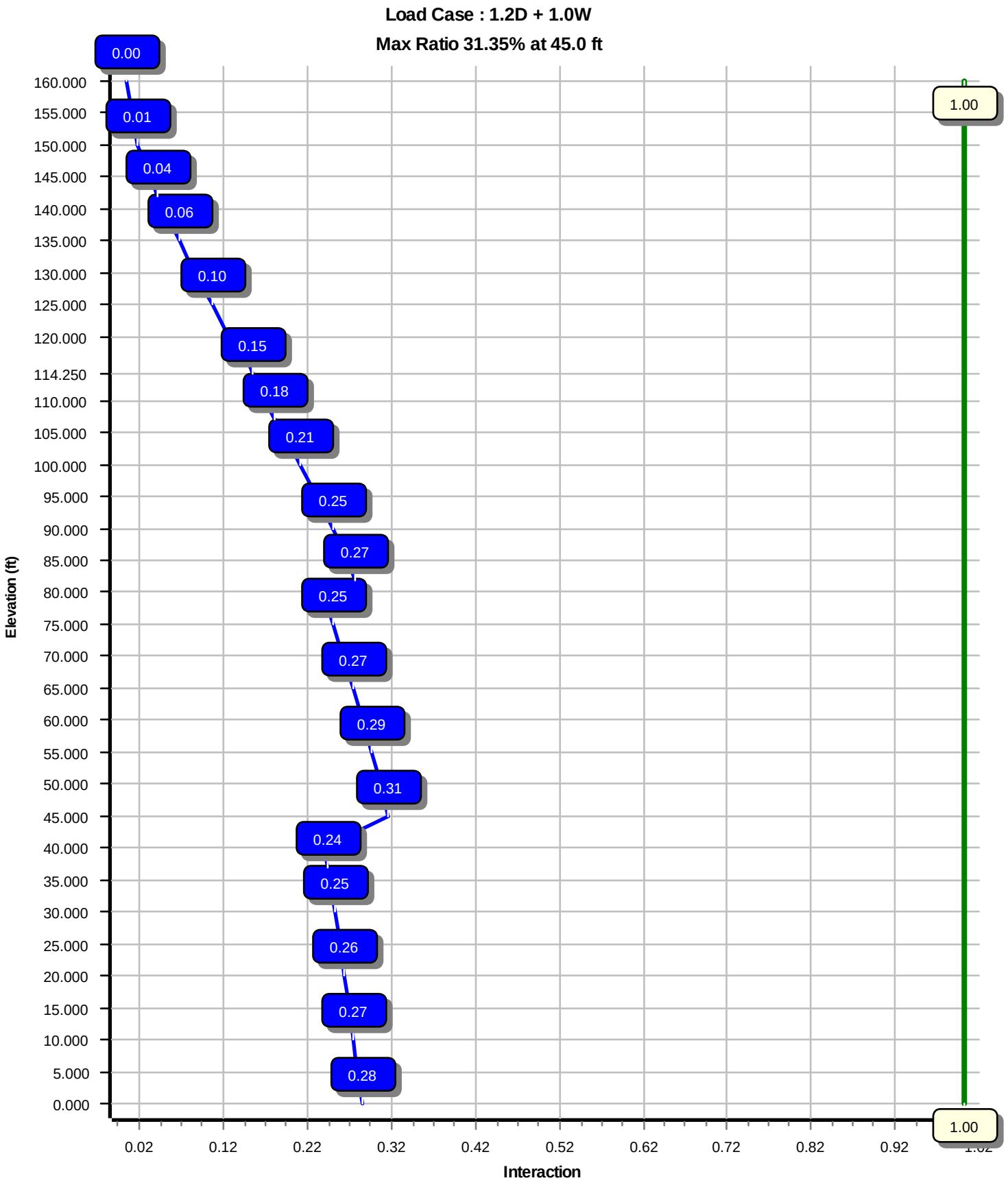
Load Case : 1.2D + 1.0W
Max Ratio 31.35% at 45.0 ft
0.00
0.01
0.04
0.06
0.10
0.15
0.18
0.21
0.25
0.27
0.25
0.27
0.29
0.31
0.24
0.25
0.26
0.27
0.28
1.00
1.00
160.000
155.000
150.000
145.000
140.000
135.000
130.000
125.000
120.000
114.250
110.000
105.000
100.000
95.000
90.000
85.000
80.000
75.000
70.000
65.000
60.000
55.000
50.000
45.000
40.000
35.000
30.000
25.000
20.000
15.000
10.000
5.000
0.000
Elevation (ft)
0.02
0.12
0.22
0.32
0.42
0.52
0.62
0.72
0.82
0.92
Interaction

Site Number: 302529	Code: ANSI/TIA-222-H	© 2007 - 2021 by ATC IP LLC. All rights reserved.
Site Name: Vernon CT 6, CT	Engineering Number:13692174_C3_06	7/14/2021 10:36:05 AM
Customer: DISH WIRELESS L.L.C.		

Analysis Parameters

Location :	Tolland County, CT	Height (ft) :	160
Code :	ANSI/TIA-222-H	Base Diameter (in) :	72.13
Shape :	18 Sides	Top Diameter (in) :	34.29
Pole Type :	Taper	Taper (in/ft) :	0.251
Pole Manfacturer :	Summit Manufacturing	Rotation (deg) :	0.00
Kd (non-service) :	0.95	Ke :	0.99

Ice & Wind Parameters

Exposure Category:	B	Design Wind Speed Without Ice:	118 mph
Risk Category:	II	Design Wind Speed With Ice:	50 mph
Topographic Factor Procedure:	Method 1	Operational Wind Speed:	60 mph
Topographic Category:	1	Design Ice Thickness:	1.50 in
Crest Height:	0 ft	HMSL:	236.00 ft

Seismic Parameters

Analysis Method:	Equivalent Lateral Force Method
Site Class:	D - Stiff Soil
Period Based on Rayleigh Method (sec):	1.65

T_L (sec):	6	p:	1	C_s:	0.036
S_s:	0.182	S_1:	0.055	C_s Max:	0.036
F_a:	1.600	F_v:	2.400	C_s Min:	0.030
S_{ds}:	0.194	S_{d1}:	0.088		

Load Cases

1.2D + 1.0W	118 mph with No Ice
0.9D + 1.0W	118 mph with No Ice (Reduced DL)
1.2D + 1.0Di + 1.0Wi	50 mph with 1.50 in Radial Ice
1.2D + 1.0Ev + 1.0Eh	Seismic
0.9D - 1.0Ev + 1.0Eh	Seismic (Reduced DL)
1.0D + 1.0W	Serviceability 60 mph

© 2007 - 2021 by ATC IP LLC. All rights reserved.

Shaft Section Properties

Sect Info	Length (ft)	Thick (in)	Fy (ksi)	Joint Type	Slip Joint Len (in)	Weight (lb)	Bottom Dia (in)	Bottom Elev (ft)	Bottom Area (in 2)	Bottom Ix (in4)	Bottom W/t Ratio	Bottom D/t Ratio	Top Dia (in)	Top Elev (ft)	Top Area (in2)	Top Ix (in4)	Top W/t Ratio	Top D/t Ratio	Taper (in/ft)
1-18	45.000	0.5625	65		0.00	18,019	72.13	0.00	127.77	82681.3	20.85	128.23	60.82	45.00	107.58	49352.3	17.30	108.13	0.251317
2-18	45.000	0.4375	65	Slip	96.00	12,250	63.70	37.00	87.85	44430.6	23.91	145.61	52.39	82.00	72.15	24609.8	19.35	119.76	0.251317
3-18	45.000	0.3750	65	Slip	84.00	8,908	54.90	75.00	64.90	24383.8	24.05	146.42	43.59	120.00	51.44	12141.6	18.74	116.26	0.251317
4-18	45.750	0.3750	65	Slip	69.00	7,350	45.79	114.25	54.06	14087.1	19.77	122.11	34.29	160.00	40.37	5868.1	14.36	91.45	0.251317
				Shaft Weight		46,527													

Discrete Appurtenance Properties

Attach Elev (ft)	Description	Qty	Ka	Vert Ecc (ft)	No Ice Weight (lb)	No Ice EPAa (sf)	No Ice Orientation Factor	Ice Weight (lb)	Ice EPAa (sf)	Ice Orientation Factor
161.00	Decibel DB844H90E-XY	12	1.00	1.000	14.00	3.615	0.74	125.34	3.927	0.74
160.00	Flat Low Profile Platform	1	1.00	0.000	1,500.00	26.100	1.00	2,152.40	45.325	1.00
150.00	Samsung Outdoor CBRS 20W	3	0.80	0.000	4.40	0.892	0.50	22.41	1.531	0.50
150.00	Samsung RT4401-48A	3	0.80	0.000	18.60	0.996	0.50	45.61	1.680	0.50
150.00	Samsung B2/B66A RRH-BR049	3	0.80	0.000	84.40	1.875	0.50	148.22	2.778	0.50
150.00	Samsung B5/B13 RRH-BR04C	3	0.80	0.000	70.30	1.875	0.50	127.52	2.778	0.50
150.00	Raycap RRFDC-3315-PF-48	2	0.80	0.000	26.90	2.512	0.67	106.59	3.554	0.67
150.00	Samsung MT6407-77A	3	0.80	0.000	81.60	4.709	0.61	183.56	6.228	0.61
150.00	Andrew LNX-6514DS-A1M	3	0.80	0.000	38.80	8.173	0.83	214.80	10.992	0.83
150.00	Andrew SBNHH-1D65B	6	0.80	0.000	50.70	8.173	0.83	226.24	11.004	0.83
150.00	Round Low Profile Platform	1	1.00	0.000	1,500.00	21.700	1.00	2,148.13	40.906	1.00
142.00	Powerwave Allgon LGP21401	6	0.80	0.000	14.10	1.104	0.50	38.95	1.815	0.50
142.00	Raycap DC6-48-60-18-8F (23.5"	1	0.80	0.000	20.00	1.260	1.00	72.44	1.916	1.00
142.00	Raycap DC6-48-60-18-8F	1	0.80	0.000	31.80	1.470	1.00	93.24	2.166	1.00
142.00	Ericsson RRUS 4478 B14	3	0.80	0.000	59.90	1.842	0.50	114.96	2.735	0.50
142.00	Ericsson RRUS-11 (50 lbs.)	3	0.80	0.000	50.00	2.566	0.67	117.89	3.609	0.67
142.00	Ericsson RRUS 32 (50.8 lbs)	3	0.80	0.000	50.80	2.692	0.67	122.03	3.842	0.67
142.00	Ericsson RRUS 32 B2	3	0.80	0.000	53.00	2.743	0.67	126.25	3.908	0.67
142.00	Powerwave Allgon 7770.00	3	0.80	0.000	35.00	5.508	0.77	169.15	6.558	0.77
142.00	CCI HPA-65R-BUU-H6	6	0.80	0.000	51.00	9.658	0.83	269.49	12.419	0.83
142.00	Round T-Arm	3	0.75	0.000	250.00	9.700	0.67	458.13	17.910	0.67
130.00	Ericsson RRUS 4415 B66	3	0.80	0.000	46.00	1.650	0.50	88.68	2.487	0.50
130.00	Ericsson Radio 4449 B71 B85A	3	0.80	0.000	75.00	1.650	0.50	134.29	2.487	0.50
130.00	Ericsson 4424 B25	3	0.80	0.000	86.00	2.052	0.67	157.89	2.982	0.67
130.00	Ericsson Air6449 B41	3	0.80	0.000	104.00	5.682	0.63	238.36	7.247	0.63
130.00	RFS APX16DWV-16DWVS-E-A20	3	0.80	0.000	40.70	6.586	0.60	155.87	8.721	0.60
130.00	RFS APXVAALL24 43-U-NA20	3	0.80	0.000	122.80	20.243	0.63	506.81	23.900	0.63
130.00	Round Low Profile Platform	1	1.00	0.000	1,500.00	21.700	1.00	2,138.75	40.628	1.00
120.00	RFS APXV18-206517S-C	3	1.00	0.000	26.40	5.160	0.80	117.08	7.475	0.80
117.00	Flush Mounts	3	1.00	0.000	65.00	2.000	0.67	175.56	4.041	0.67
107.00	Commscope RDIDC-9181-PF-48	1	0.75	0.000	21.90	1.867	1.00	76.98	2.738	1.00
107.00	Fujitsu TA08025-B605	3	0.75	0.000	75.00	1.962	0.50	135.63	2.852	0.50
107.00	Fujitsu TA08025-B604	3	0.75	0.000	63.90	1.962	0.50	120.34	2.852	0.50
107.00	JMA Wireless MX08FRO665-21	3	0.75	0.000	64.50	12.489	0.64	313.26	15.209	0.64
107.00	Generic Flat Platform with	1	1.00	0.000	2,500.00	42.400	1.00	4,219.38	62.698	1.00
Totals	Num Loadings:35	108			12,688.60			27,809.63		

Linear Appurtenance Properties

Load Case Azimuth (deg) :

Elev From (ft)	Elev To (ft)	Qty	Description	Coax Dia (in)	Coax Wt (lb/ft)	Flat	Max Coax / Row	Dist Between Rows (in)	Dist Between Cols (in)	Azimuth (deg)	Dist From Face (in)	Exposed To Wind	Carrier
0.00	161.00	12	1 1/4" Coax	1.55	0.63	N	0	0.00	0.00	0	0.00	N	SPRINT NEXTEL
0.00	150.00	6	1 5/8" Coax	1.98	0.82	N	0	0.00	0.00	0	0.00	N	VERIZON WIRELESS

© 2007 - 2021 by ATC IP LLC. All rights reserved.

0.00	150.00	2	1 5/8" Hybriflex	1.98	1.30	N	0	0.00	0.00	0	0.00	N	VERIZON WIRELESS
0.00	142.00	1	0.39" (10mm) Fiber	0.39	0.06	N	0	0.00	0.00	0	0.00	N	AT&T MOBILITY
0.00	142.00	1	0.39" (9.8mm) Cable	0.39	0.07	N	0	0.00	0.00	0	0.00	N	AT&T MOBILITY
0.00	142.00	4	0.78" (19.7mm) 8 AWG	0.78	0.59	N	0	0.00	0.00	0	0.00	N	AT&T MOBILITY
0.00	142.00	6	1 1/4" Coax	1.55	0.63	N	0	0.00	0.00	0	0.00	N	AT&T MOBILITY
0.00	142.00	1	3" conduit	3.50	7.58	N	0	0.00	0.00	0	0.00	N	AT&T MOBILITY
0.00	142.00	1	3" conduit	3.50	7.58	N	0	0.00	0.00	0	0.00	N	AT&T MOBILITY
0.00	142.00	3	3/8" (0.38"- 9.5mm)	0.38	0.23	N	0	0.00	0.00	0	0.00	N	AT&T MOBILITY
0.00	130.00	3	1 5/8" Hybriflex	1.98	1.30	N	0	0.00	0.00	0	0.00	N	SPRINT NEXTEL
0.00	120.00	6	1 5/8" Coax	1.98	0.82	N	0	0.00	0.00	0	0.00	N	METRO PCS INC
0.00	107.00	1	1.60" (40.6mm) Hybrid	1.60	2.34	N	0	0.00	0.00	0	0.00	N	DISH WIRELESS

© 2007 - 2021 by ATC IP LLC. All rights reserved.

Segment Properties (Max Len : 5. ft)

Seg Top Elev (ft)	Description	Thick (in)	Flat Dia (in)	Area (in^2)	Ix (in^4)	W/t Ratio	D/t Ratio	F'y (ksi)	S (in^3)	Z (in^3)	Weight (lb)
0.00		0.5625	72.130	127.770	82,681.3	20.85	128.23	76.9	2257.	0.0	0.0
5.00		0.5625	70.873	125.526	78,402.1	20.45	126.00	77.3	2178.	0.0	2,154.8
10.00		0.5625	69.616	123.283	74,273.2	20.06	123.76	77.8	2101.	0.0	2,116.6
15.00		0.5625	68.360	121.039	70,291.9	19.67	121.53	78.3	2025.	0.0	2,078.4
20.00		0.5625	67.103	118.796	66,455.4	19.27	119.29	78.7	1950.	0.0	2,040.3
25.00		0.5625	65.847	116.553	62,761.1	18.88	117.06	79.2	1877.	0.0	2,002.1
30.00		0.5625	64.590	114.309	59,206.4	18.48	114.83	79.7	1805.	0.0	1,963.9
35.00		0.5625	63.334	112.066	55,788.4	18.09	112.59	80.1	1735.	0.0	1,925.8
37.00	Bot - Section 2	0.5625	62.831	111.168	54,459.0	17.93	111.70	80.3	1707.	0.0	759.6
40.00		0.5625	62.077	109.822	52,504.7	17.70	110.36	80.6	1665.	0.0	2,019.5
45.00	Top - Section 1	0.4375	61.695	85.061	40,328.1	23.10	141.02	74.2	1287.	0.0	3,311.5
50.00		0.4375	60.439	83.316	37,896.9	22.60	138.15	74.8	1235.	0.0	1,432.4
55.00		0.4375	59.182	81.571	35,565.4	22.09	135.27	75.4	1183.	0.0	1,402.7
60.00		0.4375	57.926	79.827	33,331.6	21.58	132.40	76.0	1133.	0.0	1,373.0
65.00		0.4375	56.669	78.082	31,193.3	21.08	129.53	76.6	1084.	0.0	1,343.3
70.00		0.4375	55.412	76.337	29,148.5	20.57	126.66	77.2	1036.	0.0	1,313.6
75.00	Bot - Section 3	0.4375	54.156	74.592	27,195.1	20.06	123.78	77.8	989.1	0.0	1,283.9
80.00		0.4375	52.899	72.847	25,330.9	19.56	120.91	78.4	943.2	0.0	2,345.8
82.00	Top - Section 2	0.3750	53.147	62.809	22,099.2	23.23	141.72	74.1	819.0	0.0	922.9
85.00		0.3750	52.393	61.912	21,165.5	22.87	139.71	74.5	795.7	0.0	636.6
90.00		0.3750	51.136	60.416	19,668.4	22.28	136.36	75.2	757.6	0.0	1,040.6
95.00		0.3750	49.880	58.921	18,243.6	21.69	133.01	75.9	720.4	0.0	1,015.2
100.0		0.3750	48.623	57.425	16,889.3	21.10	129.66	76.6	684.2	0.0	989.7
105.0		0.3750	47.366	55.929	15,603.7	20.51	126.31	77.3	648.8	0.0	964.3
107.0		0.3750	46.864	55.331	15,108.4	20.27	124.97	77.6	635.0	0.0	378.6
110.0		0.3750	46.110	54.434	14,385.2	19.92	122.96	78.0	614.5	0.0	560.3
114.2	Bot - Section 4	0.3750	45.042	53.163	13,400.6	19.42	120.11	78.6	586.0	0.0	778.0
115.0		0.3750	44.853	52.938	13,231.7	19.33	119.61	78.7	581.0	0.0	273.1
117.0		0.3750	44.351	52.340	12,788.2	19.09	118.27	78.9	567.9	0.0	722.6
120.0	Top - Section 3	0.3750	44.347	52.335	12,784.7	19.09	118.26	78.9	567.8	0.0	1,068.6
125.0		0.3750	43.090	50.840	11,719.7	18.50	114.91	79.6	535.7	0.0	877.7
130.0		0.3750	41.833	49.344	10,715.5	17.91	111.56	80.3	504.5	0.0	852.3
135.0		0.3750	40.577	47.849	9,770.4	17.32	108.20	81.0	474.3	0.0	826.8
140.0		0.3750	39.320	46.353	8,882.6	16.73	104.85	81.7	444.9	0.0	801.4
142.0		0.3750	38.818	45.755	8,543.1	16.49	103.51	82.0	433.5	0.0	313.4
145.0		0.3750	38.064	44.857	8,050.2	16.13	101.50	82.4	416.6	0.0	462.5
150.0		0.3750	36.807	43.362	7,271.6	15.54	98.15	82.6	389.1	0.0	750.5
155.0		0.3750	35.550	41.866	6,544.8	14.95	94.80	82.6	362.6	0.0	725.0
160.0		0.3750	34.294	40.371	5,868.1	14.36	91.45	82.6	337.0	0.0	699.6
											46,526.7

© 2007 - 2021 by ATC IP LLC. All rights reserved.

Load Case: 1.2D + 1.0W 118 mph with No Ice 19 Iterations

Gust Response Factor :1.10
Dead Load Factor :1.20
Wind Load Factor :1.00

Applied Segment Forces Summary

		Shaft Forces		Discrete Forces				Linear Forces		Sum of Forces			
Seg Elev (ft)	Description	Wind FX (lb)	Dead Load (lb)	Wind FX (lb)	Torsion MY (lb-ft)	Moment MZ (lb-ft)	Dead Load (lb)	Wind FX (lb)	Dead Load (lb)	Wind FX (lb)	Dead Load (lb)	Torsion MY (lb-ft)	Moment MZ (lb)
0.00		285.5	0.0					0.0	0.0	285.5	0.0	0.0	0.0
5.00		565.9	2,585.7					0.0	290.2	565.9	2,875.9	0.0	0.0
10.00		555.9	2,539.9					0.0	290.2	555.9	2,830.1	0.0	0.0
15.00		545.8	2,494.1					0.0	290.2	545.8	2,784.3	0.0	0.0
20.00		535.8	2,448.3					0.0	290.2	535.8	2,738.5	0.0	0.0
25.00		525.8	2,402.5					0.0	290.2	525.8	2,692.7	0.0	0.0
30.00		521.9	2,356.7					0.0	290.2	521.9	2,646.9	0.0	0.0
35.00		367.7	2,310.9					0.0	290.2	367.7	2,601.1	0.0	0.0
37.00	Bot - Section 2	269.3	911.5					0.0	116.1	269.3	1,027.6	0.0	0.0
40.00		438.1	2,423.4					0.0	174.1	438.1	2,597.5	0.0	0.0
45.00	Top - Section 1	553.3	3,973.8					0.0	290.2	553.3	4,263.9	0.0	0.0
50.00		558.7	1,718.9					0.0	290.2	558.7	2,009.0	0.0	0.0
55.00		562.2	1,683.2					0.0	290.2	562.2	1,973.4	0.0	0.0
60.00		564.1	1,647.6					0.0	290.2	564.1	1,937.8	0.0	0.0
65.00		564.7	1,612.0					0.0	290.2	564.7	1,902.1	0.0	0.0
70.00		564.0	1,576.4					0.0	290.2	564.0	1,866.5	0.0	0.0
75.00	Bot - Section 3	566.1	1,540.7					0.0	290.2	566.1	1,830.9	0.0	0.0
80.00		397.8	2,814.9					0.0	290.2	397.8	3,105.1	0.0	0.0
82.00	Top - Section 2	282.8	1,107.5					0.0	116.1	282.8	1,223.5	0.0	0.0
85.00		450.3	763.9					0.0	174.1	450.3	938.0	0.0	0.0
90.00		559.3	1,248.8					0.0	290.2	559.3	1,538.9	0.0	0.0
95.00		554.0	1,218.2					0.0	290.2	554.0	1,508.4	0.0	0.0
100.00		548.0	1,187.7					0.0	290.2	548.0	1,477.9	0.0	0.0
105.00		380.4	1,157.2					0.0	290.2	380.4	1,447.3	0.0	0.0
107.00	Appurtenance(s)	268.9	454.3	2,463.3	0.0	0.0	3,758.5	0.0	116.1	2,732.2	4,328.9	0.0	0.0
110.00		386.5	672.3					0.0	165.7	386.5	838.0	0.0	0.0
114.25	Bot - Section 4	265.8	933.6					0.0	234.7	265.8	1,168.3	0.0	0.0
115.00		146.8	327.7					0.0	41.4	146.8	369.1	0.0	0.0
117.00	Appurtenance(s)	265.4	867.1	153.5	0.0	0.0	234.0	0.0	110.4	418.9	1,211.5	0.0	0.0
120.00	Top - Section 3	419.9	1,282.3	476.2	0.0	0.0	95.0	0.0	165.7	896.0	1,543.0	0.0	0.0
125.00		517.7	1,053.2					0.0	246.6	517.7	1,299.8	0.0	0.0
130.00	Appurtenance(s)	508.2	1,022.7	3,054.4	0.0	0.0	3,508.2	0.0	246.6	3,562.6	4,777.5	0.0	0.0
135.00		498.3	992.2					0.0	223.2	498.3	1,215.4	0.0	0.0
140.00		343.8	961.6					0.0	223.2	343.8	1,184.8	0.0	0.0
142.00	Appurtenance(s)	241.3	376.1	3,356.2	0.0	0.0	2,326.2	0.0	89.3	3,597.5	2,791.6	0.0	0.0
145.00		379.9	555.0					0.0	54.3	379.9	609.3	0.0	0.0
150.00	Appurtenance(s)	465.8	900.6	3,561.0	0.0	0.0	3,302.8	0.0	90.5	4,026.8	4,293.8	0.0	0.0
155.00		454.2	870.0					0.0	45.4	454.2	915.4	0.0	0.0
160.00	Appurtenance(s)	224.1	839.5	1,089.5	0.0	0.0	1,800.0	0.0	45.4	1,313.6	2,684.9	0.0	0.0
									Totals:	31,258.1	79,048.4	0.00	0.00

© 2007 - 2021 by ATC IP LLC. All rights reserved.

Load Case: 1.2D + 1.0W 118 mph with No Ice 19 Iterations

Gust Response Factor :1.10
Dead Load Factor :1.20
Wind Load Factor :1.00

Calculated Forces

Seg Elev (ft)	Pu FY (-) (kips)	Vu FX (-) (kips)	Tu MY (ft-kips)	Mu MZ (ft-kips)	Mu MX (ft-kips)	Resultant Moment (ft-kips)	phi Pn (kips)	phi Vn (kips)	phi Tn (ft-kips)	phi Mn (ft-kips)	Total Deflect (in)	Rotation (deg)	Ratio
0.00	-79.23	-32.36	0.00	-3,548.96	0.00	3,548.96	8,840.70	2,242.35	14,494.8	13,018.2	0.00	0.00	0.282
5.00	-76.32	-31.87	0.00	-3,387.17	0.00	3,387.17	8,737.81	2,202.98	13,990.3	12,639.0	0.03	-0.06	0.277
10.00	-73.46	-31.39	0.00	-3,227.81	0.00	3,227.81	8,633.05	2,163.61	13,494.8	12,262.6	0.13	-0.12	0.272
15.00	-70.65	-30.91	0.00	-3,070.87	0.00	3,070.87	8,526.42	2,124.24	13,008.2	11,888.9	0.29	-0.18	0.267
20.00	-67.88	-30.44	0.00	-2,916.32	0.00	2,916.32	8,417.92	2,084.87	12,530.5	11,518.3	0.51	-0.24	0.261
25.00	-65.16	-29.97	0.00	-2,764.14	0.00	2,764.14	8,307.56	2,045.50	12,061.8	11,150.8	0.79	-0.30	0.256
30.00	-62.48	-29.50	0.00	-2,614.31	0.00	2,614.31	8,195.31	2,006.13	11,602.0	10,786.6	1.14	-0.36	0.250
35.00	-59.86	-29.16	0.00	-2,466.83	0.00	2,466.83	8,081.20	1,966.75	11,151.1	10,425.9	1.55	-0.42	0.244
37.00	-58.82	-28.91	0.00	-2,408.52	0.00	2,408.52	8,035.03	1,951.01	10,973.3	10,282.6	1.74	-0.45	0.242
40.00	-56.20	-28.50	0.00	-2,321.79	0.00	2,321.79	7,965.22	1,927.38	10,709.2	10,068.7	2.03	-0.49	0.238
45.00	-51.91	-27.96	0.00	-2,179.30	0.00	2,179.30	5,682.57	1,492.82	8,259.56	7,167.53	2.57	-0.55	0.314
50.00	-49.88	-27.44	0.00	-2,039.49	0.00	2,039.49	5,610.67	1,462.20	7,924.21	6,930.64	3.18	-0.61	0.304
55.00	-47.88	-26.92	0.00	-1,902.28	0.00	1,902.28	5,536.90	1,431.58	7,595.82	6,695.24	3.85	-0.68	0.293
60.00	-45.91	-26.39	0.00	-1,767.68	0.00	1,767.68	5,461.26	1,400.96	7,274.37	6,461.47	4.61	-0.75	0.282
65.00	-43.98	-25.85	0.00	-1,635.73	0.00	1,635.73	5,383.74	1,370.33	6,959.87	6,229.47	5.44	-0.83	0.271
70.00	-42.10	-25.31	0.00	-1,506.46	0.00	1,506.46	5,304.36	1,339.71	6,652.32	5,999.40	6.34	-0.90	0.259
75.00	-40.24	-24.77	0.00	-1,379.89	0.00	1,379.89	5,223.10	1,309.09	6,351.73	5,771.40	7.32	-0.97	0.247
80.00	-37.13	-24.35	0.00	-1,256.05	0.00	1,256.05	5,139.97	1,278.47	6,058.08	5,545.62	8.38	-1.04	0.234
82.00	-35.89	-24.06	0.00	-1,207.36	0.00	1,207.36	4,187.73	1,102.30	5,253.96	4,550.48	8.82	-1.07	0.274
85.00	-34.94	-23.63	0.00	-1,135.18	0.00	1,135.18	4,151.14	1,086.55	5,104.92	4,445.82	9.50	-1.11	0.264
90.00	-33.38	-23.08	0.00	-1,017.03	0.00	1,017.03	4,088.64	1,060.30	4,861.29	4,272.35	10.70	-1.18	0.247
95.00	-31.86	-22.53	0.00	-901.63	0.00	901.63	4,024.28	1,034.06	4,623.62	4,100.24	11.97	-1.25	0.228
100.00	-30.37	-21.99	0.00	-788.97	0.00	788.97	3,958.05	1,007.81	4,391.90	3,929.62	13.32	-1.31	0.209
105.00	-28.92	-21.59	0.00	-679.04	0.00	679.04	3,889.94	981.56	4,166.13	3,760.65	14.73	-1.38	0.188
107.00	-24.65	-18.77	0.00	-635.86	0.00	635.86	3,862.18	971.06	4,077.50	3,693.55	15.31	-1.40	0.179
110.00	-23.81	-18.38	0.00	-579.55	0.00	579.55	3,819.97	955.31	3,946.33	3,593.46	16.20	-1.43	0.168
114.25	-22.64	-18.09	0.00	-501.44	0.00	501.44	3,759.02	933.00	3,764.18	3,452.87	17.50	-1.48	0.152
115.00	-22.27	-17.94	0.00	-487.88	0.00	487.88	3,748.12	929.07	3,732.48	3,428.21	17.73	-1.49	0.149
117.00	-21.06	-17.50	0.00	-451.99	0.00	451.99	3,718.86	918.57	3,648.61	3,362.69	18.36	-1.51	0.140
120.00	-19.53	-16.58	0.00	-399.49	0.00	399.49	3,718.63	918.48	3,647.95	3,362.17	19.32	-1.54	0.124
125.00	-18.23	-16.04	0.00	-316.61	0.00	316.61	3,644.16	892.24	3,442.46	3,199.89	20.95	-1.58	0.104
130.00	-13.55	-12.35	0.00	-236.43	0.00	236.43	3,567.82	865.99	3,242.93	3,039.89	22.62	-1.61	0.082
135.00	-12.35	-11.82	0.00	-174.69	0.00	174.69	3,489.60	839.74	3,049.35	2,882.33	24.32	-1.64	0.064
140.00	-11.17	-11.45	0.00	-115.59	0.00	115.59	3,409.52	813.49	2,861.73	2,727.34	26.05	-1.66	0.046
142.00	-8.48	-7.77	0.00	-92.69	0.00	92.69	3,376.96	802.99	2,788.35	2,666.10	26.75	-1.67	0.037
145.00	-7.88	-7.37	0.00	-69.38	0.00	69.38	3,327.57	787.25	2,680.06	2,575.08	27.80	-1.67	0.029
150.00	-3.71	-3.22	0.00	-32.52	0.00	32.52	3,221.56	761.00	2,504.36	2,409.11	29.56	-1.68	0.015
155.00	-2.81	-2.74	0.00	-16.40	0.00	16.40	3,110.44	734.75	2,334.61	2,244.97	31.33	-1.69	0.008
160.00	0.00	-2.66	0.00	-2.69	0.00	2.69	2,999.33	708.50	2,170.81	2,086.62	33.09	-1.69	0.001

© 2007 - 2021 by ATC IP LLC. All rights reserved.

Load Case: 0.9D + 1.0W 118 mph with No Ice (Reduced DL) 19 Iterations

Gust Response Factor :1.10
Dead Load Factor :0.90
Wind Load Factor :1.00

Applied Segment Forces Summary

Seg Elev (ft)	Description	Shaft Forces Wind FX (lb)	Shaft Forces Dead Load (lb)	Discrete Forces Wind FX (lb)	Discrete Forces Torsion MY (lb-ft)	Discrete Forces Moment MZ (lb-ft)	Discrete Forces Dead Load (lb)	Linear Forces Wind FX (lb)	Linear Forces Dead Load (lb)	Sum of Forces Wind FX (lb)	Sum of Forces Dead Load (lb)	Sum of Forces Torsion MY (lb-ft)	Sum of Forces Moment MZ (lb)
0.00		285.5	0.0					0.0	0.0	285.5	0.0	0.0	0.0
5.00		565.9	1,939.3					0.0	217.6	565.9	2,156.9	0.0	0.0
10.00		555.9	1,904.9					0.0	217.6	555.9	2,122.6	0.0	0.0
15.00		545.8	1,870.6					0.0	217.6	545.8	2,088.2	0.0	0.0
20.00		535.8	1,836.2					0.0	217.6	535.8	2,053.9	0.0	0.0
25.00		525.8	1,801.9					0.0	217.6	525.8	2,019.5	0.0	0.0
30.00		521.9	1,767.5					0.0	217.6	521.9	1,985.2	0.0	0.0
35.00		367.7	1,733.2					0.0	217.6	367.7	1,950.8	0.0	0.0
37.00	Bot - Section 2	269.3	683.7					0.0	87.0	269.3	770.7	0.0	0.0
40.00		438.1	1,817.5					0.0	130.6	438.1	1,948.1	0.0	0.0
45.00	Top - Section 1	553.3	2,980.3					0.0	217.6	553.3	3,198.0	0.0	0.0
50.00		558.7	1,289.1					0.0	217.6	558.7	1,506.8	0.0	0.0
55.00		562.2	1,262.4					0.0	217.6	562.2	1,480.0	0.0	0.0
60.00		564.1	1,235.7					0.0	217.6	564.1	1,453.3	0.0	0.0
65.00		564.7	1,209.0					0.0	217.6	564.7	1,426.6	0.0	0.0
70.00		564.0	1,182.3					0.0	217.6	564.0	1,399.9	0.0	0.0
75.00	Bot - Section 3	566.1	1,155.5					0.0	217.6	566.1	1,373.2	0.0	0.0
80.00		397.8	2,111.2					0.0	217.6	397.8	2,328.8	0.0	0.0
82.00	Top - Section 2	282.8	830.6					0.0	87.0	282.8	917.6	0.0	0.0
85.00		450.3	572.9					0.0	130.6	450.3	703.5	0.0	0.0
90.00		559.3	936.6					0.0	217.6	559.3	1,154.2	0.0	0.0
95.00		554.0	913.7					0.0	217.6	554.0	1,131.3	0.0	0.0
100.00		548.0	890.8					0.0	217.6	548.0	1,108.4	0.0	0.0
105.00		380.4	867.9					0.0	217.6	380.4	1,085.5	0.0	0.0
107.00	Appurtenance(s)	268.9	340.7	2,463.3	0.0	0.0	2,818.9	0.0	87.0	2,732.2	3,246.7	0.0	0.0
110.00		386.5	504.2					0.0	124.3	386.5	628.5	0.0	0.0
114.25	Bot - Section 4	265.8	700.2					0.0	176.0	265.8	876.2	0.0	0.0
115.00		146.8	245.8					0.0	31.1	146.8	276.8	0.0	0.0
117.00	Appurtenance(s)	265.4	650.3	153.5	0.0	0.0	175.5	0.0	82.8	418.9	908.6	0.0	0.0
120.00	Top - Section 3	419.9	961.7	476.2	0.0	0.0	71.3	0.0	124.3	896.0	1,157.2	0.0	0.0
125.00		517.7	789.9					0.0	184.9	517.7	974.9	0.0	0.0
130.00	Appurtenance(s)	508.2	767.0	3,054.4	0.0	0.0	2,631.1	0.0	184.9	3,562.6	3,583.1	0.0	0.0
135.00		498.3	744.1					0.0	167.4	498.3	911.5	0.0	0.0
140.00		343.8	721.2					0.0	167.4	343.8	888.6	0.0	0.0
142.00	Appurtenance(s)	241.3	282.1	3,356.2	0.0	0.0	1,744.6	0.0	67.0	3,597.5	2,093.7	0.0	0.0
145.00		379.9	416.2					0.0	40.7	379.9	457.0	0.0	0.0
150.00	Appurtenance(s)	465.8	675.4	3,561.0	0.0	0.0	2,477.1	0.0	67.9	4,026.8	3,220.4	0.0	0.0
155.00		454.2	652.5					0.0	34.0	454.2	686.5	0.0	0.0
160.00	Appurtenance(s)	224.1	629.6	1,089.5	0.0	0.0	1,350.0	0.0	34.0	1,313.6	2,013.6	0.0	0.0
									Totals:	31,258.1	59,286.3	0.00	0.00

© 2007 - 2021 by ATC IP LLC. All rights reserved.

Load Case: 0.9D + 1.0W 118 mph with No Ice (Reduced DL) 19 Iterations

Gust Response Factor :1.10
Dead Load Factor :0.90
Wind Load Factor :1.00

Calculated Forces

Seg Elev (ft)	Pu FY (-) (kips)	Vu FX (-) (kips)	Tu MY (ft-kips)	Mu MZ (ft-kips)	Mu MX (ft-kips)	Resultant Moment (ft-kips)	phi Pn (kips)	phi Vn (kips)	phi Tn (ft-kips)	phi Mn (ft-kips)	Total Deflect (in)	Rotation (deg)	Ratio
0.00	-59.42	-32.35	0.00	-3,529.70	0.00	3,529.70	8,840.70	2,242.35	14,494.8	13,018.2	0.00	0.00	0.278
5.00	-57.23	-31.84	0.00	-3,367.96	0.00	3,367.96	8,737.81	2,202.98	13,990.3	12,639.0	0.03	-0.06	0.273
10.00	-55.08	-31.34	0.00	-3,208.76	0.00	3,208.76	8,633.05	2,163.61	13,494.8	12,262.6	0.13	-0.12	0.268
15.00	-52.96	-30.84	0.00	-3,052.06	0.00	3,052.06	8,526.42	2,124.24	13,008.2	11,888.9	0.28	-0.18	0.263
20.00	-50.87	-30.35	0.00	-2,897.84	0.00	2,897.84	8,417.92	2,084.87	12,530.5	11,518.3	0.50	-0.24	0.258
25.00	-48.82	-29.87	0.00	-2,746.07	0.00	2,746.07	8,307.56	2,045.50	12,061.8	11,150.8	0.79	-0.30	0.252
30.00	-46.81	-29.39	0.00	-2,596.72	0.00	2,596.72	8,195.31	2,006.13	11,602.0	10,786.6	1.13	-0.36	0.247
35.00	-44.84	-29.04	0.00	-2,449.79	0.00	2,449.79	8,081.20	1,966.75	11,151.1	10,425.9	1.54	-0.42	0.241
37.00	-44.06	-28.79	0.00	-2,391.71	0.00	2,391.71	8,035.03	1,951.01	10,973.3	10,282.6	1.73	-0.45	0.238
40.00	-42.09	-28.37	0.00	-2,305.35	0.00	2,305.35	7,965.22	1,927.38	10,709.2	10,068.7	2.02	-0.48	0.234
45.00	-38.87	-27.83	0.00	-2,163.51	0.00	2,163.51	5,682.57	1,492.82	8,259.56	7,167.53	2.56	-0.54	0.309
50.00	-37.33	-27.30	0.00	-2,024.37	0.00	2,024.37	5,610.67	1,462.20	7,924.21	6,930.64	3.16	-0.60	0.299
55.00	-35.83	-26.77	0.00	-1,887.88	0.00	1,887.88	5,536.90	1,431.58	7,595.82	6,695.24	3.83	-0.68	0.289
60.00	-34.35	-26.23	0.00	-1,754.05	0.00	1,754.05	5,461.26	1,400.96	7,274.37	6,461.47	4.58	-0.75	0.278
65.00	-32.90	-25.68	0.00	-1,622.92	0.00	1,622.92	5,383.74	1,370.33	6,959.87	6,229.47	5.40	-0.82	0.267
70.00	-31.47	-25.14	0.00	-1,494.50	0.00	1,494.50	5,304.36	1,339.71	6,652.32	5,999.40	6.30	-0.89	0.255
75.00	-30.08	-24.59	0.00	-1,368.82	0.00	1,368.82	5,223.10	1,309.09	6,351.73	5,771.40	7.28	-0.96	0.243
80.00	-27.74	-24.17	0.00	-1,245.89	0.00	1,245.89	5,139.97	1,278.47	6,058.08	5,545.62	8.32	-1.03	0.230
82.00	-26.81	-23.89	0.00	-1,197.55	0.00	1,197.55	4,187.73	1,102.30	5,253.96	4,550.48	8.76	-1.06	0.270
85.00	-26.09	-23.45	0.00	-1,125.89	0.00	1,125.89	4,151.14	1,086.55	5,104.92	4,445.82	9.44	-1.10	0.260
90.00	-24.92	-22.90	0.00	-1,008.65	0.00	1,008.65	4,088.64	1,060.30	4,861.29	4,272.35	10.63	-1.17	0.243
95.00	-23.78	-22.35	0.00	-894.16	0.00	894.16	4,024.28	1,034.06	4,623.62	4,100.24	11.89	-1.24	0.224
100.00	-22.66	-21.80	0.00	-782.43	0.00	782.43	3,958.05	1,007.81	4,391.90	3,929.62	13.23	-1.30	0.205
105.00	-21.57	-21.41	0.00	-673.43	0.00	673.43	3,889.94	981.56	4,166.13	3,760.65	14.63	-1.37	0.185
107.00	-18.38	-18.61	0.00	-630.61	0.00	630.61	3,862.18	971.06	4,077.50	3,693.55	15.20	-1.39	0.176
110.00	-17.74	-18.22	0.00	-574.78	0.00	574.78	3,819.97	955.31	3,946.33	3,593.46	16.09	-1.42	0.165
114.25	-16.87	-17.94	0.00	-497.34	0.00	497.34	3,759.02	933.00	3,764.18	3,452.87	17.38	-1.47	0.149
115.00	-16.59	-17.79	0.00	-483.89	0.00	483.89	3,748.12	929.07	3,732.48	3,428.21	17.61	-1.48	0.146
117.00	-15.69	-17.35	0.00	-448.31	0.00	448.31	3,718.86	918.57	3,648.61	3,362.69	18.23	-1.50	0.138
120.00	-14.54	-16.44	0.00	-396.24	0.00	396.24	3,718.63	918.48	3,647.95	3,362.17	19.18	-1.52	0.122
125.00	-13.57	-15.90	0.00	-314.05	0.00	314.05	3,644.16	892.24	3,442.46	3,199.89	20.80	-1.57	0.102
130.00	-10.08	-12.25	0.00	-234.54	0.00	234.54	3,567.82	865.99	3,242.93	3,039.89	22.46	-1.60	0.080
135.00	-9.18	-11.73	0.00	-173.30	0.00	173.30	3,489.60	839.74	3,049.35	2,882.33	24.15	-1.63	0.063
140.00	-8.30	-11.36	0.00	-114.67	0.00	114.67	3,409.52	813.49	2,861.73	2,727.34	25.87	-1.65	0.045
142.00	-6.31	-7.71	0.00	-91.94	0.00	91.94	3,376.96	802.99	2,788.35	2,666.10	26.56	-1.65	0.036
145.00	-5.86	-7.31	0.00	-68.83	0.00	68.83	3,327.57	787.25	2,680.06	2,575.08	27.60	-1.66	0.029
150.00	-2.76	-3.19	0.00	-32.26	0.00	32.26	3,221.56	761.00	2,504.36	2,409.11	29.35	-1.67	0.014
155.00	-2.09	-2.72	0.00	-16.29	0.00	16.29	3,110.44	734.75	2,334.61	2,244.97	31.10	-1.68	0.008
160.00	0.00	-2.66	0.00	-2.69	0.00	2.69	2,999.33	708.50	2,170.81	2,086.62	32.86	-1.68	0.001

© 2007 - 2021 by ATC IP LLC. All rights reserved.

Load Case: 1.2D + 1.0Di + 1.0Wi 50 mph with 1.50 in Radial Ice 18 Iterations

Gust Response Factor :1.10 Ice Dead Load Factor :1.00
Dead Load Factor :1.20 Ice Importance Factor :1.00
Wind Load Factor :1.00

Applied Segment Forces Summary

		Shaft Forces		Discrete Forces				Linear Forces		Sum of Forces			
Seg Elev (ft)	Description	Wind FX (lb)	Dead Load (lb)	Wind FX (lb)	Torsion MY (lb-ft)	Moment MZ (lb-ft)	Dead Load (lb)	Wind FX (lb)	Dead Load (lb)	Wind FX (lb)	Dead Load (lb)	Torsion MY (lb-ft)	Moment MZ (lb)
0.00		86.9	0.0					0.0	0.0	86.9	0.0	0.0	0.0
5.00		172.7	3,108.7					0.0	290.2	172.7	3,398.9	0.0	0.0
10.00		170.2	3,114.5					0.0	290.2	170.2	3,404.7	0.0	0.0
15.00		167.5	3,088.7					0.0	290.2	167.5	3,378.8	0.0	0.0
20.00		164.8	3,052.6					0.0	290.2	164.8	3,342.7	0.0	0.0
25.00		161.9	3,011.1					0.0	290.2	161.9	3,301.2	0.0	0.0
30.00		161.0	2,966.3					0.0	290.2	161.0	3,256.4	0.0	0.0
35.00		113.6	2,919.2					0.0	290.2	113.6	3,209.3	0.0	0.0
37.00	Bot - Section 2	83.2	1,155.5					0.0	116.1	83.2	1,271.6	0.0	0.0
40.00		135.5	2,792.5					0.0	174.1	135.5	2,966.6	0.0	0.0
45.00	Top - Section 1	171.4	4,583.2					0.0	290.2	171.4	4,873.3	0.0	0.0
50.00		173.3	2,323.0					0.0	290.2	173.3	2,613.1	0.0	0.0
55.00		174.6	2,281.2					0.0	290.2	174.6	2,571.4	0.0	0.0
60.00		175.5	2,238.7					0.0	290.2	175.5	2,528.9	0.0	0.0
65.00		176.0	2,195.6					0.0	290.2	176.0	2,485.7	0.0	0.0
70.00		176.0	2,151.9					0.0	290.2	176.0	2,442.1	0.0	0.0
75.00	Bot - Section 3	176.9	2,107.7					0.0	290.2	176.9	2,397.9	0.0	0.0
80.00		124.4	3,380.7					0.0	290.2	124.4	3,670.8	0.0	0.0
82.00	Top - Section 2	88.6	1,332.7					0.0	116.1	88.6	1,448.8	0.0	0.0
85.00		141.2	1,098.2					0.0	174.1	141.2	1,272.3	0.0	0.0
90.00		175.6	1,795.6					0.0	290.2	175.6	2,085.7	0.0	0.0
95.00		174.3	1,755.1					0.0	290.2	174.3	2,045.2	0.0	0.0
100.00		172.7	1,714.3					0.0	290.2	172.7	2,004.5	0.0	0.0
105.00		120.1	1,673.3					0.0	290.2	120.1	1,963.4	0.0	0.0
107.00	Appurtenance(s)	85.0	659.3	621.8	0.0	0.0	6,204.5	0.0	116.1	706.8	6,980.0	0.0	0.0
110.00		122.4	975.8					0.0	165.7	122.4	1,141.5	0.0	0.0
114.25	Bot - Section 4	84.2	1,355.4					0.0	234.7	84.2	1,590.1	0.0	0.0
115.00		46.5	403.2					0.0	41.4	46.5	444.6	0.0	0.0
117.00	Appurtenance(s)	84.2	1,066.5	55.7	0.0	0.0	516.9	0.0	110.4	139.9	1,693.9	0.0	0.0
120.00	Top - Section 3	133.4	1,577.3	123.8	0.0	0.0	327.2	0.0	165.7	257.2	2,070.1	0.0	0.0
125.00		164.8	1,533.1					0.0	246.6	164.8	1,779.7	0.0	0.0
130.00	Appurtenance(s)	162.2	1,491.0	784.3	0.0	0.0	6,123.5	0.0	246.6	946.5	7,861.2	0.0	0.0
135.00		159.4	1,448.8					0.0	223.2	159.4	1,672.0	0.0	0.0
140.00		110.2	1,406.4					0.0	223.2	110.2	1,629.6	0.0	0.0
142.00	Appurtenance(s)	77.5	552.3	853.0	0.0	0.0	5,296.7	0.0	89.3	930.5	5,938.3	0.0	0.0
145.00		122.3	814.8					0.0	54.3	122.3	869.1	0.0	0.0
150.00	Appurtenance(s)	150.3	1,321.2	957.2	0.0	0.0	6,037.5	0.0	90.5	1,107.5	7,449.1	0.0	0.0
155.00		147.0	1,278.3					0.0	45.4	147.0	1,323.7	0.0	0.0
160.00	Appurtenance(s)	72.7	1,235.4	339.7	0.0	0.0	2,359.4	0.0	45.4	412.4	3,640.1	0.0	0.0
									Totals:	9,095.70	108,016.	0.00	0.00

© 2007 - 2021 by ATC IP LLC. All rights reserved.

Load Case: 1.2D + 1.0Di + 1.0Wi 50 mph with 1.50 in Radial Ice 18 Iterations

Gust Response Factor :1.10 Ice Dead Load Factor :1.00
Dead Load Factor :1.20 Ice Importance Factor :1.00
Wind Load Factor :1.00

Calculated Forces

Seg Elev (ft)	Pu FY (-) (kips)	Vu FX (-) (kips)	Tu MY (ft-kips)	Mu MZ (ft-kips)	Mu MX (ft-kips)	Resultant Moment (ft-kips)	phi Pn (kips)	phi Vn (kips)	phi Tn (ft-kips)	phi Mn (ft-kips)	Total Deflect (in)	Rotation (deg)	Ratio
0.00	-109.55	-9.29	0.00	-1,007.02	0.00	1,007.02	8,840.70	2,242.35	14,494.8	13,018.2	0.00	0.00	0.090
5.00	-106.15	-9.15	0.00	-960.58	0.00	960.58	8,737.81	2,202.98	13,990.3	12,639.0	0.01	-0.02	0.088
10.00	-102.74	-9.00	0.00	-914.85	0.00	914.85	8,633.05	2,163.61	13,494.8	12,262.6	0.04	-0.03	0.087
15.00	-99.36	-8.86	0.00	-869.83	0.00	869.83	8,526.42	2,124.24	13,008.2	11,888.9	0.08	-0.05	0.085
20.00	-96.02	-8.72	0.00	-825.52	0.00	825.52	8,417.92	2,084.87	12,530.5	11,518.3	0.14	-0.07	0.083
25.00	-92.71	-8.59	0.00	-781.90	0.00	781.90	8,307.56	2,045.50	12,061.8	11,150.8	0.22	-0.09	0.081
30.00	-89.45	-8.45	0.00	-738.97	0.00	738.97	8,195.31	2,006.13	11,602.0	10,786.6	0.32	-0.10	0.079
35.00	-86.24	-8.34	0.00	-696.74	0.00	696.74	8,081.20	1,966.75	11,151.1	10,425.9	0.44	-0.12	0.078
37.00	-84.97	-8.27	0.00	-680.05	0.00	680.05	8,035.03	1,951.01	10,973.3	10,282.6	0.49	-0.13	0.077
40.00	-82.00	-8.15	0.00	-655.23	0.00	655.23	7,965.22	1,927.38	10,709.2	10,068.7	0.58	-0.14	0.075
45.00	-77.13	-7.99	0.00	-614.49	0.00	614.49	5,682.57	1,492.82	8,259.56	7,167.53	0.73	-0.15	0.099
50.00	-74.51	-7.83	0.00	-574.54	0.00	574.54	5,610.67	1,462.20	7,924.21	6,930.64	0.90	-0.17	0.096
55.00	-71.94	-7.68	0.00	-535.38	0.00	535.38	5,536.90	1,431.58	7,595.82	6,695.24	1.09	-0.19	0.093
60.00	-69.41	-7.52	0.00	-497.00	0.00	497.00	5,461.26	1,400.96	7,274.37	6,461.47	1.30	-0.21	0.090
65.00	-66.92	-7.35	0.00	-459.42	0.00	459.42	5,383.74	1,370.33	6,959.87	6,229.47	1.54	-0.23	0.086
70.00	-64.48	-7.19	0.00	-422.65	0.00	422.65	5,304.36	1,339.71	6,652.32	5,999.40	1.79	-0.25	0.083
75.00	-62.08	-7.02	0.00	-386.70	0.00	386.70	5,223.10	1,309.09	6,351.73	5,771.40	2.07	-0.27	0.079
80.00	-58.41	-6.89	0.00	-351.58	0.00	351.58	5,139.97	1,278.47	6,058.08	5,545.62	2.37	-0.29	0.075
82.00	-56.96	-6.81	0.00	-337.80	0.00	337.80	4,187.73	1,102.30	5,253.96	4,550.48	2.49	-0.30	0.088
85.00	-55.68	-6.68	0.00	-317.37	0.00	317.37	4,151.14	1,086.55	5,104.92	4,445.82	2.68	-0.31	0.085
90.00	-53.60	-6.51	0.00	-283.99	0.00	283.99	4,088.64	1,060.30	4,861.29	4,272.35	3.02	-0.33	0.080
95.00	-51.55	-6.34	0.00	-251.46	0.00	251.46	4,024.28	1,034.06	4,623.62	4,100.24	3.38	-0.35	0.074
100.00	-49.54	-6.17	0.00	-219.78	0.00	219.78	3,958.05	1,007.81	4,391.90	3,929.62	3.76	-0.37	0.068
105.00	-47.58	-6.04	0.00	-188.94	0.00	188.94	3,889.94	981.56	4,166.13	3,760.65	4.16	-0.39	0.063
107.00	-40.60	-5.30	0.00	-176.85	0.00	176.85	3,862.18	971.06	4,077.50	3,693.55	4.32	-0.39	0.058
110.00	-39.46	-5.17	0.00	-160.97	0.00	160.97	3,819.97	955.31	3,946.33	3,593.46	4.57	-0.40	0.055
114.25	-37.87	-5.08	0.00	-138.98	0.00	138.98	3,759.02	933.00	3,764.18	3,452.87	4.94	-0.42	0.050
115.00	-37.43	-5.03	0.00	-135.17	0.00	135.17	3,748.12	929.07	3,732.48	3,428.21	5.00	-0.42	0.049
117.00	-35.74	-4.89	0.00	-125.10	0.00	125.10	3,718.86	918.57	3,648.61	3,362.69	5.18	-0.42	0.047
120.00	-33.67	-4.62	0.00	-110.44	0.00	110.44	3,718.63	918.48	3,647.95	3,362.17	5.45	-0.43	0.042
125.00	-31.89	-4.45	0.00	-87.34	0.00	87.34	3,644.16	892.24	3,442.46	3,199.89	5.90	-0.44	0.036
130.00	-24.03	-3.44	0.00	-65.10	0.00	65.10	3,567.82	865.99	3,242.93	3,039.89	6.37	-0.45	0.028
135.00	-22.36	-3.27	0.00	-47.89	0.00	47.89	3,489.60	839.74	3,049.35	2,882.33	6.85	-0.46	0.023
140.00	-20.73	-3.15	0.00	-31.53	0.00	31.53	3,409.52	813.49	2,861.73	2,727.34	7.34	-0.47	0.018
142.00	-14.80	-2.17	0.00	-25.22	0.00	25.22	3,376.96	802.99	2,788.35	2,666.10	7.53	-0.47	0.014
145.00	-13.93	-2.04	0.00	-18.71	0.00	18.71	3,327.57	787.25	2,680.06	2,575.08	7.83	-0.47	0.011
150.00	-6.49	-0.88	0.00	-8.49	0.00	8.49	3,221.56	761.00	2,504.36	2,409.11	8.32	-0.47	0.006
155.00	-5.17	-0.72	0.00	-4.11	0.00	4.11	3,110.44	734.75	2,334.61	2,244.97	8.82	-0.47	0.003
160.00	0.00	-0.67	0.00	-0.52	0.00	0.52	2,999.33	708.50	2,170.81	2,086.62	9.31	-0.47	0.000

© 2007 - 2021 by ATC IP LLC. All rights reserved.

Load Case: 1.0D + 1.0W Serviceability 60 mph 18 Iterations

Gust Response Factor :1.10
Dead Load Factor :1.00
Wind Load Factor :1.00

Applied Segment Forces Summary

		Shaft Forces		Discrete Forces				Linear Forces		Sum of Forces			
Seg Elev (ft)	Description	Wind FX (lb)	Dead Load (lb)	Wind FX (lb)	Torsion MY (lb-ft)	Moment MZ (lb-ft)	Dead Load (lb)	Wind FX (lb)	Dead Load (lb)	Wind FX (lb)	Dead Load (lb)	Torsion MY (lb-ft)	Moment MZ (lb)
0.00		66.0	0.0					0.0	0.0	66.0	0.0	0.0	0.0
5.00		130.9	2,154.8					0.0	241.8	130.9	2,396.6	0.0	0.0
10.00		128.6	2,116.6					0.0	241.8	128.6	2,358.4	0.0	0.0
15.00		126.3	2,078.4					0.0	241.8	126.3	2,320.2	0.0	0.0
20.00		123.9	2,040.3					0.0	241.8	123.9	2,282.1	0.0	0.0
25.00		121.6	2,002.1					0.0	241.8	121.6	2,243.9	0.0	0.0
30.00		120.7	1,963.9					0.0	241.8	120.7	2,205.7	0.0	0.0
35.00		85.1	1,925.8					0.0	241.8	85.1	2,167.6	0.0	0.0
37.00	Bot - Section 2	62.3	759.6					0.0	96.7	62.3	856.3	0.0	0.0
40.00		101.4	2,019.5					0.0	145.1	101.4	2,164.5	0.0	0.0
45.00	Top - Section 1	128.0	3,311.5					0.0	241.8	128.0	3,553.3	0.0	0.0
50.00		129.2	1,432.4					0.0	241.8	129.2	1,674.2	0.0	0.0
55.00		130.1	1,402.7					0.0	241.8	130.1	1,644.5	0.0	0.0
60.00		130.5	1,373.0					0.0	241.8	130.5	1,614.8	0.0	0.0
65.00		130.6	1,343.3					0.0	241.8	130.6	1,585.1	0.0	0.0
70.00		130.5	1,313.6					0.0	241.8	130.5	1,555.4	0.0	0.0
75.00	Bot - Section 3	131.0	1,283.9					0.0	241.8	131.0	1,525.7	0.0	0.0
80.00		92.0	2,345.8					0.0	241.8	92.0	2,587.6	0.0	0.0
82.00	Top - Section 2	65.4	922.9					0.0	96.7	65.4	1,019.6	0.0	0.0
85.00		104.2	636.6					0.0	145.1	104.2	781.7	0.0	0.0
90.00		129.4	1,040.6					0.0	241.8	129.4	1,282.4	0.0	0.0
95.00		128.2	1,015.2					0.0	241.8	128.2	1,257.0	0.0	0.0
100.00		126.8	989.7					0.0	241.8	126.8	1,231.5	0.0	0.0
105.00		88.0	964.3					0.0	241.8	88.0	1,206.1	0.0	0.0
107.00	Appurtenance(s)	62.2	378.6	569.8	0.0	0.0	3,132.1	0.0	96.7	632.0	3,607.4	0.0	0.0
110.00		89.4	560.3					0.0	138.1	89.4	698.3	0.0	0.0
114.25	Bot - Section 4	61.5	778.0					0.0	195.6	61.5	973.6	0.0	0.0
115.00		34.0	273.1					0.0	34.5	34.0	307.6	0.0	0.0
117.00	Appurtenance(s)	61.4	722.6	35.5	0.0	0.0	195.0	0.0	92.0	96.9	1,009.6	0.0	0.0
120.00	Top - Section 3	97.1	1,068.6	110.2	0.0	0.0	79.2	0.0	138.1	207.3	1,285.8	0.0	0.0
125.00		119.7	877.7					0.0	205.5	119.7	1,083.2	0.0	0.0
130.00	Appurtenance(s)	117.6	852.3	706.6	0.0	0.0	2,923.5	0.0	205.5	824.1	3,981.3	0.0	0.0
135.00		115.3	826.8					0.0	186.0	115.3	1,012.8	0.0	0.0
140.00		79.5	801.4					0.0	186.0	79.5	987.4	0.0	0.0
142.00	Appurtenance(s)	55.8	313.4	776.4	0.0	0.0	1,938.5	0.0	74.4	832.2	2,326.3	0.0	0.0
145.00		87.9	462.5					0.0	45.2	87.9	507.7	0.0	0.0
150.00	Appurtenance(s)	107.8	750.5	823.8	0.0	0.0	2,752.3	0.0	75.4	931.5	3,578.2	0.0	0.0
155.00		105.1	725.0					0.0	37.8	105.1	762.8	0.0	0.0
160.00	Appurtenance(s)	51.8	699.6	252.0	0.0	0.0	1,500.0	0.0	37.8	303.9	2,237.4	0.0	0.0
									Totals:	7,230.97	65,873.7	0.00	0.00

© 2007 - 2021 by ATC IP LLC. All rights reserved.

Load Case: 1.0D + 1.0W Serviceability 60 mph 18 Iterations

Gust Response Factor :1.10
Dead Load Factor :1.00
Wind Load Factor :1.00

Calculated Forces

Seg Elev (ft)	Pu FY (-) (kips)	Vu FX (-) (kips)	Tu MY (ft-kips)	Mu MZ (ft-kips)	Mu MX (ft-kips)	Resultant Moment (ft-kips)	phi Pn (kips)	phi Vn (kips)	phi Tn (ft-kips)	phi Mn (ft-kips)	Total Deflect (in)	Rotation (deg)	Ratio
0.00	-66.04	-7.48	0.00	-818.07	0.00	818.07	8,840.70	2,242.35	14,494.8	13,018.2	0.00	0.00	0.070
5.00	-63.64	-7.37	0.00	-780.65	0.00	780.65	8,737.81	2,202.98	13,990.3	12,639.0	0.01	-0.01	0.069
10.00	-61.28	-7.25	0.00	-743.81	0.00	743.81	8,633.05	2,163.61	13,494.8	12,262.6	0.03	-0.03	0.068
15.00	-58.96	-7.14	0.00	-707.54	0.00	707.54	8,526.42	2,124.24	13,008.2	11,888.9	0.07	-0.04	0.066
20.00	-56.68	-7.03	0.00	-671.84	0.00	671.84	8,417.92	2,084.87	12,530.5	11,518.3	0.12	-0.06	0.065
25.00	-54.43	-6.92	0.00	-636.71	0.00	636.71	8,307.56	2,045.50	12,061.8	11,150.8	0.18	-0.07	0.064
30.00	-52.22	-6.81	0.00	-602.12	0.00	602.12	8,195.31	2,006.13	11,602.0	10,786.6	0.26	-0.08	0.062
35.00	-50.06	-6.73	0.00	-568.09	0.00	568.09	8,081.20	1,966.75	11,151.1	10,425.9	0.36	-0.10	0.061
37.00	-49.20	-6.67	0.00	-554.64	0.00	554.64	8,035.03	1,951.01	10,973.3	10,282.6	0.40	-0.10	0.060
40.00	-47.03	-6.57	0.00	-534.63	0.00	534.63	7,965.22	1,927.38	10,709.2	10,068.7	0.47	-0.11	0.059
45.00	-43.48	-6.45	0.00	-501.77	0.00	501.77	5,682.57	1,492.82	8,259.56	7,167.53	0.59	-0.13	0.078
50.00	-41.80	-6.33	0.00	-469.53	0.00	469.53	5,610.67	1,462.20	7,924.21	6,930.64	0.73	-0.14	0.075
55.00	-40.16	-6.20	0.00	-437.90	0.00	437.90	5,536.90	1,431.58	7,595.82	6,695.24	0.89	-0.16	0.073
60.00	-38.54	-6.08	0.00	-406.88	0.00	406.88	5,461.26	1,400.96	7,274.37	6,461.47	1.06	-0.17	0.070
65.00	-36.95	-5.95	0.00	-376.49	0.00	376.49	5,383.74	1,370.33	6,959.87	6,229.47	1.25	-0.19	0.067
70.00	-35.40	-5.83	0.00	-346.71	0.00	346.71	5,304.36	1,339.71	6,652.32	5,999.40	1.46	-0.21	0.064
75.00	-33.87	-5.70	0.00	-317.57	0.00	317.57	5,223.10	1,309.09	6,351.73	5,771.40	1.69	-0.22	0.062
80.00	-31.28	-5.61	0.00	-289.06	0.00	289.06	5,139.97	1,278.47	6,058.08	5,545.62	1.93	-0.24	0.058
82.00	-30.26	-5.54	0.00	-277.85	0.00	277.85	4,187.73	1,102.30	5,253.96	4,550.48	2.03	-0.25	0.068
85.00	-29.48	-5.44	0.00	-261.23	0.00	261.23	4,151.14	1,086.55	5,104.92	4,445.82	2.19	-0.25	0.066
90.00	-28.20	-5.31	0.00	-234.03	0.00	234.03	4,088.64	1,060.30	4,861.29	4,272.35	2.46	-0.27	0.062
95.00	-26.94	-5.18	0.00	-207.48	0.00	207.48	4,024.28	1,034.06	4,623.62	4,100.24	2.76	-0.29	0.057
100.00	-25.71	-5.06	0.00	-181.55	0.00	181.55	3,958.05	1,007.81	4,391.90	3,929.62	3.07	-0.30	0.053
105.00	-24.50	-4.97	0.00	-156.26	0.00	156.26	3,889.94	981.56	4,166.13	3,760.65	3.39	-0.32	0.048
107.00	-20.90	-4.32	0.00	-146.32	0.00	146.32	3,862.18	971.06	4,077.50	3,693.55	3.53	-0.32	0.045
110.00	-20.20	-4.23	0.00	-133.37	0.00	133.37	3,819.97	955.31	3,946.33	3,593.46	3.73	-0.33	0.042
114.25	-19.22	-4.16	0.00	-115.40	0.00	115.40	3,759.02	933.00	3,764.18	3,452.87	4.03	-0.34	0.039
115.00	-18.92	-4.13	0.00	-112.28	0.00	112.28	3,748.12	929.07	3,732.48	3,428.21	4.08	-0.34	0.038
117.00	-17.91	-4.03	0.00	-104.02	0.00	104.02	3,718.86	918.57	3,648.61	3,362.69	4.23	-0.35	0.036
120.00	-16.62	-3.81	0.00	-91.94	0.00	91.94	3,718.63	918.48	3,647.95	3,362.17	4.45	-0.35	0.032
125.00	-15.54	-3.69	0.00	-72.87	0.00	72.87	3,644.16	892.24	3,442.46	3,199.89	4.82	-0.36	0.027
130.00	-11.56	-2.84	0.00	-54.42	0.00	54.42	3,567.82	865.99	3,242.93	3,039.89	5.21	-0.37	0.021
135.00	-10.55	-2.72	0.00	-40.21	0.00	40.21	3,489.60	839.74	3,049.35	2,882.33	5.60	-0.38	0.017
140.00	-9.56	-2.64	0.00	-26.61	0.00	26.61	3,409.52	813.49	2,861.73	2,727.34	6.00	-0.38	0.013
142.00	-7.24	-1.79	0.00	-21.33	0.00	21.33	3,376.96	802.99	2,788.35	2,666.10	6.16	-0.38	0.010
145.00	-6.74	-1.70	0.00	-15.97	0.00	15.97	3,327.57	787.25	2,680.06	2,575.08	6.40	-0.39	0.008
150.00	-3.16	-0.74	0.00	-7.49	0.00	7.49	3,221.56	761.00	2,504.36	2,409.11	6.81	-0.39	0.004
155.00	-2.40	-0.63	0.00	-3.78	0.00	3.78	3,110.44	734.75	2,334.61	2,244.97	7.21	-0.39	0.002
160.00	0.00	-0.61	0.00	-0.62	0.00	0.62	2,999.33	708.50	2,170.81	2,086.62	7.62	-0.39	0.000

© 2007 - 2021 by ATC IP LLC. All rights reserved.

Equivalent Lateral Forces Method Analysis

Spectral Response Acceleration for Short Period (S_s):	0.18	
Spectral Response Acceleration at 1.0 Second Period (S_1):	0.05	
Long-Period Transition Period (T_L):	6	
Importance Factor (I_E):	1.00	
Site Coefficient F_a:	1.60	
Site Coeffiecient F_v:	2.40	
Response Modification Coefficient (R):	1.50	
Design Spectral Response Acceleration at Short Period (S_{ds}):	0.19	
Design Spectral Response Acceleration at 1.0 Second Period (S_{d1}):	0.09	
Seismic Response Coefficient (C_s):	0.04	
Upper Limit C_s	0.04	
Lower Limit C_s	0.03	
Period based on Rayleigh Method (sec):	1.65	
Redundancy Factor (p):	1.00	
Seismic Force Distribution Exponent (k):	1.57	
Total Unfactored Dead Load:	66.04	k
Seismic Base Shear (E):	2.35	k

Load Case 1.2D + 1.0Ev + 1.0Eh Seismic

Segment	Height Above Base (ft)	Weight (lb)	W_z (lb-ft)	C_{vx}	Horizontal Force (lb)	Vertical Force (lb)
38	157.50	737	2,106	0.029	67	913
37	152.50	763	2,071	0.028	66	945
36	147.50	826	2,128	0.029	68	1,023
35	143.50	508	1,253	0.017	40	629
34	141.00	388	931	0.013	30	480
33	137.50	987	2,278	0.031	73	1,223
32	132.50	1,013	2,204	0.030	70	1,255
31	127.50	1,058	2,167	0.029	69	1,310
30	122.50	1,083	2,084	0.028	66	1,342
29	118.50	1,207	2,203	0.030	70	1,495
28	116.00	815	1,438	0.019	46	1,009
27	114.63	308	533	0.007	17	381
26	112.13	974	1,630	0.022	52	1,206
25	108.50	698	1,110	0.015	35	865
24	106.00	475	728	0.010	23	589
23	102.50	1,206	1,753	0.024	56	1,494
22	97.50	1,232	1,655	0.022	53	1,526
21	92.50	1,257	1,555	0.021	50	1,557
20	87.50	1,282	1,453	0.020	46	1,589
19	83.50	782	823	0.011	26	968
18	81.00	1,020	1,023	0.014	33	1,263
17	77.50	2,588	2,423	0.033	77	3,206
16	72.50	1,526	1,286	0.017	41	1,890
15	67.50	1,555	1,172	0.016	37	1,927
14	62.50	1,585	1,058	0.014	34	1,964

 © 2007 - 2021 by ATC IP LLC. All rights reserved.

13	57.50	1,615	945	0.013	30	2,000
12	52.50	1,644	834	0.011	27	2,037
11	47.50	1,674	726	0.010	23	2,074
10	42.50	3,553	1,293	0.018	41	4,402
9	38.50	2,165	674	0.009	22	2,681
8	36.00	856	240	0.003	8	1,061
7	32.50	2,168	517	0.007	17	2,685
6	27.50	2,206	405	0.005	13	2,733
5	22.50	2,244	300	0.004	10	2,780
4	17.50	2,282	206	0.003	7	2,827
3	12.50	2,320	123	0.002	4	2,874
2	7.50	2,358	56	0.001	2	2,922
1	2.50	2,397	10	0.000	0	2,969
Decibel DB844H90E-XY	160.00	168	492	0.007	16	208
Flat Low Profile Pla	160.00	1,500	4,392	0.060	140	1,858
Samsung Outdoor CBRS	150.00	13	35	0.000	1	16
Samsung RT4401-48A	150.00	56	148	0.002	5	69
Samsung B2/B66A RRH-	150.00	253	670	0.009	21	314
Samsung B5/B13 RRH-B	150.00	211	558	0.008	18	261
Raycap RRFDC-3315-PF	150.00	54	142	0.002	5	67
Samsung MT6407-77A	150.00	245	648	0.009	21	303
Andrew LNX-6514DS-A1	150.00	116	308	0.004	10	144
Andrew SBNHH-1D65B	150.00	304	805	0.011	26	377
Round Low Profile Pl	150.00	1,500	3,968	0.054	127	1,858
Powerwave Allgon LGP	142.00	85	205	0.003	7	105
Raycap DC6-48-60-18-	142.00	20	49	0.001	2	25
Raycap DC6-48-60-18-	142.00	32	77	0.001	2	39
Ericsson RRUS 4478 B	142.00	180	436	0.006	14	223
Ericsson RRUS-11 (50	142.00	150	364	0.005	12	186
Ericsson RRUS 32 (50	142.00	152	370	0.005	12	189
Ericsson RRUS 32 B2	142.00	159	386	0.005	12	197
Powerwave Allgon 777	142.00	105	255	0.003	8	130
CCI HPA-65R-BUU-H6	142.00	306	743	0.010	24	379
Round T-Arm	142.00	750	1,820	0.025	58	929
Ericsson RRUS 4415 B	130.00	138	291	0.004	9	171
Ericsson Radio 4449	130.00	225	475	0.006	15	279
Ericsson 4424 B25	130.00	258	545	0.007	17	320
Ericsson Air6449 B41	130.00	312	659	0.009	21	387
RFS APX16DWV-16DWVS-	130.00	122	258	0.003	8	151
RFS APXVAALL24 43-U-	130.00	368	778	0.011	25	456
Round Low Profile Pl	130.00	1,500	3,168	0.043	101	1,858
RFS APXV18-206517S-C	120.00	79	147	0.002	5	98
Flush Mounts	117.00	195	349	0.005	11	242
Commscope RDIDC-9181	107.00	22	34	0.000	1	27
Fujitsu TA08025-B605	107.00	225	350	0.005	11	279
Fujitsu TA08025-B604	107.00	192	298	0.004	10	237
JMA Wireless MX08FRO	107.00	193	301	0.004	10	240
Generic Flat Platfor	107.00	2,500	3,887	0.053	124	3,097
		66,042	73,805	1.000	2,355	81,814

Load Case 0.9D - 1.0Ev + 1.0Eh Seismic (Reduced DL)

Segment	Height Above Base (ft)	Weight (lb)	W_z (lb-ft)	C_{vx}	Horizontal Force (lb)	Vertical Force (lb)
38	157.50	737	2,106	0.029	67	635
37	152.50	763	2,071	0.028	66	657
36	147.50	826	2,128	0.029	68	711
35	143.50	508	1,253	0.017	40	437
34	141.00	388	931	0.013	30	334
33	137.50	987	2,278	0.031	73	850
32	132.50	1,013	2,204	0.030	70	872

 © 2007 - 2021 by ATC IP LLC. All rights reserved.

31	127.50	1,058	2,167	0.029	69	911
30	122.50	1,083	2,084	0.028	66	933
29	118.50	1,207	2,203	0.030	70	1,039
28	116.00	815	1,438	0.019	46	702
27	114.63	308	533	0.007	17	265
26	112.13	974	1,630	0.022	52	838
25	108.50	698	1,110	0.015	35	601
24	106.00	475	728	0.010	23	409
23	102.50	1,206	1,753	0.024	56	1,039
22	97.50	1,232	1,655	0.022	53	1,061
21	92.50	1,257	1,555	0.021	50	1,082
20	87.50	1,282	1,453	0.020	46	1,104
19	83.50	782	823	0.011	26	673
18	81.00	1,020	1,023	0.014	33	878
17	77.50	2,588	2,423	0.033	77	2,228
16	72.50	1,526	1,286	0.017	41	1,314
15	67.50	1,555	1,172	0.016	37	1,339
14	62.50	1,585	1,058	0.014	34	1,365
13	57.50	1,615	945	0.013	30	1,391
12	52.50	1,644	834	0.011	27	1,416
11	47.50	1,674	726	0.010	23	1,442
10	42.50	3,553	1,293	0.018	41	3,060
9	38.50	2,165	674	0.009	22	1,864
8	36.00	856	240	0.003	8	737
7	32.50	2,168	517	0.007	17	1,867
6	27.50	2,206	405	0.005	13	1,900
5	22.50	2,244	300	0.004	10	1,932
4	17.50	2,282	206	0.003	7	1,965
3	12.50	2,320	123	0.002	4	1,998
2	7.50	2,358	56	0.001	2	2,031
1	2.50	2,397	10	0.000	0	2,064
Decibel DB844H90E-XY	160.00	168	492	0.007	16	145
Flat Low Profile Pla	160.00	1,500	4,392	0.060	140	1,292
Samsung Outdoor CBRS	150.00	13	35	0.000	1	11
Samsung RT4401-48A	150.00	56	148	0.002	5	48
Samsung B2/B66A RRH-	150.00	253	670	0.009	21	218
Samsung B5/B13 RRH-B	150.00	211	558	0.008	18	182
Raycap RRFDC-3315-PF	150.00	54	142	0.002	5	46
Samsung MT6407-77A	150.00	245	648	0.009	21	211
Andrew LNX-6514DS-A1	150.00	116	308	0.004	10	100
Andrew SBNHH-1D65B	150.00	304	805	0.011	26	262
Round Low Profile Pl	150.00	1,500	3,968	0.054	127	1,292
Powerwave Allgon LGP	142.00	85	205	0.003	7	73
Raycap DC6-48-60-18-	142.00	20	49	0.001	2	17
Raycap DC6-48-60-18-	142.00	32	77	0.001	2	27
Ericsson RRUS 4478 B	142.00	180	436	0.006	14	155
Ericsson RRUS-11 (50	142.00	150	364	0.005	12	129
Ericsson RRUS 32 (50	142.00	152	370	0.005	12	131
Ericsson RRUS 32 B2	142.00	159	386	0.005	12	137
Powerwave Allgon 777	142.00	105	255	0.003	8	90
CCI HPA-65R-BUU-H6	142.00	306	743	0.010	24	264
Round T-Arm	142.00	750	1,820	0.025	58	646
Ericsson RRUS 4415 B	130.00	138	291	0.004	9	119
Ericsson Radio 4449	130.00	225	475	0.006	15	194
Ericsson 4424 B25	130.00	258	545	0.007	17	222
Ericsson Air6449 B41	130.00	312	659	0.009	21	269
RFS APX16DWV-16DWVS-	130.00	122	258	0.003	8	105
RFS APXVAALL24 43-U-	130.00	368	778	0.011	25	317
Round Low Profile Pl	130.00	1,500	3,168	0.043	101	1,292
RFS APXV18-206517S-C	120.00	79	147	0.002	5	68
Flush Mounts	117.00	195	349	0.005	11	168
Commscope RDIDC-9181	107.00	22	34	0.000	1	19
Fujitsu TA08025-B605	107.00	225	350	0.005	11	194
Fujitsu TA08025-B604	107.00	192	298	0.004	10	165

© 2007 - 2021 by ATC IP LLC. All rights reserved.

JMA Wireless MX08FRO	107.00	193	301	0.004	10	167
Generic Flat Platfor	107.00	2,500	3,887	0.053	124	2,153
		66,042	73,805	1.000	2,355	56,873

© 2007 - 2021 by ATC IP LLC. All rights reserved.

Load Case 1.2D + 1.0Ev + 1.0Eh Seismic

Calculated Forces

Seg Elev (ft)	Pu FY (-) (kips)	Vu FX (-) (kips)	Tu MY (ft-kips)	Mu MZ (ft-kips)	Mu MX (ft-kips)	Resultant Moment (ft-kips)	phi Pn (kips)	phi Vn (kips)	phi Tn (ft-kips)	phi Mn (ft-kips)	Total Deflect (in)	Rotation (deg)	Ratio
0.00	-78.85	-2.36	0.00	-278.66	0.00	278.66	8,840.70	2,242.35	14,494.8	13,018.2	0.00	0.00	0.030
5.00	-75.92	-2.36	0.00	-266.88	0.00	266.88	8,737.81	2,202.98	13,990.3	12,639.0	0.00	0.00	0.030
10.00	-73.05	-2.36	0.00	-255.08	0.00	255.08	8,633.05	2,163.61	13,494.8	12,262.6	0.01	-0.01	0.029
15.00	-70.22	-2.36	0.00	-243.26	0.00	243.26	8,526.42	2,124.24	13,008.2	11,888.9	0.02	-0.01	0.029
20.00	-67.44	-2.36	0.00	-231.45	0.00	231.45	8,417.92	2,084.87	12,530.5	11,518.3	0.04	-0.02	0.028
25.00	-64.71	-2.35	0.00	-219.67	0.00	219.67	8,307.56	2,045.50	12,061.8	11,150.8	0.06	-0.02	0.027
30.00	-62.02	-2.34	0.00	-207.93	0.00	207.93	8,195.31	2,006.13	11,602.0	10,786.6	0.09	-0.03	0.027
35.00	-60.96	-2.33	0.00	-196.25	0.00	196.25	8,081.20	1,966.75	11,151.1	10,425.9	0.12	-0.03	0.026
37.00	-58.28	-2.31	0.00	-191.58	0.00	191.58	8,035.03	1,951.01	10,973.3	10,282.6	0.14	-0.04	0.026
40.00	-53.88	-2.27	0.00	-184.65	0.00	184.65	7,965.22	1,927.38	10,709.2	10,068.7	0.16	-0.04	0.025
45.00	-51.80	-2.25	0.00	-173.30	0.00	173.30	5,682.57	1,492.82	8,259.56	7,167.53	0.20	-0.04	0.033
50.00	-49.77	-2.23	0.00	-162.05	0.00	162.05	5,610.67	1,462.20	7,924.21	6,930.64	0.25	-0.05	0.032
55.00	-47.77	-2.20	0.00	-150.92	0.00	150.92	5,536.90	1,431.58	7,595.82	6,695.24	0.31	-0.05	0.031
60.00	-45.80	-2.17	0.00	-139.92	0.00	139.92	5,461.26	1,400.96	7,274.37	6,461.47	0.36	-0.06	0.030
65.00	-43.88	-2.13	0.00	-129.08	0.00	129.08	5,383.74	1,370.33	6,959.87	6,229.47	0.43	-0.07	0.029
70.00	-41.99	-2.09	0.00	-118.42	0.00	118.42	5,304.36	1,339.71	6,652.32	5,999.40	0.50	-0.07	0.028
75.00	-38.78	-2.02	0.00	-107.95	0.00	107.95	5,223.10	1,309.09	6,351.73	5,771.40	0.58	-0.08	0.026
80.00	-37.52	-1.98	0.00	-97.87	0.00	97.87	5,139.97	1,278.47	6,058.08	5,545.62	0.66	-0.08	0.025
82.00	-36.55	-1.96	0.00	-93.90	0.00	93.90	4,187.73	1,102.30	5,253.96	4,550.48	0.70	-0.08	0.029
85.00	-34.96	-1.91	0.00	-88.02	0.00	88.02	4,151.14	1,086.55	5,104.92	4,445.82	0.75	-0.09	0.028
90.00	-33.40	-1.86	0.00	-78.46	0.00	78.46	4,088.64	1,060.30	4,861.29	4,272.35	0.85	-0.09	0.027
95.00	-31.88	-1.81	0.00	-69.14	0.00	69.14	4,024.28	1,034.06	4,623.62	4,100.24	0.95	-0.10	0.025
100.00	-30.38	-1.76	0.00	-60.09	0.00	60.09	3,958.05	1,007.81	4,391.90	3,929.62	1.05	-0.10	0.023
105.00	-29.79	-1.73	0.00	-51.31	0.00	51.31	3,889.94	981.56	4,166.13	3,760.65	1.16	-0.11	0.021
107.00	-25.05	-1.53	0.00	-47.85	0.00	47.85	3,862.18	971.06	4,077.50	3,693.55	1.21	-0.11	0.019
110.00	-23.84	-1.48	0.00	-43.25	0.00	43.25	3,819.97	955.31	3,946.33	3,593.46	1.28	-0.11	0.018
114.25	-23.46	-1.46	0.00	-36.96	0.00	36.96	3,759.02	933.00	3,764.18	3,452.87	1.38	-0.12	0.017
115.00	-22.45	-1.42	0.00	-35.86	0.00	35.86	3,748.12	929.07	3,732.48	3,428.21	1.40	-0.12	0.016
117.00	-20.72	-1.33	0.00	-33.03	0.00	33.03	3,718.86	918.57	3,648.61	3,362.69	1.45	-0.12	0.015
120.00	-19.28	-1.26	0.00	-29.03	0.00	29.03	3,718.63	918.48	3,647.95	3,362.17	1.52	-0.12	0.014
125.00	-17.97	-1.19	0.00	-22.74	0.00	22.74	3,644.16	892.24	3,442.46	3,199.89	1.65	-0.12	0.012
130.00	-13.09	-0.91	0.00	-16.80	0.00	16.80	3,567.82	865.99	3,242.93	3,039.89	1.78	-0.13	0.009
135.00	-11.87	-0.84	0.00	-12.25	0.00	12.25	3,489.60	839.74	3,049.35	2,882.33	1.91	-0.13	0.008
140.00	-11.39	-0.80	0.00	-8.07	0.00	8.07	3,409.52	813.49	2,861.73	2,727.34	2.05	-0.13	0.006
142.00	-8.36	-0.61	0.00	-6.46	0.00	6.46	3,376.96	802.99	2,788.35	2,666.10	2.10	-0.13	0.005
145.00	-7.33	-0.54	0.00	-4.64	0.00	4.64	3,327.57	787.25	2,680.06	2,575.08	2.18	-0.13	0.004
150.00	-2.98	-0.23	0.00	-1.95	0.00	1.95	3,221.56	761.00	2,504.36	2,409.11	2.32	-0.13	0.002
155.00	-2.07	-0.16	0.00	-0.80	0.00	0.80	3,110.44	734.75	2,334.61	2,244.97	2.46	-0.13	0.001
160.00	0.00	-0.16	0.00	0.00	0.00	0.00	2,999.33	708.50	2,170.81	2,086.62	2.59	-0.13	0.000

© 2007 - 2021 by ATC IP LLC. All rights reserved.

Load Case 0.9D - 1.0Ev + 1.0Eh Seismic (Reduced DL)

Calculated Forces

Seg Elev (ft)	Pu FY (-) (kips)	Vu FX (-) (kips)	Tu MY (ft-kips)	Mu MZ (ft-kips)	Mu MX (ft-kips)	Resultant Moment (ft-kips)	phi Pn (kips)	phi Vn (kips)	phi Tn (ft-kips)	phi Mn (ft-kips)	Total Deflect (in)	Rotation (deg)	Ratio
0.00	-54.81	-2.36	0.00	-276.86	0.00	276.86	8,840.70	2,242.35	14,494.8	13,018.2	0.00	0.00	0.027
5.00	-52.78	-2.36	0.00	-265.08	0.00	265.08	8,737.81	2,202.98	13,990.3	12,639.0	0.00	0.00	0.027
10.00	-50.78	-2.36	0.00	-253.29	0.00	253.29	8,633.05	2,163.61	13,494.8	12,262.6	0.01	-0.01	0.027
15.00	-48.81	-2.36	0.00	-241.50	0.00	241.50	8,526.42	2,124.24	13,008.2	11,888.9	0.02	-0.01	0.026
20.00	-46.88	-2.35	0.00	-229.72	0.00	229.72	8,417.92	2,084.87	12,530.5	11,518.3	0.04	-0.02	0.026
25.00	-44.98	-2.34	0.00	-217.98	0.00	217.98	8,307.56	2,045.50	12,061.8	11,150.8	0.06	-0.02	0.025
30.00	-43.12	-2.33	0.00	-206.28	0.00	206.28	8,195.31	2,006.13	11,602.0	10,786.6	0.09	-0.03	0.024
35.00	-42.38	-2.32	0.00	-194.66	0.00	194.66	8,081.20	1,966.75	11,151.1	10,425.9	0.12	-0.03	0.024
37.00	-40.51	-2.30	0.00	-190.02	0.00	190.02	8,035.03	1,951.01	10,973.3	10,282.6	0.14	-0.04	0.024
40.00	-37.45	-2.26	0.00	-183.12	0.00	183.12	7,965.22	1,927.38	10,709.2	10,068.7	0.16	-0.04	0.023
45.00	-36.01	-2.24	0.00	-171.83	0.00	171.83	5,682.57	1,492.82	8,259.56	7,167.53	0.20	-0.04	0.030
50.00	-34.60	-2.21	0.00	-160.64	0.00	160.64	5,610.67	1,462.20	7,924.21	6,930.64	0.25	-0.05	0.029
55.00	-33.20	-2.18	0.00	-149.58	0.00	149.58	5,536.90	1,431.58	7,595.82	6,695.24	0.30	-0.05	0.028
60.00	-31.84	-2.15	0.00	-138.65	0.00	138.65	5,461.26	1,400.96	7,274.37	6,461.47	0.36	-0.06	0.027
65.00	-30.50	-2.12	0.00	-127.89	0.00	127.89	5,383.74	1,370.33	6,959.87	6,229.47	0.43	-0.07	0.026
70.00	-29.19	-2.08	0.00	-117.31	0.00	117.31	5,304.36	1,339.71	6,652.32	5,999.40	0.50	-0.07	0.025
75.00	-26.96	-2.00	0.00	-106.92	0.00	106.92	5,223.10	1,309.09	6,351.73	5,771.40	0.58	-0.08	0.024
80.00	-26.08	-1.97	0.00	-96.92	0.00	96.92	5,139.97	1,278.47	6,058.08	5,545.62	0.66	-0.08	0.023
82.00	-25.41	-1.94	0.00	-92.99	0.00	92.99	4,187.73	1,102.30	5,253.96	4,550.48	0.69	-0.08	0.027
85.00	-24.30	-1.90	0.00	-87.17	0.00	87.17	4,151.14	1,086.55	5,104.92	4,445.82	0.75	-0.09	0.025
90.00	-23.22	-1.85	0.00	-77.69	0.00	77.69	4,088.64	1,060.30	4,861.29	4,272.35	0.84	-0.09	0.024
95.00	-22.16	-1.79	0.00	-68.46	0.00	68.46	4,024.28	1,034.06	4,623.62	4,100.24	0.94	-0.10	0.022
100.00	-21.12	-1.74	0.00	-59.49	0.00	59.49	3,958.05	1,007.81	4,391.90	3,929.62	1.04	-0.10	0.020
105.00	-20.71	-1.71	0.00	-50.80	0.00	50.80	3,889.94	981.56	4,166.13	3,760.65	1.15	-0.11	0.019
107.00	-17.41	-1.52	0.00	-47.37	0.00	47.37	3,862.18	971.06	4,077.50	3,693.55	1.20	-0.11	0.017
110.00	-16.57	-1.47	0.00	-42.82	0.00	42.82	3,819.97	955.31	3,946.33	3,593.46	1.27	-0.11	0.016
114.25	-16.31	-1.45	0.00	-36.59	0.00	36.59	3,759.02	933.00	3,764.18	3,452.87	1.37	-0.11	0.015
115.00	-15.61	-1.40	0.00	-35.50	0.00	35.50	3,748.12	929.07	3,732.48	3,428.21	1.39	-0.12	0.015
117.00	-14.40	-1.32	0.00	-32.70	0.00	32.70	3,718.86	918.57	3,648.61	3,362.69	1.44	-0.12	0.014
120.00	-13.40	-1.25	0.00	-28.74	0.00	28.74	3,718.63	918.48	3,647.95	3,362.17	1.51	-0.12	0.012
125.00	-12.49	-1.18	0.00	-22.51	0.00	22.51	3,644.16	892.24	3,442.46	3,199.89	1.64	-0.12	0.010
130.00	-9.10	-0.90	0.00	-16.64	0.00	16.64	3,567.82	865.99	3,242.93	3,039.89	1.77	-0.12	0.008
135.00	-8.25	-0.83	0.00	-12.13	0.00	12.13	3,489.60	839.74	3,049.35	2,882.33	1.90	-0.13	0.007
140.00	-7.91	-0.80	0.00	-8.00	0.00	8.00	3,409.52	813.49	2,861.73	2,727.34	2.03	-0.13	0.005
142.00	-5.81	-0.60	0.00	-6.40	0.00	6.40	3,376.96	802.99	2,788.35	2,666.10	2.08	-0.13	0.004
145.00	-5.10	-0.53	0.00	-4.60	0.00	4.60	3,327.57	787.25	2,680.06	2,575.08	2.17	-0.13	0.003
150.00	-2.07	-0.23	0.00	-1.93	0.00	1.93	3,221.56	761.00	2,504.36	2,409.11	2.30	-0.13	0.001
155.00	-1.44	-0.16	0.00	-0.79	0.00	0.79	3,110.44	734.75	2,334.61	2,244.97	2.44	-0.13	0.001
160.00	0.00	-0.16	0.00	0.00	0.00	0.00	2,999.33	708.50	2,170.81	2,086.62	2.57	-0.13	0.000

© 2007 - 2021 by ATC IP LLC. All rights reserved.

Analysis Summary

	Reactions						Max Usage	
Load Case	Shear FX (kips)	Shear FZ (kips)	Axial FY (kips)	Moment MX (ft-kips)	Moment MY (ft-kips)	Moment MZ (ft-kips)	Elev (ft)	Interaction Ratio
1.2D + 1.0W	32.36	0.00	79.23	0.00	0.00	3548.96	45.00	0.31
0.9D + 1.0W	32.35	0.00	59.42	0.00	0.00	3529.70	45.00	0.31
1.2D + 1.0Di + 1.0Wi	9.29	0.00	109.55	0.00	0.00	1007.02	45.00	0.10
1.2D + 1.0Ev + 1.0Eh	2.36	0.00	78.85	0.00	0.00	278.66	45.00	0.03
0.9D - 1.0Ev + 1.0Eh	2.36	0.00	54.81	0.00	0.00	276.86	45.00	0.03
1.0D + 1.0W	7.48	0.00	66.04	0.00	0.00	818.07	45.00	0.08

AMERICAN TOWER CORPORATION

Base Plate & Anchor Rod Analysis

Pole Dimensions		
Number of Sides	18	-
Diameter	72.13	in
Thickness	9/16	in
Orientation Offset		°

Base Reactions		
Moment, Mu	3,549.0	k-ft
Axial, Pu	79.2	k
Shear, Vu	32.4	k
Neutral Axis	315	°

Report Capacities		
Component	Capacity	Result
Base Plate	20%	Pass
Anchor Rods	33%	Pass
Dwyidag	-	-

Base Plate		
Shape	Square	-
Width	81	in
Thickness	3 1/4	in
Grade	A572-55	
Yield Strength, Fy	55	ksi
Tensile Strength, Fu	70	ksi
Clip	18	in
Orientation Offset		°
Anchor Rod Detail	d	η=0.5
Clear Distance	3	in
Applied Moment, Mu	1154.2	k
Bending Stress, ϕMn	5659.3	k

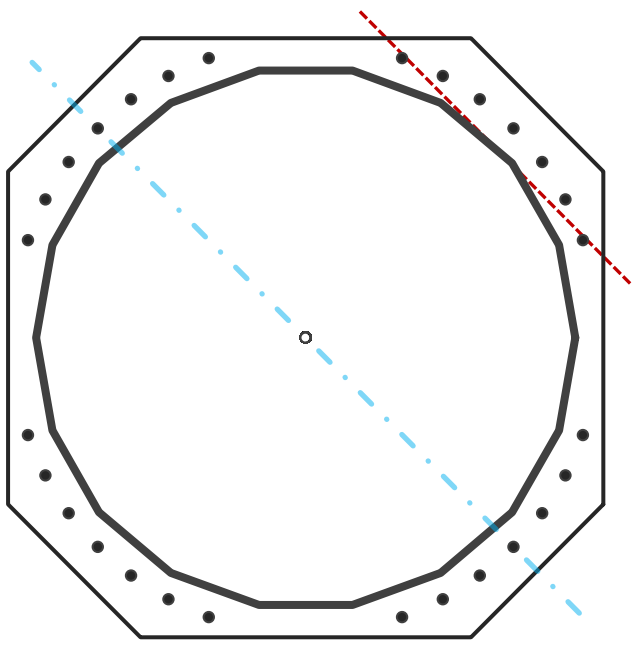

Original Anchor Rods		
Arrangement	Cluster	-
Quantity	28	-
Diameter, ø	2 1/4	in
Bolt Circle	80	in
Grade	A615-75	
Yield Strength, Fy	75	ksi
Tensile Strength, Fu	100	ksi
Spacing	6.0	in
Orientation Offset		°
Applied Force, Pu	78.9	k
Anchor Rods, ϕPn	243.6	k

Calculations for Monopole Base Plate & Anchor Rod Analysis

Reaction Distribution

Reaction	Shear Vu	Moment Mu	Factor
-	k	k-ft	-
Base Forces	32.4	3549.0	1.00
Anchor Rod Forces	32.4	3549.0	1.00
Additional Bolt (Grp1) Forces	0.0	0.0	0.00
Additional Bolt (Grp2) Forces	0.0	0.0	0.00
Dywidag Forces	0.0	0.0	0.00
Stiffener Forces	0.0	0.0	0.00

Geometric Properties

Section	Gross Area	Net Area	Individual Inertia	Threads per Inch	Moment of Inertia
-	in^2	in^2	in^4	#	in^4
Pole	125.8291	6.9905	0.7402		80573.95
Bolt	3.9761	3.2477	0.8393	4.5	72771.75
Bolt1	0.0000	0.0000	0.0000	0	0.00
Bolt2	0.0000	0.0000	0.0000	0	0.00
Dywidag	0.0000	0.0000	0.0000		0.00
Stiffener	0.0000	0.0000	0.0000		0.00

Base Plate		
Shape	Square	-
Width, W	81	in
Thickness, t	3.25	in
Yield Strength, Fy	55	ksi
Tensile Strength, Fu	70	ksi
Base Plate Chord	36.855	in
Detail Type	d	-
Detail Factor	0.50	-
Clear Distance	3	-

Anchor Rods		
Anchor Rod Quantity, N	28	-
Rod Diameter, d	2.25	in
Bolt Circle, BC	80	in
Yield Strength, Fy	75	ksi
Tensile Strength, Fu	100	ksi
Applied Axial, Pu	78.9	k
Applied Shear, Vu	0.3	k
Compressive Capacity, ϕPn	243.6	k
Tensile Capacity, ϕRnt	0.324	OK
Interaction Capacity	0.326	OK

External Base Plate		
Chord Length AA	42.296	in
Additional AA	1.000	in
Section Modulus, Z	114.329	in^3
Applied Moment, Mu	1154.2	k-ft
Bending Capacity, ϕMn	5659.3	k-ft
Capacity, Mu/ϕMn	0.204	OK
Chord Length AB	41.182	in
Additional AB	1.000	in
Section Modulus, Z	111.386	in^3
Applied Moment, Mu	939.2	k-ft
Bending Capacity, ϕMn	5513.6	k-ft
Capacity, Mu/ϕMn	0.170	OK
Bend Line Length	0.000	in
Additional Bend Line	0.000	in
Section Modulus, Z	0.000	in^3
Applied Moment, Mu	0.0	k-ft
Bending Capacity, ϕMn	0.0	k-ft
Capacity, Mu/ϕMn		

Internal Base Plate		
Arc Length	0.000	in
Section Modulus, Z	0.000	in^3
Moment Arm	0.000	in
Applied Moment, Mu	0.0	k-ft
Bending Capacity, ϕMn	0.0	k-ft
Capacity, Mu/ϕMn		

MOUNT ANALYSIS REPORT

August 10, 2021

Dish Wireless Site Name	BOBDL00017A
Dish Wireless Site Number	BOBDL00017A
ATC Site Name	Vernon CT 6, CT
ATC Site Number	302529
Infinigy Job Number	1197-F0001-C
Client	ATC
Carrier	Dish Wireless
Site Location	777 Talcotville Road Vernon Rockville, CT 06066 Tolland County 41.863500 N NAD83 72.483300 W NAD83
Mount Type	8.0 ft Platform
Mount Elevation	107.0 ft AGL
Structural Usage Ratio	**43.5**%
Overall Result	**Pass**

The enclosed mount structural analysis has been performed in accordance with the 2018 Connecticut State Building Code (2015 IBC) based on an ultimate 3-second gust wind speed of 125 mph. The evaluation criteria and applicable codes are presented in the next section of this report.

STATE OF CONNECTICUT
EMMANUEL POULIN
No. 22947
LICENSED
PROFESSIONAL ENGINEER

8/11/21

CONTENTS

1. Introduction
2. Design/Analysis Parameters
3. Proposed Loading Configuration
4. Supporting Documentation
5. Results
6. Recommendations
7. Assumptions
8. Liability Waiver and Limitations
9. Calculations

1. INTRODUCTION

Infinigy performed a structural analysis on the Dish Wireless proposed telecommunication equipment supporting Platform mounted to the existing structure located at the aforementioned address. All referenced supporting documents have been obtained from the client and are assumed to be accurate and applicable to this site. The mount was analyzed using Risa-3D version 17.0.4 analysis software.

2. DESIGN/ANALYSIS PARAMETERS

Wind Speed	125 mph (3-Second Gust)
Wind Speed w/ ice	50 mph (3-Second Gust) w/ 2.0" ice
Code / Standard	TIA-222-H
Adopted Code	2018 Connecticut State Building Code (2015 IBC)
Risk Category	II
Exposure Category	C
Topographic Category	1
Calculated Crest Height	0 ft.
Seismic Spectral Response	S_s = 0.177 g / S_1 = 0.064 g
Live Load Wind Speed	60 mph
Man Live Load at Mid/End Points	250 lbs
Man Live Load at Mount Pipes	500 lbs

3. PROPOSED LOADING CONFIGURATION - 107.0 ft. AGL Platform

Antenna Centerline (ft)	Qty.	Appurtenance Manufacturers	Appurtenance Models
107.0	3	JMA WIRELESS	MX08FRO665-21
	3	FUJITSU	TA08025-B605
	3	FUJITSU	TA08025-B604
	1	RAYCAP	RDIDC-9181-PF-48

4. SUPPORTING DOCUMENTATION

Proposed Loading	Dish Wireless Asset ID CT-ATC-T-302529 Rev 1, Site # BOBDL00017A, dated June 14, 2021
Mount Manufacturer Drawings	Commscope Document # MC-PK8-DSH, dated March 11, 2021
Structural Analysis Report	American Tower Corporation, Site # 302529, dated July 14, 2021

5. RESULTS

Components	Capacity	Pass/Fail
Mount Pipes	24.0 %	Pass
Standoffs	35.3 %	Pass
Handrails	29.4 %	Pass
Connections	43.5 %	Pass
MOUNT RATING =	**43.5 %**	**Pass**

Notes:

1. See additional documentation in Appendix for calculations supporting the capacity consumed and detailed mount connection calculations.

6. RECOMMENDATIONS

Infinigy recommends installing Dish Wireless's proposed equipment loading configuration on the mount at 107.0 ft. The installation shall be performed in accordance with the construction documents issued for this site.

Pradin Suinyal Magar
Project Engineer II | **INFINIGY**

7. ASSUMPTIONS

The antenna mounting system was properly fabricated, installed and maintained in accordance with its original design and manufacturer's specifications.	
The configuration of antennas, mounts, and other appurtenances are as specified in the proposed loading configuration table.	
All member connections are assumed to have been designed to meet or exceed the load carrying capacity of the connected member unless otherwise specified in this report.	
The analysis will require revisions if the existing conditions in the field differ from those shown in the above-referenced documents or assumed in this analysis. No allowance was made for any damaged, missing, or rusted members.	
Steel grades have been assumed as follows, unless noted otherwise:	
Channel, Solid Round, Plate, Built-up Angle	ASTM A1011 36 KSI
Structural Angle	ASTM A529 Gr. 50
HSS (Rectangular)	ASTM A500-B GR 46
HSS (Circular)	ASTM A500-B GR 42
Pipe	ASTM A500 Gr C
Connection Bolts	ASTM A325
U-Bolts	ASTM A307
All bolted connections are pretensioned in accordance with Table 8.2 of the RCSC 2014 Standard	

8. LIABILITY WAIVER AND LIMITATIONS

Our structural calculations are completed assuming all information provided to Infinigy is accurate and applicable to this site. For the purposes of calculations, we assume an overall structure condition as erected and all members and connections to be free of corrosion and/or structural defects. The structure owner and/or contractor shall verify the structure's condition prior to installation of any proposed equipment. If actual conditions differ from those described in this report, Infinigy should be notified immediately to assess the impact on the results of this report.

Our evaluation is completed using industry standard methods and procedures. The structural results, conclusions and recommendations contained in this report are proprietary and should not be used by others as their own. Infinigy is not responsible for decisions made by others that are or are not based on the stated assumptions and conclusions in this report.

This report is an evaluation of the mount structure only and does not determine the adequacy of the supporting structure, other carrier mounts or cable mounting attachments. The analysis of these elements is outside the scope of this analysis, are assumed to be adequate for the purpose of this report and to have been installed per their manufacturer requirements. This document is not for construction purposes.

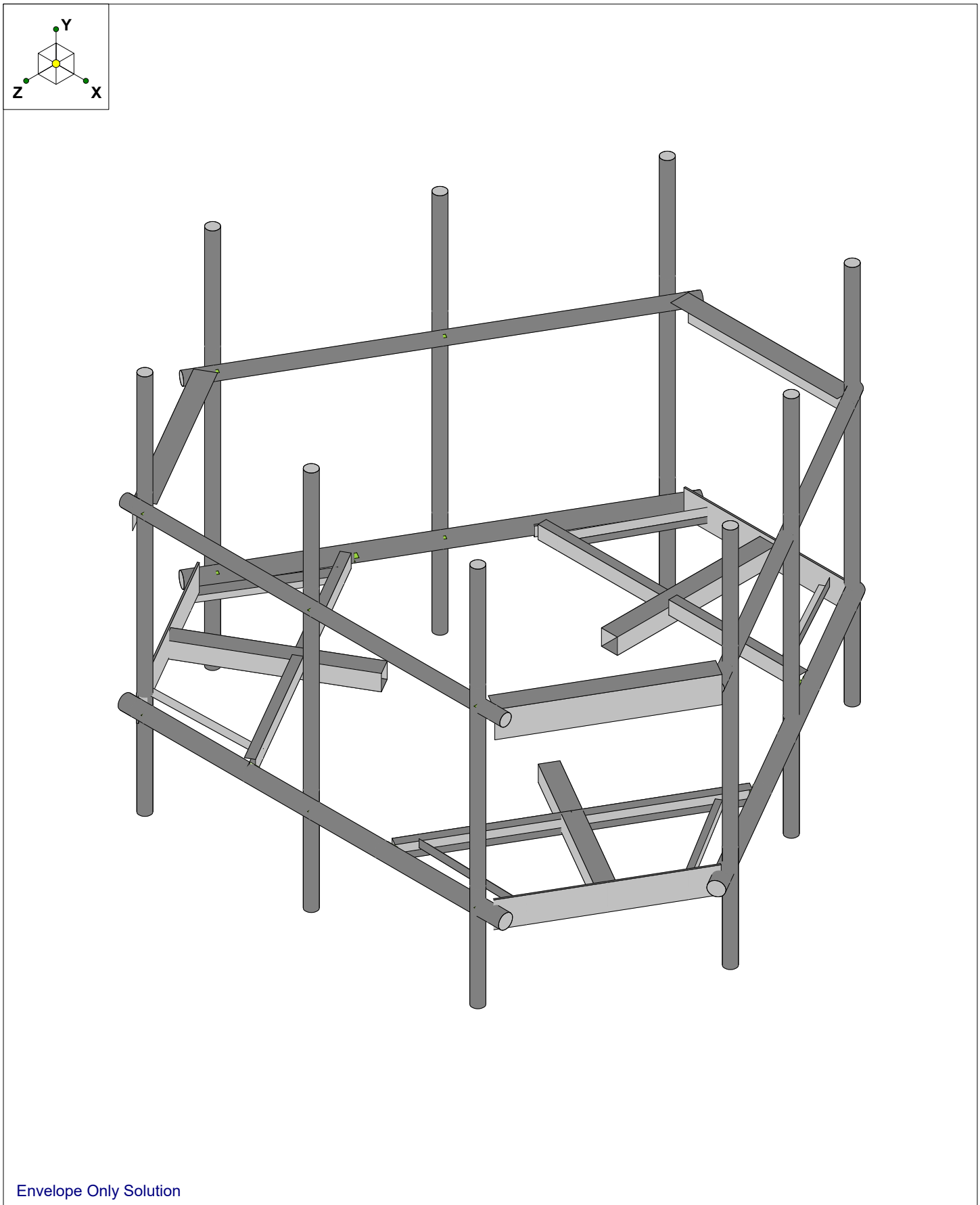

Envelope Only Solution

Infinigy Engineering, PLLC	BOBDL00017A	Rendered
PSM		Aug 10, 2021 at 3:12 PM
1197-F0001-C		BOBDL00017A_loaded.r3d

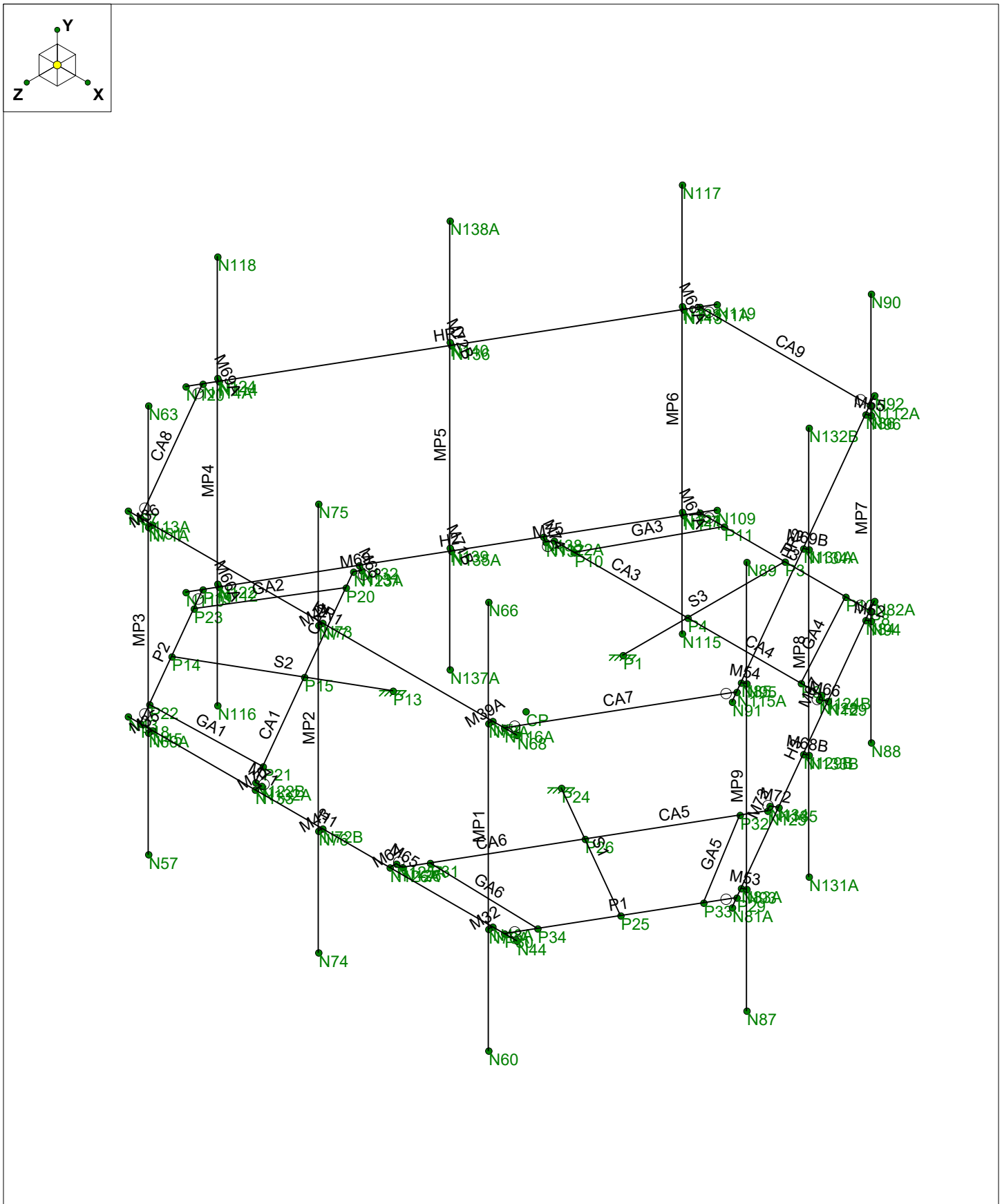

Envelope Only Solution

Infinigy Engineering, PLLC	BOBDL00017A	WireFrame
PSM		Aug 10, 2021 at 3:12 PM
1197-F0001-C		BOBDL00017A_loaded.r3d

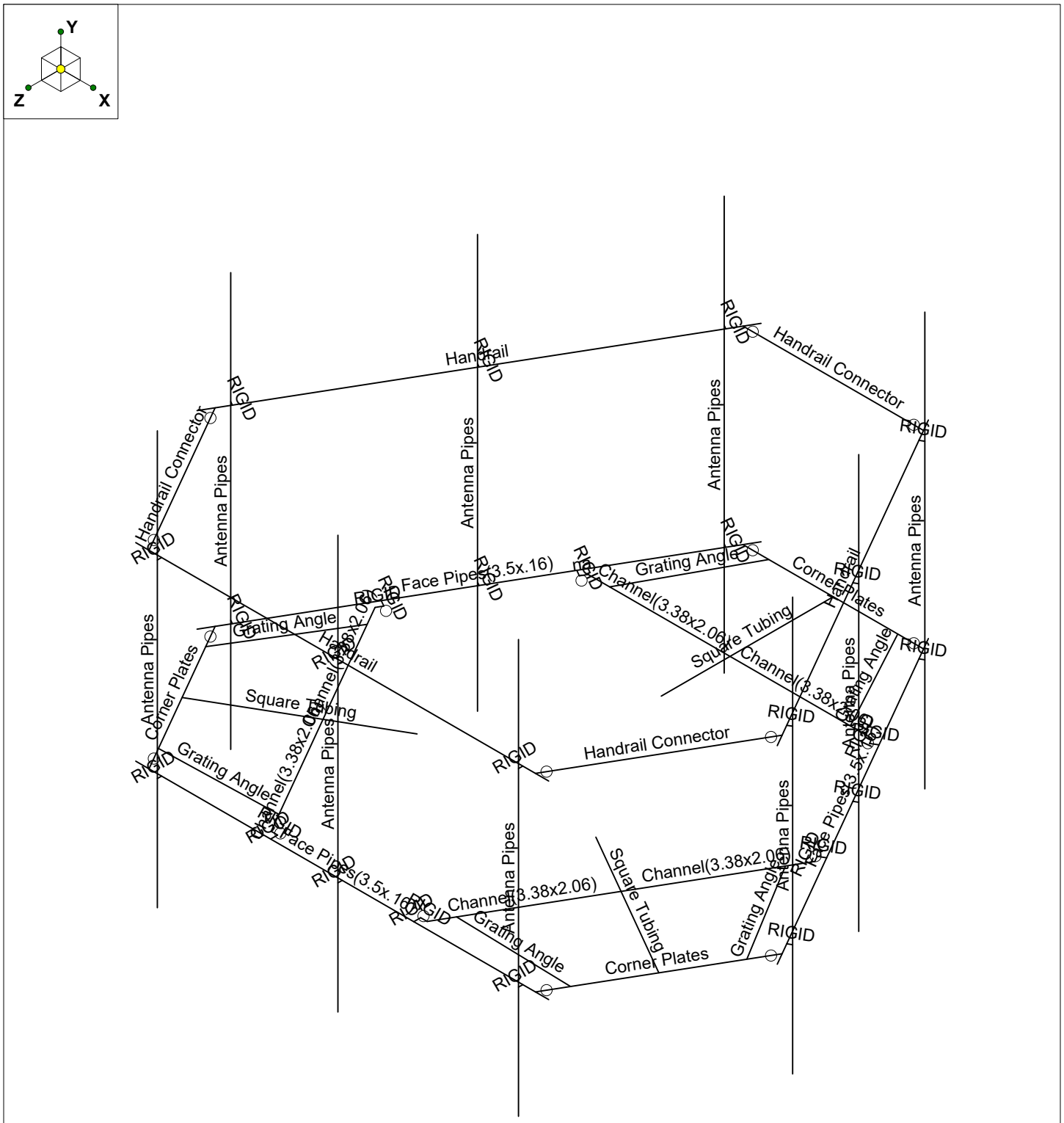

Envelope Only Solution

Infinigy Engineering, PLLC	BOBDL00017A	Section Sets
PSM		Aug 10, 2021 at 3:13 PM
1197-F0001-C		BOBDL00017A_loaded.r3d

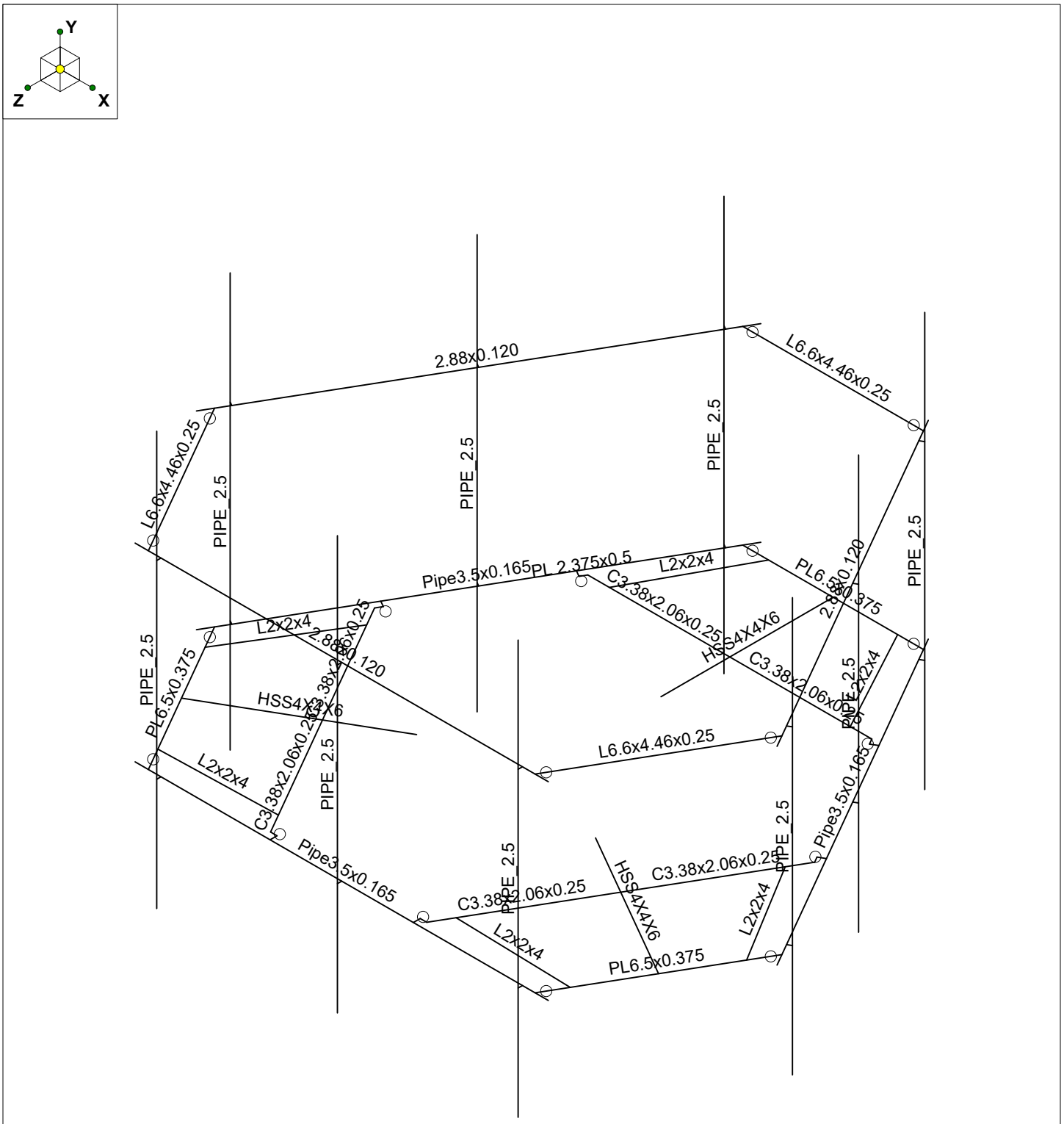

Envelope Only Solution

Infinigy Engineering, PLLC	BOBDL00017A	Member Shapes
PSM		Aug 10, 2021 at 3:13 PM
1197-F0001-C		BOBDL00017A_loaded.r3d

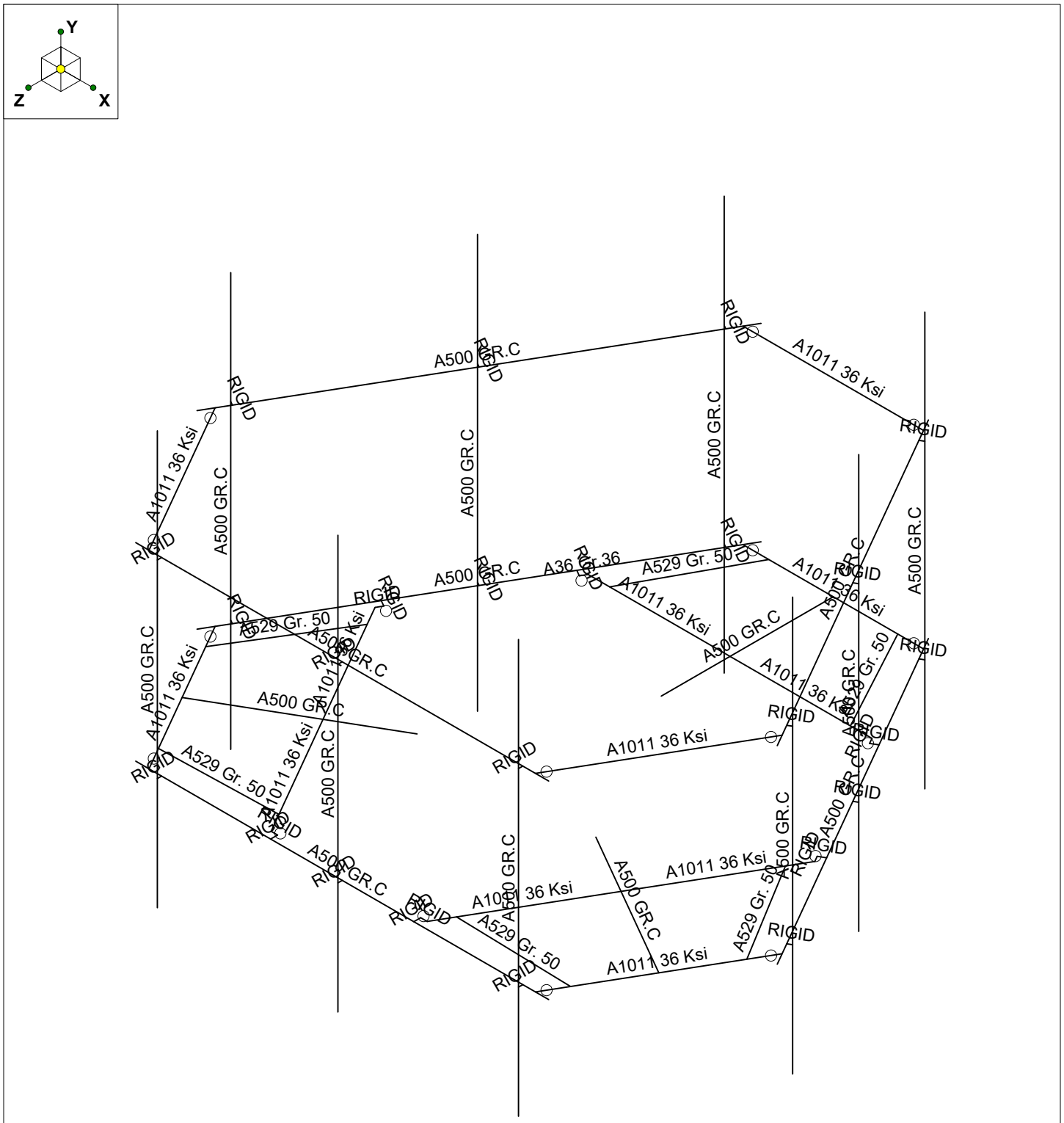

Envelope Only Solution

Infinigy Engineering, PLLC	BOBDL00017A	Material Sets
PSM		Aug 10, 2021 at 3:14 PM
1197-F0001-C		BOBDL00017A_loaded.r3d

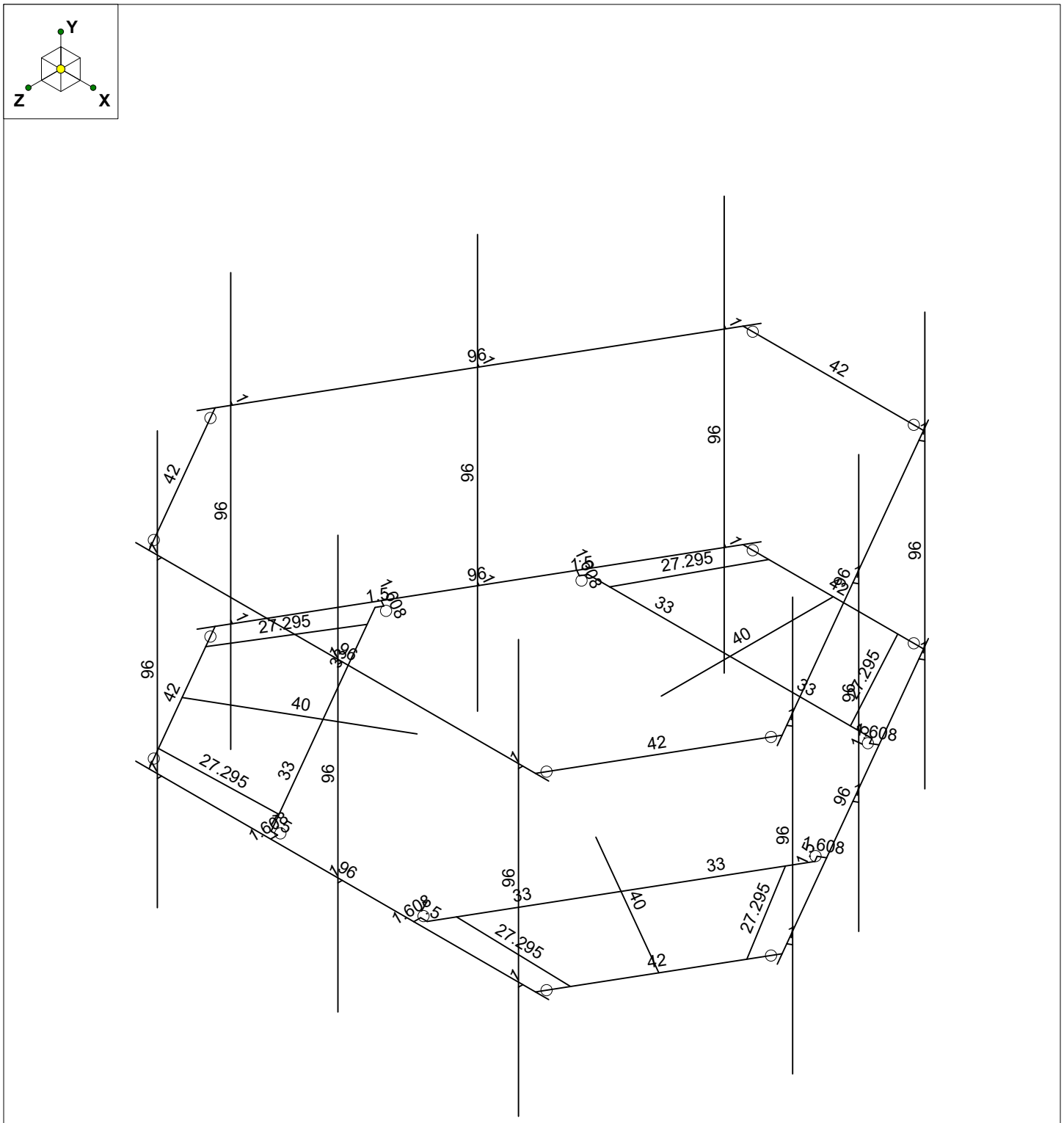

Member Length (in) Displayed
Envelope Only Solution

Infinigy Engineering, PLLC	BOBDL00017A	Member Lengths
PSM		Aug 10, 2021 at 3:14 PM
1197-F0001-C		BOBDL00017A_loaded.r3d

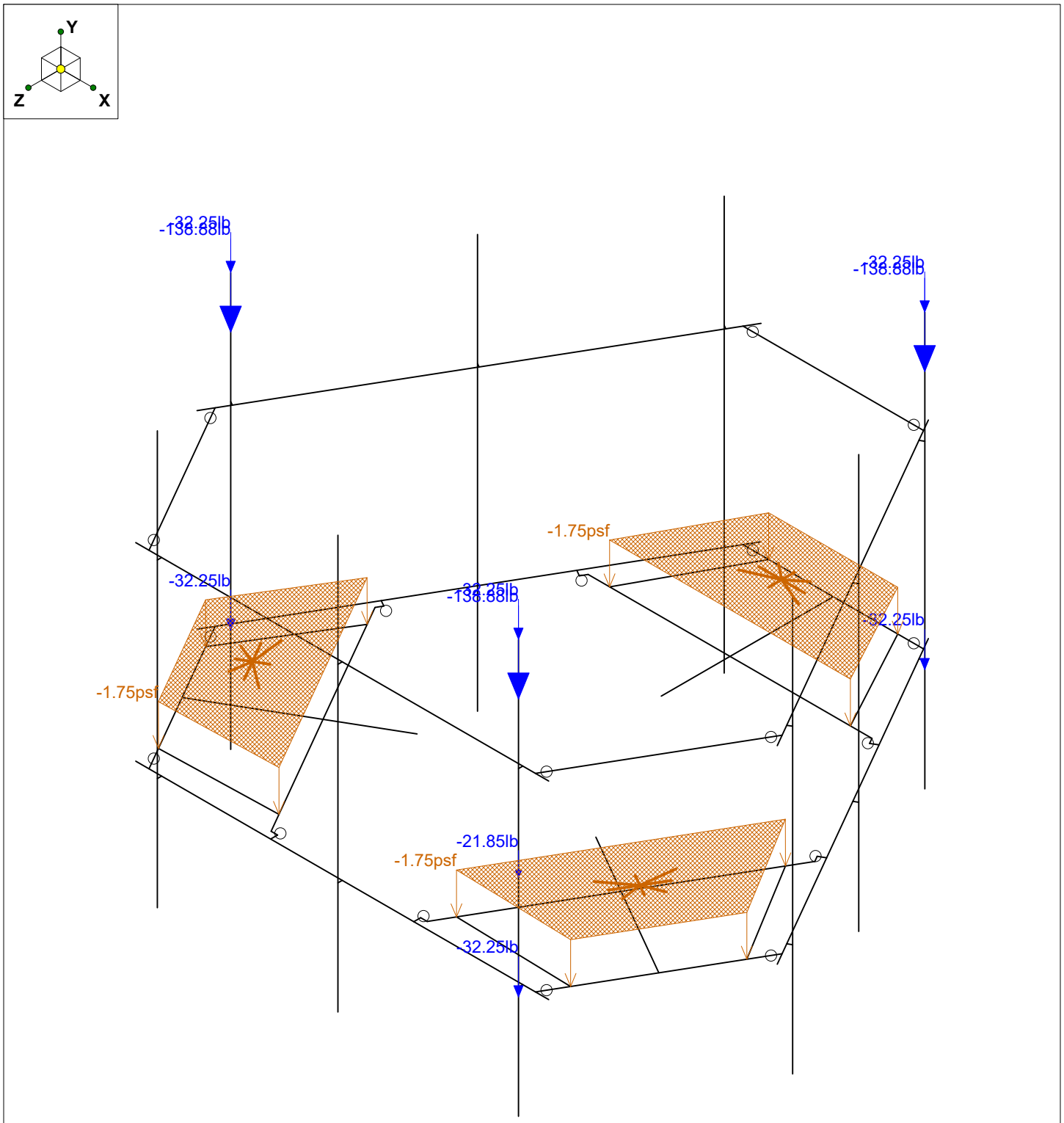

Loads: BLC 1, Self Weight
Envelope Only Solution

Infinigy Engineering, PLLC	BOBDL00017A	Self Weight
PSM		Aug 10, 2021 at 3:14 PM
1197-F0001-C		BOBDL00017A_loaded.r3d

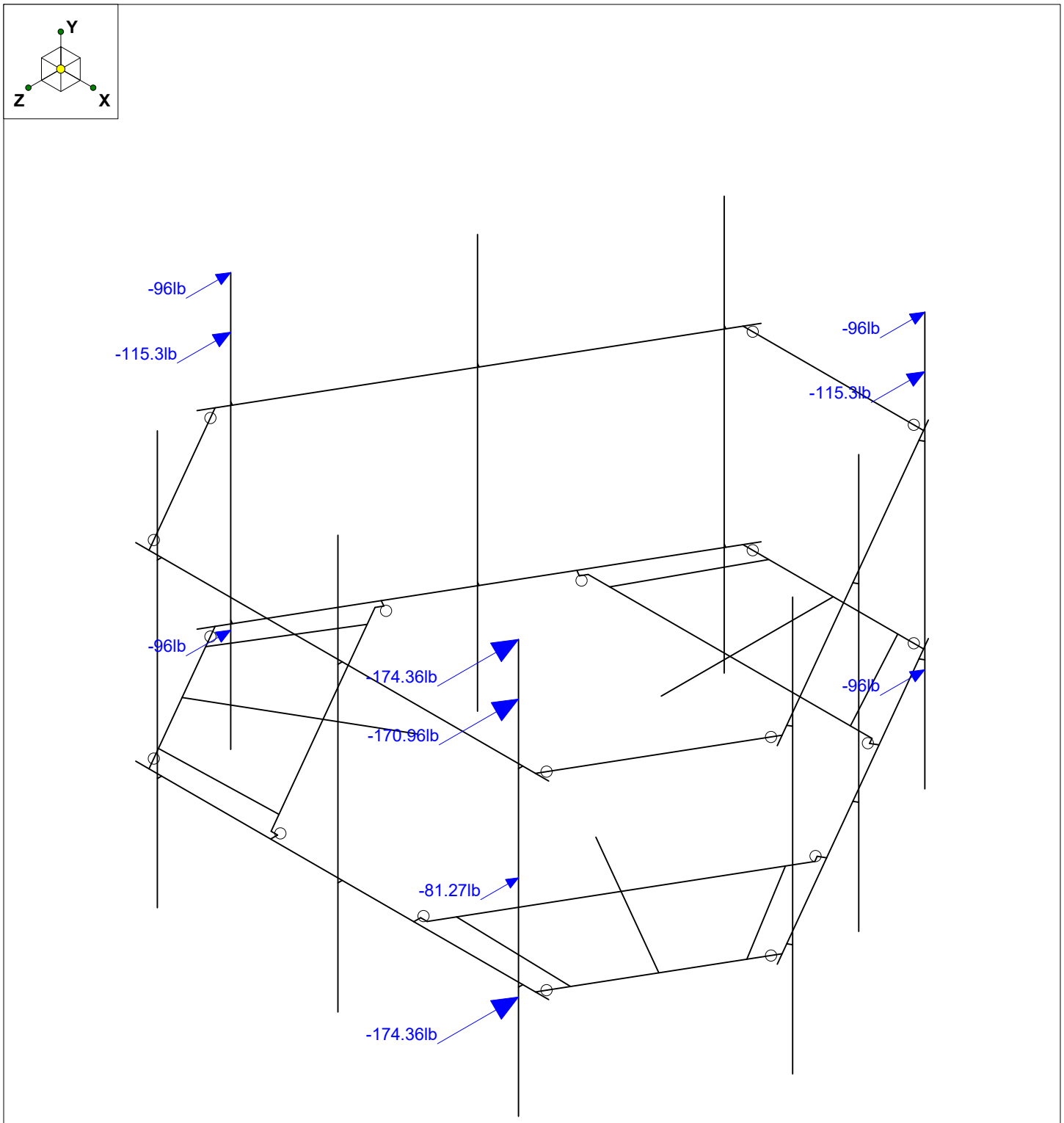

Loads: BLC 2, Wind Load AZI 0
Envelope Only Solution

Infinigy Engineering, PLLC	BOBDL00017A	Wind Load AZI 000
PSM		Aug 10, 2021 at 3:14 PM
1197-F0001-C		BOBDL00017A_loaded.r3d

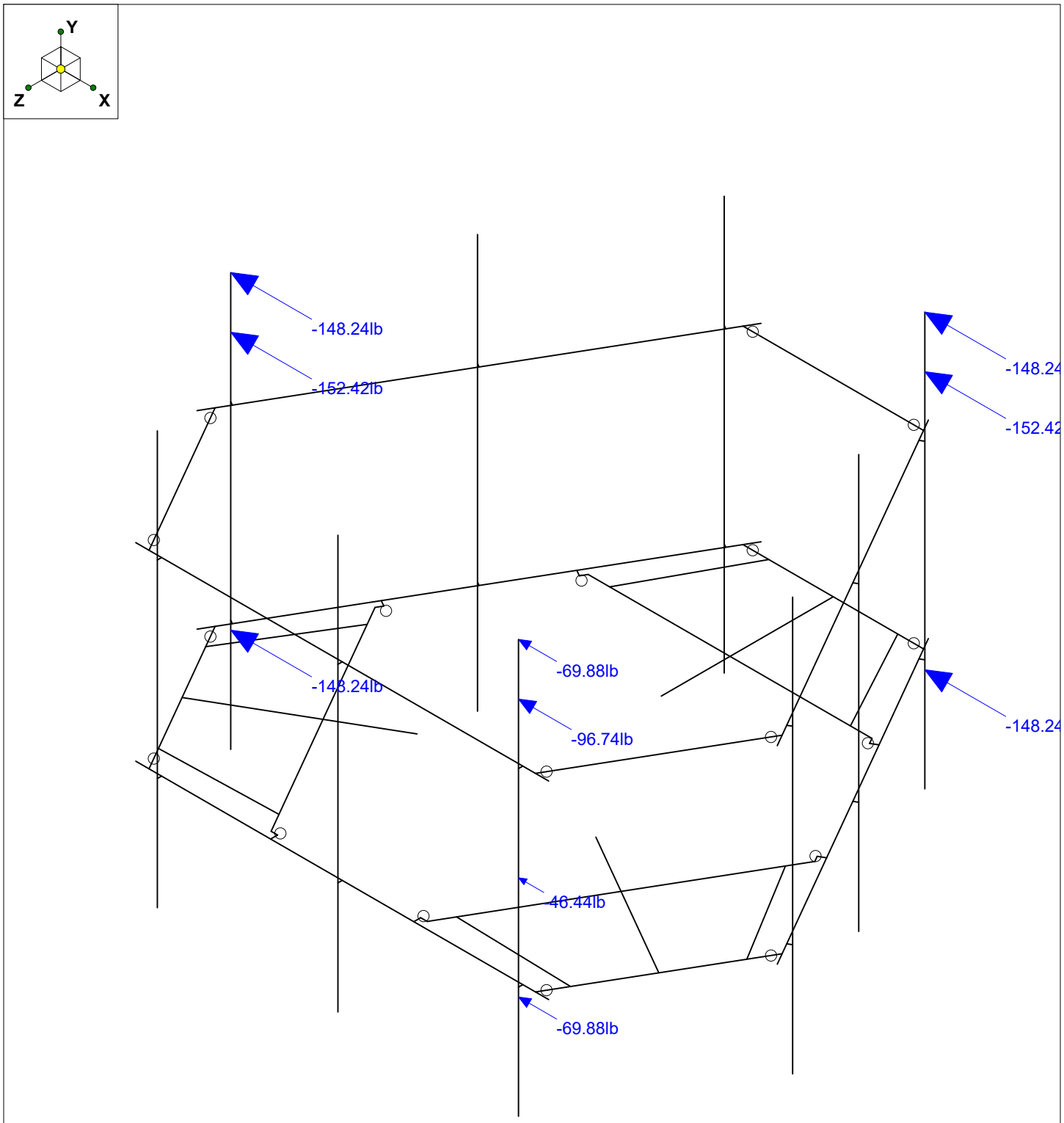

Loads: BLC 5, Wind Load AZI 90
Envelope Only Solution

Infinigy Engineering, PLLC	BOBDL00017A	Wind Load AZI 090
PSM		Aug 10, 2021 at 3:14 PM
1197-F0001-C		BOBDL00017A_loaded.r3d

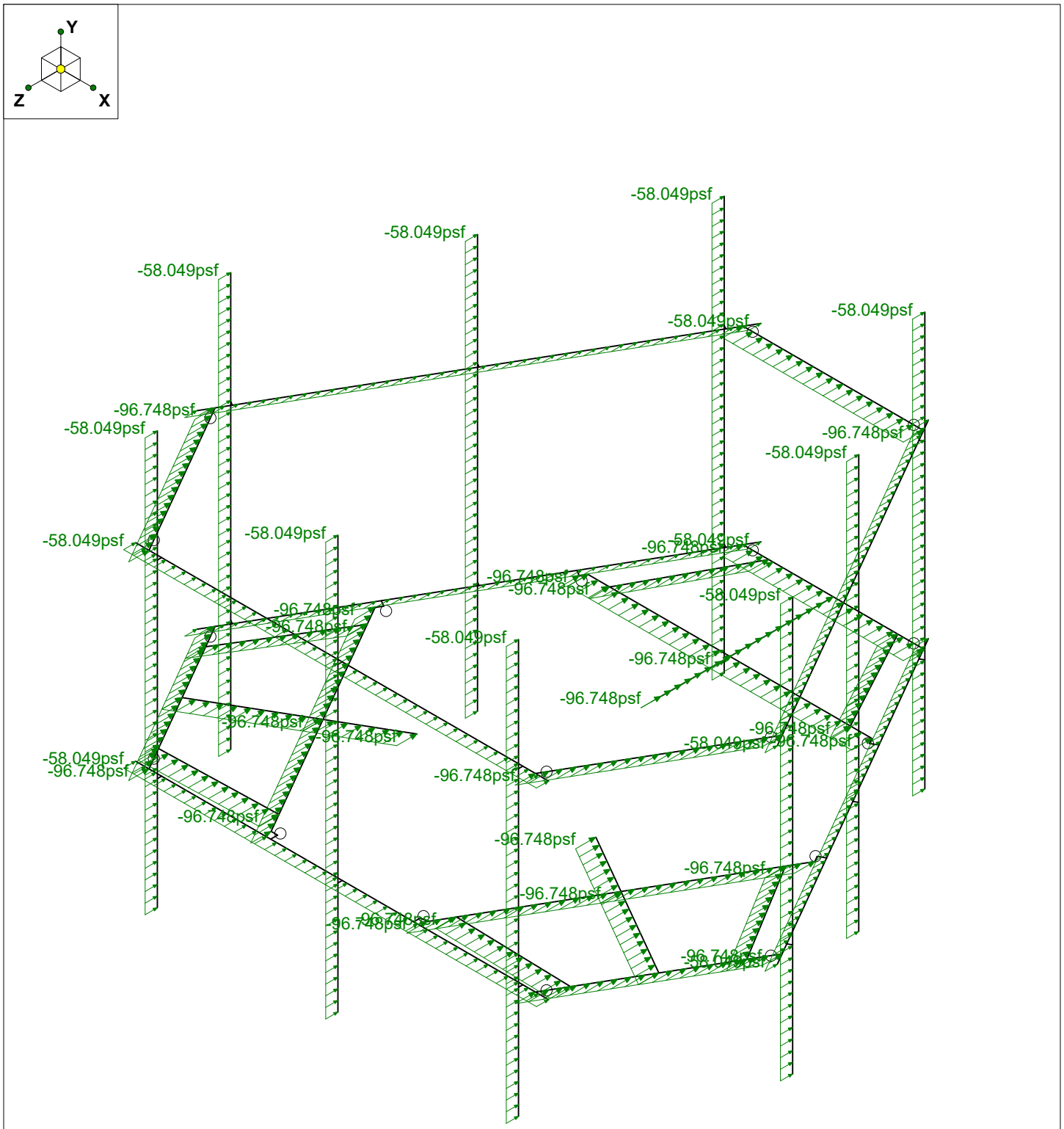

Loads: BLC 14, Distr. Wind Load Z
Envelope Only Solution

Infinigy Engineering, PLLC	BOBDL00017A	Distr Wind Load AZI 000
PSM		Aug 10, 2021 at 3:15 PM
1197-F0001-C		BOBDL00017A_loaded.r3d

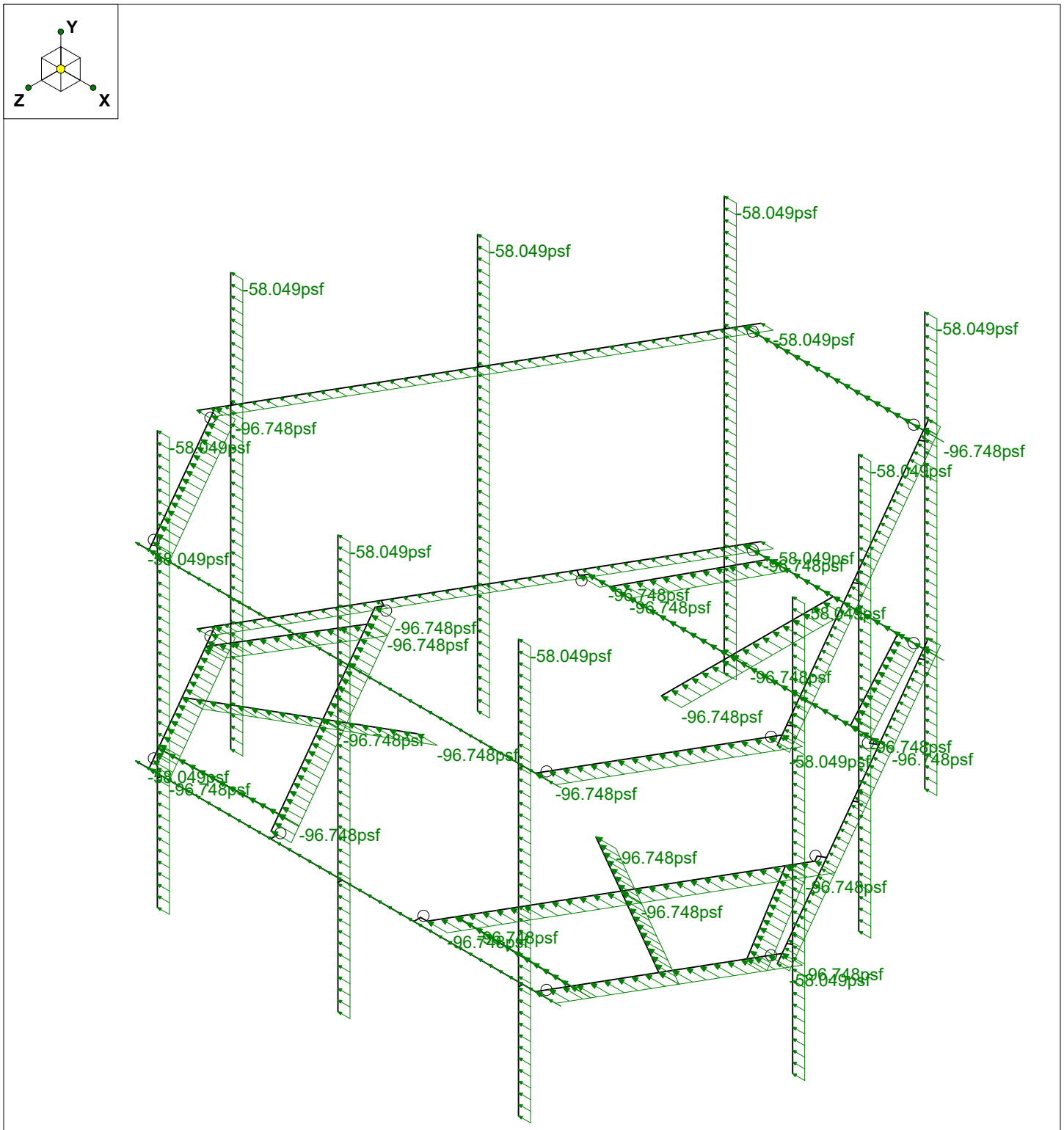

Loads: BLC 15, Distr. Wind Load X
Envelope Only Solution

Infinigy Engineering, PLLC	BOBDL00017A	Distr Wind Load AZI 090
PSM		Aug 10, 2021 at 3:15 PM
1197-F0001-C		BOBDL00017A_loaded.r3d

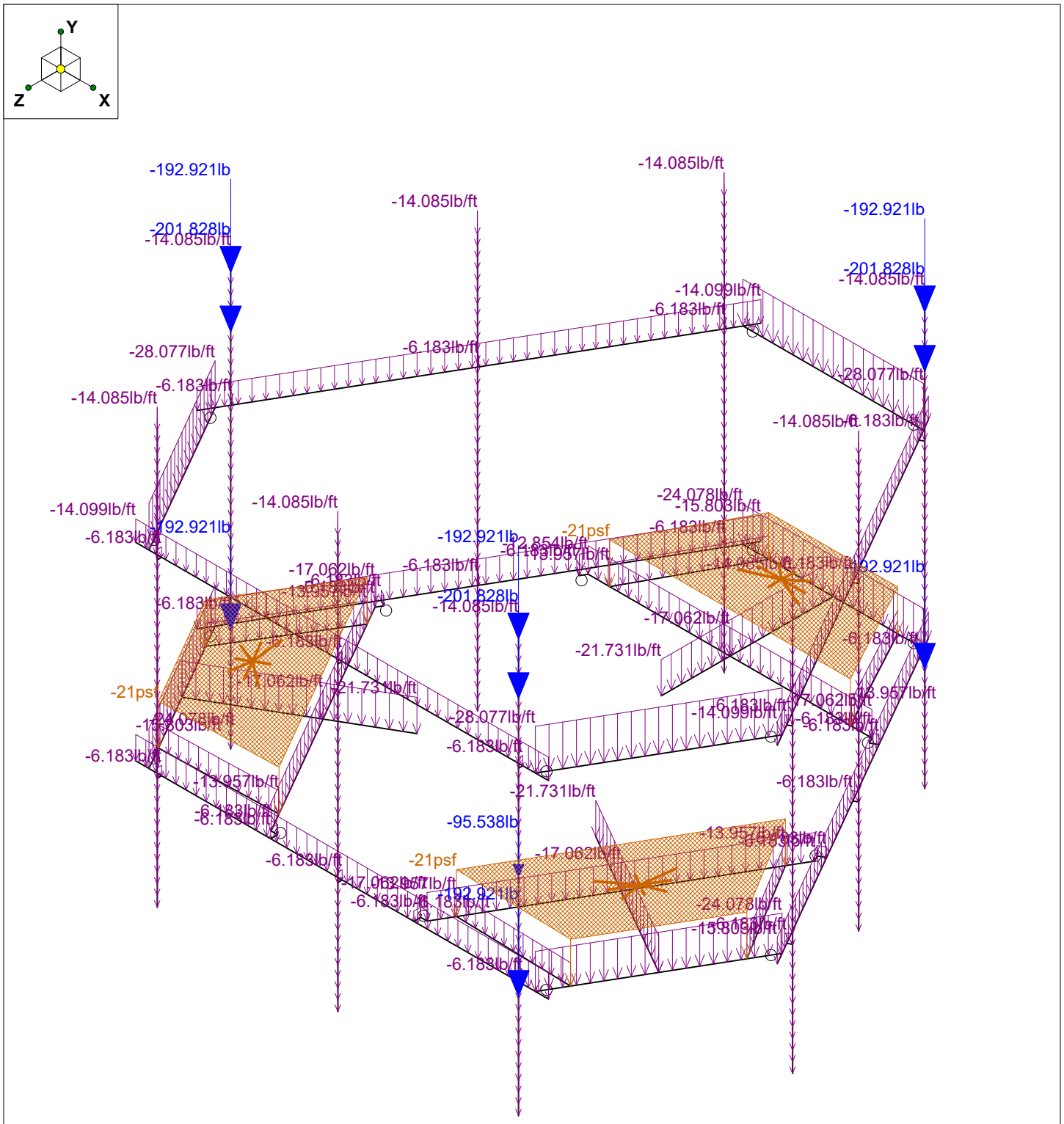

Loads: BLC 16, Ice Weight
Envelope Only Solution

Infinigy Engineering, PLLC	BOBDL00017A	Ice Weight
PSM		Aug 10, 2021 at 3:15 PM
1197-F0001-C		BOBDL00017A_loaded.r3d

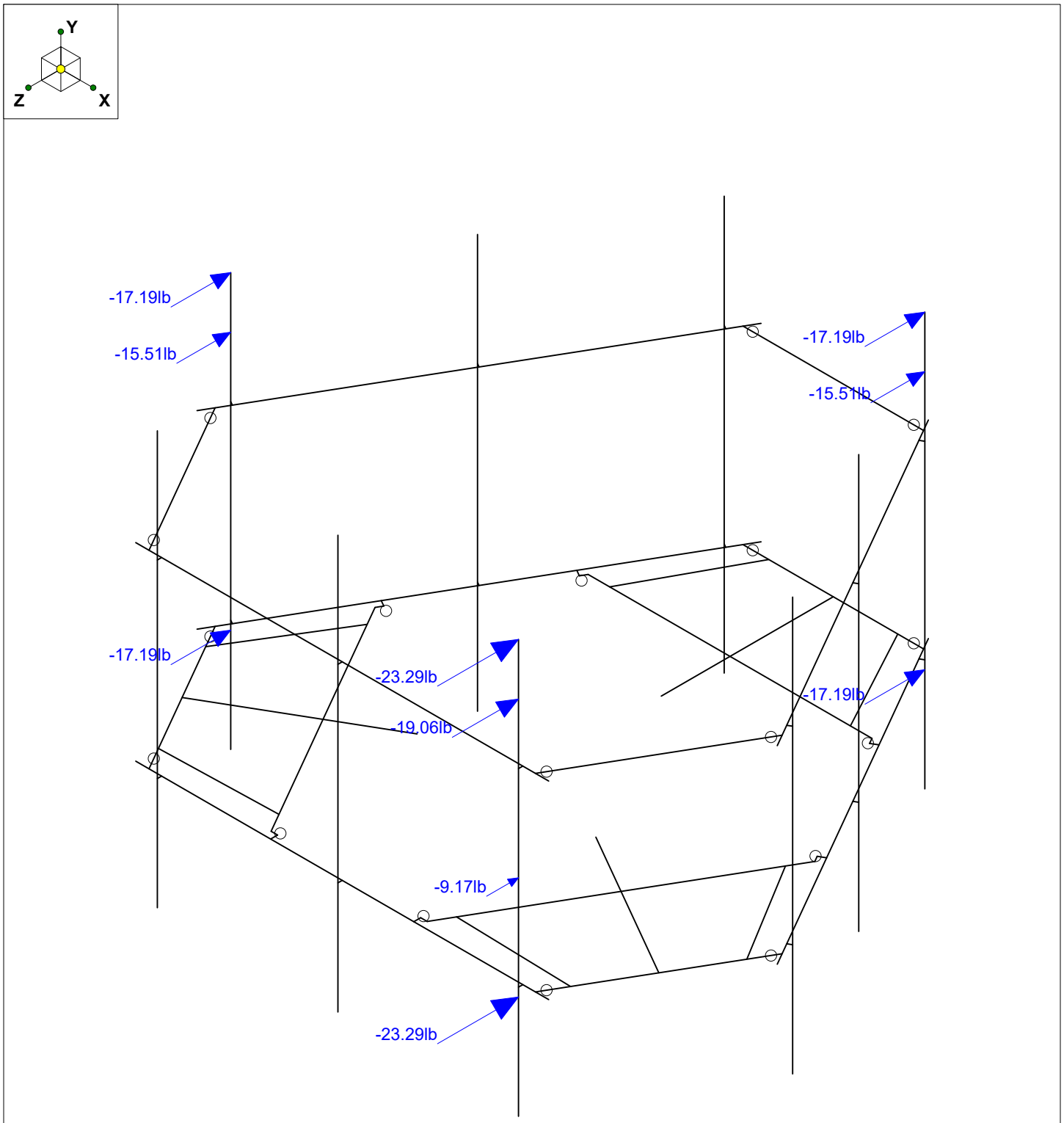

Loads: BLC 17, Ice Wind Load AZI 0
Envelope Only Solution

Infinigy Engineering, PLLC	BOBDL00017A	Wind + Ice Load AZI 000
PSM		Aug 10, 2021 at 3:16 PM
1197-F0001-C		BOBDL00017A_loaded.r3d

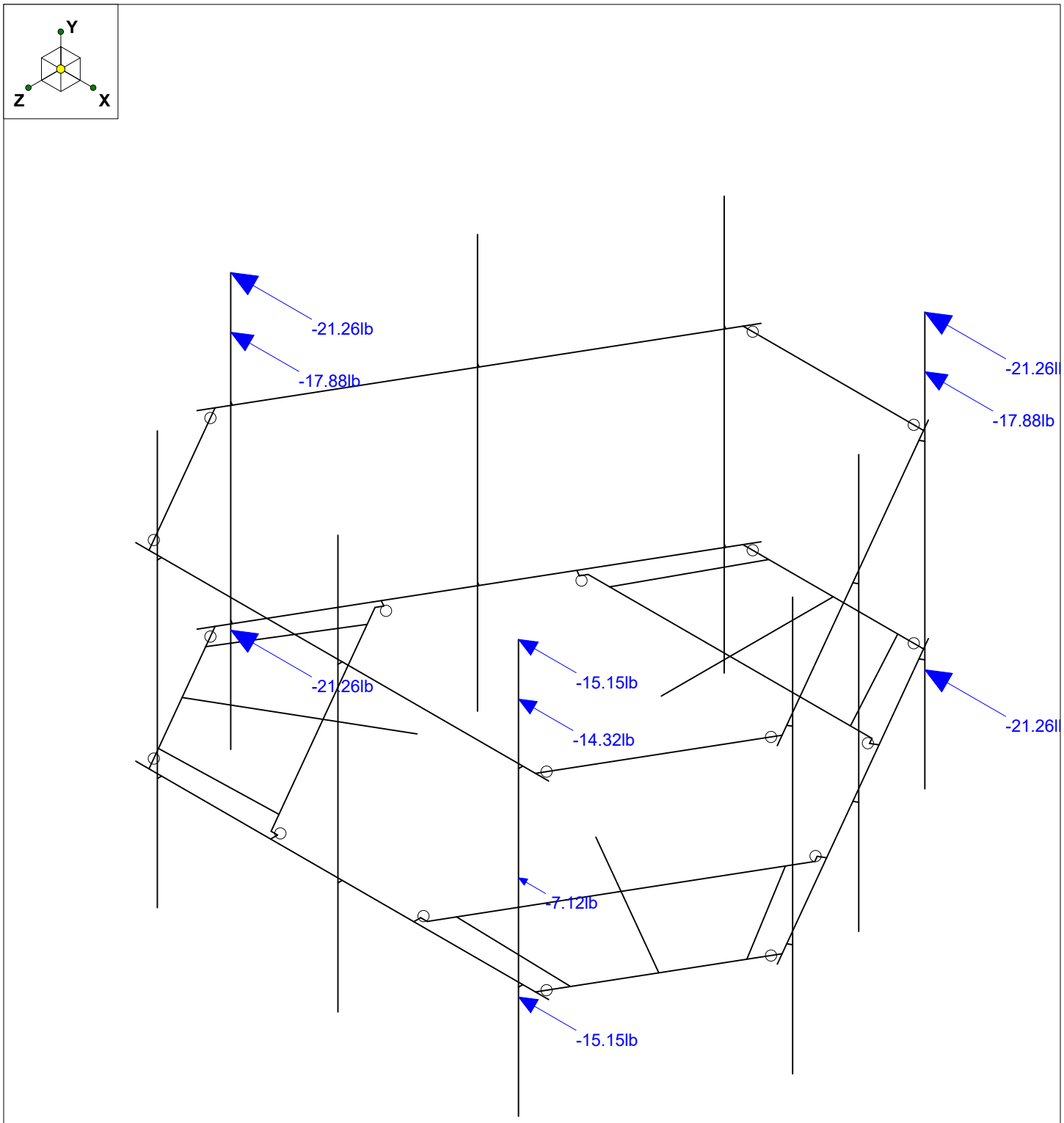

Loads: BLC 20, Ice Wind Load AZI 90
Envelope Only Solution

Infinigy Engineering, PLLC	BOBDL00017A	Wind + Ice Load AZI 090
PSM		Aug 10, 2021 at 3:16 PM
1197-F0001-C		BOBDL00017A_loaded.r3d

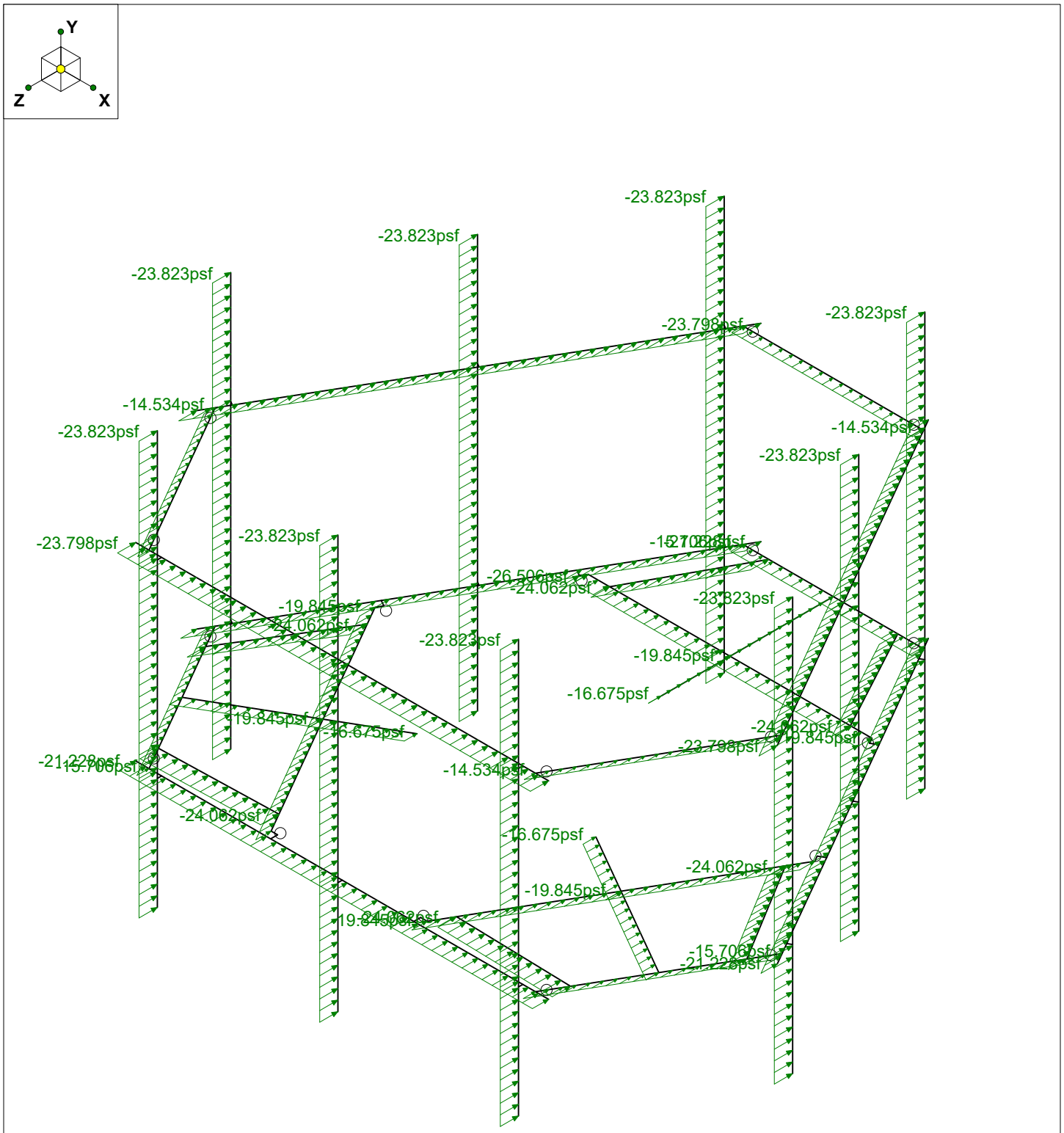

Loads: BLC 29, Distr. Ice Wind Load Z
Envelope Only Solution

Infinigy Engineering, PLLC	BOBDL00017A	Distr Wind + Ice Load AZI 000
PSM		Aug 10, 2021 at 3:16 PM
1197-F0001-C		BOBDL00017A_loaded.r3d

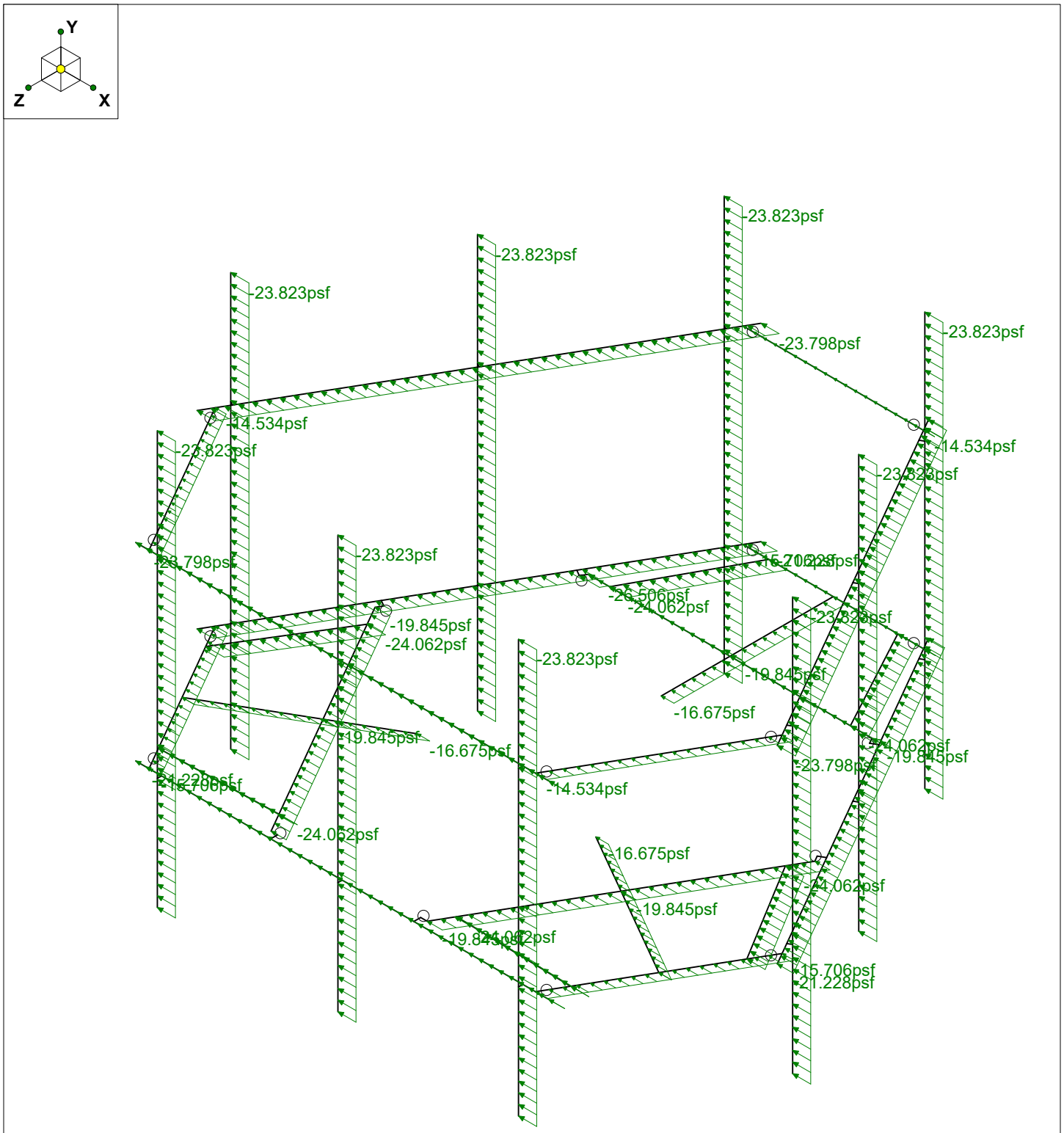

Loads: BLC 30, Distr. Ice Wind Load X
Envelope Only Solution

Infinigy Engineering, PLLC	BOBDL00017A	Distr Wind + Ice Load AZI 090
PSM		Aug 10, 2021 at 3:16 PM
1197-F0001-C		BOBDL00017A_loaded.r3d

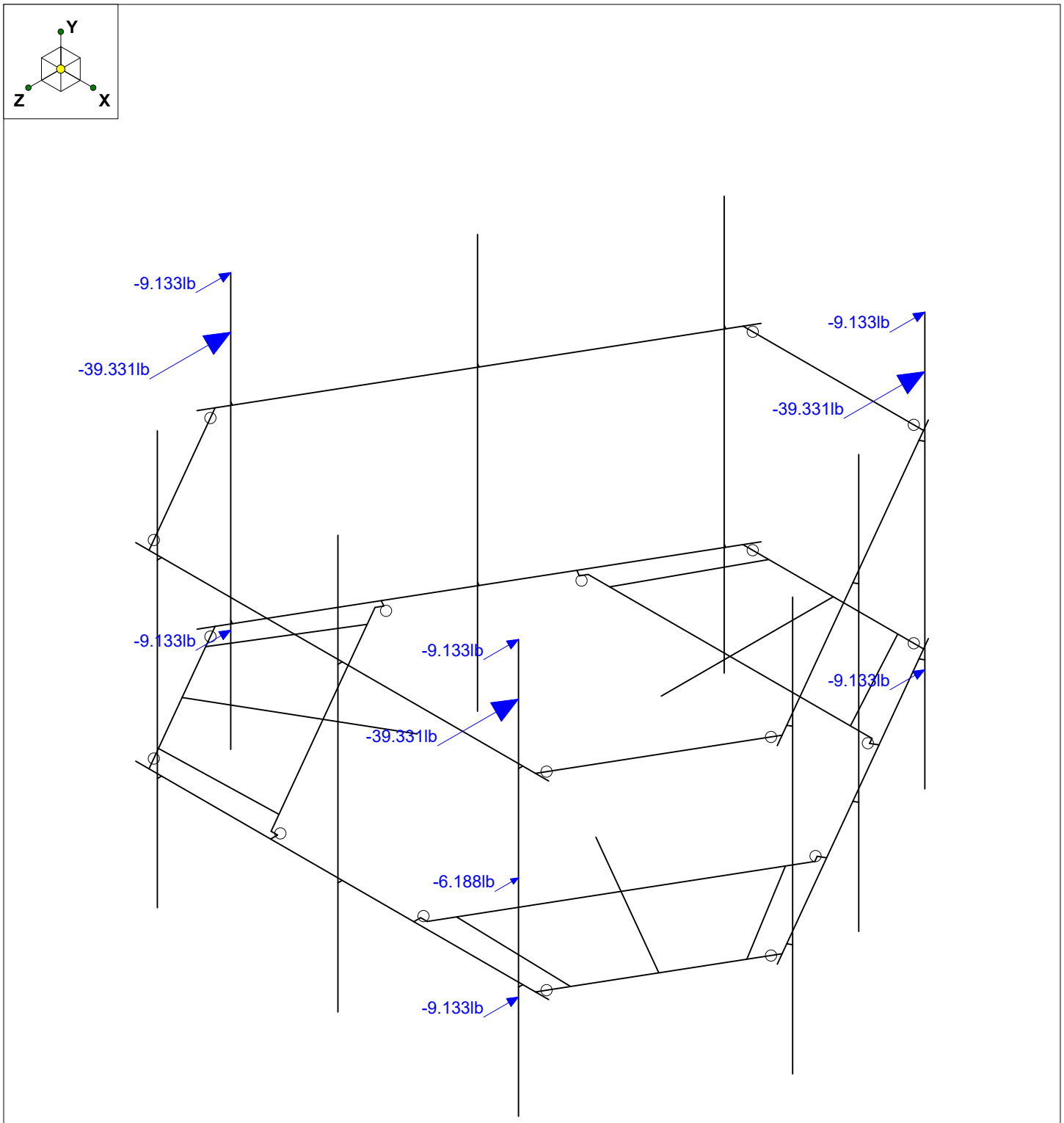

Loads: BLC 31, Seismic Load Z
Envelope Only Solution

Infinigy Engineering, PLLC	BOBDL00017A	Seismic Load AZI 000
PSM		Aug 10, 2021 at 3:17 PM
1197-F0001-C		BOBDL00017A_loaded.r3d

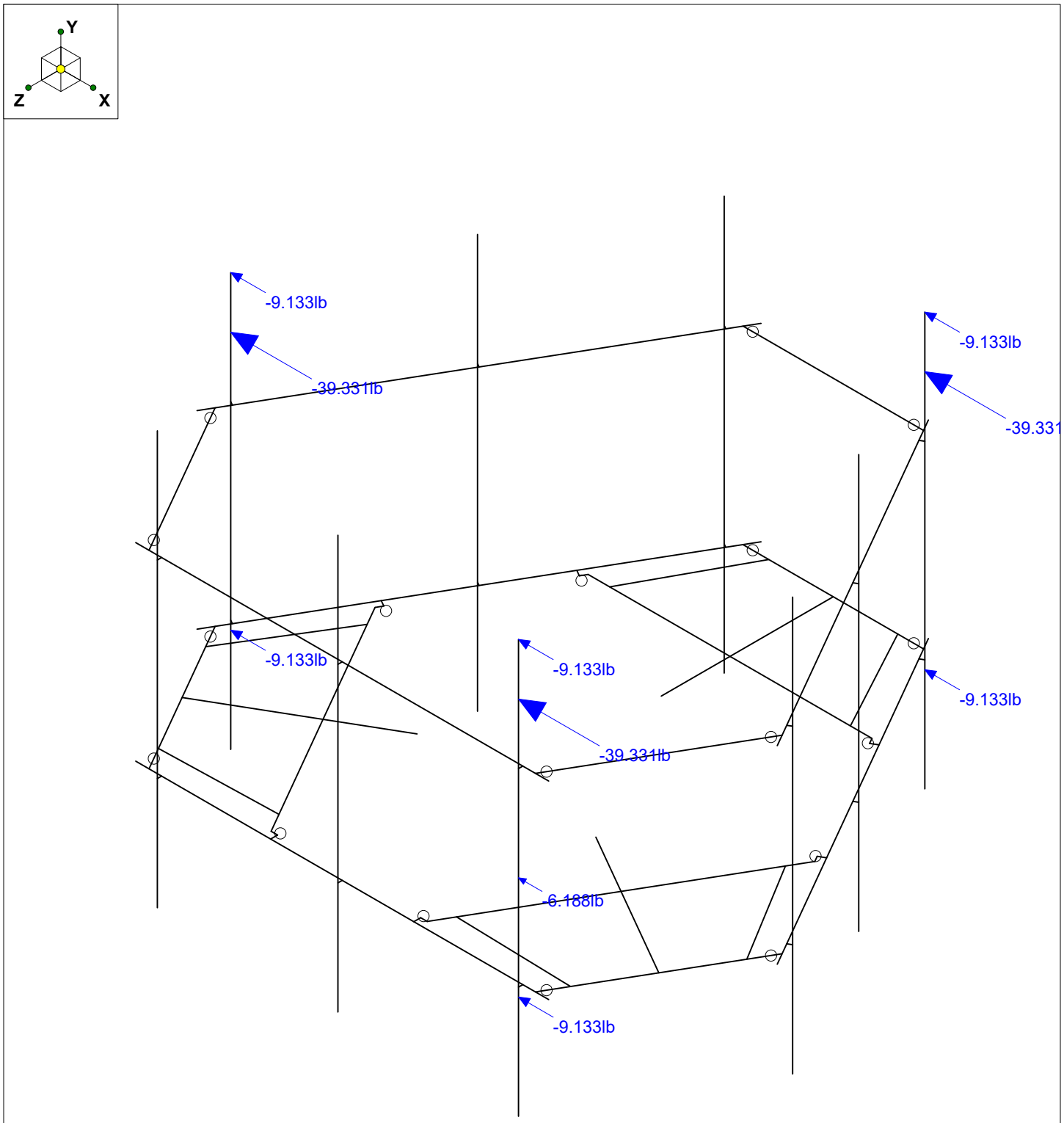

Loads: BLC 32, Seismic Load X
Envelope Only Solution

Infinigy Engineering, PLLC	BOBDL00017A	Seismic Load AZI 090
PSM		Aug 10, 2021 at 3:17 PM
1197-F0001-C		BOBDL00017A_loaded.r3d

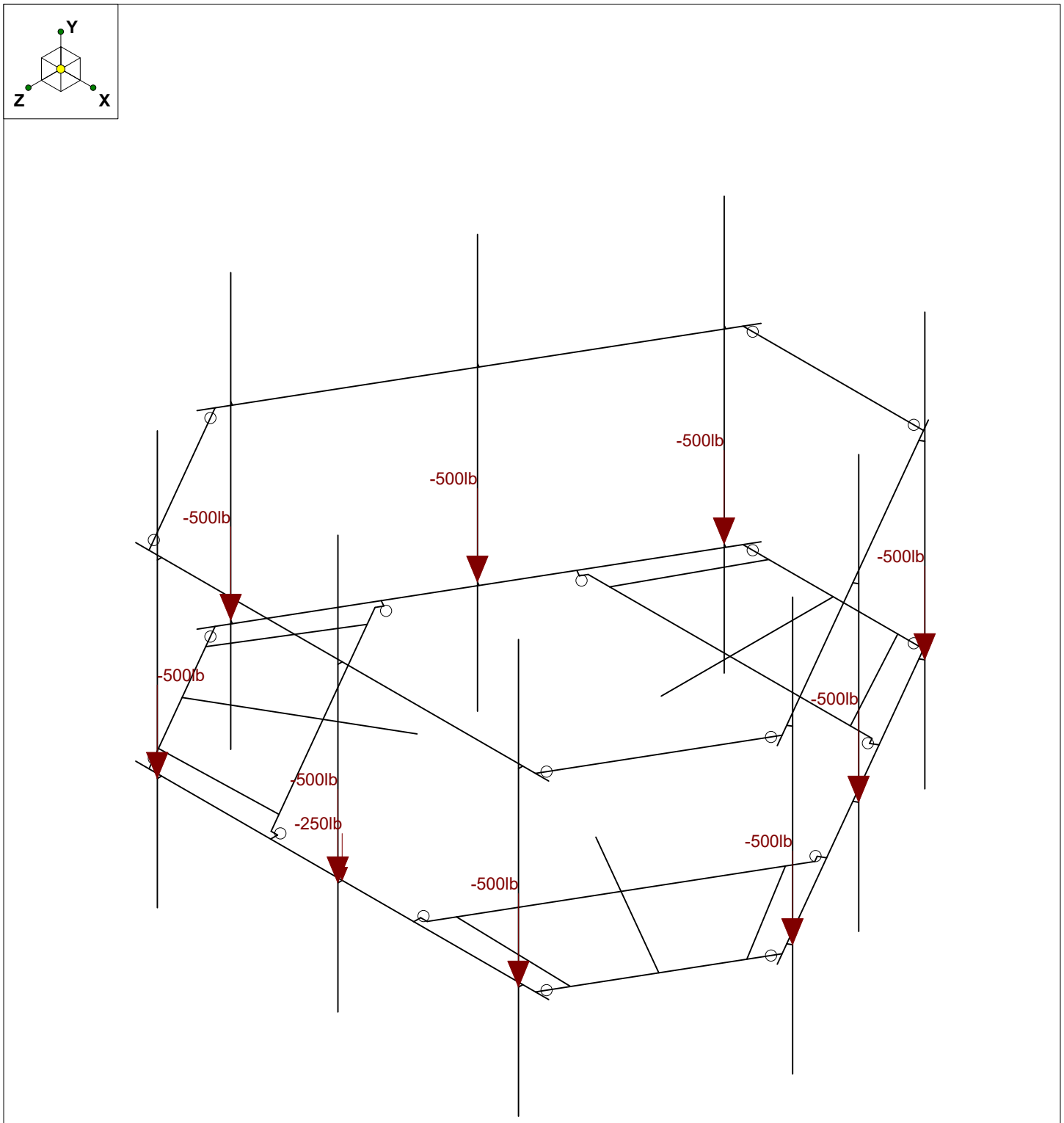

Loads: LL - Live Load

Infinigy Engineering, PLLC	BOBDL00017A	Non-concurrent Service Live Lo
PSM		Aug 10, 2021 at 3:18 PM
1197-F0001-C		BOBDL00017A_loaded.r3d

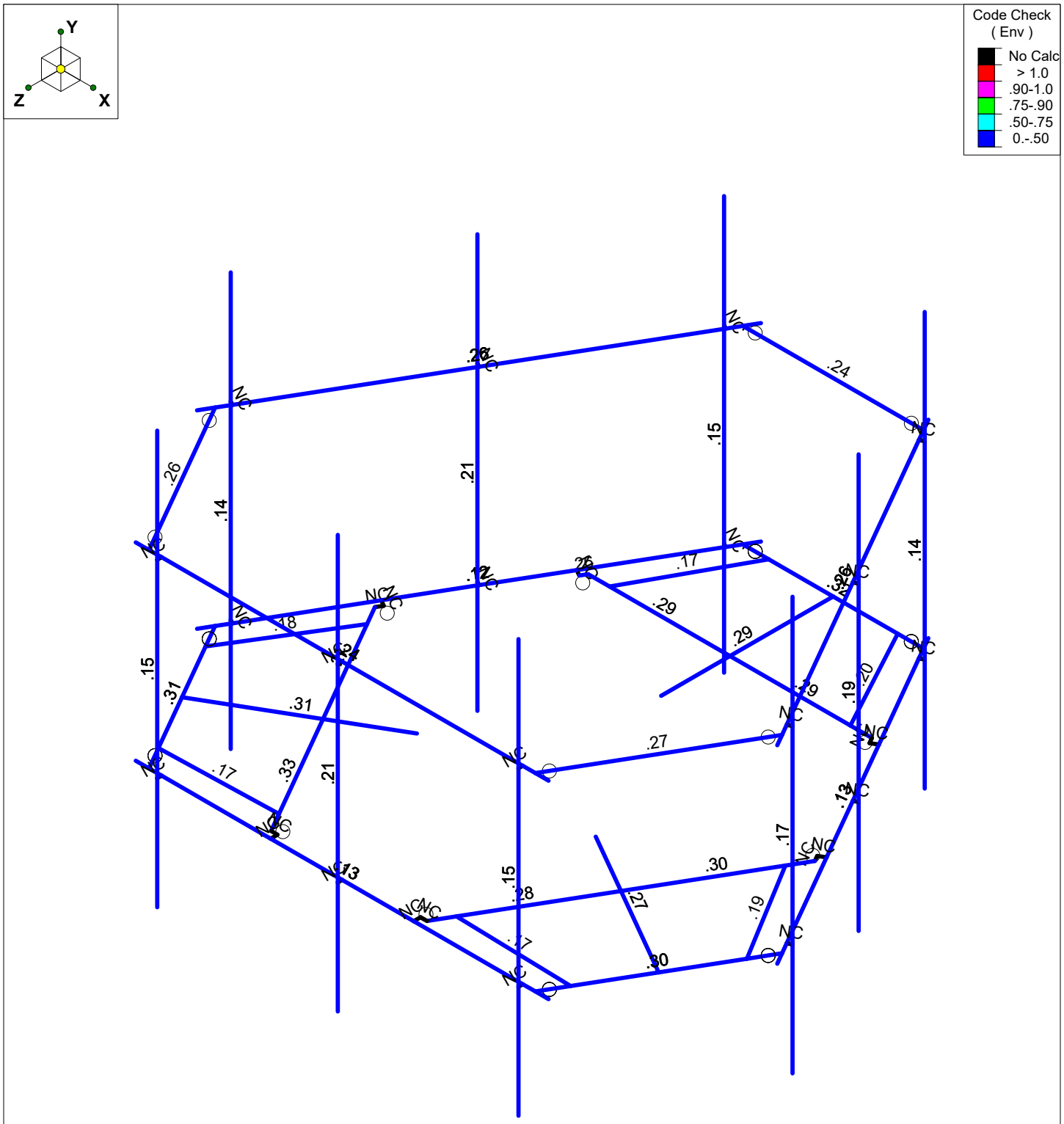

Member Code Checks Displayed (Enveloped)
Envelope Only Solution

Infinigy Engineering, PLLC	BOBDL00012A	Bending Check
PSM		Aug 10, 2021 at 2:30 PM
1197-F0001-C		BOBDL00012A_loaded.r3d

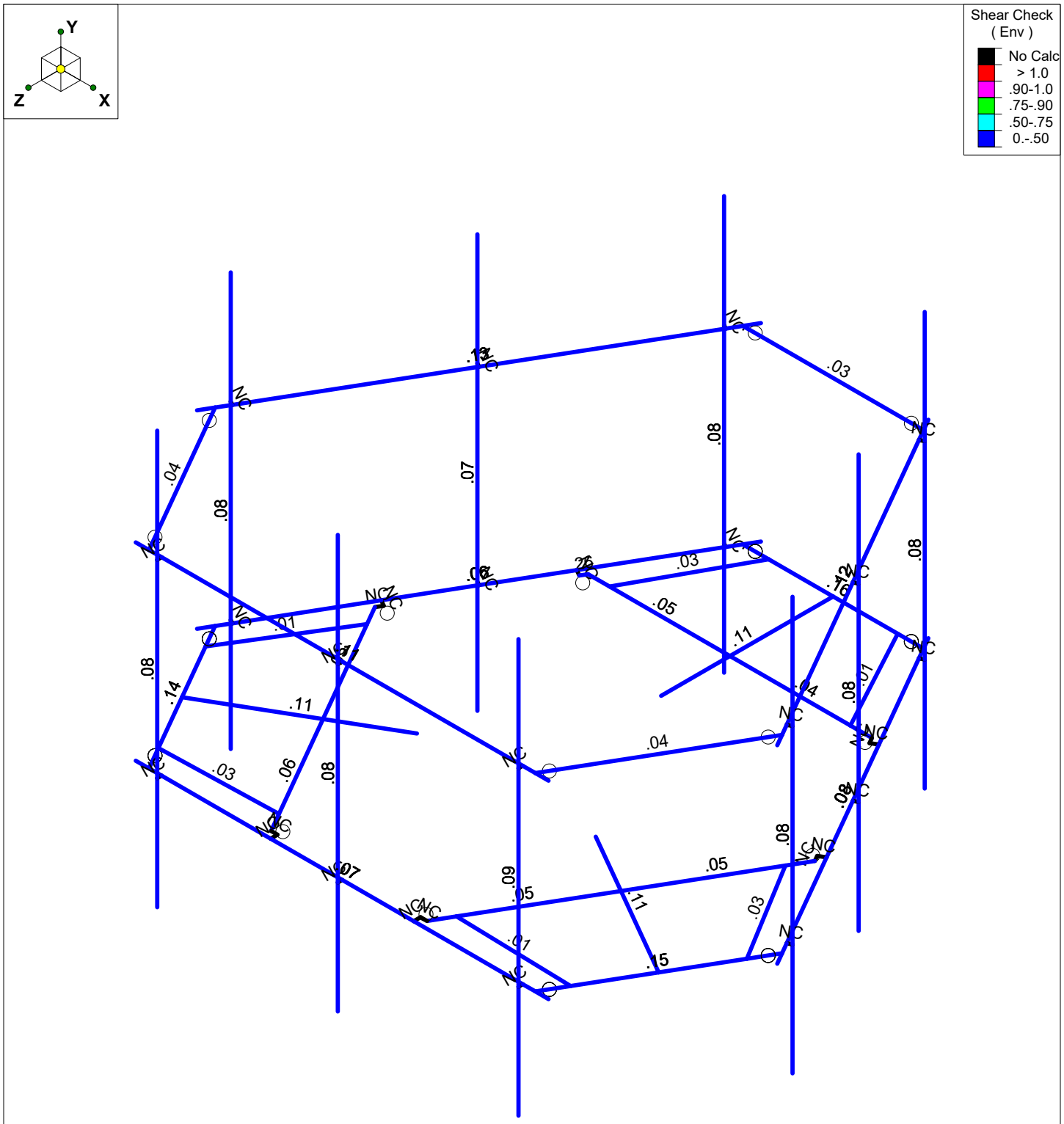

Member Shear Checks Displayed (Enveloped)
Envelope Only Solution

Infinigy Engineering, PLLC	BOBDL00012A	Shear Check
PSM		Aug 10, 2021 at 2:30 PM
1197-F0001-C		BOBDL00012A_loaded.r3d

Program Inputs

PROJECT INFORMATION	
Client:	ATC
Carrier:	Dish Wireless
Engineer:	Pradin Suinyal Magar, M.S

SITE INFORMATION		
Risk Category:	II	
Exposure Category:	C	
Topo Factor Procedure:	Method 1, Category 1	
Site Class:	D - Stiff Soil (Assumed)	
Ground Elevation:	232.72	ft *Rev H

MOUNT INFORMATION		
Mount Type:	Platform	
Num Sectors:	3	
Centerline AGL:	107.00	ft
Tower Height AGL:	160.00	ft

TOPOGRAPHIC DATA		
Topo Feature:	N/A	
Slope Distance:	N/A	ft
Crest Distance:	N/A	ft
Crest Height:	N/A	ft

FACTORS		
Directionality Fact. (K_d):	0.950	
Ground Ele. Factor (K_e):	0.992	*Rev H Only
Rooftop Speed-Up (K_s):	1.000	*Rev H Only
Topographic Factor (K_{zt}):	1.000	
Gust Effect Factor (G_h):	1.000	

CODE STANDARDS		
Building Code:	2015 IBC	
TIA Standard:	TIA-222-H	
ASCE Standard:	ASCE 7-10	

WIND AND ICE DATA		
Ultimate Wind (V_{ult}):	125	mph
Design Wind (V):	N/A	mph
Ice Wind (V_{ice}):	50	mph
Base Ice Thickness (t_i):	2	in
Flat Pressure:	96.748	psf
Round Pressure:	58.049	psf
Ice Wind Pressure:	9.288	psf

SEISMIC DATA		
Short-Period Accel. (S_s):	0.177	g
1-Second Accel. (S_1):	0.064	g
Short-Period Design (S_{DS}):	0.189	
1-Second Design (S_{D1}):	0.102	
Short-Period Coeff. (F_a):	1.600	
1-Second Coeff. (F_v):	2.400	
Amplification Factor (A_s):	3.000	
Response Mod. Coeff. (R):	2.000	

INFINIGY
FROM ZERO TO INFINIGY
the solutions are endless

Infinigy Load Calculator V2.1.7

Program Inputs

ELEVATION VIEW

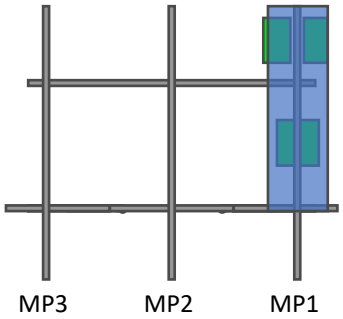

PLAN VIEW

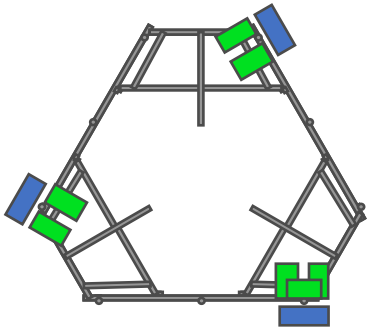

INFINIGY
FROM ZERO TO INFINIGY
the solutions are endless

Infinigy Load Calculator V2.1.7

APPURTENANCE INFORMATION

Appurtenance Name	Elevation	Qty.	K_a	q_z (psf)	EPA_N (ft^2)	EPA_T (ft^2)	Wind F_z (lbs)	Wind F_x (lbs)	Weight (lbs)	Seismic F (lbs)	Member (α sector)
JMA WIRELESS MX08FRO665-21	107.0	3	0.90	48.37	8.01	3.21	348.73	139.75	64.50	18.27	MP1
FUJITSU TA08025-B605	107.0	3	0.90	48.37	1.96	1.19	85.48	51.77	74.95	21.23	MP1
FUJITSU TA08025-B604	107.0	3	0.90	48.37	1.96	1.03	85.48	44.97	63.93	18.10	MP1
RAYCAP RDIDC-9181-PF-48	107.0	1	0.90	48.37	1.87	1.07	81.27	46.44	21.85	6.19	MP1

ASCE 7 Hazards Report

Address:
No Address at This Location

Standard: ASCE/SEI 7-10
Risk Category: I
Soil Class: D - Stiff Soil

Elevation: 232.72 ft (NAVD 88)
Latitude: 41.8635
Longitude: -72.4833

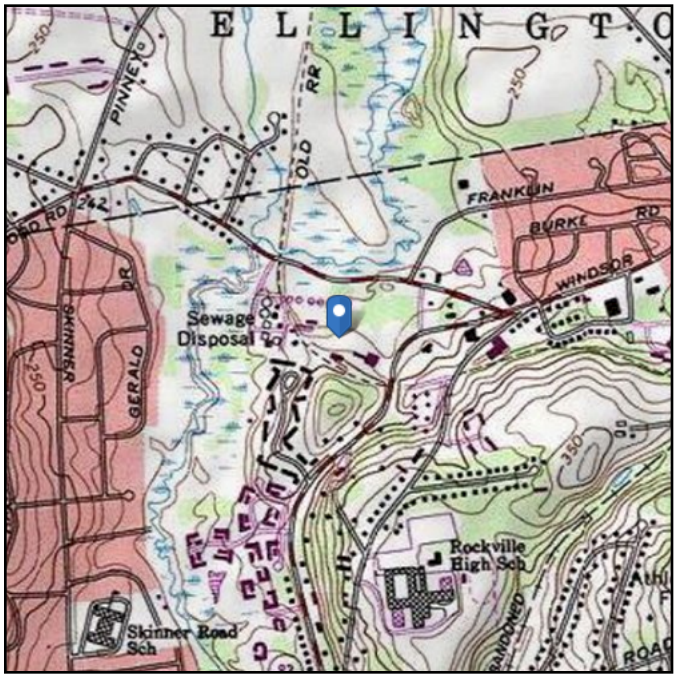

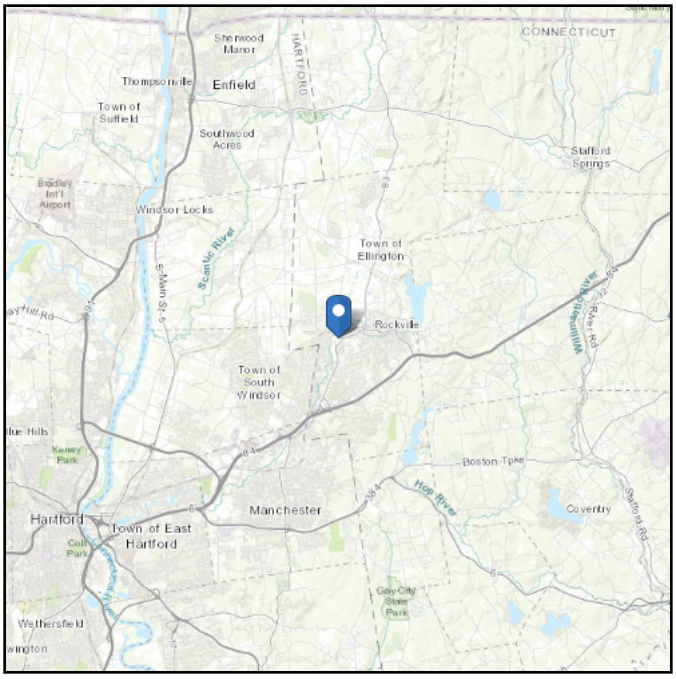

Wind

Results:

Wind Speed:	125 mph as per Vernon Rockville City Requirements
10-year MRI	77 Vmph
25-year MRI	87 Vmph
50-year MRI	93 Vmph
100-year MRI	100 Vmph

Data Accessed: Sat Aug 10 2021

Date Source: ASCE/SEI 7-10, Fig. 26.5-1C and Figs. CC-1–CC-4, and Section 26.5.2, incorporating errata of March 12, 2014

Value provided is 3-second gust wind speeds at 33 ft above ground for Exposure C Category, based on linear interpolation between contours. Wind speeds are interpolated in accordance with the 7-10 Standard. Wind speeds correspond to approximately a 15% probability of exceedance in 50 years (annual exceedance probability = 0.00333, MRI = 300 years).

Site is in a hurricane prone region as defined in ASCE/SEI 7-10 Section 26.2. Glazed openings need not be protected against wind-borne debris.

Seismic

Site Soil Class: D - Stiff Soil

Results:

S_S :	0.177	S_{DS} :	0.189
S_1 :	0.064	S_{D1} :	0.102
F_a :	1.6	T_L :	6
F_v :	2.4	PGA :	0.088
S_{MS} :	0.283	PGA_M :	0.141
S_{M1} :	0.153	F_{PGA} :	1.6
		I_e :	1

Seismic Design Category B

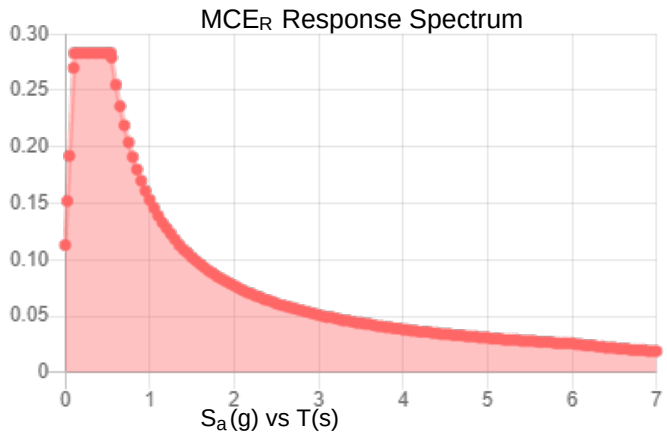

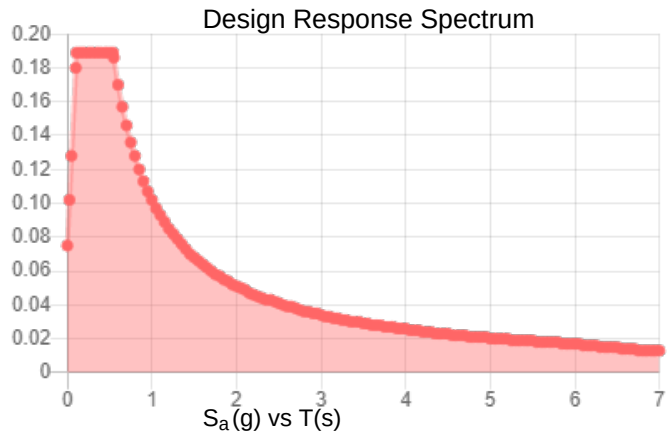

Data Accessed: Tue Aug 10 2021

Date Source: USGS Seismic Design Maps based on ASCE/SEI 7-10, incorporating Supplement 1 and errata of March 31, 2013, and ASCE/SEI 7-10 Table 1.5-2. Additional data for site-specific ground motion procedures in accordance with ASCE/SEI 7-10 Ch. 21 are available from USGS.

Ice

Results:

Ice Thickness:	1.00 in.
Concurrent Temperature:	5 F
Gust Speed:	50 mph
Data Source:	Standard ASCE/SEI 7-10, Figs. 10-2 through 10-8
Date Accessed:	Tue Aug 10 2021

Ice thicknesses on structures in exposed locations at elevations higher than the surrounding terrain and in valleys and gorges may exceed the mapped values.

Values provided are equivalent radial ice thicknesses due to freezing rain with concurrent 3-second gust speeds, for a 50-year mean recurrence interval, and temperatures concurrent with ice thicknesses due to freezing rain. Thicknesses for ice accretions caused by other sources shall be obtained from local meteorological studies. Ice thicknesses in exposed locations at elevations higher than the surrounding terrain and in valleys and gorges may exceed the mapped values.

The ASCE 7 Hazard Tool is provided for your convenience, for informational purposes only, and is provided “as is” and without warranties of any kind. The location data included herein has been obtained from information developed, produced, and maintained by third party providers; or has been extrapolated from maps incorporated in the ASCE 7 standard. While ASCE has made every effort to use data obtained from reliable sources or methodologies, ASCE does not make any representations or warranties as to the accuracy, completeness, reliability, currency, or quality of any data provided herein. Any third-party links provided by this Tool should not be construed as an endorsement, affiliation, relationship, or sponsorship of such third-party content by or from ASCE.

ASCE does not intend, nor should anyone interpret, the results provided by this Tool to replace the sound judgment of a competent professional, having knowledge and experience in the appropriate field(s) of practice, nor to substitute for the standard of care required of such professionals in interpreting and applying the contents of this Tool or the ASCE 7 standard.

In using this Tool, you expressly assume all risks associated with your use. Under no circumstances shall ASCE or its officers, directors, employees, members, affiliates, or agents be liable to you or any other person for any direct, indirect, special, incidental, or consequential damages arising from or related to your use of, or reliance on, the Tool or any information obtained therein. To the fullest extent permitted by law, you agree to release and hold harmless ASCE from any and all liability of any nature arising out of or resulting from any use of data provided by the ASCE 7 Hazard Tool.

Member Primary Data

	Label	I Joint	J Joint	K Joint	Rotate(...	Section/Shape	Type	Design List	Material	Design Rules
1	S3	P1	P3			Square Tubing	Beam	None	A500 GR.C	Typical
2	GA4	P9	P12		270	Grating Angle	Beam	None	A529 Gr. 50	Typical
3	GA3	P10	P11			Grating Angle	Beam	None	A529 Gr. 50	Typical
4	P3	P7	P8			Corner Plates	Beam	None	A1011 36 Ksi	Typical
5	S2	P13	P14			Square Tubing	Beam	None	A500 GR.C	Typical
6	GA2	P20	P23		270	Grating Angle	Beam	None	A529 Gr. 50	Typical
7	GA1	P21	P22			Grating Angle	Beam	None	A529 Gr. 50	Typical
8	P2	P18	P19			Corner Plates	Beam	None	A1011 36 Ksi	Typical
9	S1	P24	P25			Square Tubing	Beam	None	A500 GR.C	Typical
10	GA6	P31	P34		270	Grating Angle	Beam	None	A529 Gr. 50	Typical
11	GA5	P32	P33			Grating Angle	Beam	None	A529 Gr. 50	Typical
12	P1	P29	P30			Corner Plates	Beam	None	A1011 36 Ksi	Typical
13	H1	N43	N44			Face Pipes(3.5x.16)	Beam	None	A500 GR.C	Typical
14	MP1	N66	N60			Antenna Pipes	Beam	None	A500 GR.C	Typical
15	MP3	N63	N57			Antenna Pipes	Beam	None	A500 GR.C	Typical
16	HR1	N67	N68			Handrail	Beam	None	A500 GR.C	Typical
17	CA8	N114A	N113A		180	Handrail Connector	Beam	None	A1011 36 Ksi	Typical
18	CA9	N112A	N111A		180	Handrail Connector	Beam	None	A1011 36 Ksi	Typical
19	CA7	N116A	N115A		180	Handrail Connector	Beam	None	A1011 36 Ksi	Typical
20	M32	N48A	N70A			RIGID	None	None	RIGID	Typical
21	M35	N45	N69A			RIGID	None	None	RIGID	Typical
22	M36	N51	N71A			RIGID	None	None	RIGID	Typical
23	M39A	N54	N72A			RIGID	None	None	RIGID	Typical
24	CA3	P4	N122A			Channel(3.38x2.06)	Beam	None	A1011 36 Ksi	Typical
25	CA4	N124B	P4			Channel(3.38x2.06)	Beam	None	A1011 36 Ksi	Typical
26	CA1	P15	N122B			Channel(3.38x2.06)	Beam	None	A1011 36 Ksi	Typical
27	CA2	N123A	P15			Channel(3.38x2.06)	Beam	None	A1011 36 Ksi	Typical
28	CA5	P26	N125			Channel(3.38x2.06)	Beam	None	A1011 36 Ksi	Typical
29	CA6	N126	P26			Channel(3.38x2.06)	Beam	None	A1011 36 Ksi	Typical
30	M64	N126A	N125A			RIGID	None	None	RIGID	Typical
31	M65	N126	N125A			RIGID	None	None	RIGID	Typical
32	M66	N129	N128			RIGID	None	None	RIGID	Typical
33	M67	N124B	N128			RIGID	None	None	RIGID	Typical
34	M68	N132	N131			RIGID	None	None	RIGID	Typical
35	M69	N123A	N131			RIGID	None	None	RIGID	Typical
36	M70	N133	N132A			RIGID	None	None	RIGID	Typical
37	M71	N122B	N132A			RIGID	None	None	RIGID	Typical
38	M72	N135	N134			RIGID	None	None	RIGID	Typical
39	M73	N125	N134			RIGID	None	None	RIGID	Typical
40	M74	N138	N137			RIGID	None	None	RIGID	Typical
41	M75	N122A	N137			PL 2.375x0.5	None	None	A36 Gr.36	Typical

Member Primary Data (Continued)

	Label	I Joint	J Joint	K Joint	Rotate(...	Section/Shape	Type	Design List	Material	Design Rules
42	MP2	N75	N74			Antenna Pipes	Beam	None	A500 GR.C	Typical
43	M43	N72B	N76			RIGID	None	None	RIGID	Typical
44	M44	N73	N77			RIGID	None	None	RIGID	Typical
45	H3	N81A	N82A			Face Pipes(3.5x.16)	Beam	None	A500 GR.C	Typical
46	MP7	N90	N88			Antenna Pipes	Beam	None	A500 GR.C	Typical
47	MP9	N89	N87			Antenna Pipes	Beam	None	A500 GR.C	Typical
48	HR3	N91	N92			Handrail	Beam	None	A500 GR.C	Typical
49	M52	N84	N94			RIGID	None	None	RIGID	Typical
50	M53	N83A	N93			RIGID	None	None	RIGID	Typical
51	M54	N85	N95			RIGID	None	None	RIGID	Typical
52	M55	N86	N96			RIGID	None	None	RIGID	Typical
53	H2	N109	N110			Face Pipes(3.5x.16)	Beam	None	A500 GR.C	Typical
54	MP4	N118	N116			Antenna Pipes	Beam	None	A500 GR.C	Typical
55	MP6	N117	N115			Antenna Pipes	Beam	None	A500 GR.C	Typical
56	HR2	N119	N120			Handrail	Beam	None	A500 GR.C	Typical
57	M66A	N112	N122			RIGID	None	None	RIGID	Typical
58	M67A	N111	N121			RIGID	None	None	RIGID	Typical
59	M68A	N113	N123			RIGID	None	None	RIGID	Typical
60	M69A	N114	N124			RIGID	None	None	RIGID	Typical
61	MP8	N132B	N131A			Antenna Pipes	Beam	None	A500 GR.C	Typical
62	M68B	N129B	N133B			RIGID	None	None	RIGID	Typical
63	M69B	N130A	N134A			RIGID	None	None	RIGID	Typical
64	MP5	N138A	N137A			Antenna Pipes	Beam	None	A500 GR.C	Typical
65	M71B	N135A	N139			RIGID	None	None	RIGID	Typical
66	M72B	N136	N140			RIGID	None	None	RIGID	Typical

Hot Rolled Steel Design Parameters

	Label	Shape	Lengt...	Lbyy[in]	Lbzz[in]	Lcomp t...	Lcomp b...	L-tor...	Kyy	Kzz	Cb	Func...
1	S3	Square Tubing	40			Lbyy						Late...
2	GA4	Grating Angle	27.295			Lbyy						Late...
3	GA3	Grating Angle	27.295			Lbyy						Late...
4	P3	Corner Plates	42			Lbyy						Late...
5	S2	Square Tubing	40			Lbyy						Late...
6	GA2	Grating Angle	27.295			Lbyy						Late...
7	GA1	Grating Angle	27.295			Lbyy						Late...
8	P2	Corner Plates	42			Lbyy						Late...
9	S1	Square Tubing	40			Lbyy						Late...
10	GA6	Grating Angle	27.295			Lbyy						Late...
11	GA5	Grating Angle	27.295			Lbyy						Late...
12	P1	Corner Plates	42			Lbyy						Late...
13	H1	Face Pipes(3.5x.16)	96			Lbyy						Late...

Hot Rolled Steel Design Parameters (Continued)

	Label	Shape	Lengt...	Lbyy[in]	Lbzz[in]	Lcomp t...	Lcomp b...	L-tor...	Kyy	Kzz	Cb	Func...
14	MP1	Antenna Pipes	96			Lbyy						Late...
15	MP3	Antenna Pipes	96			Lbyy						Late...
16	HR1	Handrail	96			Lbyy						Late...
17	CA8	Handrail Connector	42			Lbyy						Late...
18	CA9	Handrail Connector	42			Lbyy						Late...
19	CA7	Handrail Connector	42			Lbyy						Late...
20	CA3	Channel(3.38x2.06)	33			Lbyy						Late...
21	CA4	Channel(3.38x2.06)	33			Lbyy						Late...
22	CA1	Channel(3.38x2.06)	33			Lbyy						Late...
23	CA2	Channel(3.38x2.06)	33			Lbyy						Late...
24	CA5	Channel(3.38x2.06)	33			Lbyy						Late...
25	CA6	Channel(3.38x2.06)	33			Lbyy						Late...
26	M75	PL 2.375x0.5	1.5			Lbyy						Late...
27	MP2	Antenna Pipes	96			Lbyy						Late...
28	H3	Face Pipes(3.5x.16)	96			Lbyy						Late...
29	MP7	Antenna Pipes	96			Lbyy						Late...
30	MP9	Antenna Pipes	96			Lbyy						Late...
31	HR3	Handrail	96			Lbyy						Late...
32	H2	Face Pipes(3.5x.16)	96			Lbyy						Late...
33	MP4	Antenna Pipes	96			Lbyy						Late...
34	MP6	Antenna Pipes	96			Lbyy						Late...
35	HR2	Handrail	96			Lbyy						Late...
36	MP8	Antenna Pipes	96			Lbyy						Late...
37	MP5	Antenna Pipes	96			Lbyy						Late...

Member Advanced Data

	Label	I Release	J Release	I Offset[in]	J Offset[in]	T/C Only	Physical	Defl Ra..	Analysis ...	Inactive	Seismi...
1	S3						Yes				None
2	GA4						Yes				None
3	GA3						Yes				None
4	P3	BenPIN	BenPIN				Yes	Default			None
5	S2						Yes				None
6	GA2						Yes				None
7	GA1						Yes				None
8	P2	BenPIN	BenPIN				Yes	Default			None
9	S1						Yes	Default			None
10	GA6						Yes				None
11	GA5						Yes				None
12	P1	BenPIN	BenPIN				Yes	Default			None
13	H1						Yes				None
14	MP1						Yes		+y+3		None

Member Advanced Data (Continued)

	Label	I Release	J Release	I Offset[in]	J Offset[in]	T/C Only	Physical	Defl Ra..	Analysis ...	Inactive	Seismi...
15	MP3						Yes		+y+3		None
16	HR1						Yes				None
17	CA8	OOOOOX	OOOOOX				Yes				None
18	CA9	OOOOOX	OOOOOX				Yes				None
19	CA7	OOOOOX	OOOOOX				Yes	Default			None
20	M32						Yes	** NA **			None
21	M35						Yes	** NA **			None
22	M36						Yes	** NA **			None
23	M39A						Yes	** NA **			None
24	CA3						Yes	Default			None
25	CA4						Yes	Default			None
26	CA1						Yes	Default			None
27	CA2						Yes	Default			None
28	CA5						Yes	Default			None
29	CA6						Yes	Default			None
30	M64	BenPIN					Yes	** NA **			None
31	M65						Yes	** NA **			None
32	M66	BenPIN					Yes	** NA **			None
33	M67						Yes	** NA **			None
34	M68	BenPIN					Yes	** NA **			None
35	M69						Yes	** NA **			None
36	M70	BenPIN					Yes	** NA **			None
37	M71						Yes	** NA **			None
38	M72	BenPIN					Yes	** NA **			None
39	M73						Yes	** NA **			None
40	M74	BenPIN					Yes	** NA **			None
41	M75						Yes	** NA **			None
42	MP2						Yes		+y+3		None
43	M43						Yes	** NA **			None
44	M44						Yes	** NA **			None
45	H3						Yes				None
46	MP7						Yes		+y+3		None
47	MP9						Yes		+y+3		None
48	HR3						Yes				None
49	M52						Yes	** NA **			None
50	M53						Yes	** NA **			None
51	M54						Yes	** NA **			None
52	M55						Yes	** NA **			None
53	H2						Yes				None
54	MP4						Yes		+y+3		None
55	MP6						Yes		+y+3		None
56	HR2						Yes				None

Member Advanced Data (Continued)

	Label	I Release	J Release	I Offset[in]	J Offset[in]	T/C Only	Physical	Defl Ra..	Analysis ...	Inactive	Seismi...
57	M66A						Yes	** NA **			None
58	M67A						Yes	** NA **			None
59	M68A						Yes	** NA **			None
60	M69A						Yes	** NA **			None
61	MP8						Yes		+y+3		None
62	M68B						Yes	** NA **			None
63	M69B						Yes	** NA **			None
64	MP5						Yes		+y+3		None
65	M71B						Yes	** NA **			None
66	M72B						Yes	** NA **			None

Material Takeoff

	Material	Size	Pieces	Length[in]	Weight[LB]
1	General				
2	RIGID		29	35.1	0
3	Total General		29	35.1	0
4					
5	Hot Rolled Steel				
6	A1011 36 Ksi	C3.38x2.06x0.25	6	198	98.255
7	A1011 36 Ksi	PL6.5x0.375	3	126	87.09
8	A1011 36 Ksi	L6.6x4.46x0.25	3	126	96.558
9	A36 Gr.36	PL 2.375x0.5	1	1.5	.505
10	A500 GR.C	2.88x0.120	3	288	84.974
11	A500 GR.C	HSS4X4X6	3	120	162.653
12	A500 GR.C	Pipe3.5x0.165	3	288	141.202
13	A500 GR.C	PIPE 2.5	9	864	394.45
14	A529 Gr. 50	L2x2x4	6	163.8	43.838
15	Total HR Steel		37	2175.3	1109.525

Hot Rolled Steel Section Sets

	Label	Shape	Type	Design List	Material	Design...	A [in2]	Iyy [in...	Izz [in...	J [in4]
1	Corner Plates	PL6.5x0.375	Beam	None	A1011 ...	Typical	2.438	.029	8.582	.11
2	6"x0.37" Plate	Plate 6x.37	Beam	None	A1011 ...	Typical	2.22	.025	6.66	.097
3	Grating Angle	L2x2x4	Beam	None	A529 G...	Typical	.944	.346	.346	.021
4	Face Pipes(3.5x.1...	Pipe3.5x0.165	Beam	None	A500 G...	Typical	1.729	2.409	2.409	4.819
5	Antenna Pipes	PIPE 2.5	Beam	None	A500 G...	Typical	1.61	1.45	1.45	2.89
6	Channel(3.38x2.06)	C3.38x2.06x0.25	Beam	None	A1011 ...	Typical	1.75	.715	3.026	.034
7	Square Tubing	HSS4X4X6	Beam	None	A500 G...	Typical	4.78	10.3	10.3	17.5
8	Handrail Connector	L6.6x4.46x0.25	Beam	None	A1011 ...	Typical	2.703	4.759	12.473	.055

Hot Rolled Steel Section Sets (Continued)

	Label	Shape	Type	Design List	Material	Design...	A [in2]	Iyy [in...	Izz [in...	J [in4]
9	Handrail	2.88x0.120	Beam	None	A500 G...	Typical	1.04	.993	.993	1.985

Basic Load Cases

	BLC Description	Category	X Gr...	Y Gr...	Z Gr...	Joint	Point	Distributed	Area(Memb...	Surface(Plate/Wall)
1	Self Weight	DL		-1			13		3	
2	Wind Load AZI 0	WLZ					26			
3	Wind Load AZI 30	None					26			
4	Wind Load AZI 60	None					26			
5	Wind Load AZI 90	WLX					26			
6	Wind Load AZI 1...	None					26			
7	Wind Load AZI 1...	None					26			
8	Wind Load AZI 1...	None					26			
9	Wind Load AZI 2...	None					26			
10	Wind Load AZI 2...	None					26			
11	Wind Load AZI 2...	None					26			
12	Wind Load AZI 3...	None					26			
13	Wind Load AZI 3...	None					26			
14	Distr. Wind Load Z	WLZ						66		
15	Distr. Wind Load X	WLX						66		
16	Ice Weight	OL1					13	66	3	
17	Ice Wind Load A...	OL2					26			
18	Ice Wind Load A...	None					26			
19	Ice Wind Load A...	None					26			
20	Ice Wind Load A...	OL3					26			
21	Ice Wind Load A...	None					26			
22	Ice Wind Load A...	None					26			
23	Ice Wind Load A...	None					26			
24	Ice Wind Load A...	None					26			
25	Ice Wind Load A...	None					26			
26	Ice Wind Load A...	None					26			
27	Ice Wind Load A...	None					26			
28	Ice Wind Load A...	None					26			
29	Distr. Ice Wind L...	OL2						66		
30	Distr. Ice Wind L...	OL3						66		
31	Seismic Load Z	ELZ			-.283		13			
32	Seismic Load X	ELX	-.283				13			
33	Service Live Loa...	LL				1				
34	Maintenance Loa...	LL				1				
35	Maintenance Loa...	LL				1				
36	Maintenance Loa...	LL				1				
37	Maintenance Loa...	LL				1				

Basic Load Cases (Continued)

	BLC Description	Category	X Gr...	Y Gr...	Z Gr...	Joint	Point	Distributed	Area(Memb...	Surface(Plate/Wall)
38	Maintenance Loa...	LL				1				
39	Maintenance Loa...	LL				1				
40	Maintenance Loa...	LL				1				
41	Maintenance Loa...	LL				1				
42	Maintenance Loa...	LL				1				
43	BLC 1 Transient ...	None						9		
44	BLC 16 Transien...	None						9		

Load Combinations

	Description	S...	P...	S...	B...	Fa...	B...	Fa...	B...	Fa...	B...	Fa...	B...	Fa...	B...	Fa...	B...	Fa...	B...	Fa...	B...	Fa...	B...	Fa...
1	1.4DL	Y...	Y		1	1.4																		
2	1.2DL + 1WL AZI 0	Y...	Y		1	1.2	2	1	14	1	15													
3	1.2DL + 1WL AZI 30	Y...	Y		1	1.2	3	1	14	.866	15	.5												
4	1.2DL + 1WL AZI 60	Y...	Y		1	1.2	4	1	14	.5	15	.866												
5	1.2DL + 1WL AZI 90	Y...	Y		1	1.2	5	1	14		15	1												
6	1.2DL + 1WL AZI 120	Y...	Y		1	1.2	6	1	14	-.5	15	.866												
7	1.2DL + 1WL AZI 150	Y...	Y		1	1.2	7	1	14	-.8...	15	.5												
8	1.2DL + 1WL AZI 180	Y...	Y		1	1.2	8	1	14	-1	15													
9	1.2DL + 1WL AZI 210	Y...	Y		1	1.2	9	1	14	-.8...	15	-.5												
10	1.2DL + 1WL AZI 240	Y...	Y		1	1.2	10	1	14	-.5	15	-.8...												
11	1.2DL + 1WL AZI 270	Y...	Y		1	1.2	11	1	14		15	-1												
12	1.2DL + 1WL AZI 300	Y...	Y		1	1.2	12	1	14	.5	15	-.8...												
13	1.2DL + 1WL AZI 330	Y...	Y		1	1.2	13	1	14	.866	15	-.5												
14	0.9DL + 1WL AZI 0	Y...	Y		1	.9	2	1	14	1	15													
15	0.9DL + 1WL AZI 30	Y...	Y		1	.9	3	1	14	.866	15	.5												
16	0.9DL + 1WL AZI 60	Y...	Y		1	.9	4	1	14	.5	15	.866												
17	0.9DL + 1WL AZI 90	Y...	Y		1	.9	5	1	14		15	1												
18	0.9DL + 1WL AZI 120	Y...	Y		1	.9	6	1	14	-.5	15	.866												
19	0.9DL + 1WL AZI 150	Y...	Y		1	.9	7	1	14	-.8...	15	.5												
20	0.9DL + 1WL AZI 180	Y...	Y		1	.9	8	1	14	-1	15													
21	0.9DL + 1WL AZI 210	Y...	Y		1	.9	9	1	14	-.8...	15	-.5												
22	0.9DL + 1WL AZI 240	Y...	Y		1	.9	10	1	14	-.5	15	-.8...												
23	0.9DL + 1WL AZI 270	Y...	Y		1	.9	11	1	14		15	-1												
24	0.9DL + 1WL AZI 300	Y...	Y		1	.9	12	1	14	.5	15	-.8...												
25	0.9DL + 1WL AZI 330	Y...	Y		1	.9	13	1	14	.866	15	-.5												
26	1.2D + 1.0Di	Y...	Y		1	1.2	16	1																
27	1.2D + 1.0Di +1.0Wi AZI 0	Y...	Y		1	1.2	16	1	17	1	29	1	30											
28	1.2D + 1.0Di +1.0Wi AZI 30	Y...	Y		1	1.2	16	1	18	1	29	.866	30	.5										
29	1.2D + 1.0Di +1.0Wi AZI 60	Y...	Y		1	1.2	16	1	19	1	29	.5	30	.866										
30	1.2D + 1.0Di +1.0Wi AZI 90	Y...	Y		1	1.2	16	1	20	1	29		30	1										
31	1.2D + 1.0Di +1.0Wi AZI 120	Y...	Y		1	1.2	16	1	21	1	29	-.5	30	.866										

Load Combinations (Continued)

	Description	S...	P...	S...	B...	Fa...	B...	Fa...	B...	Fa...	B...	Fa...	B...	Fa...	B...	Fa...	B...	Fa...	B...	Fa...	B...	Fa...	B...	Fa...
32	1.2D + 1.0Di +1.0Wi AZI 150	Y...	Y		1	1.2	16	1	22	1	29	-.8...	30	.5										
33	1.2D + 1.0Di +1.0Wi AZI 180	Y...	Y		1	1.2	16	1	23	1	29	-1	30											
34	1.2D + 1.0Di +1.0Wi AZI 210	Y...	Y		1	1.2	16	1	24	1	29	-.8...	30	-.5										
35	1.2D + 1.0Di +1.0Wi AZI 240	Y...	Y		1	1.2	16	1	25	1	29	-.5	30	-.8...										
36	1.2D + 1.0Di +1.0Wi AZI 270	Y...	Y		1	1.2	16	1	26	1	29		30	-1										
37	1.2D + 1.0Di +1.0Wi AZI 300	Y...	Y		1	1.2	16	1	27	1	29	.5	30	-.8...										
38	1.2D + 1.0Di +1.0Wi AZI 330	Y...	Y		1	1.2	16	1	28	1	29	.866	30	-.5										
39	(1.2 + 0.2Sds)DL + 1.0E AZI 0	Y...	Y		1	1.2...	31	1	32															
40	(1.2 + 0.2Sds)DL + 1.0E AZI 30	Y...	Y		1	1.2...	31	.866	32	.5														
41	(1.2 + 0.2Sds)DL + 1.0E AZI 60	Y...	Y		1	1.2...	31	.5	32	.866														
42	(1.2 + 0.2Sds)DL + 1.0E AZI 90	Y...	Y		1	1.2...	31		32	1														
43	(1.2 + 0.2Sds)DL + 1.0E AZI 1...	Y...	Y		1	1.2...	31	-.5	32	.866														
44	(1.2 + 0.2Sds)DL + 1.0E AZI 1...	Y...	Y		1	1.2...	31	-.8...	32	.5														
45	(1.2 + 0.2Sds)DL + 1.0E AZI 1...	Y...	Y		1	1.2...	31	-1	32															
46	(1.2 + 0.2Sds)DL + 1.0E AZI 2...	Y...	Y		1	1.2...	31	-.8...	32	-.5														
47	(1.2 + 0.2Sds)DL + 1.0E AZI 2...	Y...	Y		1	1.2...	31	-.5	32	-.8...														
48	(1.2 + 0.2Sds)DL + 1.0E AZI 2...	Y...	Y		1	1.2...	31		32	-1														
49	(1.2 + 0.2Sds)DL + 1.0E AZI 3...	Y...	Y		1	1.2...	31	.5	32	-.8...														
50	(1.2 + 0.2Sds)DL + 1.0E AZI 3...	Y...	Y		1	1.2...	31	.866	32	-.5														
51	(0.9 - 0.2Sds)DL + 1.0E AZI 0	Y...	Y		1	.862	31	1	32															
52	(0.9 - 0.2Sds)DL + 1.0E AZI 30	Y...	Y		1	.862	31	.866	32	.5														
53	(0.9 - 0.2Sds)DL + 1.0E AZI 60	Y...	Y		1	.862	31	.5	32	.866														
54	(0.9 - 0.2Sds)DL + 1.0E AZI 90	Y...	Y		1	.862	31		32	1														
55	(0.9 - 0.2Sds)DL + 1.0E AZI 1...	Y...	Y		1	.862	31	-.5	32	.866														
56	(0.9 - 0.2Sds)DL + 1.0E AZI 1...	Y...	Y		1	.862	31	-.8...	32	.5														
57	(0.9 - 0.2Sds)DL + 1.0E AZI 1...	Y...	Y		1	.862	31	-1	32															
58	(0.9 - 0.2Sds)DL + 1.0E AZI 2...	Y...	Y		1	.862	31	-.8...	32	-.5														
59	(0.9 - 0.2Sds)DL + 1.0E AZI 2...	Y...	Y		1	.862	31	-.5	32	-.8...														
60	(0.9 - 0.2Sds)DL + 1.0E AZI 2...	Y...	Y		1	.862	31		32	-1														
61	(0.9 - 0.2Sds)DL + 1.0E AZI 3...	Y...	Y		1	.862	31	.5	32	-.8...														
62	(0.9 - 0.2Sds)DL + 1.0E AZI 3...	Y...	Y		1	.862	31	.866	32	-.5														
63	1.0DL + 1.5LL + 1.0SWL (60 ...	Y...	Y		1	1	2	.23	14	.23	15		33	1.5										
64	1.0DL + 1.5LL + 1.0SWL (60 ...	Y...	Y		1	1	3	.23	14	.2	15	.115	33	1.5										
65	1.0DL + 1.5LL + 1.0SWL (60 ...	Y...	Y		1	1	4	.23	14	.115	15	.2	33	1.5										
66	1.0DL + 1.5LL + 1.0SWL (60 ...	Y...	Y		1	1	5	.23	14		15	.23	33	1.5										
67	1.0DL + 1.5LL + 1.0SWL (60 ...	Y...	Y		1	1	6	.23	14	-.1...	15	.2	33	1.5										
68	1.0DL + 1.5LL + 1.0SWL (60 ...	Y...	Y		1	1	7	.23	14	-.2	15	.115	33	1.5										
69	1.0DL + 1.5LL + 1.0SWL (60 ...	Y...	Y		1	1	8	.23	14	-.23	15		33	1.5										
70	1.0DL + 1.5LL + 1.0SWL (60 ...	Y...	Y		1	1	9	.23	14	-.2	15	-.1...	33	1.5										
71	1.0DL + 1.5LL + 1.0SWL (60 ...	Y...	Y		1	1	10	.23	14	-.1...	15	-.2	33	1.5										
72	1.0DL + 1.5LL + 1.0SWL (60 ...	Y...	Y		1	1	11	.23	14		15	-.23	33	1.5										
73	1.0DL + 1.5LL + 1.0SWL (60 ...	Y...	Y		1	1	12	.23	14	.115	15	-.2	33	1.5										

Load Combinations (Continued)

	Description	S...	P...	S...	B...	Fa...	B...	Fa...	B...	Fa...	B...	Fa...	B...	Fa...	B...	Fa...	B...	Fa...	B...	Fa...	B...	Fa...	B...	Fa...
74	1.0DL + 1.5LL + 1.0SWL (60 ...	Y...	Y		1	1	13	.23	14	.2	15	-.1...	33	1.5										
75	1.2DL + 1.5LL	Y...	Y		1	1.2	33	1.5																
76	1.2DL + 1.5LM-MP1 + 1SWL (...	Y...	Y		1	1.2	34	1.5	2	.058	14	.058	15											
77	1.2DL + 1.5LM-MP1 + 1SWL (...	Y...	Y		1	1.2	34	1.5	3	.058	14	.05	15	.029										
78	1.2DL + 1.5LM-MP1 + 1SWL (...	Y...	Y		1	1.2	34	1.5	4	.058	14	.029	15	.05										
79	1.2DL + 1.5LM-MP1 + 1SWL (...	Y...	Y		1	1.2	34	1.5	5	.058	14		15	.058										
80	1.2DL + 1.5LM-MP1 + 1SWL (...	Y...	Y		1	1.2	34	1.5	6	.058	14	-.0...	15	.05										
81	1.2DL + 1.5LM-MP1 + 1SWL (...	Y...	Y		1	1.2	34	1.5	7	.058	14	-.05	15	.029										
82	1.2DL + 1.5LM-MP1 + 1SWL (...	Y...	Y		1	1.2	34	1.5	8	.058	14	-.0...	15											
83	1.2DL + 1.5LM-MP1 + 1SWL (...	Y...	Y		1	1.2	34	1.5	9	.058	14	-.05	15	-.0...										
84	1.2DL + 1.5LM-MP1 + 1SWL (...	Y...	Y		1	1.2	34	1.5	10	.058	14	-.0...	15	-.05										
85	1.2DL + 1.5LM-MP1 + 1SWL (...	Y...	Y		1	1.2	34	1.5	11	.058	14		15	-.0...										
86	1.2DL + 1.5LM-MP1 + 1SWL (...	Y...	Y		1	1.2	34	1.5	12	.058	14	.029	15	-.05										
87	1.2DL + 1.5LM-MP1 + 1SWL (...	Y...	Y		1	1.2	34	1.5	13	.058	14	.05	15	-.0...										
88	1.2DL + 1.5LM-MP2 + 1SWL (...	Y...	Y		1	1.2	35	1.5	2	.058	14	.058	15											
89	1.2DL + 1.5LM-MP2 + 1SWL (...	Y...	Y		1	1.2	35	1.5	3	.058	14	.05	15	.029										
90	1.2DL + 1.5LM-MP2 + 1SWL (...	Y...	Y		1	1.2	35	1.5	4	.058	14	.029	15	.05										
91	1.2DL + 1.5LM-MP2 + 1SWL (...	Y...	Y		1	1.2	35	1.5	5	.058	14		15	.058										
92	1.2DL + 1.5LM-MP2 + 1SWL (...	Y...	Y		1	1.2	35	1.5	6	.058	14	-.0...	15	.05										
93	1.2DL + 1.5LM-MP2 + 1SWL (...	Y...	Y		1	1.2	35	1.5	7	.058	14	-.05	15	.029										
94	1.2DL + 1.5LM-MP2 + 1SWL (...	Y...	Y		1	1.2	35	1.5	8	.058	14	-.0...	15											
95	1.2DL + 1.5LM-MP2 + 1SWL (...	Y...	Y		1	1.2	35	1.5	9	.058	14	-.05	15	-.0...										
96	1.2DL + 1.5LM-MP2 + 1SWL (...	Y...	Y		1	1.2	35	1.5	10	.058	14	-.0...	15	-.05										
97	1.2DL + 1.5LM-MP2 + 1SWL (...	Y...	Y		1	1.2	35	1.5	11	.058	14		15	-.0...										
98	1.2DL + 1.5LM-MP2 + 1SWL (...	Y...	Y		1	1.2	35	1.5	12	.058	14	.029	15	-.05										
99	1.2DL + 1.5LM-MP2 + 1SWL (...	Y...	Y		1	1.2	35	1.5	13	.058	14	.05	15	-.0...										
100	1.2DL + 1.5LM-MP3 + 1SWL (...	Y...	Y		1	1.2	36	1.5	2	.058	14	.058	15											
101	1.2DL + 1.5LM-MP3 + 1SWL (...	Y...	Y		1	1.2	36	1.5	3	.058	14	.05	15	.029										
102	1.2DL + 1.5LM-MP3 + 1SWL (...	Y...	Y		1	1.2	36	1.5	4	.058	14	.029	15	.05										
103	1.2DL + 1.5LM-MP3 + 1SWL (...	Y...	Y		1	1.2	36	1.5	5	.058	14		15	.058										
104	1.2DL + 1.5LM-MP3 + 1SWL (...	Y...	Y		1	1.2	36	1.5	6	.058	14	-.0...	15	.05										
105	1.2DL + 1.5LM-MP3 + 1SWL (...	Y...	Y		1	1.2	36	1.5	7	.058	14	-.05	15	.029										
106	1.2DL + 1.5LM-MP3 + 1SWL (...	Y...	Y		1	1.2	36	1.5	8	.058	14	-.0...	15											
107	1.2DL + 1.5LM-MP3 + 1SWL (...	Y...	Y		1	1.2	36	1.5	9	.058	14	-.05	15	-.0...										
108	1.2DL + 1.5LM-MP3 + 1SWL (...	Y...	Y		1	1.2	36	1.5	10	.058	14	-.0...	15	-.05										
109	1.2DL + 1.5LM-MP3 + 1SWL (...	Y...	Y		1	1.2	36	1.5	11	.058	14		15	-.0...										
110	1.2DL + 1.5LM-MP3 + 1SWL (...	Y...	Y		1	1.2	36	1.5	12	.058	14	.029	15	-.05										
111	1.2DL + 1.5LM-MP3 + 1SWL (...	Y...	Y		1	1.2	36	1.5	13	.058	14	.05	15	-.0...										
112	1.2DL + 1.5LM-MP4 + 1SWL (...	Y...	Y		1	1.2	37	1.5	2	.058	14	.058	15											
113	1.2DL + 1.5LM-MP4 + 1SWL (...	Y...	Y		1	1.2	37	1.5	3	.058	14	.05	15	.029										
114	1.2DL + 1.5LM-MP4 + 1SWL (...	Y...	Y		1	1.2	37	1.5	4	.058	14	.029	15	.05										
115	1.2DL + 1.5LM-MP4 + 1SWL (...	Y...	Y		1	1.2	37	1.5	5	.058	14		15	.058										

Load Combinations (Continued)

	Description	S...	P...	S...	B...	Fa...	B...	Fa...	B...	Fa...	B...	Fa...	B...	Fa...	B...	Fa...	B...	Fa...	B...	Fa...	B...	Fa...	B...	Fa...
116	1.2DL + 1.5LM-MP4 + 1SWL (...	Y...	Y		1	1.2	37	1.5	6	.058	14	-.0...	15	.05										
117	1.2DL + 1.5LM-MP4 + 1SWL (...	Y...	Y		1	1.2	37	1.5	7	.058	14	-.05	15	.029										
118	1.2DL + 1.5LM-MP4 + 1SWL (...	Y...	Y		1	1.2	37	1.5	8	.058	14	-.0...	15											
119	1.2DL + 1.5LM-MP4 + 1SWL (...	Y...	Y		1	1.2	37	1.5	9	.058	14	-.05	15	-.0...										
120	1.2DL + 1.5LM-MP4 + 1SWL (...	Y...	Y		1	1.2	37	1.5	10	.058	14	-.0...	15	-.05										
121	1.2DL + 1.5LM-MP4 + 1SWL (...	Y...	Y		1	1.2	37	1.5	11	.058	14		15	-.0...										
122	1.2DL + 1.5LM-MP4 + 1SWL (...	Y...	Y		1	1.2	37	1.5	12	.058	14	.029	15	-.05										
123	1.2DL + 1.5LM-MP4 + 1SWL (...	Y...	Y		1	1.2	37	1.5	13	.058	14	.05	15	-.0...										
124	1.2DL + 1.5LM-MP5 + 1SWL (...	Y...	Y		1	1.2	38	1.5	2	.058	14	.058	15											
125	1.2DL + 1.5LM-MP5 + 1SWL (...	Y...	Y		1	1.2	38	1.5	3	.058	14	.05	15	.029										
126	1.2DL + 1.5LM-MP5 + 1SWL (...	Y...	Y		1	1.2	38	1.5	4	.058	14	.029	15	.05										
127	1.2DL + 1.5LM-MP5 + 1SWL (...	Y...	Y		1	1.2	38	1.5	5	.058	14		15	.058										
128	1.2DL + 1.5LM-MP5 + 1SWL (...	Y...	Y		1	1.2	38	1.5	6	.058	14	-.0...	15	.05										
129	1.2DL + 1.5LM-MP5 + 1SWL (...	Y...	Y		1	1.2	38	1.5	7	.058	14	-.05	15	.029										
130	1.2DL + 1.5LM-MP5 + 1SWL (...	Y...	Y		1	1.2	38	1.5	8	.058	14	-.0...	15											
131	1.2DL + 1.5LM-MP5 + 1SWL (...	Y...	Y		1	1.2	38	1.5	9	.058	14	-.05	15	-.0...										
132	1.2DL + 1.5LM-MP5 + 1SWL (...	Y...	Y		1	1.2	38	1.5	10	.058	14	-.0...	15	-.05										
133	1.2DL + 1.5LM-MP5 + 1SWL (...	Y...	Y		1	1.2	38	1.5	11	.058	14		15	-.0...										
134	1.2DL + 1.5LM-MP5 + 1SWL (...	Y...	Y		1	1.2	38	1.5	12	.058	14	.029	15	-.05										
135	1.2DL + 1.5LM-MP5 + 1SWL (...	Y...	Y		1	1.2	38	1.5	13	.058	14	.05	15	-.0...										
136	1.2DL + 1.5LM-MP6 + 1SWL (...	Y...	Y		1	1.2	39	1.5	2	.058	14	.058	15											
137	1.2DL + 1.5LM-MP6 + 1SWL (...	Y...	Y		1	1.2	39	1.5	3	.058	14	.05	15	.029										
138	1.2DL + 1.5LM-MP6 + 1SWL (...	Y...	Y		1	1.2	39	1.5	4	.058	14	.029	15	.05										
139	1.2DL + 1.5LM-MP6 + 1SWL (...	Y...	Y		1	1.2	39	1.5	5	.058	14		15	.058										
140	1.2DL + 1.5LM-MP6 + 1SWL (...	Y...	Y		1	1.2	39	1.5	6	.058	14	-.0...	15	.05										
141	1.2DL + 1.5LM-MP6 + 1SWL (...	Y...	Y		1	1.2	39	1.5	7	.058	14	-.05	15	.029										
142	1.2DL + 1.5LM-MP6 + 1SWL (...	Y...	Y		1	1.2	39	1.5	8	.058	14	-.0...	15											
143	1.2DL + 1.5LM-MP6 + 1SWL (...	Y...	Y		1	1.2	39	1.5	9	.058	14	-.05	15	-.0...										
144	1.2DL + 1.5LM-MP6 + 1SWL (...	Y...	Y		1	1.2	39	1.5	10	.058	14	-.0...	15	-.05										
145	1.2DL + 1.5LM-MP6 + 1SWL (...	Y...	Y		1	1.2	39	1.5	11	.058	14		15	-.0...										
146	1.2DL + 1.5LM-MP6 + 1SWL (...	Y...	Y		1	1.2	39	1.5	12	.058	14	.029	15	-.05										
147	1.2DL + 1.5LM-MP6 + 1SWL (...	Y...	Y		1	1.2	39	1.5	13	.058	14	.05	15	-.0...										
148	1.2DL + 1.5LM-MP7 + 1SWL (...	Y...	Y		1	1.2	40	1.5	2	.058	14	.058	15											
149	1.2DL + 1.5LM-MP7 + 1SWL (...	Y...	Y		1	1.2	40	1.5	3	.058	14	.05	15	.029										
150	1.2DL + 1.5LM-MP7 + 1SWL (...	Y...	Y		1	1.2	40	1.5	4	.058	14	.029	15	.05										
151	1.2DL + 1.5LM-MP7 + 1SWL (...	Y...	Y		1	1.2	40	1.5	5	.058	14		15	.058										
152	1.2DL + 1.5LM-MP7 + 1SWL (...	Y...	Y		1	1.2	40	1.5	6	.058	14	-.0...	15	.05										
153	1.2DL + 1.5LM-MP7 + 1SWL (...	Y...	Y		1	1.2	40	1.5	7	.058	14	-.05	15	.029										
154	1.2DL + 1.5LM-MP7 + 1SWL (...	Y...	Y		1	1.2	40	1.5	8	.058	14	-.0...	15											
155	1.2DL + 1.5LM-MP7 + 1SWL (...	Y...	Y		1	1.2	40	1.5	9	.058	14	-.05	15	-.0...										
156	1.2DL + 1.5LM-MP7 + 1SWL (...	Y...	Y		1	1.2	40	1.5	10	.058	14	-.0...	15	-.05										
157	1.2DL + 1.5LM-MP7 + 1SWL (...	Y...	Y		1	1.2	40	1.5	11	.058	14		15	-.0...										

Load Combinations (Continued)

	Description	S...	P...	S...	B...	Fa...	B...	Fa...	B...	Fa...	B...	Fa...	B...	Fa...	B...	Fa...	B...	Fa...	B...	Fa...	B...	Fa...	B...	Fa...
158	1.2DL + 1.5LM-MP7 + 1SWL (...	Y...	Y		1	1.2	40	1.5	12	.058	14	.029	15	-.05										
159	1.2DL + 1.5LM-MP7 + 1SWL (...	Y...	Y		1	1.2	40	1.5	13	.058	14	.05	15	-.0...										
160	1.2DL + 1.5LM-MP8 + 1SWL (...	Y...	Y		1	1.2	41	1.5	2	.058	14	.058	15											
161	1.2DL + 1.5LM-MP8 + 1SWL (...	Y...	Y		1	1.2	41	1.5	3	.058	14	.05	15	.029										
162	1.2DL + 1.5LM-MP8 + 1SWL (...	Y...	Y		1	1.2	41	1.5	4	.058	14	.029	15	.05										
163	1.2DL + 1.5LM-MP8 + 1SWL (...	Y...	Y		1	1.2	41	1.5	5	.058	14		15	.058										
164	1.2DL + 1.5LM-MP8 + 1SWL (...	Y...	Y		1	1.2	41	1.5	6	.058	14	-.0...	15	.05										
165	1.2DL + 1.5LM-MP8 + 1SWL (...	Y...	Y		1	1.2	41	1.5	7	.058	14	-.05	15	.029										
166	1.2DL + 1.5LM-MP8 + 1SWL (...	Y...	Y		1	1.2	41	1.5	8	.058	14	-.0...	15											
167	1.2DL + 1.5LM-MP8 + 1SWL (...	Y...	Y		1	1.2	41	1.5	9	.058	14	-.05	15	-.0...										
168	1.2DL + 1.5LM-MP8 + 1SWL (...	Y...	Y		1	1.2	41	1.5	10	.058	14	-.0...	15	-.05										
169	1.2DL + 1.5LM-MP8 + 1SWL (...	Y...	Y		1	1.2	41	1.5	11	.058	14		15	-.0...										
170	1.2DL + 1.5LM-MP8 + 1SWL (...	Y...	Y		1	1.2	41	1.5	12	.058	14	.029	15	-.05										
171	1.2DL + 1.5LM-MP8 + 1SWL (...	Y...	Y		1	1.2	41	1.5	13	.058	14	.05	15	-.0...										
172	1.2DL + 1.5LM-MP9 + 1SWL (...	Y...	Y		1	1.2	42	1.5	2	.058	14	.058	15											
173	1.2DL + 1.5LM-MP9 + 1SWL (...	Y...	Y		1	1.2	42	1.5	3	.058	14	.05	15	.029										
174	1.2DL + 1.5LM-MP9 + 1SWL (...	Y...	Y		1	1.2	42	1.5	4	.058	14	.029	15	.05										
175	1.2DL + 1.5LM-MP9 + 1SWL (...	Y...	Y		1	1.2	42	1.5	5	.058	14		15	.058										
176	1.2DL + 1.5LM-MP9 + 1SWL (...	Y...	Y		1	1.2	42	1.5	6	.058	14	-.0...	15	.05										
177	1.2DL + 1.5LM-MP9 + 1SWL (...	Y...	Y		1	1.2	42	1.5	7	.058	14	-.05	15	.029										
178	1.2DL + 1.5LM-MP9 + 1SWL (...	Y...	Y		1	1.2	42	1.5	8	.058	14	-.0...	15											
179	1.2DL + 1.5LM-MP9 + 1SWL (...	Y...	Y		1	1.2	42	1.5	9	.058	14	-.05	15	-.0...										
180	1.2DL + 1.5LM-MP9 + 1SWL (...	Y...	Y		1	1.2	42	1.5	10	.058	14	-.0...	15	-.05										
181	1.2DL + 1.5LM-MP9 + 1SWL (...	Y...	Y		1	1.2	42	1.5	11	.058	14		15	-.0...										
182	1.2DL + 1.5LM-MP9 + 1SWL (...	Y...	Y		1	1.2	42	1.5	12	.058	14	.029	15	-.05										

Joint Boundary Conditions

	Joint Label	X [k/in]	Y [k/in]	Z [k/in]	X Rot.[k-ft/rad]	Y Rot.[k-ft/rad]	Z Rot.[k-ft/rad]
1	P24	Reaction	Reaction	Reaction	Reaction	Reaction	Reaction
2	P13	Reaction	Reaction	Reaction	Reaction	Reaction	Reaction
3	P1	Reaction	Reaction	Reaction	Reaction	Reaction	Reaction

Envelope Joint Reactions

	Joint		X [lb]	LC	Y [lb]	LC	Z [lb]	LC	MX [lb-ft]	LC	MY [lb-ft]	LC	MZ [lb-ft]	LC
1	P24	...	1099.984	6	2644.8...	35	1691.1...	2	1149.3...	16	2161.134	19	4734	35
2		...	-1081.597	24	-635.5...	16	-1683.3...	19	-4209.07	35	-2176.872	13	-1996.924	16
3	P13	...	1283.587	4	2902.6...	31	1680.2...	15	1112.3...	24	2288.604	15	1877.778	24
4		...	-1282.95	22	-578.9...	24	-1686.5...	9	-2820.7...	92	-2333.711	9	-6654.375	31
5	P1	...	1676.954	17	2692.5...	27	873.331	2	6491.8...	27	1899.085	11	1583.633	115

Envelope Joint Reactions (Continued)

	Joint		X [lb]	LC	Y [lb]	LC	Z [lb]	LC	MX [lb-ft]	LC	MY [lb-ft]	LC	MZ [lb-ft]	LC
6		...	-1696.129	11	-655.8...	20	-881.124	8	-2367.4...	20	-1847.481	17	-865.421	157
7	Totals:	...	3855.764	5	7433.2...	34	4083.8...	14						
8		...	-3855.756	23	1534.0...	53	-4083.8...	8						

Member Point Loads (BLC 1 : Self Weight)

	Member Label	Direction	Magnitude[lb,lb-ft]	Location[in,%]
1	MP1	Y	-32.25	0
2	MP1	Y	-32.25	72
3	MP1	Y	-74.95	12
4	MP1	Y	-63.93	12
5	MP1	Y	-21.85	48
6	MP4	Y	-32.25	0
7	MP4	Y	-32.25	72
8	MP4	Y	-74.95	12
9	MP4	Y	-63.93	12
10	MP7	Y	-32.25	0
11	MP7	Y	-32.25	72
12	MP7	Y	-74.95	12
13	MP7	Y	-63.93	12

Member Point Loads (BLC 2 : Wind Load AZI 0)

	Member Label	Direction	Magnitude[lb,lb-ft]	Location[in,%]
1	MP1	X	0	0
2	MP1	Z	-174.36	0
3	MP1	X	0	72
4	MP1	Z	-174.36	72
5	MP1	X	0	12
6	MP1	Z	-85.48	12
7	MP1	X	0	12
8	MP1	Z	-85.48	12
9	MP1	X	0	48
10	MP1	Z	-81.27	48
11	MP4	X	0	0
12	MP4	Z	-96	0
13	MP4	X	0	72
14	MP4	Z	-96	72
15	MP4	X	0	12
16	MP4	Z	-60.2	12
17	MP4	X	0	12
18	MP4	Z	-55.1	12

Member Point Loads (BLC 2 : Wind Load AZI 0) (Continued)

	Member Label	Direction	Magnitude[lb,lb-ft]	Location[in,%]
19	MP7	X	0	0
20	MP7	Z	-96	0
21	MP7	X	0	72
22	MP7	Z	-96	72
23	MP7	X	0	12
24	MP7	Z	-60.2	12
25	MP7	X	0	12
26	MP7	Z	-55.1	12

Member Point Loads (BLC 3 : Wind Load AZI 30)

	Member Label	Direction	Magnitude[lb,lb-ft]	Location[in,%]
1	MP1	X	-74.12	0
2	MP1	Z	-128.38	0
3	MP1	X	-74.12	72
4	MP1	Z	-128.38	72
5	MP1	X	-38.53	12
6	MP1	Z	-66.73	12
7	MP1	X	-37.68	12
8	MP1	Z	-65.26	12
9	MP1	X	-36.28	48
10	MP1	Z	-62.84	48
11	MP4	X	-74.12	0
12	MP4	Z	-128.38	0
13	MP4	X	-74.12	72
14	MP4	Z	-128.38	72
15	MP4	X	-38.53	12
16	MP4	Z	-66.73	12
17	MP4	X	-37.68	12
18	MP4	Z	-65.26	12
19	MP7	X	-34.94	0
20	MP7	Z	-60.51	0
21	MP7	X	-34.94	72
22	MP7	Z	-60.51	72
23	MP7	X	-25.89	12
24	MP7	Z	-44.83	12
25	MP7	X	-22.49	12
26	MP7	Z	-38.95	12

Member Point Loads (BLC 4 : Wind Load AZI 60)

	Member Label	Direction	Magnitude[lb,lb-ft]	Location[in,%]
1	MP1	X	-83.14	0

Member Point Loads (BLC 4 : Wind Load AZI 60) (Continued)

	Member Label	Direction	Magnitude[lb,lb-ft]	Location[in,%]
2	MP1	Z	-48	0
3	MP1	X	-83.14	72
4	MP1	Z	-48	72
5	MP1	X	-52.13	12
6	MP1	Z	-30.1	12
7	MP1	X	-47.72	12
8	MP1	Z	-27.55	12
9	MP1	X	-47.76	48
10	MP1	Z	-27.57	48
11	MP4	X	-151	0
12	MP4	Z	-87.18	0
13	MP4	X	-151	72
14	MP4	Z	-87.18	72
15	MP4	X	-74.03	12
16	MP4	Z	-42.74	12
17	MP4	X	-74.03	12
18	MP4	Z	-42.74	12
19	MP7	X	-83.14	0
20	MP7	Z	-48	0
21	MP7	X	-83.14	72
22	MP7	Z	-48	72
23	MP7	X	-52.13	12
24	MP7	Z	-30.1	12
25	MP7	X	-47.72	12
26	MP7	Z	-27.55	12

Member Point Loads (BLC 5 : Wind Load AZI 90)

	Member Label	Direction	Magnitude[lb,lb-ft]	Location[in,%]
1	MP1	X	-69.88	0
2	MP1	Z	0	0
3	MP1	X	-69.88	72
4	MP1	Z	0	72
5	MP1	X	-51.77	12
6	MP1	Z	0	12
7	MP1	X	-44.97	12
8	MP1	Z	0	12
9	MP1	X	-46.44	48
10	MP1	Z	0	48
11	MP4	X	-148.24	0
12	MP4	Z	0	0
13	MP4	X	-148.24	72
14	MP4	Z	0	72

Member Point Loads (BLC 5 : Wind Load AZI 90) (Continued)

	Member Label	Direction	Magnitude[lb,lb-ft]	Location[in,%]
15	MP4	X	-77.06	12
16	MP4	Z	0	12
17	MP4	X	-75.36	12
18	MP4	Z	0	12
19	MP7	X	-148.24	0
20	MP7	Z	0	0
21	MP7	X	-148.24	72
22	MP7	Z	0	72
23	MP7	X	-77.06	12
24	MP7	Z	0	12
25	MP7	X	-75.36	12
26	MP7	Z	0	12

Member Point Loads (BLC 6 : Wind Load AZI 120)

	Member Label	Direction	Magnitude[lb,lb-ft]	Location[in,%]
1	MP1	X	-83.14	0
2	MP1	Z	48	0
3	MP1	X	-83.14	72
4	MP1	Z	48	72
5	MP1	X	-52.13	12
6	MP1	Z	30.1	12
7	MP1	X	-47.72	12
8	MP1	Z	27.55	12
9	MP1	X	-47.76	48
10	MP1	Z	27.57	48
11	MP4	X	-83.14	0
12	MP4	Z	48	0
13	MP4	X	-83.14	72
14	MP4	Z	48	72
15	MP4	X	-52.13	12
16	MP4	Z	30.1	12
17	MP4	X	-47.72	12
18	MP4	Z	27.55	12
19	MP7	X	-151	0
20	MP7	Z	87.18	0
21	MP7	X	-151	72
22	MP7	Z	87.18	72
23	MP7	X	-74.03	12
24	MP7	Z	42.74	12
25	MP7	X	-74.03	12
26	MP7	Z	42.74	12

Member Point Loads (BLC 7 : Wind Load AZI 150)

	Member Label	Direction	Magnitude[lb,lb-ft]	Location[in,%]
1	MP1	X	-74.12	0
2	MP1	Z	128.38	0
3	MP1	X	-74.12	72
4	MP1	Z	128.38	72
5	MP1	X	-38.53	12
6	MP1	Z	66.73	12
7	MP1	X	-37.68	12
8	MP1	Z	65.26	12
9	MP1	X	-36.28	48
10	MP1	Z	62.84	48
11	MP4	X	-34.94	0
12	MP4	Z	60.51	0
13	MP4	X	-34.94	72
14	MP4	Z	60.51	72
15	MP4	X	-25.89	12
16	MP4	Z	44.83	12
17	MP4	X	-22.49	12
18	MP4	Z	38.95	12
19	MP7	X	-74.12	0
20	MP7	Z	128.38	0
21	MP7	X	-74.12	72
22	MP7	Z	128.38	72
23	MP7	X	-38.53	12
24	MP7	Z	66.73	12
25	MP7	X	-37.68	12
26	MP7	Z	65.26	12

Member Point Loads (BLC 8 : Wind Load AZI 180)

	Member Label	Direction	Magnitude[lb,lb-ft]	Location[in,%]
1	MP1	X	0	0
2	MP1	Z	174.36	0
3	MP1	X	0	72
4	MP1	Z	174.36	72
5	MP1	X	0	12
6	MP1	Z	85.48	12
7	MP1	X	0	12
8	MP1	Z	85.48	12
9	MP1	X	0	48
10	MP1	Z	81.27	48
11	MP4	X	0	0
12	MP4	Z	96	0
13	MP4	X	0	72

Member Point Loads (BLC 8 : Wind Load AZI 180) (Continued)

	Member Label	Direction	Magnitude[lb,lb-ft]	Location[in,%]
14	MP4	Z	96	72
15	MP4	X	0	12
16	MP4	Z	60.2	12
17	MP4	X	0	12
18	MP4	Z	55.1	12
19	MP7	X	0	0
20	MP7	Z	96	0
21	MP7	X	0	72
22	MP7	Z	96	72
23	MP7	X	0	12
24	MP7	Z	60.2	12
25	MP7	X	0	12
26	MP7	Z	55.1	12

Member Point Loads (BLC 9 : Wind Load AZI 210)

	Member Label	Direction	Magnitude[lb,lb-ft]	Location[in,%]
1	MP1	X	74.12	0
2	MP1	Z	128.38	0
3	MP1	X	74.12	72
4	MP1	Z	128.38	72
5	MP1	X	38.53	12
6	MP1	Z	66.73	12
7	MP1	X	37.68	12
8	MP1	Z	65.26	12
9	MP1	X	36.28	48
10	MP1	Z	62.84	48
11	MP4	X	74.12	0
12	MP4	Z	128.38	0
13	MP4	X	74.12	72
14	MP4	Z	128.38	72
15	MP4	X	38.53	12
16	MP4	Z	66.73	12
17	MP4	X	37.68	12
18	MP4	Z	65.26	12
19	MP7	X	34.94	0
20	MP7	Z	60.51	0
21	MP7	X	34.94	72
22	MP7	Z	60.51	72
23	MP7	X	25.89	12
24	MP7	Z	44.83	12
25	MP7	X	22.49	12
26	MP7	Z	38.95	12

Member Point Loads (BLC 10 : Wind Load AZI 240)

	Member Label	Direction	Magnitude[lb,lb-ft]	Location[in,%]
1	MP1	X	83.14	0
2	MP1	Z	48	0
3	MP1	X	83.14	72
4	MP1	Z	48	72
5	MP1	X	52.13	12
6	MP1	Z	30.1	12
7	MP1	X	47.72	12
8	MP1	Z	27.55	12
9	MP1	X	47.76	48
10	MP1	Z	27.57	48
11	MP4	X	151	0
12	MP4	Z	87.18	0
13	MP4	X	151	72
14	MP4	Z	87.18	72
15	MP4	X	74.03	12
16	MP4	Z	42.74	12
17	MP4	X	74.03	12
18	MP4	Z	42.74	12
19	MP7	X	83.14	0
20	MP7	Z	48	0
21	MP7	X	83.14	72
22	MP7	Z	48	72
23	MP7	X	52.13	12
24	MP7	Z	30.1	12
25	MP7	X	47.72	12
26	MP7	Z	27.55	12

Member Point Loads (BLC 11 : Wind Load AZI 270)

	Member Label	Direction	Magnitude[lb,lb-ft]	Location[in,%]
1	MP1	X	69.88	0
2	MP1	Z	0	0
3	MP1	X	69.88	72
4	MP1	Z	0	72
5	MP1	X	51.77	12
6	MP1	Z	0	12
7	MP1	X	44.97	12
8	MP1	Z	0	12
9	MP1	X	46.44	48
10	MP1	Z	0	48
11	MP4	X	148.24	0
12	MP4	Z	0	0
13	MP4	X	148.24	72

Member Point Loads (BLC 11 : Wind Load AZI 270) (Continued)

	Member Label	Direction	Magnitude[lb,lb-ft]	Location[in,%]
14	MP4	Z	0	72
15	MP4	X	77.06	12
16	MP4	Z	0	12
17	MP4	X	75.36	12
18	MP4	Z	0	12
19	MP7	X	148.24	0
20	MP7	Z	0	0
21	MP7	X	148.24	72
22	MP7	Z	0	72
23	MP7	X	77.06	12
24	MP7	Z	0	12
25	MP7	X	75.36	12
26	MP7	Z	0	12

Member Point Loads (BLC 12 : Wind Load AZI 300)

	Member Label	Direction	Magnitude[lb,lb-ft]	Location[in,%]
1	MP1	X	83.14	0
2	MP1	Z	-48	0
3	MP1	X	83.14	72
4	MP1	Z	-48	72
5	MP1	X	52.13	12
6	MP1	Z	-30.1	12
7	MP1	X	47.72	12
8	MP1	Z	-27.55	12
9	MP1	X	47.76	48
10	MP1	Z	-27.57	48
11	MP4	X	83.14	0
12	MP4	Z	-48	0
13	MP4	X	83.14	72
14	MP4	Z	-48	72
15	MP4	X	52.13	12
16	MP4	Z	-30.1	12
17	MP4	X	47.72	12
18	MP4	Z	-27.55	12
19	MP7	X	151	0
20	MP7	Z	-87.18	0
21	MP7	X	151	72
22	MP7	Z	-87.18	72
23	MP7	X	74.03	12
24	MP7	Z	-42.74	12
25	MP7	X	74.03	12
26	MP7	Z	-42.74	12

Member Point Loads (BLC 13 : Wind Load AZI 330)

	Member Label	Direction	Magnitude[lb,lb-ft]	Location[in,%]
1	MP1	X	74.12	0
2	MP1	Z	-128.38	0
3	MP1	X	74.12	72
4	MP1	Z	-128.38	72
5	MP1	X	38.53	12
6	MP1	Z	-66.73	12
7	MP1	X	37.68	12
8	MP1	Z	-65.26	12
9	MP1	X	36.28	48
10	MP1	Z	-62.84	48
11	MP4	X	34.94	0
12	MP4	Z	-60.51	0
13	MP4	X	34.94	72
14	MP4	Z	-60.51	72
15	MP4	X	25.89	12
16	MP4	Z	-44.83	12
17	MP4	X	22.49	12
18	MP4	Z	-38.95	12
19	MP7	X	74.12	0
20	MP7	Z	-128.38	0
21	MP7	X	74.12	72
22	MP7	Z	-128.38	72
23	MP7	X	38.53	12
24	MP7	Z	-66.73	12
25	MP7	X	37.68	12
26	MP7	Z	-65.26	12

Member Point Loads (BLC 16 : Ice Weight)

	Member Label	Direction	Magnitude[lb,lb-ft]	Location[in,%]
1	MP1	Y	-192.921	0
2	MP1	Y	-192.921	72
3	MP1	Y	-103.969	12
4	MP1	Y	-97.859	12
5	MP1	Y	-95.538	48
6	MP4	Y	-192.921	0
7	MP4	Y	-192.921	72
8	MP4	Y	-103.969	12
9	MP4	Y	-97.859	12
10	MP7	Y	-192.921	0
11	MP7	Y	-192.921	72
12	MP7	Y	-103.969	12
13	MP7	Y	-97.859	12

Member Point Loads (BLC 17 : Ice Wind Load AZI 0)

	Member Label	Direction	Magnitude[lb,lb-ft]	Location[in,%]
1	MP1	X	0	0
2	MP1	Z	-23.29	0
3	MP1	X	0	72
4	MP1	Z	-23.29	72
5	MP1	X	0	12
6	MP1	Z	-9.53	12
7	MP1	X	0	12
8	MP1	Z	-9.53	12
9	MP1	X	0	48
10	MP1	Z	-9.17	48
11	MP4	X	0	0
12	MP4	Z	-17.19	0
13	MP4	X	0	72
14	MP4	Z	-17.19	72
15	MP4	X	0	12
16	MP4	Z	-7.88	12
17	MP4	X	0	12
18	MP4	Z	-7.63	12
19	MP7	X	0	0
20	MP7	Z	-17.19	0
21	MP7	X	0	72
22	MP7	Z	-17.19	72
23	MP7	X	0	12
24	MP7	Z	-7.88	12
25	MP7	X	0	12
26	MP7	Z	-7.63	12

Member Point Loads (BLC 18 : Ice Wind Load AZI 30)

	Member Label	Direction	Magnitude[lb,lb-ft]	Location[in,%]
1	MP1	X	-10.63	0
2	MP1	Z	-18.41	0
3	MP1	X	-10.63	72
4	MP1	Z	-18.41	72
5	MP1	X	-4.49	12
6	MP1	Z	-7.78	12
7	MP1	X	-4.45	12
8	MP1	Z	-7.7	12
9	MP1	X	-4.33	48
10	MP1	Z	-7.5	48
11	MP4	X	-10.63	0
12	MP4	Z	-18.41	0
13	MP4	X	-10.63	72

Member Point Loads (BLC 18 : Ice Wind Load AZI 30) (Continued)

	Member Label	Direction	Magnitude[lb,lb-ft]	Location[in,%]
14	MP4	Z	-18.41	72
15	MP4	X	-4.49	12
16	MP4	Z	-7.78	12
17	MP4	X	-4.45	12
18	MP4	Z	-7.7	12
19	MP7	X	-7.58	0
20	MP7	Z	-13.12	0
21	MP7	X	-7.58	72
22	MP7	Z	-13.12	72
23	MP7	X	-3.67	12
24	MP7	Z	-6.35	12
25	MP7	X	-3.5	12
26	MP7	Z	-6.05	12

Member Point Loads (BLC 19 : Ice Wind Load AZI 60)

	Member Label	Direction	Magnitude[lb,lb-ft]	Location[in,%]
1	MP1	X	-14.89	0
2	MP1	Z	-8.59	0
3	MP1	X	-14.89	72
4	MP1	Z	-8.59	72
5	MP1	X	-6.82	12
6	MP1	Z	-3.94	12
7	MP1	X	-6.6	12
8	MP1	Z	-3.81	12
9	MP1	X	-6.61	48
10	MP1	Z	-3.82	48
11	MP4	X	-20.17	0
12	MP4	Z	-11.65	0
13	MP4	X	-20.17	72
14	MP4	Z	-11.65	72
15	MP4	X	-8.25	12
16	MP4	Z	-4.77	12
17	MP4	X	-8.25	12
18	MP4	Z	-4.77	12
19	MP7	X	-14.89	0
20	MP7	Z	-8.59	0
21	MP7	X	-14.89	72
22	MP7	Z	-8.59	72
23	MP7	X	-6.82	12
24	MP7	Z	-3.94	12
25	MP7	X	-6.6	12
26	MP7	Z	-3.81	12

Member Point Loads (BLC 20 : Ice Wind Load AZI 90)

	Member Label	Direction	Magnitude[lb,lb-ft]	Location[in,%]
1	MP1	X	-15.15	0
2	MP1	Z	0	0
3	MP1	X	-15.15	72
4	MP1	Z	0	72
5	MP1	X	-7.33	12
6	MP1	Z	0	12
7	MP1	X	-6.99	12
8	MP1	Z	0	12
9	MP1	X	-7.12	48
10	MP1	Z	0	48
11	MP4	X	-21.26	0
12	MP4	Z	0	0
13	MP4	X	-21.26	72
14	MP4	Z	0	72
15	MP4	X	-8.98	12
16	MP4	Z	0	12
17	MP4	X	-8.9	12
18	MP4	Z	0	12
19	MP7	X	-21.26	0
20	MP7	Z	0	0
21	MP7	X	-21.26	72
22	MP7	Z	0	72
23	MP7	X	-8.98	12
24	MP7	Z	0	12
25	MP7	X	-8.9	12
26	MP7	Z	0	12

Member Point Loads (BLC 21 : Ice Wind Load AZI 120)

	Member Label	Direction	Magnitude[lb,lb-ft]	Location[in,%]
1	MP1	X	-14.89	0
2	MP1	Z	8.59	0
3	MP1	X	-14.89	72
4	MP1	Z	8.59	72
5	MP1	X	-6.82	12
6	MP1	Z	3.94	12
7	MP1	X	-6.6	12
8	MP1	Z	3.81	12
9	MP1	X	-6.61	48
10	MP1	Z	3.82	48
11	MP4	X	-14.89	0
12	MP4	Z	8.59	0
13	MP4	X	-14.89	72

Member Point Loads (BLC 21 : Ice Wind Load AZI 120) (Continued)

	Member Label	Direction	Magnitude[lb,lb-ft]	Location[in,%]
14	MP4	Z	8.59	72
15	MP4	X	-6.82	12
16	MP4	Z	3.94	12
17	MP4	X	-6.6	12
18	MP4	Z	3.81	12
19	MP7	X	-20.17	0
20	MP7	Z	11.65	0
21	MP7	X	-20.17	72
22	MP7	Z	11.65	72
23	MP7	X	-8.25	12
24	MP7	Z	4.77	12
25	MP7	X	-8.25	12
26	MP7	Z	4.77	12

Member Point Loads (BLC 22 : Ice Wind Load AZI 150)

	Member Label	Direction	Magnitude[lb,lb-ft]	Location[in,%]
1	MP1	X	-10.63	0
2	MP1	Z	18.41	0
3	MP1	X	-10.63	72
4	MP1	Z	18.41	72
5	MP1	X	-4.49	12
6	MP1	Z	7.78	12
7	MP1	X	-4.45	12
8	MP1	Z	7.7	12
9	MP1	X	-4.33	48
10	MP1	Z	7.5	48
11	MP4	X	-7.58	0
12	MP4	Z	13.12	0
13	MP4	X	-7.58	72
14	MP4	Z	13.12	72
15	MP4	X	-3.67	12
16	MP4	Z	6.35	12
17	MP4	X	-3.5	12
18	MP4	Z	6.05	12
19	MP7	X	-10.63	0
20	MP7	Z	18.41	0
21	MP7	X	-10.63	72
22	MP7	Z	18.41	72
23	MP7	X	-4.49	12
24	MP7	Z	7.78	12
25	MP7	X	-4.45	12
26	MP7	Z	7.7	12

Member Point Loads (BLC 23 : Ice Wind Load AZI 180)

	Member Label	Direction	Magnitude[lb,lb-ft]	Location[in,%]
1	MP1	X	0	0
2	MP1	Z	23.29	0
3	MP1	X	0	72
4	MP1	Z	23.29	72
5	MP1	X	0	12
6	MP1	Z	9.53	12
7	MP1	X	0	12
8	MP1	Z	9.53	12
9	MP1	X	0	48
10	MP1	Z	9.17	48
11	MP4	X	0	0
12	MP4	Z	17.19	0
13	MP4	X	0	72
14	MP4	Z	17.19	72
15	MP4	X	0	12
16	MP4	Z	7.88	12
17	MP4	X	0	12
18	MP4	Z	7.63	12
19	MP7	X	0	0
20	MP7	Z	17.19	0
21	MP7	X	0	72
22	MP7	Z	17.19	72
23	MP7	X	0	12
24	MP7	Z	7.88	12
25	MP7	X	0	12
26	MP7	Z	7.63	12

Member Point Loads (BLC 24 : Ice Wind Load AZI 210)

	Member Label	Direction	Magnitude[lb,lb-ft]	Location[in,%]
1	MP1	X	10.63	0
2	MP1	Z	18.41	0
3	MP1	X	10.63	72
4	MP1	Z	18.41	72
5	MP1	X	4.49	12
6	MP1	Z	7.78	12
7	MP1	X	4.45	12
8	MP1	Z	7.7	12
9	MP1	X	4.33	48
10	MP1	Z	7.5	48
11	MP4	X	10.63	0
12	MP4	Z	18.41	0
13	MP4	X	10.63	72

Member Point Loads (BLC 24 : Ice Wind Load AZI 210) (Continued)

	Member Label	Direction	Magnitude[lb,lb-ft]	Location[in,%]
14	MP4	Z	18.41	72
15	MP4	X	4.49	12
16	MP4	Z	7.78	12
17	MP4	X	4.45	12
18	MP4	Z	7.7	12
19	MP7	X	7.58	0
20	MP7	Z	13.12	0
21	MP7	X	7.58	72
22	MP7	Z	13.12	72
23	MP7	X	3.67	12
24	MP7	Z	6.35	12
25	MP7	X	3.5	12
26	MP7	Z	6.05	12

Member Point Loads (BLC 25 : Ice Wind Load AZI 240)

	Member Label	Direction	Magnitude[lb,lb-ft]	Location[in,%]
1	MP1	X	14.89	0
2	MP1	Z	8.59	0
3	MP1	X	14.89	72
4	MP1	Z	8.59	72
5	MP1	X	6.82	12
6	MP1	Z	3.94	12
7	MP1	X	6.6	12
8	MP1	Z	3.81	12
9	MP1	X	6.61	48
10	MP1	Z	3.82	48
11	MP4	X	20.17	0
12	MP4	Z	11.65	0
13	MP4	X	20.17	72
14	MP4	Z	11.65	72
15	MP4	X	8.25	12
16	MP4	Z	4.77	12
17	MP4	X	8.25	12
18	MP4	Z	4.77	12
19	MP7	X	14.89	0
20	MP7	Z	8.59	0
21	MP7	X	14.89	72
22	MP7	Z	8.59	72
23	MP7	X	6.82	12
24	MP7	Z	3.94	12
25	MP7	X	6.6	12
26	MP7	Z	3.81	12

Member Point Loads (BLC 26 : Ice Wind Load AZI 270)

	Member Label	Direction	Magnitude[lb,lb-ft]	Location[in,%]
1	MP1	X	15.15	0
2	MP1	Z	0	0
3	MP1	X	15.15	72
4	MP1	Z	0	72
5	MP1	X	7.33	12
6	MP1	Z	0	12
7	MP1	X	6.99	12
8	MP1	Z	0	12
9	MP1	X	7.12	48
10	MP1	Z	0	48
11	MP4	X	21.26	0
12	MP4	Z	0	0
13	MP4	X	21.26	72
14	MP4	Z	0	72
15	MP4	X	8.98	12
16	MP4	Z	0	12
17	MP4	X	8.9	12
18	MP4	Z	0	12
19	MP7	X	21.26	0
20	MP7	Z	0	0
21	MP7	X	21.26	72
22	MP7	Z	0	72
23	MP7	X	8.98	12
24	MP7	Z	0	12
25	MP7	X	8.9	12
26	MP7	Z	0	12

Member Point Loads (BLC 27 : Ice Wind Load AZI 300)

	Member Label	Direction	Magnitude[lb,lb-ft]	Location[in,%]
1	MP1	X	14.89	0
2	MP1	Z	-8.59	0
3	MP1	X	14.89	72
4	MP1	Z	-8.59	72
5	MP1	X	6.82	12
6	MP1	Z	-3.94	12
7	MP1	X	6.6	12
8	MP1	Z	-3.81	12
9	MP1	X	6.61	48
10	MP1	Z	-3.82	48
11	MP4	X	14.89	0
12	MP4	Z	-8.59	0
13	MP4	X	14.89	72

Member Point Loads (BLC 27 : Ice Wind Load AZI 300) (Continued)

	Member Label	Direction	Magnitude[lb,lb-ft]	Location[in,%]
14	MP4	Z	-8.59	72
15	MP4	X	6.82	12
16	MP4	Z	-3.94	12
17	MP4	X	6.6	12
18	MP4	Z	-3.81	12
19	MP7	X	20.17	0
20	MP7	Z	-11.65	0
21	MP7	X	20.17	72
22	MP7	Z	-11.65	72
23	MP7	X	8.25	12
24	MP7	Z	-4.77	12
25	MP7	X	8.25	12
26	MP7	Z	-4.77	12

Member Point Loads (BLC 28 : Ice Wind Load AZI 330)

	Member Label	Direction	Magnitude[lb,lb-ft]	Location[in,%]
1	MP1	X	10.63	0
2	MP1	Z	-18.41	0
3	MP1	X	10.63	72
4	MP1	Z	-18.41	72
5	MP1	X	4.49	12
6	MP1	Z	-7.78	12
7	MP1	X	4.45	12
8	MP1	Z	-7.7	12
9	MP1	X	4.33	48
10	MP1	Z	-7.5	48
11	MP4	X	7.58	0
12	MP4	Z	-13.12	0
13	MP4	X	7.58	72
14	MP4	Z	-13.12	72
15	MP4	X	3.67	12
16	MP4	Z	-6.35	12
17	MP4	X	3.5	12
18	MP4	Z	-6.05	12
19	MP7	X	10.63	0
20	MP7	Z	-18.41	0
21	MP7	X	10.63	72
22	MP7	Z	-18.41	72
23	MP7	X	4.49	12
24	MP7	Z	-7.78	12
25	MP7	X	4.45	12
26	MP7	Z	-7.7	12

Member Point Loads (BLC 31 : Seismic Load Z)

	Member Label	Direction	Magnitude[lb,lb-ft]	Location[in,%]
1	MP1	Z	-9.133	0
2	MP1	Z	-9.133	72
3	MP1	Z	-21.226	12
4	MP1	Z	-18.105	12
5	MP1	Z	-6.188	48
6	MP4	Z	-9.133	0
7	MP4	Z	-9.133	72
8	MP4	Z	-21.226	12
9	MP4	Z	-18.105	12
10	MP7	Z	-9.133	0
11	MP7	Z	-9.133	72
12	MP7	Z	-21.226	12
13	MP7	Z	-18.105	12

Member Point Loads (BLC 32 : Seismic Load X)

	Member Label	Direction	Magnitude[lb,lb-ft]	Location[in,%]
1	MP1	X	-9.133	0
2	MP1	X	-9.133	72
3	MP1	X	-21.226	12
4	MP1	X	-18.105	12
5	MP1	X	-6.188	48
6	MP4	X	-9.133	0
7	MP4	X	-9.133	72
8	MP4	X	-21.226	12
9	MP4	X	-18.105	12
10	MP7	X	-9.133	0
11	MP7	X	-9.133	72
12	MP7	X	-21.226	12
13	MP7	X	-18.105	12

Joint Loads and Enforced Displacements (BLC 33 : Service Live Loads)

	Joint Label	L,D,M	Direction	Magnitude[(lb,lb-ft), (in,rad), (lb*s^2/in, lb*s^2*in)]
1	N72B	L	Y	-250

Joint Loads and Enforced Displacements (BLC 34 : Maintenance Load 1)

	Joint Label	L,D,M	Direction	Magnitude[(lb,lb-ft), (in,rad), (lb*s^2/in, lb*s^2*in)]
1	N70A	L	Y	-500

Joint Loads and Enforced Displacements (BLC 35 : Maintenance Load 2)

Joint Label	L,D,M	Direction	Magnitude[(lb,lb-ft), (in,rad), (lb*s^2/in, lb*s^2*in)]

Joint Loads and Enforced Displacements (BLC 35 : Maintenance Load 2) (Continued)

	Joint Label	L,D,M	Direction	Magnitude[(lb,lb-ft), (in,rad), (lb*s^2/in, lb*s^2*in)]
1	N69A	L	Y	-500

Joint Loads and Enforced Displacements (BLC 36 : Maintenance Load 3)

	Joint Label	L,D,M	Direction	Magnitude[(lb,lb-ft), (in,rad), (lb*s^2/in, lb*s^2*in)]
1	N76	L	Y	-500

Joint Loads and Enforced Displacements (BLC 37 : Maintenance Load 4)

	Joint Label	L,D,M	Direction	Magnitude[(lb,lb-ft), (in,rad), (lb*s^2/in, lb*s^2*in)]
1	N94	L	Y	-500

Joint Loads and Enforced Displacements (BLC 38 : Maintenance Load 5)

	Joint Label	L,D,M	Direction	Magnitude[(lb,lb-ft), (in,rad), (lb*s^2/in, lb*s^2*in)]
1	N93	L	Y	-500

Joint Loads and Enforced Displacements (BLC 39 : Maintenance Load 6)

	Joint Label	L,D,M	Direction	Magnitude[(lb,lb-ft), (in,rad), (lb*s^2/in, lb*s^2*in)]
1	N122	L	Y	-500

Joint Loads and Enforced Displacements (BLC 40 : Maintenance Load 7)

	Joint Label	L,D,M	Direction	Magnitude[(lb,lb-ft), (in,rad), (lb*s^2/in, lb*s^2*in)]
1	N121	L	Y	-500

Joint Loads and Enforced Displacements (BLC 41 : Maintenance Load 8)

	Joint Label	L,D,M	Direction	Magnitude[(lb,lb-ft), (in,rad), (lb*s^2/in, lb*s^2*in)]
1	N133B	L	Y	-500

Joint Loads and Enforced Displacements (BLC 42 : Maintenance Load 9)

	Joint Label	L,D,M	Direction	Magnitude[(lb,lb-ft), (in,rad), (lb*s^2/in, lb*s^2*in)]
1	N139	L	Y	-500

Member Distributed Loads (BLC 14 : Distr. Wind Load Z)

	Member Label	Direction	Start Magnitude[lb/ft,...	End Magn...	Start Location...	End Location[in,%]
1	S3	SZ	-96.748	-96.748	0	%100
2	GA4	SZ	-96.748	-96.748	0	%100
3	GA3	SZ	-96.748	-96.748	0	%100
4	P3	SZ	-96.748	-96.748	0	%100
5	S2	SZ	-96.748	-96.748	0	%100
6	GA2	SZ	-96.748	-96.748	0	%100

Member Distributed Loads (BLC 14 : Distr. Wind Load Z) (Continued)

	Member Label	Direction	Start Magnitude[lb/ft,...	End Magn...	Start Location...	End Location[in,%]
7	GA1	SZ	-96.748	-96.748	0	%100
8	P2	SZ	-96.748	-96.748	0	%100
9	S1	SZ	-96.748	-96.748	0	%100
10	GA6	SZ	-96.748	-96.748	0	%100
11	GA5	SZ	-96.748	-96.748	0	%100
12	P1	SZ	-96.748	-96.748	0	%100
13	H1	SZ	-58.049	-58.049	0	%100
14	MP1	SZ	-58.049	-58.049	0	%100
15	MP3	SZ	-58.049	-58.049	0	%100
16	HR1	SZ	-58.049	-58.049	0	%100
17	CA8	SZ	-96.748	-96.748	0	%100
18	CA9	SZ	-96.748	-96.748	0	%100
19	CA7	SZ	-96.748	-96.748	0	%100
20	M32	SZ	0	0	0	%100
21	M35	SZ	0	0	0	%100
22	M36	SZ	0	0	0	%100
23	M39A	SZ	0	0	0	%100
24	CA3	SZ	-96.748	-96.748	0	%100
25	CA4	SZ	-96.748	-96.748	0	%100
26	CA1	SZ	-96.748	-96.748	0	%100
27	CA2	SZ	-96.748	-96.748	0	%100
28	CA5	SZ	-96.748	-96.748	0	%100
29	CA6	SZ	-96.748	-96.748	0	%100
30	M64	SZ	0	0	0	%100
31	M65	SZ	0	0	0	%100
32	M66	SZ	0	0	0	%100
33	M67	SZ	0	0	0	%100
34	M68	SZ	0	0	0	%100
35	M69	SZ	0	0	0	%100
36	M70	SZ	0	0	0	%100
37	M71	SZ	0	0	0	%100
38	M72	SZ	0	0	0	%100
39	M73	SZ	0	0	0	%100
40	M74	SZ	0	0	0	%100
41	M75	SZ	-96.748	-96.748	0	%100
42	MP2	SZ	-58.049	-58.049	0	%100
43	M43	SZ	0	0	0	%100
44	M44	SZ	0	0	0	%100
45	H3	SZ	-58.049	-58.049	0	%100
46	MP7	SZ	-58.049	-58.049	0	%100
47	MP9	SZ	-58.049	-58.049	0	%100
48	HR3	SZ	-58.049	-58.049	0	%100

Member Distributed Loads (BLC 14 : Distr. Wind Load Z) (Continued)

	Member Label	Direction	Start Magnitude[lb/ft,...	End Magn...	Start Location...	End Location[in,%]
49	M52	SZ	0	0	0	%100
50	M53	SZ	0	0	0	%100
51	M54	SZ	0	0	0	%100
52	M55	SZ	0	0	0	%100
53	H2	SZ	-58.049	-58.049	0	%100
54	MP4	SZ	-58.049	-58.049	0	%100
55	MP6	SZ	-58.049	-58.049	0	%100
56	HR2	SZ	-58.049	-58.049	0	%100
57	M66A	SZ	0	0	0	%100
58	M67A	SZ	0	0	0	%100
59	M68A	SZ	0	0	0	%100
60	M69A	SZ	0	0	0	%100
61	MP8	SZ	-58.049	-58.049	0	%100
62	M68B	SZ	0	0	0	%100
63	M69B	SZ	0	0	0	%100
64	MP5	SZ	-58.049	-58.049	0	%100
65	M71B	SZ	0	0	0	%100
66	M72B	SZ	0	0	0	%100

Member Distributed Loads (BLC 15 : Distr. Wind Load X)

	Member Label	Direction	Start Magnitude[lb/ft,...	End Magn...	Start Location...	End Location[in,%]
1	S3	SX	-96.748	-96.748	0	%100
2	GA4	SX	-96.748	-96.748	0	%100
3	GA3	SX	-96.748	-96.748	0	%100
4	P3	SX	-96.748	-96.748	0	%100
5	S2	SX	-96.748	-96.748	0	%100
6	GA2	SX	-96.748	-96.748	0	%100
7	GA1	SX	-96.748	-96.748	0	%100
8	P2	SX	-96.748	-96.748	0	%100
9	S1	SX	-96.748	-96.748	0	%100
10	GA6	SX	-96.748	-96.748	0	%100
11	GA5	SX	-96.748	-96.748	0	%100
12	P1	SX	-96.748	-96.748	0	%100
13	H1	SX	-58.049	-58.049	0	%100
14	MP1	SX	-58.049	-58.049	0	%100
15	MP3	SX	-58.049	-58.049	0	%100
16	HR1	SX	-58.049	-58.049	0	%100
17	CA8	SX	-96.748	-96.748	0	%100
18	CA9	SX	-96.748	-96.748	0	%100
19	CA7	SX	-96.748	-96.748	0	%100
20	M32	SX	0	0	0	%100
21	M35	SX	0	0	0	%100

Member Distributed Loads (BLC 15 : Distr. Wind Load X) (Continued)

	Member Label	Direction	Start Magnitude[lb/ft,...	End Magn...	Start Location...	End Location[in,%]
22	M36	SX	0	0	0	%100
23	M39A	SX	0	0	0	%100
24	CA3	SX	-96.748	-96.748	0	%100
25	CA4	SX	-96.748	-96.748	0	%100
26	CA1	SX	-96.748	-96.748	0	%100
27	CA2	SX	-96.748	-96.748	0	%100
28	CA5	SX	-96.748	-96.748	0	%100
29	CA6	SX	-96.748	-96.748	0	%100
30	M64	SX	0	0	0	%100
31	M65	SX	0	0	0	%100
32	M66	SX	0	0	0	%100
33	M67	SX	0	0	0	%100
34	M68	SX	0	0	0	%100
35	M69	SX	0	0	0	%100
36	M70	SX	0	0	0	%100
37	M71	SX	0	0	0	%100
38	M72	SX	0	0	0	%100
39	M73	SX	0	0	0	%100
40	M74	SX	0	0	0	%100
41	M75	SX	-96.748	-96.748	0	%100
42	MP2	SX	-58.049	-58.049	0	%100
43	M43	SX	0	0	0	%100
44	M44	SX	0	0	0	%100
45	H3	SX	-58.049	-58.049	0	%100
46	MP7	SX	-58.049	-58.049	0	%100
47	MP9	SX	-58.049	-58.049	0	%100
48	HR3	SX	-58.049	-58.049	0	%100
49	M52	SX	0	0	0	%100
50	M53	SX	0	0	0	%100
51	M54	SX	0	0	0	%100
52	M55	SX	0	0	0	%100
53	H2	SX	-58.049	-58.049	0	%100
54	MP4	SX	-58.049	-58.049	0	%100
55	MP6	SX	-58.049	-58.049	0	%100
56	HR2	SX	-58.049	-58.049	0	%100
57	M66A	SX	0	0	0	%100
58	M67A	SX	0	0	0	%100
59	M68A	SX	0	0	0	%100
60	M69A	SX	0	0	0	%100
61	MP8	SX	-58.049	-58.049	0	%100
62	M68B	SX	0	0	0	%100
63	M69B	SX	0	0	0	%100

Member Distributed Loads (BLC 15 : Distr. Wind Load X) (Continued)

	Member Label	Direction	Start Magnitude[lb/ft,...	End Magn...	Start Location...	End Location[in,%]
64	MP5	SX	-58.049	-58.049	0	%100
65	M71B	SX	0	0	0	%100
66	M72B	SX	0	0	0	%100

Member Distributed Loads (BLC 16 : Ice Weight)

	Member Label	Direction	Start Magnitude[lb/ft,...	End Magn...	Start Location...	End Location[in,%]
1	S3	Y	-21.731	-21.731	0	%100
2	GA4	Y	-13.957	-13.957	0	%100
3	GA3	Y	-13.957	-13.957	0	%100
4	P3	Y	-24.078	-24.078	0	%100
5	S2	Y	-21.731	-21.731	0	%100
6	GA2	Y	-13.957	-13.957	0	%100
7	GA1	Y	-13.957	-13.957	0	%100
8	P2	Y	-24.078	-24.078	0	%100
9	S1	Y	-21.731	-21.731	0	%100
10	GA6	Y	-13.957	-13.957	0	%100
11	GA5	Y	-13.957	-13.957	0	%100
12	P1	Y	-24.078	-24.078	0	%100
13	H1	Y	-15.803	-15.803	0	%100
14	MP1	Y	-14.085	-14.085	0	%100
15	MP3	Y	-14.085	-14.085	0	%100
16	HR1	Y	-14.099	-14.099	0	%100
17	CA8	Y	-28.077	-28.077	0	%100
18	CA9	Y	-28.077	-28.077	0	%100
19	CA7	Y	-28.077	-28.077	0	%100
20	M32	Y	-6.183	-6.183	0	%100
21	M35	Y	-6.183	-6.183	0	%100
22	M36	Y	-6.183	-6.183	0	%100
23	M39A	Y	-6.183	-6.183	0	%100
24	CA3	Y	-17.062	-17.062	0	%100
25	CA4	Y	-17.062	-17.062	0	%100
26	CA1	Y	-17.062	-17.062	0	%100
27	CA2	Y	-17.062	-17.062	0	%100
28	CA5	Y	-17.062	-17.062	0	%100
29	CA6	Y	-17.062	-17.062	0	%100
30	M64	Y	-6.183	-6.183	0	%100
31	M65	Y	-6.183	-6.183	0	%100
32	M66	Y	-6.183	-6.183	0	%100
33	M67	Y	-6.183	-6.183	0	%100
34	M68	Y	-6.183	-6.183	0	%100
35	M69	Y	-6.183	-6.183	0	%100
36	M70	Y	-6.183	-6.183	0	%100

Member Distributed Loads (BLC 16 : Ice Weight) (Continued)

	Member Label	Direction	Start Magnitude[lb/ft,...	End Magn...	Start Location...	End Location[in,%]
37	M71	Y	-6.183	-6.183	0	%100
38	M72	Y	-6.183	-6.183	0	%100
39	M73	Y	-6.183	-6.183	0	%100
40	M74	Y	-6.183	-6.183	0	%100
41	M75	Y	-12.854	-12.854	0	%100
42	MP2	Y	-14.085	-14.085	0	%100
43	M43	Y	-6.183	-6.183	0	%100
44	M44	Y	-6.183	-6.183	0	%100
45	H3	Y	-15.803	-15.803	0	%100
46	MP7	Y	-14.085	-14.085	0	%100
47	MP9	Y	-14.085	-14.085	0	%100
48	HR3	Y	-14.099	-14.099	0	%100
49	M52	Y	-6.183	-6.183	0	%100
50	M53	Y	-6.183	-6.183	0	%100
51	M54	Y	-6.183	-6.183	0	%100
52	M55	Y	-6.183	-6.183	0	%100
53	H2	Y	-15.803	-15.803	0	%100
54	MP4	Y	-14.085	-14.085	0	%100
55	MP6	Y	-14.085	-14.085	0	%100
56	HR2	Y	-14.099	-14.099	0	%100
57	M66A	Y	-6.183	-6.183	0	%100
58	M67A	Y	-6.183	-6.183	0	%100
59	M68A	Y	-6.183	-6.183	0	%100
60	M69A	Y	-6.183	-6.183	0	%100
61	MP8	Y	-14.085	-14.085	0	%100
62	M68B	Y	-6.183	-6.183	0	%100
63	M69B	Y	-6.183	-6.183	0	%100
64	MP5	Y	-14.085	-14.085	0	%100
65	M71B	Y	-6.183	-6.183	0	%100
66	M72B	Y	-6.183	-6.183	0	%100

Member Distributed Loads (BLC 29 : Distr. Ice Wind Load Z)

	Member Label	Direction	Start Magnitude[lb/ft,...	End Magn...	Start Location...	End Location[in,%]
1	S3	SZ	-16.675	-16.675	0	%100
2	GA4	SZ	-24.062	-24.062	0	%100
3	GA3	SZ	-24.062	-24.062	0	%100
4	P3	SZ	-15.706	-15.706	0	%100
5	S2	SZ	-16.675	-16.675	0	%100
6	GA2	SZ	-24.062	-24.062	0	%100
7	GA1	SZ	-24.062	-24.062	0	%100
8	P2	SZ	-15.706	-15.706	0	%100
9	S1	SZ	-16.675	-16.675	0	%100

Member Distributed Loads (BLC 29 : Distr. Ice Wind Load Z) (Continued)

	Member Label	Direction	Start Magnitude[lb/ft,...	End Magn...	Start Location...	End Location[in,%]
10	GA6	SZ	-24.062	-24.062	0	%100
11	GA5	SZ	-24.062	-24.062	0	%100
12	P1	SZ	-15.706	-15.706	0	%100
13	H1	SZ	-21.228	-21.228	0	%100
14	MP1	SZ	-23.823	-23.823	0	%100
15	MP3	SZ	-23.823	-23.823	0	%100
16	HR1	SZ	-23.798	-23.798	0	%100
17	CA8	SZ	-14.534	-14.534	0	%100
18	CA9	SZ	-14.534	-14.534	0	%100
19	CA7	SZ	-14.534	-14.534	0	%100
20	M32	SZ	0	0	0	%100
21	M35	SZ	0	0	0	%100
22	M36	SZ	0	0	0	%100
23	M39A	SZ	0	0	0	%100
24	CA3	SZ	-19.845	-19.845	0	%100
25	CA4	SZ	-19.845	-19.845	0	%100
26	CA1	SZ	-19.845	-19.845	0	%100
27	CA2	SZ	-19.845	-19.845	0	%100
28	CA5	SZ	-19.845	-19.845	0	%100
29	CA6	SZ	-19.845	-19.845	0	%100
30	M64	SZ	0	0	0	%100
31	M65	SZ	0	0	0	%100
32	M66	SZ	0	0	0	%100
33	M67	SZ	0	0	0	%100
34	M68	SZ	0	0	0	%100
35	M69	SZ	0	0	0	%100
36	M70	SZ	0	0	0	%100
37	M71	SZ	0	0	0	%100
38	M72	SZ	0	0	0	%100
39	M73	SZ	0	0	0	%100
40	M74	SZ	0	0	0	%100
41	M75	SZ	-26.506	-26.506	0	%100
42	MP2	SZ	-23.823	-23.823	0	%100
43	M43	SZ	0	0	0	%100
44	M44	SZ	0	0	0	%100
45	H3	SZ	-21.228	-21.228	0	%100
46	MP7	SZ	-23.823	-23.823	0	%100
47	MP9	SZ	-23.823	-23.823	0	%100
48	HR3	SZ	-23.798	-23.798	0	%100
49	M52	SZ	0	0	0	%100
50	M53	SZ	0	0	0	%100
51	M54	SZ	0	0	0	%100

Member Distributed Loads (BLC 29 : Distr. Ice Wind Load Z) (Continued)

	Member Label	Direction	Start Magnitude[lb/ft,...	End Magn...	Start Location...	End Location[in,%]
52	M55	SZ	0	0	0	%100
53	H2	SZ	-21.228	-21.228	0	%100
54	MP4	SZ	-23.823	-23.823	0	%100
55	MP6	SZ	-23.823	-23.823	0	%100
56	HR2	SZ	-23.798	-23.798	0	%100
57	M66A	SZ	0	0	0	%100
58	M67A	SZ	0	0	0	%100
59	M68A	SZ	0	0	0	%100
60	M69A	SZ	0	0	0	%100
61	MP8	SZ	-23.823	-23.823	0	%100
62	M68B	SZ	0	0	0	%100
63	M69B	SZ	0	0	0	%100
64	MP5	SZ	-23.823	-23.823	0	%100
65	M71B	SZ	0	0	0	%100
66	M72B	SZ	0	0	0	%100

Member Distributed Loads (BLC 30 : Distr. Ice Wind Load X)

	Member Label	Direction	Start Magnitude[lb/ft,...	End Magn...	Start Location...	End Location[in,%]
1	S3	SX	-16.675	-16.675	0	%100
2	GA4	SX	-24.062	-24.062	0	%100
3	GA3	SX	-24.062	-24.062	0	%100
4	P3	SX	-15.706	-15.706	0	%100
5	S2	SX	-16.675	-16.675	0	%100
6	GA2	SX	-24.062	-24.062	0	%100
7	GA1	SX	-24.062	-24.062	0	%100
8	P2	SX	-15.706	-15.706	0	%100
9	S1	SX	-16.675	-16.675	0	%100
10	GA6	SX	-24.062	-24.062	0	%100
11	GA5	SX	-24.062	-24.062	0	%100
12	P1	SX	-15.706	-15.706	0	%100
13	H1	SX	-21.228	-21.228	0	%100
14	MP1	SX	-23.823	-23.823	0	%100
15	MP3	SX	-23.823	-23.823	0	%100
16	HR1	SX	-23.798	-23.798	0	%100
17	CA8	SX	-14.534	-14.534	0	%100
18	CA9	SX	-14.534	-14.534	0	%100
19	CA7	SX	-14.534	-14.534	0	%100
20	M32	SX	0	0	0	%100
21	M35	SX	0	0	0	%100
22	M36	SX	0	0	0	%100
23	M39A	SX	0	0	0	%100
24	CA3	SX	-19.845	-19.845	0	%100

Member Distributed Loads (BLC 30 : Distr. Ice Wind Load X) (Continued)

	Member Label	Direction	Start Magnitude[lb/ft,...	End Magn...	Start Location...	End Location[in,%]
25	CA4	SX	-19.845	-19.845	0	%100
26	CA1	SX	-19.845	-19.845	0	%100
27	CA2	SX	-19.845	-19.845	0	%100
28	CA5	SX	-19.845	-19.845	0	%100
29	CA6	SX	-19.845	-19.845	0	%100
30	M64	SX	0	0	0	%100
31	M65	SX	0	0	0	%100
32	M66	SX	0	0	0	%100
33	M67	SX	0	0	0	%100
34	M68	SX	0	0	0	%100
35	M69	SX	0	0	0	%100
36	M70	SX	0	0	0	%100
37	M71	SX	0	0	0	%100
38	M72	SX	0	0	0	%100
39	M73	SX	0	0	0	%100
40	M74	SX	0	0	0	%100
41	M75	SX	-26.506	-26.506	0	%100
42	MP2	SX	-23.823	-23.823	0	%100
43	M43	SX	0	0	0	%100
44	M44	SX	0	0	0	%100
45	H3	SX	-21.228	-21.228	0	%100
46	MP7	SX	-23.823	-23.823	0	%100
47	MP9	SX	-23.823	-23.823	0	%100
48	HR3	SX	-23.798	-23.798	0	%100
49	M52	SX	0	0	0	%100
50	M53	SX	0	0	0	%100
51	M54	SX	0	0	0	%100
52	M55	SX	0	0	0	%100
53	H2	SX	-21.228	-21.228	0	%100
54	MP4	SX	-23.823	-23.823	0	%100
55	MP6	SX	-23.823	-23.823	0	%100
56	HR2	SX	-23.798	-23.798	0	%100
57	M66A	SX	0	0	0	%100
58	M67A	SX	0	0	0	%100
59	M68A	SX	0	0	0	%100
60	M69A	SX	0	0	0	%100
61	MP8	SX	-23.823	-23.823	0	%100
62	M68B	SX	0	0	0	%100
63	M69B	SX	0	0	0	%100
64	MP5	SX	-23.823	-23.823	0	%100
65	M71B	SX	0	0	0	%100
66	M72B	SX	0	0	0	%100

Member Distributed Loads (BLC 43 : BLC 1 Transient Area Loads)

	Member Label	Direction	Start Magnitude[lb/ft,...	End Magn...	Start Location...	End Location[in,%]
1	S2	Y	-3.185	-3.185	16.404	40
2	GA2	Y	-1.605	-1.605	3.828	27.295
3	GA1	Y	-1.605	-1.605	3.828	27.295
4	S3	Y	-3.185	-3.185	16.404	40
5	GA4	Y	-1.605	-1.605	3.828	27.295
6	GA3	Y	-1.605	-1.605	3.828	27.295
7	S1	Y	-3.185	-3.185	16.404	40
8	GA6	Y	-1.605	-1.605	3.828	27.295
9	GA5	Y	-1.605	-1.605	3.828	27.295

Member Distributed Loads (BLC 44 : BLC 16 Transient Area Loads)

	Member Label	Direction	Start Magnitude[lb/ft,...	End Magn...	Start Location...	End Location[in,%]
1	S2	Y	-38.224	-38.224	16.404	40
2	GA2	Y	-19.263	-19.263	3.828	27.295
3	GA1	Y	-19.263	-19.263	3.828	27.295
4	S3	Y	-38.224	-38.224	16.404	40
5	GA4	Y	-19.263	-19.263	3.828	27.295
6	GA3	Y	-19.263	-19.263	3.828	27.295
7	S1	Y	-38.224	-38.224	16.404	40
8	GA6	Y	-19.263	-19.263	3.828	27.295
9	GA5	Y	-19.263	-19.263	3.828	27.295

Member Area Loads (BLC 1 : Self Weight)

	Joint A	Joint B	Joint C	Joint D	Direction	Distribution	Magnitude[psf]
1	P22	P21	P20	P23	Y	Two Way	-1.75
2	P10	P11	P12	P9	Y	Two Way	-1.75
3	P31	P34	P33	P32	Y	Two Way	-1.75

Member Area Loads (BLC 16 : Ice Weight)

	Joint A	Joint B	Joint C	Joint D	Direction	Distribution	Magnitude[psf]
1	P22	P21	P20	P23	Y	Two Way	-21
2	P10	P11	P12	P9	Y	Two Way	-21
3	P31	P34	P33	P32	Y	Two Way	-21

Envelope AISC 15th(360-16): LRFD Steel Code Checks

	Member	Shape	Code Check	Loc[in]	LC	She...	Loc[in]	Dir	LC	phi*P...	phi*P...	phi*M...	phi*Mn z-z [lb...	Cb	Eqn
1	CA1	C3.38x2.06...	.353	0	31	.060	28.188	y	36	4776...	56700	2202....	5751.945	1....	H1-1b
2	P3	PL6.5x0.375	.350	21	2	.172	36.312	y	30	3658....	78975	616.9...	7930.433	1....	H1-1b
3	P2	PL6.5x0.375	.339	21	6	.150	36.312	y	10	3658....	78975	616.9...	7905.67	1....	H1-1b

Envelope AISC 15th(360-16): LRFD Steel Code Checks (Continued)

	Member	Shape	Code Check	Loc[in]	LC	She...	Loc[in]	Dir	LC	phi*P...	phi*P...	phi*M...	phi*Mn z-z [lb...	Cb	Eqn
4	S2	HSS4X4X6	.333	0	32	.115	0	y	32	1882...	1978...	2204...	22045.5	1.92	H1-1b
5	P1	PL6.5x0.375	.326	21	10	.168	36.312	y	2	3658...	78975	616.9...	7964.883	1....	H1-1b
6	CA5	C3.38x2.06...	.322	0	35	.057	28.187	y	28	4776...	56700	2202....	5751.945	1....	H1-1b
7	CA4	C3.38x2.06...	.319	33	2	.047	33	y	31	4776...	56700	2202....	5751.945	1....	H1-1b
8	CA3	C3.38x2.06...	.314	0	27	.057	28.188	y	32	4776...	56700	2202....	5751.945	1....	H1-1b
9	S3	HSS4X4X6	.307	0	38	.118	0	y	29	1882...	1978...	2204...	22045.5	1....	H1-1b
10	CA6	C3.38x2.06...	.302	33	10	.050	33	y	38	4776...	56700	2202....	5751.945	1....	H1-1b
11	CA2	C3.38x2.06...	.300	33	6	.048	33	y	34	4776...	56700	2202....	5751.945	1.62	H1-1b
12	CA7	L6.6x4.46x0...	.300	41.562	3	.040	42	z	8	5117...	87561	2464....	7125.374	1....	H2-1
13	CA8	L6.6x4.46x0...	.296	41.562	22	.041	42	z	4	5117...	87561	2464....	7125.374	1....	H2-1
14	HR3	2.88x0.120	.294	6	2	.133	92		6	2249...	4307...	3155....	3155.674	1....	H1-1b
15	M75	PL 2.375x0.5	.293	1.5	12	.271	0	y	28	3825...	38475	400.7...	1903.711	2....	H1-1b
16	S1	HSS4X4X6	.288	0	36	.120	0	y	37	1882...	1978...	2204...	22045.5	1....	H1-1b
17	HR2	2.88x0.120	.288	90	3	.142	92		4	2249...	4307...	3155....	3155.674	1.66	H1-1b
18	HR1	2.88x0.120	.274	6	4	.124	6		4	2249...	4307...	3155....	3155.674	1....	H1-1b
19	CA9	L6.6x4.46x0...	.264	41.562	6	.037	42	z	12	5117...	87561	2464....	7125.374	1....	H2-1
20	MP2	PIPE_2.5	.240	70	5	.086	70		5	3348...	66654	4726.5	4726.5	4....	H1-1b
21	MP5	PIPE_2.5	.235	70	7	.073	70		7	3348...	66654	4726.5	4726.5	4....	H1-1b
22	GA4	L2x2x4	.222	0	2	.016	27.295	y	9	2952...	42480	959.63	2190.068	2....	H2-1
23	MP8	PIPE_2.5	.213	70	9	.091	70		3	3348...	66654	4726.5	4726.5	4.1	H1-1b
24	GA5	L2x2x4	.209	0	9	.026	27.295	y	38	2952...	42480	959.63	2190.068	2....	H2-1
25	GA2	L2x2x4	.204	0	12	.016	0	y	12	2952...	42480	959.63	2190.068	2....	H2-1
26	GA6	L2x2x4	.195	0	4	.016	0	y	4	2952...	42480	959.63	2190.068	2....	H2-1
27	GA1	L2x2x4	.193	0	5	.027	27.295	y	34	2952...	42480	959.63	2190.068	2....	H2-1
28	MP9	PIPE_2.5	.189	70	2	.086	70		7	3348...	66654	4726.5	4726.5	3....	H1-1b
29	GA3	L2x2x4	.188	0	7	.027	27.295	y	30	2952...	42480	959.63	2190.068	2....	H2-1
30	MP1	PIPE_2.5	.173	70	11	.105	26		8	3348...	66654	4726.5	4726.5	2....	H1-1b
31	MP6	PIPE_2.5	.170	70	7	.091	70		6	3348...	66654	4726.5	4726.5	4....	H1-1b
32	MP3	PIPE_2.5	.166	70	5	.094	70		3	3348...	66654	4726.5	4726.5	4....	H1-1b
33	MP4	PIPE_2.5	.160	70	7	.093	26		4	3348...	66654	4726.5	4726.5	1.86	H1-1b
34	MP7	PIPE_2.5	.158	70	9	.084	26		6	3348...	66654	4726.5	4726.5	3.43	H1-1b
35	H3	Pipe3.5x0.1...	.147	31	2	.089	90		2	4587...	7158...	6337....	6337.65	1.91	H1-1b
36	H1	Pipe3.5x0.1...	.142	31	10	.079	48		4	4587...	7158...	6337....	6337.65	2....	H1-1b
37	H2	Pipe3.5x0.1...	.137	31	6	.063	48		12	4587...	7158...	6337....	6337.65	1....	H1-1b

INFINIGY
FROM ZERO TO INFINIGY
the solutions are endless

Bolt Calculation Tool, V1.5.1

PROJECT DATA	
Site Name:	BOBDL00017A
Site Number:	BOBDL00017A
Connection Description:	Platform to Monopole

MAXIMUM BOLT LOADS		
Bolt Tension:	8846.54	lbs
Bolt Shear:	1707.17	lbs

WORST CASE BOLT LOADS[1]		
Bolt Tension:	8846.54	lbs
Bolt Shear:	1525.39	lbs

BOLT PROPERTIES		
Bolt Type:	Bolt	-
Bolt Diameter:	0.625	in
Bolt Grade:	A325	-
# of Bolts:	4	-
Threads Excluded?	No	-

[1] *Worst case bolt loads correspond to Load combination #32 on member S2 in RISA-3D, which causes the maximum demand on the bolts.*

Member Information
I nodes of S3, S2, S1

BOLT CHECK		
Tensile Strength	20340.15	
Shear Strength	13805.83	
Max Tensile Usage	43.5%	
Max Shear Usage	12.4%	
Interaction Check (Worst Case)	0.20	***≤1.05***
Result	Pass	

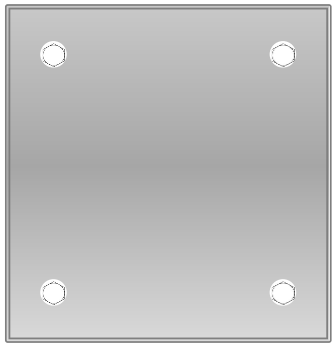

POWER DENSITY STUDY

EBI Consulting

environmental | engineering | due diligence

RADIO FREQUENCY EMISSIONS ANALYSIS REPORT
EVALUATION OF HUMAN EXPOSURE POTENTIAL TO NON-IONIZING EMISSIONS

Dish Wireless Existing Facility

Site ID: BOBDL00017A

BOBDL00017A
777 Talcottville Road
Vernon Rockville, Connecticut 06066

October 6, 2021

EBI Project Number: 6221003975

Site Compliance Summary	
Compliance Status:	**COMPLIANT**
Site total MPE% of FCC general population allowable limit:	**15.22%**

21 B Street, Burlington, MA 01803 · Tel: (781) 273.2500 · Fax: (781) 273.3311

October 6, 2021

Dish Wireless

Emissions Analysis for Site: BOBDL00017A - BOBDL00017A

EBI Consulting was directed to analyze the proposed Dish Wireless facility located at **777 Talcottville Road** in **Vernon Rockville, Connecticut** for the purpose of determining whether the emissions from the Proposed Dish Wireless Antenna Installation located on this property are within specified federal limits.

All information used in this report was analyzed as a percentage of current Maximum Permissible Exposure (% MPE) as listed in the FCC OET Bulletin 65 Edition 97-01and ANSI/IEEE Std C95.1. The FCC regulates Maximum Permissible Exposure in units of microwatts per square centimeter ($\mu W/cm^2$). The number of $\mu W/cm^2$ calculated at each sample point is called the power density. The exposure limit for power density varies depending upon the frequencies being utilized. Wireless Carriers and Paging Services use different frequency bands each with different exposure limits; therefore, it is necessary to report results and limits in terms of percent MPE rather than power density.

All results were compared to the FCC (Federal Communications Commission) radio frequency exposure rules, 47 CFR 1.1307(b)(1) – (b)(3), to determine compliance with the Maximum Permissible Exposure (MPE) limits for General Population/Uncontrolled environments as defined below.

General population/uncontrolled exposure limits apply to situations in which the general population may be exposed or in which persons who are exposed as a consequence of their employment may not be made fully aware of the potential for exposure or cannot exercise control over their exposure. Therefore, members of the general population would always be considered under this category when exposure is not employment related, for example, in the case of a telecommunications tower that exposes persons in a nearby residential area.

Public exposure to radio frequencies is regulated and enforced in units of microwatts per square centimeter ($\mu W/cm^2$). The general population exposure limits for the 600 MHz and 700 MHz frequency bands are approximately 400 $\mu W/cm^2$ and 467 $\mu W/cm^2$, respectively. The general population exposure limit for the 1900 MHz (PCS), 2100 MHz (AWS) and 11 GHz frequency bands is 1000 $\mu W/cm^2$. Because each carrier will be using different frequency bands, and each frequency band has different exposure limits, it is necessary to report percent of MPE rather than power density.

Occupational/controlled exposure limits apply to situations in which persons are exposed as a consequence of their employment and in which those persons who are exposed have been made fully

aware of the potential for exposure and can exercise control over their exposure. Occupational/controlled exposure limits also apply where exposure is of a transient nature as a result of incidental passage through a location where exposure levels may be above general population/uncontrolled limits (see below), as long as the exposed person has been made fully aware of the potential for exposure and can exercise control over his or her exposure by leaving the area or by some other appropriate means.

Additional details can be found in FCC OET 65.

CALCULATIONS

Calculations were done for the proposed Dish Wireless antenna facility located at 777 Talcottville Road in Vernon Rockville, Connecticut using the equipment information listed below. All calculations were performed per the specifications under FCC OET 65. Since Dish Wireless is proposing highly focused directional panel antennas, which project most of the emitted energy out toward the horizon, all calculations were performed assuming a lobe representing the maximum gain of the antenna per the antenna manufacturer's supplied specifications, minus 20 dB for directional panel antennas and 20 dB for highly focused parabolic microwave dishes, was focused at the base of the tower. For this report, the sample point is the top of a 6-foot person standing at the base of the tower.

For all calculations, all equipment was calculated using the following assumptions:

1) 4 n71 channels (600 MHz Band) were considered for each sector of the proposed installation. These Channels have a transmit power of 30 Watts per Channel.

2) 4 n70 channels (PCS Band - 1900 MHz) were considered for each sector of the proposed installation. These Channels have a transmit power of 40 Watts per Channel.

3) 4 n66 channels (AWS Band - 2190 MHz) were considered for each sector of the proposed installation. These Channels have a transmit power of 40 Watts per Channel.

4) All radios at the proposed installation were considered to be running at full power and were uncombined in their RF transmissions paths per carrier prescribed configuration. Per FCC OET Bulletin No. 65 - Edition 97-01 recommendations to achieve the maximum anticipated value at each sample point, all power levels emitting from the proposed antenna installation are increased by a factor of 2.56 to account for possible in-phase reflections from the surrounding environment. This is rarely the case, and if so, is never continuous.

5) For the following calculations, the sample point was the top of a 6-foot person standing at the base of the tower. The maximum gain of the antenna per the antenna manufacturer's supplied specifications, minus 20 dB for directional panel antennas and 20 dB for highly focused parabolic microwave dishes, was used in this direction. This value is a very conservative

estimate as gain reductions for these particular antennas are typically much higher in this direction.

6) The antennas used in this modeling are the JMA MX08FRO665-21 for the 600 MHz / 1900 MHz / 2190 MHz channel(s) in Sector A, the JMA MX08FRO665-21 for the 600 MHz / 1900 MHz / 2190 MHz channel(s) in Sector B, the JMA MX08FRO665-21 for the 600 MHz / 1900 MHz / 2190 MHz channel(s) in Sector C. This is based on feedback from the carrier with regard to anticipated antenna selection. All Antenna gain values and associated transmit power levels are shown in the Site Inventory and Power Data table below. The maximum gain of the antenna per the antenna manufacturer's supplied specifications, minus 20 dB for directional panel antennas and 20 dB for highly focused parabolic microwave dishes, was used for all calculations. This value is a very conservative estimate as gain reductions for these particular antennas are typically much higher in this direction.

7) The antenna mounting height centerline of the proposed antennas is 107 feet above ground level (AGL).

8) Emissions values for additional carriers were taken from the Connecticut Siting Council active database. Values in this database are provided by the individual carriers themselves.

9) All calculations were done with respect to uncontrolled / general population threshold limits.

Dish Wireless Site Inventory and Power Data

Sector:	A	Sector:	B	Sector:	C
Antenna #:	1	Antenna #:	1	Antenna #:	1
Make / Model:	JMA MX08FRO665-21	Make / Model:	JMA MX08FRO665-21	Make / Model:	JMA MX08FRO665-21
Frequency Bands:	600 MHz / 1900 MHz / 2190 MHz	Frequency Bands:	600 MHz / 1900 MHz / 2190 MHz	Frequency Bands:	600 MHz / 1900 MHz / 2190 MHz
Gain:	17.45 dBd / 22.65 dBd / 22.65 dBd	Gain:	17.45 dBd / 22.65 dBd / 22.65 dBd	Gain:	17.45 dBd / 22.65 dBd / 22.65 dBd
Height (AGL):	107 feet	Height (AGL):	107 feet	Height (AGL):	107 feet
Channel Count:	12	Channel Count:	12	Channel Count:	12
Total TX Power (W):	440 Watts	Total TX Power (W):	440 Watts	Total TX Power (W):	440 Watts
ERP (W):	5,236.31	ERP (W):	5,236.31	ERP (W):	5,236.31
Antenna A1 MPE %:	**2.32%**	Antenna B1 MPE %:	**2.32%**	Antenna C1 MPE %:	**2.32%**

Site Composite MPE %	
Carrier	**MPE %**
Dish Wireless (Max at Sector A):	2.32%
Nextel	0.24%
Verizon	5.29%
AT&T	3.58%
Metro PCS	0.52%
Sprint	3.2%
Clearwire	0.07%
Site Total MPE % :	15.22%

Dish Wireless MPE % Per Sector	
Dish Wireless Sector A Total:	2.32%
Dish Wireless Sector B Total:	2.32%
Dish Wireless Sector C Total:	2.32%
Site Total MPE % :	15.22%

Dish Wireless Maximum MPE Power Values (Sector A)

Dish Wireless Frequency Band / Technology (Sector A)	# Channels	Watts ERP (Per Channel)	Height (feet)	Total Power Density (μW/cm²)	Frequency (MHz)	Allowable MPE (μW/cm²)	Calculated % MPE
Dish Wireless 600 MHz n71	4	223.68	107.0	3.15	600 MHz n71	400	0.79%
Dish Wireless 1900 MHz n70	4	542.70	107.0	7.65	1900 MHz n70	1000	0.77%
Dish Wireless 2190 MHz n66	4	542.70	107.0	7.65	2190 MHz n66	1000	0.77%
						Total:	**2.32%**

• NOTE: Totals may vary by approximately 0.01% due to summation of remainders in calculations.

Summary

All calculations performed for this analysis yielded results that were **within** the allowable limits for general population exposure to RF Emissions.

The anticipated maximum composite contributions from the Dish Wireless facility as well as the site composite emissions value with regards to compliance with FCC's allowable limits for general population exposure to RF Emissions are shown here:

Dish Wireless Sector	Power Density Value (%)
Sector A:	2.32%
Sector B:	2.32%
Sector C:	2.32%
Dish Wireless Maximum MPE % (Sector A):	2.32%
Site Total:	15.22%
Site Compliance Status:	**COMPLIANT**

The anticipated composite MPE value for this site assuming all carriers present is **15.22%** of the allowable FCC established general population limit sampled at the ground level. This is based upon values listed in the Connecticut Siting Council database for existing carrier emissions.

FCC guidelines state that if a site is found to be out of compliance (over allowable thresholds), that carriers over a 5% contribution to the composite value will require measures to bring the site into compliance. For this facility, the composite values calculated were well within the allowable 100% threshold standard per the federal government.

November 09, 2021

Dear Customer,

The following is the proof-of-delivery for tracking number: 775109858200

Delivery Information:

Status:	Delivered	**Delivered To:**	
Signed for by:	Signature release on file	**Delivery Location:**	55 W MAIN ST
Service type:	FedEx 2Day		
Special Handling:	Deliver Weekday		VERNON ROCKVILLE, CT, 06066
		Delivery date:	Nov 9, 2021 13:58

Shipping Information:

Tracking number:	775109858200	**Ship Date:**	Nov 5, 2021
		Weight:	1.0 LB/0.45 KG

Recipient:
Steven Prattson,
55 West Main Street
VERNON ROCKVILLE, CT, US, 06066

Shipper:
Corey Milan, NB+C
100 Apollo Dr.
Suite 303
CHELMSFORD, MA, US, 01824

Reference 100814

Thank you for choosing FedEx

November 09, 2021

Dear Customer,

The following is the proof-of-delivery for tracking number: 775109882764

Delivery Information:

Status:	Delivered	**Delivered To:**	
Signed for by:	Signature release on file	**Delivery Location:**	777 TALCOTTVILLE RD
Service type:	FedEx 2Day		
Special Handling:	Deliver Weekday		VERNON ROCKVILLE, CT, 06066
		Delivery date:	Nov 9, 2021 10:41

Shipping Information:

Tracking number:	775109882764	**Ship Date:**	Nov 5, 2021
		Weight:	1.0 LB/0.45 KG

Recipient:
777 Realty LLC,
777 Talcotville Road
VERNON ROCKVILLE, CT, US, 06066

Shipper:
Corey Milan, NB+C
100 Apollo Dr.
Suite 303
CHELMSFORD, MA, US, 01824

Reference 100814

Thank you for choosing FedEx

November 09, 2021

Dear Customer,

The following is the proof-of-delivery for tracking number: 775109829605

Delivery Information:

Status:	Delivered	**Delivered To:**	
Signed for by:	Signature release on file	**Delivery Location:**	14 PARK PL
Service type:	FedEx 2Day		
Special Handling:	Deliver Weekday		VERNON ROCKVILLE, CT, 06066
		Delivery date:	Nov 9, 2021 10:13

Shipping Information:

Tracking number:	775109829605	**Ship Date:**	Nov 5, 2021
		Weight:	1.0 LB/0.45 KG

Recipient:
Daniel A. Champagne,
14 Park Place
3rd Floor
VERNON ROCKVILLE, CT, US, 06066

Shipper:
Corey Milan, NB+C
100 Apollo Dr.
Suite 303
CHELMSFORD, MA, US, 01824

Reference 100814

Thank you for choosing FedEx