STATE OF CONNECTICUT

CONNECTICUT SITING COUNCIL

Ten Franklin Square, New Britain, CT 06051
Phone: (860) 827-2935 Fax: (860) 827-2950
E-Mail: siting.council@po.state.ct.us
www.ct.gov/csc

February 3, 2005

Kenneth C. Baldwin, Esq.
Robinson & Cole LLP
280 Trumbull Street
Hartford, CT 06103-3597

RE: **EM-VER-142-050118** - Cellco Partnership d/b/a Verizon Wireless notice of intent to modify an existing telecommunications facility located at Barbara Road, Tolland, Connecticut.

Dear Attorney Baldwin:

At a public meeting held on February 2, 2005, the Connecticut Siting Council (Council) acknowledged your notice to modify this existing telecommunications facility, pursuant to Section 16-50j-73 of the Regulations of Connecticut State Agencies with the condition that the baseplate is reinforced per drawing CT-0031-M1 of the structural analysis report sealed by Jason Seaverson, P.E. prior to the new antenna installation.

The proposed modifications are to be implemented as specified here and in your notice dated January 18, 2005, including the placement of all necessary equipment and shelters within the tower compound. The modifications are in compliance with the exception criteria in Section 16-50j-72 (b) of the Regulations of Connecticut State Agencies as changes to an existing facility site that would not increase tower height, extend the boundaries of the tower site, increase noise levels at the tower site boundary by six decibels, and increase the total radio frequencies electromagnetic radiation power density measured at the tower site boundary to or above the standard adopted by the State Department of Environmental Protection pursuant to General Statutes § 22a-162. This facility has also been carefully modeled to ensure that radio frequency emissions are conservatively below State and federal standards applicable to the frequencies now used on this tower.

This decision is under the exclusive jurisdiction of the Council. Any additional change to this facility will require explicit notice to this agency pursuant to Regulations of Connecticut State Agencies Section 16-50j-73. Such notice shall include all relevant information regarding the proposed change with cumulative worst-case modeling of radio frequency exposure at the closest point of uncontrolled access to the tower base, consistent with Federal Communications Commission, Office of Engineering and Technology, Bulletin 65. Any deviation from this format may result in the Council implementing enforcement proceedings pursuant to General Statutes § 16-50u including, without limitation, imposition of expenses resulting from such failure and of civil penalties in an amount not less than one thousand dollars per day for each day of construction or operation in material violation.

Thank you for your attention and cooperation.

Very truly yours,

Pamela B. Katz

Pamela B. Katz, P.E.
Chairman

PBK/laf

c: The Honorable Richard Field, Chairman, Town Council, Town of Tolland
Linda Farmer, Town Planner, Town of Tolland
Melanie Girton, Property Management Dept., Spectrasite Communications
Stephen J. Humes, Esq., McCarter & English, LLP
Michele G. Briggs, New Cingular Wireless PCS, LLC
Thomas F. Flynn III, Nextel Communications, Inc.
Thomas J. Regan, Esq., Brown Rudnick Berlack Israels LLP

G:em\ver-bam\tolland\dc020205.doc

CSC
CONNECTICUT SITING COUNCIL

ROBINSON & COLE LLP

KENNETH C. BALDWIN

280 Trumbull Street
Hartford, CT 06103-3597
Main (860) 275-8200
Fax (860) 275-8299
kbaldwin@rc.com
Direct (860) 275-8345

EM-VER-142-050118

January 18, 2005

Via Hand Delivery

RECEIVED
JAN 18 2005
CONNECTICUT
SITING COUNCIL

S. Derek Phelps
Executive Director
Connecticut Siting Council
10 Franklin Square
New Britain, CT 06051

Re: **Notice of Exempt Modification – Antenna Swap**
Barbara Road Telecommunications Facility
Tolland, Connecticut

Dear Mr. Phelps:

Cellco Partnership d/b/a Verizon Wireless ("Cellco") currently maintains a wireless telecommunications facility, on an existing 150-foot tower, owned by SpectraSite, Barbara Road in Tolland. Existing antennas, currently above the top of the tower, include a canister mount containing T-Mobile antennas. Cellco's facility consists of twelve (12) panel-type cellular antennas at the 142-foot level of the 150-foot tower. Equipment associated with the antennas is located in a shelter near the base of the tower.

The Connecticut Siting Council ("the Council") approved Cellco's shared use of the Barbara Road facility on August 1, 1996. Cellco now intends to modify its facility by removing three (3) cellular antennas and installing six (6) PCS antennas, for a total of fifteen antennas, at the same 142-foot level on the tower. Attached behind Tab 1 are specifications for the existing cellular antennas and the proposed PCS antennas for the Barbara Road facility.

Please accept this letter as notification pursuant to R.C.S.A. § 16-50j-73, for construction that constitutes an exempt modification pursuant to R.C.S.A. § 16-50j-72(b)(2). In accordance with R.C.S.A. § 16-50j-73, a copy of this letter is being sent to Interim Town Manager, Peter Curry.

The planned modifications to the Barbara Road facility fall squarely within those activities explicitly provided for in R.C.S.A. § 16-50j-72(b)(2).

Law Offices
BOSTON
HARTFORD
NEW LONDON
STAMFORD
GREENWICH
NEW YORK
SARASOTA
www.rc.com

1. The proposed modifications will not result in any increase in the overall height of the existing structure. Cellco's replacement antennas will be mounted at the same 142-foot level on the 150-foot tower.

2. The proposed modifications will not affect ground-mounted equipment and therefore, will not require the extension of the site boundaries.

3. The proposed modifications will not increase noise levels at the facility by six decibels or more.

4. The proposed modifications will not result in radio frequency (RF) power density levels at the facility that exceed the Federal Communications Commission (FCC) adopted safety standard. Attached behind Tab 2 is a new Power Density Calculation Table.

Also attached behind Tab 3 is a structural report stating that the tower will be able to support the existing and proposed antennas and related equipment provided the tower baseplate is reinforced. Lastly, behind Tab 4 is a letter from SpectraSite confirming that the baseplate reinforcement improvements required were completed on December 30, 2004.

For the foregoing reasons, Cellco respectfully submits that the proposed modifications to the above-referenced telecommunications facility constitute an exempt modification under R.C.S.A. § 16-50j-72(b)(2).

Sincerely,

Kenneth C. Baldwin

Enclosures
cc: Peter Curry, Interim Town Manager
Sandy M. Carter

Swedcom Corporation

ALP 9212-N

Log-Periodic Reflector Antenna

92 Degrees 12 dBd

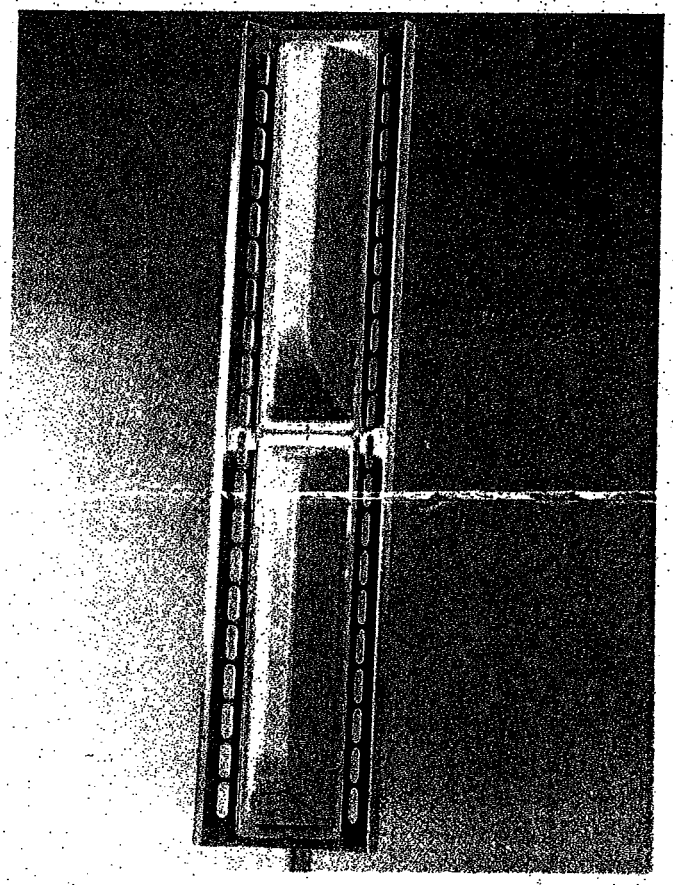

Features:

- **Broadbanded. (800-900 MHz)**
- **Low backlobe radiation. Front-to-back ratio better than 28 dB**
- **Low Intermodulation Products.**
- **Low Wind-load.**
- **Low weight.**
- **Small size.**
- **Rugged design.**

Please see the following pages including radiation patterns/tables for *ALP 9212-N.*

Electrical Specifications:

Frequency range:	806-896 MHz
Impedance:	50 ohm
Connector:	N-female or 7/8" EIA
VSWR:	Typ. 1.3:1 max 1.5:1
Polarization:	Vertical
Gain:	12 dBd
Front to back ratio:	>28 dB
Side-lobe supression:	>18 dB
Intermodulation: (2x25W):	IM3 >146 dB
	IM5 >153 dB
	IM7 & IM9 >163 dB
Power Rating:	500 W
H-Plane: -3 dB	95 °
E-Plane: -3 dB	15 °
Lightning Protection:	DC Grounded

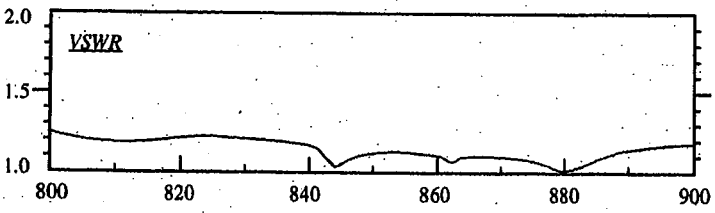

Mechanical Specifications:

Overall Height:	52 in	(1320 mm)
Width:	11.4 in	(290 mm)
Depth:	11.4 in	(290 mm)
Weight including brackets:	26.7 lbs	(12 Kg)
Rated wind velocity:	113 mph	(180 Km/h)
Wind Area (CxA/Front):	3.9 sq.ft	(0.36 sq.m)
Lateral thrust at rated wind		
Worst case:	570 N	

Materials:

Radiating elements:	Aluminum
Element housing:	Grey PVC
Back-plate:	Aluminum
Mounting hardware	
clamps:	Hot dip galvanized steel
bolts:	Stainless steel

*Manufactured by: **Allgon System AB***

DECIBEL® *Base Station Antennas*	**948F85T2E-M** 16.1 dBi, Directed Dipole Antenna 1850-1990 MHz	**1850-1990 MHz** **MaxFill™** **dB Director®**

- Exceptional azimuth roll-off reducing soft hand-offs and improving capacity
- Excellent upper side lobe suppression
- Deep null filling below the horizon assures improved signal intensity
- Low profile appearance and low wind loading profile for easier zoning approvals

85°

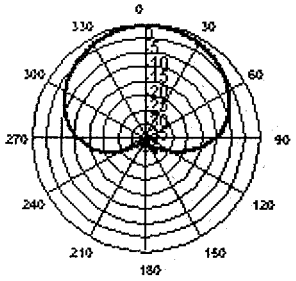

Azimuth 1850 MHz (Tilt=2)

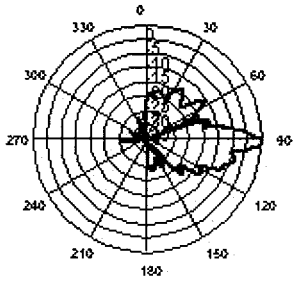

Vertical 1850 MHz (Tilt=2)

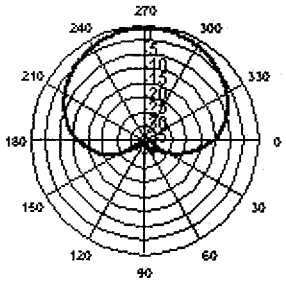

Horizontal 1850 MHz (Tilt=2)

ELECTRICAL		MECHANICAL	
Frequency (MHz):	1850-1990	**Weight:**	8.5 lbs (3.9 kg)
Polarization:	Vertical	**Dimensions (LxWxD):**	48 X 3.5 X 7 in (1219 X 89 X 178 mm)
Gain (dBd/dBi):	14/16.1	**Max. Wind Area:**	1.18 ft² (0.11 m²)
Azimuth BW:	85°	**Max. Wind Load (@ 100mph):**	65 lbf (289 N)
Elevation BW:	8°	**Max. Wind Speed:**	125 mph (201 km/h)
Beam Tilt:	2°	**Radiator Material:**	Low Loss Circuit Board
USLS* (dB):	>18	**Reflector Material:**	Aluminum
Null Fill* (dB):	15	**Radome Material:**	ABS, UV Resistant
Front-to-Back Ratio* (dB):	40	**Mounting Hardware Material:**	Galvanized Steel
VSWR:	<1.33:1	**Connector Type:**	7-16 DIN - Female (Bottom)
IM Suppression - Two 20 Watt Carriers:	-150 dBc	**Color:**	Light Gray
Impedance:	50 Ohms	**Standard Mounting Hardware:**	DB390 Pipe Mount Kit, included
Max Input Power:	250 Watts	**Downtilt Mounting Hardware:**	DB5098, optional
Lightning Protection:	DC Ground	**Opt. Mounting Hardware:**	DB5094-AZ Azimuth Wall Mount
Opt Electrical Tilt:	0°,4°,6°		

ANDREW®

Andrew Corporation
8635 Stemmons Freeway
Dallas, Texas U.S.A 75247-3701
Tel: 214.631.0310

Fax: 214.631.4706
Toll Free Tel: 1.800.676.5342
Fax: 1.800.229.4706
www.andrew.com

dbtech@andrew.com

Date: 4/29/2004
* - Indicates Typical Values

General Power Density

Site Name: Tolland , CT
Tower Height: 142 ft rad center

Operator	Operating Frequency	Number of Trans.	ERP Per Trans.	Total ERP	Distance to Target	Calculated Power Density	Maximum Permissable Exposure*	Fraction of MPE
	(MHz)		(watts)	(watts)	(feet)	(mW/cm^2)	(mW/cm^2)	(%)
Verizon	869	9	200	1800	142	0.0321	0.5793	5.54%
Verizon	1900	3	200	600	142	0.0107	1	1.07%
Total Percentage of Maximum Permissible Exposure								6.61%

*Guidelines adopted by the FCC on August 1, 1996, 47 CFR Part 1 based on NCRP Report 86, 1986 and generally on ANSI/IEEE C95.1-1992

MHz = Megahertz
mW/cm^2 = milliwatts per square centimeter
ERP = Effective Radiated Power

Absolute worst case scenario, maximum values used.

verizonwireless

SpectraSite

Structural Analysis Summary		
Tower Site	**CT-0031 Tolland**	**App. ID: 104203-0**
Address	5 Barbara Road Tolland, CT 06084 Tolland County	
Tower Height & Type	**155 ft EEI Monopole**	
Building Code	ANSI/TIA/EIA-222-F **85 mph w/ 0" radial ice**	1996 BOCA National Building Code **85 mph w/ 0" radial ice** **31 mph w/ 1-1/4" radial ice**

Tower Information	
Tower Geometry	EEI Dwg. No. GS50842, dated 03/03/98
Foundation	EEI Dwg. No. F3503-150N, dated 03/02/98

Results Summary*	
Tower Structure	***Adequate***
Anchor Bolts	***Adequate***
Base Plate	***Inadequate; See Conclusions and Recommendations***
Foundation	***Adequate***

**** See following pages for detailed analysis results.***

STATE OF CONNECTICUT
JASON M. SEAVERSON
No. 24092
LICENSED
PROFESSIONAL ENGINEER
11/15/04

Analysis prepared by:
Scott Wirgau, E.I.
Engineering Associate
Contact (919) 466-5086
with any questions.

Jason M. Seaverson, P.E.
Senior Design Engineer

I hereby certify that this engineering document was prepared by me or under my direct personal supervision and that I am a duly licensed Professional Engineer under the laws of the State of Connecticut

SpectraSite Communications Inc. **www.spectrasite.com**

100 Regency Forest Drive, Suite 400 • Cary, NC 27511 • Tel 919.468.0112 • Fax 919.468.8522

1.0 Introduction

A structural analysis was performed on the above noted tower for the addition of proposed antennas as listed. The analysis consisted of applying the forces caused by the existing and proposed loads, and determining the resulting stresses in the structure and its foundation.

1.1 Existing and Proposed Antennas

ELEVATION *(Ft. A.G.L.)*	ANTENNA	CARRIER	COAX	I/O*	NOTES
163.3	(3) EMS RR90-17-02DP on Canister Mount	T-Mobile	(6) 1-5/8"	I	Existing
155	(1) 7' Omni on Platform w/ Handrails	Arch Wireless	(1) 7/8"	I	Existing
150	(9) CSS DUO4-8670 on Platform w/ Handrails	Cingular	(9) 1-1/4"	I	Existing
142	(9) Swedcom ALP-9212 on Platform w/ Handrails	Verizon	(9) 1-5/8"	I	Existing
142	**(3) Swedcom ALP-9212 on Platform w/ Handrails**	**Verizon**	**(3) 1-5/8"**	**I**	**Remove Existing**
142	**(6) Decibel 948F85T2E-M on Existing Platform w/ Handrails**	**Verizon**	**(3) 1-5/8" (3) 1-5/8"**	**I O**	**Proposed Replacement**
130.5	(6) Decibel DB980H90E-M on Platform w/ Handrails	Sprint	(6) 1-5/8"	I	Existing
120	(12) Decibel DB844H90E-XY on Platform w/ Handrails	Nextel	(12) 1-1/4"	I	Existing
105	(3) Allgon 7250 on Flush Mounts	AT&T	(6) 1-1/4"	I	Existing
105	(3) Allgon 7250 on T-Arm Mounts	AT&T	(6) 7/8"	I	Reserved
90	(1) 7' Omni on Side Arm Mount	Arch Wireless	(1) 1/2"	O	Existing
85	(1) GPS on Side Arm Mount	Verizon	(1) 1/2"	O	Existing
60	(2) GPS on Side Arm Mount	Nextel	(1) 1/2"	O	Existing
54	(1) GPS on Side Arm Mount	Sprint	(1) 1/2"	O	Existing
15	(1) Channel Master 1.2 Meter Dish on Pipe Mount	Arch Wireless	(1) RG6	O	Existing

**** I/O denotes coax installed inside or outside of monopole respectively.***

2.0 Detailed Analysis Results

2.1 Monopole Member Stress Levels

ELEVATION *(Ft. A.G.L.)*	STRESS RATIO*
146.0 to 155.0	0.12
125.9 to 146.0	0.71
85.4 to 125.9	***1.01***
45.9 to 85.4	***1.10***
0.0 to 45.9	***1.08***
Anchor Bolts	***1.04***
Base Plate	***1.48***

** Maximum Stress Ratio: 1.00=Full Allowable.*
*** Overstressed; Considered Acceptable.*
**** Overstressed; Reinforcing Required.*

2.2 Foundation Reactions

BASE REACTIONS	REACTIONS	RESULTS*
Moment *(kip-ft)*	3937.2	*Adequate*
Compression *(kips)*	35.3	*Adequate*
Shear *(kips)*	38.4	*Adequate*

** Based on foundation analysis.*

3.0 Conclusions and Recommendations

1. The baseplate ***is not structurally adequate*** to accommodate the existing and proposed antenna and transmission line loading used in this analysis.

2. The monopole, anchor bolts, and foundation ***are structurally adequate*** to accommodate the existing and proposed antenna and transmission line loading used in this analysis.

3. The baseplate ***is structurally adequate*** to accommodate the existing and proposed antenna and transmission lines loading used in this analysis ***after being reinforced*** as per the attached drawing CT-0031-M1.

4. Any future changes in loading must be reviewed by the SpectraSite Engineering Department.

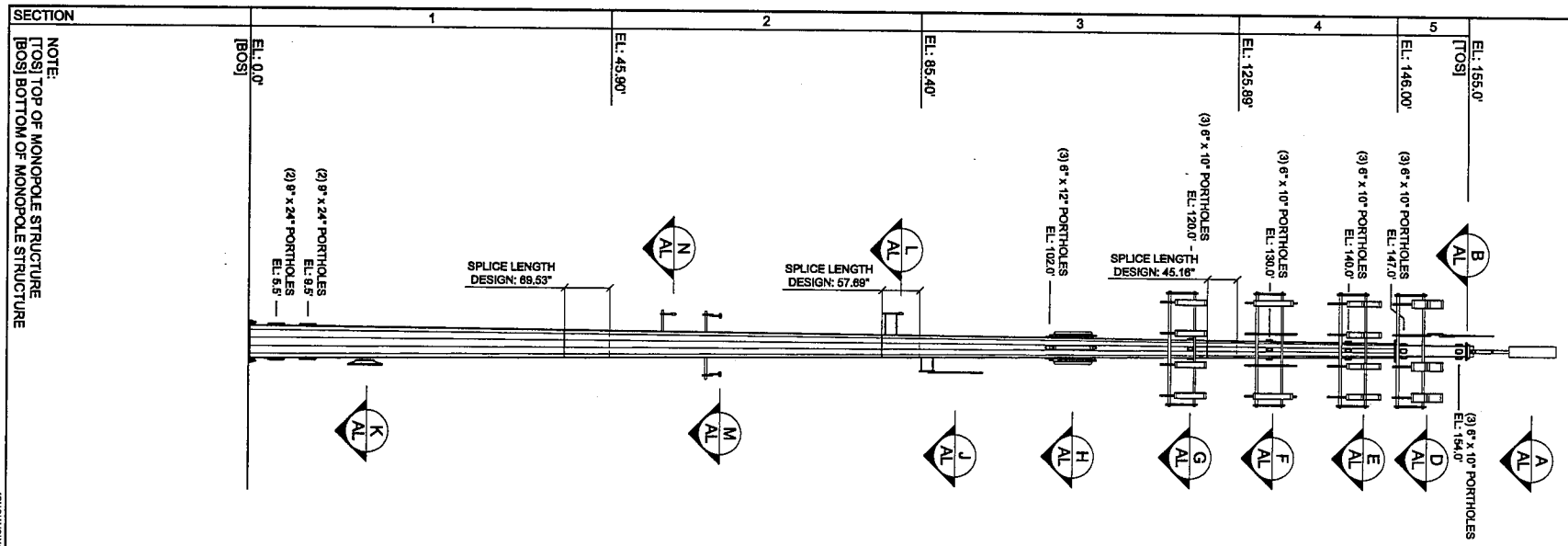

POLE MATERIAL SPECIFICATIONS	
TAPER:	0.214 (IN/FT)
SHAFT STEEL:	ASTM A572, GRADE 65
BASE PLATE STEEL:	ROUND PL 2.0" x 65.0"Ø ASTM A871, GR. 60
ANCHOR BOLTS:	(16) 2-25"Ø x 126.0" LG ASTM A615, GR. 75 59.0"Ø B.C.

FLANGE SPECIFICATIONS								
ELEV (FT)	THICKNESS (IN)		DIAMETER (IN)	BOLT CIRCLE DIAMETER (IN)	GRADE (KSI)	BOLTS		
	TOP	BTM				NO.	DIA.	GRADE
146	1.0	1.5	28.50	25.75	60	12	1"	A325

TOWER IDENTIFICATION	
MANUFACTURER:	ENGINEERED ENDEAVOURS INC.
IDENTIFICATION No:	3503

SHAFT SPECIFICATIONS							
SHAFT SECTION	SECTION LENGTH (FT)	# SIDES	THICKNESS (IN)	GRADE (KSI)	OVERLAP (IN)	DIAMETER ACROSS FLATS (IN)	
						BOTTOM	TOP
1	45.73	12	0.438	65	69.53	50.00	40.17
2	45.30	12	0.375	65	57.69	42.36	32.82
3	45.29	12	0.313	65	45.16	34.47	24.73
4	23.76	12	0.188	65	0	26.11	21.00
5	9.00	RND	0.500	42	0	16.00	16.00

DESIGN SPECIFICATIONS	
CODE:	ANSI/TIA/EIA-222-F 1996 BOCA NATIONAL BUILDING CODE
WIND:	85 MPH [TOLLAND COUNTY EIA] 85 MPH [1996 BOCA]
ICE:	31 MPH W/ 1-1/4" RADIAL

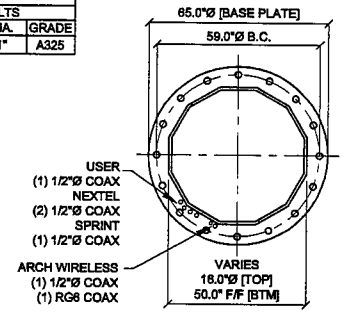

PLAN VIEW

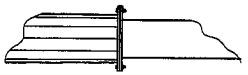

TYPICAL FLANGE DETAIL

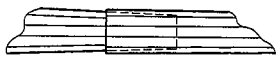

TYPICAL SPLICE DETAIL

NO.	ELEV	ANTENNA TYPE	ANT. DIMS. (LxWxD)	AZIMUTH	MOUNT	TX-LINE *	CUSTOMER	STATUS
A	163.3'	(3) EMS RR90-17-02DP	56" x 8" x 2.75"	10",130",250°	CANISTER	(6) 1-5/8" [I]	T-MOBILE	E
B	155.0'	(1) GENERIC OMNI	7'	0°	PLATFORM W/ HANDRAILS	(1) 7/8" [I]	ARCH	E
D	150.0'	(9) CSS DUO4-8670	48" X 14" x 9"	31",155",274°	PLATFORM W/ HANDRAILS	(9) 1-1/4" [I]	CINGULAR	E
E	142.0'	(9) SWEDCOM ALP-8212	52" x 11.4" x 11.4"	30",150",270°	PLATFORM W/ HANDRAILS	(9) 1-5/8" [I]	USER	E
E	142.0'	(3) SWEDCOM ALP-8212	52" x 11.4" x 11.4"	30",150",270°	PLATFORM W/ HANDRAILS	(3) 1-5/8" [I]	USER	RECO
F	130.5'	(6) DECIBEL DB980H90E-M	60" x 6.3" x 3"	30",150",270°	PLATFORM W/ HANDRAILS	(6) 1-5/8" [I]	SPRINT	E
G	120.0'	(12) DECIBEL DB844H90E-XY	48" x 6" x 8.5"	30",150",270°	PLATFORM W/ HANDRAILS	(12) 1-1/4" [I]	NEXTEL	E
H	105.0'	(3) ALLGON 7250	61.3" x 6.3" x 2.2"	0",120",240°	FLUSH	(6) 1-1/4" [I]	AT&T	E
J	90.0'	(1) GENERIC OMNI	7'	0°	SIDE ARM	(1) 1/2" [O]	ARCH	E
L	83.0'	(1) GENERIC GPS	-	-	SIDE ARM	(1) 1/2" [O]	USER	E
M	80.0'	(2) GENERIC GPS	-	-	SIDE ARM	(2) 1/2" [O]	NEXTEL	E
N	54.0'	(1) GENERIC GPS	-	-	SIDE ARM	(1) 1/2" [O]	SPRINT	E
K	15.0'	(1) CHANNEL MASTER 1.2 METER	4.0'Ø	225°	PIPE	(1) RG6 [O]	ARCH	E

EXISTING ANTENNA INFORMATION

* [I], OR [O] DENOTES COAX INSTALLED INSIDE OR OUTSIDE MONOPOLE RESPECTIVELY.

ANTENNA STATUS LEGEND			
A	ABANDON	P	PROPOSED
E	EXISTING	R	RESERVED
I	INQUIRY	T	TEMPORARY
TBR	TO BE REMOVED		
RECO	RECONFIG. IN PROGRESS		

GENERAL NOTES

1) INSTALLATION SHALL NOT INTERFERE WITH OR DENY ACCESS TO OPERATIONAL AND SAFETY EQUIPMENT

SEAL:

REV	DWN	CHK	DATE	DESCRIPTION
2	PAT	JRJ	11/11/04	ARCH DIPOLE REMOVED, GPS ADDED

SpectraSite
400 REGENCY FOREST DRIVE
CARY, NORTH CAROLINA 27511
PHONE:(919)468-0112 / FAX:(919)468-8522

TITLE: DESIGN PROFILE
PROJECT: 155.0' EEI MONOPOLE
SITE: TOLLAND, CT

DATE:	DWN:	CHK:	SITE #:	DWG #:	REV:
01/08/02	CNL		CT-0031	D1	2

COPYRIGHT: DUPLICATION, RECORDING, USE OR DISCLOSURE PROHIBITED WITHOUT WRITTEN AUTHORIZATION OF SPECTRASITE COMMUNICATIONS.

NOTE:
[TOS] TOP OF MONOPOLE STRUCTURE
[BOS] BOTTOM OF MONOPOLE STRUCTURE

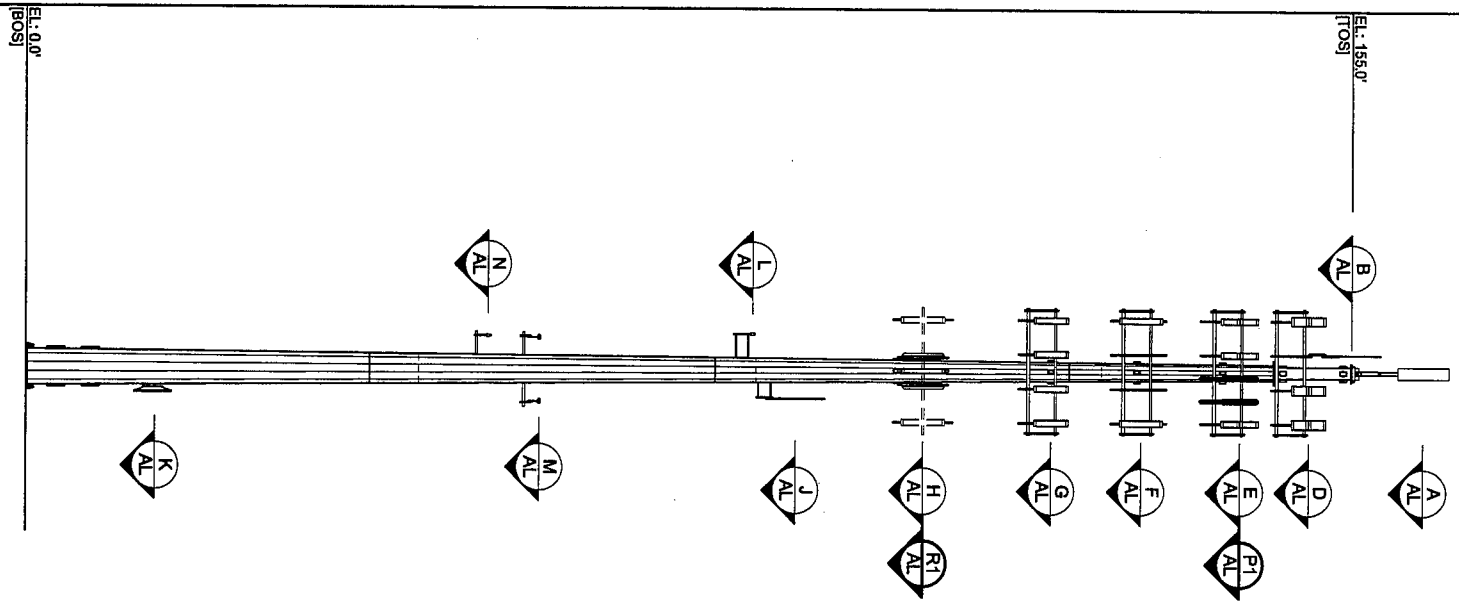

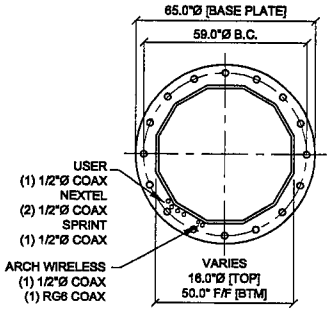

PLAN VIEW

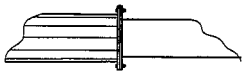

TYPICAL FLANGE DETAIL

TYPICAL SPLICE DETAIL

NO.	ELEV	ANTENNA TYPE	ANT. DIMS. (LxWxD)	AZIMUTH	MOUNT	TX-LINE *	CUSTOMER	STATUS
P1	142.0'	(6) DECIBEL 948F85T2E-M	48" x 3.5" x 7"	30°,150°,270°	PLATFORM W/ HANDRAILS	**	USER	P
R1	105.0'	(3) ALLGON 7250	61.3" x 6.3" x 2.2"	0°,120°,240°	LOW PROFILE PLATFORM	(6) 7/8" [I]	AT&T	R

PROPOSED ANTENNA INFORMATION

* [I], OR [O] DENOTES COAX INSTALLED INSIDE OR OUTSIDE MONOPOLE RESPECTIVELY. ** (3) 1-5/8" [I], (3) 1-5/8" [O]

NO.	ELEV	ANTENNA TYPE	ANT. DIMS. (LxWxD)	AZIMUTH	MOUNT	TX-LINE *	CUSTOMER	STATUS
A	163.3'	(3) EMS RR90-17-02DP	56" x 8" x 2.75"	10°,130°,250°	CANISTER	(6) 1-5/8" [I]	T-MOBILE	E
B	155.0'	(1) GENERIC OMNI	7'	0°	PLATFORM W/ HANDRAILS	(1) 7/8" [I]	ARCH	E
D	150.0'	(9) CSS DUO4-8670	48" X 14" x 9"	31°,155°,274°	PLATFORM W/ HANDRAILS	(9) 1-1/4" [I]	CINGULAR	E
E	142.0'	(9) SWEDCOM ALP-8212	52" x 11.4" x 11.4"	30°,150°,270°	PLATFORM W/ HANDRAILS	(9) 1-5/8" [I]	USER	E
E	142.0'	(3) SWEDCOM ALP-8212	52" x 11.4" x 11.4"	30°,150°,270°	PLATFORM W/ HANDRAILS	(3) 1-5/8" [I]	USER	RECO
F	130.5'	(6) DECIBEL DB980H90E-M	60" x 6.3" x 3"	30°,150°,270°	PLATFORM W/ HANDRAILS	(6) 1-5/8" [I]	SPRINT	E
G	120.0'	(12) DECIBEL DB844H90E-XY	48" x 6.5" x 8"	30°,150°,270°	PLATFORM W/ HANDRAILS	(12) 1-1/4" [I]	NEXTEL	E
H	105.0'	(3) ALLGON 7250	61.3" x 6.3" x 2.2"	0°,120°,240°	FLUSH	(6) 1-1/4" [I]	AT&T	E
J	90.0'	(1) GENERIC OMNI	7'	0°	SIDE ARM	(1) 1/2" [O]	ARCH	E
L	85.0'	(1) GENERIC GPS	-	-	SIDE ARM	(1) 1/2" [O]	USER	E
M	80.0'	(2) GENERIC GPS	-	-	SIDE ARM	(2) 1/2" [O]	NEXTEL	E
N	54.0'	(1) GENERIC GPS	-	-	SIDE ARM	(1) 1/2" [O]	SPRINT	E
K	15.0'	(1) CHANNEL MASTER 1.2 METER	4.0'Ø	225°	PIPE	(1) RG6 [O]	ARCH	E

EXISTING ANTENNA INFORMATION

* [I], OR [O] DENOTES COAX INSTALLED INSIDE OR OUTSIDE MONOPOLE RESPECTIVELY.

ANTENNA STATUS LEGEND			
A	ABANDON	P	PROPOSED
E	EXISTING	R	RESERVED
I	INQUIRY	T	TEMPORARY
TBR	TO BE REMOVED		
RECO	RECONFIG. IN PROGRESS		

GENERAL NOTES

1) INSTALLATION SHALL NOT INTERFERE WITH OR DENY ACCESS TO OPERATIONAL AND SAFETY EQUIPMENT

SEAL:

REV	DWN	CHK	DATE	DESCRIPTION
3	PAT	JRJ	11/11/04	PROPOSED USER RECONFIGURATION ARCH DIPOLE REMOVED, GPS ADDED

SpectraSite

400 REGENCY FOREST DRIVE
CARY, NORTH CAROLINA 27511
PHONE:(919)468-0112 / FAX:(919)468-8522

TITLE: TOWER PROFILE
PROJECT: 155.0' EEI MONOPOLE
SITE: TOLLAND, CT

DATE:	DWN:	CHK:	SITE #:	DWG #:	REV:
08/30/02	KMM		CT-0031	TP	3

COPYRIGHT: DUPLICATION, RECORDING, USE OR DISCLOSURE PROHIBITED WITHOUT WRITTEN AUTHORIZATION OF SPECTRASITE COMMUNICATIONS.

SECTION	1	2	3	4	5

MODIFICATION

BASE PLATE	36 KSI	(8) STIFFENERS (PL 3/4" X 5" X 1'-0")

NOTE:
[TOS] TOP OF MONOPOLE STRUCTURE
[BOS] BOTTOM OF MONOPOLE STRUCTURE

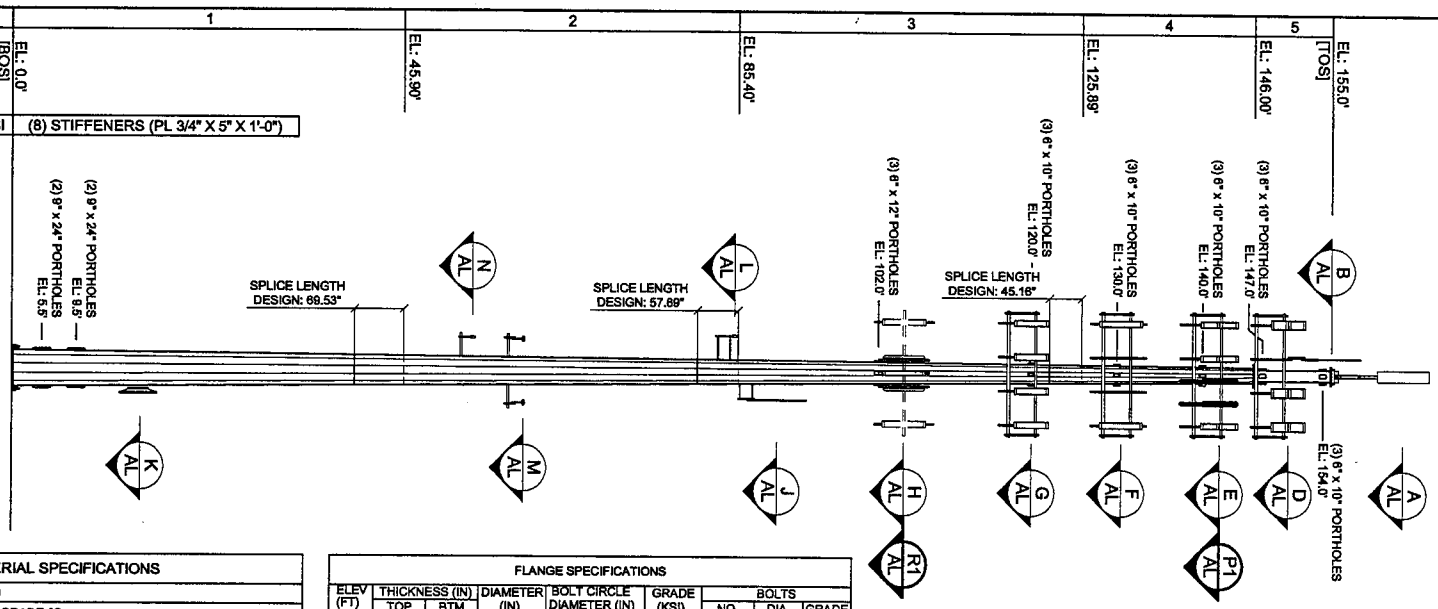

POLE MATERIAL SPECIFICATIONS	
TAPER:	0.214 (IN/FT)
SHAFT STEEL:	ASTM A572, GRADE 65
BASE PLATE STEEL:	ROUND PL 2.0" x 65.0"Ø ASTM A871, GR. 60
ANCHOR BOLTS:	(16) 2-25"Ø x 126.0" LG ASTM A615, GR. 75 59.0"Ø B.C.

FLANGE SPECIFICATIONS								
ELEV (FT)	THICKNESS (IN)		DIAMETER (IN)	BOLT CIRCLE DIAMETER (IN)	GRADE (KSI)	BOLTS		
	TOP	BTM				NO.	DIA.	GRADE
146	1.0	1.5	28.50	25.75	60	12	1"	A325

TOWER IDENTIFICATION	
MANUFACTURER:	ENGINEERED ENDEAVOURS INC.
IDENTIFICATION No:	3503

SHAFT SPECIFICATIONS							
SHAFT SECTION	SECTION LENGTH (FT)	# SIDES	THICKNESS (IN)	GRADE (KSI)	OVERLAP (IN)	DIAMETER ACROSS FLATS (IN)	
						BOTTOM	TOP
1	45.73	12	0.438	65	69.53	50.00	40.17
2	45.30	12	0.375	65	57.89	42.36	32.82
3	45.29	12	0.313	65	45.16	34.47	24.73
4	23.76	12	0.188	65	0	26.11	21.00
5	9.00	RND	0.500	42	0	16.00	16.00

DESIGN SPECIFICATIONS	
CODE:	ANSI/TIA/EIA-222-F 1996 BOCA NATIONAL BUILDING CODE
WIND:	85 MPH [TOLLAND COUNTY EIA] 85 MPH [1996 BOCA]
ICE:	31 MPH W/ 1-1/4" RADIAL

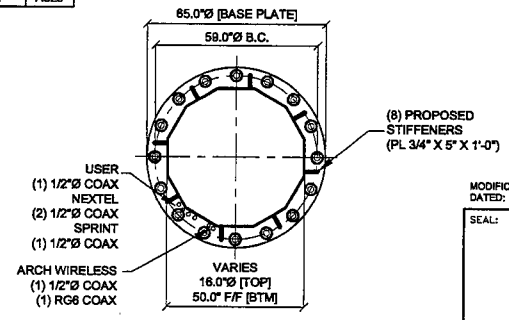

PLAN VIEW

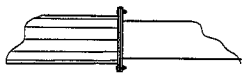

TYPICAL FLANGE DETAIL

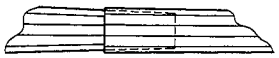

TYPICAL SPLICE DETAIL

NO.	ELEV	ANTENNA TYPE	ANT. DIMS. (LxWxD)	AZIMUTH	MOUNT	TX-LINE *	CUSTOMER	STATUS
P1	142.0'	(6) DECIBEL 948F85T2E-M	48" x 3.5" x 7"	30°,150°,270°	PLATFORM W/ HANDRAILS	**	USER	P
R1	105.0'	(3) ALLGON 7250	61.3" x 6.3" x 2.2"	0°,120°,240°	LOW PROFILE PLATFORM	(6) 7/8" [I]	AT&T	R

PROPOSED ANTENNA INFORMATION

* [I], OR [O] DENOTES COAX INSTALLED INSIDE OR OUTSIDE MONOPOLE RESPECTIVELY. ** (3) 1-5/8" [I], (3) 1-5/8" [O]

NO.	ELEV	ANTENNA TYPE	ANT. DIMS. (LxWxD)	AZIMUTH	MOUNT	TX-LINE *	CUSTOMER	STATUS
A	163.3'	(3) EMS RR90-17-02DP	56" x 8" x 2.75"	10°,130°,250°	CANISTER	(6) 1-5/8" [I]	T-MOBILE	E
B	155.0'	(1) GENERIC OMNI	7'	0°	PLATFORM W/ HANDRAILS	(1) 7/8" [I]	ARCH	E
D	150.0'	(9) CSS DUO4-8670	48" X 14" x 9"	31°,155°,274°	PLATFORM W/ HANDRAILS	(9) 1-1/4" [I]	CINGULAR	E
E	142.0'	(9) SWEDCOM ALP-9212	52" x 11.4" x 11.4"	30°,150°,270°	PLATFORM W/ HANDRAILS	(9) 1-5/8" [I]	USER	E
E	142.0'	(3) SWEDCOM ALP-9212	52" x 11.4" x 11.4"	30°,150°,270°	PLATFORM W/ HANDRAILS	(3) 1-5/8" [I]	USER	RECO
F	130.5'	(6) DECIBEL DB980H90E-M	60" x 6.3" x 3"	30°,150°,270°	PLATFORM W/ HANDRAILS	(6) 1-5/8" [I]	SPRINT	E
G	120.0'	(12) DECIBEL DB844H90E-XY	48" x 8.5" x 8"	30°,150°,270°	PLATFORM W/ HANDRAILS	(12) 1-1/4" [I]	NEXTEL	E
H	105.0'	(3) ALLGON 7250	61.3" x 6.3" x 2.2"	0°,120°,240°	FLUSH	(6) 1-1/4" [I]	AT&T	E
J	90.0'	(1) GENERIC OMNI	7'	0°	SIDE ARM	(1) 1/2" [O]	ARCH	E
L	85.0'	(1) GENERIC GPS	-	-	SIDE ARM	(1) 1/2" [O]	USER	E
M	60.0'	(2) GENERIC GPS	-	-	SIDE ARM	(2) 1/2" [O]	NEXTEL	E
N	54.0'	(1) GENERIC GPS	-	-	SIDE ARM	(1) 1/2" [O]	SPRINT	E
K	15.0'	(1) CHANNEL MASTER 1.2 METER	4.0'Ø	225°	PIPE	(1) RG6 [O]	ARCH	E

EXISTING ANTENNA INFORMATION

* [I], OR [O] DENOTES COAX INSTALLED INSIDE OR OUTSIDE MONOPOLE RESPECTIVELY.

ANTENNA STATUS LEGEND			
A	ABANDON	P	PROPOSED
E	EXISTING	R	RESERVED
I	INQUIRY	T	TEMPORARY
TBR	TO BE REMOVED		
RECO	RECONFIG. IN PROGRESS		

GENERAL NOTES
1) INSTALLATION SHALL NOT INTERFERE WITH OR DENY ACCESS TO OPERATIONAL AND SAFETY EQUIPMENT

MODIFICATIONS PER SPECTRASITE STRUCTURAL ANALYSIS
DATED: 11/15/04

SEAL:

I hereby certify that this engineering document was prepared by me or under my direct personal supervision and that I am a duly licensed Professional Engineer under the laws of the state of CONNECTICUT

REV	DWN	CHK	DATE	DESCRIPTION
0				

SpectraSite
400 REGENCY FOREST DRIVE
CARY, NORTH CAROLINA 27511
PHONE:(919)468-0112 / FAX:(919)468-8522

TITLE: MODIFICATION PROFILE
PROJECT: 155.0' EEI MONOPOLE
SITE: TOLLAND, CT

DATE:	DWN:	CHK:	SITE #:	DWG #:	REV:
11/15/04	JMB	SAW	CT-0031	M1	0

COPYRIGHT: DUPLICATION, RECORDING, USE OR DISCLOSURE PROHIBITED WITHOUT WRITTEN AUTHORIZATION OF SPECTRASITE COMMUNICATIONS.

STANDARD EIA-222F IMPERIAL UNITS

INPUT INFORMATION

Project Name	Tolland
Job Number	CT-0031
Title	155' EEI Monopole
Designer	SAW

Basic Wind Speed (mph)	85.00
Radial Ice (in)	1.25
Height (ft)	155.00
Number of Sides	12
Yield Stress (ksi)	65.00
Allowable Stress factor	1.33
Operational Wind (mph)	50.00
Iced Wind Speed (mph) optional	31.00

Site Specify Wind Only

Possible Number of Sides
0 - Round
8 - 8 Sided
12 - 12 Sided
16 - 16 Sided
18 - 18 Sided

Pole Section	Top Elev. (ft)	Bott. Elev. (ft)	Top O.D. (in.)	Bott. O.D. (in.)	Inner Bend Rad. / t (in/in)	Thickness (in.)	Dist. Area Appurtenance Bare (ft^2/ft)	Dist. Area Appurtenance Iced (ft^2/ft)
TOP	>>>							
A	155.00	150.00	16.00	16.00		1/2		
B	150.00	146.02	16.00	16.00		1/2		
C	146.02	146.01	16.00	21.00		3/16		
D	146.01	140.00	21.00	22.29		3/16		
E	140.00	130.00	22.29	24.43		3/16	0.396	0.646
F	130.00	125.90	24.43	25.30		3/16	0.396	0.646
G	125.90	125.89	25.30	24.73		5/16	0.396	0.646
H	125.89	120.00	24.73	26.00		5/16	0.396	0.646
I	120.00	110.00	26.00	28.15		5/16	0.396	0.646
J	110.00	100.00	28.15	30.30		5/16	0.396	0.646
K	100.00	90.00	30.29751	32.448092		5/16	0.396	0.646
L	90.00	85.42	32.45	33.44		5/16	0.459	0.959
M	85.42	85.41	33.44	32.82		3/8	0.459	0.959
N	85.41	80.00	32.82	33.96		3/8	0.522	1.272
O	80.00	70.00	33.96	36.06		3/8	0.522	1.272
P	70.00	60.00	36.06	38.17		3/8	0.522	1.272
Q	60.00	50.00	38.17	40.28		3/8	0.585	1.585
R	50.00	45.91	40.28	41.14		3/8	0.585	1.585
S	45.91	45.90	41.14	40.17		7/16	0.585	1.585
T	45.90	40.00	40.17	41.43		7/16	0.585	1.585
U	40.00	30.00	41.43	43.58		7/16	0.585	1.585
V	30.00	20.00	43.58	45.72		7/16	0.585	1.585
W	20.00	10.00	45.72	47.86		7/16	0.585	1.585
X	10.00	0.00	47.86	50.00		7/16	0.585	1.585

Individual Appurtenances Table

Elev (ft)	Area Appurt. C_AA_A Bare (ft^2)	Area Appurt. C_AA_A Iced (ft^2)	Weight Appurt. Bare (kip)	Weight Appurt. Iced (kip)	Description
163.30	0.00	0.00	0.054	0.121	RR90-17-02DP
163.30	10.00	13.50	0.400	0.520	Canister Mount
155.00	2.10	3.96	0.020	0.040	7' Omni
155.00	0.00	0.00	0.000	0.000	Same Mount as Belo
150.00	39.40	48.85	0.270	0.650	DUO4-8670
150.00	45.00	60.75	2.500	3.250	Platform w/ Handrails
142.00	34.75	44.41	0.240	0.646	ALP-9212
142.00	0.00	0.00	0.000	0.000	Same Mount as Belo
142.00	13.13	18.75	0.051	0.165	948F85T2E-M
142.00	45.00	60.75	2.500	3.250	Platform w/ Handrails
130.50	15.66	22.79	0.060	0.186	DB980H90E-M
130.50	45.00	60.75	2.500	3.250	Platform w/ Handrails
120.00	30.02	41.45	0.168	0.484	DB844H90E-XY
120.00	45.00	60.75	2.500	3.250	Platform w/ Handrails
105.00	16.07	23.37	0.092	0.210	7250
105.00	20.00	27.00	1.000	1.300	T-Arm Mounts
90.00	2.10	3.96	0.020	0.040	7' Omni
90.00	4.00	5.40	0.200	0.260	Side Arm Mount
85.00	0.13	0.36	0.005	0.007	GPS
85.00	4.00	5.40	0.200	0.260	Side Arm Mount
60.00	0.27	0.73	0.010	0.014	GPS
60.00	8.00	10.80	0.500	0.650	Side Arm Mount
54.00	0.13	0.36	0.005	0.007	GPS
54.00	4.00	5.40	0.200	0.260	Side Arm Mount
15.00	20.90	26.00	0.154	0.169	1.2 Meter STD Dish [
15.00	4.00	5.40	0.200	0.260	Pipe Mount

STANDARD EIA-222F IMPERIAL UNITS

ANALYSIS SUMMARY

Project Name	Tolland
Job Number	CT-0031
Title	155' EEI Monopole
Designer	SAW

Basic Wind Speed (mph)	85.00
Radial Ice (in)	1.25
Height (ft)	155.00
Number of Sides	12
Yield Stress (ksi)	65.00
Allowable Stress factor	1.33
Operational Wind (mph)	50.00
Iced Wind Speed (mph) optional	31

Site Specify Wind Only

Possible Number of Sides
0 - Round
8 - 8 Sided
12 - 12 Sided
16 - 16 Sided
18 - 18 Sided

POLE STRESSES AND DEFLECTIONS

Pole Section	Top Elev.	Bott. Elev.	Bare						Iced					
			Working Stress @Bot.				Operational @Top		Working Stress @Bot.				Operational @Top	
	(ft)	(ft)	Dead Load (kip)	Shear (kip)	Moment (kip ft)	Stress Ratio	Tilt (deg)	Defl. (ft)	Dead Load (kip)	Shear (kip)	Moment (kip ft)	Stress Ratio	Tilt (deg)	Defl. (ft)
TOP	>>>>>>>>>>>>>>>>		0.45	0.49	4.1	0.01			0.64	0.50	4.1	0.01		
A	155.00	150.00	0.90	0.93	8.4	0.02	2.66	3.96	1.24	0.70	8.0	0.02	2.10	3.01
B	150.00	146.02	4.01	5.26	30.1	0.08	2.66	3.72	5.59	4.70	28.1	0.07	2.10	2.83
C	146.02	146.01	4.01	5.26	30.1	0.12	2.65	3.54	5.59	4.70	28.1	0.11	2.09	2.68
D	146.01	140.00	7.06	10.19	76.5	0.26	2.65	3.54	10.13	9.19	70.3	0.24	2.09	2.68
E	140.00	130.00	10.10	14.13	196.6	0.56	2.61	3.26	14.43	12.27	177.0	0.51	2.05	2.46
F	130.00	125.90	10.31	14.61	260.7	0.71	2.48	2.82	14.80	12.34	233.2	0.64	1.94	2.12
G	125.90	125.89	10.31	14.61	260.9	0.42	2.41	2.64	14.80	12.34	233.4	0.38	1.88	1.98
H	125.89	120.00	10.82	15.30	356.4	0.52	2.41	2.64	15.56	12.45	314.7	0.46	1.88	1.98
I	120.00	110.00	14.40	19.91	563.8	0.69	2.33	2.40	20.65	16.11	490.7	0.61	1.81	1.79
J	110.00	100.00	16.49	22.75	793.2	0.84	2.16	2.00	23.63	17.95	678.6	0.72	1.66	1.49
K	100.00	90.00	17.55	24.06	1043.3	0.96	1.97	1.64	25.20	18.15	876.5	0.81	1.50	1.21
L	90.00	85.42	18.28	24.94	1163.2	1.00	1.75	1.32	26.26	18.54	968.8	0.84	1.32	0.96
M	85.42	85.41	18.29	24.94	1163.5	0.88	1.65	1.18	26.26	18.54	969.0	0.73	1.23	0.86
N	85.41	80.00	19.22	25.86	1309.3	0.92	1.65	1.18	27.56	18.85	1079.2	0.76	1.23	0.86
O	80.00	70.00	20.65	27.26	1589.4	0.99	1.54	1.03	29.55	19.09	1284.2	0.80	1.14	0.75
P	70.00	60.00	22.16	28.67	1882.3	1.04	1.33	0.78	31.66	19.32	1490.1	0.83	0.98	0.56
Q	60.00	50.00	24.47	30.57	2191.9	1.09	1.12	0.57	34.82	20.05	1700.8	0.85	0.82	0.41
R	50.00	45.91	25.15	31.15	2322.5	1.10	0.91	0.39	35.77	20.15	1787.6	0.86	0.66	0.28
S	45.91	45.90	25.15	31.15	2322.8	1.00	0.83	0.33	35.77	20.15	1787.8	0.77	0.59	0.23
T	45.90	40.00	26.29	31.97	2514.9	1.01	0.83	0.33	37.30	20.29	1913.2	0.78	0.59	0.23
U	40.00	30.00	28.31	33.32	2850.0	1.04	0.72	0.25	40.00	20.52	2125.9	0.78	0.51	0.17
V	30.00	20.00	30.43	34.70	3196.6	1.05	0.53	0.14	42.84	20.76	2338.8	0.78	0.37	0.10
W	20.00	10.00	33.01	36.92	3558.9	1.07	0.35	0.06	46.25	21.74	2555.4	0.77	0.24	0.04
X	10.00	0.00	35.34	38.43	3937.2	1.08	0.17	0.02	49.36	21.99	2775.6	0.77	0.12	0.01

INDIVIDUAL APPURTENANCES ROTATION

Elev. (ft)	Description	Tilt Bare (deg)	Tilt Iced (deg)
163.30	RR90-17-02DP	7.696	6.067
163.30	Canister Mount	7.696	6.067
155.00	7' Omni	7.696	6.067
155.00	Same Mount as Belo	7.696	6.067
150.00	DUO4-8670	7.685	6.056
150.00	Platform w/ Handrails	7.685	6.056
142.00	ALP-9212	7.584	5.964
142.00	Same Mount as Belo	7.584	5.964
142.00	948F85T2E-M	7.584	5.964
142.00	Platform w/ Handrails	7.584	5.964
130.50	DB980H90E-M	7.199	5.621
130.50	Platform w/ Handrails	7.199	5.621
120.00	DB844H90E-XY	6.737	5.219
120.00	Platform w/ Handrails	6.737	5.219
105.00	7250	5.965	4.564
105.00	T-Arm Mounts	5.965	4.564
90.00	7' Omni	5.055	3.808
90.00	Side Arm Mount	5.055	3.808
85.00	GPS	4.732	3.544
85.00	Side Arm Mount	4.732	3.544
60.00	GPS	3.237	2.362
60.00	Side Arm Mount	3.237	2.362
54.00	GPS	2.876	2.087
54.00	Side Arm Mount	2.876	2.087
15.00	1.2 Meter STD Dish	0.751	0.525
15.00	Pipe Mount	0.751	0.525

CALCULATION OF SECTION PROPERTIES AND CAPACITIES

Project Name	Tolland
Job Number	CT-0031
Title	155' EEI Monopole
Designer	SAW

Pole Section	Top Elev.	Bott. Elev.	Thickness	Bend Radius	r Ratio	r Ratio	w	TOP ELEVATION				BOTTOM ELEVATION						
					Bare	Iced		O. D.	Mean Width	Area	Inertia	O. D.	Mean Width	Area	Inertia	S	$(Fy)^{1/2}$ w/t	Allowable F_B
	(ft)	(ft)	(in)	(in)			(in)	(in)	(in)	(in^2)	(in^4)	(in)	(in)	(in^2)	(in^4)	(in^3)		(ksi)
TOP	>>>>>>>>>>>>>>>>>>>>>>>>>>>>>>>>>>>>>>																	
A	155.00	150.00	1/2	0.000	0.063	0.189	4.02	16.00	15.5	24.96	765.3	16.00	15.50	24.96	765.3	92.4	64.8	52.
B	150.00	146.02	1/2	0.000	0.063	0.189	4.02	16.00	15.5	24.96	765.3	16.00	15.50	24.96	765.3	92.4	64.8	52.
C	146.02	146.01	3/16	0.000	0.020	0.137	4.86	16.00	15.81	9.57	305.5	21.00	20.81	12.60	696.5	64.1	208.3	52.
D	146.01	140.00	3/16	0.000	0.017	0.119	5.70	21.00	20.81	12.60	696.5	22.29	22.10	13.38	833.8	72.3	244.4	51.63
E	140.00	130.00	3/16	0.000	0.016	0.111	6.16	22.29	22.1	13.38	833.8	24.43	24.24	14.67	1100.1	87.0	264.1	49.71
F	130.00	125.90	3/16	0.000	0.015	0.105	6.56	24.43	24.24	14.67	1100.1	25.30	25.12	15.20	1224.3	93.5	281.5	48.02
G	125.90	125.89	5/16	0.000	0.025	0.114	6.54	25.30	24.99	25.19	2008.1	24.73	24.42	24.61	1872.7	146.3	168.4	52.
H	125.89	120.00	5/16	0.000	0.025	0.112	6.63	24.73	24.42	24.61	1872.7	26.00	25.68	25.89	2179.4	162.0	170.8	52.
I	120.00	110.00	5/16	0.000	0.023	0.106	7.09	26.00	25.68	25.89	2179.4	28.15	27.83	28.05	2774.0	190.4	182.6	52.
J	110.00	100.00	5/16	0.000	0.021	0.099	7.66	28.15	27.83	28.05	2774.0	30.30	29.98	30.22	3468.0	221.1	197.4	52.
K	100.00	90.00	5/16	0.000	0.020	0.092	8.24	30.30	29.98	30.22	3468.0	32.45	32.14	32.39	4269.0	254.2	212.2	52.
L	90.00	85.42	5/16	0.000	0.019	0.088	8.66	32.45	32.14	32.39	4269.0	33.44	33.12	33.38	4675.0	270.1	223.1	52.
M	85.42	85.41	3/8	0.000	0.023	0.091	8.68	33.44	33.06	39.92	5569.6	32.82	32.45	39.18	5264.0	309.9	186.6	52.
N	85.41	80.00	3/8	0.000	0.022	0.091	8.75	32.82	32.45	39.18	5264.0	33.96	33.58	40.55	5837.8	332.1	188.1	52.
O	80.00	70.00	3/8	0.000	0.021	0.087	9.18	33.96	33.58	40.55	5837.8	36.06	35.69	43.09	7006.3	375.3	197.4	52.
P	70.00	60.00	3/8	0.000	0.020	0.082	9.75	36.06	35.69	43.09	7006.3	38.17	37.80	45.64	8321.3	421.1	209.5	52.
Q	60.00	50.00	3/8	0.000	0.019	0.078	10.31	38.17	37.8	45.64	8321.3	40.28	39.90	48.18	9791.2	469.6	221.7	52.
R	50.00	45.91	3/8	0.000	0.018	0.075	10.71	40.28	39.9	48.18	9791.2	41.14	40.76	49.22	10440.7	490.3	230.2	52.
S	45.91	45.90	7/16	0.000	0.022	0.078	10.66	41.14	40.7	57.40	12138.2	40.17	39.73	56.04	11291.1	543.0	196.2	52.
T	45.90	40.00	7/16	0.000	0.021	0.078	10.70	40.17	39.73	56.04	11291.1	41.43	41.00	57.82	12403.0	578.3	197.0	52.
U	40.00	30.00	7/16	0.000	0.021	0.075	11.16	41.43	41.	57.82	12403.0	43.58	43.14	60.84	14450.1	640.6	205.4	52.
V	30.00	20.00	7/16	0.000	0.020	0.072	11.73	43.58	43.14	60.84	14450.1	45.72	45.28	63.86	16710.9	706.2	215.9	52.
W	20.00	10.00	7/16	0.000	0.019	0.068	12.30	45.72	45.28	63.86	16710.9	47.86	47.42	66.88	19196.0	774.9	226.5	52.
X	10.00	0.00	7/16	0.000	0.018	0.066	12.88	47.86	47.42	66.88	19196.0	50.00	49.56	69.90	21916.1	846.8	237.0	52.

BARE WIND LOAD FOR POLE + DIST. APPURTENANCES

Project Name	Tolland
Job Number	CT-0031
Title	155' EEI Monopole
Designer	SAW

Pole Section	Top Elev. (ft)	Bott. Elev. (ft)	Mid-section Height (ft)	Section Length (ft)	Avg. O.D. (in)	Dist. Area Appurtenance (ft^2/ft)	Total Wind Area (ft^2)	r Ratio	Kz (ft)	q_z (lb/ft^2)	C (mph ft)	Force Coeff. Cf	Horz. Force (kip)	Shear (kip)	Moment (kip ft)
TOP	>>													0.00	0.0
A	155.00	150.00	152.50	5.00	16.00	0.00	6.67	0.063	1.55	28.64	141	1.030	0.332	0.33	0.8
B	150.00	146.02	148.01	3.98	16.00	0.00	5.31	0.063	1.54	28.40	140	1.030	0.262	0.59	2.7
C	146.02	146.01	146.02	0.01	18.50	0.00	0.02	0.020	1.53	28.29	162	1.030	0.001	0.60	2.7
D	146.01	140.00	143.01	6.01	21.64	0.00	10.84	0.017	1.52	28.12	189	1.030	0.531	1.13	7.9
E	140.00	130.00	135.00	10.00	23.36	0.40	23.42	0.016	1.50	27.66	202	1.030	1.128	2.25	24.8
F	130.00	125.90	127.95	4.10	24.87	0.40	10.12	0.015	1.47	27.24	214	1.030	0.480	2.73	35.0
G	125.90	125.89	125.89	0.01	25.02	0.40	0.02	0.025	1.47	27.12	215	1.030	0.001	2.74	35.0
H	125.89	120.00	122.94	5.89	25.36	0.40	14.78	0.025	1.46	26.93	217	1.030	0.693	3.43	53.2
I	120.00	110.00	115.00	10.00	27.07	0.40	26.52	0.023	1.43	26.42	229	1.030	1.220	4.65	93.5
J	110.00	100.00	105.00	10.00	29.22	0.40	28.31	0.021	1.39	25.75	244	1.030	1.269	5.92	146.4
K	100.00	90.00	95.00	10.00	31.37	0.40	30.10	0.020	1.35	25.02	258	1.030	1.311	7.23	212.1
L	90.00	85.42	87.71	4.58	32.94	0.46	14.69	0.019	1.32	24.46	268	1.030	0.625	7.85	246.6
M	85.42	85.41	85.41	0.01	33.13	0.46	0.03	0.023	1.31	24.27	269	1.030	0.001	7.85	246.7
N	85.41	80.00	82.70	5.41	33.39	0.52	17.86	0.022	1.30	24.05	270	1.030	0.748	8.60	291.2
O	80.00	70.00	75.00	10.00	35.01	0.52	34.40	0.021	1.26	23.39	279	1.030	1.400	10.00	384.2
P	70.00	60.00	65.00	10.00	37.12	0.52	36.15	0.020	1.21	22.45	290	1.030	1.413	11.41	491.3
Q	60.00	50.00	55.00	10.00	39.22	0.59	38.54	0.019	1.16	21.40	299	1.030	1.436	12.85	612.6
R	50.00	45.91	47.96	4.09	40.71	0.59	16.27	0.018	1.11	20.58	304	1.030	0.583	13.43	666.4
S	45.91	45.90	45.91	0.01	40.65	0.59	0.04	0.022	1.10	20.33	302	1.030	0.001	13.43	666.5
T	45.90	40.00	42.95	5.90	40.80	0.59	23.51	0.021	1.08	19.94	300	1.030	0.816	14.25	748.2
U	40.00	30.00	35.00	10.00	42.50	0.59	41.27	0.021	1.02	18.81	304	1.030	1.351	15.60	897.5
V	30.00	20.00	25.00	10.00	44.65	0.59	43.05	0.020	1.00	18.50	316	1.030	1.386	16.99	1060.4
W	20.00	10.00	15.00	10.00	46.79	0.59	44.84	0.019	1.00	18.50	331	1.030	1.444	18.43	1237.5
X	10.00	0.00	5.00	10.00	48.93	0.59	46.62	0.018	1.00	18.50	347	1.030	1.501	19.93	1429.3

ICED WIND LOAD FOR POLE + DIST. APPURTENANCES

Project Name	Tolland
Job Number	CT-0031
Title	155' EEI Monopole
Designer	SAW

Pole Section	Top Elev. (ft)	Bott. Elev. (ft)	Mid-section Height (ft)	Section Length (ft)	Avg. O.D. (in)	Dist. Area Appurtenance (ft^2/ft)	Total Wind Area (ft^2)	r Ratio	Kz (ft)	q_z (lb/ft^2)	C (mph ft)	Force Coeff. Cf	Horz. Force (kip)	Shear (kip)	Moment (kip ft)
TOP	>>													0.00	0.0
A	155.00	150.00	152.50	5.00	18.50	0.00	7.71	0.189	1.55	3.81	59	1.077	0.053	0.05	0.1
B	150.00	146.02	148.01	3.98	18.50	0.00	6.14	0.189	1.54	3.78	59	1.080	0.042	0.10	0.4
C	146.02	146.01	146.02	0.01	21.00	0.00	0.02	0.137	1.53	3.76	67	1.030	0.000	0.10	0.4
D	146.01	140.00	143.01	6.01	24.14	0.00	12.09	0.119	1.52	3.74	77	1.030	0.079	0.17	1.2
E	140.00	130.00	135.00	10.00	25.86	0.65	28.01	0.111	1.50	3.68	82	1.030	0.179	0.35	3.9
F	130.00	125.90	127.95	4.10	27.37	0.65	12.00	0.105	1.47	3.62	86	1.030	0.076	0.43	5.5
G	125.90	125.89	125.89	0.01	27.52	0.65	0.03	0.114	1.47	3.61	86	1.030	0.000	0.43	5.5
H	125.89	120.00	122.94	5.89	27.86	0.65	17.48	0.112	1.46	3.58	87	1.030	0.109	0.54	8.4
I	120.00	110.00	115.00	10.00	29.57	0.65	31.10	0.106	1.43	3.51	91	1.030	0.190	0.73	14.7
J	110.00	100.00	105.00	10.00	31.72	0.65	32.90	0.099	1.39	3.42	97	1.030	0.196	0.93	23.0
K	100.00	90.00	95.00	10.00	33.87	0.65	34.69	0.092	1.35	3.33	102	1.030	0.201	1.13	33.2
L	90.00	85.42	87.71	4.58	35.44	0.96	17.94	0.088	1.32	3.25	105	1.030	0.102	1.23	38.6
M	85.42	85.41	85.41	0.01	35.63	0.96	0.04	0.091	1.31	3.23	105	1.030	0.000	1.23	38.6
N	85.41	80.00	82.70	5.41	35.89	1.27	23.04	0.091	1.30	3.20	106	1.030	0.128	1.36	45.6
O	80.00	70.00	75.00	10.00	37.51	1.27	43.98	0.087	1.26	3.11	109	1.030	0.238	1.59	60.4
P	70.00	60.00	65.00	10.00	39.62	1.27	45.73	0.082	1.21	2.99	113	1.030	0.238	1.83	77.5
Q	60.00	50.00	55.00	10.00	41.72	1.59	50.62	0.078	1.16	2.85	116	1.030	0.251	2.08	97.1
R	50.00	45.91	47.96	4.09	43.21	1.59	21.21	0.075	1.11	2.74	118	1.030	0.101	2.18	105.8
S	45.91	45.90	45.91	0.01	43.15	1.59	0.05	0.078	1.10	2.70	117	1.030	0.000	2.18	105.8
T	45.90	40.00	42.95	5.90	43.30	1.59	30.64	0.078	1.08	2.65	116	1.030	0.141	2.33	119.1
U	40.00	30.00	35.00	10.00	45.00	1.59	53.35	0.075	1.02	2.50	117	1.030	0.232	2.56	143.5
V	30.00	20.00	25.00	10.00	47.15	1.59	55.14	0.072	1.00	2.46	122	1.030	0.236	2.79	170.3
W	20.00	10.00	15.00	10.00	49.29	1.59	56.92	0.068	1.00	2.46	127	1.030	0.244	3.04	199.5
X	10.00	0.00	5.00	10.00	51.43	1.59	58.71	0.066	1.00	2.46	133	1.030	0.251	3.29	231.1

WIND LOAD FOR INDIVIDUAL APPURTENANCES

Project Name	Tolland
Job Number	CT-0031
Title	155' EEI Monopole
Designer	SAW

Force Calculation

Elev	Bare			Iced		
	q_z	C_AA_A	Horz. Force	q_z	C_AA_A	Horz. Force
(ft)	(lb/ft^2)	(ft^2)	(kip)	(lb/ft^2)	(ft^2)	(kip)
163.30	29.21	0.00	0.00	29.21	0.00	0.00
163.30	29.21	10.00	0.49	29.21	13.50	0.50
155.00	28.78	2.10	0.10	28.78	3.96	0.14
155.00	28.78	0.00	0.00	28.78	0.00	0.00
150.00	28.51	39.40	1.90	28.51	48.85	1.77
150.00	28.51	45.00	2.17	28.51	60.75	2.20
142.00	28.06	34.75	1.65	28.06	44.41	1.58
142.00	28.06	0.00	0.00	28.06	0.00	0.00
142.00	28.06	13.13	0.62	28.06	18.75	0.67
142.00	28.06	45.00	2.13	28.06	60.75	2.16
130.50	27.40	15.66	0.73	27.40	22.79	0.79
130.50	27.40	45.00	2.08	27.40	60.75	2.11
120.00	26.75	30.02	1.36	26.75	41.45	1.41
120.00	26.75	45.00	2.03	26.75	60.75	2.06
105.00	25.75	16.07	0.70	25.75	23.37	0.76
105.00	25.75	20.00	0.87	25.75	27.00	0.88
90.00	24.64	2.10	0.09	24.64	3.96	0.12
90.00	24.64	4.00	0.17	24.64	5.40	0.17
85.00	24.24	0.13	0.01	24.24	0.36	0.01
85.00	24.24	4.00	0.16	24.24	5.40	0.17
60.00	21.94	0.27	0.01	21.94	0.73	0.02
60.00	21.94	8.00	0.30	21.94	10.80	0.30
54.00	21.29	0.13	0.00	21.29	0.36	0.01
54.00	21.29	4.00	0.14	21.29	5.40	0.15
15.00	18.50	20.90	0.65	18.50	26.00	0.61
15.00	18.50	4.00	0.13	18.50	5.40	0.13

Shear and Moment

Pole Section	Top Elev.	Bott. Elev.	Bare				Iced			
			Eq. Force	Eq. Elev.	Shear	Moment	Eq. Force	Eq. Elev.	Shear	Moment
	(ft)	(ft)	(kip)	(ft)	(kip)	(kip ft)	(kip)	(ft)	(kip)	(kip ft)
TOP	>>>>>>>>>>>>>>>>>		0.494	163.30	0.49	4.1	0.500	163.30	0.50	4.1
A	155.00	150.00	0.102	155.00	0.60	7.1	0.145	155.00	0.64	7.4
B	150.00	146.02	4.066	150.00	4.66	25.6	3.960	150.00	4.60	25.7
C	146.02	146.01			4.66	25.7			4.60	25.7
D	146.01	140.00	4.405	142.00	9.07	62.5	4.408	142.00	9.01	62.2
E	140.00	130.00	2.809	130.50	11.88	154.6	2.901	130.50	11.91	153.8
F	130.00	125.90			11.88	203.3			11.91	202.7
G	125.90	125.89			11.88	203.4			11.91	202.8
H	125.89	120.00			11.88	273.3			11.91	272.9
I	120.00	110.00	3.391	120.00	15.27	426.0	3.465	120.00	15.38	426.7
J	110.00	100.00	1.570	105.00	16.84	586.5	1.644	105.00	17.02	588.7
K	100.00	90.00			16.84	754.9			17.02	758.9
L	90.00	85.42	0.254	90.00	17.09	833.2	0.292	90.00	17.31	838.3
M	85.42	85.41			17.09	833.4			17.31	838.5
N	85.41	80.00	0.169	85.00	17.26	926.6	0.177	85.00	17.49	932.9
O	80.00	70.00			17.26	1099.2			17.49	1107.8
P	70.00	60.00			17.26	1271.8			17.49	1282.8
Q	60.00	50.00	0.455	58.04	17.71	1448.1	0.476	58.04	17.97	1461.5
R	50.00	45.91			17.71	1520.5			17.97	1535.0
S	45.91	45.90			17.71	1520.7			17.97	1535.2
T	45.90	40.00			17.71	1625.2			17.97	1641.2
U	40.00	30.00			17.71	1802.4			17.97	1820.8
V	30.00	20.00			17.71	1979.5			17.97	2000.5
W	20.00	10.00	0.778	15.00	18.49	2160.5	0.736	15.00	18.70	2183.8
X	10.00	0.00			18.49	2345.5			18.70	2370.9

CALCULATION OF BARE AND ICED POLE WEIGHT

Project Name	Tolland
Job Number	CT-0031
Title	155' EEI Monopole
Designer	SAW

Pole Section	Top Elev.	Bott. Elev.	Sec. Length	Avg. Mean Width	Thickness	Avg. Area	Pole Sec. Weight	Bare			Iced					
								App. Weight	Total Weight	Accum. Weight	Avg. Ice Area	Ice Weight	Pole Sec. Weight	App. Weight	Total Weight	Accum. Weight
	(ft)	(ft)	(ft)	(in)	(in)	(in^2)	(kip)	(kip)	(kip)	(kip)	(in^2)	(kip)	(kip)	(kip)	(kip)	(kip)
TOP	>>>							0.454	0.45	0.45				0.641	0.64	0.64
A	155.00	150.00	5.00	15.50	1/2	24.96	0.425	0.020	0.44	0.90	69.43	0.135	0.425	0.040	0.60	1.24
B	150.00	146.02	3.98	15.50	1/2	24.96	0.338	2.770	3.11	4.01	69.43	0.107	0.338	3.900	4.35	5.59
C	146.02	146.01	0.01	18.31	3/16	11.09	0.000	0.000	0.00	4.01	79.49	0.000	0.000	0.000	0.00	5.59
D	146.01	140.00	6.01	21.45	3/16	12.99	0.266	2.791	3.06	7.06	92.14	0.215	0.266	4.061	4.54	10.13
E	140.00	130.00	10.00	23.17	3/16	14.02	0.477	2.560	3.04	10.10	99.04	0.385	0.477	3.436	4.30	14.43
F	130.00	125.90	4.10	24.68	3/16	14.94	0.208	0.000	0.21	10.31	105.11	0.168	0.208	0.000	0.38	14.80
G	125.90	125.89	0.01	24.70	5/16	24.90	0.001	0.000	0.00	10.31	105.73	0.000	0.001	0.000	0.00	14.80
H	125.89	120.00	5.89	25.05	5/16	25.25	0.506	0.000	0.51	10.82	107.12	0.245	0.506	0.000	0.75	15.56
I	120.00	110.00	10.00	26.76	5/16	26.97	0.918	2.668	3.59	14.40	113.99	0.443	0.918	3.734	5.09	20.65
J	110.00	100.00	10.00	28.91	5/16	29.14	0.991	1.092	2.08	16.49	122.65	0.477	0.991	1.510	2.98	23.63
K	100.00	90.00	10.00	31.06	5/16	31.30	1.065	0.000	1.07	17.55	131.31	0.511	1.065	0.000	1.58	25.20
L	90.00	85.42	4.58	32.63	5/16	32.89	0.513	0.220	0.73	18.28	137.62	0.245	0.513	0.300	1.06	26.26
M	85.42	85.41	0.01	32.75	3/8	39.55	0.001	0.000	0.00	18.29	138.37	0.001	0.001	0.000	0.00	26.26
N	85.41	80.00	5.41	33.01	3/8	39.86	0.733	0.205	0.94	19.22	139.42	0.293	0.733	0.267	1.29	27.56
O	80.00	70.00	10.00	34.64	3/8	41.82	1.423	0.000	1.42	20.65	145.95	0.568	1.423	0.000	1.99	29.55
P	70.00	60.00	10.00	36.74	3/8	44.37	1.510	0.000	1.51	22.16	154.43	0.601	1.510	0.000	2.11	31.66
Q	60.00	50.00	10.00	38.85	3/8	46.91	1.596	0.715	2.31	24.47	162.91	0.634	1.596	0.932	3.16	34.82
R	50.00	45.91	4.09	40.33	3/8	48.70	0.678	0.000	0.68	25.15	168.88	0.269	0.678	0.000	0.95	35.77
S	45.91	45.90	0.01	40.22	7/16	56.72	0.002	0.000	0.00	25.15	168.67	0.001	0.002	0.000	0.00	35.77
T	45.90	40.00	5.90	40.36	7/16	56.93	1.143	0.000	1.14	26.29	169.26	0.388	1.143	0.000	1.53	37.30
U	40.00	30.00	10.00	42.07	7/16	59.33	2.019	0.000	2.02	28.31	176.11	0.685	2.019	0.000	2.70	40.00
V	30.00	20.00	10.00	44.21	7/16	62.35	2.122	0.000	2.12	30.43	184.73	0.718	2.122	0.000	2.84	42.84
W	20.00	10.00	10.00	46.35	7/16	65.37	2.224	0.354	2.58	33.01	193.35	0.752	2.224	0.429	3.41	46.25
X	10.00	0.00	10.00	48.49	7/16	68.39	2.327	0.000	2.33	35.34	201.97	0.785	2.327	0.000	3.11	49.36

CALCULATION OF DEFLECTIONS AND SECONDARY MOMENTS (BARE POLE)

Project Name	Tolland
Job Number	CT-0031
Title	155' EEI Monopole
Designer	SAW

							Working Stress							Operational	
Pole Section	Top Elev. (ft)	Bott. Elev. (ft)	Section Length (ft)	Moment (kip ft)	Inertia at Top of Sec. (in^4)	Inertia at Bot. of Sec. (in^4)	Avg. Moment (kip ft)	Inc. Tilt (deg)	Total Tilt (deg)	Tot. Defl. @top (ft)	Total Weight (kip)	Accum. Weight (kip)	M_2 (kip ft)	Total Tilt @top (ft)	Total Defl. @top (ft)
TOP	>>>>>>>>>>>>>>>>>>>>>>>>>			4.1	0.0	0.0					0.454	0.454			
A	155.00	150.00	5.00	7.9	765.3	765.3	6.0	0.011	**7.70**	**11.43**	0.445	0.899	**0.454**	**2.66**	**3.96**
B	150.00	146.02	3.98	28.3	765.3	765.3	18.1	0.027	**7.68**	**10.76**	3.108	4.007	**1.761**	**2.66**	**3.72**
C	146.02	146.01	0.01	28.4	305.5	696.5	28.3	0.000	**7.66**	**10.23**	0.000	4.007	**1.767**	**2.65**	**3.54**
D	146.01	140.00	6.01	70.4	696.5	833.8	49.4	0.110	**7.66**	**10.23**	3.057	7.064	**6.186**	**2.65**	**3.54**
E	140.00	130.00	10.00	179.3	833.8	1100.1	124.8	0.367	**7.55**	**9.43**	3.037	10.101	**17.256**	**2.61**	**3.26**
F	130.00	125.90	4.10	238.3	1100.1	1224.3	208.8	0.210	**7.18**	**8.14**	0.208	10.310	**22.429**	**2.48**	**2.82**
G	125.90	125.89	0.01	238.4	2008.1	1872.7	238.3	0.000	**6.97**	**7.63**	0.001	10.310	**22.441**	**2.41**	**2.64**
H	125.89	120.00	5.89	326.5	1872.7	2179.4	282.5	0.234	**6.97**	**7.63**	0.506	10.816	**29.888**	**2.41**	**2.64**
I	120.00	110.00	10.00	519.5	2179.4	2774.0	423.0	0.486	**6.74**	**6.93**	3.586	14.402	**44.220**	**2.33**	**2.40**
J	110.00	100.00	10.00	732.9	2774.0	3468.0	626.2	0.571	**6.25**	**5.79**	2.084	16.486	**60.343**	**2.16**	**2.00**
K	100.00	90.00	10.00	967.0	3468.0	4269.0	849.9	0.625	**5.68**	**4.75**	1.065	17.551	**76.328**	**1.97**	**1.64**
L	90.00	85.42	4.58	1079.9	4269.0	4675.0	1023.4	0.298	**5.05**	**3.81**	0.733	18.284	**83.364**	**1.75**	**1.32**
M	85.42	85.41	0.01	1080.1	5569.6	5264.0	1080.0	0.001	**4.76**	**3.41**	0.001	18.285	**83.380**	**1.65**	**1.18**
N	85.41	80.00	5.41	1217.8	5264.0	5837.8	1149.0	0.318	**4.76**	**3.41**	0.938	19.224	**91.519**	**1.65**	**1.18**
O	80.00	70.00	10.00	1483.4	5837.8	7006.3	1350.6	0.598	**4.44**	**2.98**	1.423	20.647	**105.952**	**1.54**	**1.03**
P	70.00	60.00	10.00	1763.1	7006.3	8321.3	1623.3	0.603	**3.84**	**2.26**	1.510	22.157	**119.199**	**1.33**	**0.78**
Q	60.00	50.00	10.00	2060.7	8321.3	9791.2	1911.9	0.601	**3.24**	**1.64**	2.311	24.468	**131.178**	**1.12**	**0.57**
R	50.00	45.91	4.09	2186.9	9791.2	10440.7	2123.8	0.244	**2.64**	**1.12**	0.678	25.146	**135.631**	**0.91**	**0.39**
S	45.91	45.90	0.01	2187.2	12138.2	11291.1	2187.1	0.001	**2.39**	**0.94**	0.002	25.147	**135.642**	**0.83**	**0.33**
T	45.90	40.00	5.90	2373.4	11291.1	12403.0	2280.3	0.323	**2.39**	**0.94**	1.143	26.290	**141.552**	**0.83**	**0.33**
U	40.00	30.00	10.00	2699.8	12403.0	14450.1	2536.6	0.537	**2.07**	**0.71**	2.019	28.309	**150.153**	**0.72**	**0.25**
V	30.00	20.00	10.00	3039.9	14450.1	16710.9	2869.9	0.524	**1.53**	**0.40**	2.122	30.431	**156.681**	**0.53**	**0.14**
W	20.00	10.00	10.00	3398.0	16710.9	19196.0	3219.0	0.510	**1.01**	**0.18**	2.578	33.009	**160.868**	**0.35**	**0.06**
X	10.00	0.00	10.00	3774.8	19196.0	21916.1	3586.4	0.496	**0.50**	**0.04**	2.327	35.336	**162.374**	**0.17**	**0.02**

CALCULATION OF DEFLECTIONS AND SECONDARY MOMENTS (ICED POLE)

Project Name	Tolland
Job Number	CT-0031
Title	155' EEI Monopole
Designer	SAW

							Working Stress							Operational	
Pole Section	Top Elev. (ft)	Bott. Elev. (ft)	Section Length (ft)	Moment (kip ft)	Inertia at Top of Sec. (in^4)	Inertia at Bot. of Sec. (in^4)	Avg. Moment (kip ft)	Inc. Tilt (deg)	Total Tilt (deg)	Tot. Defl. @top (ft)	Total Weight (kip)	Accum. Weight (kip)	M_2 (kip ft)	Total Tilt @top (ft)	Total Defl. @top (ft)
TOP	>>>>>>>>>>>>>>>>>>>>>>>>>			4.1	0.0	0.0					0.641	0.641			
A	155.00	150.00	5.00	7.5	765.3	765.3	5.8	0.011	**6.07**	**8.70**	0.599	1.240	**0.498**	**2.10**	**3.01**
B	150.00	146.02	3.98	26.1	765.3	765.3	16.8	0.025	**6.06**	**8.17**	4.345	5.586	**1.931**	**2.10**	**2.83**
C	146.02	146.01	0.01	26.2	305.5	696.5	26.2	0.000	**6.03**	**7.75**	0.001	5.586	**1.937**	**2.09**	**2.68**
D	146.01	140.00	6.01	63.5	696.5	833.8	44.8	0.100	**6.03**	**7.75**	4.542	10.129	**6.872**	**2.09**	**2.68**
E	140.00	130.00	10.00	157.7	833.8	1100.1	110.6	0.325	**5.93**	**7.12**	4.298	14.427	**19.281**	**2.05**	**2.46**
F	130.00	125.90	4.10	208.2	1100.1	1224.3	182.9	0.184	**5.61**	**6.11**	0.376	14.803	**25.054**	**1.94**	**2.12**
G	125.90	125.89	0.01	208.3	2008.1	1872.7	208.2	0.000	**5.42**	**5.72**	0.001	14.804	**25.068**	**1.88**	**1.98**
H	125.89	120.00	5.89	281.3	1872.7	2179.4	244.8	0.202	**5.42**	**5.72**	0.751	15.555	**33.376**	**1.88**	**1.98**
I	120.00	110.00	10.00	441.4	2179.4	2774.0	361.3	0.415	**5.22**	**5.17**	5.095	20.650	**49.257**	**1.81**	**1.79**
J	110.00	100.00	10.00	611.7	2774.0	3468.0	526.5	0.480	**4.80**	**4.29**	2.979	23.629	**66.942**	**1.66**	**1.49**
K	100.00	90.00	10.00	792.1	3468.0	4269.0	701.9	0.516	**4.32**	**3.49**	1.576	25.205	**84.315**	**1.50**	**1.21**
L	90.00	85.42	4.58	876.9	4269.0	4675.0	834.5	0.243	**3.81**	**2.78**	1.058	26.262	**91.908**	**1.32**	**0.96**
M	85.42	85.41	0.01	877.1	5569.6	5264.0	877.0	0.000	**3.56**	**2.49**	0.002	26.264	**91.925**	**1.23**	**0.86**
N	85.41	80.00	5.41	978.6	5264.0	5837.8	927.8	0.257	**3.56**	**2.49**	1.294	27.558	**100.653**	**1.23**	**0.86**
O	80.00	70.00	10.00	1168.2	5837.8	7006.3	1073.4	0.476	**3.31**	**2.16**	1.991	29.549	**115.981**	**1.14**	**0.75**
P	70.00	60.00	10.00	1360.3	7006.3	8321.3	1264.2	0.469	**2.83**	**1.63**	2.110	31.659	**129.882**	**0.98**	**0.56**
Q	60.00	50.00	10.00	1558.6	8321.3	9791.2	1459.4	0.458	**2.36**	**1.17**	3.161	34.820	**142.284**	**0.82**	**0.41**
R	50.00	45.91	4.09	1640.8	9791.2	10440.7	1599.7	0.184	**1.90**	**0.80**	0.946	35.767	**146.850**	**0.66**	**0.28**
S	45.91	45.90	0.01	1641.0	12138.2	11291.1	1640.9	0.000	**1.72**	**0.67**	0.003	35.769	**146.860**	**0.59**	**0.23**
T	45.90	40.00	5.90	1760.3	11291.1	12403.0	1700.6	0.241	**1.72**	**0.67**	1.531	37.301	**152.879**	**0.59**	**0.23**
U	40.00	30.00	10.00	1964.4	12403.0	14450.1	1862.3	0.395	**1.48**	**0.50**	2.704	40.004	**161.543**	**0.51**	**0.17**
V	30.00	20.00	10.00	2170.8	14450.1	16710.9	2067.6	0.378	**1.08**	**0.28**	2.840	42.844	**168.034**	**0.37**	**0.10**
W	20.00	10.00	10.00	2383.3	16710.9	19196.0	2277.1	0.361	**0.71**	**0.12**	3.405	46.250	**172.141**	**0.24**	**0.04**
X	10.00	0.00	10.00	2602.0	19196.0	21916.1	2492.6	0.345	**0.34**	**0.03**	3.113	49.362	**173.601**	**0.12**	**0.01**

SUMMARY OF INTERNAL FORCES AND CAPACITIES

Project Name	Tolland
Job Number	CT-0031
Title	155' EEI Monopole
Designer	SAW

Pole Section	Top Elev.	Bott. Elev.	Area	S	Bare										Iced									
					Dead Load	Shear	Moment	M_2	M_{TOTAL}	f_a	f_b	f_{TOTAL}	F_B	Stress Ratio	Dead Load	Shear	Moment	M_2	M_{TOTAL}	f_a	f_b	f_{TOTAL}	F_B	Stress Ratio
	(ft)	(ft)	(in^2)	(in^3)	(kip)	(kip)	(kip ft)	(kip ft)	(kip ft)	(ksi)	(ksi)	(ksi)	(ksi)		(kip)	(kip)	(kip ft)	(kip ft)	(kip ft)	(ksi)	(ksi)	(ksi)	(ksi)	
TOP	>>>>>>>>>>>>>>>>>		24.96	98.74	0.45	0.49	4.10	0.00	4.1	0.02	0.50	0.52	52.00	**0.010**	0.64	0.50	4.15	0.00	4.1	0.03	0.50	0.53	52.00	**0.010**
A	155.00	150.00	24.96	92.40	0.90	0.93	7.9	0.45	8.4	0.04	1.09	1.12	52.00	**0.022**	1.24	0.70	7.50	0.50	8.0	0.05	1.04	1.09	52.00	**0.021**
B	150.00	146.02	24.96	92.40	4.01	5.26	28.3	1.76	30.1	0.16	3.90	4.07	52.00	**0.078**	5.59	4.70	26.13	1.93	28.1	0.22	3.64	3.87	52.00	**0.074**
C	146.02	146.01	11.09	64.08	4.01	5.26	28.4	1.77	30.1	0.36	5.64	6.00	52.00	**0.115**	5.59	4.70	26.17	1.94	28.1	0.50	5.26	5.77	52.00	**0.111**
D	146.01	140.00	12.99	72.28	7.06	10.19	70.4	6.19	76.5	0.54	12.71	13.25	51.63	**0.257**	10.13	9.19	63.48	6.87	70.3	0.78	11.68	12.46	51.63	**0.241**
E	140.00	130.00	14.02	87.01	10.10	14.13	179.3	17.26	196.6	0.72	27.11	27.83	49.71	**0.560**	14.43	12.27	157.69	19.28	177.0	1.03	24.41	25.44	49.71	**0.512**
F	130.00	125.90	14.94	93.47	10.31	14.61	238.3	22.43	260.7	0.69	33.47	34.16	48.02	**0.711**	14.80	12.34	208.16	25.05	233.2	0.99	29.94	30.93	48.02	**0.644**
G	125.90	125.89	24.90	146.29	10.31	14.61	238.4	22.44	260.9	0.41	21.40	21.81	52.00	**0.419**	14.80	12.34	208.29	25.07	233.4	0.59	19.14	19.74	52.00	**0.380**
H	125.89	120.00	25.25	161.96	10.82	15.30	326.5	29.89	356.4	0.43	26.41	26.83	52.00	**0.516**	15.56	12.45	281.29	33.38	314.7	0.62	23.31	23.93	52.00	**0.460**
I	120.00	110.00	26.97	190.39	14.40	19.91	519.5	44.22	563.8	0.53	35.53	36.07	52.00	**0.694**	20.65	16.11	441.40	49.26	490.7	0.77	30.92	31.69	52.00	**0.609**
J	110.00	100.00	29.14	221.13	16.49	22.75	732.9	60.34	793.2	0.57	43.05	43.61	52.00	**0.839**	23.63	17.95	611.67	66.94	678.6	0.81	36.83	37.64	52.00	**0.724**
K	100.00	90.00	31.30	254.16	17.55	24.06	967.0	76.33	1043.3	0.56	49.26	49.82	52.00	**0.958**	25.20	18.15	792.14	84.32	876.5	0.81	41.38	42.19	52.00	**0.811**
L	90.00	85.42	32.89	270.11	18.28	24.94	1079.9	83.36	1163.2	0.56	51.68	52.23	52.00	**1.005**	26.26	18.54	876.90	91.91	968.8	0.80	43.04	43.84	52.00	**0.843**
M	85.42	85.41	39.55	309.85	18.29	24.94	1080.1	83.38	1163.5	0.46	45.06	45.52	52.00	**0.875**	26.26	18.54	877.09	91.92	969.0	0.66	37.53	38.19	52.00	**0.734**
N	85.41	80.00	39.86	332.10	19.22	25.86	1217.8	91.52	1309.3	0.48	47.31	47.79	52.00	**0.919**	27.56	18.85	978.55	100.65	1079.2	0.69	39.00	39.69	52.00	**0.763**
O	80.00	70.00	41.82	375.31	20.65	27.26	1483.4	105.95	1589.4	0.49	50.82	51.31	52.00	**0.987**	29.55	19.09	1168.21	115.98	1284.2	0.71	41.06	41.77	52.00	**0.803**
P	70.00	60.00	44.37	421.15	22.16	28.67	1763.1	119.20	1882.3	0.50	53.63	54.13	52.00	**1.041**	31.66	19.32	1360.25	129.88	1490.1	0.71	42.46	43.17	52.00	**0.830**
Q	60.00	50.00	46.91	469.63	24.47	30.57	2060.7	131.18	2191.9	0.52	56.01	56.53	52.00	**1.087**	34.82	20.05	1558.56	142.28	1700.8	0.74	43.46	44.20	52.00	**0.850**
R	50.00	45.91	48.70	490.28	25.15	31.15	2186.9	135.63	2322.5	0.52	56.85	57.36	52.00	**1.103**	35.77	20.15	1640.77	146.85	1787.6	0.73	43.75	44.49	52.00	**0.856**
S	45.91	45.90	56.72	543.01	25.15	31.15	2187.2	135.64	2322.8	0.44	51.33	51.78	52.00	**0.996**	35.77	20.15	1640.97	146.86	1787.8	0.63	39.51	40.14	52.00	**0.772**
T	45.90	40.00	56.93	578.29	26.29	31.97	2373.4	141.55	2514.9	0.46	52.19	52.65	52.00	**1.012**	37.30	20.29	1760.28	152.88	1913.2	0.66	39.70	40.35	52.00	**0.776**
U	40.00	30.00	59.33	640.63	28.31	33.32	2699.8	150.15	2850.0	0.48	53.38	53.86	52.00	**1.036**	40.00	20.52	1964.37	161.54	2125.9	0.67	39.82	40.50	52.00	**0.779**
V	30.00	20.00	62.35	706.15	30.43	34.70	3039.9	156.68	3196.6	0.49	54.32	54.81	52.00	**1.054**	42.84	20.76	2170.80	168.03	2338.8	0.69	39.74	40.43	52.00	**0.778**
W	20.00	10.00	65.37	774.87	33.01	36.92	3398.0	160.87	3558.9	0.50	55.12	55.62	52.00	**1.070**	46.25	21.74	2383.31	172.14	2555.4	0.71	39.58	40.28	52.00	**0.775**
X	10.00	0.00	68.39	846.77	35.34	38.43	3774.8	162.37	3937.2	0.52	55.80	56.31	52.00	**1.083**	49.36	21.99	2601.97	173.60	2775.6	0.72	39.33	40.06	52.00	**0.770**

STANDARD EIA-222F IMPERIAL UNITS

INPUT INFORMATION

Project Name	Tolland
Job Number	CT-0031
Title	155' EEI Monopole
Designer	SAW

Basic Wind Speed (mph)	85.00
Radial Ice (in)	1.25
Height (ft)	155.00
Number of Sides	0
Yield Stress (ksi)	42.00
Allowable Stress factor	1.33
Operational Wind (mph)	50.00
Iced Wind Speed (mph) optional	31.00

Site Specify Wind Only

Possible Number of Sides
0 - Round
8 - 8 Sided
12 - 12 Sided
16 - 16 Sided
18 - 18 Sided

Pole Section	Top Elev.	Bott. Elev.	Top O.D.	Bott. O.D.	Inner Bend Rad. / t	Thickness	Dist. Area Appurtenance Bare	Dist. Area Appurtenance Iced
	(ft)	(ft)	(in.)	(in.)	(in/in)	(in.)	(ft^2/ft)	(ft^2/ft)
TOP	>>							
A	155.00	150.00	16.00	16.00		1/2		
B	150.00	146.02	16.00	16.00		1/2		
C	146.02	146.01	16.00	21.00		3/16		
D	146.01	140.00	21.00	22.29		3/16		
E	140.00	130.00	22.29	24.43		3/16	0.396	0.646
F	130.00	125.90	24.43	25.30		3/16	0.396	0.646
G	125.90	125.89	25.30	24.73		5/16	0.396	0.646
H	125.89	120.00	24.73	26.00		5/16	0.396	0.646
I	120.00	110.00	26.00	28.15		5/16	0.396	0.646
J	110.00	100.00	28.15	30.30		5/16	0.396	0.646
K	100.00	90.00	30.29751	32.448092		5/16	0.396	0.646
L	90.00	85.42	32.45	33.44		5/16	0.459	0.959
M	85.42	85.41	33.44	32.82		3/8	0.459	0.959
N	85.41	80.00	32.82	33.96		3/8	0.522	1.272
O	80.00	70.00	33.96	36.06		3/8	0.522	1.272
P	70.00	60.00	36.06	38.17		3/8	0.522	1.272
Q	60.00	50.00	38.17	40.28		3/8	0.585	1.585
R	50.00	45.91	40.28	41.14		3/8	0.585	1.585
S	45.91	45.90	41.14	40.17		7/16	0.585	1.585
T	45.90	40.00	40.17	41.43		7/16	0.585	1.585
U	40.00	30.00	41.43	43.58		7/16	0.585	1.585
V	30.00	20.00	43.58	45.72		7/16	0.585	1.585
W	20.00	10.00	45.72	47.86		7/16	0.585	1.585
X	10.00	0.00	47.86	50.00		7/16	0.585	1.585

Individual Appurtenances Table

Elev	Area Appurt. C_AA_A Bare	Area Appurt. C_AA_A Iced	Weight Appurt. Bare	Weight Appurt. Iced	Description
(ft)	(ft^2)	(ft^2)	(kip)	(kip)	
163.30	0.00	0.00	0.054	0.121	RR90-17-02DP
163.30	10.00	13.50	0.400	0.520	Canister Mount
155.00	2.10	3.96	0.020	0.040	7' Omni
155.00	0.00	0.00	0.000	0.000	Same Mount as Belo
150.00	39.40	48.85	0.270	0.650	DUO4-8670
150.00	45.00	60.75	2.500	3.250	Platform w/ Handrails
142.00	34.75	44.41	0.240	0.646	ALP-9212
142.00	0.00	0.00	0.000	0.000	Same Mount as Belo
142.00	13.13	18.75	0.051	0.165	948F85T2E-M
142.00	45.00	60.75	2.500	3.250	Platform w/ Handrails
130.50	15.66	22.79	0.060	0.186	DB980H90E-M
130.50	45.00	60.75	2.500	3.250	Platform w/ Handrails
120.00	30.02	41.45	0.168	0.484	DB844H90E-XY
120.00	45.00	60.75	2.500	3.250	Platform w/ Handrails
105.00	16.07	23.37	0.092	0.210	7250
105.00	20.00	27.00	1.000	1.300	T-Arm Mounts
90.00	2.10	3.96	0.020	0.040	7' Omni
90.00	4.00	5.40	0.200	0.260	Side Arm Mount
85.00	0.13	0.36	0.005	0.007	GPS
85.00	4.00	5.40	0.200	0.260	Side Arm Mount
60.00	0.27	0.73	0.010	0.014	GPS
60.00	8.00	10.80	0.500	0.650	Side Arm Mount
54.00	0.13	0.36	0.005	0.007	GPS
54.00	4.00	5.40	0.200	0.260	Side Arm Mount
15.00	20.90	26.00	0.154	0.169	1.2 Meter STD Dish [
15.00	4.00	5.40	0.200	0.260	Pipe Mount

STANDARD EIA-222F IMPERIAL UNITS

ANALYSIS SUMMARY

Project Name	Tolland
Job Number	CT-0031
Title	155' EEI Monopole
Designer	SAW

Basic Wind Speed (mph)	85.00
Radial Ice (in)	1.25
Height (ft)	155.00
Number of Sides	0
Yield Stress (ksi)	42.00
Allowable Stress factor	1.33
Operational Wind (mph)	50.00
Iced Wind Speed (mph) optional	31

Site Specify Wind Only

Possible Number of Sides
0 - Round
8 - 8 Sided
12 - 12 Sided
16 - 16 Sided
18 - 18 Sided

POLE STRESSES AND DEFLECTIONS

Pole Section	Top Elev.	Bott. Elev.	Bare						Iced					
			Working Stress @Bot.				Operational @Top		Working Stress @Bot.				Operational @Top	
	(ft)	(ft)	Dead Load (kip)	Shear (kip)	Moment (kip ft)	Stress Ratio	Tilt (deg)	Defl. (ft)	Dead Load (kip)	Shear (kip)	Moment (kip ft)	Stress Ratio	Tilt (deg)	Defl. (ft)
TOP	>>>>>>>>>>>>>>>>>		0.45	0.49	4.1	0.02			0.64	0.50	4.1	0.02		
A	155.00	150.00	0.89	0.79	8.0	0.03	2.48	3.62	1.23	0.68	8.0	0.03	2.15	3.07
B	150.00	146.02	3.99	5.00	28.8	0.12	2.48	3.41	5.56	4.66	27.9	0.12	2.14	2.88
C	146.02	146.01	3.99	5.00	28.8	0.17	2.47	3.24	5.56	4.66	28.0	0.17	2.13	2.73
D	146.01	140.00	7.04	9.71	72.7	0.38	2.47	3.24	10.09	9.11	70.0	0.37	2.13	2.73
E	140.00	130.00	10.06	13.17	184.7	0.79	2.43	2.98	14.37	12.12	175.7	0.76	2.10	2.51
F	130.00	125.90	10.27	13.44	244.1	0.96	2.30	2.56	14.74	12.16	231.4	0.92	1.98	2.15
G	125.90	125.89	10.27	13.44	244.2	0.61	2.23	2.40	14.74	12.16	231.5	0.59	1.92	2.01
H	125.89	120.00	10.76	13.84	331.4	0.75	2.23	2.40	15.47	12.22	311.7	0.71	1.92	2.01
I	120.00	110.00	14.32	17.93	520.3	1.00	2.15	2.18	20.53	15.80	485.3	0.94	1.84	1.82
J	110.00	100.00	16.38	20.23	725.8	1.20	1.99	1.81	23.47	17.55	670.0	1.12	1.70	1.51
K	100.00	90.00	17.42	20.98	946.3	1.36	1.80	1.48	25.01	17.67	863.6	1.25	1.52	1.23
L	90.00	85.42	18.14	21.59	1050.8	1.42	1.59	1.18	26.05	18.02	953.8	1.30	1.34	0.98
M	85.42	85.41	18.14	21.59	1051.1	1.24	1.50	1.06	26.05	18.02	954.0	1.13	1.25	0.87
N	85.41	80.00	19.06	22.19	1177.1	1.29	1.50	1.06	27.32	18.27	1061.3	1.17	1.25	0.87
O	80.00	70.00	20.45	22.99	1415.9	1.38	1.39	0.92	29.26	18.41	1260.1	1.23	1.16	0.76
P	70.00	60.00	21.92	23.80	1661.7	1.44	1.20	0.70	31.32	18.54	1458.8	1.27	0.99	0.57
Q	60.00	50.00	24.20	25.08	1918.0	1.49	1.01	0.50	34.42	19.16	1661.2	1.30	0.83	0.41
R	50.00	45.91	24.86	25.41	2025.2	1.51	0.82	0.35	35.35	19.22	1744.2	1.31	0.67	0.28
S	45.91	45.90	24.86	25.41	2025.5	1.36	0.74	0.29	35.35	19.22	1744.4	1.18	0.60	0.23
T	45.90	40.00	25.97	25.88	2182.0	1.38	0.74	0.29	36.84	19.30	1864.1	1.18	0.60	0.23
U	40.00	30.00	27.94	26.65	2452.2	1.40	0.64	0.22	39.48	19.43	2066.4	1.18	0.52	0.18
V	30.00	20.00	30.01	27.45	2728.4	1.41	0.47	0.12	42.25	19.57	2267.9	1.18	0.38	0.10
W	20.00	10.00	32.53	29.05	3014.5	1.42	0.31	0.05	45.58	20.45	2472.0	1.17	0.25	0.04
X	10.00	0.00	34.80	29.91	3310.6	1.43	0.15	0.01	48.61	20.59	2678.6	1.16	0.12	0.01

INDIVIDUAL APPURTENANCES ROTATION

Elev. (ft)	Description	Tilt Bare (deg)	Tilt Iced (deg)
163.30	RR90-17-02DP	7.166	6.206
163.30	Canister Mount	7.166	6.206
155.00	7' Omni	7.166	6.206
155.00	Same Mount as Belo	7.166	6.206
150.00	DUO4-8670	7.154	6.194
150.00	Platform w/ Handrails	7.154	6.194
142.00	ALP-9212	7.054	6.099
142.00	Same Mount as Belo	7.054	6.099
142.00	948F85T2E-M	7.054	6.099
142.00	Platform w/ Handrails	7.054	6.099
130.50	DB980H90E-M	6.673	5.744
130.50	Platform w/ Handrails	6.673	5.744
120.00	DB844H90E-XY	6.220	5.328
120.00	Platform w/ Handrails	6.220	5.328
105.00	7250	5.476	4.652
105.00	T-Arm Mounts	5.476	4.652
90.00	7' Omni	4.607	3.875
90.00	Side Arm Mount	4.607	3.875
85.00	GPS	4.302	3.604
85.00	Side Arm Mount	4.302	3.604
60.00	GPS	2.908	2.394
60.00	Side Arm Mount	2.908	2.394
54.00	GPS	2.578	2.114
54.00	Side Arm Mount	2.578	2.114
15.00	1.2 Meter STD Dish	0.663	0.530
15.00	Pipe Mount	0.663	0.530

CALCULATION OF SECTION PROPERTIES AND CAPACITIES

Project Name	Tolland
Job Number	CT-0031
Title	155' EEI Monopole
Designer	SAW

Pole Section	Top Elev.	Bott. Elev.	Thickness	Bend Radius	r Ratio	r Ratio	w	TOP ELEVATION				BOTTOM ELEVATION						
					Bare	Iced		O. D.	Mean Width	Area	Inertia	O. D.	Mean Width	Area	Inertia	S	$(Fy)^{1/2}$ w/t	Allowable F_B
	(ft)	(ft)	(in)	(in)			(in)	(in)	(in)	(in^2)	(in^4)	(in)	(in)	(in^2)	(in^4)	(in^3)		(ksi)
TOP	>>>>>>>>>>>>>>>>>>>>>>>>>>>>>>>>>>>>>>>																	
A	155.00	150.00	1/2	0.000	0.063	0.189	0.00	16.00	15.5	24.34	731.7	16.00	15.50	24.34	731.7	91.5	0.0	33.6
B	150.00	146.02	1/2	0.000	0.063	0.189	0.00	16.00	15.5	24.34	731.7	16.00	15.50	24.34	731.7	91.5	0.0	33.6
C	146.02	146.01	3/16	0.000	0.020	0.137	0.00	16.00	15.81	9.33	292.1	21.00	20.81	12.29	666.0	63.4	0.0	33.6
D	146.01	140.00	3/16	0.000	0.017	0.119	0.00	21.00	20.81	12.29	666.0	22.29	22.10	13.04	797.3	71.5	0.0	33.6
E	140.00	130.00	3/16	0.000	0.016	0.111	0.00	22.29	22.1	13.04	797.3	24.43	24.24	14.31	1052.0	86.1	0.0	33.6
F	130.00	125.90	3/16	0.000	0.015	0.105	0.00	24.43	24.24	14.31	1052.0	25.30	25.12	14.83	1170.7	92.5	0.0	33.6
G	125.90	125.89	5/16	0.000	0.025	0.114	0.00	25.30	24.99	24.56	1920.1	24.73	24.42	24.00	1790.7	144.8	0.0	33.6
H	125.89	120.00	5/16	0.000	0.025	0.112	0.00	24.73	24.42	24.00	1790.7	26.00	25.68	25.24	2084.0	160.3	0.0	33.6
I	120.00	110.00	5/16	0.000	0.023	0.106	0.00	26.00	25.68	25.24	2084.0	28.15	27.83	27.36	2652.5	188.5	0.0	33.6
J	110.00	100.00	5/16	0.000	0.021	0.099	0.00	28.15	27.83	27.36	2652.5	30.30	29.98	29.47	3316.1	218.9	0.0	33.6
K	100.00	90.00	5/16	0.000	0.020	0.092	0.00	30.30	29.98	29.47	3316.1	32.45	32.14	31.58	4082.0	251.6	0.0	33.6
L	90.00	85.42	5/16	0.000	0.019	0.088	0.00	32.45	32.14	31.58	4082.0	33.44	33.12	32.55	4470.2	267.4	0.0	33.6
M	85.42	85.41	3/8	0.000	0.023	0.091	0.00	33.44	33.06	38.93	5325.7	32.82	32.45	38.20	5033.5	306.7	0.0	33.6
N	85.41	80.00	3/8	0.000	0.022	0.091	0.00	32.82	32.45	38.20	5033.5	33.96	33.58	39.54	5582.1	328.8	0.0	33.6
O	80.00	70.00	3/8	0.000	0.021	0.087	0.00	33.96	33.58	39.54	5582.1	36.06	35.69	42.02	6699.5	371.5	0.0	33.6
P	70.00	60.00	3/8	0.000	0.020	0.082	0.00	36.06	35.69	42.02	6699.5	38.17	37.80	44.50	7956.8	416.9	0.0	33.6
Q	60.00	50.00	3/8	0.000	0.019	0.078	0.00	38.17	37.8	44.50	7956.8	40.28	39.90	46.98	9362.4	464.9	0.0	33.6
R	50.00	45.91	3/8	0.000	0.018	0.075	0.00	40.28	39.9	46.98	9362.4	41.14	40.76	48.00	9983.4	485.3	0.0	33.6
S	45.91	45.90	7/16	0.000	0.022	0.078	0.00	41.14	40.7	55.98	11606.6	40.17	39.73	54.64	10796.6	537.5	0.0	33.6
T	45.90	40.00	7/16	0.000	0.021	0.078	0.00	40.17	39.73	54.64	10796.6	41.43	41.00	56.38	11859.8	572.5	0.0	33.6
U	40.00	30.00	7/16	0.000	0.021	0.075	0.00	41.43	41.	56.38	11859.8	43.58	43.14	59.33	13817.2	634.2	0.0	33.6
V	30.00	20.00	7/16	0.000	0.020	0.072	0.00	43.58	43.14	59.33	13817.2	45.72	45.28	62.27	15979.0	699.0	0.0	33.6
W	20.00	10.00	7/16	0.000	0.019	0.068	0.00	45.72	45.28	62.27	15979.0	47.86	47.42	65.22	18355.3	767.1	0.0	33.6
X	10.00	0.00	7/16	0.000	0.018	0.066	0.00	47.86	47.42	65.22	18355.3	50.00	49.56	68.16	20956.2	838.2	0.0	33.6

BARE WIND LOAD FOR POLE + DIST. APPURTENANCES

Project Name	Tolland
Job Number	CT-0031
Title	155' EEI Monopole
Designer	SAW

Pole Section	Top Elev. (ft)	Bott. Elev. (ft)	Mid-section Height (ft)	Section Length (ft)	Avg. O.D. (in)	Dist. Area Appurtenance (ft^2/ft)	Total Wind Area (ft^2)	r Ratio	Kz (ft)	q_z (lb/ft^2)	C (mph ft)	Force Coeff. Cf	Horz. Force (kip)	Shear (kip)	Moment (kip ft)
TOP	>>													0.00	0.0
A	155.00	150.00	152.50	5.00	16.00	0.00	6.67	0.063	1.55	28.64	141	0.590	0.190	0.19	0.5
B	150.00	146.02	148.01	3.98	16.00	0.00	5.31	0.063	1.54	28.40	140	0.590	0.150	0.34	1.5
C	146.02	146.01	146.02	0.01	18.50	0.00	0.02	0.020	1.53	28.29	162	0.590	0.000	0.34	1.5
D	146.01	140.00	143.01	6.01	21.64	0.00	10.84	0.017	1.52	28.12	189	0.590	0.304	0.65	4.5
E	140.00	130.00	135.00	10.00	23.36	0.40	23.42	0.016	1.50	27.66	202	0.590	0.646	1.29	14.2
F	130.00	125.90	127.95	4.10	24.87	0.40	10.12	0.015	1.47	27.24	214	0.590	0.275	1.57	20.0
G	125.90	125.89	125.89	0.01	25.02	0.40	0.02	0.025	1.47	27.12	215	0.590	0.001	1.57	20.1
H	125.89	120.00	122.94	5.89	25.36	0.40	14.78	0.025	1.46	26.93	217	0.590	0.397	1.96	30.4
I	120.00	110.00	115.00	10.00	27.07	0.40	26.52	0.023	1.43	26.42	229	0.590	0.699	2.66	53.6
J	110.00	100.00	105.00	10.00	29.22	0.40	28.31	0.021	1.39	25.75	244	0.590	0.727	3.39	83.8
K	100.00	90.00	95.00	10.00	31.37	0.40	30.10	0.020	1.35	25.02	258	0.590	0.751	4.14	121.5
L	90.00	85.42	87.71	4.58	32.94	0.46	14.69	0.019	1.32	24.46	268	0.590	0.358	4.50	141.3
M	85.42	85.41	85.41	0.01	33.13	0.46	0.03	0.023	1.31	24.27	269	0.590	0.001	4.50	141.3
N	85.41	80.00	82.70	5.41	33.39	0.52	17.86	0.022	1.30	24.05	270	0.590	0.428	4.93	166.8
O	80.00	70.00	75.00	10.00	35.01	0.52	34.40	0.021	1.26	23.39	279	0.590	0.802	5.73	220.1
P	70.00	60.00	65.00	10.00	37.12	0.52	36.15	0.020	1.21	22.45	290	0.590	0.809	6.54	281.4
Q	60.00	50.00	55.00	10.00	39.22	0.59	38.54	0.019	1.16	21.40	299	0.590	0.822	7.36	350.9
R	50.00	45.91	47.96	4.09	40.71	0.59	16.27	0.018	1.11	20.58	304	0.590	0.334	7.69	381.7
S	45.91	45.90	45.91	0.01	40.65	0.59	0.04	0.022	1.10	20.33	302	0.590	0.001	7.70	381.8
T	45.90	40.00	42.95	5.90	40.80	0.59	23.51	0.021	1.08	19.94	300	0.590	0.468	8.16	428.6
U	40.00	30.00	35.00	10.00	42.50	0.59	41.27	0.021	1.02	18.81	304	0.590	0.774	8.94	514.1
V	30.00	20.00	25.00	10.00	44.65	0.59	43.05	0.020	1.00	18.50	316	0.590	0.794	9.73	607.4
W	20.00	10.00	15.00	10.00	46.79	0.59	44.84	0.019	1.00	18.50	331	0.590	0.827	10.56	708.9
X	10.00	0.00	5.00	10.00	48.93	0.59	46.62	0.018	1.00	18.50	347	0.590	0.860	11.42	818.7

ICED WIND LOAD FOR POLE + DIST. APPURTENANCES

Project Name	Tolland
Job Number	CT-0031
Title	155' EEI Monopole
Designer	SAW

Pole Section	Top Elev. (ft)	Bott. Elev. (ft)	Mid-section Height (ft)	Section Length (ft)	Avg. O.D. (in)	Dist. Area Appurtenance (ft^2/ft)	Total Wind Area (ft^2)	r Ratio	Kz (ft)	q_z (lb/ft^2)	C (mph ft)	Force Coeff. Cf	Horz. Force (kip)	Shear (kip)	Moment (kip ft)
TOP	>>													0.00	0.0
A	155.00	150.00	152.50	5.00	18.50	0.00	7.71	0.189	1.55	3.81	59	0.642	0.032	0.03	0.1
B	150.00	146.02	148.01	3.98	18.50	0.00	6.14	0.189	1.54	3.78	59	0.645	0.025	0.06	0.3
C	146.02	146.01	146.02	0.01	21.00	0.00	0.02	0.137	1.53	3.76	67	0.590	0.000	0.06	0.3
D	146.01	140.00	143.01	6.01	24.14	0.00	12.09	0.119	1.52	3.74	77	0.590	0.045	0.10	0.7
E	140.00	130.00	135.00	10.00	25.86	0.65	28.01	0.111	1.50	3.68	82	0.590	0.103	0.21	2.3
F	130.00	125.90	127.95	4.10	27.37	0.65	12.00	0.105	1.47	3.62	86	0.590	0.043	0.25	3.2
G	125.90	125.89	125.89	0.01	27.52	0.65	0.03	0.114	1.47	3.61	86	0.590	0.000	0.25	3.2
H	125.89	120.00	122.94	5.89	27.86	0.65	17.48	0.112	1.46	3.58	87	0.590	0.062	0.31	4.9
I	120.00	110.00	115.00	10.00	29.57	0.65	31.10	0.106	1.43	3.51	91	0.590	0.109	0.42	8.5
J	110.00	100.00	105.00	10.00	31.72	0.65	32.90	0.099	1.39	3.42	97	0.590	0.112	0.53	13.3
K	100.00	90.00	95.00	10.00	33.87	0.65	34.69	0.092	1.35	3.33	102	0.590	0.115	0.65	19.2
L	90.00	85.42	87.71	4.58	35.44	0.96	17.94	0.088	1.32	3.25	105	0.590	0.058	0.71	22.3
M	85.42	85.41	85.41	0.01	35.63	0.96	0.04	0.091	1.31	3.23	105	0.590	0.000	0.71	22.3
N	85.41	80.00	82.70	5.41	35.89	1.27	23.04	0.091	1.30	3.20	106	0.590	0.073	0.78	26.3
O	80.00	70.00	75.00	10.00	37.51	1.27	43.98	0.087	1.26	3.11	109	0.590	0.136	0.92	34.8
P	70.00	60.00	65.00	10.00	39.62	1.27	45.73	0.082	1.21	2.99	113	0.590	0.136	1.05	44.6
Q	60.00	50.00	55.00	10.00	41.72	1.59	50.62	0.078	1.16	2.85	116	0.590	0.144	1.20	55.8
R	50.00	45.91	47.96	4.09	43.21	1.59	21.21	0.075	1.11	2.74	118	0.590	0.058	1.25	60.8
S	45.91	45.90	45.91	0.01	43.15	1.59	0.05	0.078	1.10	2.70	117	0.590	0.000	1.25	60.9
T	45.90	40.00	42.95	5.90	43.30	1.59	30.64	0.078	1.08	2.65	116	0.590	0.081	1.33	68.5
U	40.00	30.00	35.00	10.00	45.00	1.59	53.35	0.075	1.02	2.50	117	0.590	0.133	1.47	82.5
V	30.00	20.00	25.00	10.00	47.15	1.59	55.14	0.072	1.00	2.46	122	0.590	0.135	1.60	97.8
W	20.00	10.00	15.00	10.00	49.29	1.59	56.92	0.068	1.00	2.46	127	0.590	0.140	1.74	114.6
X	10.00	0.00	5.00	10.00	51.43	1.59	58.71	0.066	1.00	2.46	133	0.590	0.144	1.89	132.7

WIND LOAD FOR INDIVIDUAL APPURTENANCES

Project Name	Tolland
Job Number	CT-0031
Title	155' EEI Monopole
Designer	SAW

Force Calculation

Elev	Bare			Iced		
	q_z	C_AA_A	Horz. Force	q_z	C_AA_A	Horz. Force
(ft)	(lb/ft^2)	(ft^2)	(kip)	(lb/ft^2)	(ft^2)	(kip)
163.30	29.21	0.00	0.00	29.21	0.00	0.00
163.30	29.21	10.00	0.49	29.21	13.50	0.50
155.00	28.78	2.10	0.10	28.78	3.96	0.14
155.00	28.78	0.00	0.00	28.78	0.00	0.00
150.00	28.51	39.40	1.90	28.51	48.85	1.77
150.00	28.51	45.00	2.17	28.51	60.75	2.20
142.00	28.06	34.75	1.65	28.06	44.41	1.58
142.00	28.06	0.00	0.00	28.06	0.00	0.00
142.00	28.06	13.13	0.62	28.06	18.75	0.67
142.00	28.06	45.00	2.13	28.06	60.75	2.16
130.50	27.40	15.66	0.73	27.40	22.79	0.79
130.50	27.40	45.00	2.08	27.40	60.75	2.11
120.00	26.75	30.02	1.36	26.75	41.45	1.41
120.00	26.75	45.00	2.03	26.75	60.75	2.06
105.00	25.75	16.07	0.70	25.75	23.37	0.76
105.00	25.75	20.00	0.87	25.75	27.00	0.88
90.00	24.64	2.10	0.09	24.64	3.96	0.12
90.00	24.64	4.00	0.17	24.64	5.40	0.17
85.00	24.24	0.13	0.01	24.24	0.36	0.01
85.00	24.24	4.00	0.16	24.24	5.40	0.17
60.00	21.94	0.27	0.01	21.94	0.73	0.02
60.00	21.94	8.00	0.30	21.94	10.80	0.30
54.00	21.29	0.13	0.00	21.29	0.36	0.01
54.00	21.29	4.00	0.14	21.29	5.40	0.15
15.00	18.50	20.90	0.65	18.50	26.00	0.61
15.00	18.50	4.00	0.13	18.50	5.40	0.13

Shear and Moment

Pole Section	Top Elev.	Bott. Elev.	Bare				Iced			
			Eq. Force	Eq. Elev.	Shear	Moment	Eq. Force	Eq. Elev.	Shear	Moment
	(ft)	(ft)	(kip)	(ft)	(kip)	(kip ft)	(kip)	(ft)	(kip)	(kip ft)
TOP	>>>>>>>>>>>>>>>>>		0.494	163.30	0.49	4.1	0.500	163.30	0.50	4.1
A	155.00	150.00	0.102	155.00	0.60	7.1	0.145	155.00	0.64	7.4
B	150.00	146.02	4.066	150.00	4.66	25.6	3.960	150.00	4.60	25.7
C	146.02	146.01			4.66	25.7			4.60	25.7
D	146.01	140.00	4.405	142.00	9.07	62.5	4.408	142.00	9.01	62.2
E	140.00	130.00	2.809	130.50	11.88	154.6	2.901	130.50	11.91	153.8
F	130.00	125.90			11.88	203.3			11.91	202.7
G	125.90	125.89			11.88	203.4			11.91	202.8
H	125.89	120.00			11.88	273.3			11.91	272.9
I	120.00	110.00	3.391	120.00	15.27	426.0	3.465	120.00	15.38	426.7
J	110.00	100.00	1.570	105.00	16.84	586.5	1.644	105.00	17.02	588.7
K	100.00	90.00			16.84	754.9			17.02	758.9
L	90.00	85.42	0.254	90.00	17.09	833.2	0.292	90.00	17.31	838.3
M	85.42	85.41			17.09	833.4			17.31	838.5
N	85.41	80.00	0.169	85.00	17.26	926.6	0.177	85.00	17.49	932.9
O	80.00	70.00			17.26	1099.2			17.49	1107.8
P	70.00	60.00			17.26	1271.8			17.49	1282.8
Q	60.00	50.00	0.455	58.04	17.71	1448.1	0.476	58.04	17.97	1461.5
R	50.00	45.91			17.71	1520.5			17.97	1535.0
S	45.91	45.90			17.71	1520.7			17.97	1535.2
T	45.90	40.00			17.71	1625.2			17.97	1641.2
U	40.00	30.00			17.71	1802.4			17.97	1820.8
V	30.00	20.00			17.71	1979.5			17.97	2000.5
W	20.00	10.00	0.778	15.00	18.49	2160.5	0.736	15.00	18.70	2183.8
X	10.00	0.00			18.49	2345.5			18.70	2370.9

CALCULATION OF BARE AND ICED POLE WEIGHT

Project Name	Tolland
Job Number	CT-0031
Title	155' EEI Monopole
Designer	SAW

Pole Section	Top Elev.	Bott. Elev.	Sec. Length	Avg. Mean Width	Thickness	Avg. Area	Pole Sec. Weight	Bare			Iced					
								App. Weight	Total Weight	Accum. Weight	Avg. Ice Area	Ice Weight	Pole Sec. Weight	App. Weight	Total Weight	Accum. Weight
	(ft)	(ft)	(ft)	(in)	(in)	(in^2)	(kip)	(kip)	(kip)	(kip)	(in^2)	(kip)	(kip)	(kip)	(kip)	(kip)
TOP	>>>							0.454	0.45	0.45				0.641	0.64	0.64
A	155.00	150.00	5.00	15.50	1/2	24.34	0.414	0.020	0.43	0.89	67.71	0.132	0.414	0.040	0.59	1.23
B	150.00	146.02	3.98	15.50	1/2	24.34	0.330	2.770	3.10	3.99	67.71	0.105	0.330	3.900	4.33	5.56
C	146.02	146.01	0.01	18.31	3/16	10.81	0.000	0.000	0.00	3.99	77.52	0.000	0.000	0.000	0.00	5.56
D	146.01	140.00	6.01	21.45	3/16	12.67	0.259	2.791	3.05	7.04	89.85	0.210	0.259	4.061	4.53	10.09
E	140.00	130.00	10.00	23.17	3/16	13.68	0.465	2.560	3.03	10.06	96.58	0.376	0.465	3.436	4.28	14.37
F	130.00	125.90	4.10	24.68	3/16	14.57	0.203	0.000	0.20	10.27	102.50	0.163	0.203	0.000	0.37	14.74
G	125.90	125.89	0.01	24.70	5/16	24.28	0.001	0.000	0.00	10.27	103.10	0.000	0.001	0.000	0.00	14.74
H	125.89	120.00	5.89	25.05	5/16	24.62	0.493	0.000	0.49	10.76	104.46	0.239	0.493	0.000	0.73	15.47
I	120.00	110.00	10.00	26.76	5/16	26.30	0.895	2.668	3.56	14.32	111.16	0.432	0.895	3.734	5.06	20.53
J	110.00	100.00	10.00	28.91	5/16	28.41	0.967	1.092	2.06	16.38	119.60	0.465	0.967	1.510	2.94	23.47
K	100.00	90.00	10.00	31.06	5/16	30.53	1.039	0.000	1.04	17.42	128.04	0.498	1.039	0.000	1.54	25.01
L	90.00	85.42	4.58	32.63	5/16	32.07	0.500	0.220	0.72	18.14	134.20	0.239	0.500	0.300	1.04	26.05
M	85.42	85.41	0.01	32.75	3/8	38.57	0.001	0.000	0.00	18.14	134.93	0.001	0.001	0.000	0.00	26.05
N	85.41	80.00	5.41	33.01	3/8	38.87	0.715	0.205	0.92	19.06	135.96	0.286	0.715	0.267	1.27	27.32
O	80.00	70.00	10.00	34.64	3/8	40.78	1.388	0.000	1.39	20.45	142.33	0.553	1.388	0.000	1.94	29.26
P	70.00	60.00	10.00	36.74	3/8	43.26	1.472	0.000	1.47	21.92	150.59	0.586	1.472	0.000	2.06	31.32
Q	60.00	50.00	10.00	38.85	3/8	45.74	1.557	0.715	2.27	24.20	158.86	0.618	1.557	0.932	3.11	34.42
R	50.00	45.91	4.09	40.33	3/8	47.49	0.661	0.000	0.66	24.86	164.69	0.262	0.661	0.000	0.92	35.35
S	45.91	45.90	0.01	40.22	7/16	55.31	0.002	0.000	0.00	24.86	164.48	0.001	0.002	0.000	0.00	35.35
T	45.90	40.00	5.90	40.36	7/16	55.51	1.115	0.000	1.11	25.97	165.05	0.379	1.115	0.000	1.49	36.84
U	40.00	30.00	10.00	42.07	7/16	57.85	1.969	0.000	1.97	27.94	171.74	0.668	1.969	0.000	2.64	39.48
V	30.00	20.00	10.00	44.21	7/16	60.80	2.069	0.000	2.07	30.01	180.14	0.701	2.069	0.000	2.77	42.25
W	20.00	10.00	10.00	46.35	7/16	63.75	2.169	0.354	2.52	32.53	188.55	0.733	2.169	0.429	3.33	45.58
X	10.00	0.00	10.00	48.49	7/16	66.69	2.269	0.000	2.27	34.80	196.95	0.766	2.269	0.000	3.04	48.61

CALCULATION OF DEFLECTIONS AND SECONDARY MOMENTS (BARE POLE)

Project Name	Tolland
Job Number	CT-0031
Title	155' EEI Monopole
Designer	SAW

							Working Stress							Operational	
Pole Section	Top Elev. (ft)	Bott. Elev. (ft)	Section Length (ft)	Moment (kip ft)	Inertia at Top of Sec. (in^4)	Inertia at Bot. of Sec. (in^4)	Avg. Moment (kip ft)	Inc. Tilt (deg)	Total Tilt (deg)	Tot. Defl. @top (ft)	Total Weight (kip)	Accum. Weight (kip)	M_2 (kip ft)	Total Tilt @top (ft)	Total Defl. @top (ft)
TOP	>>>>>>>>>>>>>>>>>>>>>>>>>			4.1	0.0	0.0					0.454	0.454			
A	155.00	150.00	5.00	7.6	731.7	731.7	5.8	0.011	**7.17**	**10.47**	0.434	0.888	**0.419**	**2.48**	**3.62**
B	150.00	146.02	3.98	27.2	731.7	731.7	17.4	0.027	**7.15**	**9.85**	3.100	3.988	**1.629**	**2.48**	**3.41**
C	146.02	146.01	0.01	27.2	292.1	666.0	27.2	0.000	**7.13**	**9.35**	0.000	3.988	**1.634**	**2.47**	**3.24**
D	146.01	140.00	6.01	67.0	666.0	797.3	47.1	0.110	**7.13**	**9.35**	3.050	7.038	**5.728**	**2.47**	**3.24**
E	140.00	130.00	10.00	168.8	797.3	1052.0	117.9	0.363	**7.02**	**8.61**	3.025	10.064	**15.970**	**2.43**	**2.98**
F	130.00	125.90	4.10	223.3	1052.0	1170.7	196.0	0.206	**6.65**	**7.41**	0.203	10.267	**20.741**	**2.30**	**2.56**
G	125.90	125.89	0.01	223.5	1920.1	1790.7	223.4	0.000	**6.45**	**6.94**	0.001	10.268	**20.752**	**2.23**	**2.40**
H	125.89	120.00	5.89	303.8	1790.7	2084.0	263.6	0.228	**6.45**	**6.94**	0.493	10.761	**27.603**	**2.23**	**2.40**
I	120.00	110.00	10.00	479.6	2084.0	2652.5	391.7	0.471	**6.22**	**6.29**	3.563	14.324	**40.744**	**2.15**	**2.18**
J	110.00	100.00	10.00	670.3	2652.5	3316.1	575.0	0.548	**5.75**	**5.24**	2.059	16.383	**55.459**	**1.99**	**1.81**
K	100.00	90.00	10.00	876.4	3316.1	4082.0	773.4	0.595	**5.20**	**4.28**	1.039	17.422	**69.966**	**1.80**	**1.48**
L	90.00	85.42	4.58	974.5	4082.0	4470.2	925.4	0.282	**4.61**	**3.42**	0.720	18.142	**76.323**	**1.59**	**1.18**
M	85.42	85.41	0.01	974.7	5325.7	5033.5	974.6	0.001	**4.32**	**3.07**	0.001	18.143	**76.337**	**1.50**	**1.06**
N	85.41	80.00	5.41	1093.4	5033.5	5582.1	1034.1	0.300	**4.32**	**3.06**	0.920	19.064	**83.669**	**1.50**	**1.06**
O	80.00	70.00	10.00	1319.3	5582.1	6699.5	1206.4	0.559	**4.02**	**2.67**	1.388	20.451	**96.613**	**1.39**	**0.92**
P	70.00	60.00	10.00	1553.2	6699.5	7956.8	1436.3	0.558	**3.47**	**2.02**	1.472	21.924	**108.426**	**1.20**	**0.70**
Q	60.00	50.00	10.00	1799.0	7956.8	9362.4	1676.1	0.551	**2.91**	**1.46**	2.272	24.195	**119.049**	**1.01**	**0.50**
R	50.00	45.91	4.09	1902.2	9362.4	9983.4	1850.6	0.223	**2.36**	**1.00**	0.661	24.856	**122.983**	**0.82**	**0.35**
S	45.91	45.90	0.01	1902.5	11606.6	10796.6	1902.4	0.000	**2.13**	**0.84**	0.002	24.858	**122.993**	**0.74**	**0.29**
T	45.90	40.00	5.90	2053.8	10796.6	11859.8	1978.1	0.293	**2.13**	**0.84**	1.115	25.972	**128.200**	**0.74**	**0.29**
U	40.00	30.00	10.00	2316.4	11859.8	13817.2	2185.1	0.484	**1.84**	**0.63**	1.969	27.941	**135.746**	**0.64**	**0.22**
V	30.00	20.00	10.00	2586.9	13817.2	15979.0	2451.7	0.468	**1.36**	**0.35**	2.069	30.010	**141.446**	**0.47**	**0.12**
W	20.00	10.00	10.00	2869.4	15979.0	18355.3	2728.2	0.452	**0.89**	**0.16**	2.523	32.533	**145.085**	**0.31**	**0.05**
X	10.00	0.00	10.00	3164.2	18355.3	20956.2	3016.8	0.437	**0.44**	**0.04**	2.269	34.803	**146.388**	**0.15**	**0.01**

CALCULATION OF DEFLECTIONS AND SECONDARY MOMENTS (ICED POLE)

Project Name	Tolland
Job Number	CT-0031
Title	155' EEI Monopole
Designer	SAW

							Working Stress							Operational	
Pole Section	Top Elev. (ft)	Bott. Elev. (ft)	Section Length (ft)	Moment (kip ft)	Inertia at Top of Sec. (in^4)	Inertia at Bot. of Sec. (in^4)	Avg. Moment (kip ft)	Inc. Tilt (deg)	Total Tilt (deg)	Tot. Defl. @top (ft)	Total Weight (kip)	Accum. Weight (kip)	M_2 (kip ft)	Total Tilt @top (ft)	Total Defl. @top (ft)
TOP	>>>>>>>>>>>>>>>>>>>>>>>>>			4.1	0.0	0.0					0.641	0.641			
A	155.00	150.00	5.00	7.4	731.7	731.7	5.8	0.011	**6.21**	**8.87**	0.585	1.227	**0.505**	**2.15**	**3.07**
B	150.00	146.02	3.98	26.0	731.7	731.7	16.7	0.026	**6.19**	**8.32**	4.334	5.561	**1.963**	**2.14**	**2.88**
C	146.02	146.01	0.01	26.0	292.1	666.0	26.0	0.000	**6.17**	**7.89**	0.001	5.561	**1.969**	**2.13**	**2.73**
D	146.01	140.00	6.01	63.0	666.0	797.3	44.5	0.104	**6.17**	**7.89**	4.530	10.092	**6.996**	**2.13**	**2.73**
E	140.00	130.00	10.00	156.1	797.3	1052.0	109.5	0.337	**6.06**	**7.25**	4.277	14.369	**19.632**	**2.10**	**2.51**
F	130.00	125.90	4.10	205.9	1052.0	1170.7	181.0	0.190	**5.73**	**6.22**	0.367	14.735	**25.504**	**1.98**	**2.15**
G	125.90	125.89	0.01	206.0	1920.1	1790.7	205.9	0.000	**5.54**	**5.81**	0.001	14.737	**25.519**	**1.92**	**2.01**
H	125.89	120.00	5.89	277.8	1790.7	2084.0	241.9	0.209	**5.54**	**5.81**	0.732	15.469	**33.959**	**1.92**	**2.01**
I	120.00	110.00	10.00	435.2	2084.0	2652.5	356.5	0.428	**5.33**	**5.25**	5.061	20.530	**50.073**	**1.84**	**1.82**
J	110.00	100.00	10.00	602.0	2652.5	3316.1	518.6	0.494	**4.90**	**4.36**	2.942	23.472	**67.989**	**1.70**	**1.51**
K	100.00	90.00	10.00	778.1	3316.1	4082.0	690.0	0.531	**4.41**	**3.55**	1.537	25.009	**85.551**	**1.52**	**1.23**
L	90.00	85.42	4.58	860.6	4082.0	4470.2	819.3	0.250	**3.87**	**2.82**	1.039	26.048	**93.214**	**1.34**	**0.98**
M	85.42	85.41	0.01	860.7	5325.7	5033.5	860.6	0.000	**3.62**	**2.52**	0.002	26.050	**93.230**	**1.25**	**0.87**
N	85.41	80.00	5.41	959.2	5033.5	5582.1	910.0	0.264	**3.62**	**2.52**	1.268	27.318	**102.029**	**1.25**	**0.87**
O	80.00	70.00	10.00	1142.6	5582.1	6699.5	1050.9	0.487	**3.36**	**2.19**	1.941	29.259	**117.453**	**1.16**	**0.76**
P	70.00	60.00	10.00	1327.4	6699.5	7956.8	1235.0	0.479	**2.87**	**1.64**	2.058	31.317	**131.408**	**0.99**	**0.57**
Q	60.00	50.00	10.00	1517.3	7956.8	9362.4	1422.3	0.467	**2.39**	**1.18**	3.106	34.423	**143.832**	**0.83**	**0.41**
R	50.00	45.91	4.09	1595.8	9362.4	9983.4	1556.6	0.187	**1.93**	**0.81**	0.923	35.346	**148.399**	**0.67**	**0.28**
S	45.91	45.90	0.01	1596.0	11606.6	10796.6	1595.9	0.000	**1.74**	**0.68**	0.003	35.348	**148.410**	**0.60**	**0.23**
T	45.90	40.00	5.90	1709.6	10796.6	11859.8	1652.8	0.245	**1.74**	**0.67**	1.493	36.842	**154.424**	**0.60**	**0.23**
U	40.00	30.00	10.00	1903.3	11859.8	13817.2	1806.5	0.400	**1.49**	**0.51**	2.637	39.478	**163.067**	**0.52**	**0.18**
V	30.00	20.00	10.00	2098.3	13817.2	15979.0	2000.8	0.382	**1.09**	**0.28**	2.769	42.247	**169.528**	**0.38**	**0.10**
W	20.00	10.00	10.00	2298.4	15979.0	18355.3	2198.4	0.364	**0.71**	**0.12**	3.331	45.579	**173.609**	**0.25**	**0.04**
X	10.00	0.00	10.00	2503.6	18355.3	20956.2	2401.0	0.348	**0.35**	**0.03**	3.035	48.614	**175.058**	**0.12**	**0.01**

SUMMARY OF INTERNAL FORCES AND CAPACITIES

Project Name	Tolland
Job Number	CT-0031
Title	155' EEI Monopole
Designer	SAW

Pole Section	Top Elev.	Bott. Elev.	Area	S	Bare										Iced									
					Dead Load	Shear	Moment	M_2	M_{TOTAL}	f_a	f_b	f_{TOTAL}	F_B	Stress Ratio	Dead Load	Shear	Moment	M_2	M_{TOTAL}	f_a	f_b	f_{TOTAL}	F_B	Stress Ratio
	(ft)	(ft)	(in^2)	(in^3)	(kip)	(kip)	(kip ft)	(kip ft)	(kip ft)	(ksi)	(ksi)	(ksi)	(ksi)		(kip)	(kip)	(kip ft)	(kip ft)	(kip ft)	(ksi)	(ksi)	(ksi)	(ksi)	
TOP	>>>>>>>>>>>>>>>>>		24.34	94.42	0.45	0.49	4.10	0.00	4.1	0.02	0.52	0.54	33.60	**0.016**	0.64	0.50	4.15	0.00	4.1	0.03	0.53	0.55	33.60	**0.016**
A	155.00	150.00	24.34	91.47	0.89	0.79	7.6	0.42	8.0	0.04	1.05	1.08	33.60	**0.032**	1.23	0.68	7.45	0.51	8.0	0.05	1.04	1.09	33.60	**0.033**
B	150.00	146.02	24.34	91.47	3.99	5.00	27.2	1.63	28.8	0.16	3.78	3.94	33.60	**0.117**	5.56	4.66	25.95	1.96	27.9	0.23	3.66	3.89	33.60	**0.116**
C	146.02	146.01	10.81	63.43	3.99	5.00	27.2	1.63	28.8	0.37	5.46	5.83	33.60	**0.173**	5.56	4.66	26.00	1.97	28.0	0.51	5.29	5.81	33.60	**0.173**
D	146.01	140.00	12.67	71.55	7.04	9.71	67.0	5.73	72.7	0.56	12.20	12.75	33.60	**0.380**	10.09	9.11	62.97	7.00	70.0	0.80	11.73	12.53	33.60	**0.373**
E	140.00	130.00	13.68	86.14	10.06	13.17	168.8	15.97	184.7	0.74	25.74	26.47	33.60	**0.788**	14.37	12.12	156.08	19.63	175.7	1.05	24.48	25.53	33.60	**0.760**
F	130.00	125.90	14.57	92.53	10.27	13.44	223.3	20.74	244.1	0.70	31.65	32.36	33.60	**0.963**	14.74	12.16	205.87	25.50	231.4	1.01	30.01	31.02	33.60	**0.923**
G	125.90	125.89	24.28	144.82	10.27	13.44	223.5	20.75	244.2	0.42	20.24	20.66	33.60	**0.615**	14.74	12.16	205.99	25.52	231.5	0.61	19.18	19.79	33.60	**0.589**
H	125.89	120.00	24.62	160.33	10.76	13.84	303.8	27.60	331.4	0.44	24.80	25.24	33.60	**0.751**	15.47	12.22	277.79	33.96	311.7	0.63	23.33	23.96	33.60	**0.713**
I	120.00	110.00	26.30	188.48	14.32	17.93	479.6	40.74	520.3	0.54	33.13	33.67	33.60	**1.002**	20.53	15.80	435.22	50.07	485.3	0.78	30.90	31.68	33.60	**0.943**
J	110.00	100.00	28.41	218.90	16.38	20.23	670.3	55.46	725.8	0.58	39.79	40.36	33.60	**1.201**	23.47	17.55	601.97	67.99	670.0	0.83	36.73	37.55	33.60	**1.118**
K	100.00	90.00	30.53	251.60	17.42	20.98	876.4	69.97	946.3	0.57	45.13	45.70	33.60	**1.360**	25.01	17.67	778.08	85.55	863.6	0.82	41.19	42.01	33.60	**1.250**
L	90.00	85.42	32.07	267.39	18.14	21.59	974.5	76.32	1050.8	0.57	47.16	47.72	33.60	**1.420**	26.05	18.02	860.55	93.21	953.8	0.81	42.80	43.62	33.60	**1.298**
M	85.42	85.41	38.57	306.73	18.14	21.59	974.7	76.34	1051.1	0.47	41.12	41.59	33.60	**1.238**	26.05	18.02	860.73	93.23	954.0	0.68	37.32	38.00	33.60	**1.131**
N	85.41	80.00	38.87	328.76	19.06	22.19	1093.4	83.67	1177.1	0.49	42.96	43.45	33.60	**1.293**	27.32	18.27	959.23	102.03	1061.3	0.70	38.74	39.44	33.60	**1.174**
O	80.00	70.00	40.78	371.53	20.45	22.99	1319.3	96.61	1415.9	0.50	45.73	46.23	33.60	**1.376**	29.26	18.41	1142.61	117.45	1260.1	0.72	40.70	41.42	33.60	**1.233**
P	70.00	60.00	43.26	416.91	21.92	23.80	1553.2	108.43	1661.7	0.51	47.83	48.33	33.60	**1.439**	31.32	18.54	1327.35	131.41	1458.8	0.72	41.99	42.71	33.60	**1.271**
Q	60.00	50.00	45.74	464.91	24.20	25.08	1799.0	119.05	1918.0	0.53	49.51	50.04	33.60	**1.489**	34.42	19.16	1517.32	143.83	1661.2	0.75	42.88	43.63	33.60	**1.299**
R	50.00	45.91	47.49	485.34	24.86	25.41	1902.2	122.98	2025.2	0.52	50.07	50.60	33.60	**1.506**	35.35	19.22	1595.81	148.40	1744.2	0.74	43.13	43.87	33.60	**1.306**
S	45.91	45.90	55.31	537.55	24.86	25.41	1902.5	122.99	2025.5	0.45	45.22	45.67	33.60	**1.359**	35.35	19.22	1596.01	148.41	1744.4	0.64	38.94	39.58	33.60	**1.178**
T	45.90	40.00	55.51	572.47	25.97	25.88	2053.8	128.20	2182.0	0.47	45.74	46.21	33.60	**1.375**	36.84	19.30	1709.64	154.42	1864.1	0.66	39.07	39.74	33.60	**1.183**
U	40.00	30.00	57.85	634.18	27.94	26.65	2316.4	135.75	2452.2	0.48	46.40	46.88	33.60	**1.395**	39.48	19.43	1903.32	163.07	2066.4	0.68	39.10	39.78	33.60	**1.184**
V	30.00	20.00	60.80	699.04	30.01	27.45	2586.9	141.45	2728.4	0.49	46.84	47.33	33.60	**1.409**	42.25	19.57	2098.34	169.53	2267.9	0.69	38.93	39.63	33.60	**1.179**
W	20.00	10.00	63.75	767.07	32.53	29.05	2869.4	145.08	3014.5	0.51	47.16	47.67	33.60	**1.419**	45.58	20.45	2298.42	173.61	2472.0	0.72	38.67	39.39	33.60	**1.172**
X	10.00	0.00	66.69	838.25	34.80	29.91	3164.2	146.39	3310.6	0.52	47.39	47.91	33.60	**1.426**	48.61	20.59	2503.59	175.06	2678.6	0.73	38.35	39.08	33.60	**1.163**

SpectraSite

Notice of Completion of Tower Improvement

January 3, 2005

Michelle Kababik
Verizon Wireless

RE: SiteAgreement between SpectraSite and Verizon at
CT-0031
Tolland
5 Barbara Road

Dear Michelle Kababik

This letter serves to advise you that SpectraSite Communications, Inc. completed the Tower Improvement described in the Amendment to the Site Agreement for the Site located on the above-referenced property on December 30, 2004.

If you have any questions regarding the foregoing, please contact me at the number below.

Sincerely,

Greg Csapo
Project Manager
919-465-6502