September 15, 2020

TO: Melanie A. Bachman
Executive Director
Connecticut Siting Council
10 Franklin Square
New Britain, CT 06051

RE: Notice of Exempt Modification
130 Bald Hill Road, Tolland, CT
Lat: 41.8830919
Long: -72.3756989

Dear Ms. Bachman:

AT&T Wireless currently maintains equipment at the 90' level of an existing 180' monopole located at 130 Bald Hill Road, in Tolland, CT. The tower and property are owned by Tolland County Mutual Aid.

AT&T desires to modify its existing telecommunications facility by swapping: (3) TPA65R-BU8D antennas, swapping (3) DMP65R-BU8DA antennas, swapping (3) 4478 B14 remote radio units, swapping (3) 8843 B2/B66A remote radio units, adding (3) RRUS-32 B30 remote radio units, adding (1) DC squid and ancillary equipment and cables. The centerline height of the existing antennas and ancillary tower-mounted equipment will be relocated to 180 feet.

The facility was approved by the Connecticut Siting Council on June 29, 1993. Six conditions were enumerated in the Council's decision: 1) Any deviation from the modification as specified in the Notice and supporting documentation shall render the acknowledgement invalid; 2) Any material changes to the modification as proposed shall require the filing of a new Notice with the Council; 3) Within 45 days after the completion of construction the Council shall be notified in writing that the construction has been completed; 4) Any nonfunctioning antenna and associated antenna mounting equipment on this facility owned and operated by AT&T shall be removed within 60 days of the date the antenna ceased to function; 5) the validity of the action shall expire one year from the date of the letter; and 6) the applicant may file a request an extension of time beyond the one-year deadline provided that such a request is submitted to the Council not less than 60 days prior to the expiration.

Please accept this application as notification pursuant to R.C.S.A. §16-50j-73, for construction that constitutes an exempt modification pursuant to R.C.S.A. §16-50j-72 (b)(2). In accordance with RCSA section 16-SOj-73, a copy of this letter and attachments is being sent to Michael Rosen, Town Manager of Tolland; Cynthia Murdock, Executive Secretary; as well as to The Tolland County Mutual Aid Fire Service Inc the tower and property owners.

The planned modifications to AT&T's facility fall squarely within those activities explicitly provided for in R.C.S.A. §16-50j-72 (b)(2). Specifically:

1. The planned modification will not result in an increase in the height of the existing structure.

2. The proposed modifications will not involve any changes to AT&T's ground-space footprint, and therefore and therefore will not require an extension of the site boundary.

3. The proposed modification will not increase the noise level at the facility by six decibels or more, or to levels that exceed state and local criteria.

4. The operation of the modified facility will not increase radio frequency (RF) emissions at the facility to a level at or above Federal Communications Commission (FCC) safety standard. An RF emissions calculation (enclosed) for AT&T's modified facility is herein provided.

5. The proposed modifications will not cause a change or alteration in the physical or environmental characteristics of the site.

6. The existing structure and its foundation can support AT&T's proposed modifications. Please see enclosed structural analysis completed by completed by Malouf Engineering Intl., Inc. dated and stamped August 20th, 2020.

For the foregoing reasons, AT&T respectfully requests that the proposed installation be allowed within the exempt modifications under R.C.S.A. §16-50j-72 (b)(2).

Sincerely,

Carolyn Seeley

Carolyn Seeley
Site Acquisition Supervisor
Qualtek Wireless
16 Esquire Road | Billerica, MA 01862
Mobile: 339-234-8975
cseeley@qualtekwireless.com

Enclosures: Exhibit 1 – Field Card and GIS Map
Exhibit 2 – Construction Drawings
Exhibit 3 – Structural Analysis

cc:

Town of Tolland
Attn: Michael Rosen
Town Manager
21 Tolland Green
Tolland, CT 06084

Town of Tolland
Attn: Cynthia Murdock
Zoning Executive Secretary
21 Tolland Green
Tolland, CT 06084

Tolland County Mutual Aid
Fire Service
Attn: Tyler Millix
Executive Director
56 Tolland Green P.O. Box 6
Tolland, CT 06084

130 BALD HILL ROAD

Location	130 BALD HILL ROAD	**Mblu**	14/ B/ 48/00 /
Acct#	4028	**Owner**	TOLLAND COUNTY MUTUAL AID ASSOC
Assessment	$265,500	**Appraisal**	$379,200
PID	2006	**Building Count**	1

Current Value

Appraisal			
Valuation Year	**Improvements**	**Land**	**Total**
2019	$36,700	$342,500	$379,200
Assessment			
Valuation Year	**Improvements**	**Land**	**Total**
2019	$25,700	$239,800	$265,500

Owner of Record

Owner	TOLLAND COUNTY MUTUAL AID ASSOC	**Sale Price**	$0
Co-Owner		**Certificate**	
Address	56 TOLLAND GREEN TOLLAND, CT 06084-0000	**Book & Page**	65/ 360
		Sale Date	06/09/1960
		Instrument	29

Ownership History

Ownership History					
Owner	**Sale Price**	**Certificate**	**Book & Page**	**Instrument**	**Sale Date**
TOLLAND COUNTY MUTUAL AID ASSOC	$0		65/ 360	29	06/09/1960

Building Information

Building 1 : Section 1

Year Built:	1930
Living Area:	400
Replacement Cost:	$71,269
Building Percent Good:	49
Replacement Cost Less Depreciation:	$34,900

Building Attributes	
Field	**Description**
STYLE	Communications Bld
MODEL	Ind/Comm
Grade	Average
Stories:	1
Occupancy	1
Ext Wall 1	Brick/Masonry
Exterior Wall 2	
Roof Structure	Gable/Hip
Roof Cover	Tar & Gravel
Interior Wall 1	Plstr/shtrck
Interior Wall 2	
Interior Floor 1	Concr-Finished
Interior Floor 2	
Heating Fuel	Electric
Heating Type	Hot Air-no Duc
AC Type	Heat Pump
Bldg Use	Pub Utilit
Total Rooms	
Total Bedrms	
Total Baths	
Solar	
1st Floor Use:	
Heat/AC	Heat/AC Pkg
Frame Type	Masonry
Baths/Plumbing	None
Ceiling/Wall	None
Rooms/Prtns	Light
Wall Height	8
% Comn Wall	

Building Photo

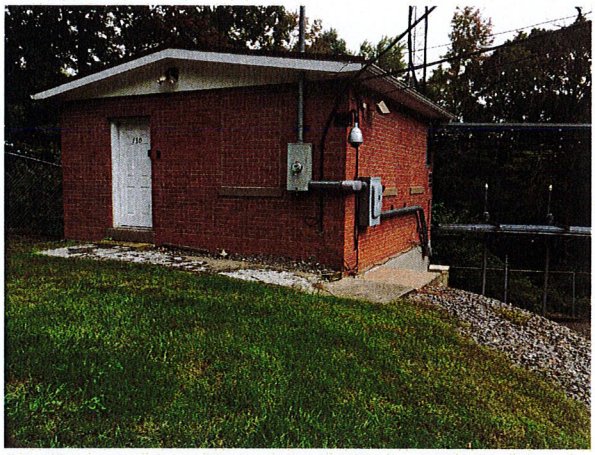

(http://images.vgsi.com/photos/TollandCTPhotos/\00\00\84/63.jpg)

Building Layout

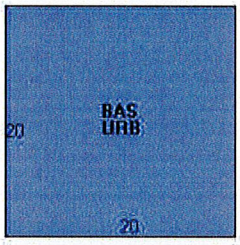

(http://images.vgsi.com/photos/TollandCTPhotos//Sketches/2006_2016.jpg

Building Sub-Areas (sq ft)			Legend
Code	**Description**	**Gross Area**	**Living Area**
BAS	Main Floor	400	400
URB	Unf Raised Bsmt	400	0
		800	400

Extra Features

Extra Features	Legend
No Data for Extra Features	

Land

Land Use

Land Line Valuation

Use Code	400	**Size (Acres)**	1.11
Description	Pub Utilit	**Frontage**	222
Zone	RDD	**Depth**	
Neighborhood	350C	**Assessed Value**	$239,800
Alt Land Appr	No	**Appraised Value**	$342,500
Category			

Outbuildings

Outbuildings						Legend
Code	**Description**	**Sub Code**	**Sub Description**	**Size**	**Value**	**Bldg #**
FN	FENCE	CL5	5' Chain Link	360 L.F.	$1,800	1

Valuation History

Appraisal			
Valuation Year	**Improvements**	**Land**	**Total**
2018	$33,900	$294,200	$328,100
2017	$33,900	$294,200	$328,100
2015	$33,900	$294,200	$328,100

Assessment			
Valuation Year	**Improvements**	**Land**	**Total**
2018	$23,800	$206,000	$229,800
2017	$23,800	$206,000	$229,800
2015	$23,800	$206,000	$229,800

(c) 2020 Vision Government Solutions, Inc. All rights reserved.

Google Maps 130 Bald Hill Rd

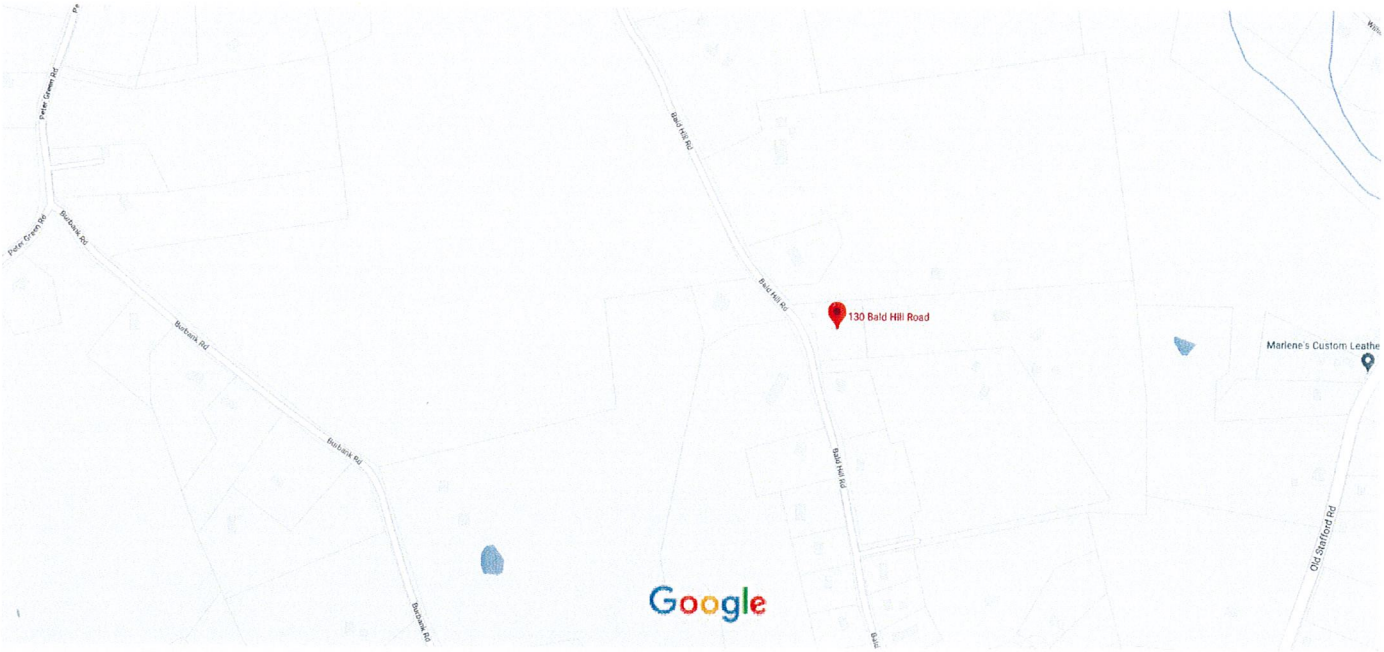

Map data ©2020 200 ft

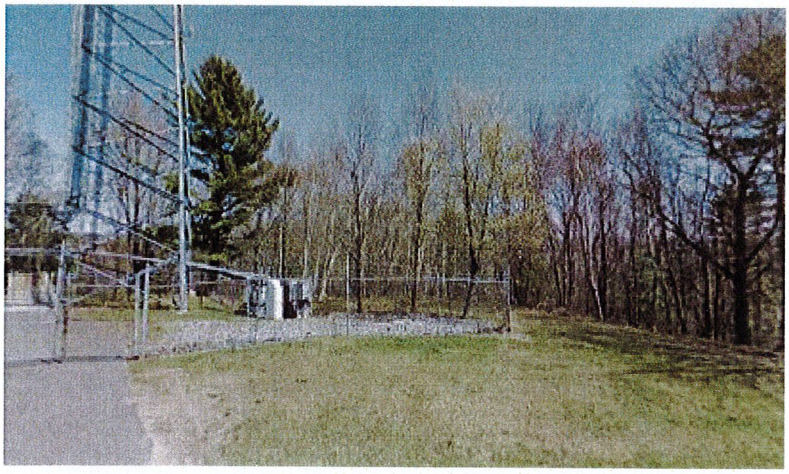

130 Bald Hill Rd

Tolland, CT 06084

Directions Save Nearby Send to your phone Share

VJMF+6V Tolland, Connecticut

Photos

Post-Mod Rigorous Structural Analysis Report

AT&T

AT&T | Tolland Central Site | CT5331 | FA 10071279

Owner: Tolland County Mutual Aid

Tolland, Connecticut

August 20, 2020

MEI PROJECT ID: CT00983S-20V1

MALOUF ENGINEERING INTL., INC.

STRUCTURAL CONSULTANTS

17950 PRESTON ROAD, SUITE 720 ▪ DALLAS, TEXAS 75252 ▪ TEL. 972-783-2578 FAX 972-783-2583

www.maloufengineering.com

TIA AISC PROFESSIONAL MEMBER ACEC MEMBER

MALOUF ENGINEERING INTL., INC.

STRUCTURAL CONSULTANTS

August 19, 2020

Mr. Miguel Nobre
Vertical Resources Group
Auburn, MA 01501

POST-MOD RIGOROUS STRUCTURAL ANALYSIS

Structure/Make/Model:	180 ft **Self-Supporting Tower**		Rohn / SSV	
Client/Site Name/#:	**Vertical Resources Group | AT&T**		**Tolland Central Site CT5331 | FA 10071279**	
Owner/Site Name/#:	Tolland County Mutual Aid		Tolland Site	
MEI Project ID:	**CT00983S-20V1**			
Location:	130 Bald Hill Rd Tolland, CT 06084		Tolland County FCC #N/A	
	LAT	41-52-59.13 N	LON	72-22-32.52 W

EXECUTIVE SUMMARY:

Malouf Engineering Int'l (MEI), as requested, has performed a rigorous structural analysis and modification design of the above-mentioned structure to assess the impact of the changed condition as noted in Table 1.

Based on the stress analysis performed, the existing structure **is in conformance** with the Int'l Building Code (IBC) / ANSI/TIA-**222-G** Standard for the loading considered under the criteria listed and referenced in the report sections **after proper installation of the recommended structural strengthening modifications outlined** – tower rated at 94.3% - Diagonals.

The Installation of the noted appurtenances configuration is structurally acceptable after proper installation of the proposed strengthening modifications. Please refer to modification drawings for details.

MEI appreciates the opportunity of providing our continuing professional services to you. If you have any questions or need further assistance on this or other projects, please contact us.

Respectfully submitted,

MALOUF ENGINEERING INT'L, INC.

Analysis performed by:

Krishna Manda, PE
Sr. Project Engineer

Reviewed & Approved by:

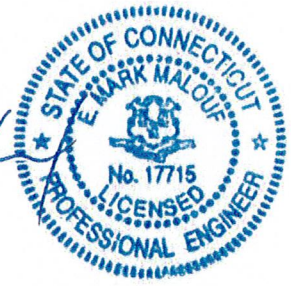

E. Mark Malouf, PE
Connecticut #17715
972-783-2578 ext. 106
mmalouf@maloufengineering.com

8/20/2020

TABLE OF CONTENTS

1. *INTRODUCTION & SCOPE* ____ 4

2. *SOURCE OF DATA* ____ 4

Background Information:---- 4

3. *ANALYSIS CRITERIA* ____ 5

Appurtenances Configuration ---- 5

4. *ANALYSIS PROCEDURE* ____ 7

Analysis Program ---- 7

Assumptions---- 7

5. *ANALYSIS RESULTS* ____ 8

6. *FINDINGS & RECOMMENDATIONS* ____ 10

7. *REPORT DISCLAIMER* ____ 11

APPENDIX 1 - ANALYSIS PRINTOUT & GRAPHICS ____ 12

APPENDIX 2 – SOURCE / CHANGED CONDITION ____ 13

Separate Attachment:

Modification Design Drawings

This report is not to be reproduced or copied in whole or in part without MEI's written consent. **2020, MEI, Inc.** ©

1. INTRODUCTION & SCOPE

A rigorous structural analysis and modification design were performed by Malouf Engineering Int'l (MEI), as requested and authorized by Mr. Miguel Nobre, Vertical Resources Group, on behalf of AT&T, to determine the acceptance of the proposed changed conditions in conformance with the IBC / ANSI/TIA-222-G Standard, "*Structural Standard for Antenna Supporting Structures and Antennas*".

The scope of this independent analysis is to determine the overall stability and the adequacy of structural members, foundations, and member connections, as available and stated. This analysis considers the structure to have been properly installed and maintained with no structural defects. Installation procedures and related loading are not within the scope of this analysis and should be performed and evaluated by a competent person of the erection contractor.

The different report sections detail the applicable information used in this evaluation, relating to the tower data, the appurtenances configuration and the wind and ice loading considered.

2. SOURCE OF DATA

The following information has been used in this evaluation as source data that accurately represent the existing structure and the related appurtenances:

	Source	Information	Reference
STRUCTURE			
Tower	Vertical Resources / Mr. Miguel Nobre	Tower Extension Drawing [Rohn]	Dwg #C840690 Dated 04/23/1984
		Previous Structural Analysis report (SA) [Maser Consulting, CT]	Project #17963024A Dated 05/11/2018
	MEI Records	Previous Structural Analysis	ID CT00983S-07V0 Dated 11/29/2007
Foundation	Vertical Resources / Mr. Miguel Nobre	Original Foundation Dwg. [Rohn]	Dwg #C790723 Dated 08/02/1979
Geotechnical	Geotech. report not made available. Soil Parameters per original design notes.		
Material Grade	Not available from supplied documents- Assumed based on typical towers of this type - Refer to Appendix		
CURRENT APPURTENANCES			
	Vertical Resources / Mr. Miguel Nobre	Tolland County Loading Sheet	Received Dated 07/14/2020
CHANGED CONDITION			
	Vertical Resources / Mr. Miguel Nobre	AT&T RFDS	Dated 03/24/2020
		Email Instructions	Dated 07/15/2020

Background Information:

Based on available information, the following is known regarding this structure:

DESIGNER / FABRICATOR	Rohn / SSV
ORIGINAL DESIGN CRITERIA	EIA Zone B w/ 1/2" Ice
PRIOR STRUCTURAL MODIFICATIONS	No strengthening Mods Known – Tower was extended 60ft from orig. 120ft height

This report is not to be reproduced or copied in whole or in part without MEI's written consent. **2020, MEI, Inc.** ©

3. ANALYSIS CRITERIA

The structural analysis performed used the following criteria:

CODE / STANDARD	2018 CT SBC / 2015 Int'l Building Code / ANSI/TIA-222-G-4 Standard	
LOADING CASES	*Full Wind:*	134 Mph Ultimate gust [equiv. 104 Mph (3-sec gust)] w/No Radial Ice**
	Iced Case:	50 Mph + 1.0" Radial Ice
	Service:	60 Mph
	Seismic:	S_s = 0.175 / S_1 = 0.064 / Site Class: D – Stiff Soil
STRUCTURE CRITERIA	*Risk Category (Structural Class):* 3	
	Exposure Category: 'B' – *Topographic Category:* 5 - Hill – Crest Height 275ft	

Appurtenances Configuration

The following appurtenances configuration is denoted by the *summation of Tables 1 & 2*:

Table 1: Tenant with Changed Condition Appurtenances Configuration

Elev (ft)	Tenant	Ants Qty	Appurtenance Model / Description	Mount Description	Lines Qty	Line size & Location
170	AT&T	3	TPA65R-BU8D Panel Antennas	(3) 12ft Sector Mounts (SFG22-12-4-96 or Equivalent)	9	3/4" DC Power Cables
		3	DMP65R-BU8DA Panel Antennas			
		3	RRUS-4478 B14 Boxes		3	Fiber Cables – (FZ)
		3	RRUS-32 B30 Boxes			
		3	RRUS-4449 B5/B12 RRH Boxes			
		3	Radio 8843 B2/B66A Boxes			
170		3	DC6-48-60-18-8C-EV OVP Boxes	Leg Mounted		
Appurtenances To Be Removed (See Below)						
90	AT&T	3	Kathrein 800-10121 Panel antennas	(3) 10ft Sector Frame Mounts	6	7/8" DC Cables
		3	KMW AM-X-CD-166500T Panels		2	
		6	Powerwave LGP21401 TMA's		1	Fiber Cable – (FZ)
		3	Ericsson RRUS-11 Boxes			
		3	Ericsson RRUS-12 Boxes			
		1	Raycap DC6-48-60-18-8F OVP Box			

Table 2: Remaining Tenants Current and Reserved/Future Appurtenances (Final)

Elev (ft)	Tenant	Ants Qty	Appurtenance Model / Description	Mount Description	Lines Qty	Line size & Location
180		1	DS4F06P36D-D Whip Antenna	3ft Side Arm Mount	1 1	1 1/4" 7/8" – (FZ)
		1	DB224 Dipole Antenna	Leg Mounted	1	7/8" – (FZ)
		1	Kreco CO-41A Whip Antenna	3ft Side Arm Mount	1	7/8" – (FZ)
		1	Kreco CO-41A Whip Antenna	Leg Mounted	1	7/8" – (FZ)
		1	DB224 Dipole Antenna	3ft Side Arm Mount	1	1/2" – (FZ)
142		1	DB420 Dipole Antenna	3ft Side Arm Mount	1	7/8" – (FZ)
135		1	220-3AN Whip Antenna	3ft Side Arm Mount	1	7/8" – (FZ)
135		1	6ft Dish w/ Radome	Dish Pipe Mount – NE Leg	1	EW63 – (FZ)
135		1	PD1142-1 Whip Antenna	3ft Side Arm Mount	1	1/2" – (FZ)
125		1	220-3AN Whip Antenna	4ft Side Arm Mount	1	7/8" – (FZ)
123		1	CC807-06 Whip Antenna	3ft Side Arm Mount	2	1 5/8" – (FZ)
		1	CC807-06 Inverted Whip Antenna			
123		1	CC807-06 Whip Antenna	3ft Side Arm Mount	2	1 5/8"
		1	432E-83I-01T Box		2	1/2" – (FZ)

Appurtenances continued into next page

This report is not to be reproduced or copied in whole or in part without MEI's written consent. **2020, MEI, Inc.** ©

Table 2: Remaining Tenants Current and Reserved/Future Appurtenances – Cont'd

Elev (ft)	Tenant	Ants Qty	Appurtenance Model / Description	Mount Description	Lines Qty	Line size & Location
123		1	DB408 Antenna	4ft Side Arm Mount	1	7/8" – (FZ)
119.5		1	2ft Dish w/ Radome	Leg Mounted – NE Leg	1	5/8" – (FZ)
113		1	2ft Dish w/ Radome	Leg Mounted – NE Leg	1	5/8" – (FZ)
104.5		1	12ft x 3" Dia Whip Antenna	4ft Side Arm Mount	1	1/2" – (FZ)
102		1	Yagi (S4307) Antenna	Pipe Mount (C5 Mount)	1	1/2" – (FZ)
99		1	Kreco CO-41A Whip Antenna	4ft Side Arm Mount	1	1/2" – (FZ)
90		1	Kreco CO-41A Whip Antenna	4ft Side Arm Mount	1	1/2" – (FZ)
85		1	DB224 Antenna	4ft Side Arm Mount	1	1/2" – (FZ)
75		1	Yagi (S4307) Antenna	Pipe Mount (C5 Mount)	1	1/2" – (FZ)
70		1	Yagi (S4307) Antenna	Pipe Mount (C5 Mount)	1	1/2" – (FZ)

Notes:

1. **As per 2015 IBC for ultimate 3-sec gust wind speed converted to nominal 3-sec gust wind speed as per Sect. 1609.3.1 as required to be used in ANSI/TIA-222-G Standard per exception 5 of Sect. 1609.1.1.
2. All elevations are measured from tower base.
3. Please note appurtenances not listed above are to be removed/not present as per data supplied.
4. (I) = Internal; (E) = External; (FZ) = Within Face Zone; (OFZ) = Outside Face Zone - as per TIA-222-G.
5. The above appurtenances represent MEI's understanding of the appurtenances configuration. If different than above, the analysis is invalid. Please contact MEI if any discrepancies are found.

This report is not to be reproduced or copied in whole or in part without MEI's written consent. **2020, MEI, Inc. ©**

4. ANALYSIS PROCEDURE

The subject structure is analyzed for feasibility of the installation of the proposed changed condition previously noted. The data records furnished were reviewed and a computer stress analysis was performed in accordance with the TIA-222 Standard provisions and with the agreed scope of work terms and the results of this analysis are reported.

Analysis Program

The computer program used to model the structure is a rigorous Finite Element Analysis program, tnxTower (ver. 8.07), a commercially available program by Tower Numerics Inc. The latticed structures members are modeled using beam/truss and cable members and the pole members using tubular beam elements. The structural parameters and geometry of the members are included in the model. The dead loads, temperature loads and the wind loads are internally calculated by the program for the different wind directions and then applied as external loads on the structure. Any applicable exemptions, as per Section 15.6 of the TIA-222-G Standard for existing structures originally designed in accordance with a previous revision of the TIA-222 Standard, have been taken.

Assumptions

This engineering study is based on the theoretical capacity of the members and is not a condition assessment of the structure. This analysis is based on information supplied, and therefore, its results are based on and as accurate as that supplied data. MEI has made no independent determination, nor is it required to, of its accuracy. The following assumptions were made for this structural stress analysis:

- This existing tower is assumed, for the purpose of this analysis, to have been properly maintained and to be in good condition with no structural defects and with no deterioration to its member capacities ('as-new' condition).
- The member sizes and configuration are considered accurate as supplied. The material grade is as per data supplied and/or as assumed and as stated.
- The appurtenances configuration is as supplied and/or as stated in the report. It is assumed to be complete and accurate. All antennas, mounts, feed lines are assumed to be properly installed and supported as per manufacturer requirements.
- Some assumptions are made regarding antennas and mounts sizes and their projected areas based on best interpretation of data supplied and of best knowledge of antenna type & industry practice.
- Mounts/Platforms are considered adequate to support the loading. No actual analysis of the platform/mount itself is performed, with the analysis being limited to analyzing the structure.
- The soil parameters are as per data supplied or as assumed and as stated. If no data is available, the foundation system is assumed to support the structure with its new reactions.
- All welds and connections are assumed to develop at least the member capacity, unless determined otherwise and explicitly stated in this report.
- All prior structural modifications, if any, are assumed to be as per data supplied/available, and to have been properly installed and to be fully effective.

If any of the above assumptions are not valid or have been made in error, this analysis results may be invalided, MEI should be contacted to review any contradictory information to determine its effect.

This report is not to be reproduced or copied in whole or in part without MEI's written consent. **2020, MEI, Inc. ©**

5. ANALYSIS RESULTS

The results of the structural stress analysis based on data available and with the previous listed criteria, indicated the following: [Note: The Wind loading controls over the Seismic loading].

STRUCTURAL STRENGTHENING REQUIRED	
1	Add new one-third split HSS round pipe leg reinforcement as detailed at Elevations 0 to 80ft ± (4 Sections Total). Field verification of length of member is required.
2	Add new mid-brace angle members bolted to tower legs at Elevation 80 to 126.7ft ± (6 Bays Total).
3	Replace existing diagonal members with new angle members at Elevation 120 to 170ft ± (8 Bays total).
4	Replace existing diagonal members with new angle members at Elevations 20 to 40ft and 100 to 120ft ±. New end bolt to be A490 grade bolt. (5 Bays total).
5	Reinforce existing diagonal members at Elevation 0 to 20ft and 40 to 100ft ± (8 Bays total).
6	Field weld plates reinforcing the gusset plates at Elevations 20 to 40ft and 100 to 120ft as detailed. (2 Sections Total).
7	Modify base foundation as detailed. Shore adjacent structures as required.
8	Locate coaxes as shown. Refer to Tx-Line Layout for details.
9	Provide temporary bracing / shoring of foundation as required for stability of structure during reinforcement / replacement of members / bolts. Replace one member / bolt at a time.
10	Contractor to perform field determination/verification before fabrication.

Prior to implementation of the changed conditions and modifications, the data designated on the design documents requiring field verification shall be validated. Rigging and temporary supports required for the erection/modification shall be determined, documented, furnished and installed by the erector/contractor accounting for the loads imposed on the structure due to the proposed construction method.

Table 3: Stress Analysis Results – AFTER PROPER INSTALLATION OF MODS

Component Type	Maximum Stress Ratio	Controlling Elev. (ft) / Component	Pass/Fail	Comment
LEGS	87.8%	60 - 40	Pass	Bolts Control
DIAGONALS	**94.3%**	**60 - 40**	Pass	Bolts Control
MID BRACES	39.5%	100 - 80	Pass	
GIRTS	18.0%	180 - 175	Pass	
FOUNDATION	90.9%	Uplift	Pass	Geotechnical report not made available. Based on soil parameters from foundation design notes.

This report is not to be reproduced or copied in whole or in part without MEI's written consent. 2020, MEI, Inc. ©

Table 4: Serviceability Requirements – AFTER PROPER INSTALLATION OF MODS

	Maximum Value	TIA Requirement (10dB)	Pass/Fail	Comment
TWIST / SWAY	0.1012 Deg.	1.7789 Deg.	Pass	2ft Dish w/ Radome Elev. 113.00ft
	0.1117 Deg.	1.7789 Deg.	Pass	2ft Dish w/ Radome Elev. 119.50ft
	0.1368 Deg.	0.9848 Deg.	Pass	6ft Dish w/ Radome Elev. 135.00ft
	0.1705 Deg.	4 Deg. from Vert. or Horiz. Axis	Pass	
HORIZONTAL DISPLACEMENT	3.184 In./ 0.14% of Ht.	3.0% of Height	Pass	

Notes:
1. The Maximum Stress Ratio is the percentage that the maximum load in the member is relative to the allowable load as determined by Code requirements.
2. Refer to the Appendix 1 for more details on the member loads.
3. A maximum stress ratio between 100% and 105% may be considered as *Acceptable* according to industry standard practice.

This report is not to be reproduced or copied in whole or in part without MEI's written consent. **2020, MEI, Inc.** ©

6. FINDINGS & RECOMMENDATIONS

- Based on the rigorous stress analysis results, the subject structure is **rated at 94.3%** of its support capacity (controlling component: Diagonals) with the proposed changed condition considered after strengthening. Please refer to Table 3 and to Appendix 1 for more details of the analysis results.
- Based on the stress analysis performed, the existing structure **is in conformance** with the IBC / ANSI/TIA **222-G** Standard for the loading considered under the criteria listed and referenced in the report sections **after proper installation of the recommended structural strengthening modifications outlined.**
- ***The addition of the proposed changed condition as noted in Table 1 is structurally acceptable after proper installation of the proposed strengthening modifications.*** Please refer to modification drawings for details.
- This structure is near its support capacity for the appurtenances and loading criteria considered, after its modification. Therefore, no changes to the configuration considered should be made without performing a new proper evaluation.

Rigging and temporary supports required for the erection/modification shall be determined, documented, furnished and installed by the erector/contractor accounting for the loads imposed on the structure due to the proposed construction method.

This report is not to be reproduced or copied in whole or in part without MEI's written consent. **2020, MEI, Inc.** ©

7. REPORT DISCLAIMER

The engineering services rendered by **M**alouf **E**ngineering **I**nternational, Inc. *('MEI') in connection with this Structural Analysis are limited to a computer analysis of the tower structure, size and capacity of its members. MEI does not analyze the fabrication, including welding and connection capacities, except as included in this Report.*

The analysis performed, and the conclusions contained herein are based on the assumption that the tower has been properly installed and maintained, including, but not limited to the following:

1. Proper alignment and plumbness.
2. Correct guy tensions, as applicable.
3. Correct bolt tightness or slip jacking of sleeved connections.
4. No significant deterioration or damage to any structural component.

Furthermore, the information and conclusions contained in this Report were determined by application of the current "state-of-the-art" engineering and analysis procedures and formulae. MALOUF ENGINEERING INTERNATIONAL, INC. assumes no obligation to revise any of the information or conclusions contained in this Report in the event that such engineering and analysis procedures and formulae are hereafter modified or revised. In addition, under no circumstances will MALOUF ENGINEERING INTERNATIONAL, INC. have any obligation or responsibility whatsoever for or on account of consequential or incidental damages sustained by any person, firm or organization as a result of any information or conclusions contained in the Report, and the maximum liability of MALOUF ENGINEERING INTERNATIONAL, INC., if any, pursuant to this Report shall be limited to the total funds actually received by MALOUF ENGINEERING INTERNATIONAL, INC. for preparation of this Report.

Customer has requested MALOUF ENGINEERING INTERNATIONAL, INC. to prepare and submit to Customer an engineering analysis with respect to the Subject Tower and has further requested MALOUF ENGINEERING INTERNATIONAL, INC. to make appropriate recommendations regarding suggested structural modifications and changes to the Subject Tower. In making such request of MALOUF ENGINEERING INTERNATIONAL, INC., Customer has informed MALOUF ENGINEERING INTERNATIONAL, INC. that Customer will make a determination as to whether or not to implement any of the changes or modifications which may be suggested by MALOUF ENGINEERING INTERNATIONAL, INC. and that Customer will have any such changes or modifications made by riggers, erectors and other subcontractors of Customer's choice. MALOUF ENGINEERING INTERNATIONAL, INC. shall have the right to rely upon the accuracy of the information supplied by the customer and shall not be held responsible for the Customer's misrepresentation or omission of relevant fact whether intentional or otherwise.

Customer hereby agrees and acknowledges that MALOUF ENGINEERING INTERNATIONAL, INC. shall have no liability whatsoever to Customer or to others for any work or services performed by any persons other than MALOUF ENGINEERING INTERNATIONAL, INC. in connection with the implementation of services including but not limited to any services rendered for Customer or for others by riggers, erectors or other subcontractors. Customer acknowledges and agrees that any riggers, erectors or subcontractors retained or employed by Customer shall be solely responsible to Customer and to others for the quality of work performed by them and that MALOUF ENGINEERING INTERNATIONAL, INC. shall have no liability or responsibility whatsoever as a result of any negligence or breach of contract by any such rigger, erector or subcontractor and that Customer and rigger, erector, or subcontractor will provide MALOUF ENGINEERING INTERNATIONAL, INC. with a Certificate of Insurance naming MALOUF ENGINEERING INTERNATIONAL, INC. as additional insured.

This report is not to be reproduced or copied in whole or in part without MEI's written consent. **2020, MEI, Inc. ©**

APPENDIX 1 - ANALYSIS PRINTOUT & GRAPHICS

AFTER NOTED MODIFICATIONS

This report is not to be reproduced or copied in whole or in part without MEI's written consent. 2020, MEI, Inc. ©

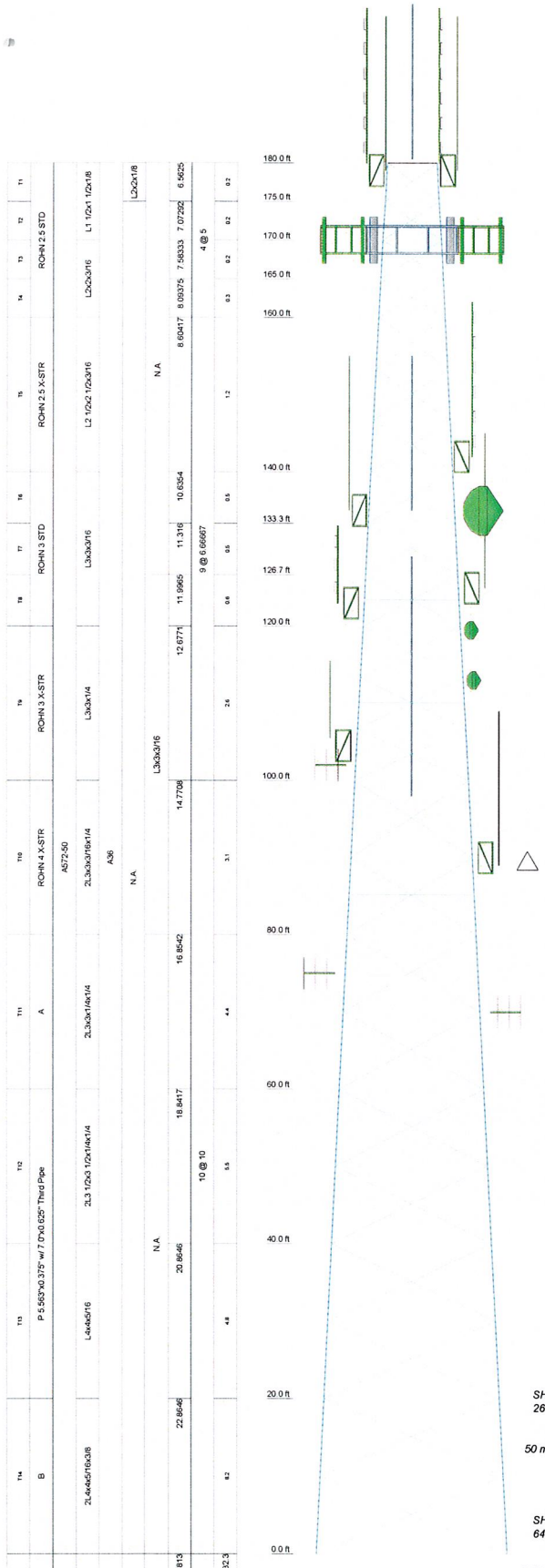

DESIGNED APPURTENANCE LOADING

TYPE	ELEVATION	TYPE	ELEVATION
DS4F06P36D-D Whip Antenna (E)	180	DC6-48-60-18-8C-EV Surge Suppressor Box (ATT / P)	170
3ft Side Arm Mount (E)	180 - 178	DB420 (E)	142
DB224 (Leg Mounted) (E)	180	3ft Side Arm Mount (E)	142
Kreco CO-41A Whip (E)	180	220-3AN Whip Antenna (E)	135
3ft Side Arm Mount (E)	180 - 178	3ft Side Arm Mount (E)	135
Kreco CO-41A Whip (Leg Mounted) (E)	180	DISH PIPE MOUNT (6'x4.5"OD) (E)	135
DB224 (E)	180	PD1142-1 (E)	135
3ft Side Arm Mount (E)	180 - 178	3ft Side Arm Mount (E)	135
TPA65R-BU8D w/ Pipe Mount (ATT / P)	170	6ft Dish w/ Radome (NE Leg / E)	135
TPA65R-BU8D w/ Pipe Mount (ATT / P)	170	4ft Side Arm Mount (E)	125
TPA65R-BU8D w/ Pipe Mount (ATT / P)	170	220-3AN Whip Antenna (E)	125
DMP65R-BU8DA Panel Antenna w/ Pipe Mount (ATT / P)	170	CC807-06 Whip (Inverted / E)	123
DMP65R-BU8DA Panel Antenna w/ Pipe Mount (ATT / P)	170	3ft Side Arm Mount (E)	123
DMP65R-BU8DA Panel Antenna w/ Pipe Mount (ATT / P)	170	CC807-06 Whip (E)	123
RRUS-4478 B14 (ATT / P)	170	432E-83I-01T TTA (E)	123
RRUS-4478 B14 (ATT / P)	170	3ft Side Arm Mount (E)	123
RRUS-4478 B14 (ATT / P)	170	DB408 (E)	123
RRUS-32 B30 (ATT / P)	170	4ft Side Arm Mount (E)	123
RRUS-32 B30 (ATT / P)	170	CC807-06 Whip (E)	123
RRUS-32 B30 (ATT / P)	170	2ft Dish w/ Radome (NE Leg / E)	119.5
RRUS-4449 B5/B12 RRH's (ATT / P)	170	2ft Dish w/ Radome (NE Leg / E)	113
RRUS-4449 B5/B12 RRH's (ATT / P)	170	12ft x 3" Dia Whip (E)	104.5
RRUS-4449 B5/B12 RRH's (ATT / P)	170	4ft Side Arm Mount (E)	104.5
RADIO 8843 B2/B66A (ATT / P)	170	Pipe Mount (C5 Mount) (E)	102
RADIO 8843 B2/B66A (ATT / P)	170	Yagi (S4307) (E)	102
RADIO 8843 B2/B66A (ATT / P)	170	4ft Side Arm Mount (E)	99
12ft Sector Mount (SFG22-12-4-96 or Equivalent) (ATT / P)	170	Kreco CO-41A Whip (E)	99
12ft Sector Mount (SFG22-12-4-96 or Equivalent) (ATT / P)	170	4ft Side Arm Mount (E)	90
12ft Sector Mount (SFG22-12-4-96 or Equivalent) (ATT / P)	170	Kreco CO-41A Whip (E)	90
DC6-48-60-18-8C-EV Surge Suppressor Box (ATT / P)	170	4ft Side Arm Mount (E)	85
DC6-48-60-18-8C-EV Surge Suppressor Box (ATT / P)	170	DB224 (E)	85
		Pipe Mount (C5 Mount) (E)	75
		Yagi (S4307) (E)	75
		Yagi (S4307) (E)	70
		Pipe Mount (C5 Mount) (E)	70

SYMBOL LIST

MARK	SIZE	MARK	SIZE
A	P 5.563"x0.258" w/ 7.0"x0.625" Third Pipe	B	P 6.625"x0.375" w/ 7.625"x0.5" Third Pipe

MATERIAL STRENGTH

GRADE	Fy	Fu	GRADE	Fy	Fu
A572-50	50 ksi	65 ksi	A36	36 ksi	58 ksi

TOWER DESIGN NOTES

1. Tower is located in Tolland County, Connecticut.
2. Tower designed for Exposure B to the TIA-222-G Standard.
3. Tower designed for a 104 mph basic wind in accordance with the TIA-222-G Standard.
4. Tower is also designed for a 50 mph basic wind with 1.00 in ice. Ice is considered to increase in thickness with height.
5. Deflections are based upon a 60 mph wind.
6. Tower Structure Class III.
7. Topographic Category 5 with Crest Height of 275.00 ft
8. 2018 CT SBC / 2015 IBC / ASCE7-10 / 134 Mph Ult Wind / Risk Cat. 3
9. TOWER RATING: 94.3%

ALL REACTIONS ARE FACTORED

MAX. CORNER REACTIONS AT BASE:
DOWN: 308 K
SHEAR: 38 K

UPLIFT: -257 K
SHEAR: 33 K

AXIAL 264 K
SHEAR 26 K / *MOMENT 2959 kip-ft*

TORQUE 69 kip-ft
50 mph WIND - 1.0000 in ICE

AXIAL 57 K
SHEAR 64 K / *MOMENT 6198 kip-ft*

TORQUE 85 kip-ft
REACTIONS - 104 mph WIND

Malouf Engineering Int'l Inc.
17950 Preston Road, STE 720
Dallas, Texas 75252
Phone: (972) 783 2578
FAX: (972) 783 2583
maloufengineering.com

Job: 180ft SST - TOLLAND CENTRAL Site - FA 1007127			
Project: CT00983S-20V1 - RUN-II (Modification Analysis)			
Client: VRG / AT&T	Drawn by: KM	App'd:	
Code: TIA-222-G	Date: 08/20/20	Scale: NTS	
Path:		Dwg No: E-1	

TIA-222-G - Service - 60 mph

Maximum Values

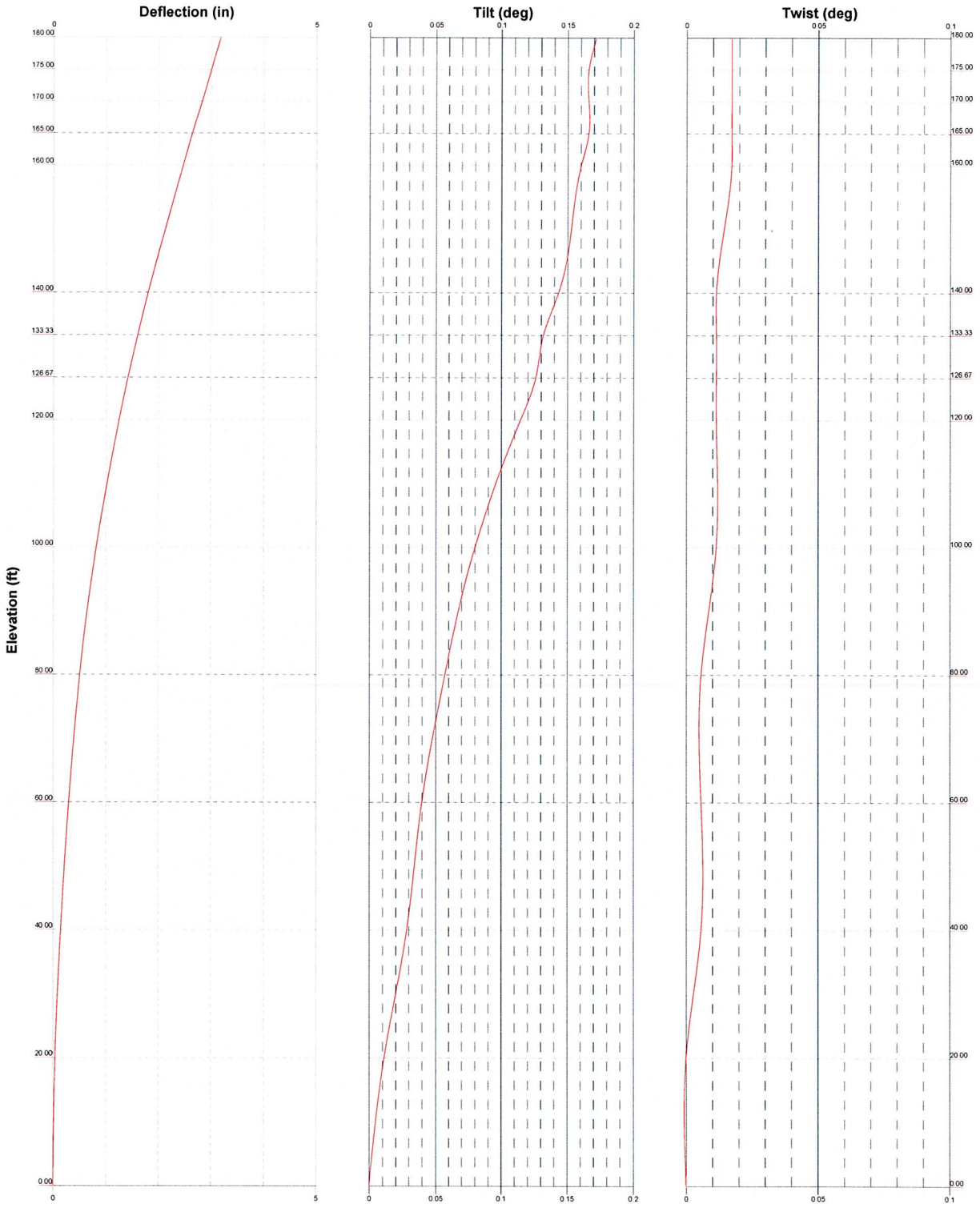

Malouf Engineering Int'l Inc.
17950 Preston Road, STE 720
Dallas, Texas 75252
Phone: (972) 783 2578
FAX: (972) 783 2583
maloufengineering.com

Job: 180ft SST - TOLLAND CENTRAL Site - FA 1007127			
Project: CT00983S-20V1 - RUN-II (Modification Analysis)			
Client: VRG / AT&T	Drawn by: KM		App'd:
Code: TIA-222-G	Date: 08/20/20		Scale: NTS
Path:			Dwg No. E-5

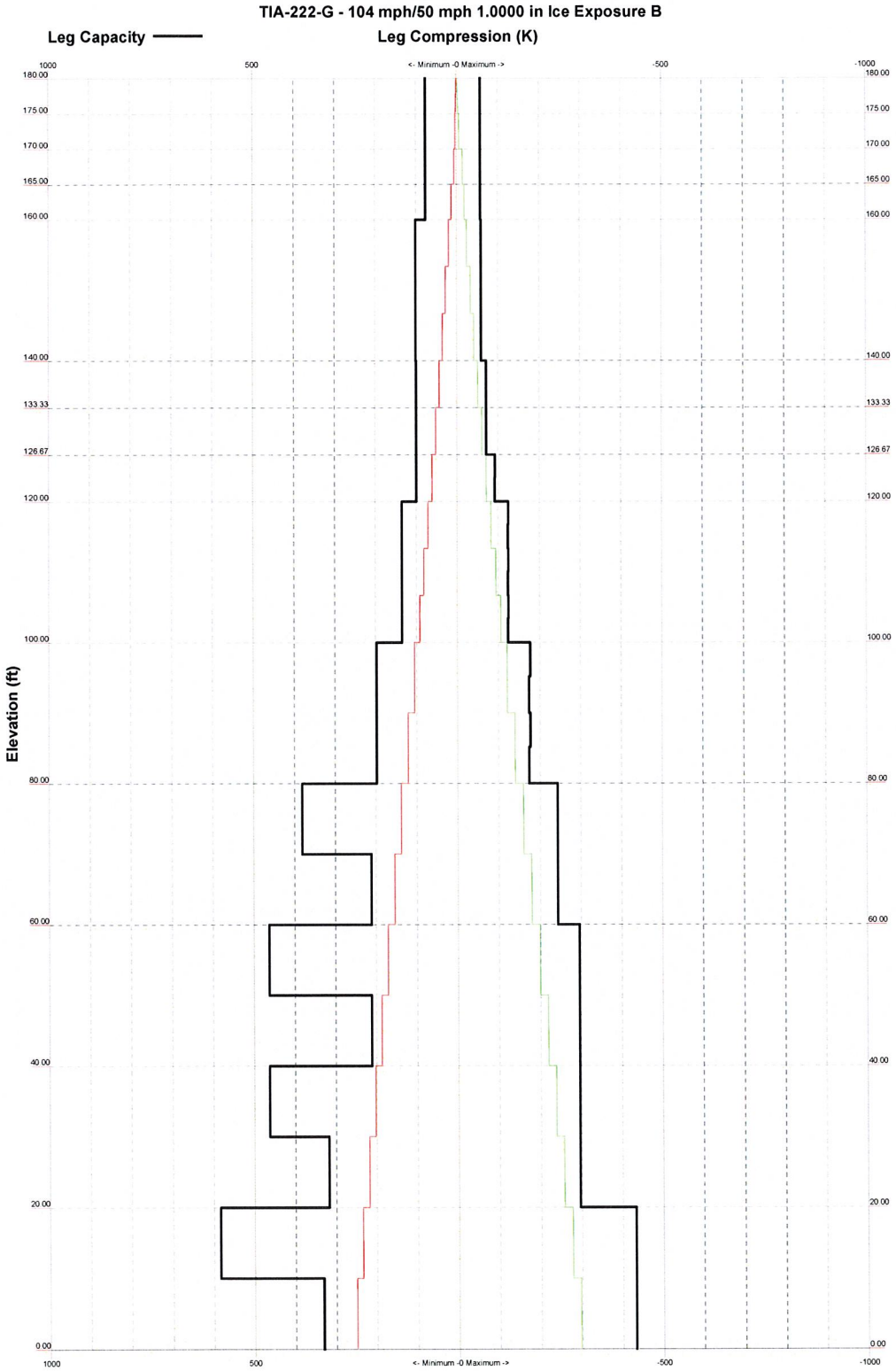

Malouf Engineering Int'l Inc.
17950 Preston Road, STE 720
Dallas, Texas 75252
Phone: (972) 783 2578
FAX: (972) 783 2583
maloufengineering.com

Job: 180ft SST - TOLLAND CENTRAL Site - FA 1007127			
Project: CT00983S-20V1 - RUN-II (Modification Analysis)			
Client: VRG / AT&T	Drawn by: KM	App'd:	
Code: TIA-222-G	Date: 08/20/20	Scale: NTS	
Path:		Dwg No. E-3	

Tower Input Data

The main tower is a 3x free standing tower with an overall height of 180.00 ft above the ground line.
The base of the tower is set at an elevation of 0.00 ft above the ground line.
The face width of the tower is 6.56 ft at the top and 24.78 ft at the base.
This tower is designed using the TIA-222-G standard.
The following design criteria apply:

Tower is located in Tolland County, Connecticut.
ASCE 7-10 Wind Data is used (wind speeds converted to nominal values).
Basic wind speed of 104 mph.
Structure Class III.
Exposure Category B.
Topographic Category 5.
Crest Height 275.00 ft.
SEAW RSM-03 procedures for wind speed-up calculations are used.
Topographic Feature: Hill.
Slope Distance L: 2340.00 ft.
Distance from Crest x: 0.00 ft.
Nominal ice thickness of 1.0000 in.
Ice thickness is considered to increase with height.
Ice density of 56 pcf.
A wind speed of 50 mph is used in combination with ice.
Deflections calculated using a wind speed of 60 mph.
2018 CT SBC / 2015 IBC / ASCE7-10 / 134 Mph Ult Wind / Risk Cat. 3.
A non-linear (P-delta) analysis was used.
Pressures are calculated at each section.
Stress ratio used in tower member design is 1.
Local bending stresses due to climbing loads, feed line supports, and appurtenance mounts are not considered.

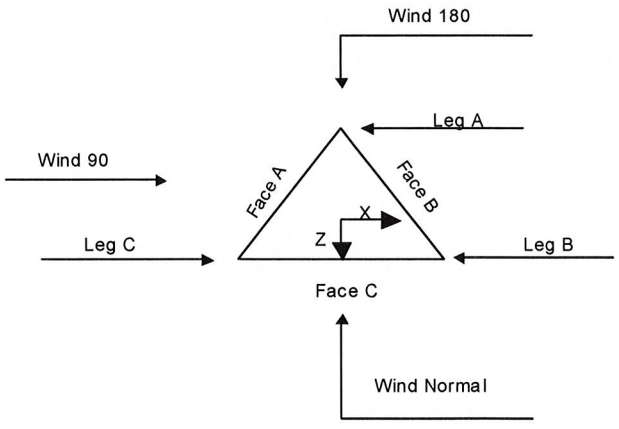

Triangular Tower

Tower Section Geometry

Tower Section	Tower Elevation	Assembly Database	Description	Section Width	Number of Sections	Section Length
	ft			ft		ft
T1	180.00-175.00			6.56	1	5.00
T2	175.00-170.00			7.07	1	5.00
T3	170.00-165.00			7.58	1	5.00
T4	165.00-160.00			8.09	1	5.00
T5	160.00-140.00			8.60	1	20.00
T6	140.00-133.33			10.64	1	6.67
T7	133.33-126.67			11.32	1	6.67
T8	126.67-120.00			12.00	1	6.67
T9	120.00-100.00			12.68	1	20.00
T10	100.00-80.00			14.77	1	20.00
T11	80.00-60.00			16.85	1	20.00
T12	60.00-40.00			18.84	1	20.00
T13	40.00-20.00			20.86	1	20.00
T14	20.00-0.00			22.86	1	20.00

Tower Section Geometry *(cont'd)*

Tower Section	Tower Elevation	Diagonal Spacing	Bracing Type	Has Horizontals
	ft	ft		
T1	180.00-175.00	5.00	X Brace	No
T2	175.00-170.00	5.00	X Brace	No
T3	170.00-165.00	5.00	X Brace	No
T4	165.00-160.00	5.00	X Brace	No
T5	160.00-140.00	6.67	X Brace	No
T6	140.00-133.33	6.67	X Brace	No
T7	133.33-126.67	6.67	X Brace	No
T8	126.67-120.00	6.67	X Brace	Yes
T9	120.00-100.00	6.67	X Brace	Yes
T10	100.00-80.00	10.00	X Brace	Yes
T11	80.00-60.00	10.00	X Brace	Yes
T12	60.00-40.00	10.00	X Brace	Yes
T13	40.00-20.00	10.00	X Brace	Yes
T14	20.00-0.00	10.00	X Brace	No

Feed Line/Linear Appurtenances - Entered As Round Or Flat

Description	Placement ft	#	Width or Diameter in	Weight plf
1 1/4 (E)	180.00 - 0.00	1	1.5500	0.66
7/8 (E)	180.00 - 0.00	1	1.1100	0.54
7/8 (E)	180.00 - 0.00	1	1.1100	0.54
7/8 (E)	180.00 - 0.00	1	1.1100	0.54
7/8 (E)	180.00 - 0.00	1	1.1100	0.54
7/8 (E)	135.00 - 0.00	1	1.1100	0.54
1/2 (E)	135.00 - 0.00	1	0.5800	0.25
7/8 (E)	125.00 - 0.00	1	1.1100	0.54
7/8 (E)	123.00 - 0.00	1	1.1100	0.54
5/8 (E)	119.50 - 0.00	1	0.8800	0.40
5/8 (E)	113.00 - 0.00	1	0.8800	0.40
1/2 (E)	104.50 - 0.00	1	0.5800	0.25
1/2 (E)	102.00 - 0.00	1	0.5800	0.25
1/2 (E)	85.00 - 0.00	1	0.5800	0.25
Feedline Ladder (Af) (E)	180.00 - 0.00	1	3.5000	8.40
Climbing Ladder (E)	180.00 - 0.00	1	1.7500	7.50
Safety Line 3/8 (E)	180.00 - 0.00	1	0.3750	0.22
1/2 (E)	180.00 - 0.00	1	0.5800	0.25

Description	Placement ft	#	Width or Diameter in	Weight plf
7/8 (E)	142.00 - 0.00	1	1.1100	0.54
EW63 (E)	135.00 - 0.00	1	2.0100	0.51
1 5/8 (E)	123.00 - 0.00	2	1.9800	1.04
1 5/8 (E)	123.00 - 0.00	2	1.9800	1.04
1/2 (E)	123.00 - 0.00	2	0.5800	0.25
1/2 (E)	99.00 - 0.00	1	0.5800	0.25
1/2 (E)	90.00 - 0.00	1	0.5800	0.25
1/2 (E)	75.00 - 0.00	1	0.5800	0.25
1/2 (E)	70.00 - 0.00	1	0.5800	0.25
Feedline Ladder (Af) (E)	180.00 - 0.00	1	3.5000	8.40
Step Bolts (E)	100.00 - 0.00	1	0.2500	0.40
Climbing Ladder (E)	120.00 - 100.00	1	1.7500	7.50
3/4" DC Power Cable (ATT / P)	170.00 - 0.00	9	0.7500	0.80
Fiber Cable (ATT / P)	170.00 - 0.00	3	0.3940	0.25
Feedline Ladder (Af) (Extend / ATT / E)	170.00 - 0.00	1	3.5000	8.40

Discrete Tower Loads

Description	*Placement*		C_AA_A *Front*	C_AA_A *Side*	*Weight*
	ft		ft^2	ft^2	*K*
DS4F06P36D-D Whip	180.00	No Ice	6.40	6.40	0.07
Antenna		1/2" Ice	9.49	9.49	0.12
(E)		1" Ice	11.64	11.64	0.18
3ft Side Arm Mount	180.00 - 178.00	No Ice	1.70	3.95	0.11
(E)		1/2" Ice	2.50	5.35	0.14
		1" Ice	3.30	6.75	0.18
DB224 (Leg Mounted)	180.00	No Ice	5.25	5.25	0.03
(E)		1/2" Ice	7.15	7.15	0.04
		1" Ice	9.05	9.05	0.05
Kreco CO-41A Whip	180.00	No Ice	1.75	1.75	0.03
(E)		1/2" Ice	3.17	3.17	0.04
		1" Ice	4.60	4.60	0.06
3ft Side Arm Mount	180.00 - 178.00	No Ice	1.70	3.95	0.11
(E)		1/2" Ice	2.50	5.35	0.14
		1" Ice	3.30	6.75	0.18
Kreco CO-41A Whip (Leg	180.00	No Ice	1.75	1.75	0.03
Mounted)		1/2" Ice	3.17	3.17	0.04
(E)		1" Ice	4.60	4.60	0.06
DB224	180.00	No Ice	5.25	5.25	0.03
(E)		1/2" Ice	7.15	7.15	0.04
		1" Ice	9.05	9.05	0.05
3ft Side Arm Mount	180.00 - 178.00	No Ice	1.70	3.95	0.11
(E)		1/2" Ice	2.50	5.35	0.14
		1" Ice	3.30	6.75	0.18
TPA65R-BU8D w/ Pipe	170.00	No Ice	18.09	10.10	0.13
Mount		1/2" Ice	18.72	11.52	0.25
(ATT / P)		1" Ice	19.36	12.80	0.38
TPA65R-BU8D w/ Pipe	170.00	No Ice	18.09	10.10	0.13
Mount		1/2" Ice	18.72	11.52	0.25
(ATT / P)		1" Ice	19.36	12.80	0.38
TPA65R-BU8D w/ Pipe	170.00	No Ice	18.09	10.10	0.13
Mount		1/2" Ice	18.72	11.52	0.25
(ATT / P)		1" Ice	19.36	12.80	0.38
DMP65R-BU8DA Panel	170.00	No Ice	17.87	10.02	0.13
Antenna w/ Pipe Mount		1/2" Ice	18.50	11.44	0.25
(ATT / P)		1" Ice	19.14	12.72	0.38
DMP65R-BU8DA Panel	170.00	No Ice	17.87	10.02	0.13
Antenna w/ Pipe Mount		1/2" Ice	18.50	11.44	0.25
(ATT / P)		1" Ice	19.14	12.72	0.38
DMP65R-BU8DA Panel	170.00	No Ice	17.87	10.02	0.13
Antenna w/ Pipe Mount		1/2" Ice	18.50	11.44	0.25
(ATT / P)		1" Ice	19.14	12.72	0.38
RRUS-4478 B14	170.00	No Ice	1.65	0.93	0.06
(ATT / P)		1/2" Ice	1.81	1.05	0.07
		1" Ice	1.98	1.19	0.09
RRUS-4478 B14	170.00	No Ice	1.65	0.93	0.06
(ATT / P)		1/2" Ice	1.81	1.05	0.07
		1" Ice	1.98	1.19	0.09
RRUS-4478 B14	170.00	No Ice	1.65	0.93	0.06
(ATT / P)		1/2" Ice	1.81	1.05	0.07
		1" Ice	1.98	1.19	0.09
RRUS-32 B30	170.00	No Ice	2.74	1.67	0.06
(ATT / P)		1/2" Ice	2.96	1.86	0.08
		1" Ice	3.19	2.05	0.11

Description	Placement		C_AA_A Front	C_AA_A Side	Weight
	ft		ft^2	ft^2	K
RRUS-32 B30 (ATT / P)	170.00	No Ice	2.74	1.67	0.06
		1/2" Ice	2.96	1.86	0.08
		1" Ice	3.19	2.05	0.11
RRUS-32 B30 (ATT / P)	170.00	No Ice	2.74	1.67	0.06
		1/2" Ice	2.96	1.86	0.08
		1" Ice	3.19	2.05	0.11
RRUS-4449 B5/B12 RRH's (ATT / P)	170.00	No Ice	1.97	1.42	0.07
		1/2" Ice	2.15	1.57	0.09
		1" Ice	2.33	1.74	0.11
RRUS-4449 B5/B12 RRH's (ATT / P)	170.00	No Ice	1.97	1.42	0.07
		1/2" Ice	2.15	1.57	0.09
		1" Ice	2.33	1.74	0.11
RRUS-4449 B5/B12 RRH's (ATT / P)	170.00	No Ice	1.97	1.42	0.07
		1/2" Ice	2.15	1.57	0.09
		1" Ice	2.33	1.74	0.11
RADIO 8843 B2/B66A (ATT / P)	170.00	No Ice	1.64	1.35	0.07
		1/2" Ice	1.80	1.50	0.09
		1" Ice	1.97	1.65	0.11
RADIO 8843 B2/B66A (ATT / P)	170.00	No Ice	1.64	1.35	0.07
		1/2" Ice	1.80	1.50	0.09
		1" Ice	1.97	1.65	0.11
RADIO 8843 B2/B66A (ATT / P)	170.00	No Ice	1.64	1.35	0.07
		1/2" Ice	1.80	1.50	0.09
		1" Ice	1.97	1.65	0.11
12ft Sector Mount (SFG22-12-4-96 or Equivalent) (ATT / P)	170.00	No Ice	17.50	9.00	0.52
		1/2" Ice	23.00	11.95	0.70
		1" Ice	28.50	14.90	0.89
12ft Sector Mount (SFG22-12-4-96 or Equivalent) (ATT / P)	170.00	No Ice	17.50	9.00	0.52
		1/2" Ice	23.00	11.95	0.70
		1" Ice	28.50	14.90	0.89
12ft Sector Mount (SFG22-12-4-96 or Equivalent) (ATT / P)	170.00	No Ice	17.50	9.00	0.52
		1/2" Ice	23.00	11.95	0.70
		1" Ice	28.50	14.90	0.89
DC6-48-60-18-8C-EV Surge Suppressor Box (ATT / P)	170.00	No Ice	4.78	2.74	0.03
		1/2" Ice	5.06	2.96	0.06
		1" Ice	5.35	3.20	0.10
DC6-48-60-18-8C-EV Surge Suppressor Box (ATT / P)	170.00	No Ice	4.78	2.74	0.03
		1/2" Ice	5.06	2.96	0.06
		1" Ice	5.35	3.20	0.10
DC6-48-60-18-8C-EV Surge Suppressor Box (ATT / P)	170.00	No Ice	4.78	2.74	0.03
		1/2" Ice	5.06	2.96	0.06
		1" Ice	5.35	3.20	0.10
DB420 (E)	142.00	No Ice	5.38	5.38	0.03
		1/2" Ice	7.90	7.90	0.04
		1" Ice	10.43	10.43	0.05
3ft Side Arm Mount (E)	142.00	No Ice	1.95	4.15	0.12
		1/2" Ice	2.75	5.65	0.17
		1" Ice	3.55	7.15	0.21
220-3AN Whip Antenna (E)	135.00	No Ice	4.14	4.14	0.02
		1/2" Ice	6.24	6.24	0.06
		1" Ice	8.35	8.35	0.10
3ft Side Arm Mount (E)	135.00	No Ice	1.95	4.15	0.12
		1/2" Ice	2.75	5.65	0.17
		1" Ice	3.55	7.15	0.21
DISH PIPE MOUNT (6'x4.5"OD)	135.00	No Ice	1.82	3.64	0.11
		1/2" Ice	2.25	4.37	0.14

Description	Placement		C_AA_A Front	C_AA_A Side	Weight
	ft		ft^2	ft^2	K
(E)		1" Ice	2.68	5.10	0.16
PD1142-1	135.00	No Ice	1.32	1.32	0.01
(E)		1/2" Ice	3.21	3.21	0.02
		1" Ice	5.12	5.12	0.05
3ft Side Arm Mount	135.00	No Ice	1.95	4.15	0.12
(E)		1/2" Ice	2.75	5.65	0.17
		1" Ice	3.55	7.15	0.21
220-3AN Whip Antenna	125.00	No Ice	4.14	4.14	0.02
(E)		1/2" Ice	6.24	6.24	0.06
		1" Ice	8.35	8.35	0.10
4ft Side Arm Mount	125.00	No Ice	2.25	5.50	0.15
(E)		1/2" Ice	3.35	7.25	0.20
		1" Ice	4.45	9.00	0.26
CC807-06 Whip	123.00	No Ice	1.73	1.73	0.02
(E)		1/2" Ice	2.09	2.09	0.03
		1" Ice	2.46	2.46	0.05
CC807-06 Whip	123.00	No Ice	1.73	1.73	0.02
(Inverted / E)		1/2" Ice	2.09	2.09	0.03
		1" Ice	2.46	2.46	0.05
3ft Side Arm Mount	123.00	No Ice	2.25	5.50	0.15
(E)		1/2" Ice	3.35	7.25	0.20
		1" Ice	4.45	9.00	0.26
CC807-06 Whip	123.00	No Ice	1.73	1.73	0.02
(E)		1/2" Ice	2.09	2.09	0.03
		1" Ice	2.46	2.46	0.05
432E-83I-01T TTA	123.00	No Ice	1.42	0.87	0.03
(E)		1/2" Ice	1.57	0.99	0.04
		1" Ice	1.73	1.12	0.05
3ft Side Arm Mount	123.00	No Ice	2.25	5.50	0.15
(E)		1/2" Ice	3.35	7.25	0.20
		1" Ice	4.45	9.00	0.26
DB408	123.00	No Ice	2.35	2.35	0.02
(E)		1/2" Ice	3.33	3.33	0.03
		1" Ice	4.31	4.31	0.06
4ft Side Arm Mount	123.00	No Ice	2.25	5.50	0.15
(E)		1/2" Ice	3.35	7.25	0.20
		1" Ice	4.45	9.00	0.26
12ft x 3" Dia Whip	104.50	No Ice	3.60	3.60	0.02
(E)		1/2" Ice	4.83	4.83	0.04
		1" Ice	6.08	6.08	0.08
4ft Side Arm Mount	104.50	No Ice	2.25	5.50	0.15
(E)		1/2" Ice	3.35	7.25	0.20
		1" Ice	4.45	9.00	0.26
Yagi (S4307)	102.00	No Ice	0.55	0.85	0.01
(E)		1/2" Ice	0.70	1.40	0.02
		1" Ice	0.85	1.95	0.03
Pipe Mount (C5 Mount)	102.00	No Ice	0.70	0.70	0.04
(E)		1/2" Ice	0.95	0.95	0.06
		1" Ice	1.20	1.20	0.08
Kreco CO-41A Whip	99.00	No Ice	1.75	1.75	0.03
(E)		1/2" Ice	3.17	3.17	0.04
		1" Ice	4.60	4.60	0.06
4ft Side Arm Mount	99.00	No Ice	2.25	5.50	0.15
(E)		1/2" Ice	3.35	7.25	0.20
		1" Ice	4.45	9.00	0.26
Kreco CO-41A Whip	90.00	No Ice	1.75	1.75	0.03
(E)		1/2" Ice	3.17	3.17	0.04
		1" Ice	4.60	4.60	0.06
4ft Side Arm Mount	90.00	No Ice	2.25	5.50	0.15

Description	Placement		C_AA_A Front	C_AA_A Side	Weight
	ft		ft²	ft²	K
(E)		1/2" Ice	3.35	7.25	0.20
		1" Ice	4.45	9.00	0.26
DB224	85.00	No Ice	5.25	5.25	0.03
(E)		1/2" Ice	7.15	7.15	0.04
		1" Ice	9.05	9.05	0.05
4ft Side Arm Mount	85.00	No Ice	2.25	5.50	0.15
(E)		1/2" Ice	3.35	7.25	0.20
		1" Ice	4.45	9.00	0.26
Yagi (S4307)	75.00	No Ice	0.55	0.85	0.01
(E)		1/2" Ice	0.70	1.40	0.02
		1" Ice	0.85	1.95	0.03
Pipe Mount (C5 Mount)	75.00	No Ice	0.70	0.70	0.04
(E)		1/2" Ice	0.95	0.95	0.06
		1" Ice	1.20	1.20	0.08
Yagi (S4307)	70.00	No Ice	0.55	0.85	0.01
(E)		1/2" Ice	0.70	1.40	0.02
		1" Ice	0.85	1.95	0.03
Pipe Mount (C5 Mount)	70.00	No Ice	0.70	0.70	0.04
(E)		1/2" Ice	0.95	0.95	0.06
		1" Ice	1.20	1.20	0.08

Dishes

Description	Face or Leg	Dish Type	Elevation	Outside Diameter		Aperture Area	Weight
			ft	ft		ft²	K
6ft Dish w/ Radome	B	Paraboloid	135.00	6.36	No Ice	31.75	0.19
(NE Leg / E)		w/Radome			1/2" Ice	32.59	0.33
					1" Ice	33.43	0.47
2ft Dish w/ Radome	B	Paraboloid	119.50	2.33	No Ice	4.26	0.03
(NE Leg / E)		w/Radome			1/2" Ice	5.45	0.08
					1" Ice	6.64	0.13
2ft Dish w/ Radome	B	Paraboloid	113.00	2.33	No Ice	4.26	0.03
(NE Leg / E)		w/Radome			1/2" Ice	5.45	0.08
					1" Ice	6.64	0.13

Load Combinations

Comb. No.	Description
1	Dead Only
2	1.2 Dead+1.6 Wind 0 deg - No Ice
3	0.9 Dead+1.6 Wind 0 deg - No Ice
4	1.2 Dead+1.6 Wind 30 deg - No Ice
5	0.9 Dead+1.6 Wind 30 deg - No Ice
6	1.2 Dead+1.6 Wind 60 deg - No Ice
7	0.9 Dead+1.6 Wind 60 deg - No Ice
8	1.2 Dead+1.6 Wind 90 deg - No Ice
9	0.9 Dead+1.6 Wind 90 deg - No Ice
10	1.2 Dead+1.6 Wind 120 deg - No Ice
11	0.9 Dead+1.6 Wind 120 deg - No Ice
12	1.2 Dead+1.6 Wind 150 deg - No Ice
13	0.9 Dead+1.6 Wind 150 deg - No Ice
14	1.2 Dead+1.6 Wind 180 deg - No Ice
15	0.9 Dead+1.6 Wind 180 deg - No Ice
16	1.2 Dead+1.6 Wind 210 deg - No Ice
17	0.9 Dead+1.6 Wind 210 deg - No Ice
18	1.2 Dead+1.6 Wind 240 deg - No Ice
19	0.9 Dead+1.6 Wind 240 deg - No Ice
20	1.2 Dead+1.6 Wind 270 deg - No Ice
21	0.9 Dead+1.6 Wind 270 deg - No Ice
22	1.2 Dead+1.6 Wind 300 deg - No Ice
23	0.9 Dead+1.6 Wind 300 deg - No Ice
24	1.2 Dead+1.6 Wind 330 deg - No Ice
25	0.9 Dead+1.6 Wind 330 deg - No Ice
26	1.2 Dead+1.0 Ice
27	1.2 Dead+1.0 Wind 0 deg+1.0 Ice
28	1.2 Dead+1.0 Wind 30 deg+1.0 Ice
29	1.2 Dead+1.0 Wind 60 deg+1.0 Ice
30	1.2 Dead+1.0 Wind 90 deg+1.0 Ice
31	1.2 Dead+1.0 Wind 120 deg+1.0 Ice
32	1.2 Dead+1.0 Wind 150 deg+1.0 Ice
33	1.2 Dead+1.0 Wind 180 deg+1.0 Ice
34	1.2 Dead+1.0 Wind 210 deg+1.0 Ice
35	1.2 Dead+1.0 Wind 240 deg+1.0 Ice
36	1.2 Dead+1.0 Wind 270 deg+1.0 Ice
37	1.2 Dead+1.0 Wind 300 deg+1.0 Ice
38	1.2 Dead+1.0 Wind 330 deg+1.0 Ice
39	Dead+Wind 0 deg - Service
40	Dead+Wind 30 deg - Service
41	Dead+Wind 60 deg - Service
42	Dead+Wind 90 deg - Service
43	Dead+Wind 120 deg - Service
44	Dead+Wind 150 deg - Service
45	Dead+Wind 180 deg - Service
46	Dead+Wind 210 deg - Service
47	Dead+Wind 240 deg - Service
48	Dead+Wind 270 deg - Service
49	Dead+Wind 300 deg - Service
50	Dead+Wind 330 deg - Service

Maximum Reactions

Location	Condition	Gov. Load Comb.	Vertical K	Horizontal, X K	Horizontal, Z K
Leg C	Max. Vert	18	305.39	32.35	-20.71
	Max. H_x	18	305.39	32.35	-20.71
	Max. H_z	7	-249.43	-26.95	17.59
	Min. Vert	7	-249.43	-26.95	17.59
	Min. H_x	7	-249.43	-26.95	17.59
	Min. H_z	18	305.39	32.35	-20.71
Leg B	Max. Vert	10	306.29	-32.74	-20.62
	Max. H_x	23	-257.15	27.79	17.75
	Max. H_z	23	-257.15	27.79	17.75
	Min. Vert	23	-257.15	27.79	17.75
	Min. H_x	10	306.29	-32.74	-20.62
	Min. H_z	10	306.29	-32.74	-20.62
Leg A	Max. Vert	2	307.80	-0.42	38.47
	Max. H_x	21	15.93	7.23	1.29
	Max. H_z	2	307.80	-0.42	38.47
	Min. Vert	15	-247.44	0.43	-32.16
	Min. H_x	8	21.01	-7.22	1.73
	Min. H_z	15	-247.44	0.43	-32.16

Tower Mast Reaction Summary

Load Combination	Vertical K	$Shear_x$ K	$Shear_z$ K	Overturning Moment, M_x kip-ft	Overturning Moment, M_z kip-ft	Torque kip-ft
Dead Only	47.53	0.00	0.00	-36.91	12.22	-0.00
1.2 Dead+1.6 Wind 0 deg - No Ice	57.04	-0.17	-63.53	-6197.67	37.55	-18.10
0.9 Dead+1.6 Wind 0 deg - No Ice	42.78	-0.17	-63.53	-6182.25	33.85	-18.08
1.2 Dead+1.6 Wind 30 deg - No Ice	57.04	29.48	-51.33	-5055.06	-2853.29	-54.05
0.9 Dead+1.6 Wind 30 deg - No Ice	42.78	29.48	-51.33	-5040.41	-2854.95	-54.01
1.2 Dead+1.6 Wind 60 deg - No Ice	57.04	49.97	-28.83	-2873.55	-4882.79	-76.11
0.9 Dead+1.6 Wind 60 deg - No Ice	42.78	49.97	-28.83	-2860.42	-4883.01	-76.06
1.2 Dead+1.6 Wind 90 deg - No Ice	57.04	59.59	0.01	-42.78	-5810.96	-84.77
0.9 Dead+1.6 Wind 90 deg - No Ice	42.78	59.59	0.01	-31.65	-5810.53	-84.72
1.2 Dead+1.6 Wind 120 deg - No Ice	57.04	55.45	31.90	3047.00	-5359.88	-63.79
0.9 Dead+1.6 Wind 120 deg - No Ice	42.78	55.45	31.90	3055.96	-5359.81	-63.75
1.2 Dead+1.6 Wind 150 deg - No Ice	57.04	29.81	51.41	4983.46	-2901.71	-23.39
0.9 Dead+1.6 Wind 150 deg - No Ice	42.78	29.81	51.41	4991.04	-2903.34	-23.37
1.2 Dead+1.6 Wind 180 deg - No Ice	57.04	-0.09	57.81	5609.30	25.89	18.64
0.9 Dead+1.6 Wind 180 deg - No Ice	42.78	-0.09	57.81	5616.44	22.20	18.63
1.2 Dead+1.6 Wind 210 deg -	57.04	-29.89	51.10	4934.74	2937.26	54.05

Load Combination	Vertical	$Shear_x$	$Shear_z$	Overturning Moment, M_x	Overturning Moment, M_z	Torque
	K	K	K	kip-ft	kip-ft	kip-ft
No Ice						
0.9 Dead+1.6 Wind 210 deg - No Ice	42.78	-29.89	51.10	4942.36	2931.53	54.01
1.2 Dead+1.6 Wind 240 deg - No Ice	57.04	-55.05	31.47	3004.85	5361.94	75.57
0.9 Dead+1.6 Wind 240 deg - No Ice	42.78	-55.05	31.47	3013.84	5354.52	75.52
1.2 Dead+1.6 Wind 270 deg - No Ice	57.04	-60.09	-0.02	-46.95	5906.19	84.45
0.9 Dead+1.6 Wind 270 deg - No Ice	42.78	-60.09	-0.02	-35.82	5898.35	84.40
1.2 Dead+1.6 Wind 300 deg - No Ice	57.04	-51.17	-29.43	-2937.22	5044.84	63.78
0.9 Dead+1.6 Wind 300 deg - No Ice	42.78	-51.17	-29.43	-2924.05	5037.61	63.74
1.2 Dead+1.6 Wind 330 deg - No Ice	57.04	-30.07	-51.84	-5129.02	2964.48	23.71
0.9 Dead+1.6 Wind 330 deg - No Ice	42.78	-30.07	-51.84	-5114.31	2958.73	23.69
1.2 Dead+1.0 Ice	263.56	0.00	0.00	-483.26	94.38	0.00
1.2 Dead+1.0 Wind 0 deg+1.0 Ice	263.56	-0.04	-25.67	-2957.03	99.23	-10.19
1.2 Dead+1.0 Wind 30 deg+1.0 Ice	263.56	12.46	-21.64	-2575.35	-1109.01	-41.77
1.2 Dead+1.0 Wind 60 deg+1.0 Ice	263.56	21.26	-12.26	-1671.62	-1964.59	-63.09
1.2 Dead+1.0 Wind 90 deg+1.0 Ice	263.56	24.68	0.01	-482.89	-2296.30	-69.33
1.2 Dead+1.0 Wind 120 deg+1.0 Ice	263.56	21.95	12.65	736.68	-2024.00	-56.03
1.2 Dead+1.0 Wind 150 deg+1.0 Ice	263.56	12.59	21.74	1617.06	-1121.88	-25.83
1.2 Dead+1.0 Wind 180 deg+1.0 Ice	263.56	-0.01	24.98	1930.45	96.47	10.34
1.2 Dead+1.0 Wind 210 deg+1.0 Ice	263.56	-12.54	21.59	1602.25	1308.82	41.78
1.2 Dead+1.0 Wind 240 deg+1.0 Ice	263.56	-21.88	12.56	728.76	2208.69	62.96
1.2 Dead+1.0 Wind 270 deg+1.0 Ice	263.56	-24.78	-0.01	-484.12	2498.34	69.24
1.2 Dead+1.0 Wind 300 deg+1.0 Ice	263.56	-21.49	-12.38	-1683.84	2178.74	56.02
1.2 Dead+1.0 Wind 330 deg+1.0 Ice	263.56	-12.64	-21.83	-2595.20	1317.43	25.94
Dead+Wind 0 deg - Service	47.53	-0.04	-13.22	-1316.46	16.99	-3.76
Dead+Wind 30 deg - Service	47.53	6.13	-10.68	-1078.87	-584.13	-11.24
Dead+Wind 60 deg - Service	47.53	10.39	-6.00	-625.23	-1006.07	-15.83
Dead+Wind 90 deg - Service	47.53	12.40	0.00	-36.63	-1199.10	-17.63
Dead+Wind 120 deg - Service	47.53	11.54	6.64	605.84	-1105.31	-13.27
Dead+Wind 150 deg - Service	47.53	6.20	10.70	1008.48	-594.17	-4.86
Dead+Wind 180 deg - Service	47.53	-0.02	12.03	1138.56	14.57	3.88
Dead+Wind 210 deg - Service	47.53	-6.22	10.63	998.35	619.93	11.24
Dead+Wind 240 deg - Service	47.53	-11.45	6.55	597.07	1124.10	15.71
Dead+Wind 270 deg - Service	47.53	-12.50	-0.00	-37.50	1237.27	17.57
Dead+Wind 300 deg - Service	47.53	-10.64	-6.12	-638.47	1058.13	13.26
Dead+Wind 330 deg - Service	47.53	-6.25	-10.79	-1094.24	625.61	4.93

Maximum Tower Deflections - Service Wind

Section No.	Elevation ft	Horz. Deflection in	Gov. Load Comb.	Tilt °	Twist °
T1	180 - 175	3.184	39	0.1696	0.0177
T2	175 - 170	3.005	39	0.1688	0.0173
T3	170 - 165	2.828	39	0.1679	0.0165
T4	165 - 160	2.646	39	0.1658	0.0160
T5	160 - 140	2.472	39	0.1623	0.0154
T6	140 - 133.333	1.810	39	0.1429	0.0133
T7	133.333 - 126.667	1.612	39	0.1338	0.0129
T8	126.667 - 120	1.425	39	0.1235	0.0125
T9	120 - 100	1.254	39	0.1120	0.0119
T10	100 - 80	0.825	39	0.0815	0.0097
T11	80 - 60	0.520	39	0.0560	0.0078
T12	60 - 40	0.302	39	0.0409	0.0059
T13	40 - 20	0.145	39	0.0271	0.0041
T14	20 - 0	0.039	39	0.0125	0.0014

Critical Deflections and Radius of Curvature - Service Wind

Elevation ft	Appurtenance	Gov. Load Comb.	Deflection in	Tilt °	Twist °	Radius of Curvature ft
180.00	DS4F06P36D-D Whip Antenna	39	3.184	0.1696	0.0177	92447
179.00	3ft Side Arm Mount	39	3.148	0.1694	0.0177	92447
178.00	3ft Side Arm Mount	39	3.112	0.1693	0.0176	92447
170.00	TPA65R-BU8D w/ Pipe Mount	39	2.828	0.1679	0.0165	50477
142.00	DB420	39	1.872	0.1453	0.0134	38812
135.00	6ft Dish w/ Radome	39	1.661	0.1362	0.0130	53429
				(3 dB)	(3 dB)	
				0.9848	0.9848	
125.00	220-3AN Whip Antenna	39	1.381	0.1206	0.0124	30869
123.00	CC807-06 Whip	39	1.329	0.1172	0.0122	33568
119.50	2ft Dish w/ Radome	39	1.242	0.1111	0.0119	39459
				(3 dB)	(3 dB)	
				1.7789	1.7789	
113.00	2ft Dish w/ Radome	39	1.089	0.1006	0.0112	39109
				(3 dB)	(3 dB)	
				1.7789	1.7789	
104.50	12ft x 3" Dia Whip	39	0.910	0.0879	0.0102	36218
102.00	Yagi (S4307)	39	0.862	0.0843	0.0099	35636
99.00	Kreco CO-41A Whip	39	0.807	0.0800	0.0096	36049
90.00	Kreco CO-41A Whip	39	0.658	0.0677	0.0087	43989
85.00	DB224	39	0.586	0.0615	0.0082	50626
75.00	Yagi (S4307)	39	0.458	0.0515	0.0073	63276
70.00	Yagi (S4307)	39	0.402	0.0476	0.0068	67410

Maximum Tower Deflections - Design Wind

Section No.	Elevation ft	Horz. Deflection in	Gov. Load Comb.	Tilt °	Twist °
T1	180 - 175	14.954	2	0.7923	0.0853
T2	175 - 170	14.115	2	0.7887	0.0835
T3	170 - 165	13.290	2	0.7851	0.0795
T4	165 - 160	12.439	2	0.7758	0.0770
T5	160 - 140	11.620	2	0.7601	0.0741
T6	140 - 133.333	8.517	2	0.6702	0.0639
T7	133.333 - 126.667	7.588	2	0.6276	0.0619
T8	126.667 - 120	6.708	2	0.5790	0.0601
T9	120 - 100	5.904	2	0.5251	0.0573
T10	100 - 80	3.887	2	0.3822	0.0467
T11	80 - 60	2.453	2	0.2630	0.0374
T12	60 - 40	1.426	2	0.1921	0.0283
T13	40 - 20	0.687	2	0.1275	0.0198
T14	20 - 0	0.186	11	0.0586	0.0069

Bolt Design Data

Section No.	Elevation ft	Component Type	Bolt Grade	Bolt Size in	Number Of Bolts	Maximum Load per Bolt K	Allowable Load per Bolt K	Ratio Load / Allowable	Allowable Ratio	Criteria
T1	180	Diagonal	A325N	0.5000	1	0.73	3.47	0.212	1	Member Block Shear
		Top Girt	A325N	0.5000	1	0.52	4.83	0.108	1	Member Block Shear
T2	175	Diagonal	A325N	0.5000	1	1.18	3.47	0.339	1	Member Block Shear
T3	170	Diagonal	A325N	0.5000	1	3.39	7.25	0.468	1	Member Block Shear
T4	165	Leg	A325N	0.6250	4	3.15	20.71	0.152	1	Bolt Tension
		Diagonal	A325N	0.5000	1	3.67	7.25	0.506	1	Member Block Shear
T5	160	Leg	A325N	0.7500	4	8.72	29.82	0.292	1	Bolt Tension
		Diagonal	A325N	0.5000	1	4.54	7.50	0.605	1	Gusset Bearing
T6	140	Diagonal	A325N	0.5000	1	4.83	7.50	0.644	1	Member Bearing
T7	133.333	Diagonal	A325N	0.5000	1	5.83	7.50	0.777	1	Member Bearing
T8	126.667	Leg	A325N	0.8750	4	15.22	40.59	0.375	1	Bolt Tension
		Diagonal	A325N	0.5000	1	6.52	7.50	0.870	1	Member Bearing
		Secondary Horizontal	A325N	0.6250	1	1.23	7.18	0.172	1	Gusset Bearing
T9	120	Leg	A325N	0.8750	4	22.80	40.59	0.562	1	Bolt Tension
		Diagonal	A490N	0.5000	1	8.03	9.94	0.808	1	Bolt Shear
		Secondary Horizontal	A325N	0.6250	1	1.83	9.57	0.192	1	Gusset Bearing
T10	100	Leg	A325N	1.0000	4	30.15	53.01	0.569	1	Bolt Tension
		Diagonal	A325N	0.6250	1	9.99	13.05	0.766	1	Gusset Bearing
		Secondary Horizontal	A325N	0.6250	1	2.43	10.93	0.223	1	Member Block Shear
T11	80	Leg	A325N	1.0000	4	38.47	53.01	0.726	1	Bolt Tension
		Diagonal	A325N	0.6250	1	11.35	13.05	0.870	1	Gusset Bearing
T12	60	Leg	A325N	1.0000	4	46.53	53.01	0.878	1	Bolt Tension
		Diagonal	A325N	0.6250	1	12.30	13.05	0.943	1	Gusset Bearing
T13	40	Leg	A325N	1.0000	6	36.33	53.01	0.685	1	Bolt Tension
		Diagonal	A490N	0.6250	1	13.52	15.53	0.871	1	Bolt Shear

Section No.	Elevation ft	Component Type	Bolt Grade	Bolt Size in	Number Of Bolts	Maximum Load per Bolt K	Allowable Load per Bolt K	Ratio Load / Allowable	Allowable Ratio	Criteria
T14	20	Leg	A354-BC	1.0000	6	41.54	55.22	0.752	1	Bolt Tension
		Diagonal	A325N	0.7500	1	14.92	21.53	0.693	1	Gusset Bearing

Section Capacity Table

Section No.	Elevation ft	Component Type	Size	Critical Element	P K	ϕP_{allow} K	% Capacity	Pass Fail
T1	180 - 175	Leg	ROHN 2.5 STD	3	-3.86	57.13	6.8	Pass
T2	175 - 170	Leg	ROHN 2.5 STD	15	-5.94	57.13	10.4	Pass
T3	170 - 165	Leg	ROHN 2.5 STD	24	-14.18	57.13	24.8	Pass
T4	165 - 160	Leg	ROHN 2.5 STD	33	-18.50	57.13	32.4	Pass
T5	160 - 140	Leg	ROHN 2.5 X-STR	42	-41.16	58.51	70.3	Pass
T6	140 - 133.333	Leg	ROHN 3 STD	63	-50.55	70.89	71.3	Pass
T7	133.333 - 126.667	Leg	ROHN 3 STD	72	-60.20	70.89	84.9	Pass
T8	126.667 - 120	Leg	ROHN 3 STD	81	-71.21	91.51	77.8	Pass
T9	120 - 100	Leg	ROHN 3 X-STR	93	-105.72	123.37	85.7	Pass
T10	100 - 80	Leg	ROHN 4 X-STR	123	-140.35	174.33	80.5	Pass
T11	80 - 60	Leg	P 5.563"x0.258" w/ 7.0"x0.625" Third Pipe	144	-179.59	243.16	73.9	Pass
T12	60 - 40	Leg	P 5.563"x0.375" w/ 7.0"x0.625" Third Pipe	159	-218.81	295.74	74.0 87.8 (b)	Pass
T13	40 - 20	Leg	P 5.563"x0.375" w/ 7.0"x0.625" Third Pipe	174	-257.37	295.75	87.0	Pass
T14	20 - 0	Leg	P 6.625"x0.375" w/ 7.625"x0.5" Third Pipe	189	-297.64	432.32	68.8 75.2 (b)	Pass
T1	180 - 175	Diagonal	L1 1/2x1 1/2x1/8	11	-0.71	2.91	24.3	Pass
T2	175 - 170	Diagonal	L1 1/2x1 1/2x1/8	21	-1.27	2.64	48.0	Pass
T3	170 - 165	Diagonal	L2x2x3/16	30	-3.54	8.43	42.0 46.8 (b)	Pass
T4	165 - 160	Diagonal	L2x2x3/16	39	-3.62	7.68	47.1 50.6 (b)	Pass
T5	160 - 140	Diagonal	L2 1/2x2 1/2x3/16	48	-4.60	9.38	49.0 60.5 (b)	Pass
T6	140 - 133.333	Diagonal	L3x3x3/16	67	-4.88	14.91	32.7 64.4 (b)	Pass
T7	133.333 - 126.667	Diagonal	L3x3x3/16	76	-5.88	13.79	42.7 77.7 (b)	Pass
T8	126.667 - 120	Diagonal	L3x3x3/16	85	-6.77	12.67	53.4 87.0 (b)	Pass
T9	120 - 100	Diagonal	L3x3x1/4	99	-8.03	12.81	62.7 80.8 (b)	Pass
T10	100 - 80	Diagonal	2L3x3x3/16x1/4	126	-10.56	29.40	35.9 76.6 (b)	Pass
T11	80 - 60	Diagonal	2L3x3x1/4x1/4	150	-11.56	33.47	34.5 87.0 (b)	Pass
T12	60 - 40	Diagonal	2L3 1/2x3 1/2x1/4x1/4	165	-12.47	44.71	27.9 94.3 (b)	Pass
T13	40 - 20	Diagonal	L4x4x5/16	180	-13.52	16.05	84.2 87.1 (b)	Pass
T14	20 - 0	Diagonal	2L4x4x5/16x3/8	195	-15.44	63.16	24.4 69.3 (b)	Pass
T8	126.667 - 120	Secondary Horizontal	L3x3x3/16	89	-1.23	10.93	11.3 17.2 (b)	Pass
T9	120 - 100	Secondary Horizontal	L3x3x3/16	101	-1.83	7.88	23.3	Pass
T10	100 - 80	Secondary Horizontal	L3x3x3/16	131	-2.43	6.16	39.5	Pass
T1	180 - 175	Top Girt	L2x2x1/8	6	-0.58	3.23	18.0	Pass

tnxTower	Job: 180ft SST - TOLLAND CENTRAL Site - FA 10071279	Page: 14 of 14
Malouf Engineering Int'l Inc. 17950 Preston Road, STE 720 Dallas, Texas 75252 Phone: (972) 783 2578 FAX: (972) 783 2583	Project: CT00983S-20V1 - RUN-II (Modification Analysis)	Date: 14:08:48 08/20/20
	Client: VRG / AT&T	Designed by: KM

Section No.	Elevation ft	Component Type	Size	Critical Element	P K	ϕP_{allow} K	% Capacity	Pass Fail
						Summary		
						Leg (T12)	87.8	Pass
						Diagonal (T12)	94.3	Pass
						Secondary Horizontal (T10)	39.5	Pass
						Top Girt (T1)	18.0	Pass
						Bolt Checks	94.3	Pass
						RATING =	**94.3**	**Pass**

FOUNDATION DESIGN PRINTOUT

```
Version: FDN2-D72/AO
*********************************************************
*               FOUNDATION ANALYSIS PROGRAM             *
*                 Spread Footing Analysis               *
*         (c) 2006, Malouf Engineering Intl., Inc.      *
*********************************************************
-------------------------------------------------------------------------------
MEI PROJECT ID = CT00983S-20V1-MODIFICATION
DESCRIPTION    = 180' S.S.TOWER / FOUNDATION
SITE NAME      = TOLLAND CENTRAL SITE, CT
CLIENT NAME    = VRG / AT&T
CHECK CODE     = TIA/EIA-222-REV. G
TIME/DATE/FILE = 18:04:36 / 08-20-2020 / CT00983M.dat
-------------------------------------------------------------------------------


======================
 INPUT DATA
======================
*LOADS*
COMPRESSION FORCE (1 PEDESTAL) =   308.000 KIPS
UPLIFT FORCE (1 PEDESTAL)      =   257.000 KIPS
SHEAR FORCE (1 PEDESTAL)       =    38.000 KIPS
MOMENT                         =      .000 KIP-FT
ECCENTRICTY OF AXIAL LOADS     =      .000 FT

*FOOTING DIMENSIONS AND PROPERTIES*
DEPTH OF FOOTING               =     7.000 FT
FOOTING DIMENSIONS (L X B)     =    18.000 x 18.000 FT
THICKNESS OF FOOTING           =     2.000 FT
NUMBER OF PEDESTALS / TYPE     =         1 / CIRCULAR
PEDESTAL DIAMETER              =     2.500 FT
EXTENSION ABOVE GRADE          =      .500 FT
CONCRETE DENSITY               =      .150 KCF
GROUNDWATER LEVEL BELOW BOTTOM OF FOUNDATION

*RESISTANCE FACTORS*
PHI BEARING GUYED              =      .600
PHI BEARING SST                =      .750
PHI BEARING MONOPOLE           =      .750
PHI UPLIFT                     =      .750
PHI LATERAL/FRICTION           =      .750

*SOIL PROPERTIES*
ULTIMATE BEARING CAPACITY      =     8.000 KSF
SOIL DENSITY                   =      .100 KCF
INTERNAL ANGLE OF FRICTION     =    30.000 DEG
SOIL COHESION (FOR UPLIFT)     =      .000 KSF (PAD PERIMETER)
ULTIMATE PASSIVE PRESSURE      =      .300 KCF
DEPTH NEGLECTED FOR PASSIVE PR.=     3.000 FT
BASE SOIL/CONCRETE FRICTION    =      .100

*** COMMENTS ***
-ADD 2FT STRIP AROUND THE FOUNDATION PAD
-FOUNDATION DETAILS AS PER ROHN DWG #C790723 DATED 8/2/1979
-GEOTECHNICAL REPORT NOT MADE AVAILABLE
-SOIL PARAMETERS AS PER ROHN FOUNDATION DESIGN NOTES

======================
 RESULTS
======================
VOL./WT. OF SOIL ABOVE     =   1506.7 FT3 /  150.671 KIPS
VOL./WT. OF SOIL WEDGE     =    297.0 FT3 /   29.705 KIPS  (FOR OVERTURNING)
                           =   1109.9 FT3 /  110.989 KIPS  (FOR UPLIFT)
VOL./WT. OF PEDESTAL(S)    =     27.0 FT3 /    4.050 KIPS
VOL./WT. OF FOOTING        =    612.5 FT3 /   91.875 KIPS

TOTAL RESISTING MOMENT     =   4874.8 KIP-FT
TOTAL OVERTURNING MOMENT   =    285.0 KIP-FT
RATIO OF RESIST MON TO OTM=  17.105 >  1.000 (OK)

SOIL PRESSURES (KSF)       =    1.843 GROSS /  .797 IN-SITU / 1.843 PMIN
FRICTION DESIGN STRENGTH   =     .000 KIPS (SKF=  .000KSF)
DOWNLOAD DESIGN STRENGTH   =    6.000 KSF  >     1.046 KSF  (OK)     R=  .174
SOIL SHEAR DESIGN STRENGTH=    23.63 (PASSIVE) +  40.39 (FRICTION)
                           =     53.9 KIPS >       38.0 KIPS (OK)     R=  .705
UPLIFT DESIGN STRENGTH     =   282.6 KIPS >      257.0 KIPS (OK)     R=  .909
PUNCHING CHECK (WIDE BEAM)=     93.1 PSI  >       33.8 PSI  (OK)     R=  .363
               (2-WAY)     =   186.2 PSI  >       85.5 PSI  (OK)     R=  .459

================================================================================
REINFORCEMENT CHECK (CIRCULAR PEDESTAL) L=  5.50' DIA= 30.0"  FC= 3000 PSI
================================================================================

FACTORED MOMENT LOAD       =   232.22 KIP-FT
FACTORED COMPRESSION LOAD  =   410.67 KIPS (ECC=  8.14")
FACTORED UPLIFT LOAD       =   285.56 KIPS
REINFD. COMPR. CAPACITY =  1073.73 KIPS (COMPR. & MOMENT: TENSION CONTROLS)

REQUIRED STEEL AREA        =   3.53 IN2 (ACI MIN.= 0.005A)
TOTAL BAR AREA PROVIDED    =  15.99 IN2 (16 x NO. 9 BARS) /FY= 40.KSI,C= 3.0"
THE TOTAL BAR AREA PROVIDED IS ACCEPTABLE - SEE INTERACTION CURVE BELOW

================================================================================
REINFORCEMENT CHECK (FOOTING) W= 17.50' THK=24.00"  FC= 3000 PSI
================================================================================

FACTORED MOMENT LOAD       =   872.79 KIP-FT (UPLIFT)
FACTORED MOMENT LOAD       =   411.67 KIP-FT (DOWNLOAD)

REQUIRED STEEL AREA        =  12.76 IN2 (DUE TO MAXIMUM MOMENT)
REQUIRED STEEL AREA        =   9.07 IN2 (ACI MIN. = 0.0018Bd)

TOTAL BAR AREA PROVIDED    =  15.63 IN2 (16xNO.7 BARS + 6xNO.9BARS)
/FY= 40.KSI,C= 3.0"
THE TOTAL BAR AREA PROVIDED IS SUFFICIENT.
```

FOUNDATION DESIGN PRINTOUT

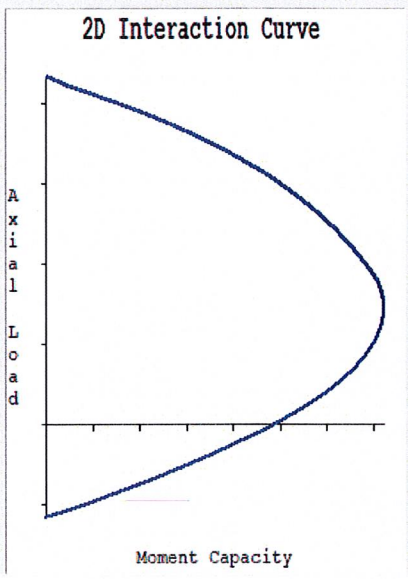

phi*Pn (k)	phi*Mn (k*ft)
480.	695.
475.	694.
470.	693.
465.	692.
460.	691.
455.	690.
450.	688.
445.	687.
440.	686.
435.	684.
430.	683.
425.	682.
420.	680.
415.	679.
410.	678.
405.	676.
400.	675.
395.	673.
390.	672.
385.	670.
380.	669.
375.	667.
370.	665.
365.	664.
360.	662.
355.	661.

COMPRESSION - MOMENT

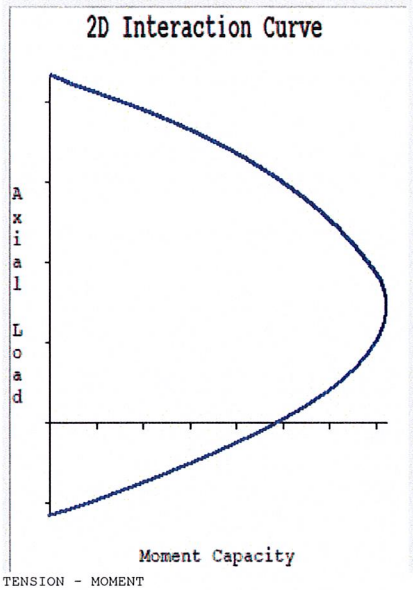

phi*Pn (k)	phi*Mn (k*ft)
-215.	332.
-220.	328.
-225.	324.
-230.	320.
-235.	316.
-240.	312.
-245.	308.
-250.	304.
-255.	300.
-260.	296.
-265.	292.
-270.	288.
-275.	284.
-280.	280.
-285.	275.
-290.	271.
-295.	267.
-300.	263.
-305.	259.
-310.	254.
-315.	250.
-320.	246.
-325.	242.
-330.	237.
-335.	233.
-340.	229.

TENSION - MOMENT

APPENDIX 2 – SOURCE / CHANGED CONDITION

This report is not to be reproduced or copied in whole or in part without MEI's written consent. 2020, MEI, Inc. ©

From: Vertical Resources Group <mnobre@verticalresourcesgrp.com>
Sent: Wednesday, July 15, 2020 4:12 PM
To: Mark Malouf
Subject: RE: New Tower SA request AT&T CT5331 Tolland

Noticed a typo in the proposed loading list

Proposed AT&T elev 170' NEW
Elev 170' (3) CCI TPA65RBU8D in position #1 (LTE700b14/WCS/AWS)
Elev 170' (3) CCI DMP65RBU8DA in position #2 (LTE700bc/850/PCS)
Elev 170' (3) Ericsson RRUS-4478b14 on dual swivel bracket behind panel pos 1(LTE700b14)
Elev 170' (3) Ericsson RRUS-32b30 on dual swivel bracket behind panel pos 1(LTEWCS)
Elev 170' (3) Ericsson RRUS-4449b5b12 on dual swivel bracket behind panel pos 2(LTE700bc/850)
Elev 170' (3) Ericsson RRUS-8843b2b66 on dual swivel bracket behind panel pos 2(LTEAWS/PCS)
Elev 170' (3) Raycap Surge DC6-48-60-18-8CEV leg mounted 1/sector
Elev 0' to 170' (9) DC trunks, (3) Fiber trunk new to be installed

Miguel Nobre
Vertical Resources Group
23 MidState Dr., #210
Auburn, MA 01501
P: 508-981-9590
F: 508-519-8939

From: Vertical Resources Group [mailto:mnobre@verticalresourcesgrp.com]
Sent: Wednesday, July 15, 2020 5:10 PM
To: 'Mark Malouf' <mmalouf@maloufengineering.com>
Cc: 'Kim Skinner' <kskinner@maloufengineering.com>
Subject: RE: New Tower SA request AT&T CT5331 Tolland

Ok Mark see below:
-1:
Existing AT&T elev 90' TO BE REMOVED
Elev 90' (3) Kathrein 800-10121 in position #1 (UMTS850 to be removed)
Elev 90' (3) KMW AMXCD166500T in position #3 (LTE700bc/PCS to be removed)
Elev 90' (6) Powerwave LGP21401 (UMTS to be removed)
Elev 90' (3) Ericsson RRUS-11 (LTE700bc to be removed)
Elev 90' (3) Ericsson RRUS-12 (LTEPCS to be removed)
Elev 90' (1) Raycap Surge DC6-48-60-18-8F (to be removed)
Elev 90' (3) 10' Sector Frames (to be removed)
Elev 0' to 90' (6) 7/8" coaxial cables to be removed
Elev 0' to 90' (2) DC trunks, (1) Fiber trunk to be removed

Proposed AT&T elev 170' NEW
Elev 170' (3) CCI TPA65RBU8D in position #1 (LTE700b14/WCS/AWS)
Elev 170' (3) CCI DMP65RBU8DA in position #2 (LTE700bc/850/PCS)
Elev 170' (3) Ericsson RRUS-4478b44 on dual swivel bracket behind panel pos 1(LTE700b14)
Elev 170' (3) Ericsson RRUS-32b30 on dual swivel bracket behind panel pos 1(LTEWCS)
Elev 170' (3) Ericsson RRUS-4449b5b12 on dual swivel bracket behind panel pos 2(LTE700bc/850)
Elev 170' (3) Ericsson RRUS-8843b2b66 on dual swivel bracket behind panel pos 1(LTEAWS/PCS)
Elev 170' (3) Raycap Surge DC6-48-60-18-8CEV leg mounted 1/sector
Elev 0' to 170' (9) DC trunks, (3) Fiber trunk new to be installed

-2: The Excel Spreadsheet is the breakdown of the FINAL antenna arrangement as approved by the tower owner Tolland County 911 for all antennas non AT&T.

-3: Yes sir class III structure and fire ambulance and 911 are on the tower.

-4: That is correct the MOD drawings were completed but the work was never done so they should not be considered, just wanted you to be aware of all the history on this tower.

-5: I am working with the Tolland County 911 to obtain more clear drawings, they have reached out to Rohn

-6: See attached Prelim CD's for reference

-7: No Mount Analysis or mount mods, this is a brand new mount install as AT&T will be moving up from 90' to 170'

Miguel Nobre
Vertical Resources Group
23 MidState Dr., #210
Auburn, MA 01501
P: 508-981-9590
F: 508-519-8939

From: Mark Malouf [mailto:mmalouf@maloufengineering.com]
Sent: Tuesday, July 14, 2020 12:01 PM
To: Vertical Resources Group <mnobre@verticalresourcesgrp.com>
Cc: Kim Skinner <kskinner@maloufengineering.com>
Subject: RE: New Tower SA request AT&T CT5331 Tolland

Hi Miguel,

Thank you – we'll add this to our schedule.

1- Please provide a summary listing of the AT&T loading to consider clarifying existing, proposed and removal.
2- Clarify if the Loading Excel sheet you attached is the total loading to consider – AT&T appurtenances are listed and other tenants.
3- Is this a county owned tower and is it primarily used for emergency services such as we need to use Structural Class III?
4- Not clear about the mods drawings included and you stated they were never installed. Confirm that we are to not consider these mods. Please clarify.
5- There is no geotech report included, yet your email states you did attach – please re-send.
6- Are there any A&E CD drawings to forward? Any layouts showing antennas on mounts and feedlines on tower?
7- What about the mount? Is there a mount analysis report you can forward? Any mount mods to be considered for tower loading?

Please let me know. Thank you.

Best regards,

Mark Malouf, PE, SECB, IPF
mmalouf@maloufengineering.com
(O) 972-783-2578 ext.106

Section 1 - RFDS GENERAL INFORMATION

RFDS NAME:	CTL05331	DATE:	03/24/2020	RF DESIGN ENG:	Parminder Singh	RF PERF ENG:		RFDS PROGRAM TYPE:	2021 LTE Next Carrier
ISSUE:	Bronze Standard	Approved? (Y/N):	Yes	RF DESIGN PHONE:	510-809-6140	RF PERF PHONE:		RFDS TECHNOLOGY:	LTE
REVISION:	Preliminary	RF MANAGER:	John Benedetto	RF DESIGN EMAIL:	SP656B@ATT.COM	RF PERF EMAIL:		STATE/STATUS:	As Built/In Progress
INITIATIVE /PROJECT:	LTE 4C 700 UPPER D, 850 5G NR 1DR-1 and LTE 700 BC 4TX4RX Software Retrofit					ADDITIONAL WORKFLOW NOTIFICATIONS:		RFDS ID:	3719609
						RFDS VERSION:	4.00	Created By: / Updated By:	SP656B / mr673a
						UMTS FREQUENCY:	850	Date Created: / Date Updated:	3/9/2020 6:04:25 PM / 5/1/2020 9:22:11 AM
						LTE FREQUENCY:	700, 850, 1900, WCS	EXPIRATION DATE:	
						5G FREQUENCY:	850	ESTIMATED SQN: / Calculation ID:	
						I-PLAN JOB # 1:	NER-RCTB-20-00936	IPLAN PRD GRP || SUB GRP #1:	5G NR Radio || 5G NR 1DR-1
						I-PLAN JOB # 2:	NER-RCTB-20-01154	IPLAN PRD GRP || SUB GRP #2:	Antenna Modifications || 4TX4RX Software Retrofit
						I-PLAN JOB # 3:	NER-RCTB-20-00646	IPLAN PRD GRP || SUB GRP #3:	LTE Next Carrier || LTE 4C
						I-PLAN JOB # 4:		IPLAN PRD GRP || SUB GRP #4:	
						I-PLAN JOB # 5:		IPLAN PRD GRP || SUB GRP #5:	
						I-PLAN JOB # 6:		IPLAN PRD GRP || SUB GRP #6:	
						I-PLAN JOB # 7:		IPLAN PRD GRP || SUB GRP #7:	
						I-PLAN JOB # 8:		IPLAN PRD GRP || SUB GRP #8:	

Section 2 - LOCATION INFORMATION

USID:	25953	FA LOCATION CODE:	10071279	LOCATION NAME:	TOLLAND CENTRAL	ORACLE PTN # 1:	2051A0VDNK	PACE JOB # 1:	MRCTB047309
REGION:	NORTHEAST	MARKET CLUSTER:	NEW ENGLAND	MARKET:	CONNECTICUT	ORACLE PTN # 2:	2051A0VF22	PACE JOB # 2:	MRCTB047319
ADDRESS:	130 BALD HILL ROAD	CITY:	TOLLAND	STATE:	CT	ORACLE PTN # 3:	2051A0VFFC	PACE JOB # 3:	MRCTB047280
ZIP CODE:	06084	COUNTY:	TOLLAND	LONG (DEC. DEG.):	-72.3756989	ORACLE PTN # 4:		PACE JOB # 4:	
LATITUDE (D-M-S):	41d 52m 59.13084s	LONGITUDE (D-M-S):	-72d -22m -32.51604s	LAT (DEC. DEG.):	41.8830919	ORACLE PTN # 5:		PACE JOB # 5:	
DIRECTIONS, ACCESS AND EQUIPMENT LOCATION:	UPDATED 03062020STEVE SCT5331TOLLAND CENTRALI84 EAST GET OFF AT EXIT 68AT THE END OF RAMP MAKE LEFT ONTO ROUTE 195GO TO THE STOP SIGN AND BEAR RIGHTTHEN GO TO THE NEXT STOP SIGN AND TAKE LEFT ONTO DUNN HILL ROADGO ABOUT 100 FEET AND THEN TAKE A RIGHT ONTO BALD HILL ROADGO UP THE HILL AND LOOK TO YOU RIGHT AND YOU WILL SEE THE LATTICE TOWER WITH OUR EQUIPMENT SMILE YOURE ON CAMERA HEREDEMARC IS IN FBI BUILDING ON PROPERTYYOU MUST GO TO TOLLAND DISPATCH TO GET THE KEY FROM THEM AND ASK THEM FOR ACCESS TO THE SITETHEY ARE THERE 24/7ADDRESS: 130 BALD HILL ROADTOLLANDCT06084ACCESS: 24/7 (8899) TO ACCESS T1 AND ELECTRICAL METER GO TOTOLLAND DISPATCHTHEY ARE LOCATED AT 56 CIDER MILL ROADIT IS A BEIGE HOUSE ON YOUR RIGHT HAND SIDE ON THE OTHER SIDE OF TOLLAND GREENTHE HOUSE HAS A LATTICE TOWER NEXT TO ITANOTHER LAND MARK IS TOLLAND COUNTY DISPATCH IS LOCATED NEXT TO THE JAIL MUSEUMGATE CODE 0043OUTDOOR CABINETS 4151GROUND LEVELOUTDOOR CABINETLTE RADIOS TOWER MOUNTEDCONTACT SECURITY: NO ISSUESPOWER COMPANY: EVERSOURCE ENERGY: (800) 2862000METER: 89533462GSMRETIRED IN PLACE 02/08/17					BORDER CELL WITH CONTOUR COORD:		SEARCH RING NAME:	
						AM STUDY REQ'D (Y/N):	No	SEARCH_RING_ID:	
						FREQ COORD:		BTA: / MSA / RSA:	
								LAC(UMTS):	05993
						RF DISTRICT:	TBD		
						RF ZONE:	TBD	RNC(UMTS):	MDTWCTNCR0R04
								MME POOL ID(LTE):	FF01
						PARENT NAME(UMTS):	MIDDLETOWN RNC04		

Section 3 - LICENSE COVERAGE/FILING INFORMATION

CGSA - NO FILING TRIGGERED (Yes/No):	No	CGSA LOSS:		PCS REDUCED - UPS ZIP:		CGSA CALL SIGNS:	z_KNLB312,z_KNLB312,z_KNLB312
CGSA - MINOR FILING NEEDED (Yes/No):	No	CGSA EXT AGMT NEEDED:		PCS POPS REDUCED:			
CGSA - MAJOR FILING NEEDED (Yes/No):	Yes	CGSA SCORECARD UPDATED:					

Section 4 - TOWER/REGULATORY INFORMATION

STRUCTURE AT&T OWNED?:	No	GROUND ELEVATION (ft):		STRUCTURE TYPE:	SELF SUPPORT	MARKET LOCATION 700 MHz Band:	
ADDITIONAL REGULATORY?:	No	HEIGHT OVERALL (ft):	0.00	FCC ASR NUMBER:		MARKET LOCATION 850 MHz Band:	
SUB-LEASE RIGHTS?:	No	STRUCTURE HEIGHT (ft):	184.00			MARKET LOCATION 1900 MHz Band:	
LIGHTING TYPE:	NOT REQUIRED					MARKET LOCATION AWS Band:	
						MARKET LOCATION WCS Band:	
						MARKET LOCATION Future Band:	

Section 5 - E-911 INFORMATION - existing

	PSAP NAME:	PSAP ID:	E911 PHASE:	MPC SVC PROVIDER:	LMU REQUIRED:	ESRN:	DATE LIVE PH1:	DATE LIVE PH2:		
SECTOR A E-911				INTRADO_MIAMI		0				
SECTOR B				INTRADO_MIAMI		0				
SECTOR C				INTRADO_MIAMI		0				
SECTOR D										
SECTOR E										
SECTOR F										
OMNI										

Section 5 - E-911 INFORMATION - final

	PSAP NAME:	PSAP ID:	E911 PHASE:	MPC SVC PROVIDER:	LMU REQUIRED:	ESRN:	DATE LIVE PH1:	DATE LIVE PH2:		
SECTOR A E-911				INTRADO_MIAMI		0				
SECTOR B				INTRADO_MIAMI		0				
SECTOR C				INTRADO_MIAMI		0				
SECTOR D										
SECTOR E										
SECTOR F										
OMNI										

SECTION 6/7 - BBU INFORMATION - existing

	BBU 1	BBU 2	BBU 3						
BBU RBS ID:	290919	208973	367036						
TECHNOLOGY:	UMTS	UMTS	LTE						
BBU NAME:	CTU5331	CTV5331	CTL05331						
CELL ID / BCF:	CTV5331	CTV5331	CTL05331						
BTA/TID:	184W	184U	184L						
4-9 DIGIT SITE ID:	5331	5331	5331						
COW OR TOY?:	No	No	No						
CELL SITE TYPE:	SECTORIZED	SECTORIZED	SECTORIZED						
SITE TYPE:	MACRO-CONVENTIONAL	MACRO-CONVENTIONAL	MACRO-CONVENTIONAL						
BTS LOCATION ID:	GROUND	GROUND	INTERNAL						
BASE STATION TYPE:	OVERLAY	BASE	BASE						
EQUIPMENT NAME:	TOLLAND CENTRAL	TOLLAND CENTRAL	TOLLAND CENTRAL						
DISASTER PRIORITY:	0	0	3						
EQUIPMENT VENDOR:	ERICSSON	ERICSSON	ERICSSON						
EQUIPMENT TYPE (Model):	3106 OUTDOOR	3106 OUTDOOR	6601 INDOOR MU						
BASEBAND CONFIGURATION:									
MARKET STATE CODE:			CT						
NODE B NUMBER:	0	0	5331						
SIDEHAUL SWITCH VENDOR:									
SIDEHAUL SWITCH MODEL:									
SIDEHAUL SWITCH NAME:									
CSS - CTS COMMON ID:	CTU5331	CTV5331	CTL05331						
CSS - SECONDARY FUNCTION ID:									

SECTION 6/7 - BBU INFORMATION - final

	BBU 1	BBU 2	BBU 3						
BBU RBS ID:	791863	367036	791862						
TECHNOLOGY:	LTE	LTE	5G						
BBU NAME:	CTL04331R	CTL05331	CTCN005331						
CELL ID / BCF:	CTL04331R	CTL05331	CTCN005331						
BTA/TID:	184L	184L	184L						
4-9 DIGIT SITE ID:	4331	5331	14005331						
COW OR TOY?:	No	No	No						
CELL SITE TYPE:	SECTORIZED	SECTORIZED	SECTORIZED						
SITE TYPE:	MACRO-CONVENTIONAL	MACRO-CONVENTIONAL	MACRO-CONVENTIONAL						
BTS LOCATION ID:	INTERNAL	INTERNAL	GROUND						
BASE STATION TYPE:	BASE	BASE	BASE						
EQUIPMENT NAME:	TOLLAND CENTRAL	TOLLAND CENTRAL	CTCN005331						
DISASTER PRIORITY:	3	3	3						
EQUIPMENT VENDOR:	ERICSSON	ERICSSON	ERICSSON						
EQUIPMENT TYPE (Model):	6601 RADIONODE 5216	6601 RADIONODE 5216	BASEBAND 6630						
BASEBAND CONFIGURATION:		1x6601 / 1x5216 / 2xXMU03	xxxxx / 1x6630 / xxxxx + IDLe						
MARKET STATE CODE:	CT	CT	CTC						
NODE B NUMBER:	4331	5331	5331						
SIDEHAUL SWITCH VENDOR:									
SIDEHAUL SWITCH MODEL:									
SIDEHAUL SWITCH NAME:									
CSS - CTS COMMON ID:	CTL04331R	CTL05331	CTCN005331						
CSS - SECONDARY FUNCTION ID:									

Section 8 - RBS/SECTOR ASSOCIATION - existing

	BBU 1	BBU 2	BBU 3
CTS Common ID	CTU53331	CTV53331	CTL05331
Soft Sector IDs	CTU53317	CTV53311	CTL05331_3A_1
	CTU53318	CTV53312	CTL05331_3B_1
	CTU53319	CTV53313	CTL05331_3C_1
			CTL05331_7A_1
			CTL05331_7B_1
			CTL05331_7C_1
			CTL05331_9A_1
			CTL05331_9A_2
			CTL05331_9B_1
			CTL05331_9B_2
			CTL05331_9C_1
			CTL05331_9C_2

Section 8 - RBS/SECTOR ASSOCIATION - final

	BBU 1	BBU 2	BBU 3
CTS Common ID	CTL04331R	CTL05331	CTCN005331
Soft Sector IDs	CTL04331_2A_1	CTL05331_3A_1	CTCN005331_N005A_1
	CTL04331_2B_1	CTL05331_3B_1	CTCN005331_N005B_1
	CTL04331_2C_1	CTL05331_3C_1	CTCN005331_N005C_1
	CTL04331_9A_1	CTL05331_7A_1	
	CTL04331_9A_2	CTL05331_7A_3_F	
	CTL04331_9B_1	CTL05331_7B_1	
	CTL04331_9B_2	CTL05331_7B_3_F	
	CTL04331_9C_1	CTL05331_7C_1	
	CTL04331_9C_2	CTL05331_7C_3_F	
		CTL05331_8A_1	
		CTL05331_8B_1	
		CTL05331_8C_1	

Section 9 - SOFT SECTOR ID - existing

	UMTS 1ST 850	UMTS 1ST 1900	LTE 1ST 700	LTE 1ST 850	LTE 1ST 1900	LTE 1ST AWS	LTE 1ST WCS	LTE 2ND 1900	LTE 4TH 1900	LTE 5TH 700	5G 1ST 850															
USEID (excluding Hard Sector)	25953 850 3G 1	25953 1900 3G 2																								
SECTOR A SOFT SECTOR ID	CTV53311	CTU53317	CTL05331_7A_1		CTL05331_9A_1		CTL05331_3A_1	CTL05331_9A_2																		
SECTOR B	CTV53312	CTU53318	CTL05331_7B_1		CTL05331_9B_1		CTL05331_3B_1	CTL05331_9B_2																		
SECTOR C	CTV53313	CTU53319	CTL05331_7C_1		CTL05331_9C_1		CTL05331_3C_1	CTL05331_9C_2																		
SECTOR D																										
SECTOR E																										
SECTOR F																										
OMNI																										

Section 9 - SOFT SECTOR ID - final

	UMTS 1ST 850	UMTS 1ST 1900	LTE 1ST 700	LTE 1ST 850	LTE 1ST 1900	LTE 1ST AWS	LTE 1ST WCS	LTE 2ND 1900	LTE 4TH 1900	LTE 5TH 700	5G 1ST 850															
USEID (excluding Hard Sector)																										
SECTOR A SOFT SECTOR ID			CTL05331_7A_1	CTL05331_8A_1	CTL04331_9A_1	CTL04331_2A_1	CTL05331_3A_1		CTL04331_9A_2	CTL05331_7A_3_F	CTCN005331_N005A_1															
SECTOR B			CTL05331_7B_1	CTL05331_8B_1	CTL04331_9B_1	CTL04331_2B_1	CTL05331_3B_1		CTL04331_9B_2	CTL05331_7B_3_F	CTCN005331_N005B_1															
SECTOR C			CTL05331_7C_1	CTL05331_8C_1	CTL04331_9C_1	CTL04331_2C_1	CTL05331_3C_1		CTL04331_9C_2	CTL05331_7C_3_F	CTCN005331_N005C_1															
SECTOR D																										
SECTOR E																										
SECTOR F																										
OMNI																										

Section 9 - Cell Number - existing

	UMTS 1ST 850	UMTS 1ST 1900	LTE 1ST 700	LTE 1ST 850	LTE 1ST 1900	LTE 1ST AWS	LTE 1ST WCS	LTE 2ND 1900	LTE 4TH 1900	LTE 5TH 700	5G 1ST 850															
USEID (excluding Hard Sector)	25953 850 3G 1	25953 1900 3G 2																								
SECTOR A CELL NUMBER			15		8		149	178																		
SECTOR B			16		9		150	179																		
SECTOR C			17		10		151	180																		
SECTOR D																										
SECTOR E																										
SECTOR F																										
OMNI																										

Section 9 - Cell Number - final

	UMTS 1ST 850	UMTS 1ST 1900	LTE 1ST 700	LTE 1ST 850	LTE 1ST 1900	LTE 1ST AWS	LTE 1ST WCS	LTE 2ND 1900	LTE 4TH 1900	LTE 5TH 700	5G 1ST 850															
USEID (excluding Hard Sector)																										
SECTOR A CELL NUMBER			15	1	8	22	149		178	171	25															
SECTOR B			16	2	9	23	150		179	172	49															
SECTOR C			17	3	10	24	151		180	173	73															
SECTOR D																										
SECTOR E																										
SECTOR F																										
OMNI																										

Section 10 - CID/SAC - existing

		UMTS 1ST 850	UMTS 1ST 1900	LTE 1ST 700	LTE 1ST 850	LTE 1ST 1900	LTE 1ST AWS	LTE 1ST WCS	LTE 2ND 1900	LTE 4TH 1900	LTE 5TH 700	5G 1ST 850																
SECTOR A	CID/SAC	53311	53317																									
SECTOR B		53312	53318																									
SECTOR C		53313	53319																									
SECTOR D																												
SECTOR E																												
SECTOR F																												
OMNI																												

Section 10 - CID/SAC - final

		UMTS 1ST 850	UMTS 1ST 1900	LTE 1ST 700	LTE 1ST 850	LTE 1ST 1900	LTE 1ST AWS	LTE 1ST WCS	LTE 2ND 1900	LTE 4TH 1900	LTE 5TH 700	5G 1ST 850																
SECTOR A	CID/SAC																											
SECTOR B																												
SECTOR C																												
SECTOR D																												
SECTOR E																												
SECTOR F																												
OMNI																												

Section 15A - CURRENT TOWER CONFIGURATION - SECTOR A (OR OMNI)

ANTENNA POSITION is LEFT to RIGHT from BACK OF ANTENNA (unless otherwise specified)	ANTENNA POSITION 1		ANTENNA POSITION 2		ANTENNA POSITION 3		ANTENNA POSITION 4		ANTENNA POSITION 5		ANTENNA POSITION 6		ANTENNA POSITION 7	
ANTENNA MAKE - MODEL	800 10121		AM-X-CD-16-65-00T-RET		QS66512-2									
ANTENNA VENDOR	Kathrein		KMW		Quintel									
ANTENNA SIZE (H x W x D)	54.5X10.3X5.9		72X11.8X5.9		72X12X9.6									
ANTENNA WEIGHT	44.1		48.5		111									
AZIMUTH	30		30		30									
MAGNETIC DECLINATION														
RADIATION CENTER (feet)	90		90		90									
ANTENNA TIP HEIGHT	92		93		93									
MECHANICAL DOWNTILT														
FEEDER AMOUNT	2													
VERTICAL SEPARATION from ANTENNA ABOVE (TIP to TIP)														
VERTICAL SEPARATION from ANTENNA BELOW (TIP to TIP)														
HORIZONTAL SEPARATION from CLOSEST ANTENNA to LEFT (CENTERLINE to CENTERLINE)														
HORIZONTAL SEPARATION from CLOSEST ANTENNA to RGHT (CENTERLINE to CENTERLINE)														
HORIZONTAL SEPARATION from ANOTHER ANTENNA (which antenna # / # of inches)														
Antenna RET Motor (QTY/MODEL)	2	Kathrein 860-10025		Built in		Built-in								
SURGE ARRESTOR (QTY/MODEL)			1	DC/Fiber Squid	1	DC/Fiber Squid								
DIPLEXER (QTY/MODEL)	2	KATHREIN 782-10250												
DUPLEXER (QTY/MODEL)														
Antenna RET CONTROL UNIT (QTY/MODEL)	1	KATHREIN 860-10006		LTE RRH		RRH								
DC BLOCK (QTY/MODEL)														
TMA/LNA (QTY/MODEL)	2	Powerwave / LGP 21401 (Dual Band - 850 Bypass)												
CURRENT INJECTORS FOR TMA (QTY/MODEL)	2	Polyphaser 1000860												
PDU FOR TMAS (QTY/MODEL)	1	LGP 12104 (1900 AND 850 Bypass TMA)												
FILTER (QTY/MODEL)														
SQUID (QTY/MODEL)														
FIBER TRUNK (QTY/MODEL)														
DC TRUNK (QTY/MODEL)														
REPEATER (QTY/MODEL)														
RRH - 700 band (QTY/MODEL)			1	RRUS-11 B12 (REUSE ONLY)										
RRH - 850 band (QTY/MODEL)														
RRH - 1900 band (QTY/MODEL)					1	RRUS-32 B2								
RRH - AWS band (QTY/MODEL)														
RRH - WCS band (QTY/MODEL)					1	RRUS-32 B30								
Additional RRH #1 - any band (QTY/MODEL)														
Additional RRH #2 - any band (QTY/MODEL)														
Additional Component 1 (QTY/MODEL)														
Additional Component 2 (QTY/MODEL)														
Additional Component 3 (QTY/MODEL)														
Local Market Note 1														
Local Market Note 2														
Local Market Note 3														

PORT SPECIFIC FIELDS	PORT NUMBER	USEID (CSSng)	USEID (Atoll)	ATOLL TXID	ATOLL CELL ID	TX/RX ?	TECHNOLOGY/FREQUENCY	ANTENNA ATOLL	ANTENNA GAIN	ELECTRICAL AZIMUTH	ELECTRICAL TILT	RRH LOCATION (Top/Bottom/ Integrated/None)	FEEDERS TYPE	FEEDER LENGTH (feet)	RXAIT KIT MODULE?	TRIPLEXER or LLC (QTY)	TRIPLEXER or LLC (MODEL)	SCPA/MCPA MODULE?	HATCHPLATE POWER (Watts)	ERP (Watts)	Antenna RET Name	CABLE NUMBER	CABLE ID (CSSNG)
ANTENNA POSITION 1	PORT 1		25953.A.850.3G.1	CTV53311	CTV53311		UMTS 850	800 10121 @850_Xpol_4dt	13.41	30	4	None	Andrew 7/8	110.028172						248.31		1	
ANTENNA POSITION 2	PORT 1		25953.A.700.4G.1	CTL05331_7A_1	CTL05331_7A_1		LTE 700	AM-X-CD-16-65-00T-RET_725MHz_02DT	15.6	30	2	TOP	FIBER	0						1475.7065		3	
ANTENNA POSITION 3	PORT 3		25953.A.WCS.4G.1	CTL05331_3A_1	CTL05331_3A_1		LTE WCS	QS66512-2_2355MHz_03DT	16.06	30	3	TOP	FIBER	0						1285.2866		6	

	PORT 4		25953.A.1900.4G.1	CTL05331_9A_1	CTL05331_9A_1		LTE 1900	QS66512-2_1930MHz_04DT	16.06	30	3	TOP	FIBER	0						3664.3757		6	
	PORT 7		25953.A.1900.4G.tmp.4	CTL05331_9A_2	CTL05331_9A_2		LTE 1900	QS66512-2_1930MHz_04DT	16.06	30	3	TOP	FIBER	0						3664.3757		6	

Section 15B - CURRENT TOWER CONFIGURATION - SECTOR B

ANTENNA POSITION is LEFT to RIGHT from BACK OF ANTENNA (unless otherwise specified)	ANTENNA POSITION 1		ANTENNA POSITION 2		ANTENNA POSITION 3		ANTENNA POSITION 4		ANTENNA POSITION 5		ANTENNA POSITION 6		ANTENNA POSITION 7	
ANTENNA MAKE - MODEL	800 10121		P65-17-XLH-RR		TPA-65R-LCUUUU-H8									
ANTENNA VENDOR	Kathrein		Powerwave		CCI									
ANTENNA SIZE (H x W x D)	54.5X10.3X5.9		96X12X6		96X14.4X8.6									
ANTENNA WEIGHT	44.1		70		94.2									
AZIMUTH	140		140		140									
MAGNETIC DECLINATION														
RADIATION CENTER (feet)	90		90		90									
ANTENNA TIP HEIGHT	92		94		94									
MECHANICAL DOWNTILT														
FEEDER AMOUNT	2													
VERTICAL SEPARATION from ANTENNA ABOVE (TIP to TIP)														
VERTICAL SEPARATION from ANTENNA BELOW (TIP to TIP)														
HORIZONTAL SEPARATION from CLOSEST ANTENNA to LEFT (CENTERLINE to CENTERLINE)														
HORIZONTAL SEPARATION from CLOSEST ANTENNA to RIGHT (CENTERLINE to CENTERLINE)														
HORIZONTAL SEPARATION from ANOTHER ANTENNA (which antenna # / # of inches)														
Antenna RET Motor (QTY/MODEL)	2	Kathrein 860-10025		Built in		Built-in								
SURGE ARRESTOR (QTY/MODEL)														
DIPLEXER (QTY/MODEL)	2	KATHREIN 782-10250												
DUPLEXER (QTY/MODEL)														
Antenna RET CONTROL UNIT (QTY/MODEL)				LTE RRH		RRH								
DC BLOCK (QTY/MODEL)														
TMA/LNA (QTY/MODEL)	2	Powerwave / LGP 21401 (Dual Band - 850 Bypass)												
CURRENT INJECTORS FOR TMA (QTY/MODEL)	2	Polyphaser 1000860												
PDU FOR TMAS (QTY/MODEL)														
FILTER (QTY/MODEL)														
SQUID (QTY/MODEL)														
FIBER TRUNK (QTY/MODEL)														
DC TRUNK (QTY/MODEL)														
REPEATER (QTY/MODEL)														
RRH - 700 band (QTY/MODEL)			1	RRUS-11 B12 (REUSE ONLY)										
RRH - 850 band (QTY/MODEL)														
RRH - 1900 band (QTY/MODEL)					1	RRUS-32 B2								
RRH - AWS band (QTY/MODEL)														
RRH - WCS band (QTY/MODEL)					1	RRUS-32 B30								
Additional RRH #1 - any band (QTY/MODEL)														
Additional RRH #2 - any band (QTY/MODEL)														
Additional Component 1 (QTY/MODEL)														
Additional Component 2 (QTY/MODEL)														
Additional Component 3 (QTY/MODEL)														
Local Market Note 1														
Local Market Note 2														
Local Market Note 3														

PORT SPECIFIC FIELDS	PORT NUMBER	USEID (CSSng)	USEID (Aloll)	ATOLL TXID	ATOLL CELL ID	TX/RX ?	TECHNOLOGY/FREQUENCY	ANTENNA ATOLL	ANTENNA GAIN	ELECTRICAL AZIMUTH	ELECTRICAL TILT	RRH LOCATION (Top/Bottom/Integrated/None)	FEEDER8 TYPE	FEEDER LENGTH (feet)	RXAIT KIT MODULE?	TRIPLEXER or LLC (QTY)	TRIPLEXER or LLC (MODEL)	SCPA/MCPA MODULE?	HATCHPLATE POWER (Watts)	ERP (Watts)	Antenna RET Name	CABLE NUMBER	CABLE ID (CSSNG)
ANTENNA POSITION 1	PORT 1		25953.B.850.3G.1	CTV53312	CTV53312		UMTS 850	800 10121 @850_Xpol_9dt	13.4	140	9	None	Andrew 7/8	110.028172						247.74		9	
ANTENNA POSITION 2	PORT 1		25953.B.700.4G.1	CTL05331_7B_1	CTL05331_7B_1		LTE 700	P65-17-XLH-RR_716MHz_06DT	16.39	140	6	TOP	FIBER	0						1475.7065		11	
ANTENNA POSITION 3	PORT 3		25953.B.WCS.4G.1	CTL05331_3B_1	CTL05331_3B_1		LTE WCS	TPA-65R-LCUUUU-H8_2360MHz_03DT	18.4	140	3	TOP	FIBER	0						1285.2866		14	
	PORT 4		25953.B.1900.4G.1	CTL05331_9B_1	CTL05331_9B_1		LTE 1900	TPA-65R-LCUUUU-	18.4	140	3	TOP	FIBER	0						3664.3757		14	

								H8_1930MHz_06DT																
	PORT 7		25953 B 1900 4G tmp 4	CTL05331_9B_2	CTL05331_9B_2		LTE 1900	TPA-65R-LCIUUU-H8_1930MHz_06DT	18.4	140	3	TOP	FIBER	0						3664 3757		14	

Section 15C - CURRENT TOWER CONFIGURATION - SECTOR C

ANTENNA POSITION is LEFT to RIGHT from BACK OF ANTENNA (unless otherwise specified)	ANTENNA POSITION 1		ANTENNA POSITION 2		ANTENNA POSITION 3		ANTENNA POSITION 4		ANTENNA POSITION 5		ANTENNA POSITION 6		ANTENNA POSITION 7	
ANTENNA MAKE - MODEL	800 10121		AM-X-CD-16-65-00T-RET		QS66512-2									
ANTENNA VENDOR	Kathrein		KMW		Quintel									
ANTENNA SIZE (H x W x D)	54.5X10.3X5.9		72X11.8X5.9		72X12X9.6									
ANTENNA WEIGHT	44.1		48.5		111									
AZIMUTH	250		260		260									
MAGNETIC DECLINATION														
RADIATION CENTER (feet)	90		90		90									
ANTENNA TIP HEIGHT	92		93		93									
MECHANICAL DOWNTILT														
FEEDER AMOUNT	2													
VERTICAL SEPARATION from ANTENNA ABOVE (TIP to TIP)														
VERTICAL SEPARATION from ANTENNA BELOW (TIP to TIP)														
HORIZONTAL SEPARATION from CLOSEST ANTENNA to LEFT (CENTERLINE to CENTERLINE)														
HORIZONTAL SEPARATION from CLOSEST ANTENNA to RIGHT (CENTERLINE to CENTERLINE)														
HORIZONTAL SEPARATION from ANOTHER ANTENNA (which antenna # / # of inches)														
Antenna RET Motor (QTY/MODEL)	2	Kathrein 860-10025		Built in		Built-in								
SURGE ARRESTOR (QTY/MODEL)														
DIPLEXER (QTY/MODEL)	2	KATHREIN 782-10250												
DUPLEXER (QTY/MODEL)														
Antenna RET CONTROL UNIT (QTY/MODEL)				LTE RRH		RRH								
DC BLOCK (QTY/MODEL)														
TMA/LNA (QTY/MODEL)	2	Powerwave / LGP 21401 (Dual Band - 850 Bypass)												
CURRENT INJECTORS FOR TMA (QTY/MODEL)	2	Polyphaser 1000860												
PDU FOR TMAS (QTY/MODEL)														
FILTER (QTY/MODEL)														
SQUID (QTY/MODEL)														
FIBER TRUNK (QTY/MODEL)														
DC TRUNK (QTY/MODEL)														
REPEATER (QTY/MODEL)														
RRH - 700 band (QTY/MODEL)			1	RRUS-11 B12 (REUSE ONLY)										
RRH - 850 band (QTY/MODEL)														
RRH - 1900 band (QTY/MODEL)					1	RRUS-32 B2								
RRH - AWS band (QTY/MODEL)														
RRH - WCS band (QTY/MODEL)					1	RRUS-32 B30								
Additional RRH #1 - any band (QTY/MODEL)														
Additional RRH #2 - any band (QTY/MODEL)														
Additional Component 1 (QTY/MODEL)														
Additional Component 2 (QTY/MODEL)														
Additional Component 3 (QTY/MODEL)														
Local Market Note 1														
Local Market Note 2														
Local Market Note 3														

PORT SPECIFIC FIELDS	PORT NUMBER	USEID (CSSng)	USEID (Atoll)	ATOLL TXID	ATOLL CELL ID	TX/RX ?	TECHNOLOGY/FREQUENCY	ANTENNA ATOLL	ANTENNA GAIN	ELECTRICAL AZIMUTH	ELECTRICAL TILT	RRH LOCATION (Top/Bottom/ Integrated/None)	FEEDERS TYPE	FEEDER LENGTH (feet)	RXAIT KIT MODULE?	TRIPLEXER or LLC (QTY)	TRIPLEXER or LLC (MODEL)	SCPA/MCPA MODULE?	HATCHPLATE POWER (Watts)	ERP (Watts)	Antenna RET Name	CABLE NUMBER	CABLE ID (CSSNG)
ANTENNA POSITION 1	PORT 1		25953.C.850.3G.1	CTV53313	CTV53313		UMTS 850	800 10121 @850_Xpol_6dt	13.42	250	6	None	Andrew 7/8	110.028172						248.89		17	
ANTENNA POSITION 2	PORT 1		25953.C.700.4G.1	CTL05331_7C_1	CTL05331_7C_1		LTE 700	AM-X-CD-16-65-00T-RET_725MHz_02DT	15.6	260	2	TOP	FIBER	0						1475.7065		19	
ANTENNA POSITION 3	PORT 3		25953.C.WCS.4G.1	CTL05331_3C_1	CTL05331_3C_1		LTE WCS	QS66512-2_2355MHz_03DT	16.06	260	3	TOP	FIBER	0						1285.2866		22	
	PORT 4		25953.C.1900.4G.1	CTL05331_9C_1	CTL05331_9C_1		LTE 1900	QS66512-	16.06	260	3	TOP	FIBER	0						3664.3757		22	

								2_1950MHz_06DT																
	PORT 7		25953 C 1900 4G tmp 4	CTL05331_9C_2	CTL05331_9C_2		LTE 1900	QS66512-2_1950MHz_06DT	16.06	260	3	TOP	FIBER	0						3664.3757		22	

Section 16A - PLANNED/PROPOSED TOWER CONFIGURATION - SECTOR A (OR OMNI)

ANTENNA POSITION is LEFT to RIGHT from BACK OF ANTENNA (unless otherwise specified)	ANTENNA POSITION 1	ANTENNA POSITION 2	ANTENNA POSITION 3	ANTENNA POSITION 4	ANTENNA POSITION 5	ANTENNA POSITION 6	ANTENNA POSITION 7
Existing Antenna?							
ANTENNA MAKE - MODEL	TPA65R-BU8D	DMP65R-BU8DA					
ANTENNA VENDOR	CCI	CCI					
ANTENNA SIZE (H x W x D)	96.0X20.7X7.7	96.0X20.7X7.7					
ANTENNA WEIGHT	87.1	95.7					
AZIMUTH	30	30					
MAGNETIC DECLINATION							
RADIATION CENTER (feet)	170	170					
ANTENNA TIP HEIGHT	173	173					
MECHANICAL DOWNTILT	0	0					
FEEDER AMOUNT							
VERTICAL SEPARATION from ANTENNA ABOVE (TIP to TIP)							
VERTICAL SEPARATION from ANTENNA BELOW (TIP to TIP)							
HORIZONTAL SEPARATION from CLOSEST ANTENNA to LEFT (CENTERLINE to CENTERLINE)							
HORIZONTAL SEPARATION from CLOSEST ANTENNA to RIGHT (CENTERLINE to CENTERLINE)							
HORIZONTAL SEPARATION from ANOTHER ANTENNA (which antenna # / # of inches)							
Antenna RET Motor (QTY/MODEL)	Built-in	Built in					
SURGE ARRESTOR (QTY/MODEL)	1 DC/Fiber Squid						
DIPLEXER (QTY/MODEL)							
DUPLEXER (QTY/MODEL)							
Antenna RET CONTROL UNIT (QTY/MODEL)	LTE RRH	LTE RRH					
DC BLOCK (QTY/MODEL)							
TMA/LNA (QTY/MODEL)							
CURRENT INJECTORS FOR TMA (QTY/MODEL)							
PDU FOR TMAS (QTY/MODEL)							
FILTER (QTY/MODEL)							
SQUID (QTY/MODEL)							
FIBER TRUNK (QTY/MODEL)							
DC TRUNK (QTY/MODEL)							
REPEATER (QTY/MODEL)							
RRH - 700 band (QTY/MODEL)	1 4478 B14	1 4449 B5/B12					
RRH - 850 band (QTY/MODEL)		RRH is shared with another band					
RRH - 1900 band (QTY/MODEL)		1 5843 B2/B66A					
RRH - AWS band (QTY/MODEL)	RRH is shared with another band						
RRH - WCS band (QTY/MODEL)							
Additional RRH #1 - any band (QTY/MODEL)							
Additional RRH #2 - any band (QTY/MODEL)							
Additional Component 1 (QTY/MODEL)							
Additional Component 2 (QTY/MODEL)							
Additional Component 3 (QTY/MODEL)							
Local Market Note 1	Arrange antenna and radio postions as per PD- Swap existing antennae with 12 port & Octo BA (Two antenna solution site)- Swap and add LTE radios- Add 6630, 2nd XMU and IDLe						
Local Market Note 2							
Local Market Note 3	2x6601 / 1x5216 / 2xXMU03 + IDLe ||xxxxx / 1x6630 / xxxxx + IDLe						

PORT SPECIFIC FIELDS	PORT NUMBER	USEID (CSSng)	USEID (AtoII)	ATOLL TXID	ATOLL CELL ID	TX/RX 7	TECHNOLOGY/FREQUENCY	ANTENNA ATOLL	ANTENNA GAIN	ELECTRICAL AZIMUTH	ELECTRICAL TILT	RRH LOCATION (Top/Bottom/ Integrated/None)	FEEDERS TYPE	FEEDER LENGTH (feet)	RXAIT KIT MODULE?	TRIPLEXER or LLC (QTY)	TRIPLEXER or LLC (MODEL)	SCPA/MCPA MODULE?	HATCHPLATE POWER (Watts)	ERP (Watts)	Antenna RET Name	CABLE NUMBER	CABLE ID (CSSNG)
ANTENNA POSITION 1	PORT 1		25953.A.700.4G.5	CTL05331_7A_3_F	CTL05331_7A_3_F		LTE 700	TPA65R-BU8D_770MHz_02DT	14.9	30	2	TOP	FIBER	0						2951.413		1	
	PORT 3		25953.A.WCS.4G.1	CTL05331_3A_1	CTL05331_3A_1		LTE WCS	TPA65R-BU8D_2355MHz_03DT	16.7	30	3	TOP	FIBER	0						1285.2866		2	
	PORT 4		25953.A.AWS.4G.1	CTL04331_2A_1	CTL04331_2A_1		LTE AWS	TPA65R-BU8D_2130MHz_04DT	17.8	30	4	TOP	FIBER	0						3837.0724		2	

ANTENNA POSITION 2	PORT 1		25953 A 700 4G 1	CTL05331_7A_1	CTL05331_7A_1		LTE 700	DMP65R-BU8D_725MHz_02DT	13.2	30	2	TOP	FIBER	0						1475.7065		3	
	PORT 2		25953 A 850 4G 1	CTL05331_8A_1	CTL05331_8A_1		LTE 850	DMP65R-BU8D_850MHz_02DT	13.1	30	2	TOP	FIBER	0						1000		3	
	PORT 3		25953 A 1900 4G 4	CTL04331_9A_2	CTL04331_9A_2		LTE 1900	DMP65R-BU8D_1930MHz_04DT	17.1	30	4	TOP	FIBER	0						3664.3757		4	
	PORT 4		25953 A 1900 4G 1	CTL04331_9A_1	CTL04331_9A_1		LTE 1900	DMP65R-BU8D_1930MHz_04DT	17.1	30	4	TOP	FIBER	0						3664.3757		4	
	PORT 5		25953 A 850 5G 1	CTCN005331_N005A_1	CTCN005331_N005A_1		5G 850	DMP65R-BU8D_850MHz_02DT	13.1	30	2	TOP	FIBER	0						1000		3	

Section 16B - PLANNED/PROPOSED TOWER CONFIGURATION - SECTOR B

ANTENNA POSITION ie LEFT to RIGHT from BACK OF ANTENNA (unless otherwise specified)	ANTENNA POSITION 1	ANTENNA POSITION 2	ANTENNA POSITION 3	ANTENNA POSITION 4	ANTENNA POSITION 5	ANTENNA POSITION 6	ANTENNA POSITION 7
Existing Antenna?							
ANTENNA MAKE - MODEL	TPA65R-BU8D	DMP65R-BU8DA					
ANTENNA VENDOR	CCI	CCI					
ANTENNA SIZE (H x W x D)	96.0X20.7X7.7	96.0X20.7X7.7					
ANTENNA WEIGHT	87.1	95.7					
AZIMUTH	140	140					
MAGNETIC DECLINATION							
RADIATION CENTER (feet)	170	170					
ANTENNA TIP HEIGHT	174	174					
MECHANICAL DOWNTILT	0	0					
FEEDER AMOUNT							
VERTICAL SEPARATION from ANTENNA ABOVE (TIP to TIP)							
VERTICAL SEPARATION from ANTENNA BELOW (TIP to TIP)							
HORIZONTAL SEPARATION from CLOSEST ANTENNA to LEFT (CENTERLINE to CENTERLINE)							
HORIZONTAL SEPARATION from CLOSEST ANTENNA to RIGHT (CENTERLINE to CENTERLINE)							
HORIZONTAL SEPARATION from ANOTHER ANTENNA (which antenna # / # of inches)							
Antenna RET Motor (QTY/MODEL)	Built-in	Built in					
SURGE ARRESTOR (QTY/MODEL)	1 DC/Fiber Squid						
DIPLEXER (QTY/MODEL)							
DUPLEXER (QTY/MODEL)							
Antenna RET CONTROL UNIT (QTY/MODEL)	LTE RRH	LTE RRH					
DC BLOCK (QTY/MODEL)							
TMA/LNA (QTY/MODEL)							
CURRENT INJECTORS FOR TMA (QTY/MODEL)							
PDU FOR TMAS (QTY/MODEL)							
FILTER (QTY/MODEL)							
SQUID (QTY/MODEL)							
FIBER TRUNK (QTY/MODEL)							
DC TRUNK (QTY/MODEL)							
REPEATER (QTY/MODEL)							
RRH - 700 band (QTY/MODEL)	1 4478 B14	1 4449 B5/B12					
RRH - 850 band (QTY/MODEL)		RRH is shared with another band					
RRH - 1900 band (QTY/MODEL)		1 8843 B2/B66A					
RRH - AWS band (QTY/MODEL)	RRH is shared with another band						
RRH - WCS band (QTY/MODEL)							
Additional RRH #1 - any band (QTY/MODEL)							
Additional RRH #2 - any band (QTY/MODEL)							
Additional Component 1 (QTY/MODEL)							
Additional Component 2 (QTY/MODEL)							
Additional Component 3 (QTY/MODEL)							
Local Market Note 1	Arrange antenna and radio postions as per PD- Swap existing antennae with 12 port & Octo BA (Two antenna solution site)- Swap and add LTE radios- Add 6630, 2nd XMU and IDLe.						
Local Market Note 2							
Local Market Note 3	2x6601 / 1x5216 / 2xXMU03 + IDLe ||xxxxx / 1x6630 / xxxxx + IDLe						

PORT SPECIFIC FIELDS	PORT NUMBER	USEID (CSSng)	USEID (Atoll)	ATOLL TXID	ATOLL CELL ID	TX/RX ?	TECHNOLOGY/FREQUENCY	ANTENNA ATOLL	ANTENNA GAIN	ELECTRICAL AZIMUTH	ELECTRICAL TILT	RRH LOCATION (Top/Bottom/ Integrated/None)	FEEDERS TYPE	FEEDER LENGTH (feet)	RXAIT KIT MODULE?	TRIPLEXER or LLC (QTY)	TRIPLEXER or LLC (MODEL)	SCPA/MCPA MODULE?	HATCHPLATE POWER (Watts)	ERP (Watts)	Antenna RET Name	CABLE NUMBER	CABLE ID (CSSNG)
ANTENNA POSITION 1	PORT 1		25953.B.700.4G.5	CTL05331_7B_3_F	CTL05331_7B_3_F		LTE 700	TPA65R-BU8D_770MHz_06DT	15.2	140	6	TOP	FIBER	0						2951.413		9	
	PORT 3		25953.B.WCS.4G.1	CTL05331_3B_1	CTL05331_3B_1		LTE WCS	TPA65R-BU8D_2355MHz_03DT	16.7	140	3	TOP	FIBER	0						1285.2866		10	
	PORT 4		25953.B.AWS.4G.1	CTL04331_2B_1	CTL04331_2B_1		LTE AWS	TPA65R-BU8D_2130MHz_06DT	18	140	6	TOP	FIBER	0						3837.0724		10	

ANTENNA POSITION 2	PORT 1		25953.B.700.4G.1	CTL05331_7B_1	CTL05331_7B_1		LTE 700	DMP65R-BUSD_725MHz_06DT	14	140	6	TOP	FIBER	0						1475.7065		11	
	PORT 2		25953.B.850.4G.1	CTL05331_8B_1	CTL05331_8B_1		LTE 850	DMP65R-BUSD_850MHz_06DT	14.9	140	6	TOP	FIBER	0						1000		11	
	PORT 3		25953.B.1900.4G.4	CTL04331_9B_2	CTL04331_9B_2		LTE 1900	DMP65R-BUSD_1930MHz_06DT	17.2	140	6	TOP	FIBER	0						3664.3757		12	
	PORT 4		25953.B.1900.4G.1	CTL04331_9B_1	CTL04331_9B_1		LTE 1900	DMP65R-BUSD_1930MHz_06DT	17.2	140	6	TOP	FIBER	0						3664.3757		12	
	PORT 5		25953.B.850.5G.1	CTCN005331_N005B_1	CTCN005331_N005B_1		5G 850	DMP65R-BUSD_850MHz_06DT	14.9	140	6	TOP	FIBER	0						1000		11	

Section 16C - PLANNED/PROPOSED TOWER CONFIGURATION - SECTOR C

ANTENNA POSITION is LEFT to RIGHT from BACK OF ANTENNA (unless otherwise specified)	ANTENNA POSITION 1	ANTENNA POSITION 2	ANTENNA POSITION 3	ANTENNA POSITION 4	ANTENNA POSITION 5	ANTENNA POSITION 6	ANTENNA POSITION 7
Existing Antenna?							
ANTENNA MAKE - MODEL	TPA65R-BU8D	DMP65R-BU8DA					
ANTENNA VENDOR	CCI	CCI					
ANTENNA SIZE (H x W x D)	96.0X20.7X7.7	96.0X20.7X7.7					
ANTENNA WEIGHT	87.1	95.7					
AZIMUTH	260	260					
MAGNETIC DECLINATION							
RADIATION CENTER (feet)	170	170					
ANTENNA TIP HEIGHT	173	173					
MECHANICAL DOWNTILT	0	0					
FEEDER AMOUNT							
VERTICAL SEPARATION from ANTENNA ABOVE (TIP to TIP)							
VERTICAL SEPARATION from ANTENNA BELOW (TIP to TIP)							
HORIZONTAL SEPARATION from CLOSEST ANTENNA to LEFT (CENTERLINE to CENTERLINE)							
HORIZONTAL SEPARATION from CLOSEST ANTENNA to RIGHT (CENTERLINE to CENTERLINE)							
HORIZONTAL SEPARATION from ANOTHER ANTENNA (which antenna # / # of inches)							
Antenna RET Motor (QTY/MODEL)	Built-in	Built in					
SURGE ARRESTOR (QTY/MODEL)	1 DC/Fiber Squid						
DXPLEXER (QTY/MODEL)							
DUPLEXER (QTY/MODEL)							
Antenna RET CONTROL UNIT (QTY/MODEL)	LTE RRH	LTE RRH					
DC BLOCK (QTY/MODEL)							
TMA/LNA (QTY/MODEL)							
CURRENT INJECTORS FOR TMA (QTY/MODEL)							
PDU FOR TMAS (QTY/MODEL)							
FILTER (QTY/MODEL)							
SQUID (QTY/MODEL)							
FIBER TRUNK (QTY/MODEL)							
DC TRUNK (QTY/MODEL)							
REPEATER (QTY/MODEL)							
RRH - 700 band (QTY/MODEL)	1 4478 B14	1 4449 B5/B12					
RRH - 850 band (QTY/MODEL)		RRH is shared with another band					
RRH - 1900 band (QTY/MODEL)		1 8843 B2/B66A					
RRH - AWS band (QTY/MODEL)	RRH is shared with another band						
RRH - WCS band (QTY/MODEL)							
Additional RRH #1 - any band (QTY/MODEL)							
Additional RRH #2 - any band (QTY/MODEL)							
Additional Component 1 (QTY/MODEL)							
Additional Component 2 (QTY/MODEL)							
Additional Component 3 (QTY/MODEL)							
Local Market Note 1	Arrange antenna and radio positions as per PD- Swap existing antennae with 12 port & Octo BA (Two antenna solution site)- Swap and add LTE radios- Add 6630, 2nd XMU and IDLe						
Local Market Note 2							
Local Market Note 3	2x6601 / 1x5216 / 2xXMU03 + IDLe [xxxxx / 1x6630 / xxxxx + IDLe						

PORT SPECIFIC FIELDS	PORT NUMBER	USEID (CSSng)	USEID (Atoll)	ATOLL TXID	ATOLL CELL ID	TX/RX ?	TECHNOLOGY/FREQUENCY	ANTENNA ATOLL	ANTENNA GAIN	ELECTRICAL AZIMUTH	ELECTRICAL TILT	RRH LOCATION (Top/Bottom/ Integrated/None)	FEEDERS TYPE	FEEDER LENGTH (feet)	RXAIT KIT MODULE?	TRIPLEXER or LLC (QTY)	TRIPLEXER or LLC (MODEL)	SCPA/MCPA MODULE?	HATCHPLATE POWER (Watts)	ERP (Watts)	Antenna RET Name	CABLE NUMBER	CABLE ID (CSSNG)
ANTENNA POSITION 1	PORT 1		25953.C.700.4G.5	CTL05331_7C_3_F	CTL05331_7C_3_F		LTE 700	TPA65R-BU8D_770MHz_02DT	14.9	260	2	TOP	FIBER	0						2951.413		17	
	PORT 3		25953.C.WCS.4G.1	CTL05331_3C_1	CTL05331_3C_1		LTE WCS	TPA65R-BU8D_2355MHz_03DT	16.7	260	3	TOP	FIBER	0						1285.2866		18	
	PORT 4		25953.C.AWS.4G.1	CTL04331_2C_1	CTL04331_2C_1		LTE AWS	TPA65R-BU8D_2130MHz_06DT	18	260	6	TOP	FIBER	0						3837.0724		18	

ANTENNA POSITION 2	PORT 1		25953.C 700.4G 1	CTL05331_7C_1	CTL05331_7C_1		LTE 700	DMP65R-BU8D_725MHz_02DT	13.2	260	2	TOP	FIBER	0						1475.7065		19	
	PORT 2		25953.C 850.4G 1	CTL05331_8C_1	CTL05331_8C_1		LTE 850	DMP65R-BU8D_850MHz_02DT	13.1	260	2	TOP	FIBER	0						1000		19	
	PORT 3		25953.C 1900.4G 4	CTL04331_9C_2	CTL04331_9C_2		LTE 1900	DMP65R-BU8D_1930MHz_06DT	17.2	260	6	TOP	FIBER	0						3664.3757		20	
	PORT 4		25953.C 1900.4G 1	CTL04331_9C_1	CTL04331_9C_1		LTE 1900	DMP65R-BU8D_1930MHz_06DT	17.2	260	6	TOP	FIBER	0						3664.3757		20	
	PORT 5		25953.C 850.5G 1	CTCN005331_N005C_1	CTCN005331_N005C_1		5G 850	DMP65R-BU8D_850MHz_02DT	13.1	260	2	TOP	FIBER	0						1000		19	

Section 17A - FINAL TOWER CONFIGURATION - SECTOR A (OR OMNI)

ANTENNA POSITION is LEFT to RIGHT from BACK OF ANTENNA (unless otherwise specified)	ANTENNA POSITION 1		ANTENNA POSITION 2		ANTENNA POSITION 3		ANTENNA POSITION 4		ANTENNA POSITION 5		ANTENNA POSITION 6		ANTENNA POSITION 7	
ANTENNA MAKE - MODEL	TPA65R-BU8D		DMP65R-BU8DA											
ANTENNA VENDOR	CCI		CCI											
ANTENNA SIZE (H x W x D)	96.0X20.7X7.7		96.0X20.7X7.7											
ANTENNA WEIGHT	87.1		95.7											
AZIMUTH	30		30											
MAGNETIC DECLINATION														
RADIATION CENTER (feet)	170		170											
ANTENNA TIP HEIGHT	173		173											
MECHANICAL DOWNTILT	0		0											
FEEDER AMOUNT														
VERTICAL SEPARATION from ANTENNA ABOVE (TIP to TIP)														
VERTICAL SEPARATION from ANTENNA BELOW (TIP to TIP)														
HORIZONTAL SEPARATION from CLOSEST ANTENNA to LEFT (CENTERLINE to CENTERLINE)														
HORIZONTAL SEPARATION from CLOSEST ANTENNA to RIGHT (CENTERLINE to CENTERLINE)														
HORIZONTAL SEPARATION from ANOTHER ANTENNA (which antenna # / # of inches)														
Antenna RET Motor (QTY/MODEL)		Built-in		Built in										
SURGE ARRESTOR (QTY/MODEL)	1	DC/Fiber Squid												
DIPLEXER (QTY/MODEL)														
DUPLEXER (QTY/MODEL)														
Antenna RET CONTROL UNIT (QTY/MODEL)		LTE RRH		LTE RRH										
DC BLOCK (QTY/MODEL)														
TMA/LNA (QTY/MODEL)														
CURRENT INJECTORS FOR TMA (QTY/MODEL)														
PDU FOR TMAS (QTY/MODEL)														
FILTER (QTY/MODEL)														
SQUID (QTY/MODEL)														
FIBER TRUNK (QTY/MODEL)														
DC TRUNK (QTY/MODEL)														
REPEATER (QTY/MODEL)														
RRH - 700 band (QTY/MODEL)	1	4478 B14	1	4449 B5/B12										
RRH - 850 band (QTY/MODEL)				RRH is shared with another band										
RRH - 1900 band (QTY/MODEL)			1	8843 B2/B66A										
RRH - AWS band (QTY/MODEL)		RRH is shared with another band												
RRH - WCS band (QTY/MODEL)	1	RRUS-32 B30												
Additional RRH #1 - any band (QTY/MODEL)														
Additional RRH #2 - any band (QTY/MODEL)														
Additional Component 1 (QTY/MODEL)														
Additional Component 2 (QTY/MODEL)														
Additional Component 3 (QTY/MODEL)														
Local Market Note 1	Arrange antenna and radio positions as per PD- Swap existing antennae with 12 port & Octo BA (Two antenna solution site)- Swap and add LTE radios- Add 6630, 2nd XMU and IDLe													
Local Market Note 2														
Local Market Note 3	2x6601 / 1x5216 / 2xXMU03 + IDLe /[xxxxx / 1x6630 / xxxxx + IDLe													

PORT SPECIFIC FIELDS	PORT NUMBER	USEID (CSSng)	USEID (AtoB)	ATOLL TXID	ATOLL CELL ID	TX/RX ?	TECHNOLOGY/FREQUENCY	ANTENNA ATOLL	ANTENNA GAIN	ELECTRICAL AZIMUTH	ELECTRICAL TILT	RRH LOCATION (Top/Bottom/ Integrated/None)	FEEDERS TYPE	FEEDER LENGTH (feet)	RXAIT KIT MODULE?	TRIPLEXER or LLC (QTY)	TRIPLEXER or LLC (MODEL)	SCPA/MCPA MODULE?	HATCHPLATE POWER (Watts)	ERP (Watts)	Antenna RET Name	CABLE NUMBER	CABLE ID (CSSNG)
ANTENNA POSITION 1	PORT 1	25953.A.700.4G.5	25953.A.700.4G.5	CTL05331_7A_3_F	CTL05331_7A_3_F		LTE 700	TPA65R-BU8D_770MHz_02DT	14.9	30	2	TOP	FIBER	0						2951.413		1	
	PORT 3	25953.A.WCS.4G.1	25953.A.WCS.4G.1	CTL05331_3A_1	CTL05331_3A_1		LTE WCS	TPA65R-BU8D_2355MHz_03DT	16.7	30	3	TOP	FIBER	0						1285.2866		2	
	PORT 4	25953.A.AWS.4G.1	25953.A.AWS.4G.1	CTL04331_2A_1	CTL04331_2A_1		LTE AWS	TPA65R-BU8D_2130MHz_04DT	17.8	30	4	TOP	FIBER	0						3837.0724		2	

ANTENNA POSITION 2	PORT 1	25953.A.700.4G.1	25953.A.700.4G.1	CTL05331_7A_1	CTL05331_7A_1		LTE 700	DMP65R-BU8D_725MHz_02DT	13.2	30	2	TOP	FIBER	0						1475.7065		3	
	PORT 2	25953.A.850.4G.1	25953.A.850.4G.1	CTL05331_8A_1	CTL05331_8A_1		LTE 850	DMP65R-BU8D_850MHz_02DT	13.1	30	2	TOP	FIBER	0						1000		3	
	PORT 3	25953.A.1900.4G.6	25953.A.1900.4G.4	CTL04331_9A_2	CTL04331_9A_2		LTE 1900	DMP65R-BU8D_1930MHz_04DT	17.1	30	4	TOP	FIBER	0						3664.3757		4	
	PORT 4	25953.A.1900.4G.5	25953.A.1900.4G.1	CTL04331_9A_1	CTL04331_9A_1		LTE 1900	DMP65R-BU8D_1930MHz_04DT	17.1	30	4	TOP	FIBER	0						3664.3757		4	
	PORT 5	25953.A.850.5G.1	25953.A.850.5G.1	CTCN005331_N005A_1	CTCN005331_N005A_1		5G 850	DMP65R-BU8D_850MHz_02DT	13.1	30	2	TOP	FIBER	0						1000		3	

Section 17B - FINAL TOWER CONFIGURATION - SECTOR B

ANTENNA POSITION is LEFT to RIGHT from BACK OF ANTENNA (unless otherwise specified)	ANTENNA POSITION 1		ANTENNA POSITION 2		ANTENNA POSITION 3		ANTENNA POSITION 4		ANTENNA POSITION 5		ANTENNA POSITION 6		ANTENNA POSITION 7	
ANTENNA MAKE - MODEL	TPA65R-BU8D		DMP65R-BU8DA											
ANTENNA VENDOR	CCI		CCI											
ANTENNA SIZE (H x W x D)	96.0X20.7X7.7		96.0X20.7X7.7											
ANTENNA WEIGHT	87.1		95.7											
AZIMUTH	140		140											
MAGNETIC DECLINATION														
RADIATION CENTER (feet)	170		170											
ANTENNA TIP HEIGHT	174		174											
MECHANICAL DOWNTILT	0		0											
FEEDER AMOUNT														
VERTICAL SEPARATION from ANTENNA ABOVE (TIP to TIP)														
VERTICAL SEPARATION from ANTENNA BELOW (TIP to TIP)														
HORIZONTAL SEPARATION from CLOSEST ANTENNA to LEFT (CENTERLINE to CENTERLINE)														
HORIZONTAL SEPARATION from CLOSEST ANTENNA to RIGHT (CENTERLINE to CENTERLINE)														
HORIZONTAL SEPARATION from ANOTHER ANTENNA (which antenna # / # of inches)														
Antenna RET Motor (QTY/MODEL)		Built-in		Built in										
SURGE ARRESTOR (QTY/MODEL)	1	DC/Fiber Squid												
DIPLEXER (QTY/MODEL)														
DUPLEXER (QTY/MODEL)														
Antenna RET CONTROL UNIT (QTY/MODEL)		LTE RRH		LTE RRH										
DC BLOCK (QTY/MODEL)														
TMA/LNA (QTY/MODEL)														
CURRENT INJECTORS FOR TMA (QTY/MODEL)														
PDU FOR TMAS (QTY/MODEL)														
FILTER (QTY/MODEL)														
SQUID (QTY/MODEL)														
FIBER TRUNK (QTY/MODEL)														
DC TRUNK (QTY/MODEL)														
REPEATER (QTY/MODEL)														
RRH - 700 band (QTY/MODEL)	1	4478 B14	1	4449 B5/B12										
RRH - 850 band (QTY/MODEL)				RRH is shared with another band										
RRH - 1900 band (QTY/MODEL)			1	8843 B2/B66A										
RRH - AWS band (QTY/MODEL)		RRH is shared with another band												
RRH - WCS band (QTY/MODEL)	1	RRUS-32 B30												
Additional RRH #1 - any band (QTY/MODEL)														
Additional RRH #2 - any band (QTY/MODEL)														
Additional Component 1 (QTY/MODEL)														
Additional Component 2 (QTY/MODEL)														
Additional Component 3 (QTY/MODEL)														
Local Market Note 1	Arrange antenna and radio postons as per PD- Swap existing antennae with 12 port & Octo BA (Two antenna solution site)- Swap and add LTE radios- Add 6630, 2nd XMU and IDLe.													
Local Market Note 2														
Local Market Note 3	2x6601 / 1x5216 / 2xXMU03 + IDLe][xxxx / 1x6630 / xxxx + IDLe													

PORT SPECIFIC FIELDS	PORT NUMBER	USEID (CSSng)	USEID (Atoll)	ATOLL TXID	ATOLL CELL ID	TX/RX ?	TECHNOLOGY/FREQUENCY	ANTENNA ATOLL	ANTENNA GAIN	ELECTRICAL AZIMUTH	ELECTRICAL TILT	RRH LOCATION (Top/Bottom/ Integrated/None)	FEEDERS TYPE	FEEDER LENGTH (feet)	RZAIT KIT MODULE?	TRIPLEXER or LLC (QTY)	TRIPLEXER or LLC (MODEL)	SCPA/MCPA MODULE?	HATCHPLATE POWER (Watts)	ERP (Watts)	Antenna RET Name	CABLE NUMBER	CABLE ID (CSSNG)
ANTENNA POSITION 1	PORT 1	25953.B.700.4G.5	25953.B.700.4G.5	CTL05331_7B_3_F	CTL05331_7B_3_F		LTE 700	TPA65R-BU8D_770MHz_06DT	15.2	140	6	TOP	FIBER	0						2951.413		9	
	PORT 3	25953.B.WCS.4G.1	25953.B.WCS.4G.1	CTL05331_3B_1	CTL05331_3B_1		LTE WCS	TPA65R-BU8D_2355MHz_03DT	16.7	140	3	TOP	FIBER	0						1285.2866		10	
	PORT 4	25953.B.AWS.4G.1	25953.B.AWS.4G.1	CTL04331_2B_1	CTL04331_2B_1		LTE AWS	TPA65R-BU8D_2130MHz_06DT	18	140	6	TOP	FIBER	0						3837.0724		10	

ANTENNA POSITION 2	PORT 1	25953 B 700 4G 1	25953 B 700 4G 1	CTL05331_7B_1	CTL05331_7B_1		LTE 700	DMP65R-BUSD_725MHz_06DT	14	140	6	TOP	FIBER	0						1475 7065		11	
	PORT 2	25953 B 850 4G 1	25953 B 850 4G 1	CTL05331_8B_1	CTL05331_8B_1		LTE 850	DMP65R-BUSD_850MHz_06DT	14 9	140	6	TOP	FIBER	0						1000		11	
	PORT 3	25953 B 1900 4G 6	25953 B 1900 4G 4	CTL04331_9B_2	CTL04331_9B_2		LTE 1900	DMP65R-BUSD_1930MHz_06DT	17 2	140	6	TOP	FIBER	0						3664 3757		12	
	PORT 4	25953 B 1900 4G 5	25953 B 1900 4G 1	CTL04331_9B_1	CTL04331_9B_1		LTE 1900	DMP65R-BUSD_1930MHz_06DT	17 2	140	6	TOP	FIBER	0						3664 3757		12	
	PORT 5	25953 B 850 5G 1	25953 B 850 5G 1	CTCN005331_N005B_1	CTCN005331_N005B_1		5G 850	DMP65R-BUSD_850MHz_06DT	14 9	140	6	TOP	FIBER	0						1000		11	

Section 17C - FINAL TOWER CONFIGURATION - SECTOR C

ANTENNA POSITION is LEFT to RIGHT from BACK OF ANTENNA (unless otherwise specified)	ANTENNA POSITION 1		ANTENNA POSITION 2		ANTENNA POSITION 3		ANTENNA POSITION 4		ANTENNA POSITION 5		ANTENNA POSITION 6		ANTENNA POSITION 7	
ANTENNA MAKE - MODEL	TPA65R-BU8D		DMP65R-BU8DA											
ANTENNA VENDOR	CCI		CCI											
ANTENNA SIZE (H x W x D)	96.0X20.7X7.7		96.0X20.7X7.7											
ANTENNA WEIGHT	87.1		95.7											
AZIMUTH	260		260											
MAGNETIC DECLINATION														
RADIATION CENTER (feet)	170		170											
ANTENNA TIP HEIGHT	173		173											
MECHANICAL DOWNTILT	0		0											
FEEDER AMOUNT														
VERTICAL SEPARATION from ANTENNA ABOVE (TIP to TIP)														
VERTICAL SEPARATION from ANTENNA BELOW (TIP to TIP)														
HORIZONTAL SEPARATION from CLOSEST ANTENNA to LEFT (CENTERLINE to CENTERLINE)														
HORIZONTAL SEPARATION from CLOSEST ANTENNA to RIGHT (CENTERLINE to CENTERLINE)														
HORIZONTAL SEPARATION from ANOTHER ANTENNA (which antenna # / # of inches)														
Antenna RET Motor (QTY/MODEL)		Built-in		Built in										
SURGE ARRESTOR (QTY/MODEL)	1	DC/Fiber Squid												
DIPLEXER (QTY/MODEL)														
DUPLEXER (QTY/MODEL)														
Antenna RET CONTROL UNIT (QTY/MODEL)		LTE RRH		LTE RRH										
DC BLOCK (QTY/MODEL)														
TMA/LNA (QTY/MODEL)														
CURRENT INJECTORS FOR TMA (QTY/MODEL)														
PDU FOR TMAS (QTY/MODEL)														
FILTER (QTY/MODEL)														
SQUID (QTY/MODEL)														
FIBER TRUNK (QTY/MODEL)														
DC TRUNK (QTY/MODEL)														
REPEATER (QTY/MODEL)														
RRH - 700 band (QTY/MODEL)	1	4478 B14	1	4449 B5/B12										
RRH - 850 band (QTY/MODEL)				RRH is shared with another band										
RRH - 1900 band (QTY/MODEL)			1	8843 B2/B66A										
RRH - AWS band (QTY/MODEL)		RRH is shared with another band												
RRH - WCS band (QTY/MODEL)	1	RRUS-32 B30												
Additional RRH #1 - any band (QTY/MODEL)														
Additional RRH #2 - any band (QTY/MODEL)														
Additional Component 1 (QTY/MODEL)														
Additional Component 2 (QTY/MODEL)														
Additional Component 3 (QTY/MODEL)														
Local Market Note 1	Arrange antenna and radio positions as per PD- Swap existing antennae with 12 port & Octo BA (Two antenna solution site)- Swap and add LTE radios- Add 6630, 2nd XMU and IDLe													
Local Market Note 2														
Local Market Note 3	2x6601 / 1x5216 / 2xXMU03 + IDLe][xxxxx / 1x6630 / xxxxx + IDLe													

PORT SPECIFIC FIELDS	PORT NUMBER	USEID (CSSng)	USEID (Atoll)	ATOLL TXID	ATOLL CELL ID	TX/RX ?	TECHNOLOGY/FREQUENCY	ANTENNA ATOLL	ANTENNA GAIN	ELECTRICAL AZIMUTH	ELECTRICAL TILT	RRH LOCATION (Top/Bottom/ Integrated/None)	FEEDERS TYPE	FEEDER LENGTH (feet)	RX/AIT KIT MODULE?	TRIPLEXER or LLC (QTY)	TRIPLEXER or LLC (MODEL)	SCPA/MCPA MODULE?	HATCHPLATE POWER (Watts)	ERP (Watts)	Antenna RET Name	CABLE NUMBER	CABLE ID (CSSNG)
ANTENNA POSITION 1	PORT 1	25953.C.700.4G.5	25953.C.700.4G.5	CTL05331_7C_3_F	CTL05331_7C_3_F		LTE 700	TPA65R-BU8D_770MHz_02DT	14.9	260	2	TOP	FIBER	0						2951.413		17	
	PORT 3	25953.C.WCS.4G.1	25953.C.WCS.4G.1	CTL05331_3C_1	CTL05331_3C_1		LTE WCS	TPA65R-BU8D_2355MHz_03DT	16.7	260	3	TOP	FIBER	0						1285.2866		18	
	PORT 4	25953.C.AWS.4G.1	25953.C.AWS.4G.1	CTL04331_2C_1	CTL04331_2C_1		LTE AWS	TPA65R-BU8D_2130MHz_06DT	18	260	6	TOP	FIBER	0						3837.0724		18	

ANTENNA POSITION 2	PORT 1	25953 C 700 4G 1	25953 C 700 4G 1	CTL05331_7C_1	CTL05331_7C_1		LTE 700	DMP65R-BUSD_725MHz_02DT	13.2	260	2	TOP	FIBER	0						1475 7065		19	
	PORT 2	25953 C 850 4G 1	25953 C 850 4G 1	CTL05331_8C_1	CTL05331_8C_1		LTE 850	DMP65R-BUSD_850MHz_02DT	13.1	260	2	TOP	FIBER	0						1000		19	
	PORT 3	25953 C 1900 4G 6	25953 C 1900 4G 4	CTL04331_9C_2	CTL04331_9C_2		LTE 1900	DMP65R-BUSD_1930MHz_06DT	17.2	260	6	TOP	FIBER	0						3664 3757		20	
	PORT 4	25953 C 1900 4G 5	25953 C 1900 4G 1	CTL04331_9C_1	CTL04331_9C_1		LTE 1900	DMP65R-BUSD_1930MHz_06DT	17.2	260	6	TOP	FIBER	0						3664 3757		20	
	PORT 5	25953 C 850 5G 1	25953 C 850 5G 1	CTCN005331_N005C_1	CTCN005331_N005C_1		5G 850	DMP65R-BUSD_850MHz_02DT	13.1	260	2	TOP	FIBER	0						1000		19	

Diagram - Sector	A	Diagram File Name - CTL05331_ABC_d1.vsd							
Atoll Site Name -	CTL05331	Location Name -	TOLLAND CENTRAL		Market -	CONNECTICUT		Market Cluster -	NEW ENGLAND

Comments: Important Note: For detailed radio to antenna wiring refer to the latest field notice - Antenna_Radio Connection Drawings Playbook v6.0_Ericsson

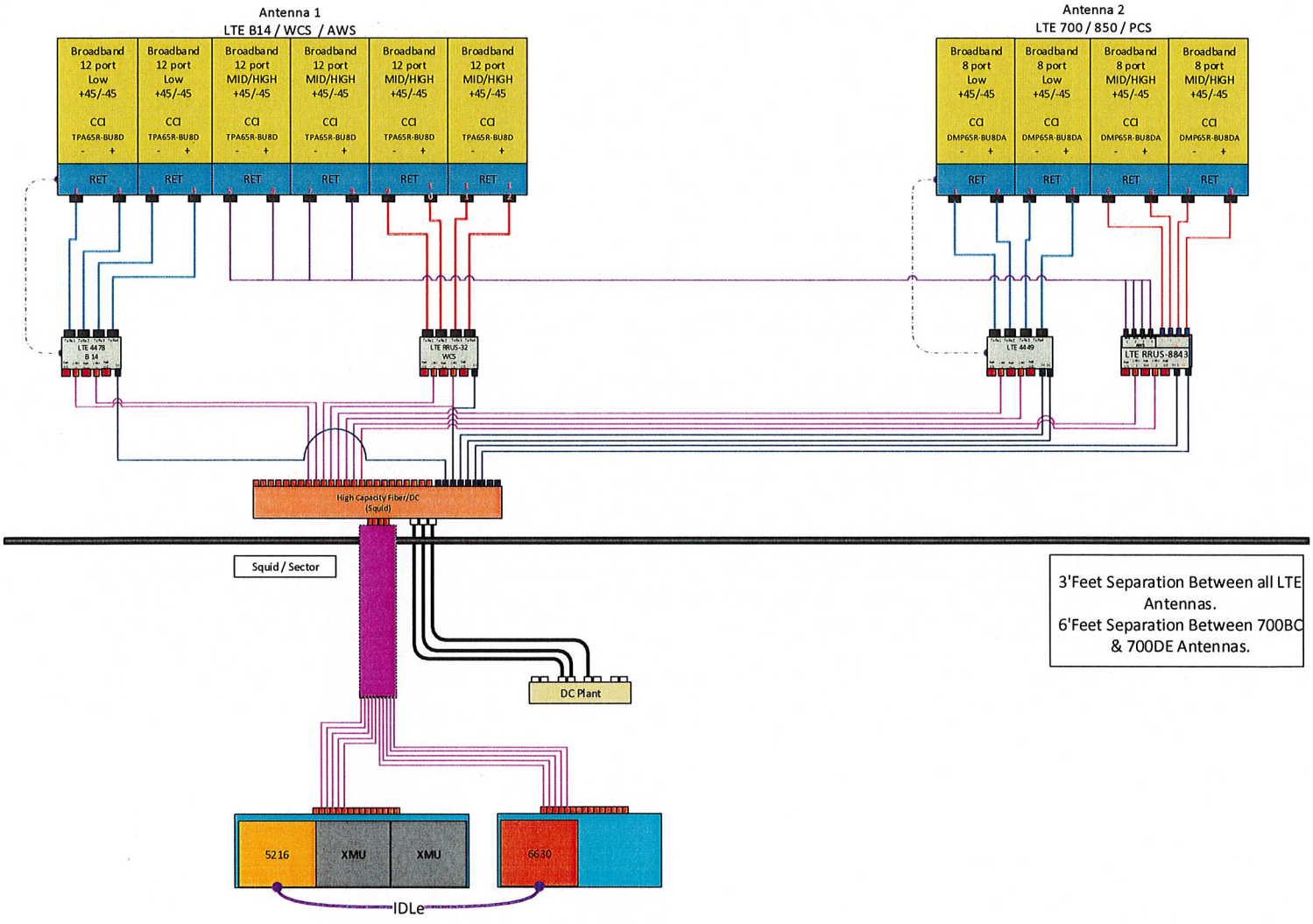

Diagram - Sector	B	Diagram File Name - CTL05331_ABC_d1.vsd							
Atoll Site Name -	CTL05331	Location Name -	TOLLAND CENTRAL		Market -	CONNECTICUT		Market Cluster -	NEW ENGLAND

Comments: Important Note: For detailed radio to antenna wiring refer to the latest field notice - Antenna_Radio Connection Drawings Playbook v6.0_Ericsson

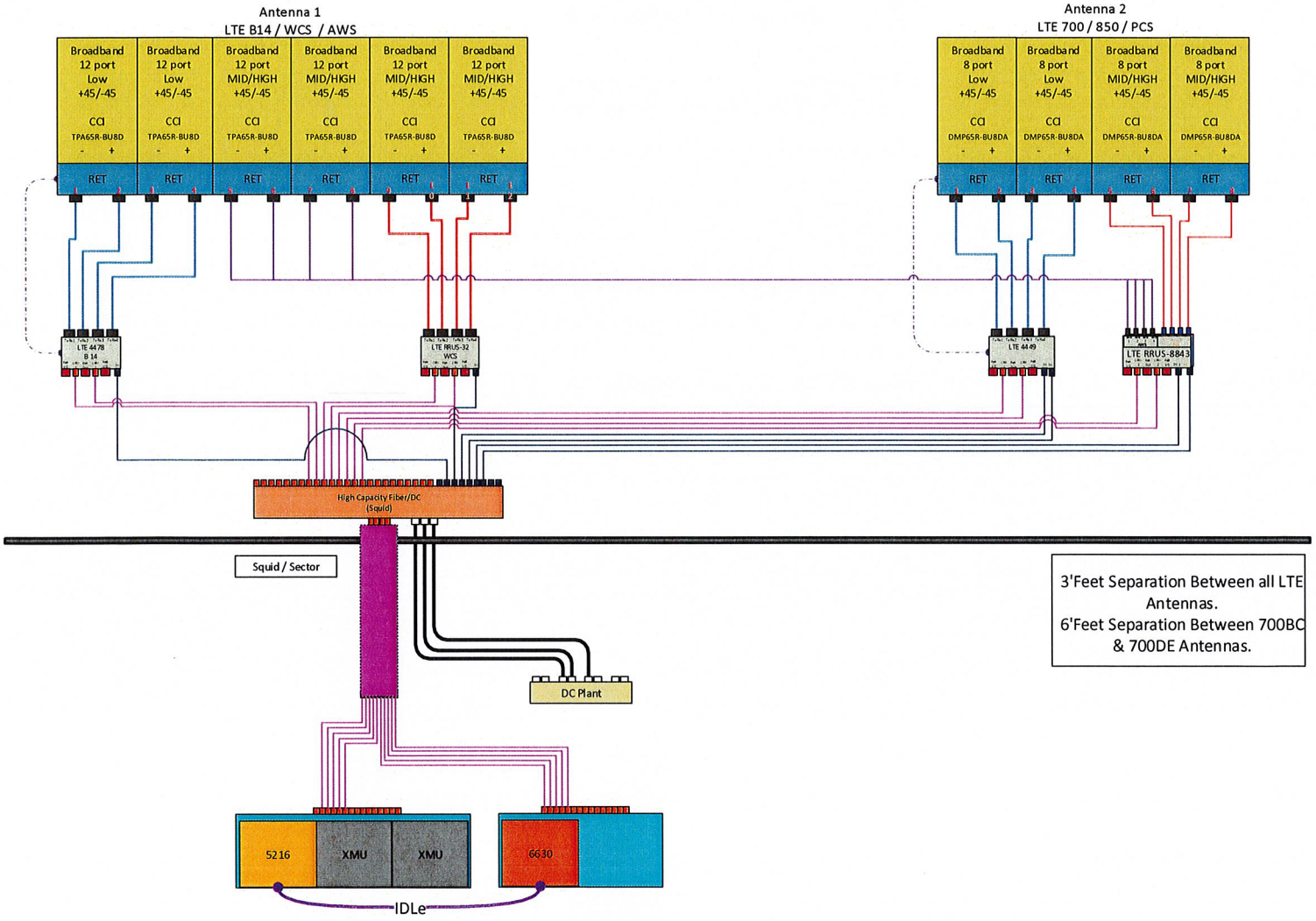

Diagram - Sector	C	Diagram File Name - CTL05331_ABC_d1.vsd							
Atoll Site Name -	CTL05331	Location Name -	TOLLAND CENTRAL		Market -	CONNECTICUT		Market Cluster -	NEW ENGLAND

Comments: Important Note: For detailed radio to antenna wiring refer to the latest field notice - Antenna_Radio Connection Drawings Playbook v8.0_Ericsson

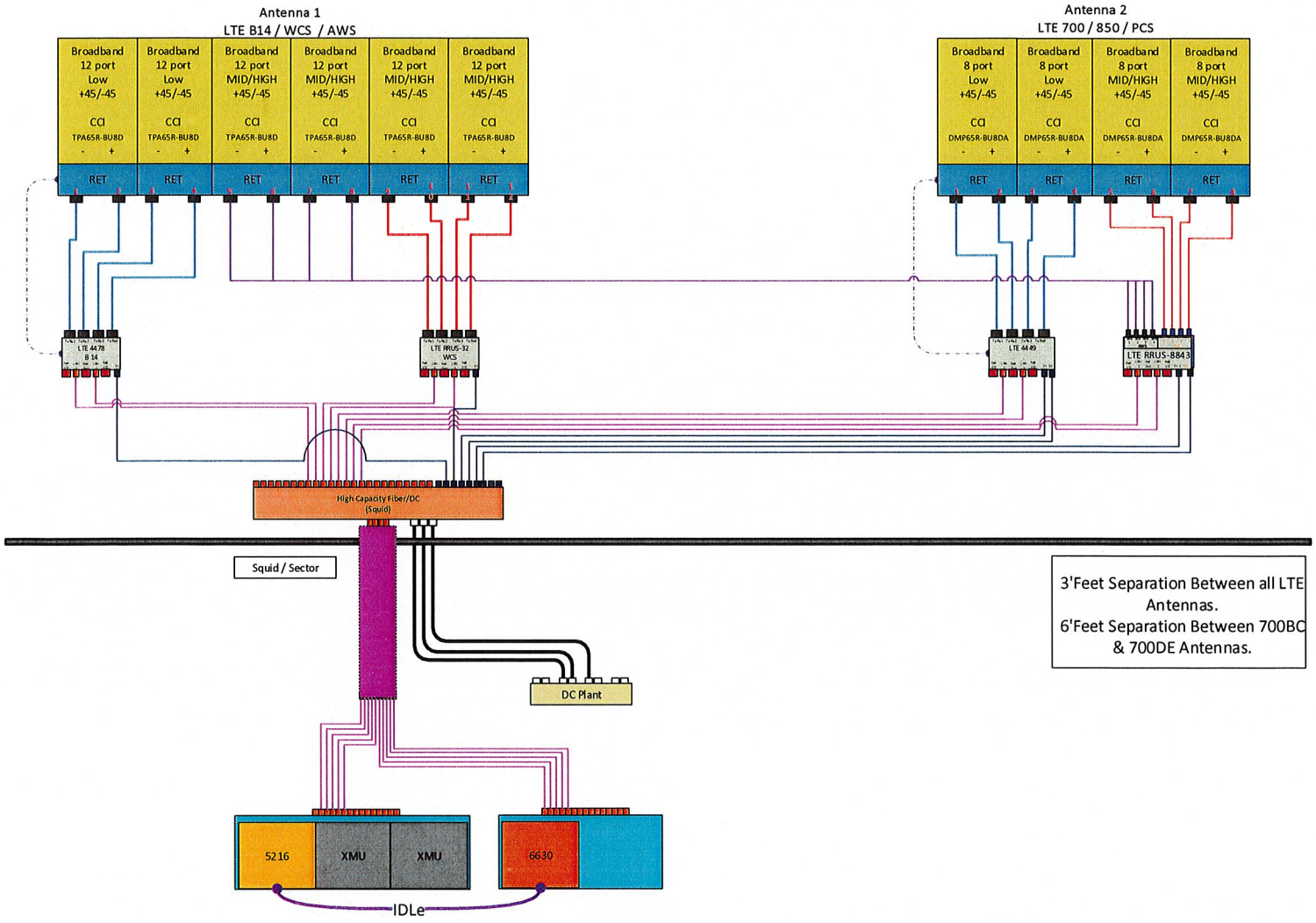

PROJECT INFORMATION

SCOPE OF WORK

UNMANNED COMMUNICATIONS FACILITY MODIFICATIONS INCLUDING:
- (P) AT&T LTE700b14/WCS/AWS CCI TPA65RBUBDA IN POS #1 ON NEW SECTOR FRAME (3 TOT.)
- (P) AT&T LTE700bc/850/PCS CCI OPA65R6BUBDA IN POS #2 ON NEW SECTOR FRAME (3 TOT.)
- (P) AT&T NEW LTE700bc/850 RRUS-4449b5b12 BEHIND PANEL POS#2 (1/SECT, 3 TOT.)
- (P) AT&T NEW LTEPCS/AWS RRUS-8843b2b66 BEHIND PANEL POS#2 (1/SECT, 3 TOT.)
- (P) AT&T NEW LTE700b14 RRUS-4478b14 BEHIND PANEL POS#1 (1/SECT, 3 TOT.)
- (P) AT&T NEW (1) DC6-48-60-18-8C2V WITH EXISTING (2) DC6-48-60-18-8F SURGE ARRESTORS SECURED TO NEW SECTOR FRAME TRANSITION PIPE MOUNTS, NOT TOWER LEGS
- (P) AT&T NEW 3-FIBER, 6-DC POWER LINES IN CABLE LADDER TO ELEV 170'
- (P) AT&T NEW SECTOR FRAMES ELEV 170' COMMSCOPE SFG22-12-4-96 (3 TOT.)
- ANTENNAS TO BE REMOVED (2) AMX-20-16-65-00T/(1) P65-17-XLHRR, (3) KATHREIN 800-10121, (2) QUINTEL QS66512-2/(1) CCI TPA65RLCUUUUH8.
- RADIOS TO BE REMOVED (3) RRUS-11 RADIOS, (3) RRUS-32b2
- COAX TO BE REMOVED (6) 1 5/8" -SECTOR FRAMES TO BE REMOVED 3 TOT.
- (E) CARRIER 3 WHIP ANTENNAS TO BE RELOCATED.
- REINFORCE EXISTING TOWER PER MEI TOWER MOD DRAWINGS PROJECT CT009835-20V1 DATED 8-21-2020

IN AT&T GROUND LEASE AREA:
- (P) NEW 1-RBS6630 FOR LTE/B505G -(P) NEW 2nd XMU -(P) NEW 1-DLe CABLE
- (P) INSTALL FLEX CABINET W/ AUXILIARY PANEL AND 24 UP CONVERTERS
- (E) RxAIT CABINET TO BE REMOVED

SITE NUMBER:	CT5331	CONTACT:	TEL 866-915-5600
SITE NAME:	TOLLAND - CENTRAL	COORDINATES	LAT. N41°52'59.13" LONG. W72°22'32.51"
SITE ADDRESS:	130 BALD HILL ROAD TOLLAND, CT 06084	GROUND LEVEL:	±51'
PROPERTY OWNER:	TOLLAND COUNTY MUTUAL AID P.O. Box 6 TOLLAND, CT 06084	DEED REFERENCE:	N/A
		SITE PARCEL NO.:	N/A
APPLICANT:	AT&T 550 COCHITUATE RD SUITES 13 & 14 FRAMINGHAM, MA 01701	CURRENT ZONING:	N/A
		HORIZONTAL DATUM:	(NAD) 1983

SITE NUMBER: CT5331 FA: 10071279
SITE NAME: TOLLAND - CENTRAL
PROJECT: LTE 4C 700b14 MRCTB047280
LTE 5G NR Ugrade MRCTB047309
LTE 4TxRx MRCTB047319

DRAWING INDEX

		REV
01	TITLE SHEET	3
02	NOTES	3
03	RF SCHEDULE/ANTENNA PLAN	3
04	ROOF PLAN & EQUIPMENT PLAN	3
05	ELEVATION VIEW & DETAILS	3
06	GROUNDING & RF DIAGRAM DETAILS	3
07	TOWER MOD DETAILS I	3
08	TOWER MOD DETAILS II	3
09	TOWER MOD DETAILS III	3
10	TOWER MOD DETAILS IV	3
11	TOWER MOD DETAILS V	3
12	TOWER MOD DETAILS VI	3
13	TOWER MOD DETAILS VII	3
14	TOWER MOD DETAILS VIII	3
15	TOWER MOD DETAILS IX	3
16	TOWER MOD DETAILS X	3
17	TOWER MOD DETAILS XI	3
18	TOWER MOD DETAILS XII	3
19	TOWER MOD DETAILS XIII	3
20	TOWER MOD DETAILS XIV	3
21	TOWER MOD DETAILS XV	3
22	TOWER MOD DETAILS XVI	3
23	TOWER MOD DETAILS XVII	3
24	TOWER MOD DETAILS XVIII	3
25	TOWER MOD DETAILS XIX	3

CONNECTICUT ONE CALL SYSTEM, INC. 1-800-922-4455 STOP - CALL BEFORE YOU DIG!

CONNECTICUT LAW REQUIRES TWO WORKING DAYS NOTICE PRIOR TO ANY EARTH MOVING ACTIVITIES BY CALLING 800-922-4455 OR DIAL 811

CONTACT & UTILITY INFORMATION

CONTACT	CONTACT	COMPANY	PHONE NO.
ENGINEERING:	MIGUEL NOBRE	VRG	(508) 981-9590
SITE ACQUISITION:	DAVID COOPER	EMPIRE	(617) 639-4908
CONSTRUCTION:	GREG DORMAN	EMPIRE	(484) 683-1750
UTILITIES			
POWER:	WORK REQUEST GROUP	NATIONAL GRID	(800) 375-7405
TELCO:		VERIZON	(800) 941-9900

LOCATION MAP

DIRECTIONS: FROM ROCKY HILL, CT: HEAD ONTO I-91 N TOWARD N TOWARDS HARTFORD. TAKE I-91 N EXIT 29 TOWARDS RT-5 EAST. CONTINUE ON RT-5 EAST. TAKE RT-5 EAST TILL END AND MERGE WITH I-84 NORTH. TAKE I-84 NORTH EXIT 68 TOWARDS TOLLAND. PROCEED NORTH ONTO RT-195 (MERROW RD.) . TURN LEFT ONTO DUNN HILL ROAD. TAKE IMMEDIATE RIGHT ONTO BALD HILL ROAD. SITE WILL BE ON RIGHT.

SITE ACCESS: LOCKED GATE

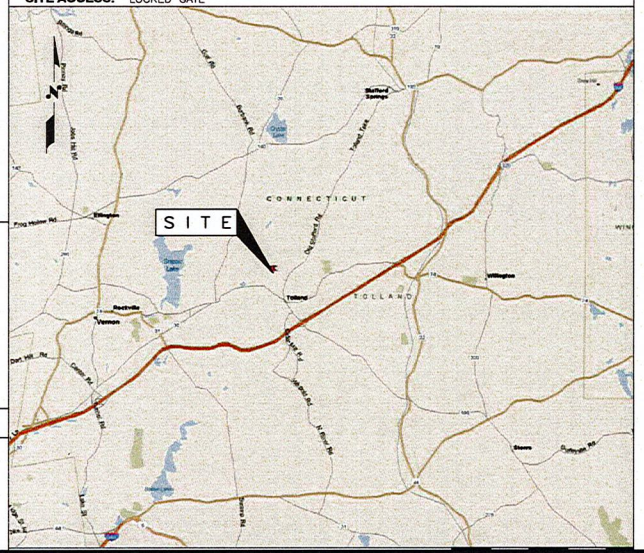

APPLICABLE BUILDING CODES AND STANDARDS

SUBCONTRACTOR'S WORK SHALL COMPLY WITH PROJECT STANDARDS AND SPECIFICATIONS. SUBCONTRACTOR WORK SHALL COMPLY WITH ALL APPLICABLE NATIONAL, STATE, AND LOCAL CODES AS ADOPTED BY THE LOCAL AUTHORITY HAVING JURISDICTION (AHJ) FOR THE LOCATION. THE EDITION OF THE AHJ ADOPTED CODES AND STANDARDS IN EFFECT ON THE DATE OF CONTRACT AWARD SHALL GOVERN THE DESIGN.

BUILDING CODE:
INTERNATIONAL, CONNECTICUT BUILDING 2018 ED.

ELECTRICAL CODE:
NATIONAL ELECTRICAL CODE LATEST EDITION
SUBCONTRACTOR'S WORK SHALL COMPLY WITH THE LATEST EDITION OF THE FOLLOWING STANDARDS.
AMERICAN CONCRETE INSTITUTE (ACI) 318, BUILDING CODE REQUIREMENTS FOR STRUCTURAL CONCRETE
AMERICAN INSTITUTE OF STEEL CONSTRUCTION (AISC). MANUAL OF STEEL CONSTRUCTION, ASD, NINTH EDITION
AMERICAN NATIONAL STANDARDS INSTITUTE/TELECOMMUNICATIONS INDUSTRY ASSOCIATION (ANSI/TIA) 222-F OR G AS APPLICABLE, STRUCTURAL STANDARDS FOR STEEL ANTENNA TOWER AND ANTENNA SUPPORTING STRUCTURES:
TIA 607, COMMERCIAL BUILDING GROUNDING AND BONDING REQUIREMENTS FOR TELECOMMUNICATIONS

INSTITUTE FOR ELECTRICAL AND ELECTRONICS ENGINEERS (IEEE) 81, GUIDE FOR MEASURING EARTH RESISTIVITY, GROUND IMPEDANCE, AND EARTH SURFACE POTENTIALS OF A GROUND SYSTEM
IEEE 1100 (1999) RECOMMENDED PRACTICE FOR POWERING AND GROUNDING OF ELECTRONIC EQUIPMENT

IEEE C62.41, RECOMMENDED PRACTICES ON SURGE VOLTAGES IN LOW VOLTAGE AC POWER CIRCUITS (FOR LOCATION CATEGORY "C3" AND "HIGH SYSTEM EXPOSURE")

TELCORDIA GR-1503, COAXIAL CABLE CONNECTIONS

ANSI T1.311, FOR TELECOM - DC POWER SYSTEMS - TELECOM, ENVIRONMENTAL PROTECTION

FOR ANY CONFLICTS BETWEEN SECTIONS OF LISTED CODES AND STANDARDS REGARDING MATERIAL, METHODS OF CONSTRUCTION, OR OTHER REQUIREMENTS, THE MOST RESTRICTIVE REQUIREMENT SHALL GOVERN. WHERE THERE IS CONFLICT BETWEEN A GENERAL REQUIREMENT AND A SPECIFIC REQUIREMENT, THE SPECIFIC REQUIREMENT SHALL GOVERN.

VRG VERTICAL RESOURCES GROUP
23 Midstate Drive, #210
Auburn, MA 01501
Tel. (508) 981-9590
Fax (508) 519-8939
mnobre@verticalresourcesgrp.com

EMPIRE telecom
EMPIRE TELECOM USA, LLC
16 ESQUIRE ROAD
BILLERICA, MA 01821

SITE NUMBER: CT5331
SITE NAME: TOLLAND CENTRAL
PROJECT: LTE 4C / 5GNR / 4TxRx
130 BALD HILL ROAD
TOLLAND, CT 06084
TOLLAND COUNTY

at&t
550 COCHITUATE RD
SUITES 13 & 14
FRAMINGHAM, MA 01701

NO.	DATE	REVISION	BY	CHK	APP'D
3	09/10/20	GENERAL REVISIONS	G.A.M.		
2	08/24/20	ADDED TOWER MODIFICATIONS	G.A.M.		
1	05/12/20	REVISED PER NEW RFDS	G.A.M.		
0	04/29/20	FOR REVIEW	G.A.M.		

SCALE | DESIGNED BY: M.N. | DRAWN BY: G.A.M.

STATE OF CONNECTICUT JAMES P. SULLIVAN No. 8657 REGISTERED PROFESSIONAL ENGINEER

AT&T

TITLE SHEET

JOB NUMBER	DRAWING NUMBER	REV
CT5331-LTE4C5G	01	2

GENERAL NOTES

1. FOR THE PURPOSE OF CONSTRUCTION DRAWING, THE FOLLOWING DEFINITIONS SHALL APPLY
   - CONTRACTOR — PRIME CONTRACTOR
   - SUBCONTRACTOR — GENERAL CONTRACTOR (CONSTRUCTION)
   - OWNER — AT&T WIRELESS
   - OEM — ORIGINAL EQUIPMENT MANUFACTURER

2. PRIOR TO THE SUBMISSION OF BIDS, THE BIDDING SUBCONTRACTOR SHALL VISIT THE CELL SITE TO FAMILIARIZE WITH THE EXISTING CONDITIONS AND TO CONFIRM THAT THE WORK CAN BE ACCOMPLISHED AS SHOWN ON THE CONSTRUCTION DRAWINGS. ANY DISCREPANCY FOUND SHALL BE BROUGHT TO THE ATTENTION OF CONTRACTOR.

3. ALL MATERIALS FURNISHED AND INSTALLED SHALL BE IN STRICT ACCORDANCE WITH ALL APPLICABLE CODES, REGULATIONS, AND ORDINANCES. SUBCONTRACTOR SHALL ISSUE ALL APPROPRIATE NOTICES AND COMPLY WITH ALL LAWS, ORDINANCES, RULES, REGULATIONS, AND LAWFUL ORDERS OF ANY PUBLIC AUTHORITY REGARDING THE PERFORMANCE OF THE WORK.

ALL WORK CARRIED OUT SHALL COMPLY WITH ALL APPLICABLE MUNICIPAL AND UTILITY COMPANY SPECIFICATIONS AND LOCAL JURISDICTIONAL CODES, ORDINANCES AND APPLICABLE REGULATIONS.

4. DRAWINGS PROVIDED HERE ARE NOT TO SCALE UNLESS OTHERWISE NOTED AND ARE INTENDED TO SHOW OUTLINE ONLY.

5. UNLESS NOTED OTHERWISE, THE WORK SHALL INCLUDE FURNISHING MATERIALS, EQUIPMENT, APPURTENANCES, AND LABOR NECESSARY TO COMPLETE ALL INSTALLATIONS AS INDICATED ON THE DRAWINGS.

6. THE SUBCONTRACTOR SHALL INSTALL ALL EQUIPMENT AND MATERIALS IN ACCORDANCE WITH MANUFACTURER'S RECOMMENDATIONS UNLESS SPECIFICALLY STATED OTHERWISE.

7. IF THE SPECIFIED EQUIPMENT CANNOT BE INSTALLED AS SHOWN ON THESE DRAWINGS, THE SUBCONTRACTOR SHALL PROPOSE AN ALTERNATIVE INSTALLATION FOR APPROVAL BY THE CONTRACTOR.

8. SUBCONTRACTOR SHALL DETERMINE ACTUAL ROUTING OF CONDUIT, POWER AND T1 CABLES, GROUNDING CABLES AS SHOWN ON THE POWER, GROUNDING AND TELCO PLAN DRAWING. ROUTING OF CONDUIT FOR POWER AND TELCO SHALL BE APPROVED BY OWNER OF SITE.

9. THE SUBCONTRACTOR SHALL PROTECT EXISTING IMPROVEMENTS, PAVEMENTS, CURBS, LANDSCAPING AND STRUCTURES. ANY DAMAGED PART SHALL BE REPAIRED AT SUBCONTRACTOR'S EXPENSE TO THE SATISFACTION OF OWNER.

10. SUBCONTRACTOR SHALL LEGALLY AND PROPERLY DISPOSE OF ALL SCRAP MATERIALS SUCH AS COAXIAL CABLES AND OTHER ITEMS REMOVED FROM THE EXISTING FACILITY. ANTENNAS REMOVED SHALL BE RETURNED TO THE OWNER'S DESIGNATED LOCATION.

11. SUBCONTRACTOR SHALL LEAVE PREMISES IN CLEAN CONDITION.

SITE WORK GENERAL NOTES

1. THE SUBCONTRACTOR SHALL CONTACT UTILITY LOCATING SERVICES PRIOR TO THE START OF CONSTRUCTION.

2. ALL EXISTING ACTIVE SEWER, WATER, GAS, ELECTRIC, AND OTHER UTILITIES WHERE ENCOUNTERED IN THE WORK, SHALL BE PROTECTED AT ALL TIMES, AND WHERE REQUIRED FOR THE PROPER EXECUTION OF THE WORK, SHALL BE RELOCATED AS DIRECTED BY CONTRACTOR. EXTREME CAUTION SHOULD BE USED BY THE SUBCONTRACTOR WHEN EXCAVATING OR DRILLING PIERS AROUND OR NEAR UTILITIES. SUBCONTRACTOR SHALL PROVIDE SAFETY TRAINING FOR THE WORKING CREW. THIS WILL INCLUDE BUT NOT BE LIMITED TO A) FALL PROTECTION B) CONFINED SPACE C) ELECTRICAL SAFETY D) TRENCHING & EXCAVATION.

3. ALL SITE WORK SHALL BE AS INDICATED ON THE DRAWINGS AND PROJECT SPECIFICATIONS.

4. IF NECESSARY, RUBBISH, STUMPS, DEBRIS, STICKS, STONES, TOP SOIL AND OTHER REFUSE SHALL BE REMOVED FROM THE SITE AND DISPOSED OF LEGALLY.

5. ALL EXISTING INACTIVE SEWER, WATER, GAS, ELECTRIC AND OTHER UTILITIES, WHICH INTERFERE WITH THE EXECUTION OF THE WORK, SHALL BE REMOVED AND/OR CAPPED, PLUGGED OR OTHERWISE DISCONTINUED AT POINTS WHICH WILL NOT INTERFERE WITH THE EXECUTION OF THE WORK, SUBJECT TO THE APPROVAL OF CONTRACTOR, OWNER AND/OR LOCAL UTILITIES.

6. SUBCONTRACTOR SHALL MINIMIZE DISTURBANCE TO EXISTING SITE DURING CONSTRUCTION.

7. THE SUBCONTRACTOR SHALL PROVIDE SITE SIGNAGE IN ACCORDANCE WITH THE OWNER SPECIFICATION FOR SITE SIGNAGE.

8. THE SITE SHALL BE GRADED TO CAUSE SURFACE WATER TO FLOW AWAY FROM THE TRANSMISSION EQUIPMENT AND TOWER AREAS.

9. NO FILL OR EMBANKMENT MATERIAL SHALL BE PLACED ON FROZEN GROUND. FROZEN MATERIALS, SNOW OR ICE SHALL NOT BE PLACED IN ANY FILL OR EMBANKMENT.

10. THE SUB GRADE SHALL BE COMPACTED AND BROUGHT TO A SMOOTH UNIFORM GRADE PRIOR TO FINISHED SURFACE APPLICATION, SEE DETAIL 3/3.

11. THE AREAS OF THE OWNERS PROPERTY DISTURBED BY THE WORK AND NOT COVERED BY THE TOWER, EQUIPMENT OR DRIVEWAY, SHALL BE GRADED TO A UNIFORM SLOPE, AND STABILIZED TO PREVENT EROSION.

12. EROSION CONTROL MEASURES, IF REQUIRED DURING CONSTRUCTION, SHALL BE IN CONFORMANCE WITH THE LOCAL JURISDICTION'S GUIDELINES FOR EROSION AND SEDIMENT CONTROL.

13. ALL EARTH WORK SHALL BE PERFORMED IN ACCORDANCE WITH TECHNICAL SPECIFICATION FOR CONSTRUCTION OF RADIO ACCESS NETWORK SITES.

STRUCTURAL STEEL NOTES:

1. ALL STEEL WORK SHALL BE GALVANIZED IN ACCORDANCE WITH ASTM A123 (HOT DIP) UNLESS NOTED OTHERWISE. STRUCTURAL STEEL SHALL BE ASTM A 36 UNLESS OTHERWISE NOTED ON THE SITE SPECIFIC DRAWINGS. STEEL DESIGN, INSTALLATION AND BOLTING SHALL BE PERFORMED IN ACCORDANCE WITH THE AMERICAN INSTITUTE OF STEEL CONSTRUCTION (AISC) "MANUAL OF STEEL CONSTRUCTION".

2. ALL WELDING SHALL BE PERFORMED USING E70XX ELECTRODES AND WELDING SHALL CONFORM TO AISC. WHERE FILLET WELD SIZES ARE NOT SHOWN, PROVIDE THE MINIMUM SIZE PER TABLE J2.4 IN THE AISC "MANUAL OF STEEL CONSTRUCTION". PAINTED SURFACES SHALL BE TOUCHED UP.

3. BOLTED CONNECTIONS SHALL BE ASTM A325 BEARING TYPE (3/4"ø) CONNECTIONS AND SHALL HAVE MINIMUM OF TWO BOLTS UNLESS NOTED OTHERWISE. STEEL FASTENER HARDWARE SHALL BE GALVANIZED IN ACCORDANCE WITH ASTM A153 (HOT-DIP).

4. NON-STRUCTURAL CONNECTIONS FOR STEEL GRATING MAY USE 5/8" DIA. ASTM A 307 BOLTS UNLESS NOTED OTHERWISE.

5. INSTALLATION OF CONCRETE EXPANSION/WEDGE ANCHOR, SHALL BE PER MANUFACTURER'S WRITTEN RECOMMENDED PROCEDURE. THE ANCHOR BOLT, DOWEL OR ROD SHALL CONFORM TO MANUFACTURER'S RECOMMENDATION FOR EMBEDMENT DEPTH OR AS SHOWN ON THE DRAWINGS. NO REBAR SHALL BE CUT WITHOUT PRIOR CONTRACTOR APPROVAL WHEN DRILLING HOLES IN CONCRETE. SPECIAL INSPECTIONS, REQUIRED BY GOVERNING CODES, SHALL BE PERFORMED IN ORDER TO MAINTAIN MANUFACTURER'S MAXIMUM ALLOWABLE LOADS. ALL EXPANSION/WEDGE ANCHORS SHALL BE STAINLESS STEEL OR HOT DIPPED GALVANIZED. EXPANSION BOLTS SHALL BE PROVIDED BY RAMSET/REDHEAD, HILTI OR APPROVED EQUAL.

6. ALL STRUCTURAL STEEL SHALL BE SUPPLIED IN ACCORDANCE WITH TECHNICAL SPECIFICATION FOR CONSTRUCTION OF RADIO ACCESS NETWORK SITES.

CONCRETE AND REINFORCING STEEL NOTES:

1. ALL CONCRETE WORK SHALL BE IN ACCORDANCE WITH THE ACI 301, ACI 318, ACI 336, ASTM A184, ASTM A185 AND THE DESIGN AND CONSTRUCTION SPECIFICATION FOR CAST-IN-PLACE CONCRETE.

2. ALL CONCRETE SHALL HAVE A MINIMUM COMPRESSIVE STRENGTH OF 4000 PSI AT 28 DAYS, UNLESS NOTED OTHERWISE. A HIGHER STRENGTH (4000 PSI) MAY BE USED.

3. REINFORCING STEEL SHALL CONFORM TO ASTM A 615, GRADE 60, DEFORMED UNLESS NOTED OTHERWISE. WELDED WIRE FABRIC SHALL CONFORM TO ASTM A 185 WELDED STEEL WIRE FABRIC UNLESS NOTED OTHERWISE. SPLICES SHALL BE CLASS "B" AND ALL HOOKS SHALL BE STANDARD, UNO.

4. THE FOLLOWING MINIMUM CONCRETE COVER SHALL BE PROVIDED FOR REINFORCING STEEL UNLESS SHOWN OTHERWISE ON DRAWINGS.

   CONCRETE CAST AGAINST EARTH..........3 IN.
   CONCRETE EXPOSED TO EARTH OR WEATHER:

   #6 AND LARGER ....2 INCH
   #5 AND SMALLER & WWF ....1 1/2 INCH

   CONCRETE NOT EXPOSED TO EARTH OR WEATHER OR NOT CAST AGAINST THE GROUND:

   SLAB AND WALL ....3/4 INCH
   BEAMS AND COLUMNS....................1 1/2 INCH

5. A 3/4" CHAMFER SHALL BE PROVIDED AT ALL EXPOSED EDGES OF CONCRETE, UNO, IN ACCORDANCE WITH ACI 301 SECTION 4.2.4.

6. INSTALLATION OF CONCRETE EXPANSION/WEDGE ANCHOR, SHALL BE PER MANUFACTURER'S WRITTEN RECOMMENDED PROCEDURE. THE ANCHOR BOLT, DOWEL OR ROD SHALL CONFORM TO MANUFACTURER'S RECOMMENDATION FOR EMBEDMENT DEPTH OR AS SHOWN ON THE DRAWINGS. NO REBAR SHALL BE CUT WITHOUT PRIOR CONTRACTOR APPROVAL WHEN DRILLING HOLES IN CONCRETE. SPECIAL INSPECTIONS, REQUIRED BY GOVERNING CODES, SHALL BE PERFORMED IN ORDER TO MAINTAIN MANUFACTURER'S MAXIMUM ALLOWABLE LOADS. ALL EXPANSION/WEDGE ANCHORS SHALL BE STAINLESS STEEL OR HOT DIPPED GALVANIZED. EXPANSION BOLTS SHALL BE PROVIDED BY RAMSET/REDHEAD HILTI OR APPROVED EQUAL.

7. CONCRETE CYLINDER TEST IS NOT REQUIRED FOR SLAB ON GRADE WHEN CONCRETE IS LESS THAN 50 CUBIC YARDS (IBC 1905.6.2.3) IN THAT EVENT THE FOLLOWING RECORDS SHALL BE PROVIDED BY THE CONCRETE SUPPLIER;
   (A) RESULTS OF CONCRETE CYLINDER TESTS PERFORMED AT THE SUPPLIER'S PLANT.
   (B) CERTIFICATION OF MINIMUM COMPRESSIVE STRENGTH FOR THE CONCRETE GRADE SUPPLIED.

   FOR GREATER THAN 50 CUBIC YARDS THE GC SHALL PERFORM THE CONCRETE CYLINDER TEST.

8. AS AN ALTERNATIVE TO ITEM 7, TEST CYLINDERS SHALL BE TAKEN INITIALLY AND THEREAFTER FOR EVERY 50 YARDS OF CONCRETE FROM EACH DIFFERENT BATCH PLANT.

9. EQUIPMENT SHALL NOT BE PLACED ON NEW PADS FOR SEVEN DAYS AFTER PAD IS POURED, UNLESS IT IS VERIFIED BY TESTS THAT COMPRESSIVE STRENGTH HAS BEEN ATTAINED.

10. ALL CONCRETE SHALL BE SUPPLIED IN ACCORDANCE WITH TECHNICAL SPECIFICATION FOR CONSTRUCTION OF RADIO ACCESS NETWORK SITES.

SOIL COMPACTION NOTES FOR SLAB ON GRADE:

1. EXCAVATE AS REQUIRED TO REMOVE VEGETATION AND TOPSOIL, EXPOSE UNDISTURBED NATURAL SUBGRADE AND PLACE CRUSHED STONE AS REQUIRED.

2. COMPACTION CERTIFICATION: AN INSPECTION AND WRITTEN CERTIFICATION BY A QUALIFIED GEOTECHNICAL TECHNICIAN OR ENGINEER IS ACCEPTABLE.

3. AS AN ALTERNATIVE TO INSPECTION AND WRITTEN CERTIFICATION, THE "UNDISTURBED SOIL" BASE SHALL BE COMPACTED WITH "COMPACTION EQUIPMENT", LISTED BELOW, TO AT LEAST 90% MODIFIED PROCTOR MAXIMUM DENSITY PER ASTM D 1557 METHOD C.

4. COMPACTED SUBBASE SHALL BE UNIFORM AND LEVELED. PROVIDE 6" MINIMUM CRUSHED STONE OR GRAVEL COMPACTED IN 3" LIFTS ABOVE COMPACTED SOIL. GRAVEL SHALL BE NATURAL OR CRUSHED WITH 100% PASSING 1" SIEVE.

5. AS AN ALTERNATIVE TO ITEMS 2 AND 3 PROOF ROLL THE SUBGRADE SOILS WITH 5 PASSES OF A MEDIUM SIZED VIBRATORY PLATE COMPACTOR (SUCH AS BOMAG BPR 30/38) OR HAND-OPERATED SINGLE DRUM VIBRATORY ROLLER (SUCH AS BOMAG BW 55E). ANY SOFT AREAS THAT ARE ENCOUNTERED SHOULD BE REMOVED AND REPLACED WITH A WELL-GRADED GRANULAR FILL AND COMPACTED AS STATED ABOVE.

6. COMPACTION CRITERIA FOR OTHER FILL AREAS ON SITE SHALL MEET THE SAME REQUIREMENTS AS NOTED ABOVE.

7. SOIL COMPACTION SHALL BE PERFORMED IN ACCORDANCE WITH TECHNICAL SPECIFICATION FOR CONSTRUCTION OF RADIO ACCESS NETWORK SITES.

COMPACTION EQUIPMENT:

HAND OPERATED DOUBLE DRUM, VIBRATORY ROLLER, VIBRATORY PLATE COMPACTOR OR JUMPING JACK COMPACTOR

GROUNDING NOTES

1. ALL GROUND ELECTRODE SYSTEMS (INCLUDING TELECOMMUNICATION, RADIO, LIGHTNING PROTECTION, AND AC POWER GES'S) SHALL BE BONDED TOGETHER, AT OR BELOW GRADE, BY TWO OR MORE COPPER BONDING CONDUCTORS. ALL AVAILABLE GROUNDING ELECTRODES SHALL BE CONNECTED TOGETHER IN ACCORDANCE WITH THE NEC.

2. THE SUBCONTRACTOR SHALL PERFORM IEEE FALL-OF-POTENTIAL RESISTANCE TO EARTH TESTING (PER IEEE 1100 AND 81) FOR GROUND ELECTRODE SYSTEMS. USE OF OTHER METHODS MUST BE PRE-APPROVED BY CONTRACTOR IN WRITING. TESTING OF NEW GROUND SYSTEMS SHALL BE DONE BEFORE BONDING TO EXISTING GROUND SYSTEMS.

3. THE SUBCONTRACTOR SHALL FURNISH AND INSTALL SUPPLEMENTAL GROUND ELECTRODES AS NEEDED TO ACHIEVE A TEST RESULT OF 5 OHMS OR LESS. WHEN ADDING ELECTRODES, CONTRACTOR SHALL MAINTAIN A MINIMUM DISTANCE BETWEEN THE ADDED ELECTRODE AND ANY OTHER EXISTING ELECTRODE EQUAL TO THE BURIED LENGTH OF THE ROD. IDEALLY, CONTRACTOR SHALL STRIVE TO KEEP THE SEPARATION DISTANCE EQUAL TO TWICE THE BURIED LENGTH OF THE RODS.

4. THE SUBCONTRACTOR IS RESPONSIBLE FOR PROPERLY SEQUENCING GROUNDING AND UNDERGROUND CONDUIT INSTALLATION AS TO PREVENT ANY LOSS OF CONTINUITY IN THE GROUNDING SYSTEM OR DAMAGE TO THE CONDUIT.

5. METAL CONDUIT AND TRAY SHALL BE GROUNDED AND MADE ELECTRICALLY CONTINUOUS WITH LISTED BONDING FITTINGS OR BY BONDING ACROSS THE DISCONTINUITY WITH 6 AWG COPPER WIRE AND UL APPROVED GROUNDING TYPE CONDUIT CLAMPS.

6. METAL RACEWAY SHALL NOT BE USED AS THE NEC REQUIRED EQUIPMENT GROUND CONDUCTOR. STRANDED COPPER CONDUCTORS WITH GREEN INSULATION, SIZED IN ACCORDANCE WITH THE NEC, SHALL BE FURNISHED AND INSTALLED WITH THE POWER CIRCUITS TO TRANSMISSION EQUIPMENT.

7. CONNECTIONS TO THE GROUND BUS SHALL NOT BE DOUBLED UP OR STACKED.

8. ALUMINUM CONDUCTOR OR COPPER CLAD STEEL CONDUCTOR SHALL NOT BE USED FOR GROUNDING CONNECTIONS.

9. USE OF 90° BENDS IN THE PROTECTION GROUNDING CONDUCTORS SHALL BE AVOIDED WHEN 45° BENDS CAN BE ADEQUATELY SUPPORTED. IN ALL CASES, BENDS SHALL BE MADE WITH A MINIMUM BEND RADIUS OF 8 INCHES.

10. COMPRESSION TYPE 2-HOLE TONGUE TINNED COPPER CONNECTORS SHALL BE USED TO TERMINATE GROUNDING CONDUCTORS TO EQUIPMENT, FRAMES AND GROUND BARS. ALL HARDWARE SHALL BE STAINLESS STEEL. ONE-HOLE CONNECTORS SHALL BE USED ON EQUIPMENT MANUFACTURED WITH PROVISIONS FOR ONLY ONE-HOLE TERMINATION.

11. EACH INTERIOR TRANSMISSION CABINET FRAME/PLINTH SHALL BE DIRECTLY CONNECTED TO THE MASTER GROUND BAR WITH 6 AWG STRANDED, GREEN INSULATED SUPPLEMENTAL EQUIPMENT GROUND WIRE UNLESS NOTED OTHERWISE IN THE DETAILS. EACH OUTDOOR CABINET FRAME/PLINTH SHALL BE DIRECTLY CONNECTED TO THE BURIED GROUND CONDUCTOR WITH 2 AWG SOLID TIN-PLATED COPPER WIRE UNLESS NOTED OTHERWISE IN THE DETAILS.

12. ALL EXTERIOR GROUND CONDUCTORS BETWEEN EQUIPMENT/GROUND BARS AND THE BURIED GROUND CONDUCTOR, SHALL BE 2 AWG SOLID TIN-PLATED COPPER UNLESS OTHERWISE INDICATED.

13. EXOTHERMIC WELDS SHALL BE USED FOR ALL GROUNDING CONNECTIONS BELOW GRADE. CONNECTIONS ABOVE GRADE SHALL BE MADE WITH EXOTHERMIC WELDS WHERE PRACTICAL OR WITH HIGH-PRESSURE COMPRESSION CONNECTORS. MECHANICAL TYPE BRASS OR BRONZE CONNECTORS MAY ONLY BE USED WITH WRITTEN PERMISSION FROM CONTRACTORS ELECTRICAL ENGINEER.

14. EXOTHERMIC WELDS SHALL BE PERMITTED ON TOWERS ONLY WITH THE EXPRESS APPROVAL OF THE TOWER MANUFACTURER OR THE CONTRACTORS STRUCTURAL ENGINEER.

15. ALL WIRE-TO-WIRE GROUND CONNECTIONS TO THE INTERIOR GROUND RING (HALO) SHALL BE FORMED USING HIGH- PRESSURE COMPRESSION OR SPLIT BOLT CONNECTORS WHERE INDICATED IN THE DETAILS.

16. ON ROOFTOP SITES WHERE EXOTHERMIC WELDS ARE A FIRE HAZARD, COPPER HIGH-PRESSURE COMPRESSION H-TAP OR C-TAP CONNECTORS MAY BE USED FOR WIRE-TO-WIRE CONNECTORS. MECHANICAL TYPE BRASS OR BRONZE CONNECTORS MAY ONLY BE USED WITH WRITTEN PERMISSION FROM CONTRACTORS ELECTRICAL ENGINEER.

17. COMPRESSION TYPE CONNECTOR PROVIDING A 2-STUD TERMINATION PAD (BURNDY TYPE "GROUND LINK" OR ENGINEERING APPROVED EQUAL) SHALL BE USED FOR CONNECTION TO STRUCTURAL STEEL ON ROOF-TOP SITES AND ELEVATED TOWER LOCATIONS WHERE EXOTHERMIC WELDS ARE NOT PRACTICAL. MECHANICAL CABLE-TO-FLAT METAL BRASS OR BRONZE CONNECTOR MAY ONLY BE USED WITH WRITTEN PERMISSION FROM CONTRACTORS ELECTRICAL ENGINEER.

18. CONNECTION TO CONCRETE ENCASED REINFORCEMENT BAR SHALL BE MADE WITH A COMPRESSION GROUND TAP CONNECTOR.

19. COAX BRIDGE BONDING CONDUCTORS SHALL BE EXOTHERMICALLY BONDED TO THE BRIDGE SUPPORT POST. BRIDGE SECTIONS SHALL BE BONDED TOGETHER USING TWO-HOLE COMPRESSION CONNECTIONS.

20. APPROVED ANTIOXIDANT COATINGS (I.E., CONDUCTIVE GEL OR PASTE) SHALL BE USED ON ALL COMPRESSION AND BOLTED GROUND CONNECTIONS.

21. ALL EXTERIOR GROUND CONNECTIONS SHALL BE COATED WITH A CORROSION RESISTANT MATERIAL.

22. MISCELLANEOUS ELECTRICAL AND NON-ELECTRICAL METAL BOXES, FRAMES AND SUPPORTS SHALL BE BONDED TO THE GROUNDING SYSTEM IN ACCORDANCE WITH THE NEC.

23. BOND ALL METALLIC OBJECTS WITHIN 6 FT OF THE BURIED GROUND CONDUCTOR WITH 2 AWG SOLID TIN-PLATED COPPER GROUND CONDUCTOR.

24. GROUND CONDUCTORS USED IN THE FACILITY GROUND AND LIGHTNING PROTECTION SYSTEMS SHALL NOT BE ROUTED THROUGH METALLIC OBJECTS THAT FORM A RING AROUND THE CONDUCTOR, SUCH AS METALLIC CONDUITS, METAL SUPPORT CLIPS OR SLEEVES THROUGH WALLS OR FLOORS. WHEN IT IS REQUIRED TO BE HOUSED IN CONDUIT TO MEET CODE REQUIREMENTS OR LOCAL CONDITIONS, NON-METALLIC MATERIAL SUCH AS PVC PLASTIC CONDUIT SHALL BE USED. WHERE USE OF METAL CONDUIT IS UNAVOIDABLE (E.G., NON-METALLIC CONDUIT PROHIBITED BY LOCAL CODE) THE GROUND CONDUCTOR SHALL BE BONDED TO EACH END OF THE METAL CONDUIT WITH LISTED BONDING FITTINGS.

25. FURNISH, INSTALLATION AND TESTING OF GROUNDING SYSTEM SHALL BE IN ACCORDANCE WITH TECHNICAL SPECIFICATION FOR FACILITY GROUNDING OF RADIO ACCESS NETWORK SITES.

VRG
VERTICAL RESOURCES GROUP
23 Midstate Drive, #210
Auburn, MA 01501
Tel (508) 981-9590
Fax (508) 519-8939
mpoirier@verticalresourcesgrp.com

EMPIRE telecom
EMPIRE TELECOM USA, LLC
16 ESQUIRE ROAD
BILLERICA, MA 01821

SITE NUMBER: CT5331
SITE NAME: TOLLAND CENTRAL
PROJECT: LTE 4C / 5GNR / 4TxRx
130 BALD HILL ROAD
TOLLAND, CT 06084
TOLLAND COUNTY

at&t
550 COCHITUATE RD
SUITES 13 & 14
FRAMINGHAM, MA 01701

NO.	DATE	REVISION	BY	CHK	APP'D
2	09/10/20	GENERAL REVISIONS	G.A.M.		
2	08/24/20	ADDED TOWER MODIFICATIONS	G.A.M.		
1	05/12/20	REVISED PER NEW RFDS	G.A.M.		
0	04/29/20	FOR REVIEW	G.A.M.		

SCALE | DESIGNED BY: M.N | DRAWN BY: G.A.M.

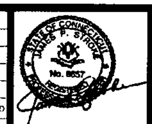

AT&T

TITLE SHEET / NOTES

JOB NUMBER	DRAWING NUMBER	REV
CT5331-LTE4C5G	01	2

AT&T RF SYSTEM SCHEDULE

POSITION	SECTOR	STATUS	BAND	ANTENNA MAKE	ANTENNA MODEL	SIZE(INCHES) (LxWxH)	RAD CTR, FT. AGL	AZIMUTH	TMA/DIPLEXER /COMBINER	REMOTE RADIOS	RADIO LOCATION	SIZE(INCHES) (LxWxH)	FEEDER TYPE	FEEDER LENGTH	RAYCAP
1	Alpha	PROPOSED	LTE700b14/WCS/AWS	CCI	TPA65RBU8DA	96.0x20.7x7.7	±170.0'	30°		1 RRUS-4478b14 0 RRUS-8843b2666 RRUS-32b30	TOWER MOUNTED	18.1x13.4x8.3 14.9x13.2x10.9 27.2x12.1x7.0	(P3) DC TRUNK (P1) FIBER TRUNK		(E1) DC6-48-60-18-8F
2	Alpha	PROPOSED	LTE700bc/5G850	CCI	DMP65RBU8DA	96.0x20.7x7.7	±170.0'	30°		1 RRUS-4449b5b12 1 RRUS-8843b2666	TOWER MOUNTED	17.9x13.2x9.5 14.9x13.2x10.9			
3	Alpha														
4	Alpha														
1	Beta	PROPOSED	LTE700b14/WCS/AWS	CCI	TPA65RBU8DA	96.0x20.7x7.7	±170.0'	140°		1 RRUS-4478b14 0 RRUS-8843b2666 RRUS-32b30	TOWER MOUNTED	18.1x13.4x8.3 14.9x13.2x10.9 27.2x12.1x7.0	(P3) DC TRUNK (P1) FIBER TRUNK		
2	Beta	PROPOSED	LTE700bc/5G850	CCI	DMP65RBU8DA	96.0x20.7x7.7	±170.0'	140°		1 RRUS-4449b5b12 1 RRUS-8843b2666	TOWER MOUNTED	17.9x13.2x9.5 14.9x13.2x10.9			(E1) DC6-48-60-18-8F
3	Beta														
4	Beta														
1	Gamma	PROPOSED	LTE700b14/WCS/AWS	CCI	TPA65RBU8DA	96.0x20.7x7.7	±170.0'	260°		1 RRUS-4478b14 0 RRUS-8843b2666 RRUS-32b30	TOWER MOUNTED	18.1x13.4x8.3 14.9x13.2x10.9 27.2x12.1x7.0	(P3) DC TRUNK (P1) FIBER TRUNK		
2	Gamma	PROPOSED	LTE700bc/5G850	CCI	DMP65RBU8DA	96.0x20.7x7.7	±170.0'	260°		1 RRUS-4449b5b12 1 RRUS-8843b2666	TOWER MOUNTED	17.9x13.2x9.5 14.9x13.2x10.9			(P1) DC6-48-60-18-8CEV
3	Gamma														
4	Gamma														

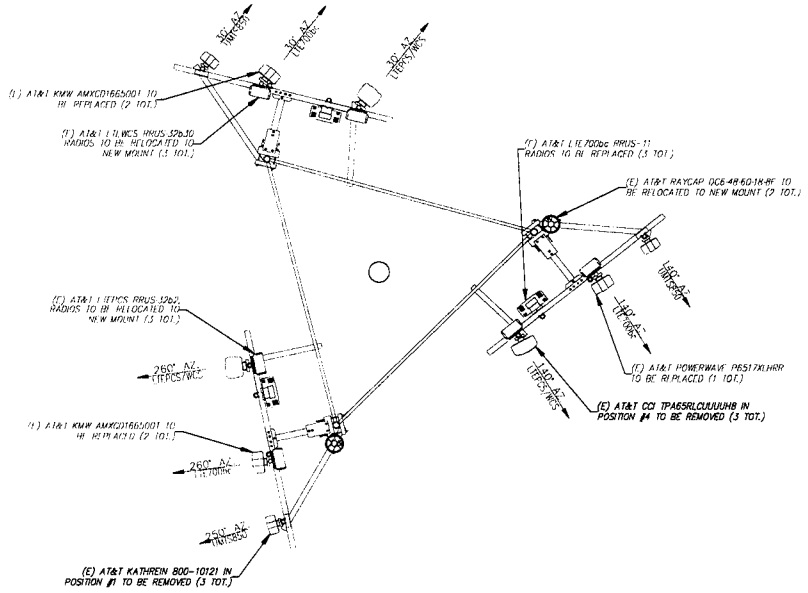

(E) ANTENNA LAYOUT
ELEV. 90'

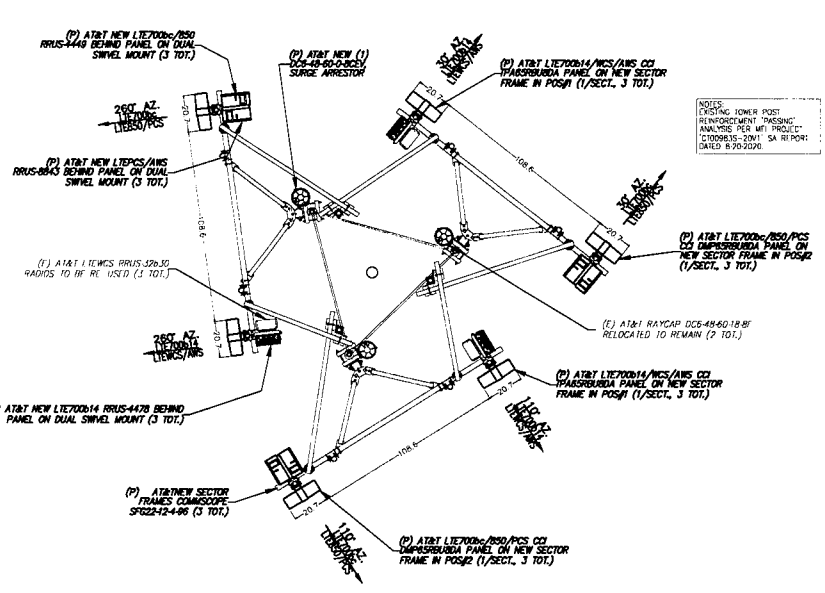

(P) ANTENNA LAYOUT
ELEV. 170'

ANTENNA MOUNTING PLAN VIEW (1/03)
SCALE: N.T.S.

VRG
VERTICAL RESOURCES GROUP
23 Midstate Drive, #210
Auburn, MA 01501
tel. (508) 981-9590
fax (508) 519-8939
mnabre@verticalresourcesgrp.com

EMPIRE telecom
EMPIRE TELECOM USA, LLC
16 LSQUIRE ROAD
BILLERICA, MA 01821

SITE NUMBER: CT5331
SITE NAME: TOLLAND CENTRAL
PROJECT: LTE 4C / 5GNR / 4TxRx

130 BALD HILL ROAD
TOLLAND, CT 06084
TOLLAND COUNTY

at&t
550 COCHITUATE RD
SUITES 13 & 14
FRAMINGHAM, MA 01701

NO.	DATE	REVISION	BY	CHK	APP'D
3	09/10/20	GENERAL REVISIONS	C.A.M.		
2	08/24/20	ADDED TOWER MODIFICATIONS	C.A.M.		
1	05/12/20	REVISED PER NEW RFDS	C.A.M.		
0	04/29/20	FOR REVIEW	C.A.M.		

SCALE: | DESIGNED BY: M.N. | DRAWN BY: C.A.M.

COMMONWEALTH OF MASSACHUSETTS — MICHAEL F. STAFFIER — No. 9057 — REGISTERED PROFESSIONAL ENGINEER

AT&T

RF SCHEDULE/ANTENNA PLAN

JOB NUMBER	DRAWING NUMBER	REV.
CT5331-LTE4CSG	03	2

GENERAL NOTES

1. THE CELLULAR INSTALLATION IS AN UNMANNED PRIVATE AND SECURED COMPOUND. IT IS ONLY ACCESSED BY TRAINED TECHNICIANS FOR PERIODIC ROUTINE MAINTENANCE, AND THEREFORE, DOES NOT REQUIRE ANY WATER OR SANITARY SEWER SERVICE. THE FACILITY IS NOT GOVERNED BY REGULATIONS REQUIRING PUBLIC ACCESS PER ADA REQUIREMENTS.
2. CONSTRUCTION, MAINTENANCE & OPERATION OF PROPOSED TOWER FACILITY WILL BE HELD IN ACCORDANCE WITH ALL APPLICABLE LOCAL, STATE & FEDERAL REGULATIONS, AND GUIDELINES.

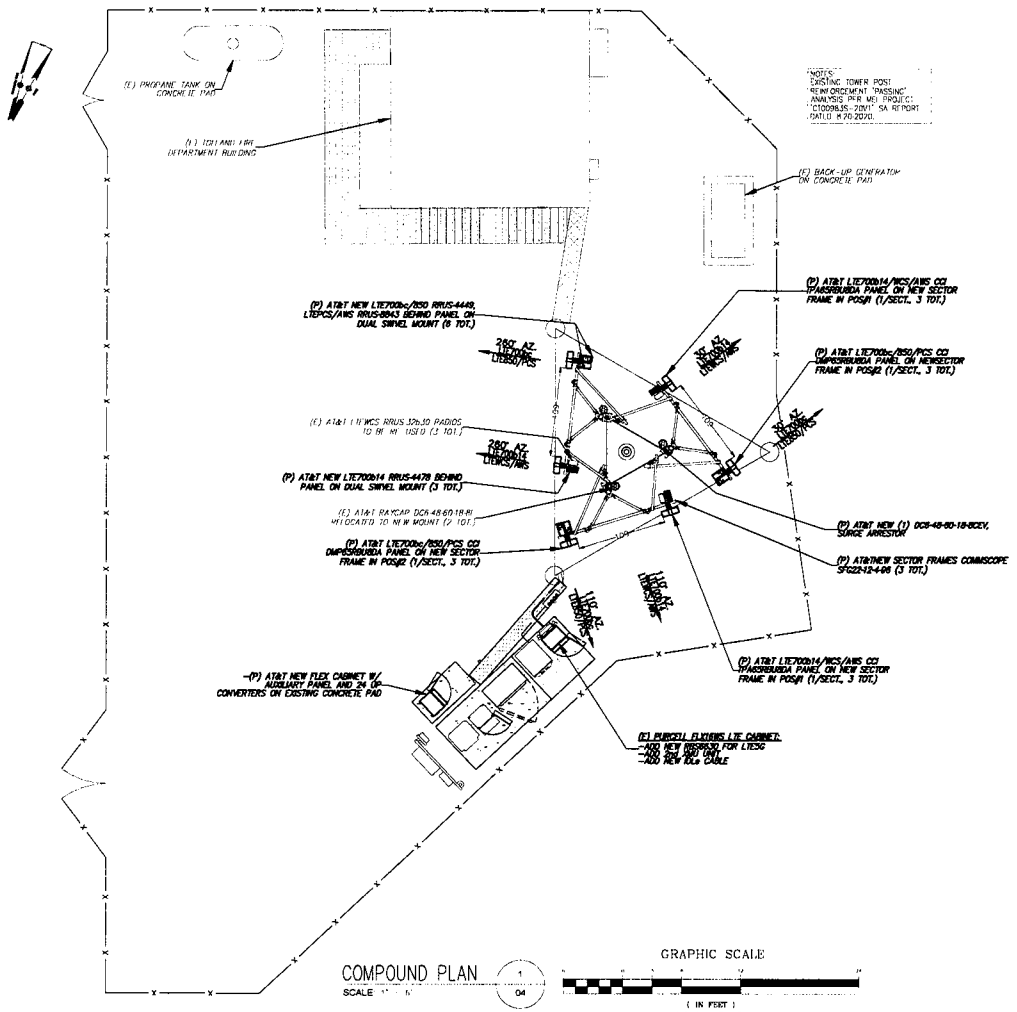

COMPOUND PLAN 1/04
SCALE 1" = 5'

GRAPHIC SCALE
(IN FEET)
1 inch = 5 FT.

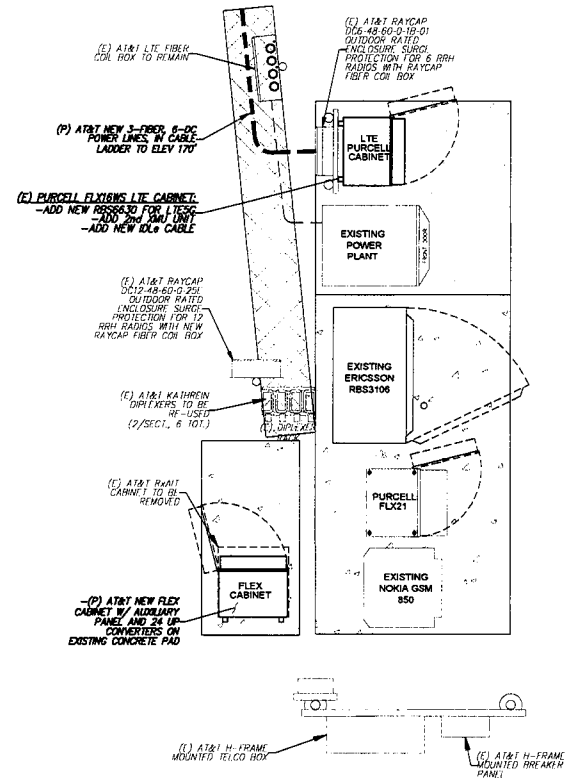

EQUIPMENT PLAN 2/04
SCALE: 1" = 2'

VRG
VERTICAL RESOURCES GROUP
23 Midstate Drive, #210
Auburn, MA 01501
Tel. (508) 981-9590
Fax (508) 519-8939
mnabre@verticalresourcesgrp.com

EMPIRE telecom
EMPIRE TELECOM USA, LLC
16 LISQUIRT ROAD
BILLERICA, MA 01821

SITE NUMBER: CT5331
SITE NAME: TOLLAND CENTRAL
PROJECT: LTE 4C / 5GNR / 4TxRx
130 BALD HILL ROAD
TOLLAND, CT 06084
TOLLAND COUNTY

at&t
550 COCHITUATE RD
SUITES 13 & 14
FRAMINGHAM, MA 01701

NO.	DATE	REVISION	BY	CHK'D	APP'D
1	09/10/20	GENERAL REVISIONS	G.A.M.		
2	08/24/20	ADDED TOWER MODIFICATIONS	G.A.M.		
1	05/12/20	REVISED PER NEW RFDS	G.A.M.		
0	04/29/20	FOR REVIEW	G.A.M.		

SCALE: | DESIGNED BY: M.N. | DRAWN BY: G.A.M.

JAMES P. RITTI No. 8057 REGISTERED PROFESSIONAL ENGINEER

AT&T

SITE PLAN & EQUIPMENT PLAN

JOB NUMBER	DRAWING NUMBER	REV.
CT5331-LTE4C5G	04	2

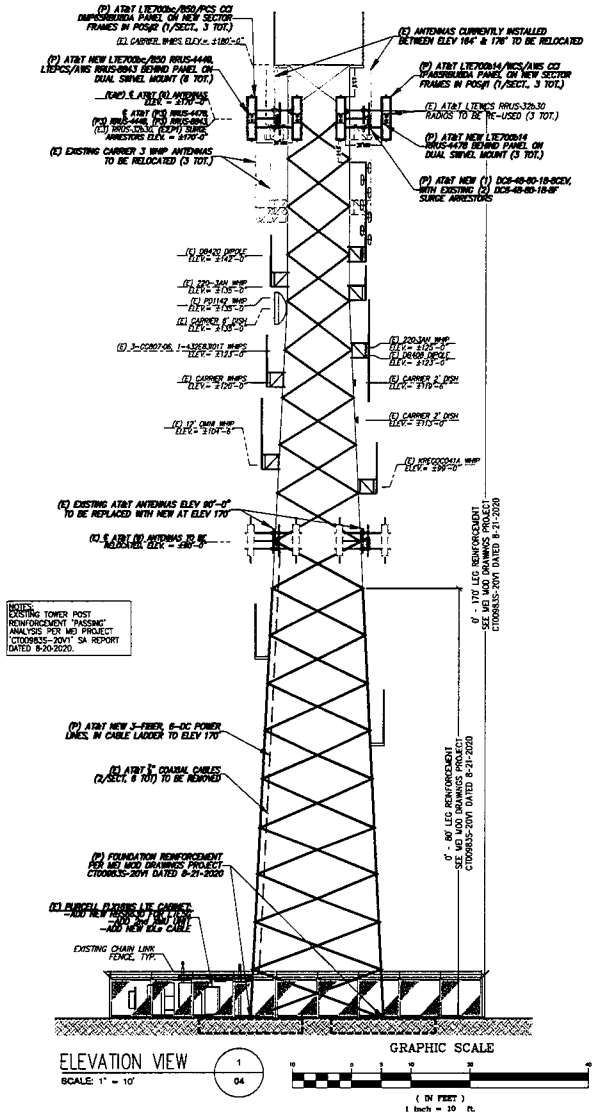

ELEVATION VIEW
SCALE: 1" = 10'
1 / 04

GRAPHIC SCALE
(IN FEET)
1 inch = 10 ft.

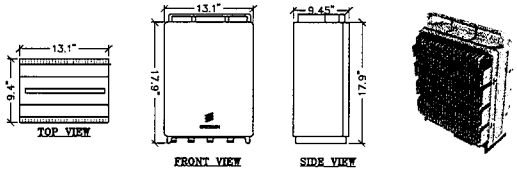

(P) AT&T LTE850/700bc
RRUS-4449b5b12
SCALE: N.T.S.
3 / 05

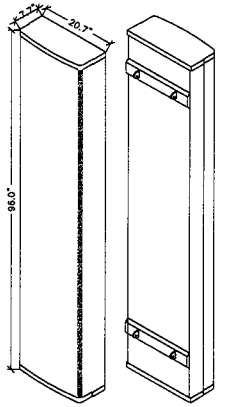

(P) LTE700b14/WCS/AWS
CCI TPA65RBU8DA
SCALE: N.T.S.
4 / 05

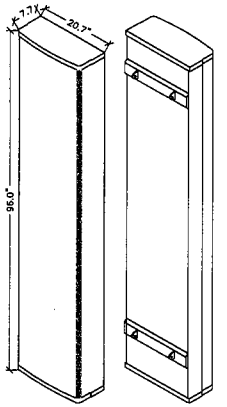

(P) LTE700bc/850/PCS
CCI DMP65RBU8DA
SCALE: N.T.S.
5 / 05

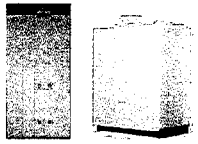

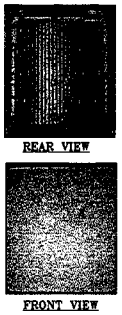

(P) AT&T LTE700d
RRUS-4478b14
SCALE: N.T.S.
6 / 05

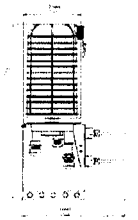

(P) RAYCAP SURGE
SUPPRESSOR
DC64860188CEV
SCALE: N.T.S.
7 / 05

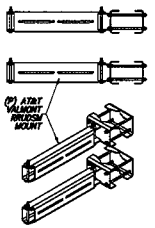

(P) AT&T RRU
DUAL SWIVEL MOUNT
SCALE: N.T.S.
8 / 05

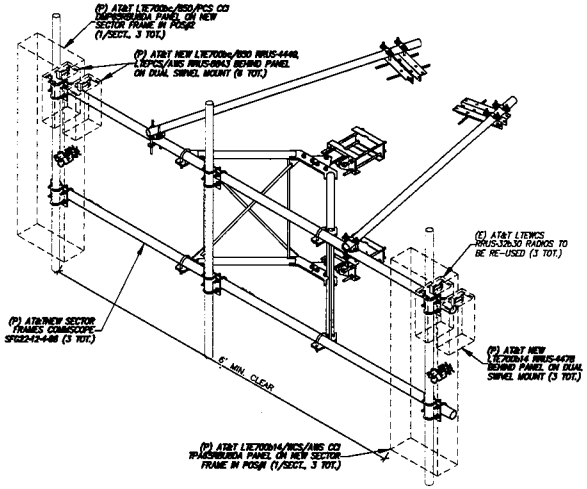

(P) ALpha/Beta/Gamma FRAME LAYOUT
RRH & SURGE MOUNTING DETAIL ELEV 170'
SCALE: N.T.S.
10 / 05

VRG
VERTICAL RESOURCES GROUP
23 Midstate Drive, #210
Auburn, MA 01501
Tel. (508) 981-9590
Fax (508) 519-8939
mnobre@verticalresourcesgrp.com

EMPIRE telecom
EMPIRE TELECOM USA, LLC
16 ESQUIRE ROAD
BILLERICA, MA 01821

SITE NUMBER: CT5331
SITE NAME: TOLLAND CENTRAL
PROJECT: LTE 4C / 5GNR / 4TxRx
130 BALD HILL ROAD
TOLLAND, CT 06084
TOLLAND COUNTY

at&t
550 COCHITUATE RD
SUITES 13 & 14
FRAMINGHAM, MA 01701

NO.	DATE	REVISION	BY	CHK	APP'D
6	09/10/20	GENERAL REVISIONS	G.A.M.		
5	08/24/20	ADDED TOWER MODIFICATIONS	G.A.M.		
4	05/12/20	REVISED PER NEW RFDS	G.A.M.		
3	04/29/20	FOR REVIEW	G.A.M.		

SCALE | DESIGNED BY: M.N. | DRAWN BY: G.A.M.

STATE OF CONNECTICUT JAMES P. STRUDAS No 18557

AT&T
ELEVATION VIEW & ANTENNA LAYOUT

JOB NUMBER	DRAWING NUMBER	REV
CT5331-LTE4CSG	05	2

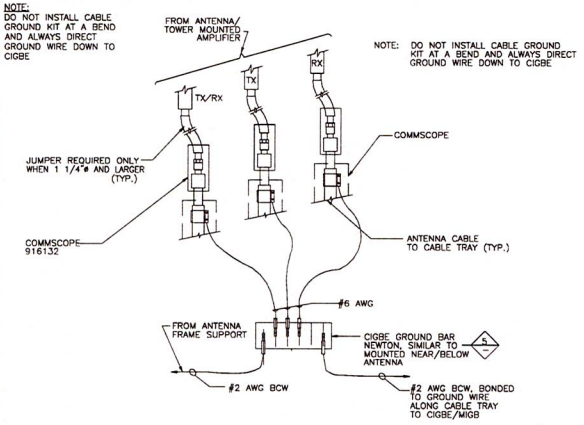

NOTE: DO NOT INSTALL CABLE GROUND KIT AT A BEND AND ALWAYS DIRECT GROUND WIRE DOWN TO CIGBE

CONNECTION OF GROUND WIRES TO GROUNDING BAR (CIGBE)

1 / 06

SCALE: N.T.S.

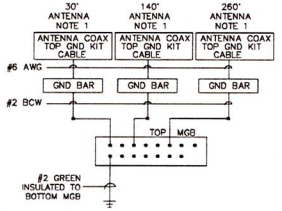

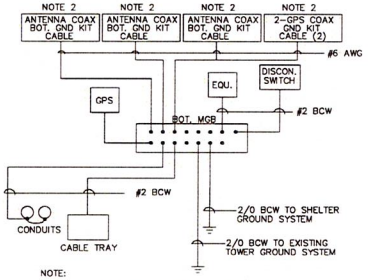

NOTE:
1. BOND ANTENNA GROUNDING KIT CABLE TO TOP CIGBE
2. BOND ANTENNA GROUNDING KIT CABLE TO BOTTOM CIGBE

SCHEMATIC GROUNDING DIAGRAM

4 / 06

SCALE: N.T.S.

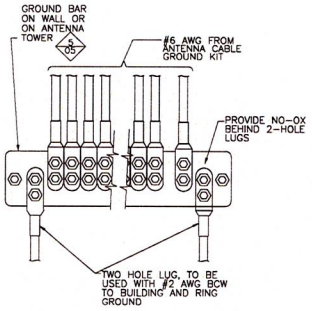

INSTALLATION OF GROUND WIRE TO GROUND BAR

2 / 06

SCALE: N.T.S.

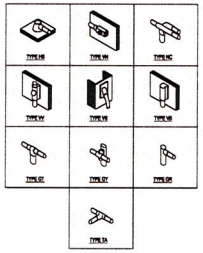

GROUNDING CONNECTION DETAIL

5 / 06

SCALE: N.T.S.

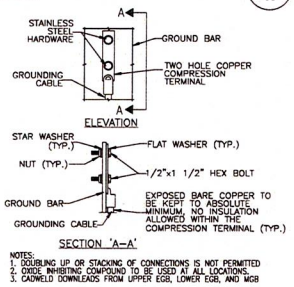

NOTES:
1. DOUBLING UP OR STACKING OF CONNECTIONS IS NOT PERMITTED
2. OXIDE INHIBITING COMPOUND TO BE USED AT ALL LOCATIONS.
3. CADWELD DOWNLEADS FROM UPPER EGB, LOWER EGB, AND MGB

TYP. MECHANICAL CONNECTION

6 / 06

SCALE: N.T.S.

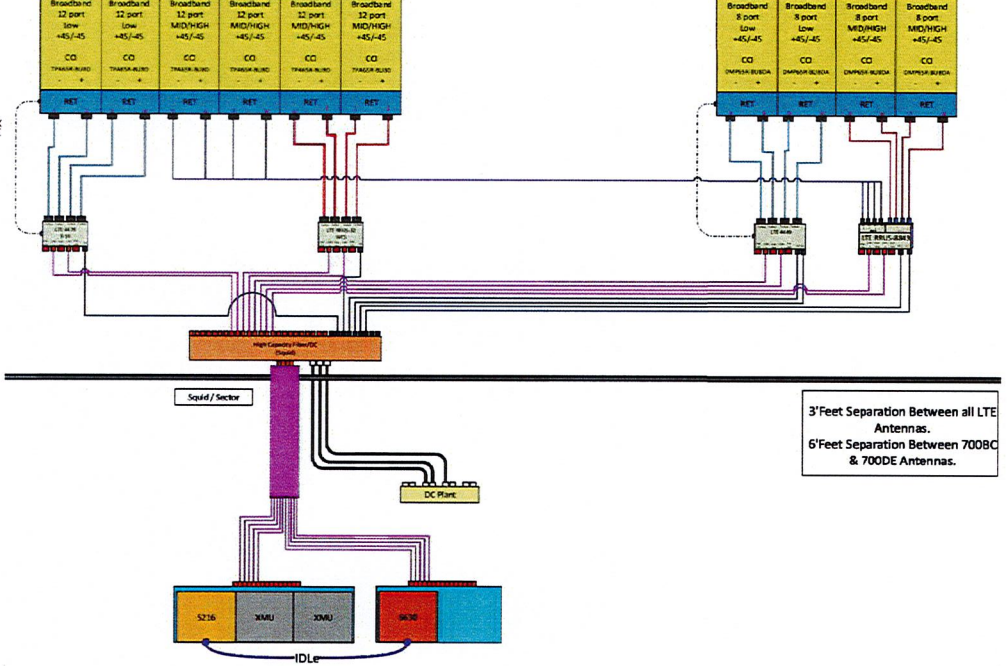

3'Feet Separation Between all LTE Antennas.
6'Feet Separation Between 7008C & 700DE Antennas.

ALPHA/BETA/GAMMA PLUMBING DIAGRAM

3 / 06

SCALE: N.T.S.

NOTE:
1. CONTRACTOR TO CONFIRM ALL PARTS
2. INSTALL ALL EQUIPMENT PER MANUFACTURERS RECOMMENDATIONS

NEWTON INSTRUMENT COMPANY, INC.
BUTNER, N.C. OR APPROVED EQUAL

ITEM	REQ.	PART NO.	DESCRIPTION
1	1	1/4"x4"x12"	PRE DRILLED GND. BAR
2	2	A-6056	WALL MTG. BRKT.
3	2	3061-4	INSULATORS
4	2	3012-13	5/8"-11x4" H.H.C.S.
5	4	3015-8	5/8 LOCKWASHER
6	2	3014-8	5/8"-11 HEX NUT

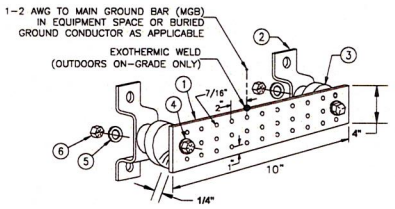

GROUND BAR DETAIL

7 / 06

SCALE: N.T.S.

VRG
VERTICAL RESOURCES GROUP
23 Midstate Drive, #210
Auburn, MA 01501
Tel. (508) 981-9590
Fax (508) 519-8939
mnobre@verticalresourcesgrp.com

EMPIRE telecom
EMPIRE TELECOM USA, LLC
16 ESQUIRE ROAD
BILLERICA, MA 01821

SITE NUMBER: CT5331
SITE NAME: TOLLAND CENTRAL
PROJECT: LTE 4C / 5GNR / 4TxRx

130 BALD HILL ROAD
TOLLAND, CT 06084
TOLLAND COUNTY

at&t
550 COCHITUATE RD
SUITES 13 & 14
FRAMINGHAM, MA 01701

NO.	DATE	REVISION	BY	CHK	APP'D
1	09/10/20	GENERAL REVISIONS	G.A.M.		
2	08/24/20	ADDED TOWER MODIFICATIONS	G.A.M.		
1	05/12/20	REVISED PER NEW RFDS	G.A.M.		
2	04/29/20	FOR REVIEW	G.A.M.		

SCALE | DESIGNED BY: M.N. | DRAWN BY: G.A.M.

STATE OF CONNECTICUT JAMES P. STONE No. 19657 REGISTERED PROFESSIONAL ENGINEER

AT&T

GROUNDING DETAILS

JOB NUMBER	DRAWING NUMBER	REV
CT5331-LTE4C5G	06	2

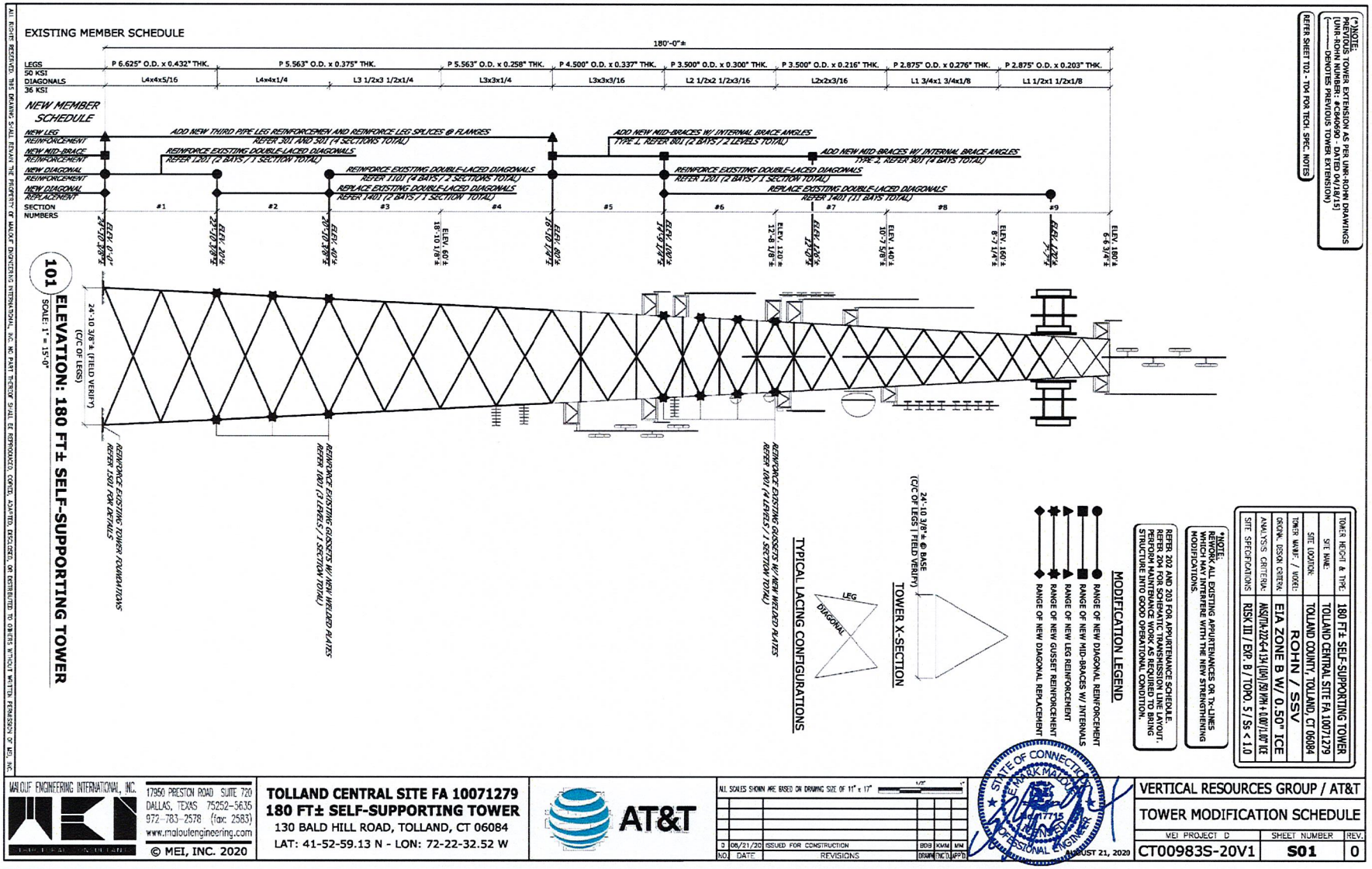

ALL RIGHTS RESERVED. THIS DRAWING SHALL REMAIN THE PROPERTY OF MALOUF ENGINEERING INTERNATIONAL, INC. NO PART THEREOF SHALL BE REPRODUCED, COPIED, ADAPTED, DISCLOSED, OR DISTRIBUTED TO OTHERS WITHOUT WRITTEN PERMISSION OF MEI, INC.

MALOUF ENGINEERING INTERNATIONAL, INC.
17950 PRESTON ROAD SUITE 720
DALLAS, TEXAS 75252-5635
972-783-2578 (fax: 2583)
www.maloufengineering.com
© MEI, INC. 2020

TOLLAND CENTRAL SITE FA 10071279
180 FT± SELF-SUPPORTING TOWER
130 BALD HILL ROAD, TOLLAND, CT 06084
LAT: 41-52-59.13 N - LON: 72-22-32.52 W

AT&T

ALL SCALES SHOWN ARE BASED ON DRAWING SIZE OF 11" x 17"

NO.	DATE	REVISIONS	BY	CHK	APP'D
0	08/21/20	ISSUED FOR CONSTRUCTION	BDB	KWM	MM

STATE OF CONNECTION — REMARK MALOUF — 17715 — PROFESSIONAL ENGINEER
AUGUST 21, 2020

VERTICAL RESOURCES GROUP / AT&T
TOWER MODIFICATION SCHEDULE

VEI PROJECT D	SHEET NUMBER	REV.
CT00983S-20V1	S01	0

VRG
VERTICAL RESOURCES GROUP
23 Midstate Drive, #210
Auburn, MA 01501
Tel. (508) 981-9590
Fax (508) 519-8939
mnobre@verticalresourcesgrp.com

EMPIRE telecom
EMPIRE TELECOM USA, LLC
16 ESQUIRE ROAD
BILLERICA, MA 01821

SITE NUMBER: CT5331
SITE NAME: TOLLAND CENTRAL
PROJECT: LTE 4C / 5GNR / 4TxRx
130 BALD HILL ROAD
TOLLAND, CT 06084
TOLLAND COUNTY

at&t
550 COCHITUATE RD
SUITES 13 & 14
FRAMINGHAM, MA 01701

NO.	DATE	REVISION	BY	CHK	APP'D
4	09/10/20	GENERAL REVISIONS	G.A.M.		
3	08/24/20	ADDED TOWER MODIFICATIONS	G.A.M.		
2	05/12/20	REVISED PER NEW RFDS	G.A.M.		
1	04/29/20	FOR REVIEW	G.A.M.		

SCALE | DESIGNED BY: M.N. | DRAWN BY: G.A.M.

AT&T

TOWER MOD DETAILS I

JOB NUMBER	DRAWING NUMBER	REV
CT5331-LTE4C5G	07	2

REFER 101 FOR TOWER MODIFICATION SCHEDULE.

REFER SHEET T02 - T04 FOR TECH. SPEC. NOTES

TOWER HEIGHT & TYPE:	180 FT± SELF-SUPPORTING TOWER
SITE NAME:	TOLLAND CENTRAL SITE FA 10071279
SITE LOCATION:	TOLLAND COUNTY, TOLLAND, CT 06084
TOWER MANUF. / MODEL:	ROHN / SSV
ORIGINAL DESIGN CRITERIA:	EIA ZONE B W/ 0.50" ICE
ANALYSIS CRITERIA:	ANSI/TIA-222-G-4 134 (104) /50 MPH + 0.00"/1.00" ICE
SITE SPECIFICATIONS	RISK III / EXP. B / TOPO. 5 / Ss < 1.0

ELEV (FT)	TENANT	ANTS QTY	APPURTENANCE MODEL / DESCRIPTION	MOUNT DESCRIPTION	LINES QTY	LINE SIZE & LOCATION
170	AT&T	9	TPA65R-BU8D PANEL ANTENNAS	(3) 12FT SECTOR MOUNTS (SFG22-12-4-95 OR EQUIVALENT)	9	3/4" DC POWER CABLES
		9	DMP65R-BU8DA PANEL ANTENNAS		144	FIBER CABLES (FZ)
		9	RRUS-4478 B14 BOXES			
		9	RRUS-32 B30 BOXES			
		9	RRUS-4449 B5/B12 RRH BOXES			
		9	RADIO 8843 B2/B66A BOXES			
170		9	DC6-48-60-18-8C-EV OVP BOXES	LEG MOUNTED		
			APPURTENANCES TO BE REMOVED (SEE BELOW)			
90	AT&T	9	KATHREIN 800-10121 PANEL ANTENNAS	(3) 10FT SECTOR FRAME MOUNTS	6	7/8" DC CABLES
		9	KNW-AM-X-CD-1665007 PANELS		2	FIBER CABLE - (FZ)
		6	POWERWAVE LGP21401 TMA'S		1	
		9	ERICSSON RRUS-11 BOXES			
		9	ERICSSON RRUS-12 BOXES			
		1	RAYCAP DC6-48-60-18-8F OVP BOX			

202 PROPOSED CHANGED APPURTENANCES SCHEDULE

ELEV (FT)	TENANT	ANTS QTY	APPURTENANCE MODEL / DESCRIPTION	MOUNT DESCRIPTION	LINES QTY	LINE SIZE & LOCATION
180		1	DS4F06P36D-D WHIP ANTENNA	3FT SIDE ARM MOUNT	1	1 1/4"
					1	7/8" - (FZ)
		1	DB224 DIPOLE ANTENNA	LEG MOUNTED	1	7/8" - (FZ)
		1	KRECO CO-41A WHIP ANTENNA	3FT SIDE ARM MOUNT	1	7/8" - (FZ)
		1	KRECO CO-41A WHIP ANTENNA	LEG MOUNTED	1	7/8" - (FZ)
142		1	DB224 DIPOLE ANTENNA	3FT SIDE ARM MOUNT	1	7/8" - (FZ)
135		1	DB420 DIPOLE ANTENNA	3FT SIDE ARM MOUNT	1	7/8" - (FZ)
135		1	220-3AN WHIP ANTENNA	3FT SIDE ARM MOUNT	1	7/8" - (FZ)
135		1	6FT DISH W/ RADOME	DISH PIPE MOUNT - NE LEG	1	EW63 - (FZ)
135		1	PD1142-1 WHIP ANTENNA	3FT SIDE ARM MOUNT	1	1/2" - (FZ)
125		1	220-3AN WHIP ANTENNA	4FT SIDE ARM MOUNT	1	7/8" - (FZ)
123		1	CC807-06 WHIP ANTENNA	3FT SIDE ARM MOUNT	2	1 5/8" (FZ)
		1	CC807-06 INVERTED WHIP ANTENNA			
123		1	CC807-06 WHIP ANTENNA	3FT SIDE ARM MOUNT	2	1 5/8"
		1	432E-B3I-01T BOX		2	1/2" - (FZ)
123		1	DB408 ANTENNA	4FT SIDE ARM MOUNT	1	7/8" - (FZ)
119.5		1	2FT DISH W/ RADOME	LEG MOUNTED - NE LEG	1	5/8" - (FZ)
113		1	2FT DISH W/ RADOME	LEG MOUNTED - NE LEG	1	5/8" - (FZ)
104.5		1	12FT X 3"-DIA WHIP ANTENNA	4FT SIDE ARM MOUNT	1	1/2" - (FZ)
102		1	YAGI (S4307) ANTENNA	PIPE MOUNT (C5 MOUNT)	1	1/2" - (FZ)
99		1	KRECO CO-41A WHIP ANTENNA	4FT SIDE ARM MOUNT	1	1/2" - (FZ)
90		1	KRECO CO-41A WHIP ANTENNA	4FT SIDE ARM MOUNT	1	1/2" - (FZ)
85		1	DB224 ANTENNA	4FT SIDE ARM MOUNT	1	1/2" - (FZ)
75		1	YAGI (S4307) ANTENNA	PIPE MOUNT (C5 MOUNT)	1	1/2" - (FZ)
70		1	YAGI (S4307) ANTENNA	PIPE MOUNT (C5 MOUNT)	1	1/2" - (FZ)

203 EXISTING / RESERVED APPURTENANCES SCHEDULE

No.	QTY.	DESCRIPTION	ELEV.	TENANT
1	1	1 1/4"	180'	E
2	1	7/8"	180'	E
3	1	7/8"	180'	E
4	1	7/8"	180'	E
5	1	7/8"	180'	E
6	1	7/8"	135'	E
7	1	1/2"	135'	E
8	1	7/8"	125'	E
9	1	7/8"	123'	E
10	1	5/8"	119'	E
11	1	5/8"	113'	E
12	1	1/2"	104'	E
13	1	1/2"	102'	E
14	1	1/2"	85'	E
15	1	FEEDLINE LADDER (AF)	180'	E
16	1	CLIMBING LADDER	180'	E
17	1	SAFETY LINE 3/8"	180'	E

No.	QTY.	DESCRIPTION	ELEV.	TENANT
18	1	1/2"	180'	E
19	1	7/8"	142'	E
20	1	EW63	135'	E
21	2	1 5/8"	123'	E
22	2	1 5/8"	123'	E
23	2	1/2"	123'	E
24	1	1/2"	99'	E
25	1	1/2"	90'	E
26	1	1/2"	75'	E
27	1	1/2"	70'	E
28	1	FEEDLINE LADDER (AF)	180'	E
29	1	STEP BOLTS	100'	E
30	1	CLIMBING LADDER	120'	E
31	9	3/4" DC POWER CABLE	170'	ATT / P
32	3	FIBER CABLE	170'	ATT / P
33	1	FEEDLINE LADDER (AF)	170'	EXTEND / ATT / E

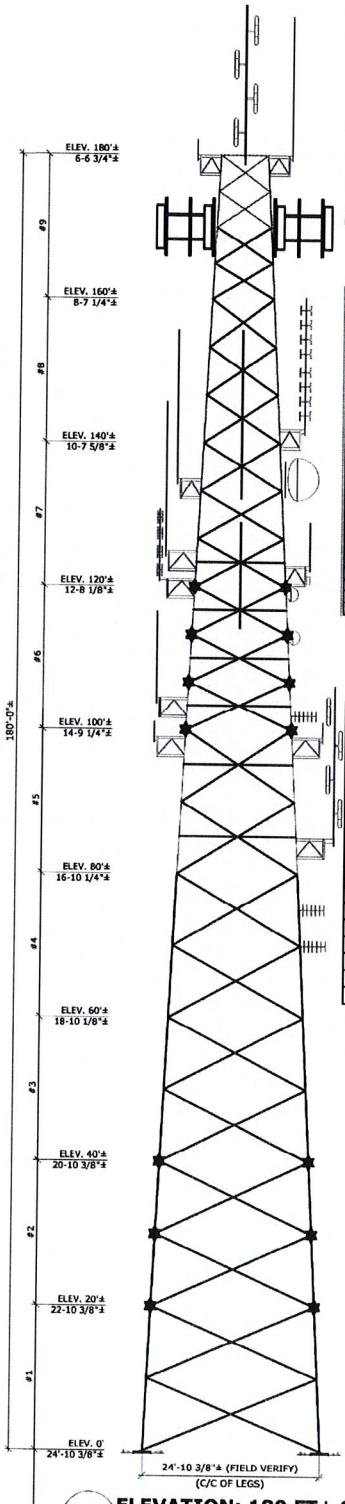

201 ELEVATION: 180 FT± SELF-SUPPORTING TOWER

SCALE: 1" = 15'-0"

LEGEND:

E = EXISTING #X

P = PROPOSED #X

F = FUTURE #X

R = REMOVE #X

TO RELOCATE

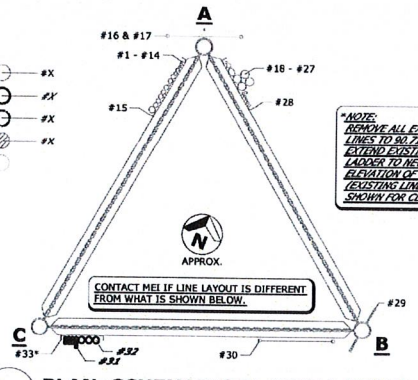

204 PLAN: SCHEMATIC Tx-LINE LAYOUT

SCALE: NOT TO SCALE

NOTES:

1. TX-LINE LAYOUT IS SCHEMATIC ONLY; BASED UPON LIMITED DATE AND PHOTOS PROVIDED.
2. NEW BRACKET SUPPORT SPECIFICATION BY OTHERS.

ALL RIGHTS RESERVED. THIS DRAWING SHALL REMAIN THE PROPERTY OF MALOUF ENGINEERING INTERNATIONAL, INC. NO PART THEREOF SHALL BE REPRODUCED, COPIED, ADAPTED, DISCLOSED, OR DISTRIBUTED TO OTHERS WITHOUT WRITTEN PERMISSION OF MEI, INC.

MALOUF ENGINEERING INTERNATIONAL, INC.
12950 PRESTON ROAD SUITE 720
DALLAS, TEXAS 75252-5635
972-783-2578 (fax: 2583)
www.maloufengineering.com

© MEI, INC. 2020

TOLLAND CENTRAL SITE FA 10071279
180 FT± SELF-SUPPORTING TOWER
130 BALD HILL ROAD, TOLLAND, CT 06084
LAT: 41-52-59.13 N - LON: 72-22-32.52 W

VERTICAL RESOURCES GROUP / AT&T
APPURTENANCES SCHEDULE AND TX-LINE LAYOUT

MEI PROJECT ID	SHEET NUMBER	REV.
CT00983S-20V1	S02	0

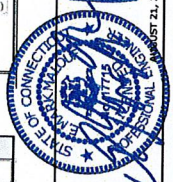

NO.	DATE	ISSUED FOR CONSTRUCTION / REVISIONS	DRAWN	CHK	APP'D
0	08/21/20		EBB	KW	MM

ALL SCALES SHOWN ARE BASED ON DRAWING SIZE @ 11" x 17"

NO.	DATE	SCALE	DESIGNED BY: M.N.	DRAWN BY: C.A.M.	CHK	APP'D
1	04/29/20	FOR REVIEW			C.A.M.	
2	05/12/20	REVISED PER NEW RFDS			C.A.M.	
3	08/24/20	ADDED TOWER MODIFICATIONS			C.A.M.	
4	09/10/20	GENERAL REVISIONS			C.A.M.	

AT&T

JOB NUMBER: CT5331-1TE4CS
DRAWING NUMBER: 08
REV: 2

TOWER MOD DETAILS II

AT&T

at&t
550 COCHITUATE RD
SUITES 13 & 14
FRAMINGHAM, MA 01701

SITE NUMBER: CT5331
SITE NAME: TOLLAND CENTRAL
PROJECT: LTE 4C / 5GNR / 4TxRx
130 BALD HILL ROAD
TOLLAND, CT 06084
TOLLAND COUNTY

EMPIRE telecom
EMPIRE TELECOM USA, LLC
16 ESQUIRE ROAD
BILLERICA, MA 01821

VRG
VERTICAL RESOURCES GROUP
23 Midstate Drive, #210
Auburn, MA 01501
Tel: (508) 949-9590
Fax: (508) 949-8939
mnabre@verticalresourcesgrp.com

ALL RIGHTS RESERVED. THIS DRAWING SHALL REMAIN THE PROPERTY OF MALOUF ENGINEERING INTERNATIONAL, INC. NO PART THEREOF SHALL BE REPRODUCED, COPIED, ADAPTED, DISCLOSED OR DISTRIBUTED TO OTHERS WITHOUT WRITTEN PERMISSION OF MEI, INC.

REFER SHEET T02 -T04 FOR TECH. SPEC. NOTES

NOTE:
LAYOUTS WERE CREATED FROM VERY LIMITED INFORMATION AND PHOTOS PROVIDED, FIELD VERIFICATION OF FIT FOR ALL REINFORCEMENT IS RECOMMENDED PRIOR TO PURCHASE. IF ANY ISSUES ARE FOUND THAT INTERFERE WITH REINFORCEMENT INSTALLATION DURING VERIFICATION PROCESS PLEASE CONTACT ENGINEER AND SUPPLY APPLICABLE TOWER INFORMATION W/ PHOTOS.

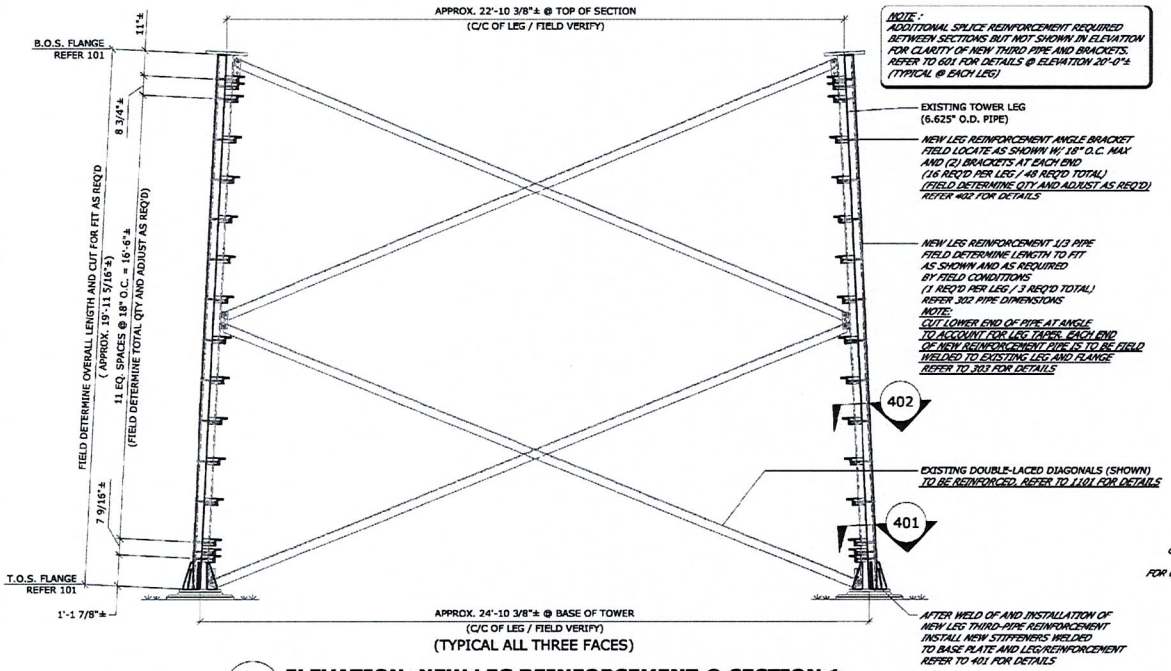

(TYPICAL ALL THREE FACES)

301 ELEVATION: NEW LEG REINFORCEMENT @ SECTION 1
SCALE: 1/4" = 1'-0"
(1 SECTION SHOWN)
(1 SECTION TOTAL)

NOTE :
ADDITIONAL SPLICE REINFORCEMENT REQUIRED BETWEEN SECTIONS BUT NOT SHOWN IN ELEVATION FOR CLARITY OF NEW THIRD PIPE AND BRACKETS. REFER TO 601 FOR DETAILS @ ELEVATION 20'-0"± (TYPICAL @ EACH LEG)

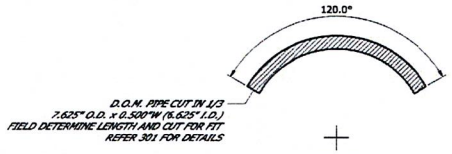

PLAN VIEW

302 DETAIL: LEG REINFORCEMENT PIPE (@ SECTION 1)
SCALE: 3" = 1'-0"
(3 REQ'D TOTAL)

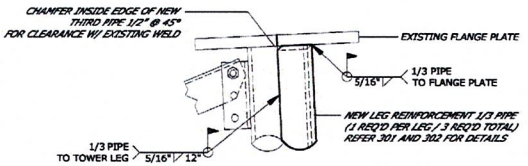

ELEVATION @ TOP OF LEG

NOTE:
TAPER OFF WELD AROUND EXISTING FLANGE BOLTS AS REQ'D TO AVOID INTERFERENCE AND DAMAGE TO BOLTS (TYPICAL @ TOP AND BOTTOM OF LEG)
FLANGE BOLTS AND NEW STIFFENERS NOT SHOWN FOR CLARITY.

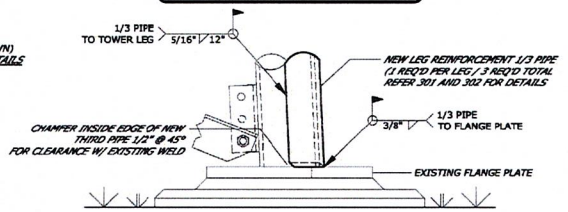

ELEVATION @ BOTTOM OF LEG

303 DETAIL: LEG REINFORCEMENT WELD (@ SECTION 1)
SCALE: 3" = 1'-0"
(TYPICAL @ EACH LEG)

REFER 101 FOR MEMBER SIZES AND SCHEDULES.

MALOUF ENGINEERING INTERNATIONAL, INC.
17950 PRESTON ROAD SUITE 720
DALLAS, TEXAS 75252-5635
972-783-2378 (fax: 2583)
www.maloufengineering.com
© MEI, INC. 2020

TOLLAND CENTRAL SITE FA 10071279
180 FT± SELF-SUPPORTING TOWER
130 BALD HILL ROAD, TOLLAND, CT 06084
LAT: 41-52-59.13 N - LON: 72-22-32.52 W

AT&T

NO.	DATE	REVISIONS	DRAWN	ENG'D	APP'D
0	08/21/20	ISSUED FOR CONSTRUCTION	BOB	KMM	MM

STATE OF CONNECTICUT — KEVIN R. K. MALOUF — 17715 — LICENSED PROFESSIONAL ENGINEER
AUGUST 21, 2020

VERTICAL RESOURCES GROUP / AT&T
SECTION 1 LEG REINFORCEMENT DETAILS

MEI PROJECT ID	SHEET NUMBER	REV.
CT00983S-20V1	S03	0

VRG
VERTICAL RESOURCES GROUP
23 Midstate Drive, #210
Auburn, MA 01501
Tel. (508) 981-9590
Fax (508) 519-8939
mnobre@verticalresourcesgrp.com

EMPIRE telecom
EMPIRE TELECOM USA, LLC
16 ESQUIRE ROAD
BILLERICA, MA 01821

SITE NUMBER: CT5331
SITE NAME: TOLLAND CENTRAL
PROJECT: LTE 4C / 5GNR / 4TxRx
130 BALD HILL ROAD
TOLLAND, CT 06084
TOLLAND COUNTY

at&t
550 COCHITUATE RD
SUITES 13 & 14
FRAMINGHAM, MA 01701

NO.	DATE	REVISION	BY	CHK	APP'D
A	09/10/20	GENERAL REVISIONS	G.A.M.		
A	08/24/20	ADDED TOWER MODIFICATIONS	G.A.M.		
A	05/12/20	REVISED PER NEW RFDS	G.A.M.		
A	04/29/20	FOR REVIEW	G.A.M.		

SCALE | DESIGNED BY: M.N. | DRAWN BY: G.A.M.

AT&T

TOWER MOD DETAILS III

JOB NUMBER	DRAWING NUMBER	REV.
CT5331-LTE4C5G	09	2

REFER SHEET T02 -T04 FOR TECH. SPEC. NOTES

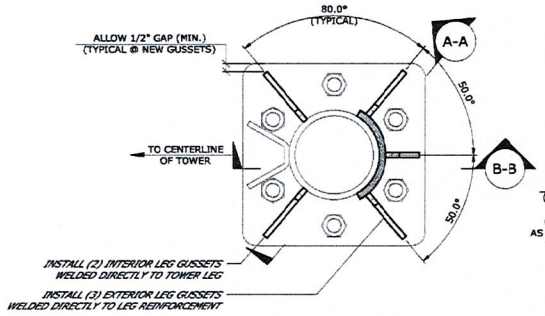

PLAN VIEW @ LEG BASE FLANGE

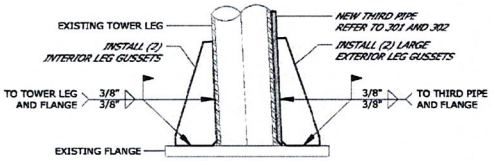

SECTION A-A
(WELD DETAILS)
(TYPICAL 2X)

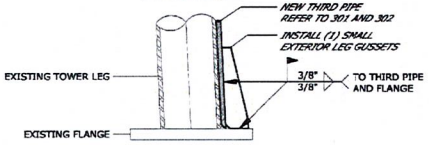

SECTION B-B
(WELD DETAILS)

(*) LENGTH APPROX. FOR BIDDING PURPOSES;
FIELD VERIFY / DETERMINE ACTUAL LENGTH.

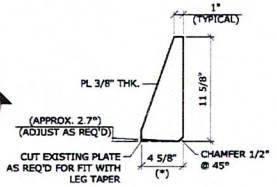

NEW GUSSET @ LEG INTERIOR
(2) REQ'D PER LEG
(6) REQ'D TOTAL

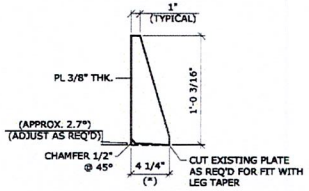

NEW LARGE GUSSET @ LEG EXTERIOR
(2) REQ'D PER LEG
(6) REQ'D TOTAL

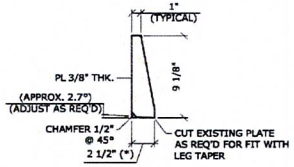

NEW SMALL GUSSET @ LEG EXTERIOR
(1) REQ'D PER LEG
(3) REQ'D TOTAL

401 DETAIL: WELDED GUSSETS @ BOTTOM OF LEG
SCALE: NOT TO SCALE (1 LEG SHOWN / 3 LEGS REQ'D TOTAL)

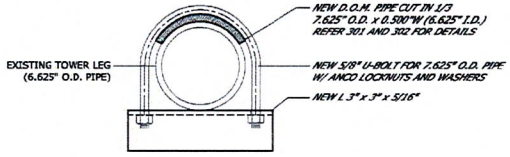

PLAN VIEW

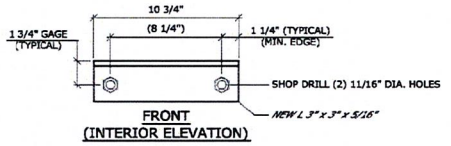

FRONT
(INTERIOR ELEVATION)

402 DETAIL: LEG REINFORCEMENT ANGLE BRACKET
SCALE: 1 1/2" = 1'-0" (16 REQ'D PER LEG / 48 REQ'D TOTAL)
(MARK "LB11")

NOTE:
LAYOUTS WERE CREATED FROM VERY LIMITED INFORMATION AND PHOTOS PROVIDED, FIELD VERIFICATION OF FIT FOR ALL REINFORCEMENT IS RECOMMENDED PRIOR TO PURCHASE. IF ANY ISSUES ARE FOUND THAT INTERFERE WITH REINFORCEMENT INSTALLATION DURING VERIFICATION PROCESS PLEASE CONTACT ENGINEER AND SUPPLY APPLICABLE TOWER INFORMATION W/ PHOTOS.

REFER 101 FOR MEMBER SIZES AND SCHEDULES.

ALL RIGHTS RESERVED. THIS DRAWING SHALL REMAIN THE PROPERTY OF MALOUF ENGINEERING INTERNATIONAL, INC. (MEI) AND SHALL NOT BE REPRODUCED, COPIED OR OTHERWISE DISCLOSED WITHOUT WRITTEN PERMISSION OF MEI, INC.

MALOUF ENGINEERING INTERNATIONAL, INC.
17950 PRESTON ROAD SUITE 720
DALLAS, TEXAS 75252-5635
972-783-2578 (fax: 2583)
www.maloufengineering.com

© MEI, INC. 2020

TOLLAND CENTRAL SITE FA 10071279
180 FT± SELF-SUPPORTING TOWER
130 BALD HILL ROAD, TOLLAND, CT 06084
LAT: 41-52-59.13 N - LON: 72-22-32.52 W

AT&T

NO.	DATE	REVISIONS	BDS	KMM	MM
0	08/21/20	ISSUED FOR CONSTRUCTION	DRAWN	CHKD	APP'D

STATE OF CONNECTICUT · BENJAMIN MALOUF · 17715 · REGISTERED PROFESSIONAL ENGINEER
AUGUST 21, 2020

VERTICAL RESOURCES GROUP / AT&T
SECTION 1 LEG REINFORCEMENT DETAILS CONT.

MEI PROJECT ID	SHEET NUMBER	REV.
CT00983S-20V1	S04	0

VRG
VERTICAL RESOURCES GROUP
23 Midstate Drive, #210
Auburn, MA 01501
Tel. (508) 981-9590
Fax (508) 519-8939
mnobre@verticalresourcesgrp.com

EMPIRE telecom
EMPIRE TELECOM USA, LLC
16 ESQUIRE ROAD
BILLERICA, MA 01821

SITE NUMBER: CT5331
SITE NAME: TOLLAND CENTRAL
PROJECT: LTE 4C / 5GNR / 4TxRx
130 BALD HILL ROAD
TOLLAND, CT 06084
TOLLAND COUNTY

at&t
550 COCHITUATE RD
SUITES 13 & 14
FRAMINGHAM, MA 01701

NO.	DATE	REVISION	BY	CHK	APP'D
4	09/10/20	GENERAL REVISIONS	G.A.M.		
3	08/24/20	ADDED TOWER MODIFICATIONS	G.A.M.		
2	05/12/20	REVISED PER NEW RFDS	G.A.M.		
1	04/29/20	FOR REVIEW	G.A.M.		

SCALE | DESIGNED BY: M.N. | DRAWN BY: G.A.M.

AT&T
TOWER MOD DETAILS IV

JOB NUMBER	DRAWING NUMBER	REV.
CT5331-LTE4C5G	10	2

ALL RIGHTS RESERVED. THIS DRAWING SHALL REMAIN THE PROPERTY OF MALOUF ENGINEERING INTERNATIONAL, INC. NO PART THEREOF SHALL BE REPRODUCED, COPIED, ADAPTED, DISCLOSED, OR DISTRIBUTED TO OTHERS WITHOUT WRITTEN PERMISSION OF MEI, INC.

REFER SHEET T02 -T04 FOR TECH. SPEC. NOTES

NOTE:
LAYOUTS WERE CREATED FROM VERY LIMITED INFORMATION AND PHOTOS PROVIDED, FIELD VERIFICATION OF FIT FOR ALL REINFORCEMENT IS RECOMMENDED PRIOR TO PURCHASE. IF ANY ISSUES ARE FOUND THAT INTERFERE WITH REINFORCEMENT INSTALLATION DURING VERIFICATION PROCESS PLEASE CONTACT ENGINEER AND SUPPLY APPLICABLE TOWER INFORMATION W/ PHOTOS.

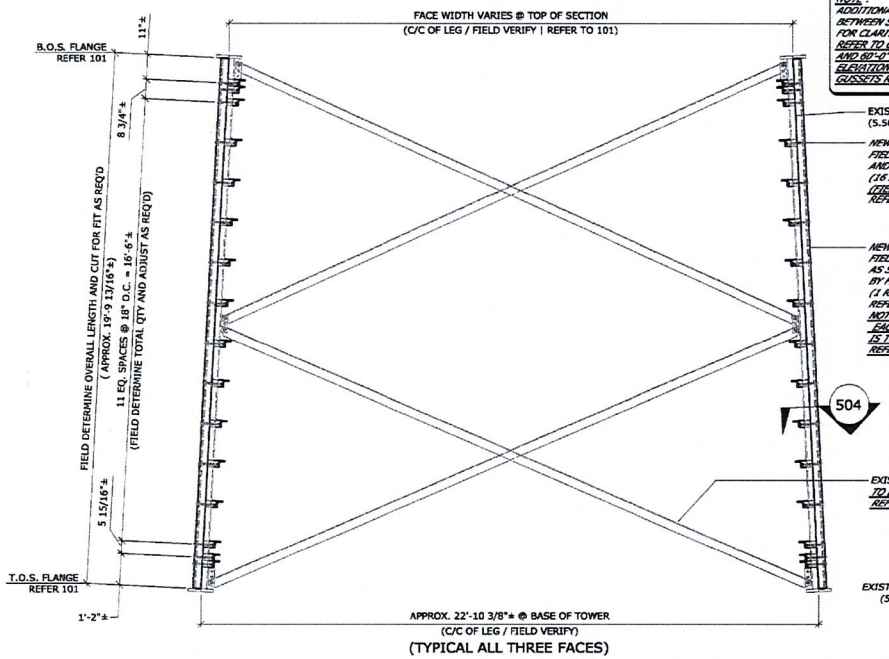

(TYPICAL ALL THREE FACES)

501 ELEVATION: NEW LEG REINFORCEMENT @ SECTIONS 2 - 4

SCALE: 1/4" = 1'-0"

(1 SECTION SHOWN)
(3 SECTION TOTAL)

NOTE :
ADDITIONAL SPLICE REINFORCEMENT REQUIRED BETWEEN SECTIONS BUT NOT SHOWN IN ELEVATION FOR CLARITY OF NEW THIRD PIPE AND BRACKETS. REFER TO 602 FOR DETAILS @ ELEVATION 40'-0"± AND 60'-0"± (TYPICAL @ EACH LEG) ELEVATION 80'-0" REQUIRES WELDED TERMINATION GUSSETS. REFER TO 603 FOR DETAILS.

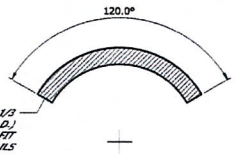

PLAN VIEW

502 DETAIL: LEG REINFORCEMENT PIPE (@ SECTIONS 2 - 4)

SCALE: 3" = 1'-0"

(3 REQ'D PER SECTION)
(9 REQ'D TOTAL)

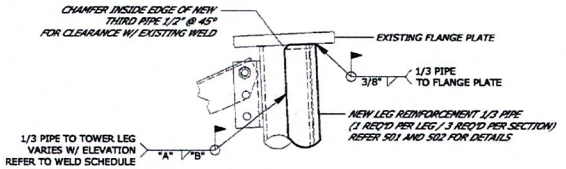

ELEVATION @ TOP OF LEG (AS SHOWN)
(BOTTOM OF LEG TYPICAL / SIMILAR)

NOTE:
TAPER OFF WELD AROUND EXISTING FLANGE BOLTS AS REQ'D TO AVOID INTERFERENCE AND DAMAGE TO BOLTS (TYPICAL @ TOP AND BOTTOM OF LEG)
FLANGE BOLTS NOT SHOWN FOR CLARITY

WELD SCHEDULE		
ELEVATION	"A"	"B"
20'-0" TO 60'-0"±	5/16"	12"
60'-0" TO 80'-0"±	1/4"	12"

503 DETAIL: LEG REINFORCEMENT WELD (@ SECTIONS 2 - 4)

SCALE: 1" = 1'-0"

(TYPICAL @ EACH LEG)

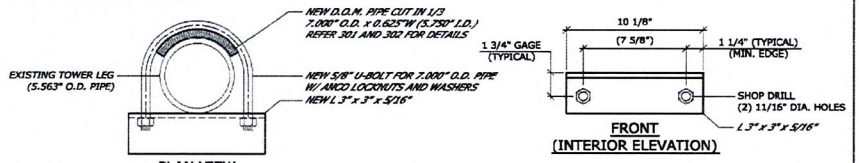

PLAN VIEW

FRONT
(INTERIOR ELEVATION)

504 DETAIL: LEG REINFORCEMENT ANGLE BRACKET

SCALE: 1 1/2" = 1'-0"

(16 REQ'D PER LEG / 48 REQ'D PER SECTION)
(MARK "LB21")

REFER 101 FOR MEMBER SIZES AND SCHEDULES.

MALOUF ENGINEERING INTERNATIONAL, INC.
17950 PRESTON ROAD SUITE 720
DALLAS, TEXAS 75252-5635
972-783-2578 (fax: 2583)
www.maloufengineering.com

© MEI, INC. 2020

TOLLAND CENTRAL SITE FA 10071279
180 FT± SELF-SUPPORTING TOWER
130 BALD HILL ROAD, TOLLAND, CT 06084
LAT: 41-52-59.13 N - LON: 72-22-32.52 W

AT&T

NO.	DATE	REVISIONS	BDB	KMM	MM
0	08/21/20	ISSUED FOR CONSTRUCTION			

DRAWN | ENG'D | APP'D

STATE OF CONNECTICUT
KIRK MALOUF
17715
REGISTERED PROFESSIONAL ENGINEER
AUGUST 21, 2020

VERTICAL RESOURCES GROUP / AT&T
LEG REINFORCEMENT DETAILS (SECTIONS 2 - 4)

MEI PROJECT ID	SHEET NUMBER	REV.
CT00983S-20V1	S05	0

VRG
VERTICAL RESOURCES GROUP
23 Midstate Drive, #210
Auburn, MA 01501
Tel. (508) 981-9590
Fax (508) 519-8939
mnobre@verticalresourcesgrp.com

EMPIRE telecom
EMPIRE TELECOM USA, LLC
16 ESQUIRE ROAD
BILLERICA, MA 01821

SITE NUMBER: CT5331
SITE NAME: TOLLAND CENTRAL
PROJECT: LTE 4C / 5GNR / 4TxRx
130 BALD HILL ROAD
TOLLAND, CT 06084
TOLLAND COUNTY

at&t
550 COCHITUATE RD
SUITES 13 & 14
FRAMINGHAM, MA 01701

NO.	DATE	REVISION	BY	CHK	APP'D
4	09/10/20	GENERAL REVISIONS	G.A.M.		
3	08/24/20	ADDED TOWER MODIFICATIONS	G.A.M.		
2	05/12/20	REVISED PER NEW RFDS	G.A.M.		
1	04/29/20	FOR REVIEW	G.A.M.		

SCALE | DESIGNED BY: M.N. | DRAWN BY: G.A.M.

AT&T
TOWER MOD DETAILS V

JOB NUMBER	DRAWING NUMBER	REV.
CT5331-LTE4C5G	11	2

ALL RIGHTS RESERVED. THIS DRAWING SHALL REMAIN THE PROPERTY OF MALOUF ENGINEERING INTERNATIONAL, INC. NO PART THEREOF SHALL BE REPRODUCED, COPIED, ADAPTED, DISCLOSED OR DISTRIBUTED TO OTHERS WITHOUT WRITTEN PERMISSION OF MEI, INC.

REFER SHEET T02 -T04 FOR TECH. SPEC. NOTES

NOTE:
EXISTING FLANGE SIZES ARE BEST ESTIMATED FROM INTERNAL RECORDS AND LIMITED INFORMATION PHOTOS PROVIDED. FIELD VERIFY ALL DIMENSIONS PRIOR TO PURCHASE, FABRICATION, AND INSTALLATION OF NEW REINFORCEMENT OF ALL SPLICE REINFORCEMENT MEMBERS (TYPICAL AT EACH LEVEL AND LEG)

NOTE:
LAYOUTS WERE CREATED FROM VERY LIMITED INFORMATION AND PHOTOS PROVIDED, FIELD VERIFICATION OF FIT FOR ALL REINFORCEMENT IS RECOMMENDED PRIOR TO PURCHASE. IF ANY ISSUES ARE FOUND THAT INTERFERE WITH REINFORCEMENT INSTALLATION DURING VERIFICATION PROCESS PLEASE CONTACT ENGINEER AND SUPPLY APPLICABLE TOWER INFORMATION W/ PHOTOS.

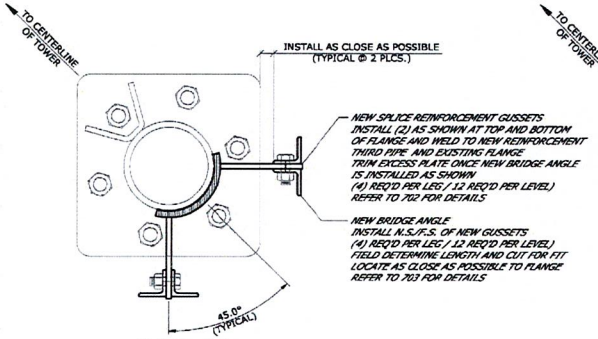

SECTION C-C
(@ SECTION 1)

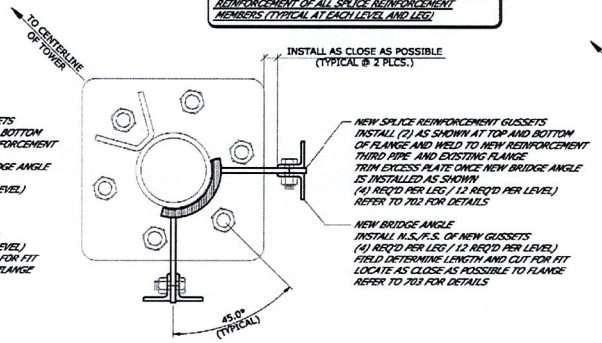

SECTION D-D
(@ SECTION 2)

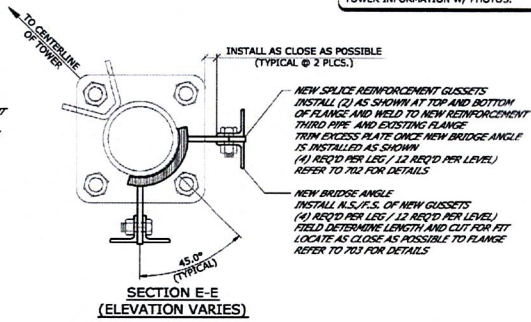

SECTION E-E
(ELEVATION VARIES)

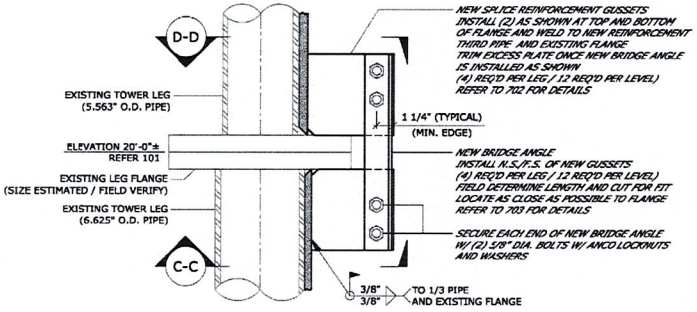

ELEVATION @ FLANGE

601 DETAIL: LEG SPLICE REINFORCEMENT (@ ELEVATION 20'-0")
SCALE: 1 1/2" = 1'-0" (TYPICAL @ EACH LEG)

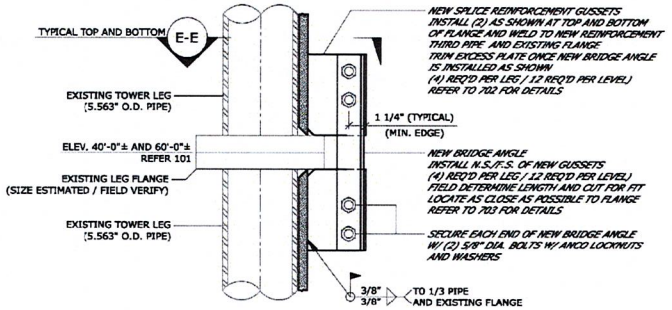

ELEVATION @ FLANGE

602 DETAIL: LEG SPLICE REINFORCEMENT (@ ELEVATION 40'-0" AND 60'-0"±)
SCALE: 1 1/2" = 1'-0" (TYPICAL @ EACH LEG)

REFER 101 FOR MEMBER SIZES AND SCHEDULES.

MALOUF ENGINEERING INTERNATIONAL, INC.
17950 PRESTON ROAD SUITE 720
DALLAS, TEXAS 75252-5635
972-783-2578 (fax: 2583)
www.maloufengineering.com
© MEI, INC. 2020

TOLLAND CENTRAL SITE FA 10071279
180 FT± SELF-SUPPORTING TOWER
130 BALD HILL ROAD, TOLLAND, CT 06084
LAT: 41-52-59.13 N - LON: 72-22-32.52 W

AT&T

NO.	DATE	REVISIONS	BDB	KMM	MM
0	08/21/20	ISSUED FOR CONSTRUCTION			

STATE OF CONNECTICUT — BENJAMIN D. BLANCHARD — 17715 — REGISTERED PROFESSIONAL ENGINEER
AUGUST 21, 2020

VERTICAL RESOURCES GROUP / AT&T
LEG SPLICE REINFORCEMENT DETAILS

MEI PROJECT ID	SHEET NUMBER	REV.
CT00983S-20V1	S06	0

VRG VERTICAL RESOURCES GROUP
23 Midstate Drive, #210
Auburn, MA 01501
Tel. (508) 981-9590
Fax (508) 519-8939
mnabre@verticalresourcesgrp.com

EMPIRE telecom
EMPIRE TELECOM USA, LLC
16 ESQUIRE ROAD
BILLERICA, MA 01821

SITE NUMBER: CT5331
SITE NAME: TOLLAND CENTRAL
PROJECT: LTE 4C / 5GNR / 4TxRx
130 BALD HILL ROAD
TOLLAND, CT 06084
TOLLAND COUNTY

at&t
550 COCHITUATE RD
SUITES 13 & 14
FRAMINGHAM, MA 01701

NO.	DATE	REVISION	BY	CHK	APP'D
4	09/10/20	GENERAL REVISIONS	G.A.M.		
3	08/24/20	ADDED TOWER MODIFICATIONS	G.A.M.		
2	05/12/20	REVISED PER NEW RFDS	G.A.M.		
1	04/29/20	FOR REVIEW	G.A.M.		

SCALE | DESIGNED BY: M.N. | DRAWN BY: G.A.M.

AT&T
TOWER MOD DETAILS VI

JOB NUMBER	DRAWING NUMBER	REV
CT5331-LTE4C5G	12	2

REFER SHEET T02 -T04 FOR TECH. SPEC. NOTES

ALL RIGHTS RESERVED: THIS DRAWING SHALL REMAIN THE PROPERTY OF MALOUF ENGINEERING INTERNATIONAL, INC. NO PART THEREOF SHALL BE REPRODUCED, COPIED, ADAPTED, DISCLOSED, OR DISTRIBUTED TO OTHERS WITHOUT WRITTEN PERMISSION OF MEI, INC.

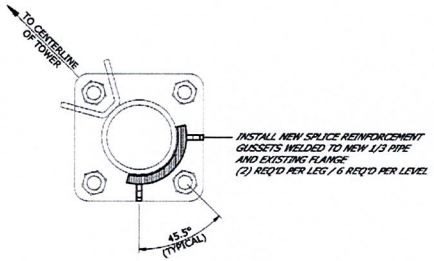

SECTION F-F
(@ ELEVATION 80'-0"±)

NOTE:
EXISTING FLANGE SIZES ARE BEST ESTIMATED FROM INTERNAL RECORDS AND LIMITED INFORMATION PHOTOS PROVIDED. FIELD VERIFY ALL DIMENSIONS PRIOR TO PURCHASE, FABRICATION, AND INSTALLATION OF NEW REINFORCEMENT OF ALL SPLICE REINFORCEMENT MEMBERS (TYPICAL AT EACH LEVEL AND LEG)

NOTE:
LAYOUTS WERE CREATED FROM VERY LIMITED INFORMATION AND PHOTOS PROVIDED. FIELD VERIFICATION OF FIT FOR ALL REINFORCEMENT IS RECOMMENDED PRIOR TO PURCHASE. IF ANY ISSUES ARE FOUND THAT INTERFERE WITH REINFORCEMENT INSTALLATION DURING VERIFICATION PROCESS PLEASE CONTACT ENGINEER AND SUPPLY APPLICABLE TOWER INFORMATION W/ PHOTOS.

(*) LENGTH APPROX. FOR BIDDING PURPOSES; FIELD VERIFY / DETERMINE ACTUAL LENGTH.

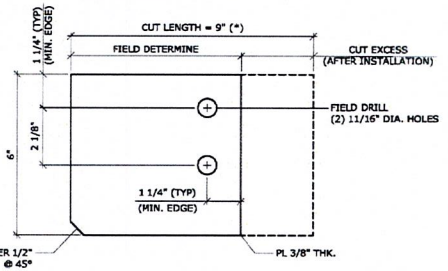

702 DETAIL: NEW BRIDGE PLATE GUSSETS
SCALE: 3" = 1'-0" (36 REQ'D TOTAL)

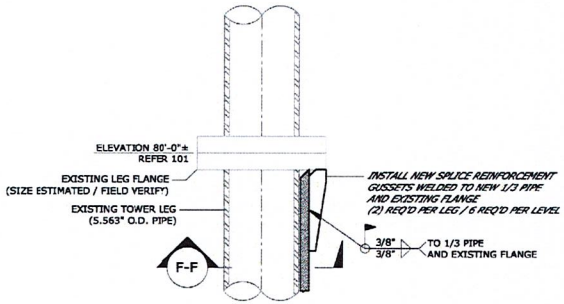

ELEVATION @ FLANGE

(*) LENGTH APPROX. FOR BIDDING PURPOSES; FIELD VERIFY / DETERMINE ACTUAL LENGTH.

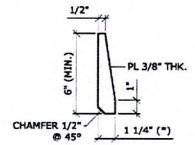

NEW GUSSET @ ELEVATION 80'-0"±
(2) REQ'D PER LEG
(6) REQ'D TOTAL

701 DETAIL: LEG SPLICE REINFORCEMENT (@ ELEVATION 80'-0")
SCALE: 1 1/2" = 1'-0" (TYPICAL @ EACH LEG)

(*) LENGTH APPROX. FOR BIDDING PURPOSES; FIELD VERIFY / DETERMINE ACTUAL LENGTH.

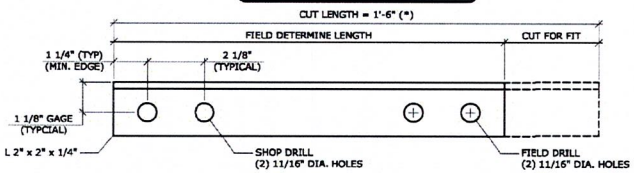

703 DETAIL: NEW SPLICE BRIDGE ANGLE
SCALE: 3" = 1'-0" (36 REQ'D TOTAL)

REFER 101 FOR MEMBER SIZES AND SCHEDULES.

MALOUF ENGINEERING INTERNATIONAL, INC.
17950 PRESTON ROAD SUITE 720
DALLAS, TEXAS 75252-5635
972-783-2578 (fax: 2583)
www.maloufengineering.com
© MEI, INC. 2020

TOLLAND CENTRAL SITE FA 10071279
180 FT± SELF-SUPPORTING TOWER
130 BALD HILL ROAD, TOLLAND, CT 06084
LAT: 41-52-59.13 N - LON: 72-22-32.52 W

AT&T

NO.	DATE	REVISIONS	BDB DRWN	KMM ENG'D	MW APP'D
0	08/21/20	ISSUED FOR CONSTRUCTION			

STATE OF CONNECTICUT · KENNETH MALOUF · 17715 · LICENSED PROFESSIONAL ENGINEER
AUGUST 21, 2020

VERTICAL RESOURCES GROUP / AT&T
LEG SPLICE REINFORCEMENT DETAILS CONT.

MEI PROJECT ID	SHEET NUMBER	REV.
CT00983S-20V1	S07	0

VRG
VERTICAL RESOURCES GROUP
23 Midstate Drive, #210
Auburn, MA 01501
Tel. (508) 981-9590
Fax (508) 519-8939
mnobre@verticalresourcesgrp.com

EMPIRE telecom
EMPIRE TELECOM USA, LLC
16 ESQUIRE ROAD
BILLERICA, MA 01821

SITE NUMBER: CT5331
SITE NAME: TOLLAND CENTRAL
PROJECT: LTE 4C / 5GNR / 4TxRx
130 BALD HILL ROAD
TOLLAND, CT 06084
TOLLAND COUNTY

at&t
550 COCHITUATE RD
SUITES 13 & 14
FRAMINGHAM, MA 01701

NO.	DATE	REVISION	BY	CHK	APP'D
1	09/10/20	GENERAL REVISIONS	G.A.M.		
2	08/24/20	ADDED TOWER MODIFICATIONS	G.A.M.		
1	05/12/20	REVISED PER NEW RFDS	G.A.M.		
4	04/29/20	FOR REVIEW	G.A.M.		

SCALE | DESIGNED BY: M.N. | DRAWN BY: G.A.M.

AT&T
TOWER MOD DETAILS VII

JOB NUMBER	DRAWING NUMBER	REV.
CT5331-LTE4C5G	13	2

REFER SHEET T02 -T04 FOR TECH. SPEC. NOTES

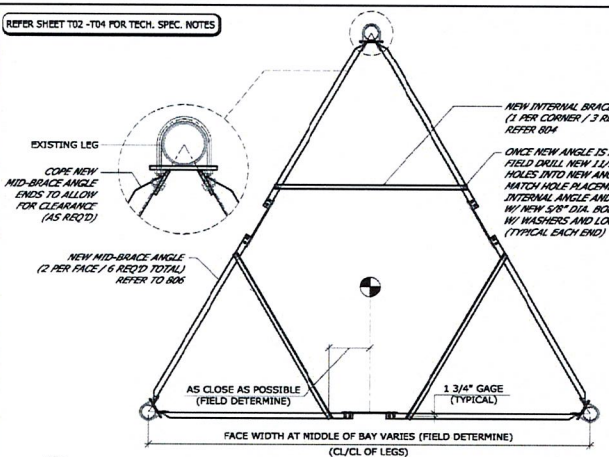

802 SECTION: NEW MID-BRACE ANGLES W/ INTERNAL ANGLES
SCALE: 1/4" = 1'-0"

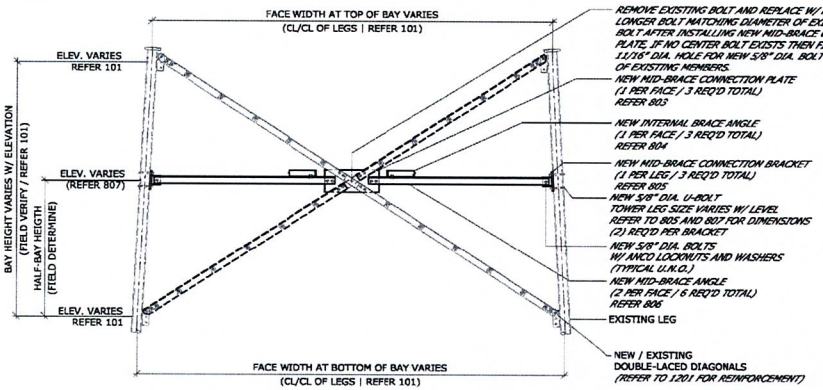

(TYPICAL ALL THREE FACES)

801 ELEVATION: NEW MID-BRACE ANGLES W/ INTERNAL ANGLES
SCALE: 1/4" = 1'-0" (1 BAY SHOWN / 2 BAYS REQ'D TOTAL)

(*) LENGTH APPROX. FOR BIDDING PURPOSES; FIELD VERIFY / DETERMINE ACTUAL LENGTH.

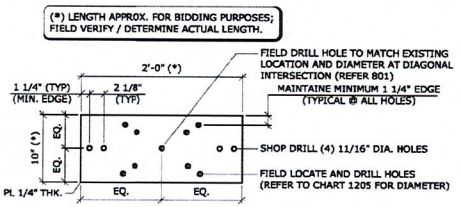

803 DETAIL: MID-BRACE CONNECTION PLATE
SCALE: 3/4" = 1'-0" (6 REQ'D TOTAL) (MARK "CP51")

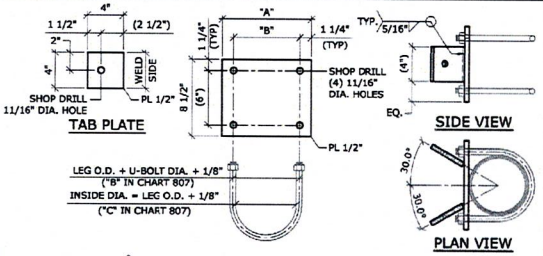

805 DETAIL: LEG BRACKET ASSEMBLY
SCALE: 1" = 1'-0" (MARK "LBxx" - REFER 807) (3 REQ'D PER BAY)

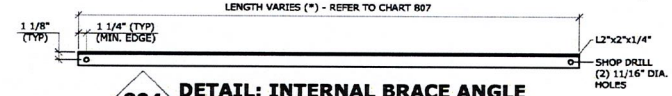

804 DETAIL: INTERNAL BRACE ANGLE
SCALE: 3/4" = 1'-0" (MARK "IBxx" - REFER 807) (3 REQ'D PER BAY)

(*) LENGTH APPROX. FOR BIDDING PURPOSES; FIELD VERIFY / DETERMINE ACTUAL LENGTH.

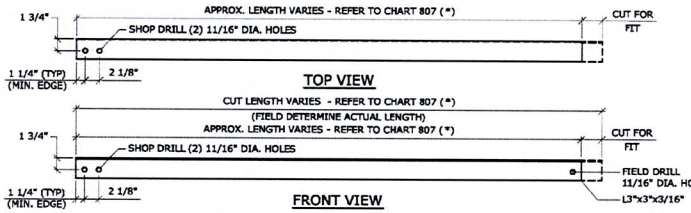

806 DETAIL: NEW ANGLE MID-BRACE
SCALE: 3/4" = 1'-0" (MARK "MBxx" - REFER 807) (6 REQ'D PER BAY)

(*) LENGTH APPROX. FOR BIDDING PURPOSES; FIELD VERIFY / DETERMINE ACTUAL LENGTH BEFORE FABRICATION.

NOTE:
LAYOUTS WERE CREATED FROM VERY LIMITED INFORMATION AND PHOTOS PROVIDED, FIELD VERIFICATION OF FIT FOR ALL REINFORCEMENT IS RECOMMENDED PRIOR TO PURCHASE. IF ANY ISSUES ARE FOUND THAT INTERFERE WITH REINFORCEMENT INSTALLATION DURING VERIFICATION PROCESS PLEASE CONTACT ENGINEER AND SUPPLY APPLICABLE TOWER INFORMATION W/ PHOTOS.

NEW ANGLE MID-BRACE MEMBER CHART (ANGLE LENGTHS ARE APPROXIMATE & SHALL BE FIELD VERIFIED)

SECTION	BAY	ELEV.	LEG O.D.	(*) INTERNAL BRACE ANGLE LENGTH	MK. INTERNAL	QTY	NEW MID-BRACE ANGLE CUT LENGTH (*)	NEW MID-BRACE ANGLE APPROX. LENGTH (*)	MK. MID-BRACE	QTY	LEG BRACKET "A"	LEG BRACKET "B"	LEG BRACKET "C"	MK. BRACKET	QTY
#5	#1	85'-2"±	4.500"	7'-1 7/8" (*)	IB51	3	7'-6" (*)	7'-1 15/16" (*)	MB51	6	7 3/4"	5 1/4"	4 5/8"	LB51	3
	#2	95'-2"±		6'-7 5/8" (*)	IB52	3	7'-0" (*)	6'-7 11/16" (*)	MB52	6					3

807 NEW ANGLE MID-BRACE MEMBER SCHEDULE

REFER 101 FOR MEMBER SIZES AND SCHEDULES.

MALOUF ENGINEERING INTERNATIONAL, INC.
17950 PRESTON ROAD SUITE 720
DALLAS, TEXAS 75252-5635
972-783-2578 (fax: 2583)
www.maloufengineering.com

© MEI, INC. 2020

TOLLAND CENTRAL SITE FA 10071279
180 FT± SELF-SUPPORTING TOWER
130 BALD HILL ROAD, TOLLAND, CT 06084
LAT: 41-52-59.13 N - LON: 72-22-32.52 W

AT&T

NO.	DATE	REVISIONS	DRAWN	CHK'D	APP'D
0	08/21/20	ISSUED FOR CONSTRUCTION	BCB	KVM	MM

STATE OF CONNECTICUT — KEVIN V. MALOUF — 17715 — REGISTERED PROFESSIONAL ENGINEER
AUGUST 21, 2020

VERTICAL RESOURCES GROUP / AT&T
NEW MID-BRACE DETAILS (TYPE 1)

MEI PROJECT ID	SHEET NUMBER	REV.
CT00983S-20V1	S08	0

VRG VERTICAL RESOURCES GROUP
23 Midstate Drive, #210
Auburn, MA 01501
Tel. (508) 981-9590
Fax (508) 519-8939
mnabre@verticalresourcesgrp.com

EMPIRE telecom
EMPIRE TELECOM USA, LLC
16 ESQUIRE ROAD
BILLERICA, MA 01821

SITE NUMBER: CT5331
SITE NAME: TOLLAND CENTRAL
PROJECT: LTE 4C / 5GNR / 4TxRx
130 BALD HILL ROAD
TOLLAND, CT 06084
TOLLAND COUNTY

at&t
550 COCHITUATE RD
SUITES 13 & 14
FRAMINGHAM, MA 01701

NO.	DATE	REVISION	BY	CHK	APP'D
1	09/10/20	GENERAL REVISIONS	G.A.M.		
2	08/24/20	ADDED TOWER MODIFICATIONS	G.A.M.		
1	05/12/20	REVISED PER NEW RFDS	G.A.M.		
A	04/29/20	FOR REVIEW	G.A.M.		

SCALE | DESIGNED BY: M.N. | DRAWN BY: G.A.M.

AT&T
TOWER MOD DETAILS VIII

JOB NUMBER	DRAWING NUMBER	REV.
CT5331-LTE4C5G	14	2

ALL RIGHTS RESERVED. THIS DRAWING SHALL REMAIN THE PROPERTY OF MALOUF ENGINEERING INTERNATIONAL, INC. IN PART THEREOF SHALL BE REPRODUCED, COPIED, MODIFIED, OR DISTRIBUTED TO OTHERS WITHOUT WRITTEN PERMISSION OF MEI, INC.

REFER SHEET T02 -T04 FOR TECH. SPEC. NOTES

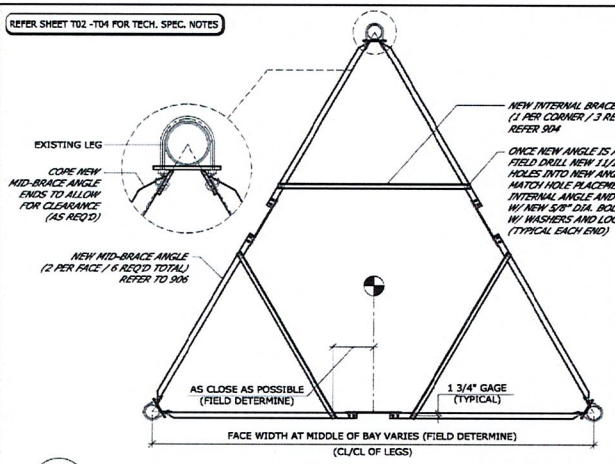

902 SECTION: NEW MID-BRACE ANGLES W/ INTERNAL ANGLES
SCALE: 1/4" = 1'-0"

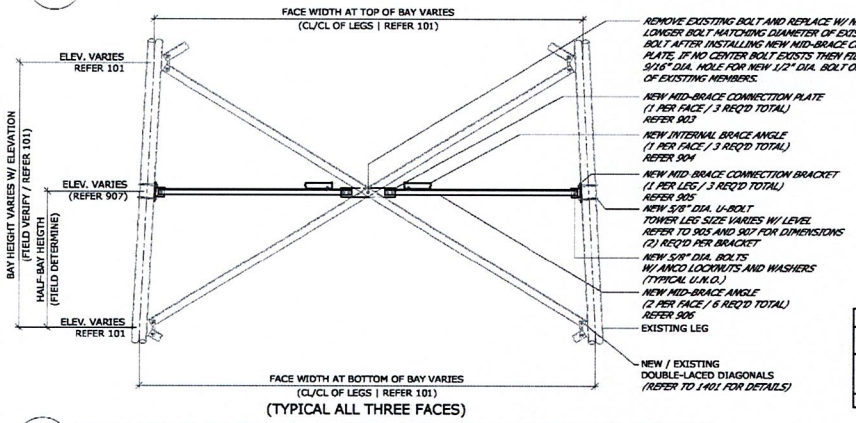

(TYPICAL ALL THREE FACES)

901 ELEVATION: NEW MID-BRACE ANGLES W/ INTERNAL ANGLES
SCALE: 1/4" = 1'-0" (1 BAY SHOWN / 6 BAYS REQ'D TOTAL)

REFER 101 FOR MEMBER SIZES AND SCHEDULES.

903 DETAIL: MID-BRACE CONNECTION PLATE
SCALE: 3/4" = 1'-0" (12 REQ'D TOTAL) (MARK "CP61")

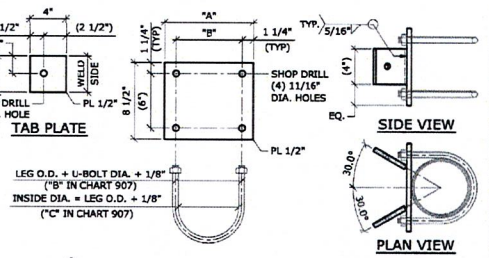

(*) LENGTH APPROX. FOR BIDDING PURPOSES; FIELD VERIFY / DETERMINE ACTUAL LENGTH.

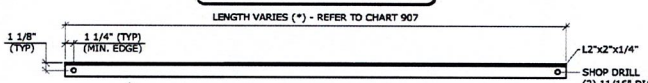

904 DETAIL: INTERNAL BRACE ANGLE
SCALE: 3/4" = 1'-0" (MARK "IBxx" - REFER 907) (3 REQ'D PER BAY)

905 DETAIL: LEG BRACKET ASSEMBLY
SCALE: 1" = 1'-0" (MARK "LBxx" - REFER 907) (3 REQ'D PER BAY)

(*) LENGTH APPROX. FOR BIDDING PURPOSES; FIELD VERIFY / DETERMINE ACTUAL LENGTH.

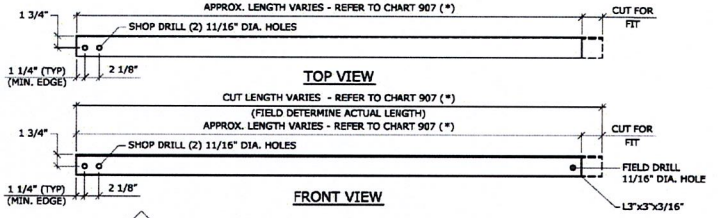

906 DETAIL: NEW ANGLE MID-BRACE
SCALE: 3/4" = 1'-0" (MARK "MBxx" - REFER 907) (6 REQ'D PER BAY)

(*) LENGTH APPROX. FOR BIDDING PURPOSES; FIELD VERIFY / DETERMINE ACTUAL LENGTH BEFORE FABRICATION.

NOTE:
LAYOUTS WERE CREATED FROM VERY LIMITED INFORMATION AND PHOTOS PROVIDED, FIELD VERIFICATION OF FIT FOR ALL REINFORCEMENT IS RECOMMENDED PRIOR TO PURCHASE. IF ANY ISSUES ARE FOUND THAT INTERFERE WITH REINFORCEMENT INSTALLATION DURING VERIFICATION PROCESS PLEASE CONTACT ENGINEER AND SUPPLY APPLICABLE TOWER INFORMATION W/ PHOTOS.

NEW ANGLE MID-BRACE MEMBER CHART (ANGLE LENGTHS ARE APPROXIMATE & SHALL BE FIELD VERIFIED)

SECTION	BAY	ELEV.	LEG O.D.	(*) INTERNAL BRACE ANGLE LENGTH	MK. INTERNAL	QTY	NEW MID-BRACE ANGLE		MK. MID-BRACE	QTY	LEG BRACKET			MK. BRACKET	QTY
							CUT LENGTH (*)	APPROX. LENGTH (*)			"A"	"B"	"C"		
#6	#1	103'-5"±	3.500"	6'-2 1/2" (*)	IB61	3	6'-9" (*)	6'-3 1/8" (*)	MB51	6	6 3/4"	4 1/4"	3 5/8"	LB61	3
	#2	110'-1"±		5'-10 1/4" (*)	IB62	3	6'-3" (*)	5'-10 15/16" (*)	MB52	6					3
	#2	116'-9"±		5'-6" (*)	IB63	3	6'-0" (*)	5'-6 3/4" (*)	MB52	6					3
#7	#1	123'-5"±		5'-2" (*)	IB71	3	5'-9" (*)	5'-2 9/16" (*)	MB71	6					3

907 NEW ANGLE MID-BRACE MEMBER SCHEDULE

MALOUF ENGINEERING INTERNATIONAL, INC.
17950 PRESTON ROAD SUITE 720
DALLAS, TEXAS 75252-5635
972-783-2578 (fax: 2583)
www.maloufengineering.com
© MEI, INC. 2020

TOLLAND CENTRAL SITE FA 10071279
180 FT± SELF-SUPPORTING TOWER
130 BALD HILL ROAD, TOLLAND, CT 06084
LAT: 41-52-59.13 N - LON: 72-22-32.52 W

AT&T

NO.	DATE	REVISIONS	DRAWN	ENG'D	APP'D
0	08/21/20	ISSUED FOR CONSTRUCTION	BDB	KMM	MM

STATE OF CONNECTION — KENNETH MARK MALOUF — 17715 — LICENSED PROFESSIONAL ENGINEER
AUGUST 21, 2020

VERTICAL RESOURCES GROUP / AT&T
NEW MID-BRACE DETAILS (TYPE 2)

MEI PROJECT ID	SHEET NUMBER	REV.
CT00983S-20V1	S09	0

VRG VERTICAL RESOURCES GROUP
23 Midstate Drive, #210
Auburn, MA 01501
Tel. (508) 981-9590
Fax (508) 519-8939
mnobre@verticalresourcesgrp.com

EMPIRE telecom
EMPIRE TELECOM USA, LLC
16 ESQUIRE ROAD
BILLERICA, MA 01821

SITE NUMBER: CT5331
SITE NAME: TOLLAND CENTRAL
PROJECT: LTE 4C / 5GNR / 4TxRx
130 BALD HILL ROAD
TOLLAND, CT 06084
TOLLAND COUNTY

at&t
550 COCHITUATE RD
SUITES 13 & 14
FRAMINGHAM, MA 01701

NO.	DATE	REVISION	BY	CHK	APP'D
4	09/10/20	GENERAL REVISIONS	G.A.M.		
3	08/24/20	ADDED TOWER MODIFICATIONS	G.A.M.		
2	05/12/20	REVISED PER NEW RFDS	G.A.M.		
1	04/29/20	FOR REVIEW	G.A.M.		

SCALE | DESIGNED BY: M.N. | DRAWN BY: G.A.M.

AT&T
TOWER MOD DETAILS IX

JOB NUMBER	DRAWING NUMBER	REV
CT5331-LTE4C5G	15	2

ALL RIGHTS RESERVED. THIS DRAWING SHALL REMAIN THE PROPERTY OF MALOUF ENGINEERING INTERNATIONAL, INC. NO PART THEREOF SHALL BE REPRODUCED, COPIED, ADAPTED, DISCLOSED, OR DISTRIBUTED TO OTHERS WITHOUT PRIOR WRITTEN PERMISSION OF MEI, INC.

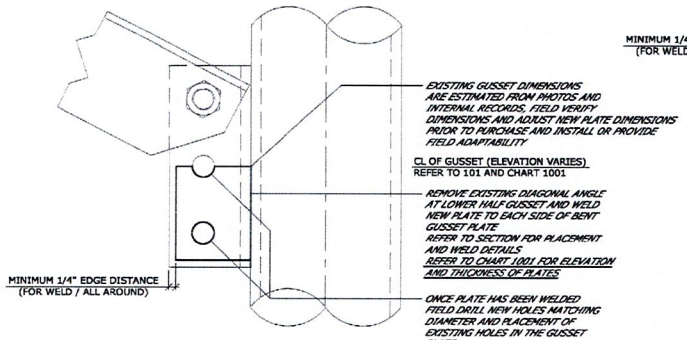

REINFORCEMENT OF LOWER HALF OF GUSSET
(REINFORCE ONE HALF OF GUSSET AT TIME)

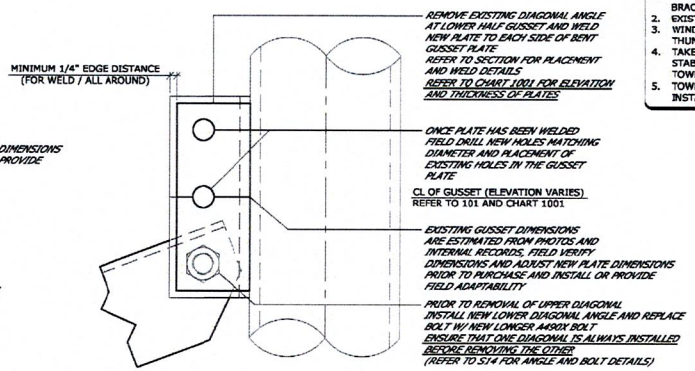

REINFORCEMENT OF UPPER HALF OF GUSSET
(REINFORCE ONE HALF OF GUSSET AT TIME)

MEMBER REPLACEMENT NOTES:

1. TOWER BAY TO BE ADEQUATELY SUPPORTED W/ TEMPORARY BRACING / FRAME PRIOR TO REMOVING ANY MEMBERS / BOLTS.
2. EXISTING MEMBERS / BOLTS ARE TO BE REMOVED AND REPLACED ONE AT A TIME.
3. WIND SPEED SHOULD NOT TO EXCEED 10 MPH AT GROUND LEVEL AND NO THUNDERSTORMS FORECASTED IN ORDER TO ENSURE SAFE WORKING CONDITIONS.
4. TAKE ALL NECESSARY PRECAUTIONS TO RETAIN THE STRUCTURAL INTEGRITY AND STABILITY OF THE TOWER; EXERCISE ALL DUE CAUTION WHILE MODIFYING THE TOWER.
5. TOWER MODIFICATIONS ARE TO BE INSTALLED AND COMPLETED PRIOR TO INSTALLATION OF NEW ANTENNAS AND APPURTENANCES.

NOTE:
LAYOUTS WERE CREATED FROM VERY LIMITED INFORMATION AND PHOTOS PROVIDED. FIELD VERIFICATION OF FIT FOR ALL REINFORCEMENT IS RECOMMENDED PRIOR TO PURCHASE. IF ANY ISSUES ARE FOUND THAT INTERFERE WITH REINFORCEMENT INSTALLATION DURING VERIFICATION PROCESS PLEASE CONTACT ENGINEER AND SUPPLY APPLICABLE TOWER INFORMATION W/ PHOTOS.

REFER SHEET T02 -T04 FOR TECH. SPEC. NOTES

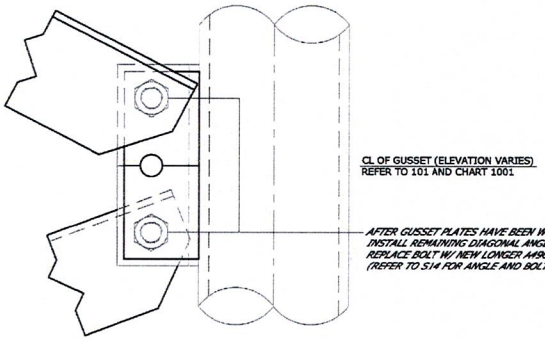

COMPLETED REINFORCEMENT OF GUSSET

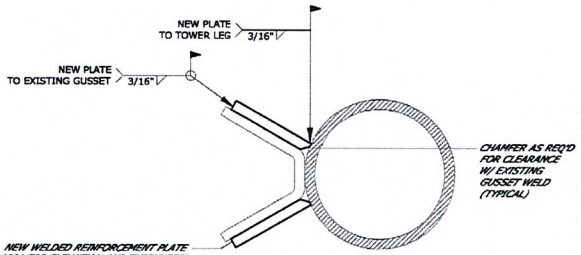

WELD DETAILS
(SECTION @ GUSSET)

NEW REINFORCEMENT PLATE					
SECTION	LEVEL	ELEV.	EXISTING GUSSET	NEW PLATE THICKNESS	QTY
#2	#1	20'-0"±	1/4"	3/8"	12
	#2	30'-0"±			12
	#3	40'-0"±			12
#6	#1	100'-0"±	3/16"	3/8"	12
	#2	106'-8"±			12
	#3	113'-4"±			12
	#4	120'-0"±			12

1001 ELEVATION: NEW GUSSET REINFORCEMENT DETAILS

SCALE: 3" = 1'-0" (1 LEVEL SHOWN / 7 LEVELS TOTAL)

REFER 101 FOR MEMBER SIZES AND SCHEDULES.

MALOUF ENGINEERING INTERNATIONAL, INC.
17950 PRESTON ROAD SUITE 720
DALLAS, TEXAS 75252-5635
972-783-2578 (fax: 2583)
www.maloufengineering.com
© MEI, INC. 2020

TOLLAND CENTRAL SITE FA 10071279
180 FT± SELF-SUPPORTING TOWER
130 BALD HILL ROAD, TOLLAND, CT 06084
LAT: 41-52-59.13 N - LON: 72-22-32.52 W

AT&T

NO.	DATE	REVISIONS	DRAWN	CHK'D	APP'D
0	08/21/20	ISSUED FOR CONSTRUCTION	BDB	KJM	MM

STATE OF CONNECTICUT — FRANK R. MALOUF — 17715 — REGISTERED PROFESSIONAL ENGINEER
AUGUST 21, 2020

VERTICAL RESOURCES GROUP / AT&T
DIAGONAL GUSSET REINFORCEMENT DETAILS

MEI PROJECT ID	SHEET NUMBER	REV.
CT00983S-20V1	S10	0

VRG
VERTICAL RESOURCES GROUP
23 Midstate Drive, #210
Auburn, MA 01501
Tel. (508) 981-9590
Fax (508) 519-8939
mnabre@verticalresourcesgrp.com

EMPIRE telecom
EMPIRE TELECOM USA, LLC
16 ESQUIRE ROAD
BILLERICA, MA 01821

SITE NUMBER: CT5331
SITE NAME: TOLLAND CENTRAL
PROJECT: LTE 4C / 5GNR / 4TxRx
130 BALD HILL ROAD
TOLLAND, CT 06084
TOLLAND COUNTY

at&t
550 COCHITUATE RD
SUITES 13 & 14
FRAMINGHAM, MA 01701

NO.	DATE	REVISION	BY	CHK	APP'D
3	09/10/20	GENERAL REVISIONS	G.A.M.		
2	08/24/20	ADDED TOWER MODIFICATIONS	G.A.M.		
1	05/12/20	REVISED PER NEW RFDS	G.A.M.		
A	04/29/20	FOR REVIEW	G.A.M.		

SCALE: | DESIGNED BY: M.N. | DRAWN BY: G.A.M.

AT&T
TOWER MOD DETAILS X

JOB NUMBER	DRAWING NUMBER	REV
CT5331-LTE4CSG	16	2

ALL RIGHTS RESERVED. THE DRAWING SHALL REMAIN THE PROPERTY OF MALOUF ENGINEERING INTERNATIONAL, INC. NO PART THEREOF SHALL BE REPRODUCED, COPIED, ADAPTED, DISCLOSED, OR DISTRIBUTED TO OTHERS WITHOUT WRITTEN PERMISSION OF MEI, INC.

MEMBER REPLACEMENT NOTES:

1. TOWER BAY TO BE ADEQUATELY SUPPORTED W/ TEMPORARY BRACING / FRAME PRIOR TO REMOVING ANY MEMBERS / BOLTS.
2. EXISTING MEMBERS / BOLTS ARE TO BE REMOVED AND REPLACED ONE AT A TIME.
3. WIND SPEED SHOULD NOT TO EXCEED 10 MPH AT GROUND LEVEL AND NO THUNDERSTORMS FORECASTED IN ORDER TO ENSURE SAFE WORKING CONDITIONS.
4. TAKE ALL NECESSARY PRECAUTIONS TO RETAIN THE STRUCTURAL INTEGRITY AND STABILITY OF THE TOWER; EXERCISE ALL DUE CAUTION WHILE MODIFYING THE TOWER.
5. TOWER MODIFICATIONS ARE TO BE INSTALLED AND COMPLETED PRIOR TO INSTALLATION OF NEW ANTENNAS AND APPURTENANCES.

REFER SHEET T02 -T04 FOR TECH. SPEC. NOTES

NOTE:
LAYOUTS WERE CREATED FROM VERY LIMITED INFORMATION AND PHOTOS PROVIDED, FIELD VERIFICATION OF FIT FOR ALL REINFORCEMENT IS RECOMMENDED PRIOR TO PURCHASE. IF ANY ISSUES ARE FOUND THAT INTERFERE WITH REINFORCEMENT INSTALLATION DURING VERIFICATION PROCESS PLEASE CONTACT ENGINEER AND SUPPLY APPLICABLE TOWER INFORMATION W/ PHOTOS.

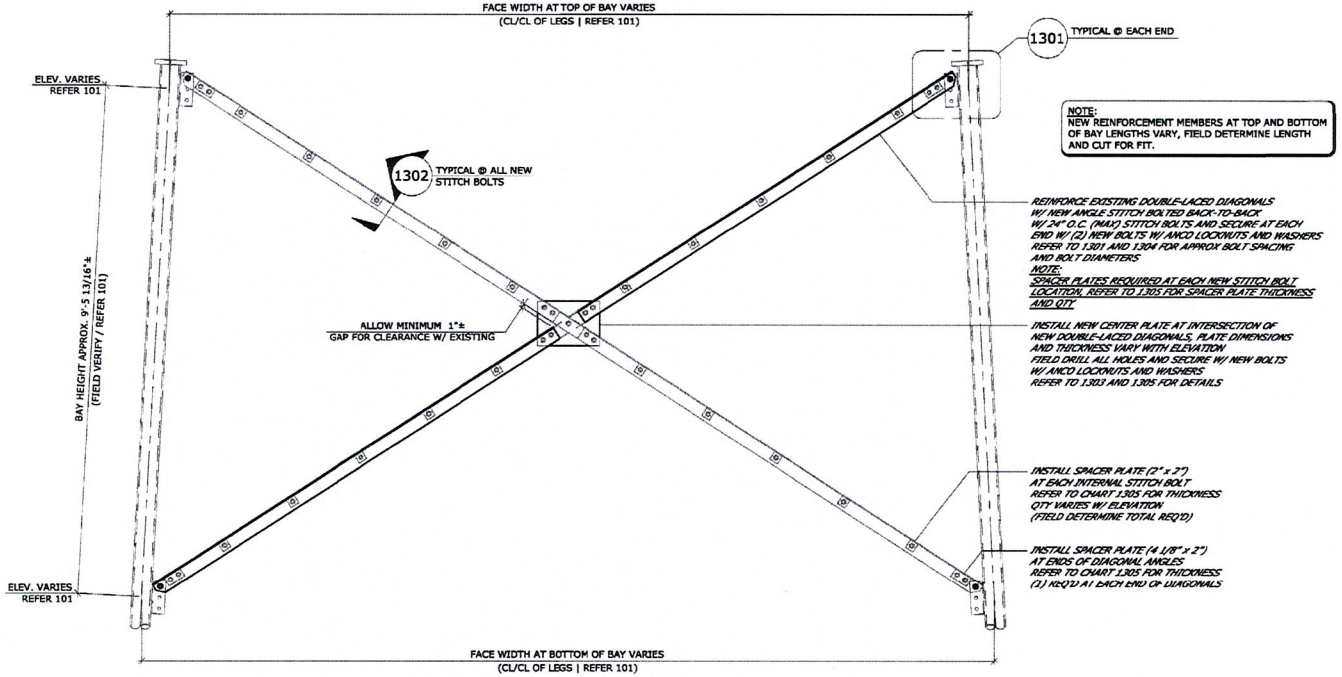

(TYPICAL ALL THREE FACES)

1101 ELEVATION: NEW DOUBLE-LACED DIAGONAL REINFORCEMENT (W/O NEW MID-BRACE)

SCALE: 1/2" = 1'-0"

(1 BAY SHOWN / 6 BAYS REQ'D TOTAL)
(ELEVATIONS 0 TO 20 FT± AND 40 TO 80 FT±)

REFER 101 FOR MEMBER SIZES AND SCHEDULES.

MALOUF ENGINEERING INTERNATIONAL, INC.
17950 PRESTON ROAD SUITE 720
DALLAS, TEXAS 75252-5635
972-783-2578 (fax: 2583)
www.maloufengineering.com

© MEI, INC. 2020

TOLLAND CENTRAL SITE FA 10071279
180 FT± SELF-SUPPORTING TOWER
130 BALD HILL ROAD, TOLLAND, CT 06084
LAT: 41-52-59.13 N - LON: 72-22-32.52 W

AT&T

NO.	DATE	REVISIONS	DRAWN	CHK'D	APP'D
0	08/21/20	ISSUED FOR CONSTRUCTION	BOB	KMM	MM

STATE OF CONNECTICUT — MARK K. MALOUF — 27715 — REGISTERED PROFESSIONAL ENGINEER
AUGUST 21, 2020

VERTICAL RESOURCES GROUP / AT&T
DOUBLE-LACED DIAGONAL REINFORCEMENT VIEWS

MEI PROJECT ID	SHEET NUMBER	REV.
CT00983S-20V1	S11	0

VRG
VERTICAL RESOURCES GROUP
23 Midstate Drive, #210
Auburn, MA 01501
Tel. (508) 981-9590
Fax (508) 519-8939
mnobre@verticalresourcesgrp.com

EMPIRE telecom
EMPIRE TELECOM USA, LLC
16 ESQUIRE ROAD
BILLERICA, MA 01821

SITE NUMBER: CT5331
SITE NAME: TOLLAND CENTRAL
PROJECT: LTE 4C / 5GNR / 4TxRx
130 BALD HILL ROAD
TOLLAND, CT 06084
TOLLAND COUNTY

at&t
550 COCHITUATE RD
SUITES 13 & 14
FRAMINGHAM, MA 01701

NO.	DATE	REVISION	BY	CHK	APP'D
4	09/10/20	GENERAL REVISIONS	G.A.M.		
3	08/24/20	ADDED TOWER MODIFICATIONS	G.A.M.		
2	05/12/20	REVISED PER NEW RFDS	G.A.M.		
1	04/29/20	FOR REVIEW	G.A.M.		

SCALE | DESIGNED BY: M.N. | DRAWN BY: G.A.M.

AT&T

TOWER MOD DETAILS XI

JOB NUMBER	DRAWING NUMBER	REV.
CT5331-LTE4C5G	17	2

ALL RIGHTS RESERVED. THIS DRAWING SHALL REMAIN THE PROPERTY OF MALOUF ENGINEERING INTERNATIONAL, INC. NO PART THEREOF SHALL BE REPRODUCED, COPIED, ADAPTED, DISCLOSED, OR DISTRIBUTED TO OTHERS WITHOUT WRITTEN PERMISSION OF MEI, INC.

MEMBER REPLACEMENT NOTES:
1. TOWER BAY TO BE ADEQUATELY SUPPORTED W/ TEMPORARY BRACING / FRAME PRIOR TO REMOVING ANY MEMBERS / BOLTS.
2. EXISTING MEMBERS / BOLTS ARE TO BE REMOVED AND REPLACED ONE AT A TIME.
3. WIND SPEED SHOULD NOT TO EXCEED 10 MPH AT GROUND LEVEL AND NO THUNDERSTORMS FORECASTED IN ORDER TO ENSURE SAFE WORKING CONDITIONS.
4. TAKE ALL NECESSARY PRECAUTIONS TO RETAIN THE STRUCTURAL INTEGRITY AND STABILITY OF THE TOWER; EXERCISE ALL DUE CAUTION WHILE MODIFYING THE TOWER.
5. TOWER MODIFICATIONS ARE TO BE INSTALLED AND COMPLETED PRIOR TO INSTALLATION OF NEW ANTENNAS AND APPURTENANCES.

REFER SHEET T02 -T04 FOR TECH. SPEC. NOTES

NOTE:
LAYOUTS WERE CREATED FROM VERY LIMITED INFORMATION AND PHOTOS PROVIDED, FIELD VERIFICATION OF FIT FOR ALL REINFORCEMENT IS RECOMMENDED PRIOR TO PURCHASE. IF ANY ISSUES ARE FOUND THAT INTERFERE WITH REINFORCEMENT INSTALLATION DURING VERIFICATION PROCESS PLEASE CONTACT ENGINEER AND SUPPLY APPLICABLE TOWER INFORMATION W/ PHOTOS.

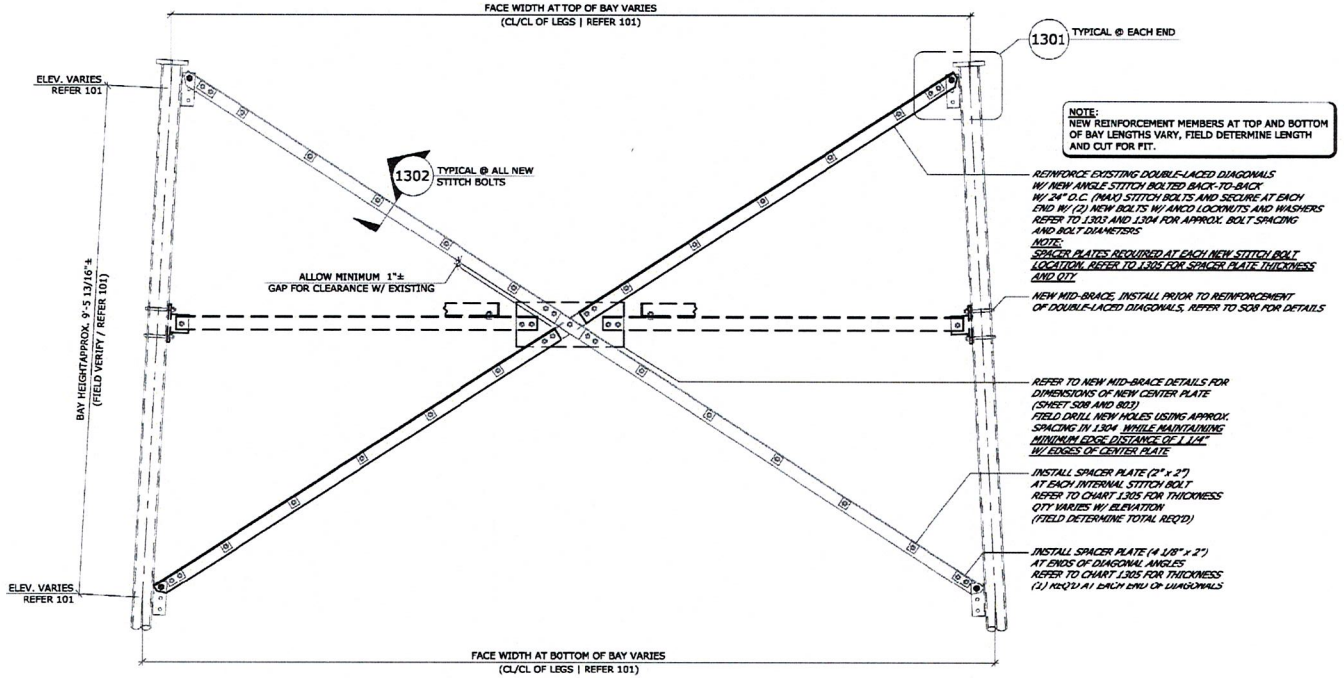

(TYPICAL ALL THREE FACES)

1201 ELEVATION: NEW DOUBLE-LACED DIAGONAL REINFORCEMENT (W/ NEW MID-BRACE)

SCALE: 1/2" = 1'-0"

(1 BAY SHOWN / 2 BAYS REQ'D TOTAL)
(ELEVATIONS 80'-0" TO 100'-0")

REFER 101 FOR MEMBER SIZES AND SCHEDULES.

MALOUF ENGINEERING INTERNATIONAL, INC.
17950 PRESTON ROAD SUITE 720
DALLAS, TEXAS 75252-5635
972-783-2578 (fax: 2583)
www.maloufengineering.com
© MEI, INC. 2020

TOLLAND CENTRAL SITE FA 10071279
180 FT± SELF-SUPPORTING TOWER
130 BALD HILL ROAD, TOLLAND, CT 06084
LAT: 41-52-59.13 N - LON: 72-22-32.52 W

AT&T

NO.	DATE	REVISIONS	BDB DRAWN	KMW ENG'D	MM APP'D
0	08/21/20	ISSUED FOR CONSTRUCTION			

STATE OF CONNECTICUT · KENRIK MALOUF · 17715 · REGISTERED PROFESSIONAL ENGINEER
AUGUST 21, 2020

VERTICAL RESOURCES GROUP / AT&T
DOUBLE-LACED DIAGONAL REINFORCEMENT VIEWS CONT.

MEI PROJECT ID	SHEET NUMBER	REV.
CT00983S-20V1	S12	0

VRG
VERTICAL RESOURCES GROUP
23 Midstate Drive, #210
Auburn, MA 01501
Tel. (508) 981-9590
Fax (508) 519-8939
mnobre@verticalresourcesgrp.com

EMPIRE telecom
EMPIRE TELECOM USA, LLC
16 ESQUIRE ROAD
BILLERICA, MA 01821

SITE NUMBER: CT5331
SITE NAME: TOLLAND CENTRAL
PROJECT: LTE 4C / 5GNR / 4TxRx
130 BALD HILL ROAD
TOLLAND, CT 06084
TOLLAND COUNTY

at&t
550 COCHITUATE RD
SUITES 13 & 14
FRAMINGHAM, MA 01701

NO.	DATE	REVISION	BY	CHK	APP'D
4	09/10/20	GENERAL REVISIONS	G.A.M.		
3	08/24/20	ADDED TOWER MODIFICATIONS	G.A.M.		
2	05/12/20	REVISED PER NEW RFDS	G.A.M.		
1	04/29/20	FOR REVIEW	G.A.M.		

SCALE | DESIGNED BY: M.N. | DRAWN BY: G.A.M.

AT&T

TOWER MOD DETAILS XII

JOB NUMBER	DRAWING NUMBER	REV
CT5331-LTE4C5G	18	2

ALL RIGHTS RESERVED. THIS DRAWING SHALL REMAIN THE PROPERTY OF MEI FOR ENGINEERING INTERPRETATION. INC. NO PART THEREOF SHALL BE REPRODUCED, COPIED OR DISCLOSED TO OTHERS OR USED IN CONNECTION WITH ANY WORK OTHER THAN THE SPECIFIC PROJECT FOR WHICH IT HAS BEEN PREPARED BY MEI, INC.

REFER SHEET T02 -T04 FOR TECH. SPEC. NOTES

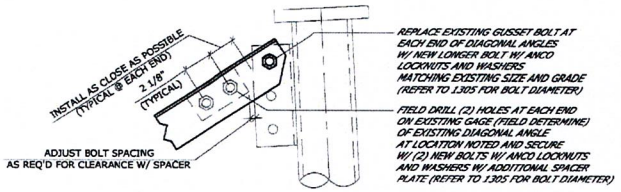

1301 ELEVATION: NEW DOUBLE-LACED DIAGONAL END CONNECTION

SCALE: 1 1/2" = 1'-0" (TYPICAL @ EACH END OF DOUBLE-LACED DIAGONALS)

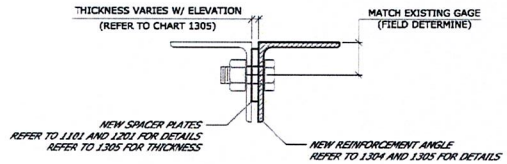

1302 SECTION: NEW REINFORCEMENT @ STITCH BOLTS

SCALE: 3" = 1'-0" (TYPICAL U.N.O.)

(*) LENGTH APPROX. FOR BIDDING PURPOSES; FIELD VERIFY / DETERMINE ACTUAL LENGTH.

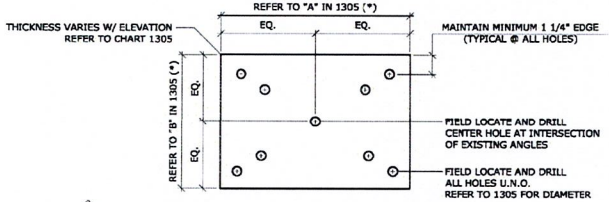

1303 DETAIL: NEW CENTER CONNECTION PLATE

SCALE: 1 1/2" = 1'-0" (MARK "CPxx" - REFER 1305) (3 REQ'D PER BAY)

(*) LENGTH APPROX. FOR BIDDING PURPOSES; FIELD VERIFY / DETERMINE ACTUAL LENGTH.

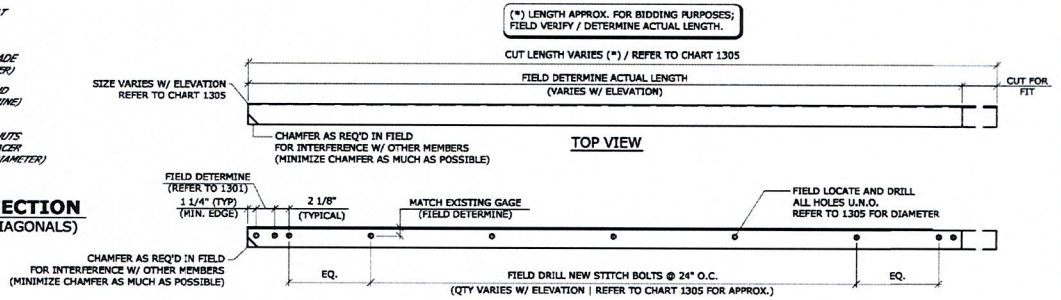

1304 DETAIL: NEW DIAGONAL REINFORCEMENT ANGLE

SCALE: 3/4" = 1'-0" (MARK "RAxx" - REFER 1305) (12 REQ'D PER BAY)

(*) LENGTH APPROX. FOR BIDDING PURPOSES; FIELD VERIFY / DETERMINE ACTUAL LENGTH BEFORE FABRICATION.

NEW REINFORCEMENT ANGLE MEMBER CHART (FIELD VERIFY LENGTHS AND QTYS)

SECTION	BAY	ELEVATION	NEW REINFORCEMENT ANGLE SIZE	NEW REINFORCEMENT ANGLE CUT LENGTH (*)	MK. ANGLE	QTY	CENTER PLATE (*) "A"	CENTER PLATE (*) "B"	CENTER PLATE (*) THK.	MK. PLATE	QTY	STITCH BOLTS (24" O.C. MAX) QTY	STITCH BOLTS (24" O.C. MAX) DIAMETER	STITCH BOLTS (24" O.C. MAX) HOLE
#1	#1	0'-0" TO 10'-0"±	4" x 4" x 5/16"	13'-0"± (*)	RA11	12	1'-8 3/8"	9 1/2"	3/8"	CP11	3	9±	3/4"ø	13/16"ø
	#2	10'-0" TO 20'-0"±	4" x 4" x 5/16"	12'-6"± (*)	RA12	12	1'-8"	9 1/8"	3/8"	CP12	3			
#3	#1	40'-0" TO 50'-0"±	3 1/2" x 3 1/2" x 1/4"	11'-3"± (*)	RA31	12	1'-5 3/8"	9 1/2"	1/4"	CP31	3	9±	5/8"ø	11/16"ø
	#2	50'-0" TO 60'-0"±	3 1/2" x 3 1/2" x 1/4"	11'-0"± (*)	RA32	12	1'-4 7/8"	9 5/8"	1/4"	CP32	3			
#4	#1	60'-0" TO 70'-0"±	3" x 3" x 1/4"	10'-6"± (*)	RA41	12	1'-3 3/8"	9 1/4"	1/4"	CP41	3	9⊥	5/8"ø	11/16"ø
	#2	70'-0" TO 80'-0"±	3" x 3" x 1/4"	10'-0"± (*)	RA42	12	1'-2 7/8"	9 1/2"	1/4"	CP42	3			
#5^	#1	80'-0" TO 90'-0"±	3" x 3" x 3/16"	9'-9"± (*)	RA51	12	-	-	-	-	-	7±	5/8"ø	11/16"ø
	#2	90'-0" TO 100'-0"±	3" x 3" x 3/16"	9'-3"± (*)	RA52	12	-	-	-	-	-			

^NOTE: CENTER PLATE DETAILS FOR BAYS 5-1 AND 5-2 ARE SHOWN WITH NEW MID-BRACE DETAILS, REFER TO SHEET S08 AND 803

1305 NEW DOUBLE-LACED REINFORCEMENT ANGLE

REFER 101 FOR MEMBER SIZES AND SCHEDULES.

MALOUF ENGINEERING INTERNATIONAL, INC.
17950 PRESTON ROAD SUITE 720
DALLAS, TEXAS 75252-5635
972-783-2578 (fax: 2583)
www.maloufengineering.com
© MEI, INC. 2020

TOLLAND CENTRAL SITE FA 10071279
180 FT± SELF-SUPPORTING TOWER
130 BALD HILL ROAD, TOLLAND, CT 06084
LAT: 41-52-59.13 N - LON: 72-22-32.52 W

AT&T

NO.	DATE	REVISIONS	BDB	KMM	MM
0	08/21/20	ISSUED FOR CONSTRUCTION	DRAWN	ENG'D	APP'D

STATE OF CONNECTICUT · MARK MALOUF · 17715 · REGISTERED PROFESSIONAL ENGINEER
AUGUST 21, 2020

VERTICAL RESOURCES GROUP / AT&T
DOUBLE-LACED DIAGONAL REINFORCEMENT DETAILS

MEI PROJECT ID	SHEET NUMBER	REV.
CT00983S-20V1	S13	0

VRG VERTICAL RESOURCES GROUP
23 Midstate Drive, #210
Auburn, MA 01501
Tel. (508) 981-9590
Fax (508) 519-8939
mnobre@verticalresourcesgrp.com

EMPIRE telecom
EMPIRE TELECOM USA, LLC
16 ESQUIRE ROAD
BILLERICA, MA 01821

SITE NUMBER: CT5331
SITE NAME: TOLLAND CENTRAL
PROJECT: LTE 4C / 5GNR / 4TxRx
130 BALD HILL ROAD
TOLLAND, CT 06084
TOLLAND COUNTY

at&t
550 COCHITUATE RD
SUITES 13 & 14
FRAMINGHAM, MA 01701

NO.	DATE	REVISION	BY	CHK	APP'D
1	09/10/20	GENERAL REVISIONS	G.A.M.		
2	08/24/20	ADDED TOWER MODIFICATIONS	G.A.M.		
1	05/12/20	REVISED PER NEW RFDS	G.A.M.		
2	04/29/20	FOR REVIEW	G.A.M.		

SCALE | DESIGNED BY: M.N. | DRAWN BY: G.A.M.

AT&T

TOWER MOD DETAILS XIII

JOB NUMBER	DRAWING NUMBER	REV
CT5331-LTE4C5G	19	2

ALL RIGHTS RESERVED. THIS DRAWING SHALL REMAIN THE PROPERTY OF MALOUF ENGINEERING INTERNATIONAL, INC. NO PART THEREOF SHALL BE REPRODUCED, COPIED, ADAPTED, DISCLOSED, OR DISTRIBUTED TO OTHERS WITHOUT WRITTEN PERMISSION OF MEI, INC.

REFER SHEET T02 -T04 FOR TECH. SPEC. NOTES

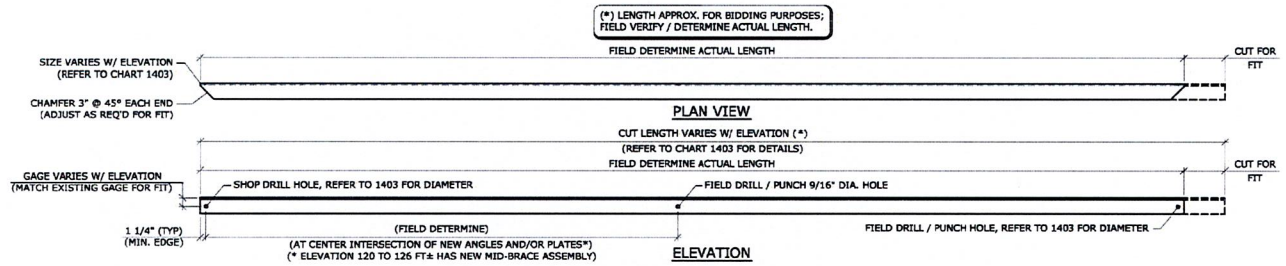

1402 DETAIL: DIAGONAL REPLACEMENT ANGLE

SCALE: 1/2" = 1'-0"

(6 REQ'D PER BAY)
(MARK "DRXX" / REFER 1403)

NOTE:
LAYOUTS WERE CREATED FROM VERY LIMITED INFORMATION AND PHOTOS PROVIDED, FIELD VERIFICATION OF FIT FOR ALL REINFORCEMENT IS RECOMMENDED PRIOR TO PURCHASE. IF ANY ISSUES ARE FOUND THAT INTERFERE WITH REINFORCEMENT INSTALLATION DURING VERIFICATION PROCESS PLEASE CONTACT ENGINEER AND SUPPLY APPLICABLE TOWER INFORMATION W/ PHOTOS.

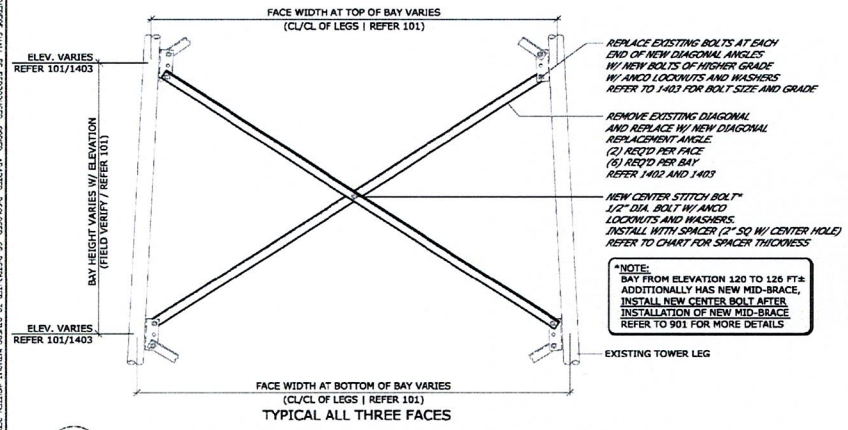

TYPICAL ALL THREE FACES

1401 ELEVATION: TYPICAL NEW DIAGONAL REPLACEMENT

SCALE: NOT TO SCALE

(1 BAY SHOWN / 13 BAYS REQ'D TOTAL)

MEMBER REPLACEMENT NOTES:

1. TOWER BAY TO BE ADEQUATELY SUPPORTED W/ TEMPORARY BRACING / FRAME PRIOR TO REMOVING ANY MEMBERS / BOLTS.
2. EXISTING MEMBERS / BOLTS ARE TO BE REMOVED AND REPLACED ONE AT A TIME.
3. WIND SPEED SHOULD NOT TO EXCEED 10 MPH AT GROUND LEVEL AND NO THUNDERSTORMS FORECASTED IN ORDER TO ENSURE SAFE WORKING CONDITIONS.
4. TAKE ALL NECESSARY PRECAUTIONS TO RETAIN THE STRUCTURAL INTEGRITY AND STABILITY OF THE TOWER; EXERCISE ALL DUE CAUTION WHILE MODIFYING THE TOWER.
5. TOWER MODIFICATIONS ARE TO BE INSTALLED AND COMPLETED PRIOR TO INSTALLATION OF NEW ANTENNAS AND APPURTENANCES.

DIAGONAL REPLACEMENT MEMBER CHART (FIELD VERIFY LENGTHS)

SECTION	BAY	BAY ELEVATION	EXISTING DIAGONAL	NEW DIAG. REPL. ANGLE	CUT LENGTH (*)	MK. DIAG.	SPACER	BOLT DIA.	BOLT GRADE	HOLE DIA.
#2	#1	20'-0"± - 30'-0"±	L 4" x 4" x 1/4"	L 4" x 4" x 5/16"	14'-3"± LG.	DR21	5/8"	5/8"ø	A490X	11/16"ø
	#2	30'-0"± - 40'-0"±			13'-9"± LG.	DR22	5/8"			
#6	#1	100'-0"± - 106'-8"±	L 2 1/2" x 2 1/2" x 3/16"	L 3" x 3" x 1/4"	14'-3"± LG.	DR61	9/16"	1/2"ø	A490X	9/16"ø
	#2	106'-8"± - 113'-4"±			13'-9"± LG.	DR62	9/16"			
	#3	113'-4"± - 120'-0"±			13'-3"± LG.	DR63	9/16"			
#7	#1	120'-0"± - 126'-8"±	L 2" x 2" x 3/16"	L 3" x 3" x 3/16"	14'-3"± LG.	DR71	3/16"	1/2"ø	A325X	9/16"ø
	#2	126'-8"± - 133'-4"±			13'-9"± LG.	DR72	3/16"			
	#3	133'-4"± - 140'-0"±			13'-3"± LG.	DR73	3/16"			
#8	#1	140'-0"± - 146'-8"±	L 1 3/4" x 1 3/4" x 1/8"	L 2 1/2" x 2 1/2" x 3/16"	12'-9"± LG.	DR81	3/16"	1/2"ø	A325X	9/16"ø
	#2	146'-8"± - 153'-4"±			12'-3"± LG.	DR82	3/16"			
	#3	153'-4"± - 160'-0"±			11'-9"± LG.	DR83	3/16"			
#9	#1	160'-0"± - 165'-0"±	L 1 1/2" x 1 1/2" x 1/8"	L 2" x 2" x 3/16"	10'-3"± LG.	DR91	-	1/2"ø	A325X	9/16"ø
	#2	165'-0"± - 170'-0"±			9'-9"± LG.	DR92	-			

(*) LENGTH APPROX. FOR BIDDING PURPOSES; FIELD VERIFY / DETERMINE ACTUAL LENGTH.

1403 DIAGONAL REPLACEMENT MEMBER SCHEDULE

REFER 101 FOR MEMBER SIZES AND SCHEDULES.

MALOUF ENGINEERING INTERNATIONAL, INC.
17950 PRESTON ROAD SUITE 720
DALLAS, TEXAS 75252-5635
972-783-2578 (fax: 2583)
www.maloufengineering.com

© MEI, INC. 2020

TOLLAND CENTRAL SITE FA 10071279
180 FT± SELF-SUPPORTING TOWER
130 BALD HILL ROAD, TOLLAND, CT 06084
LAT: 41-52-59.13 N - LON: 72-22-32.52 W

AT&T

NO.	DATE	REVISIONS	BDD	KMM	MM
0	08/21/20	ISSUED FOR CONSTRUCTION	DRAWN	CHK'D	APP'D

STATE OF CONNECTICUT — EDWARD K. MALOUF — 17715 — REGISTERED PROFESSIONAL ENGINEER
AUGUST 21, 2020

VERTICAL RESOURCES GROUP / AT&T
NEW DIAGONAL REPLACEMENT DETAILS

MEI PROJECT ID	SHEET NUMBER	REV.
CT00983S-20V1	S14	0

VRG VERTICAL RESOURCES GROUP
23 Midstate Drive, #210
Auburn, MA 01501
Tel. (508) 981-9590
Fax (508) 519-8939
mnobre@verticalresourcesgrp.com

EMPIRE telecom
EMPIRE TELECOM USA, LLC
16 ESQUIRE ROAD
BILLERICA, MA 01821

SITE NUMBER: CT5331
SITE NAME: TOLLAND CENTRAL
PROJECT: LTE 4C / 5GNR / 4TxRx
130 BALD HILL ROAD
TOLLAND, CT 06084
TOLLAND COUNTY

at&t
550 COCHITUATE RD
SUITES 13 & 14
FRAMINGHAM, MA 01701

NO.	DATE	REVISION	BY	CHK	APP'D
4	09/10/20	GENERAL REVISIONS	G.A.M.		
3	08/24/20	ADDED TOWER MODIFICATIONS	G.A.M.		
2	05/12/20	REVISED PER NEW RFDS	G.A.M.		
1	04/29/20	FOR REVIEW	G.A.M.		

SCALE | DESIGNED BY: M.N. | DRAWN BY: G.A.M.

AT&T

TOWER MOD DETAILS XIV

JOB NUMBER	DRAWING NUMBER	REV.
CT5331-LTE4C5G	20	2

REFER SHEET T02 -T04 FOR TECH. SPEC. NOTES

NOTES:
1. REWORK ANY ICE BRIDGES, EQUIPMENT AND BURIED UTILITIES AS REQUIRED.
2. SHORE ADJACENT STRUCTURES AS REQUIRED.

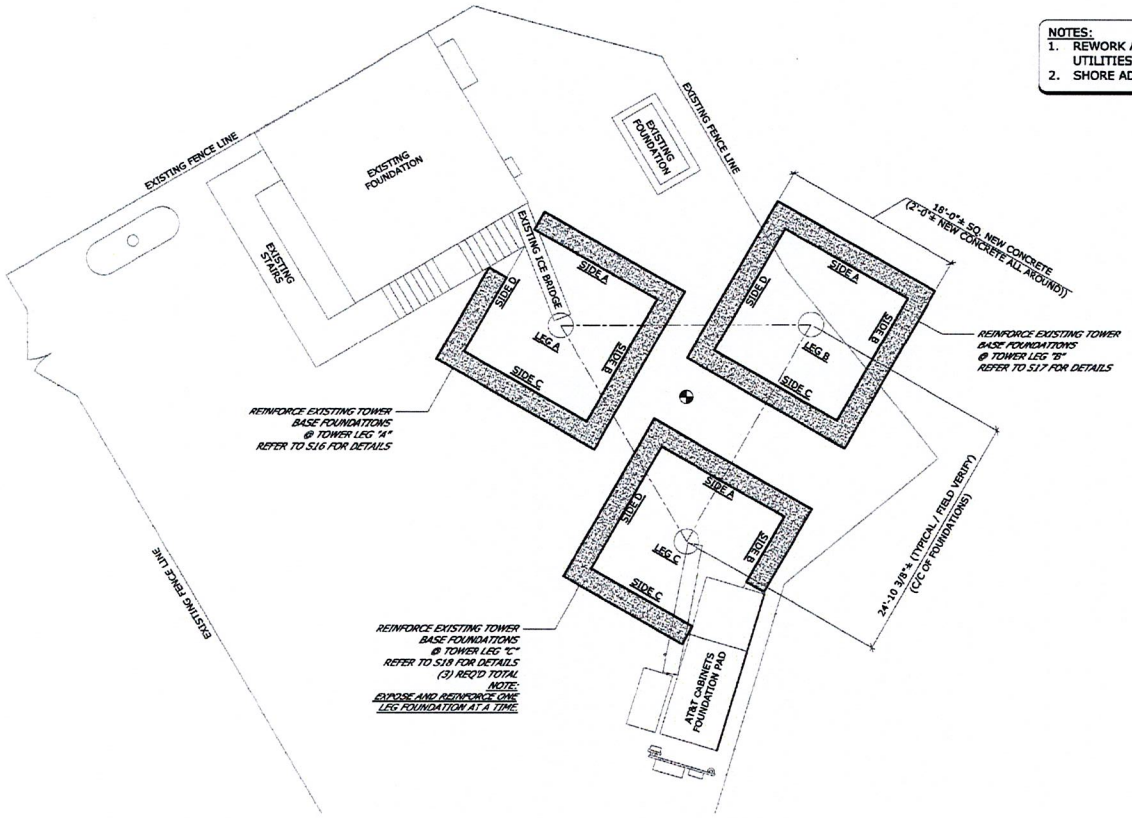

1501 PLAN VIEW: EXISTING SITE LAYOUT (W/ NEW FOUNDATIONS)
SCALE: N.T.S

N APPROX.

REFER 101 FOR MEMBER SIZES AND SCHEDULES.

ALL RIGHTS RESERVED. THIS DRAWING SHALL REMAIN THE PROPERTY OF MALOUF ENGINEERING INTERNATIONAL, INC. NO PART THEREOF SHALL BE REPRODUCED, COPIED, ADAPTED, DISCLOSED, OR DISTRIBUTED TO OTHERS WITHOUT WRITTEN PERMISSION OF MEI, INC.

MALOUF ENGINEERING INTERNATIONAL, INC.
17950 PRESTON ROAD SUITE 720
DALLAS, TEXAS 75252-5635
972-783-2578 (fax: 2583)
www.maloufengineering.com
© MEI, INC. 2020

TOLLAND CENTRAL SITE FA 10071279
180 FT± SELF-SUPPORTING TOWER
130 BALD HILL ROAD, TOLLAND, CT 06084
LAT: 41-52-59.13 N - LON: 72-22-32.52 W

AT&T

NO.	DATE	REVISIONS	DRAWN	ENG'D	APP'D
0	08/21/20	ISSUED FOR CONSTRUCTION	BDB	KMM	MM

STATE OF CONNECTICUT · E. MARK MALOUF · No. 17715 · LICENSED PROFESSIONAL ENGINEER

AUGUST 21, 2020

VERTICAL RESOURCES GROUP / AT&T
SITE PLAN LAYOUT

MEI PROJECT ID	SHEET NUMBER	REV.
CT00983S-20V1	S15	0

VRG
VERTICAL RESOURCES GROUP
23 Midstate Drive, #210
Auburn, MA 01501
Tel. (508) 981-9590
Fax (508) 519-8939
mnabre@verticalresourcesgrp.com

EMPIRE telecom
EMPIRE TELECOM USA, LLC
16 ESQUIRE ROAD
BILLERICA, MA 01821

SITE NUMBER: CT5331
SITE NAME: TOLLAND CENTRAL
PROJECT: LTE 4C / 5GNR / 4TxRx
130 BALD HILL ROAD
TOLLAND, CT 06084
TOLLAND COUNTY

at&t
550 COCHITUATE RD
SUITES 13 & 14
FRAMINGHAM, MA 01701

NO.	DATE	REVISION	BY	CHK	APP'D
2	09/10/20	GENERAL REVISIONS	G.A.M.		
2	08/24/20	ADDED TOWER MODIFICATIONS	G.A.M.		
1	05/12/20	REVISED PER NEW RFDS	G.A.M.		
0	04/29/20	FOR REVIEW	G.A.M.		

SCALE | DESIGNED BY: M.N. | DRAWN BY: G.A.M.

AT&T
TOWER MOD DETAILS XV

JOB NUMBER	DRAWING NUMBER	REV
CT5331-LTE4C5G	21	2

ALL RIGHTS RESERVED. THIS DRAWING SHALL REMAIN THE PROPERTY OF MALOUF ENGINEERING INTERNATIONAL, INC. NO PART THEREOF SHALL BE REPRODUCED, COPIED, ADAPTED, DISCLOSED OR DISTRIBUTED TO OTHERS WITHOUT WRITTEN PERMISSION OF MEI, INC.

FOUNDATION REPAIR:

1. USE "FIVESTAR" BONDING ADHESIVE FOR BONDING WET CONCRETE TO DRY CONCRETE.
2. USE "FIVESTAR" RS ANCHOR GEL TO EPOXY NEW DOWELS INTO EXISTING FOUNDATION.
3. ROUGHEN EXTERIOR PERIMETER OF EXISTING FOUNDATION TO A DEPTH OF 1/4" PRIOR TO PLACEMENT OF CONCRETE.
4. CREATE A CONTINUOUS SHEAR-KEY - : 1/2" x 4" AS SHOWN (DO NOT DAMAGE EXIST. CONC. REINF.)
5. CORE DRILL AND EPOXY FOR #8 REBAR DOWELS USING A 1 1/4" DIA. HOLE. INSTALL PER ADHESIVES MANUFACTURERS INSTRUCTIONS.
6. APPLY BONDING AGENT TO EXISTING FOUNDATIONS PREPARED SURFACE BEFORE POURING NEW CONCRETE PER MANUFACTURERS INSTRUCTIONS.
7. POUR NEW CONCRETE BEAM STRIP AROUND EXIST. TOWER FOUNDATION.

SPECIAL NOTES:

- DO NOT USE JACK HAMMERS.
- BRACE TOWER BASE AS REQUIRED FOR STABILITY PRIOR TO EXCAVATION.
- REWORK BASE GROUNDING AS REQUIRED.
- RE-WORK COAXES/ICE BRIDGES AS REQ'D. SHORE AND NEAR BY STRUCTURES INCLUDING SHELTERS AS REQ'D.

REFER SHEET T02 - T04 FOR TECH. SPEC. NOTES

BILL OF MATERIAL

DESCRIPTION	QTY.	SIZE	LENGTH
TOP LAYER REBAR (SIDE A)	3	#9	15'-6"
MIDDLE LAYER REBAR (SIDE A)	1	#9	15'-6"
BOTTOM LAYER REBAR (SIDE A)	3	#9	15'-9"
REBAR (@ LOCATION ABOVE DOWEL / SIDE A)	2	#9	15'-6"
TOP LAYER REBAR (SIDE B)	3	#9	17'-6"
MIDDLE LAYER REBAR (SIDE B)	1	#9	17'-6"
BOTTOM LAYER REBAR (SIDE B)	3	#9	18'-0"
REBAR (@ LOCATION ABOVE DOWEL / SIDE B)	2	#9	17'-6"
TOP LAYER REBAR (SIDE C)	3	#9	17'-6"
MIDDLE LAYER REBAR (SIDE C)	1	#9	17'-6"
BOTTOM LAYER REBAR (SIDE C)	3	#9	18'-0"
REBAR (@ LOCATION ABOVE DOWEL / SIDE C)	2	#9	17'-6"
TOP LAYER REBAR (SIDE D)	3	#9	10'-0"
MIDDLE LAYER REBAR (SIDE D)	1	#9	10'-0"
BOTTOM LAYER REBAR (SIDE D)	3	#9	10'-3"
REBAR (@ LOCATION ABOVE DOWEL / SIDE D)	2	#9	10'-0"
BEAM TIES	46	#4	6'-9"
BENT REBAR DOWELS	36	#8	2'-9"

APPROX. CONCRETE VOLUME: 9.50± CUBIC YARDS

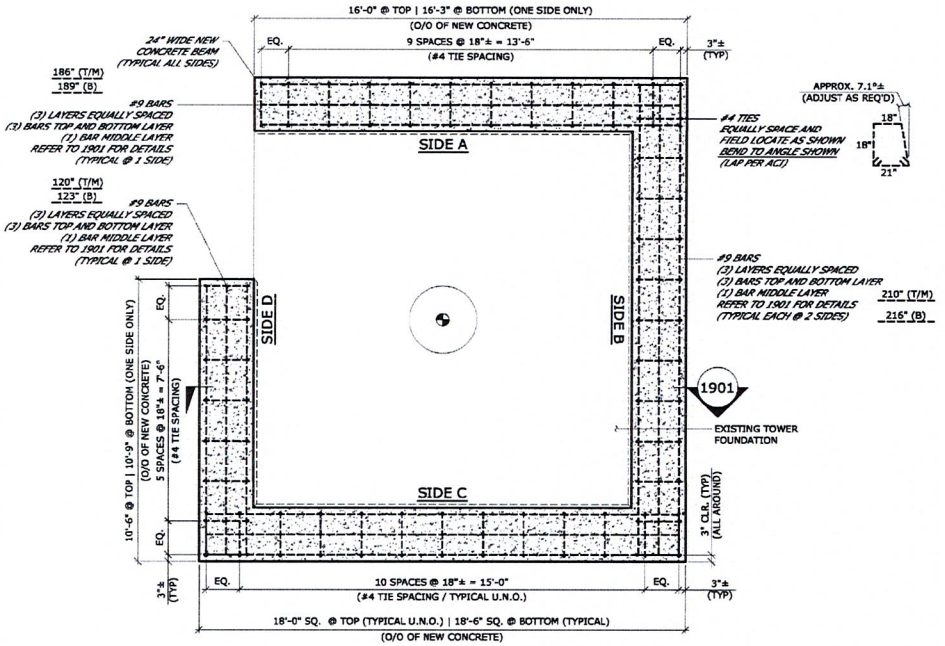

1601 PLAN VIEW: NEW FOUNDATION REINFORCEMENTS (@ LEG FOUNDATION A)
SCALE: 1/4" = 1'-0"

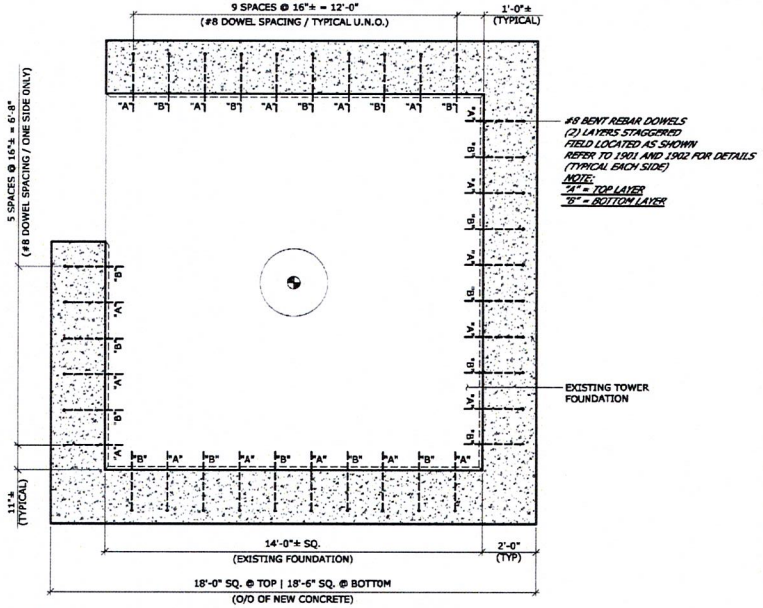

1602 PLAN VIEW: NEW FOUNDATION BENT DOWELS (@ LEG FOUNDATION B)
SCALE: 1/4" = 1'-0"

MALOUF ENGINEERING INTERNATIONAL, INC.
17950 PRESTON ROAD SUITE 720
DALLAS, TEXAS 75252-5635
972-783-2578 (fax: 2583)
www.maloufengineering.com
© MEI, INC. 2020

TOLLAND CENTRAL SITE FA 10071279
180 FT± SELF-SUPPORTING TOWER
130 BALD HILL ROAD, TOLLAND, CT 06084
LAT: 41-52-59.13 N - LON: 72-22-32.52 W

AT&T

NO.	DATE	REVISIONS	BDB DRAWN	KMM ENGR'D	MM APP'D
0	08/21/20	ISSUED FOR CONSTRUCTION			

STATE OF CONNECTICUT · KENNETH MALOUF · 17715 · LICENSED PROFESSIONAL ENGINEER
AUGUST 21, 2020

VERTICAL RESOURCES GROUP / AT&T
FOUNDATION REINFORCEMENT DETAILS (@ LEG A)

MEI PROJECT ID	SHEET NUMBER	REV.
CT00983S-20V1	S16	0

VRG
VERTICAL RESOURCES GROUP
23 Midstate Drive, #210
Auburn, MA 01501
Tel. (508) 981-9590
Fax (508) 519-8939
mnobre@verticalresourcesgrp.com

EMPIRE telecom
EMPIRE TELECOM USA, LLC
16 ESQUIRE ROAD
BILLERICA, MA 01821

SITE NUMBER: CT5331
SITE NAME: TOLLAND CENTRAL
PROJECT: LTE 4C / 5GNR / 4TxRx
130 BALD HILL ROAD
TOLLAND, CT 06084
TOLLAND COUNTY

at&t
550 COCHITUATE RD
SUITES 13 & 14
FRAMINGHAM, MA 01701

NO.	DATE	REVISION	BY	CHK	APP'D
1	09/10/20	GENERAL REVISIONS	G.A.M.		
2	08/24/20	ADDED TOWER MODIFICATIONS	G.A.M.		
1	05/12/20	REVISED PER NEW RFDS	G.A.M.		
0	04/29/20	FOR REVIEW	G.A.M.		

SCALE | DESIGNED BY: M.N. | DRAWN BY: G.A.M.

AT&T
TOWER MOD DETAILS XVI

JOB NUMBER	DRAWING NUMBER	REV
CT5331-LTE4C5G	22	2

ALL TEXT IS REVERSED THIS DRAWING AND MAY INDICATE IF NOT PLAINLY VISIBLE. IF NOT PLAINLY VISIBLE, THIS DRAWING OR ANY PART THEREOF MAY HAVE BEEN REPRODUCED OR ALTERED WITHOUT THE KNOWLEDGE AND CONSENT OF MALOUF ENGINEERING INTERNATIONAL, INC.

FOUNDATION REPAIR:

1. USE "FIVESTAR" BONDING ADHESIVE FOR BONDING WET CONCRETE TO DRY CONCRETE.
2. USE "FIVESTAR" RS ANCHOR GEL TO EPOXY NEW DOWELS INTO EXISTING FOUNDATION.
3. ROUGHEN EXTERIOR PERIMETER OF EXISTING FOUNDATION TO A DEPTH OF 1/4" PRIOR TO PLACEMENT OF CONCRETE.
4. CREATE A CONTINUOUS SHEAR-KEY - 1 1/2" x 4" AS SHOWN (DO NOT DAMAGE EXIST. CONC. REINF.)
5. CORE DRILL AND EPOXY FOR #8 REBAR DOWELS USING A 1 1/4" DIA. HOLE. INSTALL PER ADHESIVES MANUFACTURERS INSTRUCTIONS.
6. APPLY BONDING AGENT TO EXISTING FOUNDATIONS PREPARED SURFACE BEFORE POURING NEW CONCRETE PER MANUFACTURERS INSTRUCTIONS.
7. POUR NEW CONCRETE BEAM STRIP AROUND EXIST. TOWER FOUNDATION.

SPECIAL NOTES:

- DO NOT USE JACK HAMMERS.
- BRACE TOWER BASE AS REQUIRED FOR STABILITY PRIOR TO EXCAVATION.
- REWORK BASE GROUNDING AS REQUIRED.
- RE-WORK COAXES/ICE BRIDGES AS REQ'D. SHORE AND NEAR BY STRUCTURES INCLUDING SHELTERS AS REQ'D.

BILL OF MATERIAL

DESCRIPTION	QTY.	SIZE	LENGTH
TOP LAYER REBAR	12	#9	17'-6"
MIDDLE LAYER REBAR	4	#9	17'-6"
BOTTOM LAYER REBAR	12	#9	18'-0"
REBAR (@ LOCATION ABOVE DOWEL)	8	#9	17'-6"
BEAM TIES	52	#4	6'-9"
BENT REBAR DOWELS	40	#8	2'-9"

APPROX. CONCRETE VOLUME: 10.75± CUBIC YARDS

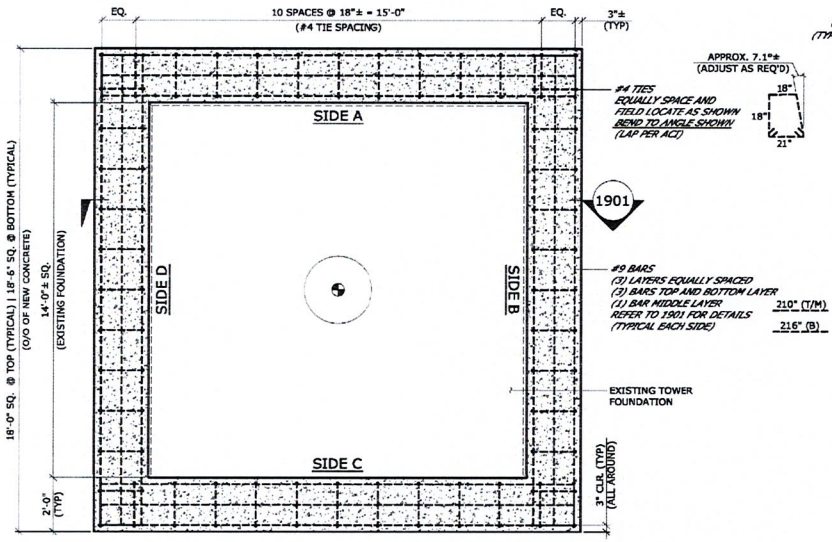

1701 PLAN VIEW: NEW FOUNDATION REINFORCEMENTS (@ LEG FOUNDATION B)
SCALE: 1/4" = 1'-0"

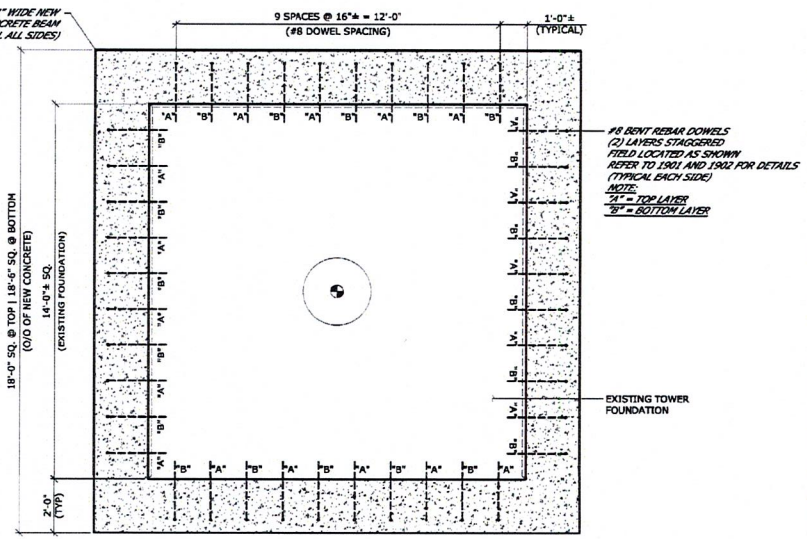

1702 PLAN VIEW: NEW FOUNDATION BENT DOWELS (@ LEG FOUNDATION B)
SCALE: 1/4" = 1'-0"

REFER 101 FOR MEMBER SIZES AND SCHEDULES.

REFER SHEET T02 - T04 FOR TECH. SPEC. NOTES

MALOUF ENGINEERING INTERNATIONAL, INC.
17950 PRESTON ROAD SUITE 720
DALLAS, TEXAS 75252-5635
972-783-2578 (fax: 2583)
www.maloufengineering.com

© MEI, INC. 2020

TOLLAND CENTRAL SITE FA 10071279
180 FT± SELF-SUPPORTING TOWER
130 BALD HILL ROAD, TOLLAND, CT 06084
LAT: 41-52-59.13 N - LON: 72-22-32.52 W

AT&T

NO.	DATE	REVISIONS	BY	CHK	APP'D
0	08/21/20	ISSUED FOR CONSTRUCTION	BOB	KJM	MM

STATE OF CONNECTICUT · KENNETH R. MALOUF · 17715 · LICENSED PROFESSIONAL ENGINEER
AUGUST 21, 2020

VERTICAL RESOURCES GROUP / AT&T
FOUNDATION REINFORCEMENT DETAILS (@ LEG B)

MEI PROJECT ID	SHEET NUMBER	REV.
CT00983S-20V1	S17	0

VRG VERTICAL RESOURCES GROUP
23 Midstate Drive, #210
Auburn, MA 01501
Tel. (508) 981-9590
Fax (508) 519-8939
mnobre@verticalresourcesgrp.com

EMPIRE telecom
EMPIRE TELECOM USA, LLC
16 ESQUIRE ROAD
BILLERICA, MA 01821

SITE NUMBER: CT5331
SITE NAME: TOLLAND CENTRAL
PROJECT: LTE 4C / 5GNR / 4TxRx
130 BALD HILL ROAD
TOLLAND, CT 06084
TOLLAND COUNTY

at&t
550 COCHITUATE RD
SUITES 13 & 14
FRAMINGHAM, MA 01701

NO.	DATE	REVISION	BY	CHK	APP'D
3	09/10/20	GENERAL REVISIONS	G.A.M.		
2	08/24/20	ADDED TOWER MODIFICATIONS	G.A.M.		
1	05/12/20	REVISED PER NEW RFDS	G.A.M.		
A	04/29/20	FOR REVIEW	G.A.M.		

SCALE | DESIGNED BY: M.N. | DRAWN BY: G.A.M.

AT&T

TOWER MOD DETAILS XVII

JOB NUMBER	DRAWING NUMBER	REV
CT5331-LTE4C5G	23	2

ALL RIGHTS RESERVED. THIS DRAWING SHALL REMAIN THE PROPERTY OF MALOUF ENGINEERING INTERNATIONAL, INC. NO PART THEREOF SHALL BE REPRODUCED, COPIED, ADAPTED, DISCLOSED, OR DISTRIBUTED TO OTHERS WITHOUT WRITTEN PERMISSION OF MEI, INC.

FOUNDATION REPAIR:

1. USE "FIVESTAR" BONDING ADHESIVE FOR BONDING WET CONCRETE TO DRY CONCRETE.
2. USE "FIVESTAR" RS ANCHOR GEL TO EPOXY NEW DOWELS INTO EXISTING FOUNDATION.
3. ROUGHEN EXTERIOR PERIMETER OF EXISTING FOUNDATION TO A DEPTH OF 1/4" PRIOR TO PLACEMENT OF CONCRETE.
4. CREATE A CONTINUOUS SHEAR-KEY - 1 1/2" x 4" AS SHOWN (DO NOT DAMAGE EXIST. CONC. REINF.)
5. CORE DRILL AND EPOXY FOR #8 REBAR DOWELS USING A 1 1/4" DIA. HOLE. INSTALL PER ADHESIVES MANUFACTURERS INSTRUCTIONS.
6. APPLY BONDING AGENT TO EXISTING FOUNDATIONS PREPARED SURFACE BEFORE POURING NEW CONCRETE PER MANUFACTURERS INSTRUCTIONS.
7. POUR NEW CONCRETE BEAM STRIP AROUND EXIST. TOWER FOUNDATION.

SPECIAL NOTES:

- DO NOT USE JACK HAMMERS.
- BRACE TOWER BASE AS REQUIRED FOR STABILITY PRIOR TO EXCAVATION.
- REWORK BASE GROUNDING AS REQUIRED.
- RE-WORK COAXES/ICE BRIDGES AS REQ'D. SHORE AND NEAR BY STRUCTURES INCLUDING SHELTERS AS REQ'D.

BILL OF MATERIAL

DESCRIPTION	QTY.	SIZE	LENGTH
TOP LAYER REBAR (SIDE A)	3	#9	17'-6"
MIDDLE LAYER REBAR (SIDE A)	1	#9	17'-6"
BOTTOM LAYER REBAR (SIDE A)	3	#9	18'-0"
REBAR (@ LOCATION ABOVE DOWEL / SIDE A)	2	#9	17'-6"
TOP LAYER REBAR (SIDE B)	3	#9	9'-0"
MIDDLE LAYER REBAR (SIDE B)	1	#9	9'-0"
BOTTOM LAYER REBAR (SIDE B)	3	#9	9'-3"
REBAR (@ LOCATION ABOVE DOWEL / SIDE B)	2	#9	9'-0"
TOP LAYER REBAR (SIDE C)	3	#9	13'-0"
MIDDLE LAYER REBAR (SIDE C)	1	#9	13'-0"
BOTTOM LAYER REBAR (SIDE C)	3	#9	13'-3"
REBAR (@ LOCATION ABOVE DOWEL / SIDE C)	2	#9	13'-0"
TOP LAYER REBAR (SIDE D)	3	#9	17'-6"
MIDDLE LAYER REBAR (SIDE D)	1	#9	17'-6"
BOTTOM LAYER REBAR (SIDE D)	3	#9	18'-0"
REBAR (@ LOCATION ABOVE DOWEL / SIDE D)	2	#9	17'-6"
BEAM TIES	43	#4	6'-9"
BENT REBAR DOWELS	33	#8	2'-9"

APPROX. CONCRETE VOLUME: 9.00± CUBIC YARDS

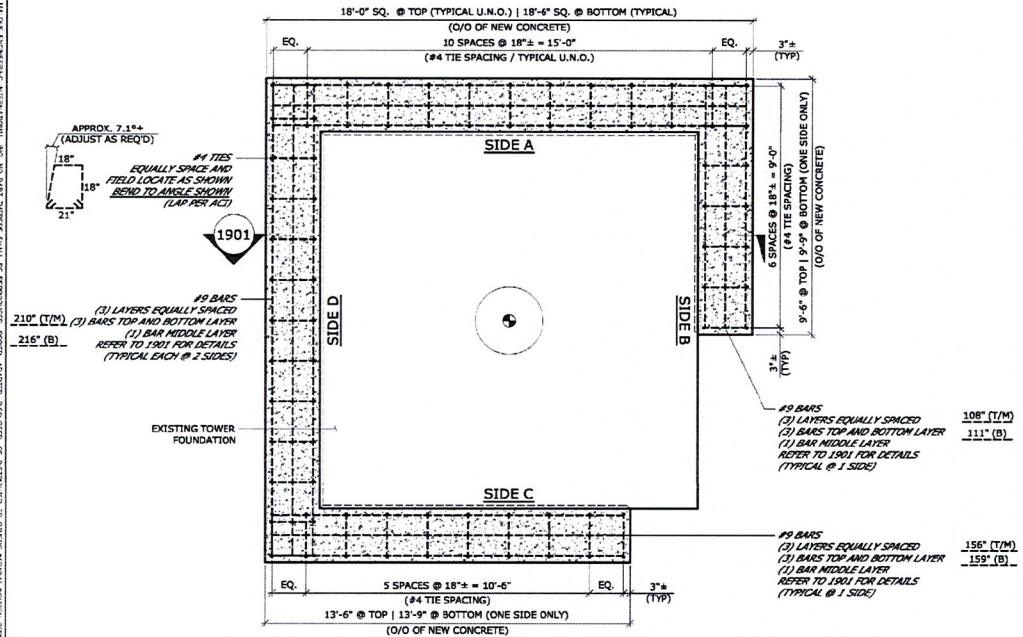

1801 PLAN VIEW: NEW FOUNDATION REINFORCEMENTS (@ LEG FOUNDATION C)
SCALE: 1/4" = 1'-0"

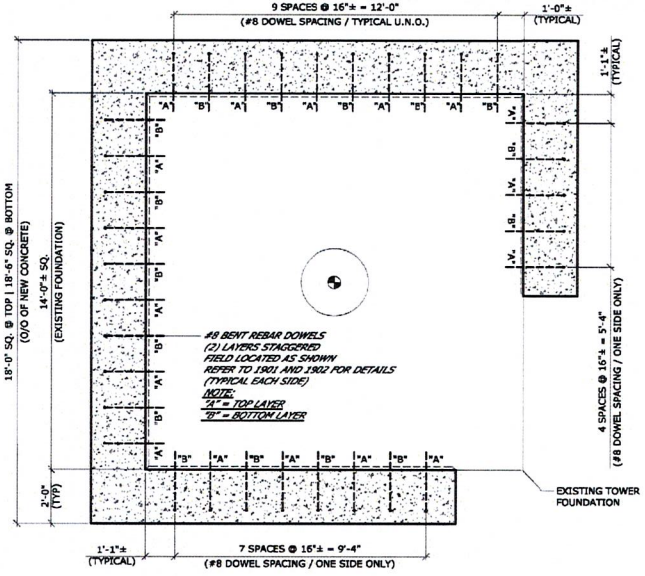

1802 PLAN VIEW: NEW FOUNDATION BENT DOWELS (@ LEG FOUNDATION C)
SCALE: 1/4" = 1'-0"

REFER 101 FOR MEMBER SIZES AND SCHEDULES.

REFER SHEET T02 - T04 FOR TECH. SPEC. NOTES

MALOUF ENGINEERING INTERNATIONAL, INC.
17950 PRESTON ROAD SUITE 720
DALLAS, TEXAS 75252-5635
972-783-2578 (fax: 2583)
www.maloufengineering.com
© MEI, INC. 2020

TOLLAND CENTRAL SITE FA 10071279
180 FT± SELF-SUPPORTING TOWER
130 BALD HILL ROAD, TOLLAND, CT 06084
LAT: 41-52-59.13 N - LON: 72-22-32.52 W

AT&T

NO.	DATE	REVISIONS	BDD	KMW	MM
0	08/21/20	ISSUED FOR CONSTRUCTION	DRAWN	ENG'D	APP'D

STATE OF CONNECTICUT — MARK MALOUF — 17715 — LICENSED PROFESSIONAL ENGINEER
AUGUST 21, 2020

VERTICAL RESOURCES GROUP / AT&T
FOUNDATION REINFORCEMENT DETAILS (@ LEG C)

MEI PROJECT ID	SHEET NUMBER	REV.
CT00983S-20V1	S18	0

VRG
VERTICAL RESOURCES GROUP
23 Midstate Drive, #210
Auburn, MA 01501
Tel. (508) 981-9590
Fax (508) 519-8939
mnobre@verticalresourcesgrp.com

EMPIRE telecom
EMPIRE TELECOM USA, LLC
16 ESQUIRE ROAD
BILLERICA, MA 01821

SITE NUMBER: CT5331
SITE NAME: TOLLAND CENTRAL
PROJECT: LTE 4C / 5GNR / 4TxRx
130 BALD HILL ROAD
TOLLAND, CT 06084
TOLLAND COUNTY

at&t
550 COCHITUATE RD
SUITES 13 & 14
FRAMINGHAM, MA 01701

NO.	DATE	REVISION	BY	CHK	APP'D
2	09/10/20	GENERAL REVISIONS	G.A.M.		
2	08/24/20	ADDED TOWER MODIFICATIONS	G.A.M.		
1	05/12/20	REVISED PER NEW RFDS	G.A.M.		
0	04/29/20	FOR REVIEW	G.A.M.		

SCALE | DESIGNED BY: M.N. | DRAWN BY: G.A.M.

AT&T
TOWER MOD DETAILS XVIII

JOB NUMBER	DRAWING NUMBER	REV.
CT5331-LTE4C5G	24	2

ALL RIGHTS RESERVED. THIS DRAWING SHALL REMAIN THE PROPERTY OF MALOUF ENGINEERING INTERNATIONAL, INC. NO PART THEREOF SHALL BE REPRODUCED, COPIED, ADAPTED, DISCLOSED OR DISTRIBUTED TO OTHERS WITHOUT WRITTEN PERMISSION OF MEI, INC.

FOUNDATION REPAIR:

1. USE "FIVESTAR" BONDING ADHESIVE FOR BONDING WET CONCRETE TO DRY CONCRETE.
2. USE "FIVESTAR" RS ANCHOR GEL TO EPOXY NEW DOWELS INTO EXISTING FOUNDATION.
3. ROUGHEN EXTERIOR PERIMETER OF EXISTING FOUNDATION TO A DEPTH OF 1/4" PRIOR TO PLACEMENT OF CONCRETE.
4. CREATE A CONTINUOUS SHEAR-KEY - 1 1/2" x 4" AS SHOWN (DO NOT DAMAGE EXIST. CONC. REINF.)
5. CORE DRILL AND EPOXY FOR #8 REBAR DOWELS USING A 1 1/4" DIA. HOLE. INSTALL PER ADHESIVES MANUFACTURERS INSTRUCTIONS.
6. APPLY BONDING AGENT TO EXISTING FOUNDATIONS PREPARED SURFACE BEFORE POURING NEW CONCRETE PER MANUFACTURERS INSTRUCTIONS.
7. POUR NEW CONCRETE BEAM STRIP AROUND EXIST. TOWER FOUNDATION.

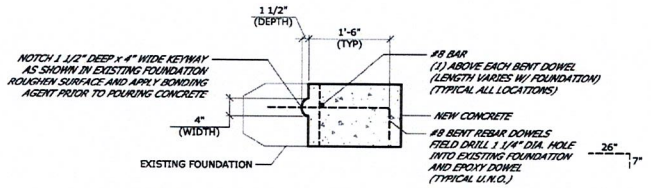

1902 DETAIL: TYPICAL DOWEL AND KEYWAY
SCALE: 1/2" = 1'-0"

SPECIAL NOTES:

- DO NOT USE JACK HAMMERS.
- BRACE TOWER BASE AS REQUIRED FOR STABILITY PRIOR TO EXCAVATION.
- REWORK BASE GROUNDING AS REQUIRED.
- RE-WORK COAXES/ICE BRIDGES AS REQ'D. SHORE AND NEAR BY STRUCTURES INCLUDING SHELTERS AS REQ'D.

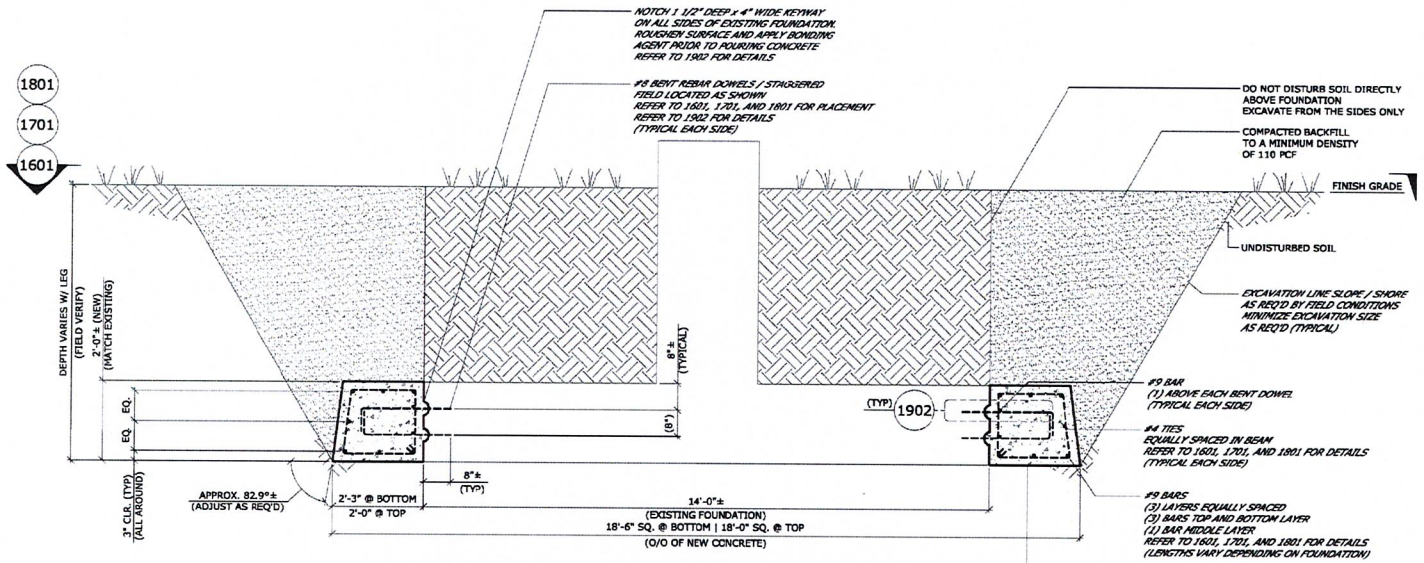

1901 SECTION: NEW FOUNDATION REINFORCEMENTS
SCALE: 3/8" = 1'-0" (1 FOUNDATION SHOWN / 3 REQ'D TOTAL)

REFER 101 FOR MEMBER SIZES AND SCHEDULES.

MALOUF ENGINEERING INTERNATIONAL, INC.
17950 PRESTON ROAD SUITE 720
DALLAS, TEXAS 75252-5635
972-783-2578 (fax: 2583)
www.malouf.engineering.com
© MEI, INC. 2020

TOLLAND CENTRAL SITE FA 10071279
180 FT± SELF-SUPPORTING TOWER
130 BALD HILL ROAD, TOLLAND, CT 06084
LAT: 41-52-59.13 N - LON: 72-22-32.52 W

AT&T

NO.	DATE	REVISIONS	DRAWN	CHK'D	APP'D
0	08/21/20	ISSUED FOR CONSTRUCTION	BOB	KMM	MM

STATE OF CONNECTION — KENNETH K. MALOUF — 17715 — PROFESSIONAL ENGINEER
AUGUST 21, 2020

VERTICAL RESOURCES GROUP / AT&T
TYPICAL FOUNDATION REINFORCEMENT SECTION

MEI PROJECT ID	SHEET NUMBER	REV.
CT00983S-20V1	S19	0

VRG
VERTICAL RESOURCES GROUP
23 Midstate Drive, #210
Auburn, MA 01501
Tel. (508) 981-9590
Fax (508) 519-8939
mnobre@verticalresourcesgrp.com

EMPIRE telecom
EMPIRE TELECOM USA, LLC
16 ESQUIRE ROAD
BILLERICA, MA 01821

SITE NUMBER: CT5331
SITE NAME: TOLLAND CENTRAL
PROJECT: LTE 4C / 5GNR / 4TxRx
130 BALD HILL ROAD
TOLLAND, CT 06084
TOLLAND COUNTY

at&t
550 COCHITUATE RD
SUITES 13 & 14
FRAMINGHAM, MA 01701

NO.	DATE	REVISION	BY	CHK	APP'D
4	09/10/20	GENERAL REVISIONS	G.A.M.		
3	08/24/20	ADDED TOWER MODIFICATIONS	G.A.M.		
2	05/12/20	REVISED PER NEW RFDS	G.A.M.		
1	04/29/20	FOR REVIEW	G.A.M.		

SCALE | DESIGNED BY: M.N. | DRAWN BY: G.A.M.

AT&T

TOWER MOD DETAILS XIX

JOB NUMBER	DRAWING NUMBER	REV
CT5331-LTE4C5G	24	2