New Cingular Wireless PCS, LLC
500 Enterprise Drive
Rocky Hill, Connecticut 06067

John Lawrence
Real Estate Consultant
95 Ryan Drive, Suite #1
Raynham, MA 02767
Phone: (781)715-5532
jlawrence@clinellc.com

May 8, 2014

Town of Statford
Mayor John A. Harkins
2725 Main Street
Stratford CT 06615

Re: Request for Tower Share – Notice
New Cingular Wireless PCS, LLC ("AT&T") Request for Approval of the Shared Use of an Existing Tower at 200 Oronoque Lane, Stratford CT 06615.
AT&T site number: CT2638

Dear Mayor Harkins,

New Cingular Wireless PCS, LLC ("AT&T") intends to replace the existing tower located at 200 Oronoque Lane and add telecommunications antennas and associated equipment. The Tower will be owned and operated by the Town of Stratford., a Municipality, having a mailing address of 2725 Main Street, Stratford CT.

A Request for Tower Share has been filed with the Connecticut Siting Council as required by Regulations of Connecticut State Agencies ("R.C.S.A.") Section 16-50aa. Please accept this letter as notification to the Town of Stratford under the Tower Share Application Guidelines.

The attached letter fully sets forth AT&T's proposal. However, if you have any questions or require any further information on the plans for the site or the Siting Council's procedures, please contact John Lawrence, Real Estate Consultant for AT&T, at (781) 715-5532 or Linda Roberts, Executive Director of the Connecticut Siting Council, at (860) 827-2935.

Sincerely,

John Lawrence
Real Estate Consultant

Enclosure
Honorable Robert Stein, Chairmen of the Connecticut Siting Council

New Cingular Wireless PCS, LLC
500 Enterprise Drive
Rocky Hill, Connecticut 06067

John Lawrence
Real Estate Consultant
95 Ryan Drive, Suite #1
Raynham, MA 02767
Phone: (781)715-5532
jlawrence@clinellc.com

May 1, 2014

Honorable Robert Stein, Chairman,
and Members of the Connecticut Siting Council
Connecticut Siting Council
10 Franklin Square
New Britain, Connecticut 06051

Re: **Request for Tower Share**
New Cingular Wireless PCS, LLC ("AT&T") Request for Approval of the Shared Use of an Existing Tower at 200 Oronoque Lane, Stratford CT 06615.
AT&T site number: CT2638

Dear Chairman Stein and Members of the Council:

AT&T proposes to share an existing telecommunications tower (the tower) located at 200 Oronoque Lane, Stratford CT (the facility). The subject parcel is identified by the Town of Stratford as Map 60 Lot 20. The property is owned by the Town of Stratford and is roughly 0.98+ acres and accommodates the Stratford Fire Department. The existing and replacement tower is and will be owned and operated by the Stratford Fire Department of 2725 Main Street, Stratford CT.

Pursuant to Connecticut General Statues Section 16-50aa (the Statute), AT&T requests a finding from the Connecticut Siting Council that the shared use of this facility is technically, legally, environmentally and economically feasible, will meet safety concerns, will avoid the unnecessary proliferation of towers and is in the public interest. AT&T further requests an order approving the shared use of this facility.

The purpose of this request is to use an existing Tower to develop AT&T's wireless broadband network to provide high speed wireless data and to develop wireless service within the State of Connecticut and in this part of Stratford, CT: thus avoiding the need for an additional tower in Stratford.

AT&T is licensed by the Federal Communications Commission ("FCC") to provide multiple technologies, including Global Systems for Mobile Communications ("GSM" or "2G"), Universal Mobile Telecommunications Service ("UMTS" or "3G") and long-term evolution ("4G" or "LTE") services in Fairfield County. AT&T is building and enhancing its network to take advantage of its licensed spectrum, and improve its broadband high speed wireless voice

and data services.

Existing Facility & Proposed Modification

The existing facility is a 120' lattice tower located at 200 Oronoque Lane and will be replaced by a 150' monopole. Site coordinates (NAD83) are N41° 15' 05.3" and W73° 07' 01.6". Currently there are no other commercial wireless carriers located on this Tower. The site plan of the facility is included in the Drawings, prepared by ProTerra Design Group, LLC attached hereto.

AT&T intends to install twelve (12) HPA-65R-BUU-H8 CCI panel antennas, twenty-seven (27) Ericsson RRUs and four (4) Surge arrestor mounted on a new antenna frame on a new monopole Tower. AT&T will install three (3) 1/2" RET cables, eight (8) DC cables and two (2) fiber lines on the tower.

AT&T has leased space for a 12'x20' shelter with emergency backup generator. The equipment will be installed within the proposed fenced compound. An ice bridge will connect the cabinet equipment with the tower. A GPS antenna will be located on the ice bridge.

Consistent with the requirements of the Statute, it is feasible for AT&T to collocate at this facility. AT&T is proposing to construct a new monopole tower which will become the ownership of the Town of Stratford. Included with this application is a Structural Design Report from Sabre Industries dated May 1, 2014 which shows that the proposed tower can support AT&T's proposed equipment.

The Proposal is Legally Feasible.

The Council has authority, pursuant to statute, to issue an order approving of the shared use of this tower. By issuing an order approving AT&T's shared use of this tower, AT&T will be able to proceed with obtaining a building permit for the proposed installation. The town of Stratford Planning Board approved the application for a Section 8-24 Review on March 20, 2014, which approval is included with this application. AT&T's proposal is legally feasible.

AT&T is a telecommunication provider licensed by the FCC to provide service in the State of Connecticut, including but not limited to Fairfield County. AT&T has entered into an agreement with the owner of this facility, Town of Stratford., for the location of this proposed equipment on the new tower so that it may provide telecommunications services to the surrounding community. Consequently, the proposal is legally feasible.

The Proposal is Environmentally Feasible.

Pursuant to the Statute, the proposal will be environmentally feasible for the following reasons:

- The overall impact on the Town of Stratford will be decreased with the sharing of a single tower versus the proliferation of multiple towers.

- There will be little increase in the visibility of the tower with the addition of the antennas and associated equipment on the new tower.

- There will be no increased impact on air quality because no air pollutants will be generated during normal operation of the facility.

- There will only be a brief, slight increase in noise pollution while the site is under construction.

- During construction, the proposed project will generate a small amount of traffic as construction takes place. Upon completion, traffic will be limited to an average of one trip per month for maintenance and inspections.

- There will be no adverse impact to the health and safety of the surrounding community or workers at the facility due to the addition of AT&T's antennas to the new tower. AT&T has performed an analysis of the radio frequency field emanating from the transmitting antennas on the tower to ensure compliance with the National Council on Radiation Protection and measurements (NCRP) standard for maximum permissible exposure (MPE) adopted by the FCC. The analysis dated April 28, 2014 indicates that AT&T and other antennas on the tower will cumulatively emit 8.875% of the NCRP standard for maximum permissible exposure. The report indicates that maximum level of exposure will be well below the FCC's mandated radio frequency exposure limits. The report is attached hereto and the calculations are below.

Measurement Position	Spatial Averaged %MPE Measurements - Cumulative of all Carriers		Calculated %MPE - Proposed Installation		Total %MPE (Current plus Proposed)	
	Controlled Population	Uncontrolled Population	Controlled Population	Uncontrolled Population	Controlled Population	Uncontrolled Population
1	0.1586	0.7930	0.0069	0.0346	0.1655	0.8276
2	0.4037	2.0185	0.0129	0.0643	0.4166	2.0828
3	0.5602	2.8010	0.0085	0.0425	0.5687	2.8435
4	1.1750	5.8750	0.0871	0.4355	1.2621	6.3105
5	0.8723	4.3615	0.0776	0.3879	0.9499	4.7494
6	0.7944	3.9720	0.0200	0.1002	0.8144	4.0722
7	0.9155	4.5775	0.0776	0.3879	0.9931	4.9654
8	0.7772	3.8860	0.0203	0.1013	0.7975	3.9873
9	0.9333	4.6665	0.0794	0.3972	1.0127	5.0637
10	0.9287	4.6435	0.0069	0.0346	0.9356	4.6781
11	0.9675	4.8375	0.0129	0.0643	0.9804	4.9018
12	1.0690	5.3450	0.0204	0.1019	1.0894	5.4469
13	1.1020	5.5100	0.0169	0.0847	1.1189	5.5947

- AT&T expects to enhance safety in this portion of Stratford by improving wireless telecommunications for local residents and travelers. AT&T is currently developing its network to provide its customers with quality and reliable coverage to comply with their FCC license, the site is a necessary part of AT&T's network development.

- Specifically, this proposal is designed to provide reliable wireless coverage for this section of Stratford, CT.

Conclusions:

For the reasons stated above, the attachment of AT&T's antennas and associated equipment to the tower would meet all the requirements set forth in the Statute. The proposal is legally, technically, economically and environmentally feasible and meets all public safety concerns. Therefore, AT&T respectfully requests that the Council approve this request for the shared use of this tower located at 200 Oronoque Lane, Stratford CT.

Respectfully yours,

John Lawrence
Real Estate Consultant

CC: Mayor John A. Harkins, Town of Stratford
Michele Briggs, New Cingular Wireless PCS, LLC (via e-mail)

TOWN OF STRATFORD

Stratford Town Hall, 2725 Main Street, Stratford, CT 06615
Phone: 203-385-4017 • Fax: 203-381-6928
www.townofstratford.com

PLANNING COMMISSION

March 20, 2014

Christopher Smedick
Special Assistant Town Attorney
Town of Stratford

Re: Section 8-24 Review – Proposed Replacement Tower at Oronoque Fire Station

Dear Chris:

At a meeting of the Planning Commission held March 18, 2014 your correspondence of March 4, 2014 concerning the above matter was discussed. The Commission also reviewed the letter and plans from Cuddy & Feder describing the proposal as well as the 8-24 Review provided by Gary Lorentson. Based on the information provided, the Commission felt that the proposed replacement tower was consistent with the goals and policies of the Plan of Conservation and Development as identified in the 8-24 Review by Gary Lorentson dated March 10, 2014, which is attached. As such, the Planning Commission voted to recommend approval of the replacement tower as proposed. During the meeting, the Commission discussed appropriate colors of the tower to reduce its visual impact on neighbors and the environment however no specific recommendation was made at the time. The Commission will discuss how best to soften the impact of the tower at their next meeting in April and will send along their recommendation following the meeting.

Sincerely,

GARY LORENTSON
Planning & Zoning Administrator

GL/ej

cc: Stephen Nocera, CAO
Tim Bishop, Town Attorney
Carol Cabral, Council Clerk
Jonathan Gottfried, Deputy Fire Chief

SITE NAME: STRATFORD MIDWOOD TRAIL
SITE NUMBER: CT-2638S
ADDRESS: 200 ORONOQUE LANE
STRATFORD, CT 06614

PERMITTING

DRAWING INDEX

SHEET	DESCRIPTION	REVISION
T-1	TITLE SHEET	1
C-1	ABUTTERS MAP & EXISTING CONDITIONS	1
A-1	PLOT PLAN	1
A-2	SITE PLAN & ELEVATION	1
D-1	DETAILS	1

GENERAL NOTES

1. CONTRACTOR SHALL VERIFY ALL PLANS AND EXISTING DIMENSIONS AND CONDITIONS ON THE JOB SITE AND SHALL IMMEDIATELY NOTIFY THE ENGINEER & AT&T REPRESENTATIVE IN WRITING OF DISCREPANCIES BEFORE PROCEEDING WITH THE WORK OR BE RESPONSIBLE FOR SAME.
2. THESE PLANS ARE INTENDED FOR PERMITTING USE ONLY. NOT FOR CONSTRUCTION.
3. ALL UNDERGROUND UTILITY INFORMATION WAS DETERMINED FROM SURFACE INVESTIGATIONS AND EXISTING PLANS OF RECORD. THE CONTRACTOR SHALL LOCATE ALL UNDERGROUND UTILITIES IN THE FIELD PRIOR TO ANY SITE WORK. CALL DIG-SAFE (888) 344-7233 72-HOURS PRIOR TO ANY EXCAVATION.
4. THIS SHEET SET WAS ORIGINALLY PRINTED TO ANSI D (22"x34") WITH 1" MARGINS. PRINTING TO ANSI B (11"x17") WILL RESULT IN A HALF-SCALE (1:2) SHEET SET WITH 1/2" MARGINS. CONFIRM ALL SCALED DISTANCES WITH GRAPHICAL SCALES SHOWN HEREIN.

VICINITY MAP

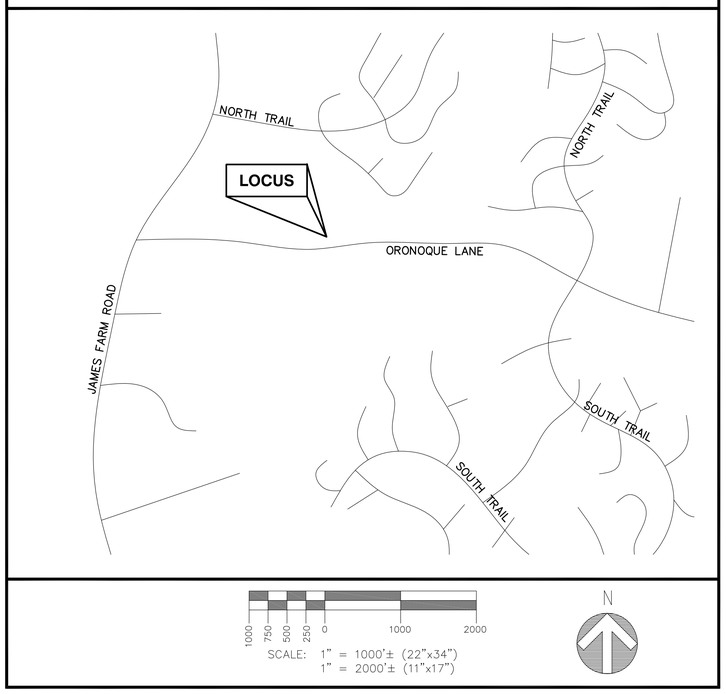

PROJECT INFORMATION

SITE TYPE:	REPLACEMENT TOWER
SCOPE OF WORK:	PROPOSED SHELTER AND MONOPOLE WITH RF EQUIPMENT.
SITE NAME:	STRATFORD MIDWOOD TRAIL
SITE NUMBER:	CT-2638S
SITE ADDRESS:	200 ORONOQUE LANE STRATFORD, CT 06614
ASSESSOR'S TAX ID#:	PARCEL 60.20-2-1
ZONING DISTRICT:	(RS-1) – ONE-FAMILY RESIDENCE
LATITUDE:	41° 15' 05.28" N
LONGITUDE:	73° 07' 01.63" W
DATUM:	NAD83
PROPERTY OWNER:	TOWN OF STRATFORD 200 ORONOQUE LANE STRATFORD, CT 06614
APPLICANT:	TOWN OF STRATFORD/FIRE DEPARTMENT TOWN HALL 2725 MAIN STREET, STRATFORD, CT 06615
ENGINEER:	PROTERRA DESIGN GROUP, LLC 1 SHORT STREET; SUITE 3 NORTHAMPTON, MA 01060 TEL: (413) 320-4918
SURVEYOR:	NORTHEAST SURVEY CONSULTANTS 116 PLEASANT STREET SUITE 302 EASTHAMPTON, MA 01027 TEL: (413) 203-5144

ProTerra DESIGN GROUP, LLC
1 Short Street
Suite 3
Northampton, MA 01060
Ph: (413)320-4918
Fax: (413)320-4917

CLIENT:

SAI
27 Northwestern Drive
Salem, NH 03079

NO.	DATE	REVISIONS
0	12/13/13	ISSUED FOR REVIEW
1	2/7/14	ISSUED FOR PERMITTING

TITLE: SITE NAME: STRATFORD MIDWOOD TRAIL
SITE NUMBER: CT-2638S
ADDRESS: 200 ORONOQUE LANE
STRATFORD, CT 06614

APPLICANT: NEW CINGULAR WIRELESS PCS, LLC
"AT&T"
500 ENTERPRISE DRIVE
ROCKY HILL, CT 06067

STAMP:

STATE OF CONNECTICUT
THOMAS E. JOHNSON
No. 28192
LICENSED
PROFESSIONAL ENGINEER

DATE:	12/13/13
DRAWN:	MJV
CHECK:	JMM/TEJ
SCALE:	SEE PLAN
JOB NO.:	13-048

SHEET TITLE:

TITLE SHEET

T-1

LEGEND

N/F	– NOW OR FORMERLY
60.20–5–1	– ASSESSOR'S MAP–BLOCK–LOT
⊙	– TOWER CONTROL POINT
○ IPF	– IRON PIPE FOUND
	– LOCUS BOUNDARY
	– ABUTTERS LINE
OHW	– OVERHEAD WIRES
D	– UNDERGROUND DRAIN LINE
E	– UNDERGROUND ELEC. LINE
	– TREE/BRUSH LINE
	– CONTOUR LINE

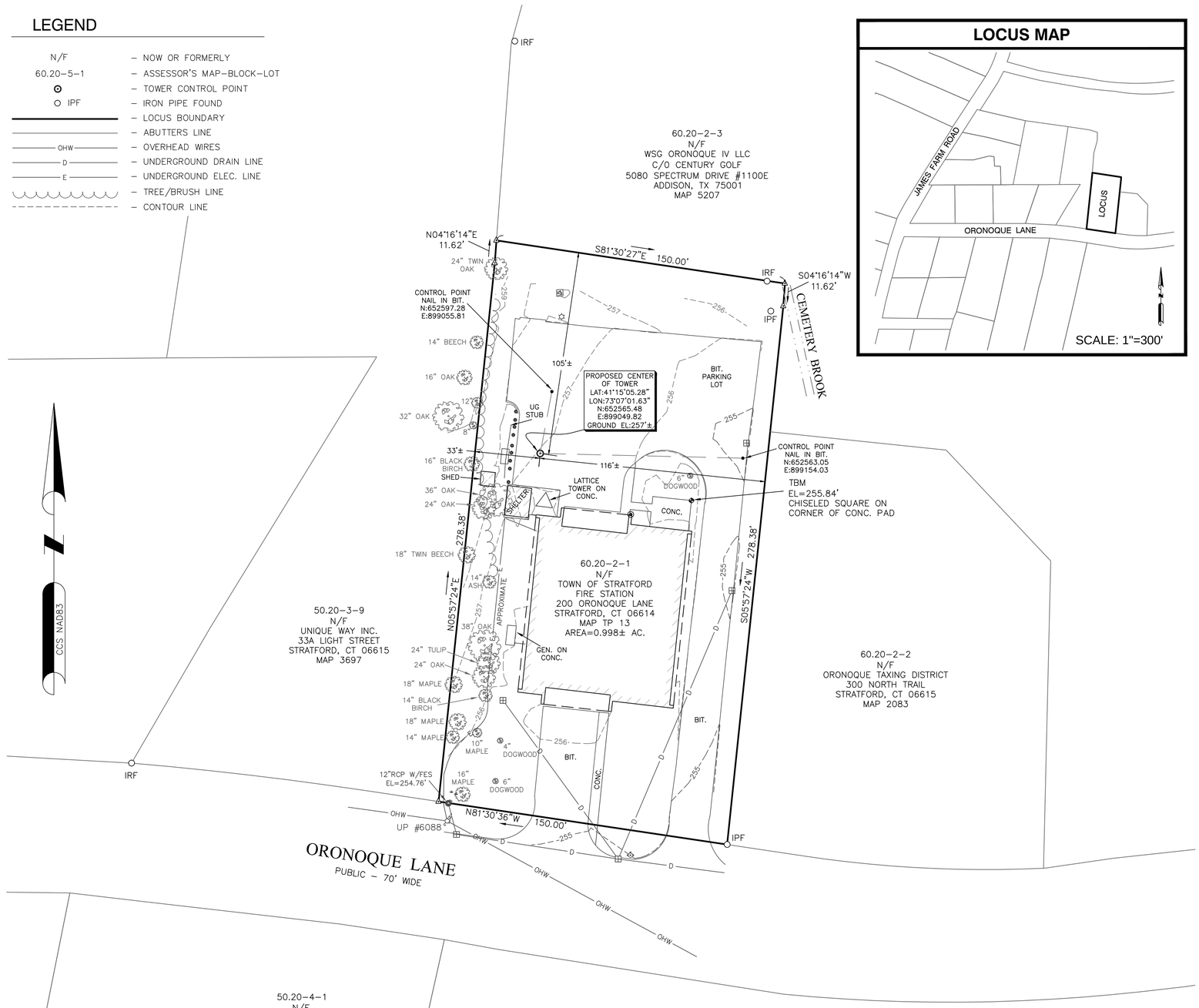

ABUTTERS MAP & EXISTING CONDITIONS

ANSI D (22"X34") SCALE: 1"=30'
ANSI A (11"x17") SCALE: 1"=60'

30 0 30 60

LOCUS MAP

SURVEY NOTES

1. THIS SURVEY HAS BEEN PREPARED PURSUANT TO THE REGULATIONS OF CONNECTICUT STATE AGENCIES SECTIONS 20–300B–1 THROUGH 20–300B–20 AND THE "STANDARDS FOR SURVEYS AND MAPS IN THE STATE OF CONNECTICUT" AS ADOPTED BY THE CONNECTICUT ASSOCIATION OF LAND SURVEYORS INC. ON SEPTEMBER 26, 1997.

TYPE OF SURVEY: IMPROVEMENT LOCATION SURVEY

BOUNDARY SURVEY CATEGORY: DEPENDENT RESURVEY

CLASS OF ACCURACY: HORIZONTAL CLASS A–2
VERTICAL CLASS V–2
TOPOGRAPHIC CLASS T–2
PURPOSE OF SURVEY: REPLACEMENT TOWER

2. PROPERTY LINE SHOWN HERON ARE FROM RECORD DEEDS, PLOTS, AND TAX MAPS AS OVERLAID ON ANY MONUMENTATION OR OTHER EVIDENCE THAT MAY HAVE BEEN LOCATED DURING THE TOPOGRAPHIC SURVEY. A PROPERTY LINE SURVEY WAS NOT PERFORMED BY PROTERRA DESIGN GROUP, LLC OR ITS AFFILIATES AND SUBCONTRACTORS AND AS A RESULT THE PROPERTY LINES SHOWN ARE APPROXIMATE AND DO NOT PRESENT A PROPERTY/ BOUNDARY OPINION.

3. BASE MAP PREPARED BY NORTHEAST SURVEY CONSULTANTS, PC ON DECEMBER 12, 2013.

4. HORIZONTAL DATUM IS GRID NORTH AS DETERMINED BY THE CONNECTICUT STATE PLANE COORDINATE SYSTEM AND IS BASED UPON GPS OBSERVATIONS TAKEN AT THE TIME OF SURVEY.

5. ALL UNDERGROUND UTILITY INFORMATION WAS DETERMINED FROM SURFACE INVESTIGATIONS AND/OR EXISTING PLANS OF RECORD. THE CONTRACTOR SHALL LOCATE ALL UNDERGROUND UTILITIES IN THE FIELD PRIOR TO ANY SITE WORK. CALL THE FOLLOWING FOR ALL PRE–CONSTRUCTION NOTIFICATION 72–HOURS PRIOR TO ANY EXCAVATION ACTIVITY: CALL BEFORE YOU DIG: 1–800–922–4455

6. THE SURVEY PLAN IS SUBJECT TO ANY STATEMENT OF FACTS THAT AN UP–TO–DATE ABSTRACT OF TITLE WOULD DISCLOSE.

7. SUBJECT TO ALL RIGHTS, EASEMENTS, COVENANTS, OR RESTRICTIONS OF RECORD.

8. THE LOCUS PARCEL AS SHOWN IS LOCATED IN THE TOWN OF STRATFORD ZONE "RS–1" ONE–FAMILY RESIDENCE DISTRICT.

9. LATITUDE/LONGITUDE/ELEVATIONS WERE OBTAINED UTILIZING CORS BASE STATIONS. LATITUDE/LONGITUDE ARE REFERENCE TO NAD83 CONNECTICUT ZONE COORDINATES SHOWN. IF ANY ARE EXPRESSED IN U.S. SURVEY FEET, ELEVATIONS ARE REFERENCED TO NAVD88. TOP OF STRUCTURE HEIGHT, IF ANY, IS DETERMINED BY VERTICAL ANGLE OR BY ACTUAL LOCATION INFORMATION BASED UPON A FAA 1A CERTIFICATION ACCURACY LEVEL AS DEFINED:

HORIZONTAL ±20 FEET/6m

VERTICAL ± 3 FEET/1m

10. THE PROJECT AREA IS LOCATED IN FLOOD ZONE "X" (UNSHADED, AREAS DETERMINED TO BE OUTSIDE THE 0.2% ANNUAL CHANCE FLOODPLAIN) AS SHOWN ON FLOOD INSURANCE RATE MAP FOR THE TOWN OF STRATFORD:
COMMUNITY PANEL NUMBER 09001C 0313F, DATED JUNE 18, 2010.

LOCUS DEED & OWNER OF RECORD

1. THE LOCUS PARCEL IS SHOWN AS BLOCK 2 LOT 1 ON THE TOWN OF STRATFORD TAX ASSESSOR'S MAP NO. 60.20.

PROPERTY OWNER: TOWN OF STRATFORD/FIRE STATION
200 ORONOQUE LANE
STRATFORD, CT 06614

LOCUS DEED REF.: N/A

PLAN REFERENCE: MAP TP 13
"NORTH END FIRE HOUSE PROPERTY SURVEY"
SCALE: 1" = 20'
DATE: AUG. 1974

THIS DOCUMENT AND COPIES THEREOF ARE VALID ONLY IF THEY BEAR THE LIVE SIGNATURE AND EMBOSSED SEAL OF THE DESIGNATED PROFESSIONAL. UNAUTHORIZED ALTERATIONS RENDER ANY DECLARATION NULL AND VOID.

TO THE BEST OF MY KNOWLEDGE AND BELIEF, THIS MAP IS SUBSTANTIALLY CORRECT AS NOTED HEREON.

CHARLES G. GIDMAN, P.L.S. #70103

ProTerra DESIGN GROUP, LLC
1 Short Street
Suite 3
Northampton, MA 01060
Ph: (413)320–4918
Fax: (413)320–4917

CONSULTANTS:
NORTHEAST SURVEY CONSULTANTS
116 Pleasant St. Ste. 302
P.O. Box 109
Easthampton, MA 01027
(413) 203–5144
northeastsurvey.com

NO.	DATE	REVISIONS
0	12/12/13	ISSUED FOR REVIEW
1	02/07/14	CHANGE SURVEY PURPOSE
2	02/13/14	UPDATE TO A–2 SURVEY

TITLE:
SITE NAME: STRATFORD MIDWOOD TRAIL
SITE: CT–2638–S
ADDRESS: 200 ORONOQUE LANE
STRATFORD, CT 06614

CLIENT:
NEW CINGULAR WIRELESS PCS, LLC
dba AT&T
500 ENTERPRISE DRIVE
ROCKY HILL, CT 06067

STAMP:

STATE OF CONNECTICUT · CHARLES G. GIDMAN · 070103 · LICENSED · LAND SURVEYOR

DATE: 12/10/2013
DRAWN: BCF
CHECK: CGG
SCALE: 1" = 30'
JOB NO.: 13–222

SHEET TITLE:
ABUTTERS MAP & EXISTING CONDITIONS

C-1

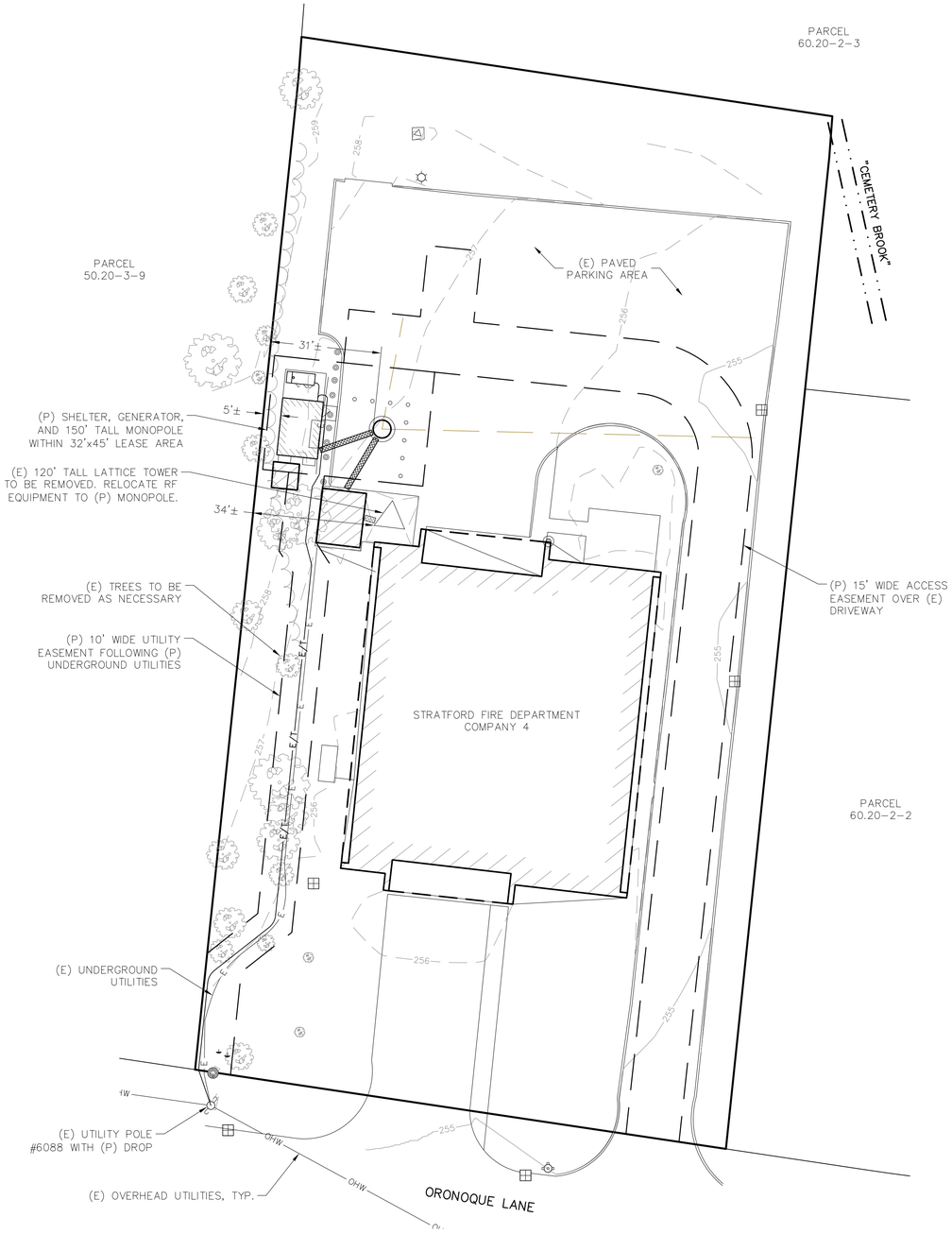

PLOT PLAN

SCALE: 1"=20' (22x34)
1"=40' (11x17)

1
A-1

20 10 0 20 40

GENERAL NOTES

1. THE TYPE, DIMENSIONS, MOUNTING HARDWARE, AND POSITIONS OF ALL PROJECT OWNER'S EQUIPMENT ARE SHOWN IN ILLUSTRATIVE FASHION. THESE DRAWINGS ARE NOT INTENDED FOR CONSTRUCTION. ACTUAL HARDWARE DETAILS AND FINAL LOCATIONS MAY DIFFER SLIGHTLY FROM WHAT IS SHOWN.
2. THE PROJECT OWNER'S PCS FACILITY IS AN UNMANNED PRIVATE AND SECURED EQUIPMENT INSTALLATION. IT IS ONLY ACCESSED BY TRAINED TECHNICIANS FOR PERIODIC ROUTINE MAINTENANCE AND THEREFORE DOES NOT REQUIRE ANY WATER OR SANITARY SEWER SERVICE. THE FACILITY IS NOT GOVERNED BY REGULATIONS REQUIRING PUBLIC ACCESS PER ADA REQUIREMENTS.
3. THE DESIGN OF THE TOWER, FOUNDATION AND ANTENNA MOUNTING HARDWARE WILL MEET THE ANSI/EIA/TIA-222-G STANDARDS FOR STRUCTURAL STEEL ANTENNA SUPPORTING STRUCTURES AND STATE BUILDING CODE REQUIREMENTS. DETAILED CONSTRUCTION DRAWINGS AND STRUCTURAL CALCULATIONS WILL BE PREPARED BY A REGISTERED PROFESSIONAL ENGINEER AND SUBMITTED WITH A BUILDING PERMIT APPLICATION FOR REVIEW AND APPROVAL BY THE LOCAL BUILDING CODE ENFORCEMENT OFFICIAL.
4. ONCE THE FACILITY BECOMES FULLY OPERATIONAL, NORMAL AND ROUTINE MAINTENANCE BY PROJECT OWNER'S TECHNICIANS WILL BE PERFORMED ON A MONTHLY BASIS. THEREFORE, THE ESTIMATED VEHICLE TRIP GENERATION RATE IS 2 TRIPS PER MONTH PER CARRIER. THE AVERAGE DAILY TRIP GENERATION RATE (ADT) IS 0.07 PER CARRIER.

DISTURBANCE SUMMARY

ITEM	AREA (SF)
TREE CLEARING	0
CONCRETE PAD	296
LOAM & SEED	704
EXISTING PAVEMENT TO BE RESTORED	1400
TOTAL EARTH DISTURBANCE	2000

ZONING SUMMARY

ZONING DISTRICT: (RS-1) – ONE-FAMILY RESIDENCE
ASSESSORS ID: PARCEL 60.20-2-1
(P) USE: EMERGENCY COMMUNICATIONS TOWER AND ACCESSORY WIRELESS FACILITY

DIMENSION	PROVIDED	CONSTRAINT
PARCEL – AREA	43,470± SF	40,000 SF MIN.
PARCEL – WIDTH	150'	150' MIN.
PARCEL – DEPTH	290'	125' MIN.
SHELTER/GENERATOR – FRONT SETBACK	173'±	40' MIN.
SHELTER/GENERATOR – SIDE SETBACK	5'±	3' MIN.[1]
SHELTER/GENERATOR – REAR SETBACK	92'±	35' MIN.
SHELTER/GENERATOR – HEIGHT	12'	30' MAX.
MONOPOLE – HEIGHT	150' (POLE) 170' (ANTENNAS)	N/A[2]
MONOPOLE – DISTANCE TO ℄	31'±	N/A
MONOPOLE – DISTANCE TO PLAYGROUND OR SCHOOL	>500	500' MIN.
MONOPOLE – DISTANCE TO INLAND WETLAND, WATERBODY, WATERCOURSE	140'±	50' MIN.
MONOPOLE – DISTANCE TO TIDAL WETLAND	>75'±	75' MIN.

SPECIAL CONSIDERATIONS MAY BE REQUIRED FOR THE FOLLOWING:

1 – ZONING REGULATIONS TABLE 4.2: MINIMUM SIDE YARD FOR RS-1 ZONING DISTRICT IS 35 FEET. §3.11 STATES "DETACHED ACCESSORY BUILDINGS NOT MORE THAN 12 FEET IN HEIGHT AND NOT USED FOR HUMAN HABITATION ... MAY BE LOCATED ... IN SO MUCH OF THE REQUIRED SIDE YARD AS LIES NOT LESS THAN 75 FEET FROM ANY STREET LINE ... PROVIDED THEY ARE NOT LESS THAN THREE FEET FROM ANY SIDE ... LOT LINE"

2 – ZONING REGULATIONS §3.28.6.G.4: "TOWERS SHALL BE LIMITED TO A MAXIMUM OF 100 FEET ..." THE MONOPOLE IS SUBJECT TO A SPECIAL CASE APPROVAL AS OUTLINED IN §20.2.

ProTerra DESIGN GROUP, LLC
1 Short Street
Suite 3
Northampton, MA 01060
Ph: (413)320-4918
Fax: (413)320-4917

CLIENT:

SAI
27 Northwestern Drive
Salem, NH 03079

NO.	DATE	REVISIONS
0	12/13/13	ISSUED FOR REVIEW
1	2/7/14	ISSUED FOR PERMITTING

TITLE: SITE NAME: STRATFORD MIDWOOD TRAIL
SITE NUMBER: CT-2638S
ADDRESS: 200 ORONOQUE LANE
STRATFORD, CT 06614

APPLICANT: NEW CINGULAR WIRELESS PCS, LLC "AT&T"
500 ENTERPRISE DRIVE
ROCKY HILL, CT 06067

at&t

STAMP:

STATE OF CONNECTICUT
THOMAS E. JOHNSON
No. 28192
LICENSED PROFESSIONAL ENGINEER
2-7-14

DATE: 12/13/13
DRAWN: MJV
CHECK: JMM/TEJ
SCALE: SEE PLAN
JOB NO.: 13-048

SHEET TITLE:

PLOT PLAN

A-1

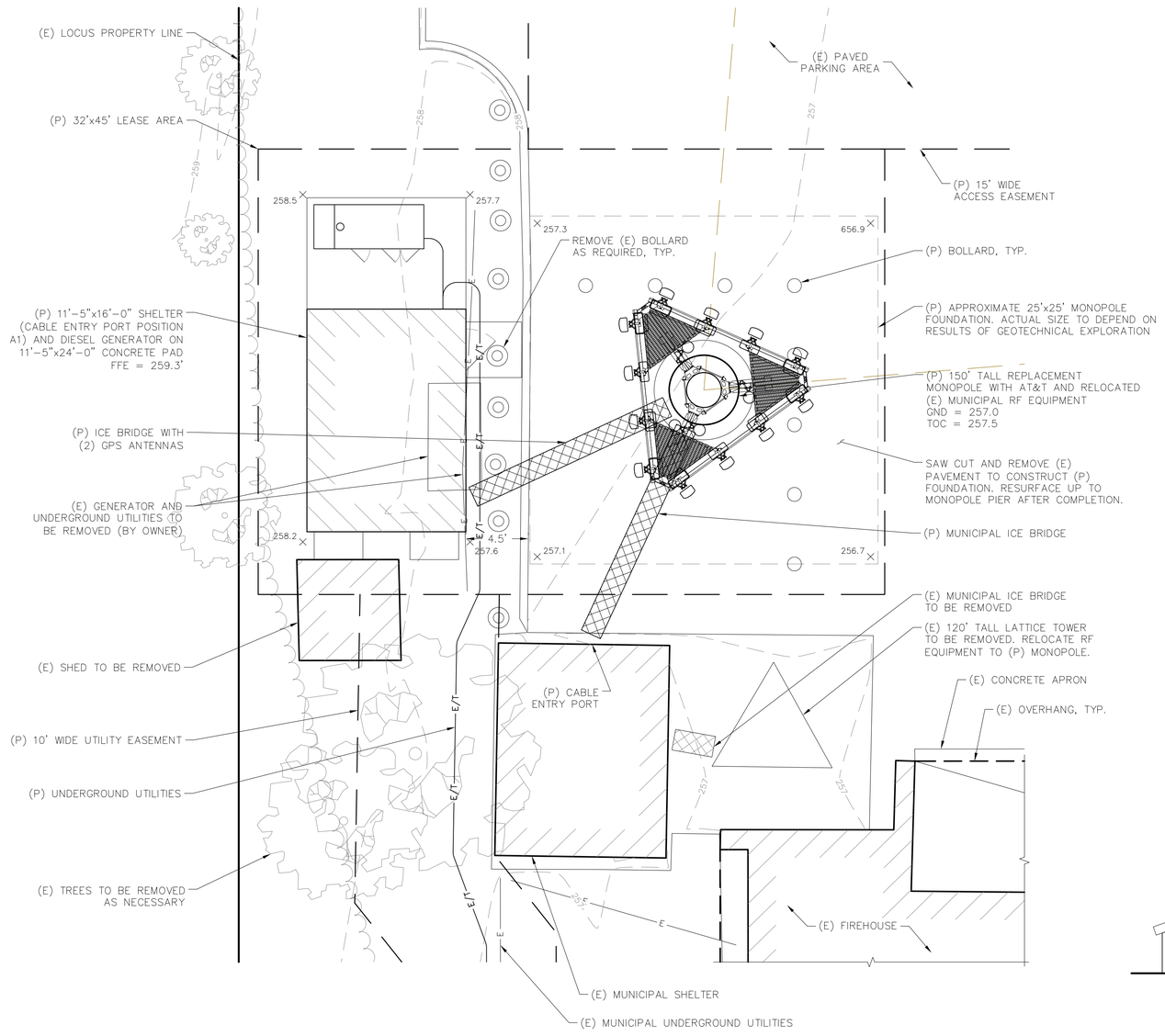

SITE PLAN

SCALE: 1"=5' (22x34)
1"=10' (11x17)

1 / A-2

5 2.5 0 5 10

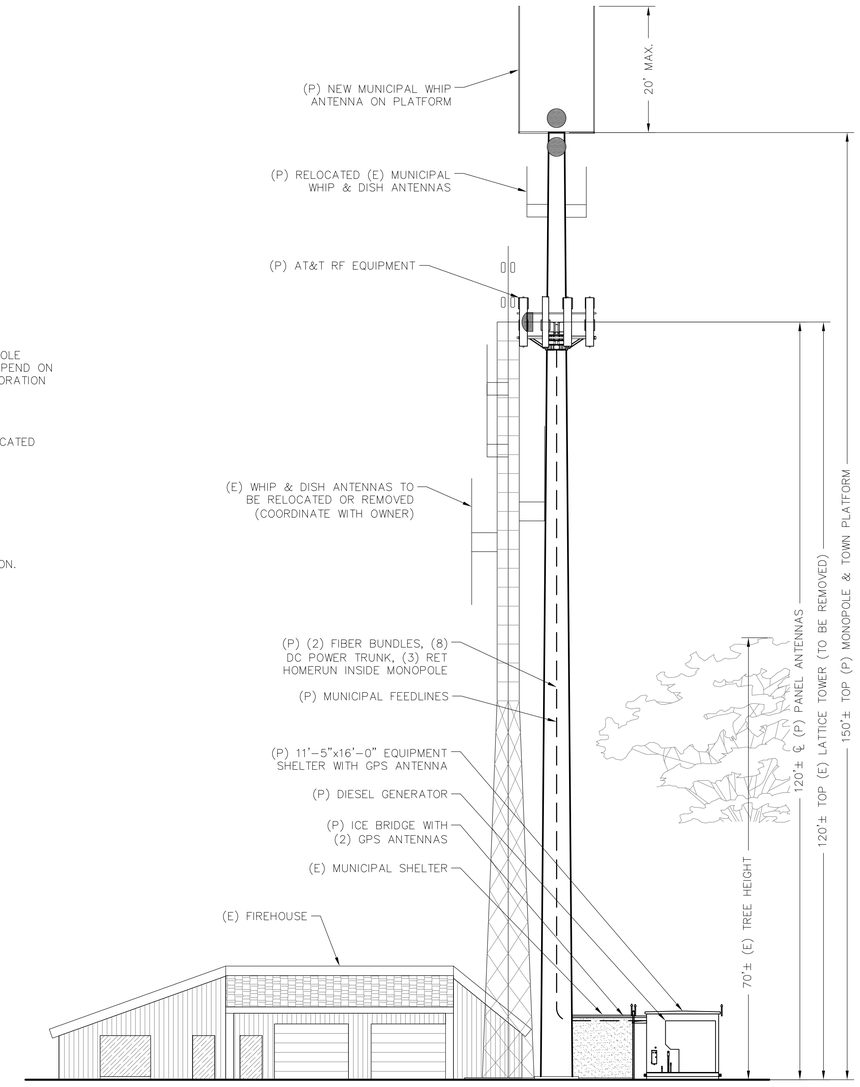

NORTH ELEVATION

SCALE: 1"=12' (22x34)
1"=24' (11x17)

2 / A-2

12 6 0 12 24

ProTerra DESIGN GROUP, LLC
1 Short Street
Suite 3
Northampton, MA 01060
Ph: (413)320-4918
Fax: (413)320-4917

CLIENT:

SAI
27 Northwestern Drive
Salem, NH 03079

NO.	DATE	REVISIONS
0	12/13/13	ISSUED FOR REVIEW
1	2/7/14	ISSUED FOR PERMITTING

TITLE:
SITE NAME: STRATFORD MIDWOOD TRAIL
SITE NUMBER: CT-2638S
ADDRESS: 200 ORONOQUE LANE
STRATFORD, CT 06614

APPLICANT:
NEW CINGULAR WIRELESS PCS, LLC "AT&T"
500 ENTERPRISE DRIVE
ROCKY HILL, CT 06067
at&t

STAMP:
STATE OF CONNECTICUT
THOMAS E. JOHNSON
No. 28192
LICENSED PROFESSIONAL ENGINEER
2-7-14

DATE: 12/13/13
DRAWN: MJV
CHECK: JMM/TEJ
SCALE: SEE PLAN
JOB NO.: 13-048

SHEET TITLE:
SITE PLAN & ELEVATION

A-2

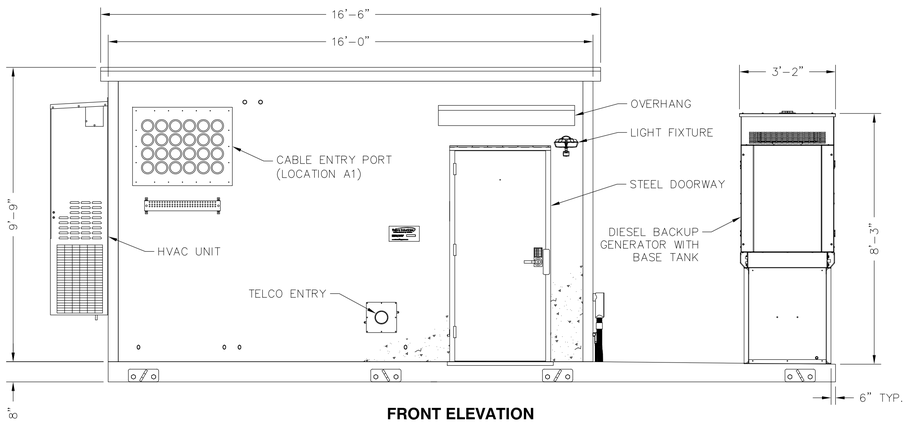

FRONT ELEVATION

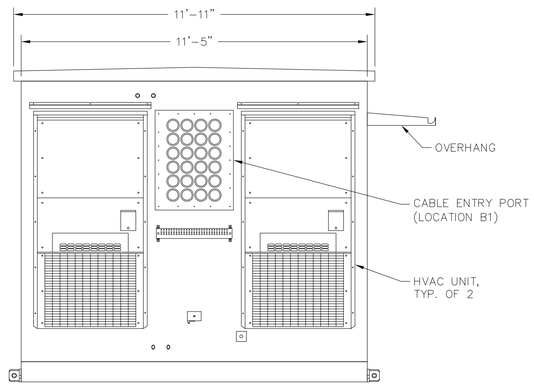

LEFT ELEVATION

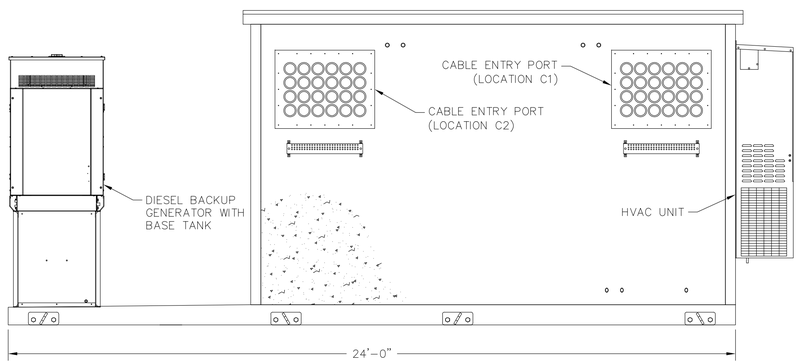

REAR ELEVATION

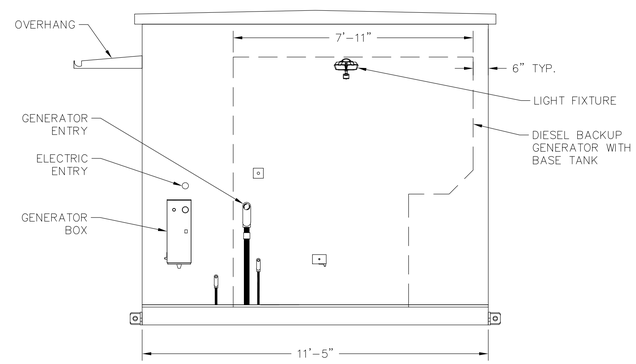

RIGHT ELEVATION

"11'-5" X 16'-0" CONCRETE SHELTER" FOR AT&T WIRELESS SERVICES BY CELLXION SHOWN. VERIFY MAKE AND MODEL WITH CONSTRUCTION MANAGER PRIOR TO COMMENCEMENT OF CONSTRUCTION

EQUIPMENT SHELTER

SCALE: NONE

1 / D-1

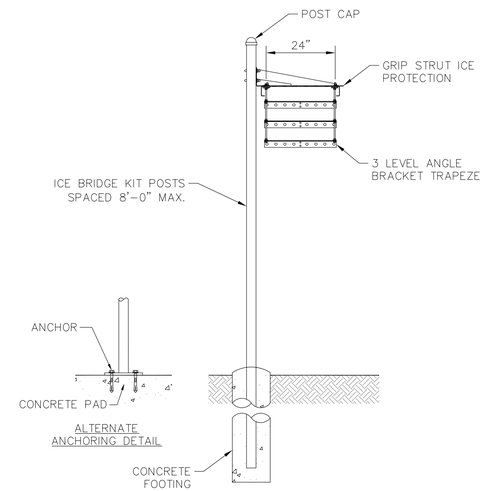

ICE BRIDGE

SCALE: NONE

2 / D-1

REFER TO CURRENT RFDS FOR RF EQUIPMENT SPECIFICS

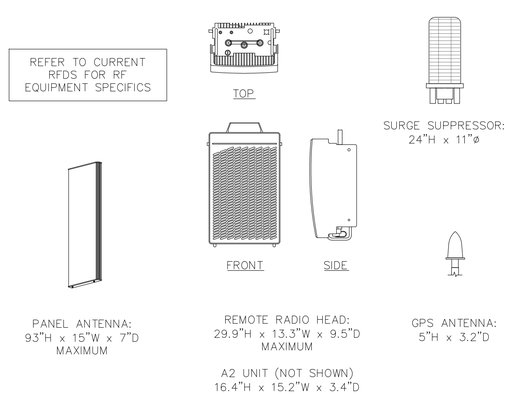

ANTENNA EQUIPMENT

SCALE: NONE

3 / D-1

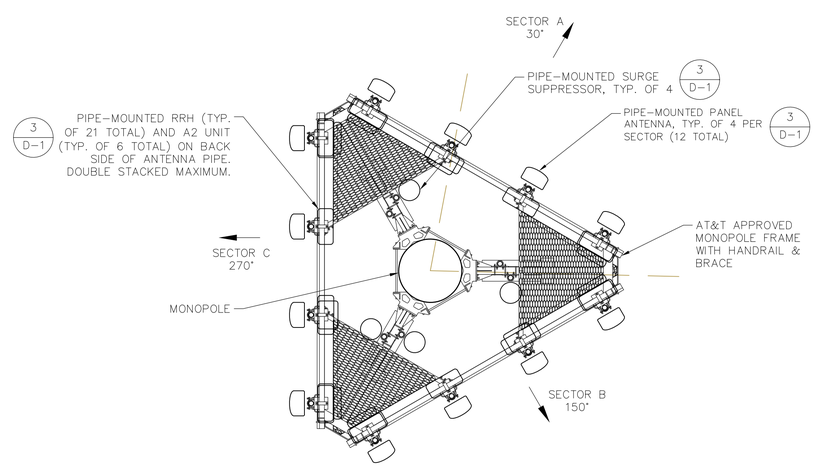

N

ANTENNA PLAN

SCALE: NONE

4 / D-1

ProTerra DESIGN GROUP, LLC
1 Short Street
Suite 3
Northampton, MA 01060
Ph: (413)320-4918
Fax: (413)320-4917

CLIENT:

SAI
27 Northwestern Drive
Salem, NH 03079

NO.	DATE	REVISIONS
0	12/13/13	ISSUED FOR REVIEW
1	2/7/14	ISSUED FOR PERMITTING

TITLE: **SITE NAME: STRATFORD MIDWOOD TRAIL**
SITE NUMBER: CT-2638S
ADDRESS: 200 ORONOQUE LANE
STRATFORD, CT 06614

NEW CINGULAR WIRELESS PCS, LLC "AT&T"
500 ENTERPRISE DRIVE
ROCKY HILL, CT 06067

APPLICANT: at&t

STAMP:

STATE OF CONNECTICUT · THOMAS E. JOHNSON · No. 28192 · LICENSED PROFESSIONAL ENGINEER · 2-7-14

DATE:	12/13/13
DRAWN:	MJV
CHECK:	JMM/TEJ
SCALE:	SEE PLAN
JOB NO.:	13-048

SHEET TITLE:

DETAILS

D-1

For visual reference only. Actual visibility is dependent upon weather conditions, season, sunlight, and viewer location.

Based upon Lease Exhibit by ProTerra dated: 10/09/2013

Stratford Midwood Trail ~ CT2638S

Photographic Renderings ~ 12/11/2013

Created By: Benjamin E. Caron
Caron & Associates Design
(978) 360-3671 info@cadsims.com

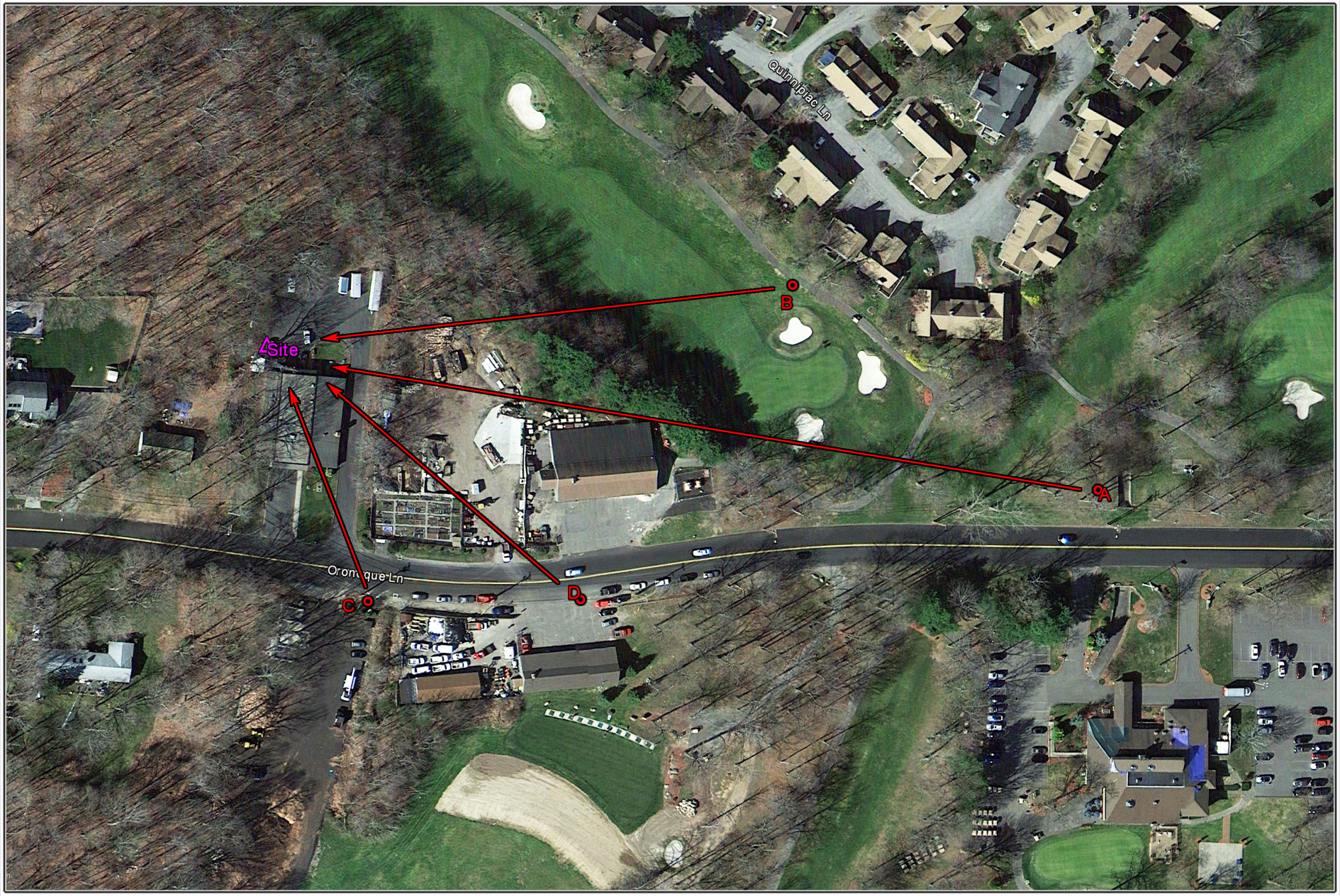

For visual reference only. Actual visibility is dependent upon weather conditions, season, sunlight, and viewer location.

Stratford Midwood Trail ~ CT2638S

Photo Location Map ~ 12/11/2013

Created By: Benjamin E. Caron
Caron & Associates Design
(978) 360-3671 info@cadsims.com

ProTerra
DESIGN GROUP, LLC

Existing Conditions

For visual reference only. Actual visibility is dependent upon weather conditions, season, sunlight, and viewer location.

Based upon Lease Exhibit by ProTerra dated: 10/09/2013

Stratford Midwood Trail ~ CT2638S

Photo Location A ~ 65mm ~ 853'+/- (0.16mi) Away ~ 12/11/2013
From Near Golf Course by Tunnel to Club House

Created By: Benjamin E. Caron
Caron & Associates Design
(978) 360-3671 info@cadsims.com

ProTerra
DESIGN GROUP, LLC

Proposed Conditions

For visual reference only. Actual visibility is dependent upon weather conditions, season, sunlight, and viewer location.

Based upon Lease Exhibit by ProTerra dated: 10/09/2013

Stratford Midwood Trail ~ CT2638S

Photo Location A ~ 65mm ~ 853'+/- (0.16mi) Away ~ 12/11/2013
From Near Golf Course by Tunnel to Club House

Created By: Benjamin E. Caron
Caron & Associates Design
(978) 360-3671 info@cadsims.com

ProTerra DESIGN GROUP, LLC

Existing Conditions

For visual reference only. Actual visibility is dependent upon weather conditions, season, sunlight, and viewer location.

Based upon Lease Exhibit by ProTerra dated: 10/09/2013

Stratford Midwood Trail ~ CT2638S

Photo Location B ~ 50mm ~ 538'+/- (0.10mi) Away ~ 12/11/2013
From Near Golf Course

Created By: Benjamin E. Caron
Caron & Associates Design
(978) 360-3671 info@cadsims.com

ProTerra DESIGN GROUP, LLC

Proposed Conditions

For visual reference only. Actual visibility is dependent upon weather conditions, season, sunlight, and viewer location.

Based upon Lease Exhibit by ProTerra dated: 10/09/2013

Stratford Midwood Trail ~ CT2638S

Photo Location B ~ 50mm ~ 538'+/- (0.10mi) Away ~ 12/11/2013
From Near Golf Course

Created By: Benjamin E. Caron
Caron & Associates Design
(978) 360-3671 info@cadsims.com

ProTerra DESIGN GROUP, LLC

Existing Conditions

For visual reference only. Actual visibility is dependent upon weather conditions, season, sunlight, and viewer location.

Based upon Lease Exhibit by ProTerra dated: 10/09/2013

Stratford Midwood Trail ~ CT2638S

Photo Location C ~ 35mm ~ 264'+/- (0.05mi) Away ~ 12/11/2013
From in Front of Fire House

Created By: Benjamin E. Caron
Caron & Associates Design
(978) 360-3671 info@cadsims.com

ProTerra DESIGN GROUP, LLC

Proposed Conditions

For visual reference only. Actual visibility is dependent upon weather conditions, season, sunlight, and viewer location.

Based upon Lease Exhibit by ProTerra dated: 10/09/2013

Stratford Midwood Trail ~ CT2638S

Photo Location C ~ 35mm ~ 264'+/- (0.05mi) Away ~ 12/11/2013
From in Front of Fire House

Created By: Benjamin E. Caron
Caron & Associates Design
(978) 360-3671 info@cadsims.com

ProTerra
DESIGN GROUP, LLC

Existing Conditions

For visual reference only. Actual visibility is dependent upon weather conditions, season, sunlight, and viewer location.

Based upon Lease Exhibit by ProTerra dated: 10/09/2013

Stratford Midwood Trail ~ CT2638S

Photo Location D ~ 50mm ~ 398'+/- (0.08mi) Away ~ 12/11/2013
From Near Oronoque Village Maintanance Building

Created By: Benjamin E. Caron
Caron & Associates Design
(978) 360-3671 info@cadsims.com

ProTerra DESIGN GROUP, LLC

Proposed Conditions

For visual reference only. Actual visibility is dependent upon weather conditions, season, sunlight, and viewer location.

Based upon Lease Exhibit by ProTerra dated: 10/09/2013

Stratford Midwood Trail ~ CT2638S

Photo Location D ~ 50mm ~ 398'+/- (0.08mi) Away ~ 12/11/2013
From Near Oronoque Village Maintanance Building

Created By: Benjamin E. Caron
Caron & Associates Design
(978) 360-3671 info@cadsims.com

MAXIMUM PERMISSIBLE EXPOSURE STUDY

Prepared for:

Site ID: CT2638S
Stratford Midwood Trail
200 Oronoque Lane, Stratford, CT 06614
Fairfield County
41.251467, -73.117119

Conclusion: ***The site measurement was 8.875% of FCC Standard for Uncontrolled/General Public Maximum Permissible Exposure (MPE).***

AT&T's proposed antenna installation is calculated to be within the FCC Standard for Uncontrolled/General Public and Controlled/Occupational Maximum Permissible Exposure (MPE).

Prepared by: **SAI Communications**
260 Cedar Hill Street
Marlboro, MA 01752
978-587-5180

Date of Report: April 28, 2014

Contents

1. PURPOSE OF REPORT

SAI Communications has conducted Radio Frequency at 200 Oronoque Lane, Stratford, CT on the grounds surrounding the RF tower at this location to determine the current RF exposure levels on and around said structures. The measurements collected represent the cumulative power density levels of all RF sources in the area within the frequency range of the equipment used. The FCC has established Maximum Permissible Exposure (MPE) limits for general population exposures and occupational exposures. This report summarizes the Radio Frequency Emission findings in relevance to the FCC compliance standards for limiting human exposure to RF Electromagnetic fields.

SAI field personnel visited this site on April 17, 2014. This report contains a detailed summary of the RF EME analysis for the site, including the following:

- Proposed Site Plan with antenna locations

This document addresses the compliance of all transmitting facilities independently and in relation to any and/or all collocated facilities at the site (if applicable).

Carriers co-located at this site include:

- None

This report also takes into consideration the theoretical calculations of the proposed installation at this site.

2. STATEMENT OF COMPLIANCE

A site is considered out of compliance with the FCC's RF exposure guidelines if there is an area at the site that is accessible to the general public or workers, where RF exposure levels exceed the applicable FCC Maximum Permissible Exposure (MPE) limits. As presented in the sections below, worst-case spatial average at 200 Oronoque Lane, Stratford, CT indicates that there are no areas at this location where the potential RF-EME field levels associated with any RF equipment existing at or around the location exceed the applicable FCC's general public or occupational MPE limits.

Theoretical calculations show AT&T's proposed antenna installation will be within the FCC Standard for Uncontrolled/General Public and Controlled/Occupational Maximum Permissible Exposure (MPE).

3. PROPOSED A&E DIAGRAMS

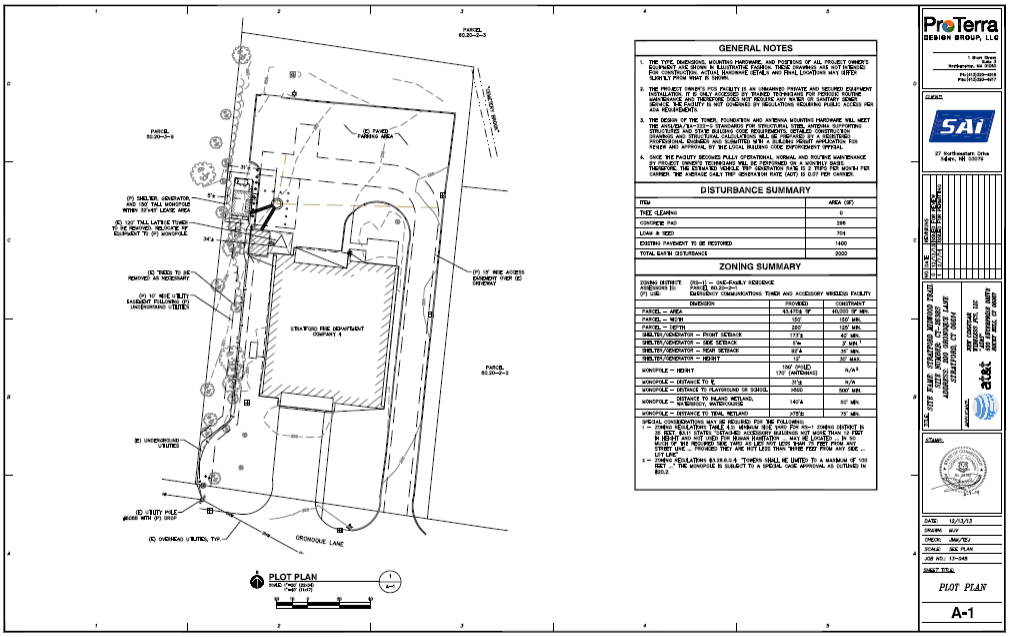

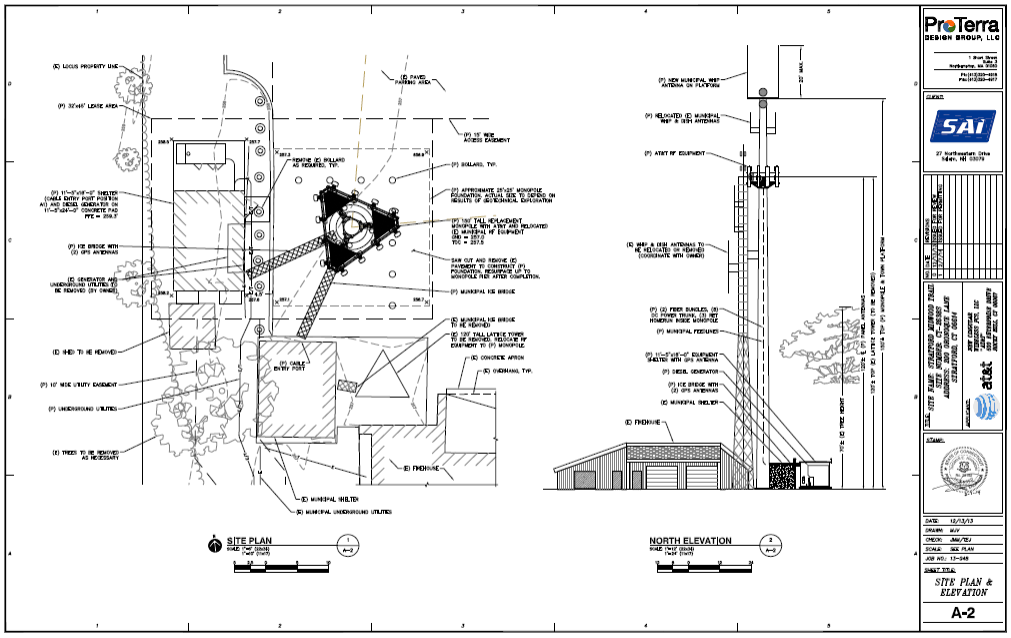

4. FCC GUIDELINES

The FCC has established maximum permissible exposure limits for human exposure to RF-EME fields (i.e., the MPE limits), based on exposure limits recommended by the National Council on Radiation Protection and Measurements (NCRP) and, over a wide range of frequencies, the exposure limits developed by the Institute of Electrical and Electronics Engineers, Inc. (IEEE) and adopted by the American National Standards Institute (ANSI). Limits for localized absorption are based on recommendations of both ANSI/IEEE and NCRP.
The FCC guidelines incorporate two separate tiers of exposure limits based upon the situation in which the exposure occurs and/or the status of the individuals who are subject to exposure: (1) occupational/controlled exposure limits (for workers), and (2) general public/uncontrolled exposure limits for members of the general public.
Occupational/controlled exposure limits apply to situations in which persons are exposed as a consequence of their employment and in which those persons who are exposed have been made fully aware of the potential for exposure and can exercise control over their exposure. Occupational/ controlled exposure limits also apply where exposure is of a transient nature as a result of incidental passage through a location where exposure levels may be above general public/uncontrolled limits (see below), as long as the exposed person has been made fully aware of the potential for exposure and can exercise control over his or her exposure by leaving the area or by some other appropriate means.
General public/uncontrolled exposure limits apply to situations in which the general public may be exposed or in which persons who are exposed as a consequence of their employment may not be made fully aware of the potential for exposure or cannot exercise control over their exposure. Therefore, members of the general public would always be considered under this category when exposure is not employment-related, for example, in the case of a telecommunications tower that exposes persons in a nearby residential area.

The FCC, in responding to the Telecommunications Act of 1996, issued ET Docket 93-62 which prescribed rules regarding the environmental effects of RF emission and to modify Title 47 parts 1, 2, 15, 24 and 97. The FCC established two levels for Maximum Permissible Exposure (MPE), the General Public/Uncontrolled limits and the Occupational/Controlled limits. The MPEs are presented in the Table 1 and Table 2, respectively below.

Table 1. MPE Limits for General Population/ Uncontrolled Exposure

Frequency Range (MHz)	Electric Field Strength (V/m)	Magnetic Field Strength (A/m)	Power Density (mW/cm^2)	Averaging Time for $\|E\|^2$, $\|H\|^2$, or S (Minutes)
0.3 – 1.34	614	1.63	(100)*	30
1.34 -30	824/f	2.19/f	($180/f^2$)*	30
30 – 300	27.5	0.073	0.2	30
300 – 1500	--	--	f/1500	30
1500– 100,000	--	--	1.0	30
f = frequency in MHz		* = Plane wave equivalent power density		

TABLE 1: *General population/uncontrolled exposures apply in situations in which the general public may be exposed, or in which persons that are exposed as a consequence of their employment may not be fully aware of the potential for exposure or can't exercise control over their exposure.*

Table 2. MPE Limits for Occupational/Controlled Exposure				
Frequency Range (MHz)	Electric Field Strength (V/m)	Magnetic Field Strength (A/m)	Power Density (mW/cm^2)	Averaging Time for $\|E\|^2$, $\|H\|^2$, or S (Minutes)
0.3 – 3.0	614	1.63	(100)*	6
3.0 – 30	1842/f	4.89/f	(900/f^2)*	6
30 – 300	61.4	0.163	1.0	6
300 – 1500	--	--	f/300	6
1500– 100,000	--	--	5.0	6
f = frequency in MHz		* = Plane wave equivalent power density		

TABLE 2: *Occupational/controlled limits apply in situations in which persons are exposed as a consequence of their employment provided those persons are fully aware of the potential for exposure and can exercise control over their exposure. Limits for occupational/controlled exposure also apply in situations when an individual is transient through a location where such occupational/controlled limits apply provided he or she is made aware of the potential for exposure.*

5. FCC RF EXPOSURE LIMITS

Table 1 and Figure 1 (below), which the FCC has provided in its guidance document "Evaluating Compliance with FCC Guidelines for Human Exposure to Radiofrequency Electromagnetic Fields," OET Bulletin 65, Edition 97-01 (OET Bulletin 65), summarize the FCC MPE limits for human exposure to RFEME fields. These limits are conservatively designed to provide a substantial margin of safety. They vary by frequency to take into account the different types of equipment that may be in operation at a

particular facility, and are "time-averaged" to reflect different exposure durations for controlled and uncontrolled exposures.
The FCC MPE limits are measured in terms of power density, which represents the rate of power flow (mW) over a unit surface area (cm2). The FCC has established a general public/uncontrolled MPE limit of 1 milliwatt per square centimeter (mW/cm2) and an occupational/controlled MPE of 5 mW/cm2 for equipment operating in the 1900 MHz frequency range. For equipment operating at 850 MHz, the general public/uncontrolled MPE limit is 0.57 mW/cm2 and the occupational/controlled limit is 2.83 mW/cm2. For the frequency ranges of interest, the MPE limits established in OET Bulletin 65 are mirrored by the Radiofrequency Exposure Limits in the Massachusetts Department of Public Health regulations, 105 CMR 122.000.

The Personal Communications Service (PCS) facility that AT&T is proposing to install at the site operates within a frequency range of 850-1900 MHz. Such facilities typically consist of (1) electronic transceivers (the radios or cabinets) that are connected to wired telephone lines; (2) coaxial cables that connect the transceivers to antennas; and (3) antennas that send the wireless signals created by the transceivers to be received by individual subscriber units (PCS telephones). Because of the short wavelength of PCS services, the antennas require line-of-site paths for good propagation, and are typically installed above ground level. Antennas are constructed to concentrate energy towards the horizon, with as little energy as possible scattered towards the ground or the sky. This design, combined with the low power of PCS facilities, generally results in no possibility for ground-level exposure to the general public or workers at a site to applicable FCC MPE levels.

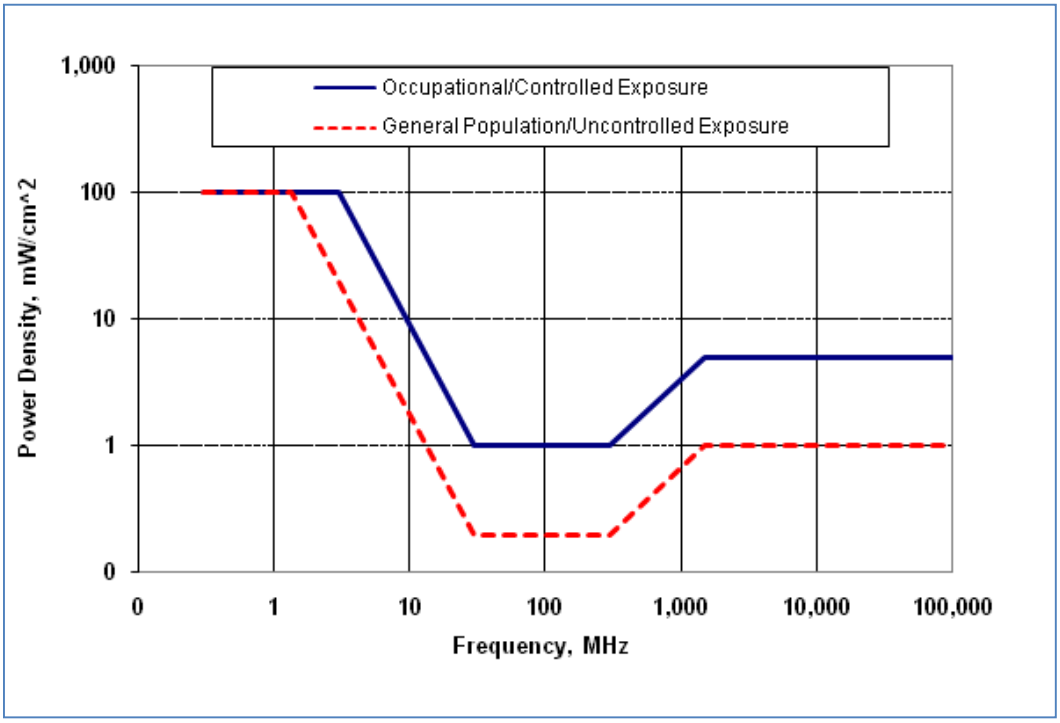

Graph of Maximum Permissible Exposures. Occupational/Controlled and General Population/Uncontrolled MPE's are functions of frequency.

6. FIELD SURVEY RESULTS

The measurement positions conducted at 200 Oronoque Lane, Stratford, CT are shown on the graphs and on the aerial photo of the surrounding area below. Contained on the following pages are tables summarizing the power density measurements recorded at the points or locations indicated. The measurements presented were taken on the grounds surrounding the RF tower and local building.

Monitoring was performed using a Narda NBM550 Electromagnetic Radiation Survey Meter, Serial #B-0552 with a Narda EA5091 Shaped Probe with a frequency range of 300kHz- 50GHz. The meter was last calibrated on April 03, 2013. This meter was programmed to measure the total power density for all electromagnetic radiation within the 300kHz-50GHz frequency range and report the power density as a percent of the FCC's controlled MPE. This reading represents all carriers present.

It was found that there were no readings exceeding ***8.875%*** of the FCC's uncontrolled or general public MPE encountered. This is in full compliance of FCC standards.

6.1 MEASUREMENT LOCATIONS

Measurement Position	Readings recorded on 04/17/2014	
	SPATIAL AVERAGED MEASUREMENTS (% MPE Std, Controlled Population)	SPATIAL AVERAGED MEASUREMENTS (% MPE Std, Uncontrolled Population)
1	0.1586	0.793
2	0.4037	2.0185
3	0.5602	2.801
4	1.175	5.875
5	0.8723	4.3615
6	0.7944	3.972
7	0.9155	4.5775
8	0.7772	3.886
9	0.9333	4.6665
10	0.9287	4.6435
11	0.9675	4.8375
12	1.069	5.345
13	1.102	5.51

6.1.1 AERIAL PHOTO

- Positions measured on the surrounding grounds are identified below in the following aerial photo:

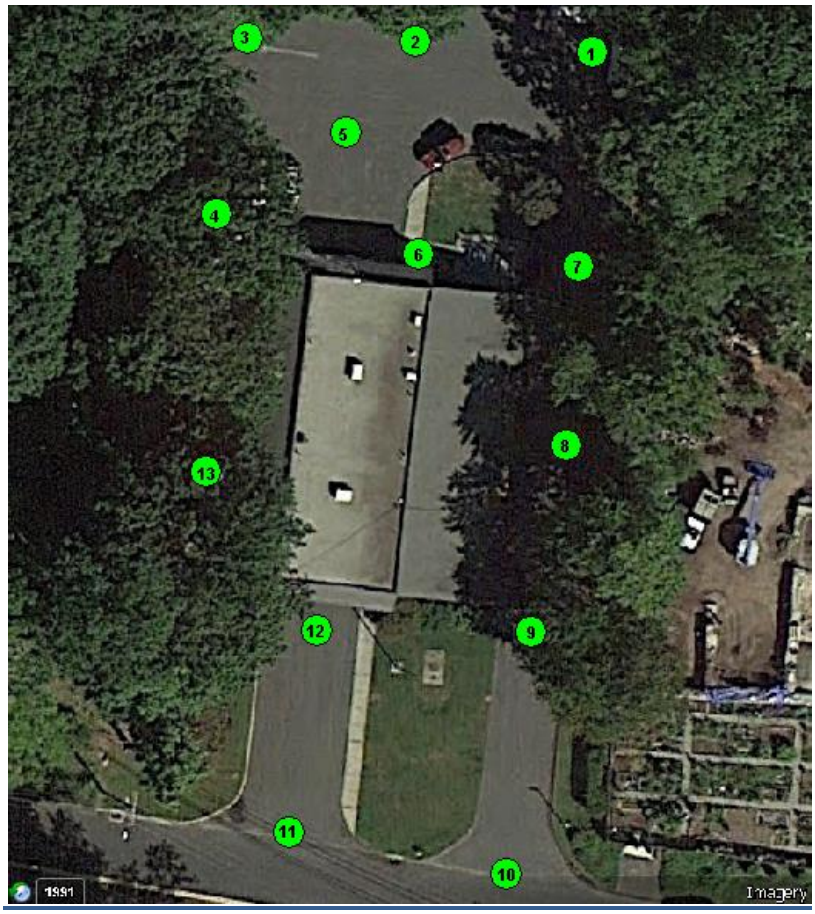

7. THEORETICAL CALCULATIONS

AT&T Mobility is planning to install 12 antennas (CCI HPA-65R-BUU-H8), 4 per sector for UMTS and LTE Technologies with azimuths of 30°-150°-270° for alpha-beta-gamma sectors. This section of the report will evaluate the power density proposed with installation at this site, through the use of FCC suggested prediction methods.

7.1 RF EXPOSURE PREDICTION METHOD

Power Density is calculated in accordance with FCC OET Bulletin 65 formula (3):

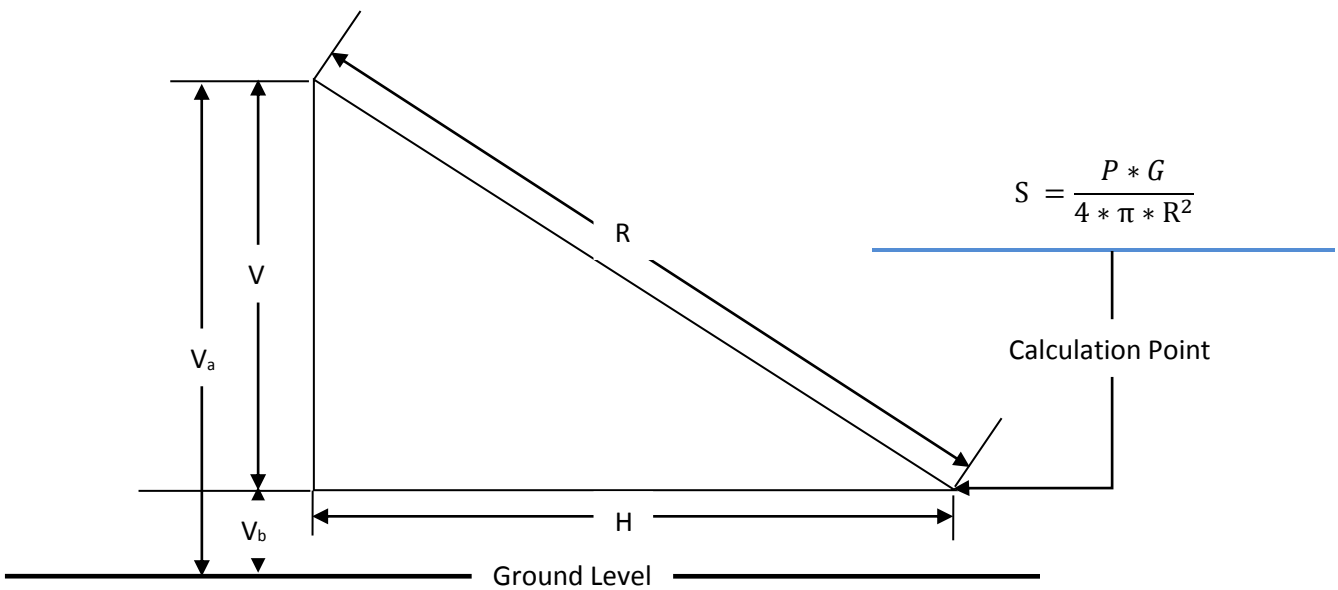

Where:
S = Power Density
P = Power input to the antenna
G = Gain of an antenna
R = Radial distance =$\sqrt{H^2 + V^2}$
H = Horizontal distance from antenna
V = Vertical distance from antenna = $Va - Vb$
V_a = Antenna height above ground
V_b = Calculation height above ground

8. CALCULATION RESULTS

The following charts show the graphical representation of the calculated % MPE at ground level for the proposed installation, as horizontal distance from antenna increases. The calculations take into account the vertical pattern of the antennas and represent the immediate direction of each sector azimuth within the antenna horizontal beamwidth. The calculations also assume line of site to the antennas and the result will be lower if measured indoor due to in-building penetration loss.

8.1 CHART 1 - %MPE AT GROUND LEVEL

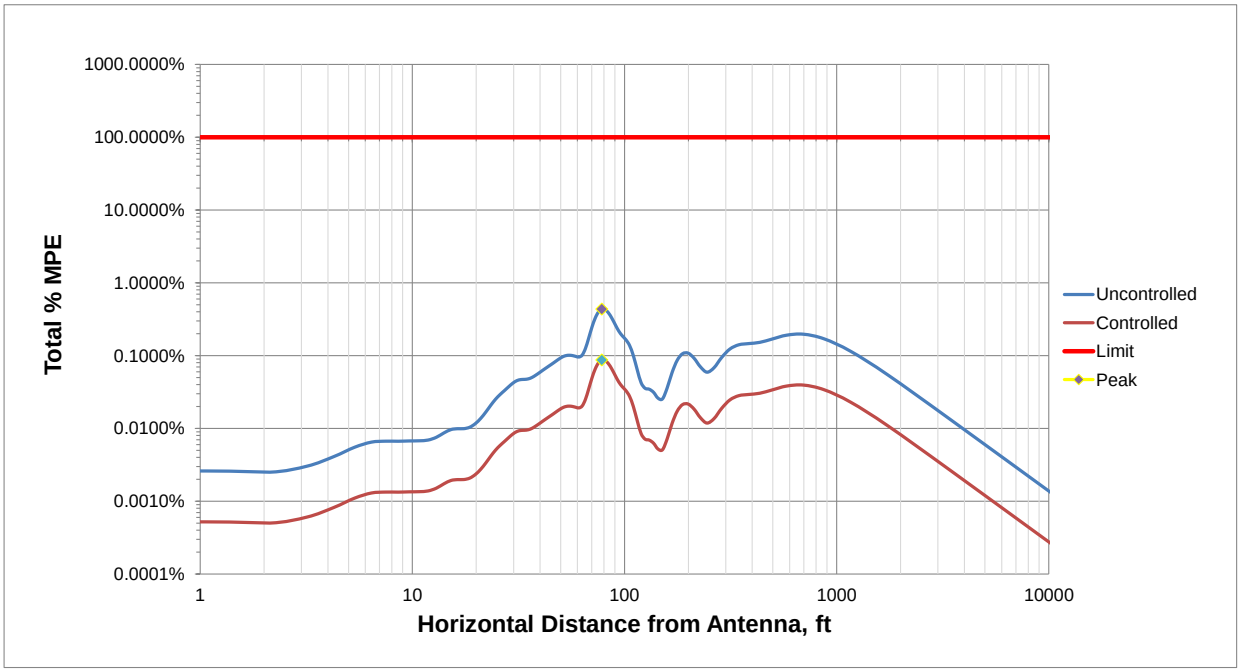

9. ADDING THEORETICAL CALCULATIONS OF PROPOSED INSTALLATION TO ACTUAL MEASUREMENTS

9.1 %MPE AT GROUND LEVEL

Measurement Position	Spatial Averaged %MPE Measurements - Cumulative of all Carriers		Calculated %MPE - Proposed Installation		Total %MPE (Current plus Proposed)	
	Controlled Population	Uncontrolled Population	Controlled Population	Uncontrolled Population	Controlled Population	Uncontrolled Population
1	0.1586	0.7930	0.0069	0.0346	0.1655	0.8276
2	0.4037	2.0185	0.0129	0.0643	0.4166	2.0828
3	0.5602	2.8010	0.0085	0.0425	0.5687	2.8435
4	1.1750	5.8750	0.0871	0.4355	1.2621	6.3105
5	0.8723	4.3615	0.0776	0.3879	0.9499	4.7494
6	0.7944	3.9720	0.0200	0.1002	0.8144	4.0722
7	0.9155	4.5775	0.0776	0.3879	0.9931	4.9654
8	0.7772	3.8860	0.0203	0.1013	0.7975	3.9873
9	0.9333	4.6665	0.0794	0.3972	1.0127	5.0637
10	0.9287	4.6435	0.0069	0.0346	0.9356	4.6781
11	0.9675	4.8375	0.0129	0.0643	0.9804	4.9018
12	1.0690	5.3450	0.0204	0.1019	1.0894	5.4469
13	1.1020	5.5100	0.0169	0.0847	1.1189	5.5947

10. RECOMMENDED SIGNAGE/COMPLIANCE PLAN

Signs are the primary means for control of access to areas where RF exposure levels may potentially exceed the MPE. As presented in the AT&T guidance document, the signs must:

- Be posted at a conspicuous point;
- Be posted at the appropriate locations;
- Be readily visible; and
- Make the reader aware of the potential risks prior to entering the affected area.

The table below presents the signs that may be used for AT&T installations.

Informational Signs		Alerting Signs	
	INFO 1		NOTICE
	INFO 2		CAUTION
at&t	INFO 3		WARNING
	INFO 4		

Based upon protocols presented in AT&T's RF Exposure Policy guidance document, dated March 31, 2009, and additional guidance provided by AT&T:

It is the opinion of this report that the following signage be placed at this site:

- Green Information #1 or #2 signs on the door to the bunker.
- Blue Notice sign on access point on the door to the bunker.
- Yellow Caution signs on the base of the pole.

No barriers are required for this site.

11. EQUIPMENT USED FOR MEASUREMENTS

The following calibrated NARDA equipment was used for the measurements contained in this report. Calibration certification documents for probe and meter are located on the last pages of this document.

Meter Manufacturer: *NARDA Microwave*	Probe Manufacturer: *NARDA Microwave*
Model: *NBM-550* S/N: *B-0552*	Model: *EA5091* S/N: *01046*
Calibration Due Date: *4/03/2015*	Calibration Due Date: *4/03/2015*

The probe used was a shaped probe which will give an aggregate reading of all transmitted RF Energy detected by the instrument by internally correcting for the different frequency/threshold limits and accurately measures the percent of MPE. The shaped probe has a frequency range of 300 KHz-50 GHz.

12. CONCLUSION

SAI has prepared this RF-EME Compliance Report for 200 Oronoque Lane, Stratford, CT. As presented in the sections below, worst-case spatial average at 200 Oronoque Lane, Stratford, CT indicates that there are no areas at this location where the potential RF-EME field levels associated with any RF equipment existing at or around the location exceed the applicable FCC's general public or occupational MPE limits.

The measurements, recorded on April 17, 2014, revealed the worst-case spatial average measured value to be ***8.875%*** on the grounds surrounding the RF tower at 200 Oronoque Lane, Stratford, CT which is in compliance with FCC MPE limits for uncontrolled/general public as outlined in the FCC OET Bulletin 65.

The ground areas at 200 Oronoque Lane, Stratford, CT were surveyed and found to be in compliance with the mandated uncontrolled/General Population limits for Maximum Permissible Exposure (MPE), as delineated in the FCC's Radio Frequency exposure rules.

Theoretical calculations show AT&T's proposed antenna installation will be within the FCC Standard for Uncontrolled/General Public and Controlled/Occupational Maximum Permissible Exposure (MPE).

13. STATEMENT OF CERTIFICATION

I certify to the best of my knowledge that the statements contained in this report are true and accurate. The measurements were obtained with properly calibrated equipment using techniques in compliance with Federal Communications Commission OET Bulletin 65 and FCC ET Docket No. 93-62.

. . April 28, 2014 .

Daniel Hamman, RF Field Technician
SAI Communications

Date

April 28, 2014 .

Mike Lawton, RF Engineering Manager
SAI Communications

Date

14. PHOTO DOCUMENTATION

14.1 LEGEND FOR SITE PHOTOS

- **1 to 2** Fire Department operated bunker and tower
- **3 to 4** Antennas on tower

14.2 SITE PHOTOS

1

2

3

4

15. SITE SURVEY INFORMATION

Surveyor Name	Daniel Hamman	Survey Date	04/17/2014
SITE INFORMATION			
200 Oronoque Lane Stratford, CT 06614		Fairfield County CT2638S 41.251467, -73.117119	
MONITOR INFORMATION		**PROBE INFORMATION**	
Model #	NBM-550	Model #	EA5091
Serial #	B-0552	Serial #	1046
Calibration Date	4/03/2013	Calibration Date	4/03/2013
Next Recommended Calibration Date	4/03/2015	Next Recommended Calibration Date	4/03/2015
CLIMATE INFORMATION			
Temperature		45	
Sunny/Overcast/Cloudy		Clear	
Windy/Mild Breeze/No Wind		No Wind	
Next Recommended Rainy/Drizzle/Foggy/Snowy		N/A	
Other Noteworthy weather factors that might influence readings (Lightning)		None	
ACCESS INFORMATION			
Type of Facility	Bunker and Tower		
Client Contact Information	Town of Stratford FD		
Property Owner and Contact Number		Town of Stratford 200 Oronoque Lane Stratford CT, 06614	
Who manages Access (e.g. security, landlord, no one)		Proterra Design Group, LLC 1 Short Street, Suite 3 Northampton, MA 01060	
How is access managed? (locks, sign-in, etc)		Access only via locked access door	
Ease of access, in general (e.g. ease of breaching any access physical controls)		Cannot access without permission from facilities	