CROWN CASTLE

Crown Castle
300 Barr Harbor Drive
Suite 300
Conshohocken, PA 19428

July 10, 2024

Via Fedex # 777324163827

Melanie A. Bachman
Executive Director
Connecticut Siting Council
10 Franklin Square
New Britain, CT 06051

RE: **Notice of Exempt Modification for Verizon Wireless: 5000386192**
Crown Site ID# 806953
69 Guinea Road, Stamford CT 06903
Latitude: 41° 6′ 6.30″/ Longitude: -73° 35′ 40.00″

Dear Ms. Bachman:

Cellco Partnership d/b/a Verizon Wireless currently maintains fifteen (15) antennas at the 139-foot mount on the existing 160-foot monopole tower located at 69 Guinea Road. The property is owned by The Girl Scouts of Connecticut Inc. and the tower is owned by Crown Castle. Cellco Partnership d/b/a Verizon Wireless now intends to remove fifteen (15) antennas and replace with nine (9) new antennas and ancillary antenna equipment at the 139-ft level. This Eligible Facilities Request for antenna modification/proposal of an existing telecommunications facility includes hardware that is both 4G (LTE) and 5G capable through remote software configuration and either or both services may be turned on or off at various times.

Planned Modification:

Tower:

Install New:

- INSTALL (6) JMA - MX06FRO860-03 ANTENNAS
- INSTALL (3) SAMSUNG - MT6413-77A ANTENNAS
- INSTALL (3) SAMSUNG - B2/B66A RRH ORAN (RF4439D-25A) RADIOS
- INSTALL (3) SAMSUNG - RF4461D-13A RADIOS
- INSTALL (1) RFS – 6X12 HYBRID CABLE
- INSTALL (1) RAYCAP – RVZDC – 6627-PF-48
- INSTALL (3) JMA DUAL ANTENNA MOUNTING BRACKET JMA 91900314-02

Remove:

- REMOVE (6) RYMSA - MG D3-800 ANTENNAS
- REMOVE (3) POWERWAVE - P65-16-XL-2 ANTENNAS
- REMOVE (6) ANDREW – DB846F65ZAXY 869 ANTENNAS
- REMOVE (3) SAMSUNG – B5 / B13 RRH-BR04C (RFV01U-D2A) RADIOS

- REMOVE (3) NOKIA - UHID B4 RRH 2X40 RADIOS
- REMOVE (1) RAYCAP - 6 OVP
- REMOVE (1) 1 5/8" COAX CABLE

The facility was approved by the Connecticut Siting Council, via Docket No. 180 on April 2, 1998.

Please accept this letter as notification pursuant to Regulations of Connecticut State Agencies §16-50j-73, for construction that constitutes an exempt modification pursuant to R.C.S.A. § 16-50j-72(b)(2). In accordance with R.C.S.A. § 16-50j-73, a copy of this letter is being sent to the Honorable Caroline Simmons, Mayor, City of Stamford, Vineeta Mathur, Principal Planner, City of Stamford and The Girl Scouts of Connecticut Inc., Property Owner. Crown Castle is the tower owner.

1. The proposed modifications will not result in an increase in the height of the existing tower.

2. The proposed modifications will not require the extension of the site boundary.

3. The proposed modification will not increase noise levels at the facility by six decibels or more, or to levels that exceed state and local criteria.

4. The operation of the replacement antennas will not increase radio frequency emissions at the facility to a level at or above the Federal Communication Commission safety standard.

5. The proposed modifications will not cause a change or alteration in the physical or environmental characteristics of the site.

6. The existing structure and its foundation can support the proposed loading.

For the foregoing reasons, Cellco Partnership d/b/a Verizon Wireless respectfully submits that the proposed modifications to the above-reference telecommunications facility constitutes an exempt modification under R.C.S.A. § 16-50j-72(b)(2). Please send approval/rejection letter to Attn: Jenifer Bachi.

Sincerely,

Jenifer Bachi
Permitting Specialist
300 Barr Harbor Drive, Ste. 300
Conshohocken, PA 19428
(610) 635-3221
Jenifer.bachi@crowncastle.com

Attachments are as follows:

Exhibit A – Original Facility Approval
Exhibit B – Property Card
Exhibit C – Property Map
Exhibit D – Construction Drawings
Exhibit E – Structural Analysis Report
Exhibit F – Mount Analysis Report
Exhibit G – Power Density / RF Emissions Report
Exhibit H – Recipient Mailing Records
Check #2967710 for $625 Application Fee

cc:

Via Fedex # 777324060505
Honorable Caroline Simmons, Mayor
City of Stamford
Stamford Government Center
888 Washington Blvd., 10th Floor
Stamford, CT 06901
203-977-4150

Via Fedex # 777324109006
Vineeta Mathur, Principal Planner
City of Stamford
Stamford Government Center
888 Washington Blvd., 7th Floor
Stamford, CT 06901
203-977-4716

Via Fedex # 777324142542
Girl Scouts of Connecticut Inc.
340 Washington Street
Hartford, CT 06106

Crown Castle, Tower Owner

EXHIBIT A

Original Facility Approval

Filing Guides
Meetings & Minutes
Public Participation
Audio Link to New Britain Hearing Rooms
Programs & Services
Telecommunications Database
Maps
Publications
Other Resources
Statutes & Regulations
Frequently Asked Questions

January 2011 Calendar
Receive Updates by E-mail Sign -Up for E-alerts
REGISTER Online to VOTE
Regulations of CT State Agencies
CT Alert WE CAN'T ALERT YOU... IF WE CAN'T REACH YOU

Melanie Bachman,
Executive Director

NOTICE TO USERS
The Connecticut Siting Council posts filed documents to this site as a public service.The Council disclaims any liability for the content of submissions made by parties, intervenors, public officials, and the general public. Further, while the Council seeks to be complete in its postings, the Council urges users of this site to confirm with the submitter the completeness of the postings made. The posting of any document does not constitute or imply endorsement by the Connecticut Siting Council. Finally, the Connecticut Siting Council assumes no responsibility for the use of documents posted on this site.
For further information about the proper use of material posted on this site, please see the State of Connecticut disclaimer.

DOCKET NO. 180 - Cellco Partnership d/b/a Bell Atlantic Mobile application for a Certificate of Environmental Compatibility and Public Need for the construction, maintenance, and operation of a cellular telecommunications tower and associated equipment located immediately north of the Merritt Parkway off Guinea Road (prime and alternate one sites), or 141 Den Road (alternate two site) in Stamford, Connecticut.

Connecticut Siting Council

April 2, 1998

Decision and Order

Pursuant to the foregoing Findings of Fact and Opinion, the Connecticut Siting Council (Council) finds that the effects associated with the construction, operation, and maintenance of a telecommunications tower and equipment buildings at the proposed prime site in Stamford, Connecticut, including effects on the natural environment; ecological integrity and balance; public health and safety; scenic, historic, and recreational values; forests and parks; air and water purity; and fish and wildlife are not disproportionate either alone or cumulatively with other effects when compared to need, are not in conflict with the policies of the State concerning such effects, and are not sufficient reason to deny the application and therefore directs that a Certificate of Environmental Compatibility and Public Need, as provided by General Statutes § 16-50k, be issued to Bell Atlantic Mobile (BAM) for the construction, operation, and maintenance of a telecommunications tower, associated equipment, and buildings at the proposed prime site, located within a 28-acre parcel at Guinea Road, Stamford, Connecticut. We find the effects on scenic resources and adjacent land uses of the first alternate site and second alternate site to be significant, and therefore deny certification of these sites.

The facility shall be constructed, operated, and maintained substantially as specified in the Council's record in this matter, and subject to the following conditions:

1. The tower shall be constructed as a monopole, no taller than necessary to provide the proposed telecommunications services, sufficient to accommodate the antennas of BAM, Springwich Cellular Limited Partnership (Springwich), Sprint PCS (Sprint), and Nextel Communications of the Mid-Atlantic, Inc. (Nextel); and such tower shall not exceed a height of 160 feet above ground level (AGL).

2. The Certificate Holder shall prepare a Development and Management (D&M) Plan for this site in compliance with Sections 16-50j-75 through 16-50j-77 of the Regulations of Connecticut State Agencies. The D&M Plan shall be submitted to and approved by the Council prior to the commencement of facility construction and shall include: adjustment of the tower location within the leased parcel to protect a nearby stream and minimize grade; a final site plan(s) for site development to include the location and specifications for the tower foundation, antennas, equipment buildings, emergency generator and fuel tank, security fence, access road, and utility line; construction plans for site clearing, tree trimming, water drainage, and erosion and sedimentation controls consistent with the Connecticut Guidelines for Soil Erosion and Sediment Control, as amended; provisions for the tower finish that may include painting; and provisions for the prevention and containment of spills and/or other discharge into surface water and ground water bodies.

3. Upon the establishment of any new State or federal radio frequency standards applicable to frequencies of this facility, the facility granted herein shall be brought into compliance with such standards.

4. The Certificate Holder shall provide the Council a recalculated report of electromagnetic radio frequency power density if and when circumstances in operation cause a change in power density above the levels originally calculated and provided in the application.

5. The Certificate Holder shall permit public or private entities to share space on the proposed tower for fair consideration, or shall provide any requesting entity with specific legal, technical, environmental, or economic reasons precluding such tower sharing.

6. If the facility does not initially provide, or permanently ceases to provide cellular services following completion of construction, this Decision and Order shall be void, and the Certificate Holder shall dismantle the tower and remove all associated equipment or reapplication for any continued or new use shall be made to the Council before any such use is made.

7. Any antenna that becomes obsolete and ceases to function shall be removed within 60 days after such antennas become obsolete and cease to function.

8. Unless otherwise approved by the Council, this Decision and Order shall be void if all construction authorized herein is not completed within three years of the effective date of this Decision and Order or within three years after all appeals to this Decision and Order have been resolved.

Pursuant to General Statutes § 16-50p, we hereby direct that a copy of the Findings of Fact, Opinion, and Decision and Order be served on each person listed below, and notice of issuance shall be published in The Hartford Courant and Stamford Advocate.

By this Decision and Order, the Council disposes of the legal rights, duties, and privileges of each party named or admitted to the proceeding in accordance with Section 16-50j-17 of the Regulations of Connecticut State Agencies.

The parties and intervenors to this proceeding are:

APPLICANT	**ITS REPRESENTATIVE**
Bell Atlantic Mobile	Kenneth C. Baldwin, Esq. Brian C. S. Freeman, Esq. Robinson & Cole One Commercial Plaza Hartford, CT 06103-3597 Mr. David S. Malko, P.E. Jennifer Young Gaudet Bell Atlantic Mobile 20 Alexander Drive Wallingford, CT 06492

INTERVENORS	**ITS REPRESENTATIVE**
Sprint Spectrum, L.P. d/b/a Sprint PCS	Elias A. Alexiades John W. Knuff Harris, Beach & Wilcox, LLP 147 North Broad Street Milford, CT 06460
Nextel Communications of the Mid-Atlantic, Inc.d/b/a Nextel Communications	Christopher B. Fisher, Esq. Cuddy, Feder & Worby, Esq. 90 Maple Avenue White Plains, NY 10601
Springwich Cellular Limited Partnership	Peter J. Tyrrell, Esq. General Counsel 500 Enterprise Drive Rocky Hill, CT 06067-3900

PARTIES	**ITS REPRESENTATIVE**
Charles H. Nobs, Maurice Lucas, and Ben and Myrna Raphan	Jeffrey J. Mirman, Esq. Levy & Droney, P.C. P.O. Box 887 Farmington, CT 06034

Content Last Modified on 8/9/2002 1:30:07 PM

State of Connecticut Disclaimer, Privacy Policy, and Web Site Accessibility Policy. Copyright © 2002-2019 State of Connecticut.

EXHIBIT B

Property Card

69 GUINEA ROAD

Location	69 GUINEA ROAD	**Mblu**	002/ 6848/ / /
Acct#	002-6848	**Owner**	GIRL SCOUTS OF CONNECTICUT INC
Assessment	$1,468,320	**Appraisal**	$2,097,590
PID	24323	**Building Count**	1

Legal Description

Current Value

Appraisal			
Valuation Year	**Improvements**	**Land**	**Total**
2023	$586,310	$1,511,280	$2,097,590
Assessment			
Valuation Year	**Improvements**	**Land**	**Total**
2023	$410,420	$1,057,900	$1,468,320

Owner of Record

Owner	GIRL SCOUTS OF CONNECTICUT INC	**Sale Price**	$0
Co-Owner		**Book & Page**	9322/0308
Address	340 WASHINGTON STREET HARTFORD, CT 06106-3317	**Sale Date**	04/16/2008
		Instrument	25

Ownership History

Ownership History				
Owner	**Sale Price**	**Book & Page**	**Instrument**	**Sale Date**
GIRL SCOUTS OF CONNECTICUT INC	$0	9322/0308	25	04/16/2008
GIRL SCOUT COUNCIL SW CT INC	$0	4405/0321		05/12/1995
SOUTHWESTERN CT GIRL SCT	$0	1035/0131	25	12/29/1964

Building Information

Building 1 : Section 1

Year Built:	1963
Living Area:	1,960

Building Attributes	
Field	**Description**
Style:	Ranch
Model	Residential
Grade:	C+
Stories:	1 Story
Occupancy	1
Exterior Wall 1	Cement fiberbd
Exterior Wall 2	
Roof Structure:	Gable/Hip
Roof Cover	Asph/F Gls/Cmp
Interior Wall 1	Drywall
Interior Wall 2	
Interior Flr 1	Hardwood
Interior Flr 2	
Heat Fuel	Electric
Heat Type:	Electr Basebrd
AC Type:	Central
Total Bedrooms:	00
Total Bthrms:	1
Total Half Baths:	0
Total Xtra Fixtrs:	3
Total Rooms:	4
Bath Style:	Average
Kitchen Style:	Typical
Fireplace Msnry.	
Fpl. Gas/Prefab	1
Fpl. Outdoor	
Fpl. Addnl. Open	
Bsmt. Garage	
Num Park	
Fireplaces	
Fndtn Cndtn	
Basement	

Building Photo

(https://images.vgsi.com/photos/StamfordCTPhotos//\0165\IMG_0703_165

Building Layout

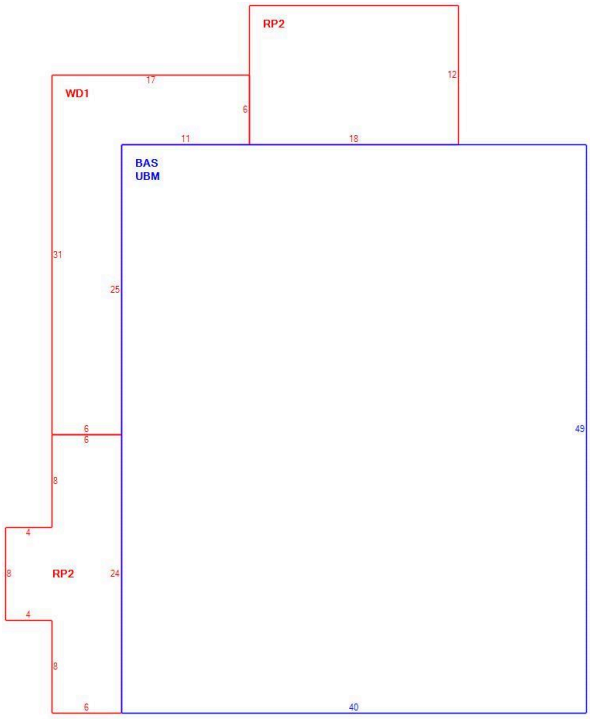

(ParcelSketch.ashx?pid=24323&bid=24323)

Building Sub-Areas (sq ft)			Legend
Code	**Description**	**Gross Area**	**Living Area**
BAS	First Floor	1,960	1,960
RP2	Porch Covered	392	0
UBM	Basement, Unfinished	1,960	0
WD1	Deck, Wood	252	0
		4,564	1,960

Extra Features

Extra Features				Legend
Code	Description	Size	Value	Bldg #
RP2	Porch Coverd	1056.00 S.F	$30,680	1
RP2	Porch Coverd	756.00 S.F	$21,960	1
RP2	Porch Coverd	672.00 S.F	$19,520	1
RP2	Porch Coverd	216.00 S.F	$6,270	1
RP2	Porch Coverd	176.00 S.F	$5,110	1

Land

Land Use

Use Code	901
Description	Exmpt Res MDL-01
Zone	RA3
Neighborhood	1100
Alt Land Appr	No
Category	

Land Line Valuation

Size (Acres)	16.86
Depth	
Assessed Value	$1,057,900
Appraised Value	$1,511,280

Outbuildings

Outbuildings						Legend
Code	Description	Sub Code	Sub Description	Size	Value	Bldg #
FC1	Shed Wood			240.00 S.F.	$3,060	1
MS1	Misc Structure			528.00 S.F.	$3,480	1
WD1	Wood Deck			252.00 S.F.	$5,670	1
CEL1	Cell Tower			1.00 SITES	$225,000	1

Valuation History

Appraisal			
Valuation Year	Improvements	Land	Total
2022	$586,310	$1,511,280	$2,097,590
2021	$461,570	$1,007,550	$1,469,120
2020	$461,570	$1,007,550	$1,469,120

Assessment			
Valuation Year	Improvements	Land	Total
2022	$410,420	$1,057,900	$1,468,320
2021	$323,130	$705,290	$1,028,420
2020	$323,130	$705,290	$1,028,420

(c) 2024 Vision Government Solutions, Inc. All rights reserved.

EXHIBIT C

Property Map

69 Guinea Rd

Map data ©2024 200 ft

69 Guinea Rd

Directions Save Nearby Send to phone Share

69 Guinea Rd, Kempton, PA 19529

Confirm or fix this location
The location shown is not precise

EXHIBIT D

Construction Drawings

DocuSign Envelope ID: D0B70F96-78BB-4BF4-AD97-6F7FB3A6BA7C

verizon

VERIZON SITE NUMBER: 5000386192
VERIZON SITE NAME: RIVERBANK CT
VERIZON PROJECT: 16092561
SITE TYPE: MONOPOLE
TOWER HEIGHT: 160'-0"

BUSINESS UNIT #: 806953
SITE ADDRESS: 69 GUINEA RD
STAMFORD, CT 06903
COUNTY: FAIRFIELD
JURISDICTION: CITY OF STAMFORD (FAIRFIELD COUNTY)

verizon

CROWN CASTLE

VERIZON SITE NUMBER:
5000386192

BU #: **806953**

CROWN CASTLE SITE NAME
BRG 2044 (A) 943097

69 GUINEA RD
STAMFORD, CT 06903

EXISTING 160'-0"
MONOPOLE

SITE INFORMATION

CROWN CASTLE USA INC.	
SITE NAME:	BRG 2044 (A) 943097
BU NUMBER:	806953
TOWER OWNER:	CROWN CASTLE USA, INC 2000 CORPORATE DRIVE CANONSBURG, PA 15317
CARRIER/APPLICANT:	VERIZON WIRELESS 20 ALEXANDER DRIVE WALLINGFORD, CT 06492
SITE ADDRESS:	69 GUINEA RD STAMFORD, CT 06903
COUNTY:	FAIRFIELD
LATITUDE:	41° 6' 6.3" / 41.1018°
LONGITUDE:	-73° 35' 40.0" / -73.5944°
LAT/LONG TYPE:	NAD83
GROUND ELEVATION:	247'+/- AMSL
AREA OF CONSTRUCTION:	EXISTING
CURRENT ZONING:	UNKNOWN
MAP/PARCEL #:	STAM-000000-000002-006848
OCCUPANCY CLASSIFICATION:	U
TYPE OF CONSTRUCTION:	IIB
A.D.A. COMPLIANCE:	FACILITY IS UNMANNED AND NOT FOR HUMAN HABITATION
PROPERTY OWNER:	GLOBAL SIGNAL ACQUISITION PO BOX 277455 ATLANTA, GA 30384
JURISDICTION:	CITY OF STAMFORD (FAIRFIELD COUNTY) 888 WASHINGTON BLVD 7TH FLOOR STAMFORD, CT 06091
ELECTRIC PROVIDER:	CONNECTICUT LIGHT & POWER CO (800) 286-2000
TELCO PROVIDER:	LIGHTOWER (855) 91-FIBER

PROJECT TEAM

A&E FIRM:	CROWN CASTLE USA, INC 2000 CORPORATE DRIVE CANONSBURG, PA 15317
CROWN CASTLE USA INC. DISTRICT CONTACTS:	8020 KATY FREEWAY HOUSTON, TX 77024 ALEXANDER MABBETT - PROJECT MANAGER ALEXANDER.MABBETT@CROWNCASTLE.COM PAIGE THOMSEN - AES PAIGE.THOMSEN@CROWNCASTLE.COM

NOTE:
PRIOR TO ACCESSING/ENTERING THE SITE YOU MUST CONTACT THE CROWN NOC AT (800) 788-7011 & CROWN CONSTRUCTION MANAGER

DRAWING INDEX

SHEET #	SHEET DESCRIPTION
T-1	TITLE SHEET
T-2	GENERAL NOTES
C-1	SITE PLAN
C-2	TOWER ELEVATIONS
C-3	ANTENNA PLANS
C-4	FINAL EQUIPMENT SCHEDULE
C-5.1	EQUIPMENT DETAILS & SPECIFICATIONS
C-5.2	EQUIPMENT DETAILS & SPECIFICATIONS
C-6	COLOR CODE MATRIX
G-1	GROUNDING DETAILS
ATTACHED	RFDS

ALL DRAWINGS CONTAINED HEREIN ARE FORMATTED FOR 22X34. CONTRACTOR SHALL VERIFY ALL PLANS AND EXISTING DIMENSIONS AND CONDITIONS ON THE JOB SITE AND SHALL IMMEDIATELY NOTIFY THE ENGINEER IN WRITING OF ANY DISCREPANCIES BEFORE PROCEEDING WITH THE WORK OR BE RESPONSIBLE FOR SAME.

CALL CONNECTICUT ONE CALL
(800) 922-4455 CBYD.COM
CALL 2 WORKING DAYS
BEFORE YOU DIG!

CONTRACTOR PMI REQUIREMENTS

PMI ACCESSED AT	https://pmi.vzwsmart.com
SMART TOOL VENDOR PROJECT NUMBER	10214349
VzW LOCATION CODE (PSLC)	468411

*** PMI AND REQUIREMENTS ALSO EMBEDDED IN MOUNT ANALYSIS REPORT

MOUNT MODIFICATION REQUIRED	N

VzW APPROVED SMART KIT VENDORS

REFER TO MOUNT MODIFICATION DRAWINGS PAGE FOR VzW SMART KIT APPROVED VENDORS

APPROVALS

VERIZON SIGNATURE BLOCK

APPROVAL	SIGNATURE	DATE
SITE ACQUISITION		
CONSTRUCTION		
RADIO		
MICROWAVE		
TELCO		
EQUIPMENT		
PROJECT ADMINISTRATOR		
WO ADMINISTRATOR		

CROWN CASTLE USA INC. SINGNATURE BLOCK

APPROVAL		
SITE ACQUISITION		
PLANNER		
CONSTRUCTION		
PROJECT MANAGER		
UTILITY MANAGER		
LANDLORD		

PROJECT DESCRIPTION

THE PURPOSE OF THIS PROJECT IS TO ENHANCE BROADBAND CONNECTIVITY AND CAPACITY TO THE EXISTING ELIGIBLE WIRELESS FACILITY.

TOWER SCOPE OF WORK:
- REMOVE (6) RYMSA - MG D3-800 ANTENNA
- REMOVE (3) POWERWAVE - P65-16-XL-2 ANTENNA
- REMOVE (6) ANDREW - DB846F65ZAXY 869 ANTENNA
- REMOVE (3) SAMSUNG - B5/B13 RRH-BR04C (RFV01U-D2A) RADIO
- REMOVE (3) NOKIA - UHID B4 RRH 2X40 RADIO
- REMOVE (1) RAYCAP- 6 OVP
- REMOVE (6) 1-5/8" COAXIAL CABLE
- INSTALL (6) JMA - MX06FRO860-03 ANTENNA
- INSTALL (3) SAMSUNG - MT6413-77A ANTENNA
- INSTALL (3) SAMSUNG - RF4461D-13A RADIO
- INSTALL (3) SAMSUNG - B2/B66A RRH ORAN (RF4439D-25A) RADIO
- INSTALL (1) RAYCAP - RVZDC-6627-PF-48
- INSTALL (1) RFS - 6X12 HYBRID HYBRID CABLE
- INSTALL (3) JMA DUAL ANTENNA MOUNTING BRACKET JMA - 91900314-02

LOCATION MAP

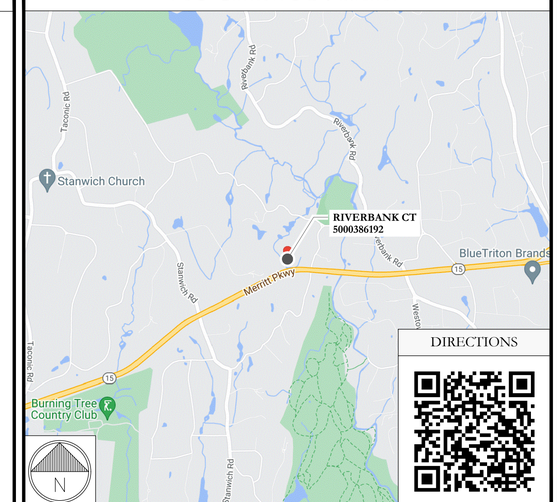

NO SCALE

APPLICABLE CODES & REFERENCE DOCUMENTS

ALL WORK SHALL BE PERFORMED AND MATERIALS INSTALLED IN ACCORDANCE WITH THE CURRENT EDITIONS OF THE FOLLOWING CODES AS ADOPTED BY THE LOCAL GOVERNING AUTHORITIES. NOTHING IN THESE PLANS IS TO BE CONSTRUED TO PERMIT WORK NOT CONFORMING TO THESE CODES:

CODE TYPE	CODE
BUILDING	2022 CONNECTICUT SBC/2021 IBC
MECHANICAL	2022 CONNECTICUT SBC/2021 IMC
ELECTRICAL	2022 CONNECTICUT SBC/2020 NEC

REFERENCE DOCUMENTS:

STRUCTURAL ANALYSIS:	TELAMON
DATED:	4/30/24
MOUNT ANALYSIS:	COLLIERS ENGINEERING & DESIGN
DATED:	3/11/24
RFDS REVISION:	3
DATED:	4/2/24
ORDER ID:	662916
REVISION:	0

ISSUED FOR:

REV	DATE	DRWN	DESCRIPTION	DES./QA
0	3/28/24	AJC	FINAL	MD
1	5/22/24	AJC	REVISION	MD

DocuSigned by:
-01434153

STATE OF CONNECTICUT
MARBEL DENTINGER
23524
LICENSED
PROFESSIONAL ENGINEER

5/23/2024 | 8:24:14 AM CDT

CROWN CASTLE USA INC.
CERTIFICATE OF REGISTRATION #PEC.0001101

IT IS A VIOLATION OF LAW FOR ANY PERSON, UNLESS THEY ARE ACTING UNDER THE DIRECTION OF A LICENSED PROFESSIONAL ENGINEER, TO ALTER THIS DOCUMENT.

SHEET NUMBER:	REVISION:
T-1	0

TEMPLATENAME_DATEOFGENERATION

DocuSign Envelope ID: D0B70F96-78BB-4BF4-AD97-6F7FB3A6BA7C

CROWN CASTLE USA INC. SITE ACTIVITY REQUIREMENTS:

1. NOTICE TO PROCEED– NO WORK SHALL COMMENCE PRIOR TO CROWN CASTLE USA INC. WRITTEN NOTICE TO PROCEED (NTP) AND THE ISSUANCE OF A PURCHASE ORDER. PRIOR TO ACCESSING/ENTERING THE SITE YOU MUST CONTACT THE CROWN CASTLE USA INC. NOC AT 800–788–7011 & THE CROWN CASTLE USA INC. CONSTRUCTION MANAGER.
2. "LOOK UP" – CROWN CASTLE USA INC. SAFETY CLIMB REQUIREMENT:
THE INTEGRITY OF THE SAFETY CLIMB AND ALL COMPONENTS OF THE CLIMBING FACILITY SHALL BE CONSIDERED DURING ALL STAGES OF DESIGN, INSTALLATION, AND INSPECTION. TOWER MODIFICATION, MOUNT REINFORCEMENTS, AND/OR EQUIPMENT INSTALLATIONS SHALL NOT COMPROMISE THE INTEGRITY OR FUNCTIONAL USE OF THE SAFETY CLIMB OR ANY COMPONENTS OF THE CLIMBING FACILITY ON THE STRUCTURE. THIS SHALL INCLUDE, BUT NOT BE LIMITED TO: PINCHING OF THE WIRE ROPE, BENDING OF THE WIRE ROPE FROM ITS SUPPORTS, DIRECT CONTACT OR CLOSE PROXIMITY TO THE WIRE ROPE WHICH MAY CAUSE FRICTIONAL WEAR, IMPACT TO THE ANCHORAGE POINTS IN ANY WAY, OR TO IMPEDE/BLOCK ITS INTENDED USE. ANY COMPROMISED SAFETY CLIMB, INCLUDING EXISTING CONDITIONS MUST BE TAGGED OUT AND REPORTED TO YOUR CROWN CASTLE USA INC. POC OR CALL THE NOC TO GENERATE A SAFETY CLIMB MAINTENANCE AND CONTRACTOR NOTICE TICKET.
3. PRIOR TO THE START OF CONSTRUCTION, ALL REQUIRED JURISDICTIONAL PERMITS SHALL BE OBTAINED. THIS INCLUDES, BUT IS NOT LIMITED TO, BUILDING, ELECTRICAL, MECHANICAL, FIRE, FLOOD ZONE, ENVIRONMENTAL, AND ZONING. AFTER ONSITE ACTIVITIES AND CONSTRUCTION ARE COMPLETED, ALL REQUIRED PERMITS SHALL BE SATISFIED AND CLOSED OUT ACCORDING TO LOCAL JURISDICTIONAL REQUIREMENTS.
4. ALL CONSTRUCTION MEANS AND METHODS; INCLUDING BUT NOT LIMITED TO, ERECTION PLANS, RIGGING PLANS, CLIMBING PLANS, AND RESCUE PLANS SHALL BE THE RESPONSIBILITY OF THE GENERAL CONTRACTOR RESPONSIBLE FOR THE EXECUTION OF THE WORK CONTAINED HEREIN, AND SHALL MEET ANSI/ASSE A10.48 (LATEST EDITION); FEDERAL, STATE, AND LOCAL REGULATIONS; AND ANY APPLICABLE INDUSTRY CONSENSUS STANDARDS RELATED TO THE CONSTRUCTION ACTIVITIES BEING PERFORMED. ALL RIGGING PLANS SHALL ADHERE TO ANSI/ASSE A10.48 (LATEST EDITION) AND CROWN CASTLE USA INC. STANDARD CED–STD–10253, INCLUDING THE REQUIRED INVOLVEMENT OF A QUALIFIED ENGINEER FOR CLASS IV CONSTRUCTION, TO CERTIFY THE SUPPORTING STRUCTURE(S) IN ACCORDANCE WITH ANSI/TIA–322 (LATEST EDITION).
5. ALL SITE WORK TO COMPLY WITH QAS–STD–10068 "INSTALLATION STANDARDS FOR CONSTRUCTION ACTIVITIES ON CROWN CASTLE USA INC. TOWER SITE," CED–STD–10294 "STANDARD FOR INSTALLATION OF MOUNTS AND APPURTENANCES," AND LATEST VERSION OF ANSI/TIA–1019–A–2012 "STANDARD FOR INSTALLATION, ALTERATION, AND MAINTENANCE OF ANTENNA SUPPORTING STRUCTURES AND ANTENNAS."
6. IF THE SPECIFIED EQUIPMENT CAN NOT BE INSTALLED AS SHOWN ON THESE DRAWINGS, THE CONTRACTOR SHALL PROPOSE AN ALTERNATIVE INSTALLATION FOR APPROVAL BY CROWN CASTLE USA INC. PRIOR TO PROCEEDING WITH ANY SUCH CHANGE OF INSTALLATION.
7. ALL MATERIALS FURNISHED AND INSTALLED SHALL BE IN STRICT ACCORDANCE WITH ALL APPLICABLE CODES, REGULATIONS AND ORDINANCES. CONTRACTOR SHALL ISSUE ALL APPROPRIATE NOTICES AND COMPLY WITH ALL LAWS, ORDINANCES, RULES, REGULATIONS AND LAWFUL ORDERS OF ANY PUBLIC AUTHORITY REGARDING THE PERFORMANCE OF THE WORK. ALL WORK CARRIED OUT SHALL COMPLY WITH ALL APPLICABLE MUNICIPAL AND UTILITY COMPANY SPECIFICATIONS AND LOCAL JURISDICTIONAL CODES, ORDINANCES AND APPLICABLE REGULATIONS.
8. THE CONTRACTOR SHALL INSTALL ALL EQUIPMENT AND MATERIALS IN ACCORDANCE WITH MANUFACTURER'S RECOMMENDATIONS UNLESS SPECIFICALLY STATED OTHERWISE.
9. THE CONTRACTOR SHALL CONTACT UTILITY LOCATING SERVICES PRIOR TO THE START OF CONSTRUCTION.
10. ALL EXISTING ACTIVE SEWER, WATER, GAS, ELECTRIC AND OTHER UTILITIES WHERE ENCOUNTERED IN THE WORK, SHALL BE PROTECTED AT ALL TIMES AND WHERE REQUIRED FOR THE PROPER EXECUTION OF THE WORK, SHALL BE RELOCATED AS DIRECTED BY CONTRACTOR. EXTREME CAUTION SHOULD BE USED BY THE CONTRACTOR WHEN EXCAVATING OR DRILLING PIERS AROUND OR NEAR UTILITIES. CONTRACTOR SHALL PROVIDE SAFETY TRAINING FOR THE WORKING CREW. THIS WILL INCLUDE BUT NOT BE LIMITED TO A) FALL PROTECTION B) CONFINED SPACE C) ELECTRICAL SAFETY D) TRENCHING AND EXCAVATION E) CONSTRUCTION SAFETY PROCEDURES.
11. ALL SITE WORK SHALL BE AS INDICATED ON THE STAMPED CONSTRUCTION DRAWINGS AND PROJECT SPECIFICATIONS, LATEST APPROVED REVISION.
12. CONTRACTOR SHALL KEEP THE SITE FREE FROM ACCUMULATING WASTE MATERIAL, DEBRIS, AND TRASH AT THE COMPLETION OF THE WORK. IF NECESSARY, RUBBISH, STUMPS, DEBRIS, STICKS, STONES AND OTHER REFUSE SHALL BE REMOVED FROM THE SITE AND DISPOSED OF LEGALLY.
13. ALL EXISTING INACTIVE SEWER, WATER, GAS, ELECTRIC AND OTHER UTILITIES, WHICH INTERFERE WITH THE EXECUTION OF THE WORK, SHALL BE REMOVED AND/OR CAPPED, PLUGGED OR OTHERWISE DISCONTINUED AT POINTS WHICH WILL NOT INTERFERE WITH THE EXECUTION OF THE WORK, SUBJECT TO THE APPROVAL OF CONTRACTOR, TOWER OWNER, CROWN CASTLE USA INC., AND/OR LOCAL UTILITIES.
14. THE CONTRACTOR SHALL PROVIDE SITE SIGNAGE IN ACCORDANCE WITH THE TECHNICAL SPECIFICATION FOR SITE SIGNAGE REQUIRED BY LOCAL JURISDICTION AND SIGNAGE REQUIRED ON INDIVIDUAL PIECES OF EQUIPMENT, ROOMS, AND SHELTERS.
15. THE SITE SHALL BE GRADED TO CAUSE SURFACE WATER TO FLOW AWAY FROM THE CARRIER'S EQUIPMENT AND TOWER AREAS.
16. THE SUB GRADE SHALL BE COMPACTED AND BROUGHT TO A SMOOTH UNIFORM GRADE PRIOR TO FINISHED SURFACE APPLICATION.
17. THE AREAS OF THE OWNERS PROPERTY DISTURBED BY THE WORK AND NOT COVERED BY THE TOWER, EQUIPMENT OR DRIVEWAY, SHALL BE GRADED TO A UNIFORM SLOPE, AND STABILIZED TO PREVENT EROSION AS SPECIFIED ON THE CONSTRUCTION DRAWINGS AND/OR PROJECT SPECIFICATIONS.
18. CONTRACTOR SHALL MINIMIZE DISTURBANCE TO EXISTING SITE DURING CONSTRUCTION. EROSION CONTROL MEASURES, IF REQUIRED DURING CONSTRUCTION, SHALL BE IN CONFORMANCE WITH THE LOCAL GUIDELINES FOR EROSION AND SEDIMENT CONTROL.
19. THE CONTRACTOR SHALL PROTECT EXISTING IMPROVEMENTS, PAVEMENTS, CURBS, LANDSCAPING AND STRUCTURES. ANY DAMAGED PART SHALL BE REPAIRED AT CONTRACTOR'S EXPENSE TO THE SATISFACTION OF OWNER.
20. CONTRACTOR SHALL LEGALLY AND PROPERLY DISPOSE OF ALL SCRAP MATERIALS SUCH AS COAXIAL CABLES AND OTHER ITEMS REMOVED FROM THE EXISTING FACILITY. ANTENNAS REMOVED SHALL BE RETURNED TO THE OWNER'S DESIGNATED LOCATION.
21. CONTRACTOR SHALL LEAVE PREMISES IN CLEAN CONDITION. TRASH AND DEBRIS SHOULD BE REMOVED FROM SITE ON A DAILY BASIS.
22. NO FILL OR EMBANKMENT MATERIAL SHALL BE PLACED ON FROZEN GROUND. FROZEN MATERIALS, SNOW OR ICE SHALL NOT BE PLACED IN ANY FILL OR EMBANKMENT.

GENERAL NOTES:

1. FOR THE PURPOSE OF CONSTRUCTION DRAWING, THE FOLLOWING DEFINITIONS SHALL APPLY:
   - CONTRACTOR: GENERAL CONTRACTOR RESPONSIBLE FOR CONSTRUCTION
   - CARRIER: VERIZON
   - TOWER OWNER: CROWN CASTLE USA INC.
2. THESE DRAWINGS HAVE BEEN PREPARED USING STANDARDS OF PROFESSIONAL CARE AND COMPLETENESS NORMALLY EXERCISED UNDER SIMILAR CIRCUMSTANCES BY REPUTABLE ENGINEERS IN THIS OR SIMILAR LOCALITIES. IT IS ASSUMED THAT THE WORK DEPICTED WILL BE PERFORMED BY AN EXPERIENCED CONTRACTOR AND/OR WORKPEOPLE WHO HAVE A WORKING KNOWLEDGE OF THE APPLICABLE CODE STANDARDS AND REQUIREMENTS AND OF INDUSTRY ACCEPTED STANDARD GOOD PRACTICE. AS NOT EVERY CONDITION OR ELEMENT IS (OR CAN BE) EXPLICITLY SHOWN ON THESE DRAWINGS, THE CONTRACTOR SHALL USE INDUSTRY ACCEPTED STANDARD GOOD PRACTICE FOR MISCELLANEOUS WORK NOT EXPLICITLY SHOWN.
3. THESE DRAWINGS REPRESENT THE FINISHED STRUCTURE. THEY DO NOT INDICATE THE MEANS OR METHODS OF CONSTRUCTION. THE CONTRACTOR SHALL BE SOLELY RESPONSIBLE FOR THE CONSTRUCTION MEANS, METHODS, TECHNIQUES, SEQUENCES, AND PROCEDURES. THE CONTRACTOR SHALL PROVIDE ALL MEASURES NECESSARY FOR PROTECTION OF LIFE AND PROPERTY DURING CONSTRUCTION. SUCH MEASURES SHALL INCLUDE, BUT NOT BE LIMITED TO, BRACING, FORMWORK, SHORING, ETC. SITE VISITS BY THE ENGINEER OR HIS REPRESENTATIVE WILL NOT INCLUDE INSPECTION OF THESE ITEMS AND IS FOR STRUCTURAL OBSERVATION OF THE FINISHED STRUCTURE ONLY.
4. NOTES AND DETAILS IN THE CONSTRUCTION DRAWINGS SHALL TAKE PRECEDENCE OVER GENERAL NOTES AND TYPICAL DETAILS. WHERE NO DETAILS ARE SHOWN, CONSTRUCTION SHALL CONFORM TO SIMILAR WORK ON THE PROJECT, AND/OR AS PROVIDED FOR IN THE CONTRACT DOCUMENTS. WHERE DISCREPANCIES OCCUR BETWEEN PLANS, DETAILS, GENERAL NOTES, AND SPECIFICATIONS, THE GREATER, MORE STRICT REQUIREMENTS, SHALL GOVERN. IF FURTHER CLARIFICATION IS REQUIRED CONTACT THE ENGINEER OF RECORD.
5. SUBSTANTIAL EFFORT HAS BEEN MADE TO PROVIDE ACCURATE DIMENSIONS AND MEASUREMENTS ON THE DRAWINGS TO ASSIST IN THE FABRICATION AND/OR PLACEMENT OF CONSTRUCTION ELEMENTS BUT IT IS THE SOLE RESPONSIBILITY OF THE CONTRACTOR TO FIELD VERIFY THE DIMENSIONS, MEASUREMENTS, AND/OR CLEARANCES SHOWN IN THE CONSTRUCTION DRAWINGS PRIOR TO FABRICATION OR CUTTING OF ANY NEW OR EXISTING CONSTRUCTION ELEMENTS. IF IT IS DETERMINED THAT THERE ARE DISCREPANCIES AND/OR CONFLICTS WITH THE CONSTRUCTION DRAWINGS THE ENGINEER OF RECORD IS TO BE NOTIFIED AS SOON AS POSSIBLE.
6. PRIOR TO THE SUBMISSION OF BIDS, THE BIDDING CONTRACTOR SHALL VISIT THE CELL SITE TO FAMILIARIZE WITH THE EXISTING CONDITIONS AND TO CONFIRM THAT THE WORK CAN BE ACCOMPLISHED AS SHOWN ON THE CONSTRUCTION DRAWINGS. ANY DISCREPANCY FOUND SHALL BE BROUGHT TO THE ATTENTION OF CROWN CASTLE.
7. ALL MATERIALS FURNISHED AND INSTALLED SHALL BE IN STRICT ACCORDANCE WITH ALL APPLICABLE CODES, REGULATIONS AND ORDINANCES. CONTRACTOR SHALL ISSUE ALL APPROPRIATE NOTICES AND COMPLY WITH ALL LAWS, ORDINANCES, RULES, REGULATIONS AND LAWFUL ORDERS OF ANY PUBLIC AUTHORITY REGARDING THE PERFORMANCE OF THE WORK. ALL WORK CARRIED OUT SHALL COMPLY WITH ALL APPLICABLE MUNICIPAL AND UTILITY COMPANY SPECIFICATIONS AND LOCAL JURISDICTIONAL CODES, ORDINANCES AND APPLICABLE REGULATIONS.
8. UNLESS NOTED OTHERWISE, THE WORK SHALL INCLUDE FURNISHING MATERIALS, EQUIPMENT, APPURTENANCES AND LABOR NECESSARY TO COMPLETE ALL INSTALLATIONS AS INDICATED ON THE DRAWINGS.
9. THE CONTRACTOR SHALL INSTALL ALL EQUIPMENT AND MATERIALS IN ACCORDANCE WITH MANUFACTURER'S RECOMMENDATIONS UNLESS SPECIFICALLY STATED OTHERWISE.
10. IF THE SPECIFIED EQUIPMENT CAN NOT BE INSTALLED AS SHOWN ON THESE DRAWINGS, THE CONTRACTOR SHALL PROPOSE AN ALTERNATIVE INSTALLATION FOR APPROVAL BY THE CARRIER AND CROWN CASTLE PRIOR TO PROCEEDING WITH ANY SUCH CHANGE OF INSTALLATION.
11. CONTRACTOR IS TO PERFORM A SITE INVESTIGATION AND IS TO DETERMINE THE BEST ROUTING OF ALL CONDUITS FOR POWER, AND TELCO AND FOR GROUNDING CABLES AS SHOWN IN THE POWER, TELCO, AND GROUNDING PLAN DRAWINGS.
12. THE CONTRACTOR SHALL PROTECT EXISTING IMPROVEMENTS, PAVEMENTS, CURBS, LANDSCAPING AND STRUCTURES. ANY DAMAGED PART SHALL BE REPAIRED AT CONTRACTOR'S EXPENSE TO THE SATISFACTION OF CROWN CASTLE USA INC.
13. CONTRACTOR SHALL LEGALLY AND PROPERLY DISPOSE OF ALL SCRAP MATERIALS SUCH AS COAXIAL CABLES AND OTHER ITEMS REMOVED FROM THE EXISTING FACILITY. ANTENNAS REMOVED SHALL BE RETURNED TO THE OWNER'S DESIGNATED LOCATION.
14. CONTRACTOR SHALL LEAVE PREMISES IN CLEAN CONDITION. TRASH AND DEBRIS SHOULD BE REMOVED FROM SITE ON A DAILY BASIS.

CONCRETE, FOUNDATIONS, AND REINFORCING STEEL:

1. ALL CONCRETE WORK SHALL BE IN ACCORDANCE WITH THE ACI 301, ACI 318, ACI 336, ASTM A184, ASTM A185 AND THE DESIGN AND CONSTRUCTION SPECIFICATION FOR CAST–IN–PLACE CONCRETE.
2. UNLESS NOTED OTHERWISE, SOIL BEARING PRESSURE USED FOR DESIGN OF SLABS AND FOUNDATIONS IS ASSUMED TO BE 1000 psf.
3. ALL CONCRETE SHALL HAVE A MINIMUM COMPRESSIVE STRENGTH (f'c) OF 3000 psi AT 28 DAYS, UNLESS NOTED OTHERWISE. NO MORE THAN 90 MINUTES SHALL ELAPSE FROM BATCH TIME TO TIME OF PLACEMENT UNLESS APPROVED BY THE ENGINEER OF RECORD. TEMPERATURE OF CONCRETE SHALL NOT EXCEED 90°f AT TIME OF PLACEMENT.
4. CONCRETE EXPOSED TO FREEZE–THAW CYCLES SHALL CONTAIN AIR ENTRAINING ADMIXTURES. AMOUNT OF AIR ENTRAINMENT TO BE BASED ON SIZE OF AGGREGATE AND F3 CLASS EXPOSURE (VERY SEVERE). CEMENT USED TO BE TYPE II PORTLAND CEMENT WITH A MAXIMUM WATER–TO–CEMENT RATIO (W/C) OF 0.45.
5. ALL STEEL REINFORCING SHALL CONFORM TO ASTM A615. ALL WELDED WIRE FABRIC (WWF) SHALL CONFORM TO ASTM A185. ALL SPLICES SHALL BE CLASS "B" TENSION SPLICES, UNLESS NOTED OTHERWISE. ALL HOOKS SHALL BE STANDARD 90 DEGREE HOOKS, UNLESS NOTED OTHERWISE. YIELD STRENGTH (Fy) OF STANDARD DEFORMED BARS ARE AS FOLLOWS:
   #4 BARS AND SMALLER......40 ksi
   #5 BARS AND LARGER......60 ksi
6. THE FOLLOWING MINIMUM CONCRETE COVER SHALL BE PROVIDED FOR REINFORCING STEEL UNLESS SHOWN OTHERWISE ON DRAWINGS:
   CONCRETE CAST AGAINST AND PERMANENTLY EXPOSED TO EARTH......3"
   CONCRETE EXPOSED TO EARTH OR WEATHER:
   #6 BARS AND LARGER......2"
   #5 BARS AND SMALLER......1–1/2"
   CONCRETE NOT EXPOSED TO EARTH OR WEATHER:
   SLAB AND WALLS......3/4"
   BEAMS AND COLUMNS......1–1/2"
7. A TOOLED EDGE OR A 3/4" CHAMFER SHALL BE PROVIDED AT ALL EXPOSED EDGES OF CONCRETE, UNLESS NOTED OTHERWISE, IN ACCORDANCE WITH ACI 301 SECTION 4.2.4.

GREENFIELD GROUNDING NOTES:

1. ALL GROUND ELECTRODE SYSTEMS (INCLUDING TELECOMMUNICATION, RADIO, LIGHTNING PROTECTION AND AC POWER GES'S) SHALL BE BONDED TOGETHER AT OR BELOW GRADE, BY TWO OR MORE COPPER BONDING CONDUCTORS IN ACCORDANCE WITH THE NEC.
2. THE CONTRACTOR SHALL PERFORM IEEE FALL–OF–POTENTAL RESISTANCE TO EARTH TESTING (PER IEEE 1100 AND 81) FOR GROUND ELECTRODE SYSTEMS, THE CONTRACTOR SHALL FURNISH AND INSTALL SUPPLEMENTAL GROUND ELECTRODES AS NEEDED TO ACHIEVE A TEST RESULT OF 5 OHMS OR LESS.
3. THE CONTRACTOR IS RESPONSIBLE FOR PROPERLY SEQUENCING GROUNDING AND UNDERGROUND CONDUIT INSTALLATION AS TO PREVENT ANY LOSS OF CONTINUITY IN THE GROUNDING SYSTEM OR DAMAGE TO THE CONDUIT AND PROVIDE TESTING RESULTS.
4. METAL CONDUIT AND TRAY SHALL BE GROUNDED AND MADE ELECTRICALLY CONTINUOUS WITH LISTED BONDING FITTINGS OR BY BONDING ACROSS THE DISCONTINUITY WITH #6 COPPER WIRE UL APPROVED GROUNDING TYPE CONDUIT CLAMPS.
5. METAL RACEWAY SHALL NOT BE USED AS THE NEC REQUIRED EQUIPMENT GROUND CONDUCTOR. STRANDED COPPER CONDUCTORS WITH GREEN INSULATION, SIZED IN ACCORDANCE WITH THE NEC, SHALL BE FURNISHED AND INSTALLED WITH THE POWER CIRCUITS TO BTS EQUIPMENT.
6. EACH CABINET FRAME SHALL BE DIRECTLY CONNECTED TO THE MASTER GROUND BAR WITH GREEN INSULATED SUPPLEMENTAL EQUIPMENT GROUND WIRES, #6 STRANDED COPPER OR LARGER FOR INDOOR BTS; #2 BARE SOLID TINNED COPPER FOR OUTDOOR BTS.
7. CONNECTIONS TO THE GROUND BUS SHALL NOT BE DOUBLED UP OR STACKED BACK TO BACK CONNECTIONS ON OPPOSITE SIDE OF THE GROUND BUS ARE PERMITTED.
8. ALL EXTERIOR GROUND CONDUCTORS BETWEEN EQUIPMENT/GROUND BARS AND THE GROUND RING SHALL BE #2 SOLID TINNED COPPER UNLESS OTHERWISE INDICATED.
9. ALUMINUM CONDUCTOR OR COPPER CLAD STEEL CONDUCTOR SHALL NOT BE USED FOR GROUNDING CONNECTIONS.
10. USE OF 90° BENDS IN THE PROTECTION GROUNDING CONDUCTORS SHALL BE AVOIDED WHEN 45° BENDS CAN BE ADEQUATELY SUPPORTED.
11. EXOTHERMIC WELDS SHALL BE USED FOR ALL GROUNDING CONNECTIONS BELOW GRADE.
12. ALL GROUND CONNECTIONS ABOVE GRADE (INTERIOR AND EXTERIOR) SHALL BE FORMED USING HIGH PRESS CRIMPS.
13. COMPRESSION GROUND CONNECTIONS MAY BE REPLACED BY EXOTHERMIC WELD CONNECTIONS.
14. ICE BRIDGE BONDING CONDUCTORS SHALL BE EXOTHERMICALLY BONDED OR BOLTED TO THE BRIDGE AND THE TOWER GROUND BAR.
15. APPROVED ANTIOXIDANT COATINGS (i.e. CONDUCTIVE GEL OR PASTE) SHALL BE USED ON ALL COMPRESSION AND BOLTED GROUND CONNECTIONS.
16. ALL EXTERIOR GROUND CONNECTIONS SHALL BE COATED WITH A CORROSION RESISTANT MATERIAL.
17. MISCELLANEOUS ELECTRICAL AND NON–ELECTRICAL METAL BOXES, FRAMES AND SUPPORTS SHALL BE BONDED TO THE GROUND RING, IN ACCORDANCE WITH THE NEC.
18. BOND ALL METALLIC OBJECTS WITHIN 6 ft OF MAIN GROUND RING WITH (1) #2 BARE SOLID TINNED COPPER GROUND CONDUCTOR.
19. GROUND CONDUCTORS USED FOR THE FACILITY GROUNDING AND LIGHTNING PROTECTION SYSTEMS SHALL NOT BE ROUTED THROUGH METALLIC OBJECTS THAT FORM A RING AROUND THE CONDUCTOR, SUCH AS METALLIC CONDUITS, METAL SUPPORT CLIPS OR SLEEVES THROUGH WALLS OR FLOORS. WHEN IT IS REQUIRED TO BE HOUSED IN CONDUIT TO MEET CODE REQUIREMENTS OR LOCAL CONDITIONS, NON–METALLIC MATERIAL SUCH AS PVC CONDUIT SHALL BE USED. WHERE USE OF METAL CONDUIT IS UNAVOIDABLE (i.e., NONMETALLIC CONDUIT PROHIBITED BY LOCAL CODE) THE GROUND CONDUCTOR SHALL BE BONDED TO EACH END OF THE METAL CONDUIT.
20. ALL GROUNDS THAT TRANSITION FROM BELOW GRADE TO ABOVE GRADE MUST BE #2 BARE SOLID TINNED COPPER IN 3/4" NON–METALLIC, FLEXIBLE CONDUIT FROM 24" BELOW GRADE TO WITHIN 3" TO 6" OF CAD–WELD TERMINATION POINT. THE EXPOSED END OF THE CONDUIT MUST BE SEALED WITH SILICONE CAULK. (ADD TRANSITIONING GROUND STANDARD DETAIL AS WELL).
21. BUILDINGS WHERE THE MAIN GROUNDING CONDUCTORS ARE REQUIRED TO BE ROUTED TO GRADE, THE CONTRACTOR SHALL ROUTE TWO GROUNDING CONDUCTORS FROM THE ROOFTOP, TOWERS, AND WATER TOWERS GROUNDING RING, TO THE EXISTING GROUNDING SYSTEM, THE GROUNDING CONDUCTORS SHALL NOT BE SMALLER THAN 2/0 COPPER. ROOFTOP GROUNDING RING SHALL BE BONDED TO THE EXISTING GROUNDING SYSTEM, THE BUILDING STEEL COLUMNS, LIGHTNING PROTECTION SYSTEM, AND BUILDING MAIN WATER LINE (FERROUS OR NONFERROUS METAL PIPING ONLY).

TEMPLATENAME_DATEOFGENERATION

ELECTRICAL INSTALLATION NOTES:

1. ALL ELECTRICAL WORK SHALL BE PERFORMED IN ACCORDANCE WITH THE PROJECT SPECIFICATIONS, NEC AND ALL APPLICABLE FEDERAL, STATE, AND LOCAL CODES/ORDINANCES.
2. CONDUIT ROUTINGS ARE SCHEMATIC. CONTRACTOR SHALL INSTALL CONDUITS SO THAT ACCESS TO EQUIPMENT IS NOT BLOCKED AND TRIP HAZARDS ARE ELIMINATED.
3. WIRING, RACEWAY AND SUPPORT METHODS AND MATERIALS SHALL COMPLY WITH THE REQUIREMENTS OF THE NEC.
4. ALL CIRCUITS SHALL BE SEGREGATED AND MAINTAIN MINIMUM CABLE SEPARATION AS REQUIRED BY THE NEC.
   - 4.1. ALL EQUIPMENT SHALL BEAR THE UNDERWRITERS LABORATORIES LABEL OF APPROVAL, AND SHALL CONFORM TO REQUIREMENT OF THE NATIONAL ELECTRICAL CODE.
   - 4.2. ALL OVERCURRENT DEVICES SHALL HAVE AN INTERRUPTING CURRENT RATING THAT SHALL BE GREATER THAN THE SHORT CIRCUIT CURRENT TO WHICH THEY ARE SUBJECTED, 22,000 AIC MINIMUM. VERYIFY AVAILABLE SHORT CIRCUIT CURRENT DOES NOT EXCEED THE RATING OF ELECTRICAL EQUIPMENT IN ACCORDANCE WITH ARTICLE 110.24 NEC OR THE MOST CURRENT ADOPTED CODE PRE THE GOVERNING JURISDICTION.
5. EACH END OF EVERY POWER PHASE CONDUCTOR, GROUNDING CONDUCTOR, AND TELCO CONDUCTOR OR CABLE SHALL BE LABELED WITH COLOR–CODED INSULATION OR ELECTRICAL TAPE (3M BRAND, 1/2" PLASTIC ELECTRICAL TAPE WITH UV PROTECTION, OR EQUAL). THE IDENTIFICATION METHOD SHALL CONFORM WITH NEC AND OSHA.
6. ALL ELECTRICAL COMPONENTS SHALL BE CLEARLY LABELED WITH LAMICOID TAGS SHOWING THEIR RATED VOLTAGE, PHASE CONFIGURATION, WIRE CONFIGURATION, POWER OR AMPACITY RATING AND BRANCH CIRCUIT ID NUMBERS (i.e. PANEL BOARD AND CIRCUIT ID'S).
7. PANEL BOARDS (ID NUMBERS) SHALL BE CLEARLY LABELED WITH PLASTIC LABELS.
8. ALL TIE WRAPS SHALL BE CUT FLUSH WITH APPROVED CUTTING TOOL TO REMOVE SHARP EDGES.
9. ALL POWER AND EQUIPMENT GROUND WIRING IN TUBING OR CONDUIT SHALL BE SINGLE COPPER CONDUCTOR (#14 OR LARGER) WITH TYPE THHW, THWN, THWN–2, XHHW, XHHW–2, THW, THW–2, RHW, OR RHW–2 INSULATION UNLESS OTHERWISE SPECIFIED.
10. SUPPLEMENTAL EQUIPMENT GROUND WIRING LOCATED INDOORS SHALL BE SINGLE COPPER CONDUCTOR (#6 OR LARGER) WITH TYPE THHW, THWN, THWN–2, XHHW, XHHW–2, THW, THW–2, RHW, OR RHW–2 INSULATION UNLESS OTHERWISE SPECIFIED.
11. POWER AND CONTROL WIRING IN FLEXIBLE CORD SHALL BE MULTI–CONDUCTOR, TYPE SOOW CORD (#14 OR LARGER) UNLESS OTHERWISE SPECIFIED.
12. POWER AND CONTROL WIRING FOR USE IN CABLE TRAY SHALL BE MULTI–CONDUCTOR, TYPE TC CABLE (#14 OR LARGER), WITH TYPE THHW, THWN, THWN–2, XHHW, XHHW–2, THW, THW–2, RHW, OR RHW–2 INSULATION UNLESS OTHERWISE SPECIFIED.
13. ALL POWER AND GROUNDING CONNECTIONS SHALL BE CRIMP–STYLE, COMPRESSION WIRE LUGS AND WIRE NUTS BY THOMAS AND BETTS (OR EQUAL). LUGS AND WIRE NUTS SHALL BE RATED FOR OPERATION NOT LESS THAN 75° C (90° C IF AVAILABLE).
14. RACEWAY AND CABLE TRAY SHALL BE LISTED OR LABELED FOR ELECTRICAL USE IN ACCORDANCE WITH NEMA, UL, ANSI/IEEE AND NEC.
15. ELECTRICAL METALLIC TUBING (EMT), INTERMEDIATE METAL CONDUIT (IMC), OR RIGID METAL CONDUIT (RMC) SHALL BE USED FOR EXPOSED INDOOR LOCATIONS.
16. ELECTRICAL METALLIC TUBING (EMT) OR METAL–CLAD CABLE (MC) SHALL BE USED FOR CONCEALED INDOOR LOCATIONS.
17. UNDERGROUND CONDUIT SHALL BE SCHEDULE 40 PVC ON STRAIGHTS AND SCHEDULE 80 PVC UNDER ALL TRAFFIC EASEMENTS AND ALL ELBOWS/90s. ABOVE GRADE CONDUIT TO BE SCH 80 PVC OR IMC/RMC CONDUIT. EMT IS ALLOWED AT STUB UP LOCATIONS AND INDOORS ONLY.
18. LIQUID–TIGHT FLEXIBLE METALLIC CONDUIT (LIQUID–TITE FLEX) SHALL BE USED INDOORS AND OUTDOORS, WHERE VIBRATION OCCURS OR FLEXIBILITY IS NEEDED.
19. CONDUIT AND TUBING FITTINGS SHALL BE THREADED OR COMPRESSION–TYPE AND APPROVED FOR THE LOCATION USED. SET SCREW FITTINGS ARE NOT ACCEPTABLE.
20. CABINETS, BOXES AND WIRE WAYS SHALL BE LABELED FOR ELECTRICAL USE IN ACCORDANCE WITH NEMA, UL, ANSI/IEEE AND THE NEC.
21. WIREWAYS SHALL BE METAL WITH AN ENAMEL FINISH AND INCLUDE A HINGED COVER, DESIGNED TO SWING OPEN DOWNWARDS (WIREMOLD SPECMATE WIREWAY).
22. SLOTTED WIRING DUCT SHALL BE PVC AND INCLUDE COVER (PANDUIT TYPE E OR EQUAL).
23. CONDUITS SHALL BE FASTENED SECURELY IN PLACE WITH APPROVED NON–PERFORATED STRAPS AND HANGERS. EXPLOSIVE DEVICES (i.e. POWDER–ACTUATED) FOR ATTACHING HANGERS TO STRUCTURE WILL NOT BE PERMITTED. CLOSELY FOLLOW THE LINES OF THE STRUCTURE, MAINTAIN CLOSE PROXIMITY TO THE STRUCTURE AND KEEP CONDUITS IN TIGHT ENVELOPES. CHANGES IN DIRECTION TO ROUTE AROUND OBSTACLES SHALL BE MADE WITH CONDUIT OUTLET BODIES. CONDUIT SHALL BE INSTALLED IN A NEAT AND WORKMANLIKE MANNER. PARALLEL AND PERPENDICULAR TO STRUCTURE WALL AND CEILING LINES. ALL CONDUIT SHALL BE FISHED TO CLEAR OBSTRUCTIONS. ENDS OF CONDUITS SHALL BE TEMPORARILY CAPPED FLUSH TO FINISH GRADE TO PREVENT CONCRETE, PLASTER OR DIRT FROM ENTERING. CONDUITS SHALL BE RIGIDLY CLAMPED TO BOXES BY GALVANIZED MALLEABLE IRON BUSHING ON INSIDE AND GALVANIZED MALLEABLE IRON LOCKNUT ON OUTSIDE AND INSIDE.
24. EQUIPMENT CABINETS, TERMINAL BOXES, JUNCTION BOXES AND PULL BOXES SHALL BE GALVANIZED OR EPOXY–COATED SHEET STEEL. SHALL MEET OR EXCEED UL 50 AND BE RATED NEMA 1 (OR BETTER) FOR INTERIOR LOCATIONS AND NEMA 3R (OR BETTER) FOR EXTERIOR LOCATIONS.
25. METAL RECEPTACLE, SWITCH AND DEVICE BOXES SHALL BE GALVANIZED, EPOXY–COATED OR NON–CORRODING; SHALL MEET OR EXCEED UL 514A AND NEMA OS 1 AND BE RATED NEMA 1 (OR BETTER) FOR INTERIOR LOCATIONS AND WEATHER PROTECTED (WP OR BETTER) FOR EXTERIOR LOCATIONS.
26. NONMETALLIC RECEPTACLE, SWITCH AND DEVICE BOXES SHALL MEET OR EXCEED NEMA OS 2 (NEWEST REVISION) AND BE RATED NEMA 1 (OR BETTER) FOR INTERIOR LOCATIONS AND WEATHER PROTECTED (WP OR BETTER) FOR EXTERIOR LOCATIONS.
27. THE CONTRACTOR SHALL NOTIFY AND OBTAIN NECESSARY AUTHORIZATION FROM THE CARRIER AND/OR CROWN CASTLE USA INC. BEFORE COMMENCING WORK ON THE AC POWER DISTRIBUTION PANELS.
28. THE CONTRACTOR SHALL PROVIDE NECESSARY TAGGING ON THE BREAKERS, CABLES AND DISTRIBUTION PANELS IN ACCORDANCE WITH THE APPLICABLE CODES AND STANDARDS TO SAFEGUARD LIFE AND PROPERTY.
29. INSTALL LAMICOID LABEL ON THE METER CENTER TO SHOW "VERIZON".
30. ALL EMPTY/SPARE CONDUITS THAT ARE INSTALLED ARE TO HAVE A METERED MULE TAPE PULL CORD INSTALLED.

CONDUCTOR COLOR CODE		
SYSTEM	CONDUCTOR	COLOR
120/240V, 1Ø	A PHASE	BLACK
	B PHASE	RED
	NEUTRAL	WHITE
	GROUND	GREEN
120/208V, 3Ø	A PHASE	BLACK
	B PHASE	RED
	C PHASE	BLUE
	NEUTRAL	WHITE
	GROUND	GREEN
277/480V, 3Ø	A PHASE	BROWN
	B PHASE	ORANGE OR PURPLE
	C PHASE	YELLOW
	NEUTRAL	GREY
	GROUND	GREEN
DC VOLTAGE	POS (+)	RED**
	NEG (–)	BLACK**

* SEE NEC 210.5(C)(1) AND (2)
** POLARITY MARKED AT TERMINATION

APWA UNIFORM COLOR CODE:

WHITE	PROPOSED EXCAVATION
PINK	TEMPORARY SURVEY MARKINGS
RED	ELECTRIC POWER LINES, CABLES, CONDUIT, AND LIGHTING CABLES
YELLOW	GAS, OIL, STEAM, PETROLEUM, OR GASEOUS MATERIALS
ORANGE	COMMUNICATION, ALARM OR SIGNAL LINES, CABLES, OR CONDUIT AND TRAFFIC LOOPS
BLUE	POTABLE WATER
PURPLE	RECLAIMED WATER, IRRIGATION, AND SLURRY LINES
GREEN	SEWERS AND DRAIN LINES

ABBREVIATIONS:

ANT	ANTENNA
(E)	EXISTING
FIF	FACILITY INTERFACE FRAME
GEN	GENERATOR
GPS	GLOBAL POSITIONING SYSTEM
GSM	GLOBAL SYSTEM FOR MOBILE
LTE	LONG TERM EVOLUTION
MGB	MASTER GROUND BAR
MW	MICROWAVE
(N)	NEW
NEC	NATIONAL ELECTRIC CODE
(P)	PROPOSED
PP	POWER PLANT
QTY	QUANTITY
RECT	RECTIFIER
RBS	RADIO BASE STATION
RET	REMOTE ELECTRIC TILT
RFDS	RADIO FREQUENCY DATA SHEET
RRH	REMOTE RADIO HEAD
RRU	REMOTE RADIO UNIT
SIAD	SMART INTEGRATED DEVICE
TMA	TOWER MOUNTED AMPLIFIER
TYP	TYPICAL
UMTS	UNIVERSAL MOBILE TELECOMMUNICATIONS SYSTEM
W.P.	WORK POINT

verizon

CROWN CASTLE

VERIZON SITE NUMBER:
5000386192

BU #: **806953**

CROWN CASTLE SITE NAME
BRG 2044 (A) 943097

69 GUINEA RD
STAMFORD, CT 06903

EXISTING 160'-0"
MONOPOLE

ISSUED FOR:

REV	DATE	DRWN	DESCRIPTION	DES./QA
0	3/28/24	AJC	FINAL	MD
1	5/22/24	AJC	REVISION	MD

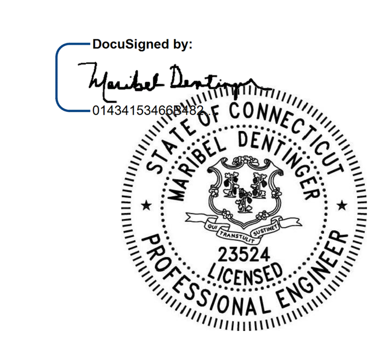

5/23/2024 | 8:24:14 AM CDT

CROWN CASTLE USA INC.
CERTIFICATE OF REGISTRATION #PEC.0001101
IT IS A VIOLATION OF LAW FOR ANY PERSON, UNLESS THEY ARE ACTING UNDER THE DIRECTION OF A LICENSED PROFESSIONAL ENGINEER, TO ALTER THIS DOCUMENT.

SHEET NUMBER: T-2

REVISION: 0

DocuSign Envelope ID: D0B70F96-78BB-4BF4-AD97-6F7FB3A6BA7C

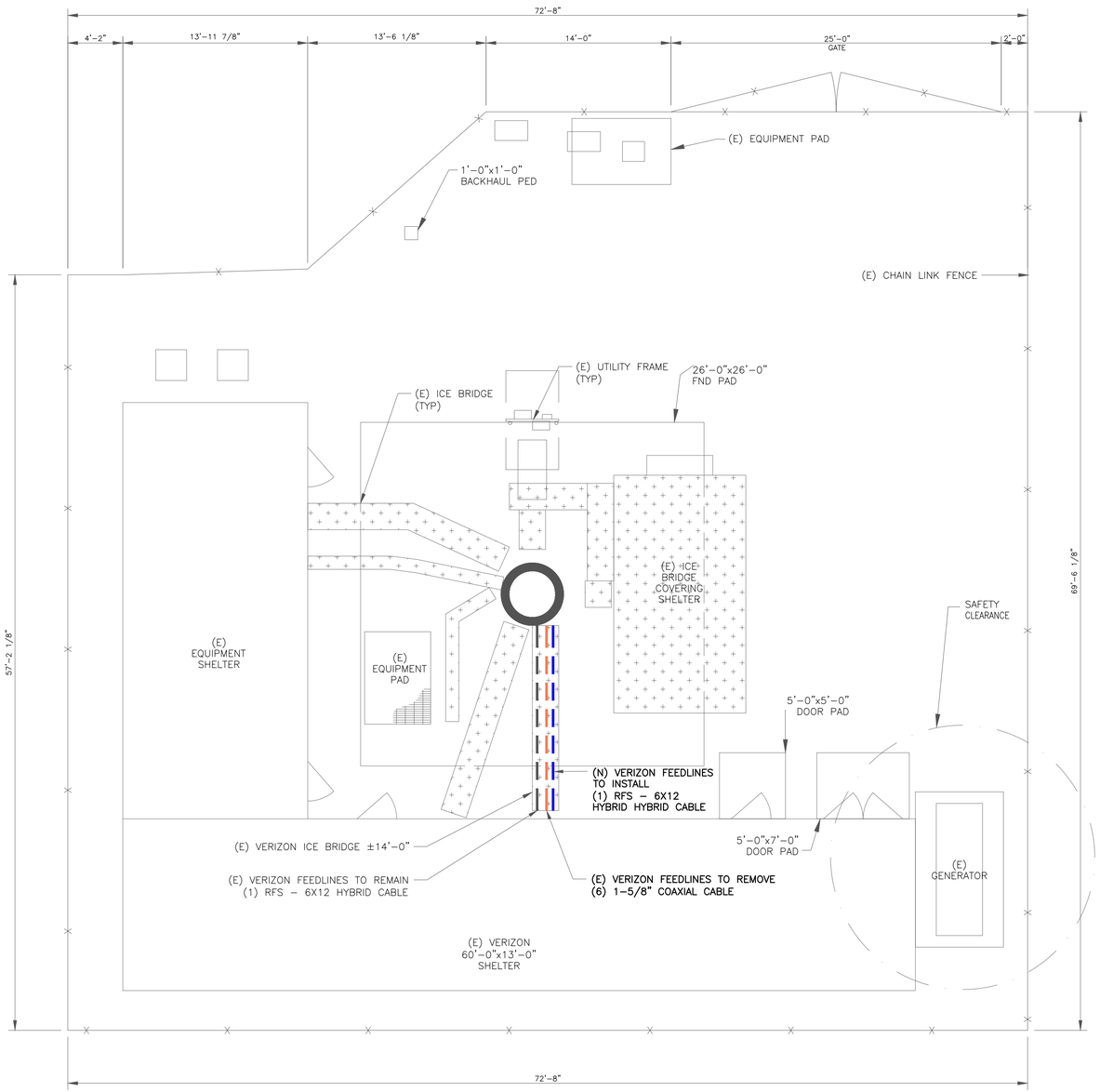

1 SITE PLAN

SCALE: 4' 2' 0 4' 3/16"=1'-0" (FULL SIZE) 3/32"=1'-0" (11x17)

N

verizon

CROWN CASTLE

VERIZON SITE NUMBER:
5000386192

BU #: **806953**

CROWN CASTLE SITE NAME
BRG 2044 (A) 943097

69 GUINEA RD
STAMFORD, CT 06903

EXISTING 160'-0"
MONOPOLE

ISSUED FOR:

REV	DATE	DRWN	DESCRIPTION	DES./QA
0	3/28/24	AJC	FINAL	MD
1	5/22/24	AJC	REVISION	MD

DocuSigned by:
0143415

STATE OF CONNECTICUT
MARBEL DENTINGER
23524
LICENSED
PROFESSIONAL ENGINEER

5/23/2024 | 8:24:14 AM CDT

CROWN CASTLE USA INC.
CERTIFICATE OF REGISTRATION #PEC.0001101

IT IS A VIOLATION OF LAW FOR ANY PERSON,
UNLESS THEY ARE ACTING UNDER THE DIRECTION
OF A LICENSED PROFESSIONAL ENGINEER,
TO ALTER THIS DOCUMENT.

SHEET NUMBER: C-1

REVISION: 0

TEMPLATENAME_DATEOFGENERATION

DocuSign Envelope ID: D0B70F96-78BB-4BF4-AD97-6F7FB3A6BA7C

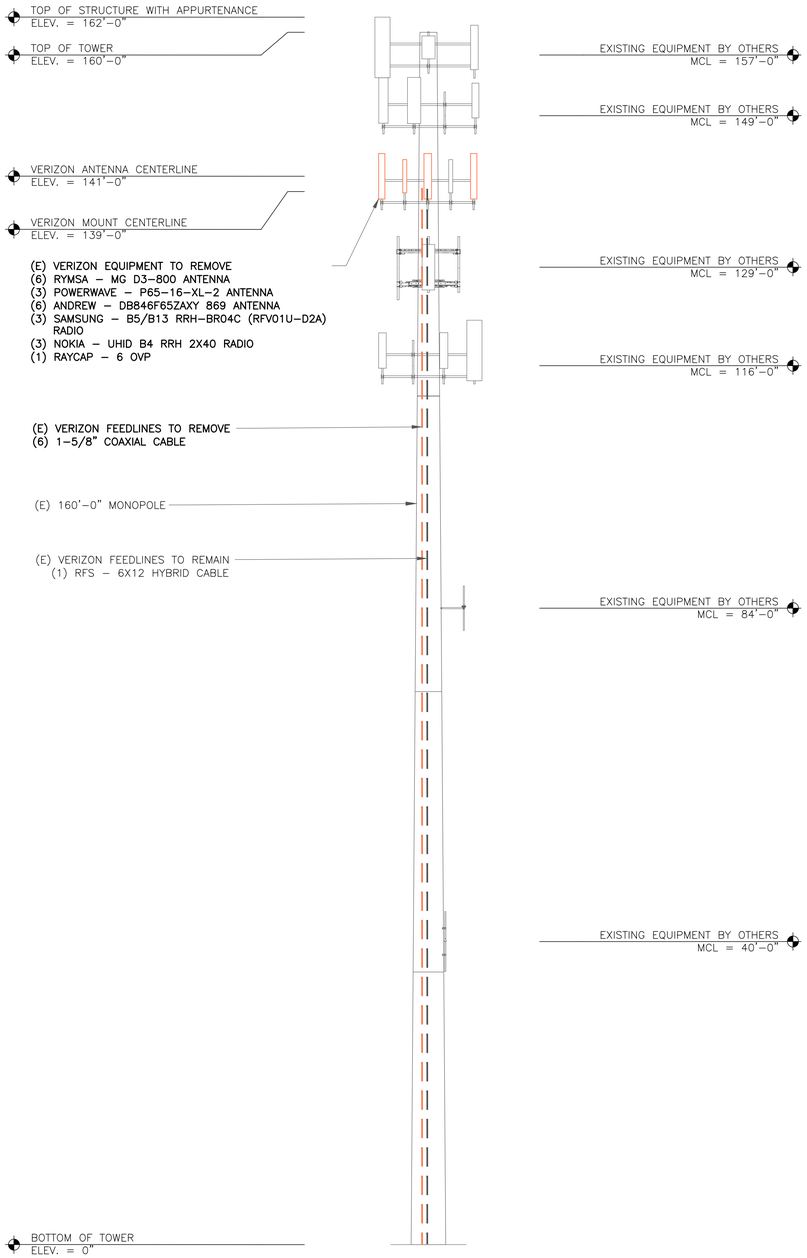

1 EXISTING TOWER ELEVATION

SCALE: 10' 5' 0 10' 1"=10'-0" (FULL SIZE) 1"=20'-0" (11x17)

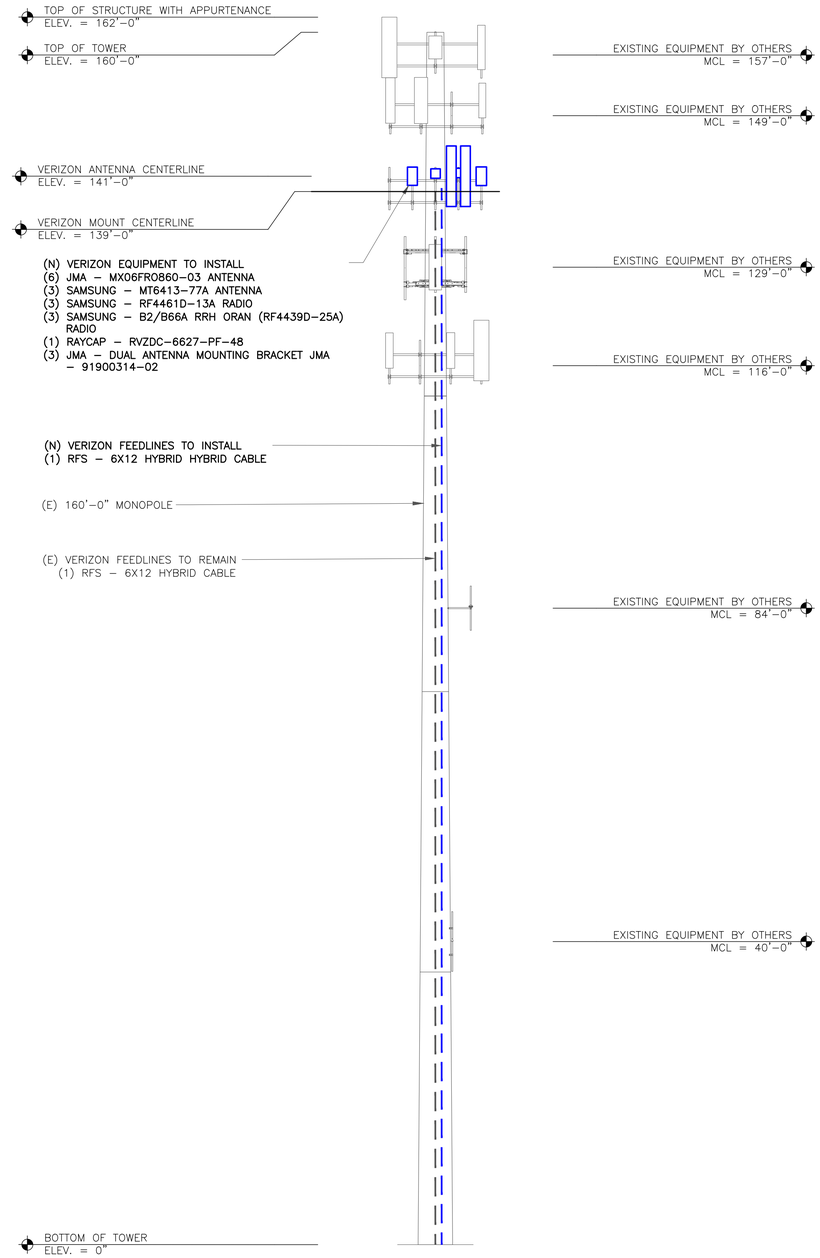

2 FINAL TOWER ELEVATION

SCALE: 10' 5' 0 10' 1"=10'-0" (FULL SIZE) 1"=20'-0" (11x17)

verizon

CROWN CASTLE

VERIZON SITE NUMBER:
5000386192

BU #: **806953**

CROWN CASTLE SITE NAME
BRG 2044 (A) 943097

69 GUINEA RD
STAMFORD, CT 06903

EXISTING 160'-0"
MONOPOLE

ISSUED FOR:

REV	DATE	DRWN	DESCRIPTION	DES./QA
0	3/28/24	AJC	FINAL	MD
1	5/22/24	AJC	REVISION	MD

DocuSigned by:
0F4341533

STATE OF CONNECTICUT
MABEL DENTINGER
23524
LICENSED
PROFESSIONAL ENGINEER

5/23/2024 | 8:24:14 AM CDT

CROWN CASTLE USA INC.
CERTIFICATE OF REGISTRATION #PEC.0001101

IT IS A VIOLATION OF LAW FOR ANY PERSON, UNLESS THEY ARE ACTING UNDER THE DIRECTION OF A LICENSED PROFESSIONAL ENGINEER, TO ALTER THIS DOCUMENT.

SHEET NUMBER: C-2

REVISION: 0

TEMPLATENAME_DATEOFGENERATION

DocuSign Envelope ID: D0B70F96-78BB-4BF4-AD97-6F7FB3A6BA7C

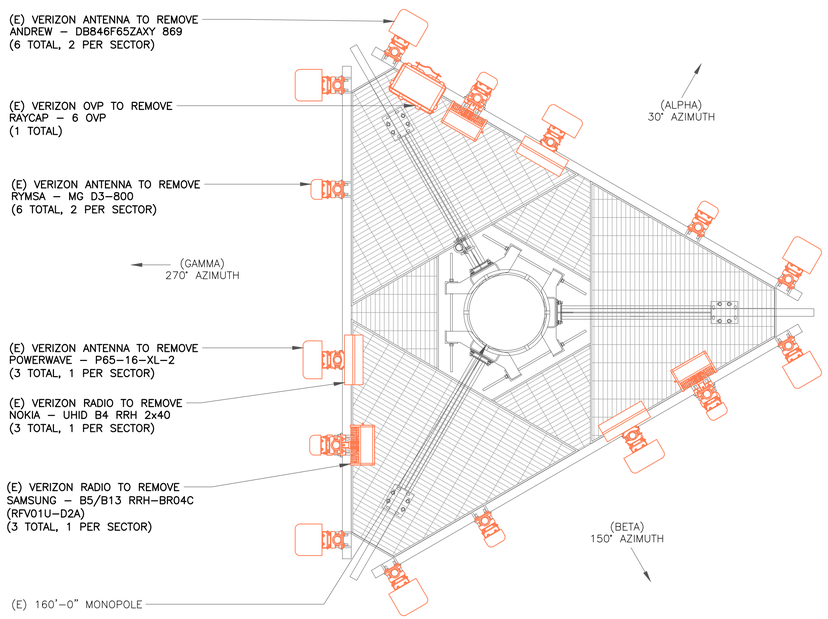

1 EXISTING ANTENNA PLAN
SCALE: 2' 1' 0 2' 1/2"=1'–0" (FULL SIZE) 1/4"=1'–0" (11x17)

N

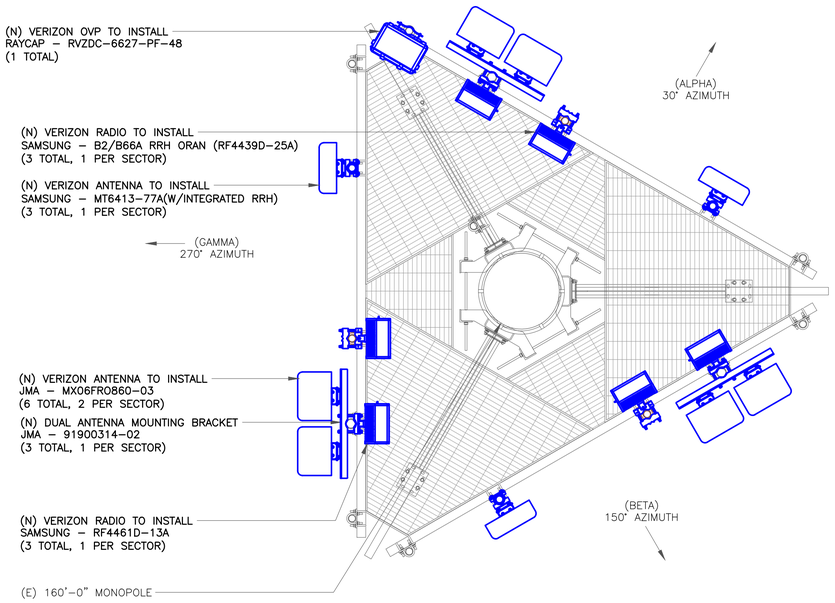

2 FINAL ANTENNA PLAN
SCALE: 2' 1' 0 2' 1/2"=1'–0" (FULL SIZE) 1/4"=1'–0" (11x17)

N

verizon

CROWN CASTLE

VERIZON SITE NUMBER:
5000386192

BU #: **806953**

CROWN CASTLE SITE NAME
BRG 2044 (A) 943097

69 GUINEA RD
STAMFORD, CT 06903

EXISTING 160'-0"
MONOPOLE

ISSUED FOR:

REV	DATE	DRWN	DESCRIPTION	DES./QA
0	3/28/24	AJC	FINAL	MD
1	5/22/24	AJC	REVISION	MD

DocuSigned by:
Marbel Dentinger
01434153000000000

STATE OF CONNECTICUT
MARBEL DENTINGER
23524
LICENSED
PROFESSIONAL ENGINEER

5/23/2024 | 8:24:14 AM CDT

CROWN CASTLE USA INC.
CERTIFICATE OF REGISTRATION #PEC.0001101

IT IS A VIOLATION OF LAW FOR ANY PERSON,
UNLESS THEY ARE ACTING UNDER THE DIRECTION
OF A LICENSED PROFESSIONAL ENGINEER,
TO ALTER THIS DOCUMENT.

SHEET NUMBER: C-3

REVISION: 0

TEMPLATENAME_DATEOFGENERATION

DocuSign Envelope ID: D0B70F96-78BB-4BF4-AD97-6F7FB3A6BA7C

FINAL EQUIPMENT SCHEDULE
(VERIFY WITH CURRENT RFDS)

POSITION	ANTENNA				RADIO			DIPLEXER			TMA		SURGE PROTECTION		CABLES			
	TECH	STATUS/MANUFACTURER MODEL	AZIMUTH	RAD CENTER	QTY.	STATUS/MODEL	LOCATION	QTY.	STATUS	LOCATION	QTY.	STATUS	QTY.	STATUS/MODEL	QTY.	STATUS/TYPE	SIZE	LENGTH
A1	–	–	–	–	–	–	–	–	–	–	–	–	1	(N) RAYCAP – 12 OVP	1	(E) HYBRID CABLE	1–5/8"	–
															1	(N) HYBRID CABLE	1–5/8"	225'–0"+/–
A2	700 850 1900 AWS	(N) JMA – MX06FRO860–03	30°	141'–0"	1	(N) SAMSUNG – RF4461D–13A	TOWER	–	–	–	–	–	–	–	–	–	–	–
		(N) JMA – MX06FRO860–03	30°	141'–0"														
A3	–	–	–	–	1	(N) SAMSUNG – B2/B66A RRH ORAN (RF4439D–25A)	TOWER	–	–	–	–	–	–	–	–	–	–	–
A4	5G	(N) SAMSUNG – MT6413–77A	30°	141'–0"	–	–	–	–	–	–	–	–	–	–	–	–	–	–
B1	–	–	–	–	–	–	–	–	–	–	–	–	–	–	–	–	–	–
B2	700 850 1900 AWS	(N) JMA – MX06FRO860–03	150°	141'–0"	1	(N) SAMSUNG – RF4461D–13A	TOWER	–	–	–	–	–	–	–	–	–	–	–
		(N) JMA – MX06FRO860–03	150°	141'–0"														
B3	–	–	–	–	1	(N) SAMSUNG – B2/B66A RRH ORAN (RF4439D–25A)	TOWER	–	–	–	–	–	–	–	–	–	–	–
B4	5G	(N) SAMSUNG – MT6413–77A	150°	141'–0"	–	–	–	–	–	–	–	–	–	–	–	–	–	–
G1	–	–	–	–	–	–	–	–	–	–	–	–	–	–	–	–	–	–
G2	700 850 1900 AWS	(N) JMA – MX06FRO860–03	270°	141'–0"	1	(N) SAMSUNG – RF4461D–13A	TOWER	–	–	–	–	–	–	–	–	–	–	–
		(N) JMA – MX06FRO860–03	270°	141'–0"														
G3	–	–	–	–	1	(N) SAMSUNG – B2/B66A RRH ORAN (RF4439D–25A)	TOWER	–	–	–	–	–	–	–	–	–	–	–
G4	5G	(N) SAMSUNG – MT6413–77A	270°	141'–0"	–	–	–	–	–	–	–	–	–	–	–	–	–	–

UNUSED FEEDLINES

–	–	–	–
–	–	–	–

1 FINAL EQUIPMENT SCHEDULE
SCALE: NOT TO SCALE

verizon

CROWN CASTLE

VERIZON SITE NUMBER:
5000386192

BU #: **806953**

CROWN CASTLE SITE NAME
BRG 2044 (A) 943097

69 GUINEA RD
STAMFORD, CT 06903

EXISTING 160'-0"
MONOPOLE

ISSUED FOR:

REV	DATE	DRWN	DESCRIPTION	DES./QA
0	3/28/24	AJC	FINAL	MD
1	5/22/24	AJC	REVISION	MD

DocuSigned by:
0743415D...

STATE OF CONNECTICUT
MARBEL DENTINGER
23524
LICENSED
PROFESSIONAL ENGINEER

5/23/2024 | 8:24:14 AM CDT

CROWN CASTLE USA INC.
CERTIFICATE OF REGISTRATION #PEC.0001101

IT IS A VIOLATION OF LAW FOR ANY PERSON,
UNLESS THEY ARE ACTING UNDER THE DIRECTION
OF A LICENSED PROFESSIONAL ENGINEER,
TO ALTER THIS DOCUMENT.

SHEET NUMBER: C-4

REVISION: 0

TEMPLATENAME_DATEOFGENERATION

DocuSign Envelope ID: D0B70F96-78BB-4BF4-AD97-6F7FB3A6BA7C

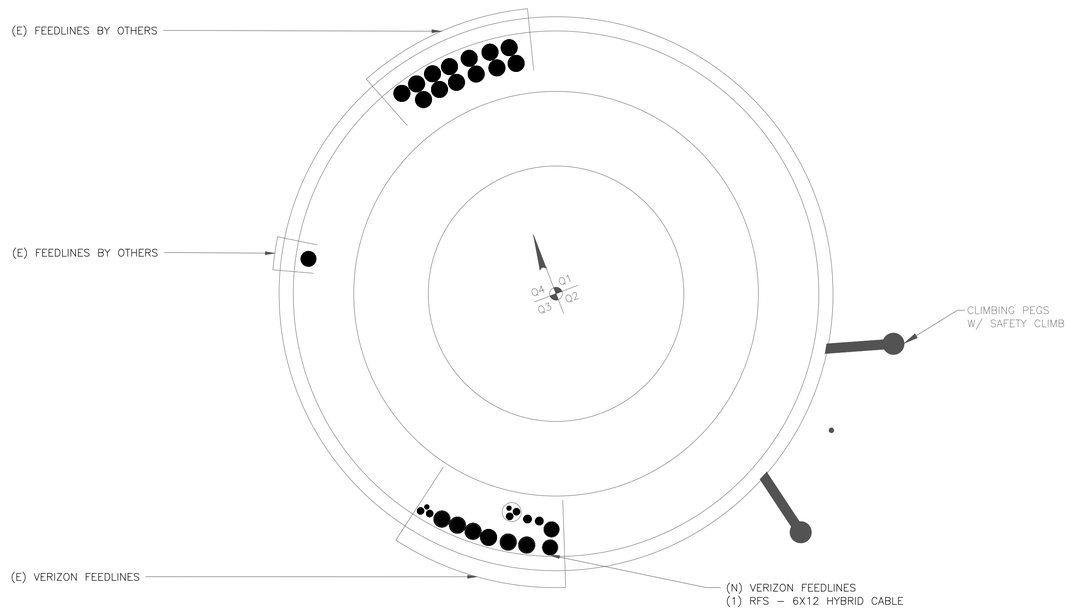

1 BASE LEVEL DETAIL
SCALE: NOT TO SCALE

INSTALLER NOTE:

1. ALL PIPES, BRACKETS, AND MISCELLANEOUS HARDWARE TO BE GALVANIZED UNLESS NOTED OTHERWISE.

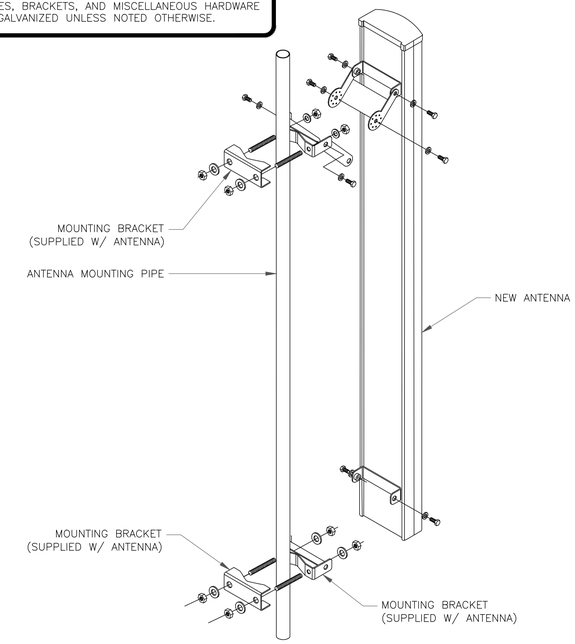

2 ANTENNA MOUNTING DETAIL
SCALE: NOT TO SCALE

INSTALLER NOTES:

1. COMPLY WITH MANUFACTURERS INSTRUCTIONS TO ENSURE THAT ALL RRUs RECEIVE ELECTRICAL POWER WITHIN 24 HOURS OF BEING REMOVED FROM THE MANUFACTURER'S PACKAGING.
2. DO NOT OPEN RRU PACKAGES IN THE RAIN.
3. ALL PIPES, BRACKETS, AND MISCELLANEOUS HARDWARE TO BE GALVANIZED UNLESS NOTED OTHERWISE.
4. ANTENNA NOT SHOWN FOR CLARITY

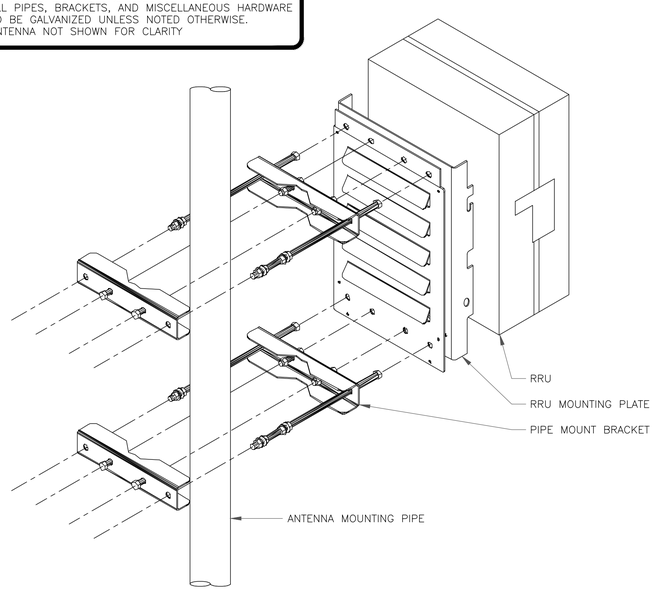

3 RRU MOUNTING DETAIL
SCALE: NOT TO SCALE

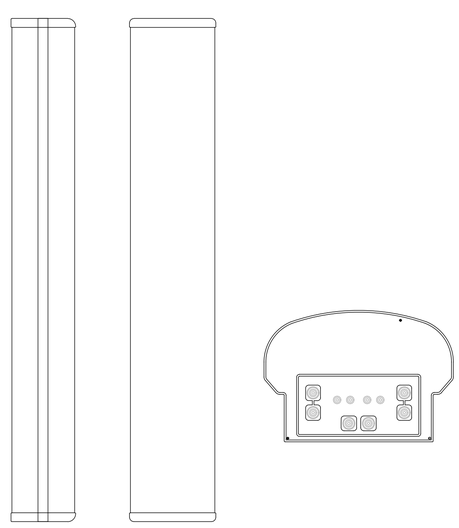

ANTENNA SPECIFICATIONS
JMA WIRELESS – MX06FRO860-03
WEIGHT (WITHOUT MOUNTING HARDWARE): 83.0 LBS
SIZE (HxWxD): 95.9x15.4x10.7 IN.
RATED WIND VELOCITY: 150.0 MPH

4 JMA WIRELESS – MX06FRO860-03
SCALE: NOT TO SCALE

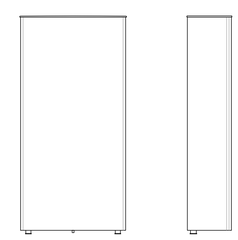

ANTENNA SPECIFICATIONS	
MANUFACTURER	SAMSUNG
MODEL #	MT6413-77A
WIDTH	15.75"
DEPTH	5.51"
HEIGHT	28.90"
WEIGHT	57.30 LBS

5 SAMSUNG – MT6413-77A
SCALE: NOT TO SCALE

verizon

CROWN CASTLE

VERIZON SITE NUMBER:
5000386192

BU #: **806953**

CROWN CASTLE SITE NAME
BRG 2044 (A) 943097

69 GUINEA RD
STAMFORD, CT 06903

EXISTING 160'-0"
MONOPOLE

ISSUED FOR:

REV	DATE	DRWN	DESCRIPTION	DES./QA
0	3/28/24	AJC	FINAL	MD
1	5/22/24	AJC	REVISION	MD

DocuSigned by:
01434153

STATE OF CONNECTICUT
MARBEL DENTINGER
23524
LICENSED
PROFESSIONAL ENGINEER

5/23/2024 | 8:24:14 AM CDT

CROWN CASTLE USA INC.
CERTIFICATE OF REGISTRATION #PEC.0001101

IT IS A VIOLATION OF LAW FOR ANY PERSON, UNLESS THEY ARE ACTING UNDER THE DIRECTION OF A LICENSED PROFESSIONAL ENGINEER, TO ALTER THIS DOCUMENT.

SHEET NUMBER:	REVISION:
C-5.1	0

TEMPLATENAME_DATEOFGENERATION

DocuSign Envelope ID: D0B70F96-78BB-4BF4-AD97-6F7FB3A6BA7C

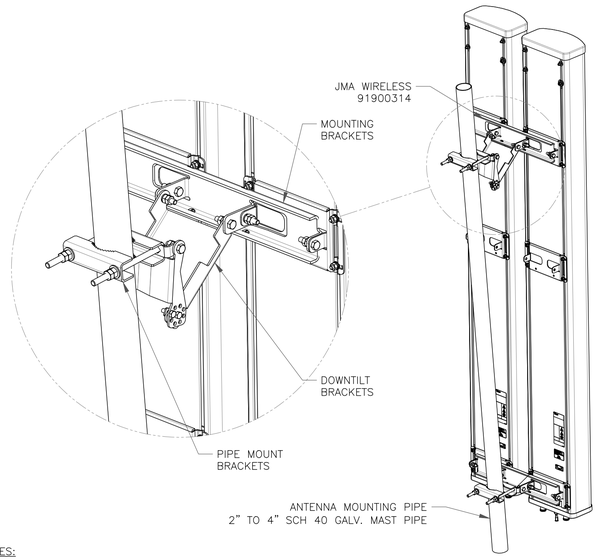

NOTES:

- 91900314-03 KIT CONTAINS (3) MOUNTING BRACKETS.
- 91900314-02 KIT CONTAINS (2) MOUNTING BRACKETS.
- MECHANICAL TILT IN LINE WITH SPECIFIED ANTENNA
- SPACING ACHIEVED CAN BE 3/4", 2" OR 12". (EDGE-TO-EDGE) DEPENDANT ON ANTENNA MODEL

1 JMA WIRELESS – 91900314
SCALE: NOT TO SCALE

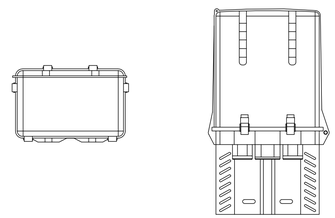

OVP SPECS	
MANUFACTURER	RAYCAP
MODEL #	RVZDC-6627-PF-48
HxWxD	28.93" x 15.73" x 10.31"
WEIGHT	32 LBS

2 RAYCAP – RVZDC-6627-PF-48
SCALE: NOT TO SCALE

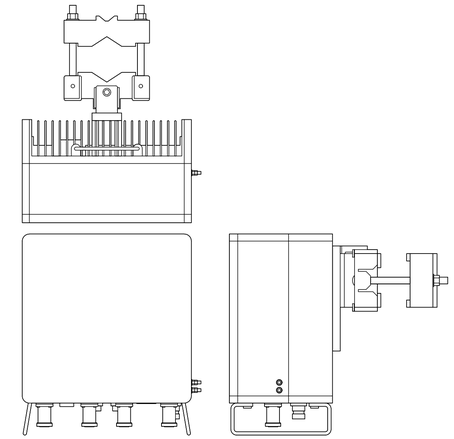

RADIO SPECIFICATIONS	
MANUFACTURER	SAMSUNG
MODEL #	RF4461D-13A
WIDTH	14.96"
DEPTH	9.06"
HEIGHT	14.96"
WEIGHT	72.50 LBS

3 SAMSUNG – RF4461D-13A
SCALE: NOT TO SCALE

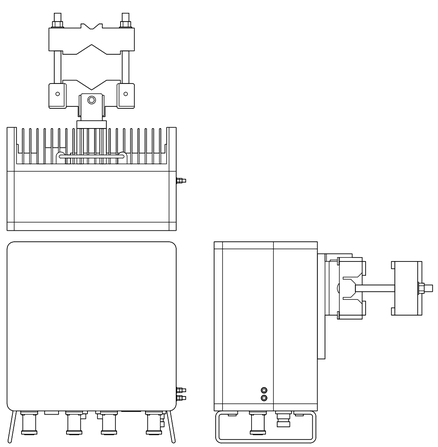

RADIO SPECIFICATIONS	
MANUFACTURER	SAMSUNG
MODEL #	B2/B66A RRH ORAN (RF4439d-25A)
WIDTH	14.96"
DEPTH	10.04"
HEIGHT	14.96"
WEIGHT	74.70 LBS

4 SAMSUNG – B2/B66A RRH ORAN (RF4439D-25A)
SCALE: NOT TO SCALE

5 NOT USED
SCALE: NOT TO SCALE

6 NOT USED
SCALE: NOT TO SCALE

verizon

CROWN CASTLE

VERIZON SITE NUMBER:
5000386192

BU #: **806953**

CROWN CASTLE SITE NAME
BRG 2044 (A) 943097

69 GUINEA RD
STAMFORD, CT 06903

EXISTING 160'-0"
MONOPOLE

ISSUED FOR:

REV	DATE	DRWN	DESCRIPTION	DES./QA
0	3/28/24	AJC	FINAL	MD
1	5/22/24	AJC	REVISION	MD

DocuSigned by:
0F4341533B8B4DD...

STATE OF CONNECTICUT
MARBEL DENTINGER
23524
LICENSED
PROFESSIONAL ENGINEER

5/23/2024 | 8:24:14 AM CDT

CROWN CASTLE USA INC.
CERTIFICATE OF REGISTRATION #PEC.0001101

IT IS A VIOLATION OF LAW FOR ANY PERSON, UNLESS THEY ARE ACTING UNDER THE DIRECTION OF A LICENSED PROFESSIONAL ENGINEER, TO ALTER THIS DOCUMENT.

SHEET NUMBER: C-5.2

REVISION: 0

TEMPLATENAME_DATEOFGENERATION

DocuSign Envelope ID: D0B70F96-78BB-4BF4-AD97-6F7FB3A6BA7C

Azimuth (1) Alpha					
Cell (850 CDMA)	Red				
PCS2 (1900 LTE)	Pink	Red	Pink		
700 LTE	Lt. Green	Red	Lt. Green		
850 LTE	Purple	Red	Purple		
2100 LTE	Orange	Red	Orange		
High Band Dual Band (Shared Lines)	Orange	Pink	Red	Pink	Orange
Low Band Dual Band (Shared Lines)	Purple	Lt. Green	Red	Lt. Green	Purple
5G 28GHz	Brown	Red	Brown		
5G 39GHz	Blue	Red	Blue		
LAA	Gray	Red	Gray		
CBRS	White	Red	White		
L-Sub6 (C-Band)	Red	Red	Red		

Azimuth (2) Beta					
Cell (850 CDMA)	Blue				
PCS2 (1900 LTE)	Pink	Blue	Pink		
700 LTE	Lt. Green	Blue	Lt. Green		
850 LTE	Purple	Blue	Purple		
2100 LTE	Orange	Blue	Orange		
High Band Dual Band (Shared Lines)	Orange	Pink	Blue	Pink	Orange
Low Band Dual Band (Shared Lines)	Purple	Lt. Green	Blue	Lt. Green	Purple
5G 28GHz	Brown	Blue	Brown		
5G 39GHz	Blue	Blue	Blue		
LAA	Gray	Blue	Gray		
CBRS	White	Blue	White		
L-Sub6 (C-Band)	Red	Blue	Red		

Azimuth (3) Gamma					
Cell (850 CDMA)	Yellow				
PCS2 (1900 LTE)	Pink	Yellow	Pink		
700 LTE	Lt. Green	Yellow	Lt. Green		
850 LTE	Purple	Yellow	Purple		
2100 LTE	Orange	Yellow	Orange		
High Band Dual Band (Shared Lines)	Orange	Pink	Yellow	Pink	Orange
Low Band Dual Band (Shared Lines)	Purple	Lt. Green	Yellow	Lt. Green	Purple
5G 28GHz	Brown	Yellow	Brown		
5G 39GHz	Blue	Yellow	Blue		
LAA	Gray	Yellow	Gray		
CBRS	White	Yellow	White		
L-Sub6 (C-Band)	Red	Yellow	Red		

Azimuth (4) Delta					
Cell (850 CDMA)	Orange				
PCS2 (1900 LTE)	Pink	Orange	Pink		
700 LTE	Lt. Green	Orange	Lt. Green		
850 LTE	Purple	Orange	Purple		
2100 LTE	Orange	Orange	Orange		
High Band Dual Band (Shared Lines)	Orange	Pink	Orange	Pink	Orange
Low Band Dual Band (Shared Lines)	Purple	Lt. Green	Orange	Lt. Green	Purple
5G 28GHz	Brown	Orange	Brown		
5G 39GHz	Blue	Orange	Blue		
LAA	Gray	Orange	Gray		
CBRS	White	Orange	White		
L-Sub6 (C-Band)	Red	Orange	Red		

Azimuth (5) Epsilon					
Cell (850 CDMA)	White				
PCS2 (1900 LTE)	Pink	White	Pink		
700 LTE	Lt. Green	White	Lt. Green		
850 LTE	Purple	White	Purple		
2100 LTE	Orange	White	Orange		
High Band Dual Band (Shared Lines)	Orange	Pink	White	Pink	Orange
Low Band Dual Band (Shared Lines)	Purple	Lt. Green	White	Lt. Green	Purple
5G 28GHz	Brown	White	Brown		
5G 39GHz	Blue	White	Blue		
LAA	Gray	White	Gray		
CBRS	White	White	White		
L-Sub6 (C-Band)	Red	White	Red		

Azimuth (6) Zeta					
Cell (850 CDMA)	Gray				
PCS2 (1900 LTE)	Pink	Gray	Pink		
700 LTE	Lt. Green	Gray	Lt. Green		
850 LTE	Purple	Gray	Purple		
2100 LTE	Orange	Gray	Orange		
High Band Dual Band (Shared Lines)	Orange	Pink	Gray	Pink	Orange
Low Band Dual Band (Shared Lines)	Purple	Lt. Green	Gray	Lt. Green	Purple
5G 28GHz	Brown	Gray	Brown		
5G 39GHz	Blue	Gray	Blue		
LAA	Gray	Gray	Gray		
CBRS	White	Gray	White		
L-Sub6 (C-Band)	Red	Gray	Red		

1 COLOR CODE MATRIX
SCALE: NOT TO SCALE

verizon

CROWN CASTLE

VERIZON SITE NUMBER:
5000386192

BU #: **806953**

CROWN CASTLE SITE NAME
BRG 2044 (A) 943097

69 GUINEA RD
STAMFORD, CT 06903

EXISTING 160'-0"
MONOPOLE

ISSUED FOR:

REV	DATE	DRWN	DESCRIPTION	DES./QA
0	3/28/24	AJC	FINAL	MD
1	5/22/24	AJC	REVISION	MD

DocuSigned by:
STATE OF CONNECTICUT
MARIBEL BENTINCER
23524
LICENSED
PROFESSIONAL ENGINEER
5/23/2024 | 8:24:14 AM CDT

CROWN CASTLE USA INC.
CERTIFICATE OF REGISTRATION #PEC.0001101

IT IS A VIOLATION OF LAW FOR ANY PERSON, UNLESS THEY ARE ACTING UNDER THE DIRECTION OF A LICENSED PROFESSIONAL ENGINEER, TO ALTER THIS DOCUMENT.

SHEET NUMBER: C-6

REVISION: 0

TEMPLATENAME_DATEOFGENERATION

DocuSign Envelope ID: D0B70F96-78BB-4BF4-AD97-6F7FB3A6BA7C

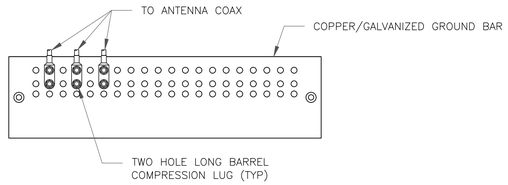

NOTES:

1. DOUBLING UP "OR STACKING" OF CONNECTIONS IS NOT PERMITTED.
2. EXTERIOR ANTIOXIDANT JOINT COMPOUND TO BE USED ON ALL EXTERIOR CONNECTIONS.
3. GROUND BAR SHALL NOT BE ISOLATED FROM TOWER. MOUNT DIRECTLY TO ANTENNA MOUNT STEEL.

1 ANTENNA SECTOR GROUND BAR DETAIL
SCALE: NOT TO SCALE

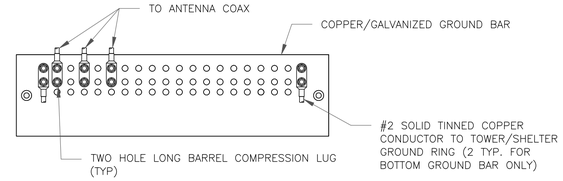

NOTES:

1. EXTERIOR ANTIOXIDANT JOINT COMPOUND TO BE USED ON ALL EXTERIOR CONNECTIONS.
2. GROUND BAR SHALL NOT BE ISOLATED FROM TOWER. MOUNT DIRECTLY TO TOWER STEEL (TOWER ONLY).
3. GROUND BAR SHALL BE ISOLATED FROM BUILDING OR SHELTER.

2 TOWER/SHELTER GROUND BAR DETAIL
SCALE: NOT TO SCALE

WIRE SIZE	BURNDY LUG	BOLT SIZE
#6 GREEN INSULATED	YA6C-2TC38	3/8" - 16 NC SS 2 BOLT
#2 SOLID TINNED	YA3C-2TC38	3/8" - 16 NC SS 2 BOLT
#2 STRANDED	YA2C-2TC38	3/8" - 16 NC SS 2 BOLT
#2/0 STRANDED	YA26-2TC38	3/8" - 16 NC SS 2 BOLT
#4/0 STRANDED	YA28-2N	1/2" - 16 NC SS 2 BOLT

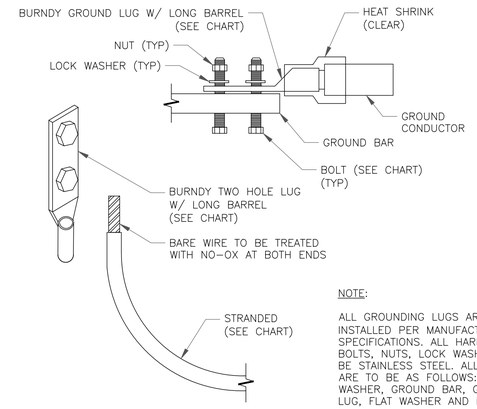

NOTE:

ALL GROUNDING LUGS ARE TO BE INSTALLED PER MANUFACTURER'S SPECIFICATIONS. ALL HARDWARE BOLTS, NUTS, LOCK WASHERS SHALL BE STAINLESS STEEL. ALL HARDWARE ARE TO BE AS FOLLOWS: BOLT, FLAT WASHER, GROUND BAR, GROUND LUG, FLAT WASHER AND NUT.

3 MECHANICAL LUG CONNECTION
SCALE: NOT TO SCALE

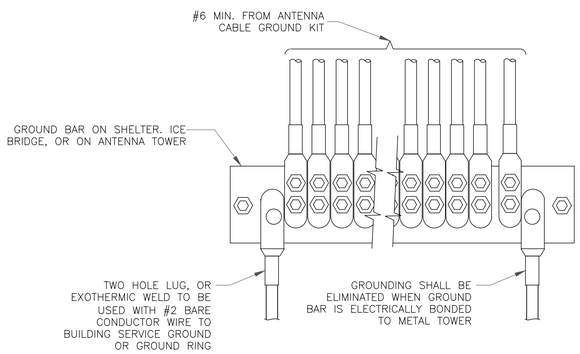

4 GROUNDWIRE INSTALLATION
SCALE: NOT TO SCALE

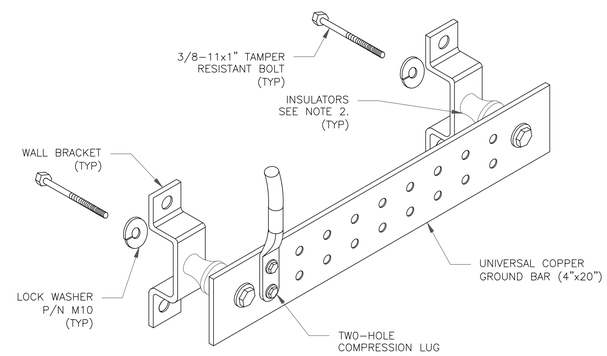

NOTES:

1. DOWN LEAD (HOME RUN) CONDUCTORS ARE NOT TO BE INSTALLED ON CROWN CASTLE USA INC. TOWER, PER THE GROUNDING DOWN CONDUCTOR POLICY QAS-STD-10091. NO MODIFICATION OR DRILLING TO TOWER STEEL IS ALLOWED IN ANY FORM OR FASHION, CAD-WELDING ON THE TOWER AND/OR IN THE AIR ARE NOT PERMITTED.

2. OMIT INSULATOR WHEN MOUNTING TO TOWER STEEL OR PLATFORM STEEL USE INSULATORS WHEN ATTACHING TO BUILDING OR SHELTERS.

5 GROUND BAR DETAIL
SCALE: NOT TO SCALE

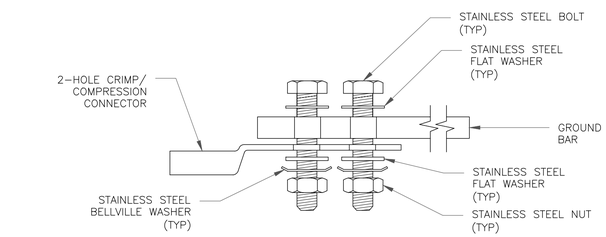

SINGLE CONNECTOR AT GROUND BARS

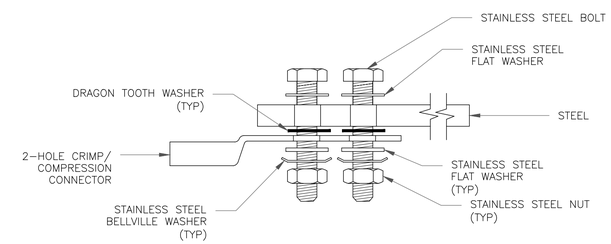

SINGLE CONNECTOR AT STEEL OBJECTS

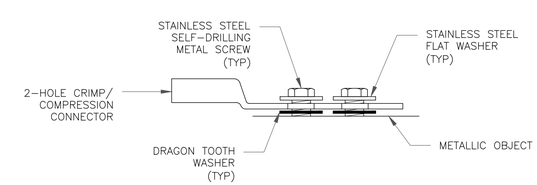

SINGLE CONNECTOR AT METALLIC/STEEL OBJECTS

8 HARDWARE DETAIL FOR EXTERIOR CONNECTIONS
SCALE: NOT TO SCALE

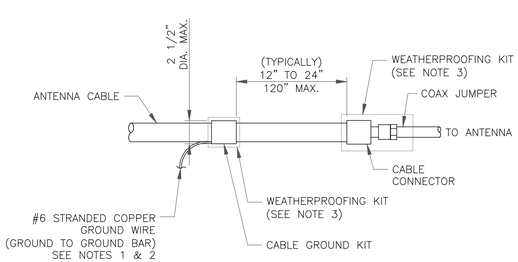

NOTES:

1. DO NOT INSTALL CABLE GROUND KIT AT A BEND AND ALWAYS DIRECT GROUND WIRE DOWN TO GROUND BAR.
2. GROUNDING KIT SHALL BE TYPE AND PART NUMBER AS SUPPLIED OR RECOMMENDED BY CABLE MANUFACTURER.
3. WEATHER PROOFING SHALL BE TWO-PART TAPE KIT, COLD SHRINK SHALL NOT BE USED.

6 CABLE GROUND KIT CONNECTION
SCALE: NOT TO SCALE

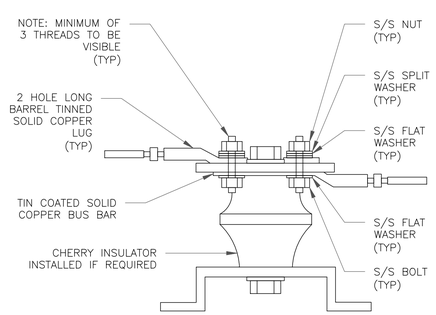

7 LUG DETAIL
SCALE: NOT TO SCALE

verizon

CROWN CASTLE

VERIZON SITE NUMBER:
5000386192

BU #: **806953**

CROWN CASTLE SITE NAME
BRG 2044 (A) 943097

69 GUINEA RD
STAMFORD, CT 06903

EXISTING 160'-0"
MONOPOLE

ISSUED FOR:

REV	DATE	DRWN	DESCRIPTION	DES./QA
0	3/28/24	AJC	FINAL	MD
1	5/22/24	AJC	REVISION	MD

DocuSigned by:
07434153...

STATE OF CONNECTICUT
MARBEL DENTICEP
23524
LICENSED
PROFESSIONAL ENGINEER

5/23/2024 | 8:24:14 AM CDT

CROWN CASTLE USA INC.
CERTIFICATE OF REGISTRATION #PEC.0001101

IT IS A VIOLATION OF LAW FOR ANY PERSON, UNLESS THEY ARE ACTING UNDER THE DIRECTION OF A LICENSED PROFESSIONAL ENGINEER, TO ALTER THIS DOCUMENT.

SHEET NUMBER: G-1

REVISION: 0

TEMPLATENAME_DATEOFGENERATION

EXHIBIT E

Structural Analysis Report

Date: **April 30, 2024**

Telamon
319 Chapanoke Road, Suite 118,
Raleigh, NC 27603
(405) 348-5460

Subject:	**Structural Analysis Report**	
Carrier Designation:	***Verizon Wireless* Co-Locate**	
	Site Number:	5000386192
	Site Name:	RIVERBANK CT
Crown Castle Designation:	**BU Number:**	806953
	Site Name:	BRG 2044 (A) 943097
	JDE Job Number:	2114102
	Work Order Number:	2297487
	Order Number:	669074 Rev. 0
Engineering Firm Designation:	**Telamon Project Number:**	42285-806953-2297487-01-STR
Site Data:	**69 Guinea RD (Camp Rocky Craig), Stamford, Fairfield County, CT** **Latitude *41° 6' 6.30"*, Longitude *-73° 35' 40.00"*** **160 Foot - Monopole Tower**	

Telamon is pleased to submit this **"Structural Analysis Report"** to determine the structural integrity of the above mentioned tower.

The purpose of the analysis is to determine acceptability of the tower stress level. Based on our analysis we have determined the tower stress level for the structure and foundation, under the following load case, to be:

LC5: Proposed Equipment Configuration **Sufficient Capacity - 64.7%**

This analysis utilizes an ultimate 3-second gust wind speed of 116 mph as required by the 2022 Connecticut State Building Code. Applicable standard references and design criteria are listed in Section 2 - Analysis Criteria.

Structural analysis prepared by: Madhavi Talluri

Respectfully submitted by:

David Chickering, P.E.
Director of Business Process Improvement

STATE OF CONNECTICUT
DAVID CHICKERING
No. 35683
LICENSED
PROFESSIONAL ENGINEER

David Chickering
Telamon Tower Engineering PLLC
PE # 35683 Exp. 01/31/2025

TABLE OF CONTENTS

1) INTRODUCTION

2) ANALYSIS CRITERIA
Table 1 - Proposed Equipment Configuration
Table 2 - Other Considered Equipment

3) ANALYSIS PROCEDURE
Table 3 - Documents Provided
3.1) Analysis Method
3.2) Assumptions

4) ANALYSIS RESULTS
Table 4 - Section Capacity (Summary)
Table 5 - Tower Component Stresses vs. Capacity - LC5
4.1) Recommendations

5) APPENDIX A
tnxTower Output

6) APPENDIX B
Base Level Drawing

7) APPENDIX C
Additional Calculations

1) INTRODUCTION

This tower is a 160-ft monopole tower designed by Valmont. The tower was modified multiple times in the past to accommodate additional loading. All the modifications are considered in this analysis per their respective post modification inspection reports.

2) ANALYSIS CRITERIA

TIA-222 Revision:	TIA-222-H
Risk Category:	II
Wind Speed:	116 mph
Exposure Category:	B
Topographic Factor:	1
Ice Thickness:	1 in
Wind Speed with Ice:	50 mph
Service Wind Speed:	60 mph

Table 1 - Proposed Equipment Configuration

Mounting Level (ft)	Center Line Elevation (ft)	Number of Antennas	Antenna Manufacturer	Antenna Model	Number of Feed Lines	Feed Line Size (in)
139.0	142.0	6	jma wireless	MX06FRO860-03	2	1-5/8
		3	samsung telecommunications	MT6413-77A w/ Mount Pipe		
		3	samsung telecommunications	RF4439D-25A		
		3	samsung telecommunications	RF4461D-13A		
		1	raycap	RVZDC-6627-PF-48		
	139.0	1	tower mounts	Platform Mount [LP 713-1]		

Table 2 - Other Considered Equipment

Mounting Level (ft)	Center Line Elevation (ft)	Number of Antennas	Antenna Manufacturer	Antenna Model	Number of Feed Lines	Feed Line Size (in)
157.0	158.0	3	commscope	VV-65B-R1_TMO w/ Mount Pipe	3	1-5/8
		3	ericsson	AIR 6419 B41_TMO w/ Mount Pipe		
		3	ericsson	RADIO 4460 B2/B25 B66_TMO		
		3	rfs celwave	APXVAALL24_43-U-NA20_TMO w/ Mount Pipe		
	157.0	3	ericsson	Radio 4480_TMOV2		
		1	tower mounts	Platform Mount [LP 713-1]		

Mounting Level (ft)	Center Line Elevation (ft)	Number of Antennas	Antenna Manufacturer	Antenna Model	Number of Feed Lines	Feed Line Size (in)
149.0	151.0	3	cci antennas	HPA-65R-BUU-H6 w/ Mount Pipe	6 4 2 2	1-5/8 5/8 3/4 3/8
		3	ericsson	RRUS 32 B30		
		3	ericsson	RRUS 4449 B5/B12		
		3	ericsson	RRUS 8843 B2/B66A		
		3	kmw communications	EPBQ-654L8H6-L2 w/ Mount Pipe		
		3	powerwave technologies	7770.00 w/ Mount Pipe		
	149.0	3	ericsson	RRUS 11 B12		
		6	powerwave technologies	LGP21401		
		3	raycap	DC6-48-60-18-8F		
		1	tower mounts	Platform Mount [LP 713-1]		
129.0	133.0	3	fujitsu	TA08025-B604	1	1-1/2
		3	fujitsu	TA08025-B605		
	130.0	1	raycap	RDIDC-9181-PF-48		
	129.0	3	jma wireless	MX08FRO665-21 w/ Mount Pipe		
		1	Valmont	SNP8HR-396 Platform Mount		
116.0	118.0	3	ericsson	AIR 32 B2A/B66AA w/ Mount Pipe	10	1-5/8
		3	ericsson	ERICSSON AIR 21 B2A B4P w/ Mount Pipe		
		3	ericsson	RADIO 4449 B12/B71		
		3	rfs celwave	APXVAARR24_43-U-NA20 w/ Mount Pipe		
	116.0	3	ericsson	KRY 112 144/1		
		1	tower mounts	Miscellaneous [NA 507-1]		
		1	tower mounts	Platform Mount [LP 712-1]		
84.0	84.0	1	gps	GPS_A	-	-
		1	tower mounts	Side Arm Mount [SO 702-1]		
40.0	40.0	1	andrew	GPS-QBW-20N	-	-
		1	tower mounts	Pipe Mount [PM 601-1]		

3) ANALYSIS PROCEDURE

Table 3 - Documents Provided

Document	Reference	Source
4-GEOTECHNICAL REPORTS	1104116	CCISITES
4-TOWER FOUNDATION DRAWINGS/DESIGN/SPECS	1104113	CCISITES
4-TOWER MANUFACTURER DRAWINGS	823122	CCISITES
4-TOWER REINFORCEMENT DESIGN/DRAWINGS/DATA	1251715	CCISITES
4-TOWER REINFORCEMENT DESIGN/DRAWINGS/DATA	3332716	CCISITES
4-POST-MODIFICATION INSPECTION	4015064	CCISITES
4-TOWER REINFORCEMENT DESIGN/DRAWINGS/DATA	4713204	CCISITES
4-TOWER REINFORCEMENT DESIGN/DRAWINGS/DATA	4837035	CCISITES
4-POST-MODIFICATION INSPECTION	5577141	CCISITES

3.1) Analysis Method

tnxTower (version 8.2.4.3), tnxTower (version 8.2.4.3), a commercially available analysis software package, was used to create a three-dimensional model of the tower and calculate member stresses for various loading cases. Selected output from the analysis is included in Appendix A. When applicable, Crown Castle has calculated and provided the effective area for panel antennas using approved methods following the intent of the TIA-222 Standard.

tnxTower was used to determine the loads on the modified structure. Additional calculations were performed to determine the stresses in the pole and in the reinforcing elements. These calculations are presented in Appendix C.

3.2) Assumptions

1) Tower and structures were maintained in accordance with the TIA-222 Standard.
2) The configuration of antennas, transmission cables, mounts and other appurtenances are as specified in Tables 1 and 2 and the referenced drawings.

This analysis may be affected if any assumptions are not valid or have been made in error. Telamon should be notified to determine the effect on the structural integrity of the tower.

4) ANALYSIS RESULTS

Table 4 - Section Capacity (Summary)

Section No.	Elevation (ft)	Component Type	Size	Critical Element	% Capacity	Pass / Fail
L1	160 - 155	Pole	TP20.801x19.6x0.25	Pole	2.6	Pass
L2	155 - 150	Pole	TP22.002x20.801x0.25	Pole	6.6	Pass
L3	150 - 145	Pole	TP23.203x22.002x0.25	Pole	13.9	Pass
L4	145 - 140	Pole	TP24.404x23.203x0.25	Pole	19.9	Pass
L5	140 - 135	Pole	TP25.605x24.404x0.25	Pole	28.7	Pass
L6	135 - 130	Pole	TP26.806x25.605x0.25	Pole	35.9	Pass
L7	130 - 125	Pole	TP28.007x26.806x0.25	Pole	43.8	Pass
L8	125 - 120	Pole	TP29.208x28.007x0.25	Pole	50.9	Pass
L9	120 - 116	Pole	TP31.29x29.208x0.25	Pole	56.0	Pass
L10	116 - 111	Pole	TP30.866x29.668x0.3438	Pole	42.3	Pass
L11	111 - 106	Pole	TP32.065x30.866x0.3438	Pole	46.4	Pass

Section No.	Elevation (ft)	Component Type	Size	Critical Element	% Capacity	Pass / Fail
L12	106 - 101	Pole	TP33.263x32.065x0.3438	Pole	50.1	Pass
L13	101 - 96	Pole	TP34.461x33.263x0.3438	Pole	53.4	Pass
L14	96 - 91	Pole	TP35.659x34.461x0.3438	Pole	56.5	Pass
L15	91 - 86	Pole	TP36.857x35.659x0.3438	Pole	59.3	Pass
L16	86 - 85.75	Pole + Reinf.	TP36.917x36.857x0.5125	Reinf. 5 Tension Rupture	56.5	Pass
L17	85.75 - 81	Pole + Reinf.	TP38.055x36.917x0.5063	Reinf. 5 Tension Rupture	58.7	Pass
L18	81 - 80.75	Pole	TP38.115x38.055x0.3438	Pole	62.0	Pass
L19	80.75 - 80.5	Pole	TP38.175x38.115x0.3438	Pole	62.2	Pass
L20	80.5 - 79	Pole	TP39.912x38.175x0.3438	Pole	62.9	Pass
L21	79 - 72.25	Pole	TP39.467x37.847x0.4063	Pole	54.0	Pass
L22	72.25 - 67.25	Pole	TP40.667x39.467x0.4063	Pole	55.6	Pass
L23	67.25 - 62.25	Pole	TP41.867x40.667x0.4063	Pole	57.0	Pass
L24	62.25 - 57.25	Pole	TP43.067x41.867x0.4063	Pole	58.4	Pass
L25	57.25 - 52.25	Pole	TP44.267x43.067x0.4063	Pole	59.7	Pass
L26	52.25 - 49.83	Pole	TP44.848x44.267x0.4063	Pole	60.3	Pass
L27	49.83 - 49.58	Pole	TP44.908x44.848x0.4063	Pole	60.4	Pass
L28	49.58 - 44.58	Pole	TP46.108x44.908x0.4063	Pole	61.6	Pass
L29	44.58 - 43	Pole	TP48.088x46.108x0.4063	Pole	62.0	Pass
L30	43 - 35.33	Pole	TP47.516x45.675x0.4375	Pole	58.9	Pass
L31	35.33 - 32.25	Pole	TP48.256x47.516x0.4375	Pole	59.5	Pass
L32	32.25 - 32	Pole	TP48.316x48.256x0.4375	Pole	59.5	Pass
L33	32 - 27	Pole	TP49.517x48.316x0.4375	Pole	60.4	Pass
L34	27 - 22	Pole	TP50.717x49.517x0.4375	Pole	61.2	Pass
L35	22 - 17	Pole	TP51.918x50.717x0.4375	Pole	62.0	Pass
L36	17 - 15.5	Pole	TP52.278x51.918x0.4375	Pole	62.2	Pass
L37	15.5 - 15.25	Pole	TP52.338x52.278x0.4375	Pole	62.3	Pass
L38	15.25 - 14.75	Pole	TP52.458x52.338x0.4375	Pole	62.4	Pass
L39	14.75 - 14.5	Pole	TP52.518x52.458x0.4375	Pole	62.4	Pass
L40	14.5 - 9.5	Pole	TP53.719x52.518x0.4375	Pole	63.2	Pass
L41	9.5 - 4.5	Pole	TP54.919x53.719x0.4375	Pole	63.9	Pass
L42	4.5 - 0	Pole	TP56x54.919x0.4375	Pole	64.6	Pass
					Summary	
				Pole	64.6	Pass
				Reinforcement	58.7	Pass
				Overall	64.6	Pass

Table 5 - Tower Component Stresses vs. Capacity - LC5

Notes	Component	Elevation (ft)	% Capacity	Pass / Fail
1	Anchor Rods	0	52.7	Pass
1	Base Plate	0	37.7	Pass
1	Base Foundation (Structure)	0	19.7	Pass
1	Base Foundation (Soil Interaction)	0	60.2	Pass

Structure Rating (max from all components) =	**64.7%**

Notes:
1) See additional documentation in "Appendix C – Additional Calculations" for calculations supporting the % capacity consumed.

4.1) Recommendations

The tower and its foundation have sufficient capacity to carry the proposed load configuration. No modifications are required at this time.

APPENDIX A

TNXTOWER OUTPUT

Section	Length (ft)	Number of Sides	Thickness (in)	Socket Length (ft)	Top Dia (in)	Bot Dia (in)	Grade	Weight (K)
1	5.00	12	0.2500		19.6000	20.8009		0.3
2	5.00	12	0.2500		20.8009	22.0019		0.3
3	5.00	12	0.2500		22.0019	23.2028		0.3
4	5.00	12	0.2500		23.2028	24.4038		0.3
5	5.00	12	0.2500		24.4038	25.6047		0.3
6	5.00	12	0.2500		25.6047	26.8057		0.4
7	5.00	12	0.2500		26.8057	28.0066		0.4
8	5.00	12	0.2500		28.0066	29.2076		0.4
9	5.00 3.67	12	0.2500	4.67	29.2076	31.2900		0.7
10		12	0.3438		31.2900	32.0645		0.6
11	5.00	12	0.3438		32.0645	32.8391		0.6
12	5.00	12	0.3438		32.8391	33.6136		0.6
13	5.00	12	0.3438		33.6136	34.3882		0.6
14	5.00	12	0.3438		34.3882	35.1627		0.7
15	5.00	12	0.3438		35.1627	35.9373		0.7
16	5.00	12	0.3438		35.9373	36.7118		0.7
17	4.75	12	0.3438		36.7118	37.4864		1.0
18		12	0.3438		37.4864	38.2609		1.0
19		12	0.3438		38.2609	39.0355		1.0
20	6.75	12	0.3438	5.75	39.0355	39.9912		1.1
21		12	0.4062		39.9912	40.9469		1.1
22	5.00	12	0.4062		40.9469	41.9026		0.9
23	5.00	12	0.4062		41.9026	42.8583		0.9
24	5.00	12	0.4062		42.8583	43.8140		0.9
25	5.00	12	0.4062		43.8140	44.7697		1.0
26	2.42	12	0.4062		44.7697	45.2476		0.5
27		12	0.4062		45.2476	45.7254		0.5
28	5.00	12	0.4062		45.7254	46.1033		1.0
29	7.67	12	0.4062		46.1033	46.1079		1.7
30		12	0.4375	6.67	46.1079	48.0880		1.7
31	23.08	12	0.4375		48.0880	49.5166		10.7
32		12	0.4375		49.5166	49.5172		0
33	5.00	12	0.4375		49.5172	50.7172		1.2
34	5.00	12	0.4375		50.7172	51.9179		1.2
35	5.00	12	0.4375		51.9179	52.5166		1.2
36	2.50	12	0.4375		52.5166	52.5172		0.4
37		12	0.4375		52.5172	53.7172		0.4
38		12	0.4375		53.7172	54.9179		0.4
39		12	0.4375		54.9179	55.5166		0.4
40	5.00	12	0.4375		55.5166	53.7188		1.3
41	5.00	12	0.4375		53.7188	54.9194		1.3
42	4.50	12	0.4375		54.9194	56.0000		1.2
								27.7

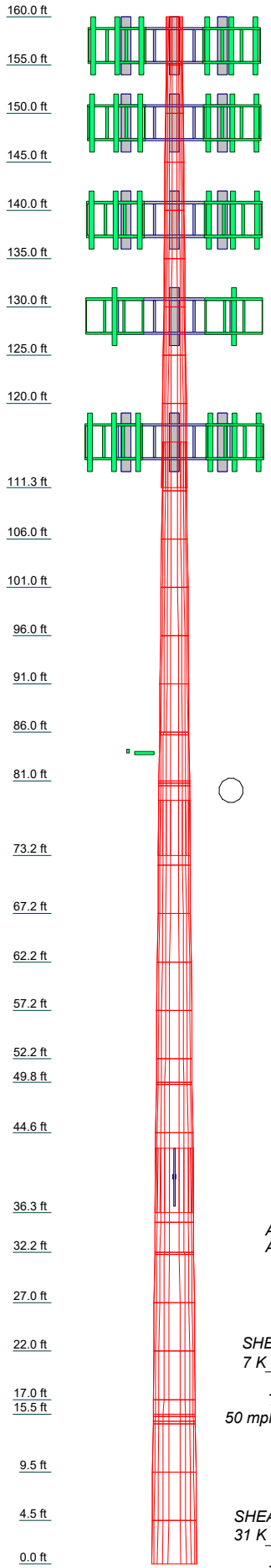

MATERIAL STRENGTH

GRADE	Fy	Fu	GRADE	Fy	Fu
A572-65	65 ksi	80 ksi			

TOWER DESIGN NOTES

1. Tower is located in Fairfield County, Connecticut.
2. Tower designed for Exposure B to the TIA-222-H Standard.
3. Tower designed for a 116 mph basic wind in accordance with the TIA-222-H Standard.
4. Tower is also designed for a 50 mph basic wind with 1.00 in ice. Ice is considered to increase in thickness with height.
5. Deflections are based upon a 60 mph wind.
6. Tower Risk Category II.
7. Topographic Category 1 with Crest Height of 0.00 ft
8. TOWER RATING: 64.7%

ALL REACTIONS ARE FACTORED

AXIAL 83 K

SHEAR 7 K

MOMENT 898 kip-ft

TORQUE 0 kip-ft
50 mph WIND - 1.0000 in ICE

AXIAL 58 K

SHEAR 31 K

MOMENT 3654 kip-ft

TORQUE 1 kip-ft
REACTIONS - 116 mph WIND

telamon

Telamon
319 Chapanoke Road, Suite 118,
Raleigh, NC 27603
Phone: (405) 348-5460
FAX: (405) 341-6334

Job:	***BU #806953 - BRG 2044 (A) 943097***		
Project:	***42285-806953-2297487-01-STR***		
Client: Crown Castle	Drawn by: MT		App'd:
Code: TIA-222-H	Date: 04/30/24		Scale: NTS
Path:			Dwg No. E-1

Tower Input Data

The tower is a monopole.
This tower is designed using the TIA-222-H standard.
The following design criteria apply:

- Tower is located in Fairfield County, Connecticut.
- Tower base elevation above sea level: 245.00 ft.
- Basic wind speed of 116 mph.
- Risk Category II.
- Exposure Category B.
- Simplified Topographic Factor Procedure for wind speed-up calculations is used.
- Topographic Category: 1.
- Crest Height: 0.00 ft.
- Nominal ice thickness of 1.0000 in.
- Ice thickness is considered to increase with height.
- Ice density of 56 pcf.
- A wind speed of 50 mph is used in combination with ice.
- Temperature drop of 50 °F.
- Deflections calculated using a wind speed of 60 mph.
- TOWER RATING: 64.7%.
- A non-linear (P-delta) analysis was used.
- Pressures are calculated at each section.
- Stress ratio used in pole design is 1.
- Tower analysis based on target reliabilities in accordance with Annex S.
- Load Modification Factors used: $K_{es}(F_w) = 0.95$, $K_{es}(t_i) = 0.85$.
- Maximum demand-capacity ratio is: 1.05.
- Local bending stresses due to climbing loads, feed line supports, and appurtenance mounts are not considered.

Options

Consider Moments - Legs	Assume Legs Pinned	Calculate Redundant Bracing Forces
Consider Moments - Horizontals	√ Assume Rigid Index Plate	Ignore Redundant Members in FEA
Consider Moments - Diagonals	√ Use Clear Spans For Wind Area	SR Leg Bolts Resist Compression
Use Moment Magnification	Use Clear Spans For KL/r	All Leg Panels Have Same Allowable
√ Use Code Stress Ratios	Retension Guys To Initial Tension	Offset Girt At Foundation
√ Use Code Safety Factors - Guys	√ Bypass Mast Stability Checks	√ Consider Feed Line Torque
Escalate Ice	√ Use Azimuth Dish Coefficients	Include Angle Block Shear Check
Always Use Max Kz	√ Project Wind Area of Appurtenances	Use TIA-222-H Bracing Resist. Exemption
Use Special Wind Profile	√ Alternative Appurt. EPA Calculation	Use TIA-222-H Tension Splice Exemption
Include Bolts In Member Capacity	Autocalc Torque Arm Areas	Poles
Leg Bolts Are At Top Of Section	Add IBC .6D+W Combination	√ Include Shear-Torsion Interaction
Secondary Horizontal Braces Leg	√ Sort Capacity Reports By Component	Always Use Sub-Critical Flow
Use Diamond Inner Bracing (4 Sided)	Triangulate Diamond Inner Bracing	Use Top Mounted Sockets
SR Members Have Cut Ends	Treat Feed Line Bundles As Cylinder	Pole Without Linear Attachments
SR Members Are Concentric	Ignore KL/ry For 60 Deg. Angle Legs	Pole With Shroud Or No Appurtenances
Distribute Leg Loads As Uniform	Use ASCE 10 X-Brace Ly Rules	Outside and Inside Corner Radii Are Known

Tapered Pole Section Geometry

Section	*Elevation* *ft*	*Section Length* *ft*	*Splice Length* *ft*	*Number of Sides*	*Top Diameter* *in*	*Bottom Diameter* *in*	*Wall Thickness* *in*	*Bend Radius* *in*	*Pole Grade*
L1	160.00-155.00	5.00	0.00	12	19.6000	20.8009	0.2500	1.0000	A572-65 (65 ksi)
L2	155.00-150.00	5.00	0.00	12	20.8009	22.0019	0.2500	1.0000	A572-65 (65 ksi)
L3	150.00-145.00	5.00	0.00	12	22.0019	23.2028	0.2500	1.0000	A572-65

Section	Elevation ft	Section Length ft	Splice Length ft	Number of Sides	Top Diameter in	Bottom Diameter in	Wall Thickness in	Bend Radius in	Pole Grade
									(65 ksi)
L4	145.00-140.00	5.00	0.00	12	23.2028	24.4038	0.2500	1.0000	A572-65 (65 ksi)
L5	140.00-135.00	5.00	0.00	12	24.4038	25.6047	0.2500	1.0000	A572-65 (65 ksi)
L6	135.00-130.00	5.00	0.00	12	25.6047	26.8057	0.2500	1.0000	A572-65 (65 ksi)
L7	130.00-125.00	5.00	0.00	12	26.8057	28.0066	0.2500	1.0000	A572-65 (65 ksi)
L8	125.00-120.00	5.00	0.00	12	28.0066	29.2076	0.2500	1.0000	A572-65 (65 ksi)
L9	120.00-111.33	8.67	4.67	12	29.2076	31.2900	0.2500	1.0000	A572-65 (65 ksi)
L10	111.33-111.00	5.00	0.00	12	29.6683	30.8664	0.3438	1.3750	A572-65 (65 ksi)
L11	111.00-106.00	5.00	0.00	12	30.8664	32.0645	0.3438	1.3750	A572-65 (65 ksi)
L12	106.00-101.00	5.00	0.00	12	32.0645	33.2626	0.3438	1.3750	A572-65 (65 ksi)
L13	101.00-96.00	5.00	0.00	12	33.2626	34.4607	0.3438	1.3750	A572-65 (65 ksi)
L14	96.00-91.00	5.00	0.00	12	34.4607	35.6588	0.3438	1.3750	A572-65 (65 ksi)
L15	91.00-86.00	5.00	0.00	12	35.6588	36.8569	0.3438	1.3750	A572-65 (65 ksi)
L16	86.00-85.75	0.25	0.00	12	36.8569	36.9168	0.5125	2.0500	A572-65 (65 ksi)
L17	85.75-81.00	4.75	0.00	12	36.9168	38.0550	0.5062	2.0250	A572-65 (65 ksi)
L18	81.00-80.75	0.25	0.00	12	38.0550	38.1149	0.3438	1.3750	A572-65 (65 ksi)
L19	80.75-80.50	0.25	0.00	12	38.1149	38.1748	0.3438	1.3750	A572-65 (65 ksi)
L20	80.50-73.25	7.25	5.75	12	38.1748	39.9120	0.3438	1.3750	A572-65 (65 ksi)
L21	73.25-72.25	6.75	0.00	12	37.8467	39.4668	0.4062	1.6250	A572-65 (65 ksi)
L22	72.25-67.25	5.00	0.00	12	39.4668	40.6668	0.4062	1.6250	A572-65 (65 ksi)
L23	67.25-62.25	5.00	0.00	12	40.6668	41.8669	0.4062	1.6250	A572-65 (65 ksi)
L24	62.25-57.25	5.00	0.00	12	41.8669	43.0670	0.4062	1.6250	A572-65 (65 ksi)
L25	57.25-52.25	5.00	0.00	12	43.0670	44.2670	0.4062	1.6250	A572-65 (65 ksi)
L26	52.25-49.83	2.42	0.00	12	44.2670	44.8478	0.4062	1.6250	A572-65 (65 ksi)
L27	49.83-49.58	0.25	0.00	12	44.8478	44.9078	0.4062	1.6250	A572-65 (65 ksi)
L28	49.58-44.58	5.00	0.00	12	44.9078	46.1079	0.4062	1.6250	A572-65 (65 ksi)
L29	44.58-36.33	8.25	6.67	12	46.1079	48.0880	0.4062	1.6250	A572-65 (65 ksi)
L30	36.33-35.33	7.67	0.00	12	45.6746	47.5164	0.4375	1.7500	A572-65 (65 ksi)
L31	35.33-32.25	3.08	0.00	12	47.5164	48.2560	0.4375	1.7500	A572-65 (65 ksi)
L32	32.25-32.00	0.25	0.00	12	48.2560	48.3160	0.4375	1.7500	A572-65 (65 ksi)
L33	32.00-27.00	5.00	0.00	12	48.3160	49.5166	0.4375	1.7500	A572-65 (65 ksi)
L34	27.00-22.00	5.00	0.00	12	49.5166	50.7172	0.4375	1.7500	A572-65 (65 ksi)
L35	22.00-17.00	5.00	0.00	12	50.7172	51.9179	0.4375	1.7500	A572-65 (65 ksi)
L36	17.00-15.50	1.50	0.00	12	51.9179	52.2781	0.4375	1.7500	A572-65 (65 ksi)
L37	15.50-15.25	0.25	0.00	12	52.2781	52.3381	0.4375	1.7500	A572-65 (65 ksi)

Section	Elevation ft	Section Length ft	Splice Length ft	Number of Sides	Top Diameter in	Bottom Diameter in	Wall Thickness in	Bend Radius in	Pole Grade
L38	15.25-14.75	0.50	0.00	12	52.3381	52.4582	0.4375	1.7500	A572-65 (65 ksi)
L39	14.75-14.50	0.25	0.00	12	52.4582	52.5182	0.4375	1.7500	A572-65 (65 ksi)
L40	14.50-9.50	5.00	0.00	12	52.5182	53.7188	0.4375	1.7500	A572-65 (65 ksi)
L41	9.50-4.50	5.00	0.00	12	53.7188	54.9194	0.4375	1.7500	A572-65 (65 ksi)
L42	4.50-0.00	4.50		12	54.9194	56.0000	0.4375	1.7500	A572-65 (65 ksi)

Tapered Pole Properties

Section	Tip Dia. in	Area in^2	I in^4	r in	C in	I/C in^3	J in^4	It/Q in^2	w in	w/t
L1	20.2032	15.5768	744.4315	6.9273	10.1528	73.3228	1508.4200	7.6664	4.5828	18.331
	21.4465	16.5435	891.8200	7.3572	10.7749	82.7684	1807.0692	8.1422	4.9047	19.619
L2	21.4465	16.5435	891.8200	7.3572	10.7749	82.7684	1807.0692	8.1422	4.9047	19.619
	22.6898	17.5103	1057.4817	7.7872	11.3970	92.7861	2142.7445	8.6180	5.2265	20.906
L3	22.6898	17.5103	1057.4817	7.7872	11.3970	92.7861	2142.7445	8.6180	5.2265	20.906
	23.9332	18.4770	1242.4842	8.2171	12.0191	103.3761	2517.6097	9.0938	5.5484	22.193
L4	23.9332	18.4770	1242.4842	8.2171	12.0191	103.3761	2517.6097	9.0938	5.5484	22.193
	25.1765	19.4438	1447.8954	8.6471	12.6412	114.5382	2933.8286	9.5696	5.8702	23.481
L5	25.1765	19.4438	1447.8954	8.6471	12.6412	114.5382	2933.8286	9.5696	5.8702	23.481
	26.4198	20.4106	1674.7831	9.0770	13.2632	126.2725	3393.5647	10.0455	6.1921	24.768
L6	26.4198	20.4106	1674.7831	9.0770	13.2632	126.2725	3393.5647	10.0455	6.1921	24.768
	27.6631	21.3773	1924.2153	9.5069	13.8853	138.5789	3898.9819	10.5213	6.5139	26.056
L7	27.6631	21.3773	1924.2153	9.5069	13.8853	138.5789	3898.9819	10.5213	6.5139	26.056
	28.9064	22.3441	2197.2597	9.9369	14.5074	151.4576	4452.2438	10.9971	6.8358	27.343
L8	28.9064	22.3441	2197.2597	9.9369	14.5074	151.4576	4452.2438	10.9971	6.8358	27.343
	30.1497	23.3108	2494.9841	10.3668	15.1295	164.9084	5055.5141	11.4729	7.1576	28.631
L9	30.1497	23.3108	2494.9841	10.3668	15.1295	164.9084	5055.5141	11.4729	7.1576	28.631
	32.3056	24.9872	3072.8897	11.1123	16.2082	189.5883	6226.5076	12.2979	7.7157	30.863
L10	31.7521	32.4586	3562.7009	10.4982	15.3682	231.8231	7218.9979	15.9752	7.0299	20.45
	31.8340	33.7848	4017.4605	10.9271	15.9888	251.2672	8140.4641	16.6278	7.3509	21.385
L11	31.8340	33.7848	4017.4605	10.9271	15.9888	251.2672	8140.4641	16.6278	7.3509	21.385
	33.0744	35.1109	4509.3598	11.3560	16.6094	271.4943	9137.1854	17.2805	7.6720	22.319
L12	33.0744	35.1109	4509.3598	11.3560	16.6094	271.4943	9137.1854	17.2805	7.6720	22.319
	34.3147	36.4370	5039.8565	11.7849	17.2300	292.5043	10212.1157	17.9332	7.9931	23.253
L13	34.3147	36.4370	5039.8565	11.7849	17.2300	292.5043	10212.1157	17.9332	7.9931	23.253
	35.5551	37.7632	5610.4086	12.2139	17.8506	314.2974	11368.2089	18.5859	8.3142	24.187
L14	35.5551	37.7632	5610.4086	12.2139	17.8506	314.2974	11368.2089	18.5859	8.3142	24.187
	36.7954	39.0893	6222.4739	12.6428	18.4712	336.8735	12608.4191	19.2386	8.6353	25.121
L15	36.7954	39.0893	6222.4739	12.6428	18.4712	336.8735	12608.4191	19.2386	8.6353	25.121
	38.0358	40.4155	6877.5101	13.0717	19.0919	360.2326	13935.7001	19.8913	8.9564	26.055
L16	37.9762	59.9773	10112.2315	13.0113	19.0919	529.6620	20490.1226	29.5190	8.5041	16.593
	38.0383	60.0761	10162.3164	13.0327	19.1229	531.4216	20591.6081	29.5677	8.5202	16.625
L17	38.0405	59.3537	10043.5569	13.0350	19.1229	525.2113	20350.9691	29.2121	8.5369	16.863
	39.2188	61.2091	11015.1865	13.4424	19.7125	558.7929	22319.7543	30.1253	8.8420	17.466
L18	39.2761	41.7416	7576.9752	13.5006	19.7125	384.3748	15353.0060	20.5439	9.2775	26.989
	39.3381	41.8079	7613.1408	13.5221	19.7435	385.6024	15426.2874	20.5766	9.2935	27.036
L19	39.3381	41.8079	7613.1408	13.5221	19.7435	385.6024	15426.287	20.5766	9.2935	27.036

Section	Tip Dia. in	Area in^2	I in^4	r in	C in	I/C in^3	J in^4	It/Q in^2	w in	w/t
	39.4002	41.8742	7649.4214	13.5435	19.7745	386.8320	15499.8014	20.6092	9.3096	27.082
L20	39.4002	41.8742	7649.4214	13.5435	19.7745	386.8320	15499.8016	20.6092	9.3096	27.082
	41.1987	43.7971	8752.3577	14.1654	20.6744	423.3424	17734.6495	21.5556	9.7752	28.437
L21	40.4672	48.9768	8763.1086	13.4037	19.6046	446.9927	17756.4337	24.1049	9.0542	22.287
	40.7157	51.0960	9950.6033	13.9837	20.4438	486.7299	20162.6200	25.1479	9.4883	23.356
L22	40.7157	51.0960	9950.6033	13.9837	20.4438	486.7299	20162.6200	25.1479	9.4883	23.356
	41.9581	52.6659	10896.2084	14.4133	21.0654	517.2557	22078.6724	25.9205	9.8100	24.148
L23	41.9581	52.6659	10896.2084	14.4133	21.0654	517.2557	22078.6724	25.9205	9.8100	24.148
	43.2005	54.2357	11899.8996	14.8429	21.6871	548.7099	24112.4228	26.6932	10.1316	24.939
L24	43.2005	54.2357	11899.8996	14.8429	21.6871	548.7099	24112.4228	26.6932	10.1316	24.939
	44.4429	55.8055	12963.4082	15.2725	22.3087	581.0925	26267.3796	27.4658	10.4532	25.731
L25	44.4429	55.8055	12963.4082	15.2725	22.3087	581.0925	26267.3796	27.4658	10.4532	25.731
	45.6853	57.3754	14088.4657	15.7022	22.9303	614.4036	28547.0510	28.2384	10.7748	26.523
L26	45.6853	57.3754	14088.4657	15.7022	22.9303	614.4036	28547.0510	28.2384	10.7748	26.523
	46.2866	58.1352	14655.6122	15.9101	23.2312	630.8595	29696.2437	28.6124	10.9305	26.906
L27	46.2866	58.1352	14655.6122	15.9101	23.2312	630.8595	29696.2437	28.6124	10.9305	26.906
	46.3487	58.2136	14715.0544	15.9316	23.2623	632.5719	29816.6896	28.6510	10.9466	26.945
L28	46.3487	58.2136	14715.0544	15.9316	23.2623	632.5719	29816.6896	28.6510	10.9466	26.945
	47.5911	59.7835	15937.8928	16.3612	23.8839	667.3071	32294.4918	29.4236	11.2682	27.737
L29	47.5911	59.7835	15937.8928	16.3612	23.8839	667.3071	32294.4918	29.4236	11.2682	27.737
	49.6411	62.3737	18100.5493	17.0701	24.9096	726.6500	36676.6202	30.6984	11.7988	29.043
L30	48.7896	63.7278	16645.8031	16.1949	23.6595	703.5582	33728.9099	31.3649	11.0683	25.299
	49.0382	66.3224	18762.8264	16.8542	24.6135	762.2986	38018.5731	32.6419	11.5619	26.427
L31	49.0382	66.3224	18762.8264	16.8542	24.6135	762.2986	38018.5731	32.6419	11.5619	26.427
	49.8039	67.3643	19661.0539	17.1190	24.9966	786.5494	39838.6255	33.1546	11.7601	26.88
L32	49.8039	67.3643	19661.0539	17.1190	24.9966	786.5494	39838.6255	33.1546	11.7601	26.88
	49.8661	67.4488	19735.1943	17.1405	25.0277	788.5345	39988.8541	33.1963	11.7762	26.917
L33	49.8661	67.4488	19735.1943	17.1405	25.0277	788.5345	39988.8541	33.1963	11.7762	26.917
	51.1090	69.1402	21257.4050	17.5703	25.6496	828.7613	43073.2657	34.0287	12.0980	27.652
L34	51.1090	69.1402	21257.4050	17.5703	25.6496	828.7613	43073.2657	34.0287	12.0980	27.652
	52.3520	70.8316	22855.9436	18.0001	26.2715	869.9889	46312.3382	34.8612	12.4197	28.388
L35	52.3520	70.8316	22855.9436	18.0001	26.2715	869.9889	46312.3382	34.8612	12.4197	28.388
	53.5950	72.5230	24532.6772	18.4300	26.8935	912.2173	49709.8552	35.6936	12.7415	29.123
L36	53.5950	72.5230	24532.6772	18.4300	26.8935	912.2173	49709.8552	35.6936	12.7415	29.123
	53.9679	73.0304	25051.224	18.5589	27.0800	925.0809	50760.572	35.9433	12.8380	29.344

Section	Tip Dia. in	Area in^2	I in^4	r in	C in	I/C in^3	J in^4	It/Q in^2	w in	w/t
			5				5			
L37	53.9679	73.0304	25051.2245	18.5589	27.0800	925.0809	50760.5725	35.9433	12.8380	29.344
	54.0300	73.1150	25138.3531	18.5804	27.1111	927.2336	50937.1188	35.9850	12.8541	29.381
L38	54.0300	73.1150	25138.3531	18.5804	27.1111	927.2336	50937.1188	35.9850	12.8541	29.381
	54.1543	73.2841	25313.2160	18.6234	27.1733	931.5465	51291.4383	36.0682	12.8863	29.454
L39	54.1543	73.2841	25313.2160	18.6234	27.1733	931.5465	51291.4383	36.0682	12.8863	29.454
	54.2165	73.3687	25400.9507	18.6449	27.2044	933.7067	51469.2126	36.1098	12.9024	29.491
L40	54.2165	73.3687	25400.9507	18.6449	27.2044	933.7067	51469.2126	36.1098	12.9024	29.491
	55.4595	75.0600	27198.4779	19.0747	27.8263	977.4363	55111.4902	36.9423	13.2241	30.227
L41	55.4595	75.0600	27198.4779	19.0747	27.8263	977.4363	55111.4902	36.9423	13.2241	30.227
	56.7025	76.7514	29078.8683	19.5045	28.4483	1022.1665	58921.6708	37.7747	13.5459	30.962
L42	56.7025	76.7514	29078.8683	19.5045	28.4483	1022.1665	58921.6708	37.7747	13.5459	30.962
	57.8211	78.2737	30843.6108	19.8914	29.0080	1063.2795	62497.5176	38.5239	13.8355	31.624

Tower Elevation ft	Gusset Area (per face) ft^2	Gusset Thickness in	Gusset Grade	Adjust. Factor A_f	Adjust. Factor A_r	Weight Mult.	Double Angle Stitch Bolt Spacing Diagonals in	Double Angle Stitch Bolt Spacing Horizontals in	Double Angle Stitch Bolt Spacing Redundants in
L1 160.00-155.00				1	1	1			
L2 155.00-150.00				1	1	1			
L3 150.00-145.00				1	1	1			
L4 145.00-140.00				1	1	1			
L5 140.00-135.00				1	1	1			
L6 135.00-130.00				1	1	1			
L7 130.00-125.00				1	1	1			
L8 125.00-120.00				1	1	1			
L9 120.00-111.33				1	1	1			
L10 111.33-111.00				1	1	1			
L11 111.00-106.00				1	1	1			
L12 106.00-101.00				1	1	1			
L13 101.00-96.00				1	1	1			
L14 96.00-91.00				1	1	1			
L15 91.00-86.00				1	1	1			
L16 86.00-85.75				1	1	0.97389			
L17 85.75-81.00				1	1	0.976446			
L18 81.00-80.75				1	1	1			
L19 80.75-80.50				1	1	1			

Tower Elevation ft	Gusset Area (per face) ft^2	Gusset Thickness in	Gusset Grade	Adjust. Factor A_f	Adjust. Factor A_r	Weight Mult.	Double Angle Stitch Bolt Spacing Diagonals in	Double Angle Stitch Bolt Spacing Horizontals in	Double Angle Stitch Bolt Spacing Redundants in
L20 80.50-73.25				1	1	1			
L21 73.25-72.25				1	1	1			
L22 72.25-67.25				1	1	1			
L23 67.25-62.25				1	1	1			
L24 62.25-57.25				1	1	1			
L25 57.25-52.25				1	1	1			
L26 52.25-49.83				1	1	1			
L27 49.83-49.58				1	1	1			
L28 49.58-44.58				1	1	1			
L29 44.58-36.33				1	1	1			
L30 36.33-35.33				1	1	1			
L31 35.33-32.25				1	1	1			
L32 32.25-32.00				1	1	1			
L33 32.00-27.00				1	1	1			
L34 27.00-22.00				1	1	1			
L35 22.00-17.00				1	1	1			
L36 17.00-15.50				1	1	1			
L37 15.50-15.25				1	1	1			
L38 15.25-14.75				1	1	1			
L39 14.75-14.50				1	1	1			
L40 14.50-9.50				1	1	1			
L41 9.50-4.50				1	1	1			
L42 4.50-0.00				1	1	1			

Feed Line/Linear Appurtenances - Entered As Round Or Flat

Description	Sector	Exclude From Torque Calculation	Component Type	Placement ft	Total Number	Number Per Row	Start/End Position	Width or Diameter in	Perimeter in	Weight plf
***										
Safety Line 3/8	C	No	Surface Ar (CaAa)	160.00 - 0.00	1	1	0.000 0.000	0.3750		0.22
Climbing Pegs	C	No	Surface Ar (CaAa)	160.00 - 0.00	1	1	-0.100 0.100	1.7500		3.04
***										
***										
Mods										
MK-SR1	C	No	Surface Af (CaAa)	16.75 - 0.00	1	1	0.000 0.000	4.0000	9.5000	0.00
MK-SR1	B	No	Surface Af (CaAa)	16.75 - 0.00	1	1	0.000 0.000	4.0000	9.5000	0.00

Description	Sector	Exclude From Torque Calculation	Component Type	Placement ft	Total Number	Number Per Row	Start/End Position	Width or Diameter in	Perimeter in	Weight plf
MK-SR1	A	No	Surface Af (CaAa)	16.75 - 0.00	1	1	0.000 0.000	4.0000	9.5000	0.00
***										
MK-SR2	B	No	Surface Af (CaAa)	82.00 - 77.00	1	1	0.500 0.500	4.0000	9.5000	0.00
MK-SR2	A	No	Surface Af (CaAa)	82.00 - 77.00	1	1	0.500 0.500	4.0000	9.5000	0.00
MK-SR2	C	No	Surface Af (CaAa)	82.00 - 77.00	1	1	0.500 0.500	4.0000	9.5000	0.00
***										
(Area) CCI-65FP-06010020 (H)	C	No	Surface Af (CaAa)	52.33 - 12.25	1	1	-0.250 -0.250	6.0000	14.0000	0.00
(Area) CCI-65FP-06010020 (H)	B	No	Surface Af (CaAa)	52.33 - 12.25	1	1	-0.250 -0.250	6.0000	14.0000	0.00
(Area) CCI-65FP-06010020 (H)	A	No	Surface Af (CaAa)	52.33 - 12.25	1	1	-0.250 -0.250	6.0000	14.0000	0.00
***										
(Area) CCI-65FP-06010020 (H)	C	No	Surface Af (CaAa)	88.50 - 78.50	1	1	-0.250 -0.250	6.0000	14.0000	0.00
(Area) CCI-65FP-06010020 (H)	B	No	Surface Af (CaAa)	88.50 - 78.50	1	1	-0.250 -0.250	6.0000	14.0000	0.00
(Area) CCI-65FP-06010020 (H)	A	No	Surface Af (CaAa)	88.50 - 78.50	1	1	-0.250 -0.250	6.0000	14.0000	0.00
***										

Feed Line/Linear Appurtenances - Entered As Area

Description	Face or Leg	Allow Shield	Exclude From Torque Calculation	Component Type	Placement ft	Total Number		C_AA_A ft^2/ft	Weight plf
157									
HB158-21U6S24-xxM_TMO(1-5/8)	B	No	No	Inside Pole	157.00 - 0.00	3	No Ice 1/2" Ice 1" Ice	0.00 0.00 0.00	2.50 2.50 2.50
149									
WR-VG82ST-BRDA(5/8)	A	No	No	Inside Pole	149.00 - 0.00	4	No Ice 1/2" Ice 1" Ice	0.00 0.00 0.00	0.31 0.31 0.31
FB-L98B-002-75000(3/8)	A	No	No	Inside Pole	149.00 - 0.00	2	No Ice 1/2" Ice 1" Ice	0.00 0.00 0.00	0.06 0.06 0.06
LCF158-50JA-A0(1-5/8)	A	No	No	Inside Pole	149.00 - 0.00	6	No Ice 1/2" Ice 1" Ice	0.00 0.00 0.00	0.80 0.80 0.80
WR-VG86ST-BRD(3/4)	A	No	No	Inside Pole	149.00 - 0.00	2	No Ice 1/2" Ice 1" Ice	0.00 0.00 0.00	0.58 0.58 0.58
2" Flexible Conduit	A	No	No	Inside Pole	149.00 - 0.00	1	No Ice 1/2" Ice 1" Ice	0.00 0.00 0.00	0.34 0.34 0.34
139									
HB158-U12S24-XXX-LI(1-5/8)	A	No	No	Inside Pole	139.00 - 0.00	2	No Ice 1/2" Ice 1" Ice	0.00 0.00 0.00	3.20 3.20 3.20
129									
CU12PSM9P6XXX (1-1/2)	A	No	No	Inside Pole	129.00 - 0.00	1	No Ice 1/2" Ice 1" Ice	0.00 0.00 0.00	2.35 2.35 2.35
116									
LDF7-50A(1-5/8)	B	No	No	Inside Pole	116.00 - 0.00	6	No Ice 1/2" Ice 1" Ice	0.00 0.00 0.00	0.82 0.82 0.82
HCS 6X12 4AWG(1-5/8)	B	No	No	Inside Pole	116.00 - 0.00	3	No Ice 1/2" Ice	0.00 0.00	2.40 2.40

Description	Face or Leg	Allow Shield	Exclude From Torque Calculation	Component Type	Placement ft	Total Number		C_AA_A ft^2/ft	Weight plf
							1" Ice	0.00	2.40
MLE HYBRID 9POWER/18FIBER RL 2(1-5/8) *** **** *** ***	B	No	No	Inside Pole	116.00 - 0.00	1	No Ice	0.00	1.07
							1/2" Ice	0.00	1.07
							1" Ice	0.00	1.07

Feed Line/Linear Appurtenances Section Areas

Tower Section	Tower Elevation ft	Face	A_R ft^2	A_F ft^2	C_AA_A In Face ft^2	C_AA_A Out Face ft^2	Weight K
L1	160.00-155.00	A	0.000	0.000	0.000	0.000	0.00
		B	0.000	0.000	0.000	0.000	0.01
		C	0.000	0.000	1.062	0.000	0.02
L2	155.00-150.00	A	0.000	0.000	0.000	0.000	0.00
		B	0.000	0.000	0.000	0.000	0.04
		C	0.000	0.000	1.062	0.000	0.02
L3	150.00-145.00	A	0.000	0.000	0.000	0.000	0.03
		B	0.000	0.000	0.000	0.000	0.04
		C	0.000	0.000	1.062	0.000	0.02
L4	145.00-140.00	A	0.000	0.000	0.000	0.000	0.04
		B	0.000	0.000	0.000	0.000	0.04
		C	0.000	0.000	1.062	0.000	0.02
L5	140.00-135.00	A	0.000	0.000	0.000	0.000	0.06
		B	0.000	0.000	0.000	0.000	0.04
		C	0.000	0.000	1.062	0.000	0.02
L6	135.00-130.00	A	0.000	0.000	0.000	0.000	0.07
		B	0.000	0.000	0.000	0.000	0.04
		C	0.000	0.000	1.062	0.000	0.02
L7	130.00-125.00	A	0.000	0.000	0.000	0.000	0.08
		B	0.000	0.000	0.000	0.000	0.04
		C	0.000	0.000	1.062	0.000	0.02
L8	125.00-120.00	A	0.000	0.000	0.000	0.000	0.08
		B	0.000	0.000	0.000	0.000	0.04
		C	0.000	0.000	1.062	0.000	0.02
L9	120.00-111.33	A	0.000	0.000	0.000	0.000	0.14
		B	0.000	0.000	0.000	0.000	0.13
		C	0.000	0.000	1.842	0.000	0.03
L10	111.33-111.00	A	0.000	0.000	0.000	0.000	0.01
		B	0.000	0.000	0.000	0.000	0.01
		C	0.000	0.000	0.070	0.000	0.00
L11	111.00-106.00	A	0.000	0.000	0.000	0.000	0.08
		B	0.000	0.000	0.000	0.000	0.10
		C	0.000	0.000	1.062	0.000	0.02
L12	106.00-101.00	A	0.000	0.000	0.000	0.000	0.08
		B	0.000	0.000	0.000	0.000	0.10
		C	0.000	0.000	1.062	0.000	0.02
L13	101.00-96.00	A	0.000	0.000	0.000	0.000	0.08
		B	0.000	0.000	0.000	0.000	0.10
		C	0.000	0.000	1.062	0.000	0.02
L14	96.00-91.00	A	0.000	0.000	0.000	0.000	0.08
		B	0.000	0.000	0.000	0.000	0.10
		C	0.000	0.000	1.062	0.000	0.02
L15	91.00-86.00	A	0.000	0.000	2.280	0.000	0.08
		B	0.000	0.000	2.280	0.000	0.10
		C	0.000	0.000	3.343	0.000	0.02
L16	86.00-85.75	A	0.000	0.000	0.228	0.000	0.00
		B	0.000	0.000	0.228	0.000	0.01
		C	0.000	0.000	0.281	0.000	0.00

Tower Section	Tower Elevation ft	Face	A_R ft^2	A_F ft^2	C_AA_A In Face ft^2	C_AA_A Out Face ft^2	Weight K
L17	85.75-81.00	A	0.000	0.000	4.885	0.000	0.08
		B	0.000	0.000	4.885	0.000	0.10
		C	0.000	0.000	5.895	0.000	0.02
L18	81.00-80.75	A	0.000	0.000	0.366	0.000	0.00
		B	0.000	0.000	0.366	0.000	0.01
		C	0.000	0.000	0.419	0.000	0.00
L19	80.75-80.50	A	0.000	0.000	0.366	0.000	0.00
		B	0.000	0.000	0.366	0.000	0.01
		C	0.000	0.000	0.419	0.000	0.00
L20	80.50-73.25	A	0.000	0.000	3.759	0.000	0.12
		B	0.000	0.000	3.759	0.000	0.15
		C	0.000	0.000	5.299	0.000	0.02
L21	73.25-72.25	A	0.000	0.000	0.000	0.000	0.02
		B	0.000	0.000	0.000	0.000	0.02
		C	0.000	0.000	0.212	0.000	0.00
L22	72.25-67.25	A	0.000	0.000	0.000	0.000	0.08
		B	0.000	0.000	0.000	0.000	0.10
		C	0.000	0.000	1.062	0.000	0.02
L23	67.25-62.25	A	0.000	0.000	0.000	0.000	0.08
		B	0.000	0.000	0.000	0.000	0.10
		C	0.000	0.000	1.062	0.000	0.02
L24	62.25-57.25	A	0.000	0.000	0.000	0.000	0.08
		B	0.000	0.000	0.000	0.000	0.10
		C	0.000	0.000	1.062	0.000	0.02
L25	57.25-52.25	A	0.000	0.000	0.080	0.000	0.08
		B	0.000	0.000	0.080	0.000	0.10
		C	0.000	0.000	1.143	0.000	0.02
L26	52.25-49.83	A	0.000	0.000	2.420	0.000	0.04
		B	0.000	0.000	2.420	0.000	0.05
		C	0.000	0.000	2.934	0.000	0.01
L27	49.83-49.58	A	0.000	0.000	0.250	0.000	0.00
		B	0.000	0.000	0.250	0.000	0.01
		C	0.000	0.000	0.303	0.000	0.00
L28	49.58-44.58	A	0.000	0.000	5.000	0.000	0.08
		B	0.000	0.000	5.000	0.000	0.10
		C	0.000	0.000	6.062	0.000	0.02
L29	44.58-36.33	A	0.000	0.000	8.250	0.000	0.14
		B	0.000	0.000	8.250	0.000	0.17
		C	0.000	0.000	10.003	0.000	0.03
L30	36.33-35.33	A	0.000	0.000	1.000	0.000	0.02
		B	0.000	0.000	1.000	0.000	0.02
		C	0.000	0.000	1.212	0.000	0.00
L31	35.33-32.25	A	0.000	0.000	3.080	0.000	0.05
		B	0.000	0.000	3.080	0.000	0.06
		C	0.000	0.000	3.735	0.000	0.01
L32	32.25-32.00	A	0.000	0.000	0.250	0.000	0.00
		B	0.000	0.000	0.250	0.000	0.01
		C	0.000	0.000	0.303	0.000	0.00
L33	32.00-27.00	A	0.000	0.000	5.000	0.000	0.08
		B	0.000	0.000	5.000	0.000	0.10
		C	0.000	0.000	6.062	0.000	0.02
L34	27.00-22.00	A	0.000	0.000	5.000	0.000	0.08
		B	0.000	0.000	5.000	0.000	0.10
		C	0.000	0.000	6.062	0.000	0.02
L35	22.00-17.00	A	0.000	0.000	5.000	0.000	0.08
		B	0.000	0.000	5.000	0.000	0.10
		C	0.000	0.000	6.062	0.000	0.02
L36	17.00-15.50	A	0.000	0.000	2.333	0.000	0.02
		B	0.000	0.000	2.333	0.000	0.03
		C	0.000	0.000	2.652	0.000	0.00
L37	15.50-15.25	A	0.000	0.000	0.417	0.000	0.00
		B	0.000	0.000	0.417	0.000	0.01
		C	0.000	0.000	0.470	0.000	0.00
L38	15.25-14.75	A	0.000	0.000	0.833	0.000	0.01
		B	0.000	0.000	0.833	0.000	0.01
		C	0.000	0.000	0.940	0.000	0.00
L39	14.75-14.50	A	0.000	0.000	0.417	0.000	0.00
		B	0.000	0.000	0.417	0.000	0.01
		C	0.000	0.000	0.470	0.000	0.00

Tower Section	Tower Elevation ft	Face	A_R ft^2	A_F ft^2	C_AA_A In Face ft^2	C_AA_A Out Face ft^2	Weight K
L40	14.50-9.50	A	0.000	0.000	5.583	0.000	0.08
		B	0.000	0.000	5.583	0.000	0.10
		C	0.000	0.000	6.646	0.000	0.02
L41	9.50-4.50	A	0.000	0.000	3.333	0.000	0.08
		B	0.000	0.000	3.333	0.000	0.10
		C	0.000	0.000	4.396	0.000	0.02
L42	4.50-0.00	A	0.000	0.000	3.000	0.000	0.07
		B	0.000	0.000	3.000	0.000	0.09
		C	0.000	0.000	3.956	0.000	0.01

Feed Line/Linear Appurtenances Section Areas - With Ice

Tower Section	Tower Elevation ft	Face or Leg	Ice Thickness in	A_R ft^2	A_F ft^2	C_AA_A In Face ft^2	C_AA_A Out Face ft^2	Weight K
L1	160.00-155.00	A	0.994	0.000	0.000	0.000	0.000	0.00
		B		0.000	0.000	0.000	0.000	0.01
		C		0.000	0.000	3.050	0.000	0.04
L2	155.00-150.00	A	0.991	0.000	0.000	0.000	0.000	0.00
		B		0.000	0.000	0.000	0.000	0.04
		C		0.000	0.000	3.044	0.000	0.04
L3	150.00-145.00	A	0.987	0.000	0.000	0.000	0.000	0.03
		B		0.000	0.000	0.000	0.000	0.04
		C		0.000	0.000	3.037	0.000	0.04
L4	145.00-140.00	A	0.984	0.000	0.000	0.000	0.000	0.04
		B		0.000	0.000	0.000	0.000	0.04
		C		0.000	0.000	3.030	0.000	0.04
L5	140.00-135.00	A	0.980	0.000	0.000	0.000	0.000	0.06
		B		0.000	0.000	0.000	0.000	0.04
		C		0.000	0.000	3.023	0.000	0.04
L6	135.00-130.00	A	0.977	0.000	0.000	0.000	0.000	0.07
		B		0.000	0.000	0.000	0.000	0.04
		C		0.000	0.000	3.016	0.000	0.04
L7	130.00-125.00	A	0.973	0.000	0.000	0.000	0.000	0.08
		B		0.000	0.000	0.000	0.000	0.04
		C		0.000	0.000	3.008	0.000	0.04
L8	125.00-120.00	A	0.969	0.000	0.000	0.000	0.000	0.08
		B		0.000	0.000	0.000	0.000	0.04
		C		0.000	0.000	3.001	0.000	0.04
L9	120.00-111.33	A	0.964	0.000	0.000	0.000	0.000	0.14
		B		0.000	0.000	0.000	0.000	0.13
		C		0.000	0.000	5.184	0.000	0.07
L10	111.33-111.00	A	0.960	0.000	0.000	0.000	0.000	0.01
		B		0.000	0.000	0.000	0.000	0.01
		C		0.000	0.000	0.197	0.000	0.00
L11	111.00-106.00	A	0.957	0.000	0.000	0.000	0.000	0.08
		B		0.000	0.000	0.000	0.000	0.10
		C		0.000	0.000	2.977	0.000	0.04
L12	106.00-101.00	A	0.953	0.000	0.000	0.000	0.000	0.08
		B		0.000	0.000	0.000	0.000	0.10
		C		0.000	0.000	2.968	0.000	0.04
L13	101.00-96.00	A	0.948	0.000	0.000	0.000	0.000	0.08
		B		0.000	0.000	0.000	0.000	0.10
		C		0.000	0.000	2.959	0.000	0.04
L14	96.00-91.00	A	0.943	0.000	0.000	0.000	0.000	0.08
		B		0.000	0.000	0.000	0.000	0.10
		C		0.000	0.000	2.949	0.000	0.04
L15	91.00-86.00	A	0.938	0.000	0.000	2.532	0.000	0.10
		B		0.000	0.000	2.532	0.000	0.12
		C		0.000	0.000	5.471	0.000	0.06
L16	86.00-85.75	A	0.935	0.000	0.000	0.253	0.000	0.01
		B		0.000	0.000	0.253	0.000	0.01
		C		0.000	0.000	0.400	0.000	0.00
L17	85.75-81.00	A	0.933	0.000	0.000	5.461	0.000	0.11
		B		0.000	0.000	5.461	0.000	0.13
		C		0.000	0.000	8.243	0.000	0.07

Tower Section	Tower Elevation ft	Face or Leg	Ice Thickness in	A_R ft^2	A_F ft^2	C_AA_A In Face ft^2	C_AA_A Out Face ft^2	Weight K
L18	81.00-80.75	A	0.930	0.000	0.000	0.416	0.000	0.01
		B		0.000	0.000	0.416	0.000	0.01
		C		0.000	0.000	0.562	0.000	0.00
L19	80.75-80.50	A	0.929	0.000	0.000	0.416	0.000	0.01
		B		0.000	0.000	0.416	0.000	0.01
		C		0.000	0.000	0.562	0.000	0.00
L20	80.50-73.25	A	0.925	0.000	0.000	4.306	0.000	0.15
		B		0.000	0.000	4.306	0.000	0.18
		C		0.000	0.000	8.529	0.000	0.09
L21	73.25-72.25	A	0.920	0.000	0.000	0.000	0.000	0.02
		B		0.000	0.000	0.000	0.000	0.02
		C		0.000	0.000	0.582	0.000	0.01
L22	72.25-67.25	A	0.916	0.000	0.000	0.000	0.000	0.08
		B		0.000	0.000	0.000	0.000	0.10
		C		0.000	0.000	2.895	0.000	0.04
L23	67.25-62.25	A	0.909	0.000	0.000	0.000	0.000	0.08
		B		0.000	0.000	0.000	0.000	0.10
		C		0.000	0.000	2.881	0.000	0.04
L24	62.25-57.25	A	0.902	0.000	0.000	0.000	0.000	0.08
		B		0.000	0.000	0.000	0.000	0.10
		C		0.000	0.000	2.866	0.000	0.04
L25	57.25-52.25	A	0.894	0.000	0.000	0.094	0.000	0.08
		B		0.000	0.000	0.094	0.000	0.10
		C		0.000	0.000	2.945	0.000	0.04
L26	52.25-49.83	A	0.888	0.000	0.000	2.850	0.000	0.05
		B		0.000	0.000	2.850	0.000	0.06
		C		0.000	0.000	4.223	0.000	0.03
L27	49.83-49.58	A	0.886	0.000	0.000	0.294	0.000	0.01
		B		0.000	0.000	0.294	0.000	0.01
		C		0.000	0.000	0.436	0.000	0.00
L28	49.58-44.58	A	0.881	0.000	0.000	5.881	0.000	0.11
		B		0.000	0.000	5.881	0.000	0.13
		C		0.000	0.000	8.705	0.000	0.07
L29	44.58-36.33	A	0.867	0.000	0.000	9.681	0.000	0.18
		B		0.000	0.000	9.681	0.000	0.22
		C		0.000	0.000	14.297	0.000	0.11
L30	36.33-35.33	A	0.857	0.000	0.000	1.173	0.000	0.02
		B		0.000	0.000	1.173	0.000	0.03
		C		0.000	0.000	1.733	0.000	0.01
L31	35.33-32.25	A	0.852	0.000	0.000	3.605	0.000	0.07
		B		0.000	0.000	3.605	0.000	0.08
		C		0.000	0.000	5.309	0.000	0.04
L32	32.25-32.00	A	0.848	0.000	0.000	0.292	0.000	0.01
		B		0.000	0.000	0.292	0.000	0.01
		C		0.000	0.000	0.430	0.000	0.00
L33	32.00-27.00	A	0.840	0.000	0.000	5.840	0.000	0.11
		B		0.000	0.000	5.840	0.000	0.13
		C		0.000	0.000	8.584	0.000	0.06
L34	27.00-22.00	A	0.825	0.000	0.000	5.825	0.000	0.11
		B		0.000	0.000	5.825	0.000	0.13
		C		0.000	0.000	8.538	0.000	0.06
L35	22.00-17.00	A	0.806	0.000	0.000	5.806	0.000	0.11
		B		0.000	0.000	5.806	0.000	0.13
		C		0.000	0.000	8.482	0.000	0.06
L36	17.00-15.50	A	0.792	0.000	0.000	2.769	0.000	0.04
		B		0.000	0.000	2.769	0.000	0.04
		C		0.000	0.000	3.563	0.000	0.02
L37	15.50-15.25	A	0.787	0.000	0.000	0.495	0.000	0.01
		B		0.000	0.000	0.495	0.000	0.01
		C		0.000	0.000	0.627	0.000	0.00
L38	15.25-14.75	A	0.786	0.000	0.000	0.990	0.000	0.01
		B		0.000	0.000	0.990	0.000	0.01
		C		0.000	0.000	1.254	0.000	0.01
L39	14.75-14.50	A	0.784	0.000	0.000	0.495	0.000	0.01
		B		0.000	0.000	0.495	0.000	0.01
		C		0.000	0.000	0.627	0.000	0.00
L40	14.50-9.50	A	0.768	0.000	0.000	6.697	0.000	0.11
		B		0.000	0.000	6.697	0.000	0.13
		C		0.000	0.000	9.296	0.000	0.06

Tower Section	Tower Elevation ft	Face or Leg	Ice Thickness in	A_R ft^2	A_F ft^2	C_AA_A In Face ft^2	C_AA_A Out Face ft^2	Weight K
L41	9.50-4.50	A	0.728	0.000	0.000	4.061	0.000	0.10
		B		0.000	0.000	4.061	0.000	0.12
		C		0.000	0.000	6.579	0.000	0.05
L42	4.50-0.00	A	0.650	0.000	0.000	3.585	0.000	0.09
		B		0.000	0.000	3.585	0.000	0.11
		C		0.000	0.000	5.710	0.000	0.04

Feed Line Center of Pressure

Section	Elevation ft	CP_X in	CP_Z in	CP_X Ice in	CP_Z Ice in
L1	160.00-155.00	0.0000	1.2393	0.0000	2.2594
L2	155.00-150.00	0.0000	1.2421	0.0000	2.2844
L3	150.00-145.00	0.0000	1.2447	0.0000	2.3069
L4	145.00-140.00	0.0000	1.2471	0.0000	2.3271
L5	140.00-135.00	0.0000	1.2492	0.0000	2.3452
L6	135.00-130.00	0.0000	1.2512	0.0000	2.3614
L7	130.00-125.00	0.0000	1.2530	0.0000	2.3759
L8	125.00-120.00	0.0000	1.2547	0.0000	2.3888
L9	120.00-111.33	0.0000	1.2568	0.0000	2.4041
L10	111.33-111.00	0.0000	1.2587	0.0000	2.4138
L11	111.00-106.00	0.0000	1.2594	0.0000	2.4135
L12	106.00-101.00	0.0000	1.2607	0.0000	2.4215
L13	101.00-96.00	0.0000	1.2618	0.0000	2.4284
L14	96.00-91.00	0.0000	1.2629	0.0000	2.4340
L15	91.00-86.00	0.0000	0.8833	0.0000	1.8248
L16	86.00-85.75	0.0000	0.6847	0.0000	1.4685
L17	85.75-81.00	0.0000	0.6518	0.0000	1.4018
L18	81.00-80.75	0.0000	0.5450	0.0000	1.1847
L19	80.75-80.50	0.0000	0.5455	0.0000	1.1855
L20	80.50-73.25	0.0000	0.8690	0.0000	1.7826
L21	73.25-72.25	0.0000	1.2670	0.0000	2.4487
L22	72.25-67.25	0.0000	1.2675	0.0000	2.4414
L23	67.25-62.25	0.0000	1.2683	0.0000	2.4407
L24	62.25-57.25	0.0000	1.2690	0.0000	2.4387
L25	57.25-52.25	0.0000	1.2538	0.0000	2.4094
L26	52.25-49.83	0.0000	0.7142	0.0000	1.4640
L27	49.83-49.58	0.0000	0.7164	0.0000	1.4668
L28	49.58-44.58	0.0000	0.7207	0.0000	1.4720
L29	44.58-36.33	0.0000	0.7314	0.0000	1.4832
L30	36.33-35.33	0.0000	0.7334	0.0000	1.4878
L31	35.33-32.25	0.0000	0.7366	0.0000	1.4808
L32	32.25-32.00	0.0000	0.7391	0.0000	1.4823
L33	32.00-27.00	0.0000	0.7431	0.0000	1.4843
L34	27.00-22.00	0.0000	0.7506	0.0000	1.4858
L35	22.00-17.00	0.0000	0.7578	0.0000	1.4836
L36	17.00-15.50	0.0000	0.6234	0.0000	1.2164
L37	15.50-15.25	0.0000	0.6027	0.0000	1.1741
L38	15.25-14.75	0.0000	0.6032	0.0000	1.1737
L39	14.75-14.50	0.0000	0.6038	0.0000	1.1734
L40	14.50-9.50	0.0000	0.7343	0.0000	1.3884
L41	9.50-4.50	0.0000	0.8917	0.0000	1.6095
L42	4.50-0.00	0.0000	0.8973	0.0000	1.5366

Note: For pole sections, center of pressure calculations do not consider feed line shielding.

Shielding Factor Ka

Tower Section	Feed Line Record No.	Description	Feed Line Segment Elev.	K_a No Ice	K_a Ice
L1	2	Safety Line 3/8	155.00 - 160.00	1.0000	1.0000
L1	3	Climbing Pegs	155.00 - 160.00	1.0000	1.0000
L2	2	Safety Line 3/8	150.00 - 155.00	1.0000	1.0000
L2	3	Climbing Pegs	150.00 - 155.00	1.0000	1.0000
L3	2	Safety Line 3/8	145.00 - 150.00	1.0000	1.0000
L3	3	Climbing Pegs	145.00 - 150.00	1.0000	1.0000
L4	2	Safety Line 3/8	140.00 - 145.00	1.0000	1.0000
L4	3	Climbing Pegs	140.00 - 145.00	1.0000	1.0000
L5	2	Safety Line 3/8	135.00 - 140.00	1.0000	1.0000
L5	3	Climbing Pegs	135.00 - 140.00	1.0000	1.0000
L6	2	Safety Line 3/8	130.00 - 135.00	1.0000	1.0000
L6	3	Climbing Pegs	130.00 - 135.00	1.0000	1.0000
L7	2	Safety Line 3/8	125.00 - 130.00	1.0000	1.0000
L7	3	Climbing Pegs	125.00 - 130.00	1.0000	1.0000
L8	2	Safety Line 3/8	120.00 - 125.00	1.0000	1.0000
L8	3	Climbing Pegs	120.00 - 125.00	1.0000	1.0000
L9	2	Safety Line 3/8	111.33 - 120.00	1.0000	1.0000
L9	3	Climbing Pegs	111.33 - 120.00	1.0000	1.0000
L10	2	Safety Line 3/8	111.00 - 111.33	1.0000	1.0000
L10	3	Climbing Pegs	111.00 - 111.33	1.0000	1.0000
L11	2	Safety Line 3/8	106.00 - 111.00	1.0000	1.0000
L11	3	Climbing Pegs	106.00 - 111.00	1.0000	1.0000
L12	2	Safety Line 3/8	101.00 - 106.00	1.0000	1.0000
L12	3	Climbing Pegs	101.00 - 106.00	1.0000	1.0000
L13	2	Safety Line 3/8	96.00 - 101.00	1.0000	1.0000
L13	3	Climbing Pegs	96.00 - 101.00	1.0000	1.0000
L14	2	Safety Line 3/8	91.00 - 96.00	1.0000	1.0000
L14	3	Climbing Pegs	91.00 - 96.00	1.0000	1.0000
L15	2	Safety Line 3/8	86.00 - 91.00	1.0000	1.0000
L15	3	Climbing Pegs	86.00 - 91.00	1.0000	1.0000
L15	40	(Area) CCI-65FP-06010020 (H)	86.00 - 88.50	1.0000	1.0000
L15	41	(Area) CCI-65FP-06010020 (H)	86.00 - 88.50	1.0000	1.0000
L15	42	(Area) CCI-65FP-06010020 (H)	86.00 - 88.50	1.0000	1.0000
L16	2	Safety Line 3/8	85.75 - 86.00	1.0000	1.0000

Tower Section	Feed Line Record No.	Description	Feed Line Segment Elev.	K_a No Ice	K_a Ice
L16	3	Climbing Pegs	85.75 - 86.00	1.0000	1.0000
L16	40	(Area) CCI-65FP-06010020 (H)	85.75 - 86.00	1.0000	1.0000
L16	41	(Area) CCI-65FP-06010020 (H)	85.75 - 86.00	1.0000	1.0000
L16	42	(Area) CCI-65FP-06010020 (H)	85.75 - 86.00	1.0000	1.0000
L17	2	Safety Line 3/8	81.00 - 85.75	1.0000	1.0000
L17	3	Climbing Pegs	81.00 - 85.75	1.0000	1.0000
L17	32	MK-SR2	81.00 - 82.00	1.0000	1.0000
L17	33	MK-SR2	81.00 - 82.00	1.0000	1.0000
L17	34	MK-SR2	81.00 - 82.00	1.0000	1.0000
L17	40	(Area) CCI-65FP-06010020 (H)	81.00 - 85.75	1.0000	1.0000
L17	41	(Area) CCI-65FP-06010020 (H)	81.00 - 85.75	1.0000	1.0000
L17	42	(Area) CCI-65FP-06010020 (H)	81.00 - 85.75	1.0000	1.0000
L18	2	Safety Line 3/8	80.75 - 81.00	1.0000	1.0000
L18	3	Climbing Pegs	80.75 - 81.00	1.0000	1.0000
L18	32	MK-SR2	80.75 - 81.00	1.0000	1.0000
L18	33	MK-SR2	80.75 - 81.00	1.0000	1.0000
L18	34	MK-SR2	80.75 - 81.00	1.0000	1.0000
L18	40	(Area) CCI-65FP-06010020 (H)	80.75 - 81.00	1.0000	1.0000
L18	41	(Area) CCI-65FP-06010020 (H)	80.75 - 81.00	1.0000	1.0000
L18	42	(Area) CCI-65FP-06010020 (H)	80.75 - 81.00	1.0000	1.0000
L19	2	Safety Line 3/8	80.50 - 80.75	1.0000	1.0000
L19	3	Climbing Pegs	80.50 - 80.75	1.0000	1.0000
L19	32	MK-SR2	80.50 - 80.75	1.0000	1.0000
L19	33	MK-SR2	80.50 - 80.75	1.0000	1.0000
L19	34	MK-SR2	80.50 - 80.75	1.0000	1.0000
L19	40	(Area) CCI-65FP-06010020 (H)	80.50 - 80.75	1.0000	1.0000
L19	41	(Area) CCI-65FP-06010020 (H)	80.50 - 80.75	1.0000	1.0000
L19	42	(Area) CCI-65FP-06010020 (H)	80.50 - 80.75	1.0000	1.0000
L20	2	Safety Line 3/8	73.25 - 80.50	1.0000	1.0000
L20	3	Climbing Pegs	73.25 - 80.50	1.0000	1.0000
L20	32	MK-SR2	77.00 - 80.50	1.0000	1.0000
L20	33	MK-SR2	77.00 - 80.50	1.0000	1.0000
L20	34	MK-SR2	77.00 - 80.50	1.0000	1.0000
L20	40	(Area) CCI-65FP-06010020 (H)	78.50 - 80.50	1.0000	1.0000
L20	41	(Area) CCI-65FP-	78.50 -	1.0000	1.0000

Tower Section	Feed Line Record No.	Description	Feed Line Segment Elev.	K_a No Ice	K_a Ice
		06010020 (H)	80.50		
L20	42	(Area) CCI-65FP-06010020 (H)	78.50 - 80.50	1.0000	1.0000
L21	2	Safety Line 3/8	72.25 - 73.25	1.0000	1.0000
L21	3	Climbing Pegs	72.25 - 73.25	1.0000	1.0000
L22	2	Safety Line 3/8	67.25 - 72.25	1.0000	1.0000
L22	3	Climbing Pegs	67.25 - 72.25	1.0000	1.0000
L23	2	Safety Line 3/8	62.25 - 67.25	1.0000	1.0000
L23	3	Climbing Pegs	62.25 - 67.25	1.0000	1.0000
L24	2	Safety Line 3/8	57.25 - 62.25	1.0000	1.0000
L24	3	Climbing Pegs	57.25 - 62.25	1.0000	1.0000
L25	2	Safety Line 3/8	52.25 - 57.25	1.0000	1.0000
L25	3	Climbing Pegs	52.25 - 57.25	1.0000	1.0000
L25	36	(Area) CCI-65FP-06010020 (H)	52.25 - 52.33	1.0000	1.0000
L25	37	(Area) CCI-65FP-06010020 (H)	52.25 - 52.33	1.0000	1.0000
L25	38	(Area) CCI-65FP-06010020 (H)	52.25 - 52.33	1.0000	1.0000
L26	2	Safety Line 3/8	49.83 - 52.25	1.0000	1.0000
L26	3	Climbing Pegs	49.83 - 52.25	1.0000	1.0000
L26	36	(Area) CCI-65FP-06010020 (H)	49.83 - 52.25	1.0000	1.0000
L26	37	(Area) CCI-65FP-06010020 (H)	49.83 - 52.25	1.0000	1.0000
L26	38	(Area) CCI-65FP-06010020 (H)	49.83 - 52.25	1.0000	1.0000
L27	2	Safety Line 3/8	49.58 - 49.83	1.0000	1.0000
L27	3	Climbing Pegs	49.58 - 49.83	1.0000	1.0000
L27	36	(Area) CCI-65FP-06010020 (H)	49.58 - 49.83	1.0000	1.0000
L27	37	(Area) CCI-65FP-06010020 (H)	49.58 - 49.83	1.0000	1.0000
L27	38	(Area) CCI-65FP-06010020 (H)	49.58 - 49.83	1.0000	1.0000
L28	2	Safety Line 3/8	44.58 - 49.58	1.0000	1.0000
L28	3	Climbing Pegs	44.58 - 49.58	1.0000	1.0000
L28	36	(Area) CCI-65FP-06010020 (H)	44.58 - 49.58	1.0000	1.0000
L28	37	(Area) CCI-65FP-06010020 (H)	44.58 - 49.58	1.0000	1.0000
L28	38	(Area) CCI-65FP-06010020 (H)	44.58 - 49.58	1.0000	1.0000
L29	2	Safety Line 3/8	36.33 - 44.58	1.0000	1.0000
L29	3	Climbing Pegs	36.33 - 44.58	1.0000	1.0000
L29	36	(Area) CCI-65FP-06010020 (H)	36.33 - 44.58	1.0000	1.0000
L29	37	(Area) CCI-65FP-06010020 (H)	36.33 - 44.58	1.0000	1.0000
L29	38	(Area) CCI-65FP-06010020 (H)	36.33 - 44.58	1.0000	1.0000

Tower Section	Feed Line Record No.	Description	Feed Line Segment Elev.	K_a No Ice	K_a Ice
L30	2	Safety Line 3/8	35.33 - 36.33	1.0000	1.0000
L30	3	Climbing Pegs	35.33 - 36.33	1.0000	1.0000
L30	36	(Area) CCI-65FP-06010020 (H)	35.33 - 36.33	1.0000	1.0000
L30	37	(Area) CCI-65FP-06010020 (H)	35.33 - 36.33	1.0000	1.0000
L30	38	(Area) CCI-65FP-06010020 (H)	35.33 - 36.33	1.0000	1.0000
L31	2	Safety Line 3/8	32.25 - 35.33	1.0000	1.0000
L31	3	Climbing Pegs	32.25 - 35.33	1.0000	1.0000
L31	36	(Area) CCI-65FP-06010020 (H)	32.25 - 35.33	1.0000	1.0000
L31	37	(Area) CCI-65FP-06010020 (H)	32.25 - 35.33	1.0000	1.0000
L31	38	(Area) CCI-65FP-06010020 (H)	32.25 - 35.33	1.0000	1.0000
L32	2	Safety Line 3/8	32.00 - 32.25	1.0000	1.0000
L32	3	Climbing Pegs	32.00 - 32.25	1.0000	1.0000
L32	36	(Area) CCI-65FP-06010020 (H)	32.00 - 32.25	1.0000	1.0000
L32	37	(Area) CCI-65FP-06010020 (H)	32.00 - 32.25	1.0000	1.0000
L32	38	(Area) CCI-65FP-06010020 (H)	32.00 - 32.25	1.0000	1.0000
L33	2	Safety Line 3/8	27.00 - 32.00	1.0000	1.0000
L33	3	Climbing Pegs	27.00 - 32.00	1.0000	1.0000
L33	36	(Area) CCI-65FP-06010020 (H)	27.00 - 32.00	1.0000	1.0000
L33	37	(Area) CCI-65FP-06010020 (H)	27.00 - 32.00	1.0000	1.0000
L33	38	(Area) CCI-65FP-06010020 (H)	27.00 - 32.00	1.0000	1.0000
L34	2	Safety Line 3/8	22.00 - 27.00	1.0000	1.0000
L34	3	Climbing Pegs	22.00 - 27.00	1.0000	1.0000
L34	36	(Area) CCI-65FP-06010020 (H)	22.00 - 27.00	1.0000	1.0000
L34	37	(Area) CCI-65FP-06010020 (H)	22.00 - 27.00	1.0000	1.0000
L34	38	(Area) CCI-65FP-06010020 (H)	22.00 - 27.00	1.0000	1.0000
L35	2	Safety Line 3/8	17.00 - 22.00	1.0000	1.0000
L35	3	Climbing Pegs	17.00 - 22.00	1.0000	1.0000
L35	36	(Area) CCI-65FP-06010020 (H)	17.00 - 22.00	1.0000	1.0000
L35	37	(Area) CCI-65FP-06010020 (H)	17.00 - 22.00	1.0000	1.0000
L35	38	(Area) CCI-65FP-06010020 (H)	17.00 - 22.00	1.0000	1.0000
L36	2	Safety Line 3/8	15.50 - 17.00	1.0000	1.0000
L36	3	Climbing Pegs	15.50 - 17.00	1.0000	1.0000
L36	28	MK-SR1	15.50 - 16.75	1.0000	1.0000
L36	29	MK-SR1	15.50 - 16.75	1.0000	1.0000
L36	30	MK-SR1	15.50 -	1.0000	1.0000

Tower Section	Feed Line Record No.	Description	Feed Line Segment Elev.	K_a No Ice	K_a Ice
			16.75		
L36	36	(Area) CCI-65FP-06010020 (H)	15.50 - 17.00	1.0000	1.0000
L36	37	(Area) CCI-65FP-06010020 (H)	15.50 - 17.00	1.0000	1.0000
L36	38	(Area) CCI-65FP-06010020 (H)	15.50 - 17.00	1.0000	1.0000
L37	2	Safety Line 3/8	15.25 - 15.50	1.0000	1.0000
L37	3	Climbing Pegs	15.25 - 15.50	1.0000	1.0000
L37	28	MK-SR1	15.25 - 15.50	1.0000	1.0000
L37	29	MK-SR1	15.25 - 15.50	1.0000	1.0000
L37	30	MK-SR1	15.25 - 15.50	1.0000	1.0000
L37	36	(Area) CCI-65FP-06010020 (H)	15.25 - 15.50	1.0000	1.0000
L37	37	(Area) CCI-65FP-06010020 (H)	15.25 - 15.50	1.0000	1.0000
L37	38	(Area) CCI-65FP-06010020 (H)	15.25 - 15.50	1.0000	1.0000
L38	2	Safety Line 3/8	14.75 - 15.25	1.0000	1.0000
L38	3	Climbing Pegs	14.75 - 15.25	1.0000	1.0000
L38	28	MK-SR1	14.75 - 15.25	1.0000	1.0000
L38	29	MK-SR1	14.75 - 15.25	1.0000	1.0000
L38	30	MK-SR1	14.75 - 15.25	1.0000	1.0000
L38	36	(Area) CCI-65FP-06010020 (H)	14.75 - 15.25	1.0000	1.0000
L38	37	(Area) CCI-65FP-06010020 (H)	14.75 - 15.25	1.0000	1.0000
L38	38	(Area) CCI-65FP-06010020 (H)	14.75 - 15.25	1.0000	1.0000
L39	2	Safety Line 3/8	14.50 - 14.75	1.0000	1.0000
L39	3	Climbing Pegs	14.50 - 14.75	1.0000	1.0000
L39	28	MK-SR1	14.50 - 14.75	1.0000	1.0000
L39	29	MK-SR1	14.50 - 14.75	1.0000	1.0000
L39	30	MK-SR1	14.50 - 14.75	1.0000	1.0000
L39	36	(Area) CCI-65FP-06010020 (H)	14.50 - 14.75	1.0000	1.0000
L39	37	(Area) CCI-65FP-06010020 (H)	14.50 - 14.75	1.0000	1.0000
L39	38	(Area) CCI-65FP-06010020 (H)	14.50 - 14.75	1.0000	1.0000
L40	2	Safety Line 3/8	9.50 - 14.50	1.0000	1.0000
L40	3	Climbing Pegs	9.50 - 14.50	1.0000	1.0000
L40	28	MK-SR1	9.50 - 14.50	1.0000	1.0000
L40	29	MK-SR1	9.50 - 14.50	1.0000	1.0000
L40	30	MK-SR1	9.50 - 14.50	1.0000	1.0000
L40	36	(Area) CCI-65FP-06010020 (H)	12.25 - 14.50	1.0000	1.0000
L40	37	(Area) CCI-65FP-06010020 (H)	12.25 - 14.50	1.0000	1.0000
L40	38	(Area) CCI-65FP-06010020 (H)	12.25 - 14.50	1.0000	1.0000
L41	2	Safety Line 3/8	4.50 - 9.50	1.0000	1.0000
L41	3	Climbing Pegs	4.50 - 9.50	1.0000	1.0000
L41	28	MK-SR1	4.50 - 9.50	1.0000	1.0000

Tower Section	Feed Line Record No.	Description	Feed Line Segment Elev.	K_a No Ice	K_a Ice
L41	29	MK-SR1	4.50 - 9.50	1.0000	1.0000
L41	30	MK-SR1	4.50 - 9.50	1.0000	1.0000
L42	2	Safety Line 3/8	0.00 - 4.50	1.0000	1.0000
L42	3	Climbing Pegs	0.00 - 4.50	1.0000	1.0000
L42	28	MK-SR1	0.00 - 4.50	1.0000	1.0000
L42	29	MK-SR1	0.00 - 4.50	1.0000	1.0000
L42	30	MK-SR1	0.00 - 4.50	1.0000	1.0000

Effective Width of Flat Linear Attachments / Feed Lines

Tower Section	Attachment Record No.	Description	Attachment Segment Elev.	Ratio Calculation Method	Effective Width Ratio
L15	40	(Area) CCI-65FP-06010020 (H)	86.00 - 88.50	Auto	0.0000
L15	41	(Area) CCI-65FP-06010020 (H)	86.00 - 88.50	Auto	0.0000
L15	42	(Area) CCI-65FP-06010020 (H)	86.00 - 88.50	Auto	0.0000
L16	40	(Area) CCI-65FP-06010020 (H)	85.75 - 86.00	Auto	0.0000
L16	41	(Area) CCI-65FP-06010020 (H)	85.75 - 86.00	Auto	0.0000
L16	42	(Area) CCI-65FP-06010020 (H)	85.75 - 86.00	Auto	0.0000
L17	32	MK-SR2	81.00 - 82.00	Auto	0.0000
L17	33	MK-SR2	81.00 - 82.00	Auto	0.0000
L17	34	MK-SR2	81.00 - 82.00	Auto	0.0000
L17	40	(Area) CCI-65FP-06010020 (H)	81.00 - 85.75	Auto	0.0000
L17	41	(Area) CCI-65FP-06010020 (H)	81.00 - 85.75	Auto	0.0000
L17	42	(Area) CCI-65FP-06010020 (H)	81.00 - 85.75	Auto	0.0000
L18	32	MK-SR2	80.75 - 81.00	Auto	0.0000
L18	33	MK-SR2	80.75 - 81.00	Auto	0.0000
L18	34	MK-SR2	80.75 - 81.00	Auto	0.0000
L18	40	(Area) CCI-65FP-06010020 (H)	80.75 - 81.00	Auto	0.0000
L18	41	(Area) CCI-65FP-06010020 (H)	80.75 - 81.00	Auto	0.0000
L18	42	(Area) CCI-65FP-06010020 (H)	80.75 - 81.00	Auto	0.0000
L19	32	MK-SR2	80.50 - 80.75	Auto	0.0000
L19	33	MK-SR2	80.50 - 80.75	Auto	0.0000
L19	34	MK-SR2	80.50 - 80.75	Auto	0.0000
L19	40	(Area) CCI-65FP-06010020 (H)	80.50 - 80.75	Auto	0.0000
L19	41	(Area) CCI-65FP-06010020 (H)	80.50 - 80.75	Auto	0.0000
L19	42	(Area) CCI-65FP-	80.50 -	Auto	0.0000

Tower Section	Attachment Record No.	Description	Attachment Segment Elev.	Ratio Calculation Method	Effective Width Ratio
		06010020 (H)	80.75		
L20	32	MK-SR2	77.00 - 80.50	Auto	0.0000
L20	33	MK-SR2	77.00 - 80.50	Auto	0.0000
L20	34	MK-SR2	77.00 - 80.50	Auto	0.0000
L20	40	(Area) CCI-65FP-06010020 (H)	78.50 - 80.50	Auto	0.0000
L20	41	(Area) CCI-65FP-06010020 (H)	78.50 - 80.50	Auto	0.0000
L20	42	(Area) CCI-65FP-06010020 (H)	78.50 - 80.50	Auto	0.0000
L25	36	(Area) CCI-65FP-06010020 (H)	52.25 - 52.33	Auto	0.0000
L25	37	(Area) CCI-65FP-06010020 (H)	52.25 - 52.33	Auto	0.0000
L25	38	(Area) CCI-65FP-06010020 (H)	52.25 - 52.33	Auto	0.0000
L26	36	(Area) CCI-65FP-06010020 (H)	49.83 - 52.25	Auto	0.0000
L26	37	(Area) CCI-65FP-06010020 (H)	49.83 - 52.25	Auto	0.0000
L26	38	(Area) CCI-65FP-06010020 (H)	49.83 - 52.25	Auto	0.0000
L27	36	(Area) CCI-65FP-06010020 (H)	49.58 - 49.83	Auto	0.0000
L27	37	(Area) CCI-65FP-06010020 (H)	49.58 - 49.83	Auto	0.0000
L27	38	(Area) CCI-65FP-06010020 (H)	49.58 - 49.83	Auto	0.0000
L28	36	(Area) CCI-65FP-06010020 (H)	44.58 - 49.58	Auto	0.0000
L28	37	(Area) CCI-65FP-06010020 (H)	44.58 - 49.58	Auto	0.0000
L28	38	(Area) CCI-65FP-06010020 (H)	44.58 - 49.58	Auto	0.0000
L29	36	(Area) CCI-65FP-06010020 (H)	36.33 - 44.58	Auto	0.0000
L29	37	(Area) CCI-65FP-06010020 (H)	36.33 - 44.58	Auto	0.0000
L29	38	(Area) CCI-65FP-06010020 (H)	36.33 - 44.58	Auto	0.0000
L30	36	(Area) CCI-65FP-06010020 (H)	35.33 - 36.33	Auto	0.0000
L30	37	(Area) CCI-65FP-06010020 (H)	35.33 - 36.33	Auto	0.0000
L30	38	(Area) CCI-65FP-06010020 (H)	35.33 - 36.33	Auto	0.0000
L31	36	(Area) CCI-65FP-06010020 (H)	32.25 - 35.33	Auto	0.0000
L31	37	(Area) CCI-65FP-06010020 (H)	32.25 - 35.33	Auto	0.0000
L31	38	(Area) CCI-65FP-06010020 (H)	32.25 - 35.33	Auto	0.0000
L32	36	(Area) CCI-65FP-06010020 (H)	32.00 - 32.25	Auto	0.0000
L32	37	(Area) CCI-65FP-06010020 (H)	32.00 - 32.25	Auto	0.0000
L32	38	(Area) CCI-65FP-06010020 (H)	32.00 - 32.25	Auto	0.0000
L33	36	(Area) CCI-65FP-06010020 (H)	27.00 - 32.00	Auto	0.0000
L33	37	(Area) CCI-65FP-06010020 (H)	27.00 - 32.00	Auto	0.0000
L33	38	(Area) CCI-65FP-06010020 (H)	27.00 - 32.00	Auto	0.0000
L34	36	(Area) CCI-65FP-	22.00 -	Auto	0.0000

Tower Section	Attachment Record No.	Description	Attachment Segment Elev.	Ratio Calculation Method	Effective Width Ratio
		06010020 (H)	27.00		
L34	37	(Area) CCI-65FP-06010020 (H)	22.00 - 27.00	Auto	0.0000
L34	38	(Area) CCI-65FP-06010020 (H)	22.00 - 27.00	Auto	0.0000
L35	36	(Area) CCI-65FP-06010020 (H)	17.00 - 22.00	Auto	0.0000
L35	37	(Area) CCI-65FP-06010020 (H)	17.00 - 22.00	Auto	0.0000
L35	38	(Area) CCI-65FP-06010020 (H)	17.00 - 22.00	Auto	0.0000
L36	28	MK-SR1	15.50 - 16.75	Auto	0.0000
L36	29	MK-SR1	15.50 - 16.75	Auto	0.0000
L36	30	MK-SR1	15.50 - 16.75	Auto	0.0000
L36	36	(Area) CCI-65FP-06010020 (H)	15.50 - 17.00	Auto	0.0000
L36	37	(Area) CCI-65FP-06010020 (H)	15.50 - 17.00	Auto	0.0000
L36	38	(Area) CCI-65FP-06010020 (H)	15.50 - 17.00	Auto	0.0000
L37	28	MK-SR1	15.25 - 15.50	Auto	0.0000
L37	29	MK-SR1	15.25 - 15.50	Auto	0.0000
L37	30	MK-SR1	15.25 - 15.50	Auto	0.0000
L37	36	(Area) CCI-65FP-06010020 (H)	15.25 - 15.50	Auto	0.0000
L37	37	(Area) CCI-65FP-06010020 (H)	15.25 - 15.50	Auto	0.0000
L37	38	(Area) CCI-65FP-06010020 (H)	15.25 - 15.50	Auto	0.0000
L38	28	MK-SR1	14.75 - 15.25	Auto	0.0000
L38	29	MK-SR1	14.75 - 15.25	Auto	0.0000
L38	30	MK-SR1	14.75 - 15.25	Auto	0.0000
L38	36	(Area) CCI-65FP-06010020 (H)	14.75 - 15.25	Auto	0.0000
L38	37	(Area) CCI-65FP-06010020 (H)	14.75 - 15.25	Auto	0.0000
L38	38	(Area) CCI-65FP-06010020 (H)	14.75 - 15.25	Auto	0.0000
L39	28	MK-SR1	14.50 - 14.75	Auto	0.0000
L39	29	MK-SR1	14.50 - 14.75	Auto	0.0000
L39	30	MK-SR1	14.50 - 14.75	Auto	0.0000
L39	36	(Area) CCI-65FP-06010020 (H)	14.50 - 14.75	Auto	0.0000
L39	37	(Area) CCI-65FP-06010020 (H)	14.50 - 14.75	Auto	0.0000
L39	38	(Area) CCI-65FP-06010020 (H)	14.50 - 14.75	Auto	0.0000
L40	28	MK-SR1	9.50 - 14.50	Auto	0.0000
L40	29	MK-SR1	9.50 - 14.50	Auto	0.0000
L40	30	MK-SR1	9.50 - 14.50	Auto	0.0000
L40	36	(Area) CCI-65FP-06010020 (H)	12.25 - 14.50	Auto	0.0000
L40	37	(Area) CCI-65FP-06010020 (H)	12.25 - 14.50	Auto	0.0000
L40	38	(Area) CCI-65FP-06010020 (H)	12.25 - 14.50	Auto	0.0000

Tower Section	Attachment Record No.	Description	Attachment Segment Elev.	Ratio Calculation Method	Effective Width Ratio
L41	28	MK-SR1	4.50 - 9.50	Auto	0.0000
L41	29	MK-SR1	4.50 - 9.50	Auto	0.0000
L41	30	MK-SR1	4.50 - 9.50	Auto	0.0000
L42	28	MK-SR1	0.00 - 4.50	Auto	0.0000
L42	29	MK-SR1	0.00 - 4.50	Auto	0.0000
L42	30	MK-SR1	0.00 - 4.50	Auto	0.0000

Discrete Tower Loads

Description	Face or Leg	Offset Type	Offsets: Horz Lateral Vert ft ft ft	Azimuth Adjustment °	Placement ft		C_AA_A Front ft^2	C_AA_A Side ft^2	Weight K
157									
VV-65B-R1_TMO w/ Mount Pipe	A	From Leg	4.00 0.00 1.00	0.0000	157.00	No Ice 1/2" Ice 1" Ice	5.82 6.37 6.94	3.48 4.00 4.54	0.07 0.12 0.19
VV-65B-R1_TMO w/ Mount Pipe	B	From Leg	4.00 0.00 1.00	0.0000	157.00	No Ice 1/2" Ice 1" Ice	5.82 6.37 6.94	3.48 4.00 4.54	0.07 0.12 0.19
VV-65B-R1_TMO w/ Mount Pipe	C	From Leg	4.00 0.00 1.00	0.0000	157.00	No Ice 1/2" Ice 1" Ice	5.82 6.37 6.94	3.48 4.00 4.54	0.07 0.12 0.19
AIR 6419 B41_TMO w/ Mount Pipe	A	From Leg	4.00 0.00 1.00	0.0000	157.00	No Ice 1/2" Ice 1" Ice	6.58 7.06 7.57	3.50 3.90 4.32	0.11 0.16 0.22
AIR 6419 B41_TMO w/ Mount Pipe	B	From Leg	4.00 0.00 1.00	0.0000	157.00	No Ice 1/2" Ice 1" Ice	6.58 7.06 7.57	3.50 3.90 4.32	0.11 0.16 0.22
AIR 6419 B41_TMO w/ Mount Pipe	C	From Leg	4.00 0.00 1.00	0.0000	157.00	No Ice 1/2" Ice 1" Ice	6.58 7.06 7.57	3.50 3.90 4.32	0.11 0.16 0.22
APXVAALL24_43-U-NA20_TMO w/ Mount Pipe	A	From Leg	4.00 0.00 1.00	0.0000	157.00	No Ice 1/2" Ice 1" Ice	14.69 15.46 16.23	6.87 7.55 8.25	0.18 0.31 0.45
APXVAALL24_43-U-NA20_TMO w/ Mount Pipe	B	From Leg	4.00 0.00 1.00	0.0000	157.00	No Ice 1/2" Ice 1" Ice	14.69 15.46 16.23	6.87 7.55 8.25	0.18 0.31 0.45
APXVAALL24_43-U-NA20_TMO w/ Mount Pipe	C	From Leg	4.00 0.00 1.00	0.0000	157.00	No Ice 1/2" Ice 1" Ice	14.69 15.46 16.23	6.87 7.55 8.25	0.18 0.31 0.45
RADIO 4460 B2/B25 B66_TMO	A	From Leg	4.00 0.00 1.00	0.0000	157.00	No Ice 1/2" Ice 1" Ice	2.14 2.32 2.51	1.69 1.85 2.02	0.11 0.13 0.16
RADIO 4460 B2/B25 B66_TMO	B	From Leg	4.00 0.00 1.00	0.0000	157.00	No Ice 1/2" Ice 1" Ice	2.14 2.32 2.51	1.69 1.85 2.02	0.11 0.13 0.16
RADIO 4460 B2/B25 B66_TMO	C	From Leg	4.00 0.00 1.00	0.0000	157.00	No Ice 1/2" Ice 1" Ice	2.14 2.32 2.51	1.69 1.85 2.02	0.11 0.13 0.16

Description	Face or Leg	Offset Type	Offsets: Horz Lateral Vert ft ft ft	Azimuth Adjustment °	Placement ft		C_AA_A Front ft^2	C_AA_A Side ft^2	Weight K
Radio 4480_TMOV2	A	From Leg	4.00 0.00 0.00	0.0000	157.00	No Ice 1/2" Ice 1" Ice	2.88 3.09 3.31	1.40 1.56 1.73	0.08 0.10 0.13
Radio 4480_TMOV2	B	From Leg	4.00 0.00 0.00	0.0000	157.00	No Ice 1/2" Ice 1" Ice	2.88 3.09 3.31	1.40 1.56 1.73	0.08 0.10 0.13
Radio 4480_TMOV2	C	From Leg	4.00 0.00 0.00	0.0000	157.00	No Ice 1/2" Ice 1" Ice	2.88 3.09 3.31	1.40 1.56 1.73	0.08 0.10 0.13
L3x3x1/4" (40" long)	A	From Leg	2.00 0.00 0.00	0.0000	157.00	No Ice 1/2" Ice 1" Ice	1.34 1.59 1.85	1.34 1.59 1.85	0.02 0.03 0.04
L3x3x1/4" (40" long)	B	From Leg	2.00 0.00 0.00	0.0000	157.00	No Ice 1/2" Ice 1" Ice	1.34 1.59 1.85	1.34 1.59 1.85	0.02 0.03 0.04
L3x3x1/4" (40" long)	C	From Leg	2.00 0.00 0.00	0.0000	157.00	No Ice 1/2" Ice 1" Ice	1.34 1.59 1.85	1.34 1.59 1.85	0.02 0.03 0.04
(2) 5' x 2" Pipe Mount	A	From Leg	4.00 0.00 0.00	0.0000	157.00	No Ice 1/2" Ice 1" Ice	1.19 1.50 1.81	1.19 1.50 1.81	0.02 0.03 0.04
(2) 5' x 2" Pipe Mount	B	From Leg	4.00 0.00 0.00	0.0000	157.00	No Ice 1/2" Ice 1" Ice	1.19 1.50 1.81	1.19 1.50 1.81	0.02 0.03 0.04
(2) 5' x 2" Pipe Mount	C	From Leg	4.00 0.00 0.00	0.0000	157.00	No Ice 1/2" Ice 1" Ice	1.19 1.50 1.81	1.19 1.50 1.81	0.02 0.03 0.04
Platform Mount [LP 713-1]	C	None		0.0000	157.00	No Ice 1/2" Ice 1" Ice	32.89 35.76 38.76	32.89 35.76 38.76	1.51 2.23 3.03
149									
HPA-65R-BUU-H6 w/ Mount Pipe	A	From Leg	4.00 0.00 2.00	0.0000	149.00	No Ice 1/2" Ice 1" Ice	9.22 9.98 10.76	6.25 6.96 7.70	0.07 0.14 0.22
HPA-65R-BUU-H6 w/ Mount Pipe	B	From Leg	4.00 0.00 2.00	0.0000	149.00	No Ice 1/2" Ice 1" Ice	9.22 9.98 10.76	6.25 6.96 7.70	0.07 0.14 0.22
HPA-65R-BUU-H6 w/ Mount Pipe	C	From Leg	4.00 0.00 2.00	0.0000	149.00	No Ice 1/2" Ice 1" Ice	9.22 9.98 10.76	6.25 6.96 7.70	0.07 0.14 0.22
EPBQ-654L8H6-L2 w/ Mount Pipe	A	From Leg	4.00 0.00 2.00	0.0000	149.00	No Ice 1/2" Ice 1" Ice	11.09 11.77 12.46	4.69 5.28 5.89	0.11 0.19 0.29
EPBQ-654L8H6-L2 w/ Mount Pipe	B	From Leg	4.00 0.00 2.00	0.0000	149.00	No Ice 1/2" Ice 1" Ice	11.09 11.77 12.46	4.69 5.28 5.89	0.11 0.19 0.29
EPBQ-654L8H6-L2 w/ Mount Pipe	C	From Leg	4.00 0.00 2.00	0.0000	149.00	No Ice 1/2" Ice 1" Ice	11.09 11.77 12.46	4.69 5.28 5.89	0.11 0.19 0.29

Description	Face or Leg	Offset Type	Offsets: Horz Lateral Vert ft ft ft	Azimuth Adjustment °	Placement ft		C_AA_A Front ft^2	C_AA_A Side ft^2	Weight K
7770.00 w/ Mount Pipe	A	From Leg	4.00 0.00 2.00	0.0000	149.00	No Ice 1/2" Ice 1" Ice	3.39 3.75 4.12	2.32 2.66 3.02	0.06 0.10 0.15
7770.00 w/ Mount Pipe	B	From Leg	4.00 0.00 2.00	0.0000	149.00	No Ice 1/2" Ice 1" Ice	3.39 3.75 4.12	2.32 2.66 3.02	0.06 0.10 0.15
7770.00 w/ Mount Pipe	C	From Leg	4.00 0.00 2.00	0.0000	149.00	No Ice 1/2" Ice 1" Ice	3.39 3.75 4.12	2.32 2.66 3.02	0.06 0.10 0.15
(2) LGP21401	A	From Leg	4.00 0.00 0.00	0.0000	149.00	No Ice 1/2" Ice 1" Ice	1.10 1.24 1.38	0.21 0.27 0.35	0.01 0.02 0.03
(2) LGP21401	B	From Leg	4.00 0.00 0.00	0.0000	149.00	No Ice 1/2" Ice 1" Ice	1.10 1.24 1.38	0.21 0.27 0.35	0.01 0.02 0.03
(2) LGP21401	C	From Leg	4.00 0.00 0.00	0.0000	149.00	No Ice 1/2" Ice 1" Ice	1.10 1.24 1.38	0.21 0.27 0.35	0.01 0.02 0.03
RRUS 11 B12	A	From Leg	4.00 0.00 0.00	0.0000	149.00	No Ice 1/2" Ice 1" Ice	2.83 3.04 3.26	1.18 1.33 1.48	0.05 0.07 0.10
RRUS 11 B12	B	From Leg	4.00 0.00 0.00	0.0000	149.00	No Ice 1/2" Ice 1" Ice	2.83 3.04 3.26	1.18 1.33 1.48	0.05 0.07 0.10
RRUS 11 B12	C	From Leg	4.00 0.00 0.00	0.0000	149.00	No Ice 1/2" Ice 1" Ice	2.83 3.04 3.26	1.18 1.33 1.48	0.05 0.07 0.10
RRUS 4449 B5/B12	A	From Leg	4.00 0.00 2.00	0.0000	149.00	No Ice 1/2" Ice 1" Ice	1.97 2.14 2.33	1.41 1.56 1.73	0.07 0.09 0.11
RRUS 4449 B5/B12	B	From Leg	4.00 0.00 2.00	0.0000	149.00	No Ice 1/2" Ice 1" Ice	1.97 2.14 2.33	1.41 1.56 1.73	0.07 0.09 0.11
RRUS 4449 B5/B12	C	From Leg	4.00 0.00 2.00	0.0000	149.00	No Ice 1/2" Ice 1" Ice	1.97 2.14 2.33	1.41 1.56 1.73	0.07 0.09 0.11
RRUS 32 B30	A	From Leg	4.00 0.00 2.00	0.0000	149.00	No Ice 1/2" Ice 1" Ice	2.69 2.91 3.14	1.57 1.76 1.95	0.06 0.08 0.10
RRUS 32 B30	B	From Leg	4.00 0.00 2.00	0.0000	149.00	No Ice 1/2" Ice 1" Ice	2.69 2.91 3.14	1.57 1.76 1.95	0.06 0.08 0.10
RRUS 32 B30	C	From Leg	4.00 0.00 2.00	0.0000	149.00	No Ice 1/2" Ice 1" Ice	2.69 2.91 3.14	1.57 1.76 1.95	0.06 0.08 0.10
RRUS 8843 B2/B66A	A	From Leg	4.00 0.00 2.00	0.0000	149.00	No Ice 1/2" Ice 1" Ice	1.64 1.80 1.97	1.35 1.50 1.65	0.07 0.09 0.11
RRUS 8843 B2/B66A	B	From Leg	4.00	0.0000	149.00	No Ice	1.64	1.35	0.07

Description	Face or Leg	Offset Type	Offsets: Horz Lateral Vert ft ft ft	Azimuth Adjustment °	Placement ft		C_AA_A Front ft^2	C_AA_A Side ft^2	Weight K
			0.00			1/2"	1.80	1.50	0.09
			2.00			Ice	1.97	1.65	0.11
						1" Ice			
RRUS 8843 B2/B66A	C	From Leg	4.00	0.0000	149.00	No Ice	1.64	1.35	0.07
			0.00			1/2"	1.80	1.50	0.09
			2.00			Ice	1.97	1.65	0.11
						1" Ice			
(2) DC6-48-60-18-8F	A	From Leg	4.00	0.0000	149.00	No Ice	0.92	0.92	0.02
			0.00			1/2"	1.46	1.46	0.04
			0.00			Ice	1.64	1.64	0.06
						1" Ice			
DC6-48-60-18-8F	B	From Leg	4.00	0.0000	149.00	No Ice	0.92	0.92	0.02
			0.00			1/2"	1.46	1.46	0.04
			0.00			Ice	1.64	1.64	0.06
						1" Ice			
5' x 2" Pipe Mount	A	From Leg	4.00	0.0000	149.00	No Ice	1.19	1.19	0.02
			0.00			1/2"	1.50	1.50	0.03
			0.00			Ice	1.81	1.81	0.04
						1" Ice			
5' x 2" Pipe Mount	B	From Leg	4.00	0.0000	149.00	No Ice	1.19	1.19	0.02
			0.00			1/2"	1.50	1.50	0.03
			0.00			Ice	1.81	1.81	0.04
						1" Ice			
5' x 2" Pipe Mount	C	From Leg	4.00	0.0000	149.00	No Ice	1.19	1.19	0.02
			0.00			1/2"	1.50	1.50	0.03
			0.00			Ice	1.81	1.81	0.04
						1" Ice			
Platform Mount [LP 713-1]	C	None		0.0000	149.00	No Ice	32.89	32.89	1.51
						1/2"	35.76	35.76	2.23
						Ice	38.76	38.76	3.03
						1" Ice			
139 ***									
(2) MX06FRO860-03	A	From Leg	4.00	0.0000	139.00	No Ice	9.01	6.19	0.08
			0.00			1/2"	9.71	6.86	0.17
			3.00			Ice	10.43	7.54	0.27
						1" Ice			
(2) MX06FRO860-03	B	From Leg	4.00	0.0000	139.00	No Ice	9.01	6.19	0.08
			0.00			1/2"	9.71	6.86	0.17
			3.00			Ice	10.43	7.54	0.27
						1" Ice			
(2) MX06FRO860-03	C	From Leg	4.00	0.0000	139.00	No Ice	9.01	6.19	0.08
			0.00			1/2"	9.71	6.86	0.17
			3.00			Ice	10.43	7.54	0.27
						1" Ice			
MT6413-77A w/ Mount Pipe	A	From Leg	4.00	0.0000	139.00	No Ice	4.00	2.15	0.07
			0.00			1/2"	4.31	2.55	0.10
			3.00			Ice	4.63	2.97	0.14
						1" Ice			
MT6413-77A w/ Mount Pipe	B	From Leg	4.00	0.0000	139.00	No Ice	4.00	2.15	0.07
			0.00			1/2"	4.31	2.55	0.10
			3.00			Ice	4.63	2.97	0.14
						1" Ice			
MT6413-77A w/ Mount Pipe	C	From Leg	4.00	0.0000	139.00	No Ice	4.00	2.15	0.07
			0.00			1/2"	4.31	2.55	0.10
			3.00			Ice	4.63	2.97	0.14
						1" Ice			
RF4439D-25A	A	From Leg	4.00	0.0000	139.00	No Ice	1.87	1.25	0.07
			0.00			1/2"	2.03	1.39	0.09
			3.00			Ice	2.21	1.54	0.11
						1" Ice			
RF4439D-25A	B	From Leg	4.00	0.0000	139.00	No Ice	1.87	1.25	0.07
			0.00			1/2"	2.03	1.39	0.09
			3.00			Ice	2.21	1.54	0.11
						1" Ice			

Description	Face or Leg	Offset Type	Offsets: Horz Lateral Vert ft ft ft	Azimuth Adjustment °	Placement ft		C_AA_A Front ft^2	C_AA_A Side ft^2	Weight K
RF4439D-25A	C	From Leg	4.00 0.00 3.00	0.0000	139.00	No Ice 1/2" Ice 1" Ice	1.87 2.03 2.21	1.25 1.39 1.54	0.07 0.09 0.11
RF4461D-13A	A	From Leg	4.00 0.00 3.00	0.0000	139.00	No Ice 1/2" Ice 1" Ice	1.87 2.03 2.21	1.28 1.42 1.57	0.08 0.10 0.12
RF4461D-13A	B	From Leg	4.00 0.00 3.00	0.0000	139.00	No Ice 1/2" Ice 1" Ice	1.87 2.03 2.21	1.28 1.42 1.57	0.08 0.10 0.12
RF4461D-13A	C	From Leg	4.00 0.00 3.00	0.0000	139.00	No Ice 1/2" Ice 1" Ice	1.87 2.03 2.21	1.28 1.42 1.57	0.08 0.10 0.12
RVZDC-6627-PF-48	A	From Leg	4.00 0.00 3.00	0.0000	139.00	No Ice 1/2" Ice 1" Ice	3.79 4.04 4.30	2.51 2.73 2.95	0.03 0.06 0.10
(5) 6' x 2" Mount Pipe	A	From Leg	4.00 0.00 0.00	0.0000	139.00	No Ice 1/2" Ice 1" Ice	1.43 1.92 2.29	1.43 1.92 2.29	0.02 0.03 0.05
(5) 6' x 2" Mount Pipe	B	From Leg	4.00 0.00 0.00	0.0000	139.00	No Ice 1/2" Ice 1" Ice	1.43 1.92 2.29	1.43 1.92 2.29	0.02 0.03 0.05
(5) 6' x 2" Mount Pipe	C	From Leg	4.00 0.00 0.00	0.0000	139.00	No Ice 1/2" Ice 1" Ice	1.43 1.92 2.29	1.43 1.92 2.29	0.02 0.03 0.05
6' x 3.5" Mount Pipe	A	From Leg	4.00 0.00 0.00	0.0000	139.00	No Ice 1/2" Ice 1" Ice	1.93 2.29 2.67	1.93 2.29 2.67	0.03 0.05 0.06
6' x 3.5" Mount Pipe	B	From Leg	4.00 0.00 0.00	0.0000	139.00	No Ice 1/2" Ice 1" Ice	1.93 2.29 2.67	1.93 2.29 2.67	0.03 0.05 0.06
6' x 3.5" Mount Pipe	C	From Leg	4.00 0.00 0.00	0.0000	139.00	No Ice 1/2" Ice 1" Ice	1.93 2.29 2.67	1.93 2.29 2.67	0.03 0.05 0.06
Platform Mount [LP 713-1]	C	None		0.0000	139.00	No Ice 1/2" Ice 1" Ice	32.89 35.76 38.76	32.89 35.76 38.76	1.51 2.23 3.03
129									
MX08FRO665-21 w/ Mount Pipe	A	From Leg	4.00 0.00 0.00	0.0000	129.00	No Ice 1/2" Ice 1" Ice	8.01 8.52 9.04	4.23 4.69 5.16	0.11 0.19 0.29
MX08FRO665-21 w/ Mount Pipe	B	From Leg	4.00 0.00 0.00	0.0000	129.00	No Ice 1/2" Ice 1" Ice	8.01 8.52 9.04	4.23 4.69 5.16	0.11 0.19 0.29
MX08FRO665-21 w/ Mount Pipe	C	From Leg	4.00 0.00 0.00	0.0000	129.00	No Ice 1/2" Ice 1" Ice	8.01 8.52 9.04	4.23 4.69 5.16	0.11 0.19 0.29
TA08025-B604	A	From Leg	4.00 0.00 4.00	0.0000	129.00	No Ice 1/2" Ice 1" Ice	1.96 2.14 2.32	1.03 1.17 1.31	0.06 0.08 0.10

Description	Face or Leg	Offset Type	Offsets: Horz Lateral Vert ft ft ft	Azimuth Adjustment °	Placement ft		C_AA_A Front ft^2	C_AA_A Side ft^2	Weight K
TA08025-B604	B	From Leg	4.00 0.00 4.00	0.0000	129.00	No Ice 1/2" Ice 1" Ice	1.96 2.14 2.32	1.03 1.17 1.31	0.06 0.08 0.10
TA08025-B604	C	From Leg	4.00 0.00 4.00	0.0000	129.00	No Ice 1/2" Ice 1" Ice	1.96 2.14 2.32	1.03 1.17 1.31	0.06 0.08 0.10
TA08025-B605	A	From Leg	4.00 0.00 4.00	0.0000	129.00	No Ice 1/2" Ice 1" Ice	2.23 2.41 2.60	1.19 1.33 1.48	0.07 0.09 0.12
TA08025-B605	B	From Leg	4.00 0.00 4.00	0.0000	129.00	No Ice 1/2" Ice 1" Ice	2.23 2.41 2.60	1.19 1.33 1.48	0.07 0.09 0.12
TA08025-B605	C	From Leg	4.00 0.00 4.00	0.0000	129.00	No Ice 1/2" Ice 1" Ice	2.23 2.41 2.60	1.19 1.33 1.48	0.07 0.09 0.12
RDIDC-9181-PF-48	C	From Leg	4.00 0.00 1.00	0.0000	129.00	No Ice 1/2" Ice 1" Ice	1.87 2.04 2.21	1.07 1.20 1.35	0.02 0.04 0.06
(2) 8' x 2" Mount Pipe	A	From Leg	4.00 0.00 0.00	0.0000	129.00	No Ice 1/2" Ice 1" Ice	1.90 2.73 3.40	1.90 2.73 3.40	0.03 0.04 0.06
(2) 8' x 2" Mount Pipe	B	From Leg	4.00 0.00 0.00	0.0000	129.00	No Ice 1/2" Ice 1" Ice	1.90 2.73 3.40	1.90 2.73 3.40	0.03 0.04 0.06
(2) 8' x 2" Mount Pipe	C	From Leg	4.00 0.00 0.00	0.0000	129.00	No Ice 1/2" Ice 1" Ice	1.90 2.73 3.40	1.90 2.73 3.40	0.03 0.04 0.06
SNP8HR-396 Platform Mount	C	None		0.0000	129.00	No Ice 1/2" Ice 1" Ice	26.80 32.20 37.60	26.80 32.20 37.60	1.51 1.81 2.11
116									
AIR 32 B2A/B66AA w/ Mount Pipe	A	From Leg	4.00 0.00 2.00	0.0000	116.00	No Ice 1/2" Ice 1" Ice	3.76 4.12 4.48	3.15 3.49 3.84	0.19 0.25 0.32
AIR 32 B2A/B66AA w/ Mount Pipe	B	From Leg	4.00 0.00 2.00	0.0000	116.00	No Ice 1/2" Ice 1" Ice	3.76 4.12 4.48	3.15 3.49 3.84	0.19 0.25 0.32
AIR 32 B2A/B66AA w/ Mount Pipe	C	From Leg	4.00 0.00 2.00	0.0000	116.00	No Ice 1/2" Ice 1" Ice	3.76 4.12 4.48	3.15 3.49 3.84	0.19 0.25 0.32
ERICSSON AIR 21 B2A B4P w/ Mount Pipe	A	From Leg	4.00 0.00 2.00	0.0000	116.00	No Ice 1/2" Ice 1" Ice	3.14 3.45 3.77	2.59 2.88 3.19	0.11 0.16 0.23
ERICSSON AIR 21 B2A B4P w/ Mount Pipe	B	From Leg	4.00 0.00 2.00	0.0000	116.00	No Ice 1/2" Ice 1" Ice	3.14 3.45 3.77	2.59 2.88 3.19	0.11 0.16 0.23
ERICSSON AIR 21 B2A B4P w/ Mount Pipe	C	From Leg	4.00 0.00 2.00	0.0000	116.00	No Ice 1/2" Ice 1" Ice	3.14 3.45 3.77	2.59 2.88 3.19	0.11 0.16 0.23

Description	Face or Leg	Offset Type	Offsets: Horz Lateral Vert ft ft ft	Azimuth Adjustment °	Placement ft		C_AA_A Front ft^2	C_AA_A Side ft^2	Weight K
APXVAARR24_43-U-NA20 w/ Mount Pipe	A	From Leg	4.00 0.00 2.00	0.0000	116.00	No Ice 1/2" Ice 1" Ice	14.69 15.46 16.23	6.87 7.55 8.25	0.19 0.31 0.46
APXVAARR24_43-U-NA20 w/ Mount Pipe	B	From Leg	4.00 0.00 2.00	0.0000	116.00	No Ice 1/2" Ice 1" Ice	14.69 15.46 16.23	6.87 7.55 8.25	0.19 0.31 0.46
APXVAARR24_43-U-NA20 w/ Mount Pipe	C	From Leg	4.00 0.00 2.00	0.0000	116.00	No Ice 1/2" Ice 1" Ice	14.69 15.46 16.23	6.87 7.55 8.25	0.19 0.31 0.46
KRY 112 144/1	A	From Leg	4.00 0.00 0.00	0.0000	116.00	No Ice 1/2" Ice 1" Ice	0.35 0.43 0.51	0.17 0.23 0.30	0.01 0.01 0.02
KRY 112 144/1	B	From Leg	4.00 0.00 0.00	0.0000	116.00	No Ice 1/2" Ice 1" Ice	0.35 0.43 0.51	0.17 0.23 0.30	0.01 0.01 0.02
KRY 112 144/1	C	From Leg	4.00 0.00 0.00	0.0000	116.00	No Ice 1/2" Ice 1" Ice	0.35 0.43 0.51	0.17 0.23 0.30	0.01 0.01 0.02
RADIO 4449 B12/B71	A	From Leg	4.00 0.00 2.00	0.0000	116.00	No Ice 1/2" Ice 1" Ice	1.65 1.81 1.98	1.16 1.30 1.45	0.07 0.09 0.11
RADIO 4449 B12/B71	B	From Leg	4.00 0.00 2.00	0.0000	116.00	No Ice 1/2" Ice 1" Ice	1.65 1.81 1.98	1.16 1.30 1.45	0.07 0.09 0.11
RADIO 4449 B12/B71	C	From Leg	4.00 0.00 2.00	0.0000	116.00	No Ice 1/2" Ice 1" Ice	1.65 1.81 1.98	1.16 1.30 1.45	0.07 0.09 0.11
6' x 2" Mount Pipe	A	From Leg	4.00 0.00 0.00	0.0000	116.00	No Ice 1/2" Ice 1" Ice	1.43 1.92 2.29	1.43 1.92 2.29	0.02 0.03 0.05
6' x 2" Mount Pipe	B	From Leg	4.00 0.00 0.00	0.0000	116.00	No Ice 1/2" Ice 1" Ice	1.43 1.92 2.29	1.43 1.92 2.29	0.02 0.03 0.05
6' x 2" Mount Pipe	C	From Leg	4.00 0.00 0.00	0.0000	116.00	No Ice 1/2" Ice 1" Ice	1.43 1.92 2.29	1.43 1.92 2.29	0.02 0.03 0.05
Miscellaneous [NA 507-1]	C	None		0.0000	116.00	No Ice 1/2" Ice 1" Ice	4.56 6.39 8.18	4.56 6.39 8.18	0.24 0.31 0.40
Platform Mount [LP 712-1]	C	None		0.0000	116.00	No Ice 1/2" Ice 1" Ice	24.56 27.92 31.27	24.56 27.92 31.27	1.33 1.91 2.55
84									
GPS_A	C	From Leg	4.00 0.00 0.00	0.0000	84.00	No Ice 1/2" Ice 1" Ice	0.26 0.32 0.39	0.26 0.32 0.39	0.00 0.00 0.01
Side Arm Mount [4' SO 702-1]	C	From Leg	2.00 0.00 0.00	0.0000	84.00	No Ice 1/2" Ice 1" Ice	0.41 0.49 0.59	0.99 1.38 1.69	0.02 0.03 0.04

Description	Face or Leg	Offset Type	Offsets: Horz Lateral Vert ft ft ft	Azimuth Adjustment °	Placement ft		C_AA_A Front ft^2	C_AA_A Side ft^2	Weight K
40									
GPS-QBW-20N	A	From Leg	1.00 0.00 0.00	0.0000	40.00	No Ice 1/2" Ice 1" Ice	0.13 0.18 0.23	0.13 0.18 0.23	0.00 0.00 0.00
Pipe Mount [PM 601-1]	A	From Leg	1.00 0.00 0.00	0.0000	40.00	No Ice 1/2" Ice 1" Ice	1.32 1.58 1.84	1.32 1.58 1.84	0.07 0.08 0.09
******									

Load Combinations

Comb. No.	Description
1	Dead Only
2	1.2 Dead+1.0 Wind 0 deg - No Ice
3	0.9 Dead+1.0 Wind 0 deg - No Ice
4	1.2 Dead+1.0 Wind 30 deg - No Ice
5	0.9 Dead+1.0 Wind 30 deg - No Ice
6	1.2 Dead+1.0 Wind 60 deg - No Ice
7	0.9 Dead+1.0 Wind 60 deg - No Ice
8	1.2 Dead+1.0 Wind 90 deg - No Ice
9	0.9 Dead+1.0 Wind 90 deg - No Ice
10	1.2 Dead+1.0 Wind 120 deg - No Ice
11	0.9 Dead+1.0 Wind 120 deg - No Ice
12	1.2 Dead+1.0 Wind 150 deg - No Ice
13	0.9 Dead+1.0 Wind 150 deg - No Ice
14	1.2 Dead+1.0 Wind 180 deg - No Ice
15	0.9 Dead+1.0 Wind 180 deg - No Ice
16	1.2 Dead+1.0 Wind 210 deg - No Ice
17	0.9 Dead+1.0 Wind 210 deg - No Ice
18	1.2 Dead+1.0 Wind 240 deg - No Ice
19	0.9 Dead+1.0 Wind 240 deg - No Ice
20	1.2 Dead+1.0 Wind 270 deg - No Ice
21	0.9 Dead+1.0 Wind 270 deg - No Ice
22	1.2 Dead+1.0 Wind 300 deg - No Ice
23	0.9 Dead+1.0 Wind 300 deg - No Ice
24	1.2 Dead+1.0 Wind 330 deg - No Ice
25	0.9 Dead+1.0 Wind 330 deg - No Ice
26	1.2 Dead+1.0 Ice+1.0 Temp
27	1.2 Dead+1.0 Wind 0 deg+1.0 Ice+1.0 Temp
28	1.2 Dead+1.0 Wind 30 deg+1.0 Ice+1.0 Temp
29	1.2 Dead+1.0 Wind 60 deg+1.0 Ice+1.0 Temp
30	1.2 Dead+1.0 Wind 90 deg+1.0 Ice+1.0 Temp
31	1.2 Dead+1.0 Wind 120 deg+1.0 Ice+1.0 Temp
32	1.2 Dead+1.0 Wind 150 deg+1.0 Ice+1.0 Temp
33	1.2 Dead+1.0 Wind 180 deg+1.0 Ice+1.0 Temp
34	1.2 Dead+1.0 Wind 210 deg+1.0 Ice+1.0 Temp
35	1.2 Dead+1.0 Wind 240 deg+1.0 Ice+1.0 Temp
36	1.2 Dead+1.0 Wind 270 deg+1.0 Ice+1.0 Temp
37	1.2 Dead+1.0 Wind 300 deg+1.0 Ice+1.0 Temp
38	1.2 Dead+1.0 Wind 330 deg+1.0 Ice+1.0 Temp
39	Dead+Wind 0 deg - Service
40	Dead+Wind 30 deg - Service
41	Dead+Wind 60 deg - Service
42	Dead+Wind 90 deg - Service
43	Dead+Wind 120 deg - Service
44	Dead+Wind 150 deg - Service
45	Dead+Wind 180 deg - Service
46	Dead+Wind 210 deg - Service
47	Dead+Wind 240 deg - Service

Comb. No.	Description
48	Dead+Wind 270 deg - Service
49	Dead+Wind 300 deg - Service
50	Dead+Wind 330 deg - Service

Maximum Member Forces

Section No.	Elevation ft	Component Type	Condition	Gov. Load Comb.	Axial K	Major Axis Moment kip-ft	Minor Axis Moment kip-ft
L1	160 - 155	Pole	Max Tension	2	0.00	0.00	-0.00
			Max. Compression	26	-7.98	0.00	-0.04
			Max. Mx	8	-3.91	-11.89	-0.02
			Max. My	14	-3.91	0.00	-11.90
			Max. Vy	8	4.75	-11.89	-0.02
			Max. Vx	2	-4.75	-0.00	11.87
			Max. Torque	18			-0.00
L2	155 - 150	Pole	Max Tension	1	0.00	0.00	0.00
			Max. Compression	26	-8.56	0.00	-0.08
			Max. Mx	8	-4.29	-36.53	-0.03
			Max. My	14	-4.29	0.00	-36.56
			Max. Vy	8	5.11	-36.53	-0.03
			Max. Vx	2	-5.11	-0.00	36.49
			Max. Torque	18			-0.00
L3	150 - 145	Pole	Max Tension	1	0.00	0.00	0.00
			Max. Compression	26	-16.53	-0.26	0.32
			Max. Mx	8	-8.11	-84.41	0.11
			Max. My	2	-8.11	-0.09	84.41
			Max. Vy	8	9.73	-84.41	0.11
			Max. Vx	2	-9.73	-0.09	84.41
			Max. Torque	10			0.25
L4	145 - 140	Pole	Max Tension	1	0.00	0.00	0.00
			Max. Compression	26	-17.21	-0.26	0.27
			Max. Mx	8	-8.59	-134.04	0.09
			Max. My	2	-8.59	-0.09	134.02
			Max. Vy	8	10.13	-134.04	0.09
			Max. Vx	2	-10.12	-0.09	134.02
			Max. Torque	10			0.25
L5	140 - 135	Pole	Max Tension	1	0.00	0.00	0.00
			Max. Compression	26	-25.28	-0.26	0.74
			Max. Mx	8	-12.44	-208.89	0.22
			Max. My	2	-12.43	-0.09	209.29
			Max. Vy	20	-14.85	208.68	0.21
			Max. Vx	2	-14.89	-0.09	209.29
			Max. Torque	20			-0.61
L6	135 - 130	Pole	Max Tension	1	0.00	0.00	0.00
			Max. Compression	26	-26.05	-0.26	0.69
			Max. Mx	8	-13.03	-284.10	0.20
			Max. My	2	-13.02	-0.10	284.67
			Max. Vy	20	-15.25	283.90	0.19
			Max. Vx	14	15.28	-0.08	-284.19
			Max. Torque	20			-0.61
L7	130 - 125	Pole	Max Tension	1	0.00	0.00	0.00
			Max. Compression	26	-31.37	0.01	0.49
			Max. Mx	20	-16.36	371.99	0.06
			Max. My	2	-16.36	-0.05	372.70
			Max. Vy	20	-18.05	371.99	0.06
			Max. Vx	14	18.08	0.06	-372.40
			Max. Torque	20			-0.61
L8	125 - 120	Pole	Max Tension	1	0.00	0.00	0.00
			Max. Compression	26	-32.20	0.01	0.43
			Max. Mx	20	-17.03	463.18	-0.01
			Max. My	2	-17.03	-0.11	464.00
			Max. Vy	20	-18.44	463.18	-0.01
			Max. Vx	14	18.47	0.12	-463.74
			Max. Torque	8			0.53
L9	120 - 111.33	Pole	Max Tension	1	0.00	0.00	0.00
			Max. Compression	26	-32.92	0.01	0.39

Section No.	Elevation ft	Component Type	Condition	Gov. Load Comb.	Axial K	Major Axis Moment kip-ft	Minor Axis Moment kip-ft
			Max. Mx	20	-17.62	537.56	-0.07
			Max. My	2	-17.62	-0.15	538.45
			Max. Vy	20	-18.76	537.56	-0.07
			Max. Vx	14	18.79	0.16	-538.24
			Max. Torque	8			0.53
L10	111.33 - 111	Pole	Max Tension	1	0.00	0.00	0.00
			Max. Compression	26	-41.70	0.01	0.33
			Max. Mx	20	-22.79	650.83	-0.15
			Max. My	2	-22.79	-0.20	651.84
			Max. Vy	20	-22.28	650.83	-0.15
			Max. Vx	14	22.31	0.21	-651.68
			Max. Torque	8			0.53
L11	111 - 106	Pole	Max Tension	1	0.00	0.00	0.00
			Max. Compression	26	-42.87	0.01	0.27
			Max. Mx	20	-23.79	763.24	-0.23
			Max. My	2	-23.79	-0.25	764.34
			Max. Vy	20	-22.70	763.24	-0.23
			Max. Vx	14	22.73	0.26	-764.24
			Max. Torque	8			0.53
L12	106 - 101	Pole	Max Tension	1	0.00	0.00	0.00
			Max. Compression	26	-44.06	0.01	0.21
			Max. Mx	20	-24.82	877.71	-0.31
			Max. My	2	-24.82	-0.30	878.93
			Max. Vy	20	-23.11	877.71	-0.31
			Max. Vx	14	23.14	0.32	-878.88
			Max. Torque	8			0.53
L13	101 - 96	Pole	Max Tension	1	0.00	0.00	0.00
			Max. Compression	26	-45.29	0.01	0.15
			Max. Mx	20	-25.89	994.27	-0.39
			Max. My	14	-25.89	0.37	-995.60
			Max. Vy	20	-23.53	994.27	-0.39
			Max. Vx	14	23.56	0.37	-995.60
			Max. Torque	8			0.53
L14	96 - 91	Pole	Max Tension	1	0.00	0.00	0.00
			Max. Compression	26	-46.55	0.01	0.08
			Max. Mx	20	-26.99	1112.90	-0.47
			Max. My	14	-26.99	0.42	-1114.40
			Max. Vy	20	-23.95	1112.90	-0.47
			Max. Vx	14	23.98	0.42	-1114.40
			Max. Torque	8			0.52
L15	91 - 86	Pole	Max Tension	1	0.00	0.00	0.00
			Max. Compression	26	-47.90	0.01	0.01
			Max. Mx	20	-28.12	1233.62	-0.55
			Max. My	14	-28.12	0.48	-1235.28
			Max. Vy	20	-24.37	1233.62	-0.55
			Max. Vx	14	24.39	0.48	-1235.28
			Max. Torque	8			0.52
L16	86 - 85.75	Pole	Max Tension	1	0.00	0.00	0.00
			Max. Compression	26	-47.99	0.01	0.01
			Max. Mx	20	-28.21	1239.72	-0.56
			Max. My	14	-28.20	0.48	-1241.38
			Max. Vy	20	-24.38	1239.72	-0.56
			Max. Vx	14	24.41	0.48	-1241.38
			Max. Torque	8			0.52
L17	85.75 - 81	Pole	Max Tension	1	0.00	0.00	0.00
			Max. Compression	26	-49.75	0.19	-0.16
			Max. Mx	20	-29.64	1356.72	-0.65
			Max. My	14	-29.63	0.57	-1358.54
			Max. Vy	20	-24.87	1356.72	-0.65
			Max. Vx	14	24.90	0.57	-1358.54
			Max. Torque	8			0.52
L18	81 - 80.75	Pole	Max Tension	1	0.00	0.00	0.00
			Max. Compression	26	-49.83	0.19	-0.16
			Max. Mx	20	-29.70	1362.94	-0.65
			Max. My	14	-29.70	0.57	-1364.77
			Max. Vy	20	-24.89	1362.94	-0.65
			Max. Vx	14	24.92	0.57	-1364.77
			Max. Torque	6			0.47
L19	80.75 - 80.5	Pole	Max Tension	1	0.00	0.00	0.00

Section No.	Elevation ft	Component Type	Condition	Gov. Load Comb.	Axial K	Major Axis Moment kip-ft	Minor Axis Moment kip-ft
			Max. Compression	26	-49.90	0.19	-0.17
			Max. Mx	20	-29.76	1369.16	-0.65
			Max. My	14	-29.76	0.57	-1371.00
			Max. Vy	20	-24.91	1369.16	-0.65
			Max. Vx	14	24.94	0.57	-1371.00
			Max. Torque	6			0.47
L20	80.5 - 73.25	Pole	Max Tension	1	0.00	0.00	0.00
			Max. Compression	26	-50.33	0.19	-0.19
			Max. Mx	20	-30.10	1406.60	-0.67
			Max. My	14	-30.10	0.57	-1408.50
			Max. Vy	20	-25.04	1406.60	-0.67
			Max. Vx	14	25.08	0.57	-1408.50
			Max. Torque	6			0.47
L21	73.25 - 72.25	Pole	Max Tension	1	0.00	0.00	0.00
			Max. Compression	26	-53.72	0.19	-0.28
			Max. Mx	20	-32.87	1577.92	-0.73
			Max. My	14	-32.87	0.59	-1580.11
			Max. Vy	20	-25.74	1577.92	-0.73
			Max. Vx	14	25.77	0.59	-1580.11
			Max. Torque	6			0.47
L22	72.25 - 67.25	Pole	Max Tension	1	0.00	0.00	0.00
			Max. Compression	26	-55.28	0.19	-0.35
			Max. Mx	20	-34.25	1707.58	-0.77
			Max. My	14	-34.25	0.60	-1709.98
			Max. Vy	20	-26.16	1707.58	-0.77
			Max. Vx	14	26.19	0.60	-1709.98
			Max. Torque	6			0.47
L23	67.25 - 62.25	Pole	Max Tension	1	0.00	0.00	0.00
			Max. Compression	26	-56.88	0.19	-0.43
			Max. Mx	20	-35.66	1839.34	-0.82
			Max. My	14	-35.66	0.62	-1841.96
			Max. Vy	20	-26.58	1839.34	-0.82
			Max. Vx	14	26.61	0.62	-1841.96
			Max. Torque	6			0.47
L24	62.25 - 57.25	Pole	Max Tension	1	0.00	0.00	0.00
			Max. Compression	26	-58.51	0.19	-0.50
			Max. Mx	20	-37.11	1973.19	-0.87
			Max. My	14	-37.11	0.63	-1976.02
			Max. Vy	20	-26.99	1973.19	-0.87
			Max. Vx	14	27.03	0.63	-1976.02
			Max. Torque	6			0.47
L25	57.25 - 52.25	Pole	Max Tension	1	0.00	0.00	0.00
			Max. Compression	26	-60.18	0.19	-0.58
			Max. Mx	20	-38.59	2109.09	-0.92
			Max. My	14	-38.59	0.64	-2112.13
			Max. Vy	20	-27.40	2109.09	-0.92
			Max. Vx	14	27.44	0.64	-2112.13
			Max. Torque	6			0.47
L26	52.25 - 49.83	Pole	Max Tension	1	0.00	0.00	0.00
			Max. Compression	26	-61.04	0.19	-0.62
			Max. Mx	20	-39.32	2175.60	-0.94
			Max. My	14	-39.32	0.65	-2178.75
			Max. Vy	20	-27.60	2175.60	-0.94
			Max. Vx	14	27.63	0.65	-2178.75
			Max. Torque	6			0.47
L27	49.83 - 49.58	Pole	Max Tension	1	0.00	0.00	0.00
			Max. Compression	26	-61.13	0.19	-0.62
			Max. Mx	20	-39.41	2182.50	-0.94
			Max. My	14	-39.40	0.65	-2185.65
			Max. Vy	20	-27.61	2182.50	-0.94
			Max. Vx	14	27.65	0.65	-2185.65
			Max. Torque	6			0.47

Section No.	Elevation ft	Component Type	Condition	Gov. Load Comb.	Axial K	Major Axis Moment kip-ft	Minor Axis Moment kip-ft
L28	49.58 - 44.58	Pole	Max Tension	1	0.00	0.00	0.00
			Max. Compression	26	-62.94	0.19	-0.70
			Max. Mx	20	-40.93	2321.49	-0.99
			Max. My	14	-40.93	0.66	-2324.86
			Max. Vy	20	-28.01	2321.49	-0.99
			Max. Vx	14	28.05	0.66	-2324.86
			Max. Torque	6			0.47
L29	44.58 - 36.33	Pole	Max Tension	1	0.00	0.00	0.00
			Max. Compression	26	-63.52	0.19	-0.73
			Max. Mx	20	-41.42	2365.82	-1.01
			Max. My	14	-41.42	0.66	-2369.26
			Max. Vy	20	-28.14	2365.82	-1.01
			Max. Vx	14	28.18	0.66	-2369.26
			Max. Torque	6			0.47
L30	36.33 - 35.33	Pole	Max Tension	1	0.00	0.00	0.00
			Max. Compression	26	-68.62	0.19	-0.54
			Max. Mx	20	-45.65	2584.54	-0.86
			Max. My	14	-45.64	0.68	-2588.08
			Max. Vy	20	-28.90	2584.54	-0.86
			Max. Vx	14	28.94	0.68	-2588.08
			Max. Torque	6			0.56
L31	35.33 - 32.25	Pole	Max Tension	1	0.00	0.00	0.00
			Max. Compression	26	-69.83	0.19	-0.59
			Max. Mx	20	-46.69	2673.84	-0.89
			Max. My	14	-46.69	0.69	-2677.51
			Max. Vy	20	-29.12	2673.84	-0.89
			Max. Vx	14	29.16	0.69	-2677.51
			Max. Torque	6			0.56
L32	32.25 - 32	Pole	Max Tension	1	0.00	0.00	0.00
			Max. Compression	26	-69.93	0.19	-0.59
			Max. Mx	20	-46.78	2681.12	-0.89
			Max. My	14	-46.78	0.69	-2684.80
			Max. Vy	20	-29.13	2681.12	-0.89
			Max. Vx	14	29.17	0.69	-2684.80
			Max. Torque	6			0.56
L33	32 - 27	Pole	Max Tension	1	0.00	0.00	0.00
			Max. Compression	26	-71.93	0.19	-0.67
			Max. Mx	20	-48.50	2827.60	-0.95
			Max. My	14	-48.50	0.70	-2831.49
			Max. Vy	20	-29.48	2827.60	-0.95
			Max. Vx	14	29.52	0.70	-2831.49
			Max. Torque	6			0.56
L34	27 - 22	Pole	Max Tension	1	0.00	0.00	0.00
			Max. Compression	26	-73.97	0.19	-0.76
			Max. Mx	20	-50.26	2975.81	-1.00
			Max. My	14	-50.26	0.71	-2979.92
			Max. Vy	20	-29.83	2975.81	-1.00
			Max. Vx	14	29.87	0.71	-2979.92
			Max. Torque	6			0.56
L35	22 - 17	Pole	Max Tension	1	0.00	0.00	0.00
			Max. Compression	26	-76.04	0.19	-0.84
			Max. Mx	20	-52.06	3125.78	-1.05
			Max. My	14	-52.06	0.72	-3130.11
			Max. Vy	20	-30.19	3125.78	-1.05
			Max. Vx	14	30.22	0.72	-3130.11
			Max. Torque	6			0.56
L36	17 - 15.5	Pole	Max Tension	1	0.00	0.00	0.00
			Max. Compression	26	-76.68	0.19	-0.87
			Max. Mx	20	-52.60	3171.12	-1.07
			Max. My	14	-52.60	0.72	-3175.51
			Max. Vy	20	-30.30	3171.12	-1.07
			Max. Vx	14	30.34	0.72	-3175.51
			Max. Torque	6			0.56
L37	15.5 - 15.25	Pole	Max Tension	1	0.00	0.00	0.00
			Max. Compression	26	-76.79	0.19	-0.87

Section No.	Elevation ft	Component Type	Condition	Gov. Load Comb.	Axial K	Major Axis Moment kip-ft	Minor Axis Moment kip-ft
			Max. Mx	20	-52.70	3178.69	-1.07
			Max. My	14	-52.70	0.72	-3183.10
			Max. Vy	20	-30.30	3178.69	-1.07
			Max. Vx	14	30.34	0.72	-3183.10
			Max. Torque	6			0.56
L38	15.25 - 14.75	Pole	Max Tension	1	0.00	0.00	0.00
			Max. Compression	26	-77.00	0.19	-0.88
			Max. Mx	20	-52.88	3193.85	-1.08
			Max. My	14	-52.88	0.72	-3198.27
			Max. Vy	20	-30.34	3193.85	-1.08
			Max. Vx	14	30.38	0.72	-3198.27
			Max. Torque	6			0.56
L39	14.75 - 14.5	Pole	Max Tension	1	0.00	0.00	0.00
			Max. Compression	26	-77.11	0.19	-0.88
			Max. Mx	20	-52.97	3201.44	-1.08
			Max. My	14	-52.97	0.72	-3205.87
			Max. Vy	20	-30.36	3201.44	-1.08
			Max. Vx	14	30.39	0.72	-3205.87
			Max. Torque	6			0.56
L40	14.5 - 9.5	Pole	Max Tension	1	0.00	0.00	0.00
			Max. Compression	26	-79.23	0.19	-0.97
			Max. Mx	20	-54.82	3354.09	-1.14
			Max. My	14	-54.82	0.73	-3358.74
			Max. Vy	20	-30.73	3354.09	-1.14
			Max. Vx	14	30.76	0.73	-3358.74
			Max. Torque	6			0.56
L41	9.5 - 4.5	Pole	Max Tension	1	0.00	0.00	0.00
			Max. Compression	26	-81.34	0.19	-1.05
			Max. Mx	20	-56.70	3508.57	-1.19
			Max. My	14	-56.70	0.74	-3513.43
			Max. Vy	20	-31.09	3508.57	-1.19
			Max. Vx	14	31.13	0.74	-3513.43
			Max. Torque	6			0.56
L42	4.5 - 0	Pole	Max Tension	1	0.00	0.00	0.00
			Max. Compression	26	-83.24	0.19	-1.12
			Max. Mx	20	-58.42	3649.16	-1.25
			Max. My	14	-58.42	0.75	-3654.22
			Max. Vy	20	-31.43	3649.16	-1.25
			Max. Vx	14	31.46	0.75	-3654.22
			Max. Torque	6			0.56

Maximum Reactions

Location	Condition	Gov. Load Comb.	Vertical K	Horizontal, X K	Horizontal, Z K
Pole	Max. Vert	26	83.24	0.00	0.00
	Max. H_x	20	58.43	31.41	-0.00
	Max. H_z	2	58.43	-0.00	31.44
	Max. M_x	2	3653.10	-0.00	31.44
	Max. M_z	8	3649.00	-31.41	0.00
	Max. Torsion	6	0.56	-27.20	15.72
	Min. Vert	7	43.82	-27.20	15.72
	Min. H_x	8	58.43	-31.41	0.00
	Min. H_z	14	58.43	0.00	-31.44
	Min. M_x	14	-3654.22	0.00	-31.44
	Min. M_z	20	-3649.16	31.41	-0.00
	Min. Torsion	20	-0.55	31.41	-0.00

Tower Mast Reaction Summary

Load Combination	Vertical K	$Shear_x$ K	$Shear_z$ K	Overturning Moment, M_x kip-ft	Overturning Moment, M_z kip-ft	Torque kip-ft
Dead Only	48.69	0.00	0.00	0.46	0.06	0.00
1.2 Dead+1.0 Wind 0 deg - No Ice	58.43	0.00	-31.44	-3653.10	-0.60	-0.15
0.9 Dead+1.0 Wind 0 deg - No Ice	43.82	0.00	-31.44	-3603.41	-0.60	-0.15
1.2 Dead+1.0 Wind 30 deg - No Ice	58.43	15.71	-27.23	-3163.94	-1824.88	-0.41
0.9 Dead+1.0 Wind 30 deg - No Ice	43.82	15.71	-27.23	-3120.92	-1800.01	-0.41
1.2 Dead+1.0 Wind 60 deg - No Ice	58.43	27.20	-15.72	-1826.85	-3160.18	-0.56
0.9 Dead+1.0 Wind 60 deg - No Ice	43.82	27.20	-15.72	-1802.07	-3117.10	-0.55
1.2 Dead+1.0 Wind 90 deg - No Ice	58.43	31.41	-0.00	-0.10	-3649.00	-0.55
0.9 Dead+1.0 Wind 90 deg - No Ice	43.82	31.41	-0.00	-0.24	-3599.26	-0.55
1.2 Dead+1.0 Wind 120 deg - No Ice	58.43	27.20	15.72	1826.82	-3159.50	-0.40
0.9 Dead+1.0 Wind 120 deg - No Ice	43.82	27.20	15.72	1801.77	-3116.43	-0.39
1.2 Dead+1.0 Wind 150 deg - No Ice	58.43	15.70	27.23	3164.40	-1823.71	-0.14
0.9 Dead+1.0 Wind 150 deg - No Ice	43.82	15.70	27.23	3121.10	-1798.86	-0.14
1.2 Dead+1.0 Wind 180 deg - No Ice	58.43	-0.00	31.44	3654.22	0.75	0.15
0.9 Dead+1.0 Wind 180 deg - No Ice	43.82	-0.00	31.44	3604.25	0.72	0.15
1.2 Dead+1.0 Wind 210 deg - No Ice	58.43	-15.71	27.23	3165.07	1825.04	0.41
0.9 Dead+1.0 Wind 210 deg - No Ice	43.82	-15.71	27.23	3121.76	1800.12	0.40
1.2 Dead+1.0 Wind 240 deg - No Ice	58.43	-27.20	15.72	1827.99	3160.33	0.55
0.9 Dead+1.0 Wind 240 deg - No Ice	43.82	-27.20	15.72	1802.92	3117.21	0.55
1.2 Dead+1.0 Wind 270 deg - No Ice	58.43	-31.41	0.00	1.25	3649.16	0.55
0.9 Dead+1.0 Wind 270 deg - No Ice	43.82	-31.41	0.00	1.09	3599.38	0.55
1.2 Dead+1.0 Wind 300 deg - No Ice	58.43	-27.20	-15.72	-1825.69	3159.67	0.41
0.9 Dead+1.0 Wind 300 deg - No Ice	43.82	-27.20	-15.72	-1800.93	3116.56	0.40
1.2 Dead+1.0 Wind 330 deg - No Ice	58.43	-15.70	-27.23	-3163.27	1823.88	0.15
0.9 Dead+1.0 Wind 330 deg - No Ice	43.82	-15.70	-27.23	-3120.26	1798.98	0.14
1.2 Dead+1.0 Ice+1.0 Temp	83.24	0.00	0.00	1.12	0.19	0.00
1.2 Dead+1.0 Wind 0 deg+1.0 Ice+1.0 Temp	83.24	-0.00	-7.49	-895.18	0.17	-0.03
1.2 Dead+1.0 Wind 30 deg+1.0 Ice+1.0 Temp	83.24	3.74	-6.49	-775.11	-447.44	-0.11
1.2 Dead+1.0 Wind 60 deg+1.0 Ice+1.0 Temp	83.24	6.48	-3.74	-447.04	-775.10	-0.15
1.2 Dead+1.0 Wind 90 deg+1.0 Ice+1.0 Temp	83.24	7.48	0.00	1.12	-895.01	-0.15
1.2 Dead+1.0 Wind 120 deg+1.0 Ice+1.0 Temp	83.24	6.48	3.75	449.30	-775.06	-0.12
1.2 Dead+1.0 Wind 150 deg+1.0 Ice+1.0 Temp	83.24	3.74	6.49	777.40	-447.37	-0.05
1.2 Dead+1.0 Wind 180 deg+1.0 Ice+1.0 Temp	83.24	0.00	7.49	897.50	0.25	0.03
1.2 Dead+1.0 Wind 210 deg+1.0 Ice+1.0 Temp	83.24	-3.74	6.49	777.44	447.85	0.11

Load Combination	Vertical K	$Shear_x$ K	$Shear_z$ K	Overturning Moment, M_x kip-ft	Overturning Moment, M_z kip-ft	Torque kip-ft
1.2 Dead+1.0 Wind 240 deg+1.0 Ice+1.0 Temp	83.24	-6.48	3.74	449.37	775.51	0.15
1.2 Dead+1.0 Wind 270 deg+1.0 Ice+1.0 Temp	83.24	-7.48	-0.00	1.20	895.43	0.15
1.2 Dead+1.0 Wind 300 deg+1.0 Ice+1.0 Temp	83.24	-6.48	-3.75	-446.97	775.47	0.12
1.2 Dead+1.0 Wind 330 deg+1.0 Ice+1.0 Temp	83.24	-3.74	-6.49	-775.07	447.78	0.05
Dead+Wind 0 deg - Service	48.69	0.00	-7.93	-913.43	-0.10	-0.03
Dead+Wind 30 deg - Service	48.69	3.96	-6.86	-791.07	-456.41	-0.10
Dead+Wind 60 deg - Service	48.69	6.86	-3.96	-456.63	-790.41	-0.15
Dead+Wind 90 deg - Service	48.69	7.92	-0.00	0.30	-912.68	-0.15
Dead+Wind 120 deg - Service	48.69	6.86	3.96	457.27	-790.24	-0.11
Dead+Wind 150 deg - Service	48.69	3.96	6.86	791.84	-456.12	-0.04
Dead+Wind 180 deg - Service	48.69	-0.00	7.93	914.36	0.23	0.03
Dead+Wind 210 deg - Service	48.69	-3.96	6.86	792.01	456.55	0.10
Dead+Wind 240 deg - Service	48.69	-6.86	3.96	457.56	790.54	0.14
Dead+Wind 270 deg - Service	48.69	-7.92	0.00	0.64	912.82	0.15
Dead+Wind 300 deg - Service	48.69	-6.86	-3.96	-456.33	790.38	0.11
Dead+Wind 330 deg - Service	48.69	-3.96	-6.86	-790.90	456.25	0.04

Solution Summary

	Sum of Applied Forces			Sum of Reactions			
Load Comb.	PX K	PY K	PZ K	PX K	PY K	PZ K	% Error
1	0.00	-48.69	0.00	0.00	48.69	0.00	0.000%
2	0.00	-58.43	-31.44	-0.00	58.43	31.44	0.000%
3	0.00	-43.82	-31.44	-0.00	43.82	31.44	0.000%
4	15.71	-58.43	-27.23	-15.71	58.43	27.23	0.000%
5	15.71	-43.82	-27.23	-15.71	43.82	27.23	0.000%
6	27.20	-58.43	-15.72	-27.20	58.43	15.72	0.000%
7	27.20	-43.82	-15.72	-27.20	43.82	15.72	0.000%
8	31.41	-58.43	-0.00	-31.41	58.43	0.00	0.000%
9	31.41	-43.82	-0.00	-31.41	43.82	0.00	0.000%
10	27.20	-58.43	15.72	-27.20	58.43	-15.72	0.000%
11	27.20	-43.82	15.72	-27.20	43.82	-15.72	0.000%
12	15.70	-58.43	27.23	-15.70	58.43	-27.23	0.000%
13	15.70	-43.82	27.23	-15.70	43.82	-27.23	0.000%
14	-0.00	-58.43	31.44	0.00	58.43	-31.44	0.000%
15	-0.00	-43.82	31.44	0.00	43.82	-31.44	0.000%
16	-15.71	-58.43	27.23	15.71	58.43	-27.23	0.000%
17	-15.71	-43.82	27.23	15.71	43.82	-27.23	0.000%
18	-27.20	-58.43	15.72	27.20	58.43	-15.72	0.000%
19	-27.20	-43.82	15.72	27.20	43.82	-15.72	0.000%
20	-31.41	-58.43	0.00	31.41	58.43	-0.00	0.000%
21	-31.41	-43.82	0.00	31.41	43.82	-0.00	0.000%
22	-27.20	-58.43	-15.72	27.20	58.43	15.72	0.000%
23	-27.20	-43.82	-15.72	27.20	43.82	15.72	0.000%
24	-15.70	-58.43	-27.23	15.70	58.43	27.23	0.000%
25	-15.70	-43.82	-27.23	15.70	43.82	27.23	0.000%
26	0.00	-83.24	0.00	0.00	83.24	0.00	0.000%
27	-0.00	-83.24	-7.49	0.00	83.24	7.49	0.000%
28	3.74	-83.24	-6.49	-3.74	83.24	6.49	0.000%
29	6.48	-83.24	-3.74	-6.48	83.24	3.74	0.000%
30	7.48	-83.24	0.00	-7.48	83.24	-0.00	0.000%
31	6.48	-83.24	3.75	-6.48	83.24	-3.75	0.000%
32	3.74	-83.24	6.49	-3.74	83.24	-6.49	0.000%

Load Comb.	Sum of Applied Forces PX K	PY K	PZ K	Sum of Reactions PX K	PY K	PZ K	% Error
33	0.00	-83.24	7.49	-0.00	83.24	-7.49	0.000%
34	-3.74	-83.24	6.49	3.74	83.24	-6.49	0.000%
35	-6.48	-83.24	3.74	6.48	83.24	-3.74	0.000%
36	-7.48	-83.24	-0.00	7.48	83.24	0.00	0.000%
37	-6.48	-83.24	-3.75	6.48	83.24	3.75	0.000%
38	-3.74	-83.24	-6.49	3.74	83.24	6.49	0.000%
39	0.00	-48.69	-7.93	-0.00	48.69	7.93	0.000%
40	3.96	-48.69	-6.86	-3.96	48.69	6.86	0.000%
41	6.86	-48.69	-3.96	-6.86	48.69	3.96	0.000%
42	7.92	-48.69	-0.00	-7.92	48.69	0.00	0.000%
43	6.86	-48.69	3.96	-6.86	48.69	-3.96	0.000%
44	3.96	-48.69	6.86	-3.96	48.69	-6.86	0.000%
45	-0.00	-48.69	7.93	0.00	48.69	-7.93	0.000%
46	-3.96	-48.69	6.86	3.96	48.69	-6.86	0.000%
47	-6.86	-48.69	3.96	6.86	48.69	-3.96	0.000%
48	-7.92	-48.69	0.00	7.92	48.69	-0.00	0.000%
49	-6.86	-48.69	-3.96	6.86	48.69	3.96	0.000%
50	-3.96	-48.69	-6.86	3.96	48.69	6.86	0.000%

Non-Linear Convergence Results

Load Combination	Converged?	Number of Cycles	Displacement Tolerance	Force Tolerance
1	Yes	4	0.00000001	0.00000001
2	Yes	5	0.00000001	0.00044267
3	Yes	5	0.00000001	0.00016446
4	Yes	7	0.00000001	0.00009195
5	Yes	6	0.00000001	0.00048549
6	Yes	7	0.00000001	0.00009313
7	Yes	6	0.00000001	0.00049198
8	Yes	5	0.00000001	0.00052701
9	Yes	5	0.00000001	0.00021596
10	Yes	7	0.00000001	0.00009186
11	Yes	6	0.00000001	0.00048505
12	Yes	7	0.00000001	0.00009257
13	Yes	6	0.00000001	0.00048881
14	Yes	5	0.00000001	0.00044709
15	Yes	5	0.00000001	0.00016725
16	Yes	7	0.00000001	0.00009300
17	Yes	6	0.00000001	0.00049115
18	Yes	7	0.00000001	0.00009179
19	Yes	6	0.00000001	0.00048460
20	Yes	5	0.00000001	0.00051331
21	Yes	5	0.00000001	0.00020812
22	Yes	7	0.00000001	0.00009285
23	Yes	6	0.00000001	0.00049046
24	Yes	7	0.00000001	0.00009218
25	Yes	6	0.00000001	0.00048676
26	Yes	4	0.00000001	0.00000001
27	Yes	6	0.00000001	0.00081782
28	Yes	6	0.00000001	0.00094191
29	Yes	6	0.00000001	0.00094268
30	Yes	6	0.00000001	0.00081685
31	Yes	6	0.00000001	0.00094164
32	Yes	6	0.00000001	0.00094285
33	Yes	6	0.00000001	0.00081810
34	Yes	6	0.00000001	0.00094387
35	Yes	6	0.00000001	0.00094225
36	Yes	6	0.00000001	0.00081715
37	Yes	6	0.00000001	0.00094253
38	Yes	6	0.00000001	0.00094217
39	Yes	5	0.00000001	0.00008805
40	Yes	5	0.00000001	0.00039977
41	Yes	5	0.00000001	0.00041226
42	Yes	5	0.00000001	0.00008972
43	Yes	5	0.00000001	0.00039911

44	Yes	5	0.00000001	0.00040712
45	Yes	5	0.00000001	0.00008811
46	Yes	5	0.00000001	0.00041084
47	Yes	5	0.00000001	0.00039831
48	Yes	5	0.00000001	0.00008965
49	Yes	5	0.00000001	0.00041005
50	Yes	5	0.00000001	0.00040206

Maximum Tower Deflections - Service Wind

Section No.	Elevation ft	Horz. Deflection in	Gov. Load Comb.	Tilt °	Twist °
L1	160 - 155	25.670	45	1.4565	0.0013
L2	155 - 150	24.146	45	1.4554	0.0013
L3	150 - 145	22.626	45	1.4467	0.0013
L4	145 - 140	21.121	45	1.4283	0.0012
L5	140 - 135	19.640	45	1.3995	0.0012
L6	135 - 130	18.194	45	1.3605	0.0010
L7	130 - 125	16.795	45	1.3120	0.0008
L8	125 - 120	15.450	45	1.2557	0.0007
L9	120 - 111.33	14.167	45	1.1926	0.0006
L10	116 - 111	13.191	45	1.1385	0.0005
L11	111 - 106	12.015	45	1.1053	0.0005
L12	106 - 101	10.888	45	1.0464	0.0004
L13	101 - 96	9.824	45	0.9854	0.0004
L14	96 - 91	8.824	45	0.9230	0.0003
L15	91 - 86	7.891	45	0.8598	0.0003
L16	86 - 85.75	7.024	45	0.7961	0.0002
L17	85.75 - 81	6.982	45	0.7940	0.0002
L18	81 - 80.75	6.213	45	0.7524	0.0002
L19	80.75 - 80.5	6.174	45	0.7492	0.0002
L20	80.5 - 73.25	6.135	45	0.7460	0.0002
L21	79 - 72.25	5.903	45	0.7270	0.0002
L22	72.25 - 67.25	4.904	45	0.6813	0.0002
L23	67.25 - 62.25	4.220	45	0.6253	0.0002
L24	62.25 - 57.25	3.595	45	0.5700	0.0002
L25	57.25 - 52.25	3.026	45	0.5154	0.0001
L26	52.25 - 49.83	2.515	45	0.4618	0.0001
L27	49.83 - 49.58	2.287	45	0.4361	0.0001
L28	49.58 - 44.58	2.265	45	0.4335	0.0001
L29	44.58 - 36.33	1.838	45	0.3812	0.0001
L30	43 - 35.33	1.715	45	0.3649	0.0001
L31	35.33 - 32.25	1.160	45	0.3215	0.0001
L32	32.25 - 32	0.962	45	0.2915	0.0001
L33	32 - 27	0.947	45	0.2891	0.0001
L34	27 - 22	0.669	45	0.2413	0.0001
L35	22 - 17	0.441	45	0.1944	0.0000
L36	17 - 15.5	0.262	45	0.1486	0.0000
L37	15.5 - 15.25	0.217	45	0.1352	0.0000
L38	15.25 - 14.75	0.210	45	0.1329	0.0000
L39	14.75 - 14.5	0.196	45	0.1284	0.0000
L40	14.5 - 9.5	0.190	45	0.1262	0.0000
L41	9.5 - 4.5	0.081	45	0.0818	0.0000
L42	4.5 - 0	0.018	45	0.0383	0.0000

Critical Deflections and Radius of Curvature - Service Wind

Elevation ft	Appurtenance	Gov. Load Comb.	Deflection in	Tilt °	Twist °	Radius of Curvature ft
157.00	VV-65B-R1_TMO w/ Mount Pipe	45	24.755	1.4564	0.0013	60566
149.00	HPA-65R-BUU-H6 w/ Mount Pipe	45	22.324	1.4438	0.0013	18834
139.00	(2) MX06FRO860-03	45	19.348	1.3926	0.0011	8032

Elevation ft	Appurtenance	Gov. Load Comb.	Deflection in	Tilt °	Twist °	Radius of Curvature ft
129.00	MX08FRO665-21 w/ Mount Pipe	45	16.521	1.3012	0.0008	5312
116.00	AIR 32 B2A/B66AA w/ Mount Pipe	45	13.191	1.1385	0.0005	5828
84.00	GPS_A	45	6.694	0.7804	0.0002	5851
40.00	GPS-QBW-20N	45	1.489	0.3458	0.0001	9305

Maximum Tower Deflections - Design Wind

Section No.	Elevation ft	Horz. Deflection in	Gov. Load Comb.	Tilt °	Twist °
L1	160 - 155	102.749	14	5.8375	0.0048
L2	155 - 150	96.648	14	5.8327	0.0048
L3	150 - 145	90.567	14	5.7980	0.0048
L4	145 - 140	84.541	14	5.7244	0.0046
L5	140 - 135	78.614	14	5.6094	0.0043
L6	135 - 130	72.827	14	5.4534	0.0037
L7	130 - 125	67.223	14	5.2587	0.0031
L8	125 - 120	61.839	14	5.0327	0.0026
L9	120 - 111.33	56.706	14	4.7794	0.0022
L10	116 - 111	52.796	14	4.5621	0.0020
L11	111 - 106	48.088	14	4.4291	0.0018
L12	106 - 101	43.577	14	4.1929	0.0016
L13	101 - 96	39.318	14	3.9480	0.0014
L14	96 - 91	35.317	14	3.6976	0.0012
L15	91 - 86	31.580	14	3.4439	0.0011
L16	86 - 85.75	28.109	14	3.1886	0.0009
L17	85.75 - 81	27.943	14	3.1800	0.0009
L18	81 - 80.75	24.864	14	3.0131	0.0008
L19	80.75 - 80.5	24.706	14	3.0003	0.0008
L20	80.5 - 73.25	24.549	14	2.9876	0.0008
L21	79 - 72.25	23.623	14	2.9112	0.0008
L22	72.25 - 67.25	19.625	14	2.7281	0.0007
L23	67.25 - 62.25	16.887	14	2.5035	0.0006
L24	62.25 - 57.25	14.382	14	2.2818	0.0006
L25	57.25 - 52.25	12.108	14	2.0632	0.0005
L26	52.25 - 49.83	10.060	14	1.8482	0.0004
L27	49.83 - 49.58	9.150	14	1.7454	0.0004
L28	49.58 - 44.58	9.059	14	1.7349	0.0004
L29	44.58 - 36.33	7.352	14	1.5255	0.0004
L30	43 - 35.33	6.858	14	1.4601	0.0003
L31	35.33 - 32.25	4.638	14	1.2863	0.0003
L32	32.25 - 32	3.847	14	1.1662	0.0003
L33	32 - 27	3.786	14	1.1566	0.0003
L34	27 - 22	2.676	14	0.9651	0.0002
L35	22 - 17	1.764	14	0.7776	0.0002
L36	17 - 15.5	1.046	14	0.5941	0.0001
L37	15.5 - 15.25	0.868	14	0.5404	0.0001
L38	15.25 - 14.75	0.839	14	0.5314	0.0001
L39	14.75 - 14.5	0.785	14	0.5135	0.0001
L40	14.5 - 9.5	0.758	14	0.5045	0.0001
L41	9.5 - 4.5	0.323	14	0.3269	0.0001
L42	4.5 - 0	0.072	14	0.1532	0.0000

Critical Deflections and Radius of Curvature - Design Wind

Elevation ft	Appurtenance	Gov. Load Comb.	Deflection in	Tilt °	Twist °	Radius of Curvature ft
157.00	VV-65B-R1_TMO w/ Mount Pipe	14	99.087	5.8369	0.0049	15452
149.00	HPA-65R-BUU-H6 w/ Mount Pipe	14	89.356	5.7865	0.0048	4797

Elevation ft	Appurtenance	Gov. Load Comb.	Deflection in	Tilt °	Twist °	Radius of Curvature ft
139.00	(2) MX06FRO860-03	14	77.444	5.5814	0.0042	2045
129.00	MX08FRO665-21 w/ Mount Pipe	14	66.128	5.2154	0.0030	1347
116.00	AIR 32 B2A/B66AA w/ Mount Pipe	14	52.796	4.5621	0.0020	1471
84.00	GPS_A	14	26.789	3.1255	0.0009	1467
40.00	GPS-QBW-20N	14	5.954	1.3836	0.0003	2326

Compression Checks

Pole Design Data

Section No.	Elevation ft	Size	L ft	L_u ft	Kl/r	A in^2	P_u K	ϕP_n K	Ratio $\frac{P_u}{\phi P_n}$
L1	160 - 155 (1)	TP20.8009x19.6x0.25	5.00	0.00	0.0	16.5435	-3.91	967.79	0.004
L2	155 - 150 (2)	TP22.0019x20.8009x0.25	5.00	0.00	0.0	17.5103	-4.29	1024.35	0.004
L3	150 - 145 (3)	TP23.2028x22.0019x0.25	5.00	0.00	0.0	18.4770	-8.11	1080.91	0.008
L4	145 - 140 (4)	TP24.4038x23.2028x0.25	5.00	0.00	0.0	19.4438	-8.59	1137.46	0.008
L5	140 - 135 (5)	TP25.6047x24.4038x0.25	5.00	0.00	0.0	20.4106	-12.43	1194.02	0.010
L6	135 - 130 (6)	TP26.8057x25.6047x0.25	5.00	0.00	0.0	21.3773	-13.02	1250.57	0.010
L7	130 - 125 (7)	TP28.0066x26.8057x0.25	5.00	0.00	0.0	22.3441	-16.36	1307.13	0.013
L8	125 - 120 (8)	TP29.2076x28.0066x0.25	5.00	0.00	0.0	23.3108	-17.03	1363.68	0.012
L9	120 - 111.33 (9)	TP31.29x29.2076x0.25	8.67	0.00	0.0	24.0842	-17.62	1408.93	0.013
L10	111.33 - 111 (10)	TP30.8664x29.6683x0.3438	5.00	0.00	0.0	33.7848	-22.79	1976.41	0.012
L11	111 - 106 (11)	TP32.0645x30.8664x0.3438	5.00	0.00	0.0	35.1109	-23.79	2053.99	0.012
L12	106 - 101 (12)	TP33.2626x32.0645x0.3438	5.00	0.00	0.0	36.4370	-24.82	2131.57	0.012
L13	101 - 96 (13)	TP34.4607x33.2626x0.3438	5.00	0.00	0.0	37.7632	-25.89	2209.15	0.012
L14	96 - 91 (14)	TP35.6588x34.4607x0.3438	5.00	0.00	0.0	39.0893	-26.99	2286.72	0.012
L15	91 - 86 (15)	TP36.8569x35.6588x0.3438	5.00	0.00	0.0	40.4155	-28.12	2364.30	0.012
L16	86 - 85.75 (16)	TP36.9168x36.8569x0.5125	0.25	0.00	0.0	60.0761	-28.20	3514.45	0.008
L17	85.75 - 81 (17)	TP38.055x36.9168x0.5063	4.75	0.00	0.0	61.2091	-29.63	3580.73	0.008
L18	81 - 80.75 (18)	TP38.1149x38.055x0.3438	0.25	0.00	0.0	41.8079	-29.70	2445.76	0.012
L19	80.75 - 80.5 (19)	TP38.1748x38.1149x0.3438	0.25	0.00	0.0	41.8742	-29.76	2449.64	0.012
L20	80.5 - 73.25 (20)	TP39.912x38.1748x0.3438	7.25	0.00	0.0	42.2720	-30.10	2472.91	0.012
L21	73.25 - 72.25 (21)	TP39.4668x37.8467x0.4063	6.75	0.00	0.0	51.0961	-32.87	2989.12	0.011
L22	72.25 - 67.25 (22)	TP40.6668x39.4668x0.4063	5.00	0.00	0.0	52.6659	-34.25	3080.95	0.011
L23	67.25 - 62.25 (23)	TP41.8669x40.6668x0.4063	5.00	0.00	0.0	54.2357	-35.66	3172.79	0.011
L24	62.25 - 57.25 (24)	TP43.067x41.8669x0.4063	5.00	0.00	0.0	55.8055	-37.11	3264.62	0.011
L25	57.25 - 52.25 (25)	TP44.267x43.067x0.4063	5.00	0.00	0.0	57.3754	-38.59	3356.46	0.011

Section No.	Elevation ft	Size	L ft	L_u ft	Kl/r	A in^2	P_u K	ϕP_n K	Ratio $\frac{P_u}{\phi P_n}$
L26	52.25 - 49.83 (26)	TP44.8478x44.267x0.4063	2.42	0.00	0.0	58.1352	-39.32	3400.91	0.012
L27	49.83 - 49.58 (27)	TP44.9078x44.8478x0.4063	0.25	0.00	0.0	58.2136	-39.40	3405.50	0.012
L28	49.58 - 44.58 (28)	TP46.1079x44.9078x0.4063	5.00	0.00	0.0	59.7835	-40.93	3497.33	0.012
L29	44.58 - 36.33 (29)	TP48.088x46.1079x0.4063	8.25	0.00	0.0	60.2795	-41.42	3526.35	0.012
L30	36.33 - 35.33 (30)	TP47.5164x45.6746x0.4375	7.67	0.00	0.0	66.3224	-45.64	3879.86	0.012
L31	35.33 - 32.25 (31)	TP48.256x47.5164x0.4375	3.08	0.00	0.0	67.3643	-46.69	3940.81	0.012
L32	32.25 - 32 (32)	TP48.316x48.256x0.4375	0.25	0.00	0.0	67.4488	-46.78	3945.76	0.012
L33	32 - 27 (33)	TP49.5166x48.316x0.4375	5.00	0.00	0.0	69.1402	-48.50	4044.70	0.012
L34	27 - 22 (34)	TP50.7172x49.5166x0.4375	5.00	0.00	0.0	70.8316	-50.26	4143.65	0.012
L35	22 - 17 (35)	TP51.9179x50.7172x0.4375	5.00	0.00	0.0	72.5230	-52.06	4242.59	0.012
L36	17 - 15.5 (36)	TP52.2781x51.9179x0.4375	1.50	0.00	0.0	73.0304	-52.60	4272.28	0.012
L37	15.5 - 15.25 (37)	TP52.3381x52.2781x0.4375	0.25	0.00	0.0	73.1150	-52.70	4277.22	0.012
L38	15.25 - 14.75 (38)	TP52.4582x52.3381x0.4375	0.50	0.00	0.0	73.2841	-52.88	4287.12	0.012
L39	14.75 - 14.5 (39)	TP52.5182x52.4582x0.4375	0.25	0.00	0.0	73.3687	-52.97	4292.07	0.012
L40	14.5 - 9.5 (40)	TP53.7188x52.5182x0.4375	5.00	0.00	0.0	75.0601	-54.82	4391.01	0.012
L41	9.5 - 4.5 (41)	TP54.9194x53.7188x0.4375	5.00	0.00	0.0	76.7514	-56.70	4489.96	0.013
L42	4.5 - 0 (42)	TP56x54.9194x0.4375	4.50	0.00	0.0	78.2737	-58.42	4579.01	0.013

Pole Bending Design Data

Section No.	Elevation ft	Size	M_{ux} kip-ft	ϕM_{nx} kip-ft	Ratio $\frac{M_{ux}}{\phi M_{nx}}$	M_{uy} kip-ft	ϕM_{ny} kip-ft	Ratio $\frac{M_{uy}}{\phi M_{ny}}$
L1	160 - 155 (1)	TP20.8009x19.6x0.25	11.90	508.13	0.023	0.00	508.13	0.000
L2	155 - 150 (2)	TP22.0019x20.8009x0.25	36.56	559.86	0.065	0.00	559.86	0.000
L3	150 - 145 (3)	TP23.2028x22.0019x0.25	84.45	612.88	0.138	0.00	612.88	0.000
L4	145 - 140 (4)	TP24.4038x23.2028x0.25	134.05	666.99	0.201	0.00	666.99	0.000
L5	140 - 135 (5)	TP25.6047x24.4038x0.25	209.29	722.02	0.290	0.00	722.02	0.000
L6	135 - 130 (6)	TP26.8057x25.6047x0.25	284.67	777.80	0.366	0.00	777.80	0.000
L7	130 - 125 (7)	TP28.0066x26.8057x0.25	372.70	834.13	0.447	0.00	834.13	0.000
L8	125 - 120 (8)	TP29.2076x28.0066x0.25	464.00	890.84	0.521	0.00	890.84	0.000
L9	120 - 111.33 (9)	TP31.29x29.2076x0.25	538.45	936.37	0.575	0.00	936.37	0.000
L10	111.33 - 111 (10)	TP30.8664x29.6683x0.3438	651.84	1506.29	0.433	0.00	1506.29	0.000
L11	111 - 106 (11)	TP32.0645x30.8664x0.3438	764.34	1606.80	0.476	0.00	1606.80	0.000
L12	106 - 101 (12)	TP33.2626x32.0645x0.3438	878.92	1708.80	0.514	0.00	1708.80	0.000
L13	101 - 96 (13)	TP34.4607x33.2626x0.3438	995.60	1812.10	0.549	0.00	1812.10	0.000
L14	96 - 91 (14)	TP35.6588x34.4607x0.3438	1114.40	1916.52	0.581	0.00	1916.52	0.000
L15	91 - 86 (15)	TP36.8569x35.6588x0.3438	1235.28	2021.89	0.611	0.00	2021.89	0.000
L16	86 - 85.75 (16)	TP36.9168x36.8569x0.5125	1241.38	3264.26	0.380	0.00	3264.26	0.000
L17	85.75 - 81	TP38.055x36.9168x0.506	1358.54	3432.38	0.396	0.00	3432.38	0.000

Section No.	Elevation ft	Size	M_{ux} kip-ft	ϕM_{nx} kip-ft	Ratio $\frac{M_{ux}}{\phi M_{nx}}$	M_{uy} kip-ft	ϕM_{ny} kip-ft	Ratio $\frac{M_{uy}}{\phi M_{ny}}$
	(17)	3						
L18	81 - 80.75	TP38.1149x38.055x0.343	1364.77	2133.35	0.640	0.00	2133.35	0.000
	(18)	8						
L19	80.75 - 80.5	TP38.1748x38.1149x0.34	1371.00	2138.68	0.641	0.00	2138.68	0.000
	(19)	38						
L20	80.5 - 73.25	TP39.912x38.1748x0.343	1408.50	2170.65	0.649	0.00	2170.65	0.000
	(20)	8						
L21	73.25 - 72.25	TP39.4668x37.8467x0.40	1580.11	2839.34	0.557	0.00	2839.34	0.000
	(21)	63						
L22	72.25 - 67.25	TP40.6668x39.4668x0.40	1709.98	2983.92	0.573	0.00	2983.92	0.000
	(22)	63						
L23	67.25 - 62.25	TP41.8669x40.6668x0.40	1841.96	3129.84	0.589	0.00	3129.84	0.000
	(23)	63						
L24	62.25 - 57.25	TP43.067x41.8669x0.406	1976.02	3276.92	0.603	0.00	3276.92	0.000
	(24)	3						
L25	57.25 - 52.25	TP44.267x43.067x0.4063	2112.13	3424.98	0.617	0.00	3424.98	0.000
	(25)							
L26	52.25 - 49.83	TP44.8478x44.267x0.406	2178.74	3496.94	0.623	0.00	3496.94	0.000
	(26)	3						
L27	49.83 - 49.58	TP44.9078x44.8478x0.40	2185.65	3504.38	0.624	0.00	3504.38	0.000
	(27)	63						
L28	49.58 - 44.58	TP46.1079x44.9078x0.40	2324.86	3653.60	0.636	0.00	3653.60	0.000
	(28)	63						
L29	44.58 - 36.33	TP48.088x46.1079x0.406	2369.26	3700.87	0.640	0.00	3700.87	0.000
	(29)	3						
L30	36.33 - 35.33	TP47.5164x45.6746x0.43	2588.07	4255.37	0.608	0.00	4255.37	0.000
	(30)	75						
L31	35.33 - 32.25	TP48.256x47.5164x0.437	2677.52	4361.59	0.614	0.00	4361.59	0.000
	(31)	5						
L32	32.25 - 32	TP48.316x48.256x0.4375	2684.80	4370.23	0.614	0.00	4370.23	0.000
	(32)							
L33	32 - 27 (33)	TP49.5166x48.316x0.437	2831.49	4543.32	0.623	0.00	4543.32	0.000
		5						
L34	27 - 22 (34)	TP50.7172x49.5166x0.43	2979.92	4716.99	0.632	0.00	4716.99	0.000
		75						
L35	22 - 17 (35)	TP51.9179x50.7172x0.43	3130.11	4891.07	0.640	0.00	4891.07	0.000
		75						
L36	17 - 15.5 (36)	TP52.2781x51.9179x0.43	3175.51	4943.34	0.642	0.00	4943.34	0.000
		75						
L37	15.5 - 15.25	TP52.3381x52.2781x0.43	3183.09	4952.06	0.643	0.00	4952.06	0.000
	(37)	75						
L38	15.25 - 14.75	TP52.4582x52.3381x0.43	3198.28	4969.48	0.644	0.00	4969.48	0.000
	(38)	75						
L39	14.75 - 14.5	TP52.5182x52.4582x0.43	3205.88	4978.20	0.644	0.00	4978.20	0.000
	(39)	75						
L40	14.5 - 9.5 (40)	TP53.7188x52.5182x0.43	3358.74	5152.55	0.652	0.00	5152.55	0.000
		75						
L41	9.5 - 4.5 (41)	TP54.9194x53.7188x0.43	3513.43	5326.85	0.660	0.00	5326.85	0.000
		75						
L42	4.5 - 0 (42)	TP56x54.9194x0.4375	3654.22	5483.53	0.666	0.00	5483.53	0.000

Pole Shear Design Data

Section No.	Elevation ft	Size	Actual V_u K	ϕV_n K	Ratio $\frac{V_u}{\phi V_n}$	Actual T_u kip-ft	ϕT_n kip-ft	Ratio $\frac{T_u}{\phi T_n}$
L1	160 - 155 (1)	TP20.8009x19.6x0.25	4.75	290.34	0.016	0.00	524.85	0.000
L2	155 - 150 (2)	TP22.0019x20.8009x0.25	5.11	307.31	0.017	0.00	587.99	0.000
L3	150 - 145 (3)	TP23.2028x22.0019x0.25	9.73	324.27	0.030	0.00	654.71	0.000
L4	145 - 140 (4)	TP24.4038x23.2028x0.25	10.12	341.24	0.030	0.13	725.01	0.000
L5	140 - 135 (5)	TP25.6047x24.4038x0.25	14.89	358.20	0.042	0.13	798.90	0.000
L6	135 - 130 (6)	TP26.8057x25.6047x0.25	15.28	375.17	0.041	0.13	876.37	0.000
L7	130 - 125 (7)	TP28.0066x26.8057x0.25	18.08	392.14	0.046	0.02	957.42	0.000
L8	125 - 120 (8)	TP29.2076x28.0066x0.25	18.47	409.11	0.045	0.02	1042.07	0.000
L9	120 - 111.33	TP31.29x29.2076x0.25	18.79	422.68	0.044	0.02	1112.37	0.000

Section No.	Elevation ft	Size	Actual V_u K	ϕV_n K	Ratio $\frac{V_u}{\phi V_n}$	Actual T_u kip-ft	ϕT_n kip-ft	Ratio $\frac{T_u}{\phi T_n}$
L10	(9) 111.33 - 111 (10)	TP30.8664x29.6683x0.3438	22.31	592.92	0.038	0.02	1591.92	0.000
L11	111 - 106 (11)	TP32.0645x30.8664x0.3438	22.73	616.20	0.037	0.02	1719.34	0.000
L12	106 - 101 (12)	TP33.2626x32.0645x0.3438	23.14	639.47	0.036	0.02	1851.67	0.000
L13	101 - 96 (13)	TP34.4607x33.2626x0.3438	23.56	662.74	0.036	0.02	1988.91	0.000
L14	96 - 91 (14)	TP35.6588x34.4607x0.3438	23.98	686.02	0.035	0.02	2131.06	0.000
L15	91 - 86 (15)	TP36.8569x35.6588x0.3438	24.39	709.29	0.034	0.02	2278.10	0.000
L16	86 - 85.75 (16)	TP36.9168x36.8569x0.5125	24.41	1054.34	0.023	0.02	3376.22	0.000
L17	85.75 - 81 (17)	TP38.055x36.9168x0.5063	24.90	1074.22	0.023	0.15	3548.03	0.000
L18	81 - 80.75 (18)	TP38.1149x38.055x0.3438	24.92	733.73	0.034	0.15	2437.78	0.000
L19	80.75 - 80.5 (19)	TP38.1748x38.1149x0.3438	24.94	734.89	0.034	0.15	2445.53	0.000
L20	80.5 - 73.25 (20)	TP39.912x38.1748x0.3438	25.08	741.87	0.034	0.15	2492.21	0.000
L21	73.25 - 72.25 (21)	TP39.4668x37.8467x0.4063	25.77	896.74	0.029	0.15	3081.07	0.000
L22	72.25 - 67.25 (22)	TP40.6668x39.4668x0.4063	26.19	924.29	0.028	0.15	3273.30	0.000
L23	67.25 - 62.25 (23)	TP41.8669x40.6668x0.4063	26.61	951.84	0.028	0.15	3471.35	0.000
L24	62.25 - 57.25 (24)	TP43.067x41.8669x0.4063	27.03	979.39	0.028	0.15	3675.21	0.000
L25	57.25 - 52.25 (25)	TP44.267x43.067x0.4063	27.44	1006.94	0.027	0.15	3884.89	0.000
L26	52.25 - 49.83 (26)	TP44.8478x44.267x0.4063	27.63	1020.27	0.027	0.15	3988.46	0.000
L27	49.83 - 49.58 (27)	TP44.9078x44.8478x0.4063	27.65	1021.65	0.027	0.15	3999.24	0.000
L28	49.58 - 44.58 (28)	TP46.1079x44.9078x0.4063	28.05	1049.20	0.027	0.15	4217.84	0.000
L29	44.58 - 36.33 (29)	TP48.088x46.1079x0.4063	28.18	1057.91	0.027	0.15	4288.12	0.000
L30	36.33 - 35.33 (30)	TP47.5164x45.6746x0.4375	28.94	1163.96	0.025	0.15	4820.18	0.000
L31	35.33 - 32.25 (31)	TP48.256x47.5164x0.4375	29.16	1182.24	0.025	0.15	4972.82	0.000
L32	32.25 - 32 (32)	TP48.316x48.256x0.4375	29.17	1183.73	0.025	0.15	4985.31	0.000
L33	32 - 27 (33)	TP49.5166x48.316x0.4375	29.52	1213.41	0.024	0.15	5238.47	0.000
L34	27 - 22 (34)	TP50.7172x49.5166x0.4375	29.87	1243.09	0.024	0.15	5497.90	0.000
L35	22 - 17 (35)	TP51.9179x50.7172x0.4375	30.22	1272.78	0.024	0.15	5763.61	0.000
L36	17 - 15.5 (36)	TP52.2781x51.9179x0.4375	30.34	1281.68	0.024	0.15	5844.54	0.000
L37	15.5 - 15.25 (37)	TP52.3381x52.2781x0.4375	30.34	1283.17	0.024	0.15	5858.08	0.000
L38	15.25 - 14.75 (38)	TP52.4582x52.3381x0.4375	30.38	1286.14	0.024	0.15	5885.22	0.000
L39	14.75 - 14.5 (39)	TP52.5182x52.4582x0.4375	30.39	1287.62	0.024	0.15	5898.81	0.000
L40	14.5 - 9.5 (40)	TP53.7188x52.5182x0.4375	30.76	1317.30	0.023	0.15	6173.92	0.000
L41	9.5 - 4.5 (41)	TP54.9194x53.7188x0.4375	31.13	1346.99	0.023	0.15	6455.29	0.000
L42	4.5 - 0 (42)	TP56x54.9194x0.4375	31.46	1373.70	0.023	0.15	6713.89	0.000

Pole Interaction Design Data

Section No.	Elevation ft	Ratio $\frac{P_u}{\phi P_n}$	Ratio $\frac{M_{ux}}{\phi M_{nx}}$	Ratio $\frac{M_{uy}}{\phi M_{ny}}$	Ratio $\frac{V_u}{\phi V_n}$	Ratio $\frac{T_u}{\phi T_n}$	Comb. Stress Ratio	Allow. Stress Ratio	Criteria
L1	160 - 155 (1)	0.004	0.023	0.000	0.016	0.000	0.028	1.050	
L2	155 - 150 (2)	0.004	0.065	0.000	0.017	0.000	0.070	1.050	
L3	150 - 145 (3)	0.008	0.138	0.000	0.030	0.000	0.146	1.050	
L4	145 - 140 (4)	0.008	0.201	0.000	0.030	0.000	0.209	1.050	
L5	140 - 135 (5)	0.010	0.290	0.000	0.042	0.000	0.302	1.050	
L6	135 - 130 (6)	0.010	0.366	0.000	0.041	0.000	0.378	1.050	
L7	130 - 125 (7)	0.013	0.447	0.000	0.046	0.000	0.461	1.050	
L8	125 - 120 (8)	0.012	0.521	0.000	0.045	0.000	0.535	1.050	
L9	120 - 111.33 (9)	0.013	0.575	0.000	0.044	0.000	0.590	1.050	
L10	111.33 - 111 (10)	0.012	0.433	0.000	0.038	0.000	0.446	1.050	
L11	111 - 106 (11)	0.012	0.476	0.000	0.037	0.000	0.489	1.050	
L12	106 - 101 (12)	0.012	0.514	0.000	0.036	0.000	0.527	1.050	
L13	101 - 96 (13)	0.012	0.549	0.000	0.036	0.000	0.562	1.050	
L14	96 - 91 (14)	0.012	0.581	0.000	0.035	0.000	0.594	1.050	
L15	91 - 86 (15)	0.012	0.611	0.000	0.034	0.000	0.624	1.050	
L16	86 - 85.75 (16)	0.008	0.380	0.000	0.023	0.000	0.389	1.050	
L17	85.75 - 81 (17)	0.008	0.396	0.000	0.023	0.000	0.405	1.050	
L18	81 - 80.75 (18)	0.012	0.640	0.000	0.034	0.000	0.653	1.050	
L19	80.75 - 80.5 (19)	0.012	0.641	0.000	0.034	0.000	0.654	1.050	
L20	80.5 - 73.25 (20)	0.012	0.649	0.000	0.034	0.000	0.662	1.050	
L21	73.25 - 72.25 (21)	0.011	0.557	0.000	0.029	0.000	0.568	1.050	
L22	72.25 - 67.25 (22)	0.011	0.573	0.000	0.028	0.000	0.585	1.050	
L23	67.25 - 62.25 (23)	0.011	0.589	0.000	0.028	0.000	0.601	1.050	
L24	62.25 - 57.25 (24)	0.011	0.603	0.000	0.028	0.000	0.615	1.050	
L25	57.25 - 52.25 (25)	0.011	0.617	0.000	0.027	0.000	0.629	1.050	
L26	52.25 - 49.83 (26)	0.012	0.623	0.000	0.027	0.000	0.635	1.050	
L27	49.83 - 49.58 (27)	0.012	0.624	0.000	0.027	0.000	0.636	1.050	
L28	49.58 - 44.58 (28)	0.012	0.636	0.000	0.027	0.000	0.649	1.050	
L29	44.58 - 36.33 (29)	0.012	0.640	0.000	0.027	0.000	0.653	1.050	
L30	36.33 - 35.33 (30)	0.012	0.608	0.000	0.025	0.000	0.621	1.050	
L31	35.33 - 32.25 (31)	0.012	0.614	0.000	0.025	0.000	0.626	1.050	
L32	32.25 - 32 (32)	0.012	0.614	0.000	0.025	0.000	0.627	1.050	
L33	32 - 27 (33)	0.012	0.623	0.000	0.024	0.000	0.636	1.050	
L34	27 - 22 (34)	0.012	0.632	0.000	0.024	0.000	0.644	1.050	
L35	22 - 17 (35)	0.012	0.640	0.000	0.024	0.000	0.653	1.050	
L36	17 - 15.5 (36)	0.012	0.642	0.000	0.024	0.000	0.655	1.050	
L37	15.5 - 15.25 (37)	0.012	0.643	0.000	0.024	0.000	0.656	1.050	
L38	15.25 - 14.75 (38)	0.012	0.644	0.000	0.024	0.000	0.656	1.050	
L39	14.75 - 14.5 (39)	0.012	0.644	0.000	0.024	0.000	0.657	1.050	
L40	14.5 - 9.5 (40)	0.012	0.652	0.000	0.023	0.000	0.665	1.050	
L41	9.5 - 4.5 (41)	0.013	0.660	0.000	0.023	0.000	0.673	1.050	
L42	4.5 - 0 (42)	0.013	0.666	0.000	0.023	0.000	0.680	1.050	

Section Capacity Table

Section No.	Elevation ft	Component Type	Size	Critical Element	P K	$øP_{allow}$ K	% Capacity	Pass Fail
L1	160 - 155	Pole	TP20.8009x19.6x0.25	1	-3.91	1016.18	2.6	Pass
L2	155 - 150	Pole	TP22.0019x20.8009x0.25	2	-4.29	1075.57	6.6	Pass
L3	150 - 145	Pole	TP23.2028x22.0019x0.25	3	-8.11	1134.96	13.9	Pass
L4	145 - 140	Pole	TP24.4038x23.2028x0.25	4	-8.59	1194.33	19.9	Pass
L5	140 - 135	Pole	TP25.6047x24.4038x0.25	5	-12.43	1253.72	28.8	Pass
L6	135 - 130	Pole	TP26.8057x25.6047x0.25	6	-13.02	1313.10	36.0	Pass
L7	130 - 125	Pole	TP28.0066x26.8057x0.25	7	-16.36	1372.49	43.9	Pass
L8	125 - 120	Pole	TP29.2076x28.0066x0.25	8	-17.03	1431.86	51.0	Pass
L9	120 - 111.33	Pole	TP31.29x29.2076x0.25	9	-17.62	1479.38	56.1	Pass
L10	111.33 - 111	Pole	TP30.8664x29.6683x0.3438	10	-22.79	2075.23	42.4	Pass
L11	111 - 106	Pole	TP32.0645x30.8664x0.3438	11	-23.79	2156.69	46.5	Pass
L12	106 - 101	Pole	TP33.2626x32.0645x0.3438	12	-24.82	2238.15	50.2	Pass
L13	101 - 96	Pole	TP34.4607x33.2626x0.3438	13	-25.89	2319.61	53.6	Pass
L14	96 - 91	Pole	TP35.6588x34.4607x0.3438	14	-26.99	2401.06	56.6	Pass
L15	91 - 86	Pole	TP36.8569x35.6588x0.3438	15	-28.12	2482.51	59.4	Pass
L16	86 - 85.75	Pole	TP36.9168x36.8569x0.5125	16	-28.20	3690.17	37.0	Pass
L17	85.75 - 81	Pole	TP38.055x36.9168x0.5063	17	-29.63	3759.77	38.5	Pass
L18	81 - 80.75	Pole	TP38.1149x38.055x0.3438	18	-29.70	2568.05	62.2	Pass
L19	80.75 - 80.5	Pole	TP38.1748x38.1149x0.3438	19	-29.76	2572.12	62.3	Pass
L20	80.5 - 73.25	Pole	TP39.912x38.1748x0.3438	20	-30.10	2596.56	63.1	Pass
L21	73.25 - 72.25	Pole	TP39.4668x37.8467x0.4063	21	-32.87	3138.58	54.1	Pass
L22	72.25 - 67.25	Pole	TP40.6668x39.4668x0.4063	22	-34.25	3235.00	55.7	Pass
L23	67.25 - 62.25	Pole	TP41.8669x40.6668x0.4063	23	-35.66	3331.43	57.2	Pass
L24	62.25 - 57.25	Pole	TP43.067x41.8669x0.4063	24	-37.11	3427.85	58.6	Pass
L25	57.25 - 52.25	Pole	TP44.267x43.067x0.4063	25	-38.59	3524.28	59.9	Pass
L26	52.25 - 49.83	Pole	TP44.8478x44.267x0.4063	26	-39.32	3570.96	60.5	Pass
L27	49.83 - 49.58	Pole	TP44.9078x44.8478x0.4063	27	-39.40	3575.77	60.6	Pass
L28	49.58 - 44.58	Pole	TP46.1079x44.9078x0.4063	28	-40.93	3672.20	61.8	Pass
L29	44.58 - 36.33	Pole	TP48.088x46.1079x0.4063	29	-41.42	3702.67	62.2	Pass
L30	36.33 - 35.33	Pole	TP47.5164x45.6746x0.4375	30	-45.64	4073.85	59.1	Pass
L31	35.33 - 32.25	Pole	TP48.256x47.5164x0.4375	31	-46.69	4137.85	59.7	Pass
L32	32.25 - 32	Pole	TP48.316x48.256x0.4375	32	-46.78	4143.05	59.7	Pass
L33	32 - 27	Pole	TP49.5166x48.316x0.4375	33	-48.50	4246.94	60.6	Pass
L34	27 - 22	Pole	TP50.7172x49.5166x0.4375	34	-50.26	4350.83	61.4	Pass
L35	22 - 17	Pole	TP51.9179x50.7172x0.4375	35	-52.06	4454.72	62.2	Pass
L36	17 - 15.5	Pole	TP52.2781x51.9179x0.4375	36	-52.60	4485.89	62.4	Pass
L37	15.5 - 15.25	Pole	TP52.3381x52.2781x0.4375	37	-52.70	4491.08	62.4	Pass
L38	15.25 - 14.75	Pole	TP52.4582x52.3381x0.4375	38	-52.88	4501.48	62.5	Pass
L39	14.75 - 14.5	Pole	TP52.5182x52.4582x0.4375	39	-52.97	4506.67	62.6	Pass
L40	14.5 - 9.5	Pole	TP53.7188x52.5182x0.4375	40	-54.82	4610.56	63.3	Pass
L41	9.5 - 4.5	Pole	TP54.9194x53.7188x0.4375	41	-56.70	4714.46	64.1	Pass
L42	4.5 - 0	Pole	TP56x54.9194x0.4375	42	-58.42	4807.96	64.7	Pass
							Summary	
						Pole (L42)	64.7	Pass
						RATING =	**64.7**	**Pass**

***NOTE: Above stress ratios for reinforced sections are approximate. More exact calculations are presented in Appendix C.**

APPENDIX B

BASE LEVEL DRAWING

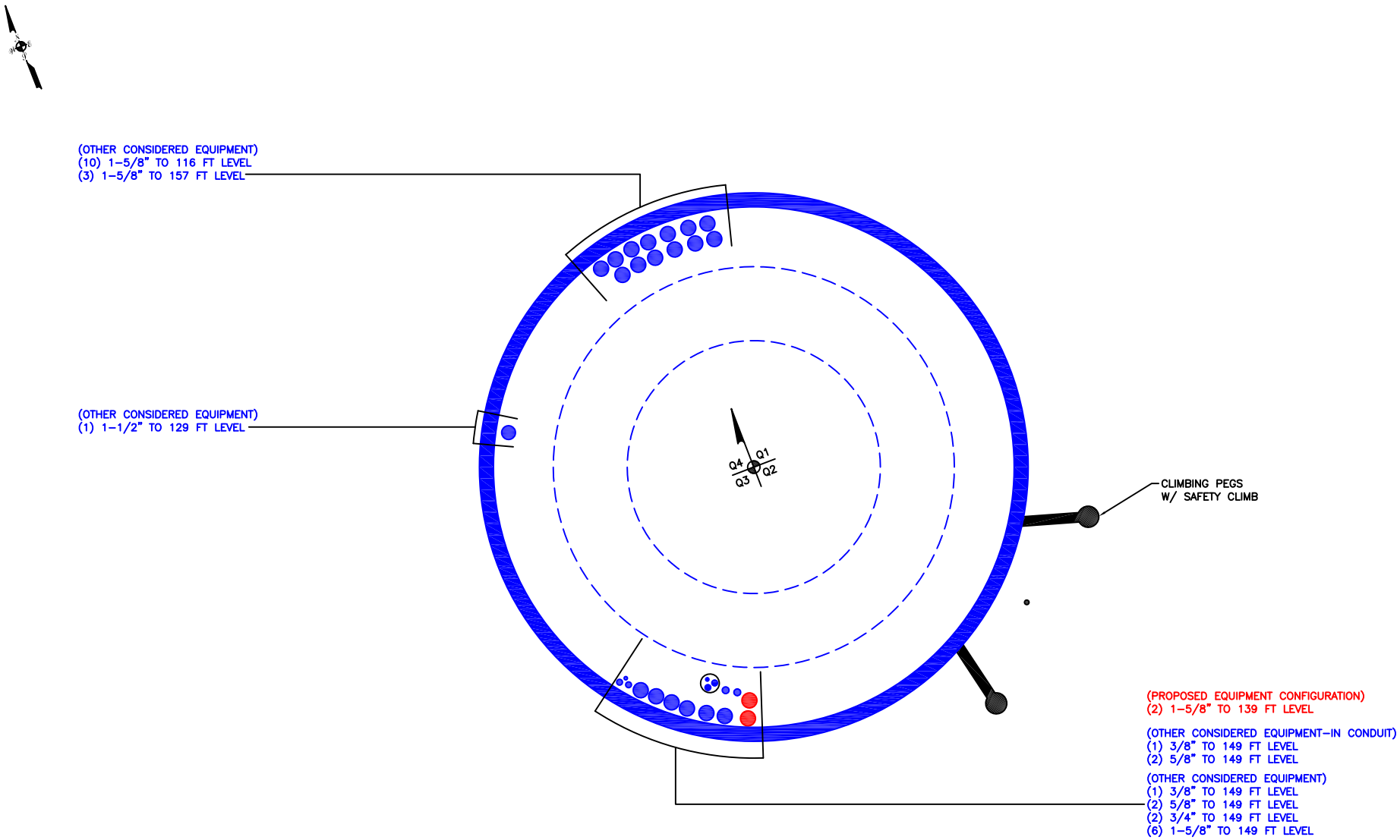
(OTHER CONSIDERED EQUIPMENT)
(10) 1-5/8" TO 116 FT LEVEL
(3) 1-5/8" TO 157 FT LEVEL
(OTHER CONSIDERED EQUIPMENT)
(1) 1-1/2" TO 129 FT LEVEL
Q4
Q1
Q3
Q2
CLIMBING PEGS
W/ SAFETY CLIMB
(PROPOSED EQUIPMENT CONFIGURATION)
(2) 1-5/8" TO 139 FT LEVEL
(OTHER CONSIDERED EQUIPMENT-IN CONDUIT)
(1) 3/8" TO 149 FT LEVEL
(2) 5/8" TO 149 FT LEVEL
(OTHER CONSIDERED EQUIPMENT)
(1) 3/8" TO 149 FT LEVEL
(2) 5/8" TO 149 FT LEVEL
(2) 3/4" TO 149 FT LEVEL
(6) 1-5/8" TO 149 FT LEVEL

APPENDIX C

ADDITIONAL CALCULATIONS

CCIpole

per TIA-222- H

Site BU: 806953

Work Order: 2297487

Copyright © 2019 Crown Castle

Pole Geometry

	Pole Height Above Base (ft)	Section Length (ft)	Lap Splice Length (ft)	Number of Sides	Top Diameter (in)	Bottom Diameter (in)	Wall Thickness (in)	Bend Radius (in)	Pole Material
1	160	48.67	4.67	12	19.6	31.29	0.25	Auto	A572-65
2	116	42.75	5.75	12	29.67	39.912	0.34375	Auto	A572-65
3	79	42.67	6.67	12	37.85	48.088	0.40625	Auto	A572-65
4	43	43	0	12	45.67	56	0.4375	Auto	A572-65

Reinforcement Configuration

	Bottom Effective Elevation (ft)	Top Effective Elevation (ft)	Type	Model	Number	1	2	3	4	5	6	7	8	9	10	11	12
1	0	15.5	plate	MK SR1	3	x				x				x			
2	78.25	80.75	plate	MK SR2	3			x				x				x	
3	14.75	32.25	plate	CCI-AFP-060100	3		x				x				x		
4	32.25	49.83	plate	CCI-AFP-060100	3		x				x				x		
5	81	86	plate	CCI-AFP-060100	3		x				x				x		
6																	
7																	
8																	
9																	
10																	

Reinforcement Details

	B (in)	H (in)	Gross Area (in^2)	Pole Face to Centroid (in)	Bottom Termination Type	Bottom Termination Length (in)	Top Termination Type	Top Termination Length (in)	Lu (in)	Net Area (in2)	Bolt Hole Size (in)	Reinforcement Material
1	4	0.75	3	0.375	PC 8.8 - M20 (100)	15	PC 8.8 - M20 (100)	15.000	15.000	2.063	1.1875	A572-65
2	4	0.75	3	0.375	PC 8.8 - M20 (100)	15	PC 8.8 - M20 (100)	15.000	15.000	2.063	1.1875	A572-65
3	6	1	6	0.5	PC 8.8 - M20 (100)	30	PC 8.8 - M20 (100)	30.000	16.000	4.750	1.1875	A572-65
4	6	1	6	0.5	PC 8.8 - M20 (100)	30	PC 8.8 - M20 (100)	30.000	16.000	4.750	1.1875	A572-65
5	6	1	6	0.5	PC 8.8 - M20 (100)	30	PC 8.8 - M20 (100)	30.000	16.000	4.750	1.1875	A572-65

Connection Details for Custom Reinforcements

Reinforcement	End	# Bolts	N or X	Bolt Spacing (in)	Edge Dist (in)	Weld Grade (ksi)	Transverse (Horiz.) Weld Type	Horiz. Weld Length (in)	Horiz. Groove Depth (in)	Horiz. Groove Angle (deg)	Horiz. Fillet Size (in)	Vertical Weld Length (in)	Vertical Fillet Size (in)	Rev H Connection Capacity (kip)
MK SR1	Top	5	N	3	3	-	-	-	-	-	-	-	-	-
	Bottom	5	N	3	3	-	-	-	-	-	-	-	-	-
MK SR2	Top	5	N	3	3	-	-	-	-	-	-	-	-	-
	Bottom	5	N	3	3	-	-	-	-	-	-	-	-	-

TNX Geometry Input

Increment (ft): 5 Export to TNX

	Section Height (ft)	Section Length (ft)	Lap Splice Length (ft)	Number of Sides	Top Diameter (in)	Bottom Diameter (in)	Wall Thickness (in)	Tapered Pole Grade	Weight Multiplier
1	160 - 155	5		12	19.600	20.801	0.25	A572-65	1.000
2	155 - 150	5		12	20.801	22.002	0.25	A572-65	1.000
3	150 - 145	5		12	22.002	23.203	0.25	A572-65	1.000
4	145 - 140	5		12	23.203	24.404	0.25	A572-65	1.000
5	140 - 135	5		12	24.404	25.605	0.25	A572-65	1.000
6	135 - 130	5		12	25.605	26.806	0.25	A572-65	1.000
7	130 - 125	5		12	26.806	28.007	0.25	A572-65	1.000
8	125 - 120	5		12	28.007	29.208	0.25	A572-65	1.000
9	120 - 116	8.67	4.67	12	29.208	31.290	0.25	A572-65	1.000
10	116 - 111	5		12	29.668	30.866	0.34375	A572-65	1.000
11	111 - 106	5		12	30.866	32.065	0.34375	A572-65	1.000
12	106 - 101	5		12	32.065	33.263	0.34375	A572-65	1.000
13	101 - 96	5		12	33.263	34.461	0.34375	A572-65	1.000
14	96 - 91	5		12	34.461	35.659	0.34375	A572-65	1.000
15	91 - 86	5		12	35.659	36.857	0.34375	A572-65	1.000
16	86 - 85.75	0.25		12	36.857	36.917	0.5125	A572-65	0.974
17	85.75 - 81	4.75		12	36.917	38.055	0.50625	A572-65	0.976
18	81 - 80.75	0.25		12	38.055	38.115	0.34375	A572-65	1.000
19	80.75 - 80.5	0.25		12	38.115	38.175	0.34375	A572-65	1.000
20	80.5 - 79	7.25	5.75	12	38.175	39.912	0.34375	A572-65	1.000
21	79 - 72.25	6.75		12	37.847	39.467	0.40625	A572-65	1.000
22	72.25 - 67.25	5		12	39.467	40.667	0.40625	A572-65	1.000
23	67.25 - 62.25	5		12	40.667	41.867	0.40625	A572-65	1.000
24	62.25 - 57.25	5		12	41.867	43.067	0.40625	A572-65	1.000
25	57.25 - 52.25	5		12	43.067	44.267	0.40625	A572-65	1.000
26	52.25 - 49.83	2.42		12	44.267	44.848	0.40625	A572-65	1.000
27	49.83 - 49.58	0.25		12	44.848	44.908	0.40625	A572-65	1.000
28	49.58 - 44.58	5		12	44.908	46.108	0.40625	A572-65	1.000
29	44.58 - 43	8.25	6.67	12	46.108	48.088	0.40625	A572-65	1.000
30	43 - 35.33	7.67		12	45.675	47.516	0.4375	A572-65	1.000
31	35.33 - 32.25	3.08		12	47.516	48.256	0.4375	A572-65	1.000
32	32.25 - 32	0.25		12	48.256	48.316	0.4375	A572-65	1.000
33	32 - 27	5		12	48.316	49.517	0.4375	A572-65	1.000
34	27 - 22	5		12	49.517	50.717	0.4375	A572-65	1.000
35	22 - 17	5		12	50.717	51.918	0.4375	A572-65	1.000
36	17 - 15.5	1.5		12	51.918	52.278	0.4375	A572-65	1.000
37	15.5 - 15.25	0.25		12	52.278	52.338	0.4375	A572-65	1.000
38	15.25 - 14.75	0.5		12	52.338	52.458	0.4375	A572-65	1.000
39	14.75 - 14.5	0.25		12	52.458	52.518	0.4375	A572-65	1.000
40	14.5 - 9.5	5		12	52.518	53.719	0.4375	A572-65	1.000
41	9.5 - 4.5	5		12	53.719	54.919	0.4375	A572-65	1.000
42	4.5 - 0	4.5		12	54.919	56.000	0.4375	A572-65	1.000

TNX Section Forces

Increment (ft): 5

	Section Height (ft)	TNX Output		
		P_u (K)	M_{ux} (kip-ft)	V_u (K)
1	160 - 155	3.91	11.90	4.75
2	155 - 150	4.29	36.56	5.11
3	150 - 145	8.11	84.45	9.73
4	145 - 140	8.59	134.06	10.12
5	140 - 135	12.43	209.29	14.89
6	135 - 130	13.02	284.67	15.28
7	130 - 125	16.36	372.70	18.08
8	125 - 120	17.03	464.00	18.47
9	120 - 116	17.62	538.45	18.79
10	116 - 111	22.79	651.84	22.31
11	111 - 106	23.79	764.34	22.73
12	106 - 101	24.82	878.93	23.14
13	101 - 96	25.89	995.60	23.56
14	96 - 91	26.99	1114.40	23.98
15	91 - 86	28.12	1235.28	24.39
16	86 - 85.75	28.20	1241.38	24.41
17	85.75 - 81	29.63	1358.54	24.90
18	81 - 80.75	29.70	1364.77	24.92
19	80.75 - 80.5	29.76	1371.00	24.94
20	80.5 - 79	30.10	1408.50	25.08
21	79 - 72.25	32.87	1580.11	25.77
22	72.25 - 67.25	34.25	1709.98	26.19
23	67.25 - 62.25	35.66	1841.96	26.61
24	62.25 - 57.25	37.11	1976.02	27.03
25	57.25 - 52.25	38.59	2112.13	27.44
26	52.25 - 49.83	39.32	2178.75	27.63
27	49.83 - 49.58	39.40	2185.65	27.65
28	49.58 - 44.58	40.93	2324.86	28.05
29	44.58 - 43	41.42	2369.26	28.18
30	43 - 35.33	45.64	2588.08	28.94
31	35.33 - 32.25	46.69	2677.51	29.16
32	32.25 - 32	46.78	2684.80	29.17
33	32 - 27	48.50	2831.49	29.52
34	27 - 22	50.26	2979.92	29.87
35	22 - 17	52.06	3130.11	30.22
36	17 - 15.5	52.60	3175.51	30.34
37	15.5 - 15.25	52.70	3183.10	30.34
38	15.25 - 14.75	52.88	3198.27	30.38
39	14.75 - 14.5	52.97	3205.87	30.39
40	14.5 - 9.5	54.82	3358.74	30.76
41	9.5 - 4.5	56.70	3513.43	31.13
42	4.5 - 0	58.42	3654.22	31.46

Analysis Results

Elevation (ft)	Component Type	Size	Critical Element	% Capacity	Pass / Fail
160 - 155	Pole	TP20.801x19.6x0.25	Pole	2.6%	Pass
155 - 150	Pole	TP22.002x20.801x0.25	Pole	6.6%	Pass
150 - 145	Pole	TP23.203x22.002x0.25	Pole	13.9%	Pass
145 - 140	Pole	TP24.404x23.203x0.25	Pole	19.9%	Pass
140 - 135	Pole	TP25.605x24.404x0.25	Pole	28.7%	Pass
135 - 130	Pole	TP26.806x25.605x0.25	Pole	35.9%	Pass
130 - 125	Pole	TP28.007x26.806x0.25	Pole	43.8%	Pass
125 - 120	Pole	TP29.208x28.007x0.25	Pole	50.9%	Pass
120 - 116	Pole	TP31.29x29.208x0.25	Pole	56.0%	Pass
116 - 111	Pole	TP30.866x29.668x0.3438	Pole	42.3%	Pass
111 - 106	Pole	TP32.065x30.866x0.3438	Pole	46.4%	Pass
106 - 101	Pole	TP33.263x32.065x0.3438	Pole	50.1%	Pass
101 - 96	Pole	TP34.461x33.263x0.3438	Pole	53.4%	Pass
96 - 91	Pole	TP35.659x34.461x0.3438	Pole	56.5%	Pass
91 - 86	Pole	TP36.857x35.659x0.3438	Pole	59.3%	Pass
86 - 85.75	Pole + Reinf.	TP36.917x36.857x0.5125	Reinf. 5 Tension Rupture	56.5%	Pass
85.75 - 81	Pole + Reinf.	TP38.055x36.917x0.5063	Reinf. 5 Tension Rupture	58.7%	Pass
81 - 80.75	Pole	TP38.115x38.055x0.3438	Pole	62.0%	Pass
80.75 - 80.5	Pole	TP38.175x38.115x0.3438	Pole	62.2%	Pass
80.5 - 79	Pole	TP39.912x38.175x0.3438	Pole	62.9%	Pass
79 - 72.25	Pole	TP39.467x37.847x0.4063	Pole	54.0%	Pass
72.25 - 67.25	Pole	TP40.667x39.467x0.4063	Pole	55.6%	Pass
67.25 - 62.25	Pole	TP41.867x40.667x0.4063	Pole	57.0%	Pass
62.25 - 57.25	Pole	TP43.067x41.867x0.4063	Pole	58.4%	Pass
57.25 - 52.25	Pole	TP44.267x43.067x0.4063	Pole	59.7%	Pass
52.25 - 49.83	Pole	TP44.848x44.267x0.4063	Pole	60.3%	Pass
49.83 - 49.58	Pole	TP44.908x44.848x0.4063	Pole	60.4%	Pass
49.58 - 44.58	Pole	TP46.108x44.908x0.4063	Pole	61.6%	Pass
44.58 - 43	Pole	TP48.088x46.108x0.4063	Pole	62.0%	Pass
43 - 35.33	Pole	TP47.516x45.675x0.4375	Pole	58.9%	Pass
35.33 - 32.25	Pole	TP48.256x47.516x0.4375	Pole	59.5%	Pass
32.25 - 32	Pole	TP48.316x48.256x0.4375	Pole	59.5%	Pass
32 - 27	Pole	TP49.517x48.316x0.4375	Pole	60.4%	Pass
27 - 22	Pole	TP50.717x49.517x0.4375	Pole	61.2%	Pass
22 - 17	Pole	TP51.918x50.717x0.4375	Pole	62.0%	Pass
17 - 15.5	Pole	TP52.278x51.918x0.4375	Pole	62.2%	Pass
15.5 - 15.25	Pole	TP52.338x52.278x0.4375	Pole	62.3%	Pass
15.25 - 14.75	Pole	TP52.458x52.338x0.4375	Pole	62.4%	Pass
14.75 - 14.5	Pole	TP52.518x52.458x0.4375	Pole	62.4%	Pass
14.5 - 9.5	Pole	TP53.719x52.518x0.4375	Pole	63.2%	Pass
9.5 - 4.5	Pole	TP54.919x53.719x0.4375	Pole	63.9%	Pass
4.5 - 0	Pole	TP56x54.919x0.4375	Pole	64.6%	Pass
				Summary	
			Pole	64.6%	Pass
			Reinforcement	58.7%	Pass
			Overall	64.6%	Pass

Additional Calculations

Section Elevation (ft)	Moment of Inertia (in^4)			Area (in^2)			% Capacity*					
	Pole	Reinf.	Total	Pole	Reinf.	Total	Pole	R1	R2	R3	R4	R5
160 - 155	893	n/a	893	16.52	n/a	16.52	2.6%					
155 - 150	1059	n/a	1059	17.49	n/a	17.49	6.6%					
150 - 145	1244	n/a	1244	18.45	n/a	18.45	13.9%					
145 - 140	1450	n/a	1450	19.42	n/a	19.42	19.9%					
140 - 135	1677	n/a	1677	20.38	n/a	20.38	28.7%					
135 - 130	1927	n/a	1927	21.35	n/a	21.35	35.9%					
130 - 125	2200	n/a	2200	22.31	n/a	22.31	43.8%					
125 - 120	2498	n/a	2498	23.28	n/a	23.28	50.9%					
120 - 116	2755	n/a	2755	24.05	n/a	24.05	56.0%					
116 - 111	4023	n/a	4023	33.74	n/a	33.74	42.3%					
111 - 106	4515	n/a	4515	35.06	n/a	35.06	46.4%					
106 - 101	5047	n/a	5047	36.38	n/a	36.38	50.1%					
101 - 96	5618	n/a	5618	37.71	n/a	37.71	53.4%					
96 - 91	6231	n/a	6231	39.03	n/a	39.03	56.5%					
91 - 86	6887	n/a	6887	40.36	n/a	40.36	59.3%					
86 - 85.75	6921	3263	10183	40.42	18.00	58.42	39.1%					56.5%
85.75 - 81	7587	3460	11047	41.68	18.00	59.68	41.1%					58.7%
81 - 80.75	7623	n/a	7623	41.75	n/a	41.75	62.0%					
80.75 - 80.5	7660	n/a	7660	41.81	n/a	41.81	62.2%					
80.5 - 79	7880	n/a	7880	42.21	n/a	42.21	62.9%					
79 - 72.25	9964	n/a	9964	51.02	n/a	51.02	54.0%					
72.25 - 67.25	10911	n/a	10911	52.59	n/a	52.59	55.6%					
67.25 - 62.25	11916	n/a	11916	54.16	n/a	54.16	57.0%					
62.25 - 57.25	12981	n/a	12981	55.73	n/a	55.73	58.4%					
57.25 - 52.25	14107	n/a	14107	57.29	n/a	57.29	59.7%					
52.25 - 49.83	14675	n/a	14675	58.05	n/a	58.05	60.3%					
49.83 - 49.58	14735	n/a	14735	58.13	n/a	58.13	60.4%					
49.58 - 44.58	15959	n/a	15959	59.70	n/a	59.70	61.6%					
44.58 - 43	16360	n/a	16360	60.19	n/a	60.19	62.0%					
43 - 35.33	18788	n/a	18788	66.23	n/a	66.23	58.9%					
35.33 - 32.25	19688	n/a	19688	67.27	n/a	67.27	59.5%					
32.25 - 32	19762	n/a	19762	67.35	n/a	67.35	59.5%					
32 - 27	21286	n/a	21286	69.04	n/a	69.04	60.4%					
27 - 22	22887	n/a	22887	70.73	n/a	70.73	61.2%					
22 - 17	24566	n/a	24566	72.42	n/a	72.42	62.0%					
17 - 15.5	25085	n/a	25085	72.93	n/a	72.93	62.2%					
15.5 - 15.25	25172	n/a	25172	73.01	n/a	73.01	62.3%					
15.25 - 14.75	25347	n/a	25347	73.18	n/a	73.18	62.4%					
14.75 - 14.5	25435	n/a	25435	73.26	n/a	73.26	62.4%					
14.5 - 9.5	27235	n/a	27235	74.95	n/a	74.95	63.2%					
9.5 - 4.5	29118	n/a	29118	76.64	n/a	76.64	63.9%					
4.5 - 0	30885	n/a	30885	78.16	n/a	78.16	64.6%					

Note: Section capacity checked using 5 degree increments.
Rating per TIA-222-H Section 15.5.

Monopole Base Plate Connection

Site Info	
BU #	806953
Site Name	BRG 2044 (A) 943097
Order #	669074 Rev. 0

Analysis Considerations	
TIA-222 Revision	H
Grout Considered:	No
l_{ar} (in)	1

Applied Loads	
Moment (kip-ft)	3654.22
Axial Force (kips)	58.42
Shear Force (kips)	31.46

**TIA-222-H Section 15.5 Applied*

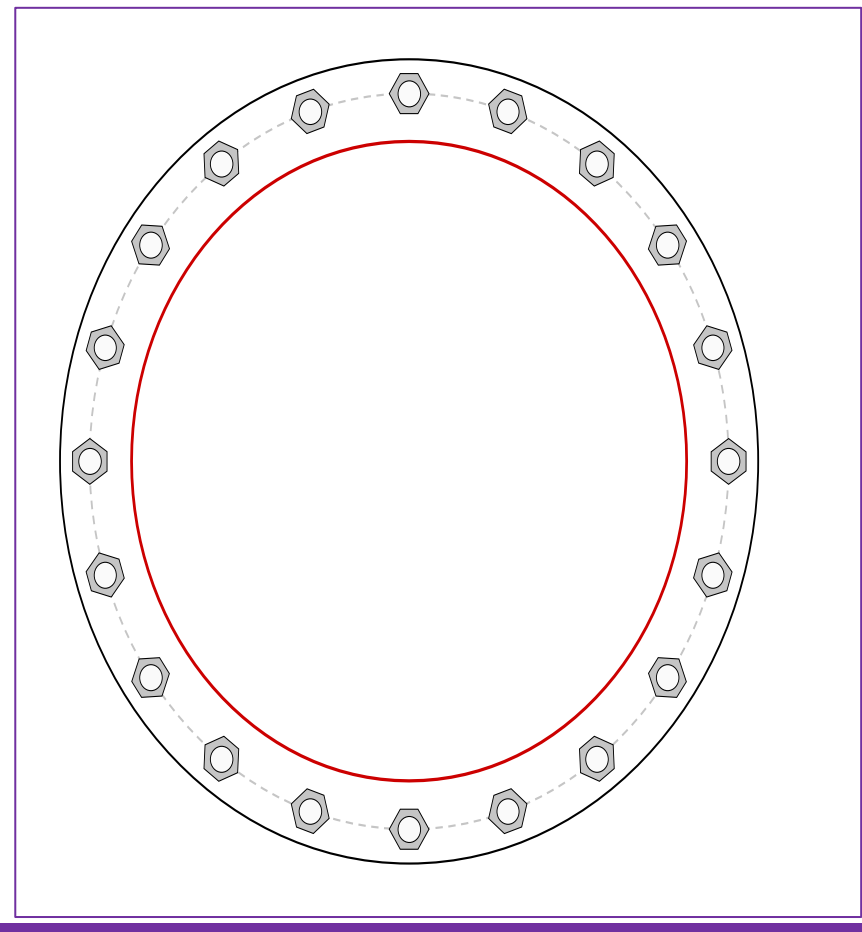

Connection Properties

Anchor Rod Data

(20) 2-1/4" ø bolts (A615-75 N; Fy=75 ksi, Fu=100 ksi) on 64.48" BC

Base Plate Data

70.48" OD x 2.75" Plate (A633 Gr. E; Fy=60 ksi, Fu=70 ksi)

Stiffener Data

N/A

Pole Data

56" x 0.4375" 12-sided pole (A572-65; Fy=65 ksi, Fu=80 ksi)

Analysis Results

Anchor Rod Summary *(units of kips, kip-in)*

Pu_t = 133.02	ϕPn_t = 243.75	**Stress Rating**
Vu = 1.57	ϕVn = 149.1	**52.0%**
Mu = n/a	ϕMn = n/a	**Pass**

Base Plate Summary

Max Stress (ksi):	21.39	(Flexural)
Allowable Stress (ksi):	54	
Stress Rating:	**37.7%**	**Pass**

Pier and Pad Foundation

BU # :	806953
Site Name:	BRG 2044 (A) 943(
App. Number:	669074 Rev. 0

TIA-222 Revision:	H
Tower Type:	Monopole

Top & Bot. Pad Rein. Different?:	☑
Block Foundation?:	☑
Rectangular Pad?:	☐

Superstructure Analysis Reactions

Compression, P_{comp}:	58.43	kips
Base Shear, Vu_comp:	31.44	kips
Moment, M_u:	3654.22	ft-kips
Tower Height, **H**:	160	ft
BP Dist. Above Fdn, bp_{dist}:	3.25	in
Bolt Circle / Bearing Plate Width, **BC**:	64.48	in

Foundation Analysis Checks

	Capacity	Demand	Rating*	Check
Lateral (Sliding) (kips)	194.31	31.44	**15.4%**	**Pass**
Bearing Pressure (ksf)	30.34	2.16	**7.1%**	**Pass**
*Overturning (kip*ft)*	6343.63	3819.94	**60.2%**	**Pass**
*Pad Flexure (kip*ft)*	8047.81	1666.85	**19.7%**	**Pass**
Pad Shear - 1-way (kips)	1630.75	192.10	**11.2%**	**Pass**
Pad Shear - 2-way (Comp) (ksi)	0.190	0.002	**1.2%**	**Pass**
*Flexural 2-way (Comp) (kip*ft)*	6537.76	0.00	**0.0%**	**Pass**

**Rating per TIA-222-H Section 15.5*

Structural Rating*:	**19.7%**
Soil Rating*:	**60.2%**

Pad Properties

Depth, **D**:	3.5	ft
Pad Width, W_1:	26	ft
Pad Thickness, **T**:	5	ft
Pad Rebar Size (Top dir.2), Sp_{top2}:	8	
Pad Rebar Quantity (Top dir. 2), mp_{top2}:	18	
Pad Rebar Size (Bottom dir. 2), Sp_2:	10	
Pad Rebar Quantity (Bottom dir. 2), mp_2:	26	
Pad Clear Cover, cc_{pad}:	3	in

Material Properties

Rebar Grade, **Fy**:	60	ksi
Concrete Compressive Strength, **F'c**:	4	ksi
Dry Concrete Density, δc:	150	pcf

Soil Properties

Total Soil Unit Weight, γ:	130	pcf
Ultimate Net Bearing, Qnet:	40.000	ksf
Cohesion, **Cu**:	0.000	ksf
Friction Angle, φ:	40	degrees
SPT Blow Count, N_{blows}:		
Base Friction, μ:	0.5	
Neglected Depth, **N**:	3.33	ft
Foundation Bearing on Rock?	No	
Groundwater Depth, **gw**:	N/A	ft

<--Toggle between Gross and Net

ASCE Hazards Report

Address:
No Address at This Location

Standard: ASCE/SEI 7-16
Risk Category: II
Soil Class: D - Default (see Section 11.4.3)

Latitude: 41.10175
Longitude: -73.594444
Elevation: 245.1011906352326 ft (NAVD 88)

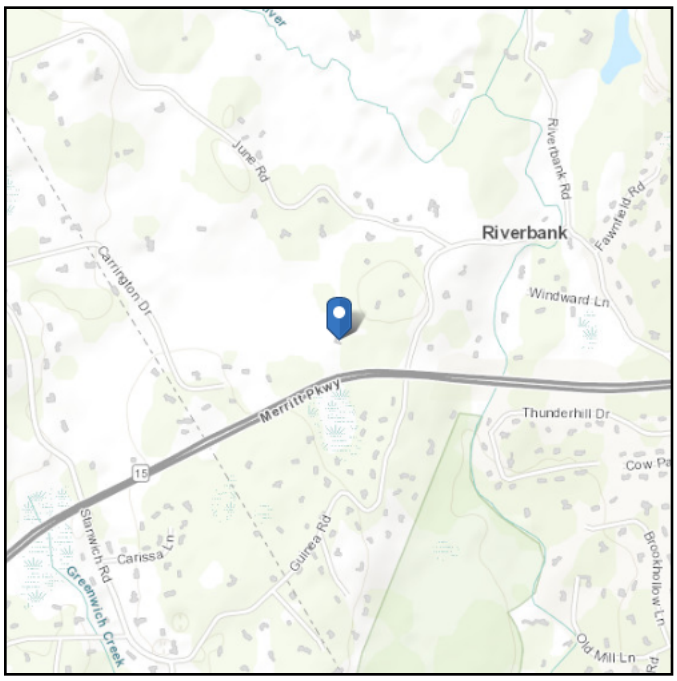

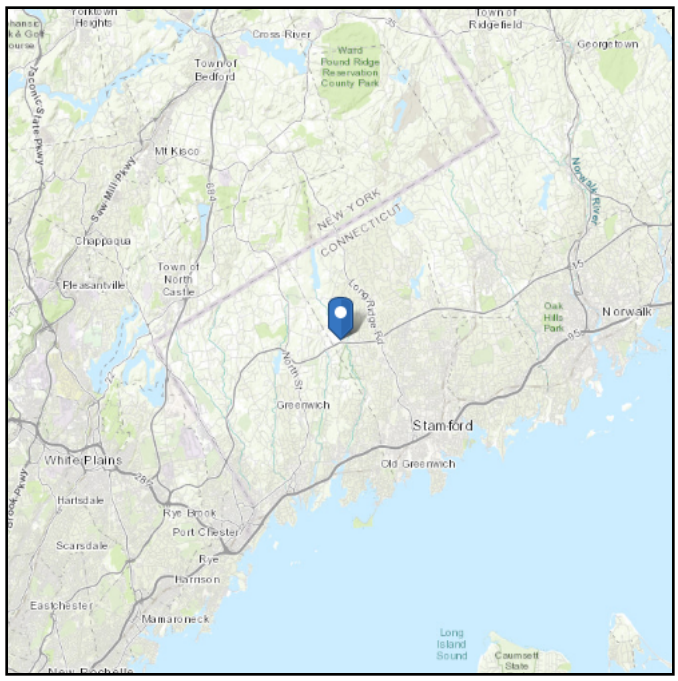

Wind

Results:

Wind Speed	116 Vmph
10-year MRI	75 Vmph
25-year MRI	84 Vmph
50-year MRI	90 Vmph
100-year MRI	97 Vmph

Data Source:	ASCE/SEI 7-16, Fig. 26.5-1B and Figs. CC.2-1–CC.2-4, and Section 26.5.2
Date Accessed:	Sat Apr 27 2024

Value provided is 3-second gust wind speeds at 33 ft above ground for Exposure C Category, based on linear interpolation between contours. Wind speeds are interpolated in accordance with the 7-16 Standard. Wind speeds correspond to approximately a 7% probability of exceedance in 50 years (annual exceedance probability = 0.00143, MRI = 700 years).

Site is in a hurricane-prone region as defined in ASCE/SEI 7-16 Section 26.2. Glazed openings need not be protected against wind-borne debris.

Seismic

Site Soil Class: D - Default (see Section 11.4.3)

Results:

S_S :	0.27	S_{D1} :	0.095
S_1 :	0.059	T_L :	6
F_a :	1.584	PGA :	0.163
F_v :	2.4	PGA_M :	0.241
S_{MS} :	0.427	F_{PGA} :	1.473
S_{M1} :	0.142	I_e :	1
S_{DS} :	0.285	C_v :	0.839

Seismic Design Category: B

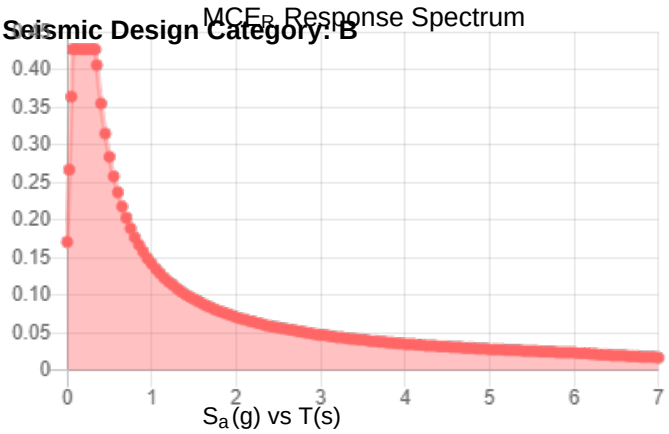

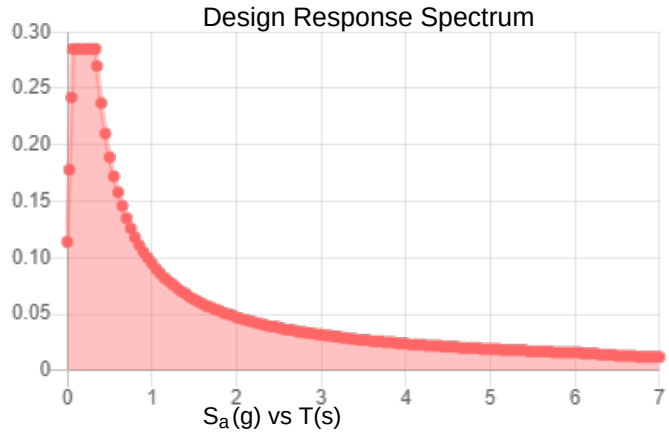

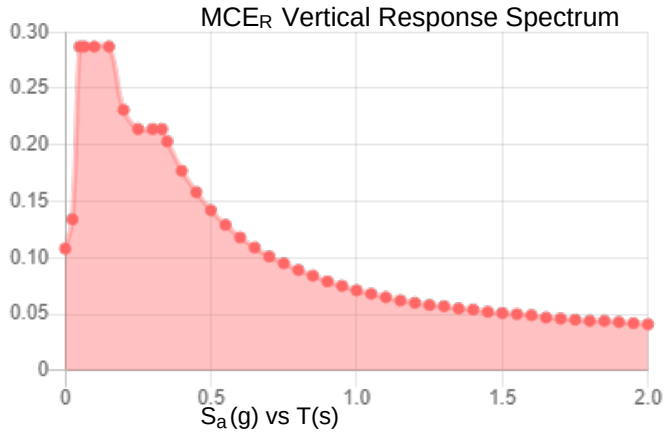

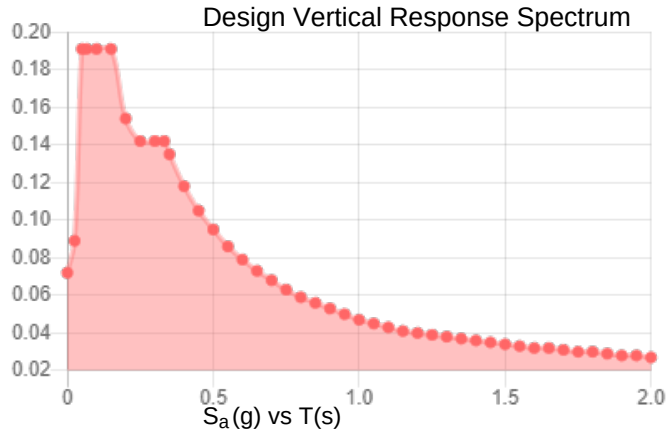

Data Accessed: **Sat Apr 27 2024**

Date Source:

USGS Seismic Design Maps based on ASCE/SEI 7-16 and ASCE/SEI 7-16 Table 1.5-2. Additional data for site-specific ground motion procedures in accordance with ASCE/SEI 7-16 Ch. 21 are available from USGS.

Ice

Results:

Ice Thickness:	1.00 in.
Concurrent Temperature:	15 F
Gust Speed	50 mph
Data Source:	Standard ASCE/SEI 7-16, Figs. 10-2 through 10-8
Date Accessed:	Sat Apr 27 2024

Ice thicknesses on structures in exposed locations at elevations higher than the surrounding terrain and in valleys and gorges may exceed the mapped values.

Values provided are equivalent radial ice thicknesses due to freezing rain with concurrent 3-second gust speeds, for a 500-year mean recurrence interval, and temperatures concurrent with ice thicknesses due to freezing rain. Thicknesses for ice accretions caused by other sources shall be obtained from local meteorological studies. Ice thicknesses in exposed locations at elevations higher than the surrounding terrain and in valleys and gorges may exceed the mapped values.

The ASCE Hazard Tool is provided for your convenience, for informational purposes only, and is provided “as is” and without warranties of any kind. The location data included herein has been obtained from information developed, produced, and maintained by third party providers; or has been extrapolated from maps incorporated in the ASCE standard. While ASCE has made every effort to use data obtained from reliable sources or methodologies, ASCE does not make any representations or warranties as to the accuracy, completeness, reliability, currency, or quality of any data provided herein. Any third-party links provided by this Tool should not be construed as an endorsement, affiliation, relationship, or sponsorship of such third-party content by or from ASCE.

ASCE does not intend, nor should anyone interpret, the results provided by this Tool to replace the sound judgment of a competent professional, having knowledge and experience in the appropriate field(s) of practice, nor to substitute for the standard of care required of such professionals in interpreting and applying the contents of this Tool or the ASCE standard.

In using this Tool, you expressly assume all risks associated with your use. Under no circumstances shall ASCE or its officers, directors, employees, members, affiliates, or agents be liable to you or any other person for any direct, indirect, special, incidental, or consequential damages arising from or related to your use of, or reliance on, the Tool or any information obtained therein. To the fullest extent permitted by law, you agree to release and hold harmless ASCE from any and all liability of any nature arising out of or resulting from any use of data provided by the ASCE Hazard Tool.

EXHIBIT F

Mount Analysis Report

Colliers Engineering & Design,
Architecture, Landscaping Architecture,
Surveying, CT, P.C.
1055 Washington Boulevard
Stamford, CT 06901
203.324.0800
peter.albano@collierseng.com

Antenna Mount Analysis Report and PMI Requirements

Mount ReAnalysis-VZW

SMART Tool Project #: 10214349
Colliers Engineering & Design Project #:22777018 (Rev 2)

March 11, 2024

Site Information	*Site ID:*	*5000386192-VZW / RIVERBANK CT*
	Site Name:	*RIVERBANK CT*
	Carrier Name:	*Verizon Wireless*
	Address:	*70 Guinea Rd.* *Stamford, Connecticut 06903* *Fairfield County*
	Latitude:	*41.101763°*
	Longitude:	*-73.594847°*
Structure Information	*Tower Type:*	*150-Ft Monopole*
	Mount Type:	*13.00-Ft Platform*

FUZE ID # 16092561

Analysis Results

Platform: **92.0% Pass***

***Antennas and equipment to be installed in compliance with PMI Requirements of this mount analysis.**

******Contractor PMI Requirements*:**
Included at the end of this MA report
Available & Submitted via portal at https://pmi.vzwsmart.com

For additional questions and support, please reach out to:
pmisupport@colliersengineering.com

Report Prepared By: Frank Centone

Executive Summary:

The objective of this report is to determine the capacity of the antenna support mount at the subject facility for the final wireless telecommunications configuration, per the applicable codes and standards. Any modification listed under Sources of Information was assumed completed and was included in this analysis.

This analysis is inclusive of the mount structure only and does not address the structural capacity of the supporting structure. This mounting frame was not analyzed as an anchor attachment point for fall protection. All climbing activities are required to have a fall protection plan completed by a competent person.

Sources of Information:

Document Type	Remarks
Radio Frequency Data Sheet (RFDS)	*Verizon RFDS, Site ID: 468411, dated October 12, 2023*
Mount Mapping Report	*Tower Engineering Professionals, Site ID: 468411, dated June 29, 2022*

Analysis Criteria:

Codes and Standards:	ANSI/TIA-222-H 2022 Connecticut State Building Code (CSBC), Effective October 1, 2022	
Wind Parameters:	Basic Wind Speed (Ultimate 3-sec. Gust), V_{ULT}:	120 mph
	Ice Wind Speed (3-sec. Gust):	50 mph
	Design Ice Thickness:	1.00 in
	Risk Category:	II
	Exposure Category:	B
	Topographic Category:	1
	Topographic Feature Considered:	N/A
	Topographic Method:	N/A
	Ground Elevation Factor, K_e:	0.992
Seismic Parameters:	S_S:	0.261 g
	S_1:	0.058 g
Maintenance Parameters:	Wind Speed (3-sec. Gust):	30 mph
	Maintenance Load, Lv:	250 lbs.
	Maintenance Load, Lm:	500 lbs.
Analysis Software:	RISA-3D (V17)	

Final Loading Configuration:

The following equipment has been considered for the analysis of the mount:

Mount Elevation (ft)	Equipment Elevation (ft)	Quantity	Manufacturer	Model	Status
138.92	141.00	6	JMA Wireless	MX06FRO860-03	Added
		1	Raycap	RVZDC-6627-PF-48	
		3	Samsung	MT6413-77A	
		3	Samsung	RF4461d-13A	
		3	Samsung	RF4439d-25A	
		1	-	Beacon Light	Retained

The recent mount mapping reported existing OVP units. It is acceptable to install up to any three (3) of the OVP model numbers listed below as required at any location other than the mount face without affecting the structural capacity of the mount. If OVP units are installed on the mount face, a mount re-analysis may be required unless replacing an existing OVP.

Model Number	Ports	AKA
DB-B1-6C-12AB-0Z	6	OVP-6
RVZDC-6627-PF-48	12	OVP-12

Standard Conditions:

1. All engineering services are performed on the basis that the information provided to Colliers Engineering & Design and used in this analysis is current and correct. The existing equipment loading has been applied at locations determined from the supplied documentation. Any deviation from the loading locations specified in this report shall be communicated to Colliers Engineering & Design to verify deviation will not adversely impact the analysis.

2. Mounts are assumed to have been properly fabricated, installed and maintained in good condition, twist free and plumb in accordance with its original design and manufacturer's specifications.

   Obvious safety and structural issues/deficiencies noticed at the time of the mount mapping and reported in the Mount Mapping Report are assumed to be corrected and documented as part of the PMI process and are not considered in the mount analysis.

   The mount analysis and the mount mapping are not a condition assessment of the mount. Proper maintenance and condition assessments are still required post analysis.

3. For mount analyses completed from other data sources (including new replacement mounts) and not specifically mapped in accordance with the NSTD-446 Standard, the mounts are assumed to have been properly fabricated, installed and maintained in good condition, twist free and plumb in accordance with its original design and manufacturer's specifications.

4. All member connections are assumed to have been designed to meet or exceed the load carrying capacity of the connected member unless otherwise specified in this report.

5. The mount was checked up to, and including, the bolts that fasten it to the mount collar/attachment and threaded rod connections in collar members if applicable. Local deformation and interaction between the mount collar/attachment and the supporting tower structure are outside the scope of this analysis.

6. All services are performed, results obtained, and recommendations made in accordance with generally accepted engineering principles and practices. Colliers Engineering & Design is not responsible for the conclusion, opinions, and recommendations made by others based on the information supplied.

7. Structural Steel Grades have been assumed as follows, if applicable, unless otherwise noted in this analysis:
   - Channel, Solid Round, Angle, Plate — ASTM A36 (Gr. 36)
   - HSS (Rectangular) — ASTM 500 (Gr. B-46)
   - Pipe — ASTM A53 (Gr. B-35)
   - Threaded Rod — F1554 (Gr. 36)
   - Bolts — ASTM A325

Discrepancies between in-field conditions and the assumptions listed above may render this analysis invalid unless explicitly approved by Colliers Engineering & Design.

Analysis Results:

Component	Utilization %	Pass/Fail
Face Horizontal	42.5%	Pass
Standoff	48.6%	Pass
Standoff Brace	92.0%	Pass
Standoff Tab	57.3%	Pass
Corner Plate	24.7%	Pass
Support Rail	48.3%	Pass
Mount Pipe	47.5%	Pass
Larger Mount Pipe	6.7%	Pass
Support Rail Plate	14.2%	Pass
Mount Connection	40.8%	Pass

Structure Rating – *(Controlling Utilization of all Components)*	**92.0%**

Mount Connection Envelope Reactions:

Connection Description	Elev. AGL (Ft)	Node Label	Envelope Wind Reactions				Envelope Wind + Ice Reactions			
			Axial (Lbs)	Lateral (Lbs)	Moment (K-Ft)	Torsion (K-Ft)	Axial (Lbs)	Lateral (Lbs)	Moment (K-Ft)	Torsion (K-Ft)
Sector C Standoff	138.9	N153 A	2123	3747	5.218	2.702	2760	4073	5.396	0.942
Sector B Standoff	138.9	N171	2102	3779	5.136	2.683	2744	4057	5.308	0.924
Sector A Standoff	138.9	N185	2151	3929	5.314	2.804	2898	4354	5.831	0.929

Notes:
- Axial loads act along the axis of the tower
- Lateral reactions act perpendicular to the tower
- Moment loads introduce bending moment to the tower
- Torsion loads introduce twisting moment to the tower
- Batch solutions by individual load cases are included at the end of this document

Mount Steel (EPA)a per ANSI/TIA-222-H Section 2.6.11.2:

Ice Thickness (In)	Mount Pipes Excluded		Mount Pipes Included	
	Front (EPA)a (Sq. Ft.)	Side (EPA)a (Sq. Ft.)	Front (EPA)a (Sq. Ft.)	Side (EPA)a (Sq. Ft.)
0	42.8	42.8	59.4	59.4
0.5	51.9	51.9	75.1	75.1
1	60.9	60.9	90.6	90.6

Notes:
- (EPA)a values listed above may be used in the absence of more precise information
- (EPA)a values in the table above include 3 sector(s).
- Ka factors included in (EPA)a calculations

Requirements:

The existing mount is **SUFFICIENT** for the final loading configuration shown in attachment 2 and do not require modifications. Additional requirements are noted below.

Remove Existing grating mounted OVP pipe and associated hardware. Refer to antenna placement diagrams for OVP installation location.

If required, ANSI/ASSP rigging plan review services compliant with the requirements of ANSI/TIA 322 are available for a Construction Class IV site or other. Separate review fees will apply.

Attachments:

1. **Contractor Required Post Installation Inspection (PMI) Report Deliverables**
2. Antenna Placement Diagrams
3. Mount Photos
4. Mount Mapping Report (for reference only)
5. Analysis Calculations

Mount Desktop – Post Modification Inspection (PMI) Report Requirements

Documents & Photos Required from Contractor – Passing Mount Analysis

Passing Mount Analysis requires a PMI due to a modification in loading.

Electronic pdf version of this can be downloaded at https://pmi.vzwsmart.com.

For additional questions and support, please reach out to pmisupport@colliersengineering.com

---

MDG #: 5000386192 SMART Project #: 10214349 Fuze Project ID: 16092561

Purpose – to provide SMART Tool structural vendor the proper documentation in order to complete the required Mount Desktop review of the Post Modification Inspection Report.

- Contractor is responsible for making certain the photos provided as noted below provide confirmation that the installation was completed in accordance with this Passing Mount Analysis.
- Contractor shall relay any data that can impact the performance of the mount, this includes safety issues.

Base Requirements:

- If installation will cause damage to the structure, the climbing facility, or safety climb if present or any installed system, SMART Tool vendor to be notified prior to install. Any special photos outside of the standard requirements will be indicated on the drawings.
- Provide "as built mount drawings" showing contractor's name, contact information, preparer's signature, and date. Any deviations from the drawings (Proposed modification) shall be shown. NOTE: If loading is different than what is conveyed in the passing mount analysis (MA) contact the SMART Tool vendor immediately.
- Each photo should be time and date stamped
- Photos should be high resolution.
- Contractor shall ensure that the safety climb wire rope is supported and not adversely impacted by the install of the modification components. This may involve the install of wire rope guides, or other items to protect the wire rope. If there is conflict, contact the SMART Tool engineer for recommendations.
- The PMI can be accessed at the following portal: ***https://pmi.vzwsmart.com***

Photo Requirements:

- *Photos taken at ground level*
  - Photo of Gate Signs showing the tower owner, site name, and number.
  - Overall tower structure after installation.
  - Photos of the mount after installation; if the mounts are at different rad elevations, pictures must be provided for all elevations that equipment was installed.
- *Photos taken at Mount Elevation*
  - Photos showing the safety climb wire rope above and below the mount prior to installation.
  - Photos showing the climbing facility and safety climb if present.

- Photos showing each individual sector after installation. Each entire sector shall be in one photo to show the interconnection of members.
    - These photos shall also certify that the placement and geometry of the equipment on the mount is as depicted in the antenna placement diagram in this form.
- Photos that show the model number of each antenna and piece of equipment installed per sector.

Antenna & equipment placement and Geometry Confirmation:

- The contractor shall certify that the antenna & equipment placement and geometry is in accordance with the sketch and table as included in the mount analysis and noted below.

☐ The contractor certifies that the photos support and the equipment on the mount is as depicted on the sketch and table included in this form and with the mount analysis provided.

OR

☐ The contractor notes that the equipment on the mount is not in accordance with the sketch and has noted the differences below and provided photo documentation of any alterations.

Special Instructions / Validation as required from the MA or any other information the contractor deems necessary to share that was identified:

Issue:

Remove Existing grating mounted OVP pipe and associated hardware. Refer to antenna placement diagrams for OVP installation location.

Response:

Special Instruction Confirmation:

☐ The contractor has read and acknowledges the above special instructions.

☐ All hardware listed in the Special Instructions above (if applicable) has been properly installed, and the existing hardware was inspected.

☐ The material utilized was as specified in the SMART Tool engineering vendor Special Instructions above (if applicable) and included in the material certification folder is a packing list or invoice for these materials.

OR

☐ The material utilized was approved by a SMART Tool engineering vendor as an “equivalent” and this approval is included as part of the contractor submission.

Comments:

Contractor certifies that the climbing facility / safety climb was not damaged prior to starting work:

☐ Yes ☐ No

Contractor certifies no new damage created during the current installation:

☐ Yes ☐ No

Contractor to certify the condition of the safety climb and verify no damage when leaving the site:

☐ Safety Climb in Good Condition ☐ Safety Climb Damaged

Contractor to provide measurement from top of the highest equipment/steel to the bottom of the lowest equipment/steel by documenting it using the most appropriate illustration below along with supporting photos:

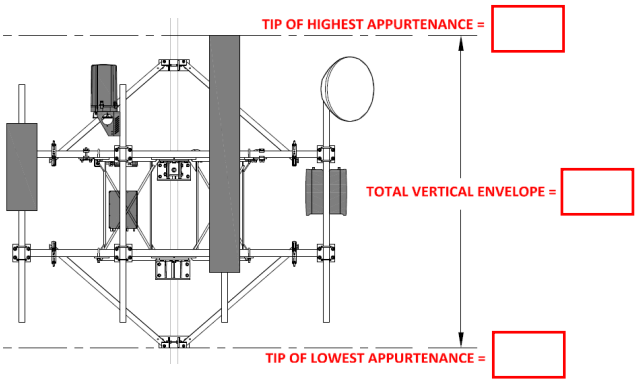

Illustration #1

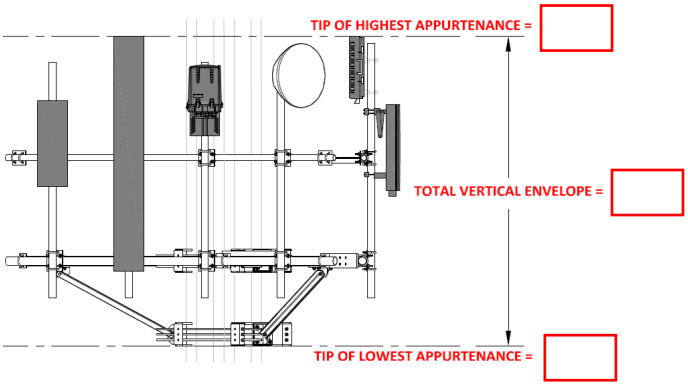

Illustration #2

Certifying Individual:

Company:	
Employee Name:	
Contact Phone:	
Email:	
Date:	

A i Seesgcgl

0 ecgel i l v

0 ei ulvg 0e

Colliers Engineering & Design

Plan View

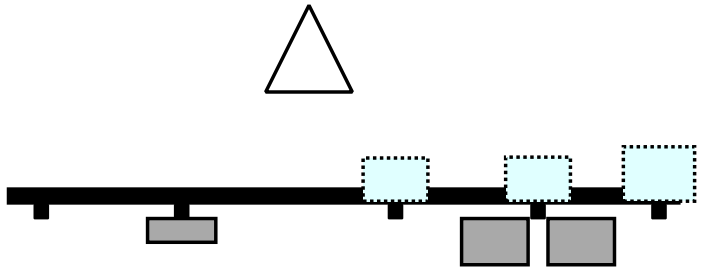

Front View - 0 0

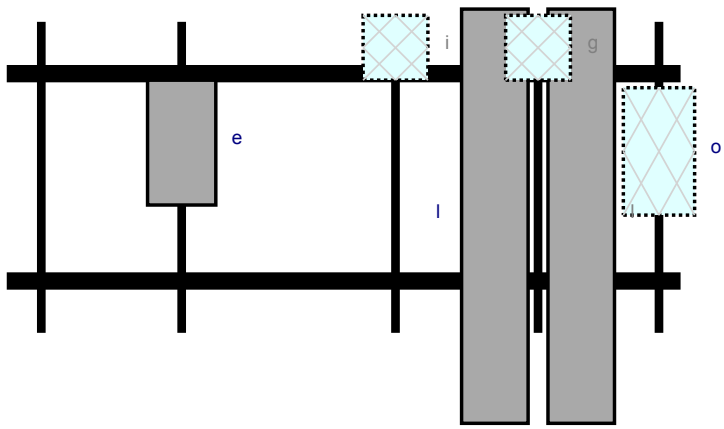

n l i g e

6		A B	A B	0 l	6	0	0 l	0
o	FoogpF Fl u	gvln	eoln	ene	e		i c	c
l	co uocFci	vnlv	enll	egi	g		l n	ec
l	co uocFci	vnlv	enll	egi	g		l n	Fec
g	l l oe Fei	en	en	egi	g		o	c
i	l l i v Fgn	en	en	vc	i		o	c
e	ol ei Fpp	gulv	enlu	l cln	l		gplvo	c
		eg	v					cosgvsgcgg

B i Se Sgcgl

0 ecgel i l v

0 ei ulvg 0g

Colliers Engineering & Design

Plan View

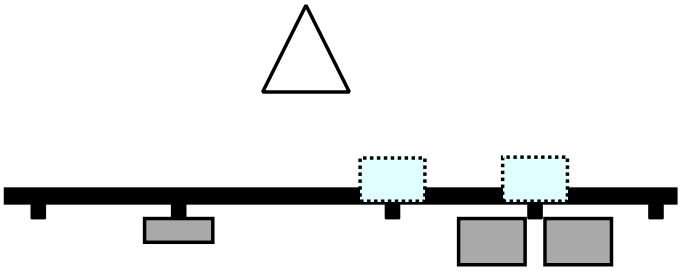

Front View - 0 0

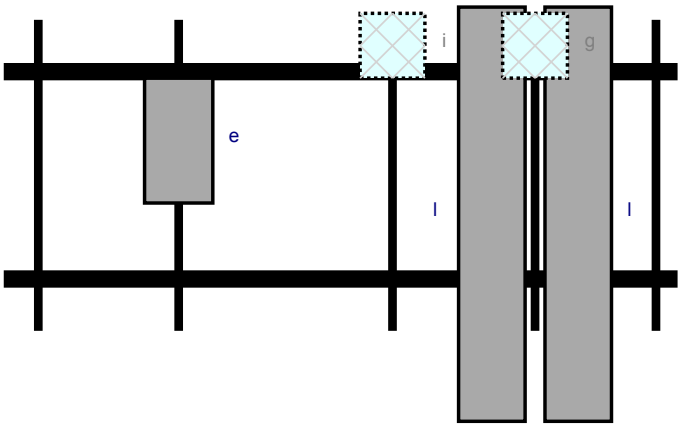

n l i g e

0 l0

6	A B	A B	0 l	6	0	0 l	0
l co uocFci	vnlv	enll	egi	g		l n	ec
l co uocFci	vnlv	enll	egi	g		l n	Fec
g l l oe Fei	en	en	egi	g		o	c
i l l i v Fgn	en	en	vc	i		o	c
e ol ei Fpp	gulv	enlu	l cln	l		gplvo	c

C i Se Sgcgl

0 ecgel i l v

0 ei ulvg 0

Colliers Engineering & Design

Plan View

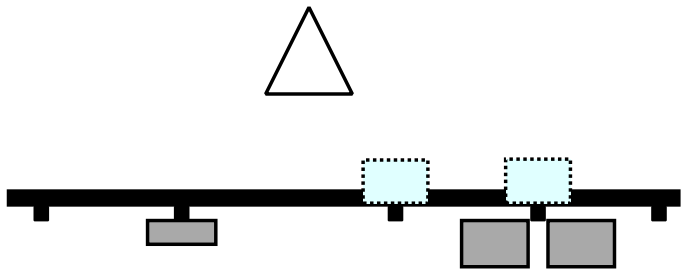

Front View - 0 0

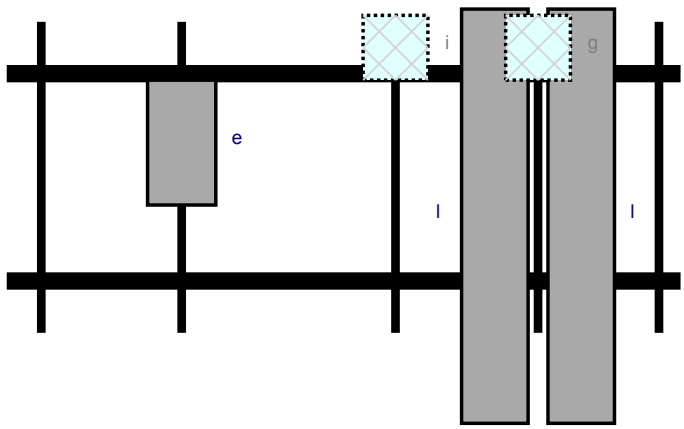

n l i g e

6		A B	A B	0 l	6	0	0 l	0
l	co uocFci	vnlv	enll	egi	g		l n	ec
l	co uocFci	vnlv	enll	egi	g		l n	Fec
g	l l oe Fei	en	en	egi	g		o	c
i	l l i v Fgn	en	en	vc	i		o	c
e	ol ei Fpp	gulv	enlu	l cln	l		gplvo	c

06/29/2022 13:42

V4.1 Updated on 12-17-2021

Antenna Mount Mapping Form (PATENT PENDING)

FCC #

Colliers Engineering & Design

Tower Owner:	CCI	**Mapping Date:**	6/29/2022
Site Name:	RIVERBANK CT	**Tower Type:**	Monopole
Site Number or ID:	468411	**Tower Height (Ft.):**	150
Mapping Contractor:	TEP	**Mount Elevation (Ft.):**	133

This antenna mapping form is the property of TES and under **PATENT PENDING**. The formation contained herein is considered confidential in nature and is to be used only for the specific customer it was intended for. Reproduction, transmission, publication, modification or disclosure by any method is prohibited except by express written permission of TES. All means and methods are the responsibility of the contractor and the work shall be compliant with ANSI/ASSE A 10.48, OSHA, FCC, FAA and other safety requirements that may apply. TES is not warrantying the usability of the safety climb as it must be assessed prior to each use in compliance with OSHA requirements.

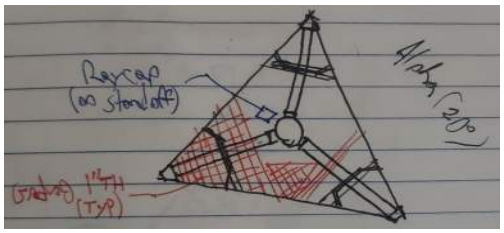

Mount Pipe Configuration and Geometries [Unit = Inches]

Sector / Position	Mount Pipe Size & Length	Vertical Offset Dimension "u"	Horizontal Offset "C1, C2, C3, etc."	Sector / Position	Mount Pipe Size & Length	Vertical Offset Dimension "u"	Horizontal Offset "C1, C2, C3, etc."
A1	2.375"Øx0.154"x72"	60.00	5.00	C1	2.375"Øx0.154"x72"	60.00	5.00
A2	2.375"Øx0.154"x60"	41.00	16.00	C2	2.375"Øx0.154"x60"	41.00	16.00
A3	3.5"Øx0.22"x72"	64.00	33.00	C3	3.5"Øx0.22"x72"	64.00	33.00
A4	2.375"Øx0.154"x72"	58.00	66.00	C4	2.375"Øx0.154"x72"	58.00	66.00
A5	2.375"Øx0.154"x60"	41.00	115.50	C5	2.375"Øx0.154"x60"	50.00	115.50
A6	2.375"Øx0.154"x60"	41.00	135.50	C6	2.375"Øx0.154"x60"	41.00	135.50
B1	2.375"Øx0.154"x72"	60.00	5.00	D1			
B2	2.375"Øx0.154"x60"	41.00	16.00	D2			
B3	3.5"Øx0.22"x72"	64.00	33.00	D3			
B4	2.375"Øx0.154"x72"	58.00	66.00	D4			
B5	2.375"Øx0.154"x60"	41.00	115.50	D5			
B6	2.375"Øx0.154"x60"	41.00	135.50	D6			

Distance from top of bottom support rail to lowest tip of ant./eqpt. of Carrier above. (N/A if > 10 ft.) :	
Distance from top of bottom support rail to highest tip of ant./eqpt. of Carrier below. (N/A if > 10 ft.) :	

Please enter additional infomation or comments below.

Total Coax: (12) FH 1-5/8", (1) FH 1-1/2" |Pipe 7 (All): 2.375"Øx0.154"x72", 60" V-off, 147" H-off

Ant. 6 (All):RFS FD9R6004/2C-3L, 134' CL, Photo #78 | Ant. 7 (C): Andrew DB846F65ZAXY, 135.25' CL, Photo #92

Ant.7 (AB): Amphenol BXA70063-6CF-EDIN, 135' CL, Photo #82 | *See notes for offsets

Tower Face Width at Mount Elev. (ft.):		Tower Leg Size or Pole Shaft Diameter at Mount Elev. (in.):	

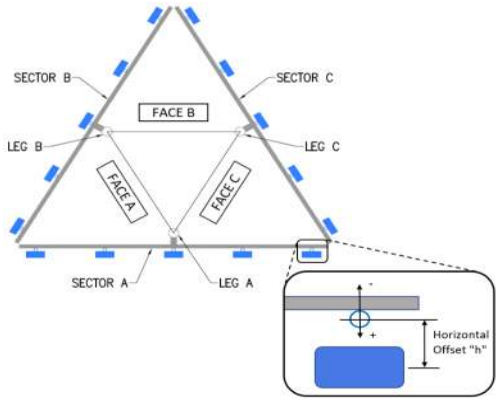

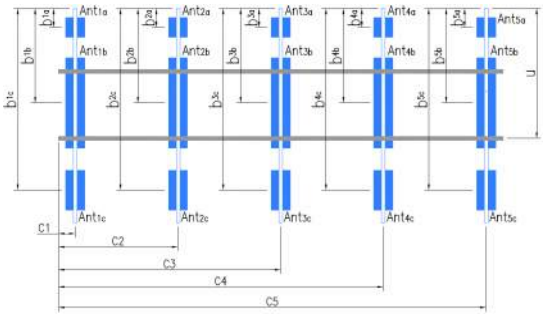

Antenna Layout (Looking Out From Tower)

	Enter antenna model. If not labeled, enter "Unknown".						Mounting Locations [Units are inches and degrees]			Photos of antennas
Ants. Items	Antenna Models if Known	Width (in.)	Depth (in.)	Height (in.)	Coax Size and Qty	Antenna Center-line (Ft.)	Vertical Distances"b_{1a}, b_{2a}, b_{3a}, b_{1b}...." (Inches)	Horiz. Offset "h" (Use "-" if Ant. is behind)	Antenna Azimuth (Degrees)	Photo Numbers
Sector A										
Ant_{1a}										
Ant_{1b}	Andrew DB846F65ZA	10.00	8.50	72.00		135	36.00	8.00	20.00	57
Ant_{1c}										
Ant_{2a}										
Ant_{2b}										
Ant_{2c}										
Ant_{3a}										
Ant_{3b}	RYMSA MGD3-800T0	6.30	3.50	52.70		135.58	33.00	7.00	20.00	65
Ant_{3c}	Alcatel Lucent 9442 R	10.60	6.70	24.40		135.33	36.00	-7.00		63
Ant_{4a}										
Ant_{4b}	Unknown Panel	12.50	6.00	72.00		134.92	35.00	10.00	20.00	67
Ant_{4c}										
Ant_{5a}										
Ant_{5b}	RYMSA MGD3-800T0	6.30	3.50	52.70		134.08	28.00	8.00	20.00	72
Ant_{5c}	RFS FD9R6004/2C-3L	6.50	1.50	5.80		134	29.00	-3.00		86
Ant on Standoff										
Ant on Standoff										
Ant on Tower										
Ant on Tower										

Mount Azimuth (Degree) for Each Sector			Tower Leg Azimuth (Degree) for Each Sector		
Sector A:	20.00	Deg	Leg A:		Deg
Sector B:	140.00	Deg	Leg B:		Deg
Sector C:	260.00	Deg	Leg C:		Deg
Sector D:		Deg	Leg D:		Deg

Climbing Facility Information			
Location:	190.00	Deg	
Climbing Facility	Corrosion Type:		Good condition.
	Access:		Climbing path was unobstructed.
	Condition:		Good condition.

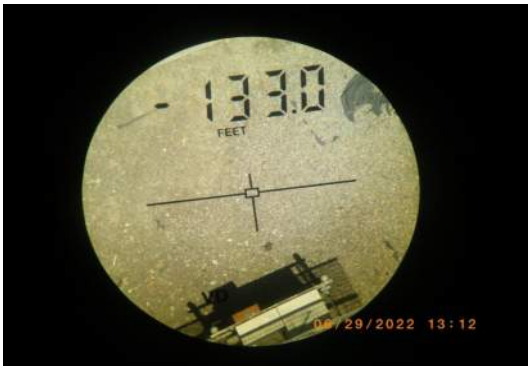

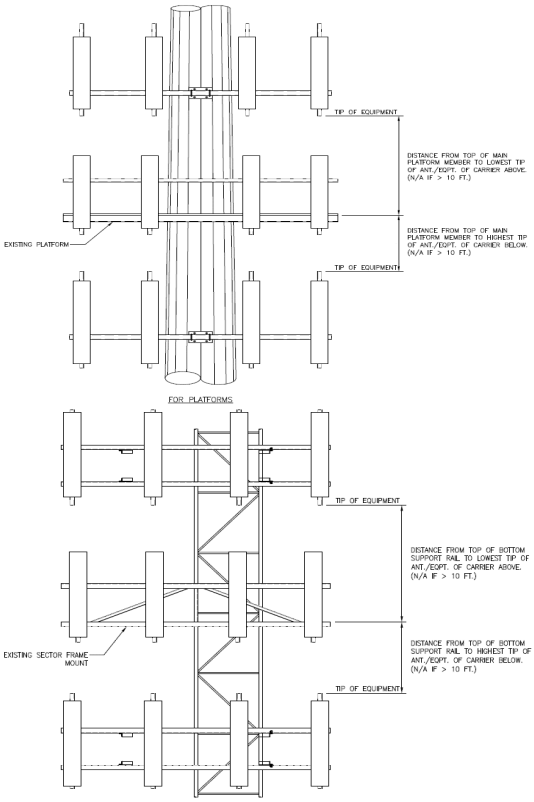

Sector B										
Ant_{1a}										
Ant_{1b}	Andrew DB846F65ZA	10.00	8.50	72.00		135	36.00	8.00	140.00	104
Ant_{1c}										
Ant_{2a}										
Ant_{2b}										
Ant_{2c}										
Ant_{3a}										
Ant_{3b}	RYMSA MGD3-800T0	6.30	3.50	52.70		135.58	33.00	7.00	140.00	108
Ant_{3c}	Alcatel Lucent 9442 R	10.60	6.70	24.40		135.33	36.00	-7.00		107
Ant_{4a}										
Ant_{4b}	Unknown Panel	12.50	6.00	72.00		134.92	35.00	10.00	140.00	111
Ant_{4c}										
Ant_{5a}										
Ant_{5b}	RYMSA MGD3-800T0	6.30	3.50	52.70		134.08	28.00	8.00	140.00	117
Ant_{5c}	RFS FD9R6004/2C-3L	6.50	1.50	5.80		134	29.00	-3.00		115
Ant on Standoff										
Ant on Standoff										
Ant on Tower										
Ant on Tower										
Sector C										
Ant_{1a}										
Ant_{1b}	Andrew DB846F65ZA	10.00	8.50	72.00		135	36.00	8.00	260.00	133
Ant_{1c}										
Ant_{2a}	RFS FD9R6004/2C-3L	6.50	1.50	5.80		134	29.00	-3.00		136
Ant_{2b}										
Ant_{2c}										
Ant_{3a}										
Ant_{3b}	RYMSA MGD3-800T0	6.30	3.50	52.70		135.58	33.00	7.00	260.00	140
Ant_{3c}	Alcatel Lucent 9442 R	10.60	6.70	24.40		135.33	36.00	-7.00		139
Ant_{4a}										
Ant_{4b}	Unknown Panel	12.50	6.00	72.00		134.92	35.00	10.00	260.00	142
Ant_{4c}										
Ant_{5a}										
Ant_{5b}	RYMSA MGD3-800T0	6.30	3.50	52.70		134.08	28.00	8.00	260.00	117
Ant_{5c}										
Ant on Standoff	Raycap RRFDC-3315-P	15.73	10.30	28.93			0.00	6.00		100
Ant on Standoff										
Ant on Tower										
Ant on Tower										
Sector D										
Ant_{1a}										
Ant_{1b}										
Ant_{1c}										
Ant_{2a}										
Ant_{2b}										
Ant_{2c}										
Ant_{3a}										
Ant_{3b}										
Ant_{3c}										
Ant_{4a}										
Ant_{4b}										
Ant_{4c}										
Ant_{5a}										
Ant_{5b}										
Ant_{5c}										
Ant on Standoff										
Ant on Standoff										
Ant on Tower										
Ant on Tower										

Observed Safety and Structural Issues During the Mount Mapping		
Issue #	Description of Issue	Photo #
1		
2		
3		
4		
5		
6		
7		
8		

Mapping Notes

1. Please report any visible structural or safety issues observed on the antenna mounts (Damaged members, loose connections, tilting mounts, safety climb issues, etc.)
2. If the thickness of the existing pipes or tubing can't be obtained from a general tool (such as Caliper), please use an ultrasonic measurement tool (thickness gauge) to measure the thickness.
3. Please create all required detail sketches of the mounts and insert them into the "Sketches" tab.
4. Please measure and enter the bolt sizes and types under the Members Box in the spreadsheet of the mount type.
5. Take and label the photos of the tower, mounts, connections, antennas and all measurements. Minimum 50 photos are required.
6. Please measure and report the size and length of all existing antenna mounting pipes.
7. Please measure and report the antenna information for all sectors.
8. Don't delete or rearrange any sheet or contents of any sheet from this mapping form.

Standard Conditions

1. Obvious safety and structural issues/deficiencies noticed at the time of the mount mapping are to be reported in this mapping. However, this mount mapping is not a condition assessment of the mount.

V4.1 Updated on 12-17-2021

SMART Tool© Vendor	Antenna Mount Mapping Form (PATENT PENDING)		FCC #

Tower Owner:	CCI	**Mapping Date:**	6/29/2022
Site Name:	RIVERBANK CT	**Tower Type:**	Monopole
Site Number or ID:	468411	**Tower Height (Ft.):**	150
Mapping Contractor:	TEP	**Mount Elevation (Ft.):**	133

This antenna mapping form is the property of TES and under **PATENT PENDING**. The formation contained herein is considered confidential in nature and is to be used only for the specific customer it was intended for. Reproduction, transmission, publication, modification or disclosure by any method is prohibited except by express written permission of TES. All means and methods are the responsibility of the contractor and the work shall be compliant with ANSI/ASSE A 10.48, OSHA, FCC, FAA and other safety requirements that may apply. TES is not warrantying the usability of the safety climb as it must be assessed prior to each use in compliance with OSHA requirements.

Please Insert Sketches of the Antenna Mount

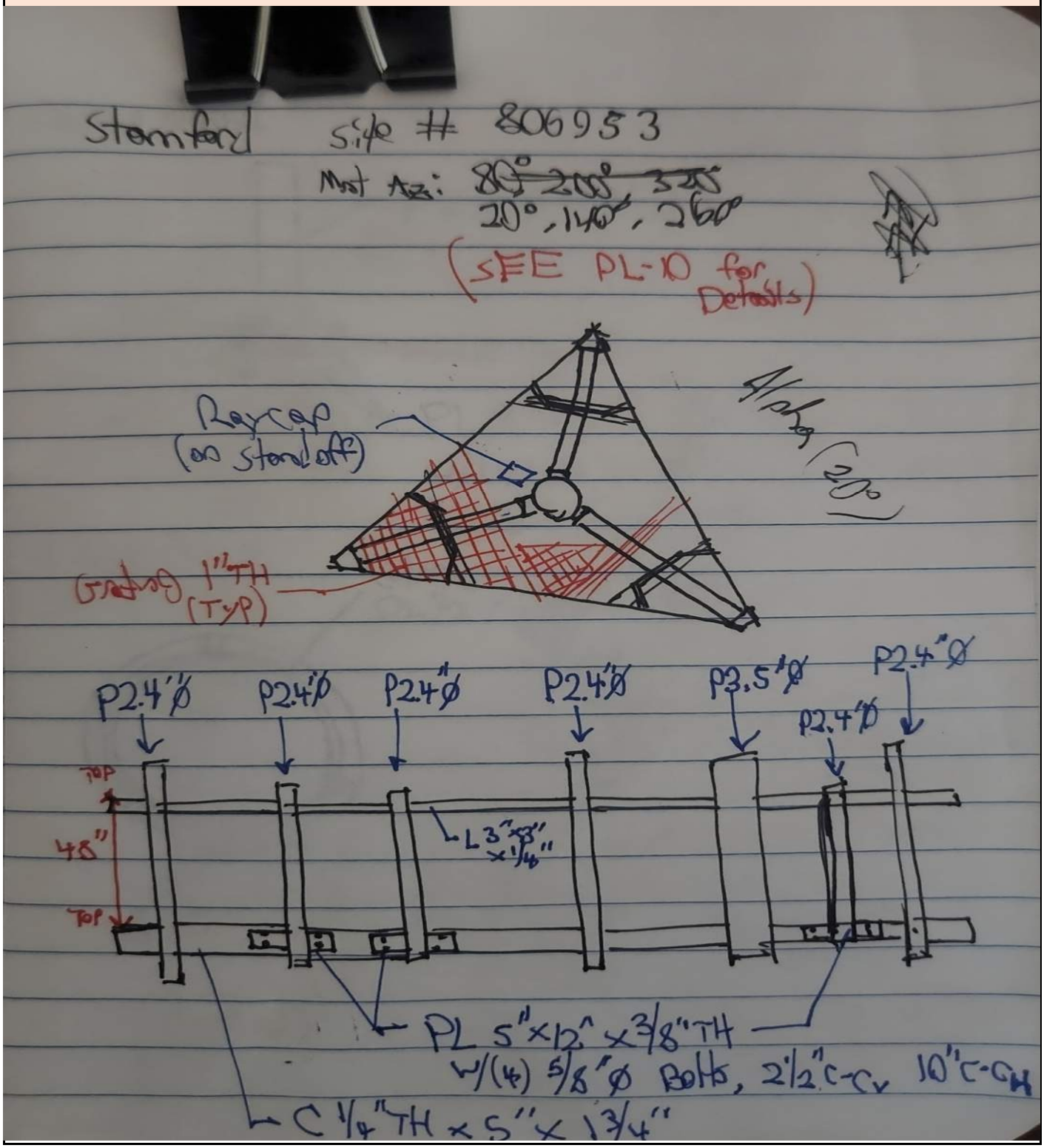

Please Insert Sketches of the Antenna Mount, cont'd

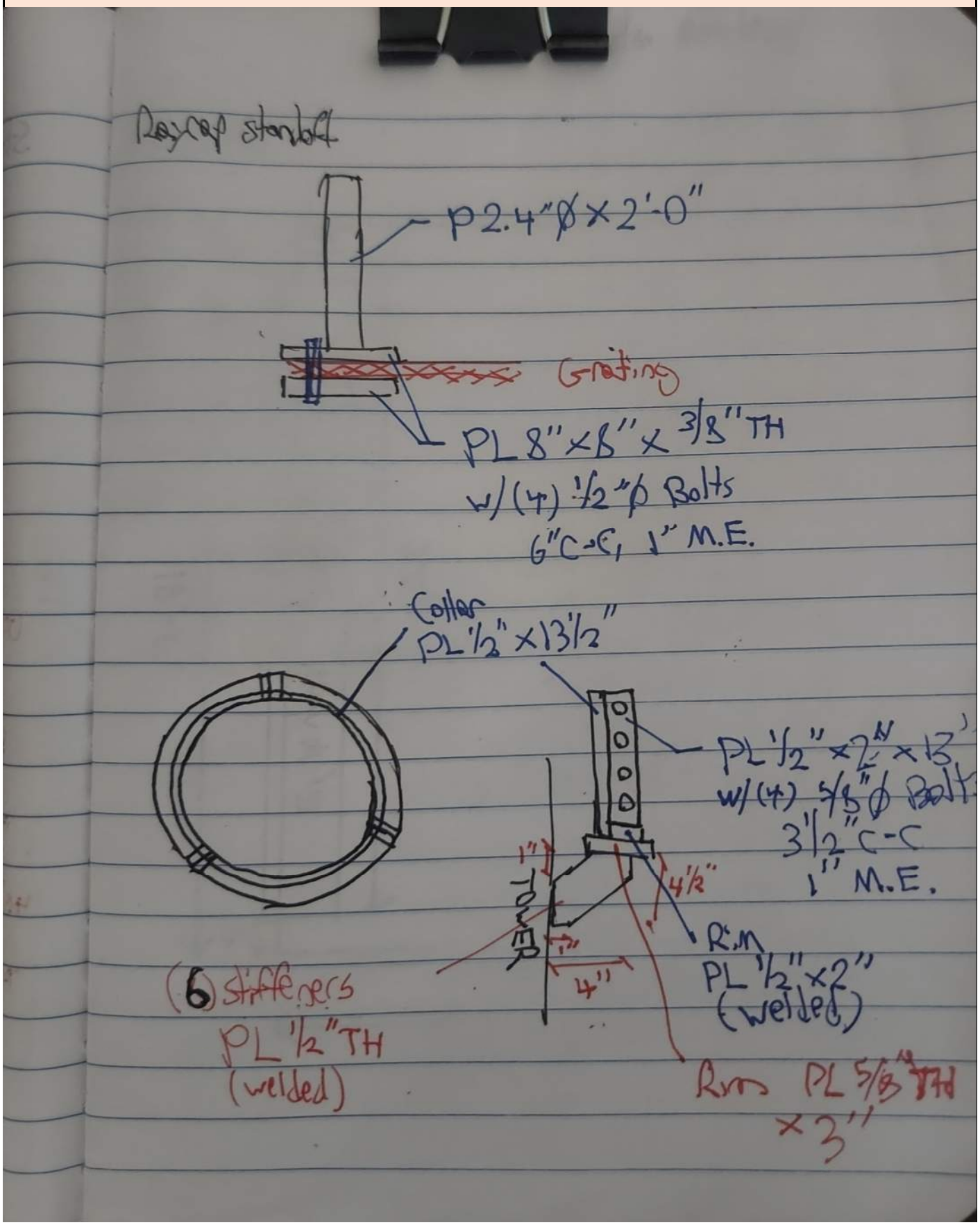

Please Insert Sketches of the Antenna Mount, cont'd

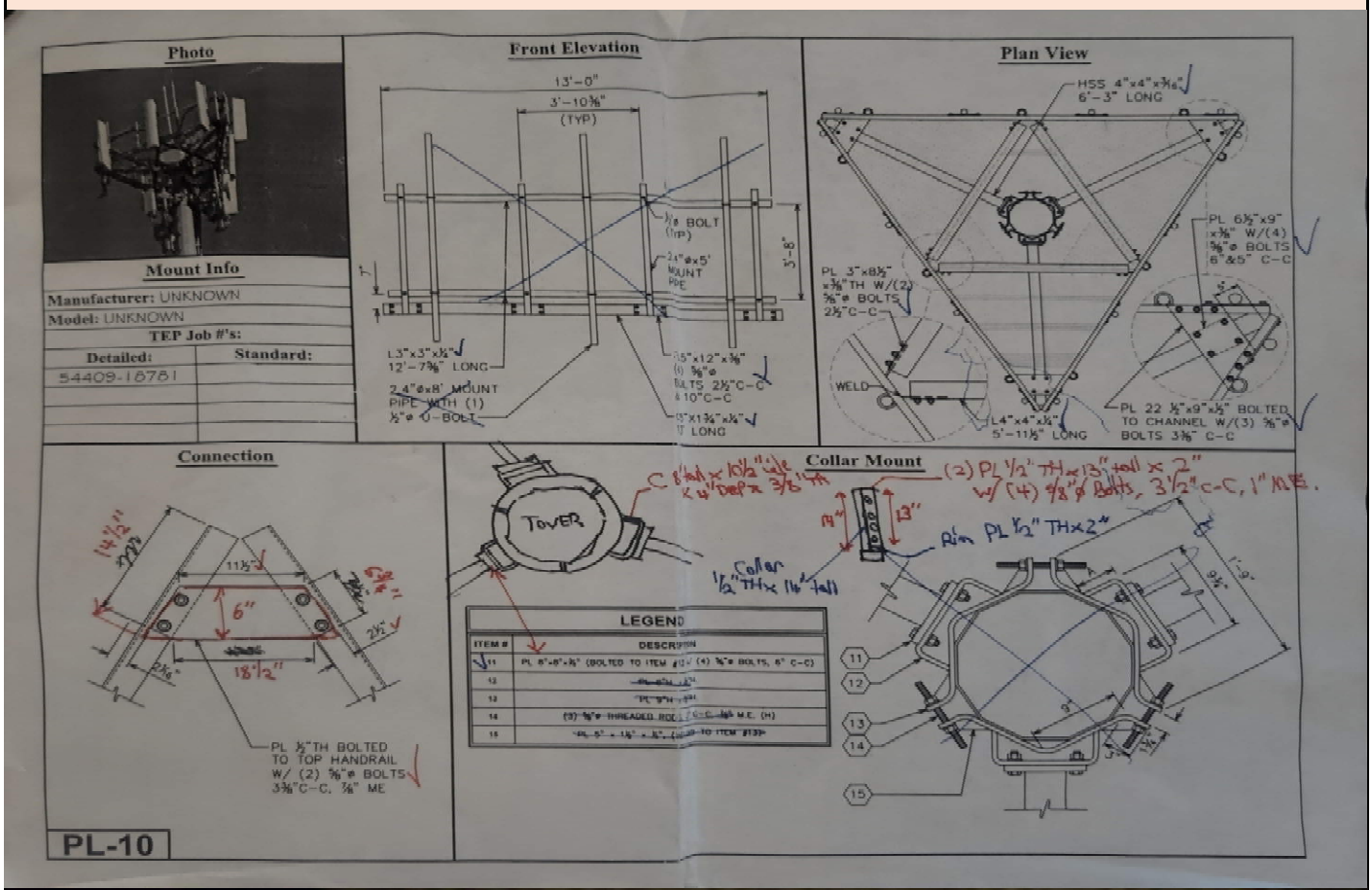

SITE NAME/#: RIVER BANK CT CREW: WC / I N DATE: 04/29/22

A-LEG Az: — MOUNT Az: ~~0, 120, 240~~ 20 / 140 / 260 TWR HEIGHT: 150' MNT ℄: 133

TWR FW @ MNT: ~~180~~ TWR LEGø @ MNT: — WA3F @ MNT: 21" TOTAL FLATS: 12

SAFETY Az: 190° VZW TO NEAREST NON-VZW APP. ABOVE: — BELOW: — FOR MONOPOLE: INSIDE OR OUTSIDE? COAX: (12) FH 1 5/8" (1) FH 1½"

SAFETY CONDITION? SAFETY OBSTRUCTION? (Y) / N WHERE?: BOTT. MT LIGHTING OBSTRUCTION? Y / (N) WHERE?: — *T-ARMS & PLATFORMS* WELD SIZE AT STANDOFF TO COLLAR:

FCC#:

						5	5	2	2	6	5	4	3	3	2	1	POS
						1	2	2	1			2	1	3	1	2	

Please Insert Sketches of the Antenna Mount, cont'd

SITE NAME/#: RIVER BANK CT CREW: WC/IN DATE: 06/29/22

A-LEG Az: — MOUNT Az: ~~0, 120, 240~~ 26, 140, 260 TWR HEIGHT: 150' MNT ℄: 133

TWR FW @ MNT: ~~150~~ TWR LEGØ @ MNT: — WA3F @ MNT: 21" TOTAL FLATS: 12

SAFETY Az: 190° VZW TO NEAREST NON-VZW APP. ABOVE: — BELOW: — FOR MONOPOLE: INSIDE OR OUTSIDE? COAX: (12) FH 1 5/8" (1) FH 1½

SAFETY CONDITION?: SAFETY OBSRUCTION? (Y) N WHERE?: BOTT. AT LIGHTING OBSRUCTION? Y / (N) WHERE?: — *T-ARMS & PLATFORMS* WELD SIZE AT STANDOFF TO COLLAR: —

FCC#: —

POS.	MOUNT PIPES DIA.	LENGTH	Ydir	Hgt	ANTENNAS & EQUIPMENT MANUFACTURER	MODEL #	Hgt	Hgt	AZIMUTH
1	2.4"Ø	72"	60"	5"	ANDREW	DB846F65ZAXY	36"	8"	29, 140, 260
2	1	60"	41"	16"	—	—	—	—	
3	3.5Ø	72"	64"	33"	RYMSA	MGD3-800TD/5206	33"	7"	
3	1	1	1	1	ALCATE-LUCENT	9442 BRH 2X40-AWS	34"	-7"	
4	2.4"Ø	72"	58"	66"	UNK.	12.5"x 6"x 72"	35"	10"	
5C	1	60"	56"	115.5"	RYMSA	MGD3-800 TO	28"	8"	
6	1	60"	41"	135.5"	RFS	FD9R6004/2C-3L	29"	-3	
7B	1	72"	60"	147"	AMPHENOL	BXA7G063-6CF-EDIV	32"	9"	
7C	2.4"Ø	72"	60"	147"	ANDREW	DB846F65ZAXY	33"	7"	
5B	2.4"Ø	60"	41"	135.5"	RYMSA	MGD3-800TD	28"	8"	
5A	1	1	1	1	RFS	FD9R6004/2C-3L	29	-3	
	C STAND OFF				RAYCAP	RRFDC-3315-PF-48	0"	6"	

JUN 29 2022 20:33

Please Insert Sketches of the Antenna Mount, cont'd

POS.	MOUNT PIPES				ANTENNAS & EQUIPMENT				
	WIDTH	LENGTH	Vorr	Horr	MANUFACTURER	MODEL #	Vorr	Horr	AZIMUTH
1	2.4"ø	72"	60"	5"	ANDREW	DB846F65ZAXY	36"	8"	20,140,260
2	⊥	60"	41"	16"	—	—	—	—	
3	3.5"ø	72"	64"	33"	RYMSA	MGD3-800TO/52OE40	33"	7"	
3	⊥	⊥	⊥	⊥	ALCATE-LUCENT	9942 RRH 2X40-AWS	36"	-7"	
4	2.4"ø	72"	58"	66"	UNK.	12.5"x6"x72"	35"	10"	
5C	⊥	60"	56"	115.5"	RYMSA	MGD3-800 TO	28"	8"	
6	⊥	60"	41"	135.5"	RFS	FD9R6004/2C-3L	29"	-3	
7A/B	⊥	72"	60"	147"	AMPHENOL	BXA70063-6CF-EDIN	36"	9"	
7C	2.4"ø	72"	60"	147"	ANDREW	DB846F65ZAXY	33"	7"	
5B	2.4"ø	60"	41"	135.5	RYMSA	MGD3-800TO	28"	8"	
5A/B	⊥	⊥	⊥	⊥	RFS	FD9R6004/2C-3L	29	-3	
	C STAND OFF				RAYCAP	RRFDC-3315-PF-48	0"	6"	

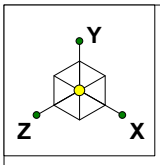

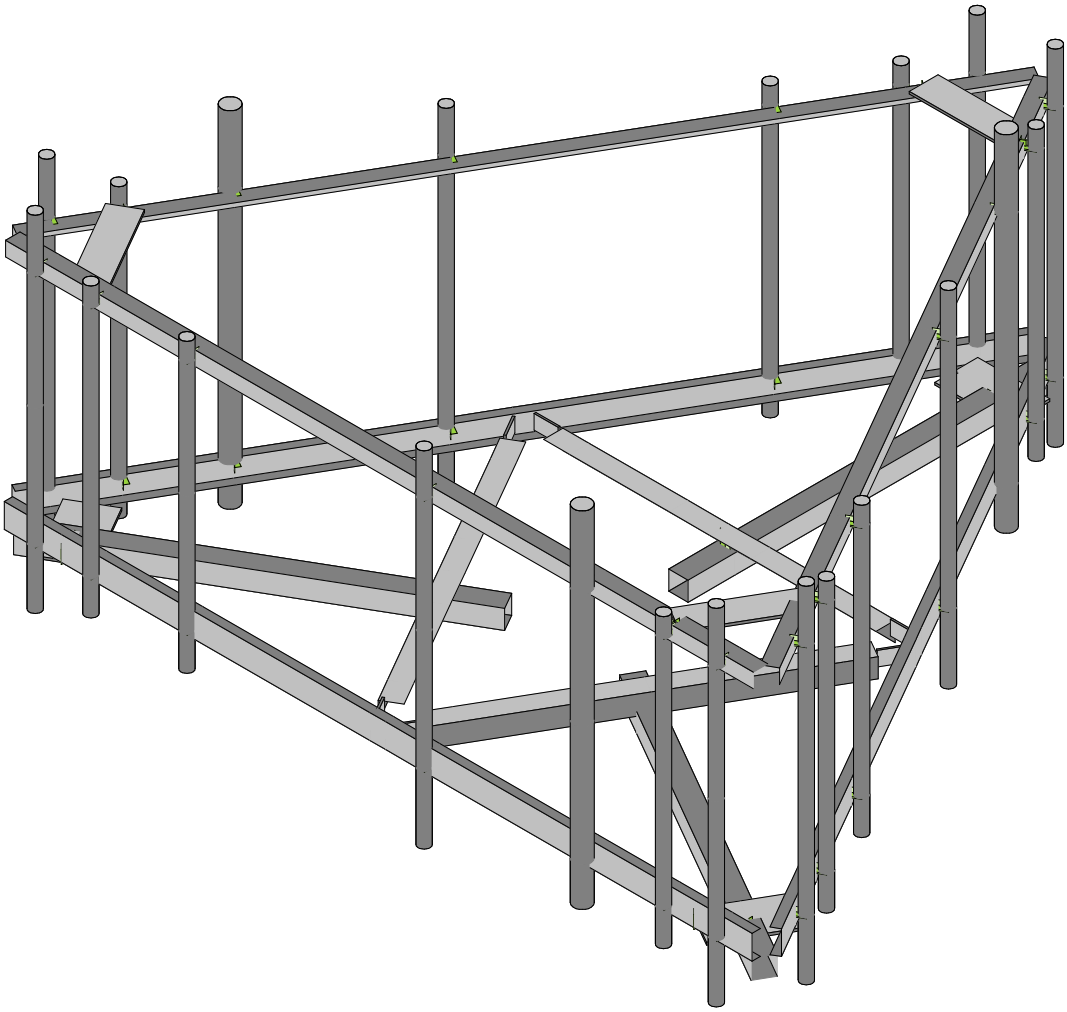

		SK - 1
		Mar 11, 2024 at 10:18 AM
		5000386192-VZW_MT_LO_H.r3d

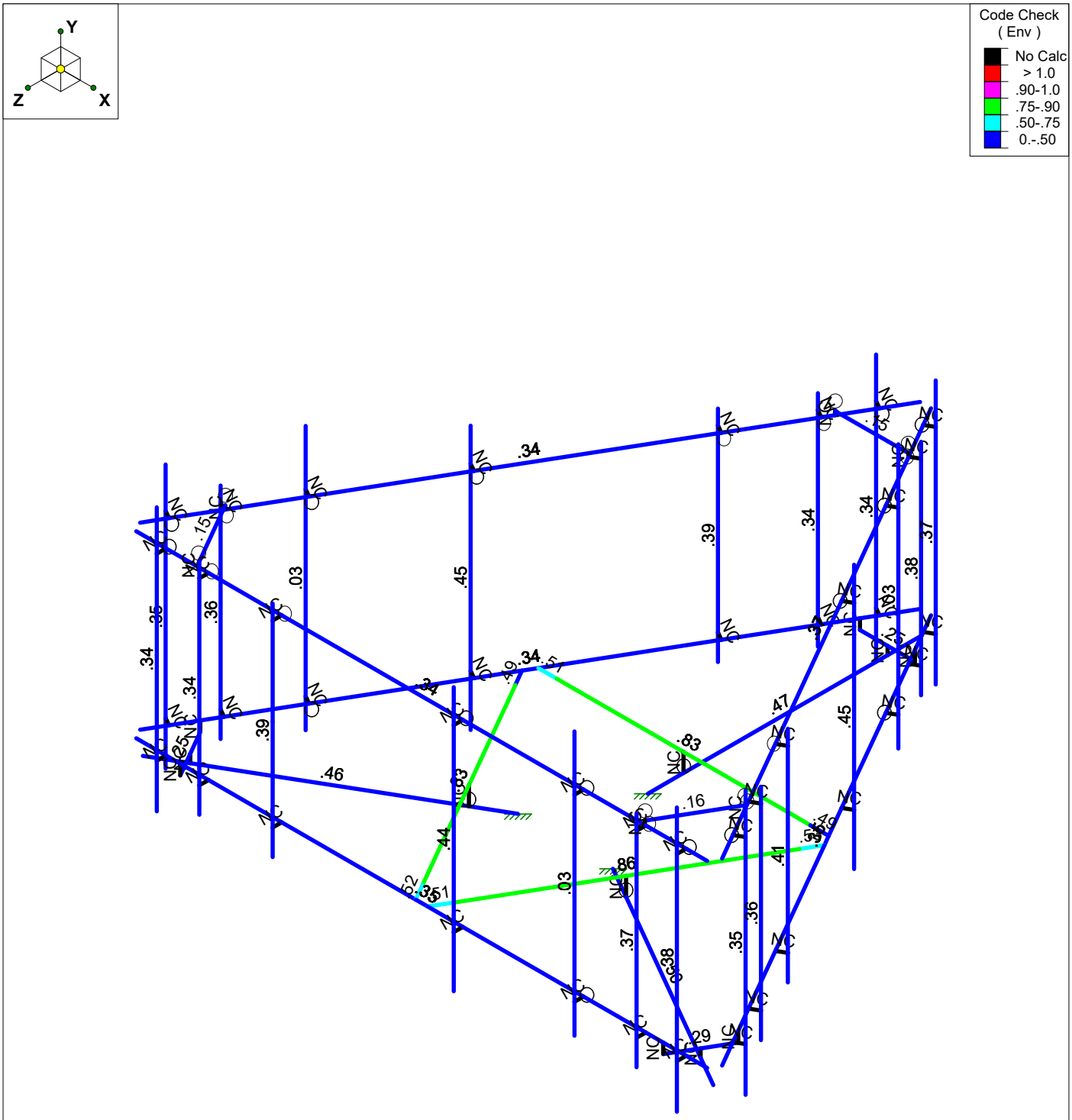

Member Code Checks Displayed (Enveloped)
Results for LC 1, 1.2D+1.0Wo (0 Deg)

		SK - 2
		Mar 11, 2024 at 10:18 AM
		5000386192-VZW_MT_LO_H.r3d

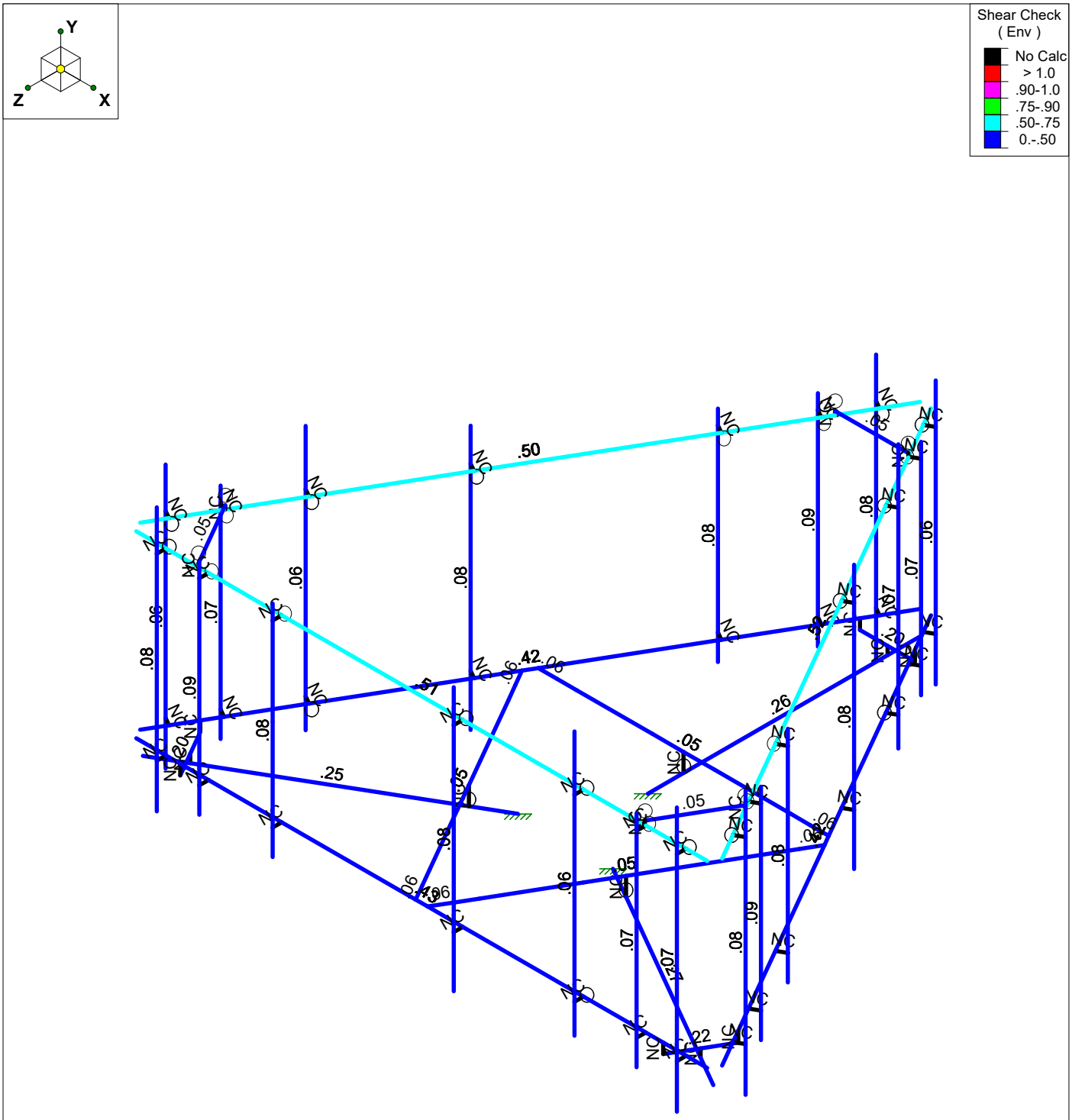

Member Shear Checks Displayed (Enveloped)
Results for LC 1, 1.2D+1.0Wo (0 Deg)

		SK - 3
		Mar 11, 2024 at 10:19 AM
		5000386192-VZW_MT_LO_H.r3d

Basic Load Cases

	BLC Description	Category	X Gravity	Y Gravity	Z Gravity	Joint	Point	Distribut...	Area(Me...	Surface(...
1	Antenna D	None					78			
2	Antenna Di	None					78			
3	Antenna Wo (0 Deg)	None					78			
4	Antenna Wo (30 Deg)	None					78			
5	Antenna Wo (60 Deg)	None					78			
6	Antenna Wo (90 Deg)	None					78			
7	Antenna Wo (120 Deg)	None					78			
8	Antenna Wo (150 Deg)	None					78			
9	Antenna Wo (180 Deg)	None					78			
10	Antenna Wo (210 Deg)	None					78			
11	Antenna Wo (240 Deg)	None					78			
12	Antenna Wo (270 Deg)	None					78			
13	Antenna Wo (300 Deg)	None					78			
14	Antenna Wo (330 Deg)	None					78			
15	Antenna Wi (0 Deg)	None					78			
16	Antenna Wi (30 Deg)	None					78			
17	Antenna Wi (60 Deg)	None					78			
18	Antenna Wi (90 Deg)	None					78			
19	Antenna Wi (120 Deg)	None					78			
20	Antenna Wi (150 Deg)	None					78			
21	Antenna Wi (180 Deg)	None					78			
22	Antenna Wi (210 Deg)	None					78			
23	Antenna Wi (240 Deg)	None					78			
24	Antenna Wi (270 Deg)	None					78			
25	Antenna Wi (300 Deg)	None					78			
26	Antenna Wi (330 Deg)	None					78			
27	Antenna Wm (0 Deg)	None					78			
28	Antenna Wm (30 Deg)	None					78			
29	Antenna Wm (60 Deg)	None					78			
30	Antenna Wm (90 Deg)	None					78			
31	Antenna Wm (120 Deg)	None					78			
32	Antenna Wm (150 Deg)	None					78			
33	Antenna Wm (180 Deg)	None					78			
34	Antenna Wm (210 Deg)	None					78			
35	Antenna Wm (240 Deg)	None					78			
36	Antenna Wm (270 Deg)	None					78			
37	Antenna Wm (300 Deg)	None					78			
38	Antenna Wm (330 Deg)	None					78			
39	Structure D	None		-1					6	
40	Structure Di	None						45	6	
41	Structure Wo (0 Deg)	None						90		
42	Structure Wo (30 Deg)	None						90		
43	Structure Wo (60 Deg)	None						90		
44	Structure Wo (90 Deg)	None						90		
45	Structure Wo (120 Deg)	None						90		
46	Structure Wo (150 Deg)	None						90		
47	Structure Wo (180 Deg)	None						90		
48	Structure Wo (210 Deg)	None						90		
49	Structure Wo (240 Deg)	None						90		
50	Structure Wo (270 Deg)	None						90		
51	Structure Wo (300 Deg)	None						90		
52	Structure Wo (330 Deg)	None						90		
53	Structure Wi (0 Deg)	None						90		
54	Structure Wi (30 Deg)	None						90		
55	Structure Wi (60 Deg)	None						90		
56	Structure Wi (90 Deg)	None						90		
57	Structure Wi (120 Deg)	None						90		
58	Structure Wi (150 Deg)	None						90		

Basic Load Cases (Continued)

	BLC Description	Category	X Gravity	Y Gravity	Z Gravity	Joint	Point	Distribut...	Area(Me...	Surface(...
59	Structure Wi (180 Deg)	None						90		
60	Structure Wi (210 Deg)	None						90		
61	Structure Wi (240 Deg)	None						90		
62	Structure Wi (270 Deg)	None						90		
63	Structure Wi (300 Deg)	None						90		
64	Structure Wi (330 Deg)	None						90		
65	Structure Wm (0 Deg)	None						90		
66	Structure Wm (30 Deg)	None						90		
67	Structure Wm (60 Deg)	None						90		
68	Structure Wm (90 Deg)	None						90		
69	Structure Wm (120 Deg)	None						90		
70	Structure Wm (150 Deg)	None						90		
71	Structure Wm (180 Deg)	None						90		
72	Structure Wm (210 Deg)	None						90		
73	Structure Wm (240 Deg)	None						90		
74	Structure Wm (270 Deg)	None						90		
75	Structure Wm (300 Deg)	None						90		
76	Structure Wm (330 Deg)	None						90		
77	Lm1	None					1			
78	Lm2	None					1			
79	Lv1	None					1			
80	Lv2	None					1			
81	Antenna Ev	None					78			
82	Antenna Eh (0 Deg)	None					52			
83	Antenna Eh (90 Deg)	None					52			
84	Structure Ev	ELY							6	
85	Structure Eh (0 Deg)	ELZ			-.03				6	
86	Structure Eh (90 Deg)	ELX	.03						6	
87	BLC 39 Transient Area Loads	None						81		
88	BLC 40 Transient Area Loads	None						81		
89	BLC 84 Transient Area Loads	None								
90	BLC 85 Transient Area Loads	None						81		
91	BLC 86 Transient Area Loads	None						81		

Load Combinations

	Description	So...	P...	S...	BLC	Fac...	BLC	Fac...	BLC	Fac...	BLC	Fac...	BLC	Fac...	BLC	Fac...	BLC	Fac...	BLC	Fac...	BLC	Fac...	BLC	Fac...
1	1.2D+1.0Wo (0 Deg)	Yes	Y		1	1.2	39	1.2	3	1	41	1												
2	1.2D+1.0Wo (30 D...	Yes	Y		1	1.2	39	1.2	4	1	42	1												
3	1.2D+1.0Wo (60 D...	Yes	Y		1	1.2	39	1.2	5	1	43	1												
4	1.2D+1.0Wo (90 D...	Yes	Y		1	1.2	39	1.2	6	1	44	1												
5	1.2D+1.0Wo (120 ...	Yes	Y		1	1.2	39	1.2	7	1	45	1												
6	1.2D+1.0Wo (150 ...	Yes	Y		1	1.2	39	1.2	8	1	46	1												
7	1.2D+1.0Wo (180 ...	Yes	Y		1	1.2	39	1.2	9	1	47	1												
8	1.2D+1.0Wo (210 ...	Yes	Y		1	1.2	39	1.2	10	1	48	1												
9	1.2D+1.0Wo (240 ...	Yes	Y		1	1.2	39	1.2	11	1	49	1												
10	1.2D+1.0Wo (270 ...	Yes	Y		1	1.2	39	1.2	12	1	50	1												
11	1.2D+1.0Wo (300 ...	Yes	Y		1	1.2	39	1.2	13	1	51	1												
12	1.2D+1.0Wo (330 ...	Yes	Y		1	1.2	39	1.2	14	1	52	1												
13	1.2D + 1.0Di + 1.0...	Yes	Y		1	1.2	39	1.2	2	1	40	1	15	1	53	1								
14	1.2D + 1.0Di + 1.0...	Yes	Y		1	1.2	39	1.2	2	1	40	1	16	1	54	1								
15	1.2D + 1.0Di + 1.0...	Yes	Y		1	1.2	39	1.2	2	1	40	1	17	1	55	1								
16	1.2D + 1.0Di + 1.0...	Yes	Y		1	1.2	39	1.2	2	1	40	1	18	1	56	1								
17	1.2D + 1.0Di + 1.0...	Yes	Y		1	1.2	39	1.2	2	1	40	1	19	1	57	1								
18	1.2D + 1.0Di + 1.0...	Yes	Y		1	1.2	39	1.2	2	1	40	1	20	1	58	1								
19	1.2D + 1.0Di + 1.0...	Yes	Y		1	1.2	39	1.2	2	1	40	1	21	1	59	1								
20	1.2D + 1.0Di + 1.0...	Yes	Y		1	1.2	39	1.2	2	1	40	1	22	1	60	1								
21	1.2D + 1.0Di + 1.0...	Yes	Y		1	1.2	39	1.2	2	1	40	1	23	1	61	1								

Load Combinations (Continued)

	Description	So...	P...	S...	BLC	Fac...	BLC	Fac...	BLC	Fac...	BLC	Fac...	BLC	Fac...	BLC	Fac...	BLC	Fac...	BLC	Fac...	BLC	Fac...	BLC	Fac...
22	1.2D + 1.0Di + 1.0...	Yes	Y		1	1.2	39	1.2	2	1	40	1	24	1	62	1								
23	1.2D + 1.0Di + 1.0...	Yes	Y		1	1.2	39	1.2	2	1	40	1	25	1	63	1								
24	1.2D + 1.0Di + 1.0...	Yes	Y		1	1.2	39	1.2	2	1	40	1	26	1	64	1								
25	1.2D + 1.5Lm1 + 1...	Yes	Y		1	1.2	39	1.2	77	1.5	27	1	65	1										
26	1.2D + 1.5Lm1 + 1...	Yes	Y		1	1.2	39	1.2	77	1.5	28	1	66	1										
27	1.2D + 1.5Lm1 + 1...	Yes	Y		1	1.2	39	1.2	77	1.5	29	1	67	1										
28	1.2D + 1.5Lm1 + 1...	Yes	Y		1	1.2	39	1.2	77	1.5	30	1	68	1										
29	1.2D + 1.5Lm1 + 1...	Yes	Y		1	1.2	39	1.2	77	1.5	31	1	69	1										
30	1.2D + 1.5Lm1 + 1...	Yes	Y		1	1.2	39	1.2	77	1.5	32	1	70	1										
31	1.2D + 1.5Lm1 + 1...	Yes	Y		1	1.2	39	1.2	77	1.5	33	1	71	1										
32	1.2D + 1.5Lm1 + 1...	Yes	Y		1	1.2	39	1.2	77	1.5	34	1	72	1										
33	1.2D + 1.5Lm1 + 1...	Yes	Y		1	1.2	39	1.2	77	1.5	35	1	73	1										
34	1.2D + 1.5Lm1 + 1...	Yes	Y		1	1.2	39	1.2	77	1.5	36	1	74	1										
35	1.2D + 1.5Lm1 + 1...	Yes	Y		1	1.2	39	1.2	77	1.5	37	1	75	1										
36	1.2D + 1.5Lm1 + 1...	Yes	Y		1	1.2	39	1.2	77	1.5	38	1	76	1										
37	1.2D + 1.5Lm2 + 1...	Yes	Y		1	1.2	39	1.2	78	1.5	27	1	65	1										
38	1.2D + 1.5Lm2 + 1...	Yes	Y		1	1.2	39	1.2	78	1.5	28	1	66	1										
39	1.2D + 1.5Lm2 + 1...	Yes	Y		1	1.2	39	1.2	78	1.5	29	1	67	1										
40	1.2D + 1.5Lm2 + 1...	Yes	Y		1	1.2	39	1.2	78	1.5	30	1	68	1										
41	1.2D + 1.5Lm2 + 1...	Yes	Y		1	1.2	39	1.2	78	1.5	31	1	69	1										
42	1.2D + 1.5Lm2 + 1...	Yes	Y		1	1.2	39	1.2	78	1.5	32	1	70	1										
43	1.2D + 1.5Lm2 + 1...	Yes	Y		1	1.2	39	1.2	78	1.5	33	1	71	1										
44	1.2D + 1.5Lm2 + 1...	Yes	Y		1	1.2	39	1.2	78	1.5	34	1	72	1										
45	1.2D + 1.5Lm2 + 1...	Yes	Y		1	1.2	39	1.2	78	1.5	35	1	73	1										
46	1.2D + 1.5Lm2 + 1...	Yes	Y		1	1.2	39	1.2	78	1.5	36	1	74	1										
47	1.2D + 1.5Lm2 + 1...	Yes	Y		1	1.2	39	1.2	78	1.5	37	1	75	1										
48	1.2D + 1.5Lm2 + 1...	Yes	Y		1	1.2	39	1.2	78	1.5	38	1	76	1										
49	1.2D + 1.5Lv1	Yes	Y		1	1.2	39	1.2	79	1.5														
50	1.2D + 1.5Lv2	Yes	Y		1	1.2	39	1.2	80	1.5														
51	1.4D	Yes	Y		1	1.4	39	1.4																
52	1.2D + 1.0Ev + 1.0...	Yes	Y		1	1.2	39	1.2	81	1	ELY	1	82	1	83		ELZ	1	ELX					
53	1.2D + 1.0Ev + 1.0...	Yes	Y		1	1.2	39	1.2	81	1	ELY	1	82	.866	83	.5	ELZ	.866	ELX	.5				
54	1.2D + 1.0Ev + 1.0...	Yes	Y		1	1.2	39	1.2	81	1	ELY	1	82	.5	83	.866	ELZ	.5	ELX	.866				
55	1.2D + 1.0Ev + 1.0...	Yes	Y		1	1.2	39	1.2	81	1	ELY	1	82		83	1	ELZ		ELX	1				
56	1.2D + 1.0Ev + 1.0...	Yes	Y		1	1.2	39	1.2	81	1	ELY	1	82	-.5	83	.866	ELZ	-.5	ELX	.866				
57	1.2D + 1.0Ev + 1.0...	Yes	Y		1	1.2	39	1.2	81	1	ELY	1	82	-.866	83	.5	ELZ	-.866	ELX	.5				
58	1.2D + 1.0Ev + 1.0...	Yes	Y		1	1.2	39	1.2	81	1	ELY	1	82	-1	83		ELZ	-1	ELX					
59	1.2D + 1.0Ev + 1.0...	Yes	Y		1	1.2	39	1.2	81	1	ELY	1	82	-.866	83	-.5	ELZ	-.866	ELX	-.5				
60	1.2D + 1.0Ev + 1.0...	Yes	Y		1	1.2	39	1.2	81	1	ELY	1	82	-.5	83	-.866	ELZ	-.5	ELX	-.866				
61	1.2D + 1.0Ev + 1.0...	Yes	Y		1	1.2	39	1.2	81	1	ELY	1	82		83	-1	ELZ		ELX	-1				
62	1.2D + 1.0Ev + 1.0...	Yes	Y		1	1.2	39	1.2	81	1	ELY	1	82	.5	83	-.866	ELZ	.5	ELX	-.866				
63	1.2D + 1.0Ev + 1.0...	Yes	Y		1	1.2	39	1.2	81	1	ELY	1	82	.866	83	-.5	ELZ	.866	ELX	-.5				
64	0.9D - 1.0Ev + 1.0...	Yes	Y		1	.9	39	.9	81	-1	ELY	-1	82	1	83		ELZ	1	ELX					
65	0.9D - 1.0Ev + 1.0...	Yes	Y		1	.9	39	.9	81	-1	ELY	-1	82	.866	83	.5	ELZ	.866	ELX	.5				
66	0.9D - 1.0Ev + 1.0...	Yes	Y		1	.9	39	.9	81	-1	ELY	-1	82	.5	83	.866	ELZ	.5	ELX	.866				
67	0.9D - 1.0Ev + 1.0...	Yes	Y		1	.9	39	.9	81	-1	ELY	-1	82		83	1	ELZ		ELX	1				
68	0.9D - 1.0Ev + 1.0...	Yes	Y		1	.9	39	.9	81	-1	ELY	-1	82	-.5	83	.866	ELZ	-.5	ELX	.866				
69	0.9D - 1.0Ev + 1.0...	Yes	Y		1	.9	39	.9	81	-1	ELY	-1	82	-.866	83	.5	ELZ	-.866	ELX	.5				
70	0.9D - 1.0Ev + 1.0...	Yes	Y		1	.9	39	.9	81	-1	ELY	-1	82	-1	83		ELZ	-1	ELX					
71	0.9D - 1.0Ev + 1.0...	Yes	Y		1	.9	39	.9	81	-1	ELY	-1	82	-.866	83	-.5	ELZ	-.866	ELX	-.5				
72	0.9D - 1.0Ev + 1.0...	Yes	Y		1	.9	39	.9	81	-1	ELY	-1	82	-.5	83	-.866	ELZ	-.5	ELX	-.866				
73	0.9D - 1.0Ev + 1.0...	Yes	Y		1	.9	39	.9	81	-1	ELY	-1	82		83	-1	ELZ		ELX	-1				
74	0.9D - 1.0Ev + 1.0...	Yes	Y		1	.9	39	.9	81	-1	ELY	-1	82	.5	83	-.866	ELZ	.5	ELX	-.866				
75	0.9D - 1.0Ev + 1.0...	Yes	Y		1	.9	39	.9	81	-1	ELY	-1	82	.866	83	-.5	ELZ	.866	ELX	-.5				

Hot Rolled Steel Section Sets

	Label	Shape	Type	Design L...	Material	Design ...	A [in2]	Iyy [in4]	Izz [in4]	J [in4]
1	TES Plate	PL1/2x10	Beam	Pipe	A53 Gr.B	Typical	5	.104	41.667	.404
2	Mount Pipe	PIPE_2.0	Beam	Pipe	A53 Gr.B	Typical	1.02	.627	.627	1.25
3	Larger Mount Pipe	PIPE_3.0	Beam	Pipe	A53 Gr.B	Typical	2.07	2.85	2.85	5.69
4	Support Rail	L3X3X4	Beam	RECT	A36 Gr.36	Typical	1.44	1.23	1.23	.031
5	Support Rail Plate	PL1/2x6	Beam	RECT	A36 Gr.36	Typical	3	.063	9	.237
6	Standoff Tab	PL3/8x3	Beam	RECT	A36 Gr.36	Typical	1.125	.013	.844	.049
7	Corner Plate	PL1/2x9	Beam	RECT	A36 Gr.36	Typical	4.5	.094	30.375	.362
8	Standoff	HSS4X4X3	Beam	Channel	A500 Gr.B Rect	Typical	2.58	6.21	6.21	10
9	Standoff Brace	L4X4X4	Beam	Channel	A36 Gr.36	Typical	1.93	3	3	.044
10	Face Horizontal	C5X6.7	Beam	Channel	A36 Gr.36	Typical	1.97	.47	7.48	.055

Member Primary Data

	Label	I Joint	J Joint	K Joint	Rotate(deg)	Section/Shape	Type	Design List	Material	Design Rules
1	LV	N142A	N141A		180	Face Horizontal	Beam	Channel	A36 Gr.36	Typical
2	M76	N153A	N154A			Standoff	Beam	Channel	A500 Gr.B...	Typical
3	M77	N161B	N162A		90	Standoff Brace	Beam	Channel	A36 Gr.36	Typical
4	M78	N162	N161B			Standoff Tab	Beam	RECT	A36 Gr.36	Typical
5	M79	N162A	N158			Standoff Tab	Beam	RECT	A36 Gr.36	Typical
6	M80	N164	N163			RIGID	None	None	RIGID	Typical
7	M81	N170	N169			RIGID	None	None	RIGID	Typical
8	M82	N169A	N168			RIGID	None	None	RIGID	Typical
9	M83	N170A	N168A			RIGID	None	None	RIGID	Typical
10	M84	N170	N169A		90	Corner Plate	Beam	RECT	A36 Gr.36	Typical
11	M85	N171	N172			Standoff	Beam	Channel	A500 Gr.B...	Typical
12	M86	N175	N176		90	Standoff Brace	Beam	Channel	A36 Gr.36	Typical
13	M87	N156	N175			Standoff Tab	Beam	RECT	A36 Gr.36	Typical
14	M88	N176	N161			Standoff Tab	Beam	RECT	A36 Gr.36	Typical
15	M89	N178	N177			RIGID	None	None	RIGID	Typical
16	M90	N183	N180			RIGID	None	None	RIGID	Typical
17	M91	N182	N179			RIGID	None	None	RIGID	Typical
18	M92	N184	N181			RIGID	None	None	RIGID	Typical
19	M93	N183	N182		90	Corner Plate	Beam	RECT	A36 Gr.36	Typical
20	M94	N185	N186			Standoff	Beam	Channel	A500 Gr.B...	Typical
21	M95	N189	N190		90	Standoff Brace	Beam	Channel	A36 Gr.36	Typical
22	M96	N159	N189			Standoff Tab	Beam	RECT	A36 Gr.36	Typical
23	M97	N190	N155			Standoff Tab	Beam	RECT	A36 Gr.36	Typical
24	M98	N192	N191			RIGID	None	None	RIGID	Typical
25	M99	N197	N194			RIGID	None	None	RIGID	Typical
26	M100	N196	N193			RIGID	None	None	RIGID	Typical
27	M101	N198	N195			RIGID	None	None	RIGID	Typical
28	M102	N197	N196		90	Corner Plate	Beam	RECT	A36 Gr.36	Typical
29	M103	N199	N198A		180	Support Rail	Beam	RECT	A36 Gr.36	Typical
30	M109	N213	N218			RIGID	None	None	RIGID	Typical
31	M110	N216	N221A			RIGID	None	None	RIGID	Typical
32	M111	N215	N220A			RIGID	None	None	RIGID	Typical
33	M112	N214	N219A			RIGID	None	None	RIGID	Typical
34	M113	N215A	N223A			RIGID	None	None	RIGID	Typical
35	M114	N216A	N224A			RIGID	None	None	RIGID	Typical
36	L	N217	N225A			RIGID	None	None	RIGID	Typical
37	M116	N214A	N222			RIGID	None	None	RIGID	Typical
38	MP5A	N226A	N230			Mount Pipe	Beam	Pipe	A53 Gr.B	Typical
39	MP2A	N229	N233			Larger Mount ...	Beam	Pipe	A53 Gr.B	Typical
40	OVP	N228A	N232			Mount Pipe	Beam	Pipe	A53 Gr.B	Typical
41	MP1A	N227A	N231			Mount Pipe	Beam	Pipe	A53 Gr.B	Typical
42	M49	N98	N100			RIGID	None	None	RIGID	Typical
43	LM1	N99	N101			RIGID	None	None	RIGID	Typical

Member Primary Data (Continued)

	Label	I Joint	J Joint	K Joint	Rotate(deg)	Section/Shape	Type	Design List	Material	Design Rules
44	MP3A	N102	N103			Mount Pipe	Beam	Pipe	A53 Gr.B	Typical
45	M52	N104	N106			RIGID	None	None	RIGID	Typical
46	LM2	N105	N107			RIGID	None	None	RIGID	Typical
47	MP4A	N108	N109			Mount Pipe	Beam	Pipe	A53 Gr.B	Typical
48	M55	N110	N112			RIGID	None	None	RIGID	Typical
49	M56	N111	N113			RIGID	None	None	RIGID	Typical
50	M57	N114	N115			Mount Pipe	Beam	Pipe	A53 Gr.B	Typical
51	M58	N116	N124			RIGID	None	None	RIGID	Typical
52	M59	N119	N127			RIGID	None	None	RIGID	Typical
53	M60	N118	N126			RIGID	None	None	RIGID	Typical
54	M61	N117	N125			RIGID	None	None	RIGID	Typical
55	M62	N121	N129			RIGID	None	None	RIGID	Typical
56	M63	N122	N130			RIGID	None	None	RIGID	Typical
57	M64	N123	N131			RIGID	None	None	RIGID	Typical
58	M65	N120	N128			RIGID	None	None	RIGID	Typical
59	MP5C	N132	N136		240	Mount Pipe	Beam	Pipe	A53 Gr.B	Typical
60	MP2C	N135	N139A		240	Larger Mount ...	Beam	Pipe	A53 Gr.B	Typical
61	M68	N134	N138A		240	Mount Pipe	Beam	Pipe	A53 Gr.B	Typical
62	MP1C	N133	N137		240	Mount Pipe	Beam	Pipe	A53 Gr.B	Typical
63	M70	N140B	N142C			RIGID	None	None	RIGID	Typical
64	M71	N141C	N143B			RIGID	None	None	RIGID	Typical
65	MP3C	N144A	N145A		240	Mount Pipe	Beam	Pipe	A53 Gr.B	Typical
66	M73A	N146B	N148A			RIGID	None	None	RIGID	Typical
67	M74A	N147B	N149A			RIGID	None	None	RIGID	Typical
68	MP4C	N150	N151A		240	Mount Pipe	Beam	Pipe	A53 Gr.B	Typical
69	M76A	N152	N154			RIGID	None	None	RIGID	Typical
70	M77A	N153	N155A			RIGID	None	None	RIGID	Typical
71	M78A	N156A	N157		240	Mount Pipe	Beam	Pipe	A53 Gr.B	Typical
72	M79A	N158A	N166			RIGID	None	None	RIGID	Typical
73	M80A	N161A	N169B			RIGID	None	None	RIGID	Typical
74	M81A	N160	N168B			RIGID	None	None	RIGID	Typical
75	M82A	N159A	N167			RIGID	None	None	RIGID	Typical
76	M83A	N163A	N171A			RIGID	None	None	RIGID	Typical
77	M84A	N164A	N172A			RIGID	None	None	RIGID	Typical
78	M85A	N165	N173			RIGID	None	None	RIGID	Typical
79	M86A	N162B	N170B			RIGID	None	None	RIGID	Typical
80	MP5B	N174	N178A		120	Mount Pipe	Beam	Pipe	A53 Gr.B	Typical
81	MP2B	N177A	N181A		120	Larger Mount ...	Beam	Pipe	A53 Gr.B	Typical
82	M89A	N176A	N180A		120	Mount Pipe	Beam	Pipe	A53 Gr.B	Typical
83	MP1B	N175A	N179A		120	Mount Pipe	Beam	Pipe	A53 Gr.B	Typical
84	M91A	N182A	N184A			RIGID	None	None	RIGID	Typical
85	M92A	N183A	N185A			RIGID	None	None	RIGID	Typical
86	MP3B	N186A	N187		120	Mount Pipe	Beam	Pipe	A53 Gr.B	Typical
87	M94A	N188	N190A			RIGID	None	None	RIGID	Typical
88	M95A	N189A	N191A			RIGID	None	None	RIGID	Typical
89	MP4B	N192A	N193A		120	Mount Pipe	Beam	Pipe	A53 Gr.B	Typical
90	M97A	N194A	N196A			RIGID	None	None	RIGID	Typical
91	M98A	N195A	N197A			RIGID	None	None	RIGID	Typical
92	LIGHT	N198B	N199A		120	Mount Pipe	Beam	Pipe	A53 Gr.B	Typical
93	M98B	N199B	N198C		180	Support Rail	Beam	RECT	A36 Gr.36	Typical
94	M99B	N201	N200		180	Support Rail	Beam	RECT	A36 Gr.36	Typical
95	M98C	N203A	N202		180	Face Horizontal	Beam	Channel	A36 Gr.36	Typical
96	M99C	N205	N204A		180	Face Horizontal	Beam	Channel	A36 Gr.36	Typical
97	M100A	N209	N208		90	Support Rail P...	Beam	RECT	A36 Gr.36	Typical
98	M101A	N205B	N210		90	Support Rail P...	Beam	RECT	A36 Gr.36	Typical
99	M102A	N207	N206A		90	Support Rail P...	Beam	RECT	A36 Gr.36	Typical
100	M100B	N210A	N205B			RIGID	None	None	RIGID	Typical
101	M102B	N146A	N207		120	RIGID	None	None	RIGID	Typical
102	M104	N148	N209		240	RIGID	None	None	RIGID	Typical

Member Primary Data (Continued)

	Label	I Joint	J Joint	K Joint	Rotate(deg)	Section/Shape	Type	Design List	Material	Design Rules
103	M103A	N211A	N206A			RIGID	None	None	RIGID	Typical
104	M104A	N147A	N208		120	RIGID	None	None	RIGID	Typical
105	M105	N149	N210		240	RIGID	None	None	RIGID	Typical

Member Advanced Data

	Label	I Release	J Release	I Offset[in]	J Offset[in]	T/C Only	Physical	Defl Rat...	Analysis ...	Inactive	Seismic...
1	LV						Yes				None
2	M76						Yes				None
3	M77						Yes				None
4	M78						Yes				None
5	M79						Yes				None
6	M80		AllPIN			Compres...	Yes	** NA **			None
7	M81						Yes	** NA **			None
8	M82						Yes	** NA **			None
9	M83						Yes	** NA **			None
10	M84						Yes				None
11	M85						Yes				None
12	M86						Yes				None
13	M87						Yes				None
14	M88						Yes				None
15	M89		AllPIN			Compres...	Yes	** NA **			None
16	M90						Yes	** NA **			None
17	M91						Yes	** NA **			None
18	M92						Yes	** NA **			None
19	M93						Yes				None
20	M94						Yes				None
21	M95						Yes				None
22	M96						Yes				None
23	M97						Yes				None
24	M98		AllPIN			Compres...	Yes	** NA **			None
25	M99						Yes	** NA **			None
26	M100						Yes	** NA **			None
27	M101						Yes	** NA **			None
28	M102						Yes				None
29	M103						Yes				None
30	M109		OOOXOO				Yes	** NA **			None
31	M110		OOOXOO				Yes	** NA **			None
32	M111		OOOXOO				Yes	** NA **			None
33	M112		OOOXOO				Yes	** NA **			None
34	M113						Yes	** NA **			None
35	M114						Yes	** NA **			None
36	L		OOOXOO				Yes	** NA **			None
37	M116						Yes	** NA **			None
38	MP5A						Yes				None
39	MP2A						Yes				None
40	OVP						Yes				None
41	MP1A						Yes	Default			None
42	M49		OOOXOO				Yes	** NA **			None
43	LM1						Yes	** NA **			None
44	MP3A						Yes				None
45	M52		OOOXOO				Yes	** NA **			None
46	LM2						Yes	** NA **			None
47	MP4A						Yes	Default			None
48	M55		OOOXOO				Yes	** NA **			None
49	M56						Yes	** NA **			None
50	M57						Yes				None
51	M58		OOOXOO				Yes	** NA **			None

Member Advanced Data (Continued)

	Label	I Release	J Release	I Offset[in]	J Offset[in]	T/C Only	Physical	Defl Rat...	Analysis ...	Inactive	Seismic...
52	M59		OOOXOO				Yes	** NA **			None
53	M60		OOOXOO				Yes	** NA **			None
54	M61		OOOXOO				Yes	** NA **			None
55	M62						Yes	** NA **			None
56	M63						Yes	** NA **			None
57	M64		OOOXOO				Yes	** NA **			None
58	M65						Yes	** NA **			None
59	MP5C						Yes				None
60	MP2C						Yes				None
61	M68						Yes				None
62	MP1C						Yes	Default			None
63	M70		OOOXOO				Yes	** NA **			None
64	M71						Yes	** NA **			None
65	MP3C						Yes				None
66	M73A		OOOXOO				Yes	** NA **			None
67	M74A						Yes	** NA **			None
68	MP4C						Yes	Default			None
69	M76A		OOOXOO				Yes	** NA **			None
70	M77A						Yes	** NA **			None
71	M78A						Yes				None
72	M79A		OOOXOO				Yes	** NA **			None
73	M80A		OOOXOO				Yes	** NA **			None
74	M81A		OOOXOO				Yes	** NA **			None
75	M82A		OOOXOO				Yes	** NA **			None
76	M83A						Yes	** NA **			None
77	M84A						Yes	** NA **			None
78	M85A		OOOXOO				Yes	** NA **			None
79	M86A						Yes	** NA **			None
80	MP5B						Yes				None
81	MP2B						Yes				None
82	M89A						Yes				None
83	MP1B						Yes	Default			None
84	M91A		OOOXOO				Yes	** NA **			None
85	M92A						Yes	** NA **			None
86	MP3B						Yes				None
87	M94A		OOOXOO				Yes	** NA **			None
88	M95A						Yes	** NA **			None
89	MP4B						Yes	Default			None
90	M97A		OOOXOO				Yes	** NA **			None
91	M98A						Yes	** NA **			None
92	LIGHT						Yes				None
93	M98B						Yes				None
94	M99B						Yes				None
95	M98C						Yes				None
96	M99C						Yes				None
97	M100A						Yes				None
98	M101A						Yes				None
99	M102A						Yes				None
100	M100B	OOOOOX					Yes	** NA **			None
101	M102B	OOOOOX					Yes	** NA **			None
102	M104	OOOOOX					Yes	** NA **			None
103	M103A	OOOOOX					Yes	** NA **			None
104	M104A	OOOOOX					Yes	** NA **			None
105	M105	OOOOOX					Yes	** NA **			None

Member Point Loads (BLC 1 : Antenna D)

	Member Label	Direction	Magnitude[lb,k-ft]	Location[ft,%]
1	MP2A	Y	-25.5	1.75
2	MP2A	My	-.013	1.75
3	MP2A	Mz	.021	1.75
4	MP2A	Y	-25.5	5.75
5	MP2A	My	-.013	5.75
6	MP2A	Mz	.021	5.75
7	MP2B	Y	-25.5	1.75
8	MP2B	My	-.012	1.75
9	MP2B	Mz	-.022	1.75
10	MP2B	Y	-25.5	5.75
11	MP2B	My	-.012	5.75
12	MP2B	Mz	-.022	5.75
13	MP2C	Y	-25.5	1.75
14	MP2C	My	.025	1.75
15	MP2C	Mz	.000417	1.75
16	MP2C	Y	-25.5	5.75
17	MP2C	My	.025	5.75
18	MP2C	Mz	.000417	5.75
19	MP2A	Y	-25.5	1.75
20	MP2A	My	-.013	1.75
21	MP2A	Mz	-.021	1.75
22	MP2A	Y	-25.5	5.75
23	MP2A	My	-.013	5.75
24	MP2A	Mz	-.021	5.75
25	MP2B	Y	-25.5	1.75
26	MP2B	My	.025	1.75
27	MP2B	Mz	-.000417	1.75
28	MP2B	Y	-25.5	5.75
29	MP2B	My	.025	5.75
30	MP2B	Mz	-.000417	5.75
31	MP2C	Y	-25.5	1.75
32	MP2C	My	-.012	1.75
33	MP2C	Mz	.022	1.75
34	MP2C	Y	-25.5	5.75
35	MP2C	My	-.012	5.75
36	MP2C	Mz	.022	5.75
37	MP1A	Y	-32	2.5
38	MP1A	My	.016	2.5
39	MP1A	Mz	0	2.5
40	LIGHT	Y	-10	.13
41	LIGHT	My	0	.13
42	LIGHT	Mz	0	.13
43	MP4A	Y	-28.65	1.33
44	MP4A	My	-.014	1.33
45	MP4A	Mz	0	1.33
46	MP4A	Y	-28.65	3.33
47	MP4A	My	-.014	3.33
48	MP4A	Mz	0	3.33
49	MP4B	Y	-28.65	1.33
50	MP4B	My	.007	1.33
51	MP4B	Mz	-.012	1.33
52	MP4B	Y	-28.65	3.33
53	MP4B	My	.007	3.33
54	MP4B	Mz	-.012	3.33
55	MP4C	Y	-28.65	1.33
56	MP4C	My	.007	1.33
57	MP4C	Mz	.012	1.33
58	MP4C	Y	-28.65	3.33

Member Point Loads (BLC 1 : Antenna D) (Continued)

	Member Label	Direction	Magnitude[lb,k-ft]	Location[ft,%]
59	MP4C	My	.007	3.33
60	MP4C	Mz	.012	3.33
61	MP2A	Y	-79.1	.5
62	MP2A	My	.04	.5
63	MP2A	Mz	0	.5
64	MP2B	Y	-79.1	.5
65	MP2B	My	-.02	.5
66	MP2B	Mz	.034	.5
67	MP2C	Y	-79.1	.5
68	MP2C	My	-.02	.5
69	MP2C	Mz	-.034	.5
70	MP3A	Y	-74.7	.5
71	MP3A	My	.037	.5
72	MP3A	Mz	0	.5
73	MP3B	Y	-74.7	.5
74	MP3B	My	-.019	.5
75	MP3B	Mz	.032	.5
76	MP3C	Y	-74.7	.5
77	MP3C	My	-.019	.5
78	MP3C	Mz	-.032	.5

Member Point Loads (BLC 2 : Antenna Di)

	Member Label	Direction	Magnitude[lb,k-ft]	Location[ft,%]
1	MP2A	Y	-108.203	1.75
2	MP2A	My	-.054	1.75
3	MP2A	Mz	.09	1.75
4	MP2A	Y	-108.203	5.75
5	MP2A	My	-.054	5.75
6	MP2A	Mz	.09	5.75
7	MP2B	Y	-108.203	1.75
8	MP2B	My	-.051	1.75
9	MP2B	Mz	-.092	1.75
10	MP2B	Y	-108.203	5.75
11	MP2B	My	-.051	5.75
12	MP2B	Mz	-.092	5.75
13	MP2C	Y	-108.203	1.75
14	MP2C	My	.105	1.75
15	MP2C	Mz	.002	1.75
16	MP2C	Y	-108.203	5.75
17	MP2C	My	.105	5.75
18	MP2C	Mz	.002	5.75
19	MP2A	Y	-108.203	1.75
20	MP2A	My	-.054	1.75
21	MP2A	Mz	-.09	1.75
22	MP2A	Y	-108.203	5.75
23	MP2A	My	-.054	5.75
24	MP2A	Mz	-.09	5.75
25	MP2B	Y	-108.203	1.75
26	MP2B	My	.105	1.75
27	MP2B	Mz	-.002	1.75
28	MP2B	Y	-108.203	5.75
29	MP2B	My	.105	5.75
30	MP2B	Mz	-.002	5.75
31	MP2C	Y	-108.203	1.75
32	MP2C	My	-.051	1.75
33	MP2C	Mz	.092	1.75
34	MP2C	Y	-108.203	5.75
35	MP2C	My	-.051	5.75

Member Point Loads (BLC 2 : Antenna Di) (Continued)

	Member Label	Direction	Magnitude[lb,k-ft]	Location[ft,%]
36	MP2C	Mz	.092	5.75
37	MP1A	Y	-87.961	2.5
38	MP1A	My	.044	2.5
39	MP1A	Mz	0	2.5
40	LIGHT	Y	-11.397	.13
41	LIGHT	My	0	.13
42	LIGHT	Mz	0	.13
43	MP4A	Y	-29.795	1.33
44	MP4A	My	-.015	1.33
45	MP4A	Mz	0	1.33
46	MP4A	Y	-29.795	3.33
47	MP4A	My	-.015	3.33
48	MP4A	Mz	0	3.33
49	MP4B	Y	-29.795	1.33
50	MP4B	My	.007	1.33
51	MP4B	Mz	-.013	1.33
52	MP4B	Y	-29.795	3.33
53	MP4B	My	.007	3.33
54	MP4B	Mz	-.013	3.33
55	MP4C	Y	-29.795	1.33
56	MP4C	My	.007	1.33
57	MP4C	Mz	.013	1.33
58	MP4C	Y	-29.795	3.33
59	MP4C	My	.007	3.33
60	MP4C	Mz	.013	3.33
61	MP2A	Y	-45.402	.5
62	MP2A	My	.023	.5
63	MP2A	Mz	0	.5
64	MP2B	Y	-45.402	.5
65	MP2B	My	-.011	.5
66	MP2B	Mz	.02	.5
67	MP2C	Y	-45.402	.5
68	MP2C	My	-.011	.5
69	MP2C	Mz	-.02	.5
70	MP3A	Y	-44.926	.5
71	MP3A	My	.022	.5
72	MP3A	Mz	0	.5
73	MP3B	Y	-44.926	.5
74	MP3B	My	-.011	.5
75	MP3B	Mz	.019	.5
76	MP3C	Y	-44.926	.5
77	MP3C	My	-.011	.5
78	MP3C	Mz	-.019	.5

Member Point Loads (BLC 3 : Antenna Wo (0 Deg))

	Member Label	Direction	Magnitude[lb,k-ft]	Location[ft,%]
1	MP2A	X	0	1.75
2	MP2A	Z	-107.941	1.75
3	MP2A	Mx	-.09	1.75
4	MP2A	X	0	5.75
5	MP2A	Z	-107.941	5.75
6	MP2A	Mx	-.09	5.75
7	MP2B	X	0	1.75
8	MP2B	Z	-87.575	1.75
9	MP2B	Mx	.074	1.75
10	MP2B	X	0	5.75
11	MP2B	Z	-87.575	5.75
12	MP2B	Mx	.074	5.75

Member Point Loads (BLC 3 : Antenna Wo (0 Deg)) (Continued)

	Member Label	Direction	Magnitude[lb,k-ft]	Location[ft,%]
13	MP2C	X	0	1.75
14	MP2C	Z	-87.575	1.75
15	MP2C	Mx	-.001	1.75
16	MP2C	X	0	5.75
17	MP2C	Z	-87.575	5.75
18	MP2C	Mx	-.001	5.75
19	MP2A	X	0	1.75
20	MP2A	Z	-107.941	1.75
21	MP2A	Mx	.09	1.75
22	MP2A	X	0	5.75
23	MP2A	Z	-107.941	5.75
24	MP2A	Mx	.09	5.75
25	MP2B	X	0	1.75
26	MP2B	Z	-87.575	1.75
27	MP2B	Mx	.001	1.75
28	MP2B	X	0	5.75
29	MP2B	Z	-87.575	5.75
30	MP2B	Mx	.001	5.75
31	MP2C	X	0	1.75
32	MP2C	Z	-87.575	1.75
33	MP2C	Mx	-.074	1.75
34	MP2C	X	0	5.75
35	MP2C	Z	-87.575	5.75
36	MP2C	Mx	-.074	5.75
37	MP1A	X	0	2.5
38	MP1A	Z	-107.601	2.5
39	MP1A	Mx	0	2.5
40	LIGHT	X	0	.13
41	LIGHT	Z	-30.549	.13
42	LIGHT	Mx	0	.13
43	MP4A	X	0	1.33
44	MP4A	Z	-53.631	1.33
45	MP4A	Mx	0	1.33
46	MP4A	X	0	3.33
47	MP4A	Z	-53.631	3.33
48	MP4A	Mx	0	3.33
49	MP4B	X	0	1.33
50	MP4B	Z	-27.537	1.33
51	MP4B	Mx	.012	1.33
52	MP4B	X	0	3.33
53	MP4B	Z	-27.537	3.33
54	MP4B	Mx	.012	3.33
55	MP4C	X	0	1.33
56	MP4C	Z	-27.537	1.33
57	MP4C	Mx	-.012	1.33
58	MP4C	X	0	3.33
59	MP4C	Z	-27.537	3.33
60	MP4C	Mx	-.012	3.33
61	MP2A	X	0	.5
62	MP2A	Z	-63.475	.5
63	MP2A	Mx	0	.5
64	MP2B	X	0	.5
65	MP2B	Z	-48.327	.5
66	MP2B	Mx	-.021	.5
67	MP2C	X	0	.5
68	MP2C	Z	-48.327	.5
69	MP2C	Mx	.021	.5
70	MP3A	X	0	.5
71	MP3A	Z	-52.613	.5

Member Point Loads (BLC 3 : Antenna Wo (0 Deg)) (Continued)

	Member Label	Direction	Magnitude[lb,k-ft]	Location[ft,%]
72	MP3A	Mx	0	.5
73	MP3B	X	0	.5
74	MP3B	Z	-39.629	.5
75	MP3B	Mx	-.017	.5
76	MP3C	X	0	.5
77	MP3C	Z	-39.629	.5
78	MP3C	Mx	.017	.5

Member Point Loads (BLC 4 : Antenna Wo (30 Deg))

	Member Label	Direction	Magnitude[lb,k-ft]	Location[ft,%]
1	MP2A	X	50.576	1.75
2	MP2A	Z	-87.6	1.75
3	MP2A	Mx	-.098	1.75
4	MP2A	X	50.576	5.75
5	MP2A	Z	-87.6	5.75
6	MP2A	Mx	-.098	5.75
7	MP2B	X	40.393	1.75
8	MP2B	Z	-69.963	1.75
9	MP2B	Mx	.04	1.75
10	MP2B	X	40.393	5.75
11	MP2B	Z	-69.963	5.75
12	MP2B	Mx	.04	5.75
13	MP2C	X	50.576	1.75
14	MP2C	Z	-87.6	1.75
15	MP2C	Mx	.048	1.75
16	MP2C	X	50.576	5.75
17	MP2C	Z	-87.6	5.75
18	MP2C	Mx	.048	5.75
19	MP2A	X	50.576	1.75
20	MP2A	Z	-87.6	1.75
21	MP2A	Mx	.048	1.75
22	MP2A	X	50.576	5.75
23	MP2A	Z	-87.6	5.75
24	MP2A	Mx	.048	5.75
25	MP2B	X	40.393	1.75
26	MP2B	Z	-69.963	1.75
27	MP2B	Mx	.04	1.75
28	MP2B	X	40.393	5.75
29	MP2B	Z	-69.963	5.75
30	MP2B	Mx	.04	5.75
31	MP2C	X	50.576	1.75
32	MP2C	Z	-87.6	1.75
33	MP2C	Mx	-.098	1.75
34	MP2C	X	50.576	5.75
35	MP2C	Z	-87.6	5.75
36	MP2C	Mx	-.098	5.75
37	MP1A	X	50.576	2.5
38	MP1A	Z	-87.6	2.5
39	MP1A	Mx	.025	2.5
40	LIGHT	X	11.88	.13
41	LIGHT	Z	-20.577	.13
42	LIGHT	Mx	0	.13
43	MP4A	X	22.466	1.33
44	MP4A	Z	-38.913	1.33
45	MP4A	Mx	-.011	1.33
46	MP4A	X	22.466	3.33
47	MP4A	Z	-38.913	3.33
48	MP4A	Mx	-.011	3.33

Member Point Loads (BLC 4 : Antenna Wo (30 Deg)) (Continued)

	Member Label	Direction	Magnitude[lb,k-ft]	Location[ft,%]
49	MP4B	X	9.419	1.33
50	MP4B	Z	-16.315	1.33
51	MP4B	Mx	.009	1.33
52	MP4B	X	9.419	3.33
53	MP4B	Z	-16.315	3.33
54	MP4B	Mx	.009	3.33
55	MP4C	X	22.466	1.33
56	MP4C	Z	-38.913	1.33
57	MP4C	Mx	-.011	1.33
58	MP4C	X	22.466	3.33
59	MP4C	Z	-38.913	3.33
60	MP4C	Mx	-.011	3.33
61	MP2A	X	29.213	.5
62	MP2A	Z	-50.598	.5
63	MP2A	Mx	.015	.5
64	MP2B	X	21.639	.5
65	MP2B	Z	-37.48	.5
66	MP2B	Mx	-.022	.5
67	MP2C	X	29.213	.5
68	MP2C	Z	-50.598	.5
69	MP2C	Mx	.015	.5
70	MP3A	X	24.142	.5
71	MP3A	Z	-41.816	.5
72	MP3A	Mx	.012	.5
73	MP3B	X	17.651	.5
74	MP3B	Z	-30.572	.5
75	MP3B	Mx	-.018	.5
76	MP3C	X	24.142	.5
77	MP3C	Z	-41.816	.5
78	MP3C	Mx	.012	.5

Member Point Loads (BLC 5 : Antenna Wo (60 Deg))

	Member Label	Direction	Magnitude[lb,k-ft]	Location[ft,%]
1	MP2A	X	75.842	1.75
2	MP2A	Z	-43.787	1.75
3	MP2A	Mx	-.074	1.75
4	MP2A	X	75.842	5.75
5	MP2A	Z	-43.787	5.75
6	MP2A	Mx	-.074	5.75
7	MP2B	X	75.842	1.75
8	MP2B	Z	-43.787	1.75
9	MP2B	Mx	.001	1.75
10	MP2B	X	75.842	5.75
11	MP2B	Z	-43.787	5.75
12	MP2B	Mx	.001	5.75
13	MP2C	X	93.479	1.75
14	MP2C	Z	-53.97	1.75
15	MP2C	Mx	.09	1.75
16	MP2C	X	93.479	5.75
17	MP2C	Z	-53.97	5.75
18	MP2C	Mx	.09	5.75
19	MP2A	X	75.842	1.75
20	MP2A	Z	-43.787	1.75
21	MP2A	Mx	-.001	1.75
22	MP2A	X	75.842	5.75
23	MP2A	Z	-43.787	5.75
24	MP2A	Mx	-.001	5.75
25	MP2B	X	75.842	1.75

Member Point Loads (BLC 5 : Antenna Wo (60 Deg)) (Continued)

	Member Label	Direction	Magnitude[lb,k-ft]	Location[ft,%]
26	MP2B	Z	-43.787	1.75
27	MP2B	Mx	.074	1.75
28	MP2B	X	75.842	5.75
29	MP2B	Z	-43.787	5.75
30	MP2B	Mx	.074	5.75
31	MP2C	X	93.479	1.75
32	MP2C	Z	-53.97	1.75
33	MP2C	Mx	-.09	1.75
34	MP2C	X	93.479	5.75
35	MP2C	Z	-53.97	5.75
36	MP2C	Mx	-.09	5.75
37	MP1A	X	76.43	2.5
38	MP1A	Z	-44.127	2.5
39	MP1A	Mx	.038	2.5
40	LIGHT	X	17.638	.13
41	LIGHT	Z	-10.183	.13
42	LIGHT	Mx	0	.13
43	MP4A	X	23.848	1.33
44	MP4A	Z	-13.768	1.33
45	MP4A	Mx	-.012	1.33
46	MP4A	X	23.848	3.33
47	MP4A	Z	-13.768	3.33
48	MP4A	Mx	-.012	3.33
49	MP4B	X	23.848	1.33
50	MP4B	Z	-13.768	1.33
51	MP4B	Mx	.012	1.33
52	MP4B	X	23.848	3.33
53	MP4B	Z	-13.768	3.33
54	MP4B	Mx	.012	3.33
55	MP4C	X	46.446	1.33
56	MP4C	Z	-26.815	1.33
57	MP4C	Mx	0	1.33
58	MP4C	X	46.446	3.33
59	MP4C	Z	-26.815	3.33
60	MP4C	Mx	0	3.33
61	MP2A	X	41.853	.5
62	MP2A	Z	-24.164	.5
63	MP2A	Mx	.021	.5
64	MP2B	X	41.853	.5
65	MP2B	Z	-24.164	.5
66	MP2B	Mx	-.021	.5
67	MP2C	X	54.971	.5
68	MP2C	Z	-31.737	.5
69	MP2C	Mx	0	.5
70	MP3A	X	34.32	.5
71	MP3A	Z	-19.815	.5
72	MP3A	Mx	.017	.5
73	MP3B	X	34.32	.5
74	MP3B	Z	-19.815	.5
75	MP3B	Mx	-.017	.5
76	MP3C	X	45.564	.5
77	MP3C	Z	-26.306	.5
78	MP3C	Mx	0	.5

Member Point Loads (BLC 6 : Antenna Wo (90 Deg))

	Member Label	Direction	Magnitude[lb,k-ft]	Location[ft,%]
1	MP2A	X	80.786	1.75
2	MP2A	Z	0	1.75

Member Point Loads (BLC 6 : Antenna Wo (90 Deg)) (Continued)

	Member Label	Direction	Magnitude[lb,k-ft]	Location[ft,%]
3	MP2A	Mx	-.04	1.75
4	MP2A	X	80.786	5.75
5	MP2A	Z	0	5.75
6	MP2A	Mx	-.04	5.75
7	MP2B	X	101.152	1.75
8	MP2B	Z	0	1.75
9	MP2B	Mx	-.048	1.75
10	MP2B	X	101.152	5.75
11	MP2B	Z	0	5.75
12	MP2B	Mx	-.048	5.75
13	MP2C	X	101.152	1.75
14	MP2C	Z	0	1.75
15	MP2C	Mx	.098	1.75
16	MP2C	X	101.152	5.75
17	MP2C	Z	0	5.75
18	MP2C	Mx	.098	5.75
19	MP2A	X	80.786	1.75
20	MP2A	Z	0	1.75
21	MP2A	Mx	-.04	1.75
22	MP2A	X	80.786	5.75
23	MP2A	Z	0	5.75
24	MP2A	Mx	-.04	5.75
25	MP2B	X	101.152	1.75
26	MP2B	Z	0	1.75
27	MP2B	Mx	.098	1.75
28	MP2B	X	101.152	5.75
29	MP2B	Z	0	5.75
30	MP2B	Mx	.098	5.75
31	MP2C	X	101.152	1.75
32	MP2C	Z	0	1.75
33	MP2C	Mx	-.048	1.75
34	MP2C	X	101.152	5.75
35	MP2C	Z	0	5.75
36	MP2C	Mx	-.048	5.75
37	MP1A	X	81.804	2.5
38	MP1A	Z	0	2.5
39	MP1A	Mx	.041	2.5
40	LIGHT	X	23.761	.13
41	LIGHT	Z	0	.13
42	LIGHT	Mx	0	.13
43	MP4A	X	18.839	1.33
44	MP4A	Z	0	1.33
45	MP4A	Mx	-.009	1.33
46	MP4A	X	18.839	3.33
47	MP4A	Z	0	3.33
48	MP4A	Mx	-.009	3.33
49	MP4B	X	44.933	1.33
50	MP4B	Z	0	1.33
51	MP4B	Mx	.011	1.33
52	MP4B	X	44.933	3.33
53	MP4B	Z	0	3.33
54	MP4B	Mx	.011	3.33
55	MP4C	X	44.933	1.33
56	MP4C	Z	0	1.33
57	MP4C	Mx	.011	1.33
58	MP4C	X	44.933	3.33
59	MP4C	Z	0	3.33
60	MP4C	Mx	.011	3.33
61	MP2A	X	43.278	.5

Member Point Loads (BLC 6 : Antenna Wo (90 Deg)) (Continued)

	Member Label	Direction	Magnitude[lb,k-ft]	Location[ft,%]
62	MP2A	Z	0	.5
63	MP2A	Mx	.022	.5
64	MP2B	X	58.425	.5
65	MP2B	Z	0	.5
66	MP2B	Mx	-.015	.5
67	MP2C	X	58.425	.5
68	MP2C	Z	0	.5
69	MP2C	Mx	-.015	.5
70	MP3A	X	35.301	.5
71	MP3A	Z	0	.5
72	MP3A	Mx	.018	.5
73	MP3B	X	48.285	.5
74	MP3B	Z	0	.5
75	MP3B	Mx	-.012	.5
76	MP3C	X	48.285	.5
77	MP3C	Z	0	.5
78	MP3C	Mx	-.012	.5

Member Point Loads (BLC 7 : Antenna Wo (120 Deg))

	Member Label	Direction	Magnitude[lb,k-ft]	Location[ft,%]
1	MP2A	X	75.842	1.75
2	MP2A	Z	43.787	1.75
3	MP2A	Mx	-.001	1.75
4	MP2A	X	75.842	5.75
5	MP2A	Z	43.787	5.75
6	MP2A	Mx	-.001	5.75
7	MP2B	X	93.479	1.75
8	MP2B	Z	53.97	1.75
9	MP2B	Mx	-.09	1.75
10	MP2B	X	93.479	5.75
11	MP2B	Z	53.97	5.75
12	MP2B	Mx	-.09	5.75
13	MP2C	X	75.842	1.75
14	MP2C	Z	43.787	1.75
15	MP2C	Mx	.074	1.75
16	MP2C	X	75.842	5.75
17	MP2C	Z	43.787	5.75
18	MP2C	Mx	.074	5.75
19	MP2A	X	75.842	1.75
20	MP2A	Z	43.787	1.75
21	MP2A	Mx	-.074	1.75
22	MP2A	X	75.842	5.75
23	MP2A	Z	43.787	5.75
24	MP2A	Mx	-.074	5.75
25	MP2B	X	93.479	1.75
26	MP2B	Z	53.97	1.75
27	MP2B	Mx	.09	1.75
28	MP2B	X	93.479	5.75
29	MP2B	Z	53.97	5.75
30	MP2B	Mx	.09	5.75
31	MP2C	X	75.842	1.75
32	MP2C	Z	43.787	1.75
33	MP2C	Mx	.001	1.75
34	MP2C	X	75.842	5.75
35	MP2C	Z	43.787	5.75
36	MP2C	Mx	.001	5.75
37	MP1A	X	76.43	2.5
38	MP1A	Z	44.127	2.5

Member Point Loads (BLC 7 : Antenna Wo (120 Deg)) (Continued)

	Member Label	Direction	Magnitude[lb,k-ft]	Location[ft,%]
39	MP1A	Mx	.038	2.5
40	LIGHT	X	26.456	.13
41	LIGHT	Z	15.275	.13
42	LIGHT	Mx	0	.13
43	MP4A	X	23.848	1.33
44	MP4A	Z	13.768	1.33
45	MP4A	Mx	-.012	1.33
46	MP4A	X	23.848	3.33
47	MP4A	Z	13.768	3.33
48	MP4A	Mx	-.012	3.33
49	MP4B	X	46.446	1.33
50	MP4B	Z	26.815	1.33
51	MP4B	Mx	0	1.33
52	MP4B	X	46.446	3.33
53	MP4B	Z	26.815	3.33
54	MP4B	Mx	0	3.33
55	MP4C	X	23.848	1.33
56	MP4C	Z	13.768	1.33
57	MP4C	Mx	.012	1.33
58	MP4C	X	23.848	3.33
59	MP4C	Z	13.768	3.33
60	MP4C	Mx	.012	3.33
61	MP2A	X	41.853	.5
62	MP2A	Z	24.164	.5
63	MP2A	Mx	.021	.5
64	MP2B	X	54.971	.5
65	MP2B	Z	31.737	.5
66	MP2B	Mx	0	.5
67	MP2C	X	41.853	.5
68	MP2C	Z	24.164	.5
69	MP2C	Mx	-.021	.5
70	MP3A	X	34.32	.5
71	MP3A	Z	19.815	.5
72	MP3A	Mx	.017	.5
73	MP3B	X	45.564	.5
74	MP3B	Z	26.306	.5
75	MP3B	Mx	0	.5
76	MP3C	X	34.32	.5
77	MP3C	Z	19.815	.5
78	MP3C	Mx	-.017	.5

Member Point Loads (BLC 8 : Antenna Wo (150 Deg))

	Member Label	Direction	Magnitude[lb,k-ft]	Location[ft,%]
1	MP2A	X	50.576	1.75
2	MP2A	Z	87.6	1.75
3	MP2A	Mx	.048	1.75
4	MP2A	X	50.576	5.75
5	MP2A	Z	87.6	5.75
6	MP2A	Mx	.048	5.75
7	MP2B	X	50.576	1.75
8	MP2B	Z	87.6	1.75
9	MP2B	Mx	-.098	1.75
10	MP2B	X	50.576	5.75
11	MP2B	Z	87.6	5.75
12	MP2B	Mx	-.098	5.75
13	MP2C	X	40.393	1.75
14	MP2C	Z	69.963	1.75
15	MP2C	Mx	.04	1.75

Member Point Loads (BLC 8 : Antenna Wo (150 Deg)) (Continued)

	Member Label	Direction	Magnitude[lb,k-ft]	Location[ft,%]
16	MP2C	X	40.393	5.75
17	MP2C	Z	69.963	5.75
18	MP2C	Mx	.04	5.75
19	MP2A	X	50.576	1.75
20	MP2A	Z	87.6	1.75
21	MP2A	Mx	-.098	1.75
22	MP2A	X	50.576	5.75
23	MP2A	Z	87.6	5.75
24	MP2A	Mx	-.098	5.75
25	MP2B	X	50.576	1.75
26	MP2B	Z	87.6	1.75
27	MP2B	Mx	.048	1.75
28	MP2B	X	50.576	5.75
29	MP2B	Z	87.6	5.75
30	MP2B	Mx	.048	5.75
31	MP2C	X	40.393	1.75
32	MP2C	Z	69.963	1.75
33	MP2C	Mx	.04	1.75
34	MP2C	X	40.393	5.75
35	MP2C	Z	69.963	5.75
36	MP2C	Mx	.04	5.75
37	MP1A	X	50.576	2.5
38	MP1A	Z	87.6	2.5
39	MP1A	Mx	.025	2.5
40	LIGHT	X	16.972	.13
41	LIGHT	Z	29.396	.13
42	LIGHT	Mx	0	.13
43	MP4A	X	22.466	1.33
44	MP4A	Z	38.913	1.33
45	MP4A	Mx	-.011	1.33
46	MP4A	X	22.466	3.33
47	MP4A	Z	38.913	3.33
48	MP4A	Mx	-.011	3.33
49	MP4B	X	22.466	1.33
50	MP4B	Z	38.913	1.33
51	MP4B	Mx	-.011	1.33
52	MP4B	X	22.466	3.33
53	MP4B	Z	38.913	3.33
54	MP4B	Mx	-.011	3.33
55	MP4C	X	9.419	1.33
56	MP4C	Z	16.315	1.33
57	MP4C	Mx	.009	1.33
58	MP4C	X	9.419	3.33
59	MP4C	Z	16.315	3.33
60	MP4C	Mx	.009	3.33
61	MP2A	X	29.213	.5
62	MP2A	Z	50.598	.5
63	MP2A	Mx	.015	.5
64	MP2B	X	29.213	.5
65	MP2B	Z	50.598	.5
66	MP2B	Mx	.015	.5
67	MP2C	X	21.639	.5
68	MP2C	Z	37.48	.5
69	MP2C	Mx	-.022	.5
70	MP3A	X	24.142	.5
71	MP3A	Z	41.816	.5
72	MP3A	Mx	.012	.5
73	MP3B	X	24.142	.5
74	MP3B	Z	41.816	.5

Member Point Loads (BLC 8 : Antenna Wo (150 Deg)) (Continued)

	Member Label	Direction	Magnitude[lb,k-ft]	Location[ft,%]
75	MP3B	Mx	.012	.5
76	MP3C	X	17.651	.5
77	MP3C	Z	30.572	.5
78	MP3C	Mx	-.018	.5

Member Point Loads (BLC 9 : Antenna Wo (180 Deg))

	Member Label	Direction	Magnitude[lb,k-ft]	Location[ft,%]
1	MP2A	X	0	1.75
2	MP2A	Z	107.941	1.75
3	MP2A	Mx	.09	1.75
4	MP2A	X	0	5.75
5	MP2A	Z	107.941	5.75
6	MP2A	Mx	.09	5.75
7	MP2B	X	0	1.75
8	MP2B	Z	87.575	1.75
9	MP2B	Mx	-.074	1.75
10	MP2B	X	0	5.75
11	MP2B	Z	87.575	5.75
12	MP2B	Mx	-.074	5.75
13	MP2C	X	0	1.75
14	MP2C	Z	87.575	1.75
15	MP2C	Mx	.001	1.75
16	MP2C	X	0	5.75
17	MP2C	Z	87.575	5.75
18	MP2C	Mx	.001	5.75
19	MP2A	X	0	1.75
20	MP2A	Z	107.941	1.75
21	MP2A	Mx	-.09	1.75
22	MP2A	X	0	5.75
23	MP2A	Z	107.941	5.75
24	MP2A	Mx	-.09	5.75
25	MP2B	X	0	1.75
26	MP2B	Z	87.575	1.75
27	MP2B	Mx	-.001	1.75
28	MP2B	X	0	5.75
29	MP2B	Z	87.575	5.75
30	MP2B	Mx	-.001	5.75
31	MP2C	X	0	1.75
32	MP2C	Z	87.575	1.75
33	MP2C	Mx	.074	1.75
34	MP2C	X	0	5.75
35	MP2C	Z	87.575	5.75
36	MP2C	Mx	.074	5.75
37	MP1A	X	0	2.5
38	MP1A	Z	107.601	2.5
39	MP1A	Mx	0	2.5
40	LIGHT	X	0	.13
41	LIGHT	Z	30.549	.13
42	LIGHT	Mx	0	.13
43	MP4A	X	0	1.33
44	MP4A	Z	53.631	1.33
45	MP4A	Mx	0	1.33
46	MP4A	X	0	3.33
47	MP4A	Z	53.631	3.33
48	MP4A	Mx	0	3.33
49	MP4B	X	0	1.33
50	MP4B	Z	27.537	1.33
51	MP4B	Mx	-.012	1.33

Member Point Loads (BLC 9 : Antenna Wo (180 Deg)) (Continued)

	Member Label	Direction	Magnitude[lb,k-ft]	Location[ft,%]
52	MP4B	X	0	3.33
53	MP4B	Z	27.537	3.33
54	MP4B	Mx	-.012	3.33
55	MP4C	X	0	1.33
56	MP4C	Z	27.537	1.33
57	MP4C	Mx	.012	1.33
58	MP4C	X	0	3.33
59	MP4C	Z	27.537	3.33
60	MP4C	Mx	.012	3.33
61	MP2A	X	0	.5
62	MP2A	Z	63.475	.5
63	MP2A	Mx	0	.5
64	MP2B	X	0	.5
65	MP2B	Z	48.327	.5
66	MP2B	Mx	.021	.5
67	MP2C	X	0	.5
68	MP2C	Z	48.327	.5
69	MP2C	Mx	-.021	.5
70	MP3A	X	0	.5
71	MP3A	Z	52.613	.5
72	MP3A	Mx	0	.5
73	MP3B	X	0	.5
74	MP3B	Z	39.629	.5
75	MP3B	Mx	.017	.5
76	MP3C	X	0	.5
77	MP3C	Z	39.629	.5
78	MP3C	Mx	-.017	.5

Member Point Loads (BLC 10 : Antenna Wo (210 Deg))

	Member Label	Direction	Magnitude[lb,k-ft]	Location[ft,%]
1	MP2A	X	-50.576	1.75
2	MP2A	Z	87.6	1.75
3	MP2A	Mx	.098	1.75
4	MP2A	X	-50.576	5.75
5	MP2A	Z	87.6	5.75
6	MP2A	Mx	.098	5.75
7	MP2B	X	-40.393	1.75
8	MP2B	Z	69.963	1.75
9	MP2B	Mx	-.04	1.75
10	MP2B	X	-40.393	5.75
11	MP2B	Z	69.963	5.75
12	MP2B	Mx	-.04	5.75
13	MP2C	X	-50.576	1.75
14	MP2C	Z	87.6	1.75
15	MP2C	Mx	-.048	1.75
16	MP2C	X	-50.576	5.75
17	MP2C	Z	87.6	5.75
18	MP2C	Mx	-.048	5.75
19	MP2A	X	-50.576	1.75
20	MP2A	Z	87.6	1.75
21	MP2A	Mx	-.048	1.75
22	MP2A	X	-50.576	5.75
23	MP2A	Z	87.6	5.75
24	MP2A	Mx	-.048	5.75
25	MP2B	X	-40.393	1.75
26	MP2B	Z	69.963	1.75
27	MP2B	Mx	-.04	1.75
28	MP2B	X	-40.393	5.75

Member Point Loads (BLC 10 : Antenna Wo (210 Deg)) (Continued)

	Member Label	Direction	Magnitude[lb,k-ft]	Location[ft,%]
29	MP2B	Z	69.963	5.75
30	MP2B	Mx	-.04	5.75
31	MP2C	X	-50.576	1.75
32	MP2C	Z	87.6	1.75
33	MP2C	Mx	.098	1.75
34	MP2C	X	-50.576	5.75
35	MP2C	Z	87.6	5.75
36	MP2C	Mx	.098	5.75
37	MP1A	X	-50.576	2.5
38	MP1A	Z	87.6	2.5
39	MP1A	Mx	-.025	2.5
40	LIGHT	X	-11.88	.13
41	LIGHT	Z	20.577	.13
42	LIGHT	Mx	0	.13
43	MP4A	X	-22.466	1.33
44	MP4A	Z	38.913	1.33
45	MP4A	Mx	.011	1.33
46	MP4A	X	-22.466	3.33
47	MP4A	Z	38.913	3.33
48	MP4A	Mx	.011	3.33
49	MP4B	X	-9.419	1.33
50	MP4B	Z	16.315	1.33
51	MP4B	Mx	-.009	1.33
52	MP4B	X	-9.419	3.33
53	MP4B	Z	16.315	3.33
54	MP4B	Mx	-.009	3.33
55	MP4C	X	-22.466	1.33
56	MP4C	Z	38.913	1.33
57	MP4C	Mx	.011	1.33
58	MP4C	X	-22.466	3.33
59	MP4C	Z	38.913	3.33
60	MP4C	Mx	.011	3.33
61	MP2A	X	-29.213	.5
62	MP2A	Z	50.598	.5
63	MP2A	Mx	-.015	.5
64	MP2B	X	-21.639	.5
65	MP2B	Z	37.48	.5
66	MP2B	Mx	.022	.5
67	MP2C	X	-29.213	.5
68	MP2C	Z	50.598	.5
69	MP2C	Mx	-.015	.5
70	MP3A	X	-24.142	.5
71	MP3A	Z	41.816	.5
72	MP3A	Mx	-.012	.5
73	MP3B	X	-17.651	.5
74	MP3B	Z	30.572	.5
75	MP3B	Mx	.018	.5
76	MP3C	X	-24.142	.5
77	MP3C	Z	41.816	.5
78	MP3C	Mx	-.012	.5

Member Point Loads (BLC 11 : Antenna Wo (240 Deg))

	Member Label	Direction	Magnitude[lb,k-ft]	Location[ft,%]
1	MP2A	X	-75.842	1.75
2	MP2A	Z	43.787	1.75
3	MP2A	Mx	.074	1.75
4	MP2A	X	-75.842	5.75
5	MP2A	Z	43.787	5.75

Member Point Loads (BLC 11 : Antenna Wo (240 Deg)) (Continued)

	Member Label	Direction	Magnitude[lb,k-ft]	Location[ft,%]
6	MP2A	Mx	.074	5.75
7	MP2B	X	-75.842	1.75
8	MP2B	Z	43.787	1.75
9	MP2B	Mx	-.001	1.75
10	MP2B	X	-75.842	5.75
11	MP2B	Z	43.787	5.75
12	MP2B	Mx	-.001	5.75
13	MP2C	X	-93.479	1.75
14	MP2C	Z	53.97	1.75
15	MP2C	Mx	-.09	1.75
16	MP2C	X	-93.479	5.75
17	MP2C	Z	53.97	5.75
18	MP2C	Mx	-.09	5.75
19	MP2A	X	-75.842	1.75
20	MP2A	Z	43.787	1.75
21	MP2A	Mx	.001	1.75
22	MP2A	X	-75.842	5.75
23	MP2A	Z	43.787	5.75
24	MP2A	Mx	.001	5.75
25	MP2B	X	-75.842	1.75
26	MP2B	Z	43.787	1.75
27	MP2B	Mx	-.074	1.75
28	MP2B	X	-75.842	5.75
29	MP2B	Z	43.787	5.75
30	MP2B	Mx	-.074	5.75
31	MP2C	X	-93.479	1.75
32	MP2C	Z	53.97	1.75
33	MP2C	Mx	.09	1.75
34	MP2C	X	-93.479	5.75
35	MP2C	Z	53.97	5.75
36	MP2C	Mx	.09	5.75
37	MP1A	X	-76.43	2.5
38	MP1A	Z	44.127	2.5
39	MP1A	Mx	-.038	2.5
40	LIGHT	X	-17.638	.13
41	LIGHT	Z	10.183	.13
42	LIGHT	Mx	0	.13
43	MP4A	X	-23.848	1.33
44	MP4A	Z	13.768	1.33
45	MP4A	Mx	.012	1.33
46	MP4A	X	-23.848	3.33
47	MP4A	Z	13.768	3.33
48	MP4A	Mx	.012	3.33
49	MP4B	X	-23.848	1.33
50	MP4B	Z	13.768	1.33
51	MP4B	Mx	-.012	1.33
52	MP4B	X	-23.848	3.33
53	MP4B	Z	13.768	3.33
54	MP4B	Mx	-.012	3.33
55	MP4C	X	-46.446	1.33
56	MP4C	Z	26.815	1.33
57	MP4C	Mx	0	1.33
58	MP4C	X	-46.446	3.33
59	MP4C	Z	26.815	3.33
60	MP4C	Mx	0	3.33
61	MP2A	X	-41.853	.5
62	MP2A	Z	24.164	.5
63	MP2A	Mx	-.021	.5
64	MP2B	X	-41.853	.5

Member Point Loads (BLC 11 : Antenna Wo (240 Deg)) (Continued)

	Member Label	Direction	Magnitude[lb,k-ft]	Location[ft,%]
65	MP2B	Z	24.164	.5
66	MP2B	Mx	.021	.5
67	MP2C	X	-54.971	.5
68	MP2C	Z	31.737	.5
69	MP2C	Mx	0	.5
70	MP3A	X	-34.32	.5
71	MP3A	Z	19.815	.5
72	MP3A	Mx	-.017	.5
73	MP3B	X	-34.32	.5
74	MP3B	Z	19.815	.5
75	MP3B	Mx	.017	.5
76	MP3C	X	-45.564	.5
77	MP3C	Z	26.306	.5
78	MP3C	Mx	0	.5

Member Point Loads (BLC 12 : Antenna Wo (270 Deg))

	Member Label	Direction	Magnitude[lb,k-ft]	Location[ft,%]
1	MP2A	X	-80.786	1.75
2	MP2A	Z	0	1.75
3	MP2A	Mx	.04	1.75
4	MP2A	X	-80.786	5.75
5	MP2A	Z	0	5.75
6	MP2A	Mx	.04	5.75
7	MP2B	X	-101.152	1.75
8	MP2B	Z	0	1.75
9	MP2B	Mx	.048	1.75
10	MP2B	X	-101.152	5.75
11	MP2B	Z	0	5.75
12	MP2B	Mx	.048	5.75
13	MP2C	X	-101.152	1.75
14	MP2C	Z	0	1.75
15	MP2C	Mx	-.098	1.75
16	MP2C	X	-101.152	5.75
17	MP2C	Z	0	5.75
18	MP2C	Mx	-.098	5.75
19	MP2A	X	-80.786	1.75
20	MP2A	Z	0	1.75
21	MP2A	Mx	.04	1.75
22	MP2A	X	-80.786	5.75
23	MP2A	Z	0	5.75
24	MP2A	Mx	.04	5.75
25	MP2B	X	-101.152	1.75
26	MP2B	Z	0	1.75
27	MP2B	Mx	-.098	1.75
28	MP2B	X	-101.152	5.75
29	MP2B	Z	0	5.75
30	MP2B	Mx	-.098	5.75
31	MP2C	X	-101.152	1.75
32	MP2C	Z	0	1.75
33	MP2C	Mx	.048	1.75
34	MP2C	X	-101.152	5.75
35	MP2C	Z	0	5.75
36	MP2C	Mx	.048	5.75
37	MP1A	X	-81.804	2.5
38	MP1A	Z	0	2.5
39	MP1A	Mx	-.041	2.5
40	LIGHT	X	-23.761	.13
41	LIGHT	Z	0	.13

Member Point Loads (BLC 12 : Antenna Wo (270 Deg)) (Continued)

	Member Label	Direction	Magnitude[lb,k-ft]	Location[ft,%]
42	LIGHT	Mx	0	.13
43	MP4A	X	-18.839	1.33
44	MP4A	Z	0	1.33
45	MP4A	Mx	.009	1.33
46	MP4A	X	-18.839	3.33
47	MP4A	Z	0	3.33
48	MP4A	Mx	.009	3.33
49	MP4B	X	-44.933	1.33
50	MP4B	Z	0	1.33
51	MP4B	Mx	-.011	1.33
52	MP4B	X	-44.933	3.33
53	MP4B	Z	0	3.33
54	MP4B	Mx	-.011	3.33
55	MP4C	X	-44.933	1.33
56	MP4C	Z	0	1.33
57	MP4C	Mx	-.011	1.33
58	MP4C	X	-44.933	3.33
59	MP4C	Z	0	3.33
60	MP4C	Mx	-.011	3.33
61	MP2A	X	-43.278	.5
62	MP2A	Z	0	.5
63	MP2A	Mx	-.022	.5
64	MP2B	X	-58.425	.5
65	MP2B	Z	0	.5
66	MP2B	Mx	.015	.5
67	MP2C	X	-58.425	.5
68	MP2C	Z	0	.5
69	MP2C	Mx	.015	.5
70	MP3A	X	-35.301	.5
71	MP3A	Z	0	.5
72	MP3A	Mx	-.018	.5
73	MP3B	X	-48.285	.5
74	MP3B	Z	0	.5
75	MP3B	Mx	.012	.5
76	MP3C	X	-48.285	.5
77	MP3C	Z	0	.5
78	MP3C	Mx	.012	.5

Member Point Loads (BLC 13 : Antenna Wo (300 Deg))

	Member Label	Direction	Magnitude[lb,k-ft]	Location[ft,%]
1	MP2A	X	-75.842	1.75
2	MP2A	Z	-43.787	1.75
3	MP2A	Mx	.001	1.75
4	MP2A	X	-75.842	5.75
5	MP2A	Z	-43.787	5.75
6	MP2A	Mx	.001	5.75
7	MP2B	X	-93.479	1.75
8	MP2B	Z	-53.97	1.75
9	MP2B	Mx	.09	1.75
10	MP2B	X	-93.479	5.75
11	MP2B	Z	-53.97	5.75
12	MP2B	Mx	.09	5.75
13	MP2C	X	-75.842	1.75
14	MP2C	Z	-43.787	1.75
15	MP2C	Mx	-.074	1.75
16	MP2C	X	-75.842	5.75
17	MP2C	Z	-43.787	5.75
18	MP2C	Mx	-.074	5.75

Member Point Loads (BLC 13 : Antenna Wo (300 Deg)) (Continued)

	Member Label	Direction	Magnitude[lb,k-ft]	Location[ft,%]
19	MP2A	X	-75.842	1.75
20	MP2A	Z	-43.787	1.75
21	MP2A	Mx	.074	1.75
22	MP2A	X	-75.842	5.75
23	MP2A	Z	-43.787	5.75
24	MP2A	Mx	.074	5.75
25	MP2B	X	-93.479	1.75
26	MP2B	Z	-53.97	1.75
27	MP2B	Mx	-.09	1.75
28	MP2B	X	-93.479	5.75
29	MP2B	Z	-53.97	5.75
30	MP2B	Mx	-.09	5.75
31	MP2C	X	-75.842	1.75
32	MP2C	Z	-43.787	1.75
33	MP2C	Mx	-.001	1.75
34	MP2C	X	-75.842	5.75
35	MP2C	Z	-43.787	5.75
36	MP2C	Mx	-.001	5.75
37	MP1A	X	-76.43	2.5
38	MP1A	Z	-44.127	2.5
39	MP1A	Mx	-.038	2.5
40	LIGHT	X	-26.456	.13
41	LIGHT	Z	-15.275	.13
42	LIGHT	Mx	0	.13
43	MP4A	X	-23.848	1.33
44	MP4A	Z	-13.768	1.33
45	MP4A	Mx	.012	1.33
46	MP4A	X	-23.848	3.33
47	MP4A	Z	-13.768	3.33
48	MP4A	Mx	.012	3.33
49	MP4B	X	-46.446	1.33
50	MP4B	Z	-26.815	1.33
51	MP4B	Mx	0	1.33
52	MP4B	X	-46.446	3.33
53	MP4B	Z	-26.815	3.33
54	MP4B	Mx	0	3.33
55	MP4C	X	-23.848	1.33
56	MP4C	Z	-13.768	1.33
57	MP4C	Mx	-.012	1.33
58	MP4C	X	-23.848	3.33
59	MP4C	Z	-13.768	3.33
60	MP4C	Mx	-.012	3.33
61	MP2A	X	-41.853	.5
62	MP2A	Z	-24.164	.5
63	MP2A	Mx	-.021	.5
64	MP2B	X	-54.971	.5
65	MP2B	Z	-31.737	.5
66	MP2B	Mx	0	.5
67	MP2C	X	-41.853	.5
68	MP2C	Z	-24.164	.5
69	MP2C	Mx	.021	.5
70	MP3A	X	-34.32	.5
71	MP3A	Z	-19.815	.5
72	MP3A	Mx	-.017	.5
73	MP3B	X	-45.564	.5
74	MP3B	Z	-26.306	.5
75	MP3B	Mx	0	.5
76	MP3C	X	-34.32	.5
77	MP3C	Z	-19.815	.5

Member Point Loads (BLC 13 : Antenna Wo (300 Deg)) (Continued)

	Member Label	Direction	Magnitude[lb,k-ft]	Location[ft,%]
78	MP3C	Mx	.017	.5

Member Point Loads (BLC 14 : Antenna Wo (330 Deg))

	Member Label	Direction	Magnitude[lb,k-ft]	Location[ft,%]
1	MP2A	X	-50.576	1.75
2	MP2A	Z	-87.6	1.75
3	MP2A	Mx	-.048	1.75
4	MP2A	X	-50.576	5.75
5	MP2A	Z	-87.6	5.75
6	MP2A	Mx	-.048	5.75
7	MP2B	X	-50.576	1.75
8	MP2B	Z	-87.6	1.75
9	MP2B	Mx	.098	1.75
10	MP2B	X	-50.576	5.75
11	MP2B	Z	-87.6	5.75
12	MP2B	Mx	.098	5.75
13	MP2C	X	-40.393	1.75
14	MP2C	Z	-69.963	1.75
15	MP2C	Mx	-.04	1.75
16	MP2C	X	-40.393	5.75
17	MP2C	Z	-69.963	5.75
18	MP2C	Mx	-.04	5.75
19	MP2A	X	-50.576	1.75
20	MP2A	Z	-87.6	1.75
21	MP2A	Mx	.098	1.75
22	MP2A	X	-50.576	5.75
23	MP2A	Z	-87.6	5.75
24	MP2A	Mx	.098	5.75
25	MP2B	X	-50.576	1.75
26	MP2B	Z	-87.6	1.75
27	MP2B	Mx	-.048	1.75
28	MP2B	X	-50.576	5.75
29	MP2B	Z	-87.6	5.75
30	MP2B	Mx	-.048	5.75
31	MP2C	X	-40.393	1.75
32	MP2C	Z	-69.963	1.75
33	MP2C	Mx	-.04	1.75
34	MP2C	X	-40.393	5.75
35	MP2C	Z	-69.963	5.75
36	MP2C	Mx	-.04	5.75
37	MP1A	X	-50.576	2.5
38	MP1A	Z	-87.6	2.5
39	MP1A	Mx	-.025	2.5
40	LIGHT	X	-16.972	.13
41	LIGHT	Z	-29.396	.13
42	LIGHT	Mx	0	.13
43	MP4A	X	-22.466	1.33
44	MP4A	Z	-38.913	1.33
45	MP4A	Mx	.011	1.33
46	MP4A	X	-22.466	3.33
47	MP4A	Z	-38.913	3.33
48	MP4A	Mx	.011	3.33
49	MP4B	X	-22.466	1.33
50	MP4B	Z	-38.913	1.33
51	MP4B	Mx	.011	1.33
52	MP4B	X	-22.466	3.33
53	MP4B	Z	-38.913	3.33
54	MP4B	Mx	.011	3.33

Member Point Loads (BLC 14 : Antenna Wo (330 Deg)) (Continued)

	Member Label	Direction	Magnitude[lb,k-ft]	Location[ft,%]
55	MP4C	X	-9.419	1.33
56	MP4C	Z	-16.315	1.33
57	MP4C	Mx	-.009	1.33
58	MP4C	X	-9.419	3.33
59	MP4C	Z	-16.315	3.33
60	MP4C	Mx	-.009	3.33
61	MP2A	X	-29.213	.5
62	MP2A	Z	-50.598	.5
63	MP2A	Mx	-.015	.5
64	MP2B	X	-29.213	.5
65	MP2B	Z	-50.598	.5
66	MP2B	Mx	-.015	.5
67	MP2C	X	-21.639	.5
68	MP2C	Z	-37.48	.5
69	MP2C	Mx	.022	.5
70	MP3A	X	-24.142	.5
71	MP3A	Z	-41.816	.5
72	MP3A	Mx	-.012	.5
73	MP3B	X	-24.142	.5
74	MP3B	Z	-41.816	.5
75	MP3B	Mx	-.012	.5
76	MP3C	X	-17.651	.5
77	MP3C	Z	-30.572	.5
78	MP3C	Mx	.018	.5

Member Point Loads (BLC 15 : Antenna Wi (0 Deg))

	Member Label	Direction	Magnitude[lb,k-ft]	Location[ft,%]
1	MP2A	X	0	1.75
2	MP2A	Z	-44.474	1.75
3	MP2A	Mx	-.037	1.75
4	MP2A	X	0	5.75
5	MP2A	Z	-44.474	5.75
6	MP2A	Mx	-.037	5.75
7	MP2B	X	0	1.75
8	MP2B	Z	-36.588	1.75
9	MP2B	Mx	.031	1.75
10	MP2B	X	0	5.75
11	MP2B	Z	-36.588	5.75
12	MP2B	Mx	.031	5.75
13	MP2C	X	0	1.75
14	MP2C	Z	-36.588	1.75
15	MP2C	Mx	-.000598	1.75
16	MP2C	X	0	5.75
17	MP2C	Z	-36.588	5.75
18	MP2C	Mx	-.000598	5.75
19	MP2A	X	0	1.75
20	MP2A	Z	-44.474	1.75
21	MP2A	Mx	.037	1.75
22	MP2A	X	0	5.75
23	MP2A	Z	-44.474	5.75
24	MP2A	Mx	.037	5.75
25	MP2B	X	0	1.75
26	MP2B	Z	-36.588	1.75
27	MP2B	Mx	.000598	1.75
28	MP2B	X	0	5.75
29	MP2B	Z	-36.588	5.75
30	MP2B	Mx	.000598	5.75
31	MP2C	X	0	1.75

Member Point Loads (BLC 15 : Antenna Wi (0 Deg)) (Continued)

	Member Label	Direction	Magnitude[lb,k-ft]	Location[ft,%]
32	MP2C	Z	-36.588	1.75
33	MP2C	Mx	-.031	1.75
34	MP2C	X	0	5.75
35	MP2C	Z	-36.588	5.75
36	MP2C	Mx	-.031	5.75
37	MP1A	X	0	2.5
38	MP1A	Z	-27.099	2.5
39	MP1A	Mx	0	2.5
40	LIGHT	X	0	.13
41	LIGHT	Z	-6.354	.13
42	LIGHT	Mx	0	.13
43	MP4A	X	0	1.33
44	MP4A	Z	-12.767	1.33
45	MP4A	Mx	0	1.33
46	MP4A	X	0	3.33
47	MP4A	Z	-12.767	3.33
48	MP4A	Mx	0	3.33
49	MP4B	X	0	1.33
50	MP4B	Z	-7.235	1.33
51	MP4B	Mx	.003	1.33
52	MP4B	X	0	3.33
53	MP4B	Z	-7.235	3.33
54	MP4B	Mx	.003	3.33
55	MP4C	X	0	1.33
56	MP4C	Z	-7.235	1.33
57	MP4C	Mx	-.003	1.33
58	MP4C	X	0	3.33
59	MP4C	Z	-7.235	3.33
60	MP4C	Mx	-.003	3.33
61	MP2A	X	0	.5
62	MP2A	Z	-13.187	.5
63	MP2A	Mx	0	.5
64	MP2B	X	0	.5
65	MP2B	Z	-10.297	.5
66	MP2B	Mx	-.004	.5
67	MP2C	X	0	.5
68	MP2C	Z	-10.297	.5
69	MP2C	Mx	.004	.5
70	MP3A	X	0	.5
71	MP3A	Z	-13.187	.5
72	MP3A	Mx	0	.5
73	MP3B	X	0	.5
74	MP3B	Z	-10.176	.5
75	MP3B	Mx	-.004	.5
76	MP3C	X	0	.5
77	MP3C	Z	-10.176	.5
78	MP3C	Mx	.004	.5

Member Point Loads (BLC 16 : Antenna Wi (30 Deg))

	Member Label	Direction	Magnitude[lb,k-ft]	Location[ft,%]
1	MP2A	X	20.923	1.75
2	MP2A	Z	-36.239	1.75
3	MP2A	Mx	-.041	1.75
4	MP2A	X	20.923	5.75
5	MP2A	Z	-36.239	5.75
6	MP2A	Mx	-.041	5.75
7	MP2B	X	16.979	1.75
8	MP2B	Z	-29.409	1.75

Member Point Loads (BLC 16 : Antenna Wi (30 Deg)) (Continued)

	Member Label	Direction	Magnitude[lb,k-ft]	Location[ft,%]
9	MP2B	Mx	.017	1.75
10	MP2B	X	16.979	5.75
11	MP2B	Z	-29.409	5.75
12	MP2B	Mx	.017	5.75
13	MP2C	X	20.923	1.75
14	MP2C	Z	-36.239	1.75
15	MP2C	Mx	.02	1.75
16	MP2C	X	20.923	5.75
17	MP2C	Z	-36.239	5.75
18	MP2C	Mx	.02	5.75
19	MP2A	X	20.923	1.75
20	MP2A	Z	-36.239	1.75
21	MP2A	Mx	.02	1.75
22	MP2A	X	20.923	5.75
23	MP2A	Z	-36.239	5.75
24	MP2A	Mx	.02	5.75
25	MP2B	X	16.979	1.75
26	MP2B	Z	-29.409	1.75
27	MP2B	Mx	.017	1.75
28	MP2B	X	16.979	5.75
29	MP2B	Z	-29.409	5.75
30	MP2B	Mx	.017	5.75
31	MP2C	X	20.923	1.75
32	MP2C	Z	-36.239	1.75
33	MP2C	Mx	-.041	1.75
34	MP2C	X	20.923	5.75
35	MP2C	Z	-36.239	5.75
36	MP2C	Mx	-.041	5.75
37	MP1A	X	12.811	2.5
38	MP1A	Z	-22.189	2.5
39	MP1A	Mx	.006	2.5
40	LIGHT	X	2.685	.13
41	LIGHT	Z	-4.651	.13
42	LIGHT	Mx	0	.13
43	MP4A	X	5.461	1.33
44	MP4A	Z	-9.459	1.33
45	MP4A	Mx	-.003	1.33
46	MP4A	X	5.461	3.33
47	MP4A	Z	-9.459	3.33
48	MP4A	Mx	-.003	3.33
49	MP4B	X	2.696	1.33
50	MP4B	Z	-4.669	1.33
51	MP4B	Mx	.003	1.33
52	MP4B	X	2.696	3.33
53	MP4B	Z	-4.669	3.33
54	MP4B	Mx	.003	3.33
55	MP4C	X	5.461	1.33
56	MP4C	Z	-9.459	1.33
57	MP4C	Mx	-.003	1.33
58	MP4C	X	5.461	3.33
59	MP4C	Z	-9.459	3.33
60	MP4C	Mx	-.003	3.33
61	MP2A	X	6.112	.5
62	MP2A	Z	-10.586	.5
63	MP2A	Mx	.003	.5
64	MP2B	X	4.667	.5
65	MP2B	Z	-8.083	.5
66	MP2B	Mx	-.005	.5
67	MP2C	X	6.112	.5

Member Point Loads (BLC 16 : Antenna Wi (30 Deg)) (Continued)

	Member Label	Direction	Magnitude[lb,k-ft]	Location[ft,%]
68	MP2C	Z	-10.586	.5
69	MP2C	Mx	.003	.5
70	MP3A	X	6.092	.5
71	MP3A	Z	-10.551	.5
72	MP3A	Mx	.003	.5
73	MP3B	X	4.586	.5
74	MP3B	Z	-7.944	.5
75	MP3B	Mx	-.005	.5
76	MP3C	X	6.092	.5
77	MP3C	Z	-10.551	.5
78	MP3C	Mx	.003	.5

Member Point Loads (BLC 17 : Antenna Wi (60 Deg))

	Member Label	Direction	Magnitude[lb,k-ft]	Location[ft,%]
1	MP2A	X	31.686	1.75
2	MP2A	Z	-18.294	1.75
3	MP2A	Mx	-.031	1.75
4	MP2A	X	31.686	5.75
5	MP2A	Z	-18.294	5.75
6	MP2A	Mx	-.031	5.75
7	MP2B	X	31.686	1.75
8	MP2B	Z	-18.294	1.75
9	MP2B	Mx	.000598	1.75
10	MP2B	X	31.686	5.75
11	MP2B	Z	-18.294	5.75
12	MP2B	Mx	.000598	5.75
13	MP2C	X	38.516	1.75
14	MP2C	Z	-22.237	1.75
15	MP2C	Mx	.037	1.75
16	MP2C	X	38.516	5.75
17	MP2C	Z	-22.237	5.75
18	MP2C	Mx	.037	5.75
19	MP2A	X	31.686	1.75
20	MP2A	Z	-18.294	1.75
21	MP2A	Mx	-.000598	1.75
22	MP2A	X	31.686	5.75
23	MP2A	Z	-18.294	5.75
24	MP2A	Mx	-.000598	5.75
25	MP2B	X	31.686	1.75
26	MP2B	Z	-18.294	1.75
27	MP2B	Mx	.031	1.75
28	MP2B	X	31.686	5.75
29	MP2B	Z	-18.294	5.75
30	MP2B	Mx	.031	5.75
31	MP2C	X	38.516	1.75
32	MP2C	Z	-22.237	1.75
33	MP2C	Mx	-.037	1.75
34	MP2C	X	38.516	5.75
35	MP2C	Z	-22.237	5.75
36	MP2C	Mx	-.037	5.75
37	MP1A	X	19.631	2.5
38	MP1A	Z	-11.334	2.5
39	MP1A	Mx	.01	2.5
40	LIGHT	X	4.226	.13
41	LIGHT	Z	-2.44	.13
42	LIGHT	Mx	0	.13
43	MP4A	X	6.266	1.33
44	MP4A	Z	-3.617	1.33

Member Point Loads (BLC 17 : Antenna Wi (60 Deg)) (Continued)

	Member Label	Direction	Magnitude[lb,k-ft]	Location[ft,%]
45	MP4A	Mx	-.003	1.33
46	MP4A	X	6.266	3.33
47	MP4A	Z	-3.617	3.33
48	MP4A	Mx	-.003	3.33
49	MP4B	X	6.266	1.33
50	MP4B	Z	-3.617	1.33
51	MP4B	Mx	.003	1.33
52	MP4B	X	6.266	3.33
53	MP4B	Z	-3.617	3.33
54	MP4B	Mx	.003	3.33
55	MP4C	X	11.056	1.33
56	MP4C	Z	-6.383	1.33
57	MP4C	Mx	0	1.33
58	MP4C	X	11.056	3.33
59	MP4C	Z	-6.383	3.33
60	MP4C	Mx	0	3.33
61	MP2A	X	8.917	.5
62	MP2A	Z	-5.148	.5
63	MP2A	Mx	.004	.5
64	MP2B	X	8.917	.5
65	MP2B	Z	-5.148	.5
66	MP2B	Mx	-.004	.5
67	MP2C	X	11.42	.5
68	MP2C	Z	-6.593	.5
69	MP2C	Mx	0	.5
70	MP3A	X	8.813	.5
71	MP3A	Z	-5.088	.5
72	MP3A	Mx	.004	.5
73	MP3B	X	8.813	.5
74	MP3B	Z	-5.088	.5
75	MP3B	Mx	-.004	.5
76	MP3C	X	11.42	.5
77	MP3C	Z	-6.593	.5
78	MP3C	Mx	0	.5

Member Point Loads (BLC 18 : Antenna Wi (90 Deg))

	Member Label	Direction	Magnitude[lb,k-ft]	Location[ft,%]
1	MP2A	X	33.959	1.75
2	MP2A	Z	0	1.75
3	MP2A	Mx	-.017	1.75
4	MP2A	X	33.959	5.75
5	MP2A	Z	0	5.75
6	MP2A	Mx	-.017	5.75
7	MP2B	X	41.846	1.75
8	MP2B	Z	0	1.75
9	MP2B	Mx	-.02	1.75
10	MP2B	X	41.846	5.75
11	MP2B	Z	0	5.75
12	MP2B	Mx	-.02	5.75
13	MP2C	X	41.846	1.75
14	MP2C	Z	0	1.75
15	MP2C	Mx	.041	1.75
16	MP2C	X	41.846	5.75
17	MP2C	Z	0	5.75
18	MP2C	Mx	.041	5.75
19	MP2A	X	33.959	1.75
20	MP2A	Z	0	1.75
21	MP2A	Mx	-.017	1.75

Member Point Loads (BLC 18 : Antenna Wi (90 Deg)) (Continued)

	Member Label	Direction	Magnitude[lb,k-ft]	Location[ft,%]
22	MP2A	X	33.959	5.75
23	MP2A	Z	0	5.75
24	MP2A	Mx	-.017	5.75
25	MP2B	X	41.846	1.75
26	MP2B	Z	0	1.75
27	MP2B	Mx	.041	1.75
28	MP2B	X	41.846	5.75
29	MP2B	Z	0	5.75
30	MP2B	Mx	.041	5.75
31	MP2C	X	41.846	1.75
32	MP2C	Z	0	1.75
33	MP2C	Mx	-.02	1.75
34	MP2C	X	41.846	5.75
35	MP2C	Z	0	5.75
36	MP2C	Mx	-.02	5.75
37	MP1A	X	21.191	2.5
38	MP1A	Z	0	2.5
39	MP1A	Mx	.011	2.5
40	LIGHT	X	5.371	.13
41	LIGHT	Z	0	.13
42	LIGHT	Mx	0	.13
43	MP4A	X	5.391	1.33
44	MP4A	Z	0	1.33
45	MP4A	Mx	-.003	1.33
46	MP4A	X	5.391	3.33
47	MP4A	Z	0	3.33
48	MP4A	Mx	-.003	3.33
49	MP4B	X	10.923	1.33
50	MP4B	Z	0	1.33
51	MP4B	Mx	.003	1.33
52	MP4B	X	10.923	3.33
53	MP4B	Z	0	3.33
54	MP4B	Mx	.003	3.33
55	MP4C	X	10.923	1.33
56	MP4C	Z	0	1.33
57	MP4C	Mx	.003	1.33
58	MP4C	X	10.923	3.33
59	MP4C	Z	0	3.33
60	MP4C	Mx	.003	3.33
61	MP2A	X	9.333	.5
62	MP2A	Z	0	.5
63	MP2A	Mx	.005	.5
64	MP2B	X	12.223	.5
65	MP2B	Z	0	.5
66	MP2B	Mx	-.003	.5
67	MP2C	X	12.223	.5
68	MP2C	Z	0	.5
69	MP2C	Mx	-.003	.5
70	MP3A	X	9.173	.5
71	MP3A	Z	0	.5
72	MP3A	Mx	.005	.5
73	MP3B	X	12.183	.5
74	MP3B	Z	0	.5
75	MP3B	Mx	-.003	.5
76	MP3C	X	12.183	.5
77	MP3C	Z	0	.5
78	MP3C	Mx	-.003	.5

Member Point Loads (BLC 19 : Antenna Wi (120 Deg))

	Member Label	Direction	Magnitude[lb,k-ft]	Location[ft,%]
1	MP2A	X	31.686	1.75
2	MP2A	Z	18.294	1.75
3	MP2A	Mx	-.000598	1.75
4	MP2A	X	31.686	5.75
5	MP2A	Z	18.294	5.75
6	MP2A	Mx	-.000598	5.75
7	MP2B	X	38.516	1.75
8	MP2B	Z	22.237	1.75
9	MP2B	Mx	-.037	1.75
10	MP2B	X	38.516	5.75
11	MP2B	Z	22.237	5.75
12	MP2B	Mx	-.037	5.75
13	MP2C	X	31.686	1.75
14	MP2C	Z	18.294	1.75
15	MP2C	Mx	.031	1.75
16	MP2C	X	31.686	5.75
17	MP2C	Z	18.294	5.75
18	MP2C	Mx	.031	5.75
19	MP2A	X	31.686	1.75
20	MP2A	Z	18.294	1.75
21	MP2A	Mx	-.031	1.75
22	MP2A	X	31.686	5.75
23	MP2A	Z	18.294	5.75
24	MP2A	Mx	-.031	5.75
25	MP2B	X	38.516	1.75
26	MP2B	Z	22.237	1.75
27	MP2B	Mx	.037	1.75
28	MP2B	X	38.516	5.75
29	MP2B	Z	22.237	5.75
30	MP2B	Mx	.037	5.75
31	MP2C	X	31.686	1.75
32	MP2C	Z	18.294	1.75
33	MP2C	Mx	.000598	1.75
34	MP2C	X	31.686	5.75
35	MP2C	Z	18.294	5.75
36	MP2C	Mx	.000598	5.75
37	MP1A	X	19.631	2.5
38	MP1A	Z	11.334	2.5
39	MP1A	Mx	.01	2.5
40	LIGHT	X	5.503	.13
41	LIGHT	Z	3.177	.13
42	LIGHT	Mx	0	.13
43	MP4A	X	6.266	1.33
44	MP4A	Z	3.617	1.33
45	MP4A	Mx	-.003	1.33
46	MP4A	X	6.266	3.33
47	MP4A	Z	3.617	3.33
48	MP4A	Mx	-.003	3.33
49	MP4B	X	11.056	1.33
50	MP4B	Z	6.383	1.33
51	MP4B	Mx	0	1.33
52	MP4B	X	11.056	3.33
53	MP4B	Z	6.383	3.33
54	MP4B	Mx	0	3.33
55	MP4C	X	6.266	1.33
56	MP4C	Z	3.617	1.33
57	MP4C	Mx	.003	1.33
58	MP4C	X	6.266	3.33
59	MP4C	Z	3.617	3.33

Member Point Loads (BLC 19 : Antenna Wi (120 Deg)) (Continued)

	Member Label	Direction	Magnitude[lb,k-ft]	Location[ft,%]
60	MP4C	Mx	.003	3.33
61	MP2A	X	8.917	.5
62	MP2A	Z	5.148	.5
63	MP2A	Mx	.004	.5
64	MP2B	X	11.42	.5
65	MP2B	Z	6.593	.5
66	MP2B	Mx	0	.5
67	MP2C	X	8.917	.5
68	MP2C	Z	5.148	.5
69	MP2C	Mx	-.004	.5
70	MP3A	X	8.813	.5
71	MP3A	Z	5.088	.5
72	MP3A	Mx	.004	.5
73	MP3B	X	11.42	.5
74	MP3B	Z	6.593	.5
75	MP3B	Mx	0	.5
76	MP3C	X	8.813	.5
77	MP3C	Z	5.088	.5
78	MP3C	Mx	-.004	.5

Member Point Loads (BLC 20 : Antenna Wi (150 Deg))

	Member Label	Direction	Magnitude[lb,k-ft]	Location[ft,%]
1	MP2A	X	20.923	1.75
2	MP2A	Z	36.239	1.75
3	MP2A	Mx	.02	1.75
4	MP2A	X	20.923	5.75
5	MP2A	Z	36.239	5.75
6	MP2A	Mx	.02	5.75
7	MP2B	X	20.923	1.75
8	MP2B	Z	36.239	1.75
9	MP2B	Mx	-.041	1.75
10	MP2B	X	20.923	5.75
11	MP2B	Z	36.239	5.75
12	MP2B	Mx	-.041	5.75
13	MP2C	X	16.979	1.75
14	MP2C	Z	29.409	1.75
15	MP2C	Mx	.017	1.75
16	MP2C	X	16.979	5.75
17	MP2C	Z	29.409	5.75
18	MP2C	Mx	.017	5.75
19	MP2A	X	20.923	1.75
20	MP2A	Z	36.239	1.75
21	MP2A	Mx	-.041	1.75
22	MP2A	X	20.923	5.75
23	MP2A	Z	36.239	5.75
24	MP2A	Mx	-.041	5.75
25	MP2B	X	20.923	1.75
26	MP2B	Z	36.239	1.75
27	MP2B	Mx	.02	1.75
28	MP2B	X	20.923	5.75
29	MP2B	Z	36.239	5.75
30	MP2B	Mx	.02	5.75
31	MP2C	X	16.979	1.75
32	MP2C	Z	29.409	1.75
33	MP2C	Mx	.017	1.75
34	MP2C	X	16.979	5.75
35	MP2C	Z	29.409	5.75
36	MP2C	Mx	.017	5.75

Member Point Loads (BLC 20 : Antenna Wi (150 Deg)) (Continued)

	Member Label	Direction	Magnitude[lb,k-ft]	Location[ft,%]
37	MP1A	X	12.811	2.5
38	MP1A	Z	22.189	2.5
39	MP1A	Mx	.006	2.5
40	LIGHT	X	3.423	.13
41	LIGHT	Z	5.928	.13
42	LIGHT	Mx	0	.13
43	MP4A	X	5.461	1.33
44	MP4A	Z	9.459	1.33
45	MP4A	Mx	-.003	1.33
46	MP4A	X	5.461	3.33
47	MP4A	Z	9.459	3.33
48	MP4A	Mx	-.003	3.33
49	MP4B	X	5.461	1.33
50	MP4B	Z	9.459	1.33
51	MP4B	Mx	-.003	1.33
52	MP4B	X	5.461	3.33
53	MP4B	Z	9.459	3.33
54	MP4B	Mx	-.003	3.33
55	MP4C	X	2.696	1.33
56	MP4C	Z	4.669	1.33
57	MP4C	Mx	.003	1.33
58	MP4C	X	2.696	3.33
59	MP4C	Z	4.669	3.33
60	MP4C	Mx	.003	3.33
61	MP2A	X	6.112	.5
62	MP2A	Z	10.586	.5
63	MP2A	Mx	.003	.5
64	MP2B	X	6.112	.5
65	MP2B	Z	10.586	.5
66	MP2B	Mx	.003	.5
67	MP2C	X	4.667	.5
68	MP2C	Z	8.083	.5
69	MP2C	Mx	-.005	.5
70	MP3A	X	6.092	.5
71	MP3A	Z	10.551	.5
72	MP3A	Mx	.003	.5
73	MP3B	X	6.092	.5
74	MP3B	Z	10.551	.5
75	MP3B	Mx	.003	.5
76	MP3C	X	4.586	.5
77	MP3C	Z	7.944	.5
78	MP3C	Mx	-.005	.5

Member Point Loads (BLC 21 : Antenna Wi (180 Deg))

	Member Label	Direction	Magnitude[lb,k-ft]	Location[ft,%]
1	MP2A	X	0	1.75
2	MP2A	Z	44.474	1.75
3	MP2A	Mx	.037	1.75
4	MP2A	X	0	5.75
5	MP2A	Z	44.474	5.75
6	MP2A	Mx	.037	5.75
7	MP2B	X	0	1.75
8	MP2B	Z	36.588	1.75
9	MP2B	Mx	-.031	1.75
10	MP2B	X	0	5.75
11	MP2B	Z	36.588	5.75
12	MP2B	Mx	-.031	5.75
13	MP2C	X	0	1.75

Member Point Loads (BLC 21 : Antenna Wi (180 Deg)) (Continued)

	Member Label	Direction	Magnitude[lb,k-ft]	Location[ft,%]
14	MP2C	Z	36.588	1.75
15	MP2C	Mx	.000598	1.75
16	MP2C	X	0	5.75
17	MP2C	Z	36.588	5.75
18	MP2C	Mx	.000598	5.75
19	MP2A	X	0	1.75
20	MP2A	Z	44.474	1.75
21	MP2A	Mx	-.037	1.75
22	MP2A	X	0	5.75
23	MP2A	Z	44.474	5.75
24	MP2A	Mx	-.037	5.75
25	MP2B	X	0	1.75
26	MP2B	Z	36.588	1.75
27	MP2B	Mx	-.000598	1.75
28	MP2B	X	0	5.75
29	MP2B	Z	36.588	5.75
30	MP2B	Mx	-.000598	5.75
31	MP2C	X	0	1.75
32	MP2C	Z	36.588	1.75
33	MP2C	Mx	.031	1.75
34	MP2C	X	0	5.75
35	MP2C	Z	36.588	5.75
36	MP2C	Mx	.031	5.75
37	MP1A	X	0	2.5
38	MP1A	Z	27.099	2.5
39	MP1A	Mx	0	2.5
40	LIGHT	X	0	.13
41	LIGHT	Z	6.354	.13
42	LIGHT	Mx	0	.13
43	MP4A	X	0	1.33
44	MP4A	Z	12.767	1.33
45	MP4A	Mx	0	1.33
46	MP4A	X	0	3.33
47	MP4A	Z	12.767	3.33
48	MP4A	Mx	0	3.33
49	MP4B	X	0	1.33
50	MP4B	Z	7.235	1.33
51	MP4B	Mx	-.003	1.33
52	MP4B	X	0	3.33
53	MP4B	Z	7.235	3.33
54	MP4B	Mx	-.003	3.33
55	MP4C	X	0	1.33
56	MP4C	Z	7.235	1.33
57	MP4C	Mx	.003	1.33
58	MP4C	X	0	3.33
59	MP4C	Z	7.235	3.33
60	MP4C	Mx	.003	3.33
61	MP2A	X	0	.5
62	MP2A	Z	13.187	.5
63	MP2A	Mx	0	.5
64	MP2B	X	0	.5
65	MP2B	Z	10.297	.5
66	MP2B	Mx	.004	.5
67	MP2C	X	0	.5
68	MP2C	Z	10.297	.5
69	MP2C	Mx	-.004	.5
70	MP3A	X	0	.5
71	MP3A	Z	13.187	.5
72	MP3A	Mx	0	.5

Member Point Loads (BLC 21 : Antenna Wi (180 Deg)) (Continued)

	Member Label	Direction	Magnitude[lb,k-ft]	Location[ft,%]
73	MP3B	X	0	.5
74	MP3B	Z	10.176	.5
75	MP3B	Mx	.004	.5
76	MP3C	X	0	.5
77	MP3C	Z	10.176	.5
78	MP3C	Mx	-.004	.5

Member Point Loads (BLC 22 : Antenna Wi (210 Deg))

	Member Label	Direction	Magnitude[lb,k-ft]	Location[ft,%]
1	MP2A	X	-20.923	1.75
2	MP2A	Z	36.239	1.75
3	MP2A	Mx	.041	1.75
4	MP2A	X	-20.923	5.75
5	MP2A	Z	36.239	5.75
6	MP2A	Mx	.041	5.75
7	MP2B	X	-16.979	1.75
8	MP2B	Z	29.409	1.75
9	MP2B	Mx	-.017	1.75
10	MP2B	X	-16.979	5.75
11	MP2B	Z	29.409	5.75
12	MP2B	Mx	-.017	5.75
13	MP2C	X	-20.923	1.75
14	MP2C	Z	36.239	1.75
15	MP2C	Mx	-.02	1.75
16	MP2C	X	-20.923	5.75
17	MP2C	Z	36.239	5.75
18	MP2C	Mx	-.02	5.75
19	MP2A	X	-20.923	1.75
20	MP2A	Z	36.239	1.75
21	MP2A	Mx	-.02	1.75
22	MP2A	X	-20.923	5.75
23	MP2A	Z	36.239	5.75
24	MP2A	Mx	-.02	5.75
25	MP2B	X	-16.979	1.75
26	MP2B	Z	29.409	1.75
27	MP2B	Mx	-.017	1.75
28	MP2B	X	-16.979	5.75
29	MP2B	Z	29.409	5.75
30	MP2B	Mx	-.017	5.75
31	MP2C	X	-20.923	1.75
32	MP2C	Z	36.239	1.75
33	MP2C	Mx	.041	1.75
34	MP2C	X	-20.923	5.75
35	MP2C	Z	36.239	5.75
36	MP2C	Mx	.041	5.75
37	MP1A	X	-12.811	2.5
38	MP1A	Z	22.189	2.5
39	MP1A	Mx	-.006	2.5
40	LIGHT	X	-2.685	.13
41	LIGHT	Z	4.651	.13
42	LIGHT	Mx	0	.13
43	MP4A	X	-5.461	1.33
44	MP4A	Z	9.459	1.33
45	MP4A	Mx	.003	1.33
46	MP4A	X	-5.461	3.33
47	MP4A	Z	9.459	3.33
48	MP4A	Mx	.003	3.33
49	MP4B	X	-2.696	1.33

Member Point Loads (BLC 22 : Antenna Wi (210 Deg)) (Continued)

	Member Label	Direction	Magnitude[lb,k-ft]	Location[ft,%]
50	MP4B	Z	4.669	1.33
51	MP4B	Mx	-.003	1.33
52	MP4B	X	-2.696	3.33
53	MP4B	Z	4.669	3.33
54	MP4B	Mx	-.003	3.33
55	MP4C	X	-5.461	1.33
56	MP4C	Z	9.459	1.33
57	MP4C	Mx	.003	1.33
58	MP4C	X	-5.461	3.33
59	MP4C	Z	9.459	3.33
60	MP4C	Mx	.003	3.33
61	MP2A	X	-6.112	.5
62	MP2A	Z	10.586	.5
63	MP2A	Mx	-.003	.5
64	MP2B	X	-4.667	.5
65	MP2B	Z	8.083	.5
66	MP2B	Mx	.005	.5
67	MP2C	X	-6.112	.5
68	MP2C	Z	10.586	.5
69	MP2C	Mx	-.003	.5
70	MP3A	X	-6.092	.5
71	MP3A	Z	10.551	.5
72	MP3A	Mx	-.003	.5
73	MP3B	X	-4.586	.5
74	MP3B	Z	7.944	.5
75	MP3B	Mx	.005	.5
76	MP3C	X	-6.092	.5
77	MP3C	Z	10.551	.5
78	MP3C	Mx	-.003	.5

Member Point Loads (BLC 23 : Antenna Wi (240 Deg))

	Member Label	Direction	Magnitude[lb,k-ft]	Location[ft,%]
1	MP2A	X	-31.686	1.75
2	MP2A	Z	18.294	1.75
3	MP2A	Mx	.031	1.75
4	MP2A	X	-31.686	5.75
5	MP2A	Z	18.294	5.75
6	MP2A	Mx	.031	5.75
7	MP2B	X	-31.686	1.75
8	MP2B	Z	18.294	1.75
9	MP2B	Mx	-.000598	1.75
10	MP2B	X	-31.686	5.75
11	MP2B	Z	18.294	5.75
12	MP2B	Mx	-.000598	5.75
13	MP2C	X	-38.516	1.75
14	MP2C	Z	22.237	1.75
15	MP2C	Mx	-.037	1.75
16	MP2C	X	-38.516	5.75
17	MP2C	Z	22.237	5.75
18	MP2C	Mx	-.037	5.75
19	MP2A	X	-31.686	1.75
20	MP2A	Z	18.294	1.75
21	MP2A	Mx	.000598	1.75
22	MP2A	X	-31.686	5.75
23	MP2A	Z	18.294	5.75
24	MP2A	Mx	.000598	5.75
25	MP2B	X	-31.686	1.75
26	MP2B	Z	18.294	1.75

Member Point Loads (BLC 23 : Antenna Wi (240 Deg)) (Continued)

	Member Label	Direction	Magnitude[lb,k-ft]	Location[ft,%]
27	MP2B	Mx	-.031	1.75
28	MP2B	X	-31.686	5.75
29	MP2B	Z	18.294	5.75
30	MP2B	Mx	-.031	5.75
31	MP2C	X	-38.516	1.75
32	MP2C	Z	22.237	1.75
33	MP2C	Mx	.037	1.75
34	MP2C	X	-38.516	5.75
35	MP2C	Z	22.237	5.75
36	MP2C	Mx	.037	5.75
37	MP1A	X	-19.631	2.5
38	MP1A	Z	11.334	2.5
39	MP1A	Mx	-.01	2.5
40	LIGHT	X	-4.226	.13
41	LIGHT	Z	2.44	.13
42	LIGHT	Mx	0	.13
43	MP4A	X	-6.266	1.33
44	MP4A	Z	3.617	1.33
45	MP4A	Mx	.003	1.33
46	MP4A	X	-6.266	3.33
47	MP4A	Z	3.617	3.33
48	MP4A	Mx	.003	3.33
49	MP4B	X	-6.266	1.33
50	MP4B	Z	3.617	1.33
51	MP4B	Mx	-.003	1.33
52	MP4B	X	-6.266	3.33
53	MP4B	Z	3.617	3.33
54	MP4B	Mx	-.003	3.33
55	MP4C	X	-11.056	1.33
56	MP4C	Z	6.383	1.33
57	MP4C	Mx	0	1.33
58	MP4C	X	-11.056	3.33
59	MP4C	Z	6.383	3.33
60	MP4C	Mx	0	3.33
61	MP2A	X	-8.917	.5
62	MP2A	Z	5.148	.5
63	MP2A	Mx	-.004	.5
64	MP2B	X	-8.917	.5
65	MP2B	Z	5.148	.5
66	MP2B	Mx	.004	.5
67	MP2C	X	-11.42	.5
68	MP2C	Z	6.593	.5
69	MP2C	Mx	0	.5
70	MP3A	X	-8.813	.5
71	MP3A	Z	5.088	.5
72	MP3A	Mx	-.004	.5
73	MP3B	X	-8.813	.5
74	MP3B	Z	5.088	.5
75	MP3B	Mx	.004	.5
76	MP3C	X	-11.42	.5
77	MP3C	Z	6.593	.5
78	MP3C	Mx	0	.5

Member Point Loads (BLC 24 : Antenna Wi (270 Deg))

	Member Label	Direction	Magnitude[lb,k-ft]	Location[ft,%]
1	MP2A	X	-33.959	1.75
2	MP2A	Z	0	1.75
3	MP2A	Mx	.017	1.75

Member Point Loads (BLC 24 : Antenna Wi (270 Deg)) (Continued)

	Member Label	Direction	Magnitude[lb,k-ft]	Location[ft,%]
4	MP2A	X	-33.959	5.75
5	MP2A	Z	0	5.75
6	MP2A	Mx	.017	5.75
7	MP2B	X	-41.846	1.75
8	MP2B	Z	0	1.75
9	MP2B	Mx	.02	1.75
10	MP2B	X	-41.846	5.75
11	MP2B	Z	0	5.75
12	MP2B	Mx	.02	5.75
13	MP2C	X	-41.846	1.75
14	MP2C	Z	0	1.75
15	MP2C	Mx	-.041	1.75
16	MP2C	X	-41.846	5.75
17	MP2C	Z	0	5.75
18	MP2C	Mx	-.041	5.75
19	MP2A	X	-33.959	1.75
20	MP2A	Z	0	1.75
21	MP2A	Mx	.017	1.75
22	MP2A	X	-33.959	5.75
23	MP2A	Z	0	5.75
24	MP2A	Mx	.017	5.75
25	MP2B	X	-41.846	1.75
26	MP2B	Z	0	1.75
27	MP2B	Mx	-.041	1.75
28	MP2B	X	-41.846	5.75
29	MP2B	Z	0	5.75
30	MP2B	Mx	-.041	5.75
31	MP2C	X	-41.846	1.75
32	MP2C	Z	0	1.75
33	MP2C	Mx	.02	1.75
34	MP2C	X	-41.846	5.75
35	MP2C	Z	0	5.75
36	MP2C	Mx	.02	5.75
37	MP1A	X	-21.191	2.5
38	MP1A	Z	0	2.5
39	MP1A	Mx	-.011	2.5
40	LIGHT	X	-5.371	.13
41	LIGHT	Z	0	.13
42	LIGHT	Mx	0	.13
43	MP4A	X	-5.391	1.33
44	MP4A	Z	0	1.33
45	MP4A	Mx	.003	1.33
46	MP4A	X	-5.391	3.33
47	MP4A	Z	0	3.33
48	MP4A	Mx	.003	3.33
49	MP4B	X	-10.923	1.33
50	MP4B	Z	0	1.33
51	MP4B	Mx	-.003	1.33
52	MP4B	X	-10.923	3.33
53	MP4B	Z	0	3.33
54	MP4B	Mx	-.003	3.33
55	MP4C	X	-10.923	1.33
56	MP4C	Z	0	1.33
57	MP4C	Mx	-.003	1.33
58	MP4C	X	-10.923	3.33
59	MP4C	Z	0	3.33
60	MP4C	Mx	-.003	3.33
61	MP2A	X	-9.333	.5
62	MP2A	Z	0	.5

Member Point Loads (BLC 24 : Antenna Wi (270 Deg)) (Continued)

	Member Label	Direction	Magnitude[lb,k-ft]	Location[ft,%]
63	MP2A	Mx	-.005	.5
64	MP2B	X	-12.223	.5
65	MP2B	Z	0	.5
66	MP2B	Mx	.003	.5
67	MP2C	X	-12.223	.5
68	MP2C	Z	0	.5
69	MP2C	Mx	.003	.5
70	MP3A	X	-9.173	.5
71	MP3A	Z	0	.5
72	MP3A	Mx	-.005	.5
73	MP3B	X	-12.183	.5
74	MP3B	Z	0	.5
75	MP3B	Mx	.003	.5
76	MP3C	X	-12.183	.5
77	MP3C	Z	0	.5
78	MP3C	Mx	.003	.5

Member Point Loads (BLC 25 : Antenna Wi (300 Deg))

	Member Label	Direction	Magnitude[lb,k-ft]	Location[ft,%]
1	MP2A	X	-31.686	1.75
2	MP2A	Z	-18.294	1.75
3	MP2A	Mx	.000598	1.75
4	MP2A	X	-31.686	5.75
5	MP2A	Z	-18.294	5.75
6	MP2A	Mx	.000598	5.75
7	MP2B	X	-38.516	1.75
8	MP2B	Z	-22.237	1.75
9	MP2B	Mx	.037	1.75
10	MP2B	X	-38.516	5.75
11	MP2B	Z	-22.237	5.75
12	MP2B	Mx	.037	5.75
13	MP2C	X	-31.686	1.75
14	MP2C	Z	-18.294	1.75
15	MP2C	Mx	-.031	1.75
16	MP2C	X	-31.686	5.75
17	MP2C	Z	-18.294	5.75
18	MP2C	Mx	-.031	5.75
19	MP2A	X	-31.686	1.75
20	MP2A	Z	-18.294	1.75
21	MP2A	Mx	.031	1.75
22	MP2A	X	-31.686	5.75
23	MP2A	Z	-18.294	5.75
24	MP2A	Mx	.031	5.75
25	MP2B	X	-38.516	1.75
26	MP2B	Z	-22.237	1.75
27	MP2B	Mx	-.037	1.75
28	MP2B	X	-38.516	5.75
29	MP2B	Z	-22.237	5.75
30	MP2B	Mx	-.037	5.75
31	MP2C	X	-31.686	1.75
32	MP2C	Z	-18.294	1.75
33	MP2C	Mx	-.000598	1.75
34	MP2C	X	-31.686	5.75
35	MP2C	Z	-18.294	5.75
36	MP2C	Mx	-.000598	5.75
37	MP1A	X	-19.631	2.5
38	MP1A	Z	-11.334	2.5
39	MP1A	Mx	-.01	2.5

Member Point Loads (BLC 25 : Antenna Wi (300 Deg)) (Continued)

	Member Label	Direction	Magnitude[lb,k-ft]	Location[ft,%]
40	LIGHT	X	-5.503	.13
41	LIGHT	Z	-3.177	.13
42	LIGHT	Mx	0	.13
43	MP4A	X	-6.266	1.33
44	MP4A	Z	-3.617	1.33
45	MP4A	Mx	.003	1.33
46	MP4A	X	-6.266	3.33
47	MP4A	Z	-3.617	3.33
48	MP4A	Mx	.003	3.33
49	MP4B	X	-11.056	1.33
50	MP4B	Z	-6.383	1.33
51	MP4B	Mx	0	1.33
52	MP4B	X	-11.056	3.33
53	MP4B	Z	-6.383	3.33
54	MP4B	Mx	0	3.33
55	MP4C	X	-6.266	1.33
56	MP4C	Z	-3.617	1.33
57	MP4C	Mx	-.003	1.33
58	MP4C	X	-6.266	3.33
59	MP4C	Z	-3.617	3.33
60	MP4C	Mx	-.003	3.33
61	MP2A	X	-8.917	.5
62	MP2A	Z	-5.148	.5
63	MP2A	Mx	-.004	.5
64	MP2B	X	-11.42	.5
65	MP2B	Z	-6.593	.5
66	MP2B	Mx	0	.5
67	MP2C	X	-8.917	.5
68	MP2C	Z	-5.148	.5
69	MP2C	Mx	.004	.5
70	MP3A	X	-8.813	.5
71	MP3A	Z	-5.088	.5
72	MP3A	Mx	-.004	.5
73	MP3B	X	-11.42	.5
74	MP3B	Z	-6.593	.5
75	MP3B	Mx	0	.5
76	MP3C	X	-8.813	.5
77	MP3C	Z	-5.088	.5
78	MP3C	Mx	.004	.5

Member Point Loads (BLC 26 : Antenna Wi (330 Deg))

	Member Label	Direction	Magnitude[lb,k-ft]	Location[ft,%]
1	MP2A	X	-20.923	1.75
2	MP2A	Z	-36.239	1.75
3	MP2A	Mx	-.02	1.75
4	MP2A	X	-20.923	5.75
5	MP2A	Z	-36.239	5.75
6	MP2A	Mx	-.02	5.75
7	MP2B	X	-20.923	1.75
8	MP2B	Z	-36.239	1.75
9	MP2B	Mx	.041	1.75
10	MP2B	X	-20.923	5.75
11	MP2B	Z	-36.239	5.75
12	MP2B	Mx	.041	5.75
13	MP2C	X	-16.979	1.75
14	MP2C	Z	-29.409	1.75
15	MP2C	Mx	-.017	1.75
16	MP2C	X	-16.979	5.75

Member Point Loads (BLC 26 : Antenna Wi (330 Deg)) (Continued)

	Member Label	Direction	Magnitude[lb,k-ft]	Location[ft,%]
17	MP2C	Z	-29.409	5.75
18	MP2C	Mx	-.017	5.75
19	MP2A	X	-20.923	1.75
20	MP2A	Z	-36.239	1.75
21	MP2A	Mx	.041	1.75
22	MP2A	X	-20.923	5.75
23	MP2A	Z	-36.239	5.75
24	MP2A	Mx	.041	5.75
25	MP2B	X	-20.923	1.75
26	MP2B	Z	-36.239	1.75
27	MP2B	Mx	-.02	1.75
28	MP2B	X	-20.923	5.75
29	MP2B	Z	-36.239	5.75
30	MP2B	Mx	-.02	5.75
31	MP2C	X	-16.979	1.75
32	MP2C	Z	-29.409	1.75
33	MP2C	Mx	-.017	1.75
34	MP2C	X	-16.979	5.75
35	MP2C	Z	-29.409	5.75
36	MP2C	Mx	-.017	5.75
37	MP1A	X	-12.811	2.5
38	MP1A	Z	-22.189	2.5
39	MP1A	Mx	-.006	2.5
40	LIGHT	X	-3.423	.13
41	LIGHT	Z	-5.928	.13
42	LIGHT	Mx	0	.13
43	MP4A	X	-5.461	1.33
44	MP4A	Z	-9.459	1.33
45	MP4A	Mx	.003	1.33
46	MP4A	X	-5.461	3.33
47	MP4A	Z	-9.459	3.33
48	MP4A	Mx	.003	3.33
49	MP4B	X	-5.461	1.33
50	MP4B	Z	-9.459	1.33
51	MP4B	Mx	.003	1.33
52	MP4B	X	-5.461	3.33
53	MP4B	Z	-9.459	3.33
54	MP4B	Mx	.003	3.33
55	MP4C	X	-2.696	1.33
56	MP4C	Z	-4.669	1.33
57	MP4C	Mx	-.003	1.33
58	MP4C	X	-2.696	3.33
59	MP4C	Z	-4.669	3.33
60	MP4C	Mx	-.003	3.33
61	MP2A	X	-6.112	.5
62	MP2A	Z	-10.586	.5
63	MP2A	Mx	-.003	.5
64	MP2B	X	-6.112	.5
65	MP2B	Z	-10.586	.5
66	MP2B	Mx	-.003	.5
67	MP2C	X	-4.667	.5
68	MP2C	Z	-8.083	.5
69	MP2C	Mx	.005	.5
70	MP3A	X	-6.092	.5
71	MP3A	Z	-10.551	.5
72	MP3A	Mx	-.003	.5
73	MP3B	X	-6.092	.5
74	MP3B	Z	-10.551	.5
75	MP3B	Mx	-.003	.5

Member Point Loads (BLC 26 : Antenna Wi (330 Deg)) (Continued)

	Member Label	Direction	Magnitude[lb,k-ft]	Location[ft,%]
76	MP3C	X	-4.586	.5
77	MP3C	Z	-7.944	.5
78	MP3C	Mx	.005	.5

Member Point Loads (BLC 27 : Antenna Wm (0 Deg))

	Member Label	Direction	Magnitude[lb,k-ft]	Location[ft,%]
1	MP2A	X	0	1.75
2	MP2A	Z	-6.746	1.75
3	MP2A	Mx	-.006	1.75
4	MP2A	X	0	5.75
5	MP2A	Z	-6.746	5.75
6	MP2A	Mx	-.006	5.75
7	MP2B	X	0	1.75
8	MP2B	Z	-5.473	1.75
9	MP2B	Mx	.005	1.75
10	MP2B	X	0	5.75
11	MP2B	Z	-5.473	5.75
12	MP2B	Mx	.005	5.75
13	MP2C	X	0	1.75
14	MP2C	Z	-5.473	1.75
15	MP2C	Mx	-8.9e-5	1.75
16	MP2C	X	0	5.75
17	MP2C	Z	-5.473	5.75
18	MP2C	Mx	-8.9e-5	5.75
19	MP2A	X	0	1.75
20	MP2A	Z	-6.746	1.75
21	MP2A	Mx	.006	1.75
22	MP2A	X	0	5.75
23	MP2A	Z	-6.746	5.75
24	MP2A	Mx	.006	5.75
25	MP2B	X	0	1.75
26	MP2B	Z	-5.473	1.75
27	MP2B	Mx	8.9e-5	1.75
28	MP2B	X	0	5.75
29	MP2B	Z	-5.473	5.75
30	MP2B	Mx	8.9e-5	5.75
31	MP2C	X	0	1.75
32	MP2C	Z	-5.473	1.75
33	MP2C	Mx	-.005	1.75
34	MP2C	X	0	5.75
35	MP2C	Z	-5.473	5.75
36	MP2C	Mx	-.005	5.75
37	MP1A	X	0	2.5
38	MP1A	Z	-6.725	2.5
39	MP1A	Mx	0	2.5
40	LIGHT	X	0	.13
41	LIGHT	Z	-1.909	.13
42	LIGHT	Mx	0	.13
43	MP4A	X	0	1.33
44	MP4A	Z	-3.352	1.33
45	MP4A	Mx	0	1.33
46	MP4A	X	0	3.33
47	MP4A	Z	-3.352	3.33
48	MP4A	Mx	0	3.33
49	MP4B	X	0	1.33
50	MP4B	Z	-1.721	1.33
51	MP4B	Mx	.000745	1.33
52	MP4B	X	0	3.33

Member Point Loads (BLC 27 : Antenna Wm (0 Deg)) (Continued)

	Member Label	Direction	Magnitude[lb,k-ft]	Location[ft,%]
53	MP4B	Z	-1.721	3.33
54	MP4B	Mx	.000745	3.33
55	MP4C	X	0	1.33
56	MP4C	Z	-1.721	1.33
57	MP4C	Mx	-.000745	1.33
58	MP4C	X	0	3.33
59	MP4C	Z	-1.721	3.33
60	MP4C	Mx	-.000745	3.33
61	MP2A	X	0	.5
62	MP2A	Z	-3.967	.5
63	MP2A	Mx	0	.5
64	MP2B	X	0	.5
65	MP2B	Z	-3.02	.5
66	MP2B	Mx	-.001	.5
67	MP2C	X	0	.5
68	MP2C	Z	-3.02	.5
69	MP2C	Mx	.001	.5
70	MP3A	X	0	.5
71	MP3A	Z	-3.288	.5
72	MP3A	Mx	0	.5
73	MP3B	X	0	.5
74	MP3B	Z	-2.477	.5
75	MP3B	Mx	-.001	.5
76	MP3C	X	0	.5
77	MP3C	Z	-2.477	.5
78	MP3C	Mx	.001	.5

Member Point Loads (BLC 28 : Antenna Wm (30 Deg))

	Member Label	Direction	Magnitude[lb,k-ft]	Location[ft,%]
1	MP2A	X	3.161	1.75
2	MP2A	Z	-5.475	1.75
3	MP2A	Mx	-.006	1.75
4	MP2A	X	3.161	5.75
5	MP2A	Z	-5.475	5.75
6	MP2A	Mx	-.006	5.75
7	MP2B	X	2.525	1.75
8	MP2B	Z	-4.373	1.75
9	MP2B	Mx	.003	1.75
10	MP2B	X	2.525	5.75
11	MP2B	Z	-4.373	5.75
12	MP2B	Mx	.003	5.75
13	MP2C	X	3.161	1.75
14	MP2C	Z	-5.475	1.75
15	MP2C	Mx	.003	1.75
16	MP2C	X	3.161	5.75
17	MP2C	Z	-5.475	5.75
18	MP2C	Mx	.003	5.75
19	MP2A	X	3.161	1.75
20	MP2A	Z	-5.475	1.75
21	MP2A	Mx	.003	1.75
22	MP2A	X	3.161	5.75
23	MP2A	Z	-5.475	5.75
24	MP2A	Mx	.003	5.75
25	MP2B	X	2.525	1.75
26	MP2B	Z	-4.373	1.75
27	MP2B	Mx	.003	1.75
28	MP2B	X	2.525	5.75
29	MP2B	Z	-4.373	5.75

Member Point Loads (BLC 28 : Antenna Wm (30 Deg)) (Continued)

	Member Label	Direction	Magnitude[lb,k-ft]	Location[ft,%]
30	MP2B	Mx	.003	5.75
31	MP2C	X	3.161	1.75
32	MP2C	Z	-5.475	1.75
33	MP2C	Mx	-.006	1.75
34	MP2C	X	3.161	5.75
35	MP2C	Z	-5.475	5.75
36	MP2C	Mx	-.006	5.75
37	MP1A	X	3.161	2.5
38	MP1A	Z	-5.475	2.5
39	MP1A	Mx	.002	2.5
40	LIGHT	X	.743	.13
41	LIGHT	Z	-1.286	.13
42	LIGHT	Mx	0	.13
43	MP4A	X	1.404	1.33
44	MP4A	Z	-2.432	1.33
45	MP4A	Mx	-.000702	1.33
46	MP4A	X	1.404	3.33
47	MP4A	Z	-2.432	3.33
48	MP4A	Mx	-.000702	3.33
49	MP4B	X	.589	1.33
50	MP4B	Z	-1.02	1.33
51	MP4B	Mx	.000589	1.33
52	MP4B	X	.589	3.33
53	MP4B	Z	-1.02	3.33
54	MP4B	Mx	.000589	3.33
55	MP4C	X	1.404	1.33
56	MP4C	Z	-2.432	1.33
57	MP4C	Mx	-.000702	1.33
58	MP4C	X	1.404	3.33
59	MP4C	Z	-2.432	3.33
60	MP4C	Mx	-.000702	3.33
61	MP2A	X	1.826	.5
62	MP2A	Z	-3.162	.5
63	MP2A	Mx	.000913	.5
64	MP2B	X	1.352	.5
65	MP2B	Z	-2.342	.5
66	MP2B	Mx	-.001	.5
67	MP2C	X	1.826	.5
68	MP2C	Z	-3.162	.5
69	MP2C	Mx	.000913	.5
70	MP3A	X	1.509	.5
71	MP3A	Z	-2.613	.5
72	MP3A	Mx	.000754	.5
73	MP3B	X	1.103	.5
74	MP3B	Z	-1.911	.5
75	MP3B	Mx	-.001	.5
76	MP3C	X	1.509	.5
77	MP3C	Z	-2.613	.5
78	MP3C	Mx	.000754	.5

Member Point Loads (BLC 29 : Antenna Wm (60 Deg))

	Member Label	Direction	Magnitude[lb,k-ft]	Location[ft,%]
1	MP2A	X	4.74	1.75
2	MP2A	Z	-2.737	1.75
3	MP2A	Mx	-.005	1.75
4	MP2A	X	4.74	5.75
5	MP2A	Z	-2.737	5.75
6	MP2A	Mx	-.005	5.75

Member Point Loads (BLC 29 : Antenna Wm (60 Deg)) (Continued)

	Member Label	Direction	Magnitude[lb,k-ft]	Location[ft,%]
7	MP2B	X	4.74	1.75
8	MP2B	Z	-2.737	1.75
9	MP2B	Mx	9e-5	1.75
10	MP2B	X	4.74	5.75
11	MP2B	Z	-2.737	5.75
12	MP2B	Mx	9e-5	5.75
13	MP2C	X	5.842	1.75
14	MP2C	Z	-3.373	1.75
15	MP2C	Mx	.006	1.75
16	MP2C	X	5.842	5.75
17	MP2C	Z	-3.373	5.75
18	MP2C	Mx	.006	5.75
19	MP2A	X	4.74	1.75
20	MP2A	Z	-2.737	1.75
21	MP2A	Mx	-8.9e-5	1.75
22	MP2A	X	4.74	5.75
23	MP2A	Z	-2.737	5.75
24	MP2A	Mx	-8.9e-5	5.75
25	MP2B	X	4.74	1.75
26	MP2B	Z	-2.737	1.75
27	MP2B	Mx	.005	1.75
28	MP2B	X	4.74	5.75
29	MP2B	Z	-2.737	5.75
30	MP2B	Mx	.005	5.75
31	MP2C	X	5.842	1.75
32	MP2C	Z	-3.373	1.75
33	MP2C	Mx	-.006	1.75
34	MP2C	X	5.842	5.75
35	MP2C	Z	-3.373	5.75
36	MP2C	Mx	-.006	5.75
37	MP1A	X	4.777	2.5
38	MP1A	Z	-2.758	2.5
39	MP1A	Mx	.002	2.5
40	LIGHT	X	1.102	.13
41	LIGHT	Z	-.636	.13
42	LIGHT	Mx	0	.13
43	MP4A	X	1.49	1.33
44	MP4A	Z	-.861	1.33
45	MP4A	Mx	-.000745	1.33
46	MP4A	X	1.49	3.33
47	MP4A	Z	-.861	3.33
48	MP4A	Mx	-.000745	3.33
49	MP4B	X	1.49	1.33
50	MP4B	Z	-.861	1.33
51	MP4B	Mx	.000745	1.33
52	MP4B	X	1.49	3.33
53	MP4B	Z	-.861	3.33
54	MP4B	Mx	.000745	3.33
55	MP4C	X	2.903	1.33
56	MP4C	Z	-1.676	1.33
57	MP4C	Mx	0	1.33
58	MP4C	X	2.903	3.33
59	MP4C	Z	-1.676	3.33
60	MP4C	Mx	0	3.33
61	MP2A	X	2.616	.5
62	MP2A	Z	-1.51	.5
63	MP2A	Mx	.001	.5
64	MP2B	X	2.616	.5
65	MP2B	Z	-1.51	.5

Member Point Loads (BLC 29 : Antenna Wm (60 Deg)) (Continued)

	Member Label	Direction	Magnitude[lb,k-ft]	Location[ft,%]
66	MP2B	Mx	-.001	.5
67	MP2C	X	3.436	.5
68	MP2C	Z	-1.984	.5
69	MP2C	Mx	0	.5
70	MP3A	X	2.145	.5
71	MP3A	Z	-1.238	.5
72	MP3A	Mx	.001	.5
73	MP3B	X	2.145	.5
74	MP3B	Z	-1.238	.5
75	MP3B	Mx	-.001	.5
76	MP3C	X	2.848	.5
77	MP3C	Z	-1.644	.5
78	MP3C	Mx	0	.5

Member Point Loads (BLC 30 : Antenna Wm (90 Deg))

	Member Label	Direction	Magnitude[lb,k-ft]	Location[ft,%]
1	MP2A	X	5.049	1.75
2	MP2A	Z	0	1.75
3	MP2A	Mx	-.003	1.75
4	MP2A	X	5.049	5.75
5	MP2A	Z	0	5.75
6	MP2A	Mx	-.003	5.75
7	MP2B	X	6.322	1.75
8	MP2B	Z	0	1.75
9	MP2B	Mx	-.003	1.75
10	MP2B	X	6.322	5.75
11	MP2B	Z	0	5.75
12	MP2B	Mx	-.003	5.75
13	MP2C	X	6.322	1.75
14	MP2C	Z	0	1.75
15	MP2C	Mx	.006	1.75
16	MP2C	X	6.322	5.75
17	MP2C	Z	0	5.75
18	MP2C	Mx	.006	5.75
19	MP2A	X	5.049	1.75
20	MP2A	Z	0	1.75
21	MP2A	Mx	-.003	1.75
22	MP2A	X	5.049	5.75
23	MP2A	Z	0	5.75
24	MP2A	Mx	-.003	5.75
25	MP2B	X	6.322	1.75
26	MP2B	Z	0	1.75
27	MP2B	Mx	.006	1.75
28	MP2B	X	6.322	5.75
29	MP2B	Z	0	5.75
30	MP2B	Mx	.006	5.75
31	MP2C	X	6.322	1.75
32	MP2C	Z	0	1.75
33	MP2C	Mx	-.003	1.75
34	MP2C	X	6.322	5.75
35	MP2C	Z	0	5.75
36	MP2C	Mx	-.003	5.75
37	MP1A	X	5.113	2.5
38	MP1A	Z	0	2.5
39	MP1A	Mx	.003	2.5
40	LIGHT	X	1.485	.13
41	LIGHT	Z	0	.13
42	LIGHT	Mx	0	.13

Member Point Loads (BLC 30 : Antenna Wm (90 Deg)) (Continued)

	Member Label	Direction	Magnitude[lb,k-ft]	Location[ft,%]
43	MP4A	X	1.177	1.33
44	MP4A	Z	0	1.33
45	MP4A	Mx	-.000588	1.33
46	MP4A	X	1.177	3.33
47	MP4A	Z	0	3.33
48	MP4A	Mx	-.000588	3.33
49	MP4B	X	2.808	1.33
50	MP4B	Z	0	1.33
51	MP4B	Mx	.000702	1.33
52	MP4B	X	2.808	3.33
53	MP4B	Z	0	3.33
54	MP4B	Mx	.000702	3.33
55	MP4C	X	2.808	1.33
56	MP4C	Z	0	1.33
57	MP4C	Mx	.000702	1.33
58	MP4C	X	2.808	3.33
59	MP4C	Z	0	3.33
60	MP4C	Mx	.000702	3.33
61	MP2A	X	2.705	.5
62	MP2A	Z	0	.5
63	MP2A	Mx	.001	.5
64	MP2B	X	3.652	.5
65	MP2B	Z	0	.5
66	MP2B	Mx	-.000913	.5
67	MP2C	X	3.652	.5
68	MP2C	Z	0	.5
69	MP2C	Mx	-.000913	.5
70	MP3A	X	2.206	.5
71	MP3A	Z	0	.5
72	MP3A	Mx	.001	.5
73	MP3B	X	3.018	.5
74	MP3B	Z	0	.5
75	MP3B	Mx	-.000754	.5
76	MP3C	X	3.018	.5
77	MP3C	Z	0	.5
78	MP3C	Mx	-.000754	.5

Member Point Loads (BLC 31 : Antenna Wm (120 Deg))

	Member Label	Direction	Magnitude[lb,k-ft]	Location[ft,%]
1	MP2A	X	4.74	1.75
2	MP2A	Z	2.737	1.75
3	MP2A	Mx	-8.9e-5	1.75
4	MP2A	X	4.74	5.75
5	MP2A	Z	2.737	5.75
6	MP2A	Mx	-8.9e-5	5.75
7	MP2B	X	5.842	1.75
8	MP2B	Z	3.373	1.75
9	MP2B	Mx	-.006	1.75
10	MP2B	X	5.842	5.75
11	MP2B	Z	3.373	5.75
12	MP2B	Mx	-.006	5.75
13	MP2C	X	4.74	1.75
14	MP2C	Z	2.737	1.75
15	MP2C	Mx	.005	1.75
16	MP2C	X	4.74	5.75
17	MP2C	Z	2.737	5.75
18	MP2C	Mx	.005	5.75
19	MP2A	X	4.74	1.75

Member Point Loads (BLC 31 : Antenna Wm (120 Deg)) (Continued)

	Member Label	Direction	Magnitude[lb,k-ft]	Location[ft,%]
20	MP2A	Z	2.737	1.75
21	MP2A	Mx	-.005	1.75
22	MP2A	X	4.74	5.75
23	MP2A	Z	2.737	5.75
24	MP2A	Mx	-.005	5.75
25	MP2B	X	5.842	1.75
26	MP2B	Z	3.373	1.75
27	MP2B	Mx	.006	1.75
28	MP2B	X	5.842	5.75
29	MP2B	Z	3.373	5.75
30	MP2B	Mx	.006	5.75
31	MP2C	X	4.74	1.75
32	MP2C	Z	2.737	1.75
33	MP2C	Mx	9e-5	1.75
34	MP2C	X	4.74	5.75
35	MP2C	Z	2.737	5.75
36	MP2C	Mx	9e-5	5.75
37	MP1A	X	4.777	2.5
38	MP1A	Z	2.758	2.5
39	MP1A	Mx	.002	2.5
40	LIGHT	X	1.654	.13
41	LIGHT	Z	.955	.13
42	LIGHT	Mx	0	.13
43	MP4A	X	1.49	1.33
44	MP4A	Z	.861	1.33
45	MP4A	Mx	-.000745	1.33
46	MP4A	X	1.49	3.33
47	MP4A	Z	.861	3.33
48	MP4A	Mx	-.000745	3.33
49	MP4B	X	2.903	1.33
50	MP4B	Z	1.676	1.33
51	MP4B	Mx	0	1.33
52	MP4B	X	2.903	3.33
53	MP4B	Z	1.676	3.33
54	MP4B	Mx	0	3.33
55	MP4C	X	1.49	1.33
56	MP4C	Z	.861	1.33
57	MP4C	Mx	.000745	1.33
58	MP4C	X	1.49	3.33
59	MP4C	Z	.861	3.33
60	MP4C	Mx	.000745	3.33
61	MP2A	X	2.616	.5
62	MP2A	Z	1.51	.5
63	MP2A	Mx	.001	.5
64	MP2B	X	3.436	.5
65	MP2B	Z	1.984	.5
66	MP2B	Mx	0	.5
67	MP2C	X	2.616	.5
68	MP2C	Z	1.51	.5
69	MP2C	Mx	-.001	.5
70	MP3A	X	2.145	.5
71	MP3A	Z	1.238	.5
72	MP3A	Mx	.001	.5
73	MP3B	X	2.848	.5
74	MP3B	Z	1.644	.5
75	MP3B	Mx	0	.5
76	MP3C	X	2.145	.5
77	MP3C	Z	1.238	.5
78	MP3C	Mx	-.001	.5

Member Point Loads (BLC 32 : Antenna Wm (150 Deg))

	Member Label	Direction	Magnitude[lb,k-ft]	Location[ft,%]
1	MP2A	X	3.161	1.75
2	MP2A	Z	5.475	1.75
3	MP2A	Mx	.003	1.75
4	MP2A	X	3.161	5.75
5	MP2A	Z	5.475	5.75
6	MP2A	Mx	.003	5.75
7	MP2B	X	3.161	1.75
8	MP2B	Z	5.475	1.75
9	MP2B	Mx	-.006	1.75
10	MP2B	X	3.161	5.75
11	MP2B	Z	5.475	5.75
12	MP2B	Mx	-.006	5.75
13	MP2C	X	2.525	1.75
14	MP2C	Z	4.373	1.75
15	MP2C	Mx	.003	1.75
16	MP2C	X	2.525	5.75
17	MP2C	Z	4.373	5.75
18	MP2C	Mx	.003	5.75
19	MP2A	X	3.161	1.75
20	MP2A	Z	5.475	1.75
21	MP2A	Mx	-.006	1.75
22	MP2A	X	3.161	5.75
23	MP2A	Z	5.475	5.75
24	MP2A	Mx	-.006	5.75
25	MP2B	X	3.161	1.75
26	MP2B	Z	5.475	1.75
27	MP2B	Mx	.003	1.75
28	MP2B	X	3.161	5.75
29	MP2B	Z	5.475	5.75
30	MP2B	Mx	.003	5.75
31	MP2C	X	2.525	1.75
32	MP2C	Z	4.373	1.75
33	MP2C	Mx	.003	1.75
34	MP2C	X	2.525	5.75
35	MP2C	Z	4.373	5.75
36	MP2C	Mx	.003	5.75
37	MP1A	X	3.161	2.5
38	MP1A	Z	5.475	2.5
39	MP1A	Mx	.002	2.5
40	LIGHT	X	1.061	.13
41	LIGHT	Z	1.837	.13
42	LIGHT	Mx	0	.13
43	MP4A	X	1.404	1.33
44	MP4A	Z	2.432	1.33
45	MP4A	Mx	-.000702	1.33
46	MP4A	X	1.404	3.33
47	MP4A	Z	2.432	3.33
48	MP4A	Mx	-.000702	3.33
49	MP4B	X	1.404	1.33
50	MP4B	Z	2.432	1.33
51	MP4B	Mx	-.000702	1.33
52	MP4B	X	1.404	3.33
53	MP4B	Z	2.432	3.33
54	MP4B	Mx	-.000702	3.33
55	MP4C	X	.589	1.33
56	MP4C	Z	1.02	1.33
57	MP4C	Mx	.000589	1.33
58	MP4C	X	.589	3.33
59	MP4C	Z	1.02	3.33

Member Point Loads (BLC 32 : Antenna Wm (150 Deg)) (Continued)

	Member Label	Direction	Magnitude[lb,k-ft]	Location[ft,%]
60	MP4C	Mx	.000589	3.33
61	MP2A	X	1.826	.5
62	MP2A	Z	3.162	.5
63	MP2A	Mx	.000913	.5
64	MP2B	X	1.826	.5
65	MP2B	Z	3.162	.5
66	MP2B	Mx	.000913	.5
67	MP2C	X	1.352	.5
68	MP2C	Z	2.342	.5
69	MP2C	Mx	-.001	.5
70	MP3A	X	1.509	.5
71	MP3A	Z	2.613	.5
72	MP3A	Mx	.000754	.5
73	MP3B	X	1.509	.5
74	MP3B	Z	2.613	.5
75	MP3B	Mx	.000754	.5
76	MP3C	X	1.103	.5
77	MP3C	Z	1.911	.5
78	MP3C	Mx	-.001	.5

Member Point Loads (BLC 33 : Antenna Wm (180 Deg))

	Member Label	Direction	Magnitude[lb,k-ft]	Location[ft,%]
1	MP2A	X	0	1.75
2	MP2A	Z	6.746	1.75
3	MP2A	Mx	.006	1.75
4	MP2A	X	0	5.75
5	MP2A	Z	6.746	5.75
6	MP2A	Mx	.006	5.75
7	MP2B	X	0	1.75
8	MP2B	Z	5.473	1.75
9	MP2B	Mx	-.005	1.75
10	MP2B	X	0	5.75
11	MP2B	Z	5.473	5.75
12	MP2B	Mx	-.005	5.75
13	MP2C	X	0	1.75
14	MP2C	Z	5.473	1.75
15	MP2C	Mx	8.9e-5	1.75
16	MP2C	X	0	5.75
17	MP2C	Z	5.473	5.75
18	MP2C	Mx	8.9e-5	5.75
19	MP2A	X	0	1.75
20	MP2A	Z	6.746	1.75
21	MP2A	Mx	-.006	1.75
22	MP2A	X	0	5.75
23	MP2A	Z	6.746	5.75
24	MP2A	Mx	-.006	5.75
25	MP2B	X	0	1.75
26	MP2B	Z	5.473	1.75
27	MP2B	Mx	-8.9e-5	1.75
28	MP2B	X	0	5.75
29	MP2B	Z	5.473	5.75
30	MP2B	Mx	-8.9e-5	5.75
31	MP2C	X	0	1.75
32	MP2C	Z	5.473	1.75
33	MP2C	Mx	.005	1.75
34	MP2C	X	0	5.75
35	MP2C	Z	5.473	5.75
36	MP2C	Mx	.005	5.75

Member Point Loads (BLC 33 : Antenna Wm (180 Deg)) (Continued)

	Member Label	Direction	Magnitude[lb,k-ft]	Location[ft,%]
37	MP1A	X	0	2.5
38	MP1A	Z	6.725	2.5
39	MP1A	Mx	0	2.5
40	LIGHT	X	0	.13
41	LIGHT	Z	1.909	.13
42	LIGHT	Mx	0	.13
43	MP4A	X	0	1.33
44	MP4A	Z	3.352	1.33
45	MP4A	Mx	0	1.33
46	MP4A	X	0	3.33
47	MP4A	Z	3.352	3.33
48	MP4A	Mx	0	3.33
49	MP4B	X	0	1.33
50	MP4B	Z	1.721	1.33
51	MP4B	Mx	-.000745	1.33
52	MP4B	X	0	3.33
53	MP4B	Z	1.721	3.33
54	MP4B	Mx	-.000745	3.33
55	MP4C	X	0	1.33
56	MP4C	Z	1.721	1.33
57	MP4C	Mx	.000745	1.33
58	MP4C	X	0	3.33
59	MP4C	Z	1.721	3.33
60	MP4C	Mx	.000745	3.33
61	MP2A	X	0	.5
62	MP2A	Z	3.967	.5
63	MP2A	Mx	0	.5
64	MP2B	X	0	.5
65	MP2B	Z	3.02	.5
66	MP2B	Mx	.001	.5
67	MP2C	X	0	.5
68	MP2C	Z	3.02	.5
69	MP2C	Mx	-.001	.5
70	MP3A	X	0	.5
71	MP3A	Z	3.288	.5
72	MP3A	Mx	0	.5
73	MP3B	X	0	.5
74	MP3B	Z	2.477	.5
75	MP3B	Mx	.001	.5
76	MP3C	X	0	.5
77	MP3C	Z	2.477	.5
78	MP3C	Mx	-.001	.5

Member Point Loads (BLC 34 : Antenna Wm (210 Deg))

	Member Label	Direction	Magnitude[lb,k-ft]	Location[ft,%]
1	MP2A	X	-3.161	1.75
2	MP2A	Z	5.475	1.75
3	MP2A	Mx	.006	1.75
4	MP2A	X	-3.161	5.75
5	MP2A	Z	5.475	5.75
6	MP2A	Mx	.006	5.75
7	MP2B	X	-2.525	1.75
8	MP2B	Z	4.373	1.75
9	MP2B	Mx	-.003	1.75
10	MP2B	X	-2.525	5.75
11	MP2B	Z	4.373	5.75
12	MP2B	Mx	-.003	5.75
13	MP2C	X	-3.161	1.75

Member Point Loads (BLC 34 : Antenna Wm (210 Deg)) (Continued)

	Member Label	Direction	Magnitude[lb,k-ft]	Location[ft,%]
14	MP2C	Z	5.475	1.75
15	MP2C	Mx	-.003	1.75
16	MP2C	X	-3.161	5.75
17	MP2C	Z	5.475	5.75
18	MP2C	Mx	-.003	5.75
19	MP2A	X	-3.161	1.75
20	MP2A	Z	5.475	1.75
21	MP2A	Mx	-.003	1.75
22	MP2A	X	-3.161	5.75
23	MP2A	Z	5.475	5.75
24	MP2A	Mx	-.003	5.75
25	MP2B	X	-2.525	1.75
26	MP2B	Z	4.373	1.75
27	MP2B	Mx	-.003	1.75
28	MP2B	X	-2.525	5.75
29	MP2B	Z	4.373	5.75
30	MP2B	Mx	-.003	5.75
31	MP2C	X	-3.161	1.75
32	MP2C	Z	5.475	1.75
33	MP2C	Mx	.006	1.75
34	MP2C	X	-3.161	5.75
35	MP2C	Z	5.475	5.75
36	MP2C	Mx	.006	5.75
37	MP1A	X	-3.161	2.5
38	MP1A	Z	5.475	2.5
39	MP1A	Mx	-.002	2.5
40	LIGHT	X	-.743	.13
41	LIGHT	Z	1.286	.13
42	LIGHT	Mx	0	.13
43	MP4A	X	-1.404	1.33
44	MP4A	Z	2.432	1.33
45	MP4A	Mx	.000702	1.33
46	MP4A	X	-1.404	3.33
47	MP4A	Z	2.432	3.33
48	MP4A	Mx	.000702	3.33
49	MP4B	X	-.589	1.33
50	MP4B	Z	1.02	1.33
51	MP4B	Mx	-.000589	1.33
52	MP4B	X	-.589	3.33
53	MP4B	Z	1.02	3.33
54	MP4B	Mx	-.000589	3.33
55	MP4C	X	-1.404	1.33
56	MP4C	Z	2.432	1.33
57	MP4C	Mx	.000702	1.33
58	MP4C	X	-1.404	3.33
59	MP4C	Z	2.432	3.33
60	MP4C	Mx	.000702	3.33
61	MP2A	X	-1.826	.5
62	MP2A	Z	3.162	.5
63	MP2A	Mx	-.000913	.5
64	MP2B	X	-1.352	.5
65	MP2B	Z	2.342	.5
66	MP2B	Mx	.001	.5
67	MP2C	X	-1.826	.5
68	MP2C	Z	3.162	.5
69	MP2C	Mx	-.000913	.5
70	MP3A	X	-1.509	.5
71	MP3A	Z	2.613	.5
72	MP3A	Mx	-.000754	.5

Member Point Loads (BLC 34 : Antenna Wm (210 Deg)) (Continued)

	Member Label	Direction	Magnitude[lb,k-ft]	Location[ft,%]
73	MP3B	X	-1.103	.5
74	MP3B	Z	1.911	.5
75	MP3B	Mx	.001	.5
76	MP3C	X	-1.509	.5
77	MP3C	Z	2.613	.5
78	MP3C	Mx	-.000754	.5

Member Point Loads (BLC 35 : Antenna Wm (240 Deg))

	Member Label	Direction	Magnitude[lb,k-ft]	Location[ft,%]
1	MP2A	X	-4.74	1.75
2	MP2A	Z	2.737	1.75
3	MP2A	Mx	.005	1.75
4	MP2A	X	-4.74	5.75
5	MP2A	Z	2.737	5.75
6	MP2A	Mx	.005	5.75
7	MP2B	X	-4.74	1.75
8	MP2B	Z	2.737	1.75
9	MP2B	Mx	-9e-5	1.75
10	MP2B	X	-4.74	5.75
11	MP2B	Z	2.737	5.75
12	MP2B	Mx	-9e-5	5.75
13	MP2C	X	-5.842	1.75
14	MP2C	Z	3.373	1.75
15	MP2C	Mx	-.006	1.75
16	MP2C	X	-5.842	5.75
17	MP2C	Z	3.373	5.75
18	MP2C	Mx	-.006	5.75
19	MP2A	X	-4.74	1.75
20	MP2A	Z	2.737	1.75
21	MP2A	Mx	8.9e-5	1.75
22	MP2A	X	-4.74	5.75
23	MP2A	Z	2.737	5.75
24	MP2A	Mx	8.9e-5	5.75
25	MP2B	X	-4.74	1.75
26	MP2B	Z	2.737	1.75
27	MP2B	Mx	-.005	1.75
28	MP2B	X	-4.74	5.75
29	MP2B	Z	2.737	5.75
30	MP2B	Mx	-.005	5.75
31	MP2C	X	-5.842	1.75
32	MP2C	Z	3.373	1.75
33	MP2C	Mx	.006	1.75
34	MP2C	X	-5.842	5.75
35	MP2C	Z	3.373	5.75
36	MP2C	Mx	.006	5.75
37	MP1A	X	-4.777	2.5
38	MP1A	Z	2.758	2.5
39	MP1A	Mx	-.002	2.5
40	LIGHT	X	-1.102	.13
41	LIGHT	Z	.636	.13
42	LIGHT	Mx	0	.13
43	MP4A	X	-1.49	1.33
44	MP4A	Z	.861	1.33
45	MP4A	Mx	.000745	1.33
46	MP4A	X	-1.49	3.33
47	MP4A	Z	.861	3.33
48	MP4A	Mx	.000745	3.33
49	MP4B	X	-1.49	1.33

Member Point Loads (BLC 35 : Antenna Wm (240 Deg)) (Continued)

	Member Label	Direction	Magnitude[lb,k-ft]	Location[ft,%]
50	MP4B	Z	.861	1.33
51	MP4B	Mx	-.000745	1.33
52	MP4B	X	-1.49	3.33
53	MP4B	Z	.861	3.33
54	MP4B	Mx	-.000745	3.33
55	MP4C	X	-2.903	1.33
56	MP4C	Z	1.676	1.33
57	MP4C	Mx	0	1.33
58	MP4C	X	-2.903	3.33
59	MP4C	Z	1.676	3.33
60	MP4C	Mx	0	3.33
61	MP2A	X	-2.616	.5
62	MP2A	Z	1.51	.5
63	MP2A	Mx	-.001	.5
64	MP2B	X	-2.616	.5
65	MP2B	Z	1.51	.5
66	MP2B	Mx	.001	.5
67	MP2C	X	-3.436	.5
68	MP2C	Z	1.984	.5
69	MP2C	Mx	0	.5
70	MP3A	X	-2.145	.5
71	MP3A	Z	1.238	.5
72	MP3A	Mx	-.001	.5
73	MP3B	X	-2.145	.5
74	MP3B	Z	1.238	.5
75	MP3B	Mx	.001	.5
76	MP3C	X	-2.848	.5
77	MP3C	Z	1.644	.5
78	MP3C	Mx	0	.5

Member Point Loads (BLC 36 : Antenna Wm (270 Deg))

	Member Label	Direction	Magnitude[lb,k-ft]	Location[ft,%]
1	MP2A	X	-5.049	1.75
2	MP2A	Z	0	1.75
3	MP2A	Mx	.003	1.75
4	MP2A	X	-5.049	5.75
5	MP2A	Z	0	5.75
6	MP2A	Mx	.003	5.75
7	MP2B	X	-6.322	1.75
8	MP2B	Z	0	1.75
9	MP2B	Mx	.003	1.75
10	MP2B	X	-6.322	5.75
11	MP2B	Z	0	5.75
12	MP2B	Mx	.003	5.75
13	MP2C	X	-6.322	1.75
14	MP2C	Z	0	1.75
15	MP2C	Mx	-.006	1.75
16	MP2C	X	-6.322	5.75
17	MP2C	Z	0	5.75
18	MP2C	Mx	-.006	5.75
19	MP2A	X	-5.049	1.75
20	MP2A	Z	0	1.75
21	MP2A	Mx	.003	1.75
22	MP2A	X	-5.049	5.75
23	MP2A	Z	0	5.75
24	MP2A	Mx	.003	5.75
25	MP2B	X	-6.322	1.75
26	MP2B	Z	0	1.75

Member Point Loads (BLC 36 : Antenna Wm (270 Deg)) (Continued)

	Member Label	Direction	Magnitude[lb,k-ft]	Location[ft,%]
27	MP2B	Mx	-.006	1.75
28	MP2B	X	-6.322	5.75
29	MP2B	Z	0	5.75
30	MP2B	Mx	-.006	5.75
31	MP2C	X	-6.322	1.75
32	MP2C	Z	0	1.75
33	MP2C	Mx	.003	1.75
34	MP2C	X	-6.322	5.75
35	MP2C	Z	0	5.75
36	MP2C	Mx	.003	5.75
37	MP1A	X	-5.113	2.5
38	MP1A	Z	0	2.5
39	MP1A	Mx	-.003	2.5
40	LIGHT	X	-1.485	.13
41	LIGHT	Z	0	.13
42	LIGHT	Mx	0	.13
43	MP4A	X	-1.177	1.33
44	MP4A	Z	0	1.33
45	MP4A	Mx	.000588	1.33
46	MP4A	X	-1.177	3.33
47	MP4A	Z	0	3.33
48	MP4A	Mx	.000588	3.33
49	MP4B	X	-2.808	1.33
50	MP4B	Z	0	1.33
51	MP4B	Mx	-.000702	1.33
52	MP4B	X	-2.808	3.33
53	MP4B	Z	0	3.33
54	MP4B	Mx	-.000702	3.33
55	MP4C	X	-2.808	1.33
56	MP4C	Z	0	1.33
57	MP4C	Mx	-.000702	1.33
58	MP4C	X	-2.808	3.33
59	MP4C	Z	0	3.33
60	MP4C	Mx	-.000702	3.33
61	MP2A	X	-2.705	.5
62	MP2A	Z	0	.5
63	MP2A	Mx	-.001	.5
64	MP2B	X	-3.652	.5
65	MP2B	Z	0	.5
66	MP2B	Mx	.000913	.5
67	MP2C	X	-3.652	.5
68	MP2C	Z	0	.5
69	MP2C	Mx	.000913	.5
70	MP3A	X	-2.206	.5
71	MP3A	Z	0	.5
72	MP3A	Mx	-.001	.5
73	MP3B	X	-3.018	.5
74	MP3B	Z	0	.5
75	MP3B	Mx	.000754	.5
76	MP3C	X	-3.018	.5
77	MP3C	Z	0	.5
78	MP3C	Mx	.000754	.5

Member Point Loads (BLC 37 : Antenna Wm (300 Deg))

	Member Label	Direction	Magnitude[lb,k-ft]	Location[ft,%]
1	MP2A	X	-4.74	1.75
2	MP2A	Z	-2.737	1.75
3	MP2A	Mx	8.9e-5	1.75

Member Point Loads (BLC 37 : Antenna Wm (300 Deg)) (Continued)

	Member Label	Direction	Magnitude[lb,k-ft]	Location[ft,%]
4	MP2A	X	-4.74	5.75
5	MP2A	Z	-2.737	5.75
6	MP2A	Mx	8.9e-5	5.75
7	MP2B	X	-5.842	1.75
8	MP2B	Z	-3.373	1.75
9	MP2B	Mx	.006	1.75
10	MP2B	X	-5.842	5.75
11	MP2B	Z	-3.373	5.75
12	MP2B	Mx	.006	5.75
13	MP2C	X	-4.74	1.75
14	MP2C	Z	-2.737	1.75
15	MP2C	Mx	-.005	1.75
16	MP2C	X	-4.74	5.75
17	MP2C	Z	-2.737	5.75
18	MP2C	Mx	-.005	5.75
19	MP2A	X	-4.74	1.75
20	MP2A	Z	-2.737	1.75
21	MP2A	Mx	.005	1.75
22	MP2A	X	-4.74	5.75
23	MP2A	Z	-2.737	5.75
24	MP2A	Mx	.005	5.75
25	MP2B	X	-5.842	1.75
26	MP2B	Z	-3.373	1.75
27	MP2B	Mx	-.006	1.75
28	MP2B	X	-5.842	5.75
29	MP2B	Z	-3.373	5.75
30	MP2B	Mx	-.006	5.75
31	MP2C	X	-4.74	1.75
32	MP2C	Z	-2.737	1.75
33	MP2C	Mx	-9e-5	1.75
34	MP2C	X	-4.74	5.75
35	MP2C	Z	-2.737	5.75
36	MP2C	Mx	-9e-5	5.75
37	MP1A	X	-4.777	2.5
38	MP1A	Z	-2.758	2.5
39	MP1A	Mx	-.002	2.5
40	LIGHT	X	-1.654	.13
41	LIGHT	Z	-.955	.13
42	LIGHT	Mx	0	.13
43	MP4A	X	-1.49	1.33
44	MP4A	Z	-.861	1.33
45	MP4A	Mx	.000745	1.33
46	MP4A	X	-1.49	3.33
47	MP4A	Z	-.861	3.33
48	MP4A	Mx	.000745	3.33
49	MP4B	X	-2.903	1.33
50	MP4B	Z	-1.676	1.33
51	MP4B	Mx	0	1.33
52	MP4B	X	-2.903	3.33
53	MP4B	Z	-1.676	3.33
54	MP4B	Mx	0	3.33
55	MP4C	X	-1.49	1.33
56	MP4C	Z	-.861	1.33
57	MP4C	Mx	-.000745	1.33
58	MP4C	X	-1.49	3.33
59	MP4C	Z	-.861	3.33
60	MP4C	Mx	-.000745	3.33
61	MP2A	X	-2.616	.5
62	MP2A	Z	-1.51	.5

Member Point Loads (BLC 37 : Antenna Wm (300 Deg)) (Continued)

	Member Label	Direction	Magnitude[lb,k-ft]	Location[ft,%]
63	MP2A	Mx	-.001	.5
64	MP2B	X	-3.436	.5
65	MP2B	Z	-1.984	.5
66	MP2B	Mx	0	.5
67	MP2C	X	-2.616	.5
68	MP2C	Z	-1.51	.5
69	MP2C	Mx	.001	.5
70	MP3A	X	-2.145	.5
71	MP3A	Z	-1.238	.5
72	MP3A	Mx	-.001	.5
73	MP3B	X	-2.848	.5
74	MP3B	Z	-1.644	.5
75	MP3B	Mx	0	.5
76	MP3C	X	-2.145	.5
77	MP3C	Z	-1.238	.5
78	MP3C	Mx	.001	.5

Member Point Loads (BLC 38 : Antenna Wm (330 Deg))

	Member Label	Direction	Magnitude[lb,k-ft]	Location[ft,%]
1	MP2A	X	-3.161	1.75
2	MP2A	Z	-5.475	1.75
3	MP2A	Mx	-.003	1.75
4	MP2A	X	-3.161	5.75
5	MP2A	Z	-5.475	5.75
6	MP2A	Mx	-.003	5.75
7	MP2B	X	-3.161	1.75
8	MP2B	Z	-5.475	1.75
9	MP2B	Mx	.006	1.75
10	MP2B	X	-3.161	5.75
11	MP2B	Z	-5.475	5.75
12	MP2B	Mx	.006	5.75
13	MP2C	X	-2.525	1.75
14	MP2C	Z	-4.373	1.75
15	MP2C	Mx	-.003	1.75
16	MP2C	X	-2.525	5.75
17	MP2C	Z	-4.373	5.75
18	MP2C	Mx	-.003	5.75
19	MP2A	X	-3.161	1.75
20	MP2A	Z	-5.475	1.75
21	MP2A	Mx	.006	1.75
22	MP2A	X	-3.161	5.75
23	MP2A	Z	-5.475	5.75
24	MP2A	Mx	.006	5.75
25	MP2B	X	-3.161	1.75
26	MP2B	Z	-5.475	1.75
27	MP2B	Mx	-.003	1.75
28	MP2B	X	-3.161	5.75
29	MP2B	Z	-5.475	5.75
30	MP2B	Mx	-.003	5.75
31	MP2C	X	-2.525	1.75
32	MP2C	Z	-4.373	1.75
33	MP2C	Mx	-.003	1.75
34	MP2C	X	-2.525	5.75
35	MP2C	Z	-4.373	5.75
36	MP2C	Mx	-.003	5.75
37	MP1A	X	-3.161	2.5
38	MP1A	Z	-5.475	2.5
39	MP1A	Mx	-.002	2.5

Member Point Loads (BLC 38 : Antenna Wm (330 Deg)) (Continued)

	Member Label	Direction	Magnitude[lb,k-ft]	Location[ft,%]
40	LIGHT	X	-1.061	.13
41	LIGHT	Z	-1.837	.13
42	LIGHT	Mx	0	.13
43	MP4A	X	-1.404	1.33
44	MP4A	Z	-2.432	1.33
45	MP4A	Mx	.000702	1.33
46	MP4A	X	-1.404	3.33
47	MP4A	Z	-2.432	3.33
48	MP4A	Mx	.000702	3.33
49	MP4B	X	-1.404	1.33
50	MP4B	Z	-2.432	1.33
51	MP4B	Mx	.000702	1.33
52	MP4B	X	-1.404	3.33
53	MP4B	Z	-2.432	3.33
54	MP4B	Mx	.000702	3.33
55	MP4C	X	-.589	1.33
56	MP4C	Z	-1.02	1.33
57	MP4C	Mx	-.000589	1.33
58	MP4C	X	-.589	3.33
59	MP4C	Z	-1.02	3.33
60	MP4C	Mx	-.000589	3.33
61	MP2A	X	-1.826	.5
62	MP2A	Z	-3.162	.5
63	MP2A	Mx	-.000913	.5
64	MP2B	X	-1.826	.5
65	MP2B	Z	-3.162	.5
66	MP2B	Mx	-.000913	.5
67	MP2C	X	-1.352	.5
68	MP2C	Z	-2.342	.5
69	MP2C	Mx	.001	.5
70	MP3A	X	-1.509	.5
71	MP3A	Z	-2.613	.5
72	MP3A	Mx	-.000754	.5
73	MP3B	X	-1.509	.5
74	MP3B	Z	-2.613	.5
75	MP3B	Mx	-.000754	.5
76	MP3C	X	-1.103	.5
77	MP3C	Z	-1.911	.5
78	MP3C	Mx	.001	.5

Member Point Loads (BLC 77 : Lm1)

	Member Label	Direction	Magnitude[lb,k-ft]	Location[ft,%]
1	LM2	Y	-500	0

Member Point Loads (BLC 78 : Lm2)

	Member Label	Direction	Magnitude[lb,k-ft]	Location[ft,%]
1	L	Y	-500	0

Member Point Loads (BLC 79 : Lv1)

	Member Label	Direction	Magnitude[lb,k-ft]	Location[ft,%]
1	LV	Y	-250	%100

Member Point Loads (BLC 80 : Lv2)

	Member Label	Direction	Magnitude[lb,k-ft]	Location[ft,%]
1	LV	Y	-250	%50

Member Point Loads (BLC 81 : Antenna Ev)

	Member Label	Direction	Magnitude[lb,k-ft]	Location[ft,%]
1	MP2A	Y	0	1.75
2	MP2A	My	0	1.75
3	MP2A	Mz	0	1.75
4	MP2A	Y	0	5.75
5	MP2A	My	0	5.75
6	MP2A	Mz	0	5.75
7	MP2B	Y	0	1.75
8	MP2B	My	0	1.75
9	MP2B	Mz	0	1.75
10	MP2B	Y	0	5.75
11	MP2B	My	0	5.75
12	MP2B	Mz	0	5.75
13	MP2C	Y	0	1.75
14	MP2C	My	0	1.75
15	MP2C	Mz	0	1.75
16	MP2C	Y	0	5.75
17	MP2C	My	0	5.75
18	MP2C	Mz	0	5.75
19	MP2A	Y	0	1.75
20	MP2A	My	0	1.75
21	MP2A	Mz	0	1.75
22	MP2A	Y	0	5.75
23	MP2A	My	0	5.75
24	MP2A	Mz	0	5.75
25	MP2B	Y	0	1.75
26	MP2B	My	0	1.75
27	MP2B	Mz	0	1.75
28	MP2B	Y	0	5.75
29	MP2B	My	0	5.75
30	MP2B	Mz	0	5.75
31	MP2C	Y	0	1.75
32	MP2C	My	0	1.75
33	MP2C	Mz	0	1.75
34	MP2C	Y	0	5.75
35	MP2C	My	0	5.75
36	MP2C	Mz	0	5.75
37	MP1A	Y	0	2.5
38	MP1A	My	0	2.5
39	MP1A	Mz	0	2.5
40	LIGHT	Y	0	.13
41	LIGHT	My	0	.13
42	LIGHT	Mz	0	.13
43	MP4A	Y	0	1.33
44	MP4A	My	0	1.33
45	MP4A	Mz	0	1.33
46	MP4A	Y	0	3.33
47	MP4A	My	0	3.33
48	MP4A	Mz	0	3.33
49	MP4B	Y	0	1.33
50	MP4B	My	0	1.33
51	MP4B	Mz	0	1.33
52	MP4B	Y	0	3.33
53	MP4B	My	0	3.33
54	MP4B	Mz	0	3.33
55	MP4C	Y	0	1.33
56	MP4C	My	0	1.33
57	MP4C	Mz	0	1.33
58	MP4C	Y	0	3.33
59	MP4C	My	0	3.33

Member Point Loads (BLC 81 : Antenna Ev) (Continued)

	Member Label	Direction	Magnitude[lb,k-ft]	Location[ft,%]
60	MP4C	Mz	0	3.33
61	MP2A	Y	0	.5
62	MP2A	My	0	.5
63	MP2A	Mz	0	.5
64	MP2B	Y	0	.5
65	MP2B	My	0	.5
66	MP2B	Mz	0	.5
67	MP2C	Y	0	.5
68	MP2C	My	0	.5
69	MP2C	Mz	0	.5
70	MP3A	Y	0	.5
71	MP3A	My	0	.5
72	MP3A	Mz	0	.5
73	MP3B	Y	0	.5
74	MP3B	My	0	.5
75	MP3B	Mz	0	.5
76	MP3C	Y	0	.5
77	MP3C	My	0	.5
78	MP3C	Mz	0	.5

Member Point Loads (BLC 82 : Antenna Eh (0 Deg))

	Member Label	Direction	Magnitude[lb,k-ft]	Location[ft,%]
1	MP2A	Z	-.765	1.75
2	MP2A	Mx	-.000638	1.75
3	MP2A	Z	-.765	5.75
4	MP2A	Mx	-.000638	5.75
5	MP2B	Z	-.765	1.75
6	MP2B	Mx	.00065	1.75
7	MP2B	Z	-.765	5.75
8	MP2B	Mx	.00065	5.75
9	MP2C	Z	-.765	1.75
10	MP2C	Mx	-1.3e-5	1.75
11	MP2C	Z	-.765	5.75
12	MP2C	Mx	-1.3e-5	5.75
13	MP2A	Z	-.765	1.75
14	MP2A	Mx	.000638	1.75
15	MP2A	Z	-.765	5.75
16	MP2A	Mx	.000638	5.75
17	MP2B	Z	-.765	1.75
18	MP2B	Mx	1.3e-5	1.75
19	MP2B	Z	-.765	5.75
20	MP2B	Mx	1.3e-5	5.75
21	MP2C	Z	-.765	1.75
22	MP2C	Mx	-.00065	1.75
23	MP2C	Z	-.765	5.75
24	MP2C	Mx	-.00065	5.75
25	MP1A	Z	-.96	2.5
26	MP1A	Mx	0	2.5
27	LIGHT	Z	-.3	.13
28	LIGHT	Mx	0	.13
29	MP4A	Z	-.86	1.33
30	MP4A	Mx	0	1.33
31	MP4A	Z	-.86	3.33
32	MP4A	Mx	0	3.33
33	MP4B	Z	-.86	1.33
34	MP4B	Mx	.000372	1.33
35	MP4B	Z	-.86	3.33
36	MP4B	Mx	.000372	3.33

Member Point Loads (BLC 82 : Antenna Eh (0 Deg)) (Continued)

	Member Label	Direction	Magnitude[lb,k-ft]	Location[ft,%]
37	MP4C	Z	-.86	1.33
38	MP4C	Mx	-.000372	1.33
39	MP4C	Z	-.86	3.33
40	MP4C	Mx	-.000372	3.33
41	MP2A	Z	-2.373	.5
42	MP2A	Mx	0	.5
43	MP2B	Z	-2.373	.5
44	MP2B	Mx	-.001	.5
45	MP2C	Z	-2.373	.5
46	MP2C	Mx	.001	.5
47	MP3A	Z	-2.241	.5
48	MP3A	Mx	0	.5
49	MP3B	Z	-2.241	.5
50	MP3B	Mx	-.00097	.5
51	MP3C	Z	-2.241	.5
52	MP3C	Mx	.00097	.5

Member Point Loads (BLC 83 : Antenna Eh (90 Deg))

	Member Label	Direction	Magnitude[lb,k-ft]	Location[ft,%]
1	MP2A	X	.765	1.75
2	MP2A	Mx	-.000383	1.75
3	MP2A	X	.765	5.75
4	MP2A	Mx	-.000383	5.75
5	MP2B	X	.765	1.75
6	MP2B	Mx	-.000361	1.75
7	MP2B	X	.765	5.75
8	MP2B	Mx	-.000361	5.75
9	MP2C	X	.765	1.75
10	MP2C	Mx	.000743	1.75
11	MP2C	X	.765	5.75
12	MP2C	Mx	.000743	5.75
13	MP2A	X	.765	1.75
14	MP2A	Mx	-.000383	1.75
15	MP2A	X	.765	5.75
16	MP2A	Mx	-.000383	5.75
17	MP2B	X	.765	1.75
18	MP2B	Mx	.000743	1.75
19	MP2B	X	.765	5.75
20	MP2B	Mx	.000743	5.75
21	MP2C	X	.765	1.75
22	MP2C	Mx	-.000361	1.75
23	MP2C	X	.765	5.75
24	MP2C	Mx	-.000361	5.75
25	MP1A	X	.96	2.5
26	MP1A	Mx	.00048	2.5
27	LIGHT	X	.3	.13
28	LIGHT	Mx	0	.13
29	MP4A	X	.86	1.33
30	MP4A	Mx	-.00043	1.33
31	MP4A	X	.86	3.33
32	MP4A	Mx	-.00043	3.33
33	MP4B	X	.86	1.33
34	MP4B	Mx	.000215	1.33
35	MP4B	X	.86	3.33
36	MP4B	Mx	.000215	3.33
37	MP4C	X	.86	1.33
38	MP4C	Mx	.000215	1.33
39	MP4C	X	.86	3.33

Member Point Loads (BLC 83 : Antenna Eh (90 Deg)) (Continued)

	Member Label	Direction	Magnitude[lb,k-ft]	Location[ft,%]
40	MP4C	Mx	.000215	3.33
41	MP2A	X	2.373	.5
42	MP2A	Mx	.001	.5
43	MP2B	X	2.373	.5
44	MP2B	Mx	-.000593	.5
45	MP2C	X	2.373	.5
46	MP2C	Mx	-.000593	.5
47	MP3A	X	2.241	.5
48	MP3A	Mx	.001	.5
49	MP3B	X	2.241	.5
50	MP3B	Mx	-.00056	.5
51	MP3C	X	2.241	.5
52	MP3C	Mx	-.00056	.5

Member Area Loads (BLC 39 : Structure D)

	Joint A	Joint B	Joint C	Joint D	Direction	Distribution	Magnitude[ksf]
1	N180	N179	N161	N156	Y	Two Way	-.005
2	N155	N159	N194	N193	Y	Two Way	-.005
3	N162	N169	N168	N158	Y	Two Way	-.005
4	N144	N161	N162	N142B	Y	Two Way	-.005
5	N206	N205A	N159	N158	Y	Two Way	-.005
6	N156	N140	N142	N155	Y	Two Way	-.005

Member Area Loads (BLC 40 : Structure Di)

	Joint A	Joint B	Joint C	Joint D	Direction	Distribution	Magnitude[ksf]
1	N180	N179	N161	N156	Y	Two Way	-.01
2	N155	N159	N194	N193	Y	Two Way	-.01
3	N162	N169	N168	N158	Y	Two Way	-.01
4	N144	N161	N162	N142B	Y	Two Way	-.01
5	N206	N205A	N159	N158	Y	Two Way	-.01
6	N156	N140	N142	N155	Y	Two Way	-.01

Member Area Loads (BLC 84 : Structure Ev)

	Joint A	Joint B	Joint C	Joint D	Direction	Distribution	Magnitude[ksf]
1	N180	N179	N161	N156	Y	Two Way	0
2	N155	N159	N194	N193	Y	Two Way	0
3	N162	N169	N168	N158	Y	Two Way	0
4	N144	N161	N162	N142B	Y	Two Way	0
5	N206	N205A	N159	N158	Y	Two Way	0
6	N156	N140	N142	N155	Y	Two Way	0

Member Area Loads (BLC 85 : Structure Eh (0 Deg))

	Joint A	Joint B	Joint C	Joint D	Direction	Distribution	Magnitude[ksf]
1	N180	N179	N161	N156	Z	Two Way	-.000156
2	N155	N159	N194	N193	Z	Two Way	-.000156
3	N162	N169	N168	N158	Z	Two Way	-.000156
4	N144	N161	N162	N142B	Z	Two Way	-.000156
5	N206	N205A	N159	N158	Z	Two Way	-.000156
6	N156	N140	N142	N155	Z	Two Way	-.000156

Member Area Loads (BLC 86 : Structure Eh (90 Deg))

	Joint A	Joint B	Joint C	Joint D	Direction	Distribution	Magnitude[ksf]
1	N180	N179	N161	N156	X	Two Way	.000156
2	N155	N159	N194	N193	X	Two Way	.000156
3	N162	N169	N168	N158	X	Two Way	.000156

Member Area Loads (BLC 86 : Structure Eh (90 Deg)) (Continued)

	Joint A	Joint B	Joint C	Joint D	Direction	Distribution	Magnitude[ksf]
4	N144	N161	N162	N142B	X	Two Way	.000156
5	N206	N205A	N159	N158	X	Two Way	.000156
6	N156	N140	N142	N155	X	Two Way	.000156

Envelope Joint Reactions

	Joint		X [lb]	LC	Y [lb]	LC	Z [lb]	LC	MX [k-ft]	LC	MY [k-ft]	LC	MZ [k-ft]	LC
1	N153A	max	3304.095	10	2760.434	13	-1222.863	70	5.391	13	2.702	4	1.545	4
2		min	-3408.998	4	-28.771	7	-4048.576	24	-1.462	7	-2.646	10	-1.411	10
3	N171	max	352.492	12	2744.236	21	3628.716	12	.911	2	2.637	12	1.277	3
4		min	-3945.289	18	-25.199	3	-2065.173	6	-2.674	8	-2.683	6	-4.654	21
5	N185	max	4083.074	20	2898.017	17	3923.351	2	.916	12	2.768	8	4.942	17
6		min	-202.838	2	16.562	11	-2222.349	8	-3.186	18	-2.804	2	-1.164	11
7	Totals:	max	3946.727	10	7417.461	21	3979.874	1						
8		min	-3946.73	4	2387.81	65	-3979.884	7						

Joint Reactions (By Combination)

	LC	Joint Label	X [lb]	Y [lb]	Z [lb]	MX [k-ft]	MY [k-ft]	MZ [k-ft]
1	1	N153A	-30.149	2123.183	-1991.797	5.218	.031	.051
2	1	N171	40.673	486.138	2743.554	.864	1.882	-.759
3	1	N185	-10.689	574.416	3228.117	.892	-2.258	.817
4	1	Totals:	-.165	3183.737	3979.874			
5	1	COG (ft):	X: .063	Y: 1.866	Z: .03			
6	2	N153A	-1132.674	1965.081	-1866.109	4.775	.9	.563
7	2	N171	-647.666	100.274	1378.044	.911	.659	.639
8	2	N185	-202.838	1118.377	3923.351	.322	-2.804	2.394
9	2	Totals:	-1983.178	3183.732	3435.286			
10	2	COG (ft):	X: .063	Y: 1.866	Z: .03			
11	3	N153A	-2642.162	1568.805	-1719.33	3.573	2.101	1.217
12	3	N171	-1215.083	-25.199	492.565	.714	-.167	1.277
13	3	N185	436.547	1640.125	3202.049	-.851	-2.031	3.63
14	3	Totals:	-3420.699	3183.73	1975.285			
15	3	COG (ft):	X: .063	Y: 1.866	Z: .03			
16	4	N153A	-3408.998	1038.779	-1555.256	1.945	2.702	1.545
17	4	N171	-1847.39	130.824	-364.859	.079	-1.002	1.165
18	4	N185	1309.658	2014.132	1920.252	-2.052	-.788	4.373
19	4	Totals:	-3946.73	3183.735	.137			
20	4	COG (ft):	X: .063	Y: 1.866	Z: .03			
21	5	N153A	-2583.27	501.828	-1376.438	.279	2.022	1.203
22	5	N171	-2684.295	531.203	-1555.697	-1.052	-2.152	.469
23	5	N185	1838.21	2150.713	952.014	-2.745	.085	4.55
24	5	Totals:	-3429.355	3183.744	-1980.121			
25	5	COG (ft):	X: .063	Y: 1.866	Z: .03			
26	6	N153A	-1126.194	106.382	-1269.807	-.982	.852	.574
27	6	N171	-3164.237	1073.136	-2065.173	-2.122	-2.683	-.803
28	6	N185	2302.442	2004.234	-108.958	-3.004	.994	3.931
29	6	Totals:	-1987.989	3183.752	-3443.938			
30	6	COG (ft):	X: .063	Y: 1.866	Z: .03			
31	7	N153A	-69.644	-28.771	-1301.142	-1.462	.02	.081
32	7	N171	-2854.478	1602.642	-1165.211	-2.621	-1.92	-2.447
33	7	N185	2924.283	1609.887	-1513.531	-2.977	2.21	2.56
34	7	Totals:	.161	3183.758	-3979.884			
35	7	COG (ft):	X: .063	Y: 1.866	Z: .03			
36	8	N153A	1042.823	132.455	-1417.615	-1.028	-.857	-.436
37	8	N171	-2180.301	1976.908	204.668	-2.674	-.7	-3.851
38	8	N185	3120.653	1074.399	-2222.349	-2.414	2.768	.981
39	8	Totals:	1983.175	3183.763	-3435.297			

Joint Reactions (By Combination) (Continued)

	LC	Joint Label	X [lb]	Y [lb]	Z [lb]	MX [k-ft]	MY [k-ft]	MZ [k-ft]
40	8	COG (ft):	X: .063	Y: 1.866	Z: .03			
41	9	N153A	2550.365	540.736	-1549.534	.167	-2.055	-1.091
42	9	N171	-1624.699	2101.904	1080.859	-2.488	.116	-4.493
43	9	N185	2495.03	541.124	-1506.623	-1.246	2.003	-.261
44	9	Totals:	3420.696	3183.764	-1975.297			
45	9	COG (ft):	X: .063	Y: 1.866	Z: .03			
46	10	N153A	3304.095	1079.321	-1709.142	1.796	-2.646	-1.411
47	10	N171	-989.354	1949.68	1924.531	-1.854	.942	-4.371
48	10	N185	1631.986	154.759	-215.539	-.047	.757	-.998
49	10	Totals:	3946.727	3183.759	-.149			
50	10	COG (ft):	X: .063	Y: 1.866	Z: .03			
51	11	N153A	2466.731	1605.985	-1896.368	3.461	-1.958	-1.062
52	11	N171	-138.399	1561.202	3109.532	-.72	2.096	-3.669
53	11	N185	1101.02	16.562	766.946	.648	-.126	-1.164
54	11	Totals:	3429.352	3183.75	1980.11			
55	11	COG (ft):	X: .063	Y: 1.866	Z: .03			
56	12	N153A	1012.623	1989.705	-2016.991	4.73	-.79	-.435
57	12	N171	352.492	1027.111	3628.716	.357	2.637	-2.401
58	12	N185	622.87	166.926	1832.202	.916	-1.044	-.549
59	12	Totals:	1987.985	3183.742	3443.928			
60	12	COG (ft):	X: .063	Y: 1.866	Z: .03			
61	13	N153A	-211.21	2760.434	-4033.23	5.391	.137	.23
62	13	N171	-2928.777	2246.139	2414.114	-1.504	.486	-3.475
63	13	N185	3139.932	2410.879	2868.879	-1.944	-.788	3.765
64	13	Totals:	-.056	7417.452	1249.763			
65	13	COG (ft):	X: .093	Y: 1.677	Z: .054			
66	14	N153A	-585.775	2713.063	-3988.197	5.258	.434	.403
67	14	N171	-3136.16	2127.691	2009.674	-1.478	.121	-3.037
68	14	N185	3098.311	2576.696	3058.735	-2.135	-.929	4.255
69	14	Totals:	-623.623	7417.45	1080.212			
70	14	COG (ft):	X: .093	Y: 1.677	Z: .054			
71	15	N153A	-1032.834	2590.693	-3936.444	4.882	.79	.598
72	15	N171	-3330.257	2087.794	1713.716	-1.546	-.158	-2.827
73	15	N185	3285.982	2738.963	2844.679	-2.5	-.697	4.651
74	15	Totals:	-1077.11	7417.45	621.951			
75	15	COG (ft):	X: .093	Y: 1.677	Z: .054			
76	16	N153A	-1231.758	2426.351	-3882.309	4.366	.942	.684
77	16	N171	-3550.903	2135.16	1422.15	-1.756	-.446	-2.856
78	16	N185	3539.935	2855.94	2460.18	-2.869	-.326	4.892
79	16	Totals:	-1242.726	7417.452	.021			
80	16	COG (ft):	X: .093	Y: 1.677	Z: .054			
81	17	N153A	-978.993	2261.977	-3829.838	3.84	.731	.579
82	17	N171	-3809.608	2257.46	1073.928	-2.104	-.788	-3.082
83	17	N185	3710.265	2898.017	2133.258	-3.095	-.034	4.942
84	17	Totals:	-1078.336	7417.454	-622.653			
85	17	COG (ft):	X: .093	Y: 1.677	Z: .054			
86	18	N153A	-542.612	2141.556	-3802.918	3.443	.379	.39
87	18	N171	-3945.289	2423.191	946.347	-2.43	-.924	-3.49
88	18	N185	3863.628	2852.71	1775.088	-3.186	.273	4.744
89	18	Totals:	-624.273	7417.457	-1081.483			
90	18	COG (ft):	X: .093	Y: 1.677	Z: .054			
91	19	N153A	-189.483	2099.307	-3818.796	3.288	.1	.226
92	19	N171	-3851.463	2587.183	1212.807	-2.593	-.693	-4.005
93	19	N185	4040.992	2730.969	1356.179	-3.169	.633	4.32
94	19	Totals:	.047	7417.459	-1249.81			
95	19	COG (ft):	X: .093	Y: 1.677	Z: .054			
96	20	N153A	186.045	2147.089	-3862.843	3.421	-.197	.053
97	20	N171	-3645.504	2704.466	1617.616	-2.62	-.329	-4.444
98	20	N185	4083.074	2565.905	1164.967	-2.978	.775	3.829

Joint Reactions (By Combination) (Continued)

	LC	Joint Label	X [lb]	Y [lb]	Z [lb]	MX [k-ft]	MY [k-ft]	MZ [k-ft]
99	20	Totals:	623.615	7417.461	-1080.26			
100	20	COG (ft):	X: .093	Y: 1.677	Z: .054			
101	21	N153A	632.839	2270.693	-3913.136	3.797	-.553	-.142
102	21	N171	-3452.536	2744.236	1912.598	-2.553	-.051	-4.654
103	21	N185	3896.799	2402.531	1378.539	-2.615	.544	3.433
104	21	Totals:	1077.101	7417.461	-621.999			
105	21	COG (ft):	X: .093	Y: 1.677	Z: .054			
106	22	N153A	830.414	2435.792	-3966.892	4.312	-.704	-.228
107	22	N171	-3231.516	2697.347	2202.796	-2.343	.236	-4.625
108	22	N185	3643.819	2284.32	1764.027	-2.245	.173	3.193
109	22	Totals:	1242.717	7417.459	-.069			
110	22	COG (ft):	X: .093	Y: 1.677	Z: .054			
111	23	N153A	576.547	2599.158	-4020.273	4.838	-.492	-.122
112	23	N171	-2971.393	2576.272	2550.518	-1.994	.579	-4.398
113	23	N185	3473.173	2242.026	2092.36	-2.019	-.121	3.143
114	23	Totals:	1078.327	7417.456	622.605			
115	23	COG (ft):	X: .093	Y: 1.677	Z: .054			
116	24	N153A	140.532	2718.41	-4048.576	5.236	-.141	.067
117	24	N171	-2834.67	2411.232	2679.121	-1.668	.716	-3.99
118	24	N185	3318.402	2287.812	2450.89	-1.928	-.429	3.342
119	24	Totals:	624.264	7417.454	1081.435			
120	24	COG (ft):	X: .093	Y: 1.677	Z: .054			
121	25	N153A	480.484	910.188	-1614.698	1.477	-.343	-.166
122	25	N171	-2219.212	1775.186	1335.462	-1.911	.097	-3.051
123	25	N185	1738.748	1248.306	527.896	-1.261	.222	1.591
124	25	Totals:	.02	3933.68	248.66			
125	25	COG (ft):	X: -.556	Y: 1.51	Z: .767			
126	26	N153A	411.041	900.145	-1607.254	1.45	-.288	-.134
127	26	N171	-2261.578	1751.701	1249.865	-1.907	.021	-2.963
128	26	N185	1726.617	1281.833	572.019	-1.296	.187	1.69
129	26	Totals:	-123.92	3933.68	214.629			
130	26	COG (ft):	X: -.556	Y: 1.51	Z: .767			
131	27	N153A	316.673	874.941	-1598.663	1.375	-.213	-.093
132	27	N171	-2296.542	1743.977	1194.791	-1.919	-.031	-2.923
133	27	N185	1766.11	1314.761	527.254	-1.369	.235	1.767
134	27	Totals:	-213.759	3933.68	123.382			
135	27	COG (ft):	X: -.556	Y: 1.51	Z: .767			
136	28	N153A	269.187	841.501	-1588.622	1.273	-.176	-.072
137	28	N171	-2336.135	1753.595	1141.699	-1.959	-.083	-2.931
138	28	N185	1820.31	1338.584	446.856	-1.444	.313	1.813
139	28	Totals:	-246.639	3933.68	-.067			
140	28	COG (ft):	X: -.556	Y: 1.51	Z: .767			
141	29	N153A	321.279	808.286	-1577.207	1.169	-.219	-.094
142	29	N171	-2388.944	1778.142	1067.589	-2.03	-.154	-2.974
143	29	N185	1853.364	1347.253	385.781	-1.488	.368	1.824
144	29	Totals:	-214.301	3933.681	-123.837			
145	29	COG (ft):	X: -.556	Y: 1.51	Z: .767			
146	30	N153A	412.467	784.038	-1570.09	1.09	-.292	-.133
147	30	N171	-2419.424	1811.493	1035.645	-2.097	-.188	-3.054
148	30	N185	1882.736	1338.151	319.123	-1.504	.425	1.785
149	30	Totals:	-124.221	3933.681	-215.321			
150	30	COG (ft):	X: -.556	Y: 1.51	Z: .767			
151	31	N153A	478.373	775.741	-1571.776	1.06	-.344	-.164
152	31	N171	-2400.228	1844.536	1091.653	-2.128	-.14	-3.157
153	31	N185	1921.896	1313.405	231.311	-1.503	.501	1.7
154	31	Totals:	.041	3933.681	-248.812			
155	31	COG (ft):	X: -.556	Y: 1.51	Z: .767			
156	32	N153A	547.855	785.795	-1579.184	1.087	-.399	-.196
157	32	N171	-2357.917	1867.975	1177.267	-2.132	-.064	-3.245

Joint Reactions (By Combination) (Continued)

	LC	Joint Label	X [lb]	Y [lb]	Z [lb]	MX [k-ft]	MY [k-ft]	MZ [k-ft]
158	32	N185	1934.043	1279.912	187.135	-1.467	.536	1.601
159	32	Totals:	123.981	3933.682	-214.782			
160	32	COG (ft):	X: -.556	Y: 1.51	Z: .767			
161	33	N153A	642.216	811.046	-1587.717	1.162	-.474	-.237
162	33	N171	-2322.999	1875.696	1232.305	-2.12	-.013	-3.285
163	33	N185	1894.604	1246.939	231.878	-1.394	.488	1.524
164	33	Totals:	213.82	3933.682	-123.535			
165	33	COG (ft):	X: -.556	Y: 1.51	Z: .767			
166	34	N153A	689.651	844.52	-1597.741	1.264	-.511	-.258
167	34	N171	-2283.394	1866.094	1285.343	-2.08	.039	-3.277
168	34	N185	1840.444	1223.068	312.313	-1.319	.41	1.477
169	34	Totals:	246.7	3933.681	-.085			
170	34	COG (ft):	X: -.556	Y: 1.51	Z: .767			
171	35	N153A	637.512	877.695	-1609.189	1.368	-.468	-.236
172	35	N171	-2230.53	1841.595	1359.43	-2.009	.111	-3.234
173	35	N185	1807.38	1214.392	373.444	-1.276	.355	1.467
174	35	Totals:	214.362	3933.681	123.684			
175	35	COG (ft):	X: -.556	Y: 1.51	Z: .767			
176	36	N153A	546.336	901.897	-1616.36	1.447	-.395	-.197
177	36	N171	-2200.007	1808.274	1391.411	-1.942	.144	-3.154
178	36	N185	1777.953	1223.509	440.118	-1.259	.298	1.506
179	36	Totals:	124.282	3933.68	215.169			
180	36	COG (ft):	X: -.556	Y: 1.51	Z: .767			
181	37	N153A	-673.414	924.694	-1668.514	1.489	.46	.34
182	37	N171	-1739.547	1148.774	375.621	-1.074	-.341	-1.397
183	37	N185	2412.938	1860.211	1541.565	-2.138	-.174	3.264
184	37	Totals:	-.024	3933.68	248.671			
185	37	COG (ft):	X: .754	Y: 1.51	Z: .767			
186	38	N153A	-742.885	914.837	-1660.87	1.462	.515	.373
187	38	N171	-1782.104	1125.293	289.878	-1.071	-.418	-1.31
188	38	N185	2401.025	1893.549	1585.633	-2.173	-.209	3.363
189	38	Totals:	-123.964	3933.68	214.64			
190	38	COG (ft):	X: .754	Y: 1.51	Z: .767			
191	39	N153A	-837.376	889.872	-1652.116	1.387	.59	.414
192	39	N171	-1817.165	1117.633	234.582	-1.083	-.469	-1.27
193	39	N185	2440.738	1926.174	1540.928	-2.246	-.161	3.441
194	39	Totals:	-213.803	3933.679	123.393			
195	39	COG (ft):	X: .754	Y: 1.51	Z: .767			
196	40	N153A	-885.09	856.561	-1642.012	1.285	.627	.434
197	40	N171	-1856.698	1127.367	181.234	-1.122	-.521	-1.277
198	40	N185	2495.105	1949.753	1460.722	-2.321	-.083	3.487
199	40	Totals:	-246.683	3933.68	-.056			
200	40	COG (ft):	X: .754	Y: 1.51	Z: .767			
201	41	N153A	-833.222	823.246	-1630.665	1.181	.585	.413
202	41	N171	-1909.303	1152.129	106.946	-1.193	-.593	-1.321
203	41	N185	2528.18	1958.306	1399.893	-2.365	-.028	3.498
204	41	Totals:	-214.345	3933.68	-123.825			
205	41	COG (ft):	X: .754	Y: 1.51	Z: .767			
206	42	N153A	-742.15	798.795	-1623.712	1.102	.511	.373
207	42	N171	-1939.529	1185.729	74.966	-1.26	-.627	-1.4
208	42	N185	2557.414	1949.157	1333.436	-2.381	.029	3.459
209	42	Totals:	-124.265	3933.681	-215.31			
210	42	COG (ft):	X: .754	Y: 1.51	Z: .767			
211	43	N153A	-676.269	790.332	-1625.599	1.072	.46	.343
212	43	N171	-1920.099	1218.909	131.047	-1.291	-.579	-1.503
213	43	N185	2596.365	1924.441	1245.75	-2.379	.105	3.374
214	43	Totals:	-.003	3933.681	-248.801			
215	43	COG (ft):	X: .754	Y: 1.51	Z: .767			
216	44	N153A	-606.759	800.201	-1633.207	1.1	.405	.31

Joint Reactions (By Combination) (Continued)

	LC	Joint Label	X [lb]	Y [lb]	Z [lb]	MX [k-ft]	MY [k-ft]	MZ [k-ft]
217	44	N171	-1877.598	1242.345	216.808	-1.294	-.503	-1.59
218	44	N185	2608.294	1891.136	1201.629	-2.344	.139	3.275
219	44	Totals:	123.937	3933.681	-214.77			
220	44	COG (ft):	X: .754	Y: 1.51	Z: .767			
221	45	N153A	-512.276	825.213	-1641.903	1.174	.33	.269
222	45	N171	-1842.583	1250.003	272.067	-1.282	-.451	-1.63
223	45	N185	2568.635	1858.466	1246.313	-2.271	.091	3.197
224	45	Totals:	213.776	3933.682	-123.523			
225	45	COG (ft):	X: .754	Y: 1.51	Z: .767			
226	46	N153A	-464.614	858.558	-1651.99	1.276	.292	.249
227	46	N171	-1803.039	1240.285	325.361	-1.243	-.399	-1.623
228	46	N185	2514.308	1834.839	1326.556	-2.196	.013	3.151
229	46	Totals:	246.656	3933.681	-.074			
230	46	COG (ft):	X: .754	Y: 1.51	Z: .767			
231	47	N153A	-516.527	891.833	-1663.37	1.38	.335	.271
232	47	N171	-1750.379	1215.569	399.626	-1.172	-.327	-1.579
233	47	N185	2481.224	1826.279	1387.44	-2.152	-.041	3.14
234	47	Totals:	214.318	3933.681	123.696			
235	47	COG (ft):	X: .754	Y: 1.51	Z: .767			
236	48	N153A	-607.588	916.237	-1670.377	1.459	.408	.31
237	48	N171	-1720.11	1181.999	431.644	-1.105	-.294	-1.5
238	48	N185	2451.935	1835.443	1453.914	-2.136	-.098	3.179
239	48	Totals:	124.238	3933.68	215.18			
240	48	COG (ft):	X: .754	Y: 1.51	Z: .767			
241	49	N153A	-661.247	998.884	-1863.909	1.607	.451	.334
242	49	N171	-1854.4	973.734	366.779	-.947	-.425	-1.213
243	49	N185	2515.628	1586.09	1497.094	-1.852	-.046	2.864
244	49	Totals:	-.018	3558.708	-.036			
245	49	COG (ft):	X: .741	Y: 1.669	Z: .437			
246	50	N153A	-51.439	919.005	-1532.044	1.548	.026	.068
247	50	N171	-1570.941	1296.351	729.457	-1.215	-.086	-1.943
248	50	N185	1622.383	1343.367	802.553	-1.376	.041	2.027
249	50	Totals:	.003	3558.722	-.034			
250	50	COG (ft):	X: .057	Y: 1.669	Z: .437			
251	51	N153A	-59.766	1227.269	-1919.772	2.185	.031	.078
252	51	N171	-1655.23	1216.833	917.518	-1.032	-.029	-1.871
253	51	N185	1714.994	1270.27	1002.248	-1.222	-.024	1.971
254	51	Totals:	-.002	3714.372	-.007			
255	51	COG (ft):	X: .063	Y: 1.866	Z: .03			
256	52	N153A	-50.705	1073.774	-1650.792	1.939	.026	.067
257	52	N171	-1387.613	1031.453	828.021	-.847	.014	-1.586
258	52	N185	1438.313	1078.521	902.382	-1.009	-.061	1.67
259	52	Totals:	-.005	3183.747	79.611			
260	52	COG (ft):	X: .063	Y: 1.866	Z: .03			
261	53	N153A	-80.91	1070.527	-1649.706	1.931	.049	.08
262	53	N171	-1396.591	1023.704	807.391	-.843	-.003	-1.559
263	53	N185	1437.694	1089.516	911.26	-1.023	-.067	1.701
264	53	Totals:	-39.807	3183.747	68.944			
265	53	COG (ft):	X: .063	Y: 1.866	Z: .03			
266	54	N153A	-103.141	1062.301	-1646.92	1.906	.066	.09
267	54	N171	-1411	1021.114	780.896	-.85	-.026	-1.544
268	54	N185	1445.199	1100.332	905.83	-1.043	-.061	1.729
269	54	Totals:	-68.942	3183.747	39.806			
270	54	COG (ft):	X: .063	Y: 1.866	Z: .03			
271	55	N153A	-111.444	1051.296	-1643.179	1.873	.073	.094
272	55	N171	-1426.978	1024.378	755.632	-.866	-.049	-1.545
273	55	N185	1458.815	1108.073	887.545	-1.064	-.043	1.746
274	55	Totals:	-79.607	3183.747	-.002			
275	55	COG (ft):	X: .063	Y: 1.866	Z: .03			

Joint Reactions (By Combination) (Continued)

	LC	Joint Label	X [lb]	Y [lb]	Z [lb]	MX [k-ft]	MY [k-ft]	MZ [k-ft]
276	56	N153A	-103.589	1040.46	-1639.492	1.839	.067	.09
277	56	N171	-1440.246	1032.622	738.374	-.886	-.066	-1.561
278	56	N185	1474.897	1110.666	861.306	-1.081	-.02	1.747
279	56	Totals:	-68.939	3183.747	-39.811			
280	56	COG (ft):	X: .063	Y: 1.866	Z: .03			
281	57	N153A	-81.683	1032.698	-1636.839	1.813	.05	.081
282	57	N171	-1447.247	1043.632	733.745	-.906	-.071	-1.589
283	57	N185	1489.129	1107.418	834.141	-1.088	.004	1.733
284	57	Totals:	-39.802	3183.747	-68.952			
285	57	COG (ft):	X: .063	Y: 1.866	Z: .03			
286	58	N153A	-51.594	1030.091	-1635.934	1.804	.027	.067
287	58	N171	-1446.112	1054.459	742.984	-.92	-.065	-1.62
288	58	N185	1497.707	1099.197	813.327	-1.085	.021	1.707
289	58	Totals:	.002	3183.748	-79.622			
290	58	COG (ft):	X: .063	Y: 1.866	Z: .03			
291	59	N153A	-21.385	1033.34	-1637.015	1.812	.003	.054
292	59	N171	-1437.137	1062.203	763.616	-.924	-.047	-1.647
293	59	N185	1498.325	1088.205	804.444	-1.071	.027	1.676
294	59	Totals:	39.804	3183.748	-68.955			
295	59	COG (ft):	X: .063	Y: 1.866	Z: .03			
296	60	N153A	.846	1041.571	-1639.798	1.837	-.014	.044
297	60	N171	-1422.734	1064.79	790.108	-.917	-.024	-1.662
298	60	N185	1490.827	1077.386	809.873	-1.051	.02	1.648
299	60	Totals:	68.939	3183.748	-39.817			
300	60	COG (ft):	X: .063	Y: 1.866	Z: .03			
301	61	N153A	9.145	1052.579	-1643.535	1.871	-.02	.04
302	61	N171	-1406.754	1061.529	815.367	-.901	-.001	-1.661
303	61	N185	1477.213	1069.639	828.159	-1.029	.003	1.631
304	61	Totals:	79.604	3183.748	-.009			
305	61	COG (ft):	X: .063	Y: 1.866	Z: .03			
306	62	N153A	1.286	1063.412	-1647.227	1.905	-.014	.044
307	62	N171	-1393.482	1053.291	832.623	-.881	.015	-1.645
308	62	N185	1461.131	1067.044	854.404	-1.013	-.021	1.63
309	62	Totals:	68.935	3183.747	39.8			
310	62	COG (ft):	X: .063	Y: 1.866	Z: .03			
311	63	N153A	-20.619	1071.169	-1649.884	1.93	.003	.053
312	63	N171	-1386.476	1042.283	837.255	-.861	.021	-1.617
313	63	N185	1446.893	1070.295	881.57	-1.005	-.044	1.644
314	63	Totals:	39.798	3183.747	68.941			
315	63	COG (ft):	X: .063	Y: 1.866	Z: .03			
316	64	N153A	-37.844	810.816	-1237.352	1.47	.019	.05
317	64	N171	-1031.42	770.649	630.487	-.625	.021	-1.184
318	64	N185	1069.26	806.345	686.478	-.746	-.056	1.247
319	64	Totals:	-.005	2387.811	79.613			
320	64	COG (ft):	X: .063	Y: 1.866	Z: .03			
321	65	N153A	-67.955	807.566	-1236.285	1.461	.043	.063
322	65	N171	-1040.428	762.885	609.947	-.621	.003	-1.157
323	65	N185	1068.576	817.359	695.283	-.76	-.062	1.278
324	65	Totals:	-39.807	2387.81	68.946			
325	65	COG (ft):	X: .063	Y: 1.866	Z: .03			
326	66	N153A	-90.113	799.327	-1233.562	1.437	.06	.073
327	66	N171	-1054.818	760.288	583.547	-.628	-.02	-1.142
328	66	N185	1075.989	828.196	689.822	-.78	-.056	1.305
329	66	Totals:	-68.942	2387.81	39.807			
330	66	COG (ft):	X: .063	Y: 1.866	Z: .03			
331	67	N153A	-98.385	788.303	-1229.914	1.403	.066	.077
332	67	N171	-1070.734	763.554	558.356	-.644	-.043	-1.143
333	67	N185	1089.512	835.953	671.557	-.802	-.038	1.322
334	67	Totals:	-79.607	2387.811	-.001			

Joint Reactions (By Combination) (Continued)

	LC	Joint Label	X [lb]	Y [lb]	Z [lb]	MX [k-ft]	MY [k-ft]	MZ [k-ft]
335	67	COG (ft):	X: .063	Y: 1.866	Z: .03			
336	68	N153A	-90.547	777.448	-1226.318	1.369	.06	.074
337	68	N171	-1083.911	771.809	541.13	-.665	-.059	-1.159
338	68	N185	1105.52	838.553	645.378	-.818	-.015	1.323
339	68	Totals:	-68.938	2387.811	-39.81			
340	68	COG (ft):	X: .063	Y: 1.866	Z: .03			
341	69	N153A	-68.704	769.672	-1223.738	1.344	.043	.064
342	69	N171	-1090.819	782.837	536.483	-.684	-.065	-1.187
343	69	N185	1119.722	835.301	618.304	-.826	.009	1.309
344	69	Totals:	-39.801	2387.811	-68.951			
345	69	COG (ft):	X: .063	Y: 1.866	Z: .03			
346	70	N153A	-38.705	767.059	-1222.863	1.335	.02	.05
347	70	N171	-1089.612	793.684	545.659	-.698	-.058	-1.218
348	70	N185	1128.319	827.067	597.583	-.822	.026	1.283
349	70	Totals:	.002	2387.811	-79.621			
350	70	COG (ft):	X: .063	Y: 1.866	Z: .03			
351	71	N153A	-8.59	770.312	-1223.926	1.343	-.003	.037
352	71	N171	-1080.607	801.444	566.2	-.702	-.041	-1.245
353	71	N185	1129.002	816.055	588.773	-.808	.032	1.252
354	71	Totals:	39.805	2387.811	-68.954			
355	71	COG (ft):	X: .063	Y: 1.866	Z: .03			
356	72	N153A	13.567	778.557	-1226.644	1.368	-.02	.027
357	72	N171	-1066.222	804.039	592.597	-.695	-.018	-1.26
358	72	N185	1121.594	805.216	594.232	-.788	.025	1.225
359	72	Totals:	68.939	2387.811	-39.815			
360	72	COG (ft):	X: .063	Y: 1.866	Z: .03			
361	73	N153A	21.835	789.583	-1230.291	1.401	-.026	.023
362	73	N171	-1050.305	800.775	617.783	-.679	.005	-1.259
363	73	N185	1108.074	797.453	612.501	-.767	.008	1.208
364	73	Totals:	79.605	2387.811	-.007			
365	73	COG (ft):	X: .063	Y: 1.866	Z: .03			
366	74	N153A	13.994	800.435	-1233.89	1.435	-.02	.027
367	74	N171	-1037.123	792.525	635.007	-.659	.021	-1.243
368	74	N185	1092.065	794.851	638.684	-.75	-.016	1.206
369	74	Totals:	68.936	2387.811	39.801			
370	74	COG (ft):	X: .063	Y: 1.866	Z: .03			
371	75	N153A	-7.849	808.206	-1236.474	1.46	-.004	.037
372	75	N171	-1030.211	781.5	639.657	-.639	.027	-1.215
373	75	N185	1077.858	798.106	665.759	-.743	-.039	1.221
374	75	Totals:	39.799	2387.811	68.942			
375	75	COG (ft):	X: .063	Y: 1.866	Z: .03			

Envelope AISC 15th(360-16): LRFD Steel Code Checks

	Member	Shape	Code C...	Loc[ft]	LC	Shear ...	Loc[ft]	Dir	LC	phi*Pnc [lb]	phi*Pnt [lb]	phi*Mn y-...	phi*Mn z-...	Cb	Eqn
1	LV	C5X6.7	.348	6.365	6	.426	6.635	z	2	4363.033	63828	1.604	8.035	1....	H1-1b
2	M76	HSS4X4X3	.471	0	14	.260	0	z	4	91274.199	106812	12.662	12.662	2....	H1-1b
3	M77	L4X4X4	.833	2.891	13	.051	2.891	z	13	40740.38	62532	3.138	6.046	1....	H2-1
4	M78	PL3/8x3	.510	.417	24	.059	.417	y	13	32577.986	36450	.285	2.278	1....	H1-1b
5	M79	PL3/8x3	.493	0	13	.059	0	y	13	32577.986	36450	.285	2.278	2....	H1-1b
6	M84	PL1/2x9	.254	.625	14	.198	0	y	16	82502.914	145800	1.519	27.338	1....	H1-1b
7	M85	HSS4X4X3	.457	0	10	.254	0	z	12	91274.199	106812	12.662	12.662	2....	H1-1b
8	M86	L4X4X4	.831	2.891	21	.051	2.891	z	21	40740.38	62532	3.138	6.045	1....	H2-1
9	M87	PL3/8x3	.520	.417	20	.060	.417	y	21	32577.986	36450	.285	2.278	1....	H1-1b
10	M88	PL3/8x3	.490	0	21	.061	0	y	21	32577.986	36450	.285	2.278	2....	H1-1b
11	M93	PL1/2x9	.253	.625	22	.201	0	y	24	82502.914	145800	1.519	27.338	1....	H1-1b
12	M94	HSS4X4X3	.497	0	16	.268	0	z	8	91274.199	106812	12.662	12.662	2....	H1-1b
13	M95	L4X4X4	.863	2.891	17	.053	2.891	z	17	40740.38	62532	3.138	6.046	1....	H2-1

Envelope AISC 15th(360-16): LRFD Steel Code Checks (Continued)

	Member	Shape	Code C...	Loc[ft]	LC	Shear ...	Loc[ft]	Dir	LC	phi*Pnc [lb]	phi*Pnt [lb]	phi*Mn y-...	phi*Mn z-...	Cb	Eqn
14	M96	PL3/8x3	.528	.417	16	.062	.417	y	17	32577.986	36450	.285	2.278	1....	H1-1b
15	M97	PL3/8x3	.507	0	18	.063	0	y	17	32577.986	36450	.285	2.278	1....	H1-1b
16	M102	PL1/2x9	.289	.625	18	.217	0	y	20	82502.914	145800	1.519	27.338	1....	H1-1b
17	M103	L3X3X4	.341	1.49	5	.505	1.625	y	6	4574.724	46656	1.688	2.897	1....	H2-1
18	MP5A	PIPE_2.0	.338	5	10	.078	5		5	20866.733	32130	1.872	1.872	1....	H1-1b
19	MP2A	PIPE_3.0	.033	5.312	13	.061	1.25		7	53775.839	65205	5.749	5.749	1	H1-1b
20	OVP	PIPE_2.0	.366	4.375	10	.069	4.375		2	23808.54	32130	1.872	1.872	1....	H1-1b
21	MP1A	PIPE_2.0	.382	5	10	.072	5		3	20866.733	32130	1.872	1.872	1....	H1-1b
22	MP3A	PIPE_2.0	.441	4.813	10	.076	4.813		6	20866.733	32130	1.872	1.872	1....	H1-1b
23	MP4A	PIPE_2.0	.393	4.375	4	.082	.365		6	23808.54	32130	1.872	1.872	1....	H1-1b
24	M57	PIPE_2.0	.344	4.375	4	.089	4.375		5	23808.54	32130	1.872	1.872	1....	H1-1b
25	MP5C	PIPE_2.0	.349	5	6	.077	5		1	20866.733	32130	1.872	1.872	1....	H1-1b
26	MP2C	PIPE_3.0	.032	5.312	16	.065	1.25		3	53775.839	65205	5.749	5.749	1....	H1-1b
27	M68	PIPE_2.0	.382	4.375	6	.068	4.375		10	23808.54	32130	1.872	1.872	1....	H1-1b
28	MP1C	PIPE_2.0	.370	5	6	.062	5		10	20866.733	32130	1.872	1.872	1....	H1-1b
29	MP3C	PIPE_2.0	.447	4.813	6	.083	4.813		2	20866.733	32130	1.872	1.872	1....	H1-1b
30	MP4C	PIPE_2.0	.406	4.375	12	.078	4.375		3	23808.54	32130	1.872	1.872	1....	H1-1b
31	M78A	PIPE_2.0	.358	4.375	12	.087	4.375		1	23808.54	32130	1.872	1.872	1....	H1-1b
32	MP5B	PIPE_2.0	.336	5	2	.077	5		9	20866.733	32130	1.872	1.872	1....	H1-1b
33	MP2B	PIPE_3.0	.032	5.312	22	.065	1.25		11	53775.839	65205	5.749	5.749	1....	H1-1b
34	M89A	PIPE_2.0	.364	4.375	8	.070	4.375		6	23808.54	32130	1.872	1.872	1....	H1-1b
35	MP1B	PIPE_2.0	.352	5	2	.063	5		6	20866.733	32130	1.872	1.872	1....	H1-1b
36	MP3B	PIPE_2.0	.446	4.813	2	.081	4.813		4	20866.733	32130	1.872	1.872	1....	H1-1b
37	MP4B	PIPE_2.0	.392	4.375	8	.080	1.302		10	23808.54	32130	1.872	1.872	1....	H1-1b
38	LIGHT	PIPE_2.0	.342	4.375	8	.087	4.375		9	23808.54	32130	1.872	1.872	1....	H1-1b
39	M98B	L3X3X4	.366	1.49	1	.521	1.625	y	2	4574.724	46656	1.688	2.903	1....	H2-1
40	M99B	L3X3X4	.345	1.49	9	.502	1.625	y	10	4574.724	46656	1.688	2.87	1....	H2-1
41	M98C	C5X6.7	.351	6.365	2	.419	6.635	z	10	4363.033	63828	1.604	8.01	1....	H1-1b
42	M99C	C5X6.7	.341	6.365	10	.424	6.635	z	6	4363.033	63828	1.604	7.951	1....	H1-1b
43	M100A	PL1/2x6	.147	0	9	.050	0	y	10	35292.016	97200	1.012	12.15	1....	H1-1b
44	M101A	PL1/2x6	.149	0	5	.052	0	y	6	35292.016	97200	1.012	12.15	1....	H1-1b
45	M102A	PL1/2x6	.158	0	1	.051	0	y	2	35292.016	97200	1.012	12.15	2....	H1-1b

VzW SMART Tool© Vendor			
Client:	Verizon Wireless	Date:	3/11/2024
Site Name:	FELLOWS LAKE		
MDG #:	5000278840		
Fuze ID #:	16947595	Page:	1

Version 2.00

I. Mount-to-Tower Connection Check

Custom Orientation Required | Yes

Nodes (labeled per Risa)	Orientation (per graphic of typical platform)
N153A	180
N171	300
N185	60

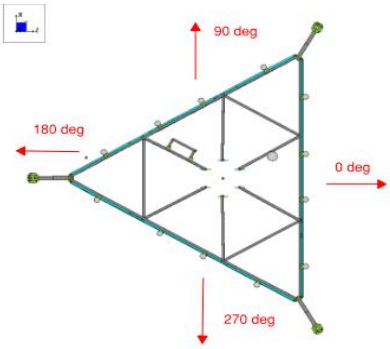

Tower Connection Bolt Checks | Yes

Bolt Orientation | Parallel

Bolt Quantity per Reaction:	4
d_x (in) *(Delta X of typ. bolt config. sketch)*:	6
d_y (in) *(Delta Y of typ. bolt config. sketch)*:	6
Bolt Type:	A325N
Bolt Diameter (in):	0.625
Required Tensile Strength / bolt (kips):	5.5
Required Shear Strength / bolt (kips):	1.7
Tensile Capacity / bolt (kips):	20.7
Shear Capacity / bolt (kips):	12.4
Bolt Overall Utilization:	**26.4%**

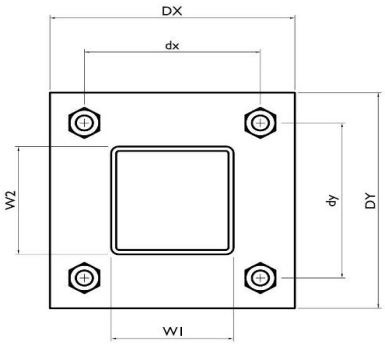

Tower Connection Baseplate Checks | Yes

Connecting Standoff Member Shape:	Rect Tube
Weld Stiffener Configuration:	No Stiffeners
Plate Width, D_x (in):	8
Plate Height, D_y (in):	8
W1(in):	4
W2 (in):	4
Member Thickness (in):	0.18
Stiffener location a_1 (in):	
Stiffener location b_1 (in):	
Stiffener location a_2 (in):	
Stiffener location b_2 (in):	
F_y (ksi, plate):	36
Plate Thickness (in):	0.75
Length of Yield Line, L_y (in):	5.80
Bolt Eccentricity, e (in):	1.58
M_u (kip-in):	8.66
Phi*M_n (kip-in):	26.41
Plate Bending Utilization:	**32.8%**

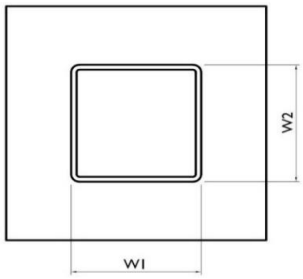

VzW SMART Tool© Vendor

Client:	Verizon Wireless	Date:	3/11/2024
Site Name:	FELLOWS LAKE		
MDG #:	5000278840		
Fuze ID #:	16947595	Page:	2

Version 2.00

Tower Connection Weld Checks	Yes
Weld Shape:	Rectangle
Weld Stiffener Configuration:	None
Stiffener Notch Length, n (in):	0
Weld Size (1/16 in):	4
W1 (in):	4
W2 (in):	4
Weld Total Length (in):	16.00
Z_x (in^3/in):	21.33
Z_y (in^3/in):	21.33
J_p (in^4/in):	85.33
c_x (in)	2.18
c_y (in)	2.18
Required combined strength (kip/in):	2.27
Weld Capacity (kip/in):	5.57
Weld Utilization:	**40.8%**

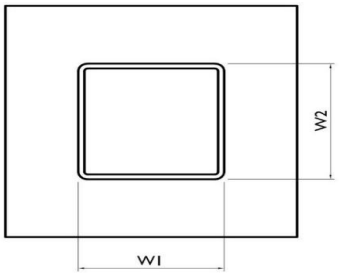

EXHIBIT G

Power Density / RF Emissions Report

FOX HILL TELECOM

Radio Frequency Emissions Analysis Report

Prepared for:

CROWN CASTLE

verizon

Crown Site ID: 806953_BRG 2044 (A) 943097

Verizon Wireless Site Name: Riverbank CT

Verizon Wireless FUZE ID: 16092561

Site Address:

69 Guinea Road (Camp Rocky Craig)

Stamford, CT 06903

July 2, 2024

Fox Hill Telecom Project Number: 240183

Site Compliance Summary	
Compliance Status:	COMPLIANT
Site total MPE% of FCC general population allowable limit:	7.28 %

FOX HILL TELECOM

July 2, 2024

Crown Castle
1800 W. Park Drive
Westborough, MA 01581

Emissions Analysis for:

Crown Castle Site: **806953 – BRG 2044 (A) 943097**

Verizon Wireless Site: **Riverbank CT**

Fox Hill Telecom, Inc ("Fox Hill") was directed to analyze the proposed upgrades for Verizon Wireless to the Crown Castle facility located at **69 Guinea Road (Camp Rocky Craig), Stamford, CT**, for the purpose of determining whether the emissions from the Proposed Verizon Wireless Antenna Installation, in addition to all existing radio systems located on this property, are within specified federal limits.

All information used in this report was analyzed as a percentage of current Maximum Permissible Exposure (% MPE) as listed in the FCC OET Bulletin 65 Edition 97-01and ANSI/IEEE Std C95.1. The FCC regulates Maximum Permissible Exposure in units of microwatts per square centimeter (μW/cm2). The number of $\mu W/cm^2$ calculated at each sample point is called the power density. The exposure limit for power density varies depending upon the frequencies being utilized. Wireless Carriers and Paging Services use different frequency bands each with different exposure limits, therefore it is necessary to report results and limits in terms of percent MPE rather than power density.

All results were compared to the FCC (Federal Communications Commission) radio frequency exposure rules, 47 CFR 1.1307(b)(1) – (b)(3), to determine compliance with the Maximum Permissible Exposure (MPE) limits for General Population/Uncontrolled environments as defined below.

General population/uncontrolled exposure limits apply to situations in which the general population may be exposed or in which persons who are exposed as a consequence of their employment may not be made fully aware of the potential for exposure or cannot exercise control over their exposure. Therefore, members of the general population would always be considered under this category when exposure is not employment related, for example, in the case of a telecommunications tower that exposes persons in a nearby residential area.

General population exposure to radio frequencies is regulated and enforced in units of microwatts per square centimeter ($\mu W/cm^2$). The general population exposure limits for the 700 MHz band & the 850 MHz cellular band are approximately 497 $\mu W/cm^2$ and 586 $\mu W/cm^2$ respectively. The general population exposure limit for the 1900 MHz (PCS), 2100 MHz (AWS) and 3700 MHz (C band) frequency bands is 1000 $\mu W/cm^2$. Because each carrier will be using different frequency bands, and each frequency band has different exposure limits, it is necessary to report the percentage of MPE rather than power density.

Occupational/controlled exposure limits apply to situations in which persons are exposed as a consequence of their employment and in which those persons who are exposed have been made fully aware of the potential for exposure and can exercise control over their exposure. Occupational/controlled exposure limits also apply where exposure is of a transient nature as a result of incidental passage through a location where exposure levels may be above general population/uncontrolled limits (see below), as long as the exposed person has been made fully aware of the potential for exposure and can exercise control over his or her exposure by leaving the area or by some other appropriate means.

Additional details can be found in FCC OET 65.

CALCULATIONS

Calculations were performed for the proposed upgrades to the Crown Castle facility for Verizon Wireless located at **69 Guinea Road (Camp Rocky Craig), Stamford, CT**, using the equipment information listed below. All calculations were performed per the specifications under FCC OET 65 for far field modeling calculations.

In OET-65, plane wave power densities in the far field of an antenna are calculated by considering antenna gain and reflective waves that would contribute to exposure.

Since the radiation pattern of an antenna has developed in the **far field** region the power gain in specific directions needs to be considered in exposure predictions to yield an Effective Radiated Power (ERP) in each specific direction from the antenna. Also, since the vertical radiation pattern of the antenna is considered, the exposure calculations would most likely be reduced significantly at ground level, resulting in a more realistic estimate of the actual exposure levels. To determine a worst-case scenario at each point along the calculation radials, each point was calculated using the antenna gain value at each angle of incident and compared against the result using an isotropic radiator at the antenna height with the greater of the two used to yield the more pessimistic far field value for each point along the calculation radial.

Additionally, to model a truly "worst case" prediction of exposure levels at or near a surface, such as at ground-level or on a rooftop, reflection off the surface of antenna radiation power can be assumed, resulting in a potential 1.6 times increase in power density in calculating far field power density values.

With these factors considered, the worst case **far field prediction model** utilized in this analysis is determined by the following equation:

Equation 9 per FCC OET65 for Far Field Modeling

$$S = \frac{33.4\ ERP}{R^2}$$

S = Power Density (in $\mu w/cm^2$)
ERP = Effective Radiated Power from antenna (watts)
R = Distance from the antenna (meters)

Predicted far field power density values for all carriers identified in this report were calculated 6 feet above the ground level and are displayed as a percentage of the applicable FCC standards. All emissions values for other carriers were calculated using the same Far Field model outlined above, using industry standard radio configurations and frequency band selection based upon available licenses in this geographic area for emissions contribution estimates.

For each Verizon Wireless sector, the following channel counts, frequency bands and power levels were utilized as shown in *Table 1*:

Technology	Frequency Band	Channel Count	Transmit Power per Channel (W)
LTE	700 MHz	4	40
LTE / 5G	850 MHz	4	40
LTE	1900 MHz (PCS)	4	40
LTE	2100 MHz (AWS)	4	40
5G	3700 MHz (C Band)	2	160

Table 1: Channel Data Table

The following **Verizon Wireless** antennas listed in *Table 2 – Antenna Data* were used in the modeling for transmission in the 700 MHz, 850 MHz, 1900 MHz (PCS), 2100 MHz (AWS) and 3700 MHz (C Band) frequency bands. This is based on feedback from Verizon Wireless regarding anticipated antenna selection. Maximum gain values for all antennas are listed in *Table 3 – Verizon Wireless Inventory and Power Data* below.

Sector	Antenna Number	Antenna Make / Model	Antenna Centerline (ft)
A	1	JMA MX06FRO860-03	141
A	2	JMA MX06FRO860-03	141
A	3	Samsung MT6413-77A	141
B	1	JMA MX06FRO860-03	141
B	2	JMA MX06FRO860-03	141
B	3	Samsung MT6413-77A	141
C	1	JMA MX06FRO860-03	141
C	2	JMA MX06FRO860-03	141
C	3	Samsung MT6413-77A	141

Table 2: Antenna Data

All calculations were done with respect to uncontrolled / general population threshold limits.

RESULTS

Per the calculations completed for the proposed Verizon Wireless configurations *Table 3* shows resulting emissions power levels and percentages of the FCC's allowable general population limit.

Antenna ID	Antenna Make / Model	Frequency Bands	Antenna Gain (dBd)	Channel Count	Total TX Power (W)	ERP (W)	MPE %
Antenna A1	JMA MX06FRO860-03	700 MHz / 850 MHz	13.15 / 12.35	8	320	6,053.26	1.24
Antenna A2	JMA MX06FRO860-03	1900 MHz (PCS) / 2100 MHz (AWS)	15.75 / 16.05	8	320	12,456.87	0.64
Antenna A3	Samsung MT6413-77A	3700 MHz (C Band)	23.15	2	320	66,092.16	2.70
						Sector A Composite MPE%	**4.58**
Antenna B1	JMA MX06FRO860-03	700 MHz / 850 MHz	13.15 / 12.35	8	320	6,053.26	1.24
Antenna B2	JMA MX06FRO860-03	1900 MHz (PCS) / 2100 MHz (AWS)	15.75 / 16.05	8	320	12,456.87	0.64
Antenna B3	Samsung MT6413-77A	3700 MHz (C Band)	23.15	2	320	66,092.16	2.70
						Sector B Composite MPE%	**4.58**
Antenna C1	JMA MX06FRO860-03	700 MHz / 850 MHz	13.15 / 12.35	8	320	6,053.26	1.24
Antenna C2	JMA MX06FRO860-03	1900 MHz (PCS) / 2100 MHz (AWS)	15.75 / 16.05	8	320	12,456.87	0.64
Antenna C3	Samsung MT6413-77A	3700 MHz (C Band)	23.15	2	320	66,092.16	2.70
						Sector C Composite MPE%	**4.58**

Table 3: Verizon Wireless Inventory and Power Data table

Table 4: All Carrier MPE Contributions shows all additional identified carriers on site and their emissions contribution estimates, along with the newly calculated maximum Verizon Wireless far field emissions contributions per this report. FCC OET 65 specifies that for carriers utilizing directional antennas the highest recorded sector value be used for composite site emissions values due to their greatly reduced emissions contributions in the directions of the adjacent sectors. For this site, all three Verizon Wireless sectors have the same configuration yielding the same results for all three sectors. *Table 5* below shows a summary for each Verizon Wireless Sector as well as the composite estimated emissions value for the site.

Site Composite MPE%	
Carrier	**MPE%**
Verizon Wireless – Max Per Sector Value	**4.58 %**
T-Mobile	2.70 %
Site Total MPE %:	**7.28 %**

Table 4: All Carrier MPE Contributions

Verizon Wireless Sector A Total:	4.58 %
Verizon Wireless Sector B Total:	4.58 %
Verizon Wireless Sector C Total:	4.58 %
Site Total:	7.28 %

Table 5: Site MPE Summary

Table 6 below details a breakdown by frequency band and technology for the MPE power values for the maximum calculated Verizon sector(s). For this site, all three Verizon Wireless sectors have the same configuration yielding the same results for all three sectors.

Verizon Wireless _ Frequency Band / Technology Max Power Values (Per Sector)	**# Channels**	**Watts ERP (Per Channel)**	**Height (feet)**	**Total Power Density ($\mu W/cm^2$)**	**Frequency (MHz)**	**Allowable MPE ($\mu W/cm^2$)**	**Calculated % MPE**
Verizon Wireless 700 MHz LTE	4	826.15	141	3.38	700 MHz	497	0.68%
Verizon Wireless 850 MHz LTE / 5G	4	687.16	141	3.28	850 MHz	586	0.56%
Verizon Wireless 1900 MHz (PCS) LTE	4	1,503.35	141	3.20	1900 MHz (PCS)	1000	0.32%
Verizon Wireless 2100 MHz (AWS) LTE	4	1,610.87	141	3.20	2100 MHz (AWS)	1000	0.32%
Verizon Wireless 3700 MHz (C Band) 5G	2	33,046.08	141	27.00	3700 MHz (C Band)	1000	2.70%
						Total:	**4.58 %**

Table 6: Verizon Wireless Maximum Sector MPE Power Values

Summary

All calculations performed for this analysis yielded results that were **within** the allowable limits for general population exposure to RF Emissions.

The anticipated maximum composite contributions from the Verizon Wireless facility as well as the site composite emissions estimates value with regards to compliance with FCC's allowable limits for general population exposure to RF Emissions are shown here:

Verizon Wireless Sector	Power Density Value (%)
Sector A:	4.58 %
Sector B:	4.58 %
Sector C:	4.58 %
Verizon Wireless Maximum Total (per sector):	4.58 %
Site Total:	7.28 %
Site Compliance Status:	**COMPLIANT**

The estimated composite emissions value for this site, assuming all carriers present, is **7.28 %** of the allowable FCC established general population limit sampled at the ground level. This is based upon the far field calculations performed for all carriers identified in this report.

FCC guidelines state that if a site is found to be out of compliance (over allowable thresholds), that carriers over a 5% contribution to the composite value will require measures to bring the site into compliance. For this facility, the composite estimated values calculated were well within the allowable 100% threshold standard per the federal government.

Scott Heffernan
Principal RF Engineer
Fox Hill Telecom, Inc
Worcester, MA 01609
(978)660-3998

EXHIBIT H

Recipient Mailing Records

FedEx®

Hi. Your package was delivered Thu, 07/11/2024 at 10:18am.

OBTAIN PROOF OF DELIVERY

How was your delivery ?

TRACKING NUMBER	777324060505
FROM	KING OF PRUSSIA, PA, US
TO	STAMFORD, CT, US
SHIP DATE	Wed 7/10/2024 06:09 PM
DELIVERED TO	Shipping/Receiving
PACKAGING TYPE	FedEx Pak
ORIGIN	KING OF PRUSSIA, PA, US
DESTINATION	STAMFORD, CT, US
SPECIAL HANDLING	Deliver Weekday
NUMBER OF PIECES	1
TOTAL SHIPMENT WEIGHT	1.00 LB
SERVICE TYPE	FedEx Priority Overnight

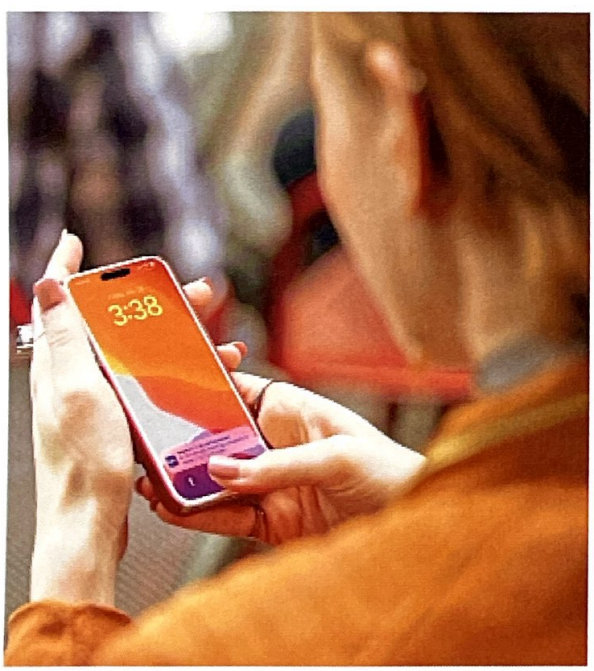

Easy options for your next shipment

There's no need to weigh packages or calculate shipping costs with FedEx One Rate®. Enjoy an easy shipping process with predictable pricing and complimentary flat-rate packaging options.

EXPLORE FEDEX ONE RATE

Bachi, Jenifer

From: TrackingUpdates@fedex.com
Sent: Thursday, July 11, 2024 10:46 AM
To: Bachi, Jenifer
Subject: FedEx Shipment 777324109006: Your package has been delivered / 806953 FE to Planner

CAUTION: This email originated from outside of the organization. Do not click links or open attachments unless you recognize the sender and know the content is safe.

FedEx®

Hi. Your package was delivered Thu, 07/11/2024 at 10:18am.

OBTAIN PROOF OF DELIVERY

How was your delivery ?

TRACKING NUMBER	777324109006
FROM	KING OF PRUSSIA, PA, US
TO	STAMFORD, CT, US
SHIP DATE	Wed 7/10/2024 06:09 PM
DELIVERED TO	Shipping/Receiving
PACKAGING TYPE	FedEx Pak
ORIGIN	KING OF PRUSSIA, PA, US
DESTINATION	STAMFORD, CT, US
SPECIAL HANDLING	Deliver Weekday
NUMBER OF PIECES	1
TOTAL SHIPMENT WEIGHT	1.00 LB
SERVICE TYPE	FedEx Priority Overnight

Your delivery has been updated.

UPDATED DELIVERY DATE

Fri, 07/12/2024
before 10:30am

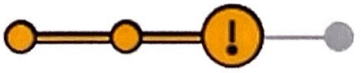

RUNNING LATE
WINDSOR LOCKS, CT

TRACKING NUMBER 777324142542

FROM	KING OF PRUSSIA, PA, US
TO	HARTFORD, CT, US
SHIP DATE	Wed 7/10/2024 06:09 PM
DELIVERY LOCATION	WINDSOR LOCKS, CT
PACKAGING TYPE	FedEx Pak
ORIGIN	KING OF PRUSSIA, PA, US
DESTINATION	HARTFORD, CT, US
SPECIAL HANDLING	Deliver Weekday
STANDARD TRANSIT	Thu, 07/11/2024 by 10:30am
NUMBER OF PIECES	1
TOTAL SHIPMENT WEIGHT	1.00 LB
SERVICE TYPE	FedEx Priority Overnight

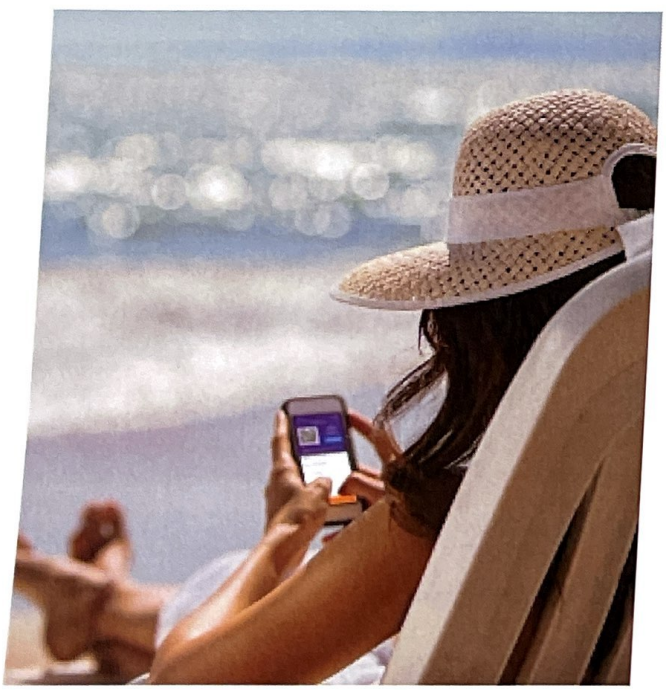

Make your deliveries fit your life

Don't want packages sitting on the porch? Enroll in FedEx Delivery Manager® to request to redirect a package to a FedEx location for free. You can also get a QR code to show to a team member for an even easier pickup.

SIGN UP FOR FEDEX DELIVERY MANAGER

FOLLOW FEDEX

ORIGIN ID:KPDA (610) 635-3221
JENIFER BACHI
CROWN CASTLE
3200 HORIZON DRIVE
SUITE 150
KING OF PRUSSIA, PA 19406
UNITED STATES US

SHIP DATE: 11JUL24
ACTWGT: 2.00 LB
CAD: 104924192/INET4730

BILL SENDER

TO MELANIE A. BACHMAN, EXEC DIRECTOR
CONNECTICUT SITING COUNCIL
10 FRANKLIN SQUARE

NEW BRITAIN CT 06051
(860) 827-2935 REF: 1766.668
INV:
PO: 806593_VERIZON DEPT:

583J9/E024/9AE3

FedEx Express

J242024032601uv

FRI - 12 JUL 10:30A
PRIORITY OVERNIGHT

TRK# 0201 7773 2416 3827

EB BDLA

06051
CT-US BDL

FedEx Ship Manager - Print Your Label(s)

PM