CROWN CASTLE

1 Cityplace Dr, Suite 490
Creve Coeur, MO 63141

Phone: (314) 513-0147
www.crowncastle.com

June 30th, 2022

Melanie A. Bachman
Executive Director
Connecticut Siting Council
10 Franklin Square
New Britain, CT 06051

RE: **Notice of Exempt Modification for Verizon Wireless**
**Crown Site ID#828054; Verizon Wireless Site ID#467434**
**300 Governors Highway, South Windsor, CT 06074**
**Latitude: 41° 50' 0.40"/ Longitude: -72° 36' 11.00"**

Dear Ms. Bachman:

Verizon Wireless currently maintains (12) antennas at the 230-foot mounts on the existing 226-foot Monopole Tower located at 3**00 Governors Highway, South Windsor.** The property is owned by Electron Technologies and the Tower is owned by Crown Castle. Verizon now intends to replace (9) antennas. This modification/proposal includes hardware that is both 4G(LTE) and 5G capable through remote software configuration and either or both services may be turned on or off at various times.

**Planned Modifications:**

**Tower:**

**REMOVE AND REPLACE**
(3) Andrew LNX-6514DS-ATM Antennas (**REMOVE**), (3) Samsung MT6407-77A antennas (**REPLACE**)
(6) Andrew HBXX-6517DS-A2M antennas (**REMOVE**) (3) Commscope NHH-65B-R2B (**REPLACE)** (3) Commscope NHHSS-65B-R28T4 **(REPLACE)**
(3) Nokia UHBA B13 RRH (**REMOVE**) (3) Samsung CBRS RT4401-48A RRH **(REPLACE)**
(3) Nokia UHIC B4 RRH (**REMOVE**) (3) Samsung RF 44400-13A RRH **(REPLACE)**
(1) Raycap-RRFDC-3315-PF-48 6-OVP **(REMOVE)** (2) Raycap RVZDC-6627-PF-48 12-OVP **(REPLACE)**
(1) Hybrid Cable 1-1/4" **(REMOVE)** (2) Hybrid Cables 1-5/8" **(REPLACE)**
**INSTALL**
(3) Side-by-side Antenna mounts – Commscope BSAMNT-SBS-R2BT4
**REMAINING**
(3) Andrew LNX-6514DS-ATM

**Ground**:
N/A

The facility was approved by The Connecticut Siting Council on September 21st, 1999. The approval was with conditions which this exempt modification complies with.

CROWN CASTLE

1 Cityplace Dr, Suite 490
Creve Coeur, MO 63141

Phone: (314) 513-0147
www.crowncastle.com

Please accept this letter as notification pursuant to Regulations of Connecticut State Agencies §16-50j-73, for construction that constitutes an exempt modification pursuant to R.C.S.A. §16-50j-72(b)(2). In accordance with R.C.S.A. §16-50j-73, a copy of this letter is being sent to The Honorable Andrew Paterna, Mayor, Michele M. Lipe, Director of Planning, and property owner, Electron Technologies.

1. The proposed modifications will not result in an increase in the height of the existing tower.

2. The proposed modifications will not require the extension of the site boundary.

3. The proposed modification will not increase noise levels at the facility by six decibels or more, or to levels that exceed state and local criteria.

4. The operation of the replacement antennas will not increase radio frequency emissions at the facility to a level at or above the Federal Communication Commission safety standard.

5. The proposed modifications will not cause a change or alteration in the physical or environmental characteristics of the site.

6. The existing structure and its foundation can support the proposed loading.

For the foregoing reasons, Verizon Wireless respectfully submits that the proposed modifications to the above-
reference telecommunications facility constitutes an exempt modification under R.C.S.A. §16-50j-72(b)(2).

Sincerely,

Katie Adams
Crown Castle, Agent for Verizon Wireless
kadams@nbcllc.com
(781) 392-7547

1 Cityplace Dr, Suite 490
Creve Coeur, MO 63141

Phone: (314) 513-0147
www.crowncastle.com

cc:

The Honorable Andrew Paterna, Mayor
Town of South Windsor
1540 Sullivan Ave South Windsor, CT 06074
860-644-2511
*(Via Fedex)*

Michele M. Lipe, Director of Planning
Town of South Windsor
1540 Sullivan Ave South Windsor, CT 06074
860-644-2511 ext. 252
*(Via Fedex)*

Electron Technologies
300 Governors Highway
South Windsor, CT 06074
*(Via Fedex)*

**Katie Adams**

**From:** TrackingUpdates@fedex.com
**Sent:** Wednesday, July 6, 2022 10:00 AM
**To:** Katie Adams
**Subject:** FedEx Shipment 777286987464: Your package has been delivered

# Hi. Your package was delivered Wed, 07/06/2022 at 9:57am.

Delivered to 1540 SULLIVAN AVE, SOUTH WINDSOR, CT 06074
Received by J.JERU

**OBTAIN PROOF OF DELIVERY**

| | |
|---|---|
| **TRACKING NUMBER** | 777286987464 |
| **FROM** | NB+C<br>100 Apollo Drive<br>Suite 303<br>CHELMSFORD, MA, US, 01824 |
| **TO** | Town of South Windsor<br>Michele M. Lipe |

| | |
|---|---|
| | 1540 Sullivan Ave<br>SOUTH WINDSOR, CT, US, 06074 |
| **REFERENCE** | 100788 - CSC |
| **SHIPPER REFERENCE** | 100788 - CSC |
| **SHIP DATE** | Tue 7/05/2022 06:28 PM |
| **DELIVERED TO** | Receptionist/Front Desk |
| **PACKAGING TYPE** | FedEx Pak |
| **ORIGIN** | CHELMSFORD, MA, US, 01824 |
| **DESTINATION** | SOUTH WINDSOR, CT, US, 06074 |
| **SPECIAL HANDLING** | Deliver Weekday |
| **NUMBER OF PIECES** | 1 |
| **TOTAL SHIPMENT WEIGHT** | 1.00 LB |
| **SERVICE TYPE** | FedEx Priority Overnight |


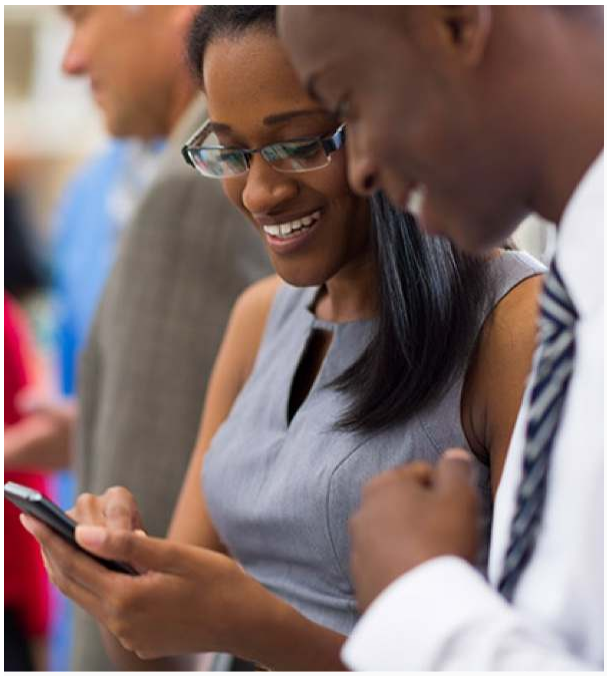

Get the FedEx® Mobile app

Create shipments, receive tracking alerts, redirect packages to a FedEx retail location for pickup, and more from the palm of your hand
- **Download now**.

Download on the App Store

GET IT ON Google Play

**Katie Adams**

**From:** TrackingUpdates@fedex.com
**Sent:** Wednesday, July 6, 2022 10:01 AM
**To:** Katie Adams
**Subject:** FedEx Shipment 777286973711: Your package has been delivered

# Hi. Your package was delivered Wed, 07/06/2022 at 9:57am.

Delivered to 1540 SULLIVAN AVE, SOUTH WINDSOR, CT 06074
Received by J.JERU

**OBTAIN PROOF OF DELIVERY**

**TRACKING NUMBER** 777286973711

**FROM** NB+C
100 Apollo Drive
Suite 303
CHELMSFORD, MA, US, 01824

**TO** Town of South Windsor
Andrew Paterna, Mayor

| | |
|---|---|
| | 1540 Sullivan Ave<br>SOUTH WINDSOR, CT, US, 06074 |
| **REFERENCE** | 100788 - CSC |
| **SHIPPER REFERENCE** | 100788 - CSC |
| **SHIP DATE** | Tue 7/05/2022 06:28 PM |
| **DELIVERED TO** | Receptionist/Front Desk |
| **PACKAGING TYPE** | FedEx Pak |
| **ORIGIN** | CHELMSFORD, MA, US, 01824 |
| **DESTINATION** | SOUTH WINDSOR, CT, US, 06074 |
| **SPECIAL HANDLING** | Deliver Weekday |
| **NUMBER OF PIECES** | 1 |
| **TOTAL SHIPMENT WEIGHT** | 1.00 LB |
| **SERVICE TYPE** | FedEx Priority Overnight |


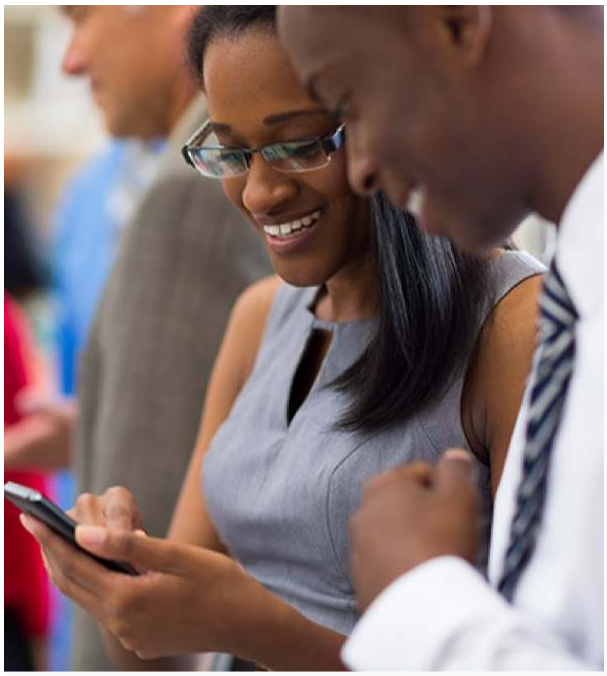

Get the FedEx® Mobile app

Create shipments, receive tracking alerts, redirect packages to a FedEx retail location for pickup, and more from the palm of your hand
- **Download now**.

Download on the App Store

GET IT ON Google Play

**Katie Adams**

**From:** TrackingUpdates@fedex.com
**Sent:** Wednesday, July 6, 2022 10:08 AM
**To:** Katie Adams
**Subject:** FedEx Shipment 777286954006: Your package has been delivered

# Hi. Your package was delivered Wed, 07/06/2022 at 10:06am.

Delivered to 300 GOVERNORS HWY, SOUTH WINDSOR, CT 06074

**OBTAIN PROOF OF DELIVERY**

| | |
|---|---|
| **TRACKING NUMBER** | 777286954006 |
| **FROM** | NB+C<br>100 Apollo Drive<br>Suite 303<br>CHELMSFORD, MA, US, 01824 |
| **TO** | Electron Technologies<br>300 Governors Highway<br>SOUTH WINDSOR, CT, US, 06074 |

| | |
|---|---|
| **REFERENCE** | 100788 - CSC |
| **SHIPPER REFERENCE** | 100788 - CSC |
| **SHIP DATE** | Tue 7/05/2022 06:28 PM |
| **PACKAGING TYPE** | FedEx Pak |
| **ORIGIN** | CHELMSFORD, MA, US, 01824 |
| **DESTINATION** | SOUTH WINDSOR, CT, US, 06074 |
| **SPECIAL HANDLING** | Deliver Weekday |
| **NUMBER OF PIECES** | 1 |
| **TOTAL SHIPMENT WEIGHT** | 1.00 LB |
| **SERVICE TYPE** | FedEx Priority Overnight |


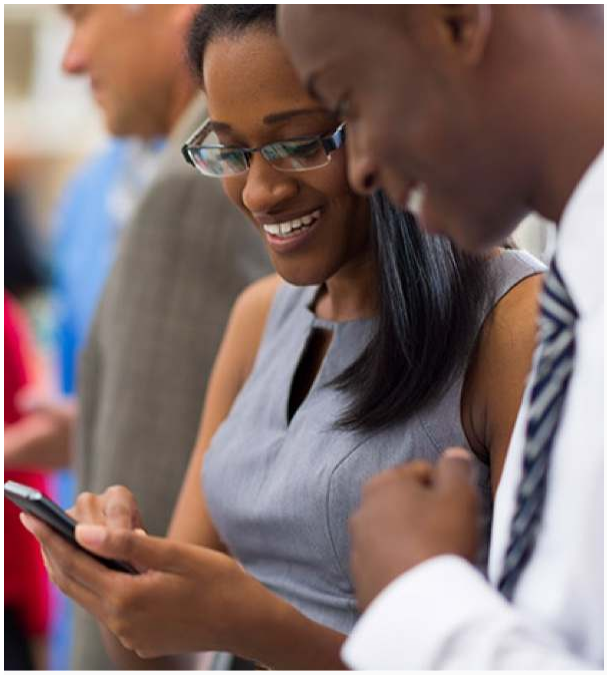

Get the FedEx® Mobile app

Create shipments, receive tracking alerts, redirect packages to a FedEx retail location for pickup, and more from the palm of your hand
**- Download now**.

Download on the App Store

GET IT ON Google Play



**FOLLOW FEDEX**

# Exhibit A

## Original  Facility Approval

Town of South Windsor
1540 SULLIVAN AVENUE • SOUTH WINDSOR, CT 06074-2786
AREA CODE 860/644-2511
FAX 860/644-3781

**CERTIFIED MAIL**

September 21, 1999

Mr. Thomas M. Gilligan
Omnipoint Communications, Inc.
100 Filley Street
Bloomfield, CT 06002

Dear Mr. Gilligan:

Re: Appl 99-51P, Omnipoint Communications Services

We are pleased to advise you that the Planning & Zoning Commission voted on September 14, 1999 to approve with modifications the above referenced application for a request for a Special Exception to Section XVI for the construction of a 175 ft. multi-carrier telecommunications monopole on property located at 300 Governor's Highway, I zone as shown on plans prepared by Arcnet, Job No. A 99506823A, dated 5/9/99, as revised. This approval is subject to the following modifications:

1. Prior to commencement of any site work, a meeting must be held with Town Staff.

2. No building permit will be issued until the final mylars have been filed in the Town Clerk's office.

3. An as-built plan is required prior to issuance of a Certificate of Occupancy per Section 8.1.10 of the Zoning Regulations.

4. All plans used in the field by the developer must bear the stamp and authorized signature of the Town of South Windsor.

5. Special Exception approval is granted for five years and must be renewed prior to September 14, 2004. The attached Special Exception form must be completed and filed in the Town Clerk's office. The special exception will take effect upon filing.

Black and white transparent mylars of Sheet S-1 with the above modifications, together with three blueprint copies of the entire set of plans must be submitted to this Commission within 30 days to be stamped and signed.

After the mylars have been signed by the Commission, they will be returned to you for filing in the Office of the Town Clerk. After filing these plans, a copy of the receipt must be submitted to the Planning Department.

Sincerely,

Sue W. Larsen /dlw

Sue W. Larsen, Chairperson
Planning and Zoning Commission

SL/dlw

Attachment

cc: Town Engineer
Chief Building Official
Assessor
Superintendent of Pollution Control
Fire Marshal

# Exhibit B

## Property Card

# 300 GOVERNORS HIGHWAY

| | | | |
|---|---|---|---|
| **Location** | 300 GOVERNORS HIGHWAY | **Mblu** | 71/ 22/ / / |
| **Acct#** | 36900300 | **Owner** | ELECTRON TECHNOLOGIES CORPORATIO |
| **Assessment** | $776,200 | **Appraisal** | $1,108,900 |
| **PID** | 2698 | **Building Count** | 1 |

## Current Value

| Appraisal | | | |
|---|---|---|---|
| **Valuation Year** | **Improvements** | **Land** | **Total** |
| 2017 | $628,200 | $480,700 | $1,108,900 |

| Assessment | | | |
|---|---|---|---|
| **Valuation Year** | **Improvements** | **Land** | **Total** |
| 2017 | $439,700 | $336,500 | $776,200 |

## Owner of Record

| | | | |
|---|---|---|---|
| **Owner** | ELECTRON TECHNOLOGIES CORPORATIO | **Sale Price** | $800,000 |
| **Co-Owner** | P.O.BOX 316 | **Certificate** | |
| **Address** | 300 GOVERNORS HIGHWAY<br>SOUTH WINDSOR, CT 06074 | **Book & Page** | 0540/0418 |
| | | **Sale Date** | 10/04/1988 |
| | | **Instrument** | 00 |

## Ownership History

| Ownership History | | | | | |
|---|---|---|---|---|---|
| **Owner** | **Sale Price** | **Certificate** | **Book & Page** | **Instrument** | **Sale Date** |
| ELECTRON TECHNOLOGIES CORPORATIO | $800,000 | | 0540/0418 | 00 | 10/04/1988 |

## Building Information

### Building 1 : Section 1

| | |
|---|---|
| **Year Built:** | 1965 |
| **Living Area:** | 22,060 |
| **Replacement Cost:** | $960,272 |
| **Building Percent Good:** | 63 |
| **Replacement Cost Less Depreciation:** | $605,000 |

| Building Attributes | |
|---|---|
| **Field** | **Description** |
| Style: | Light Industrial |
| Model | Comm/Ind |
| Grade | C |
| Stories: | 1.00 |
| Occupancy | 1.00 |
| Exterior Wall 1 | Precast Panel |
| Exterior Wall 2 | |
| Roof Structure | Flat |
| Roof Cover | Tar & Gravel |
| Interior Wall 1 | Minimum |
| Interior Wall 2 | Drywall |
| Interior Floor 1 | Concrete |
| Interior Floor 2 | Carpet |
| Heating Fuel | Gas |
| Heating Type | Forced Hot Air |
| % Central Air | 100 |
| Foundation | Poured Conc |
| Bldg Use | Industrial |
| Total Rooms | 0 |
| Total Bedrms | 0 |
| Total Fixtures | 12 |
| % Wet Sprinkler | |
| % Dry Sprinkler | |
| 1st Floor Use | |
| Heat/AC | HEAT/AC SPLIT |
| Frame Type | MASONRY |
| Baths/Plumbing | AVERAGE |
| % Finished | 25 |
| Class | C |
| Wall Height | 16.00 |

### Building Photo

(https://images.vgsi.com/photos/SouthWindsorCTPhotos//\00\01\76\96.jpg)

### Building Layout

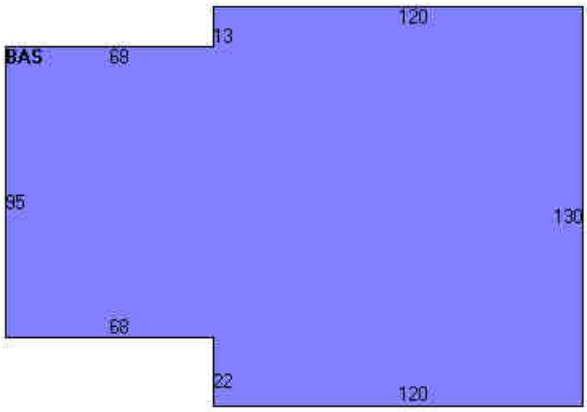


(https://images.vgsi.com/photos/SouthWindsorCTPhotos//Sketches/2698_

| Building Sub-Areas (sq ft) | | | Legend |
|---|---|---|---|
| **Code** | **Description** | **Gross Area** | **Living Area** |
| BAS | First Floor | 22,060 | 22,060 |
| | | 22,060 | 22,060 |

## Extra Features

| Extra Features | Legend |
|---|---|
| No Data for Extra Features | |

## Land

### Land Use

### Land Line Valuation

| | | | |
|---|---|---|---|
| **Use Code** | 301 | **Size (Acres)** | 6.03 |
| **Description** | Industrial | **Frontage** | 0 |
| **Zone** | I | **Depth** | 0 |
| **Neighborhood** | C400 | **Assessed Value** | $336,500 |
| **Alt Land Appr** | No | **Appraised Value** | $480,700 |
| **Category** | | | |

## Outbuildings

| Outbuildings | | | | | | Legend |
|---|---|---|---|---|---|---|
| **Code** | **Description** | **Sub Code** | **Sub Description** | **Size** | **Value** | **Bldg #** |
| PAV1 | Paving | AS | Asphalt | 36700.00 S.F. | $19,300 | 1 |
| FN1 | Fence | | | 1080.00 L.F. | $3,200 | 1 |
| LT1 | Lights | | | 1.00 UNITS | $700 | 1 |

## Valuation History

| Appraisal | | | |
|---|---|---|---|
| **Valuation Year** | **Improvements** | **Land** | **Total** |
| 2019 | $628,200 | $480,700 | $1,108,900 |
| 2018 | $628,200 | $480,700 | $1,108,900 |
| 2017 | $628,200 | $480,700 | $1,108,900 |

| Assessment | | | |
|---|---|---|---|
| **Valuation Year** | **Improvements** | **Land** | **Total** |
| 2019 | $439,700 | $336,500 | $776,200 |
| 2018 | $439,700 | $336,500 | $776,200 |
| 2017 | $439,700 | $336,500 | $776,200 |

(c) 2022 Vision Government Solutions, Inc. All rights reserved.

# Exhibit C

## Construction Drawings

# verizon

**VERIZON SITE NUMBER:** 467434
**VERIZON SITE NAME:** SOUTH WINDSOR 2 CT
**VERIZON FUZE ID:** 16092601
**SITE TYPE:** MONOPOLE
**TOWER HEIGHT:** 169'-0"

**BUSINESS UNIT #:** 828054
**SITE ADDRESS:** 300 GOVERNORS HWY
SOUTH WINDSOR, CT 06074
**COUNTY:** HARTFORD
**JURISDICTION:** CONNECTICUT SITING COUNCIL

## VERIZON MODIFICATION;4G_850,5G_850,5G_L-SUB6-PREP

## SITE INFORMATION

| | |
|---|---|
| CROWN CASTLE USA INC. SITE NAME: | SOUTH WINDSOR/RT 5 |
| SITE ADDRESS: | 300 GOVERNORS HWY<br>SOUTH WINDSOR, CT 06074 |
| COUNTY: | HARTFORD |
| MAP/PARCEL #: | 71-22 |
| AREA OF CONSTRUCTION: | EXISTING |
| LATITUDE: | 41° 50' 0.40" |
| LONGITUDE: | -72° 36' 11.00" |
| LAT/LONG TYPE: | NAD83 |
| GROUND ELEVATION: | 82 FT |
| CURRENT ZONING: | I |
| JURISDICTION: | CONNECTICUT SITING COUNCIL |
| OCCUPANCY CLASSIFICATION: | U |
| TYPE OF CONSTRUCTION: | IIB |
| A.D.A. COMPLIANCE: | FACILITY IS UNMANNED AND NOT FOR HUMAN HABITATION |
| PROPERTY OWNER: | ELECTRON TECHNOLOGIES CORPORATION<br>300 GOVERNORS HIGHWAY<br>SOUTH WINDSOR, CT 06074 |
| TOWER OWNER: | CROWN CASTLE<br>2000 CORPORATE DRIVE<br>CANONSBURG, PA 15317 |
| CARRIER/APPLICANT: | VERIZON WIRELESS<br>180 WASHINGTON VALLEY ROAD<br>BEDMINSTER, NJ 07921 |
| ELECTRIC PROVIDER: | CONNECTICUT LIGHT & POWER CO<br>(800)-286-2000 |
| TELCO PROVIDER: | AT&T<br>(833) 205-0045 |

## PROJECT TEAM

| | |
|---|---|
| A&E FIRM: | TOWER ENGINEERING PROFESSIONALS<br>326 TRYON ROAD<br>RALEIGH, NC 27603<br>(919) 661-6351<br>JOSEPH T. CRESS - PROJECT MANAGER<br>SCOTT C. BRANTLEY - CIVIL ENGINEER |
| CROWN CASTLE USA INC. DISTRICT CONTACTS: | 6325 ARDREY KELL ROAD, SUITE 600<br>CHARLOTTE, NC 28277<br>SARA REA LOADHOLDT - A&E SPECIALIST<br>(704) 405-6548 |

## DRAWING INDEX



| SHEET # | SHEET DESCRIPTION |
|---|---|
| T-1 | TITLE SHEET |
| T-2 | GENERAL NOTES |
| C-1 | SITE PLAN |
| C-2 | TOWER ELEVATION & ANTENNA PLANS |
| C-3 | EQUIPMENT SCHEDULES |
| C-4 | EQUIPMENT DETAILS |
| C-5 | EQUIPMENT DETAILS |
| C-6 | PLUMBING DIAGRAM |
| G-1 | GROUNDING DETAILS |
| G-2 | GROUNDING DETAILS |
| | |
| APPENDIX | MOUNT MODIFICATION DRAWINGS |
| | |



ALL DRAWINGS CONTAINED HEREIN ARE FORMATTED FOR FULL SIZE. CONTRACTOR SHALL VERIFY ALL PLANS AND EXISTING DIMENSIONS AND CONDITIONS ON THE JOB SITE AND SHALL IMMEDIATELY NOTIFY THE ENGINEER IN WRITING OF ANY DISCREPANCIES BEFORE PROCEEDING WITH THE WORK OR BE RESPONSIBLE FOR SAME.

## APPROVALS

| SIGNATURE | DATE |
|---|---|
| | |
| | |
| | |
| | |
| | |

## CONTRACTOR PMI REQUIREMENTS

| | |
|---|---|
| PMI ACCESSED AT | https://pmi.vxwsmart.com |
| SMART TOOL VENDOR PROJECT NUMBER | 10145262 |
| VzW LOCATION CODE (PSLC) | **467434** |

*** PMI AND REQUIREMENTS ALSO EMBEDDED IN MOUNT ANALYSIS REPORT

| MOUNT MODIFICATION REQUIRED | Y |
|---|---|

**VzW APPROVED SMART KIT VENDORS**

REFER TO MOUNT MODIFICATION DRAWINGS PAGE FOR VzW SMART KIT APPROVED VENDORS

## LOCATION MAP

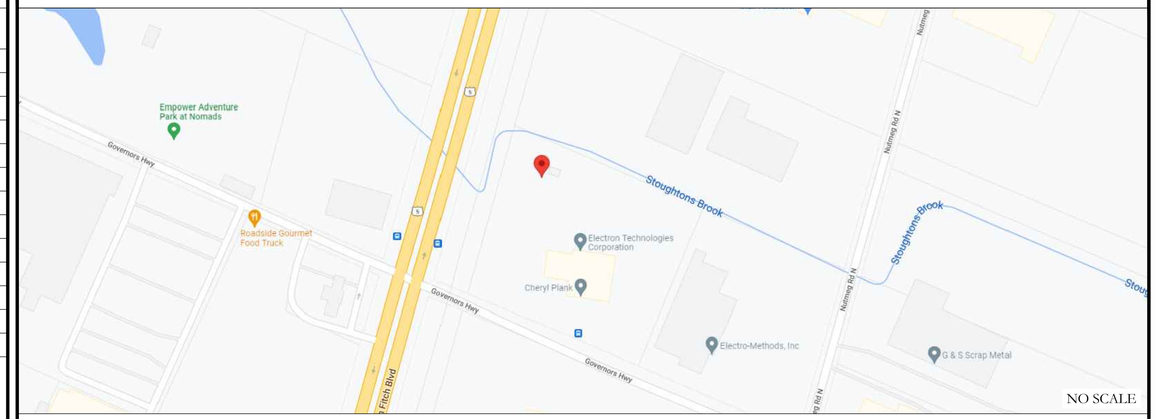


NO SCALE

DRIVING DIRECTIONS FROM VERIZON LOCAL OFFICE (2912 MAIN ST, GLASTONBURY, CT 06033)
HEAD NORTH TOWARD MAIN ST. TURN LEFT TOWARD MAIN ST. TURN RIGHT ONTO MAIN ST. CONTINUE ONTO KING ST. CONTINUE ONTO US-5 N/ELLINGTON RD.

## APPLICABLE CODES/REFERENCE DOCUMENTS

ALL WORK SHALL BE PERFORMED AND MATERIALS INSTALLED IN ACCORDANCE WITH THE CURRENT EDITIONS OF THE FOLLOWING CODES AS ADOPTED BY THE LOCAL GOVERNING AUTHORITIES. NOTHING IN THESE PLANS IS TO BE CONSTRUED TO PERMIT WORK NOT CONFORMING TO THESE CODES:

| CODE TYPE | CODE |
|---|---|
| BUILDING | 2015 IBC |
| MECHANICAL | 2015 IMC |
| ELECTRICAL | 2017 NEC |

REFERENCE DOCUMENTS:

| | |
|---|---|
| STRUCTURAL ANALYSIS: | PAUL J FORD & COMPANY |
| DATED: | 05/17/2022 |
| MOUNT ANALYSIS: | MASER CONSULTING CONNECTICUT |
| DATED: | 04/25/2022 |
| RFDS REVISION: | 1 |
| DATED: | 03/28/2022 |
| ORDER ID: | 617722 |
| REVISION: | 0 |

CALL CONNECTICUT ONE CALL
(800) 922-4455 CBYD.COM
CALL 2 WORKING DAYS
BEFORE YOU DIG!

## PROJECT DESCRIPTION

THE PURPOSE OF THIS PROJECT IS TO ENHANCE BROADBAND CONNECTIVITY AND CAPACITY TO THE EXISTING ELIGIBLE WIRELESS FACILITY.

TOWER SCOPE OF WORK:
- REMOVE (9) ANTENNAS
- REMOVE (6) RRHs
- REMOVE (1) 6-OVP
- REMOVE (1) HYBRID
- INSTALL PLATFORM MOUNT MODIFICATIONS
- INSTALL (3) SIDE-BY-SIDE ANTENAN MOUNTING BRACKET
- INSTALL (9) ANTENNAS
- INSTALL (9) RRHs
- INSTALL (2) 12-OVP
- INSTALL (2) HYBRID

NOTE:
PRIOR TO ACCESSING/ENTERING THE SITE YOU MUST CONTACT THE CROWN NOC AT (800) 788-7011 & CROWN CONSTRUCTION MANAGER


verizon
20 ALEXANDER DRIVE, 2ND FLOOR
WALLINGFORD, CT 06492

CROWN CASTLE
1200 MACARTHUR BLVD, SUITE 200
MAHWAH, NJ 07430

TOWER ENGINEERING PROFESSIONALS
326 TRYON RD
RALEIGH, NC 27603
(919) 661-6351
TEP JOB #: 47923.702033


VERIZON SITE NUMBER:
**467434**

BU #: **828054**
**SOUTH WINDSOR/RT 5**

300 GOVERNORS HWY
SOUTH WINDSOR, CT 06074

EXISTING 169'-0" MONOPOLE

**ISSUED FOR:**

| REV | DATE | DRWN | DESCRIPTION | DES./QA |
|---|---|---|---|---|
| 0 | 05/27/22 | ODS | CONSTRUCTION | RST |
| | | | | |
| | | | | |
| | | | | |
| | | | | |

STATE OF CONNECTICUT
SCOTT C. BRANTLEY
35536
LICENSED
PROFESSIONAL ENGINEER

05/27/22


IT IS A VIOLATION OF LAW FOR ANY PERSON, UNLESS THEY ARE ACTING UNDER THE DIRECTION OF A LICENSED PROFESSIONAL ENGINEER, TO ALTER THIS DOCUMENT.


**SHEET NUMBER:** T-1
**REVISION:** 0

## CROWN CASTLE USA INC. SITE ACTIVITY REQUIREMENTS:

1. NOTICE TO PROCEED– NO WORK SHALL COMMENCE PRIOR TO CROWN CASTLE USA INC. WRITTEN NOTICE TO PROCEED (NTP) AND THE ISSUANCE OF A PURCHASE ORDER. PRIOR TO ACCESSING/ENTERING THE SITE YOU MUST CONTACT THE CROWN CASTLE USA INC. NOC AT 800–788–7011 & THE CROWN CASTLE USA INC. CONSTRUCTION MANAGER.
2. "LOOK UP" – CROWN CASTLE USA INC. SAFETY CLIMB REQUIREMENT:
THE INTEGRITY OF THE SAFETY CLIMB AND ALL COMPONENTS OF THE CLIMBING FACILITY SHALL BE CONSIDERED DURING ALL STAGES OF DESIGN, INSTALLATION, AND INSPECTION. TOWER MODIFICATION, MOUNT REINFORCEMENTS, AND/OR EQUIPMENT INSTALLATIONS SHALL NOT COMPROMISE THE INTEGRITY OR FUNCTIONAL USE OF THE SAFETY CLIMB OR ANY COMPONENTS OF THE CLIMBING FACILITY ON THE STRUCTURE. THIS SHALL INCLUDE, BUT NOT BE LIMITED TO: PINCHING OF THE WIRE ROPE, BENDING OF THE WIRE ROPE FROM ITS SUPPORTS, DIRECT CONTACT OR CLOSE PROXIMITY TO THE WIRE ROPE WHICH MAY CAUSE FRICTIONAL WEAR, IMPACT TO THE ANCHORAGE POINTS IN ANY WAY, OR TO IMPEDE/BLOCK ITS INTENDED USE. ANY COMPROMISED SAFETY CLIMB, INCLUDING EXISTING CONDITIONS MUST BE TAGGED OUT AND REPORTED TO YOUR CROWN CASTLE USA INC. POC OR CALL THE NOC TO GENERATE A SAFETY CLIMB MAINTENANCE AND CONTRACTOR NOTICE TICKET.
3. PRIOR TO THE START OF CONSTRUCTION, ALL REQUIRED JURISDICTIONAL PERMITS SHALL BE OBTAINED. THIS INCLUDES, BUT IS NOT LIMITED TO, BUILDING, ELECTRICAL, MECHANICAL, FIRE, FLOOD ZONE, ENVIRONMENTAL, AND ZONING. AFTER ONSITE ACTIVITIES AND CONSTRUCTION ARE COMPLETED, ALL REQUIRED PERMITS SHALL BE SATISFIED AND CLOSED OUT ACCORDING TO LOCAL JURISDICTIONAL REQUIREMENTS.
4. ALL CONSTRUCTION MEANS AND METHODS; INCLUDING BUT NOT LIMITED TO, ERECTION PLANS, RIGGING PLANS, CLIMBING PLANS, AND RESCUE PLANS SHALL BE THE RESPONSIBILITY OF THE GENERAL CONTRACTOR RESPONSIBLE FOR THE EXECUTION OF THE WORK CONTAINED HEREIN, AND SHALL MEET ANSI/ASSE A10.48 (LATEST EDITION); FEDERAL, STATE, AND LOCAL REGULATIONS; AND ANY APPLICABLE INDUSTRY CONSENSUS STANDARDS RELATED TO THE CONSTRUCTION ACTIVITIES BEING PERFORMED. ALL RIGGING PLANS SHALL ADHERE TO ANSI/ASSE A10.48 (LATEST EDITION) AND CROWN CASTLE USA INC. STANDARD CED–STD–10253, INCLUDING THE REQUIRED INVOLVEMENT OF A QUALIFIED ENGINEER FOR CLASS IV CONSTRUCTION, TO CERTIFY THE SUPPORTING STRUCTURE(S) IN ACCORDANCE WITH ANSI/TIA–322 (LATEST EDITION).
5. ALL SITE WORK TO COMPLY WITH QAS–STD–10068 "INSTALLATION STANDARDS FOR CONSTRUCTION ACTIVITIES ON CROWN CASTLE USA INC. TOWER SITE," CED–STD–10294 "STANDARD FOR INSTALLATION OF MOUNTS AND APPURTENANCES," AND LATEST VERSION OF ANSI/TIA–1019–A–2012 "STANDARD FOR INSTALLATION, ALTERATION, AND MAINTENANCE OF ANTENNA SUPPORTING STRUCTURES AND ANTENNAS."
6. IF THE SPECIFIED EQUIPMENT CAN NOT BE INSTALLED AS SHOWN ON THESE DRAWINGS, THE CONTRACTOR SHALL PROPOSE AN ALTERNATIVE INSTALLATION FOR APPROVAL BY CROWN CASTLE USA INC. PRIOR TO PROCEEDING WITH ANY SUCH CHANGE OF INSTALLATION.
7. ALL MATERIALS FURNISHED AND INSTALLED SHALL BE IN STRICT ACCORDANCE WITH ALL APPLICABLE CODES, REGULATIONS AND ORDINANCES. CONTRACTOR SHALL ISSUE ALL APPROPRIATE NOTICES AND COMPLY WITH ALL LAWS, ORDINANCES, RULES, REGULATIONS AND LAWFUL ORDERS OF ANY PUBLIC AUTHORITY REGARDING THE PERFORMANCE OF THE WORK. ALL WORK CARRIED OUT SHALL COMPLY WITH ALL APPLICABLE MUNICIPAL AND UTILITY COMPANY SPECIFICATIONS AND LOCAL JURISDICTIONAL CODES, ORDINANCES AND APPLICABLE REGULATIONS.
8. THE CONTRACTOR SHALL INSTALL ALL EQUIPMENT AND MATERIALS IN ACCORDANCE WITH MANUFACTURER'S RECOMMENDATIONS UNLESS SPECIFICALLY STATED OTHERWISE.
9. THE CONTRACTOR SHALL CONTACT UTILITY LOCATING SERVICES PRIOR TO THE START OF CONSTRUCTION.
10. ALL EXISTING ACTIVE SEWER, WATER, GAS, ELECTRIC AND OTHER UTILITIES WHERE ENCOUNTERED IN THE WORK, SHALL BE PROTECTED AT ALL TIMES AND WHERE REQUIRED FOR THE PROPER EXECUTION OF THE WORK, SHALL BE RELOCATED AS DIRECTED BY CONTRACTOR. EXTREME CAUTION SHOULD BE USED BY THE CONTRACTOR WHEN EXCAVATING OR DRILLING PIERS AROUND OR NEAR UTILITIES. CONTRACTOR SHALL PROVIDE SAFETY TRAINING FOR THE WORKING CREW. THIS WILL INCLUDE BUT NOT BE LIMITED TO A) FALL PROTECTION B) CONFINED SPACE C) ELECTRICAL SAFETY D) TRENCHING AND EXCAVATION E) CONSTRUCTION SAFETY PROCEDURES.
11. ALL SITE WORK SHALL BE AS INDICATED ON THE STAMPED CONSTRUCTION DRAWINGS AND PROJECT SPECIFICATIONS, LATEST APPROVED REVISION.
12. CONTRACTOR SHALL KEEP THE SITE FREE FROM ACCUMULATING WASTE MATERIAL, DEBRIS, AND TRASH AT THE COMPLETION OF THE WORK. IF NECESSARY, RUBBISH, STUMPS, DEBRIS, STICKS, STONES AND OTHER REFUSE SHALL BE REMOVED FROM THE SITE AND DISPOSED OF LEGALLY.
13. ALL EXISTING INACTIVE SEWER, WATER, GAS, ELECTRIC AND OTHER UTILITIES, WHICH INTERFERE WITH THE EXECUTION OF THE WORK, SHALL BE REMOVED AND/OR CAPPED, PLUGGED OR OTHERWISE DISCONTINUED AT POINTS WHICH WILL NOT INTERFERE WITH THE EXECUTION OF THE WORK, SUBJECT TO THE APPROVAL OF CONTRACTOR, TOWER OWNER, CROWN CASTLE USA INC., AND/OR LOCAL UTILITIES.
14. THE CONTRACTOR SHALL PROVIDE SITE SIGNAGE IN ACCORDANCE WITH THE TECHNICAL SPECIFICATION FOR SITE SIGNAGE REQUIRED BY LOCAL JURISDICTION AND SIGNAGE REQUIRED ON INDIVIDUAL PIECES OF EQUIPMENT, ROOMS, AND SHELTERS.
15. THE SITE SHALL BE GRADED TO CAUSE SURFACE WATER TO FLOW AWAY FROM THE CARRIER'S EQUIPMENT AND TOWER AREAS.
16. THE SUB GRADE SHALL BE COMPACTED AND BROUGHT TO A SMOOTH UNIFORM GRADE PRIOR TO FINISHED SURFACE APPLICATION.
17. THE AREAS OF THE OWNERS PROPERTY DISTURBED BY THE WORK AND NOT COVERED BY THE TOWER, EQUIPMENT OR DRIVEWAY, SHALL BE GRADED TO A UNIFORM SLOPE, AND STABILIZED TO PREVENT EROSION AS SPECIFIED ON THE CONSTRUCTION DRAWINGS AND/OR PROJECT SPECIFICATIONS.
18. CONTRACTOR SHALL MINIMIZE DISTURBANCE TO EXISTING SITE DURING CONSTRUCTION. EROSION CONTROL MEASURES, IF REQUIRED DURING CONSTRUCTION, SHALL BE IN CONFORMANCE WITH THE LOCAL GUIDELINES FOR EROSION AND SEDIMENT CONTROL.
19. THE CONTRACTOR SHALL PROTECT EXISTING IMPROVEMENTS, PAVEMENTS, CURBS, LANDSCAPING AND STRUCTURES. ANY DAMAGED PART SHALL BE REPAIRED AT CONTRACTOR'S EXPENSE TO THE SATISFACTION OF OWNER.
20. CONTRACTOR SHALL LEGALLY AND PROPERLY DISPOSE OF ALL SCRAP MATERIALS SUCH AS COAXIAL CABLES AND OTHER ITEMS REMOVED FROM THE EXISTING FACILITY. ANTENNAS REMOVED SHALL BE RETURNED TO THE OWNER'S DESIGNATED LOCATION.
21. CONTRACTOR SHALL LEAVE PREMISES IN CLEAN CONDITION. TRASH AND DEBRIS SHOULD BE REMOVED FROM SITE ON A DAILY BASIS.
22. NO FILL OR EMBANKMENT MATERIAL SHALL BE PLACED ON FROZEN GROUND. FROZEN MATERIALS, SNOW OR ICE SHALL NOT BE PLACED IN ANY FILL OR EMBANKMENT.

## GENERAL NOTES:

1. FOR THE PURPOSE OF CONSTRUCTION DRAWING, THE FOLLOWING DEFINITIONS SHALL APPLY:
CONTRACTOR: GENERAL CONTRACTOR RESPONSIBLE FOR CONSTRUCTION
CARRIER: VERIZON
TOWER OWNER: CROWN CASTLE USA INC.
2. THESE DRAWINGS HAVE BEEN PREPARED USING STANDARDS OF PROFESSIONAL CARE AND COMPLETENESS NORMALLY EXERCISED UNDER SIMILAR CIRCUMSTANCES BY REPUTABLE ENGINEERS IN THIS OR SIMILAR LOCALITIES. IT IS ASSUMED THAT THE WORK DEPICTED WILL BE PERFORMED BY AN EXPERIENCED CONTRACTOR AND/OR WORKPEOPLE WHO HAVE A WORKING KNOWLEDGE OF THE APPLICABLE CODE STANDARDS AND REQUIREMENTS AND OF INDUSTRY ACCEPTED STANDARD GOOD PRACTICE. AS NOT EVERY CONDITION OR ELEMENT IS (OR CAN BE) EXPLICITLY SHOWN ON THESE DRAWINGS, THE CONTRACTOR SHALL USE INDUSTRY ACCEPTED STANDARD GOOD PRACTICE FOR MISCELLANEOUS WORK NOT EXPLICITLY SHOWN.
3. THESE DRAWINGS REPRESENT THE FINISHED STRUCTURE. THEY DO NOT INDICATE THE MEANS OR METHODS OF CONSTRUCTION. THE CONTRACTOR SHALL BE SOLELY RESPONSIBLE FOR THE CONSTRUCTION MEANS, METHODS, TECHNIQUES, SEQUENCES, AND PROCEDURES. THE CONTRACTOR SHALL PROVIDE ALL MEASURES NECESSARY FOR PROTECTION OF LIFE AND PROPERTY DURING CONSTRUCTION. SUCH MEASURES SHALL INCLUDE, BUT NOT BE LIMITED TO, BRACING, FORMWORK, SHORING, ETC. SITE VISITS BY THE ENGINEER OR HIS REPRESENTATIVE WILL NOT INCLUDE INSPECTION OF THESE ITEMS AND IS FOR STRUCTURAL OBSERVATION OF THE FINISHED STRUCTURE ONLY.
4. NOTES AND DETAILS IN THE CONSTRUCTION DRAWINGS SHALL TAKE PRECEDENCE OVER GENERAL NOTES AND TYPICAL DETAILS. WHERE NO DETAILS ARE SHOWN, CONSTRUCTION SHALL CONFORM TO SIMILAR WORK ON THE PROJECT, AND/OR AS PROVIDED FOR IN THE CONTRACT DOCUMENTS. WHERE DISCREPANCIES OCCUR BETWEEN PLANS, DETAILS, GENERAL NOTES, AND SPECIFICATIONS, THE GREATER, MORE STRICT REQUIREMENTS, SHALL GOVERN. IF FURTHER CLARIFICATION IS REQUIRED CONTACT THE ENGINEER OF RECORD.
5. SUBSTANTIAL EFFORT HAS BEEN MADE TO PROVIDE ACCURATE DIMENSIONS AND MEASUREMENTS ON THE DRAWINGS TO ASSIST IN THE FABRICATION AND/OR PLACEMENT OF CONSTRUCTION ELEMENTS BUT IT IS THE SOLE RESPONSIBILITY OF THE CONTRACTOR TO FIELD VERIFY THE DIMENSIONS, MEASUREMENTS, AND/OR CLEARANCES SHOWN IN THE CONSTRUCTION DRAWINGS PRIOR TO FABRICATION OR CUTTING OF ANY NEW OR EXISTING CONSTRUCTION ELEMENTS. IF IT IS DETERMINED THAT THERE ARE DISCREPANCIES AND/OR CONFLICTS WITH THE CONSTRUCTION DRAWINGS THE ENGINEER OF RECORD IS TO BE NOTIFIED AS SOON AS POSSIBLE.
6. PRIOR TO THE SUBMISSION OF BIDS, THE BIDDING CONTRACTOR SHALL VISIT THE CELL SITE TO FAMILIARIZE WITH THE EXISTING CONDITIONS AND TO CONFIRM THAT THE WORK CAN BE ACCOMPLISHED AS SHOWN ON THE CONSTRUCTION DRAWINGS. ANY DISCREPANCY FOUND SHALL BE BROUGHT TO THE ATTENTION OF CROWN CASTLE.
7. ALL MATERIALS FURNISHED AND INSTALLED SHALL BE IN STRICT ACCORDANCE WITH ALL APPLICABLE CODES, REGULATIONS AND ORDINANCES. CONTRACTOR SHALL ISSUE ALL APPROPRIATE NOTICES AND COMPLY WITH ALL LAWS, ORDINANCES, RULES, REGULATIONS AND LAWFUL ORDERS OF ANY PUBLIC AUTHORITY REGARDING THE PERFORMANCE OF THE WORK. ALL WORK CARRIED OUT SHALL COMPLY WITH ALL APPLICABLE MUNICIPAL AND UTILITY COMPANY SPECIFICATIONS AND LOCAL JURISDICTIONAL CODES, ORDINANCES AND APPLICABLE REGULATIONS.
8. UNLESS NOTED OTHERWISE, THE WORK SHALL INCLUDE FURNISHING MATERIALS, EQUIPMENT, APPURTENANCES AND LABOR NECESSARY TO COMPLETE ALL INSTALLATIONS AS INDICATED ON THE DRAWINGS.
9. THE CONTRACTOR SHALL INSTALL ALL EQUIPMENT AND MATERIALS IN ACCORDANCE WITH MANUFACTURER'S RECOMMENDATIONS UNLESS SPECIFICALLY STATED OTHERWISE.
10. IF THE SPECIFIED EQUIPMENT CAN NOT BE INSTALLED AS SHOWN ON THESE DRAWINGS, THE CONTRACTOR SHALL PROPOSE AN ALTERNATIVE INSTALLATION FOR APPROVAL BY THE CARRIER AND CROWN CASTLE PRIOR TO PROCEEDING WITH ANY SUCH CHANGE OF INSTALLATION.
11. CONTRACTOR IS TO PERFORM A SITE INVESTIGATION AND IS TO DETERMINE THE BEST ROUTING OF ALL CONDUITS FOR POWER, AND TELCO AND FOR GROUNDING CABLES AS SHOWN IN THE POWER, TELCO, AND GROUNDING PLAN DRAWINGS.
12. THE CONTRACTOR SHALL PROTECT EXISTING IMPROVEMENTS, PAVEMENTS, CURBS, LANDSCAPING AND STRUCTURES. ANY DAMAGED PART SHALL BE REPAIRED AT CONTRACTOR'S EXPENSE TO THE SATISFACTION OF CROWN CASTLE USA INC.
13. CONTRACTOR SHALL LEGALLY AND PROPERLY DISPOSE OF ALL SCRAP MATERIALS SUCH AS COAXIAL CABLES AND OTHER ITEMS REMOVED FROM THE EXISTING FACILITY. ANTENNAS REMOVED SHALL BE RETURNED TO THE OWNER'S DESIGNATED LOCATION.
14. CONTRACTOR SHALL LEAVE PREMISES IN CLEAN CONDITION. TRASH AND DEBRIS SHOULD BE REMOVED FROM SITE ON A DAILY BASIS.

## CONCRETE, FOUNDATIONS, AND REINFORCING STEEL:

1. ALL CONCRETE WORK SHALL BE IN ACCORDANCE WITH THE ACI 301, ACI 318, ACI 336, ASTM A184, ASTM A185 AND THE DESIGN AND CONSTRUCTION SPECIFICATION FOR CAST–IN–PLACE CONCRETE.
2. UNLESS NOTED OTHERWISE, SOIL BEARING PRESSURE USED FOR DESIGN OF SLABS AND FOUNDATIONS IS ASSUMED TO BE 1000 psf.
3. ALL CONCRETE SHALL HAVE A MINIMUM COMPRESSIVE STRENGTH (f'c) OF 3000 psi AT 28 DAYS, UNLESS NOTED OTHERWISE. NO MORE THAN 90 MINUTES SHALL ELAPSE FROM BATCH TIME TO TIME OF PLACEMENT UNLESS APPROVED BY THE ENGINEER OF RECORD. TEMPERATURE OF CONCRETE SHALL NOT EXCEED 90°f AT TIME OF PLACEMENT.
4. CONCRETE EXPOSED TO FREEZE–THAW CYCLES SHALL CONTAIN AIR ENTRAINING ADMIXTURES. AMOUNT OF AIR ENTRAINMENT TO BE BASED ON SIZE OF AGGREGATE AND F3 CLASS EXPOSURE (VERY SEVERE). CEMENT USED TO BE TYPE II PORTLAND CEMENT WITH A MAXIMUM WATER–TO–CEMENT RATIO (W/C) OF 0.45.
5. ALL STEEL REINFORCING SHALL CONFORM TO ASTM A615. ALL WELDED WIRE FABRIC (WWF) SHALL CONFORM TO ASTM A185. ALL SPLICES SHALL BE CLASS "B" TENSION SPLICES, UNLESS NOTED OTHERWISE. ALL HOOKS SHALL BE STANDARD 90 DEGREE HOOKS, UNLESS NOTED OTHERWISE. YIELD STRENGTH (Fy) OF STANDARD DEFORMED BARS ARE AS FOLLOWS:
#4 BARS AND SMALLER........40 ksi
#5 BARS AND LARGER........60 ksi
6. THE FOLLOWING MINIMUM CONCRETE COVER SHALL BE PROVIDED FOR REINFORCING STEEL UNLESS SHOWN OTHERWISE ON DRAWINGS:
CONCRETE CAST AGAINST AND PERMANENTLY EXPOSED TO EARTH........3"
CONCRETE EXPOSED TO EARTH OR WEATHER:
#6 BARS AND LARGER........2"
#5 BARS AND SMALLER........1–1/2"
CONCRETE NOT EXPOSED TO EARTH OR WEATHER:
SLAB AND WALLS........3/4"
BEAMS AND COLUMNS........1–1/2"
7. A TOOLED EDGE OR A 3/4" CHAMFER SHALL BE PROVIDED AT ALL EXPOSED EDGES OF CONCRETE, UNLESS NOTED OTHERWISE, IN ACCORDANCE WITH ACI 301 SECTION 4.2.4.

## ELECTRICAL INSTALLATION NOTES:

1. ALL ELECTRICAL WORK SHALL BE PERFORMED IN ACCORDANCE WITH THE PROJECT SPECIFICATIONS, NEC AND ALL APPLICABLE FEDERAL, STATE, AND LOCAL CODES/ORDINANCES.
2. CONDUIT ROUTINGS ARE SCHEMATIC. CONTRACTOR SHALL INSTALL CONDUITS SO THAT ACCESS TO EQUIPMENT IS NOT BLOCKED AND TRIP HAZARDS ARE ELIMINATED.
3. WIRING, RACEWAY AND SUPPORT METHODS AND MATERIALS SHALL COMPLY WITH THE REQUIREMENTS OF THE NEC.
4. ALL CIRCUITS SHALL BE SEGREGATED AND MAINTAIN MINIMUM CABLE SEPARATION AS REQUIRED BY THE NEC.
4.1. ALL EQUIPMENT SHALL BEAR THE UNDERWRITERS LABORATORIES LABEL OF APPROVAL, AND SHALL CONFORM TO REQUIREMENT OF THE NATIONAL ELECTRICAL CODE.
4.2. ALL OVERCURRENT DEVICES SHALL HAVE AN INTERRUPTING CURRENT RATING THAT SHALL BE GREATER THAN THE SHORT CIRCUIT CURRENT TO WHICH THEY ARE SUBJECTED, 22,000 AIC MINIMUM. VERYIFY AVAILABLE SHORT CIRCUIT CURRENT DOES NOT EXCEED THE RATING OF ELECTRICAL EQUIPMENT IN ACCORDANCE WITH ARTICLE 110.24 NEC OR THE MOST CURRENT ADOPTED CODE PRE THE GOVERNING JURISDICTION.
5. EACH END OF EVERY POWER PHASE CONDUCTOR, GROUNDING CONDUCTOR, AND TELCO CONDUCTOR OR CABLE SHALL BE LABELED WITH COLOR–CODED INSULATION OR ELECTRICAL TAPE (3M BRAND, 1/2" PLASTIC ELECTRICAL TAPE WITH UV PROTECTION, OR EQUAL). THE IDENTIFICATION METHOD SHALL CONFORM WITH NEC AND OSHA.
6. ALL ELECTRICAL COMPONENTS SHALL BE CLEARLY LABELED WITH LAMICOID TAGS SHOWING THEIR RATED VOLTAGE, PHASE CONFIGURATION, WIRE CONFIGURATION, POWER OR AMPACITY RATING AND BRANCH CIRCUIT ID NUMBERS (i.e. PANEL BOARD AND CIRCUIT ID'S).
7. PANEL BOARDS (ID NUMBERS) SHALL BE CLEARLY LABELED WITH PLASTIC LABELS.
8. ALL TIE WRAPS SHALL BE CUT FLUSH WITH APPROVED CUTTING TOOL TO REMOVE SHARP EDGES.
9. ALL POWER AND EQUIPMENT GROUND WIRING IN TUBING OR CONDUIT SHALL BE SINGLE COPPER CONDUCTOR (#14 OR LARGER) WITH TYPE THHW, THWN, THWN–2, XHHW, XHHW–2, THW, THW–2, RHW, OR RHW–2 INSULATION UNLESS OTHERWISE SPECIFIED.
10. SUPPLEMENTAL EQUIPMENT GROUND WIRING LOCATED INDOORS SHALL BE SINGLE COPPER CONDUCTOR (#6 OR LARGER) WITH TYPE THHW, THWN, THWN–2, XHHW, XHHW–2, THW, THW–2, RHW, OR RHW–2 INSULATION UNLESS OTHERWISE SPECIFIED.
11. POWER AND CONTROL WIRING IN FLEXIBLE CORD SHALL BE MULTI–CONDUCTOR, TYPE SOOW CORD (#14 OR LARGER) UNLESS OTHERWISE SPECIFIED.
12. POWER AND CONTROL WIRING FOR USE IN CABLE TRAY SHALL BE MULTI–CONDUCTOR, TYPE TC CABLE (#14 OR LARGER), WITH TYPE THHW, THWN, THWN–2, XHHW, XHHW–2, THW, THW–2, RHW, OR RHW–2 INSULATION UNLESS OTHERWISE SPECIFIED.
13. ALL POWER AND GROUNDING CONNECTIONS SHALL BE CRIMP–STYLE, COMPRESSION WIRE LUGS AND WIRE NUTS BY THOMAS AND BETTS (OR EQUAL). LUGS AND WIRE NUTS SHALL BE RATED FOR OPERATION NOT LESS THAN 75° C (90° C IF AVAILABLE).
14. RACEWAY AND CABLE TRAY SHALL BE LISTED OR LABELED FOR ELECTRICAL USE IN ACCORDANCE WITH NEMA, UL, ANSI/IEEE AND NEC.
15. ELECTRICAL METALLIC TUBING (EMT), INTERMEDIATE METAL CONDUIT (IMC), OR RIGID METAL CONDUIT (RMC) SHALL BE USED FOR EXPOSED INDOOR LOCATIONS.
16. ELECTRICAL METALLIC TUBING (EMT) OR METAL–CLAD CABLE (MC) SHALL BE USED FOR CONCEALED INDOOR LOCATIONS.
17. SCHEDULE 40 PVC UNDERGROUND ON STRAIGHTS AND SCHEDULE 80 PVC FOR ALL ELBOWS/90s AND ALL APPROVED ABOVE GRADE PVC CONDUIT.
18. LIQUID–TIGHT FLEXIBLE METALLIC CONDUIT (LIQUID–TITE FLEX) SHALL BE USED INDOORS AND OUTDOORS, WHERE VIBRATION OCCURS OR FLEXIBILITY IS NEEDED.
19. CONDUIT AND TUBING FITTINGS SHALL BE THREADED OR COMPRESSION–TYPE AND APPROVED FOR THE LOCATION USED. SET SCREW FITTINGS ARE NOT ACCEPTABLE.
20. CABINETS, BOXES AND WIRE WAYS SHALL BE LABELED FOR ELECTRICAL USE IN ACCORDANCE WITH NEMA, UL, ANSI/IEEE AND THE NEC.
21. WIREWAYS SHALL BE METAL WITH AN ENAMEL FINISH AND INCLUDE A HINGED COVER, DESIGNED TO SWING OPEN DOWNWARDS (WIREMOLD SPECMATE WIREWAY).
22. SLOTTED WIRING DUCT SHALL BE PVC AND INCLUDE COVER (PANDUIT TYPE E OR EQUAL).
23. CONDUITS SHALL BE FASTENED SECURELY IN PLACE WITH APPROVED NON–PERFORATED STRAPS AND HANGERS. EXPLOSIVE DEVICES (i.e. POWDER–ACTUATED) FOR ATTACHING HANGERS TO STRUCTURE WILL NOT BE PERMITTED. CLOSELY FOLLOW THE LINES OF THE STRUCTURE, MAINTAIN CLOSE PROXIMITY TO THE STRUCTURE AND KEEP CONDUITS IN TIGHT ENVELOPES. CHANGES IN DIRECTION TO ROUTE AROUND OBSTACLES SHALL BE MADE WITH CONDUIT OUTLET BODIES. CONDUIT SHALL BE INSTALLED IN A NEAT AND WORKMANLIKE MANNER. PARALLEL AND PERPENDICULAR TO STRUCTURE WALL AND CEILING LINES. ALL CONDUIT SHALL BE FISHED TO CLEAR OBSTRUCTIONS. ENDS OF CONDUITS SHALL BE TEMPORARILY CAPPED FLUSH TO FINISH GRADE TO PREVENT CONCRETE, PLASTER OR DIRT FROM ENTERING. CONDUITS SHALL BE RIGIDLY CLAMPED TO BOXES BY GALVANIZED MALLEABLE IRON BUSHING ON INSIDE AND GALVANIZED MALLEABLE IRON LOCKNUT ON OUTSIDE AND INSIDE.
24. EQUIPMENT CABINETS, TERMINAL BOXES, JUNCTION BOXES AND PULL BOXES SHALL BE GALVANIZED OR EPOXY–COATED SHEET STEEL. SHALL MEET OR EXCEED UL 50 AND BE RATED NEMA 1 (OR BETTER) FOR INTERIOR LOCATIONS AND NEMA 3R (OR BETTER) FOR EXTERIOR LOCATIONS.
25. METAL RECEPTACLE, SWITCH AND DEVICE BOXES SHALL BE GALVANIZED, EPOXY–COATED OR NON–CORRODING; SHALL MEET OR EXCEED UL 514A AND NEMA OS 1 AND BE RATED NEMA 1 (OR BETTER) FOR INTERIOR LOCATIONS AND WEATHER PROTECTED (WP OR BETTER) FOR EXTERIOR LOCATIONS.
26. NONMETALLIC RECEPTACLE, SWITCH AND DEVICE BOXES SHALL MEET OR EXCEED NEMA OS 2 (NEWEST REVISION) AND BE RATED NEMA 1 (OR BETTER) FOR INTERIOR LOCATIONS AND WEATHER PROTECTED (WP OR BETTER) FOR EXTERIOR LOCATIONS.
27. THE CONTRACTOR SHALL NOTIFY AND OBTAIN NECESSARY AUTHORIZATION FROM THE CARRIER AND/OR CROWN CASTLE USA INC. BEFORE COMMENCING WORK ON THE AC POWER DISTRIBUTION PANELS.
28. THE CONTRACTOR SHALL PROVIDE NECESSARY TAGGING ON THE BREAKERS, CABLES AND DISTRIBUTION PANELS IN ACCORDANCE WITH THE APPLICABLE CODES AND STANDARDS TO SAFEGUARD LIFE AND PROPERTY.
29. INSTALL LAMICOID LABEL ON THE METER CENTER TO SHOW "VERIZON".
30. ALL EMPTY/SPARE CONDUITS THAT ARE INSTALLED ARE TO HAVE A METERED MULE TAPE PULL CORD INSTALLED.

| CONDUCTOR COLOR CODE | | |
|---|---|---|
| SYSTEM | CONDUCTOR | COLOR |
| 120/240V, 1Ø | A PHASE | BLACK |
| | B PHASE | RED |
| | NEUTRAL | WHITE |
| | GROUND | GREEN |
| 120/208V, 3Ø | A PHASE | BLACK |
| | B PHASE | RED |
| | C PHASE | BLUE |
| | NEUTRAL | WHITE |
| | GROUND | GREEN |
| 277/480V, 3Ø | A PHASE | BROWN |
| | B PHASE | ORANGE OR PURPLE |
| | C PHASE | YELLOW |
| | NEUTRAL | GREY |
| | GROUND | GREEN |
| DC VOLTAGE | POS (+) | RED** |
| | NEG (–) | BLACK** |

* SEE NEC 210.5(C)(1) AND (2)
** POLARITY MARKED AT TERMINATION

## APWA UNIFORM COLOR CODE:

| | |
|---|---|
| WHITE | PROPOSED EXCAVATION |
| PINK | TEMPORARY SURVEY MARKINGS |
| RED | ELECTRIC POWER LINES, CABLES, CONDUIT, AND LIGHTING CABLES |
| YELLOW | GAS, OIL, STEAM, PETROLEUM, OR GASEOUS MATERIALS |
| ORANGE | COMMUNICATION, ALARM OR SIGNAL LINES, CABLES, OR CONDUIT AND TRAFFIC LOOPS |
| BLUE | POTABLE WATER |
| PURPLE | RECLAIMED WATER, IRRIGATION, AND SLURRY LINES |
| GREEN | SEWERS AND DRAIN LINES |

## ABBREVIATIONS:

| | |
|---|---|
| ANT | ANTENNA |
| (E) | EXISTING |
| FIF | FACILITY INTERFACE FRAME |
| GEN | GENERATOR |
| GPS | GLOBAL POSITIONING SYSTEM |
| GSM | GLOBAL SYSTEM FOR MOBILE |
| LTE | LONG TERM EVOLUTION |
| MGB | MASTER GROUND BAR |
| MW | MICROWAVE |
| (N) | NEW |
| NEC | NATIONAL ELECTRIC CODE |
| (P) | PROPOSED |
| PP | POWER PLANT |
| QTY | QUANTITY |
| RECT | RECTIFIER |
| RBS | RADIO BASE STATION |
| RET | REMOTE ELECTRIC TILT |
| RFDS | RADIO FREQUENCY DATA SHEET |
| RRH | REMOTE RADIO HEAD |
| RRU | REMOTE RADIO UNIT |
| SIAD | SMART INTEGRATED DEVICE |
| TMA | TOWER MOUNTED AMPLIFIER |
| TYP | TYPICAL |
| UMTS | UNIVERSAL MOBILE TELECOMMUNICATIONS SYSTEM |
| W.P. | WORK POINT |

## GREENFIELD GROUNDING NOTES:

1. ALL GROUND ELECTRODE SYSTEMS (INCLUDING TELECOMMUNICATION, RADIO, LIGHTNING PROTECTION AND AC POWER GES'S) SHALL BE BONDED TOGETHER AT OR BELOW GRADE, BY TWO OR MORE COPPER BONDING CONDUCTORS IN ACCORDANCE WITH THE NEC.
2. THE CONTRACTOR SHALL PERFORM IEEE FALL–OF–POTENTAL RESISTANCE TO EARTH TESTING (PER IEEE 1100 AND 81) FOR GROUND ELECTRODE SYSTEMS, THE CONTRACTOR SHALL FURNISH AND INSTALL SUPPLEMENTAL GROUND ELECTRODES AS NEEDED TO ACHIEVE A TEST RESULT OF 5 OHMS OR LESS.
3. THE CONTRACTOR IS RESPONSIBLE FOR PROPERLY SEQUENCING GROUNDING AND UNDERGROUND CONDUIT INSTALLATION AS TO PREVENT ANY LOSS OF CONTINUITY IN THE GROUNDING SYSTEM OR DAMAGE TO THE CONDUIT AND PROVIDE TESTING RESULTS.
4. METAL CONDUIT AND TRAY SHALL BE GROUNDED AND MADE ELECTRICALLY CONTINUOUS WITH LISTED BONDING FITTINGS OR BY BONDING ACROSS THE DISCONTINUITY WITH #6 COPPER WIRE UL APPROVED GROUNDING TYPE CONDUIT CLAMPS.
5. METAL RACEWAY SHALL NOT BE USED AS THE NEC REQUIRED EQUIPMENT GROUND CONDUCTOR. STRANDED COPPER CONDUCTORS WITH GREEN INSULATION, SIZED IN ACCORDANCE WITH THE NEC, SHALL BE FURNISHED AND INSTALLED WITH THE POWER CIRCUITS TO BTS EQUIPMENT.
6. EACH CABINET FRAME SHALL BE DIRECTLY CONNECTED TO THE MASTER GROUND BAR WITH GREEN INSULATED SUPPLEMENTAL EQUIPMENT GROUND WIRES, #6 STRANDED COPPER OR LARGER FOR INDOOR BTS; #2 BARE SOLID TINNED COPPER FOR OUTDOOR BTS.
7. CONNECTIONS TO THE GROUND BUS SHALL NOT BE DOUBLED UP OR STACKED BACK TO BACK CONNECTIONS ON OPPOSITE SIDE OF THE GROUND BUS ARE PERMITTED.
8. ALL EXTERIOR GROUND CONDUCTORS BETWEEN EQUIPMENT/GROUND BARS AND THE GROUND RING SHALL BE #2 SOLID TINNED COPPER UNLESS OTHERWISE INDICATED.
9. ALUMINUM CONDUCTOR OR COPPER CLAD STEEL CONDUCTOR SHALL NOT BE USED FOR GROUNDING CONNECTIONS.
10. USE OF 90° BENDS IN THE PROTECTION GROUNDING CONDUCTORS SHALL BE AVOIDED WHEN 45° BENDS CAN BE ADEQUATELY SUPPORTED.
11. EXOTHERMIC WELDS SHALL BE USED FOR ALL GROUNDING CONNECTIONS BELOW GRADE.
12. ALL GROUND CONNECTIONS ABOVE GRADE (INTERIOR AND EXTERIOR) SHALL BE FORMED USING HIGH PRESS CRIMPS.
13. COMPRESSION GROUND CONNECTIONS MAY BE REPLACED BY EXOTHERMIC WELD CONNECTIONS.
14. ICE BRIDGE BONDING CONDUCTORS SHALL BE EXOTHERMICALLY BONDED OR BOLTED TO THE BRIDGE AND THE TOWER GROUND BAR.
15. APPROVED ANTIOXIDANT COATINGS (i.e. CONDUCTIVE GEL OR PASTE) SHALL BE USED ON ALL COMPRESSION AND BOLTED GROUND CONNECTIONS.
16. ALL EXTERIOR GROUND CONNECTIONS SHALL BE COATED WITH A CORROSION RESISTANT MATERIAL.
17. MISCELLANEOUS ELECTRICAL AND NON–ELECTRICAL METAL BOXES, FRAMES AND SUPPORTS SHALL BE BONDED TO THE GROUND RING, IN ACCORDANCE WITH THE NEC.
18. BOND ALL METALLIC OBJECTS WITHIN 6 ft OF MAIN GROUND RING WITH (1) #2 BARE SOLID TINNED COPPER GROUND CONDUCTOR.
19. GROUND CONDUCTORS USED FOR THE FACILITY GROUNDING AND LIGHTNING PROTECTION SYSTEMS SHALL NOT BE ROUTED THROUGH METALLIC OBJECTS THAT FORM A RING AROUND THE CONDUCTOR, SUCH AS METALLIC CONDUITS, METAL SUPPORT CLIPS OR SLEEVES THROUGH WALLS OR FLOORS. WHEN IT IS REQUIRED TO BE HOUSED IN CONDUIT TO MEET CODE REQUIREMENTS OR LOCAL CONDITIONS, NON–METALLIC MATERIAL SUCH AS PVC CONDUIT SHALL BE USED. WHERE USE OF METAL CONDUIT IS UNAVOIDABLE (i.e., NONMETALLIC CONDUIT PROHIBITED BY LOCAL CODE) THE GROUND CONDUCTOR SHALL BE BONDED TO EACH END OF THE METAL CONDUIT.
20. ALL GROUNDS THAT TRANSITION FROM BELOW GRADE TO ABOVE GRADE MUST BE #2 BARE SOLID TINNED COPPER IN 3/4" NON–METALLIC, FLEXIBLE CONDUIT FROM 24" BELOW GRADE TO WITHIN 3" TO 6" OF CAD–WELD TERMINATION POINT. THE EXPOSED END OF THE CONDUIT MUST BE SEALED WITH SILICONE CAULK. (ADD TRANSITIONING GROUND STANDARD DETAIL AS WELL).
21. BUILDINGS WHERE THE MAIN GROUNDING CONDUCTORS ARE REQUIRED TO BE ROUTED TO GRADE, THE CONTRACTOR SHALL ROUTE TWO GROUNDING CONDUCTORS FROM THE ROOFTOP, TOWERS, AND WATER TOWERS GROUNDING RING, TO THE EXISTING GROUNDING SYSTEM, THE GROUNDING CONDUCTORS SHALL NOT BE SMALLER THAN 2/0 COPPER. ROOFTOP GROUNDING RING SHALL BE BONDED TO THE EXISTING GROUNDING SYSTEM, THE BUILDING STEEL COLUMNS, LIGHTNING PROTECTION SYSTEM, AND BUILDING MAIN WATER LINE (FERROUS OR NONFERROUS METAL PIPING ONLY).


verizon
20 ALEXANDER DRIVE, 2ND FLOOR
WALLINGFORD, CT 06492

CROWN CASTLE
1200 MACARTHUR BLVD, SUITE 200
MAHWAH, NJ 07430

TOWER ENGINEERING PROFESSIONALS
326 TRYON RD
RALEIGH, NC 27603
(919) 661-6351
TEP JOB #: 47923.702033


VERIZON SITE NUMBER:
**467434**

BU #: **828054**
**SOUTH WINDSOR/RT 5**

300 GOVERNORS HWY
SOUTH WINDSOR, CT 06074

EXISTING 169'-0" MONOPOLE

**ISSUED FOR:**

| REV | DATE | DRWN | DESCRIPTION | DES./QA |
|---|---|---|---|---|
| 0 | 05/27/22 | ODS | CONSTRUCTION | RST |
| | | | | |
| | | | | |
| | | | | |

STATE OF CONNECTICUT SCOTT C. BRANTLEY 25536 LICENSED PROFESSIONAL ENGINEER

05/27/22


IT IS A VIOLATION OF LAW FOR ANY PERSON, UNLESS THEY ARE ACTING UNDER THE DIRECTION OF A LICENSED PROFESSIONAL ENGINEER, TO ALTER THIS DOCUMENT.


SHEET NUMBER: T-2
REVISION: 0

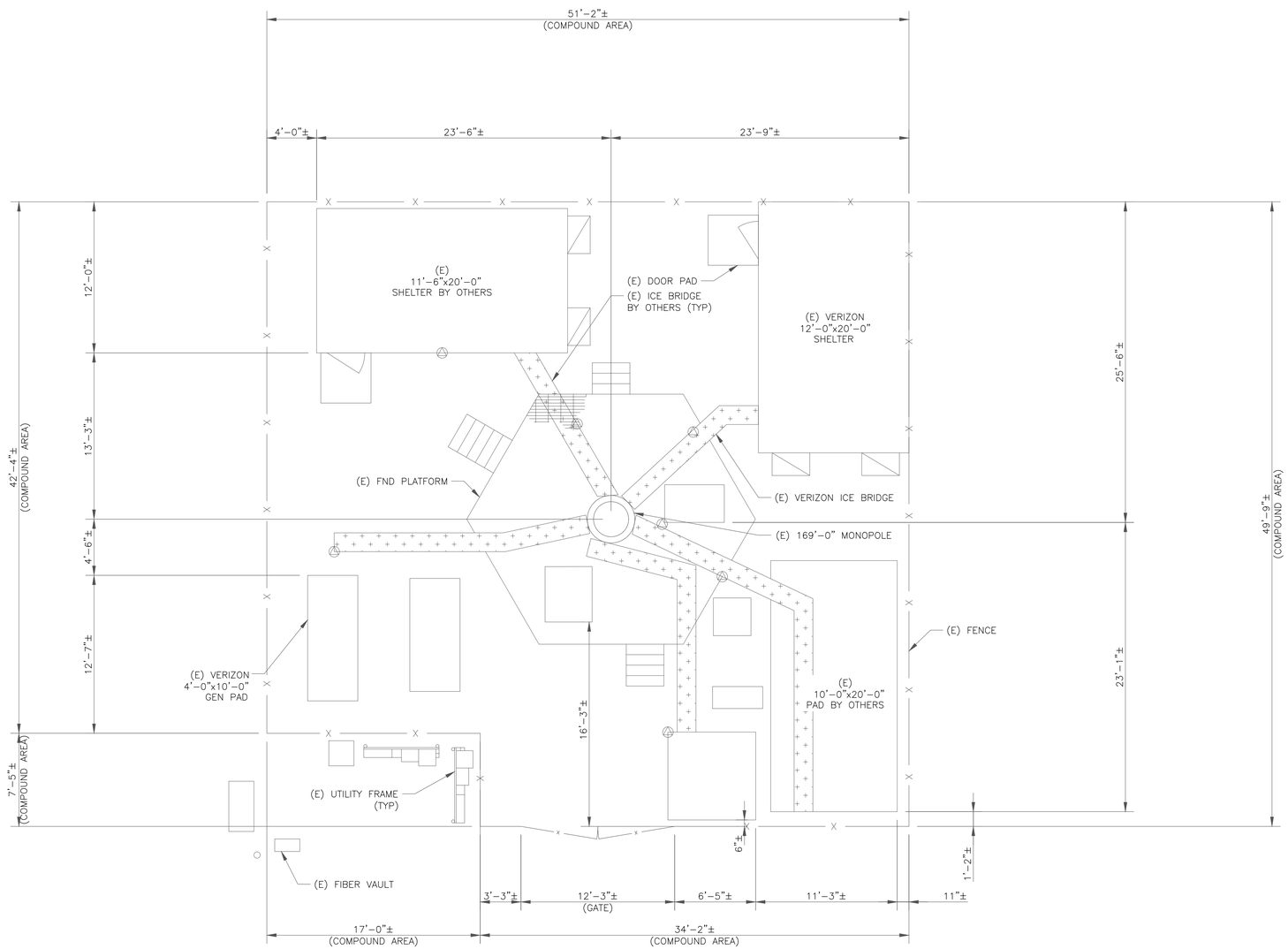


1 SITE PLAN

SCALE: 4' 2' 0 4' 3/16"=1'-0" (FULL SIZE) 3/32"=1'-0" (11x17)

N

verizon

20 ALEXANDER DRIVE, 2ND FLOOR
WALLINGFORD, CT 06492

CROWN CASTLE

1200 MACARTHUR BLVD, SUITE 200
MAHWAH, NJ 07430

TOWER ENGINEERING PROFESSIONALS

326 TRYON RD
RALEIGH, NC 27603
(919) 661-6351

TEP JOB #: 47923.702033

VERIZON SITE NUMBER:
**467434**

BU #: **828054**
**SOUTH WINDSOR/RT 5**

300 GOVERNORS HWY
SOUTH WINDSOR, CT 06074

EXISTING 169'-0" MONOPOLE

**ISSUED FOR:**

| REV | DATE | DRWN | DESCRIPTION | DES./QA |
|---|---|---|---|---|
| 0 | 05/27/22 | ODS | CONSTRUCTION | RST |
| | | | | |
| | | | | |
| | | | | |
| | | | | |

STATE OF CONNECTICUT
SCOTT C. BRANT
35536
LICENSED
PROFESSIONAL ENGINEER

05/27/22

IT IS A VIOLATION OF LAW FOR ANY PERSON, UNLESS THEY ARE ACTING UNDER THE DIRECTION OF A LICENSED PROFESSIONAL ENGINEER, TO ALTER THIS DOCUMENT.

**SHEET NUMBER:** C-1

**REVISION:** 0

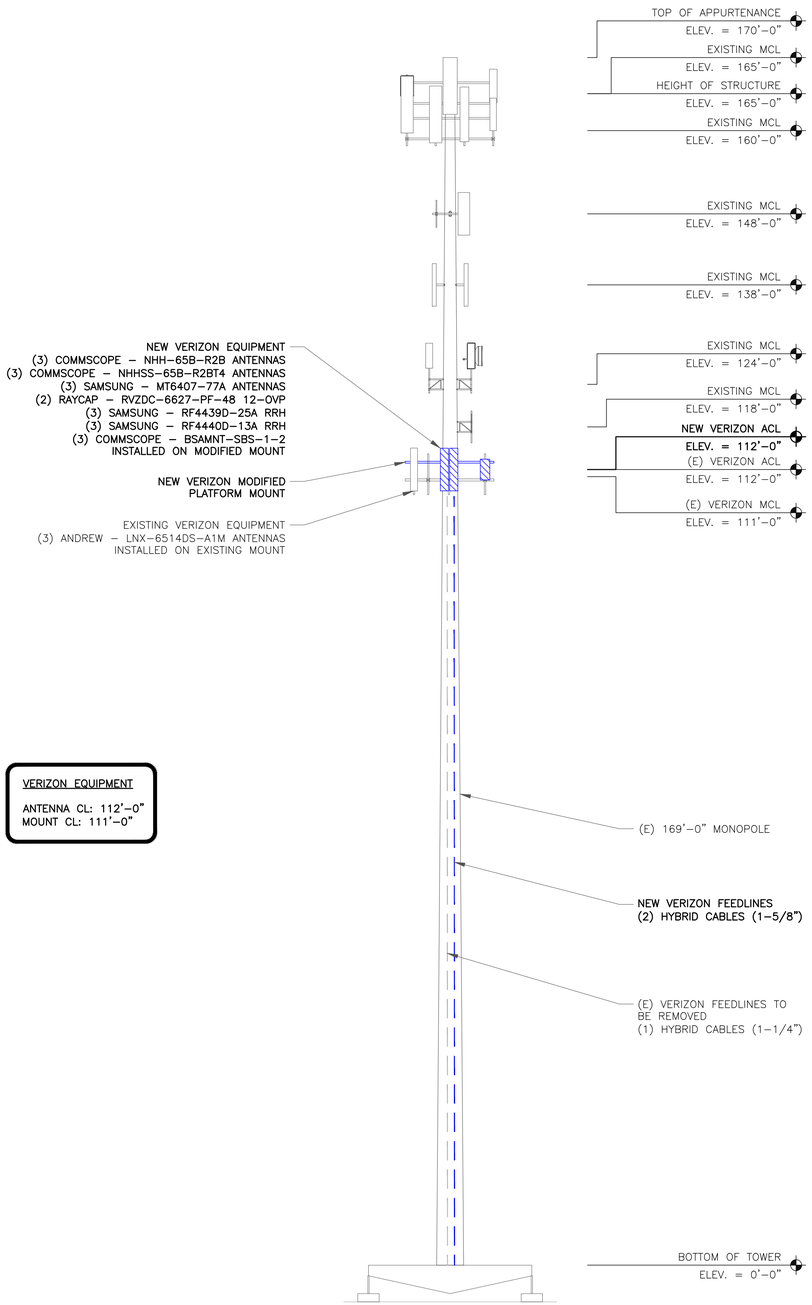


VERIZON EQUIPMENT

ANTENNA CL: 112'-0"
MOUNT CL: 111'-0"

1 TOWER ELEVATION
SCALE: NOT TO SCALE

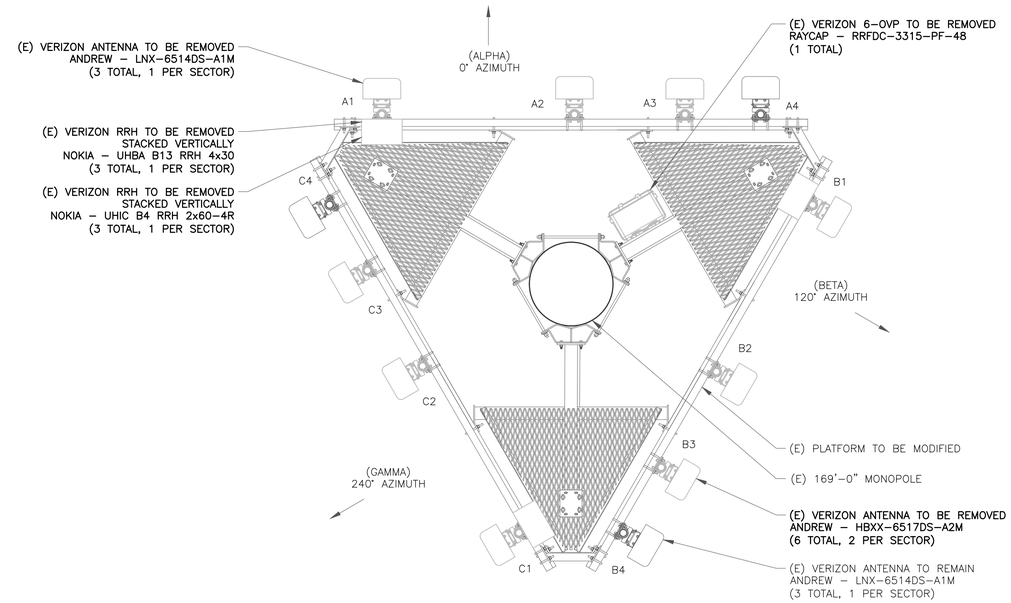


2 EXISTING ANTENNA PLAN
SCALE: NOT TO SCALE

INSTALLER NOTE:

EXISTING AND PROPOSED ANTENNA/ EQUIPMENT POSITIONING SHOWN PER RFDS. FIELD CONDITIONS MAY VARY.

TOWER ANALYSIS NOTES:

1. THE DESIGN DEPICTED IN THESE DRAWINGS IS VALID WHEN ACCOMPANIED BY A CORRESPONDING PASSING TOWER ANALYSIS.
2. CONSTRUCTION MANAGER / GENERAL CONTRACTOR SHALL REVIEW THE TOWER ANALYSIS FOR ANY CONDITIONS PRIOR TO INSTALLATION.
3. ANY REQUIRED TOWER MODIFICATION DESIGN OR TOWER REPLACEMENT SHALL BE APPROVED BY EOR.

MOUNT ANALYSIS NOTES:

1. THE DESIGN DEPICTED IN THESE DRAWINGS IS VALID WHEN ACCOMPANIED BY A CORRESPONDING PASSING MOUNT ANALYSIS.
2. CONSTRUCTION MANAGER / GENERAL CONTRACTOR SHALL REVIEW THE MOUNT ANALYSIS FOR ANY CONDITIONS PRIOR TO INSTALLATION.
3. ANY REQUIRED MOUNT MODIFICATION DESIGN OR MOUNT REPLACEMENT SHALL BE APPROVED BY EOR.

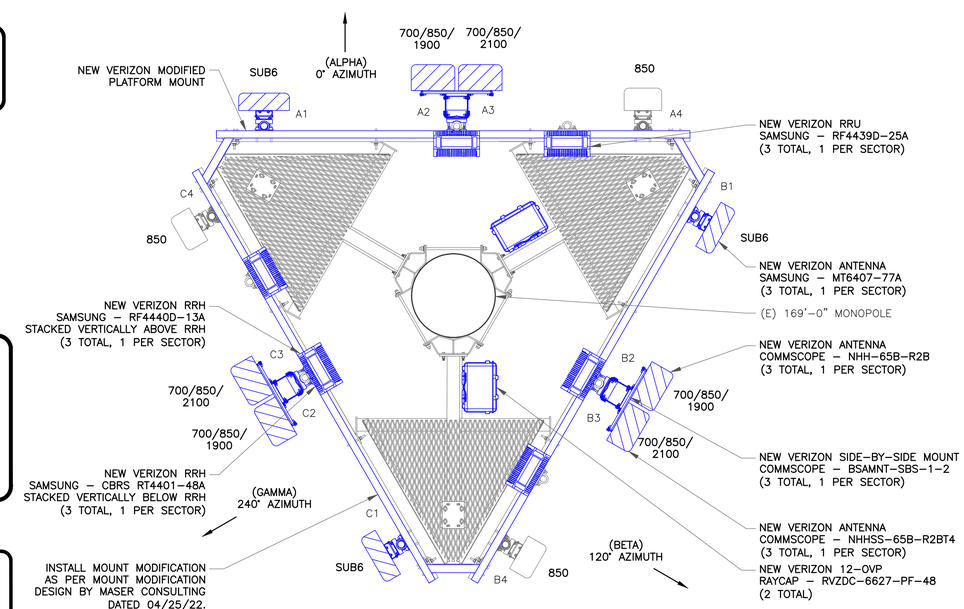


3 NEW ANTENNA PLAN
SCALE: NOT TO SCALE

verizon
20 ALEXANDER DRIVE, 2ND FLOOR
WALLINGFORD, CT 06492

CROWN CASTLE
1200 MACARTHUR BLVD, SUITE 200
MAHWAH, NJ 07430

TOWER ENGINEERING PROFESSIONALS
326 TRYON RD
RALEIGH, NC 27603
(919) 661-6351
TEP JOB #: 47923.702033

VERIZON SITE NUMBER:
**467434**

BU #: **828054**
**SOUTH WINDSOR/RT 5**

300 GOVERNORS HWY
SOUTH WINDSOR, CT 06074

EXISTING 169'-0" MONOPOLE

**ISSUED FOR:**

| REV | DATE | DRWN | DESCRIPTION | DES./QA |
|---|---|---|---|---|
| 0 | 05/27/22 | ODS | CONSTRUCTION | RST |
| | | | | |
| | | | | |
| | | | | |
| | | | | |

05/27/22

IT IS A VIOLATION OF LAW FOR ANY PERSON, UNLESS THEY ARE ACTING UNDER THE DIRECTION OF A LICENSED PROFESSIONAL ENGINEER, TO ALTER THIS DOCUMENT.

**SHEET NUMBER:** C-2

**REVISION:** 0

## ANTENNA/RRH SCHEDULE

| SECTOR | STATUS | ANTENNA MANUFACTURER | ANTENNA MODEL | ANTENNA CENTERLINE | AZIMUTH | MECHANICAL DOWNTILTS | ELECTRICAL DOWNTILTS | TOWER EQUIPMENT MANUFACTURER | TOWER EQUIPMENT QTY/MODEL |
|---|---|---|---|---|---|---|---|---|---|
| A1 | NEW | SAMSUNG | MT6407-77A | 112'-0" | 0° | * | * | RAYCAP | RVZDC-6627-PF-48 12-OVP |
| A2 | NEW | COMMSCOPE | NHH-65B-R2B | 112'-0" | 0° | * | * | SAMSUNG<br>SAMSUNG | (1) RF4440D-13A RRH<br>(1) CBRS RT4401-48A RRH |
| A3 | NEW | COMMSCOPE | NHHSS-65B-R2BT4 | 112'-0" | 0° | * | * | SAMSUNG | (1) RF4439D-25A RRH |
| A4 | EXISTING | ANDREW | LNX-6514DS-A1M | 112'-0" | 0° | * | * | – | – |
| | | | | | | | | | |
| B1 | NEW | SAMSUNG | MT6407-77A | 112'-0" | 120° | * | * | RAYCAP | RVZDC-6627-PF-48 12-OVP |
| B2 | NEW | COMMSCOPE | NHH-65B-R2B | 112'-0" | 120° | * | * | SAMSUNG<br>SAMSUNG | (1) RF4440D-13A RRH<br>(1) CBRS RT4401-48A RRH |
| B3 | NEW | COMMSCOPE | NHHSS-65B-R2BT4 | 112'-0" | 120° | * | * | SAMSUNG | (1) RF4439D-25A RRH |
| B4 | EXISTING | ANDREW | LNX-6514DS-A1M | 112'-0" | 120° | * | * | – | – |
| | | | | | | | | | |
| C1 | NEW | SAMSUNG | MT6407-77A | 112'-0" | 240° | * | * | – | – |
| C2 | NEW | COMMSCOPE | NHH-65B-R2B | 112'-0" | 240° | * | * | SAMSUNG<br>SAMSUNG | (1) RF4440D-13A RRH<br>(1) CBRS RT4401-48A RRH |
| C3 | NEW | COMMSCOPE | NHHSS-65B-R2BT4 | 112'-0" | 240° | * | * | SAMSUNG | (1) RF4439D-25A RRH |
| C4 | EXISTING | ANDREW | LNX-6514DS-A1M | 112'-0" | 240° | * | * | – | – |

NOTE – NEW ANTENNA/EQUIPMENT SHOWN IN BOLD

* – CONTRACTOR TO REFERENCE MOST RECENT RFDS FOR MECHANICAL AND ELECTRICAL DOWNTILTS

1 VERIZON TOWER EQUIPMENT SCHEDULE
SCALE: NOT TO SCALE

## CABLE SCHEDULE

| STATUS | CABLE TYPE | MANUFACTURER (MODEL #) | SIZE | LENGTH | QTY |
|---|---|---|---|---|---|
| EXISTING | COAX | ANDREW LDF6-50A | 1-1/4" | 161'-0"± | 2 |
| EXISTING | COAX | ANDREW LDF7-50A | 1-5/8" | 161'-0"± | 16 |
| NEW | HYBRID | RFS/CELWAVE HB158-1-08U8-S8J18 | 1-5/8" | 161'-0"± | 2 |
| | | | TOTAL CABLE QTY: | | 20 |

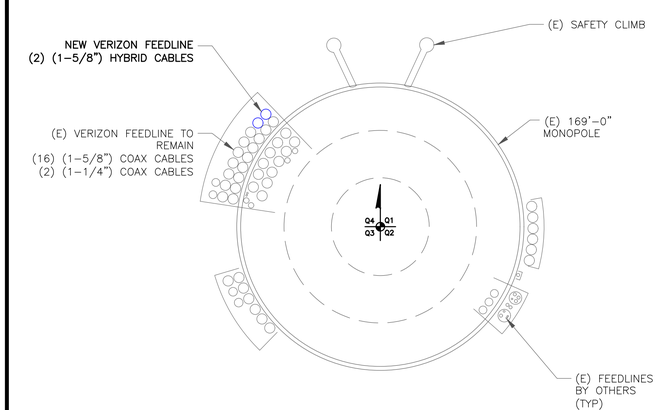


2 BASE LEVEL DETAIL
SCALE: NOT TO SCALE

N


verizon
20 ALEXANDER DRIVE, 2ND FLOOR
WALLINGFORD, CT 06492

CROWN CASTLE
1200 MACARTHUR BLVD, SUITE 200
MAHWAH, NJ 07430

TOWER ENGINEERING PROFESSIONALS
326 TRYON RD
RALEIGH, NC 27603
(919) 661-6351
TEP JOB #: 47923.702033


VERIZON SITE NUMBER:
**467434**

BU #: **828054**
**SOUTH WINDSOR/RT 5**

300 GOVERNORS HWY
SOUTH WINDSOR, CT 06074

EXISTING 169'-0" MONOPOLE

**ISSUED FOR:**

| REV | DATE | DRWN | DESCRIPTION | DES./QA |
|---|---|---|---|---|
| 0 | 05/27/22 | ODS | CONSTRUCTION | RST |
| | | | | |
| | | | | |
| | | | | |
| | | | | |

05/27/22


IT IS A VIOLATION OF LAW FOR ANY PERSON, UNLESS THEY ARE ACTING UNDER THE DIRECTION OF A LICENSED PROFESSIONAL ENGINEER, TO ALTER THIS DOCUMENT.


**SHEET NUMBER:** C-3

**REVISION:** 0

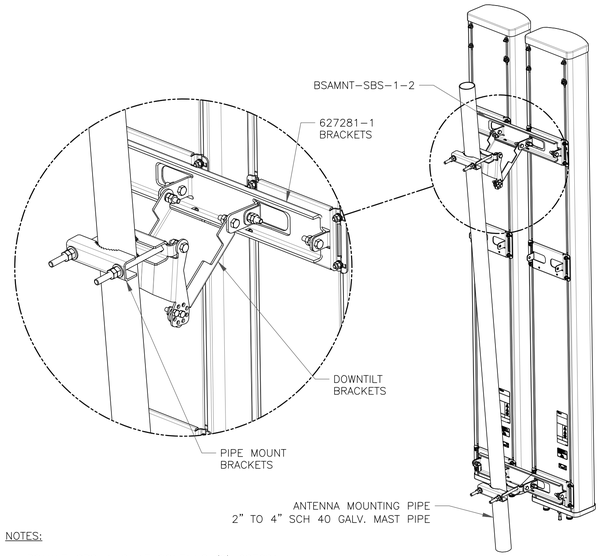


NOTES:

- BSAMNT-SBS-1-2 KIT CONTAINS (2) 627281 MOUNTING BRACKETS.
- TORQUE THE M10 BOLT ASSEMBLY TO 37 N.m. PER MANUFACTURE'S RECOMMENDATIONS.

1 COMMSCOPE – BSAMNT-SBS-1-2
SCALE: NOT TO SCALE

| FIBER NAMING CONVENTION | |
|---|---|
| Technology | (Equipment-Sector-OPTI #) |
| DUPLEX FIBER RUN | |
| 5GmmW L0 | 5GmmW-A-0 |
| SIMPLEX FIBER RUN | |
| CBRS L0 | CBRS-A-0 |
| CBRS L1 | CBRS-A-1 |
| LAA L0 | LAA-A-0 |
| High Band Dual Band L0 | HB-A-0 |
| High Band Dual Band L1 | HB-A-1 |
| Low Band Dual Band L0 | LB-A-0 |
| FDMIMO AWS L0 | FDM-AWS-A-0 |
| FDMIMO AWS L1 | FDM-AWS-A-1 |
| FDMIMO PCS L0 | FDM-PCS-A-0 |
| FDMIMO PCS L1 | FDM-PCS-A-1 |
| Rev. 2/23/2021 | |

2 FIBER NAMING CONVENTION CHART
SCALE: NOT TO SCALE

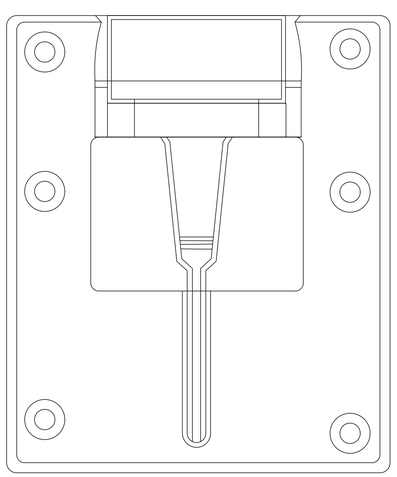

3 SAMSUNG – EP97-01585A BRACKET DETAIL
SCALE: NOT TO SCALE

INSTALLER NOTES:

ALL PIPES BRACKETS AND MISCELLANEOUS HARDWARE TO BE GALVANIZED UNLESS NOTED OTHERWISE.

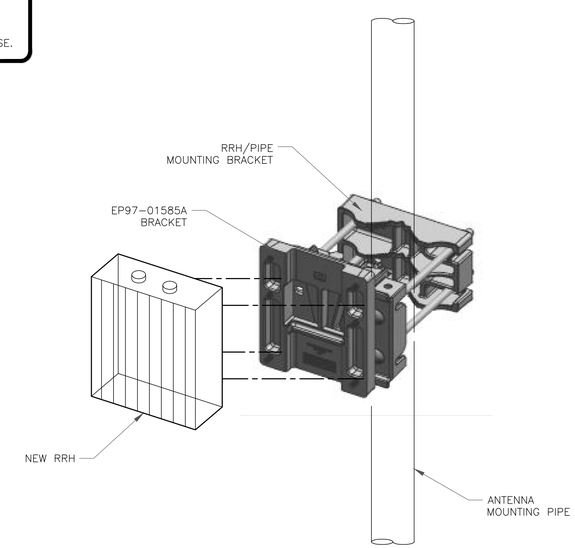


4 ANTENNA & RRH MOUNTING DETAIL
SCALE: NOT TO SCALE

verizon
20 ALEXANDER DRIVE, 2ND FLOOR
WALLINGFORD, CT 06492

CROWN CASTLE
1200 MACARTHUR BLVD, SUITE 200
MAHWAH, NJ 07430

TOWER ENGINEERING PROFESSIONALS
326 TRYON RD
RALEIGH, NC 27603
(919) 661-6351
TEP JOB #: 47923.702033

VERIZON SITE NUMBER:
**467434**

BU #: **828054**
**SOUTH WINDSOR/RT 5**

300 GOVERNORS HWY
SOUTH WINDSOR, CT 06074

EXISTING 169'-0" MONOPOLE

**ISSUED FOR:**

| REV | DATE | DRWN | DESCRIPTION | DES./QA |
|---|---|---|---|---|
| 0 | 05/27/22 | ODS | CONSTRUCTION | RST |
| | | | | |
| | | | | |
| | | | | |
| | | | | |

05/27/22

IT IS A VIOLATION OF LAW FOR ANY PERSON, UNLESS THEY ARE ACTING UNDER THE DIRECTION OF A LICENSED PROFESSIONAL ENGINEER, TO ALTER THIS DOCUMENT.

**SHEET NUMBER:** C-4

**REVISION:** 0

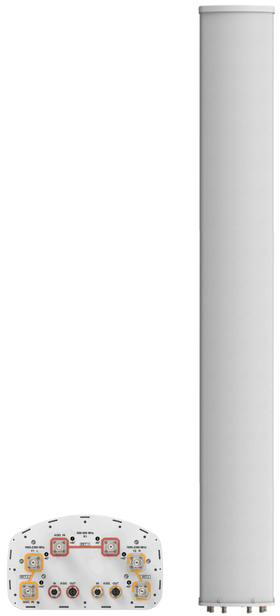

COMMSCOPE – NHH-65C-R2B ANTENNA
WEIGHT: 43.70 LBS
SIZE (HxWxD): 72.0x11.9x7.1 IN.

1 COMMSCOPE – NHH-65B-R2B
SCALE: NOT TO SCALE

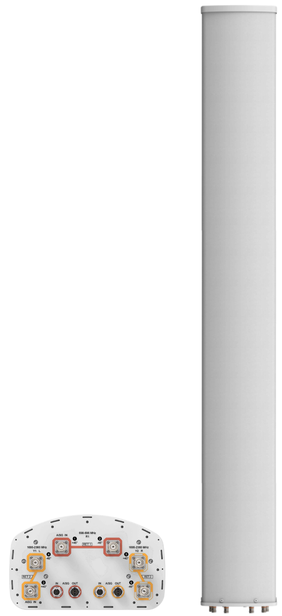

COMMSCOPE – NHHSS-65B-R2BT4 ANTENNA
WEIGHT: 50.93 LBS
SIZE (HxWxD): 71.97x11.85x7.13 IN.

2 COMMSCOPE – NHHSS-65B-R2BT4
SCALE: NOT TO SCALE

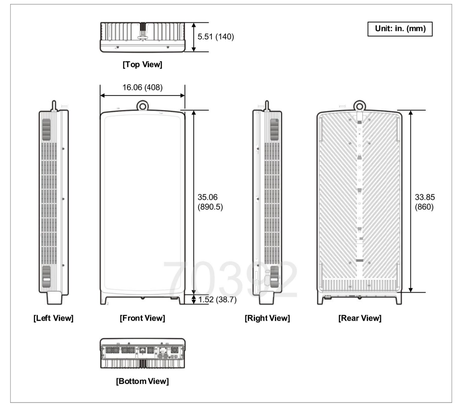


SAMSUNG TELECOMMUNICATIONS – MT6407-77A ANTENNA
WEIGHT: 81.57 LBS
SIZE (HxWxD): 35.06x16.06x5.51 IN.

3 SAMSUNG – MT6407-77A
SCALE: NOT TO SCALE

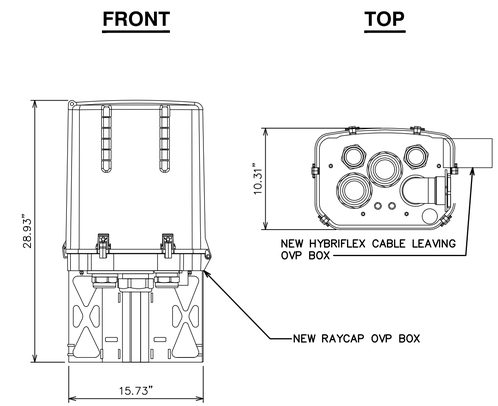


RAYCAP – RVZDC-6627-PF-48
WEIGHT: 32.00 LBS
SIZE (HxWxD): 28.93x15.73x10.31 IN.

4 RAYCAP RVZDC-6627-PF-48
SCALE: NOT TO SCALE

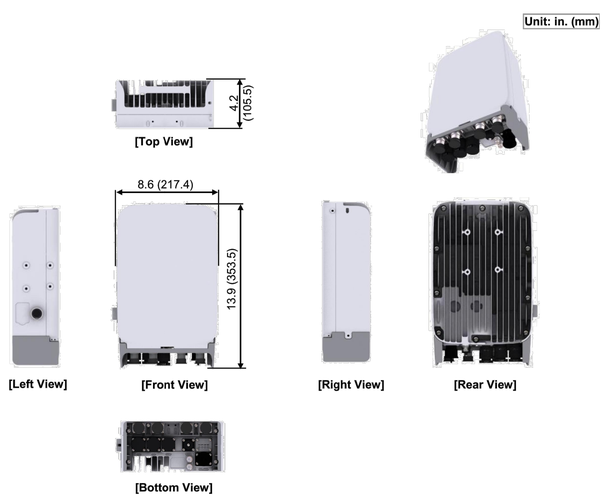


SAMSUNG – CBRS RT4401-48A RRH
WEIGHT: 23.00 LBS
SIZE (HxWxD): 16.16x11.39x5.45 IN.

5 SAMSUNG – CBRS RT4401-48A RRH
SCALE: NOT TO SCALE

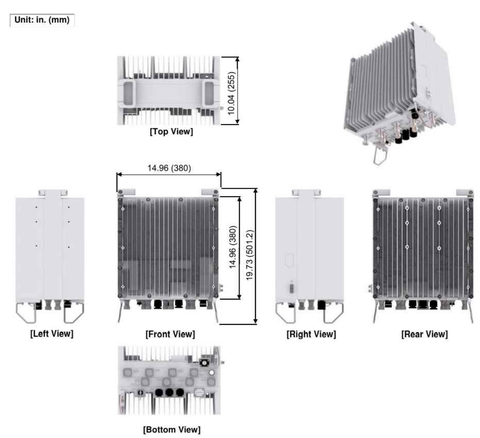


SAMSUNG – RF4439D-25A RRH
WEIGHT (WITHOUT MOUNTING HARDWARE): 74.70 LBS
SIZE (HxWxD): 14.96x14.96x10.04 IN

6 SAMSUNG – RF4439D-25A
SCALE: NOT TO SCALE

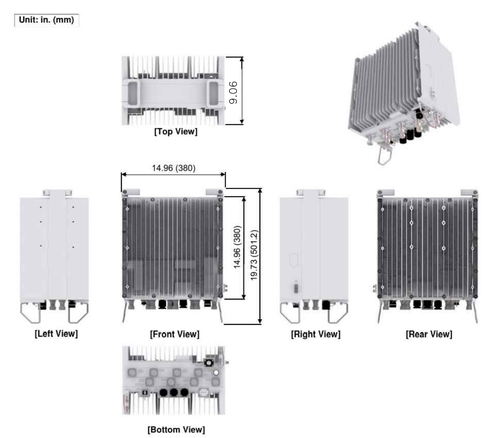


SAMSUNG – RF4440D-13A RRH
WEIGHT (WITHOUT MOUNTING HARDWARE): 72.50 LBS
SIZE (HxWxD): 14.96x14.96x9.06 IN

7 SAMSUNG – RF4440D-13A
SCALE: NOT TO SCALE


verizon
20 ALEXANDER DRIVE, 2ND FLOOR
WALLINGFORD, CT 06492

CROWN CASTLE
1200 MACARTHUR BLVD, SUITE 200
MAHWAH, NJ 07430

TOWER ENGINEERING PROFESSIONALS
326 TRYON RD
RALEIGH, NC 27603
(919) 661-6351
TEP JOB #: 47923.702033


VERIZON SITE NUMBER:
**467434**

BU #: **828054**
**SOUTH WINDSOR/RT 5**

300 GOVERNORS HWY
SOUTH WINDSOR, CT 06074

EXISTING 169'-0" MONOPOLE

**ISSUED FOR:**

| REV | DATE | DRWN | DESCRIPTION | DES./QA |
|---|---|---|---|---|
| 0 | 05/27/22 | ODS | CONSTRUCTION | RST |
| | | | | |
| | | | | |
| | | | | |
| | | | | |

05/27/22


IT IS A VIOLATION OF LAW FOR ANY PERSON, UNLESS THEY ARE ACTING UNDER THE DIRECTION OF A LICENSED PROFESSIONAL ENGINEER, TO ALTER THIS DOCUMENT.


**SHEET NUMBER:** C-5

**REVISION:** 0

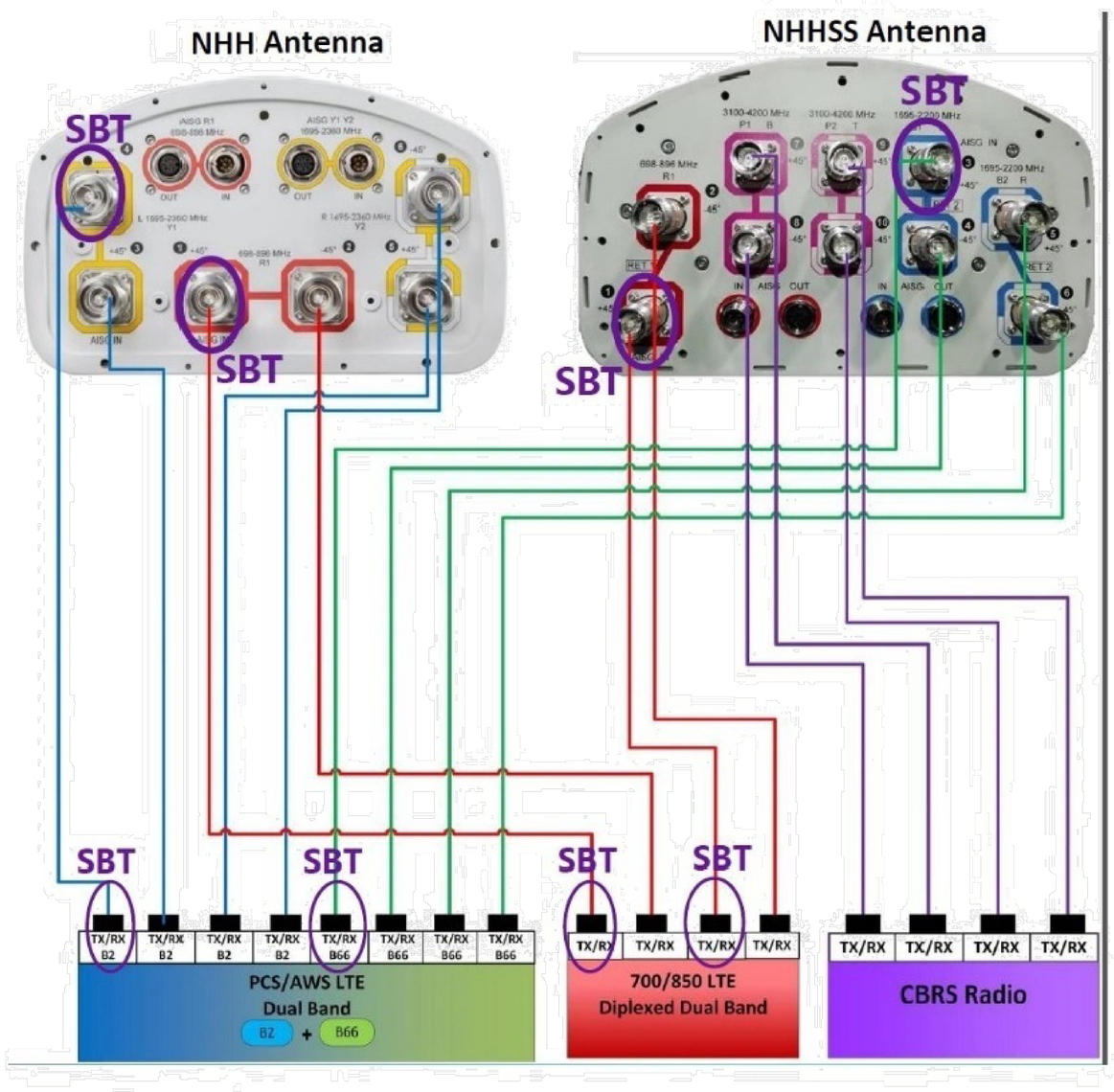

1 PLUMBING DIAGRAM
SCALE: NOT TO SCALE

verizon
20 ALEXANDER DRIVE, 2ND FLOOR
WALLINGFORD, CT 06492

CROWN CASTLE
1200 MACARTHUR BLVD, SUITE 200
MAHWAH, NJ 07430

TOWER ENGINEERING PROFESSIONALS
326 TRYON RD
RALEIGH, NC 27603
(919) 661-6351

TEP JOB #: 47923.702033

VERIZON SITE NUMBER:
**467434**

BU #: **828054**
**SOUTH WINDSOR/RT 5**

300 GOVERNORS HWY
SOUTH WINDSOR, CT 06074

EXISTING 169'-0" MONOPOLE

**ISSUED FOR:**

| REV | DATE | DRWN | DESCRIPTION | DES./QA |
|---|---|---|---|---|
| 0 | 05/27/22 | ODS | CONSTRUCTION | RST |
| | | | | |
| | | | | |
| | | | | |
| | | | | |

05/27/22

IT IS A VIOLATION OF LAW FOR ANY PERSON, UNLESS THEY ARE ACTING UNDER THE DIRECTION OF A LICENSED PROFESSIONAL ENGINEER, TO ALTER THIS DOCUMENT.

**SHEET NUMBER:** C-6

**REVISION:** 0

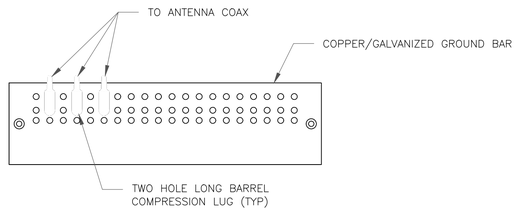


NOTES:

1. DOUBLING UP "OR STACKING" OF CONNECTIONS IS NOT PERMITTED.
2. EXTERIOR ANTIOXIDANT JOINT COMPOUND TO BE USED ON ALL EXTERIOR CONNECTIONS.
3. GROUND BAR SHALL NOT BE ISOLATED FROM TOWER. MOUNT DIRECTLY TO ANTENNA MOUNT STEEL.

1 ANTENNA SECTOR GROUND BAR DETAIL
SCALE: NOT TO SCALE

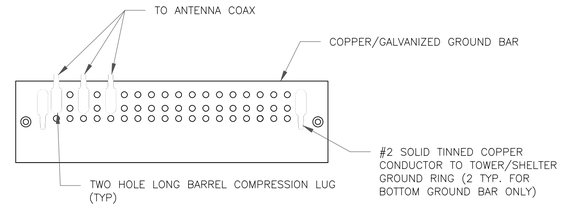


NOTES:

1. EXTERIOR ANTIOXIDANT JOINT COMPOUND TO BE USED ON ALL EXTERIOR CONNECTIONS.
2. GROUND BAR SHALL NOT BE ISOLATED FROM TOWER. MOUNT DIRECTLY TO TOWER STEEL (TOWER ONLY).
3. GROUND BAR SHALL BE ISOLATED FROM BUILDING OR SHELTER.

2 TOWER/SHELTER GROUND BAR DETAIL
SCALE: NOT TO SCALE

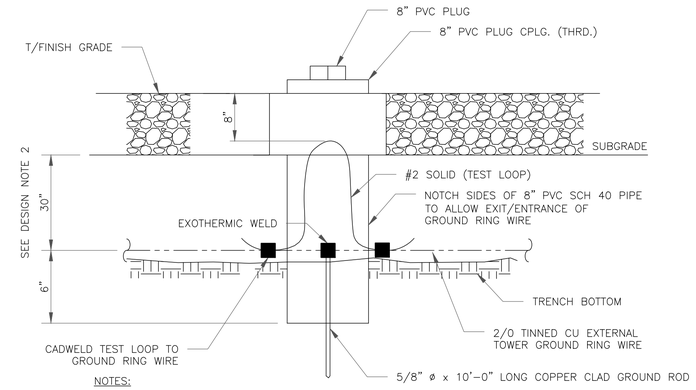


NOTES:

1. GROUND ROD SHALL BE DRIVEN VERTICALLY, NOT TO EXCEED 45 DEGREES FROM THE VERTICAL
2. GROUND WIRE SHALL BE MIN. 30" BELOW GRADE OR 6" BELOW FROST LINE. (WHICH EVER IS GREATER) AS PER N.E.C. ARTICLE 250-50(D)

3 INSPECTION WELL DETAIL
SCALE: NOT TO SCALE

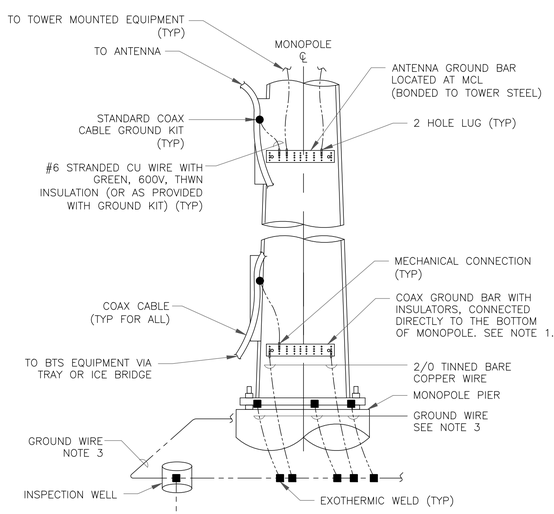


NOTES:

1. NUMBER OF GROUNDING BARS MAY VARY DEPENDING ON THE TYPE OF TOWER, ANTENNA LOCATIONS AND CONNECTION ORIENTATION. COAXIAL CABLES EXCEEDING 200 FEET ON THE TOWER SHALL HAVE GROUND KITS AT THE MIDPOINT. PROVIDE AS REQUIRED.
2. ONLY MECHANICAL CONNECTIONS ARE ALLOWED TO BE MADE TO CROWN CASTLE USA INC. TOWERS. ALL MECHANICAL CONNECTIONS SHALL BE TREATED WITH AN ANTI-OXIDANT COATING.
3. ALL TOWER GROUNDING SYSTEMS SHALL COMPLY WITH THE REQUIREMENTS OF THE RECOGNIZED EDITION OF ANSI/TIA 222 AND NFPA 780.

4 TYPICAL ANTENNA CABLE GROUNDING
SCALE: NOT TO SCALE

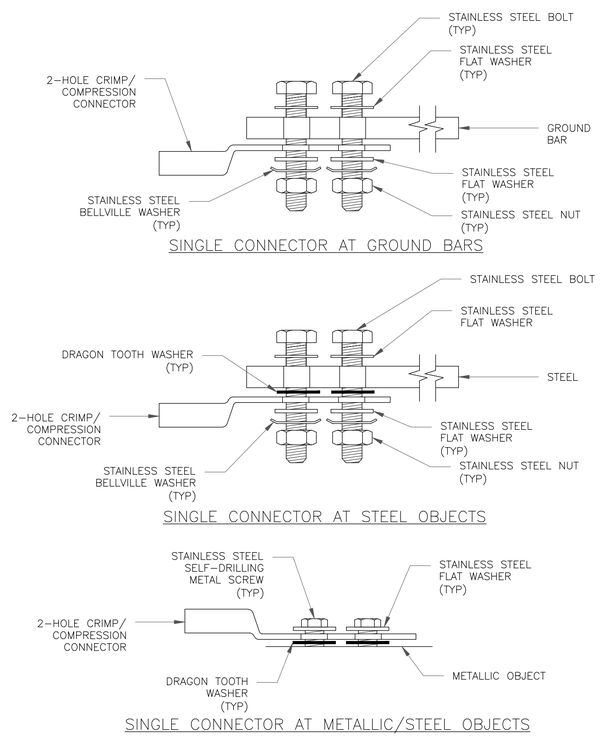


5 HARDWARE DETAIL FOR EXTERIOR CONNECTIONS
SCALE: NOT TO SCALE

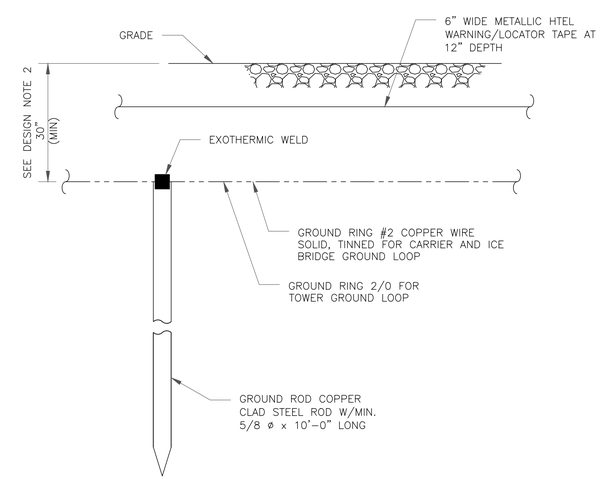


NOTES:

1. GROUND ROD SHALL BE DRIVEN VERTICALLY, NOT TO EXCEED 45 DEGREES FROM THE VERTICAL
2. GROUND WIRE SHALL BE MIN. 30" BELOW GRADE OR 6" BELOW FROST LINE. (WHICH EVER IS GREATER) AS PER N.E.C. ARTICLE 250-50(D)

6 GROUND ROD DETAIL
SCALE: NOT TO SCALE

verizon
20 ALEXANDER DRIVE, 2ND FLOOR
WALLINGFORD, CT 06492

CROWN CASTLE
1200 MACARTHUR BLVD, SUITE 200
MAHWAH, NJ 07430

TOWER ENGINEERING PROFESSIONALS
326 TRYON RD
RALEIGH, NC 27603
(919) 661-6351
TEP JOB #: 47923.702033

VERIZON SITE NUMBER:
**467434**

BU #: **828054**
**SOUTH WINDSOR/RT 5**

300 GOVERNORS HWY
SOUTH WINDSOR, CT 06074

EXISTING 169'-0" MONOPOLE

**ISSUED FOR:**

| REV | DATE | DRWN | DESCRIPTION | DES./QA |
|---|---|---|---|---|
| 0 | 05/27/22 | ODS | CONSTRUCTION | RST |
| | | | | |
| | | | | |
| | | | | |
| | | | | |

05/27/22

IT IS A VIOLATION OF LAW FOR ANY PERSON, UNLESS THEY ARE ACTING UNDER THE DIRECTION OF A LICENSED PROFESSIONAL ENGINEER, TO ALTER THIS DOCUMENT.

**SHEET NUMBER:** G-1
**REVISION:** 0

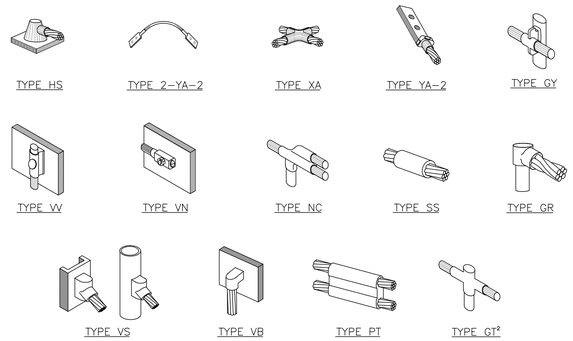


NOTE:

1. ERICO EXOTHERMIC "MOLD TYPES" SHOWN HERE ARE EXAMPLES. CONSULT WITH CONSTRUCTION MANAGER FOR SPECIFIC MOLDS TO BE USED FOR THIS PROJECT.
2. MOLD TYPE ONLY TO BE USED BELOW GRADE WHEN CONNECTING GROUND RING TO GROUND ROD.

1 CADWELD GROUNDING CONNECTIONS
SCALE: NOT TO SCALE

| WIRE SIZE | BURNDY LUG | BOLT SIZE |
|---|---|---|
| #6 AWG GREEN INSULATED | YA6C-2TC38 | 3/8" - 16 NC S 2 BOLT |
| #2 AWG SOLID TINNED | YA3C-2TC38 | 3/8" - 16 NC S 2 BOLT |
| #2 AWG STRANDED | YA2C-2TC38 | 3/8" - 16 NC S 2 BOLT |
| #2/0 AWG STRANDED | YA26-2TC38 | 3/8" - 16 NC S 2 BOLT |
| #4/0 AWG STRANDED | YA28-2N | 1/2" - 16 NC S 2 BOLT |

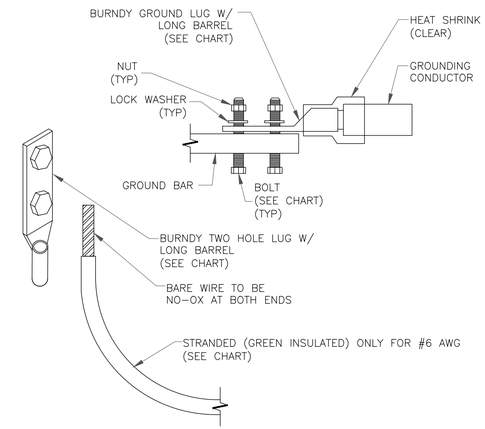


NOTES:

1. ALL GROUNDING LUGS ARE TO BE INSTALLED PER MANUFACTURER'S SPECIFICATIONS. ALL HARDWARE BOLTS, NUTS, LOCK WASHERS SHALL BE STAINLESS STEEL. ALL HARDWARE ARE TO BE AS FOLLOWS: BOLT, FLAT WASHER,GROUND BAR, GROUND LUG, FLAT WASHER AND NUT.

2 MECHANICAL LUG CONNECTION
SCALE: NOT TO SCALE

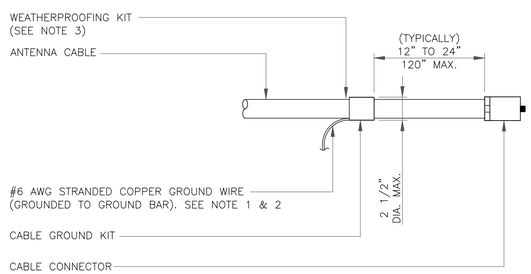


NOTES:

1. DO NOT INSTALL CABLE GROUND KIT AT A BEND AND ALWAYS DIRECT GROUND WIRE DOWN TO GROUND BAR.
2. GROUNDING KIT SHALL BE TYPE AND PART NUMBER AS SUPPLIED OR RECOMMENDED BY CABLE MANUFACTURER.
3. WEATHER PROOFING SHALL BE TWO-PART TAPE KIT, COLD SHRINK SHALL NOT BE USED.

3 CABLE GROUND KIT CONNECTION
SCALE: NOT TO SCALE

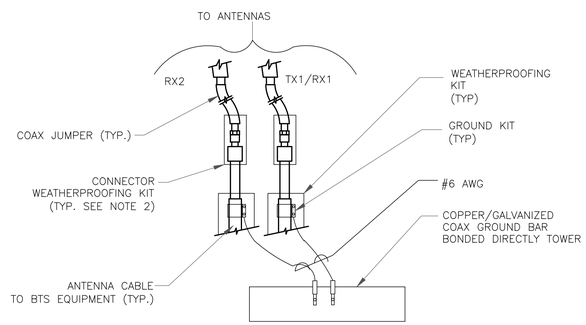


NOTES:

1. DO NOT INSTALL CABLE GROUND KIT AT A BEND AND ALWAYS DIRECT GROUND WIRE DOWN TO ANTENNA GROUND BAR.
2. WEATHER PROOFING SHALL BE TWO-PART TAPE KIT. COLD SHRINK SHALL NOT BE USED.

4 GROUND CABLE CONNECTION
SCALE: NOT TO SCALE

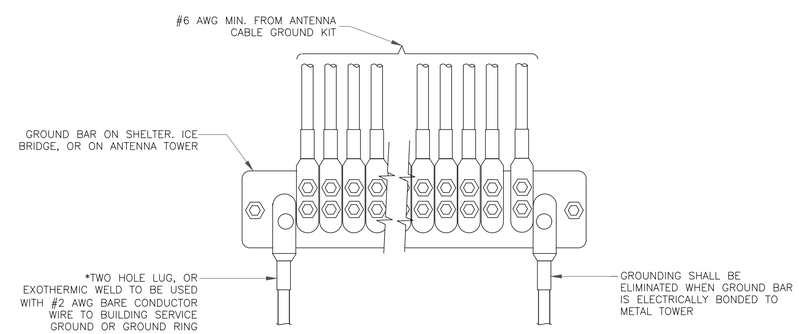


5 GROUNDWIRE INSTALLATION
SCALE: NOT TO SCALE

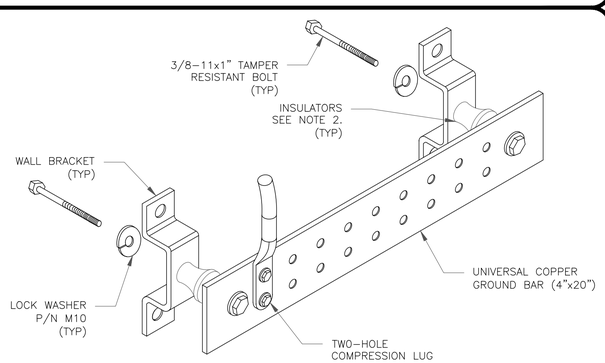


NOTES:

1. DOWN LEAD (HOME RUN) CONDUCTORS ARE NOT TO BE INSTALLED ON CROWN CASTLE USA INC. TOWER, PER THE GROUNDING DOWN CONDUCTOR POLICY QAS-STD-10091. NO MODIFICATION OR DRILLING TO TOWER STEEL IS ALLOWED IN ANY FORM OR FASHION, CAD-WELDING ON THE TOWER AND/OR IN THE AIR ARE NOT PERMITTED.
2. OMIT INSULATOR WHEN MOUNTING TO TOWER STEEL OR PLATFORM STEEL USE INSULATORS WHEN ATTACHING TO BUILDING OR SHELTERS.

6 GROUND BAR DETAIL
SCALE: NOT TO SCALE

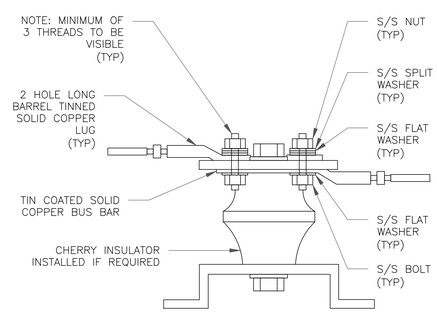


7 LUG DETAIL
SCALE: NOT TO SCALE

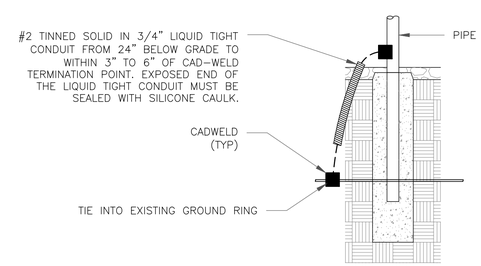


8 TRANSITIONING GROUND DETAIL
SCALE: NOT TO SCALE

verizon
20 ALEXANDER DRIVE, 2ND FLOOR
WALLINGFORD, CT 06492

CROWN CASTLE
1200 MACARTHUR BLVD, SUITE 200
MAHWAH, NJ 07430

TOWER ENGINEERING PROFESSIONALS
326 TRYON RD
RALEIGH, NC 27603
(919) 661-6351
TEP JOB #: 47923.702033

VERIZON SITE NUMBER:
**467434**

BU #: **828054**
**SOUTH WINDSOR/RT 5**

300 GOVERNORS HWY
SOUTH WINDSOR, CT 06074

EXISTING 169'-0" MONOPOLE

**ISSUED FOR:**

| REV | DATE | DRWN | DESCRIPTION | DES./QA |
|---|---|---|---|---|
| 0 | 05/27/22 | ODS | CONSTRUCTION | RST |
| | | | | |
| | | | | |
| | | | | |
| | | | | |

05/27/22

IT IS A VIOLATION OF LAW FOR ANY PERSON, UNLESS THEY ARE ACTING UNDER THE DIRECTION OF A LICENSED PROFESSIONAL ENGINEER, TO ALTER THIS DOCUMENT.

**SHEET NUMBER:** G-2
**REVISION:** 0

# MOUNT MODIFICATION DRAWINGS
# EXISTING 12'-6" PLATFORM

TOWER OWNER: CROWN CASTLE
TOWER OWNER SITE NUMBER: 828054

CARRIER SITE NAME: SOUTH WINDSOR 2 CT
CARRIER SITE NUMBER: 467434
FUZE ID: 16092601

300 GOVERNORS HIGHWAY
SOUTH WINDSOR, CT 06074
HARTFORD COUNTY

LATITUDE: 41.833496° N
LONGITUDE: 72.603026° W

## DESIGN CRITERIA

WIND LOADS

BASIC WIND SPEED (3 SECOND GUST), V = 117 MPH
EXPOSURE CATEGORY C
TOPOGRAPHIC CATEGORY 1
MEAN BASE ELEVATION (AMSL) = 70.43'

ICE LOADS

ICE WIND SPEED (3 SECOND GUST), V = 50 MPH
ICE THICKNESS = 1.50 IN

SEISMIC LOADS

SEISMIC DESIGN CATEGORY B
SHORT TERM MCER GROUND MOTION, $S_S$ = .184
LONG TERM MCER GROUND MOTION, $S_1$ = .055

## PROJECT INFORMATION

APPLICANT/LESSEE

COMPANY: VERIZON WIRELESS

CLIENT REPRESENTATIVE

COMPANY: VERIZON WIRELESS

PROJECT MANAGER

COMPANY: COLLIERS ENGINEERING & DESIGN
CONTACT: PETER ALBANO
PHONE: 856.797.0412
E-MAIL: PETER.ALBANO@COLLIERSENGINEERING.COM

## CONTRACTOR PMI REQUIREMENTS

PMI LOCATION: HTTPS://PMI.VZWSMART.COM
SMART TOOL PROJECT #: 10141850
VZW LOCATION CODE (PSLC): 467434
ANALYSIS DATE: 4/25/2022

PMI REQUIREMENTS EMBEDDED WITHIN MOUNT MODIFICATION REPORT

## SHEET INDEX


| SHEET | DESCRIPTION |
|---|---|
| ST-1 | TITLE SHEET |
| SBOM-1 | BILL OF MATERIALS |
| SGN-1 | GENERAL NOTES |
| SCF-1 | CLIMBING FACILITY DETAIL |
| SS-1 | MODIFICATION DETAILS |
| SS-2 | MOUNT PHOTOS |
| | SPECIFICATION SHEETS |



COPYRIGHT ©2022
COLLIERS ENGINEERING & DESIGN
ALL RIGHTS RESERVED
THIS DRAWING AND ALL THE INFORMATION CONTAINED HEREIN IS AUTHORIZED FOR USE ONLY BY THE PARTY FOR WHOM THE WORK WAS CONTRACTED OR TO WHOM IT IS CERTIFIED. THIS DRAWING MAY NOT BE COPIED, REUSED, DISCLOSED, DISTRIBUTED OR RELIED UPON FOR ANY OTHER PURPOSE WITHOUT THE EXPRESS WRITTEN CONSENT OF COLLIERS ENGINEERING & DESIGN.



Colliers Engineering & Design
www.colliersengineering.com
Copyright © 2022. Colliers Engineering & Design All Rights Reserved. This drawing and all the information contained herein is authorized for use only by the party for whom the services were contracted or to whom it is certified. This drawing may not be copied, reused, disclosed, distributed or relied upon for any other purpose without the express written consent of Colliers Engineering & Design.
Doing Business as MASER CONSULTING


PROTECT YOURSELF
ALL STATES REQUIRE NOTIFICATION OF EXCAVATORS, DESIGNERS, OR ANY PERSON PREPARING TO DISTURB THE EARTH'S SURFACE ANYWHERE IN ANY STATE
Know what's below. Call before you dig.
FOR STATE SPECIFIC DIRECT PHONE NUMBERS VISIT: WWW.CALL811.COM

SCALE: AS SHOWN
JOB NUMBER: 22777026A

| REV | DATE | DESCRIPTION | DRAWN BY | CHECKED BY |
|---|---|---|---|---|
| 0 | 4/25/22 | ISSUED FOR CONSTRUCTION | DA | DX |

STATE OF CONNECTICUT
DEJIAN XU
No. 33733
LICENSED PROFESSIONAL ENGINEER
04/25/2022
COLLIERS ENGINEERING & DESIGN CT, P.C.
C.T. C.O.A. #PC.0000131

IT IS A VIOLATION OF LAW FOR ANY PERSON, UNLESS THEY ARE ACTING UNDER THE DIRECTION OF THE RESPONSIBLE LICENSED PROFESSIONAL ENGINEER, TO ALTER THIS DOCUMENT.

SITE NAME:
SOUTH WINDSOR 2 CT
467434
300 GOVERNORS HIGHWAY
SOUTH WINDSOR, CT 06074
HARTFORD COUNTY


Colliers Engineering & Design
STAMFORD
1055 Washington Boulevard
Stamford, CT 06901
Phone: 203.324.0800
COLLIERS ENGINEERING & DESIGN, INC.
DOING BUSINESS AS MASER CONSULTING


SHEET TITLE: TITLE SHEET
SHEET NUMBER: ST-1

NOTE: DO NOT SCALE DRAWINGS FOR CONSTRUCTION.


NAD\ulbln_SOS\21\Template\Mount MOD revisions.dwg\ST-1 By: DAVID.ANIELKA

# BILL OF MATERIALS

## SECTION 1 - VZWSMART KITS

| QUANTITY | MANUFACTURER | PART NUMBER | DESCRIPTION | NOTES | UNIT WEIGHT (LBS.) | WEIGHT (LBS.) |
|---|---|---|---|---|---|---|
| 1 | VZWSMART | VZWSMART-PLK1 | SUPPORT RAIL KIT | CONTRACTOR TO VERIFY THE LENGTH REQUIRED AND TRIM AS NECESSARY IN ACCORDANCE WITH THE 'STRUCTURAL STEEL' NOTES ON SHEET SGN-1. | 504 | 504 |
| 1 | | VZWSMART-PLK5 | KICKER KIT | CONTRACTOR TO VERIFY THE LENGTH REQUIRED AND TRIM AS NECESSARY IN ACCORDANCE WITH THE 'STRUCTURAL STEEL' NOTES ON SHEET SGN-1. | 291 | 291 |
| 1 | | VZWSMART-PLK7 | MONOPOLE COLLAR MOUNT ASSEMBLY | | 150 | 150 |
| 3 | | VZWSMART-P40-278X072 | 72" LONG, PIPE 2 1/2 STD (2.875"OD X 0.203" THK) | | 35 | 105 |
| | | | | | | |
| | | | | | | |
| | | | | | | |
| | | | | | | |
| | | | | | | |

## SECTION 2 - OTHER REQUIRED PARTS

| QUANTITY | MANUFACTURER | PART NUMBER | DESCRIPTION | NOTES | UNIT WEIGHT (LBS.) | WEIGHT (LBS.) |
|---|---|---|---|---|---|---|
| 3 | SITE PRO 1 | SP219-H | CROSSOVER PLATE | | 13 | 39 |
| | | | | | | |
| | | | | | | |
| | | | | | | |
| | | | | | | |
| | | | | | | |
| | | | | | | |
| | | | | | | |
| | | | | | | |
| | | | | | | |
| | | | | | | |
| | | | | | TOTAL: | 1089 |

NOTES:

1. THE MANUFACTURERS LISTED ARE THE APPROVED VENDORS FOR THE VZW MOUNT KITS. EACH MANUFACTURER WILL BE AWARE OF WHICH KITS HAVE BEEN THROUGH THE VZW APPROVAL PROCESS AND THEY ARE IN TURN APPROVED TO SELL. PLEASE NOTE THAT THE MATERIAL UTILIZED ON THE MOUNT MODIFICATIONS WILL BE REVIEWED AS A PART OF THE DESKTOP PMI COMPLETED BY THE SMART TOOL VENDOR. IT WILL BE REQUIRED THAT THE VZW KITS SPECIFIED ARE UTILIZED IN THE MODIFICATIONS.

2. ALL MATERIALS REQUIRED FOR THE DESIGNED MODIFICATIONS BUT NOT LISTED IN THIS SHEET ARE ASSUMED TO BE PROVIDED BY THE CONTRACTOR.

## VZWSMART KITS - APPROVED VENDORS

| | |
|---|---|
| **COMMSCOPE** | |
| CONTACT | SALVADOR ANGUIANO |
| PHONE | (817) 304-7492 |
| EMAIL | SALVADOR.ANGUIANO@COMMSCOPE.COM |
| WEBSITE | WWW.COMMSCOPE.COM |
| **METROSITE FABRICATORS, LLC** | |
| CONTACT | KENT RAMEY |
| PHONE | (706) 335-7045 (O), (706) 982-9788 (M) |
| EMAIL | KENT@METROSITELLC.COM |
| WEBSITE | METROSITEFABRICATORS.COM |
| **PERFECTVISION** | |
| CONTACT | WIRELESS SALES |
| PHONE | (844) 887-6723 |
| EMAIL | WWW.PERFECT-VISION.COM |
| WEBSITE | WIRELESSSALES@PERFECT-VISION.COM |
| **SABRE INDUSTRIES, INC.** | |
| CONTACT | ANGIE WELCH |
| PHONE | (866) 428-6937 |
| EMAIL | AKWELCH@SABREINDUSTRIES.COM |
| WEBSITE | WWW.SABRESITESOLUTIONS.COM |
| **SITE PRO 1** | |
| CONTACT | PAULA BOSWELL |
| PHONE | (972) 236-9843 |
| EMAIL | PAULA.BOSWELL@VALMONT.COM |
| WEBSITE | WWW.SITEPRO1.COM |

## VZWSMART KITS - APPROVED VENDORS

| | |
|---|---|
| **NEWAVE** | |
| CONTACT | NEWAVE SALES TEAM |
| PHONE | (971) 239-4762 |
| EMAIL | SALES@NEWAVETC.COM |
| WEBSITE | WWW.NEWAVETC.COM |
| **BETTER METAL, LLC** | |
| CONTACT | DAVID STANSBERRY |
| PHONE | (615) 535-0990 (O), (615) 631-2520 (M) |
| EMAIL | DLS@BETTERMETAL.COM |
| WEBSITE | WWW.BETTERMETAL.COM |

Colliers Engineering & Design

www.colliersengineering.com

Copyright © 2022. Colliers Engineering & Design All Rights Reserved. This drawing and all the information contained herein is authorized for use only by the party for whom the services were contracted or to whom it is certified. This drawing may not be copied, reused, disclosed, distributed or relied upon for any other purpose without the express written consent of Colliers Engineering & Design.

Doing Business as MASER CONSULTING

verizon

PROTECT YOURSELF

ALL STATES REQUIRE NOTIFICATION OF EXCAVATORS, DESIGNERS, OR ANY PERSON PREPARING TO DISTURB THE EARTH'S SURFACE ANYWHERE IN ANY STATE

811 Know what's below. Call before you dig.

FOR STATE SPECIFIC DIRECT PHONE NUMBERS VISIT: WWW.CALL811.COM

SCALE: AS SHOWN

JOB NUMBER: 22777026A

| REV | DATE | DESCRIPTION | DRAWN BY | CHECKED BY |
|---|---|---|---|---|
| 0 | 4/25/22 | ISSUED FOR CONSTRUCTION | DA | DX |

STATE OF CONNECTICUT
DEJIAN XU
No. 33733
LICENSED PROFESSIONAL ENGINEER
04/25/2022

COLLIERS ENGINEERING & DESIGN CT, P.C.
C.T. C.O.A. #PC.0000131

IT IS A VIOLATION OF LAW FOR ANY PERSON, UNLESS THEY ARE ACTING UNDER THE DIRECTION OF THE RESPONSIBLE LICENSED PROFESSIONAL ENGINEER, TO ALTER THIS DOCUMENT.

SITE NAME:

SOUTH WINDSOR 2 CT
467434

300 GOVERNORS HIGHWAY
SOUTH WINDSOR, CT 06074
HARTFORD COUNTY

Colliers Engineering & Design

STAMFORD
1055 Washington Boulevard

Stamford, CT 06901
Phone: 203.324.0800
COLLIERS ENGINEERING & DESIGN, INC.
DOING BUSINESS AS MASER CONSULTING

SHEET TITLE: BILL OF MATERIALS

SHEET NUMBER: SBOM-1

## PROJECT NOTES

1. SEE MODIFICATION NOTES
2. THE CONTRACTOR SHALL COMPLY WITH ALL APPLICABLE CODES, ORDINANCES, LAWS AND REGULATIONS OF ALL MUNICIPALITIES, UTILITY COMPANIES OR OTHER PUBLIC/GOVERNING AUTHORITIES.
3. THE CONTRACTOR SHALL BE RESPONSIBLE FOR OBTAINING ALL PERMITS AND INSPECTIONS THAT MAY BE REQUIRED BY ANY FEDERAL, STATE, COUNTY OR MUNICIPAL AUTHORITIES.
4. THE CONTRACTOR SHALL NOTIFY THE CONSTRUCTION MANAGER, IN WRITING, OF ANY CONFLICTS, ERRORS OR OMISSIONS PRIOR TO THE SUBMISSION OF BIDS OR PERFORMANCE OF WORK.
5. THE CONTRACTOR SHALL BE RESPONSIBLE FOR PROTECTING ALL EXISTING SITE IMPROVEMENTS PRIOR TO COMMENCING CONSTRUCTION. THE CONTRACTOR SHALL REPAIR ANY DAMAGE AS A RESULT OF CONSTRUCTION OF THIS FACILITY AT THE CONTRACTOR'S EXPENSE TO THE SATISFACTION OF THE OWNER.
6. THE SCOPE OF WORK FOR THIS PROJECT SHALL INCLUDE PROVIDING ALL MATERIALS, EQUIPMENT AND LABOR REQUIRED TO COMPLETE THIS PROJECT. ALL EQUIPMENT SHALL BE INSTALLED IN ACCORDANCE WITH MANUFACTURER'S RECOMMENDATIONS.
7. THE CONTRACTOR SHALL VISIT THE PROJECT SITE PRIOR TO SUBMITTING THE BID TO VERIFY THAT THE PROJECT CAN BE CONSTRUCTED IN ACCORDANCE WITH THE CONTRACT DOCUMENTS AND CONSTRUCTION DRAWINGS.
8. THE CONTRACTOR SHALL VERIFY ALL EXISTING DIMENSIONS AND CONDITIONS PRIOR TO COMMENCING ANY WORK. ALL DIMENSIONS OF EXISTING CONSTRUCTION SHOWN ON THESE DRAWINGS MUST BE VERIFIED. THE CONTRACTOR SHALL NOTIFY THE CONSTRUCTION MANAGER OF ANY DISCREPANCIES PRIOR TO ORDERING MATERIAL OR PROCEEDING WITH CONSTRUCTION.
9. SINCE THE CELL SITE MAY BE ACTIVE, ALL SAFETY PRECAUTIONS MUST BE TAKEN WHEN WORKING AROUND HIGH LEVELS OF ELECTROMAGNETIC RADIATION. EQUIPMENT SHOULD BE SHUTDOWN PRIOR TO PERFORMING ANY WORK THAT COULD EXPOSE THE WORKERS TO DANGER. PERSONAL RF EXPOSURE MONITORS ARE REQUIRED TO BE WORN TO ALERT OF ANY POTENTIALLY DANGEROUS EXPOSURE LEVELS.
10. NO NOISE, SMOKE, DUST OR ODOR WILL RESULT FROM THIS FACILITY AS TO CAUSE A NUISANCE.
11. THE FACILITY IS UNMANNED AND NOT FOR HUMAN HABITATION (NO HANDICAP ACCESS IS REQUIRED).

## GENERAL NOTES

1. THESE MODIFICATIONS HAVE BEEN DESIGNED IN ACCORDANCE WITH THE GOVERNING PROVISIONS OF THE TELECOMMUNICATIONS INDUSTRY STANDARD TIA-222-H. MATERIALS AND SERVICES PROVIDED BY THE CONTRACTOR SHALL CONFORM TO THE ABOVE MENTIONED CODES.
2. CONTRACTOR SHALL TAKE ALL PRECAUTIONS NECESSARY TO PREVENT DAMAGE TO EXISTING STRUCTURES. ANY DAMAGE TO EXISTING STRUCTURES AS A RESULT OF THE CONTRACTOR'S WORK OR FROM DAMAGE DUE TO OTHER CAUSES SHALL BE REPAIRED AT THE CONTRACTOR'S EXPENSE TO THE SATISFACTION OF THE OWNER.
3. CONTRACTOR SHALL VERIFY ALL DIMENSIONS AND EXISTING CONDITIONS BEFORE BEGINNING WORK, ORDERING MATERIAL, AND PREPARING OF SHOP DRAWINGS. ANY DISCREPANCIES BETWEEN FIELD CONDITIONS AND THE CONTRACT DOCUMENTS SHALL BE BROUGHT TO THE IMMEDIATE ATTENTION OF THE ENGINEER. IF THE CONTRACTOR DISCOVERS ANY EXISTING CONDITIONS THAT ARE NOT REPRESENTED ON THESE DRAWINGS, OR ANY CONDITIONS THAT WOULD INTERFERE WITH THE INSTALLATION OF THE MODIFICATIONS, NOTIFY THE ENGINEER IMMEDIATELY.
4. IT IS ASSUMED THAT ANY STRUCTURAL MODIFICATION WORK SPECIFIED ON THESE PLANS WILL BE ACCOMPLISHED BY KNOWLEDGEABLE WORKMEN WITH TOWER CONSTRUCTION EXPERIENCE.
5. THE CONTRACTOR SHALL SUPERVISE AND DIRECT THE WORK AND SHALL BE SOLELY RESPONSIBLE FOR ALL CONSTRUCTION METHODS, MEANS, TECHNIQUES, SEQUENCES, AND PROCEDURES.
6. ALL CONSTRUCTION MEANS AND METHODS; INCLUDING BUT NOT LIMITED TO, ERECTION PLANS, RIGGING PLANS, CLIMBING PLANS, AND RESCUE PLANS SHALL BE THE RESPONSIBILITY OF THE GENERAL CONTRACTOR RESPONSIBLE FOR THE EXECUTION OF THE WORK CONTAINED HEREIN AND SHALL MEET ANSI/TIA-322 (LATEST EDITION), OSHA, AND GENERAL INDUSTRY STANDARDS. ALL RIGGING PLANS SHALL ADHERE TO ANSI/TIA-322 (LATEST EDITION) INCLUDING THE REQUIRED INVOLVEMENT OF A QUALIFIED ENGINEER FOR CLASS IV CONSTRUCTION.
7. THE CONTRACTOR IS SOLELY RESPONSIBLE FOR INITIATING, MAINTAINING, AND SUPERVISING ALL SAFETY PROGRAMS IN ACCORDANCE WITH APPLICABLE SAFETY CODES.
8. WORK SHALL ONLY BE PERFORMED DURING CALM DRY DAYS (WINDS LESS THAN 30-MPH). THE STRUCTURE SHOWN ON THE DRAWINGS IS STRUCTURALLY SOUND ONLY IN THE COMPLETED FORM. THE CONTRACTOR SHALL BE RESPONSIBLE FOR THE STRENGTH AND STABILITY OF THE STRUCTURE DURING ERECTION. CONTRACTOR SHALL PROVIDE TEMPORARY SUPPORT, SHORING, BRACING AND ANY OTHER STRUCTURAL SYSTEMS AS REQUIRED TO RESIST ALL FORCES THAT MAY OCCUR DURING HANDLING AND ERECTION UNTIL THE STRUCTURE IS FULLY COMPLETED. TEMPORARY SUPPORTS, BRACING AND OTHER STRUCTURAL SYSTEMS REQUIRED DURING CONSTRUCTION SHALL REMAIN THE CONTRACTOR'S PROPERTY AFTER THEIR USE.
9. ALL INSTALLATIONS PERFORMED ON THIS STRUCTURE SHALL BE COMPLETED IN ACCORDANCE WITH THE GOVERNING PROVISIONS OF THE STANDARD FOR INSTALLATION, ALTERATION AND MAINTENANCE OF ANTENNA SUPPORTING STRUCTURES AND ANTENNAS, ANSI/TIA-322.
10. CONTRACTOR SHALL SECURE SITE BACK TO EXISTING CONDITION UNDER SUPERVISION OF OWNER. ALL FENCE, STONE, GEOFABRIC, GROUNDING, AND SURROUNDING GRADE SHALL BE REPLACED AND REPAIRED AS REQUIRED TO ACHIEVE OWNER APPROVAL. POSITIVE DRAINAGE AWAY FROM TOWER SITE SHALL BE MAINTAINED.
11. CONNECTIONS BETWEEN ITEMS SUPPORTED BY THE STRUCTURE AND THE STRUCTURE NOT SPECIFICALLY DETAILED IN THE CONTRACT DOCUMENTS ARE THE RESPONSIBILITY OF THE CONTRACTOR. SUCH CONNECTIONS SHALL BE DESIGNED, COORDINATED AND INSPECTED BY A PROFESSIONAL STRUCTURAL ENGINEER LICENSED IN THE STATE OF THE PROJECT. SUBMIT SIGNED AND SEALED CALCULATIONS DURING SHOP DRAWING REVIEW.
12. DO NOT SCALE DRAWINGS.
13. DO NOT USE THESE DRAWINGS FOR ANY OTHER SITE.
14. ALL MATERIAL UTILIZED FOR THIS PROJECT MUST BE NEW AND FREE OF ANY DEFECTS. ANY MATERIAL SUBSTITUTIONS, INCLUDING BUT NOT LIMITED TO ALTERED SIZE AND/OR STRENGTHS, MUST BE APPROVED BY THE OWNER AND ENGINEER IN WRITING.
15. THE MOUNT UNDER NO CIRCUMSTANCES SHOULD BE USED AS A TIE OFF POINT.

## STRUCTURAL STEEL

1. DESIGN, DETAILING, FABRICATION AND ERECTION OF STRUCTURAL STEEL SHALL CONFORM TO THE FOLLOWING PUBLICATIONS EXCEPT AS SPECIFICALLY INDICATED IN THE CONTRACT DOCUMENTS.
   a. AMERICAN INSTITUTE OF STEEL CONSTRUCTION (AISC) MANUAL OF STEEL CONSTRUCTION (15TH EDITION)
   b. SPECIFICATION FOR STRUCTURAL JOINTS USING ASTM A325 OR A490 BOLTS
   c. AISC CODE OF STANDARD PRACTICE
2. STRUCTURAL STEEL SHALL CONFORM TO THE FOLLOWING UNLESS OTHERWISE SHOWN:

| | |
|---|---|
| CHANNELS, ANGLES, PLATES, ETC. | ASTM A36 (GR 36) |
| STEEL PIPE | ASTM A53 (GR 35) |
| BOLTS | ASTM A325 |
| NUTS | ASTM A563 |
| LOCK WASHERS | LOCKING STRUCTURAL GRADE |

3. ALL SUBSTITUTIONS PROPOSED BY THE CONTRACTOR SHALL BE APPROVED IN WRITING BY THE ENGINEER. CONTRACTOR SHALL PROVIDE DOCUMENTATION TO ENGINEER FOR VERIFYING THE SUBSTITUTE IS SUITABLE FOR USE AND MEETS ORIGINAL DESIGN CRITERIA. DIFFERENCES FROM THE ORIGINAL DESIGN, INCLUDING MAINTENANCE, REPAIR AND REPLACEMENT, SHALL BE NOTED. ESTIMATES OF COSTS/CREDITS ASSOCIATED WITH THE SUBSTITUTION (INCLUDING RE-DESIGN COSTS AND COSTS TO SUB-CONTRACTORS) SHALL BE PROVIDED TO THE ENGINEER. CONTRACTOR SHALL PROVIDE ADDITIONAL DOCUMENTATION AND/OR SPECIFICATIONS TO THE ENGINEER AS REQUESTED.
4. PROVIDE STRUCTURAL STEEL SHOP DRAWINGS TO ENGINEER FOR APPROVAL PRIOR TO FABRICATION.
   a. SUBMIT SHOP DRAWINGS TO
      PETER.ALBANO@COLLIERSENGINEERING.COM
   b. PROVIDE MASER CONSULTING PROJECT # AND MASER CONSULTING PROJECT ENGINEER CONTACT IN THE BODY OF THE EMAIL.
5. DRILL NO HOLES IN ANY NEW OR EXISTING STRUCTURAL STEEL MEMBERS OTHER THAN THOSE SHOWN ON STRUCTURAL DRAWINGS WITHOUT THE APPROVAL OF THE ENGINEER OF RECORD.
6. GALVANIZED ASTM A325 BOLTS SHALL NOT BE REUSED.
7. ALL NEW STEEL SHALL BE HOT BE DIPPED GALVANIZED FOR FULL WEATHER PROTECTION. IN ADDITION ALL NEW STEEL SHALL BE PAINTED TO MATCH EXISTING STEEL. CONTRACTOR SHALL OBTAIN WRITTEN PERMISSION TO PROTECT STEEL BY ANY OTHER MEANS.
8. CONTRACTOR SHALL PROTECT CUT ENDS OF ALL FIELD-CUT STEEL WITH TWO (2) COATS OF COLD GALVANIZATION (ZINGA OR ZINC COTE).
9. ALL BOLT ASSEMBLIES FOR STRUCTURAL MEMBERS REPRESENTED IN THIS DRAWING REQUIRE LOCKING DEVICES TO BE INSTALLED IN ACCORDANCE WITH TIA-222-H SECTION 4.9.2 REQUIREMENTS.
10. WHERE CONNECTIONS ARE NOT FULLY DETAILED ON THESE DRAWINGS, FABRICATOR SHALL DESIGN CONNECTIONS TO RESIST LOADS AND FORCES WHERE SHOWN ON DRAWINGS AND AS OUTLINED IN SPECIFICATIONS.
11. FOR MEMBERS BEING REPLACED, PROVIDE NEW BOLTS AND MATCH EXISTING SIZE AND GRADE. MAINTAIN AISC REQUIREMENTS FOR MINIMUM BOLT DISTANCE AND SPACING.
12. ALL PROPOSED AND/OR REPLACED BOLTS SHALL BE OF SUFFICIENT LENGTH SUCH THAT THE END OF THE BOLT IS AT LEAST FLUSH WITH THE FACE OF THE NUT. IT IS NOT PERMITTED FOR THE BOLT END TO BE BELOW THE FACE OF THE NUT AFTER TIGHTENING IS COMPLETED.
13. GALVANIZED ASTM A325 BOLTS SHALL NOT BE REUSED.
14. ALL EXISTING PAINTED/GALVANIZED SURFACES DAMAGED DURING REHAB INCLUDING AREAS UNDER STIFFENER PLATES SHALL BE WIRE BRUSHED CLEAN, REPAIRED BY COLD GALVANIZING (ZINGA OR ZINC COTE), AND REPAINTED TO MATCH THE EXISTING FINISH (IF APPLICABLE).
15. ALL HOLES IN STEEL MEMBERS SHALL BE SIZED 1/16" LARGER THAN THE BOLT DIAMETER. STANDARD HOLES SHALL BE USED UNLESS NOTED OTHERWISE.

## WELDING NOTES

1. ALL WELDING SHALL BE DONE IN ACCORDANCE WITH AWS D1.0 (LATEST EDITION). THIS SHALL INCLUDE A CERTIFIED WELD INSPECTION (CWI) FOR ACCEPTANCE OR REJECTION OF ALL WELDING OPERATIONS, PRE, DURING, AND POST INSTALLATION, USING THE ACCEPTANCE CRITERIA OF AWS D1.1.
2. CONTRACTOR IS RESPONSIBLE FOR COMMISSIONING A THIRD PARTY CERTIFIED WELD INSPECTOR (CWI) THROUGHOUT THE ENTIRETY OF THE PROJECT. A PASSING CWI REPORT SHALL BE PROVIDED TO THE ENGINEER UPON COMPLETION OF THE PROJECT.
3. THE CERTIFIED WELD INSPECTOR SHALL INDICATE, IN A WRITTEN CWI REPORT, THAT ALL WELDING OPERATIONS PRE, DURING, AND POST INSTALLATION WERE CONDUCTED IN ACCORDANCE WITH AWS D1.1 WITH PHOTOGRAPHS AND DOCUMENTATION SUPPORTING THE ACCEPTANCE OR REJECTION OF ALL WELDING. ALL CWI WELD INSPECTION DOCUMENTATION AND PHOTOS SHALL BE SUBMITTED DURING THE PMI.
4. IN CASES WHERE A WELD IS SPECIFIED BETWEEN TWO MEMBERS IN WHICH THERE IS A GAP IN BETWEEN, THE WELD IS TO BE BUILT-UP SUCH THAT THE SIZE OF WELD ON THE MEMBER IS EQUAL TO THAT SHOWN IN THE DRAWINGS.
5. OXY FUEL GAS WELDING OR BRAZING IS STRICTLY PROHIBITED. SPECIFICALLY, NO TORCH CUTTING IS PERMITTED ON SITE. ALL HOLES SHALL BE CUT WITH A GRINDER.
6. CONTRACTOR SHALL EXERCISE CAUTION WHEN WELDING A GALVANIZED SURFACE.
7. CONTRACTOR SHALL HAVE A FIRE PROTECTION PLAN IN PLACE THAT CONFORMS WITH ALL OSHA, ANSI/ASSP A10.48, ANSI Z49.1, AND LOCAL JURISDICTIONAL REQUIREMENTS.

### BOLT SCHEDULE (IN.)

| BOLT DIAMETER | STANDARD HOLE | SHORT SLOT | MIN. EDGE DISTANCE | SPACING |
|---|---|---|---|---|
| 1/2 | 9/16 | 9/16 x 11/16 | 7/8 | 1 1/2 |
| 5/8 | 11/16 | 11/16 x 7/8 | 1 1/8 | 1 7/8 |
| 3/4 | 13/16 | 13/16 x 1 | 1 1/4 | 2 1/4 |
| 7/8 | 15/16 | 15/16 x 1 1/8 | 1 1/2 | 2 5/8 |
| 1 | 1 1/16 | 1 1/16 x 1 5/16 | 1 3/4 | 3 |

### WORKABLE GAGES (IN.)

| LEG | GAGE |
|---|---|
| 4 | 2 1/2 |
| 3 1/2 | 2 |
| 3 | 1 3/4 |
| 2 1/2 | 1 3/8 |
| 2 | 1 1/8 |

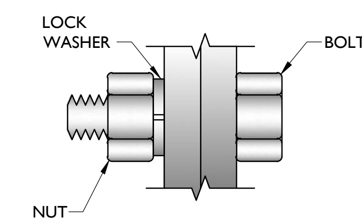


TYP. BOLT ASSEMBLY

NOTES:

1. ALL DIMENSIONS REPRESENTED IN THE ABOVE TABLES ARE AISC MINIMUM REQUIREMENTS. CONTRACTOR SHALL VERIFY EXISTING CONDITIONS IN FIELD AND NOTIFY ENGINEER IF DISTANCES ARE LESS THAN THOSE PROVIDED.
2. THE DIMENSIONS PROVIDED ARE MINIMUM REQUIREMENTS. ACTUAL DIMENSIONS OF PROPOSED MEMBERS WITHIN THESE DRAWINGS MAY VARY FROM THE AISC MINIMUM REQUIREMENTS.
3. SHORT SLOT HOLES SHALL ONLY BE USED WHEN DEPICTED IN THE DRAWINGS
4. MATCH EXISTING GAGES WHEN APPLICABLE, UNLESS MINIMUM EDGE DISTANCES ARE COMPROMISED.

ALLOWABLE COPING

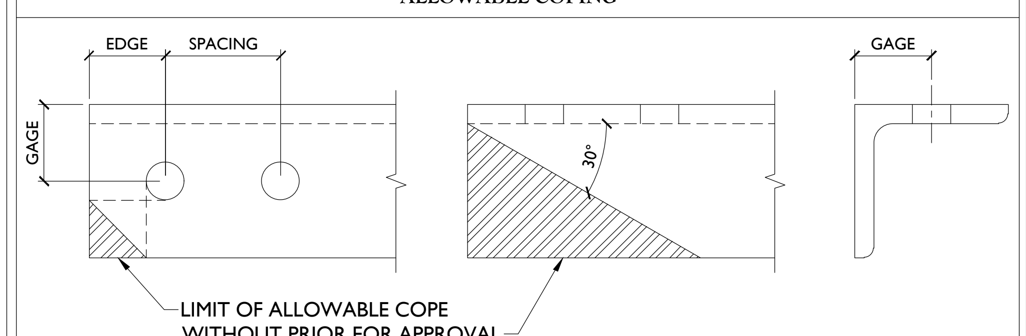


Colliers Engineering & Design

www.colliersengineering.com

Copyright © 2022. Colliers Engineering & Design All Rights Reserved. This drawing and all the information contained herein is authorized for use only by the party for whom the services were contracted or to whom it is certified. This drawing may not be copied, reused, disclosed, distributed or relied upon for any other purpose without the express written consent of Colliers Engineering & Design.

Doing Business as MASER CONSULTING

verizon

811 Know what's below. Call before you dig.

PROTECT YOURSELF
ALL STATES REQUIRE NOTIFICATION OF EXCAVATORS, DESIGNERS, OR ANY PERSON PREPARING TO DISTURB THE EARTH'S SURFACE ANYWHERE IN ANY STATE

FOR STATE SPECIFIC DIRECT PHONE NUMBERS VISIT: WWW.CALL811.COM

| SCALE : | JOB NUMBER : |
|---|---|
| AS SHOWN | 22777026A |

| REV | DATE | DESCRIPTION | DRAWN BY | CHECKED BY |
|---|---|---|---|---|
| . | . | . | . | . |
| . | . | . | . | . |
| . | . | . | . | . |
| 0 | 4/25/22 | ISSUED FOR CONSTRUCTION | DA | DX |

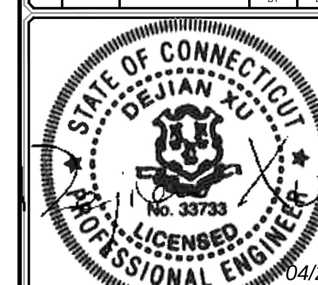


04/25/2022

COLLIERS ENGINEERING & DESIGN CT, P.C.
C.T. C.O.A. #JPC.0000131

IT IS A VIOLATION OF LAW FOR ANY PERSON, UNLESS THEY ARE ACTING UNDER THE DIRECTION OF THE RESPONSIBLE LICENSED PROFESSIONAL ENGINEER, TO ALTER THIS DOCUMENT.

SITE NAME:

SOUTH WINDSOR 2 CT
467434

300 GOVERNORS HIGHWAY
SOUTH WINDSOR, CT 06074
HARTFORD COUNTY

Colliers Engineering & Design

STAMFORD
1055 Washington Boulevard
Stamford, CT 06901
Phone: 203.324.0800
COLLIERS ENGINEERING & DESIGN, INC.
DOING BUSINESS AS MASER CONSULTING

SHEET TITLE :
GENERAL NOTES

SHEET NUMBER :
SGN-1

NOTE: DO NOT SCALE DRAWINGS FOR CONSTRUCTION.

\AcPublish_50652\Template.Mount MOD_recover.dwg\SGN-1 By: DAVID.ANUKA

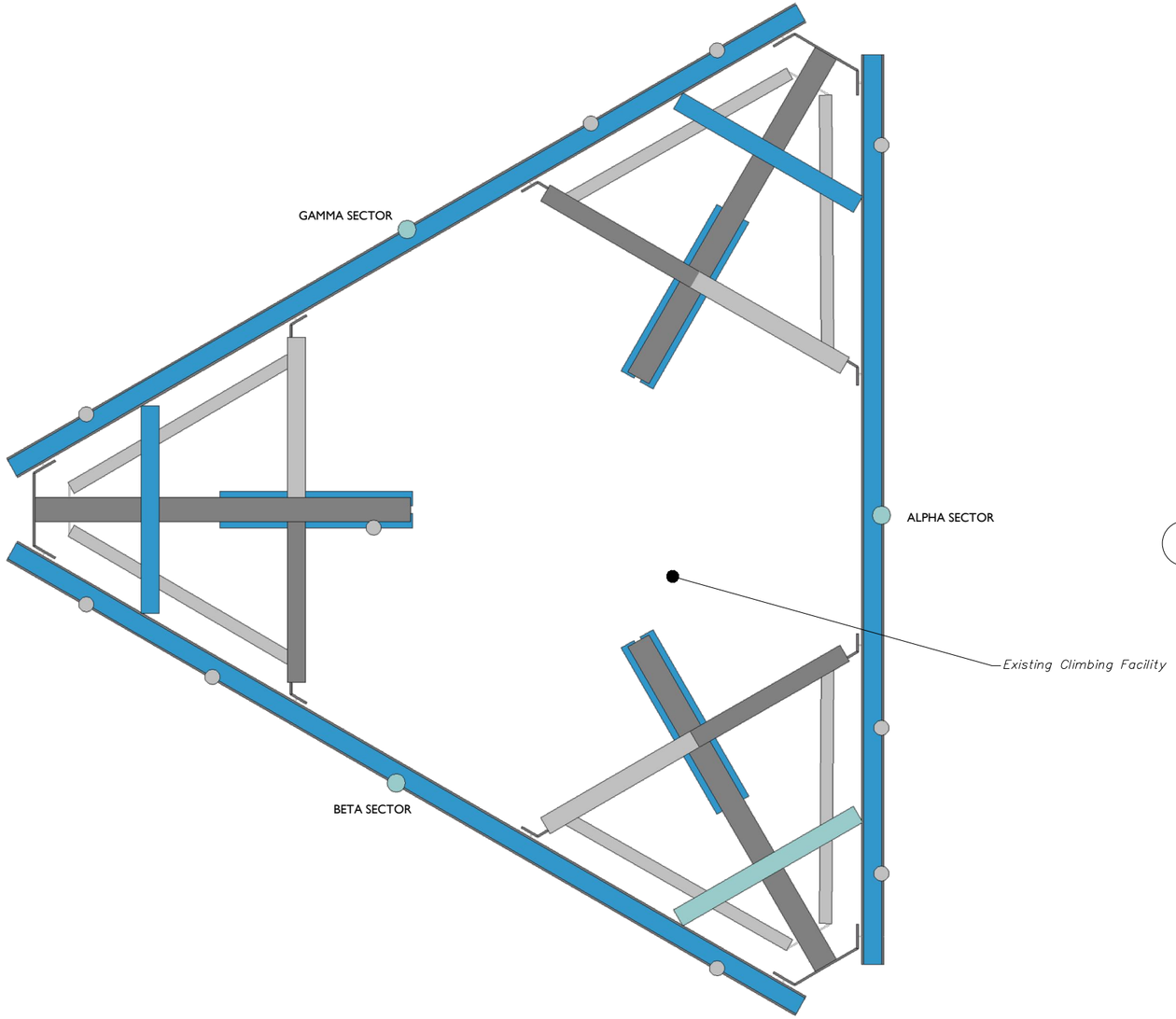


1 CLIMBING FACILITY LOCATION

SCALE : N.T.S.

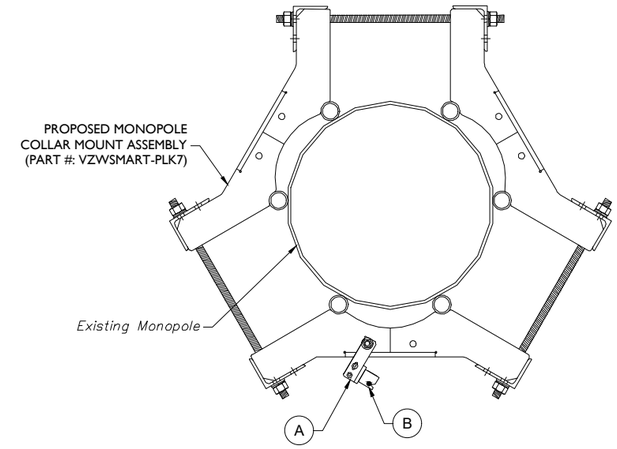


| ITEM # | QTY | PART NUMBER | DESCRIPTIONS |
|---|---|---|---|
| A | 1 | H42-0501-06 | WIRE ROPE GUIDE (PERFECT VISION OR EQUIV) |
| B | 1 | PV-CMX-CG-BO | WIRE ROPE GUIDE (PERFECT VISION OR EQUIV) |

2 PROPOSED WIRE ROPE GUIDE ATTACHMENT - PLAN VIEW

SCALE : N.T.S.

NOTE: CONTRACTOR SHALL ENSURE THAT WIRE ROPE GUIDE DOES NOT PUSH THE WIRE ROPE OUTSIDE OF THE VERTICAL PLANE OF THE SAFETY CLIMB. CONTRACT EOR WITH PHOTOS OF SAFETY CLIMB AND COLLAR FOR FURTHER DIRECTION IF NEEDED.

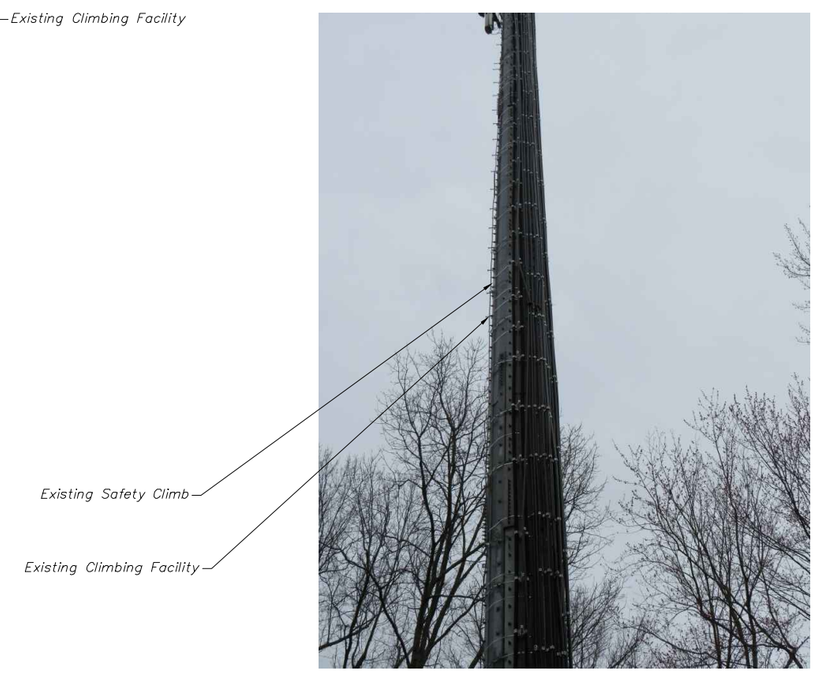


CLIMBING FACILITY PHOTO

STRUCTURAL NOTES:

1. PER THE MOUNT MAPPING COMPLETED BY ONSIGHT SERVICES LLC ON 4/7/2022, THE SAFETY CLIMB AND CLIMBING FACILITIES UP TO THE VERIZON MOUNT ELEVATION (110'-9") ARE IN GOOD CONDITION. COLLIERS ENGINEERING & DESIGN DOES NOT WARRANT THIS INFORMATION.

2. INSTALL SHALL NOT CAUSE HARM TO THE STRUCTURE, CLIMBING FACILITY, SAFETY CLIMB, OR ANY SYSTEM INSTALLED ON THE STRUCTURE. TIMELY NOTICE AND DOCUMENTATION SHALL BE PROVIDED BY CONTRACTORS TO THE EOR (OF STRUCTURAL DESIGN) IF AN OBSTRUCTION WAS REQUIRED TO MEET THE RF SYSTEM DESIGN REQUIREMENTS AND PERFORMANCES.

Colliers Engineering & Design

www.colliersengineering.com

Copyright © 2022. Colliers Engineering & Design All Rights Reserved. This drawing and all the information contained herein is authorized for use only by the party for whom the services were contracted or to whom it is certified. This drawing may not be copied, reused, disclosed, distributed or relied upon for any other purpose without the express written consent of Colliers Engineering & Design.

Doing Business as MASER CONSULTING

verizon

811 Know what's below. Call before you dig.

PROTECT YOURSELF

ALL STATES REQUIRE NOTIFICATION OF EXCAVATORS, DESIGNERS, OR ANY PERSON PREPARING TO DISTURB THE EARTH'S SURFACE ANYWHERE IN ANY STATE

FOR STATE SPECIFIC DIRECT PHONE NUMBERS VISIT: WWW.CALL811.COM

SCALE : AS SHOWN

JOB NUMBER : 22777026A

| REV | DATE | DESCRIPTION | DRAWN BY | CHECKED BY |
|---|---|---|---|---|
| 0 | 4/25/22 | ISSUED FOR CONSTRUCTION | DA | DX |

STATE OF CONNECTICUT
DEJIAN XU
No. 33733
LICENSED PROFESSIONAL ENGINEER
04/25/2022

COLLIERS ENGINEERING & DESIGN CT, P.C.
C.T. C.O.A. #PC.0000131

IT IS A VIOLATION OF LAW FOR ANY PERSON, UNLESS THEY ARE ACTING UNDER THE DIRECTION OF THE RESPONSIBLE LICENSED PROFESSIONAL ENGINEER, TO ALTER THIS DOCUMENT.

SITE NAME:

SOUTH WINDSOR 2 CT
467434

300 GOVERNORS HIGHWAY
SOUTH WINDSOR, CT 06074
HARTFORD COUNTY

Colliers Engineering & Design

STAMFORD
1055 Washington Boulevard

Stamford, CT 06901
Phone: 203.324.0800
COLLIERS ENGINEERING & DESIGN, INC.
DOING BUSINESS AS MASER CONSULTING

SHEET TITLE : CLIMBING FACILITY DETAIL

SHEET NUMBER : SCF-1

LEGEND:

- PROPOSED
- RELOCATED
- EXISTING

## MOUNT MODIFICATION SCHEDULE

| NO. | ELEVATION | QUANTITY | DESCRIPTION | NOTES |
|---|---|---|---|---|
| 1 | 110'-9" | 1 | PROPOSED SUPPORT RAIL KIT (PART #: VZWSMART-PLK1) | CONTRACTOR TO VERIFY THE LENGTH REQUIRED AND TRIM AS NECESSARY IN ACCORDANCE WITH THE 'STRUCTURAL STEEL' NOTES ON SHEET SGN-1. RADIO AND/OR TME POSITIONS SHALL BE ADJUSTED VERTICALLY AS NEEDED IN ORDER TO ACHIEVE INSTALLATION OF HORIZONTAL AS SHOWN. |
| 2 | | 1 | PROPOSED KICKER KIT (PART #: VZWSMART-PLK5)) | CONTRACTOR TO VERIFY THE LENGTH REQUIRED AND TRIM AS NECESSARY IN ACCORDANCE WITH THE 'STRUCTURAL STEEL' NOTES ON SHEET SGN-1. CONNECT OTHER END OF KICKER KIT TO MONOPOLE COLLAR MOUNT ASSEMBLY (PART #: VZWSMART-PLK7). |
| 3 | | 3 | PROPOSED 72" LONG, P2 1/2 STD (PART #: VZWSMART-P40-278X072) | CONNECT NEW MOUNT PIPE TO EXISTING HORIZONTAL WITH CROSSOVER PLATES (PART #: SP1 SP219-H). REPLACE EXISTING POSITION 2 PIPE IN ALL SECTORS. |

NOTES.

MOUNT MEMBERS NOT SHOWN FOR CLARITY U.N.O.
THREADED ROD FROM PROPOSED KITS SHALL BE TRIMMED TO EXTEND NO MORE THAN 3" BEYOND THE LOCK NUT. TREAT ALL CUT ENDS WITH (2) COATS OF COLD GALVANIZATION (ZINGA OR ZINC KOTE).

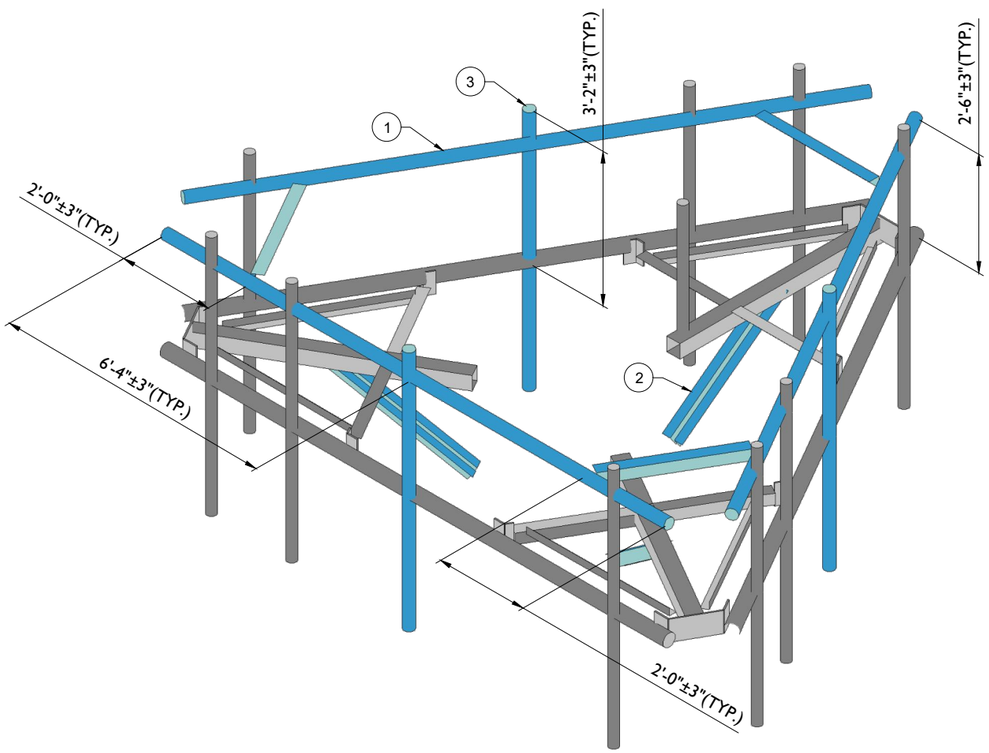


1 PROPOSED ISOMETRIC VIEW (TYP. ALL SECTORS)

SCALE : N.T.S.

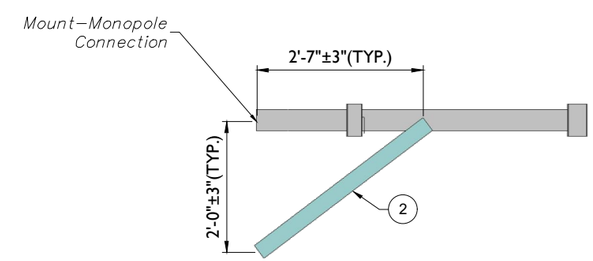


2 PROPOSED SIDE ELEVATION VIEW (TYP. ALL SECTORS)

SCALE : N.T.S.

Colliers Engineering & Design

www.colliersengineering.com

Copyright © 2022. Colliers Engineering & Design All Rights Reserved. This drawing and all the information contained herein is authorized for use only by the party for whom the services were contracted or to whom it is certified. This drawing may not be copied, reused, disclosed, distributed or relied upon for any other purpose without the express written consent of Colliers Engineering & Design.

Doing Business as MASER CONSULTING

verizon

PROTECT YOURSELF

ALL STATES REQUIRE NOTIFICATION OF EXCAVATORS, DESIGNERS, OR ANY PERSON PREPARING TO DISTURB THE EARTH'S SURFACE ANYWHERE IN ANY STATE

811 Know what's below. Call before you dig.

FOR STATE SPECIFIC DIRECT PHONE NUMBERS VISIT: WWW.CALL811.COM

| SCALE : | JOB NUMBER : |
|---|---|
| AS SHOWN | 22777026A |

| REV | DATE | DESCRIPTION | DRAWN BY | CHECKED BY |
|---|---|---|---|---|
| . | . | . | . | . |
| . | . | . | . | . |
| . | . | . | . | . |
| 0 | 4/25/22 | ISSUED FOR CONSTRUCTION | DA | DX |

STATE OF CONNECTICUT · DEJIAN XU · No. 33733 · LICENSED PROFESSIONAL ENGINEER

04/25/2022

COLLIERS ENGINEERING & DESIGN CT, P.C.
C.T. C.O.A. #PC.0000131

IT IS A VIOLATION OF LAW FOR ANY PERSON, UNLESS THEY ARE ACTING UNDER THE DIRECTION OF THE RESPONSIBLE LICENSED PROFESSIONAL ENGINEER, TO ALTER THIS DOCUMENT.

SITE NAME:

SOUTH WINDSOR 2 CT
467434

300 GOVERNORS HIGHWAY
SOUTH WINDSOR, CT 06074
HARTFORD COUNTY

Colliers Engineering & Design

STAMFORD
1055 Washington Boulevard

Stamford, CT 06901
Phone: 203.324.0800
COLLIERS ENGINEERING & DESIGN, INC.
DOING BUSINESS AS MASER CONSULTING

SHEET TITLE :

MODIFICATION DETAILS

SHEET NUMBER :

SS-1

MOUNT PHOTO 1

MOUNT PHOTO 2

MOUNT PHOTO 3

MOUNT PHOTO 4

Colliers Engineering & Design

www.colliersengineering.com

Copyright © 2022. Colliers Engineering & Design All Rights Reserved. This drawing and all the information contained herein is authorized for use only by the party for whom the services were contracted or to whom it is certified. This drawing may not be copied, reused, disclosed, distributed or relied upon for any other purpose without the express written consent of Colliers Engineering & Design.

Doing Business as MASER CONSULTING

verizon

811 Know what's below. Call before you dig.

PROTECT YOURSELF

ALL STATES REQUIRE NOTIFICATION OF EXCAVATORS, DESIGNERS, OR ANY PERSON PREPARING TO DISTURB THE EARTH'S SURFACE ANYWHERE IN ANY STATE

FOR STATE SPECIFIC DIRECT PHONE NUMBERS VISIT: WWW.CALL811.COM

| SCALE : | JOB NUMBER : |
|---|---|
| AS SHOWN | 22777026A |

| REV | DATE | DESCRIPTION | DRAWN BY | CHECKED BY |
|---|---|---|---|---|
| . | . | . | . | . |
| . | . | . | . | . |
| . | . | . | . | . |
| 0 | 4/25/22 | ISSUED FOR CONSTRUCTION | DA | DX |

STATE OF CONNECTICUT
DEJIAN XU
No. 33733
LICENSED PROFESSIONAL ENGINEER
04/25/2022

COLLIERS ENGINEERING & DESIGN CT, P.C.
C.T. C.O.A. #PC.0000131

IT IS A VIOLATION OF LAW FOR ANY PERSON, UNLESS THEY ARE ACTING UNDER THE DIRECTION OF THE RESPONSIBLE LICENSED PROFESSIONAL ENGINEER, TO ALTER THIS DOCUMENT.

SITE NAME:

SOUTH WINDSOR 2 CT
467434

300 GOVERNORS HIGHWAY
SOUTH WINDSOR, CT 06074
HARTFORD COUNTY

Colliers Engineering & Design

STAMFORD
1055 Washington Boulevard

Stamford, CT 06901
Phone: 203.324.0800
COLLIERS ENGINEERING & DESIGN, INC.
DOING BUSINESS AS MASER CONSULTING

SHEET TITLE :

MOUNT PHOTOS

SHEET NUMBER :

SS-2

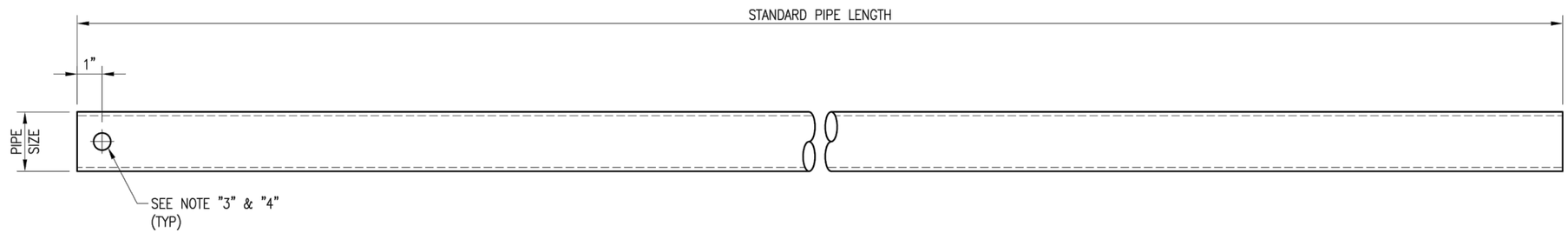


| VZWSMART Standard Pipe | | |
|---|---|---|
| VZWSMART Number | Size | Length |
| P40-238X048 | PIPE 2 SCH40 (2.375" OD x 0.154" THK) | 48" |
| P40-238X072 | PIPE 2 SCH40 (2.375" OD x 0.154" THK) | 72" |
| P40-238X096 | PIPE 2 SCH40 (2.375" OD x 0.154" THK) | 96" |
| P40-238X120 | PIPE 2 SCH40 (2.375" OD x 0.154" THK) | 120" |
| P40-238X126 | PIPE 2 SCH40 (2.375" OD x 0.154" THK) | 126" |
| P40-238X150 | PIPE 2 SCH40 (2.375" OD x 0.154" THK) | 150" |
| P40-238X174 | PIPE 2 SCH40 (2.375" OD x 0.154" THK) | 174" |
| P40-278X048 | PIPE 2.5 SCH40 (2.875" OD x 0.203" THK) | 48" |
| P40-278X072 | PIPE 2.5 SCH40 (2.875" OD x 0.203" THK) | 72" |
| P40-278X096 | PIPE 2.5 SCH40 (2.875" OD x 0.203" THK) | 96" |
| P40-278X120 | PIPE 2.5 SCH40 (2.875" OD x 0.203" THK) | 120" |
| P40-278X126 | PIPE 2.5 SCH40 (2.875" OD x 0.203" THK) | 126" |
| P40-278X150 | PIPE 2.5 SCH40 (2.875" OD x 0.203" THK) | 150" |
| P40-278X174 | PIPE 2.5 SCH40 (2.875" OD x 0.203" THK) | 174" |
| P40-312X048 | PIPE 3 SCH40 (3.5" OD x 0.216" THK) | 48" |
| P40-312X072 | PIPE 3 SCH40 (3.5" OD x 0.216" THK) | 72" |
| P40-312X126 | PIPE 3 SCH40 (3.5" OD x 0.216" THK) | 126" |
| P40-312X150 | PIPE 3 SCH40 (3.5" OD x 0.216" THK) | 150" |
| P40-312X174 | PIPE 3 SCH40 (3.5" OD x 0.216" THK) | 174" |

**NOTE:**
**APPROVED SMART KIT VENDORS ARE ALLOWED TO SUBSTITUTE AT THEIR DISCRETION PIPES LISTED ON THIS PAGE FOR CUSTOM LENGTH COMPONENTS OF MATCHING SIZE. SUBSTITUTIONS SHALL MEET THE ORIGINAL STRUCTURAL INTENT.**

NOTES:
1. ALL PIPE GRADE A53-B OR BETTER.
2. HOT-DIPPED GALVANIZED PER ASTM A123.
3. ALL HOLES ARE 11/16" DIA. U.N.O
4. HOLES MAY OR MAY NOT BE PRESENT, DEPEND UPON MANUFACTURE DISCRETION.
5. ALL FIELD CUT AND DRILLED SURFACES SHALL BE REPAIRED WITH A MINIMUM OF TWO COATS OF ZINGA OR ZINC COTE PER ASTM A780 AND MANUFACTURER'S RECOMMENDATIONS.

**VzW SMART Tool© Vendor**

verizon

DRAWN BY: BT | CHECKED BY: HMA/KW

| REV. | DESCRIPTION | BY | DATE |
|---|---|---|---|
| 0 | FIRST ISSUE | BT | 08/04/21 |

SHEET TITLE:
VZWSMART STANDARD PIPE

SHEET NUMBER: VZWSMART-PIPE

REV #: 0

| PARTS LIST | | | | | | |
|---|---|---|---|---|---|---|
| ITEM | QTY | PART NO. | PART DESCRIPTION | LENGTH | UNIT WT. | NET WT. |
| 1 | 1 | X-SP219 | SMALL SUPPORT CROSS PLATE | 8 1/4 in | 8.61 | 8.61 |
| 2 | 2 | X-UB1306 | 1/2" X 3-5/8" X 6" X 3" U-BOLT (HDG.) | | 0.66 | 1.31 |
| 3 | 2 | X-UB1300 | 1/2" X 3" X 5" X 2" U-BOLT (HDG.) | | 0.66 | 1.31 |
| 4 | 8 | G12FW | 1/2" HDG USS FLATWASHER | | 0.03 | 0.27 |
| 5 | 8 | G12LW | 1/2" HDG LOCKWASHER | | 0.01 | 0.11 |
| 6 | 8 | G12NUT | 1/2" HDG HEAVY 2H HEX NUT | | 0.07 | 0.57 |
| | | | | | TOTAL WT. # | 12.61 |

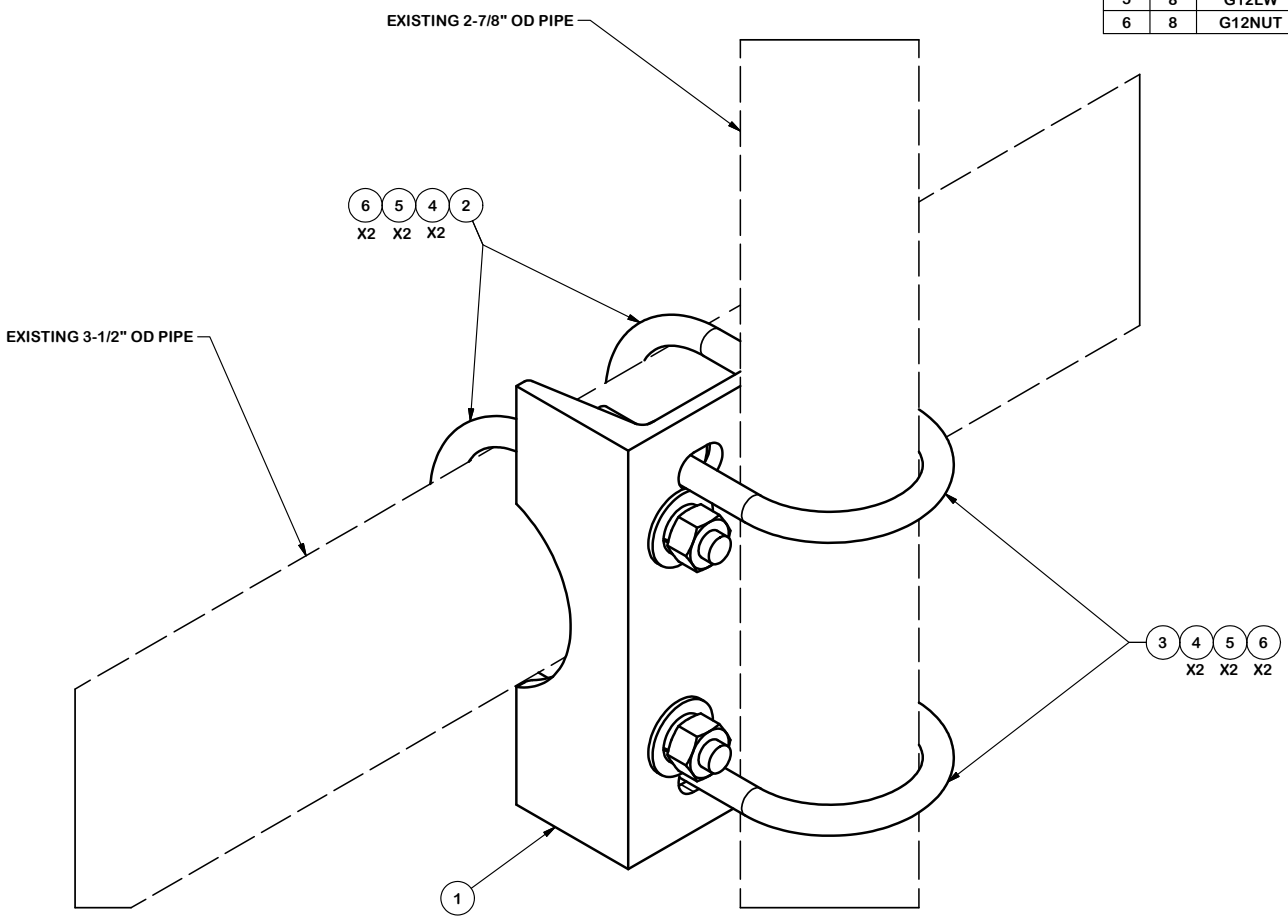


## TOLERANCE NOTES

**TOLERANCES ON DIMENSIONS, UNLESS OTHERWISE NOTED ARE:**
**SAWED, SHEARED AND GAS CUT EDGES *(± 0.030")***
**DRILLED AND GAS CUT HOLES *(± 0.030")* - NO CONING OF HOLES**
**LASER CUT EDGES AND HOLES *(± 0.010")* - NO CONING OF HOLES**
**BENDS ARE ± 1/2 DEGREE**
**ALL OTHER MACHINING *(± 0.030")***
**ALL OTHER ASSEMBLY *(± 0.060")***


PROPRIETARY NOTE:
THE DATA AND TECHNIQUES CONTAINED IN THIS DRAWING ARE PROPRIETARY INFORMATION OF VALMONT INDUSTRIES AND CONSIDERED A TRADE SECRET. ANY USE OR DISCLOSURE WITHOUT THE CONSENT OF VALMONT INDUSTRIES IS STRICTLY PROHIBITED.


| REV | DESCRIPTION OF REVISIONS | CPD | BY | DATE |
|---|---|---|---|---|
| A | REDRAWN IN INV, UPDATED VIEWS & TABLE | | KC8 | 8-21-2012 |

REVISION HISTORY

DESCRIPTION
2-7/8" TO 3-1/2"
PIPE MOUNT ASSEMBLY

| CPD NO. | DRAWN BY | ENG. APPROVAL | PART NO. |
|---|---|---|---|
| 4518 | BMC 6/3/2009 | | SP219-H |

| CLASS | SUB | DRAWING USAGE | CHECKED BY | DWG. NO. |
|---|---|---|---|---|
| 81 | 01 | CUSTOMER | CEK 2/18/2013 | SP219-H |


SITE PRO 1
A valmont COMPANY
Engineering Support Team:
1-888-753-7446
Locations:
New York, NY
Atlanta, GA
Los Angeles, CA
Plymouth, IN
Salem, OR
Dallas, TX

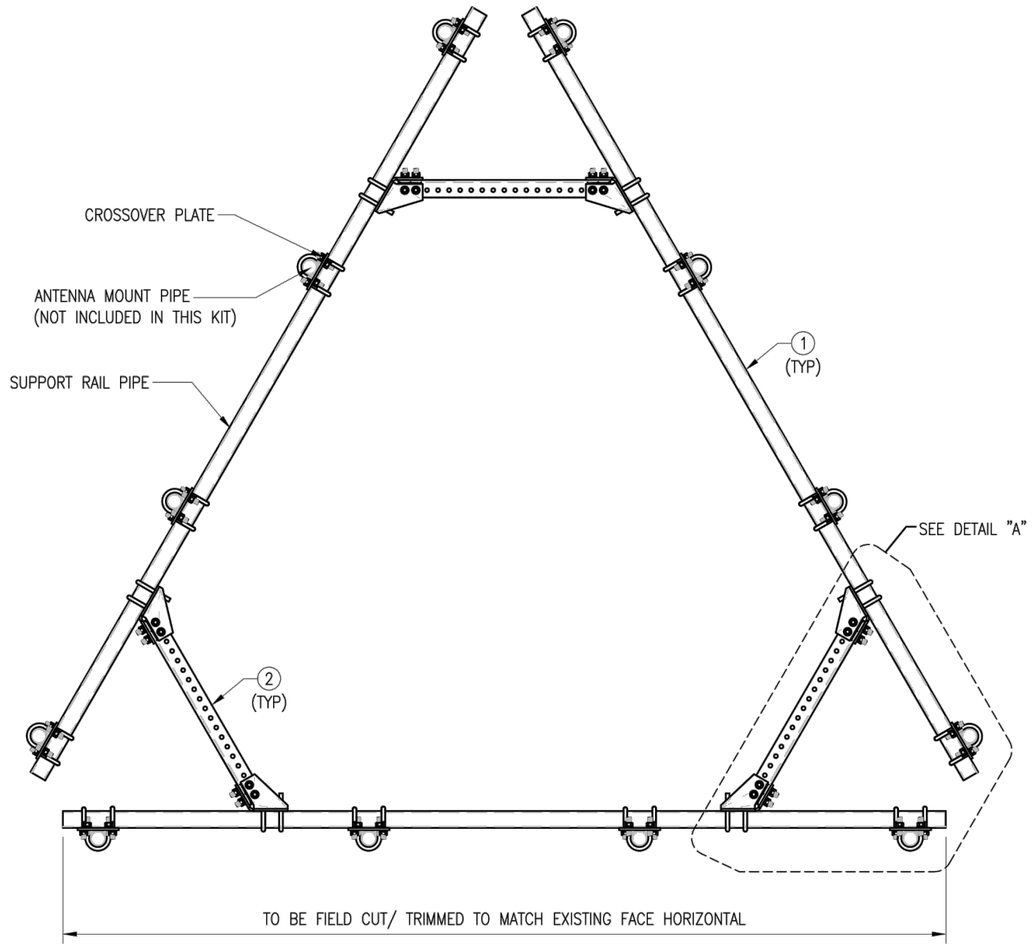


PLAN VIEW

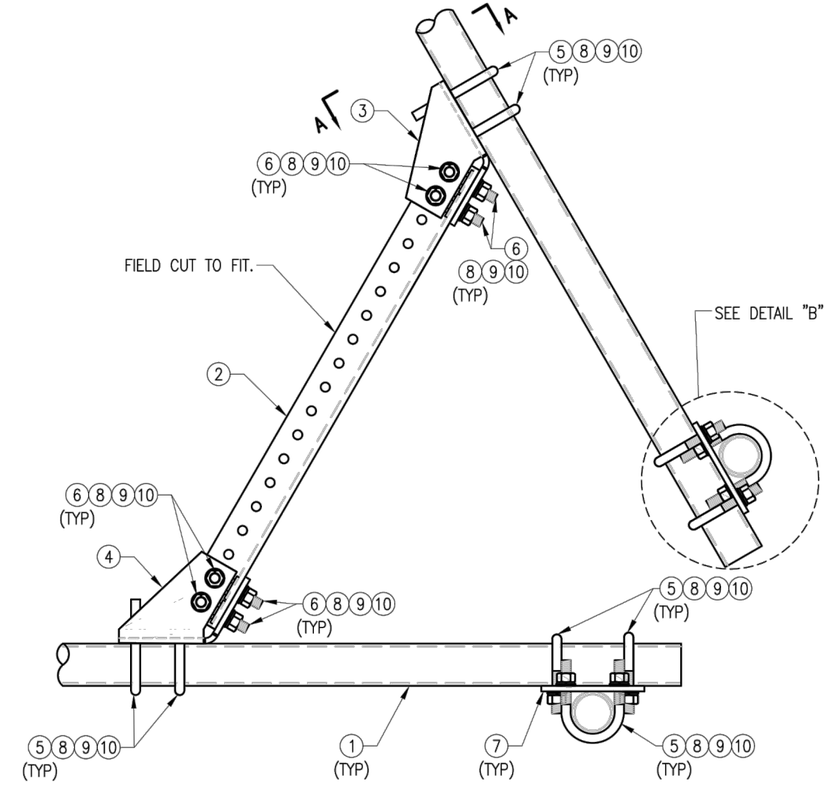


DETAIL "A"

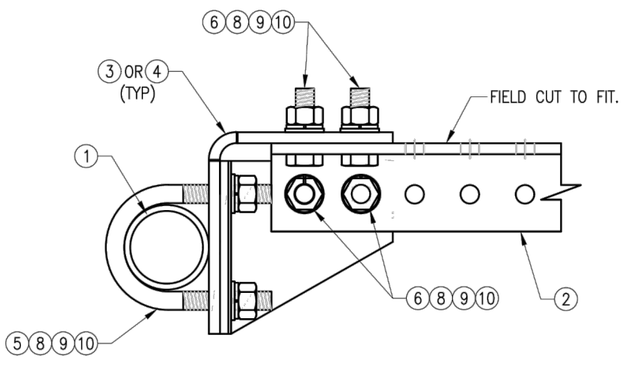


SECTION "A–A"

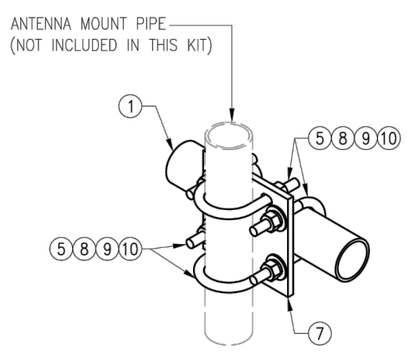


DETAIL "B"

NOTES:
1. HOT–DIPPED GALVANIZED PER ASTM A123.

VZW SMART–PLK1 (SUPPORT RAIL KIT)

| ITEM NO. | QTY. | PART NO. | DESCRIPTION | SHEET # | WT |
|---|---|---|---|---|---|
| 1 | 3 | PST2875–12.5 | 2.5" PST (2.875" O.D. X 0.203" THK.) X 12'–6" A53 GR–B | PLK1–F1 | 292 |
| 2 | 3 | L33375–3 | L 3" X 3" X 3/8" X 3'–0" A36 | PLK1–F1 | 66 |
| 3 | 3 | CBP–L | CORNER BENT PLATE BRACKET | PLK1–F2 | 28 |
| 4 | 3 | CBP–R | CORNER BENT PLATE BRACKET | PLK1–F2 | 28 |
| 5 | 60 | MS02–625–300–500 | RU–BOLT 5/8" X 3" I.W. X 5" I.L. A36 (OR EQUIV.) | RBC–1 | 82 |
| 6 | 24 | --- | BOLT 5/8" X 2" A325 | --- | 9 |
| 7 | 12 | PL375–857 | PL 3/8" X 8 1/2" X 7'–0" A36 | PLK1–F3 | 77 |
| 8 | 144 | FW–625 | 5/8" HDG USS FLAT WASHER | --- | 12 |
| 9 | 144 | LW–625 | 5/8" HDG LOCK WASHER | --- | 3 |
| 10 | 144 | NUT–625 | 5/8" HDG HEX NUT | --- | 17 |
| | | | | GALVANIZED WT | 504 |

VzW
SMART Tool©
Vendor

verizon

DRAWN BY: H.R | CHECKED BY: HMA

| REV. | DESCRIPTION | BY | DATE |
|---|---|---|---|
| 0 | FIRST ISSUE | H.R | 05/08/20 |

SHEET TITLE:

VZWSMART–PLK1
SUPPORT RAIL KIT

SHEET NUMBER: VZWSMART–PLK1

REV #: 0

NOTE:
THE LOCATION OF KICKER AND EXISTING ANTENNA MOUNT SHOWN ON THE DRAWING IS FOR REPRESENTATION PURPOSE ONLY. SEE INSTALLATION DRAWINGS FOR ACTUAL INSTALLATION OF DETAILS.

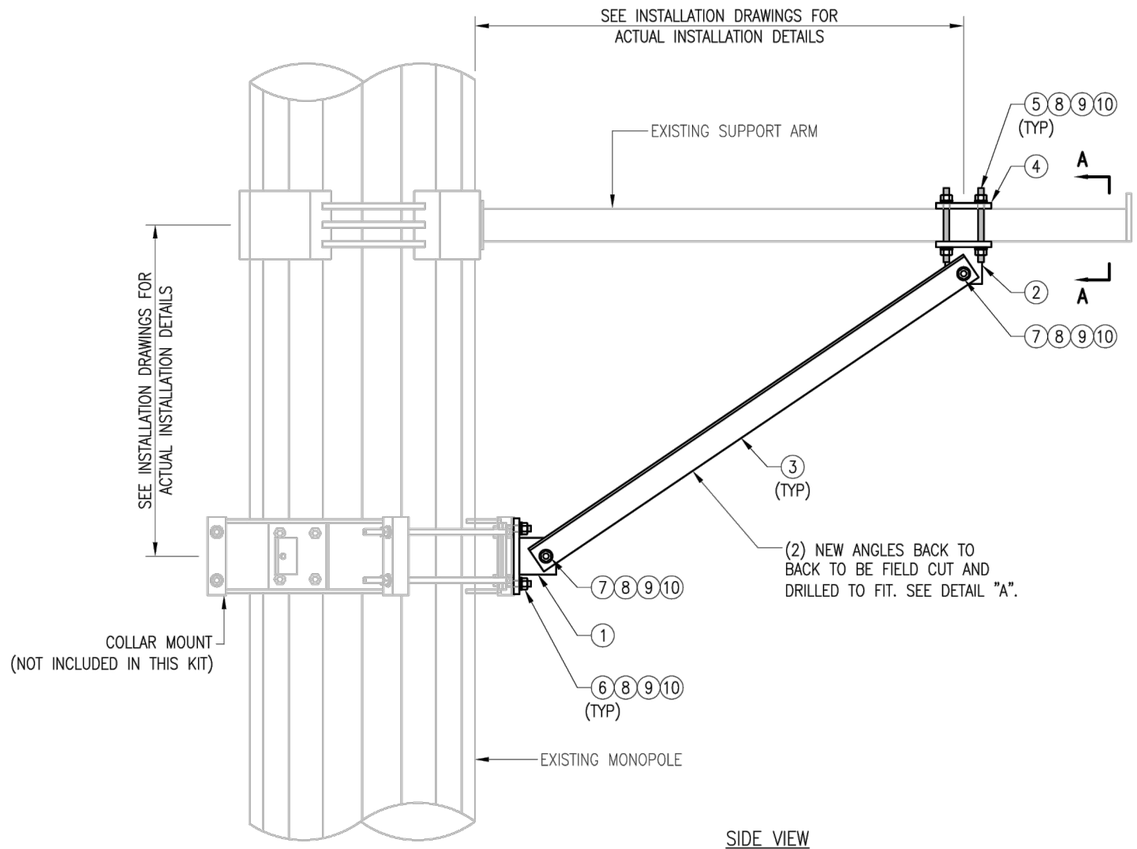


SIDE VIEW
KICKER KIT

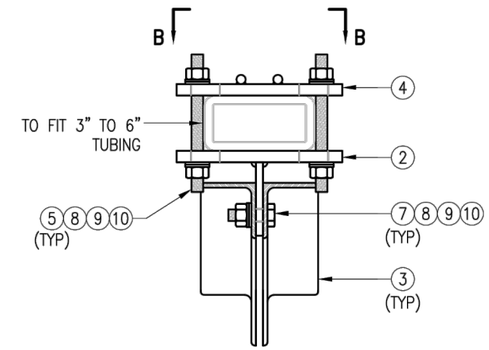


SECTION "A–A"
RECT. HSS MOUNTING

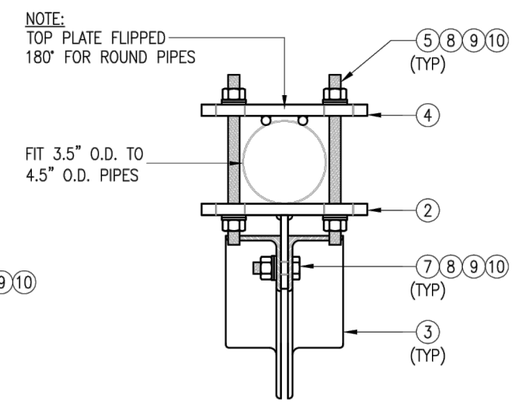


SECTION "A–A"
ROUND PIPE MOUNTING

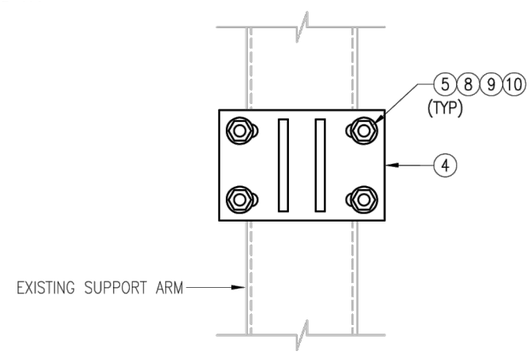


SECTION "B–B"

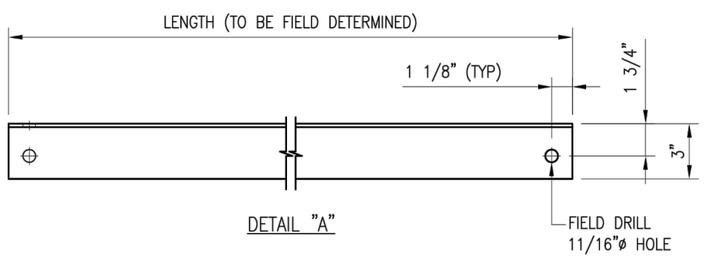


DETAIL "A"

NOTES:
1. ALL HOLES ARE 11/16" DIA. U.N.O
2. HOT–DIPPED GALVANIZED PER ASTM A123.
3. FIT UP TO 6" SQ. TUBING OR 4 1/2" O.D. PIPE

VZWSMART–PLK5 (KICKER KIT)

| ITEM NO. | QTY. | PART NO. | DESCRIPTION | SHEET # | WT |
|---|---|---|---|---|---|
| 1 | 3 | BRKW–XXX | BRACKET WELDMENT A36 | PLK5–F3 | 43.8 |
| 2 | 3 | BRKW–XXXX | BRACKET WELDMENT A36 | PLK5–F2 | 35.7 |
| 3 | 6 | L331875–8 | L 3" X 3" X 3/16" X 8'–0" A36 | PLK5–F4 | 182.9 |
| 4 | 3 | PL–KI | PL 5/8" X 6" X 9" A36 | PLK5–F1 | 29.0 |
| 5 | 12 | --- | THREADED ROD 5/8" DIA. X 1'–0" F1554–36 HDG | --- | -- |
| 6 | 6 | --- | BOLT 5/8" X 2" A325 | --- | -- |
| 7 | 12 | --- | BOLT 5/8" X 2 1/2" A325 | --- | -- |
| 8 | 42 | FW–625 | 5/8" HDG USS FLAT WASHER | --- | 3 |
| 9 | 42 | LW–625 | 5/8" HDG LOCK WASHER | --- | 1 |
| 10 | 42 | NUT–625 | 5/8" HDG HEX NUT | --- | 5 |
| | | | | GALVANIZED WT | 291 |

VzW
SMART Tool©
Vendor

verizon

DRAWN BY: MN | CHECKED BY: HMA/KW

| REV. | DESCRIPTION | BY | DATE |
|---|---|---|---|
| 0 | FIRST ISSUE | MN | 05/08/20 |

SHEET TITLE:
VZWSMART–PLK5
KICKER KIT

SHEET NUMBER: VZWSMART–PLK5
REV #: 0

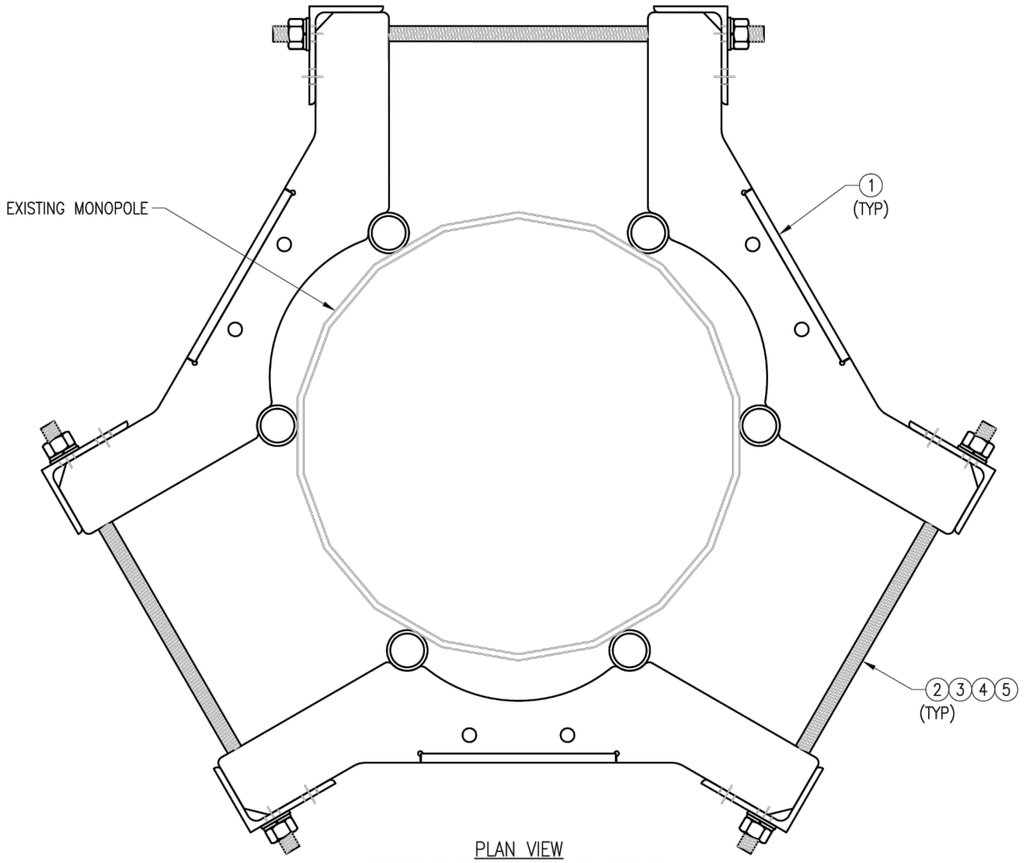


PLAN VIEW
MONOPOLE COLLAR MOUNT ASSEMBLY

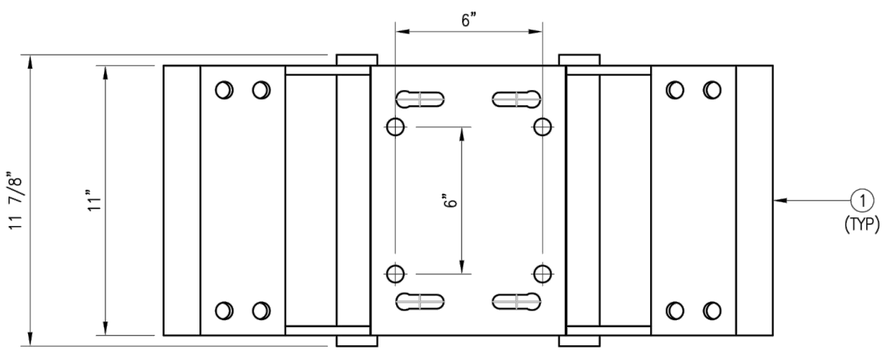


FRONT VIEW

NOTES:
1. FIT 12" TO 45" DIA MONOPOLE.
2. HOT-DIPPED GALVANIZED PER ASTM A123.

VZWSMART-PLK7 (MONOPOLE COLLAR MOUNT ASSEMBLY)

| ITEM NO. | QTY. | PART NO. | DESCRIPTION | SHEET # | WT |
|---|---|---|---|---|---|
| 1 | 3 | CM-1245 | COLLAR MOUNT ASSEMBLY | PLK7-F1 | 147 |
| 2 | 6 | --- | THREADED ROD 5/8" X 4'-0" A193-B7 | --- | |
| 3 | 12 | FW-625 | 5/8" HDG USS FLAT WASHER | --- | 1 |
| 4 | 12 | LW-625 | 5/8" HDG LOCK WASHER | --- | 0 |
| 5 | 12 | NUT-625 | 5/8" HDG HEX NUT | --- | 1 |
| | | | | GALVANIZED WT | 150 |

VzW
SMART Tool©
Vendor

verizon

DRAWN BY: BT | CHECKED BY: HMA/KW

| REV. | DESCRIPTION | BY | DATE |
|---|---|---|---|
| 0 | FIRST ISSUE | BT | 05/11/20 |

SHEET TITLE:
VZWSMART-PLK7
MONOPOLE COLLAR
MOUNT ASSEMBLY

SHEET NUMBER: VZWSMART-PLK7

REV #: 0

# Exhibit D

## Structural Analysis Report

PAUL J. FORD & COMPANY

Date: **May 17, 2022**

Paul J Ford & Company
250 East Broad Street, STE 600
Columbus, Ohio
614-221-6679

| | | |
|---|---|---|
| ***Subject:*** | **Structural Analysis Report** | |
| ***Carrier Designation:*** | ***Verizon Wireless* Co-Locate** | |
| | **Site Number:** | 467434 |
| | **Site Name:** | SOUTH WINDSOR 2 CT |
| ***Crown Castle Designation:*** | **BU Number:** | 828054 |
| | **Site Name:** | South Windsor/Rt 5 |
| | **JDE Job Number:** | 717404 |
| | **Work Order Number:** | 2115008 |
| | **Order Number:** | 617722 Rev. 0 |
| ***Engineering Firm Designation:*** | **Paul J Ford & Company Project Number:** | 37522-0173.001.7805 |
| ***Site Data:*** | **300 Governors Highway, South Windsor, Hartford County, CT** | |
| | **Latitude *41° 50' 0.4"*, Longitude *-72° 36' 11"*** | |
| | **169 Foot - Monopole Tower** | |

Paul J Ford & Company is pleased to submit this **"Structural Analysis Report"** to determine the structural integrity of the above-mentioned tower.

The purpose of the analysis is to determine acceptability of the tower stress level. Based on our analysis we have determined the tower stress level for the structure and foundation, under the following load case, to be:

LC7: Proposed Equipment Configuration **Sufficient Capacity – 96.1%**

This analysis utilizes an ultimate 3-second gust wind speed of 117 mph as required by the 2015 International Building Code. Applicable Standard references and design criteria are listed in Section 2 - Analysis Criteria.

Respectfully submitted by:

Donna L. Campbell
Structural Designer II
dcampbell@paulford.com

STATE OF CONNECTICUT
JAMES R. ANTOSZEWSKI
31499
LICENSED
PROFESSIONAL ENGINEER

05/19/2022

# TABLE OF CONTENTS

**1) INTRODUCTION**

**2) ANALYSIS CRITERIA**
- Table 1 - Proposed Equipment Configuration
- Table 2 - Other Considered Equipment

**3) ANALYSIS PROCEDURE**
- Table 3 - Documents Provided
- 3.1) Analysis Method
- 3.2) Assumptions

**4) ANALYSIS RESULTS**
- Table 4 - Section Capacity (Summary)
- Table 5 – Tower Component Stresses vs. Capacity
- 4.1) Recommendations

**5) APPENDIX A**
- tnxTower Output

**6) APPENDIX B**
- Base Level Drawing

**7) APPENDIX C**
- Additional Calculations

## 1) INTRODUCTION

This tower is a 169 ft Monopole tower designed by ENGINEERED ENDEAVORS, INC.

The tower has been modified multiple times to accommodate additional loading.

## 2) ANALYSIS CRITERIA

| | |
|---|---|
| **TIA-222 Revision:** | TIA-222-H |
| **Risk Category:** | II |
| **Wind Speed:** | 117 mph |
| **Exposure Category:** | C |
| **Topographic Factor:** | 1 |
| **Ice Thickness:** | 1.5 in |
| **Wind Speed with Ice:** | 50 mph |
| **Service Wind Speed:** | 60 mph |

**Table 1 - Proposed Equipment Configuration**

| Mounting Level (ft) | Center Line Elevation (ft) | Number of Antennas | Antenna Manufacturer | Antenna Model | Number of Feed Lines | Feed Line Size (in) |
|---|---|---|---|---|---|---|
| 111.0 | 111.0 | 3 | andrew | LNX-6514DS-A1M w/ Mount Pipe | 2<br>18 | 1-1/4<br>1-5/8 |
| | | 3 | commscope | NHH-65B-R2B w/ Mount Pipe | | |
| | | 3 | commscope | NHHSS-65B-R2B w/ Mount Pipe | | |
| | | 2 | raycap | RVZDC-6627-PF-48 | | |
| | | 3 | samsung telecommunications | CBRS RT4401-48A | | |
| | | 3 | samsung telecommunications | MT6407-77A w/ Mount Pipe | | |
| | | 3 | samsung telecommunications | RF4439D-25A | | |
| | | 3 | samsung telecommunications | RF4440D-13A | | |
| | | 1 | tower mounts | Platform Mount [LP 303-1] | | |

**Table 2 - Other Considered Equipment**

| Mounting Level (ft) | Center Line Elevation (ft) | Number of Antennas | Antenna Manufacturer | Antenna Model | Number of Feed Lines | Feed Line Size (in) |
|---|---|---|---|---|---|---|
| 165.0 | 166.0 | 3 | commscope | SDX1926Q-43 | 2<br>7 | 1-3/8<br>1-5/8 |
| | | 3 | ericsson | AIR 32 B2A/B66AA w/ Mount Pipe | | |
| | | 3 | ericsson | AIR6449 B41_T-MOBILE w/ Mount Pipe | | |
| | | 3 | ericsson | KRY 112 144/1 | | |
| | | 3 | ericsson | RADIO 4449 B12/B71 | | |
| | | 3 | ericsson | RRUS 4415 B25_CCIV2 | | |
| | | 3 | rfs celwave | APXVAARR24_43-U-NA20 w/ Mount Pipe | | |
| | | 1 | tower mounts | Platform Mount [LP 602-1] | | |

| Mounting Level (ft) | Center Line Elevation (ft) | Number of Antennas | Antenna Manufacturer | Antenna Model | Number of Feed Lines | Feed Line Size (in) |
|---|---|---|---|---|---|---|
| 160.0 | 162.0 | 3 | cci antennas | DMP65R-BU8D w/ Mount Pipe | 2<br>4<br>12 | 17/64<br>7/8<br>1-5/8 |
| | | 3 | cci antennas | HPA-65R-BUU-H8 w/ Mount Pipe | | |
| | | 3 | cci antennas | OPA65R-BU8D w/ Mount Pipe | | |
| | | 3 | ericsson | RADIO 4415 B30 | | |
| | | 3 | ericsson | RADIO 4449 B5/B12 | | |
| | | 3 | ericsson | RRUS 8843 B2/B66A | | |
| | | 3 | powerwave technologies | 7770.00 w/ Mount Pipe | | |
| | | 2 | raycap | DC6-48-60-18-8F | | |
| | 160.0 | 1 | tower mounts | Platform Mount [LP 602-1] | | |
| 148.0 | 148.0 | 3 | alcatel lucent | 800MHZ RRH | 3 | 1-1/4 |
| | | 3 | alcatel lucent | PCS 1900MHZ 4X45W-65MHZ | | |
| | | 3 | alcatel lucent | RRH2X50-800 | | |
| | | 3 | commscope | NNVV-65B-R4 w/ Mount Pipe | | |
| | | 1 | tower mounts | T-Arm Mount [TA 702-3] | | |
| 138.0 | 138.0 | 3 | fujitsu | TA08025-B604 | 1 | 1-1/2 |
| | | 3 | fujitsu | TA08025-B605 | | |
| | | 3 | jma wireless | MX08FRO665-21 | | |
| | | 1 | mounts | Commscope_MC-Pk8-DSH_Platform | | |
| | | 1 | raycap | RDIDC-9181-PF-48 | | |
| 124.0 | 128.0 | 2 | andrew | VHLP800-11 | 1<br>6<br>3<br>2 | 5/16<br>1/2<br>1/4<br>conduit |
| | | 3 | argus technologies | LLPX310R w/ Mount Pipe | | |
| | | 2 | dragonwave | HORIZON DUO | | |
| | | 3 | samsung telecommunications | WIMAX DAP HEAD | | |
| | 124.0 | 1 | tower mounts | Side Arm Mount [SO 701-3] | | |
| 118.0 | 118.0 | 1 | tower mounts | Side Arm Mount [SO 304-1] | 1 | 1/2 |

## 3) ANALYSIS PROCEDURE

**Table 3 - Documents Provided**

| Document | Reference | Source |
|---|---|---|
| 4-GEOTECHNICAL REPORTS | 3436696 | CCISITES |
| 4-TOWER FOUNDATION DRAWINGS/DESIGN/SPECS | 3436661 | CCISITES |
| 4-TOWER MANUFACTURER DRAWINGS | 3436681 | CCISITES |
| 4-TOWER STRUCTURAL ANALYSIS REPORTS | 3487016 | CCISITES |
| 4-POST-MODIFICATION INSPECTION | 3773025 | CCISITES |
| 4-TOWER REINFORCEMENT DESIGN/DRAWINGS/DATA | 3793344 | CCISITES |
| 4-POST-MODIFICATION INSPECTION | 3773024 | CCISITES |
| 4-TOWER REINFORCEMENT DESIGN/DRAWINGS/DATA | 5431037 | CCISITES |
| 4-POST-MODIFICATION INSPECTION | 6000997 | CCISITES |
| 4-TOWER REINFORCEMENT DESIGN/DRAWINGS/DATA | 6563357 | CCISITES |
| 4-POST-MODIFICATION INSPECTION | 6861018 | CCISITES |

### 3.1) Analysis Method

tnxTower (version 8.1.1.0), a commercially available analysis software package, was used to create a three-dimensional model of the tower and calculate member stresses for various loading cases. Selected output from the analysis is included in Appendix A. When applicable, Crown Castle has calculated and provided the effective area for panel antennas using approved methods following the intent of the TIA-222 standard.

tnxTower was used to determine the loads on the modified structure. Additional calculations were performed to determine the stresses in the pole and in the reinforcing elements. These calculations are presented in Appendix C.

### 3.2) Assumptions

1) Tower and structures were maintained in accordance with the TIA-222 Standard.
2) The configuration of antennas, transmission cables, mounts and other appurtenances are as specified in Tables 1 and 2 and the referenced drawings.
3) The structure was modified in conformance with the referenced modification drawings as shown in the referenced post modification inspection.
4) It is assumed that all base pole reactions are taken by the micropiles.

This analysis may be affected if any assumptions are not valid or have been made in error. Paul J Ford & Company should be notified to determine the effect on the structural integrity of the tower.

## 4) ANALYSIS RESULTS

### Table 4 - Section Capacity (Summary)

| Elevation (ft) | Component Type | Size | Critical Element | % Capacity | Pass / Fail |
|---|---|---|---|---|---|
| 169 - 164 | Pole | TP16.455x15.5x0.25 | Pole | 3.5% | Pass |
| 164 - 159 | Pole | TP17.409x16.455x0.25 | Pole | 16.2% | Pass |
| 159 - 154 | Pole | TP18.364x17.409x0.25 | Pole | 30.8% | Pass |
| 154 - 149 | Pole | TP19.318x18.364x0.25 | Pole | 42.8% | Pass |
| 149 - 144 | Pole | TP20.273x19.318x0.25 | Pole | 54.3% | Pass |
| 144 - 139 | Pole | TP21.228x20.273x0.25 | Pole | 63.9% | Pass |
| 139 - 136.66 | Pole | TP22.31x21.228x0.25 | Pole | 69.1% | Pass |
| 136.66 - 131.66 | Pole | TP22.115x21.174x0.3125 | Pole | 66.9% | Pass |
| 131.66 - 126.66 | Pole | TP23.055x22.115x0.3125 | Pole | 74.2% | Pass |
| 126.66 - 121.66 | Pole | TP23.996x23.055x0.3125 | Pole | 81.0% | Pass |
| 121.66 - 116.66 | Pole | TP24.937x23.996x0.3125 | Pole | 86.7% | Pass |
| 116.66 - 111.66 | Pole | TP25.877x24.937x0.3125 | Pole | 91.5% | Pass |
| 111.66 - 111 | Pole | TP26.001x25.877x0.3125 | Pole | 92.1% | Pass |
| 111 - 110.75 | Pole + Reinf. | TP26.048x26.001x0.575 | Reinf. 6 Tension Rupture | 82.6% | Pass |
| 110.75 - 105.75 | Pole + Reinf. | TP26.989x26.048x0.5625 | Reinf. 6 Tension Rupture | 89.4% | Pass |
| 105.75 - 101.5 | Pole + Reinf. | TP27.788x26.989x0.55 | Reinf. 6 Tension Rupture | 94.9% | Pass |
| 101.5 - 101.25 | Pole + Reinf. | TP27.835x27.788x0.9875 | Reinf. 12 Tension Rupture | 64.6% | Pass |
| 101.25 - 101 | Pole + Reinf. | TP27.882x27.835x0.9875 | Reinf. 12 Tension Rupture | 64.9% | Pass |
| 101 - 100.75 | Pole + Reinf. | TP27.93x27.882x0.725 | Reinf. 12 Tension Rupture | 86.4% | Pass |
| 100.75 - 95.75 | Pole + Reinf. | TP28.87x27.93x0.7125 | Reinf. 12 Tension Rupture | 92.2% | Pass |
| 95.75 - 92.16 | Pole + Reinf. | TP30.36x28.87x0.7 | Reinf. 12 Tension Rupture | 96.1% | Pass |
| 92.16 - 86.83 | Pole + Reinf. | TP29.924x28.92x0.9375 | Reinf. 12 Tension Rupture | 79.2% | Pass |
| 86.83 - 81.83 | Pole + Reinf. | TP30.865x29.924x0.925 | Reinf. 12 Tension Rupture | 83.2% | Pass |
| 81.83 - 81.5 | Pole + Reinf. | TP30.927x30.865x0.925 | Reinf. 12 Tension Rupture | 83.4% | Pass |
| 81.5 - 81.25 | Pole + Reinf. | TP30.974x30.927x0.95 | Reinf. 11 Tension Rupture | 70.8% | Pass |
| 81.25 - 76.25 | Pole + Reinf. | TP31.915x30.974x0.925 | Reinf. 11 Tension Rupture | 74.1% | Pass |
| 76.25 - 71.25 | Pole + Reinf. | TP32.856x31.915x0.9 | Reinf. 11 Tension Rupture | 77.1% | Pass |
| 71.25 - 66.25 | Pole + Reinf. | TP33.797x32.856x0.875 | Reinf. 11 Tension Rupture | 80.1% | Pass |
| 66.25 - 61.25 | Pole + Reinf. | TP34.738x33.797x0.8625 | Reinf. 11 Tension Rupture | 82.9% | Pass |
| 61.25 - 56.25 | Pole + Reinf. | TP35.679x34.738x0.85 | Reinf. 11 Tension Rupture | 85.6% | Pass |
| 56.25 - 51.25 | Pole + Reinf. | TP36.619x35.679x0.825 | Reinf. 11 Tension Rupture | 88.1% | Pass |
| 51.25 - 48.66 | Pole + Reinf. | TP38.11x36.619x0.825 | Reinf. 11 Tension Rupture | 89.4% | Pass |
| 48.66 - 42.33 | Pole + Reinf. | TP37.546x36.357x1.0375 | Reinf. 11 Tension Rupture | 76.1% | Pass |
| 42.33 - 37.4 | Pole + Reinf. | TP38.473x37.546x1.025 | Reinf. 11 Tension Rupture | 78.2% | Pass |
| 37.4 - 37.15 | Pole + Reinf. | TP38.52x38.473x1.025 | Reinf. 7 Tension Rupture | 78.3% | Pass |
| 37.15 - 32.15 | Pole + Reinf. | TP39.459x38.52x1 | Reinf. 7 Tension Rupture | 80.2% | Pass |

| | | | | | |
|---|---|---|---|---|---|
| 32.15 - 27.15 | Pole + Reinf. | TP40.399x39.459x0.975 | Reinf. 7 Tension Rupture | 82.1% | Pass |
| 27.15 - 22.15 | Pole + Reinf. | TP41.338x40.399x0.9625 | Reinf. 7 Tension Rupture | 83.9% | Pass |
| 22.15 - 19.5 | Pole + Reinf. | TP41.836x41.338x0.95 | Reinf. 7 Tension Rupture | 84.9% | Pass |
| 19.5 - 19.25 | Pole + Reinf. | TP41.883x41.836x1.025 | Reinf. 7 Tension Rupture | 79.4% | Pass |
| 19.25 - 14.25 | Pole + Reinf. | TP42.822x41.883x1 | Reinf. 7 Tension Rupture | 81.0% | Pass |
| 14.25 - 9.25 | Pole + Reinf. | TP43.762x42.822x1 | Reinf. 7 Tension Rupture | 82.6% | Pass |
| 9.25 - 9 | Pole + Reinf. | TP43.809x43.762x1 | Reinf. 7 Tension Rupture | 82.7% | Pass |
| 9 - 8.75 | Pole + Reinf. | TP43.856x43.809x1.025 | Reinf. 7 Tension Rupture | 79.7% | Pass |
| 8.75 - 7 | Pole + Reinf. | TP44.185x43.856x1.025 | Reinf. 7 Tension Rupture | 80.2% | Pass |
| 7 - 6.75 | Pole + Reinf. | TP44.232x44.185x0.975 | Reinf. 7 Tension Rupture | 83.4% | Pass |
| 6.75 - 5 | Pole + Reinf. | TP44.561x44.232x0.975 | Reinf. 7 Tension Rupture | 83.9% | Pass |
| 5 - 4.75 | Pole + Reinf. | TP44.607x44.561x1.45 | Reinf. 3 Connection | 66.2% | Pass |
| 4.75 - 3 | Pole + Reinf. | TP44.936x44.607x1.425 | Reinf. 3 Connection | 66.7% | Pass |
| 3 - 2.75 | Pole + Reinf. | TP44.983x44.936x1.45 | Reinf. 7 Tension Rupture | 58.9% | Pass |
| 2.75 - 2.25 | Pole + Reinf. | TP45.077x44.983x1.45 | Reinf. 7 Tension Rupture | 59.1% | Pass |
| 2.25 - 2 | Pole + Reinf. | TP45.124x45.077x1.2 | Reinf. 8 Tension Rupture | 70.9% | Pass |
| 2 - 0 | Pole + Reinf. | TP45.5x45.124x1.175 | Reinf. 8 Tension Rupture | 71.5% | Pass |
| | | | | Summary | |
| | | | Pole | 92.1% | Pass |
| | | | Reinforcement | 96.1% | Pass |
| | | | Overall | 96.1% | Pass |

**Table 5 - Tower Component Stresses vs. Capacity**

| Notes | Component | Elevation (ft) | % Capacity | Pass / Fail |
|---|---|---|---|---|
| 1 | Base Foundation (Structure) | 0 | 86.4 | Pass |

| | |
|---|---|
| **Structure Rating (max from all components) =** | **96.1%** |

Notes:

- All structural ratings are per TIA-222-H Section 15.5

1) See additional documentation in “Appendix C – Additional Calculations” for calculations supporting the % capacity consumed.

## 4.1) Recommendations

The tower and its foundation have sufficient capacity to carry the proposed load configuration. No modifications are required at this time.

# APPENDIX A

# TNXTOWER OUTPUT

| Section | Length (ft) | Number of Sides | Thickness (in) | Socket Length (ft) | Top Dia (in) | Bot Dia (in) | Grade | Weight (K) |
|---|---|---|---|---|---|---|---|---|
| 1 | 5.00 | 18 | 0.2500 | | 15.5000 | 16.4546 | A572-65 | 0.2 |
| 2 | 5.00 | 18 | 0.2500 | | 16.4546 | 17.4092 | | 0.2 |
| 3 | 5.00 | 18 | 0.2500 | | 17.4092 | 18.3638 | | 0.2 |
| 4 | 5.00 | 18 | 0.2500 | | 18.3638 | 19.3183 | | 0.3 |
| 5 | 5.00 | 18 | 0.2500 | | 19.3183 | 20.2729 | | 0.3 |
| 6 | 5.00 | 18 | 0.2500 | | 20.2729 | 21.2275 | | 0.3 |
| 7 | 5.67 | 18 | 0.2500 | 3.33 | 21.2275 | 22.3100 | | 0.3 |
| 8 | 5.00 | 18 | 0.3125 | | [illegible] | [illegible] | | 0.4 |
| 9 | 5.00 | 18 | 0.3125 | | 22.11[illegible] | 23.05[illegible] | | 0.4 |
| 10 | 5.00 | 18 | 0.3125 | | 23.0554 | 23.9960 | | 0.4 |
| 11 | 5.00 | 18 | 0.3125 | | 23.9960 | 24.9366 | | 0.4 |
| 12 | 5.00 | 18 | 0.3125 | | 24.9366 | 25.8772 | | 0.4 |
| 13 | [illegible] | 18 | [illegible] | | [illegible] | [illegible] | | [illegible] |
| 14 | [illegible] | 18 | [illegible] | | [illegible] | [illegible] | | [illegible] |
| 15 | 5.00 | 18 | 0.56[illegible] | | 26.0[illegible] | 26.9[illegible] | | 0.7 |
| 16 | 4.25 | 18 | [illegible]500 | | [illegible]88 | [illegible]88 | | 0.6 |
| 17 | [illegible] | 18 | [illegible] | | [illegible] | [illegible] | | [illegible] |
| 18 | [illegible] | 18 | [illegible] | | [illegible] | [illegible] | | [illegible] |
| 19 | [illegible] | 18 | [illegible] | | [illegible] | [illegible] | | [illegible] |
| 20 | 5.00 | 18 | 0.71[illegible] | | 27.9[illegible] | 28.8[illegible] | | 1.0 |
| 21 | 7.92 | 18 | 0.7000 | 4.33 | 28.8701 | 30.3600 | | 1.6 |
| 22 | [illegible] | 18 | [illegible]9375 | | [illegible] | [illegible] | | 1.4 |
| 23 | 5.00 | 18 | [illegible] | | [illegible] | [illegible] | | 1.3 |
| 24 | [illegible] | 18 | [illegible] | | [illegible] | [illegible] | | [illegible] |
| 25 | [illegible] | 18 | [illegible] | | [illegible] | [illegible] | | [illegible] |
| 26 | 5.00 | 18 | 0.92[illegible] | | 30.9[illegible] | 31.9[illegible] | | 1.4 |
| 27 | 5.00 | 18 | 0.9000 | | 31.9146 | 32.8556 | | 1.4 |
| 28 | 5.00 | 18 | 0.8750 | | 32.8556 | 33.7966 | | 1.4 |
| 29 | 5.00 | 18 | 0.8625 | | 33.7966 | 34.7376 | | 1.4 |
| 30 | 5.00 | 18 | 0.8500 | | 34.7376 | 35.6785 | | 1.5 |
| 31 | 5.00 | 18 | 0.8250 | | 35.6785 | 36.6195 | | 1.5 |
| 32 | 7.92 | 18 | 0.8250 | 5.33 | 36.6195 | 38.1100 | | 2.4 |
| 33 | [illegible] | 18 | [illegible]0375 | | [illegible] | [illegible] | | 2.4 |
| 34 | 4.93 | 18 | [illegible] | | [illegible] | [illegible] | | 1.9 |
| 35 | [illegible] | 18 | [illegible] | | [illegible] | [illegible] | | 0.1 |
| 36 | 5.00 | 18 | 1.00[illegible] | | 38.5[illegible] | 39.45[illegible] | | 1.9 |
| 37 | 5.00 | 18 | 0.9750 | | 39.4591 | 40.3986 | | 2.0 |
| 38 | 5.00 | 18 | 0.9625 | | 40.3986 | 41.3381 | | 2.0 |
| 39 | [illegible] | 18 | [illegible] | | [illegible] | [illegible] | | 1.1 |
| 40 | [illegible] | 18 | [illegible] | | [illegible] | [illegible] | | 0.1 |
| 41 | 5.00 | 18 | 1.00[illegible] | | 41.8[illegible] | 42.8[illegible] | | 2.2 |
| 42 | 5.00 | 18 | [illegible]0000 | | [illegible]225 | [illegible]620 | | 2.2 |
| 43–53 | [illegible] | 18 | [illegible] | | [illegible] | [illegible] | | [illegible] |
| | | | | | | | | 42.3 |

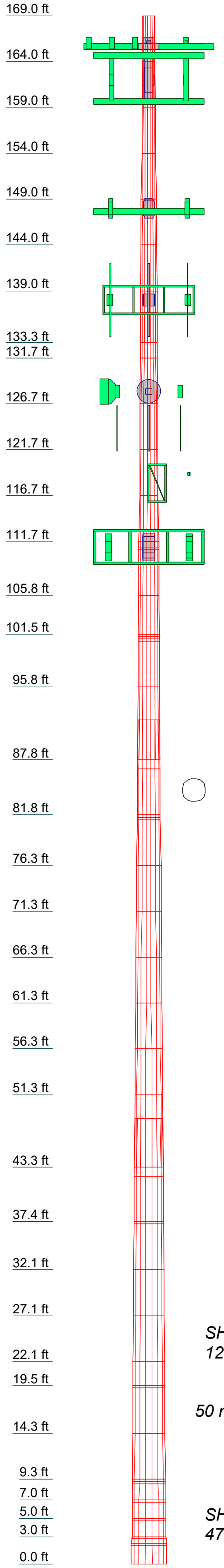


## MATERIAL STRENGTH

| GRADE | Fy | Fu | GRADE | Fy | Fu |
|---|---|---|---|---|---|
| A572-65 | 65 ksi | 80 ksi | | | |

## TOWER DESIGN NOTES

1. Tower designed for Exposure C to the TIA-222-H Standard.
2. Tower designed for a 117 mph basic wind in accordance with the TIA-222-H Standard.
3. Tower is also designed for a 50 mph basic wind with 1.50 in ice. Ice is considered to increase in thickness with height.
4. Deflections are based upon a 60 mph wind.
5. Tower Risk Category II.
6. Topographic Category 1 with Crest Height of 0.00 ft
7. TIA-222-H Annex S
8. TOWER RATING: 96.1%

*ALL REACTIONS ARE FACTORED*

*AXIAL 127 K*
*SHEAR 12 K*
*MOMENT 1549 kip-ft*
*TORQUE 0 kip-ft*
*50 mph WIND - 1.5000 in ICE*

*AXIAL 74 K*
*SHEAR 47 K*
*MOMENT 5140 kip-ft*
*TORQUE 2 kip-ft*
*REACTIONS - 117 mph WIND*

PJFLogo

**Paul J Ford & Company**
250 East Broad Street, STE 600
Columbus, Ohio
Phone: 614-221-6679
FAX:

| | | |
|---|---|---|
| Job: **BU 828054** | | |
| Project: | | |
| Client: Crown Castle | Drawn by: dcampbell | App'd: |
| Code: TIA-222-H | Date: 05/17/22 | Scale: NTS |
| Path: G:\TOWER\375_Crown_Castle\2022\37522-0173_828054_South Windsor-Rt 5\37522-0173.001.7805_SA_2115008\37522-0173.001.7805_CCIpole.eri | | Dwg No. E-1 |

# Tower Input Data

The tower is a monopole.
This tower is designed using the TIA-222-H standard.
The following design criteria apply:

1) Tower base elevation above sea level: 70.11 ft.
2) Basic wind speed of 117 mph.
3) Risk Category II.
4) Exposure Category C.
5) Simplified Topographic Factor Procedure for wind speed-up calculations is used.
6) Topographic Category: 1.
7) Crest Height: 0.00 ft.
8) Nominal ice thickness of 1.5000 in.
9) Ice thickness is considered to increase with height.
10) Ice density of 56 pcf.
11) A wind speed of 50 mph is used in combination with ice.
12) Temperature drop of 50 °F.
13) Deflections calculated using a wind speed of 60 mph.
14) TIA-222-H Annex S.
15) A non-linear (P-delta) analysis was used.
16) Pressures are calculated at each section.
17) Stress ratio used in pole design is 1.
18) Tower analysis based on target reliabilities in accordance with Annex S.
19) Load Modification Factors used: $K_{es}(F_w) = 0.95$, $K_{es}(t_i) = 0.85$.
20) Maximum demand-capacity ratio is: 1.05.
21) Local bending stresses due to climbing loads, feed line supports, and appurtenance mounts are not considered.

# Options

| | | |
|---|---|---|
| Consider Moments - Legs | Distribute Leg Loads As Uniform | Use ASCE 10 X-Brace Ly Rules |
| Consider Moments - Horizontals | Assume Legs Pinned | Calculate Redundant Bracing Forces |
| Consider Moments - Diagonals | √ Assume Rigid Index Plate | Ignore Redundant Members in FEA |
| Use Moment Magnification | √ Use Clear Spans For Wind Area | SR Leg Bolts Resist Compression |
| √ Use Code Stress Ratios | Use Clear Spans For KL/r | All Leg Panels Have Same Allowable |
| √ Use Code Safety Factors - Guys | Retension Guys To Initial Tension | Offset Girt At Foundation |
| Escalate Ice | √ Bypass Mast Stability Checks | √ Consider Feed Line Torque |
| Always Use Max Kz | √ Use Azimuth Dish Coefficients | Include Angle Block Shear Check |
| Use Special Wind Profile | √ Project Wind Area of Appurt. | Use TIA-222-H Bracing Resist. Exemption |
| Include Bolts In Member Capacity | Autocalc Torque Arm Areas | Use TIA-222-H Tension Splice Exemption |
| Leg Bolts Are At Top Of Section | Add IBC .6D+W Combination | **Poles** |
| Secondary Horizontal Braces Leg | Sort Capacity Reports By Component | √ Include Shear-Torsion Interaction |
| Use Diamond Inner Bracing (4 Sided) | Triangulate Diamond Inner Bracing | Always Use Sub-Critical Flow |
| SR Members Have Cut Ends | Treat Feed Line Bundles As Cylinder | Use Top Mounted Sockets |
| SR Members Are Concentric | Ignore KL/ry For 60 Deg. Angle Legs | Pole Without Linear Attachments |
| | | Pole With Shroud Or No Appurtenances |
| | | Outside and Inside Corner Radii Are Known |

# Tapered Pole Section Geometry

| Section | Elevation ft | Section Length ft | Splice Length ft | Number of Sides | Top Diameter in | Bottom Diameter in | Wall Thickness in | Bend Radius in | Pole Grade |
|---|---|---|---|---|---|---|---|---|---|
| L1 | 169.00-164.00 | 5.00 | 0.00 | 18 | 15.5000 | 16.4546 | 0.2500 | 1.0000 | A572-65 (65 ksi) |
| L2 | 164.00-159.00 | 5.00 | 0.00 | 18 | 16.4546 | 17.4092 | 0.2500 | 1.0000 | A572-65 (65 ksi) |
| L3 | 159.00-154.00 | 5.00 | 0.00 | 18 | 17.4092 | 18.3638 | 0.2500 | 1.0000 | A572-65 (65 ksi) |
| L4 | 154.00-149.00 | 5.00 | 0.00 | 18 | 18.3638 | 19.3183 | 0.2500 | 1.0000 | A572-65 (65 ksi) |
| L5 | 149.00-144.00 | 5.00 | 0.00 | 18 | 19.3183 | 20.2729 | 0.2500 | 1.0000 | A572-65 (65 ksi) |
| L6 | 144.00-139.00 | 5.00 | 0.00 | 18 | 20.2729 | 21.2275 | 0.2500 | 1.0000 | A572-65 (65 ksi) |
| L7 | 139.00-133.33 | 5.67 | 3.33 | 18 | 21.2275 | 22.3100 | 0.2500 | 1.0000 | A572-65 (65 ksi) |
| L8 | 133.33-131.66 | 5.00 | 0.00 | 18 | 21.1742 | 22.1148 | 0.3125 | 1.2500 | A572-65 (65 ksi) |
| L9 | 131.66-126.66 | 5.00 | 0.00 | 18 | 22.1148 | 23.0554 | 0.3125 | 1.2500 | A572-65 (65 ksi) |
| L10 | 126.66-121.66 | 5.00 | 0.00 | 18 | 23.0554 | 23.9960 | 0.3125 | 1.2500 | A572-65 (65 ksi) |
| L11 | 121.66-116.66 | 5.00 | 0.00 | 18 | 23.9960 | 24.9366 | 0.3125 | 1.2500 | A572-65 (65 ksi) |
| L12 | 116.66-111.66 | 5.00 | 0.00 | 18 | 24.9366 | 25.8772 | 0.3125 | 1.2500 | A572-65 (65 ksi) |
| L13 | 111.66-111.00 | 0.66 | 0.00 | 18 | 25.8772 | 26.0013 | 0.3125 | 1.2500 | A572-65 (65 ksi) |
| L14 | 111.00-110.75 | 0.25 | 0.00 | 18 | 26.0013 | 26.0484 | 0.5750 | 2.3000 | A572-65 (65 ksi) |
| L15 | 110.75-105.75 | 5.00 | 0.00 | 18 | 26.0484 | 26.9889 | 0.5625 | 2.2500 | A572-65 (65 ksi) |
| L16 | 105.75-101.50 | 4.25 | 0.00 | 18 | 26.9889 | 27.7884 | 0.5500 | 2.2000 | A572-65 (65 ksi) |
| L17 | 101.50-101.25 | 0.25 | 0.00 | 18 | 27.7884 | 27.8355 | 0.9875 | 3.9500 | A572-65 (65 ksi) |
| L18 | 101.25-101.00 | 0.25 | 0.00 | 18 | 27.8355 | 27.8825 | 0.9875 | 3.9500 | A572-65 (65 ksi) |
| L19 | 101.00-100.75 | 0.25 | 0.00 | 18 | 27.8825 | 27.9295 | 0.7250 | 2.9000 | A572-65 (65 ksi) |
| L20 | 100.75-95.75 | 5.00 | 0.00 | 18 | 27.9295 | 28.8701 | 0.7125 | 2.8500 | A572-65 (65 ksi) |
| L21 | 95.75-87.83 | 7.92 | 4.33 | 18 | 28.8701 | 30.3600 | 0.7000 | 2.8000 | A572-65 (65 ksi) |
| L22 | 87.83-86.83 | 5.33 | 0.00 | 18 | 28.9205 | 29.9235 | 0.9375 | 3.7500 | A572-65 (65 ksi) |
| L23 | 86.83-81.83 | 5.00 | 0.00 | 18 | 29.9235 | 30.8645 | 0.9250 | 3.7000 | A572-65 (65 ksi) |
| L24 | 81.83-81.50 | 0.33 | 0.00 | 18 | 30.8645 | 30.9266 | 0.9250 | 3.7000 | A572-65 (65 ksi) |
| L25 | 81.50-81.25 | 0.25 | 0.00 | 18 | 30.9266 | 30.9737 | 0.9500 | 3.8000 | A572-65 (65 ksi) |
| L26 | 81.25-76.25 | 5.00 | 0.00 | 18 | 30.9737 | 31.9146 | 0.9250 | 3.7000 | A572-65 (65 ksi) |
| L27 | 76.25-71.25 | 5.00 | 0.00 | 18 | 31.9146 | 32.8556 | 0.9000 | 3.6000 | A572-65 (65 ksi) |
| L28 | 71.25-66.25 | 5.00 | 0.00 | 18 | 32.8556 | 33.7966 | 0.8750 | 3.5000 | A572-65 (65 ksi) |
| L29 | 66.25-61.25 | 5.00 | 0.00 | 18 | 33.7966 | 34.7376 | 0.8625 | 3.4500 | A572-65 (65 ksi) |
| L30 | 61.25-56.25 | 5.00 | 0.00 | 18 | 34.7376 | 35.6785 | 0.8500 | 3.4000 | A572-65 (65 ksi) |
| L31 | 56.25-51.25 | 5.00 | 0.00 | 18 | 35.6785 | 36.6195 | 0.8250 | 3.3000 | A572-65 (65 ksi) |
| L32 | 51.25-43.33 | 7.92 | 5.33 | 18 | 36.6195 | 38.1100 | 0.8250 | 3.3000 | A572-65 (65 ksi) |
| L33 | 43.33-42.33 | 6.33 | 0.00 | 18 | 36.3569 | 37.5463 | 1.0375 | 4.1500 | A572-65 (65 ksi) |
| L34 | 42.33-37.40 | 4.93 | 0.00 | 18 | 37.5463 | 38.4726 | 1.0250 | 4.1000 | A572-65 (65 ksi) |
| L35 | 37.40-37.15 | 0.25 | 0.00 | 18 | 38.4726 | 38.5196 | 1.0250 | 4.1000 | A572-65 |

| Section | Elevation ft | Section Length ft | Splice Length ft | Number of Sides | Top Diameter in | Bottom Diameter in | Wall Thickness in | Bend Radius in | Pole Grade |
|---|---|---|---|---|---|---|---|---|---|
| | | | | | | | | | (65 ksi) |
| L36 | 37.15-32.15 | 5.00 | 0.00 | 18 | 38.5196 | 39.4591 | 1.0000 | 4.0000 | A572-65 (65 ksi) |
| L37 | 32.15-27.15 | 5.00 | 0.00 | 18 | 39.4591 | 40.3986 | 0.9750 | 3.9000 | A572-65 (65 ksi) |
| L38 | 27.15-22.15 | 5.00 | 0.00 | 18 | 40.3986 | 41.3381 | 0.9625 | 3.8500 | A572-65 (65 ksi) |
| L39 | 22.15-19.50 | 2.65 | 0.00 | 18 | 41.3381 | 41.8360 | 0.9500 | 3.8000 | A572-65 (65 ksi) |
| L40 | 19.50-19.25 | 0.25 | 0.00 | 18 | 41.8360 | 41.8830 | 1.0250 | 4.1000 | A572-65 (65 ksi) |
| L41 | 19.25-14.25 | 5.00 | 0.00 | 18 | 41.8830 | 42.8225 | 1.0000 | 4.0000 | A572-65 (65 ksi) |
| L42 | 14.25-9.25 | 5.00 | 0.00 | 18 | 42.8225 | 43.7620 | 1.0000 | 4.0000 | A572-65 (65 ksi) |
| L43 | 9.25-9.00 | 0.25 | 0.00 | 18 | 43.7620 | 43.8089 | 1.0000 | 4.0000 | A572-65 (65 ksi) |
| L44 | 9.00-8.75 | 0.25 | 0.00 | 18 | 43.8089 | 43.8559 | 1.0250 | 4.1000 | A572-65 (65 ksi) |
| L45 | 8.75-7.00 | 1.75 | 0.00 | 18 | 43.8559 | 44.1847 | 1.0250 | 4.1000 | A572-65 (65 ksi) |
| L46 | 7.00-6.75 | 0.25 | 0.00 | 18 | 44.1847 | 44.2317 | 0.9750 | 3.9000 | A572-65 (65 ksi) |
| L47 | 6.75-5.00 | 1.75 | 0.00 | 18 | 44.2317 | 44.5605 | 0.9750 | 3.9000 | A572-65 (65 ksi) |
| L48 | 5.00-4.75 | 0.25 | 0.00 | 18 | 44.5605 | 44.6075 | 1.4500 | 5.8000 | A572-65 (65 ksi) |
| L49 | 4.75-3.00 | 1.75 | 0.00 | 18 | 44.6075 | 44.9363 | 1.4250 | 5.7000 | A572-65 (65 ksi) |
| L50 | 3.00-2.75 | 0.25 | 0.00 | 18 | 44.9363 | 44.9833 | 1.4500 | 5.8000 | A572-65 (65 ksi) |
| L51 | 2.75-2.25 | 0.50 | 0.00 | 18 | 44.9833 | 45.0772 | 1.4500 | 5.8000 | A572-65 (65 ksi) |
| L52 | 2.25-2.00 | 0.25 | 0.00 | 18 | 45.0772 | 45.1242 | 1.2000 | 4.8000 | A572-65 (65 ksi) |
| L53 | 2.00-0.00 | 2.00 | | 18 | 45.1242 | 45.5000 | 1.1750 | 4.7000 | A572-65 (65 ksi) |

# Tapered Pole Properties

| Section | Tip Dia. in | Area $in^2$ | I $in^4$ | r in | C in | I/C $in^3$ | J $in^4$ | It/Q $in^2$ | w in | w/t |
|---|---|---|---|---|---|---|---|---|---|---|
| L1 | 15.7005 | 12.1009 | 355.5445 | 5.4138 | 7.8740 | 45.1542 | 711.5567 | 6.0516 | 2.2880 | 9.152 |
| | 16.6699 | 12.8583 | 426.5776 | 5.7526 | 8.3589 | 51.0326 | 853.7165 | 6.4304 | 2.4560 | 9.824 |
| L2 | 16.6699 | 12.8583 | 426.5776 | 5.7526 | 8.3589 | 51.0326 | 853.7165 | 6.4304 | 2.4560 | 9.824 |
| | 17.6392 | 13.6158 | 506.4925 | 6.0915 | 8.8439 | 57.2705 | 1013.6514 | 6.8092 | 2.6240 | 10.496 |
| L3 | 17.6392 | 13.6158 | 506.4925 | 6.0915 | 8.8439 | 57.2705 | 1013.6514 | 6.8092 | 2.6240 | 10.496 |
| | 18.6085 | 14.3733 | 595.8124 | 6.4304 | 9.3288 | 63.8682 | 1192.4089 | 7.1880 | 2.7920 | 11.168 |
| L4 | 18.6085 | 14.3733 | 595.8124 | 6.4304 | 9.3288 | 63.8682 | 1192.4089 | 7.1880 | 2.7920 | 11.168 |
| | 19.5778 | 15.1307 | 695.0606 | 6.7693 | 9.8137 | 70.8254 | 1391.0359 | 7.5668 | 2.9600 | 11.84 |
| L5 | 19.5778 | 15.1307 | 695.0606 | 6.7693 | 9.8137 | 70.8254 | 1391.0359 | 7.5668 | 2.9600 | 11.84 |
| | 20.5471 | 15.8882 | 804.7602 | 7.1081 | 10.2986 | 78.1424 | 1610.5793 | 7.9456 | 3.1280 | 12.512 |
| L6 | 20.5471 | 15.8882 | 804.7602 | 7.1081 | 10.2986 | 78.1424 | 1610.5793 | 7.9456 | 3.1280 | 12.512 |
| | 21.5164 | 16.6456 | 925.4345 | 7.4470 | 10.7836 | 85.8189 | 1852.0867 | 8.3244 | 3.2960 | 13.184 |
| L7 | 21.5164 | 16.6456 | 925.4345 | 7.4470 | 10.7836 | 85.8189 | 1852.0867 | 8.3244 | 3.2960 | 13.184 |
| | 22.6156 | 17.5046 | 1076.2196 | 7.8313 | 11.3335 | 94.9593 | 2153.8554 | 8.7540 | 3.4866 | 13.946 |
| L8 | 22.0888 | 20.6922 | 1137.7489 | 7.4059 | 10.7565 | 105.7730 | 2276.9948 | 10.3481 | 3.1767 | 10.165 |
| | 22.4078 | 21.6252 | 1298.6833 | 7.7398 | 11.2343 | 115.5995 | 2599.0753 | 10.8146 | 3.3422 | 10.695 |
| L9 | 22.4078 | 21.6252 | 1298.6833 | 7.7398 | 11.2343 | 115.5995 | 2599.0753 | 10.8146 | 3.3422 | 10.695 |
| | 23.3629 | 22.5581 | 1474.1202 | 8.0737 | 11.7122 | 125.8625 | 2950.1801 | 11.2812 | 3.5078 | 11.225 |
| L10 | 23.3629 | 22.5581 | 1474.1202 | 8.0737 | 11.7122 | 125.8625 | 2950.1801 | 11.2812 | 3.5078 | 11.225 |
| | 24.3180 | 23.4911 | 1664.6853 | 8.4076 | 12.1900 | 136.5619 | 3331.5611 | 11.7478 | 3.6733 | 11.755 |
| L11 | 24.3180 | 23.4911 | 1664.6853 | 8.4076 | 12.1900 | 136.5619 | 3331.5611 | 11.7478 | 3.6733 | 11.755 |
| | 25.2731 | 24.4240 | 1871.0044 | 8.7416 | 12.6678 | 147.6978 | 3744.4707 | 12.2143 | 3.8388 | 12.284 |
| L12 | 25.2731 | 24.4240 | 1871.0044 | 8.7416 | 12.6678 | 147.6978 | 3744.4707 | 12.2143 | 3.8388 | 12.284 |

| Section | Tip Dia. in | Area $in^2$ | I $in^4$ | r in | C in | I/C $in^3$ | J $in^4$ | It/Q $in^2$ | w in | w/t |
|---|---|---|---|---|---|---|---|---|---|---|
| | 26.2282 | 25.3570 | 2093.7030 | 9.0755 | 13.1456 | 159.2702 | 4190.1609 | 12.6809 | 4.0044 | 12.814 |
| L13 | 26.2282 | 25.3570 | 2093.7030 | 9.0755 | 13.1456 | 159.2702 | 4190.1609 | 12.6809 | 4.0044 | 12.814 |
| | 26.3542 | 25.4801 | 2124.3561 | 9.1195 | 13.2087 | 160.8304 | 4251.5075 | 12.7425 | 4.0262 | 12.884 |
| L14 | 26.3137 | 46.4043 | 3790.2094 | 9.0263 | 13.2087 | 286.9485 | 7585.4060 | 23.2066 | 3.5642 | 6.199 |
| | 26.3615 | 46.4902 | 3811.2801 | 9.0430 | 13.2326 | 288.0227 | 7627.5752 | 23.2495 | 3.5725 | 6.213 |
| L15 | 26.3634 | 45.5018 | 3733.9176 | 9.0475 | 13.2326 | 282.1764 | 7472.7483 | 22.7552 | 3.5945 | 6.39 |
| | 27.3185 | 47.1811 | 4162.7764 | 9.3814 | 13.7104 | 303.6222 | 8331.0303 | 23.5950 | 3.7601 | 6.685 |
| L16 | 27.3204 | 46.1545 | 4076.0488 | 9.3858 | 13.7104 | 297.2965 | 8157.4610 | 23.0816 | 3.7821 | 6.876 |
| | 28.1323 | 47.5501 | 4457.1146 | 9.6696 | 14.1165 | 315.7373 | 8920.0940 | 23.7796 | 3.9228 | 7.132 |
| L17 | 28.0648 | 84.0029 | 7623.0998 | 9.5143 | 14.1165 | 540.0124 | 15256.2303 | 42.0094 | 3.1528 | 3.193 |
| | 28.1125 | 84.1503 | 7663.3002 | 9.5310 | 14.1404 | 541.9429 | 15336.6840 | 42.0831 | 3.1610 | 3.201 |
| L18 | 28.1125 | 84.1503 | 7663.3002 | 9.5310 | 14.1404 | 541.9429 | 15336.6840 | 42.0831 | 3.1610 | 3.201 |
| | 28.1603 | 84.2977 | 7703.6417 | 9.5477 | 14.1643 | 543.8770 | 15417.4200 | 42.1568 | 3.1693 | 3.209 |
| L19 | 28.2008 | 62.4935 | 5823.0658 | 9.6409 | 14.1643 | 411.1083 | 11653.7937 | 31.2527 | 3.6313 | 5.009 |
| | 28.2485 | 62.6017 | 5853.3698 | 9.6576 | 14.1882 | 412.5520 | 11714.4417 | 31.3068 | 3.6396 | 5.02 |
| L20 | 28.2505 | 61.5506 | 5760.3828 | 9.6620 | 14.1882 | 405.9981 | 11528.3452 | 30.7812 | 3.6616 | 5.139 |
| | 29.2056 | 63.6777 | 6378.4734 | 9.9960 | 14.6660 | 434.9152 | 12765.3397 | 31.8449 | 3.8271 | 5.371 |
| L21 | 29.2075 | 62.5884 | 6274.9198 | 10.0004 | 14.6660 | 427.8544 | 12558.0963 | 31.3001 | 3.8491 | 5.499 |
| | 30.7204 | 65.8986 | 7324.1268 | 10.5293 | 15.4229 | 474.8871 | 14657.8908 | 32.9556 | 4.1114 | 5.873 |
| L22 | 30.0494 | 83.2668 | 8237.5161 | 9.9339 | 14.6916 | 560.6960 | 16485.8714 | 41.6413 | 3.4400 | 3.669 |
| | 30.2405 | 86.2516 | 9155.4966 | 10.2900 | 15.2012 | 602.2896 | 18323.0403 | 43.1340 | 3.6165 | 3.858 |
| L23 | 30.2425 | 85.1382 | 9045.1151 | 10.2945 | 15.2012 | 595.0282 | 18102.1321 | 42.5772 | 3.6385 | 3.934 |
| | 31.1979 | 87.9009 | 9954.5115 | 10.6285 | 15.6792 | 634.8877 | 19922.1214 | 43.9588 | 3.8042 | 4.113 |
| L24 | 31.1979 | 87.9009 | 9954.5115 | 10.6285 | 15.6792 | 634.8877 | 19922.1214 | 43.9588 | 3.8042 | 4.113 |
| | 31.2610 | 88.0832 | 10016.5865 | 10.6506 | 15.7107 | 637.5639 | 20046.3531 | 44.0500 | 3.8151 | 4.124 |
| L25 | 31.2571 | 90.3885 | 10261.6096 | 10.6417 | 15.7107 | 653.1598 | 20536.7217 | 45.2028 | 3.7711 | 3.97 |
| | 31.3049 | 90.5303 | 10310.0020 | 10.6584 | 15.7346 | 655.2432 | 20633.5701 | 45.2738 | 3.7794 | 3.978 |
| L26 | 31.3088 | 88.2214 | 10063.7839 | 10.6673 | 15.7346 | 639.5951 | 20140.8101 | 44.1191 | 3.8234 | 4.133 |
| | 32.2643 | 90.9840 | 11039.1420 | 11.0013 | 16.2126 | 680.8976 | 22092.8096 | 45.5006 | 3.9890 | 4.312 |
| L27 | 32.2681 | 88.5964 | 10766.8023 | 11.0102 | 16.2126 | 664.0996 | 21547.7718 | 44.3066 | 4.0330 | 4.481 |
| | 33.2236 | 91.2844 | 11776.8183 | 11.3442 | 16.6906 | 705.5939 | 23569.1328 | 45.6509 | 4.1986 | 4.665 |
| L28 | 33.2275 | 88.8181 | 11476.5780 | 11.3531 | 16.6906 | 687.6053 | 22968.2571 | 44.4175 | 4.2426 | 4.849 |
| | 34.1830 | 91.4315 | 12519.7125 | 11.6872 | 17.1687 | 729.2189 | 25055.8988 | 45.7244 | 4.4082 | 5.038 |
| L29 | 34.1849 | 90.1595 | 12354.9219 | 11.6916 | 17.1687 | 719.6206 | 24726.1008 | 45.0883 | 4.4302 | 5.136 |
| | 35.1404 | 92.7355 | 13444.4596 | 12.0256 | 17.6467 | 761.8692 | 26906.6097 | 46.3766 | 4.5958 | 5.328 |
| L30 | 35.1423 | 91.4252 | 13264.2852 | 12.0301 | 17.6467 | 751.6591 | 26546.0239 | 45.7213 | 4.6178 | 5.433 |
| | 36.0978 | 93.9639 | 14400.2007 | 12.3641 | 18.1247 | 794.5074 | 28819.3496 | 46.9909 | 4.7834 | 5.628 |
| L31 | 36.1017 | 91.2657 | 14006.7845 | 12.3730 | 18.1247 | 772.8013 | 28031.9994 | 45.6415 | 4.8274 | 5.851 |
| | 37.0571 | 93.7297 | 15172.1508 | 12.7070 | 18.6027 | 815.5884 | 30364.2654 | 46.8737 | 4.9930 | 6.052 |

| Section | Tip Dia. in | Area $in^2$ | I $in^4$ | r in | C in | I/C $in^3$ | J $in^4$ | It/Q $in^2$ | w in | w/t |
|---|---|---|---|---|---|---|---|---|---|---|
| L32 | 37.0571 | 93.7297 | 15172.1508 | 12.7070 | 18.6027 | 815.5884 | 30364.2654 | 46.8737 | 4.9930 | 6.052 |
| | 38.5706 | 97.6326 | 17147.4981 | 13.2362 | 19.3599 | 885.7234 | 34317.5593 | 48.8256 | 5.2554 | 6.37 |
| L33 | 37.7747 | 116.3077 | 18330.4548 | 12.5384 | 18.4693 | 992.4815 | 36685.0294 | 58.1649 | 4.5728 | 4.408 |
| | 37.9655 | 120.2244 | 20245.3636 | 12.9606 | 19.0735 | 1061.4379 | 40517.3666 | 60.1236 | 4.7822 | 4.609 |
| L34 | 37.9674 | 118.8166 | 20021.9951 | 12.9651 | 19.0735 | 1049.7270 | 40070.3356 | 59.4196 | 4.8042 | 4.687 |
| | 38.9080 | 121.8303 | 21584.4890 | 13.2939 | 19.5441 | 1104.3990 | 43197.3794 | 60.9267 | 4.9672 | 4.846 |
| L35 | 38.9080 | 121.8303 | 21584.4890 | 13.2939 | 19.5441 | 1104.3990 | 43197.3794 | 60.9267 | 4.9672 | 4.846 |
| | 38.9557 | 121.9831 | 21665.8171 | 13.3106 | 19.5680 | 1107.2084 | 43360.1427 | 61.0031 | 4.9755 | 4.854 |
| L36 | 38.9596 | 119.0873 | 21179.6916 | 13.3195 | 19.5680 | 1082.3655 | 42387.2519 | 59.5550 | 5.0195 | 5.019 |
| | 39.9136 | 122.0692 | 22810.8723 | 13.6530 | 20.0452 | 1137.9704 | 45651.7597 | 61.0462 | 5.1848 | 5.185 |
| L37 | 39.9174 | 119.0948 | 22284.0006 | 13.6619 | 20.0452 | 1111.6862 | 44597.3230 | 59.5587 | 5.2288 | 5.363 |
| | 40.8714 | 122.0022 | 23956.1779 | 13.9954 | 20.5225 | 1167.3137 | 47943.8780 | 61.0127 | 5.3942 | 5.532 |
| L38 | 40.8733 | 120.4763 | 23671.5497 | 13.9998 | 20.5225 | 1153.4447 | 47374.2471 | 60.2496 | 5.4162 | 5.627 |
| | 41.8273 | 123.3464 | 25403.9551 | 14.3333 | 20.9997 | 1209.7269 | 50841.3373 | 61.6849 | 5.5815 | 5.799 |
| L39 | 41.8292 | 121.7822 | 25097.3290 | 14.3378 | 20.9997 | 1195.1255 | 50227.6818 | 60.9027 | 5.6035 | 5.898 |
| | 42.3348 | 123.2836 | 26037.0640 | 14.5145 | 21.2527 | 1225.1185 | 52108.3882 | 61.6535 | 5.6911 | 5.991 |
| L40 | 42.3233 | 132.7725 | 27938.3084 | 14.4879 | 21.2527 | 1314.5775 | 55913.3788 | 66.3989 | 5.5591 | 5.424 |
| | 42.3710 | 132.9253 | 28034.8916 | 14.5046 | 21.2766 | 1317.6425 | 56106.6722 | 66.4753 | 5.5674 | 5.432 |
| L41 | 42.3748 | 129.7626 | 27401.3509 | 14.5135 | 21.2766 | 1287.8661 | 54838.7572 | 64.8936 | 5.6114 | 5.611 |
| | 43.3288 | 132.7445 | 29334.1327 | 14.8470 | 21.7538 | 1348.4594 | 58706.8639 | 66.3849 | 5.7768 | 5.777 |
| L42 | 43.3288 | 132.7445 | 29334.1327 | 14.8470 | 21.7538 | 1348.4594 | 58706.8639 | 66.3849 | 5.7768 | 5.777 |
| | 44.2828 | 135.7264 | 31355.7294 | 15.1805 | 22.2311 | 1410.4462 | 62752.7174 | 67.8761 | 5.9421 | 5.942 |
| L43 | 44.2828 | 135.7264 | 31355.7294 | 15.1805 | 22.2311 | 1410.4462 | 62752.7174 | 67.8761 | 5.9421 | 5.942 |
| | 44.3305 | 135.8755 | 31459.1757 | 15.1972 | 22.2549 | 1413.5821 | 62959.7462 | 67.9507 | 5.9504 | 5.95 |
| L44 | 44.3266 | 139.1911 | 32189.1946 | 15.1883 | 22.2549 | 1446.3846 | 64420.7446 | 69.6088 | 5.9064 | 5.762 |
| | 44.3743 | 139.3439 | 32295.3383 | 15.2050 | 22.2788 | 1449.5997 | 64633.1717 | 69.6852 | 5.9146 | 5.77 |
| L45 | 44.3743 | 139.3439 | 32295.3383 | 15.2050 | 22.2788 | 1449.5997 | 64633.1717 | 69.6852 | 5.9146 | 5.77 |
| | 44.7082 | 140.4137 | 33044.8735 | 15.3217 | 22.4458 | 1472.2050 | 66133.2283 | 70.2202 | 5.9725 | 5.827 |
| L46 | 44.7159 | 133.7190 | 31542.2990 | 15.3395 | 22.4458 | 1405.2627 | 63126.1022 | 66.8722 | 6.0605 | 6.216 |
| | 44.7636 | 133.8643 | 31645.2814 | 15.3561 | 22.4697 | 1408.3535 | 63332.2024 | 66.9449 | 6.0688 | 6.224 |
| L47 | 44.7636 | 133.8643 | 31645.2814 | 15.3561 | 22.4697 | 1408.3535 | 63332.2024 | 66.9449 | 6.0688 | 6.224 |
| | 45.0975 | 134.8819 | 32372.4452 | 15.4729 | 22.6367 | 1430.0842 | 64787.4869 | 67.4538 | 6.1267 | 6.284 |
| L48 | 45.0242 | 198.4075 | 46586.7032 | 15.3042 | 22.6367 | 2058.0128 | 93234.7063 | 99.2226 | 5.2907 | 3.649 |
| | 45.0719 | 198.6237 | 46739.1543 | 15.3209 | 22.6606 | 2062.5732 | 93539.8092 | 99.3307 | 5.2989 | 3.654 |
| L49 | 45.0758 | 195.3122 | 46013.1770 | 15.3298 | 22.6606 | 2030.5362 | 92086.8992 | 97.6747 | 5.3429 | 3.749 |

| Section | Tip Dia. in | Area $in^2$ | I $in^4$ | r in | C in | I/C $in^3$ | J $in^4$ | It/Q $in^2$ | w in | w/t |
|---|---|---|---|---|---|---|---|---|---|---|
| | 45.4097 | 196.7995 | 47072.3254 | 15.4465 | 22.8276 | 2062.0755 | 94206.5899 | 98.4184 | 5.4008 | 3.79 |
| L50 | 45.4058 | 200.1370 | 47815.6416 | 15.4376 | 22.8276 | 2094.6376 | 95694.2002 | 100.0875 | 5.3568 | 3.694 |
| | 45.4535 | 200.3532 | 47970.7640 | 15.4543 | 22.8515 | 2099.2385 | 96004.6491 | 100.1957 | 5.3651 | 3.7 |
| L51 | 45.4535 | 200.3532 | 47970.7640 | 15.4543 | 22.8515 | 2099.2385 | 96004.6491 | 100.1957 | 5.3651 | 3.7 |
| | 45.5489 | 200.7856 | 48282.0079 | 15.4877 | 22.8992 | 2108.4552 | 96627.5466 | 100.4119 | 5.3816 | 3.711 |
| L52 | 45.5875 | 167.1196 | 40648.3813 | 15.5764 | 22.8992 | 1775.0979 | 81350.2488 | 83.5757 | 5.8216 | 4.851 |
| | 45.6352 | 167.2985 | 40779.0757 | 15.5931 | 22.9231 | 1778.9514 | 81611.8095 | 83.6652 | 5.8299 | 4.858 |
| L53 | 45.6391 | 163.9064 | 39997.7295 | 15.6020 | 22.9231 | 1744.8659 | 80048.0891 | 81.9688 | 5.8739 | 4.999 |
| | 46.0206 | 165.3079 | 41032.5467 | 15.7354 | 23.1140 | 1775.2248 | 82119.0850 | 82.6696 | 5.9400 | 5.055 |

| Tower Elevation ft | Gusset Area (per face) $ft^2$ | Gusset Thickness in | Gusset Grade | Adjust. Factor $A_f$ | Adjust. Factor $A_r$ | Weight Mult. | Double Angle Stitch Bolt Spacing Diagonals in | Double Angle Stitch Bolt Spacing Horizontals in | Double Angle Stitch Bolt Spacing Redundants in |
|---|---|---|---|---|---|---|---|---|---|
| L1 169.00-164.00 | | | | 1 | 1 | 1 | | | |
| L2 164.00-159.00 | | | | 1 | 1 | 1 | | | |
| L3 159.00-154.00 | | | | 1 | 1 | 1 | | | |
| L4 154.00-149.00 | | | | 1 | 1 | 1 | | | |
| L5 149.00-144.00 | | | | 1 | 1 | 1 | | | |
| L6 144.00-139.00 | | | | 1 | 1 | 1 | | | |
| L7 139.00-133.33 | | | | 1 | 1 | 1 | | | |
| L8 133.33-131.66 | | | | 1 | 1 | 1 | | | |
| L9 131.66-126.66 | | | | 1 | 1 | 1 | | | |
| L10 126.66-121.66 | | | | 1 | 1 | 1 | | | |
| L11 121.66-116.66 | | | | 1 | 1 | 1 | | | |
| L12 116.66-111.66 | | | | 1 | 1 | 1 | | | |
| L13 111.66-111.00 | | | | 1 | 1 | 1 | | | |
| L14 111.00-110.75 | | | | 1 | 1 | 0.936271 | | | |
| L15 110.75-105.75 | | | | 1 | 1 | 0.942334 | | | |
| L16 105.75-101.50 | | | | 1 | 1 | 0.951697 | | | |
| L17 101.50-101.25 | | | | 1 | 1 | 0.894841 | | | |
| L18 101.25-101.00 | | | | 1 | 1 | 0.893829 | | | |
| L19 101.00-100.75 | | | | 1 | 1 | 0.916808 | | | |
| L20 100.75-95.75 | | | | 1 | 1 | 0.915966 | | | |
| L21 95.75-87.83 | | | | 1 | 1 | 0.920543 | | | |
| L22 87.83-86.83 | | | | 1 | 1 | 0.912119 | | | |

| Tower Elevation ft | Gusset Area (per face) $ft^2$ | Gusset Thickness in | Gusset Grade | Adjust. Factor $A_f$ | Adjust. Factor $A_r$ | Weight Mult. | Double Angle Stitch Bolt Spacing Diagonals in | Double Angle Stitch Bolt Spacing Horizontals in | Double Angle Stitch Bolt Spacing Redundants in |
|---|---|---|---|---|---|---|---|---|---|
| L23 86.83-81.83 | | | | 1 | 1 | 0.907746 | | | |
| L24 81.83-81.50 | | | | 1 | 1 | 0.906706 | | | |
| L25 81.50-81.25 | | | | 1 | 1 | 0.899386 | | | |
| L26 81.25-76.25 | | | | 1 | 1 | 0.907211 | | | |
| L27 76.25-71.25 | | | | 1 | 1 | 0.916495 | | | |
| L28 71.25-66.25 | | | | 1 | 1 | 0.92727 | | | |
| L29 66.25-61.25 | | | | 1 | 1 | 0.926308 | | | |
| L30 61.25-56.25 | | | | 1 | 1 | 0.926118 | | | |
| L31 56.25-51.25 | | | | 1 | 1 | 0.940381 | | | |
| L32 51.25-43.33 | | | | 1 | 1 | 0.933854 | | | |
| L33 43.33-42.33 | | | | 1 | 1 | 0.941952 | | | |
| L34 42.33-37.40 | | | | 1 | 1 | 0.938586 | | | |
| L35 37.40-37.15 | | | | 1 | 1 | 0.937868 | | | |
| L36 37.15-32.15 | | | | 1 | 1 | 0.946368 | | | |
| L37 32.15-27.15 | | | | 1 | 1 | 0.956053 | | | |
| L38 27.15-22.15 | | | | 1 | 1 | 0.9547 | | | |
| L39 22.15-19.50 | | | | 1 | 1 | 0.959994 | | | |
| L40 19.50-19.25 | | | | 1 | 1 | 0.954729 | | | |
| L41 19.25-14.25 | | | | 1 | 1 | 0.964453 | | | |
| L42 14.25-9.25 | | | | 1 | 1 | 0.951503 | | | |
| L43 9.25-9.00 | | | | 1 | 1 | 0.95087 | | | |
| L44 9.00-8.75 | | | | 1 | 1 | 0.963488 | | | |
| L45 8.75-7.00 | | | | 1 | 1 | 0.958934 | | | |
| L46 7.00-6.75 | | | | 1 | 1 | 0.968915 | | | |
| L47 6.75-5.00 | | | | 1 | 1 | 0.964507 | | | |
| L48 5.00-4.75 | | | | 1 | 1 | 0.856655 | | | |
| L49 4.75-3.00 | | | | 1 | 1 | 0.866584 | | | |
| L50 3.00-2.75 | | | | 1 | 1 | 0.876449 | | | |
| L51 2.75-2.25 | | | | 1 | 1 | 0.875119 | | | |
| L52 2.25-2.00 | | | | 1 | 1 | 0.856349 | | | |
| L53 2.00-0.00 | | | | 1 | 1 | 0.869367 | | | |

# Feed Line/Linear Appurtenances - Entered As Round Or Flat

| Description | Sector | Exclude From Torque Calculation | Component Type | Placement ft | Total Number | Number Per Row | Start/End Position | Width or Diameter in | Perimeter in | Weight plf |
|---|---|---|---|---|---|---|---|---|---|---|
| CCI-065125 Reinforcement | A | No | Surface Af (CaAa) | 22.25 - 0.00 | 1 | 1 | 0.333 0.333 | 6.5000 | 15.5000 | 0.00 |
| CCI-065125 Reinforcement | A | No | Surface Af (CaAa) | 22.25 - 0.00 | 1 | 1 | -0.333 -0.333 | 6.5000 | 15.5000 | 0.00 |
| CCI-065125 Reinforcement | C | No | Surface Af (CaAa) | 22.25 - 0.00 | 1 | 1 | -0.167 -0.167 | 6.5000 | 15.5000 | 0.00 |

| Description | Sector | Exclude From Torque Calculation | Component Type | Placement ft | Total Number | Number Per Row | Start/End Position | Width or Diameter in | Perimeter in | Weight plf |
|---|---|---|---|---|---|---|---|---|---|---|
| CCI-065125 | B | No | Surface Af | 22.25 - | 1 | 1 | 0.167 | 6.5000 | 15.5000 | 0.00 |
| Reinforcement | | | (CaAa) | 0.00 | | | 0.167 | | | |
| CCI-060100 | A | No | Surface Af | 45.10 - | 1 | 1 | 0.333 | 6.0000 | 14.0000 | 0.00 |
| Reinforcement | | | (CaAa) | 22.25 | | | 0.333 | | | |
| CCI-060100 | A | No | Surface Af | 47.33 - | 1 | 1 | 0.333 | 6.0000 | 14.0000 | 0.00 |
| Reinforcement | | | (CaAa) | 45.10 | | | 0.333 | | | |
| CCI-060100 | A | No | Surface Af | 45.10 - | 1 | 1 | -0.333 | 6.0000 | 14.0000 | 0.00 |
| Reinforcement | | | (CaAa) | 22.25 | | | -0.333 | | | |
| CCI-060100 | A | No | Surface Af | 47.33 - | 1 | 1 | -0.333 | 6.0000 | 14.0000 | 0.00 |
| Reinforcement | | | (CaAa) | 45.10 | | | -0.333 | | | |
| CCI-060100 | C | No | Surface Af | 45.10 - | 1 | 1 | -0.167 | 6.0000 | 14.0000 | 0.00 |
| Reinforcement | | | (CaAa) | 22.25 | | | -0.167 | | | |
| CCI-060100 | C | No | Surface Af | 47.33 - | 1 | 1 | -0.167 | 6.0000 | 14.0000 | 0.00 |
| Reinforcement | | | (CaAa) | 45.10 | | | -0.167 | | | |
| CCI-060100 | B | No | Surface Af | 45.10 - | 1 | 1 | 0.167 | 6.0000 | 14.0000 | 0.00 |
| Reinforcement | | | (CaAa) | 22.25 | | | 0.167 | | | |
| CCI-060100 | B | No | Surface Af | 47.33 - | 1 | 1 | 0.167 | 6.0000 | 14.0000 | 0.00 |
| Reinforcement | | | (CaAa) | 45.10 | | | 0.167 | | | |
| CCI-045100 | A | No | Surface Af | 90.00 - | 1 | 1 | 0.167 | 4.5000 | 11.0000 | 0.00 |
| Reinforcement | | | (CaAa) | 80.00 | | | 0.167 | | | |
| CCI-045100 | C | No | Surface Af | 90.00 - | 1 | 1 | 0.167 | 4.5000 | 11.0000 | 0.00 |
| Reinforcement | | | (CaAa) | 80.00 | | | 0.167 | | | |
| CCI-045100 | B | No | Surface Af | 90.00 - | 1 | 1 | 0.167 | 4.5000 | 11.0000 | 0.00 |
| Reinforcement | | | (CaAa) | 80.00 | | | 0.167 | | | |
| ********** | | | | | | | | | | |
| ********** | | | | | | | | | | |
| CCI-065125 | B | No | Surface Af | 26.01 - | 1 | 1 | -0.500 | 6.5000 | 15.5000 | 0.00 |
| Reinforcement | | | (CaAa) | 0.00 | | | -0.500 | | | |
| CCI-065125 | B | No | Surface Af | 81.80 - | 1 | 1 | -0.500 | 6.5000 | 15.5000 | 0.00 |
| Reinforcement | | | (CaAa) | 26.01 | | | -0.500 | | | |
| CCI-065125 | A | No | Surface Af | 26.01 - | 1 | 1 | 0.000 | 6.5000 | 15.5000 | 0.00 |
| Reinforcement | | | (CaAa) | 0.00 | | | 0.000 | | | |
| CCI-065125 | A | No | Surface Af | 81.80 - | 1 | 1 | 0.000 | 6.5000 | 15.5000 | 0.00 |
| Reinforcement | | | (CaAa) | 26.01 | | | 0.000 | | | |
| CCI-065125 | A | No | Surface Af | 26.01 - | 1 | 1 | -0.500 | 6.5000 | 15.5000 | 0.00 |
| Reinforcement | | | (CaAa) | 0.00 | | | -0.500 | | | |
| CCI-065125 | A | No | Surface Af | 81.80 - | 1 | 1 | -0.500 | 6.5000 | 15.5000 | 0.00 |
| Reinforcement | | | (CaAa) | 26.01 | | | -0.500 | | | |
| CCI-065125 | C | No | Surface Af | 26.01 - | 1 | 1 | 0.000 | 6.5000 | 15.5000 | 0.00 |
| Reinforcement | | | (CaAa) | 0.00 | | | 0.000 | | | |
| CCI-065125 | C | No | Surface Af | 81.80 - | 1 | 1 | 0.000 | 6.5000 | 15.5000 | 0.00 |
| Reinforcement | | | (CaAa) | 26.01 | | | 0.000 | | | |
| CCI-065125 | C | No | Surface Af | 26.01 - | 1 | 1 | -0.500 | 6.5000 | 15.5000 | 0.00 |
| Reinforcement | | | (CaAa) | 0.00 | | | -0.500 | | | |
| CCI-065125 | C | No | Surface Af | 81.80 - | 1 | 1 | -0.500 | 6.5000 | 15.5000 | 0.00 |
| Reinforcement | | | (CaAa) | 26.01 | | | -0.500 | | | |
| CCI-065125 | B | No | Surface Af | 26.01 - | 1 | 1 | 0.000 | 6.5000 | 15.5000 | 0.00 |
| Reinforcement | | | (CaAa) | 0.00 | | | 0.000 | | | |
| CCI-065125 | B | No | Surface Af | 81.80 - | 1 | 1 | 0.000 | 6.5000 | 15.5000 | 0.00 |
| Reinforcement | | | (CaAa) | 26.01 | | | 0.000 | | | |
| CCI-040125 | B | No | Surface Af | 104.00 - | 1 | 1 | -0.500 | 4.0000 | 10.5000 | 0.00 |
| Reinforcement | | | (CaAa) | 81.80 | | | -0.500 | | | |
| CCI-040125 | A | No | Surface Af | 104.00 - | 1 | 1 | 0.000 | 4.0000 | 10.5000 | 0.00 |
| Reinforcement | | | (CaAa) | 81.80 | | | 0.000 | | | |
| CCI-040125 | A | No | Surface Af | 104.00 - | 1 | 1 | -0.500 | 4.0000 | 10.5000 | 0.00 |
| Reinforcement | | | (CaAa) | 81.80 | | | -0.500 | | | |
| CCI-040125 | C | No | Surface Af | 104.00 - | 1 | 1 | 0.000 | 4.0000 | 10.5000 | 0.00 |
| Reinforcement | | | (CaAa) | 81.80 | | | 0.000 | | | |
| CCI-040125 | C | No | Surface Af | 104.00 - | 1 | 1 | -0.500 | 4.0000 | 10.5000 | 0.00 |
| Reinforcement | | | (CaAa) | 81.80 | | | -0.500 | | | |
| CCI-040125 | B | No | Surface Af | 104.00 - | 1 | 1 | 0.000 | 4.0000 | 10.5000 | 0.00 |
| Reinforcement | | | (CaAa) | 81.80 | | | 0.000 | | | |
| ********** | | | | | | | | | | |
| ********** | | | | | | | | | | |
| CCI-060100 | A | No | Surface Af | 108.25 - | 1 | 1 | 0.167 | 6.0000 | 14.0000 | 0.00 |
| Reinforcement | | | (CaAa) | 98.25 | | | 0.167 | | | |
| CCI-060100 | C | No | Surface Af | 108.25 - | 1 | 1 | 0.167 | 6.0000 | 14.0000 | 0.00 |
| Reinforcement | | | (CaAa) | 98.25 | | | 0.167 | | | |

| Description | Sector | Exclude From Torque Calculation | Component Type | Placement ft | Total Number | Number Per Row | Start/End Position | Width or Diameter in | Perimeter in | Weight plf |
|---|---|---|---|---|---|---|---|---|---|---|
| CCI-060100 Reinforcement | B | No | Surface Af (CaAa) | 108.25 - 98.25 | 1 | 1 | 0.167 0.167 | 6.0000 | 14.0000 | 0.00 |
| ********** | | | | | | | | | | |
| ********** | | | | | | | | | | |
| LDF7-50A(1-5/8) | C | No | Surface Ar (CaAa) | 165.00 - 0.00 | 9 | 9 | 0.278 0.500 | 1.9800 | | 0.82 |
| LDF4-50A(1/2) | C | No | Surface Ar (CaAa) | 124.00 - 0.00 | 2 | 1 | -0.487 -0.487 | 0.6250 | | 0.15 |
| 2" (Nominal) Conduit | C | No | Surface Ar (CaAa) | 124.00 - 0.00 | 2 | 2 | -0.500 -0.395 | 2.3750 | | 0.72 |
| *** | | | | | | | | | | |
| EC4-50(1/2) | B | No | Surface Ar (CaAa) | 118.00 - 0.00 | 1 | 1 | 0.411 0.411 | 0.6300 | | 0.16 |
| *** | | | | | | | | | | |
| LDF6-50A(1-1/4) | C | No | Surface Ar (CaAa) | 111.00 - 0.00 | 2 | 1 | -0.270 -0.260 | 1.5500 | | 0.60 |
| LDF7-50A(1-5/8) | C | No | Surface Ar (CaAa) | 111.00 - 0.00 | 18 | 9 | -0.272 0.275 | 1.9800 | | 0.82 |
| *** | | | | | | | | | | |

# Feed Line/Linear Appurtenances - Entered As Area

| Description | Face or Leg | Allow Shield | Exclude From Torque Calculation | Component Type | Placement ft | Total Number | | $C_AA_A$ $ft^2/ft$ | Weight plf |
|---|---|---|---|---|---|---|---|---|---|
| *** | | | | | | | | | |
| A-DQZNB2YN1750N(17/64) | C | No | No | Inside Pole | 160.00 - 0.00 | 1 | No Ice | 0.00 | 0.03 |
| | | | | | | | 1/2" Ice | 0.00 | 0.03 |
| | | | | | | | 1" Ice | 0.00 | 0.03 |
| | | | | | | | 2" Ice | 0.00 | 0.03 |
| A-DQZNB2YN1750N(17/64) | C | No | No | Inside Pole | 160.00 - 0.00 | 1 | No Ice | 0.00 | 0.03 |
| | | | | | | | 1/2" Ice | 0.00 | 0.03 |
| | | | | | | | 1" Ice | 0.00 | 0.03 |
| | | | | | | | 2" Ice | 0.00 | 0.03 |
| WR-VG86ST-BRDA(7/8) | C | No | No | Inside Pole | 160.00 - 0.00 | 4 | No Ice | 0.00 | 0.68 |
| | | | | | | | 1/2" Ice | 0.00 | 0.68 |
| | | | | | | | 1" Ice | 0.00 | 0.68 |
| | | | | | | | 2" Ice | 0.00 | 0.68 |
| LDF7-50A(1-5/8) | C | No | No | Inside Pole | 160.00 - 0.00 | 12 | No Ice | 0.00 | 0.82 |
| | | | | | | | 1/2" Ice | 0.00 | 0.82 |
| | | | | | | | 1" Ice | 0.00 | 0.82 |
| | | | | | | | 2" Ice | 0.00 | 0.82 |
| *** | | | | | | | | | |
| HB114-1-08U4-M5F(1-1/4) | C | No | No | Inside Pole | 148.00 - 0.00 | 3 | No Ice | 0.00 | 1.08 |
| | | | | | | | 1/2" Ice | 0.00 | 1.08 |
| | | | | | | | 1" Ice | 0.00 | 1.08 |
| | | | | | | | 2" Ice | 0.00 | 1.08 |
| *** | | | | | | | | | |
| *** | | | | | | | | | |
| LDF1-50A(1/4) | C | No | No | Inside Pole | 124.00 - 0.00 | 3 | No Ice | 0.00 | 0.06 |
| | | | | | | | 1/2" Ice | 0.00 | 0.06 |
| | | | | | | | 1" Ice | 0.00 | 0.06 |
| | | | | | | | 2" Ice | 0.00 | 0.06 |
| 9207(5/16) | C | No | No | Inside Pole | 124.00 - 0.00 | 1 | No Ice | 0.00 | 0.06 |
| | | | | | | | 1/2" Ice | 0.00 | 0.06 |
| | | | | | | | 1" Ice | 0.00 | 0.06 |
| | | | | | | | 2" Ice | 0.00 | 0.06 |
| LDF4-50A(1/2) | C | No | No | Inside Pole | 124.00 - 0.00 | 4 | No Ice | 0.00 | 0.15 |
| | | | | | | | 1/2" Ice | 0.00 | 0.15 |
| | | | | | | | 1" Ice | 0.00 | 0.15 |
| | | | | | | | 2" Ice | 0.00 | 0.15 |
| *** | | | | | | | | | |

# Feed Line/Linear Appurtenances Section Areas

| Tower Section | Tower Elevation ft | Face | $A_R$ $ft^2$ | $A_F$ $ft^2$ | $C_AA_A$ In Face $ft^2$ | $C_AA_A$ Out Face $ft^2$ | Weight K |
|---|---|---|---|---|---|---|---|
| L1 | 169.00-164.00 | A | 0.000 | 0.000 | 0.000 | 0.000 | 0.00 |
| | | B | 0.000 | 0.000 | 0.000 | 0.000 | 0.00 |
| | | C | 0.000 | 0.000 | 1.782 | 0.000 | 0.01 |
| L2 | 164.00-159.00 | A | 0.000 | 0.000 | 0.000 | 0.000 | 0.00 |
| | | B | 0.000 | 0.000 | 0.000 | 0.000 | 0.00 |
| | | C | 0.000 | 0.000 | 8.910 | 0.000 | 0.05 |
| L3 | 159.00-154.00 | A | 0.000 | 0.000 | 0.000 | 0.000 | 0.00 |
| | | B | 0.000 | 0.000 | 0.000 | 0.000 | 0.00 |
| | | C | 0.000 | 0.000 | 8.910 | 0.000 | 0.10 |
| L4 | 154.00-149.00 | A | 0.000 | 0.000 | 0.000 | 0.000 | 0.00 |
| | | B | 0.000 | 0.000 | 0.000 | 0.000 | 0.00 |
| | | C | 0.000 | 0.000 | 8.910 | 0.000 | 0.10 |
| L5 | 149.00-144.00 | A | 0.000 | 0.000 | 0.000 | 0.000 | 0.00 |
| | | B | 0.000 | 0.000 | 0.000 | 0.000 | 0.00 |
| | | C | 0.000 | 0.000 | 8.910 | 0.000 | 0.11 |
| L6 | 144.00-139.00 | A | 0.000 | 0.000 | 0.000 | 0.000 | 0.00 |
| | | B | 0.000 | 0.000 | 0.000 | 0.000 | 0.00 |
| | | C | 0.000 | 0.000 | 8.910 | 0.000 | 0.12 |
| L7 | 139.00-133.33 | A | 0.000 | 0.000 | 0.000 | 0.000 | 0.00 |
| | | B | 0.000 | 0.000 | 0.000 | 0.000 | 0.00 |
| | | C | 0.000 | 0.000 | 10.104 | 0.000 | 0.13 |
| L8 | 133.33-131.66 | A | 0.000 | 0.000 | 0.000 | 0.000 | 0.00 |
| | | B | 0.000 | 0.000 | 0.000 | 0.000 | 0.00 |
| | | C | 0.000 | 0.000 | 2.976 | 0.000 | 0.04 |
| L9 | 131.66-126.66 | A | 0.000 | 0.000 | 0.000 | 0.000 | 0.00 |
| | | B | 0.000 | 0.000 | 0.000 | 0.000 | 0.00 |
| | | C | 0.000 | 0.000 | 8.910 | 0.000 | 0.12 |
| L10 | 126.66-121.66 | A | 0.000 | 0.000 | 0.000 | 0.000 | 0.00 |
| | | B | 0.000 | 0.000 | 0.000 | 0.000 | 0.00 |
| | | C | 0.000 | 0.000 | 10.168 | 0.000 | 0.12 |
| L11 | 121.66-116.66 | A | 0.000 | 0.000 | 0.000 | 0.000 | 0.00 |
| | | B | 0.000 | 0.000 | 0.084 | 0.000 | 0.00 |
| | | C | 0.000 | 0.000 | 11.598 | 0.000 | 0.13 |
| L12 | 116.66-111.66 | A | 0.000 | 0.000 | 0.000 | 0.000 | 0.00 |
| | | B | 0.000 | 0.000 | 0.315 | 0.000 | 0.00 |
| | | C | 0.000 | 0.000 | 11.598 | 0.000 | 0.13 |
| L13 | 111.66-111.00 | A | 0.000 | 0.000 | 0.000 | 0.000 | 0.00 |
| | | B | 0.000 | 0.000 | 0.042 | 0.000 | 0.00 |
| | | C | 0.000 | 0.000 | 1.531 | 0.000 | 0.02 |
| L14 | 111.00-110.75 | A | 0.000 | 0.000 | 0.000 | 0.000 | 0.00 |
| | | B | 0.000 | 0.000 | 0.016 | 0.000 | 0.00 |
| | | C | 0.000 | 0.000 | 1.064 | 0.000 | 0.01 |
| L15 | 110.75-105.75 | A | 0.000 | 0.000 | 2.280 | 0.000 | 0.00 |
| | | B | 0.000 | 0.000 | 2.595 | 0.000 | 0.00 |
| | | C | 0.000 | 0.000 | 23.563 | 0.000 | 0.21 |
| L16 | 105.75-101.50 | A | 0.000 | 0.000 | 7.210 | 0.000 | 0.00 |
| | | B | 0.000 | 0.000 | 7.478 | 0.000 | 0.00 |
| | | C | 0.000 | 0.000 | 25.300 | 0.000 | 0.18 |
| L17 | 101.50-101.25 | A | 0.000 | 0.000 | 0.561 | 0.000 | 0.00 |
| | | B | 0.000 | 0.000 | 0.577 | 0.000 | 0.00 |
| | | C | 0.000 | 0.000 | 1.625 | 0.000 | 0.01 |
| L18 | 101.25-101.00 | A | 0.000 | 0.000 | 0.561 | 0.000 | 0.00 |
| | | B | 0.000 | 0.000 | 0.577 | 0.000 | 0.00 |
| | | C | 0.000 | 0.000 | 1.625 | 0.000 | 0.01 |
| L19 | 101.00-100.75 | A | 0.000 | 0.000 | 0.561 | 0.000 | 0.00 |
| | | B | 0.000 | 0.000 | 0.577 | 0.000 | 0.00 |
| | | C | 0.000 | 0.000 | 1.625 | 0.000 | 0.01 |
| L20 | 100.75-95.75 | A | 0.000 | 0.000 | 8.947 | 0.000 | 0.00 |
| | | B | 0.000 | 0.000 | 9.262 | 0.000 | 0.00 |
| | | C | 0.000 | 0.000 | 30.229 | 0.000 | 0.21 |
| L21 | 95.75-87.83 | A | 0.000 | 0.000 | 12.188 | 0.000 | 0.00 |
| | | B | 0.000 | 0.000 | 12.686 | 0.000 | 0.00 |
| | | C | 0.000 | 0.000 | 45.899 | 0.000 | 0.33 |

| Tower Section | Tower Elevation ft | Face | $A_R$ $ft^2$ | $A_F$ $ft^2$ | $C_AA_A$ In Face $ft^2$ | $C_AA_A$ Out Face $ft^2$ | Weight K |
|---|---|---|---|---|---|---|---|
| L22 | 87.83-86.83 | A | 0.000 | 0.000 | 2.083 | 0.000 | 0.00 |
| | | B | 0.000 | 0.000 | 2.146 | 0.000 | 0.00 |
| | | C | 0.000 | 0.000 | 6.340 | 0.000 | 0.04 |
| L23 | 86.83-81.83 | A | 0.000 | 0.000 | 10.417 | 0.000 | 0.00 |
| | | B | 0.000 | 0.000 | 10.732 | 0.000 | 0.00 |
| | | C | 0.000 | 0.000 | 31.699 | 0.000 | 0.21 |
| L24 | 81.83-81.50 | A | 0.000 | 0.000 | 0.938 | 0.000 | 0.00 |
| | | B | 0.000 | 0.000 | 0.958 | 0.000 | 0.00 |
| | | C | 0.000 | 0.000 | 2.342 | 0.000 | 0.01 |
| L25 | 81.50-81.25 | A | 0.000 | 0.000 | 0.729 | 0.000 | 0.00 |
| | | B | 0.000 | 0.000 | 0.745 | 0.000 | 0.00 |
| | | C | 0.000 | 0.000 | 1.793 | 0.000 | 0.01 |
| L26 | 81.25-76.25 | A | 0.000 | 0.000 | 11.771 | 0.000 | 0.00 |
| | | B | 0.000 | 0.000 | 12.086 | 0.000 | 0.00 |
| | | C | 0.000 | 0.000 | 33.053 | 0.000 | 0.21 |
| L27 | 76.25-71.25 | A | 0.000 | 0.000 | 10.833 | 0.000 | 0.00 |
| | | B | 0.000 | 0.000 | 11.148 | 0.000 | 0.00 |
| | | C | 0.000 | 0.000 | 32.116 | 0.000 | 0.21 |
| L28 | 71.25-66.25 | A | 0.000 | 0.000 | 10.833 | 0.000 | 0.00 |
| | | B | 0.000 | 0.000 | 11.148 | 0.000 | 0.00 |
| | | C | 0.000 | 0.000 | 32.116 | 0.000 | 0.21 |
| L29 | 66.25-61.25 | A | 0.000 | 0.000 | 10.833 | 0.000 | 0.00 |
| | | B | 0.000 | 0.000 | 11.148 | 0.000 | 0.00 |
| | | C | 0.000 | 0.000 | 32.116 | 0.000 | 0.21 |
| L30 | 61.25-56.25 | A | 0.000 | 0.000 | 10.833 | 0.000 | 0.00 |
| | | B | 0.000 | 0.000 | 11.148 | 0.000 | 0.00 |
| | | C | 0.000 | 0.000 | 32.116 | 0.000 | 0.21 |
| L31 | 56.25-51.25 | A | 0.000 | 0.000 | 10.833 | 0.000 | 0.00 |
| | | B | 0.000 | 0.000 | 11.148 | 0.000 | 0.00 |
| | | C | 0.000 | 0.000 | 32.116 | 0.000 | 0.21 |
| L32 | 51.25-43.33 | A | 0.000 | 0.000 | 23.567 | 0.000 | 0.00 |
| | | B | 0.000 | 0.000 | 20.862 | 0.000 | 0.00 |
| | | C | 0.000 | 0.000 | 54.075 | 0.000 | 0.33 |
| L33 | 43.33-42.33 | A | 0.000 | 0.000 | 4.167 | 0.000 | 0.00 |
| | | B | 0.000 | 0.000 | 3.230 | 0.000 | 0.00 |
| | | C | 0.000 | 0.000 | 7.423 | 0.000 | 0.04 |
| L34 | 42.33-37.40 | A | 0.000 | 0.000 | 20.542 | 0.000 | 0.00 |
| | | B | 0.000 | 0.000 | 15.922 | 0.000 | 0.00 |
| | | C | 0.000 | 0.000 | 36.596 | 0.000 | 0.21 |
| L35 | 37.40-37.15 | A | 0.000 | 0.000 | 1.042 | 0.000 | 0.00 |
| | | B | 0.000 | 0.000 | 0.807 | 0.000 | 0.00 |
| | | C | 0.000 | 0.000 | 1.856 | 0.000 | 0.01 |
| L36 | 37.15-32.15 | A | 0.000 | 0.000 | 20.833 | 0.000 | 0.00 |
| | | B | 0.000 | 0.000 | 16.148 | 0.000 | 0.00 |
| | | C | 0.000 | 0.000 | 37.116 | 0.000 | 0.21 |
| L37 | 32.15-27.15 | A | 0.000 | 0.000 | 20.833 | 0.000 | 0.00 |
| | | B | 0.000 | 0.000 | 16.148 | 0.000 | 0.00 |
| | | C | 0.000 | 0.000 | 37.116 | 0.000 | 0.21 |
| L38 | 27.15-22.15 | A | 0.000 | 0.000 | 20.850 | 0.000 | 0.00 |
| | | B | 0.000 | 0.000 | 16.157 | 0.000 | 0.00 |
| | | C | 0.000 | 0.000 | 37.124 | 0.000 | 0.21 |
| L39 | 22.15-19.50 | A | 0.000 | 0.000 | 11.483 | 0.000 | 0.00 |
| | | B | 0.000 | 0.000 | 8.779 | 0.000 | 0.00 |
| | | C | 0.000 | 0.000 | 19.892 | 0.000 | 0.11 |
| L40 | 19.50-19.25 | A | 0.000 | 0.000 | 1.083 | 0.000 | 0.00 |
| | | B | 0.000 | 0.000 | 0.828 | 0.000 | 0.00 |
| | | C | 0.000 | 0.000 | 1.877 | 0.000 | 0.01 |
| L41 | 19.25-14.25 | A | 0.000 | 0.000 | 21.667 | 0.000 | 0.00 |
| | | B | 0.000 | 0.000 | 16.565 | 0.000 | 0.00 |
| | | C | 0.000 | 0.000 | 37.532 | 0.000 | 0.21 |
| L42 | 14.25-9.25 | A | 0.000 | 0.000 | 21.667 | 0.000 | 0.00 |
| | | B | 0.000 | 0.000 | 16.565 | 0.000 | 0.00 |
| | | C | 0.000 | 0.000 | 37.532 | 0.000 | 0.21 |
| L43 | 9.25-9.00 | A | 0.000 | 0.000 | 1.083 | 0.000 | 0.00 |
| | | B | 0.000 | 0.000 | 0.828 | 0.000 | 0.00 |
| | | C | 0.000 | 0.000 | 1.877 | 0.000 | 0.01 |
| L44 | 9.00-8.75 | A | 0.000 | 0.000 | 1.083 | 0.000 | 0.00 |
| | | B | 0.000 | 0.000 | 0.828 | 0.000 | 0.00 |
| | | C | 0.000 | 0.000 | 1.877 | 0.000 | 0.01 |

| Tower Section | Tower Elevation ft | Face | $A_R$ $ft^2$ | $A_F$ $ft^2$ | $C_AA_A$ In Face $ft^2$ | $C_AA_A$ Out Face $ft^2$ | Weight K |
|---|---|---|---|---|---|---|---|
| L45 | 8.75-7.00 | A | 0.000 | 0.000 | 7.583 | 0.000 | 0.00 |
| | | B | 0.000 | 0.000 | 5.798 | 0.000 | 0.00 |
| | | C | 0.000 | 0.000 | 13.136 | 0.000 | 0.07 |
| L46 | 7.00-6.75 | A | 0.000 | 0.000 | 1.083 | 0.000 | 0.00 |
| | | B | 0.000 | 0.000 | 0.828 | 0.000 | 0.00 |
| | | C | 0.000 | 0.000 | 1.877 | 0.000 | 0.01 |
| L47 | 6.75-5.00 | A | 0.000 | 0.000 | 7.583 | 0.000 | 0.00 |
| | | B | 0.000 | 0.000 | 5.798 | 0.000 | 0.00 |
| | | C | 0.000 | 0.000 | 13.136 | 0.000 | 0.07 |
| L48 | 5.00-4.75 | A | 0.000 | 0.000 | 1.083 | 0.000 | 0.00 |
| | | B | 0.000 | 0.000 | 0.828 | 0.000 | 0.00 |
| | | C | 0.000 | 0.000 | 1.877 | 0.000 | 0.01 |
| L49 | 4.75-3.00 | A | 0.000 | 0.000 | 7.583 | 0.000 | 0.00 |
| | | B | 0.000 | 0.000 | 5.798 | 0.000 | 0.00 |
| | | C | 0.000 | 0.000 | 13.136 | 0.000 | 0.07 |
| L50 | 3.00-2.75 | A | 0.000 | 0.000 | 1.083 | 0.000 | 0.00 |
| | | B | 0.000 | 0.000 | 0.828 | 0.000 | 0.00 |
| | | C | 0.000 | 0.000 | 1.877 | 0.000 | 0.01 |
| L51 | 2.75-2.25 | A | 0.000 | 0.000 | 2.167 | 0.000 | 0.00 |
| | | B | 0.000 | 0.000 | 1.657 | 0.000 | 0.00 |
| | | C | 0.000 | 0.000 | 3.753 | 0.000 | 0.02 |
| L52 | 2.25-2.00 | A | 0.000 | 0.000 | 1.083 | 0.000 | 0.00 |
| | | B | 0.000 | 0.000 | 0.828 | 0.000 | 0.00 |
| | | C | 0.000 | 0.000 | 1.877 | 0.000 | 0.01 |
| L53 | 2.00-0.00 | A | 0.000 | 0.000 | 8.667 | 0.000 | 0.00 |
| | | B | 0.000 | 0.000 | 6.626 | 0.000 | 0.00 |
| | | C | 0.000 | 0.000 | 15.013 | 0.000 | 0.08 |

## Feed Line/Linear Appurtenances Section Areas - With Ice

| Tower Section | Tower Elevation ft | Face or Leg | Ice Thickness in | $A_R$ $ft^2$ | $A_F$ $ft^2$ | $C_AA_A$ In Face $ft^2$ | $C_AA_A$ Out Face $ft^2$ | Weight K |
|---|---|---|---|---|---|---|---|---|
| L1 | 169.00-164.00 | A | 1.499 | 0.000 | 0.000 | 0.000 | 0.000 | 0.00 |
| | | B | | 0.000 | 0.000 | 0.000 | 0.000 | 0.00 |
| | | C | | 0.000 | 0.000 | 2.602 | 0.000 | 0.03 |
| L2 | 164.00-159.00 | A | 1.494 | 0.000 | 0.000 | 0.000 | 0.000 | 0.00 |
| | | B | | 0.000 | 0.000 | 0.000 | 0.000 | 0.00 |
| | | C | | 0.000 | 0.000 | 13.006 | 0.000 | 0.19 |
| L3 | 159.00-154.00 | A | 1.490 | 0.000 | 0.000 | 0.000 | 0.000 | 0.00 |
| | | B | | 0.000 | 0.000 | 0.000 | 0.000 | 0.00 |
| | | C | | 0.000 | 0.000 | 13.000 | 0.000 | 0.24 |
| L4 | 154.00-149.00 | A | 1.485 | 0.000 | 0.000 | 0.000 | 0.000 | 0.00 |
| | | B | | 0.000 | 0.000 | 0.000 | 0.000 | 0.00 |
| | | C | | 0.000 | 0.000 | 12.994 | 0.000 | 0.24 |
| L5 | 149.00-144.00 | A | 1.480 | 0.000 | 0.000 | 0.000 | 0.000 | 0.00 |
| | | B | | 0.000 | 0.000 | 0.000 | 0.000 | 0.00 |
| | | C | | 0.000 | 0.000 | 12.987 | 0.000 | 0.25 |
| L6 | 144.00-139.00 | A | 1.475 | 0.000 | 0.000 | 0.000 | 0.000 | 0.00 |
| | | B | | 0.000 | 0.000 | 0.000 | 0.000 | 0.00 |
| | | C | | 0.000 | 0.000 | 12.981 | 0.000 | 0.25 |
| L7 | 139.00-133.33 | A | 1.469 | 0.000 | 0.000 | 0.000 | 0.000 | 0.00 |
| | | B | | 0.000 | 0.000 | 0.000 | 0.000 | 0.00 |
| | | C | | 0.000 | 0.000 | 14.712 | 0.000 | 0.28 |
| L8 | 133.33-131.66 | A | 1.465 | 0.000 | 0.000 | 0.000 | 0.000 | 0.00 |
| | | B | | 0.000 | 0.000 | 0.000 | 0.000 | 0.00 |
| | | C | | 0.000 | 0.000 | 4.333 | 0.000 | 0.08 |
| L9 | 131.66-126.66 | A | 1.461 | 0.000 | 0.000 | 0.000 | 0.000 | 0.00 |
| | | B | | 0.000 | 0.000 | 0.000 | 0.000 | 0.00 |
| | | C | | 0.000 | 0.000 | 12.964 | 0.000 | 0.25 |
| L10 | 126.66-121.66 | A | 1.456 | 0.000 | 0.000 | 0.000 | 0.000 | 0.00 |
| | | B | | 0.000 | 0.000 | 0.000 | 0.000 | 0.00 |
| | | C | | 0.000 | 0.000 | 16.025 | 0.000 | 0.30 |
| L11 | 121.66-116.66 | A | 1.450 | 0.000 | 0.000 | 0.000 | 0.000 | 0.00 |
| | | B | | 0.000 | 0.000 | 0.473 | 0.000 | 0.01 |
| | | C | | 0.000 | 0.000 | 19.493 | 0.000 | 0.35 |

| Tower Section | Tower Elevation ft | Face or Leg | Ice Thickness in | $A_R$ $ft^2$ | $A_F$ $ft^2$ | $C_AA_A$ In Face $ft^2$ | $C_AA_A$ Out Face $ft^2$ | Weight K |
|---|---|---|---|---|---|---|---|---|
| L12 | 116.66-111.66 | A | 1.443 | 0.000 | 0.000 | 0.000 | 0.000 | 0.00 |
| | | B | | 0.000 | 0.000 | 1.758 | 0.000 | 0.02 |
| | | C | | 0.000 | 0.000 | 19.471 | 0.000 | 0.35 |
| L13 | 111.66-111.00 | A | 1.440 | 0.000 | 0.000 | 0.000 | 0.000 | 0.00 |
| | | B | | 0.000 | 0.000 | 0.232 | 0.000 | 0.00 |
| | | C | | 0.000 | 0.000 | 2.568 | 0.000 | 0.05 |
| L14 | 111.00-110.75 | A | 1.439 | 0.000 | 0.000 | 0.000 | 0.000 | 0.00 |
| | | B | | 0.000 | 0.000 | 0.088 | 0.000 | 0.00 |
| | | C | | 0.000 | 0.000 | 1.730 | 0.000 | 0.04 |
| L15 | 110.75-105.75 | A | 1.436 | 0.000 | 0.000 | 2.661 | 0.000 | 0.03 |
| | | B | | 0.000 | 0.000 | 4.412 | 0.000 | 0.05 |
| | | C | | 0.000 | 0.000 | 37.249 | 0.000 | 0.74 |
| L16 | 105.75-101.50 | A | 1.430 | 0.000 | 0.000 | 9.285 | 0.000 | 0.09 |
| | | B | | 0.000 | 0.000 | 10.768 | 0.000 | 0.11 |
| | | C | | 0.000 | 0.000 | 38.653 | 0.000 | 0.70 |
| L17 | 101.50-101.25 | A | 1.426 | 0.000 | 0.000 | 0.742 | 0.000 | 0.01 |
| | | B | | 0.000 | 0.000 | 0.829 | 0.000 | 0.01 |
| | | C | | 0.000 | 0.000 | 2.469 | 0.000 | 0.04 |
| L18 | 101.25-101.00 | A | 1.426 | 0.000 | 0.000 | 0.742 | 0.000 | 0.01 |
| | | B | | 0.000 | 0.000 | 0.829 | 0.000 | 0.01 |
| | | C | | 0.000 | 0.000 | 2.468 | 0.000 | 0.04 |
| L19 | 101.00-100.75 | A | 1.426 | 0.000 | 0.000 | 0.742 | 0.000 | 0.01 |
| | | B | | 0.000 | 0.000 | 0.829 | 0.000 | 0.01 |
| | | C | | 0.000 | 0.000 | 2.468 | 0.000 | 0.04 |
| L20 | 100.75-95.75 | A | 1.422 | 0.000 | 0.000 | 12.168 | 0.000 | 0.11 |
| | | B | | 0.000 | 0.000 | 13.905 | 0.000 | 0.13 |
| | | C | | 0.000 | 0.000 | 46.676 | 0.000 | 0.82 |
| L21 | 95.75-87.83 | A | 1.412 | 0.000 | 0.000 | 17.009 | 0.000 | 0.16 |
| | | B | | 0.000 | 0.000 | 19.745 | 0.000 | 0.19 |
| | | C | | 0.000 | 0.000 | 71.581 | 0.000 | 1.28 |
| L22 | 87.83-86.83 | A | 1.405 | 0.000 | 0.000 | 2.809 | 0.000 | 0.03 |
| | | B | | 0.000 | 0.000 | 3.154 | 0.000 | 0.03 |
| | | C | | 0.000 | 0.000 | 9.699 | 0.000 | 0.17 |
| L23 | 86.83-81.83 | A | 1.400 | 0.000 | 0.000 | 14.013 | 0.000 | 0.13 |
| | | B | | 0.000 | 0.000 | 15.728 | 0.000 | 0.15 |
| | | C | | 0.000 | 0.000 | 48.396 | 0.000 | 0.83 |
| L24 | 81.83-81.50 | A | 1.396 | 0.000 | 0.000 | 1.174 | 0.000 | 0.01 |
| | | B | | 0.000 | 0.000 | 1.287 | 0.000 | 0.01 |
| | | C | | 0.000 | 0.000 | 3.442 | 0.000 | 0.06 |
| L25 | 81.50-81.25 | A | 1.395 | 0.000 | 0.000 | 0.908 | 0.000 | 0.01 |
| | | B | | 0.000 | 0.000 | 0.994 | 0.000 | 0.01 |
| | | C | | 0.000 | 0.000 | 2.626 | 0.000 | 0.04 |
| L26 | 81.25-76.25 | A | 1.391 | 0.000 | 0.000 | 14.750 | 0.000 | 0.12 |
| | | B | | 0.000 | 0.000 | 16.456 | 0.000 | 0.14 |
| | | C | | 0.000 | 0.000 | 49.079 | 0.000 | 0.82 |
| L27 | 76.25-71.25 | A | 1.382 | 0.000 | 0.000 | 13.597 | 0.000 | 0.11 |
| | | B | | 0.000 | 0.000 | 15.294 | 0.000 | 0.13 |
| | | C | | 0.000 | 0.000 | 47.873 | 0.000 | 0.81 |
| L28 | 71.25-66.25 | A | 1.372 | 0.000 | 0.000 | 13.577 | 0.000 | 0.11 |
| | | B | | 0.000 | 0.000 | 15.265 | 0.000 | 0.13 |
| | | C | | 0.000 | 0.000 | 47.798 | 0.000 | 0.80 |
| L29 | 66.25-61.25 | A | 1.362 | 0.000 | 0.000 | 13.557 | 0.000 | 0.11 |
| | | B | | 0.000 | 0.000 | 15.234 | 0.000 | 0.13 |
| | | C | | 0.000 | 0.000 | 47.718 | 0.000 | 0.80 |
| L30 | 61.25-56.25 | A | 1.351 | 0.000 | 0.000 | 13.535 | 0.000 | 0.11 |
| | | B | | 0.000 | 0.000 | 15.200 | 0.000 | 0.13 |
| | | C | | 0.000 | 0.000 | 47.632 | 0.000 | 0.79 |
| L31 | 56.25-51.25 | A | 1.339 | 0.000 | 0.000 | 13.511 | 0.000 | 0.11 |
| | | B | | 0.000 | 0.000 | 15.164 | 0.000 | 0.12 |
| | | C | | 0.000 | 0.000 | 47.540 | 0.000 | 0.79 |
| L32 | 51.25-43.33 | A | 1.322 | 0.000 | 0.000 | 29.320 | 0.000 | 0.25 |
| | | B | | 0.000 | 0.000 | 27.926 | 0.000 | 0.23 |
| | | C | | 0.000 | 0.000 | 79.080 | 0.000 | 1.28 |
| L33 | 43.33-42.33 | A | 1.309 | 0.000 | 0.000 | 5.224 | 0.000 | 0.04 |
| | | B | | 0.000 | 0.000 | 4.287 | 0.000 | 0.03 |
| | | C | | 0.000 | 0.000 | 10.746 | 0.000 | 0.17 |
| L34 | 42.33-37.40 | A | 1.299 | 0.000 | 0.000 | 25.666 | 0.000 | 0.20 |
| | | B | | 0.000 | 0.000 | 21.047 | 0.000 | 0.16 |
| | | C | | 0.000 | 0.000 | 52.784 | 0.000 | 0.81 |

| Tower Section | Tower Elevation ft | Face or Leg | Ice Thickness in | $A_R$ $ft^2$ | $A_F$ $ft^2$ | $C_AA_A$ In Face $ft^2$ | $C_AA_A$ Out Face $ft^2$ | Weight K |
|---|---|---|---|---|---|---|---|---|
| L35 | 37.40-37.15 | A | 1.291 | 0.000 | 0.000 | 1.300 | 0.000 | 0.01 |
| | | B | | 0.000 | 0.000 | 1.066 | 0.000 | 0.01 |
| | | C | | 0.000 | 0.000 | 2.673 | 0.000 | 0.04 |
| L36 | 37.15-32.15 | A | 1.281 | 0.000 | 0.000 | 25.958 | 0.000 | 0.20 |
| | | B | | 0.000 | 0.000 | 21.273 | 0.000 | 0.16 |
| | | C | | 0.000 | 0.000 | 53.375 | 0.000 | 0.81 |
| L37 | 32.15-27.15 | A | 1.261 | 0.000 | 0.000 | 25.879 | 0.000 | 0.19 |
| | | B | | 0.000 | 0.000 | 21.194 | 0.000 | 0.16 |
| | | C | | 0.000 | 0.000 | 53.202 | 0.000 | 0.80 |
| L38 | 27.15-22.15 | A | 1.238 | 0.000 | 0.000 | 25.803 | 0.000 | 0.19 |
| | | B | | 0.000 | 0.000 | 21.110 | 0.000 | 0.16 |
| | | C | | 0.000 | 0.000 | 53.008 | 0.000 | 0.79 |
| L39 | 22.15-19.50 | A | 1.218 | 0.000 | 0.000 | 14.065 | 0.000 | 0.10 |
| | | B | | 0.000 | 0.000 | 11.361 | 0.000 | 0.08 |
| | | C | | 0.000 | 0.000 | 28.215 | 0.000 | 0.42 |
| L40 | 19.50-19.25 | A | 1.209 | 0.000 | 0.000 | 1.325 | 0.000 | 0.01 |
| | | B | | 0.000 | 0.000 | 1.070 | 0.000 | 0.01 |
| | | C | | 0.000 | 0.000 | 2.658 | 0.000 | 0.04 |
| L41 | 19.25-14.25 | A | 1.191 | 0.000 | 0.000 | 26.432 | 0.000 | 0.19 |
| | | B | | 0.000 | 0.000 | 21.330 | 0.000 | 0.15 |
| | | C | | 0.000 | 0.000 | 53.005 | 0.000 | 0.77 |
| L42 | 14.25-9.25 | A | 1.150 | 0.000 | 0.000 | 26.266 | 0.000 | 0.18 |
| | | B | | 0.000 | 0.000 | 21.164 | 0.000 | 0.15 |
| | | C | | 0.000 | 0.000 | 52.642 | 0.000 | 0.76 |
| L43 | 9.25-9.00 | A | 1.121 | 0.000 | 0.000 | 1.308 | 0.000 | 0.01 |
| | | B | | 0.000 | 0.000 | 1.052 | 0.000 | 0.01 |
| | | C | | 0.000 | 0.000 | 2.620 | 0.000 | 0.04 |
| L44 | 9.00-8.75 | A | 1.118 | 0.000 | 0.000 | 1.307 | 0.000 | 0.01 |
| | | B | | 0.000 | 0.000 | 1.052 | 0.000 | 0.01 |
| | | C | | 0.000 | 0.000 | 2.618 | 0.000 | 0.04 |
| L45 | 8.75-7.00 | A | 1.105 | 0.000 | 0.000 | 9.130 | 0.000 | 0.06 |
| | | B | | 0.000 | 0.000 | 7.344 | 0.000 | 0.05 |
| | | C | | 0.000 | 0.000 | 18.287 | 0.000 | 0.26 |
| L46 | 7.00-6.75 | A | 1.090 | 0.000 | 0.000 | 1.301 | 0.000 | 0.01 |
| | | B | | 0.000 | 0.000 | 1.046 | 0.000 | 0.01 |
| | | C | | 0.000 | 0.000 | 2.606 | 0.000 | 0.04 |
| L47 | 6.75-5.00 | A | 1.073 | 0.000 | 0.000 | 9.085 | 0.000 | 0.06 |
| | | B | | 0.000 | 0.000 | 7.300 | 0.000 | 0.05 |
| | | C | | 0.000 | 0.000 | 18.189 | 0.000 | 0.25 |
| L48 | 5.00-4.75 | A | 1.053 | 0.000 | 0.000 | 1.294 | 0.000 | 0.01 |
| | | B | | 0.000 | 0.000 | 1.039 | 0.000 | 0.01 |
| | | C | | 0.000 | 0.000 | 2.590 | 0.000 | 0.04 |
| L49 | 4.75-3.00 | A | 1.029 | 0.000 | 0.000 | 9.024 | 0.000 | 0.05 |
| | | B | | 0.000 | 0.000 | 7.239 | 0.000 | 0.04 |
| | | C | | 0.000 | 0.000 | 18.055 | 0.000 | 0.25 |
| L50 | 3.00-2.75 | A | 0.999 | 0.000 | 0.000 | 1.283 | 0.000 | 0.01 |
| | | B | | 0.000 | 0.000 | 1.028 | 0.000 | 0.01 |
| | | C | | 0.000 | 0.000 | 2.566 | 0.000 | 0.03 |
| L51 | 2.75-2.25 | A | 0.985 | 0.000 | 0.000 | 2.561 | 0.000 | 0.01 |
| | | B | | 0.000 | 0.000 | 2.051 | 0.000 | 0.01 |
| | | C | | 0.000 | 0.000 | 5.120 | 0.000 | 0.07 |
| L52 | 2.25-2.00 | A | 0.969 | 0.000 | 0.000 | 1.277 | 0.000 | 0.01 |
| | | B | | 0.000 | 0.000 | 1.022 | 0.000 | 0.01 |
| | | C | | 0.000 | 0.000 | 2.553 | 0.000 | 0.03 |
| L53 | 2.00-0.00 | A | 0.899 | 0.000 | 0.000 | 10.105 | 0.000 | 0.05 |
| | | B | | 0.000 | 0.000 | 8.064 | 0.000 | 0.04 |
| | | C | | 0.000 | 0.000 | 20.178 | 0.000 | 0.25 |

# Feed Line Center of Pressure

| Section | Elevation ft | $CP_X$ in | $CP_Z$ in | $CP_X$ Ice in | $CP_Z$ Ice in |
|---|---|---|---|---|---|
| L1 | 169.00-164.00 | -1.7730 | 1.6720 | -1.3545 | 1.2774 |
| L2 | 164.00-159.00 | -4.3387 | 4.0914 | -3.4172 | 3.2225 |

| Section | Elevation | $CP_X$ | $CP_Z$ | $CP_X$ Ice | $CP_Z$ Ice |
|---|---|---|---|---|---|
| | ft | in | in | in | in |
| L3 | 159.00-154.00 | -4.4645 | 4.2101 | -3.5250 | 3.3241 |
| L4 | 154.00-149.00 | -4.5853 | 4.3240 | -3.6290 | 3.4222 |
| L5 | 149.00-144.00 | -4.7014 | 4.4334 | -3.7293 | 3.5168 |
| L6 | 144.00-139.00 | -4.8129 | 4.5386 | -3.8261 | 3.6081 |
| L7 | 139.00-133.33 | -4.9273 | 4.6465 | -3.9258 | 3.7021 |
| L8 | 133.33-131.66 | -4.9490 | 4.6669 | -3.9450 | 3.7202 |
| L9 | 131.66-126.66 | -5.0167 | 4.7308 | -4.0041 | 3.7759 |
| L10 | 126.66-121.66 | -3.9838 | 5.0242 | -2.5814 | 4.0034 |
| L11 | 121.66-116.66 | -2.8917 | 5.3141 | -1.1924 | 4.2162 |
| L12 | 116.66-111.66 | -2.7731 | 5.4075 | -0.8107 | 4.3139 |
| L13 | 111.66-111.00 | -2.8038 | 5.4670 | -0.8235 | 4.3697 |
| L14 | 111.00-110.75 | -1.6947 | 8.8381 | -0.2911 | 6.9658 |
| L15 | 110.75-105.75 | -1.3953 | 7.2663 | -0.2627 | 6.2301 |
| L16 | 105.75-101.50 | -0.9490 | 4.9302 | -0.2005 | 4.6824 |
| L17 | 101.50-101.25 | -0.8369 | 4.3431 | -0.1817 | 4.2091 |
| L18 | 101.25-101.00 | -0.8381 | 4.3485 | -0.1820 | 4.2144 |
| L19 | 101.00-100.75 | -0.8390 | 4.3531 | -0.1824 | 4.2189 |
| L20 | 100.75-95.75 | -0.9528 | 4.9372 | -0.2017 | 4.6227 |
| L21 | 95.75-87.83 | -1.0537 | 5.4437 | -0.2224 | 4.9815 |
| L22 | 87.83-86.83 | -0.9202 | 4.7519 | -0.2024 | 4.5313 |
| L23 | 86.83-81.83 | -0.9341 | 4.8173 | -0.2104 | 4.5954 |
| L24 | 81.83-81.50 | -0.7388 | 3.8061 | -0.1939 | 4.1932 |
| L25 | 81.50-81.25 | -0.7286 | 3.7528 | -0.1923 | 4.1542 |
| L26 | 81.25-76.25 | -0.9011 | 4.6368 | -0.2157 | 4.6118 |
| L27 | 76.25-71.25 | -0.9632 | 4.9467 | -0.2321 | 4.8680 |
| L28 | 71.25-66.25 | -0.9853 | 5.0511 | -0.2419 | 4.9713 |
| L29 | 66.25-61.25 | -1.0073 | 5.1547 | -0.2521 | 5.0736 |
| L30 | 61.25-56.25 | -1.0290 | 5.2573 | -0.2628 | 5.1749 |
| L31 | 56.25-51.25 | -1.0506 | 5.3590 | -0.2742 | 5.2752 |
| L32 | 51.25-43.33 | -0.3827 | 5.2198 | 0.1948 | 5.1966 |
| L33 | 43.33-42.33 | 0.3896 | 4.9176 | 0.7761 | 4.9480 |
| L34 | 42.33-37.40 | 0.3952 | 4.9745 | 0.7770 | 5.0041 |
| L35 | 37.40-37.15 | 0.4000 | 5.0241 | 0.7820 | 5.0533 |
| L36 | 37.15-32.15 | 0.4048 | 5.0740 | 0.7867 | 5.1028 |
| L37 | 32.15-27.15 | 0.4140 | 5.1688 | 0.7944 | 5.1966 |
| L38 | 27.15-22.15 | 0.4252 | 5.2622 | 0.8015 | 5.2892 |
| L39 | 22.15-19.50 | 0.5309 | 5.2970 | 0.8659 | 5.3348 |
| L40 | 19.50-19.25 | 0.5341 | 5.3242 | 0.8670 | 5.3616 |
| L41 | 19.25-14.25 | 0.5399 | 5.3728 | 0.8679 | 5.4094 |
| L42 | 14.25-9.25 | 0.5508 | 5.4652 | 0.8653 | 5.4998 |
| L43 | 9.25-9.00 | 0.5565 | 5.5135 | 0.8603 | 5.5468 |
| L44 | 9.00-8.75 | 0.5571 | 5.5181 | 0.8596 | 5.5513 |
| L45 | 8.75-7.00 | 0.5593 | 5.5365 | 0.8565 | 5.5690 |
| L46 | 7.00-6.75 | 0.5614 | 5.5546 | 0.8525 | 5.5865 |
| L47 | 6.75-5.00 | 0.5636 | 5.5729 | 0.8474 | 5.6041 |
| L48 | 5.00-4.75 | 0.5659 | 5.5926 | 0.8411 | 5.6232 |
| L49 | 4.75-3.00 | 0.5680 | 5.6107 | 0.8323 | 5.6404 |
| L50 | 3.00-2.75 | 0.5702 | 5.6290 | 0.8204 | 5.6576 |
| L51 | 2.75-2.25 | 0.5710 | 5.6358 | 0.8145 | 5.6639 |
| L52 | 2.25-2.00 | 0.5717 | 5.6419 | 0.8075 | 5.6694 |
| L53 | 2.00-0.00 | 0.5741 | 5.6623 | 0.7747 | 5.6874 |

Note: For pole sections, center of pressure calculations do not consider feed line shielding.

## Shielding Factor Ka

| Tower Section | Feed Line Record No. | Description | Feed Line Segment Elev. | $K_a$ No Ice | $K_a$ Ice |
|---|---|---|---|---|---|
| L1 | 45 | LDF7-50A(1-5/8) | 164.00 - 165.00 | 1.0000 | 1.0000 |

| Tower Section | Feed Line Record No. | Description | Feed Line Segment Elev. | $K_a$ No Ice | $K_a$ Ice |
|---|---|---|---|---|---|
| L2 | 45 | LDF7-50A(1-5/8) | 159.00 - 164.00 | 1.0000 | 1.0000 |
| L3 | 45 | LDF7-50A(1-5/8) | 154.00 - 159.00 | 1.0000 | 1.0000 |
| L4 | 45 | LDF7-50A(1-5/8) | 149.00 - 154.00 | 1.0000 | 1.0000 |
| L5 | 45 | LDF7-50A(1-5/8) | 144.00 - 149.00 | 1.0000 | 1.0000 |
| L6 | 45 | LDF7-50A(1-5/8) | 139.00 - 144.00 | 1.0000 | 1.0000 |
| L7 | 45 | LDF7-50A(1-5/8) | 133.33 - 139.00 | 1.0000 | 1.0000 |
| L8 | 45 | LDF7-50A(1-5/8) | 131.66 - 133.33 | 1.0000 | 1.0000 |
| L9 | 45 | LDF7-50A(1-5/8) | 126.66 - 131.66 | 1.0000 | 1.0000 |
| L10 | 45 | LDF7-50A(1-5/8) | 121.66 - 126.66 | 1.0000 | 1.0000 |
| L10 | 63 | LDF4-50A(1/2) | 121.66 - 124.00 | 1.0000 | 1.0000 |
| L10 | 64 | 2" (Nominal) Conduit | 121.66 - 124.00 | 1.0000 | 1.0000 |
| L11 | 45 | LDF7-50A(1-5/8) | 116.66 - 121.66 | 1.0000 | 1.0000 |
| L11 | 63 | LDF4-50A(1/2) | 116.66 - 121.66 | 1.0000 | 1.0000 |
| L11 | 64 | 2" (Nominal) Conduit | 116.66 - 121.66 | 1.0000 | 1.0000 |
| L11 | 66 | EC4-50(1/2) | 116.66 - 118.00 | 1.0000 | 1.0000 |
| L12 | 45 | LDF7-50A(1-5/8) | 111.66 - 116.66 | 1.0000 | 1.0000 |
| L12 | 63 | LDF4-50A(1/2) | 111.66 - 116.66 | 1.0000 | 1.0000 |
| L12 | 64 | 2" (Nominal) Conduit | 111.66 - 116.66 | 1.0000 | 1.0000 |
| L12 | 66 | EC4-50(1/2) | 111.66 - 116.66 | 1.0000 | 1.0000 |
| L13 | 45 | LDF7-50A(1-5/8) | 111.00 - 111.66 | 1.0000 | 1.0000 |
| L13 | 63 | LDF4-50A(1/2) | 111.00 - 111.66 | 1.0000 | 1.0000 |
| L13 | 64 | 2" (Nominal) Conduit | 111.00 - 111.66 | 1.0000 | 1.0000 |
| L13 | 66 | EC4-50(1/2) | 111.00 - 111.66 | 1.0000 | 1.0000 |
| L14 | 45 | LDF7-50A(1-5/8) | 110.75 - 111.00 | 1.0000 | 1.0000 |
| L14 | 63 | LDF4-50A(1/2) | 110.75 - 111.00 | 1.0000 | 1.0000 |
| L14 | 64 | 2" (Nominal) Conduit | 110.75 - 111.00 | 1.0000 | 1.0000 |
| L14 | 66 | EC4-50(1/2) | 110.75 - 111.00 | 1.0000 | 1.0000 |
| L14 | 68 | LDF6-50A(1-1/4) | 110.75 - 111.00 | 1.0000 | 1.0000 |
| L14 | 69 | LDF7-50A(1-5/8) | 110.75 - 111.00 | 1.0000 | 1.0000 |
| L15 | 36 | CCI-060100 Reinforcement | 105.75 - 108.25 | 1.0000 | 1.0000 |
| L15 | 37 | CCI-060100 Reinforcement | 105.75 - 108.25 | 1.0000 | 1.0000 |
| L15 | 38 | CCI-060100 Reinforcement | 105.75 - 108.25 | 1.0000 | 1.0000 |
| L15 | 45 | LDF7-50A(1-5/8) | 105.75 - 110.75 | 1.0000 | 1.0000 |
| L15 | 63 | LDF4-50A(1/2) | 105.75 - 110.75 | 1.0000 | 1.0000 |

| Tower Section | Feed Line Record No. | Description | Feed Line Segment Elev. | $K_a$ No Ice | $K_a$ Ice |
|---|---|---|---|---|---|
| L15 | 64 | 2" (Nominal) Conduit | 105.75 - 110.75 | 1.0000 | 1.0000 |
| L15 | 66 | EC4-50(1/2) | 105.75 - 110.75 | 1.0000 | 1.0000 |
| L15 | 68 | LDF6-50A(1-1/4) | 105.75 - 110.75 | 1.0000 | 1.0000 |
| L15 | 69 | LDF7-50A(1-5/8) | 105.75 - 110.75 | 1.0000 | 1.0000 |
| L16 | 29 | CCI-040125 Reinforcement | 101.50 - 104.00 | 1.0000 | 1.0000 |
| L16 | 30 | CCI-040125 Reinforcement | 101.50 - 104.00 | 1.0000 | 1.0000 |
| L16 | 31 | CCI-040125 Reinforcement | 101.50 - 104.00 | 1.0000 | 1.0000 |
| L16 | 32 | CCI-040125 Reinforcement | 101.50 - 104.00 | 1.0000 | 1.0000 |
| L16 | 33 | CCI-040125 Reinforcement | 101.50 - 104.00 | 1.0000 | 1.0000 |
| L16 | 34 | CCI-040125 Reinforcement | 101.50 - 104.00 | 1.0000 | 1.0000 |
| L16 | 36 | CCI-060100 Reinforcement | 101.50 - 105.75 | 1.0000 | 1.0000 |
| L16 | 37 | CCI-060100 Reinforcement | 101.50 - 105.75 | 1.0000 | 1.0000 |
| L16 | 38 | CCI-060100 Reinforcement | 101.50 - 105.75 | 1.0000 | 1.0000 |
| L16 | 45 | LDF7-50A(1-5/8) | 101.50 - 105.75 | 1.0000 | 1.0000 |
| L16 | 63 | LDF4-50A(1/2) | 101.50 - 105.75 | 1.0000 | 1.0000 |
| L16 | 64 | 2" (Nominal) Conduit | 101.50 - 105.75 | 1.0000 | 1.0000 |
| L16 | 66 | EC4-50(1/2) | 101.50 - 105.75 | 1.0000 | 1.0000 |
| L16 | 68 | LDF6-50A(1-1/4) | 101.50 - 105.75 | 1.0000 | 1.0000 |
| L16 | 69 | LDF7-50A(1-5/8) | 101.50 - 105.75 | 1.0000 | 1.0000 |
| L17 | 29 | CCI-040125 Reinforcement | 101.25 - 101.50 | 1.0000 | 1.0000 |
| L17 | 30 | CCI-040125 Reinforcement | 101.25 - 101.50 | 1.0000 | 1.0000 |
| L17 | 31 | CCI-040125 Reinforcement | 101.25 - 101.50 | 1.0000 | 1.0000 |
| L17 | 32 | CCI-040125 Reinforcement | 101.25 - 101.50 | 1.0000 | 1.0000 |
| L17 | 33 | CCI-040125 Reinforcement | 101.25 - 101.50 | 1.0000 | 1.0000 |
| L17 | 34 | CCI-040125 Reinforcement | 101.25 - 101.50 | 1.0000 | 1.0000 |
| L17 | 36 | CCI-060100 Reinforcement | 101.25 - 101.50 | 1.0000 | 1.0000 |
| L17 | 37 | CCI-060100 Reinforcement | 101.25 - 101.50 | 1.0000 | 1.0000 |
| L17 | 38 | CCI-060100 Reinforcement | 101.25 - 101.50 | 1.0000 | 1.0000 |
| L17 | 45 | LDF7-50A(1-5/8) | 101.25 - 101.50 | 1.0000 | 1.0000 |
| L17 | 63 | LDF4-50A(1/2) | 101.25 - 101.50 | 1.0000 | 1.0000 |
| L17 | 64 | 2" (Nominal) Conduit | 101.25 - 101.50 | 1.0000 | 1.0000 |
| L17 | 66 | EC4-50(1/2) | 101.25 - 101.50 | 1.0000 | 1.0000 |
| L17 | 68 | LDF6-50A(1-1/4) | 101.25 - 101.50 | 1.0000 | 1.0000 |
| L17 | 69 | LDF7-50A(1-5/8) | 101.25 - 101.50 | 1.0000 | 1.0000 |

| Tower Section | Feed Line Record No. | Description | Feed Line Segment Elev. | $K_a$ No Ice | $K_a$ Ice |
|---|---|---|---|---|---|
| L18 | 29 | CCI-040125 Reinforcement | 101.00 - 101.25 | 1.0000 | 1.0000 |
| L18 | 30 | CCI-040125 Reinforcement | 101.00 - 101.25 | 1.0000 | 1.0000 |
| L18 | 31 | CCI-040125 Reinforcement | 101.00 - 101.25 | 1.0000 | 1.0000 |
| L18 | 32 | CCI-040125 Reinforcement | 101.00 - 101.25 | 1.0000 | 1.0000 |
| L18 | 33 | CCI-040125 Reinforcement | 101.00 - 101.25 | 1.0000 | 1.0000 |
| L18 | 34 | CCI-040125 Reinforcement | 101.00 - 101.25 | 1.0000 | 1.0000 |
| L18 | 36 | CCI-060100 Reinforcement | 101.00 - 101.25 | 1.0000 | 1.0000 |
| L18 | 37 | CCI-060100 Reinforcement | 101.00 - 101.25 | 1.0000 | 1.0000 |
| L18 | 38 | CCI-060100 Reinforcement | 101.00 - 101.25 | 1.0000 | 1.0000 |
| L18 | 45 | LDF7-50A(1-5/8) | 101.00 - 101.25 | 1.0000 | 1.0000 |
| L18 | 63 | LDF4-50A(1/2) | 101.00 - 101.25 | 1.0000 | 1.0000 |
| L18 | 64 | 2" (Nominal) Conduit | 101.00 - 101.25 | 1.0000 | 1.0000 |
| L18 | 66 | EC4-50(1/2) | 101.00 - 101.25 | 1.0000 | 1.0000 |
| L18 | 68 | LDF6-50A(1-1/4) | 101.00 - 101.25 | 1.0000 | 1.0000 |
| L18 | 69 | LDF7-50A(1-5/8) | 101.00 - 101.25 | 1.0000 | 1.0000 |
| L19 | 29 | CCI-040125 Reinforcement | 100.75 - 101.00 | 1.0000 | 1.0000 |
| L19 | 30 | CCI-040125 Reinforcement | 100.75 - 101.00 | 1.0000 | 1.0000 |
| L19 | 31 | CCI-040125 Reinforcement | 100.75 - 101.00 | 1.0000 | 1.0000 |
| L19 | 32 | CCI-040125 Reinforcement | 100.75 - 101.00 | 1.0000 | 1.0000 |
| L19 | 33 | CCI-040125 Reinforcement | 100.75 - 101.00 | 1.0000 | 1.0000 |
| L19 | 34 | CCI-040125 Reinforcement | 100.75 - 101.00 | 1.0000 | 1.0000 |
| L19 | 36 | CCI-060100 Reinforcement | 100.75 - 101.00 | 1.0000 | 1.0000 |
| L19 | 37 | CCI-060100 Reinforcement | 100.75 - 101.00 | 1.0000 | 1.0000 |
| L19 | 38 | CCI-060100 Reinforcement | 100.75 - 101.00 | 1.0000 | 1.0000 |
| L19 | 45 | LDF7-50A(1-5/8) | 100.75 - 101.00 | 1.0000 | 1.0000 |
| L19 | 63 | LDF4-50A(1/2) | 100.75 - 101.00 | 1.0000 | 1.0000 |
| L19 | 64 | 2" (Nominal) Conduit | 100.75 - 101.00 | 1.0000 | 1.0000 |
| L19 | 66 | EC4-50(1/2) | 100.75 - 101.00 | 1.0000 | 1.0000 |
| L19 | 68 | LDF6-50A(1-1/4) | 100.75 - 101.00 | 1.0000 | 1.0000 |
| L19 | 69 | LDF7-50A(1-5/8) | 100.75 - 101.00 | 1.0000 | 1.0000 |
| L20 | 29 | CCI-040125 Reinforcement | 95.75 - 100.75 | 1.0000 | 1.0000 |
| L20 | 30 | CCI-040125 Reinforcement | 95.75 - 100.75 | 1.0000 | 1.0000 |
| L20 | 31 | CCI-040125 Reinforcement | 95.75 - 100.75 | 1.0000 | 1.0000 |
| L20 | 32 | CCI-040125 Reinforcement | 95.75 - 100.75 | 1.0000 | 1.0000 |

| Tower Section | Feed Line Record No. | Description | Feed Line Segment Elev. | $K_a$ No Ice | $K_a$ Ice |
|---|---|---|---|---|---|
| L20 | 33 | CCI-040125 Reinforcement | 95.75 - 100.75 | 1.0000 | 1.0000 |
| L20 | 34 | CCI-040125 Reinforcement | 95.75 - 100.75 | 1.0000 | 1.0000 |
| L20 | 36 | CCI-060100 Reinforcement | 98.25 - 100.75 | 1.0000 | 1.0000 |
| L20 | 37 | CCI-060100 Reinforcement | 98.25 - 100.75 | 1.0000 | 1.0000 |
| L20 | 38 | CCI-060100 Reinforcement | 98.25 - 100.75 | 1.0000 | 1.0000 |
| L20 | 45 | LDF7-50A(1-5/8) | 95.75 - 100.75 | 1.0000 | 1.0000 |
| L20 | 63 | LDF4-50A(1/2) | 95.75 - 100.75 | 1.0000 | 1.0000 |
| L20 | 64 | 2" (Nominal) Conduit | 95.75 - 100.75 | 1.0000 | 1.0000 |
| L20 | 66 | EC4-50(1/2) | 95.75 - 100.75 | 1.0000 | 1.0000 |
| L20 | 68 | LDF6-50A(1-1/4) | 95.75 - 100.75 | 1.0000 | 1.0000 |
| L20 | 69 | LDF7-50A(1-5/8) | 95.75 - 100.75 | 1.0000 | 1.0000 |
| L21 | 13 | CCI-045100 Reinforcement | 87.83 - 90.00 | 1.0000 | 1.0000 |
| L21 | 14 | CCI-045100 Reinforcement | 87.83 - 90.00 | 1.0000 | 1.0000 |
| L21 | 15 | CCI-045100 Reinforcement | 87.83 - 90.00 | 1.0000 | 1.0000 |
| L21 | 29 | CCI-040125 Reinforcement | 87.83 - 95.75 | 1.0000 | 1.0000 |
| L21 | 30 | CCI-040125 Reinforcement | 87.83 - 95.75 | 1.0000 | 1.0000 |
| L21 | 31 | CCI-040125 Reinforcement | 87.83 - 95.75 | 1.0000 | 1.0000 |
| L21 | 32 | CCI-040125 Reinforcement | 87.83 - 95.75 | 1.0000 | 1.0000 |
| L21 | 33 | CCI-040125 Reinforcement | 87.83 - 95.75 | 1.0000 | 1.0000 |
| L21 | 34 | CCI-040125 Reinforcement | 87.83 - 95.75 | 1.0000 | 1.0000 |
| L21 | 45 | LDF7-50A(1-5/8) | 87.83 - 95.75 | 1.0000 | 1.0000 |
| L21 | 63 | LDF4-50A(1/2) | 87.83 - 95.75 | 1.0000 | 1.0000 |
| L21 | 64 | 2" (Nominal) Conduit | 87.83 - 95.75 | 1.0000 | 1.0000 |
| L21 | 66 | EC4-50(1/2) | 87.83 - 95.75 | 1.0000 | 1.0000 |
| L21 | 68 | LDF6-50A(1-1/4) | 87.83 - 95.75 | 1.0000 | 1.0000 |
| L21 | 69 | LDF7-50A(1-5/8) | 87.83 - 95.75 | 1.0000 | 1.0000 |
| L22 | 13 | CCI-045100 Reinforcement | 86.83 - 87.83 | 1.0000 | 1.0000 |
| L22 | 14 | CCI-045100 Reinforcement | 86.83 - 87.83 | 1.0000 | 1.0000 |
| L22 | 15 | CCI-045100 Reinforcement | 86.83 - 87.83 | 1.0000 | 1.0000 |
| L22 | 29 | CCI-040125 Reinforcement | 86.83 - 87.83 | 1.0000 | 1.0000 |
| L22 | 30 | CCI-040125 Reinforcement | 86.83 - 87.83 | 1.0000 | 1.0000 |
| L22 | 31 | CCI-040125 Reinforcement | 86.83 - 87.83 | 1.0000 | 1.0000 |
| L22 | 32 | CCI-040125 Reinforcement | 86.83 - 87.83 | 1.0000 | 1.0000 |
| L22 | 33 | CCI-040125 Reinforcement | 86.83 - 87.83 | 1.0000 | 1.0000 |

| Tower Section | Feed Line Record No. | Description | Feed Line Segment Elev. | $K_a$ No Ice | $K_a$ Ice |
|---|---|---|---|---|---|
| L22 | 34 | CCI-040125 Reinforcement | 86.83 - 87.83 | 1.0000 | 1.0000 |
| L22 | 45 | LDF7-50A(1-5/8) | 86.83 - 87.83 | 1.0000 | 1.0000 |
| L22 | 63 | LDF4-50A(1/2) | 86.83 - 87.83 | 1.0000 | 1.0000 |
| L22 | 64 | 2" (Nominal) Conduit | 86.83 - 87.83 | 1.0000 | 1.0000 |
| L22 | 66 | EC4-50(1/2) | 86.83 - 87.83 | 1.0000 | 1.0000 |
| L22 | 68 | LDF6-50A(1-1/4) | 86.83 - 87.83 | 1.0000 | 1.0000 |
| L22 | 69 | LDF7-50A(1-5/8) | 86.83 - 87.83 | 1.0000 | 1.0000 |
| L23 | 13 | CCI-045100 Reinforcement | 81.83 - 86.83 | 1.0000 | 1.0000 |
| L23 | 14 | CCI-045100 Reinforcement | 81.83 - 86.83 | 1.0000 | 1.0000 |
| L23 | 15 | CCI-045100 Reinforcement | 81.83 - 86.83 | 1.0000 | 1.0000 |
| L23 | 29 | CCI-040125 Reinforcement | 81.83 - 86.83 | 1.0000 | 1.0000 |
| L23 | 30 | CCI-040125 Reinforcement | 81.83 - 86.83 | 1.0000 | 1.0000 |
| L23 | 31 | CCI-040125 Reinforcement | 81.83 - 86.83 | 1.0000 | 1.0000 |
| L23 | 32 | CCI-040125 Reinforcement | 81.83 - 86.83 | 1.0000 | 1.0000 |
| L23 | 33 | CCI-040125 Reinforcement | 81.83 - 86.83 | 1.0000 | 1.0000 |
| L23 | 34 | CCI-040125 Reinforcement | 81.83 - 86.83 | 1.0000 | 1.0000 |
| L23 | 45 | LDF7-50A(1-5/8) | 81.83 - 86.83 | 1.0000 | 1.0000 |
| L23 | 63 | LDF4-50A(1/2) | 81.83 - 86.83 | 1.0000 | 1.0000 |
| L23 | 64 | 2" (Nominal) Conduit | 81.83 - 86.83 | 1.0000 | 1.0000 |
| L23 | 66 | EC4-50(1/2) | 81.83 - 86.83 | 1.0000 | 1.0000 |
| L23 | 68 | LDF6-50A(1-1/4) | 81.83 - 86.83 | 1.0000 | 1.0000 |
| L23 | 69 | LDF7-50A(1-5/8) | 81.83 - 86.83 | 1.0000 | 1.0000 |
| L24 | 13 | CCI-045100 Reinforcement | 81.50 - 81.83 | 1.0000 | 1.0000 |
| L24 | 14 | CCI-045100 Reinforcement | 81.50 - 81.83 | 1.0000 | 1.0000 |
| L24 | 15 | CCI-045100 Reinforcement | 81.50 - 81.83 | 1.0000 | 1.0000 |
| L24 | 18 | CCI-065125 Reinforcement | 81.50 - 81.80 | 1.0000 | 1.0000 |
| L24 | 20 | CCI-065125 Reinforcement | 81.50 - 81.80 | 1.0000 | 1.0000 |
| L24 | 22 | CCI-065125 Reinforcement | 81.50 - 81.80 | 1.0000 | 1.0000 |
| L24 | 24 | CCI-065125 Reinforcement | 81.50 - 81.80 | 1.0000 | 1.0000 |
| L24 | 26 | CCI-065125 Reinforcement | 81.50 - 81.80 | 1.0000 | 1.0000 |
| L24 | 28 | CCI-065125 Reinforcement | 81.50 - 81.80 | 1.0000 | 1.0000 |
| L24 | 29 | CCI-040125 Reinforcement | 81.80 - 81.83 | 1.0000 | 1.0000 |
| L24 | 30 | CCI-040125 Reinforcement | 81.80 - 81.83 | 1.0000 | 1.0000 |
| L24 | 31 | CCI-040125 Reinforcement | 81.80 - 81.83 | 1.0000 | 1.0000 |

| Tower Section | Feed Line Record No. | Description | Feed Line Segment Elev. | $K_a$ No Ice | $K_a$ Ice |
|---|---|---|---|---|---|
| L24 | 32 | CCI-040125 Reinforcement | 81.80 - 81.83 | 1.0000 | 1.0000 |
| L24 | 33 | CCI-040125 Reinforcement | 81.80 - 81.83 | 1.0000 | 1.0000 |
| L24 | 34 | CCI-040125 Reinforcement | 81.80 - 81.83 | 1.0000 | 1.0000 |
| L24 | 45 | LDF7-50A(1-5/8) | 81.50 - 81.83 | 1.0000 | 1.0000 |
| L24 | 63 | LDF4-50A(1/2) | 81.50 - 81.83 | 1.0000 | 1.0000 |
| L24 | 64 | 2" (Nominal) Conduit | 81.50 - 81.83 | 1.0000 | 1.0000 |
| L24 | 66 | EC4-50(1/2) | 81.50 - 81.83 | 1.0000 | 1.0000 |
| L24 | 68 | LDF6-50A(1-1/4) | 81.50 - 81.83 | 1.0000 | 1.0000 |
| L24 | 69 | LDF7-50A(1-5/8) | 81.50 - 81.83 | 1.0000 | 1.0000 |
| L25 | 13 | CCI-045100 Reinforcement | 81.25 - 81.50 | 1.0000 | 1.0000 |
| L25 | 14 | CCI-045100 Reinforcement | 81.25 - 81.50 | 1.0000 | 1.0000 |
| L25 | 15 | CCI-045100 Reinforcement | 81.25 - 81.50 | 1.0000 | 1.0000 |
| L25 | 18 | CCI-065125 Reinforcement | 81.25 - 81.50 | 1.0000 | 1.0000 |
| L25 | 20 | CCI-065125 Reinforcement | 81.25 - 81.50 | 1.0000 | 1.0000 |
| L25 | 22 | CCI-065125 Reinforcement | 81.25 - 81.50 | 1.0000 | 1.0000 |
| L25 | 24 | CCI-065125 Reinforcement | 81.25 - 81.50 | 1.0000 | 1.0000 |
| L25 | 26 | CCI-065125 Reinforcement | 81.25 - 81.50 | 1.0000 | 1.0000 |
| L25 | 28 | CCI-065125 Reinforcement | 81.25 - 81.50 | 1.0000 | 1.0000 |
| L25 | 45 | LDF7-50A(1-5/8) | 81.25 - 81.50 | 1.0000 | 1.0000 |
| L25 | 63 | LDF4-50A(1/2) | 81.25 - 81.50 | 1.0000 | 1.0000 |
| L25 | 64 | 2" (Nominal) Conduit | 81.25 - 81.50 | 1.0000 | 1.0000 |
| L25 | 66 | EC4-50(1/2) | 81.25 - 81.50 | 1.0000 | 1.0000 |
| L25 | 68 | LDF6-50A(1-1/4) | 81.25 - 81.50 | 1.0000 | 1.0000 |
| L25 | 69 | LDF7-50A(1-5/8) | 81.25 - 81.50 | 1.0000 | 1.0000 |
| L26 | 13 | CCI-045100 Reinforcement | 80.00 - 81.25 | 1.0000 | 1.0000 |
| L26 | 14 | CCI-045100 Reinforcement | 80.00 - 81.25 | 1.0000 | 1.0000 |
| L26 | 15 | CCI-045100 Reinforcement | 80.00 - 81.25 | 1.0000 | 1.0000 |
| L26 | 18 | CCI-065125 Reinforcement | 76.25 - 81.25 | 1.0000 | 1.0000 |
| L26 | 20 | CCI-065125 Reinforcement | 76.25 - 81.25 | 1.0000 | 1.0000 |
| L26 | 22 | CCI-065125 Reinforcement | 76.25 - 81.25 | 1.0000 | 1.0000 |
| L26 | 24 | CCI-065125 Reinforcement | 76.25 - 81.25 | 1.0000 | 1.0000 |
| L26 | 26 | CCI-065125 Reinforcement | 76.25 - 81.25 | 1.0000 | 1.0000 |
| L26 | 28 | CCI-065125 Reinforcement | 76.25 - 81.25 | 1.0000 | 1.0000 |
| L26 | 45 | LDF7-50A(1-5/8) | 76.25 - 81.25 | 1.0000 | 1.0000 |

| Tower Section | Feed Line Record No. | Description | Feed Line Segment Elev. | $K_a$ No Ice | $K_a$ Ice |
|---|---|---|---|---|---|
| L26 | 63 | LDF4-50A(1/2) | 76.25 - 81.25 | 1.0000 | 1.0000 |
| L26 | 64 | 2" (Nominal) Conduit | 76.25 - 81.25 | 1.0000 | 1.0000 |
| L26 | 66 | EC4-50(1/2) | 76.25 - 81.25 | 1.0000 | 1.0000 |
| L26 | 68 | LDF6-50A(1-1/4) | 76.25 - 81.25 | 1.0000 | 1.0000 |
| L26 | 69 | LDF7-50A(1-5/8) | 76.25 - 81.25 | 1.0000 | 1.0000 |
| L27 | 18 | CCI-065125 Reinforcement | 71.25 - 76.25 | 1.0000 | 1.0000 |
| L27 | 20 | CCI-065125 Reinforcement | 71.25 - 76.25 | 1.0000 | 1.0000 |
| L27 | 22 | CCI-065125 Reinforcement | 71.25 - 76.25 | 1.0000 | 1.0000 |
| L27 | 24 | CCI-065125 Reinforcement | 71.25 - 76.25 | 1.0000 | 1.0000 |
| L27 | 26 | CCI-065125 Reinforcement | 71.25 - 76.25 | 1.0000 | 1.0000 |
| L27 | 28 | CCI-065125 Reinforcement | 71.25 - 76.25 | 1.0000 | 1.0000 |
| L27 | 45 | LDF7-50A(1-5/8) | 71.25 - 76.25 | 1.0000 | 1.0000 |
| L27 | 63 | LDF4-50A(1/2) | 71.25 - 76.25 | 1.0000 | 1.0000 |
| L27 | 64 | 2" (Nominal) Conduit | 71.25 - 76.25 | 1.0000 | 1.0000 |
| L27 | 66 | EC4-50(1/2) | 71.25 - 76.25 | 1.0000 | 1.0000 |
| L27 | 68 | LDF6-50A(1-1/4) | 71.25 - 76.25 | 1.0000 | 1.0000 |
| L27 | 69 | LDF7-50A(1-5/8) | 71.25 - 76.25 | 1.0000 | 1.0000 |
| L28 | 18 | CCI-065125 Reinforcement | 66.25 - 71.25 | 1.0000 | 1.0000 |
| L28 | 20 | CCI-065125 Reinforcement | 66.25 - 71.25 | 1.0000 | 1.0000 |
| L28 | 22 | CCI-065125 Reinforcement | 66.25 - 71.25 | 1.0000 | 1.0000 |
| L28 | 24 | CCI-065125 Reinforcement | 66.25 - 71.25 | 1.0000 | 1.0000 |
| L28 | 26 | CCI-065125 Reinforcement | 66.25 - 71.25 | 1.0000 | 1.0000 |
| L28 | 28 | CCI-065125 Reinforcement | 66.25 - 71.25 | 1.0000 | 1.0000 |
| L28 | 45 | LDF7-50A(1-5/8) | 66.25 - 71.25 | 1.0000 | 1.0000 |
| L28 | 63 | LDF4-50A(1/2) | 66.25 - 71.25 | 1.0000 | 1.0000 |
| L28 | 64 | 2" (Nominal) Conduit | 66.25 - 71.25 | 1.0000 | 1.0000 |
| L28 | 66 | EC4-50(1/2) | 66.25 - 71.25 | 1.0000 | 1.0000 |
| L28 | 68 | LDF6-50A(1-1/4) | 66.25 - 71.25 | 1.0000 | 1.0000 |
| L28 | 69 | LDF7-50A(1-5/8) | 66.25 - 71.25 | 1.0000 | 1.0000 |
| L29 | 18 | CCI-065125 Reinforcement | 61.25 - 66.25 | 1.0000 | 1.0000 |
| L29 | 20 | CCI-065125 Reinforcement | 61.25 - 66.25 | 1.0000 | 1.0000 |
| L29 | 22 | CCI-065125 Reinforcement | 61.25 - 66.25 | 1.0000 | 1.0000 |
| L29 | 24 | CCI-065125 Reinforcement | 61.25 - 66.25 | 1.0000 | 1.0000 |
| L29 | 26 | CCI-065125 Reinforcement | 61.25 - 66.25 | 1.0000 | 1.0000 |

| Tower Section | Feed Line Record No. | Description | Feed Line Segment Elev. | $K_a$ No Ice | $K_a$ Ice |
|---|---|---|---|---|---|
| L29 | 28 | CCI-065125 Reinforcement | 61.25 - 66.25 | 1.0000 | 1.0000 |
| L29 | 45 | LDF7-50A(1-5/8) | 61.25 - 66.25 | 1.0000 | 1.0000 |
| L29 | 63 | LDF4-50A(1/2) | 61.25 - 66.25 | 1.0000 | 1.0000 |
| L29 | 64 | 2" (Nominal) Conduit | 61.25 - 66.25 | 1.0000 | 1.0000 |
| L29 | 66 | EC4-50(1/2) | 61.25 - 66.25 | 1.0000 | 1.0000 |
| L29 | 68 | LDF6-50A(1-1/4) | 61.25 - 66.25 | 1.0000 | 1.0000 |
| L29 | 69 | LDF7-50A(1-5/8) | 61.25 - 66.25 | 1.0000 | 1.0000 |
| L30 | 18 | CCI-065125 Reinforcement | 56.25 - 61.25 | 1.0000 | 1.0000 |
| L30 | 20 | CCI-065125 Reinforcement | 56.25 - 61.25 | 1.0000 | 1.0000 |
| L30 | 22 | CCI-065125 Reinforcement | 56.25 - 61.25 | 1.0000 | 1.0000 |
| L30 | 24 | CCI-065125 Reinforcement | 56.25 - 61.25 | 1.0000 | 1.0000 |
| L30 | 26 | CCI-065125 Reinforcement | 56.25 - 61.25 | 1.0000 | 1.0000 |
| L30 | 28 | CCI-065125 Reinforcement | 56.25 - 61.25 | 1.0000 | 1.0000 |
| L30 | 45 | LDF7-50A(1-5/8) | 56.25 - 61.25 | 1.0000 | 1.0000 |
| L30 | 63 | LDF4-50A(1/2) | 56.25 - 61.25 | 1.0000 | 1.0000 |
| L30 | 64 | 2" (Nominal) Conduit | 56.25 - 61.25 | 1.0000 | 1.0000 |
| L30 | 66 | EC4-50(1/2) | 56.25 - 61.25 | 1.0000 | 1.0000 |
| L30 | 68 | LDF6-50A(1-1/4) | 56.25 - 61.25 | 1.0000 | 1.0000 |
| L30 | 69 | LDF7-50A(1-5/8) | 56.25 - 61.25 | 1.0000 | 1.0000 |
| L31 | 18 | CCI-065125 Reinforcement | 51.25 - 56.25 | 1.0000 | 1.0000 |
| L31 | 20 | CCI-065125 Reinforcement | 51.25 - 56.25 | 1.0000 | 1.0000 |
| L31 | 22 | CCI-065125 Reinforcement | 51.25 - 56.25 | 1.0000 | 1.0000 |
| L31 | 24 | CCI-065125 Reinforcement | 51.25 - 56.25 | 1.0000 | 1.0000 |
| L31 | 26 | CCI-065125 Reinforcement | 51.25 - 56.25 | 1.0000 | 1.0000 |
| L31 | 28 | CCI-065125 Reinforcement | 51.25 - 56.25 | 1.0000 | 1.0000 |
| L31 | 45 | LDF7-50A(1-5/8) | 51.25 - 56.25 | 1.0000 | 1.0000 |
| L31 | 63 | LDF4-50A(1/2) | 51.25 - 56.25 | 1.0000 | 1.0000 |
| L31 | 64 | 2" (Nominal) Conduit | 51.25 - 56.25 | 1.0000 | 1.0000 |
| L31 | 66 | EC4-50(1/2) | 51.25 - 56.25 | 1.0000 | 1.0000 |
| L31 | 68 | LDF6-50A(1-1/4) | 51.25 - 56.25 | 1.0000 | 1.0000 |
| L31 | 69 | LDF7-50A(1-5/8) | 51.25 - 56.25 | 1.0000 | 1.0000 |
| L32 | 5 | CCI-060100 Reinforcement | 43.33 - 45.10 | 1.0000 | 1.0000 |
| L32 | 6 | CCI-060100 Reinforcement | 45.10 - 47.33 | 1.0000 | 1.0000 |
| L32 | 7 | CCI-060100 Reinforcement | 43.33 - 45.10 | 1.0000 | 1.0000 |

| Tower Section | Feed Line Record No. | Description | Feed Line Segment Elev. | $K_a$ No Ice | $K_a$ Ice |
|---|---|---|---|---|---|
| L32 | 8 | CCI-060100 Reinforcement | 45.10 - 47.33 | 1.0000 | 1.0000 |
| L32 | 9 | CCI-060100 Reinforcement | 43.33 - 45.10 | 1.0000 | 1.0000 |
| L32 | 10 | CCI-060100 Reinforcement | 45.10 - 47.33 | 1.0000 | 1.0000 |
| L32 | 11 | CCI-060100 Reinforcement | 43.33 - 45.10 | 1.0000 | 1.0000 |
| L32 | 12 | CCI-060100 Reinforcement | 45.10 - 47.33 | 1.0000 | 1.0000 |
| L32 | 18 | CCI-065125 Reinforcement | 43.33 - 51.25 | 1.0000 | 1.0000 |
| L32 | 20 | CCI-065125 Reinforcement | 43.33 - 51.25 | 1.0000 | 1.0000 |
| L32 | 22 | CCI-065125 Reinforcement | 43.33 - 51.25 | 1.0000 | 1.0000 |
| L32 | 24 | CCI-065125 Reinforcement | 43.33 - 51.25 | 1.0000 | 1.0000 |
| L32 | 26 | CCI-065125 Reinforcement | 43.33 - 51.25 | 1.0000 | 1.0000 |
| L32 | 28 | CCI-065125 Reinforcement | 43.33 - 51.25 | 1.0000 | 1.0000 |
| L32 | 45 | LDF7-50A(1-5/8) | 43.33 - 51.25 | 1.0000 | 1.0000 |
| L32 | 63 | LDF4-50A(1/2) | 43.33 - 51.25 | 1.0000 | 1.0000 |
| L32 | 64 | 2" (Nominal) Conduit | 43.33 - 51.25 | 1.0000 | 1.0000 |
| L32 | 66 | EC4-50(1/2) | 43.33 - 51.25 | 1.0000 | 1.0000 |
| L32 | 68 | LDF6-50A(1-1/4) | 43.33 - 51.25 | 1.0000 | 1.0000 |
| L32 | 69 | LDF7-50A(1-5/8) | 43.33 - 51.25 | 1.0000 | 1.0000 |
| L33 | 5 | CCI-060100 Reinforcement | 42.33 - 43.33 | 1.0000 | 1.0000 |
| L33 | 7 | CCI-060100 Reinforcement | 42.33 - 43.33 | 1.0000 | 1.0000 |
| L33 | 9 | CCI-060100 Reinforcement | 42.33 - 43.33 | 1.0000 | 1.0000 |
| L33 | 11 | CCI-060100 Reinforcement | 42.33 - 43.33 | 1.0000 | 1.0000 |
| L33 | 18 | CCI-065125 Reinforcement | 42.33 - 43.33 | 1.0000 | 1.0000 |
| L33 | 20 | CCI-065125 Reinforcement | 42.33 - 43.33 | 1.0000 | 1.0000 |
| L33 | 22 | CCI-065125 Reinforcement | 42.33 - 43.33 | 1.0000 | 1.0000 |
| L33 | 24 | CCI-065125 Reinforcement | 42.33 - 43.33 | 1.0000 | 1.0000 |
| L33 | 26 | CCI-065125 Reinforcement | 42.33 - 43.33 | 1.0000 | 1.0000 |
| L33 | 28 | CCI-065125 Reinforcement | 42.33 - 43.33 | 1.0000 | 1.0000 |
| L33 | 45 | LDF7-50A(1-5/8) | 42.33 - 43.33 | 1.0000 | 1.0000 |
| L33 | 63 | LDF4-50A(1/2) | 42.33 - 43.33 | 1.0000 | 1.0000 |
| L33 | 64 | 2" (Nominal) Conduit | 42.33 - 43.33 | 1.0000 | 1.0000 |
| L33 | 66 | EC4-50(1/2) | 42.33 - 43.33 | 1.0000 | 1.0000 |
| L33 | 68 | LDF6-50A(1-1/4) | 42.33 - 43.33 | 1.0000 | 1.0000 |
| L33 | 69 | LDF7-50A(1-5/8) | 42.33 - 43.33 | 1.0000 | 1.0000 |
| L34 | 5 | CCI-060100 Reinforcement | 37.40 - 42.33 | 1.0000 | 1.0000 |

| Tower Section | Feed Line Record No. | Description | Feed Line Segment Elev. | $K_a$ No Ice | $K_a$ Ice |
|---|---|---|---|---|---|
| L34 | 7 | CCI-060100 Reinforcement | 37.40 - 42.33 | 1.0000 | 1.0000 |
| L34 | 9 | CCI-060100 Reinforcement | 37.40 - 42.33 | 1.0000 | 1.0000 |
| L34 | 11 | CCI-060100 Reinforcement | 37.40 - 42.33 | 1.0000 | 1.0000 |
| L34 | 18 | CCI-065125 Reinforcement | 37.40 - 42.33 | 1.0000 | 1.0000 |
| L34 | 20 | CCI-065125 Reinforcement | 37.40 - 42.33 | 1.0000 | 1.0000 |
| L34 | 22 | CCI-065125 Reinforcement | 37.40 - 42.33 | 1.0000 | 1.0000 |
| L34 | 24 | CCI-065125 Reinforcement | 37.40 - 42.33 | 1.0000 | 1.0000 |
| L34 | 26 | CCI-065125 Reinforcement | 37.40 - 42.33 | 1.0000 | 1.0000 |
| L34 | 28 | CCI-065125 Reinforcement | 37.40 - 42.33 | 1.0000 | 1.0000 |
| L34 | 45 | LDF7-50A(1-5/8) | 37.40 - 42.33 | 1.0000 | 1.0000 |
| L34 | 63 | LDF4-50A(1/2) | 37.40 - 42.33 | 1.0000 | 1.0000 |
| L34 | 64 | 2" (Nominal) Conduit | 37.40 - 42.33 | 1.0000 | 1.0000 |
| L34 | 66 | EC4-50(1/2) | 37.40 - 42.33 | 1.0000 | 1.0000 |
| L34 | 68 | LDF6-50A(1-1/4) | 37.40 - 42.33 | 1.0000 | 1.0000 |
| L34 | 69 | LDF7-50A(1-5/8) | 37.40 - 42.33 | 1.0000 | 1.0000 |
| L35 | 5 | CCI-060100 Reinforcement | 37.15 - 37.40 | 1.0000 | 1.0000 |
| L35 | 7 | CCI-060100 Reinforcement | 37.15 - 37.40 | 1.0000 | 1.0000 |
| L35 | 9 | CCI-060100 Reinforcement | 37.15 - 37.40 | 1.0000 | 1.0000 |
| L35 | 11 | CCI-060100 Reinforcement | 37.15 - 37.40 | 1.0000 | 1.0000 |
| L35 | 18 | CCI-065125 Reinforcement | 37.15 - 37.40 | 1.0000 | 1.0000 |
| L35 | 20 | CCI-065125 Reinforcement | 37.15 - 37.40 | 1.0000 | 1.0000 |
| L35 | 22 | CCI-065125 Reinforcement | 37.15 - 37.40 | 1.0000 | 1.0000 |
| L35 | 24 | CCI-065125 Reinforcement | 37.15 - 37.40 | 1.0000 | 1.0000 |
| L35 | 26 | CCI-065125 Reinforcement | 37.15 - 37.40 | 1.0000 | 1.0000 |
| L35 | 28 | CCI-065125 Reinforcement | 37.15 - 37.40 | 1.0000 | 1.0000 |
| L35 | 45 | LDF7-50A(1-5/8) | 37.15 - 37.40 | 1.0000 | 1.0000 |
| L35 | 63 | LDF4-50A(1/2) | 37.15 - 37.40 | 1.0000 | 1.0000 |
| L35 | 64 | 2" (Nominal) Conduit | 37.15 - 37.40 | 1.0000 | 1.0000 |
| L35 | 66 | EC4-50(1/2) | 37.15 - 37.40 | 1.0000 | 1.0000 |
| L35 | 68 | LDF6-50A(1-1/4) | 37.15 - 37.40 | 1.0000 | 1.0000 |
| L35 | 69 | LDF7-50A(1-5/8) | 37.15 - 37.40 | 1.0000 | 1.0000 |
| L36 | 5 | CCI-060100 Reinforcement | 32.15 - 37.15 | 1.0000 | 1.0000 |
| L36 | 7 | CCI-060100 Reinforcement | 32.15 - 37.15 | 1.0000 | 1.0000 |
| L36 | 9 | CCI-060100 Reinforcement | 32.15 - 37.15 | 1.0000 | 1.0000 |

| Tower Section | Feed Line Record No. | Description | Feed Line Segment Elev. | $K_a$ No Ice | $K_a$ Ice |
|---|---|---|---|---|---|
| L36 | 11 | CCI-060100 Reinforcement | 32.15 - 37.15 | 1.0000 | 1.0000 |
| L36 | 18 | CCI-065125 Reinforcement | 32.15 - 37.15 | 1.0000 | 1.0000 |
| L36 | 20 | CCI-065125 Reinforcement | 32.15 - 37.15 | 1.0000 | 1.0000 |
| L36 | 22 | CCI-065125 Reinforcement | 32.15 - 37.15 | 1.0000 | 1.0000 |
| L36 | 24 | CCI-065125 Reinforcement | 32.15 - 37.15 | 1.0000 | 1.0000 |
| L36 | 26 | CCI-065125 Reinforcement | 32.15 - 37.15 | 1.0000 | 1.0000 |
| L36 | 28 | CCI-065125 Reinforcement | 32.15 - 37.15 | 1.0000 | 1.0000 |
| L36 | 45 | LDF7-50A(1-5/8) | 32.15 - 37.15 | 1.0000 | 1.0000 |
| L36 | 63 | LDF4-50A(1/2) | 32.15 - 37.15 | 1.0000 | 1.0000 |
| L36 | 64 | 2" (Nominal) Conduit | 32.15 - 37.15 | 1.0000 | 1.0000 |
| L36 | 66 | EC4-50(1/2) | 32.15 - 37.15 | 1.0000 | 1.0000 |
| L36 | 68 | LDF6-50A(1-1/4) | 32.15 - 37.15 | 1.0000 | 1.0000 |
| L36 | 69 | LDF7-50A(1-5/8) | 32.15 - 37.15 | 1.0000 | 1.0000 |
| L37 | 5 | CCI-060100 Reinforcement | 27.15 - 32.15 | 1.0000 | 1.0000 |
| L37 | 7 | CCI-060100 Reinforcement | 27.15 - 32.15 | 1.0000 | 1.0000 |
| L37 | 9 | CCI-060100 Reinforcement | 27.15 - 32.15 | 1.0000 | 1.0000 |
| L37 | 11 | CCI-060100 Reinforcement | 27.15 - 32.15 | 1.0000 | 1.0000 |
| L37 | 18 | CCI-065125 Reinforcement | 27.15 - 32.15 | 1.0000 | 1.0000 |
| L37 | 20 | CCI-065125 Reinforcement | 27.15 - 32.15 | 1.0000 | 1.0000 |
| L37 | 22 | CCI-065125 Reinforcement | 27.15 - 32.15 | 1.0000 | 1.0000 |
| L37 | 24 | CCI-065125 Reinforcement | 27.15 - 32.15 | 1.0000 | 1.0000 |
| L37 | 26 | CCI-065125 Reinforcement | 27.15 - 32.15 | 1.0000 | 1.0000 |
| L37 | 28 | CCI-065125 Reinforcement | 27.15 - 32.15 | 1.0000 | 1.0000 |
| L37 | 45 | LDF7-50A(1-5/8) | 27.15 - 32.15 | 1.0000 | 1.0000 |
| L37 | 63 | LDF4-50A(1/2) | 27.15 - 32.15 | 1.0000 | 1.0000 |
| L37 | 64 | 2" (Nominal) Conduit | 27.15 - 32.15 | 1.0000 | 1.0000 |
| L37 | 66 | EC4-50(1/2) | 27.15 - 32.15 | 1.0000 | 1.0000 |
| L37 | 68 | LDF6-50A(1-1/4) | 27.15 - 32.15 | 1.0000 | 1.0000 |
| L37 | 69 | LDF7-50A(1-5/8) | 27.15 - 32.15 | 1.0000 | 1.0000 |
| L38 | 1 | CCI-065125 Reinforcement | 22.15 - 22.25 | 1.0000 | 1.0000 |
| L38 | 2 | CCI-065125 Reinforcement | 22.15 - 22.25 | 1.0000 | 1.0000 |
| L38 | 3 | CCI-065125 Reinforcement | 22.15 - 22.25 | 1.0000 | 1.0000 |
| L38 | 4 | CCI-065125 Reinforcement | 22.15 - 22.25 | 1.0000 | 1.0000 |
| L38 | 5 | CCI-060100 Reinforcement | 22.25 - 27.15 | 1.0000 | 1.0000 |

| Tower Section | Feed Line Record No. | Description | Feed Line Segment Elev. | $K_a$ No Ice | $K_a$ Ice |
|---|---|---|---|---|---|
| L38 | 7 | CCI-060100 Reinforcement | 22.25 - 27.15 | 1.0000 | 1.0000 |
| L38 | 9 | CCI-060100 Reinforcement | 22.25 - 27.15 | 1.0000 | 1.0000 |
| L38 | 11 | CCI-060100 Reinforcement | 22.25 - 27.15 | 1.0000 | 1.0000 |
| L38 | 17 | CCI-065125 Reinforcement | 22.15 - 26.01 | 1.0000 | 1.0000 |
| L38 | 18 | CCI-065125 Reinforcement | 26.01 - 27.15 | 1.0000 | 1.0000 |
| L38 | 19 | CCI-065125 Reinforcement | 22.15 - 26.01 | 1.0000 | 1.0000 |
| L38 | 20 | CCI-065125 Reinforcement | 26.01 - 27.15 | 1.0000 | 1.0000 |
| L38 | 21 | CCI-065125 Reinforcement | 22.15 - 26.01 | 1.0000 | 1.0000 |
| L38 | 22 | CCI-065125 Reinforcement | 26.01 - 27.15 | 1.0000 | 1.0000 |
| L38 | 23 | CCI-065125 Reinforcement | 22.15 - 26.01 | 1.0000 | 1.0000 |
| L38 | 24 | CCI-065125 Reinforcement | 26.01 - 27.15 | 1.0000 | 1.0000 |
| L38 | 25 | CCI-065125 Reinforcement | 22.15 - 26.01 | 1.0000 | 1.0000 |
| L38 | 26 | CCI-065125 Reinforcement | 26.01 - 27.15 | 1.0000 | 1.0000 |
| L38 | 27 | CCI-065125 Reinforcement | 22.15 - 26.01 | 1.0000 | 1.0000 |
| L38 | 28 | CCI-065125 Reinforcement | 26.01 - 27.15 | 1.0000 | 1.0000 |
| L38 | 45 | LDF7-50A(1-5/8) | 22.15 - 27.15 | 1.0000 | 1.0000 |
| L38 | 63 | LDF4-50A(1/2) | 22.15 - 27.15 | 1.0000 | 1.0000 |
| L38 | 64 | 2" (Nominal) Conduit | 22.15 - 27.15 | 1.0000 | 1.0000 |
| L38 | 66 | EC4-50(1/2) | 22.15 - 27.15 | 1.0000 | 1.0000 |
| L38 | 68 | LDF6-50A(1-1/4) | 22.15 - 27.15 | 1.0000 | 1.0000 |
| L38 | 69 | LDF7-50A(1-5/8) | 22.15 - 27.15 | 1.0000 | 1.0000 |
| L39 | 1 | CCI-065125 Reinforcement | 19.50 - 22.15 | 1.0000 | 1.0000 |
| L39 | 2 | CCI-065125 Reinforcement | 19.50 - 22.15 | 1.0000 | 1.0000 |
| L39 | 3 | CCI-065125 Reinforcement | 19.50 - 22.15 | 1.0000 | 1.0000 |
| L39 | 4 | CCI-065125 Reinforcement | 19.50 - 22.15 | 1.0000 | 1.0000 |
| L39 | 17 | CCI-065125 Reinforcement | 19.50 - 22.15 | 1.0000 | 1.0000 |
| L39 | 19 | CCI-065125 Reinforcement | 19.50 - 22.15 | 1.0000 | 1.0000 |
| L39 | 21 | CCI-065125 Reinforcement | 19.50 - 22.15 | 1.0000 | 1.0000 |
| L39 | 23 | CCI-065125 Reinforcement | 19.50 - 22.15 | 1.0000 | 1.0000 |
| L39 | 25 | CCI-065125 Reinforcement | 19.50 - 22.15 | 1.0000 | 1.0000 |
| L39 | 27 | CCI-065125 Reinforcement | 19.50 - 22.15 | 1.0000 | 1.0000 |
| L39 | 45 | LDF7-50A(1-5/8) | 19.50 - 22.15 | 1.0000 | 1.0000 |
| L39 | 63 | LDF4-50A(1/2) | 19.50 - 22.15 | 1.0000 | 1.0000 |
| L39 | 64 | 2" (Nominal) Conduit | 19.50 - 22.15 | 1.0000 | 1.0000 |

| Tower Section | Feed Line Record No. | Description | Feed Line Segment Elev. | $K_a$ No Ice | $K_a$ Ice |
|---|---|---|---|---|---|
| L39 | 66 | EC4-50(1/2) | 19.50 - 22.15 | 1.0000 | 1.0000 |
| L39 | 68 | LDF6-50A(1-1/4) | 19.50 - 22.15 | 1.0000 | 1.0000 |
| L39 | 69 | LDF7-50A(1-5/8) | 19.50 - 22.15 | 1.0000 | 1.0000 |
| L40 | 1 | CCI-065125 Reinforcement | 19.25 - 19.50 | 1.0000 | 1.0000 |
| L40 | 2 | CCI-065125 Reinforcement | 19.25 - 19.50 | 1.0000 | 1.0000 |
| L40 | 3 | CCI-065125 Reinforcement | 19.25 - 19.50 | 1.0000 | 1.0000 |
| L40 | 4 | CCI-065125 Reinforcement | 19.25 - 19.50 | 1.0000 | 1.0000 |
| L40 | 17 | CCI-065125 Reinforcement | 19.25 - 19.50 | 1.0000 | 1.0000 |
| L40 | 19 | CCI-065125 Reinforcement | 19.25 - 19.50 | 1.0000 | 1.0000 |
| L40 | 21 | CCI-065125 Reinforcement | 19.25 - 19.50 | 1.0000 | 1.0000 |
| L40 | 23 | CCI-065125 Reinforcement | 19.25 - 19.50 | 1.0000 | 1.0000 |
| L40 | 25 | CCI-065125 Reinforcement | 19.25 - 19.50 | 1.0000 | 1.0000 |
| L40 | 27 | CCI-065125 Reinforcement | 19.25 - 19.50 | 1.0000 | 1.0000 |
| L40 | 45 | LDF7-50A(1-5/8) | 19.25 - 19.50 | 1.0000 | 1.0000 |
| L40 | 63 | LDF4-50A(1/2) | 19.25 - 19.50 | 1.0000 | 1.0000 |
| L40 | 64 | 2" (Nominal) Conduit | 19.25 - 19.50 | 1.0000 | 1.0000 |
| L40 | 66 | EC4-50(1/2) | 19.25 - 19.50 | 1.0000 | 1.0000 |
| L40 | 68 | LDF6-50A(1-1/4) | 19.25 - 19.50 | 1.0000 | 1.0000 |
| L40 | 69 | LDF7-50A(1-5/8) | 19.25 - 19.50 | 1.0000 | 1.0000 |
| L41 | 1 | CCI-065125 Reinforcement | 14.25 - 19.25 | 1.0000 | 1.0000 |
| L41 | 2 | CCI-065125 Reinforcement | 14.25 - 19.25 | 1.0000 | 1.0000 |
| L41 | 3 | CCI-065125 Reinforcement | 14.25 - 19.25 | 1.0000 | 1.0000 |
| L41 | 4 | CCI-065125 Reinforcement | 14.25 - 19.25 | 1.0000 | 1.0000 |
| L41 | 17 | CCI-065125 Reinforcement | 14.25 - 19.25 | 1.0000 | 1.0000 |
| L41 | 19 | CCI-065125 Reinforcement | 14.25 - 19.25 | 1.0000 | 1.0000 |
| L41 | 21 | CCI-065125 Reinforcement | 14.25 - 19.25 | 1.0000 | 1.0000 |
| L41 | 23 | CCI-065125 Reinforcement | 14.25 - 19.25 | 1.0000 | 1.0000 |
| L41 | 25 | CCI-065125 Reinforcement | 14.25 - 19.25 | 1.0000 | 1.0000 |
| L41 | 27 | CCI-065125 Reinforcement | 14.25 - 19.25 | 1.0000 | 1.0000 |
| L41 | 45 | LDF7-50A(1-5/8) | 14.25 - 19.25 | 1.0000 | 1.0000 |
| L41 | 63 | LDF4-50A(1/2) | 14.25 - 19.25 | 1.0000 | 1.0000 |
| L41 | 64 | 2" (Nominal) Conduit | 14.25 - 19.25 | 1.0000 | 1.0000 |
| L41 | 66 | EC4-50(1/2) | 14.25 - 19.25 | 1.0000 | 1.0000 |
| L41 | 68 | LDF6-50A(1-1/4) | 14.25 - 19.25 | 1.0000 | 1.0000 |

| Tower Section | Feed Line Record No. | Description | Feed Line Segment Elev. | $K_a$ No Ice | $K_a$ Ice |
|---|---|---|---|---|---|
| L41 | 69 | LDF7-50A(1-5/8) | 14.25 - 19.25 | 1.0000 | 1.0000 |
| L42 | 1 | CCI-065125 Reinforcement | 9.25 - 14.25 | 1.0000 | 1.0000 |
| L42 | 2 | CCI-065125 Reinforcement | 9.25 - 14.25 | 1.0000 | 1.0000 |
| L42 | 3 | CCI-065125 Reinforcement | 9.25 - 14.25 | 1.0000 | 1.0000 |
| L42 | 4 | CCI-065125 Reinforcement | 9.25 - 14.25 | 1.0000 | 1.0000 |
| L42 | 17 | CCI-065125 Reinforcement | 9.25 - 14.25 | 1.0000 | 1.0000 |
| L42 | 19 | CCI-065125 Reinforcement | 9.25 - 14.25 | 1.0000 | 1.0000 |
| L42 | 21 | CCI-065125 Reinforcement | 9.25 - 14.25 | 1.0000 | 1.0000 |
| L42 | 23 | CCI-065125 Reinforcement | 9.25 - 14.25 | 1.0000 | 1.0000 |
| L42 | 25 | CCI-065125 Reinforcement | 9.25 - 14.25 | 1.0000 | 1.0000 |
| L42 | 27 | CCI-065125 Reinforcement | 9.25 - 14.25 | 1.0000 | 1.0000 |
| L42 | 45 | LDF7-50A(1-5/8) | 9.25 - 14.25 | 1.0000 | 1.0000 |
| L42 | 63 | LDF4-50A(1/2) | 9.25 - 14.25 | 1.0000 | 1.0000 |
| L42 | 64 | 2" (Nominal) Conduit | 9.25 - 14.25 | 1.0000 | 1.0000 |
| L42 | 66 | EC4-50(1/2) | 9.25 - 14.25 | 1.0000 | 1.0000 |
| L42 | 68 | LDF6-50A(1-1/4) | 9.25 - 14.25 | 1.0000 | 1.0000 |
| L42 | 69 | LDF7-50A(1-5/8) | 9.25 - 14.25 | 1.0000 | 1.0000 |
| L43 | 1 | CCI-065125 Reinforcement | 9.00 - 9.25 | 1.0000 | 1.0000 |
| L43 | 2 | CCI-065125 Reinforcement | 9.00 - 9.25 | 1.0000 | 1.0000 |
| L43 | 3 | CCI-065125 Reinforcement | 9.00 - 9.25 | 1.0000 | 1.0000 |
| L43 | 4 | CCI-065125 Reinforcement | 9.00 - 9.25 | 1.0000 | 1.0000 |
| L43 | 17 | CCI-065125 Reinforcement | 9.00 - 9.25 | 1.0000 | 1.0000 |
| L43 | 19 | CCI-065125 Reinforcement | 9.00 - 9.25 | 1.0000 | 1.0000 |
| L43 | 21 | CCI-065125 Reinforcement | 9.00 - 9.25 | 1.0000 | 1.0000 |
| L43 | 23 | CCI-065125 Reinforcement | 9.00 - 9.25 | 1.0000 | 1.0000 |
| L43 | 25 | CCI-065125 Reinforcement | 9.00 - 9.25 | 1.0000 | 1.0000 |
| L43 | 27 | CCI-065125 Reinforcement | 9.00 - 9.25 | 1.0000 | 1.0000 |
| L43 | 45 | LDF7-50A(1-5/8) | 9.00 - 9.25 | 1.0000 | 1.0000 |
| L43 | 63 | LDF4-50A(1/2) | 9.00 - 9.25 | 1.0000 | 1.0000 |
| L43 | 64 | 2" (Nominal) Conduit | 9.00 - 9.25 | 1.0000 | 1.0000 |
| L43 | 66 | EC4-50(1/2) | 9.00 - 9.25 | 1.0000 | 1.0000 |
| L43 | 68 | LDF6-50A(1-1/4) | 9.00 - 9.25 | 1.0000 | 1.0000 |
| L43 | 69 | LDF7-50A(1-5/8) | 9.00 - 9.25 | 1.0000 | 1.0000 |
| L44 | 1 | CCI-065125 Reinforcement | 8.75 - 9.00 | 1.0000 | 1.0000 |
| L44 | 2 | CCI-065125 Reinforcement | 8.75 - 9.00 | 1.0000 | 1.0000 |
| L44 | 3 | CCI-065125 Reinforcement | 8.75 - 9.00 | 1.0000 | 1.0000 |
| L44 | 4 | CCI-065125 Reinforcement | 8.75 - 9.00 | 1.0000 | 1.0000 |
| L44 | 17 | CCI-065125 Reinforcement | 8.75 - 9.00 | 1.0000 | 1.0000 |
| L44 | 19 | CCI-065125 Reinforcement | 8.75 - 9.00 | 1.0000 | 1.0000 |
| L44 | 21 | CCI-065125 Reinforcement | 8.75 - 9.00 | 1.0000 | 1.0000 |

| Tower Section | Feed Line Record No. | Description | Feed Line Segment Elev. | $K_a$ No Ice | $K_a$ Ice |
|---|---|---|---|---|---|
| L44 | 23 | CCI-065125 Reinforcement | 8.75 - 9.00 | 1.0000 | 1.0000 |
| L44 | 25 | CCI-065125 Reinforcement | 8.75 - 9.00 | 1.0000 | 1.0000 |
| L44 | 27 | CCI-065125 Reinforcement | 8.75 - 9.00 | 1.0000 | 1.0000 |
| L44 | 45 | LDF7-50A(1-5/8) | 8.75 - 9.00 | 1.0000 | 1.0000 |
| L44 | 63 | LDF4-50A(1/2) | 8.75 - 9.00 | 1.0000 | 1.0000 |
| L44 | 64 | 2" (Nominal) Conduit | 8.75 - 9.00 | 1.0000 | 1.0000 |
| L44 | 66 | EC4-50(1/2) | 8.75 - 9.00 | 1.0000 | 1.0000 |
| L44 | 68 | LDF6-50A(1-1/4) | 8.75 - 9.00 | 1.0000 | 1.0000 |
| L44 | 69 | LDF7-50A(1-5/8) | 8.75 - 9.00 | 1.0000 | 1.0000 |
| L45 | 1 | CCI-065125 Reinforcement | 7.00 - 8.75 | 1.0000 | 1.0000 |
| L45 | 2 | CCI-065125 Reinforcement | 7.00 - 8.75 | 1.0000 | 1.0000 |
| L45 | 3 | CCI-065125 Reinforcement | 7.00 - 8.75 | 1.0000 | 1.0000 |
| L45 | 4 | CCI-065125 Reinforcement | 7.00 - 8.75 | 1.0000 | 1.0000 |
| L45 | 17 | CCI-065125 Reinforcement | 7.00 - 8.75 | 1.0000 | 1.0000 |
| L45 | 19 | CCI-065125 Reinforcement | 7.00 - 8.75 | 1.0000 | 1.0000 |
| L45 | 21 | CCI-065125 Reinforcement | 7.00 - 8.75 | 1.0000 | 1.0000 |
| L45 | 23 | CCI-065125 Reinforcement | 7.00 - 8.75 | 1.0000 | 1.0000 |
| L45 | 25 | CCI-065125 Reinforcement | 7.00 - 8.75 | 1.0000 | 1.0000 |
| L45 | 27 | CCI-065125 Reinforcement | 7.00 - 8.75 | 1.0000 | 1.0000 |
| L45 | 45 | LDF7-50A(1-5/8) | 7.00 - 8.75 | 1.0000 | 1.0000 |
| L45 | 63 | LDF4-50A(1/2) | 7.00 - 8.75 | 1.0000 | 1.0000 |
| L45 | 64 | 2" (Nominal) Conduit | 7.00 - 8.75 | 1.0000 | 1.0000 |
| L45 | 66 | EC4-50(1/2) | 7.00 - 8.75 | 1.0000 | 1.0000 |
| L45 | 68 | LDF6-50A(1-1/4) | 7.00 - 8.75 | 1.0000 | 1.0000 |
| L45 | 69 | LDF7-50A(1-5/8) | 7.00 - 8.75 | 1.0000 | 1.0000 |
| L46 | 1 | CCI-065125 Reinforcement | 6.75 - 7.00 | 1.0000 | 1.0000 |
| L46 | 2 | CCI-065125 Reinforcement | 6.75 - 7.00 | 1.0000 | 1.0000 |
| L46 | 3 | CCI-065125 Reinforcement | 6.75 - 7.00 | 1.0000 | 1.0000 |
| L46 | 4 | CCI-065125 Reinforcement | 6.75 - 7.00 | 1.0000 | 1.0000 |
| L46 | 17 | CCI-065125 Reinforcement | 6.75 - 7.00 | 1.0000 | 1.0000 |
| L46 | 19 | CCI-065125 Reinforcement | 6.75 - 7.00 | 1.0000 | 1.0000 |
| L46 | 21 | CCI-065125 Reinforcement | 6.75 - 7.00 | 1.0000 | 1.0000 |
| L46 | 23 | CCI-065125 Reinforcement | 6.75 - 7.00 | 1.0000 | 1.0000 |
| L46 | 25 | CCI-065125 Reinforcement | 6.75 - 7.00 | 1.0000 | 1.0000 |
| L46 | 27 | CCI-065125 Reinforcement | 6.75 - 7.00 | 1.0000 | 1.0000 |
| L46 | 45 | LDF7-50A(1-5/8) | 6.75 - 7.00 | 1.0000 | 1.0000 |
| L46 | 63 | LDF4-50A(1/2) | 6.75 - 7.00 | 1.0000 | 1.0000 |
| L46 | 64 | 2" (Nominal) Conduit | 6.75 - 7.00 | 1.0000 | 1.0000 |
| L46 | 66 | EC4-50(1/2) | 6.75 - 7.00 | 1.0000 | 1.0000 |
| L46 | 68 | LDF6-50A(1-1/4) | 6.75 - 7.00 | 1.0000 | 1.0000 |
| L46 | 69 | LDF7-50A(1-5/8) | 6.75 - 7.00 | 1.0000 | 1.0000 |
| L47 | 1 | CCI-065125 Reinforcement | 5.00 - 6.75 | 1.0000 | 1.0000 |
| L47 | 2 | CCI-065125 Reinforcement | 5.00 - 6.75 | 1.0000 | 1.0000 |

| Tower Section | Feed Line Record No. | Description | Feed Line Segment Elev. | $K_a$ No Ice | $K_a$ Ice |
|---|---|---|---|---|---|
| L47 | 3 | CCI-065125 Reinforcement | 5.00 - 6.75 | 1.0000 | 1.0000 |
| L47 | 4 | CCI-065125 Reinforcement | 5.00 - 6.75 | 1.0000 | 1.0000 |
| L47 | 17 | CCI-065125 Reinforcement | 5.00 - 6.75 | 1.0000 | 1.0000 |
| L47 | 19 | CCI-065125 Reinforcement | 5.00 - 6.75 | 1.0000 | 1.0000 |
| L47 | 21 | CCI-065125 Reinforcement | 5.00 - 6.75 | 1.0000 | 1.0000 |
| L47 | 23 | CCI-065125 Reinforcement | 5.00 - 6.75 | 1.0000 | 1.0000 |
| L47 | 25 | CCI-065125 Reinforcement | 5.00 - 6.75 | 1.0000 | 1.0000 |
| L47 | 27 | CCI-065125 Reinforcement | 5.00 - 6.75 | 1.0000 | 1.0000 |
| L47 | 45 | LDF7-50A(1-5/8) | 5.00 - 6.75 | 1.0000 | 1.0000 |
| L47 | 63 | LDF4-50A(1/2) | 5.00 - 6.75 | 1.0000 | 1.0000 |
| L47 | 64 | 2" (Nominal) Conduit | 5.00 - 6.75 | 1.0000 | 1.0000 |
| L47 | 66 | EC4-50(1/2) | 5.00 - 6.75 | 1.0000 | 1.0000 |
| L47 | 68 | LDF6-50A(1-1/4) | 5.00 - 6.75 | 1.0000 | 1.0000 |
| L47 | 69 | LDF7-50A(1-5/8) | 5.00 - 6.75 | 1.0000 | 1.0000 |
| L48 | 1 | CCI-065125 Reinforcement | 4.75 - 5.00 | 1.0000 | 1.0000 |
| L48 | 2 | CCI-065125 Reinforcement | 4.75 - 5.00 | 1.0000 | 1.0000 |
| L48 | 3 | CCI-065125 Reinforcement | 4.75 - 5.00 | 1.0000 | 1.0000 |
| L48 | 4 | CCI-065125 Reinforcement | 4.75 - 5.00 | 1.0000 | 1.0000 |
| L48 | 17 | CCI-065125 Reinforcement | 4.75 - 5.00 | 1.0000 | 1.0000 |
| L48 | 19 | CCI-065125 Reinforcement | 4.75 - 5.00 | 1.0000 | 1.0000 |
| L48 | 21 | CCI-065125 Reinforcement | 4.75 - 5.00 | 1.0000 | 1.0000 |
| L48 | 23 | CCI-065125 Reinforcement | 4.75 - 5.00 | 1.0000 | 1.0000 |
| L48 | 25 | CCI-065125 Reinforcement | 4.75 - 5.00 | 1.0000 | 1.0000 |
| L48 | 27 | CCI-065125 Reinforcement | 4.75 - 5.00 | 1.0000 | 1.0000 |
| L48 | 45 | LDF7-50A(1-5/8) | 4.75 - 5.00 | 1.0000 | 1.0000 |
| L48 | 63 | LDF4-50A(1/2) | 4.75 - 5.00 | 1.0000 | 1.0000 |
| L48 | 64 | 2" (Nominal) Conduit | 4.75 - 5.00 | 1.0000 | 1.0000 |
| L48 | 66 | EC4-50(1/2) | 4.75 - 5.00 | 1.0000 | 1.0000 |
| L48 | 68 | LDF6-50A(1-1/4) | 4.75 - 5.00 | 1.0000 | 1.0000 |
| L48 | 69 | LDF7-50A(1-5/8) | 4.75 - 5.00 | 1.0000 | 1.0000 |
| L49 | 1 | CCI-065125 Reinforcement | 3.00 - 4.75 | 1.0000 | 1.0000 |
| L49 | 2 | CCI-065125 Reinforcement | 3.00 - 4.75 | 1.0000 | 1.0000 |
| L49 | 3 | CCI-065125 Reinforcement | 3.00 - 4.75 | 1.0000 | 1.0000 |
| L49 | 4 | CCI-065125 Reinforcement | 3.00 - 4.75 | 1.0000 | 1.0000 |
| L49 | 17 | CCI-065125 Reinforcement | 3.00 - 4.75 | 1.0000 | 1.0000 |
| L49 | 19 | CCI-065125 Reinforcement | 3.00 - 4.75 | 1.0000 | 1.0000 |
| L49 | 21 | CCI-065125 Reinforcement | 3.00 - 4.75 | 1.0000 | 1.0000 |
| L49 | 23 | CCI-065125 Reinforcement | 3.00 - 4.75 | 1.0000 | 1.0000 |
| L49 | 25 | CCI-065125 Reinforcement | 3.00 - 4.75 | 1.0000 | 1.0000 |
| L49 | 27 | CCI-065125 Reinforcement | 3.00 - 4.75 | 1.0000 | 1.0000 |
| L49 | 45 | LDF7-50A(1-5/8) | 3.00 - 4.75 | 1.0000 | 1.0000 |

| Tower Section | Feed Line Record No. | Description | Feed Line Segment Elev. | $K_a$ No Ice | $K_a$ Ice |
|---|---|---|---|---|---|
| L49 | 63 | LDF4-50A(1/2) | 3.00 - 4.75 | 1.0000 | 1.0000 |
| L49 | 64 | 2" (Nominal) Conduit | 3.00 - 4.75 | 1.0000 | 1.0000 |
| L49 | 66 | EC4-50(1/2) | 3.00 - 4.75 | 1.0000 | 1.0000 |
| L49 | 68 | LDF6-50A(1-1/4) | 3.00 - 4.75 | 1.0000 | 1.0000 |
| L49 | 69 | LDF7-50A(1-5/8) | 3.00 - 4.75 | 1.0000 | 1.0000 |
| L50 | 1 | CCI-065125 Reinforcement | 2.75 - 3.00 | 1.0000 | 1.0000 |
| L50 | 2 | CCI-065125 Reinforcement | 2.75 - 3.00 | 1.0000 | 1.0000 |
| L50 | 3 | CCI-065125 Reinforcement | 2.75 - 3.00 | 1.0000 | 1.0000 |
| L50 | 4 | CCI-065125 Reinforcement | 2.75 - 3.00 | 1.0000 | 1.0000 |
| L50 | 17 | CCI-065125 Reinforcement | 2.75 - 3.00 | 1.0000 | 1.0000 |
| L50 | 19 | CCI-065125 Reinforcement | 2.75 - 3.00 | 1.0000 | 1.0000 |
| L50 | 21 | CCI-065125 Reinforcement | 2.75 - 3.00 | 1.0000 | 1.0000 |
| L50 | 23 | CCI-065125 Reinforcement | 2.75 - 3.00 | 1.0000 | 1.0000 |
| L50 | 25 | CCI-065125 Reinforcement | 2.75 - 3.00 | 1.0000 | 1.0000 |
| L50 | 27 | CCI-065125 Reinforcement | 2.75 - 3.00 | 1.0000 | 1.0000 |
| L50 | 45 | LDF7-50A(1-5/8) | 2.75 - 3.00 | 1.0000 | 1.0000 |
| L50 | 63 | LDF4-50A(1/2) | 2.75 - 3.00 | 1.0000 | 1.0000 |
| L50 | 64 | 2" (Nominal) Conduit | 2.75 - 3.00 | 1.0000 | 1.0000 |
| L50 | 66 | EC4-50(1/2) | 2.75 - 3.00 | 1.0000 | 1.0000 |
| L50 | 68 | LDF6-50A(1-1/4) | 2.75 - 3.00 | 1.0000 | 1.0000 |
| L50 | 69 | LDF7-50A(1-5/8) | 2.75 - 3.00 | 1.0000 | 1.0000 |
| L51 | 1 | CCI-065125 Reinforcement | 2.25 - 2.75 | 1.0000 | 1.0000 |
| L51 | 2 | CCI-065125 Reinforcement | 2.25 - 2.75 | 1.0000 | 1.0000 |
| L51 | 3 | CCI-065125 Reinforcement | 2.25 - 2.75 | 1.0000 | 1.0000 |
| L51 | 4 | CCI-065125 Reinforcement | 2.25 - 2.75 | 1.0000 | 1.0000 |
| L51 | 17 | CCI-065125 Reinforcement | 2.25 - 2.75 | 1.0000 | 1.0000 |
| L51 | 19 | CCI-065125 Reinforcement | 2.25 - 2.75 | 1.0000 | 1.0000 |
| L51 | 21 | CCI-065125 Reinforcement | 2.25 - 2.75 | 1.0000 | 1.0000 |
| L51 | 23 | CCI-065125 Reinforcement | 2.25 - 2.75 | 1.0000 | 1.0000 |
| L51 | 25 | CCI-065125 Reinforcement | 2.25 - 2.75 | 1.0000 | 1.0000 |
| L51 | 27 | CCI-065125 Reinforcement | 2.25 - 2.75 | 1.0000 | 1.0000 |
| L51 | 45 | LDF7-50A(1-5/8) | 2.25 - 2.75 | 1.0000 | 1.0000 |
| L51 | 63 | LDF4-50A(1/2) | 2.25 - 2.75 | 1.0000 | 1.0000 |
| L51 | 64 | 2" (Nominal) Conduit | 2.25 - 2.75 | 1.0000 | 1.0000 |
| L51 | 66 | EC4-50(1/2) | 2.25 - 2.75 | 1.0000 | 1.0000 |
| L51 | 68 | LDF6-50A(1-1/4) | 2.25 - 2.75 | 1.0000 | 1.0000 |
| L51 | 69 | LDF7-50A(1-5/8) | 2.25 - 2.75 | 1.0000 | 1.0000 |
| L52 | 1 | CCI-065125 Reinforcement | 2.00 - 2.25 | 1.0000 | 1.0000 |
| L52 | 2 | CCI-065125 Reinforcement | 2.00 - 2.25 | 1.0000 | 1.0000 |
| L52 | 3 | CCI-065125 Reinforcement | 2.00 - 2.25 | 1.0000 | 1.0000 |
| L52 | 4 | CCI-065125 Reinforcement | 2.00 - 2.25 | 1.0000 | 1.0000 |
| L52 | 17 | CCI-065125 Reinforcement | 2.00 - 2.25 | 1.0000 | 1.0000 |
| L52 | 19 | CCI-065125 Reinforcement | 2.00 - 2.25 | 1.0000 | 1.0000 |

| Tower Section | Feed Line Record No. | Description | Feed Line Segment Elev. | $K_a$ No Ice | $K_a$ Ice |
|---|---|---|---|---|---|
| L52 | 21 | CCI-065125 Reinforcement | 2.00 - 2.25 | 1.0000 | 1.0000 |
| L52 | 23 | CCI-065125 Reinforcement | 2.00 - 2.25 | 1.0000 | 1.0000 |
| L52 | 25 | CCI-065125 Reinforcement | 2.00 - 2.25 | 1.0000 | 1.0000 |
| L52 | 27 | CCI-065125 Reinforcement | 2.00 - 2.25 | 1.0000 | 1.0000 |
| L52 | 45 | LDF7-50A(1-5/8) | 2.00 - 2.25 | 1.0000 | 1.0000 |
| L52 | 63 | LDF4-50A(1/2) | 2.00 - 2.25 | 1.0000 | 1.0000 |
| L52 | 64 | 2" (Nominal) Conduit | 2.00 - 2.25 | 1.0000 | 1.0000 |
| L52 | 66 | EC4-50(1/2) | 2.00 - 2.25 | 1.0000 | 1.0000 |
| L52 | 68 | LDF6-50A(1-1/4) | 2.00 - 2.25 | 1.0000 | 1.0000 |
| L52 | 69 | LDF7-50A(1-5/8) | 2.00 - 2.25 | 1.0000 | 1.0000 |
| L53 | 1 | CCI-065125 Reinforcement | 0.00 - 2.00 | 1.0000 | 1.0000 |
| L53 | 2 | CCI-065125 Reinforcement | 0.00 - 2.00 | 1.0000 | 1.0000 |
| L53 | 3 | CCI-065125 Reinforcement | 0.00 - 2.00 | 1.0000 | 1.0000 |
| L53 | 4 | CCI-065125 Reinforcement | 0.00 - 2.00 | 1.0000 | 1.0000 |
| L53 | 17 | CCI-065125 Reinforcement | 0.00 - 2.00 | 1.0000 | 1.0000 |
| L53 | 19 | CCI-065125 Reinforcement | 0.00 - 2.00 | 1.0000 | 1.0000 |
| L53 | 21 | CCI-065125 Reinforcement | 0.00 - 2.00 | 1.0000 | 1.0000 |
| L53 | 23 | CCI-065125 Reinforcement | 0.00 - 2.00 | 1.0000 | 1.0000 |
| L53 | 25 | CCI-065125 Reinforcement | 0.00 - 2.00 | 1.0000 | 1.0000 |
| L53 | 27 | CCI-065125 Reinforcement | 0.00 - 2.00 | 1.0000 | 1.0000 |
| L53 | 45 | LDF7-50A(1-5/8) | 0.00 - 2.00 | 1.0000 | 1.0000 |
| L53 | 63 | LDF4-50A(1/2) | 0.00 - 2.00 | 1.0000 | 1.0000 |
| L53 | 64 | 2" (Nominal) Conduit | 0.00 - 2.00 | 1.0000 | 1.0000 |
| L53 | 66 | EC4-50(1/2) | 0.00 - 2.00 | 1.0000 | 1.0000 |
| L53 | 68 | LDF6-50A(1-1/4) | 0.00 - 2.00 | 1.0000 | 1.0000 |
| L53 | 69 | LDF7-50A(1-5/8) | 0.00 - 2.00 | 1.0000 | 1.0000 |

## Effective Width of Flat Linear Attachments / Feed Lines

| Tower Section | Attachment Record No. | Description | Attachment Segment Elev. | Ratio Calculation Method | Effective Width Ratio |
|---|---|---|---|---|---|
| L15 | 36 | CCI-060100 Reinforcement | 105.75 - 108.25 | Auto | 0.3802 |
| L15 | 37 | CCI-060100 Reinforcement | 105.75 - 108.25 | Auto | 0.3802 |
| L15 | 38 | CCI-060100 Reinforcement | 105.75 - 108.25 | Auto | 0.3802 |
| L16 | 29 | CCI-040125 Reinforcement | 101.50 - 104.00 | Auto | 0.0297 |
| L16 | 30 | CCI-040125 Reinforcement | 101.50 - 104.00 | Auto | 0.0297 |
| L16 | 31 | CCI-040125 Reinforcement | 101.50 - 104.00 | Auto | 0.0297 |
| L16 | 32 | CCI-040125 Reinforcement | 101.50 - 104.00 | Auto | 0.0297 |

| Tower Section | Attachment Record No. | Description | Attachment Segment Elev. | Ratio Calculation Method | Effective Width Ratio |
|---|---|---|---|---|---|
| L16 | 33 | CCI-040125 Reinforcement | 101.50 - 104.00 | Auto | 0.0297 |
| L16 | 34 | CCI-040125 Reinforcement | 101.50 - 104.00 | Auto | 0.0297 |
| L16 | 36 | CCI-060100 Reinforcement | 101.50 - 105.75 | Auto | 0.3579 |
| L16 | 37 | CCI-060100 Reinforcement | 101.50 - 105.75 | Auto | 0.3579 |
| L16 | 38 | CCI-060100 Reinforcement | 101.50 - 105.75 | Auto | 0.3579 |
| L17 | 29 | CCI-040125 Reinforcement | 101.25 - 101.50 | Auto | 0.2108 |
| L17 | 30 | CCI-040125 Reinforcement | 101.25 - 101.50 | Auto | 0.2108 |
| L17 | 31 | CCI-040125 Reinforcement | 101.25 - 101.50 | Auto | 0.2108 |
| L17 | 32 | CCI-040125 Reinforcement | 101.25 - 101.50 | Auto | 0.2108 |
| L17 | 33 | CCI-040125 Reinforcement | 101.25 - 101.50 | Auto | 0.2108 |
| L17 | 34 | CCI-040125 Reinforcement | 101.25 - 101.50 | Auto | 0.2108 |
| L17 | 36 | CCI-060100 Reinforcement | 101.25 - 101.50 | Auto | 0.4738 |
| L17 | 37 | CCI-060100 Reinforcement | 101.25 - 101.50 | Auto | 0.4738 |
| L17 | 38 | CCI-060100 Reinforcement | 101.25 - 101.50 | Auto | 0.4738 |
| L18 | 29 | CCI-040125 Reinforcement | 101.00 - 101.25 | Auto | 0.2087 |
| L18 | 30 | CCI-040125 Reinforcement | 101.00 - 101.25 | Auto | 0.2087 |
| L18 | 31 | CCI-040125 Reinforcement | 101.00 - 101.25 | Auto | 0.2087 |
| L18 | 32 | CCI-040125 Reinforcement | 101.00 - 101.25 | Auto | 0.2087 |
| L18 | 33 | CCI-040125 Reinforcement | 101.00 - 101.25 | Auto | 0.2087 |
| L18 | 34 | CCI-040125 Reinforcement | 101.00 - 101.25 | Auto | 0.2087 |
| L18 | 36 | CCI-060100 Reinforcement | 101.00 - 101.25 | Auto | 0.4725 |
| L18 | 37 | CCI-060100 Reinforcement | 101.00 - 101.25 | Auto | 0.4725 |
| L18 | 38 | CCI-060100 Reinforcement | 101.00 - 101.25 | Auto | 0.4725 |
| L19 | 29 | CCI-040125 Reinforcement | 100.75 - 101.00 | Auto | 0.0911 |
| L19 | 30 | CCI-040125 Reinforcement | 100.75 - 101.00 | Auto | 0.0911 |
| L19 | 31 | CCI-040125 Reinforcement | 100.75 - 101.00 | Auto | 0.0911 |
| L19 | 32 | CCI-040125 Reinforcement | 100.75 - 101.00 | Auto | 0.0911 |
| L19 | 33 | CCI-040125 Reinforcement | 100.75 - 101.00 | Auto | 0.0911 |
| L19 | 34 | CCI-040125 Reinforcement | 100.75 - 101.00 | Auto | 0.0911 |
| L19 | 36 | CCI-060100 Reinforcement | 100.75 - 101.00 | Auto | 0.3941 |
| L19 | 37 | CCI-060100 Reinforcement | 100.75 - 101.00 | Auto | 0.3941 |
| L19 | 38 | CCI-060100 Reinforcement | 100.75 - 101.00 | Auto | 0.3941 |
| L20 | 29 | CCI-040125 Reinforcement | 95.75 - 100.75 | Auto | 0.0639 |
| L20 | 30 | CCI-040125 Reinforcement | 95.75 - 100.75 | Auto | 0.0639 |

| Tower Section | Attachment Record No. | Description | Attachment Segment Elev. | Ratio Calculation Method | Effective Width Ratio |
|---|---|---|---|---|---|
| L20 | 31 | CCI-040125 Reinforcement | 95.75 - 100.75 | Auto | 0.0639 |
| L20 | 32 | CCI-040125 Reinforcement | 95.75 - 100.75 | Auto | 0.0639 |
| L20 | 33 | CCI-040125 Reinforcement | 95.75 - 100.75 | Auto | 0.0639 |
| L20 | 34 | CCI-040125 Reinforcement | 95.75 - 100.75 | Auto | 0.0639 |
| L20 | 36 | CCI-060100 Reinforcement | 98.25 - 100.75 | Auto | 0.3828 |
| L20 | 37 | CCI-060100 Reinforcement | 98.25 - 100.75 | Auto | 0.3828 |
| L20 | 38 | CCI-060100 Reinforcement | 98.25 - 100.75 | Auto | 0.3828 |
| L21 | 13 | CCI-045100 Reinforcement | 87.83 - 90.00 | Auto | 0.0943 |
| L21 | 14 | CCI-045100 Reinforcement | 87.83 - 90.00 | Auto | 0.0943 |
| L21 | 15 | CCI-045100 Reinforcement | 87.83 - 90.00 | Auto | 0.0943 |
| L21 | 29 | CCI-040125 Reinforcement | 87.83 - 95.75 | Auto | 0.0108 |
| L21 | 30 | CCI-040125 Reinforcement | 87.83 - 95.75 | Auto | 0.0108 |
| L21 | 31 | CCI-040125 Reinforcement | 87.83 - 95.75 | Auto | 0.0108 |
| L21 | 32 | CCI-040125 Reinforcement | 87.83 - 95.75 | Auto | 0.0108 |
| L21 | 33 | CCI-040125 Reinforcement | 87.83 - 95.75 | Auto | 0.0108 |
| L21 | 34 | CCI-040125 Reinforcement | 87.83 - 95.75 | Auto | 0.0108 |
| L22 | 13 | CCI-045100 Reinforcement | 86.83 - 87.83 | Auto | 0.2000 |
| L22 | 14 | CCI-045100 Reinforcement | 86.83 - 87.83 | Auto | 0.2000 |
| L22 | 15 | CCI-045100 Reinforcement | 86.83 - 87.83 | Auto | 0.2000 |
| L22 | 29 | CCI-040125 Reinforcement | 86.83 - 87.83 | Auto | 0.1000 |
| L22 | 30 | CCI-040125 Reinforcement | 86.83 - 87.83 | Auto | 0.1000 |
| L22 | 31 | CCI-040125 Reinforcement | 86.83 - 87.83 | Auto | 0.1000 |
| L22 | 32 | CCI-040125 Reinforcement | 86.83 - 87.83 | Auto | 0.1000 |
| L22 | 33 | CCI-040125 Reinforcement | 86.83 - 87.83 | Auto | 0.1000 |
| L22 | 34 | CCI-040125 Reinforcement | 86.83 - 87.83 | Auto | 0.1000 |
| L23 | 13 | CCI-045100 Reinforcement | 81.83 - 86.83 | Auto | 0.1730 |
| L23 | 14 | CCI-045100 Reinforcement | 81.83 - 86.83 | Auto | 0.1730 |
| L23 | 15 | CCI-045100 Reinforcement | 81.83 - 86.83 | Auto | 0.1730 |
| L23 | 29 | CCI-040125 Reinforcement | 81.83 - 86.83 | Auto | 0.0697 |
| L23 | 30 | CCI-040125 Reinforcement | 81.83 - 86.83 | Auto | 0.0697 |
| L23 | 31 | CCI-040125 Reinforcement | 81.83 - 86.83 | Auto | 0.0697 |
| L23 | 32 | CCI-040125 Reinforcement | 81.83 - 86.83 | Auto | 0.0697 |
| L23 | 33 | CCI-040125 Reinforcement | 81.83 - 86.83 | Auto | 0.0697 |
| L23 | 34 | CCI-040125 Reinforcement | 81.83 - 86.83 | Auto | 0.0697 |

| Tower Section | Attachment Record No. | Description | Attachment Segment Elev. | Ratio Calculation Method | Effective Width Ratio |
|---|---|---|---|---|---|
| L24 | 13 | CCI-045100 Reinforcement | 81.50 - 81.83 | Auto | 0.1534 |
| L24 | 14 | CCI-045100 Reinforcement | 81.50 - 81.83 | Auto | 0.1534 |
| L24 | 15 | CCI-045100 Reinforcement | 81.50 - 81.83 | Auto | 0.1534 |
| L24 | 18 | CCI-065125 Reinforcement | 81.50 - 81.80 | Auto | 0.4138 |
| L24 | 20 | CCI-065125 Reinforcement | 81.50 - 81.80 | Auto | 0.4138 |
| L24 | 22 | CCI-065125 Reinforcement | 81.50 - 81.80 | Auto | 0.4138 |
| L24 | 24 | CCI-065125 Reinforcement | 81.50 - 81.80 | Auto | 0.4138 |
| L24 | 26 | CCI-065125 Reinforcement | 81.50 - 81.80 | Auto | 0.4138 |
| L24 | 28 | CCI-065125 Reinforcement | 81.50 - 81.80 | Auto | 0.4138 |
| L24 | 29 | CCI-040125 Reinforcement | 81.80 - 81.83 | Auto | 0.0488 |
| L24 | 30 | CCI-040125 Reinforcement | 81.80 - 81.83 | Auto | 0.0488 |
| L24 | 31 | CCI-040125 Reinforcement | 81.80 - 81.83 | Auto | 0.0488 |
| L24 | 32 | CCI-040125 Reinforcement | 81.80 - 81.83 | Auto | 0.0488 |
| L24 | 33 | CCI-040125 Reinforcement | 81.80 - 81.83 | Auto | 0.0488 |
| L24 | 34 | CCI-040125 Reinforcement | 81.80 - 81.83 | Auto | 0.0488 |
| L25 | 13 | CCI-045100 Reinforcement | 81.25 - 81.50 | Auto | 0.1611 |
| L25 | 14 | CCI-045100 Reinforcement | 81.25 - 81.50 | Auto | 0.1611 |
| L25 | 15 | CCI-045100 Reinforcement | 81.25 - 81.50 | Auto | 0.1611 |
| L25 | 18 | CCI-065125 Reinforcement | 81.25 - 81.50 | Auto | 0.4192 |
| L25 | 20 | CCI-065125 Reinforcement | 81.25 - 81.50 | Auto | 0.4192 |
| L25 | 22 | CCI-065125 Reinforcement | 81.25 - 81.50 | Auto | 0.4192 |
| L25 | 24 | CCI-065125 Reinforcement | 81.25 - 81.50 | Auto | 0.4192 |
| L25 | 26 | CCI-065125 Reinforcement | 81.25 - 81.50 | Auto | 0.4192 |
| L25 | 28 | CCI-065125 Reinforcement | 81.25 - 81.50 | Auto | 0.4192 |
| L26 | 13 | CCI-045100 Reinforcement | 80.00 - 81.25 | Auto | 0.1458 |
| L26 | 14 | CCI-045100 Reinforcement | 80.00 - 81.25 | Auto | 0.1458 |
| L26 | 15 | CCI-045100 Reinforcement | 80.00 - 81.25 | Auto | 0.1458 |
| L26 | 18 | CCI-065125 Reinforcement | 76.25 - 81.25 | Auto | 0.3991 |
| L26 | 20 | CCI-065125 Reinforcement | 76.25 - 81.25 | Auto | 0.3991 |
| L26 | 22 | CCI-065125 Reinforcement | 76.25 - 81.25 | Auto | 0.3991 |
| L26 | 24 | CCI-065125 Reinforcement | 76.25 - 81.25 | Auto | 0.3991 |
| L26 | 26 | CCI-065125 Reinforcement | 76.25 - 81.25 | Auto | 0.3991 |
| L26 | 28 | CCI-065125 Reinforcement | 76.25 - 81.25 | Auto | 0.3991 |
| L27 | 18 | CCI-065125 Reinforcement | 71.25 - 76.25 | Auto | 0.3668 |

| Tower Section | Attachment Record No. | Description | Attachment Segment Elev. | Ratio Calculation Method | Effective Width Ratio |
|---|---|---|---|---|---|
| L27 | 20 | CCI-065125 Reinforcement | 71.25 - 76.25 | Auto | 0.3668 |
| L27 | 22 | CCI-065125 Reinforcement | 71.25 - 76.25 | Auto | 0.3668 |
| L27 | 24 | CCI-065125 Reinforcement | 71.25 - 76.25 | Auto | 0.3668 |
| L27 | 26 | CCI-065125 Reinforcement | 71.25 - 76.25 | Auto | 0.3668 |
| L27 | 28 | CCI-065125 Reinforcement | 71.25 - 76.25 | Auto | 0.3668 |
| L28 | 18 | CCI-065125 Reinforcement | 66.25 - 71.25 | Auto | 0.3346 |
| L28 | 20 | CCI-065125 Reinforcement | 66.25 - 71.25 | Auto | 0.3346 |
| L28 | 22 | CCI-065125 Reinforcement | 66.25 - 71.25 | Auto | 0.3346 |
| L28 | 24 | CCI-065125 Reinforcement | 66.25 - 71.25 | Auto | 0.3346 |
| L28 | 26 | CCI-065125 Reinforcement | 66.25 - 71.25 | Auto | 0.3346 |
| L28 | 28 | CCI-065125 Reinforcement | 66.25 - 71.25 | Auto | 0.3346 |
| L29 | 18 | CCI-065125 Reinforcement | 61.25 - 66.25 | Auto | 0.3057 |
| L29 | 20 | CCI-065125 Reinforcement | 61.25 - 66.25 | Auto | 0.3057 |
| L29 | 22 | CCI-065125 Reinforcement | 61.25 - 66.25 | Auto | 0.3057 |
| L29 | 24 | CCI-065125 Reinforcement | 61.25 - 66.25 | Auto | 0.3057 |
| L29 | 26 | CCI-065125 Reinforcement | 61.25 - 66.25 | Auto | 0.3057 |
| L29 | 28 | CCI-065125 Reinforcement | 61.25 - 66.25 | Auto | 0.3057 |
| L30 | 18 | CCI-065125 Reinforcement | 56.25 - 61.25 | Auto | 0.2768 |
| L30 | 20 | CCI-065125 Reinforcement | 56.25 - 61.25 | Auto | 0.2768 |
| L30 | 22 | CCI-065125 Reinforcement | 56.25 - 61.25 | Auto | 0.2768 |
| L30 | 24 | CCI-065125 Reinforcement | 56.25 - 61.25 | Auto | 0.2768 |
| L30 | 26 | CCI-065125 Reinforcement | 56.25 - 61.25 | Auto | 0.2768 |
| L30 | 28 | CCI-065125 Reinforcement | 56.25 - 61.25 | Auto | 0.2768 |
| L31 | 18 | CCI-065125 Reinforcement | 51.25 - 56.25 | Auto | 0.2446 |
| L31 | 20 | CCI-065125 Reinforcement | 51.25 - 56.25 | Auto | 0.2446 |
| L31 | 22 | CCI-065125 Reinforcement | 51.25 - 56.25 | Auto | 0.2446 |
| L31 | 24 | CCI-065125 Reinforcement | 51.25 - 56.25 | Auto | 0.2446 |
| L31 | 26 | CCI-065125 Reinforcement | 51.25 - 56.25 | Auto | 0.2446 |
| L31 | 28 | CCI-065125 Reinforcement | 51.25 - 56.25 | Auto | 0.2446 |
| L32 | 5 | CCI-060100 Reinforcement | 43.33 - 45.10 | Auto | 0.1290 |
| L32 | 6 | CCI-060100 Reinforcement | 45.10 - 47.33 | Auto | 0.1400 |
| L32 | 7 | CCI-060100 Reinforcement | 43.33 - 45.10 | Auto | 0.1290 |
| L32 | 8 | CCI-060100 Reinforcement | 45.10 - 47.33 | Auto | 0.1400 |
| L32 | 9 | CCI-060100 Reinforcement | 43.33 - 45.10 | Auto | 0.1290 |

| Tower Section | Attachment Record No. | Description | Attachment Segment Elev. | Ratio Calculation Method | Effective Width Ratio |
|---|---|---|---|---|---|
| L32 | 10 | CCI-060100 Reinforcement | 45.10 - 47.33 | Auto | 0.1400 |
| L32 | 11 | CCI-060100 Reinforcement | 43.33 - 45.10 | Auto | 0.1290 |
| L32 | 12 | CCI-060100 Reinforcement | 45.10 - 47.33 | Auto | 0.1400 |
| L32 | 18 | CCI-065125 Reinforcement | 43.33 - 51.25 | Auto | 0.2117 |
| L32 | 20 | CCI-065125 Reinforcement | 43.33 - 51.25 | Auto | 0.2117 |
| L32 | 22 | CCI-065125 Reinforcement | 43.33 - 51.25 | Auto | 0.2117 |
| L32 | 24 | CCI-065125 Reinforcement | 43.33 - 51.25 | Auto | 0.2117 |
| L32 | 26 | CCI-065125 Reinforcement | 43.33 - 51.25 | Auto | 0.2117 |
| L32 | 28 | CCI-065125 Reinforcement | 43.33 - 51.25 | Auto | 0.2117 |
| L33 | 5 | CCI-060100 Reinforcement | 42.33 - 43.33 | Auto | 0.2057 |
| L33 | 7 | CCI-060100 Reinforcement | 42.33 - 43.33 | Auto | 0.2057 |
| L33 | 9 | CCI-060100 Reinforcement | 42.33 - 43.33 | Auto | 0.2057 |
| L33 | 11 | CCI-060100 Reinforcement | 42.33 - 43.33 | Auto | 0.2057 |
| L33 | 18 | CCI-065125 Reinforcement | 42.33 - 43.33 | Auto | 0.2668 |
| L33 | 20 | CCI-065125 Reinforcement | 42.33 - 43.33 | Auto | 0.2668 |
| L33 | 22 | CCI-065125 Reinforcement | 42.33 - 43.33 | Auto | 0.2668 |
| L33 | 24 | CCI-065125 Reinforcement | 42.33 - 43.33 | Auto | 0.2668 |
| L33 | 26 | CCI-065125 Reinforcement | 42.33 - 43.33 | Auto | 0.2668 |
| L33 | 28 | CCI-065125 Reinforcement | 42.33 - 43.33 | Auto | 0.2668 |
| L34 | 5 | CCI-060100 Reinforcement | 37.40 - 42.33 | Auto | 0.1857 |
| L34 | 7 | CCI-060100 Reinforcement | 37.40 - 42.33 | Auto | 0.1857 |
| L34 | 9 | CCI-060100 Reinforcement | 37.40 - 42.33 | Auto | 0.1857 |
| L34 | 11 | CCI-060100 Reinforcement | 37.40 - 42.33 | Auto | 0.1857 |
| L34 | 18 | CCI-065125 Reinforcement | 37.40 - 42.33 | Auto | 0.2484 |
| L34 | 20 | CCI-065125 Reinforcement | 37.40 - 42.33 | Auto | 0.2484 |
| L34 | 22 | CCI-065125 Reinforcement | 37.40 - 42.33 | Auto | 0.2484 |
| L34 | 24 | CCI-065125 Reinforcement | 37.40 - 42.33 | Auto | 0.2484 |
| L34 | 26 | CCI-065125 Reinforcement | 37.40 - 42.33 | Auto | 0.2484 |
| L34 | 28 | CCI-065125 Reinforcement | 37.40 - 42.33 | Auto | 0.2484 |
| L35 | 5 | CCI-060100 Reinforcement | 37.15 - 37.40 | Auto | 0.1714 |
| L35 | 7 | CCI-060100 Reinforcement | 37.15 - 37.40 | Auto | 0.1714 |
| L35 | 9 | CCI-060100 Reinforcement | 37.15 - 37.40 | Auto | 0.1714 |
| L35 | 11 | CCI-060100 Reinforcement | 37.15 - 37.40 | Auto | 0.1714 |
| L35 | 18 | CCI-065125 Reinforcement | 37.15 - 37.40 | Auto | 0.2352 |

| Tower Section | Attachment Record No. | Description | Attachment Segment Elev. | Ratio Calculation Method | Effective Width Ratio |
|---|---|---|---|---|---|
| L35 | 20 | CCI-065125 Reinforcement | 37.15 - 37.40 | Auto | 0.2352 |
| L35 | 22 | CCI-065125 Reinforcement | 37.15 - 37.40 | Auto | 0.2352 |
| L35 | 24 | CCI-065125 Reinforcement | 37.15 - 37.40 | Auto | 0.2352 |
| L35 | 26 | CCI-065125 Reinforcement | 37.15 - 37.40 | Auto | 0.2352 |
| L35 | 28 | CCI-065125 Reinforcement | 37.15 - 37.40 | Auto | 0.2352 |
| L36 | 5 | CCI-060100 Reinforcement | 32.15 - 37.15 | Auto | 0.1496 |
| L36 | 7 | CCI-060100 Reinforcement | 32.15 - 37.15 | Auto | 0.1496 |
| L36 | 9 | CCI-060100 Reinforcement | 32.15 - 37.15 | Auto | 0.1496 |
| L36 | 11 | CCI-060100 Reinforcement | 32.15 - 37.15 | Auto | 0.1496 |
| L36 | 18 | CCI-065125 Reinforcement | 32.15 - 37.15 | Auto | 0.2151 |
| L36 | 20 | CCI-065125 Reinforcement | 32.15 - 37.15 | Auto | 0.2151 |
| L36 | 22 | CCI-065125 Reinforcement | 32.15 - 37.15 | Auto | 0.2151 |
| L36 | 24 | CCI-065125 Reinforcement | 32.15 - 37.15 | Auto | 0.2151 |
| L36 | 26 | CCI-065125 Reinforcement | 32.15 - 37.15 | Auto | 0.2151 |
| L36 | 28 | CCI-065125 Reinforcement | 32.15 - 37.15 | Auto | 0.2151 |
| L37 | 5 | CCI-060100 Reinforcement | 27.15 - 32.15 | Auto | 0.1148 |
| L37 | 7 | CCI-060100 Reinforcement | 27.15 - 32.15 | Auto | 0.1148 |
| L37 | 9 | CCI-060100 Reinforcement | 27.15 - 32.15 | Auto | 0.1148 |
| L37 | 11 | CCI-060100 Reinforcement | 27.15 - 32.15 | Auto | 0.1148 |
| L37 | 18 | CCI-065125 Reinforcement | 27.15 - 32.15 | Auto | 0.1828 |
| L37 | 20 | CCI-065125 Reinforcement | 27.15 - 32.15 | Auto | 0.1828 |
| L37 | 22 | CCI-065125 Reinforcement | 27.15 - 32.15 | Auto | 0.1828 |
| L37 | 24 | CCI-065125 Reinforcement | 27.15 - 32.15 | Auto | 0.1828 |
| L37 | 26 | CCI-065125 Reinforcement | 27.15 - 32.15 | Auto | 0.1828 |
| L37 | 28 | CCI-065125 Reinforcement | 27.15 - 32.15 | Auto | 0.1828 |
| L38 | 1 | CCI-065125 Reinforcement | 22.15 - 22.25 | Auto | 0.1416 |
| L38 | 2 | CCI-065125 Reinforcement | 22.15 - 22.25 | Auto | 0.1416 |
| L38 | 3 | CCI-065125 Reinforcement | 22.15 - 22.25 | Auto | 0.1416 |
| L38 | 4 | CCI-065125 Reinforcement | 22.15 - 22.25 | Auto | 0.1416 |
| L38 | 5 | CCI-060100 Reinforcement | 22.25 - 27.15 | Auto | 0.0838 |
| L38 | 7 | CCI-060100 Reinforcement | 22.25 - 27.15 | Auto | 0.0838 |
| L38 | 9 | CCI-060100 Reinforcement | 22.25 - 27.15 | Auto | 0.0838 |
| L38 | 11 | CCI-060100 Reinforcement | 22.25 - 27.15 | Auto | 0.0838 |
| L38 | 17 | CCI-065125 Reinforcement | 22.15 - 26.01 | Auto | 0.1511 |

| Tower Section | Attachment Record No. | Description | Attachment Segment Elev. | Ratio Calculation Method | Effective Width Ratio |
|---|---|---|---|---|---|
| L38 | 18 | CCI-065125 Reinforcement | 26.01 - 27.15 | Auto | 0.1638 |
| L38 | 19 | CCI-065125 Reinforcement | 22.15 - 26.01 | Auto | 0.1511 |
| L38 | 20 | CCI-065125 Reinforcement | 26.01 - 27.15 | Auto | 0.1638 |
| L38 | 21 | CCI-065125 Reinforcement | 22.15 - 26.01 | Auto | 0.1511 |
| L38 | 22 | CCI-065125 Reinforcement | 26.01 - 27.15 | Auto | 0.1638 |
| L38 | 23 | CCI-065125 Reinforcement | 22.15 - 26.01 | Auto | 0.1511 |
| L38 | 24 | CCI-065125 Reinforcement | 26.01 - 27.15 | Auto | 0.1638 |
| L38 | 25 | CCI-065125 Reinforcement | 22.15 - 26.01 | Auto | 0.1511 |
| L38 | 26 | CCI-065125 Reinforcement | 26.01 - 27.15 | Auto | 0.1638 |
| L38 | 27 | CCI-065125 Reinforcement | 22.15 - 26.01 | Auto | 0.1511 |
| L38 | 28 | CCI-065125 Reinforcement | 26.01 - 27.15 | Auto | 0.1638 |
| L39 | 1 | CCI-065125 Reinforcement | 19.50 - 22.15 | Auto | 0.1312 |
| L39 | 2 | CCI-065125 Reinforcement | 19.50 - 22.15 | Auto | 0.1312 |
| L39 | 3 | CCI-065125 Reinforcement | 19.50 - 22.15 | Auto | 0.1312 |
| L39 | 4 | CCI-065125 Reinforcement | 19.50 - 22.15 | Auto | 0.1312 |
| L39 | 17 | CCI-065125 Reinforcement | 19.50 - 22.15 | Auto | 0.1312 |
| L39 | 19 | CCI-065125 Reinforcement | 19.50 - 22.15 | Auto | 0.1312 |
| L39 | 21 | CCI-065125 Reinforcement | 19.50 - 22.15 | Auto | 0.1312 |
| L39 | 23 | CCI-065125 Reinforcement | 19.50 - 22.15 | Auto | 0.1312 |
| L39 | 25 | CCI-065125 Reinforcement | 19.50 - 22.15 | Auto | 0.1312 |
| L39 | 27 | CCI-065125 Reinforcement | 19.50 - 22.15 | Auto | 0.1312 |
| L40 | 1 | CCI-065125 Reinforcement | 19.25 - 19.50 | Auto | 0.1441 |
| L40 | 2 | CCI-065125 Reinforcement | 19.25 - 19.50 | Auto | 0.1441 |
| L40 | 3 | CCI-065125 Reinforcement | 19.25 - 19.50 | Auto | 0.1441 |
| L40 | 4 | CCI-065125 Reinforcement | 19.25 - 19.50 | Auto | 0.1441 |
| L40 | 17 | CCI-065125 Reinforcement | 19.25 - 19.50 | Auto | 0.1441 |
| L40 | 19 | CCI-065125 Reinforcement | 19.25 - 19.50 | Auto | 0.1441 |
| L40 | 21 | CCI-065125 Reinforcement | 19.25 - 19.50 | Auto | 0.1441 |
| L40 | 23 | CCI-065125 Reinforcement | 19.25 - 19.50 | Auto | 0.1441 |
| L40 | 25 | CCI-065125 Reinforcement | 19.25 - 19.50 | Auto | 0.1441 |
| L40 | 27 | CCI-065125 Reinforcement | 19.25 - 19.50 | Auto | 0.1441 |
| L41 | 1 | CCI-065125 Reinforcement | 14.25 - 19.25 | Auto | 0.1240 |
| L41 | 2 | CCI-065125 Reinforcement | 14.25 - 19.25 | Auto | 0.1240 |
| L41 | 3 | CCI-065125 Reinforcement | 14.25 - 19.25 | Auto | 0.1240 |

| Tower Section | Attachment Record No. | Description | Attachment Segment Elev. | Ratio Calculation Method | Effective Width Ratio |
|---|---|---|---|---|---|
| L41 | 4 | CCI-065125 Reinforcement | 14.25 - 19.25 | Auto | 0.1240 |
| L41 | 17 | CCI-065125 Reinforcement | 14.25 - 19.25 | Auto | 0.1240 |
| L41 | 19 | CCI-065125 Reinforcement | 14.25 - 19.25 | Auto | 0.1240 |
| L41 | 21 | CCI-065125 Reinforcement | 14.25 - 19.25 | Auto | 0.1240 |
| L41 | 23 | CCI-065125 Reinforcement | 14.25 - 19.25 | Auto | 0.1240 |
| L41 | 25 | CCI-065125 Reinforcement | 14.25 - 19.25 | Auto | 0.1240 |
| L41 | 27 | CCI-065125 Reinforcement | 14.25 - 19.25 | Auto | 0.1240 |
| L42 | 1 | CCI-065125 Reinforcement | 9.25 - 14.25 | Auto | 0.0985 |
| L42 | 2 | CCI-065125 Reinforcement | 9.25 - 14.25 | Auto | 0.0985 |
| L42 | 3 | CCI-065125 Reinforcement | 9.25 - 14.25 | Auto | 0.0985 |
| L42 | 4 | CCI-065125 Reinforcement | 9.25 - 14.25 | Auto | 0.0985 |
| L42 | 17 | CCI-065125 Reinforcement | 9.25 - 14.25 | Auto | 0.0985 |
| L42 | 19 | CCI-065125 Reinforcement | 9.25 - 14.25 | Auto | 0.0985 |
| L42 | 21 | CCI-065125 Reinforcement | 9.25 - 14.25 | Auto | 0.0985 |
| L42 | 23 | CCI-065125 Reinforcement | 9.25 - 14.25 | Auto | 0.0985 |
| L42 | 25 | CCI-065125 Reinforcement | 9.25 - 14.25 | Auto | 0.0985 |
| L42 | 27 | CCI-065125 Reinforcement | 9.25 - 14.25 | Auto | 0.0985 |
| L43 | 1 | CCI-065125 Reinforcement | 9.00 - 9.25 | Auto | 0.0852 |
| L43 | 2 | CCI-065125 Reinforcement | 9.00 - 9.25 | Auto | 0.0852 |
| L43 | 3 | CCI-065125 Reinforcement | 9.00 - 9.25 | Auto | 0.0852 |
| L43 | 4 | CCI-065125 Reinforcement | 9.00 - 9.25 | Auto | 0.0852 |
| L43 | 17 | CCI-065125 Reinforcement | 9.00 - 9.25 | Auto | 0.0852 |
| L43 | 19 | CCI-065125 Reinforcement | 9.00 - 9.25 | Auto | 0.0852 |
| L43 | 21 | CCI-065125 Reinforcement | 9.00 - 9.25 | Auto | 0.0852 |
| L43 | 23 | CCI-065125 Reinforcement | 9.00 - 9.25 | Auto | 0.0852 |
| L43 | 25 | CCI-065125 Reinforcement | 9.00 - 9.25 | Auto | 0.0852 |
| L43 | 27 | CCI-065125 Reinforcement | 9.00 - 9.25 | Auto | 0.0852 |
| L44 | 1 | CCI-065125 Reinforcement | 8.75 - 9.00 | Auto | 0.0907 |
| L44 | 2 | CCI-065125 Reinforcement | 8.75 - 9.00 | Auto | 0.0907 |
| L44 | 3 | CCI-065125 Reinforcement | 8.75 - 9.00 | Auto | 0.0907 |
| L44 | 4 | CCI-065125 Reinforcement | 8.75 - 9.00 | Auto | 0.0907 |
| L44 | 17 | CCI-065125 Reinforcement | 8.75 - 9.00 | Auto | 0.0907 |
| L44 | 19 | CCI-065125 Reinforcement | 8.75 - 9.00 | Auto | 0.0907 |
| L44 | 21 | CCI-065125 Reinforcement | 8.75 - 9.00 | Auto | 0.0907 |

| Tower Section | Attachment Record No. | Description | Attachment Segment Elev. | Ratio Calculation Method | Effective Width Ratio |
|---|---|---|---|---|---|
| L44 | 23 | CCI-065125 Reinforcement | 8.75 - 9.00 | Auto | 0.0907 |
| L44 | 25 | CCI-065125 Reinforcement | 8.75 - 9.00 | Auto | 0.0907 |
| L44 | 27 | CCI-065125 Reinforcement | 8.75 - 9.00 | Auto | 0.0907 |
| L45 | 1 | CCI-065125 Reinforcement | 7.00 - 8.75 | Auto | 0.0856 |
| L45 | 2 | CCI-065125 Reinforcement | 7.00 - 8.75 | Auto | 0.0856 |
| L45 | 3 | CCI-065125 Reinforcement | 7.00 - 8.75 | Auto | 0.0856 |
| L45 | 4 | CCI-065125 Reinforcement | 7.00 - 8.75 | Auto | 0.0856 |
| L45 | 17 | CCI-065125 Reinforcement | 7.00 - 8.75 | Auto | 0.0856 |
| L45 | 19 | CCI-065125 Reinforcement | 7.00 - 8.75 | Auto | 0.0856 |
| L45 | 21 | CCI-065125 Reinforcement | 7.00 - 8.75 | Auto | 0.0856 |
| L45 | 23 | CCI-065125 Reinforcement | 7.00 - 8.75 | Auto | 0.0856 |
| L45 | 25 | CCI-065125 Reinforcement | 7.00 - 8.75 | Auto | 0.0856 |
| L45 | 27 | CCI-065125 Reinforcement | 7.00 - 8.75 | Auto | 0.0856 |
| L46 | 1 | CCI-065125 Reinforcement | 6.75 - 7.00 | Auto | 0.0670 |
| L46 | 2 | CCI-065125 Reinforcement | 6.75 - 7.00 | Auto | 0.0670 |
| L46 | 3 | CCI-065125 Reinforcement | 6.75 - 7.00 | Auto | 0.0670 |
| L46 | 4 | CCI-065125 Reinforcement | 6.75 - 7.00 | Auto | 0.0670 |
| L46 | 17 | CCI-065125 Reinforcement | 6.75 - 7.00 | Auto | 0.0670 |
| L46 | 19 | CCI-065125 Reinforcement | 6.75 - 7.00 | Auto | 0.0670 |
| L46 | 21 | CCI-065125 Reinforcement | 6.75 - 7.00 | Auto | 0.0670 |
| L46 | 23 | CCI-065125 Reinforcement | 6.75 - 7.00 | Auto | 0.0670 |
| L46 | 25 | CCI-065125 Reinforcement | 6.75 - 7.00 | Auto | 0.0670 |
| L46 | 27 | CCI-065125 Reinforcement | 6.75 - 7.00 | Auto | 0.0670 |
| L47 | 1 | CCI-065125 Reinforcement | 5.00 - 6.75 | Auto | 0.0619 |
| L47 | 2 | CCI-065125 Reinforcement | 5.00 - 6.75 | Auto | 0.0619 |
| L47 | 3 | CCI-065125 Reinforcement | 5.00 - 6.75 | Auto | 0.0619 |
| L47 | 4 | CCI-065125 Reinforcement | 5.00 - 6.75 | Auto | 0.0619 |
| L47 | 17 | CCI-065125 Reinforcement | 5.00 - 6.75 | Auto | 0.0619 |
| L47 | 19 | CCI-065125 Reinforcement | 5.00 - 6.75 | Auto | 0.0619 |
| L47 | 21 | CCI-065125 Reinforcement | 5.00 - 6.75 | Auto | 0.0619 |
| L47 | 23 | CCI-065125 Reinforcement | 5.00 - 6.75 | Auto | 0.0619 |
| L47 | 25 | CCI-065125 Reinforcement | 5.00 - 6.75 | Auto | 0.0619 |
| L47 | 27 | CCI-065125 Reinforcement | 5.00 - 6.75 | Auto | 0.0619 |
| L48 | 1 | CCI-065125 Reinforcement | 4.75 - 5.00 | Auto | 0.1854 |

| Tower Section | Attachment Record No. | Description | Attachment Segment Elev. | Ratio Calculation Method | Effective Width Ratio |
|---|---|---|---|---|---|
| L48 | 2 | CCI-065125 Reinforcement | 4.75 - 5.00 | Auto | 0.1854 |
| L48 | 3 | CCI-065125 Reinforcement | 4.75 - 5.00 | Auto | 0.1854 |
| L48 | 4 | CCI-065125 Reinforcement | 4.75 - 5.00 | Auto | 0.1854 |
| L48 | 17 | CCI-065125 Reinforcement | 4.75 - 5.00 | Auto | 0.1854 |
| L48 | 19 | CCI-065125 Reinforcement | 4.75 - 5.00 | Auto | 0.1854 |
| L48 | 21 | CCI-065125 Reinforcement | 4.75 - 5.00 | Auto | 0.1854 |
| L48 | 23 | CCI-065125 Reinforcement | 4.75 - 5.00 | Auto | 0.1854 |
| L48 | 25 | CCI-065125 Reinforcement | 4.75 - 5.00 | Auto | 0.1854 |
| L48 | 27 | CCI-065125 Reinforcement | 4.75 - 5.00 | Auto | 0.1854 |
| L49 | 1 | CCI-065125 Reinforcement | 3.00 - 4.75 | Auto | 0.1736 |
| L49 | 2 | CCI-065125 Reinforcement | 3.00 - 4.75 | Auto | 0.1736 |
| L49 | 3 | CCI-065125 Reinforcement | 3.00 - 4.75 | Auto | 0.1736 |
| L49 | 4 | CCI-065125 Reinforcement | 3.00 - 4.75 | Auto | 0.1736 |
| L49 | 17 | CCI-065125 Reinforcement | 3.00 - 4.75 | Auto | 0.1736 |
| L49 | 19 | CCI-065125 Reinforcement | 3.00 - 4.75 | Auto | 0.1736 |
| L49 | 21 | CCI-065125 Reinforcement | 3.00 - 4.75 | Auto | 0.1736 |
| L49 | 23 | CCI-065125 Reinforcement | 3.00 - 4.75 | Auto | 0.1736 |
| L49 | 25 | CCI-065125 Reinforcement | 3.00 - 4.75 | Auto | 0.1736 |
| L49 | 27 | CCI-065125 Reinforcement | 3.00 - 4.75 | Auto | 0.1736 |
| L50 | 1 | CCI-065125 Reinforcement | 2.75 - 3.00 | Auto | 0.1752 |
| L50 | 2 | CCI-065125 Reinforcement | 2.75 - 3.00 | Auto | 0.1752 |
| L50 | 3 | CCI-065125 Reinforcement | 2.75 - 3.00 | Auto | 0.1752 |
| L50 | 4 | CCI-065125 Reinforcement | 2.75 - 3.00 | Auto | 0.1752 |
| L50 | 17 | CCI-065125 Reinforcement | 2.75 - 3.00 | Auto | 0.1752 |
| L50 | 19 | CCI-065125 Reinforcement | 2.75 - 3.00 | Auto | 0.1752 |
| L50 | 21 | CCI-065125 Reinforcement | 2.75 - 3.00 | Auto | 0.1752 |
| L50 | 23 | CCI-065125 Reinforcement | 2.75 - 3.00 | Auto | 0.1752 |
| L50 | 25 | CCI-065125 Reinforcement | 2.75 - 3.00 | Auto | 0.1752 |
| L50 | 27 | CCI-065125 Reinforcement | 2.75 - 3.00 | Auto | 0.1752 |
| L51 | 1 | CCI-065125 Reinforcement | 2.25 - 2.75 | Auto | 0.1733 |
| L51 | 2 | CCI-065125 Reinforcement | 2.25 - 2.75 | Auto | 0.1733 |
| L51 | 3 | CCI-065125 Reinforcement | 2.25 - 2.75 | Auto | 0.1733 |
| L51 | 4 | CCI-065125 Reinforcement | 2.25 - 2.75 | Auto | 0.1733 |
| L51 | 17 | CCI-065125 Reinforcement | 2.25 - 2.75 | Auto | 0.1733 |

| Tower Section | Attachment Record No. | Description | Attachment Segment Elev. | Ratio Calculation Method | Effective Width Ratio |
|---|---|---|---|---|---|
| L51 | 19 | CCI-065125 Reinforcement | 2.25 - 2.75 | Auto | 0.1733 |
| L51 | 21 | CCI-065125 Reinforcement | 2.25 - 2.75 | Auto | 0.1733 |
| L51 | 23 | CCI-065125 Reinforcement | 2.25 - 2.75 | Auto | 0.1733 |
| L51 | 25 | CCI-065125 Reinforcement | 2.25 - 2.75 | Auto | 0.1733 |
| L51 | 27 | CCI-065125 Reinforcement | 2.25 - 2.75 | Auto | 0.1733 |
| L52 | 1 | CCI-065125 Reinforcement | 2.00 - 2.25 | Auto | 0.1037 |
| L52 | 2 | CCI-065125 Reinforcement | 2.00 - 2.25 | Auto | 0.1037 |
| L52 | 3 | CCI-065125 Reinforcement | 2.00 - 2.25 | Auto | 0.1037 |
| L52 | 4 | CCI-065125 Reinforcement | 2.00 - 2.25 | Auto | 0.1037 |
| L52 | 17 | CCI-065125 Reinforcement | 2.00 - 2.25 | Auto | 0.1037 |
| L52 | 19 | CCI-065125 Reinforcement | 2.00 - 2.25 | Auto | 0.1037 |
| L52 | 21 | CCI-065125 Reinforcement | 2.00 - 2.25 | Auto | 0.1037 |
| L52 | 23 | CCI-065125 Reinforcement | 2.00 - 2.25 | Auto | 0.1037 |
| L52 | 25 | CCI-065125 Reinforcement | 2.00 - 2.25 | Auto | 0.1037 |
| L52 | 27 | CCI-065125 Reinforcement | 2.00 - 2.25 | Auto | 0.1037 |
| L53 | 1 | CCI-065125 Reinforcement | 0.00 - 2.00 | Auto | 0.0912 |
| L53 | 2 | CCI-065125 Reinforcement | 0.00 - 2.00 | Auto | 0.0912 |
| L53 | 3 | CCI-065125 Reinforcement | 0.00 - 2.00 | Auto | 0.0912 |
| L53 | 4 | CCI-065125 Reinforcement | 0.00 - 2.00 | Auto | 0.0912 |
| L53 | 17 | CCI-065125 Reinforcement | 0.00 - 2.00 | Auto | 0.0912 |
| L53 | 19 | CCI-065125 Reinforcement | 0.00 - 2.00 | Auto | 0.0912 |
| L53 | 21 | CCI-065125 Reinforcement | 0.00 - 2.00 | Auto | 0.0912 |
| L53 | 23 | CCI-065125 Reinforcement | 0.00 - 2.00 | Auto | 0.0912 |
| L53 | 25 | CCI-065125 Reinforcement | 0.00 - 2.00 | Auto | 0.0912 |
| L53 | 27 | CCI-065125 Reinforcement | 0.00 - 2.00 | Auto | 0.0912 |

# Discrete Tower Loads

| Description | Face or Leg | Offset Type | Offsets: Horz Lateral Vert | Azimuth Adjustment | Placement | | $C_AA_A$ Front | $C_AA_A$ Side | Weight |
|---|---|---|---|---|---|---|---|---|---|
| | | | ft<br>ft<br>ft | ° | ft | | $ft^2$ | $ft^2$ | K |
| AIR6449 B41_T-MOBILE<br>w/ Mount Pipe | A | From Leg | 4.00<br>0.00 | 0.0000 | 165.00 | No Ice | 5.19<br>5.59 | 2.71<br>3.04 | 0.13<br>0.17 |

| Description | Face or Leg | Offset Type | Offsets: Horz Lateral Vert ft ft ft | Azimuth Adjustment ° | Placement ft | | $C_AA_A$ Front $ft^2$ | $C_AA_A$ Side $ft^2$ | Weight K |
|---|---|---|---|---|---|---|---|---|---|
| | | | 1.00 | | | 1/2" Ice 1" Ice 2" Ice | 6.02 6.90 | 3.38 4.12 | 0.23 0.35 |
| AIR6449 B41_T-MOBILE w/ Mount Pipe | B | From Leg | 4.00 0.00 1.00 | 0.0000 | 165.00 | No Ice 1/2" Ice 1" Ice 2" Ice | 5.19 5.59 6.02 6.90 | 2.71 3.04 3.38 4.12 | 0.13 0.17 0.23 0.35 |
| AIR6449 B41_T-MOBILE w/ Mount Pipe | C | From Leg | 4.00 0.00 1.00 | 0.0000 | 165.00 | No Ice 1/2" Ice 1" Ice 2" Ice | 5.19 5.59 6.02 6.90 | 2.71 3.04 3.38 4.12 | 0.13 0.17 0.23 0.35 |
| AIR 32 B2A/B66AA w/ Mount Pipe | A | From Leg | 4.00 0.00 1.00 | 0.0000 | 165.00 | No Ice 1/2" Ice 1" Ice 2" Ice | 3.76 4.12 4.48 5.24 | 3.15 3.49 3.84 4.58 | 0.19 0.25 0.32 0.48 |
| AIR 32 B2A/B66AA w/ Mount Pipe | B | From Leg | 4.00 0.00 1.00 | 0.0000 | 165.00 | No Ice 1/2" Ice 1" Ice 2" Ice | 3.76 4.12 4.48 5.24 | 3.15 3.49 3.84 4.58 | 0.19 0.25 0.32 0.48 |
| AIR 32 B2A/B66AA w/ Mount Pipe | C | From Leg | 4.00 0.00 1.00 | 0.0000 | 165.00 | No Ice 1/2" Ice 1" Ice 2" Ice | 3.76 4.12 4.48 5.24 | 3.15 3.49 3.84 4.58 | 0.19 0.25 0.32 0.48 |
| APXVAARR24_43-U-NA20 w/ Mount Pipe | A | From Leg | 4.00 0.00 1.00 | 0.0000 | 165.00 | No Ice 1/2" Ice 1" Ice 2" Ice | 14.69 15.46 16.23 17.82 | 6.87 7.55 8.25 9.67 | 0.19 0.31 0.46 0.79 |
| APXVAARR24_43-U-NA20 w/ Mount Pipe | B | From Leg | 4.00 0.00 1.00 | 0.0000 | 165.00 | No Ice 1/2" Ice 1" Ice 2" Ice | 14.69 15.46 16.23 17.82 | 6.87 7.55 8.25 9.67 | 0.19 0.31 0.46 0.79 |
| APXVAARR24_43-U-NA20 w/ Mount Pipe | C | From Leg | 4.00 0.00 1.00 | 0.0000 | 165.00 | No Ice 1/2" Ice 1" Ice 2" Ice | 14.69 15.46 16.23 17.82 | 6.87 7.55 8.25 9.67 | 0.19 0.31 0.46 0.79 |
| KRY 112 144/1 | A | From Leg | 4.00 0.00 1.00 | 0.0000 | 165.00 | No Ice 1/2" Ice 1" Ice 2" Ice | 0.35 0.43 0.51 0.70 | 0.17 0.23 0.30 0.46 | 0.01 0.01 0.02 0.03 |
| KRY 112 144/1 | B | From Leg | 4.00 0.00 1.00 | 0.0000 | 165.00 | No Ice 1/2" Ice 1" Ice 2" Ice | 0.35 0.43 0.51 0.70 | 0.17 0.23 0.30 0.46 | 0.01 0.01 0.02 0.03 |
| KRY 112 144/1 | C | From Leg | 4.00 0.00 1.00 | 0.0000 | 165.00 | No Ice 1/2" Ice 1" Ice 2" Ice | 0.35 0.43 0.51 0.70 | 0.17 0.23 0.30 0.46 | 0.01 0.01 0.02 0.03 |
| SDX1926Q-43 | A | From Leg | 4.00 0.00 1.00 | 0.0000 | 165.00 | No Ice 1/2" Ice 1" Ice 2" Ice | 0.24 0.31 0.38 0.55 | 0.10 0.14 0.19 0.32 | 0.01 0.01 0.01 0.02 |
| SDX1926Q-43 | B | From Leg | 4.00 | 0.0000 | 165.00 | No Ice | 0.24 | 0.10 | 0.01 |

| Description | Face or Leg | Offset Type | Offsets: Horz Lateral Vert ft ft ft | Azimuth Adjustment ° | Placement ft | | $C_AA_A$ Front $ft^2$ | $C_AA_A$ Side $ft^2$ | Weight K |
|---|---|---|---|---|---|---|---|---|---|
| | | | 0.00 | | | 1/2" | 0.31 | 0.14 | 0.01 |
| | | | 1.00 | | | Ice | 0.38 | 0.19 | 0.01 |
| | | | | | | 1" Ice | 0.55 | 0.32 | 0.02 |
| | | | | | | 2" Ice | | | |
| SDX1926Q-43 | C | From Leg | 4.00 | 0.0000 | 165.00 | No Ice | 0.24 | 0.10 | 0.01 |
| | | | 0.00 | | | 1/2" | 0.31 | 0.14 | 0.01 |
| | | | 1.00 | | | Ice | 0.38 | 0.19 | 0.01 |
| | | | | | | 1" Ice | 0.55 | 0.32 | 0.02 |
| | | | | | | 2" Ice | | | |
| RRUS 4415 B25_CCIV2 | A | From Leg | 4.00 | 0.0000 | 165.00 | No Ice | 1.84 | 0.82 | 0.05 |
| | | | 0.00 | | | 1/2" | 2.01 | 0.94 | 0.06 |
| | | | 1.00 | | | Ice | 2.19 | 1.07 | 0.08 |
| | | | | | | 1" Ice | 2.57 | 1.37 | 0.12 |
| | | | | | | 2" Ice | | | |
| RRUS 4415 B25_CCIV2 | B | From Leg | 4.00 | 0.0000 | 165.00 | No Ice | 1.84 | 0.82 | 0.05 |
| | | | 0.00 | | | 1/2" | 2.01 | 0.94 | 0.06 |
| | | | 1.00 | | | Ice | 2.19 | 1.07 | 0.08 |
| | | | | | | 1" Ice | 2.57 | 1.37 | 0.12 |
| | | | | | | 2" Ice | | | |
| RRUS 4415 B25_CCIV2 | C | From Leg | 4.00 | 0.0000 | 165.00 | No Ice | 1.84 | 0.82 | 0.05 |
| | | | 0.00 | | | 1/2" | 2.01 | 0.94 | 0.06 |
| | | | 1.00 | | | Ice | 2.19 | 1.07 | 0.08 |
| | | | | | | 1" Ice | 2.57 | 1.37 | 0.12 |
| | | | | | | 2" Ice | | | |
| (3) RADIO 4449 B12/B71 | C | From Leg | 4.00 | 0.0000 | 165.00 | No Ice | 1.65 | 1.16 | 0.07 |
| | | | 0.00 | | | 1/2" | 1.81 | 1.30 | 0.09 |
| | | | 1.00 | | | Ice | 1.98 | 1.45 | 0.11 |
| | | | | | | 1" Ice | 2.34 | 1.76 | 0.16 |
| | | | | | | 2" Ice | | | |
| 8-ft Ladder | C | None | | 0.0000 | 165.00 | No Ice | 7.07 | 7.07 | 0.04 |
| | | | | | | 1/2" | 9.73 | 9.73 | 0.07 |
| | | | | | | Ice | 11.19 | 11.19 | 0.08 |
| | | | | | | 1" Ice | 13.98 | 13.98 | 0.11 |
| | | | | | | 2" Ice | | | |
| Platform Mount [LP 602-1] | C | None | | 0.0000 | 165.00 | No Ice | 31.07 | 31.07 | 1.34 |
| | | | | | | 1/2" | 34.82 | 34.82 | 1.97 |
| | | | | | | Ice | 38.48 | 38.48 | 2.67 |
| | | | | | | 1" Ice | 45.60 | 45.60 | 4.31 |
| | | | | | | 2" Ice | | | |
| *** | | | | | | | | | |
| HPA-65R-BUU-H8 w/ Mount Pipe | A | From Leg | 4.00 | 0.0000 | 160.00 | No Ice | 12.25 | 8.33 | 0.10 |
| | | | 0.00 | | | 1/2" | 13.19 | 9.23 | 0.19 |
| | | | 2.00 | | | Ice | 14.16 | 10.15 | 0.30 |
| | | | | | | 1" Ice | 16.14 | 12.05 | 0.54 |
| | | | | | | 2" Ice | | | |
| HPA-65R-BUU-H8 w/ Mount Pipe | B | From Leg | 4.00 | 0.0000 | 160.00 | No Ice | 12.25 | 8.33 | 0.10 |
| | | | 0.00 | | | 1/2" | 13.19 | 9.23 | 0.19 |
| | | | 2.00 | | | Ice | 14.16 | 10.15 | 0.30 |
| | | | | | | 1" Ice | 16.14 | 12.05 | 0.54 |
| | | | | | | 2" Ice | | | |
| HPA-65R-BUU-H8 w/ Mount Pipe | C | From Leg | 4.00 | 0.0000 | 160.00 | No Ice | 12.25 | 8.33 | 0.10 |
| | | | 0.00 | | | 1/2" | 13.19 | 9.23 | 0.19 |
| | | | 2.00 | | | Ice | 14.16 | 10.15 | 0.30 |
| | | | | | | 1" Ice | 16.14 | 12.05 | 0.54 |
| | | | | | | 2" Ice | | | |
| 7770.00 w/ Mount Pipe | A | From Leg | 4.00 | 0.0000 | 160.00 | No Ice | 5.75 | 4.25 | 0.06 |
| | | | 0.00 | | | 1/2" | 6.18 | 5.01 | 0.10 |
| | | | 2.00 | | | Ice | 6.61 | 5.71 | 0.16 |
| | | | | | | 1" Ice | 7.49 | 7.16 | 0.29 |
| | | | | | | 2" Ice | | | |
| 7770.00 w/ Mount Pipe | B | From Leg | 4.00 | 0.0000 | 160.00 | No Ice | 5.75 | 4.25 | 0.06 |
| | | | 0.00 | | | 1/2" | 6.18 | 5.01 | 0.10 |
| | | | 2.00 | | | Ice | 6.61 | 5.71 | 0.16 |
| | | | | | | 1" Ice | 7.49 | 7.16 | 0.29 |
| | | | | | | 2" Ice | | | |

| Description | Face or Leg | Offset Type | Offsets: Horz Lateral Vert ft ft ft | Azimuth Adjustment ° | Placement ft | | $C_AA_A$ Front $ft^2$ | $C_AA_A$ Side $ft^2$ | Weight K |
|---|---|---|---|---|---|---|---|---|---|
| 7770.00 w/ Mount Pipe | C | From Leg | 4.00<br>0.00<br>2.00 | 0.0000 | 160.00 | No Ice<br>1/2" Ice<br>1" Ice<br>2" Ice | 5.75<br>6.18<br>6.61<br>7.49 | 4.25<br>5.01<br>5.71<br>7.16 | 0.06<br>0.10<br>0.16<br>0.29 |
| DMP65R-BU8D w/ Mount Pipe | A | From Leg | 4.00<br>0.00<br>2.00 | 0.0000 | 160.00 | No Ice<br>1/2" Ice<br>1" Ice<br>2" Ice | 15.89<br>16.81<br>17.76<br>19.70 | 7.89<br>8.74<br>9.60<br>11.37 | 0.14<br>0.25<br>0.38<br>0.68 |
| DMP65R-BU8D w/ Mount Pipe | B | From Leg | 4.00<br>0.00<br>2.00 | 0.0000 | 160.00 | No Ice<br>1/2" Ice<br>1" Ice<br>2" Ice | 15.89<br>16.81<br>17.76<br>19.70 | 7.89<br>8.74<br>9.60<br>11.37 | 0.14<br>0.25<br>0.38<br>0.68 |
| DMP65R-BU8D w/ Mount Pipe | C | From Leg | 4.00<br>0.00<br>2.00 | 0.0000 | 160.00 | No Ice<br>1/2" Ice<br>1" Ice<br>2" Ice | 15.89<br>16.81<br>17.76<br>19.70 | 7.89<br>8.74<br>9.60<br>11.37 | 0.14<br>0.25<br>0.38<br>0.68 |
| OPA65R-BU8D w/ Mount Pipe | A | From Leg | 4.00<br>0.00<br>2.00 | 0.0000 | 160.00 | No Ice<br>1/2" Ice<br>1" Ice<br>2" Ice | 17.46<br>18.46<br>19.48<br>21.58 | 8.58<br>9.49<br>10.42<br>12.33 | 0.11<br>0.22<br>0.35<br>0.66 |
| OPA65R-BU8D w/ Mount Pipe | B | From Leg | 4.00<br>0.00<br>2.00 | 0.0000 | 160.00 | No Ice<br>1/2" Ice<br>1" Ice<br>2" Ice | 17.46<br>18.46<br>19.48<br>21.58 | 8.58<br>9.49<br>10.42<br>12.33 | 0.11<br>0.22<br>0.35<br>0.66 |
| OPA65R-BU8D w/ Mount Pipe | C | From Leg | 4.00<br>0.00<br>2.00 | 0.0000 | 160.00 | No Ice<br>1/2" Ice<br>1" Ice<br>2" Ice | 17.46<br>18.46<br>19.48<br>21.58 | 8.58<br>9.49<br>10.42<br>12.33 | 0.11<br>0.22<br>0.35<br>0.66 |
| RRUS 8843 B2/B66A | A | From Leg | 4.00<br>0.00<br>2.00 | 0.0000 | 160.00 | No Ice<br>1/2" Ice<br>1" Ice<br>2" Ice | 1.64<br>1.80<br>1.97<br>2.32 | 1.35<br>1.50<br>1.65<br>1.99 | 0.07<br>0.09<br>0.11<br>0.16 |
| RRUS 8843 B2/B66A | B | From Leg | 4.00<br>0.00<br>2.00 | 0.0000 | 160.00 | No Ice<br>1/2" Ice<br>1" Ice<br>2" Ice | 1.64<br>1.80<br>1.97<br>2.32 | 1.35<br>1.50<br>1.65<br>1.99 | 0.07<br>0.09<br>0.11<br>0.16 |
| RRUS 8843 B2/B66A | C | From Leg | 4.00<br>0.00<br>2.00 | 0.0000 | 160.00 | No Ice<br>1/2" Ice<br>1" Ice<br>2" Ice | 1.64<br>1.80<br>1.97<br>2.32 | 1.35<br>1.50<br>1.65<br>1.99 | 0.07<br>0.09<br>0.11<br>0.16 |
| RADIO 4415 B30 | A | From Leg | 4.00<br>0.00<br>2.00 | 0.0000 | 160.00 | No Ice<br>1/2" Ice<br>1" Ice<br>2" Ice | 1.64<br>1.80<br>1.97<br>2.33 | 0.64<br>0.75<br>0.87<br>1.13 | 0.04<br>0.05<br>0.07<br>0.11 |
| RADIO 4415 B30 | B | From Leg | 4.00<br>0.00<br>2.00 | 0.0000 | 160.00 | No Ice<br>1/2" Ice<br>1" Ice<br>2" Ice | 1.64<br>1.80<br>1.97<br>2.33 | 0.64<br>0.75<br>0.87<br>1.13 | 0.04<br>0.05<br>0.07<br>0.11 |
| RADIO 4415 B30 | C | From Leg | 4.00<br>0.00<br>2.00 | 0.0000 | 160.00 | No Ice<br>1/2" Ice<br>1" Ice<br>2" Ice | 1.64<br>1.80<br>1.97<br>2.33 | 0.64<br>0.75<br>0.87<br>1.13 | 0.04<br>0.05<br>0.07<br>0.11 |

| Description | Face or Leg | Offset Type | Offsets: Horz Lateral Vert<br>ft<br>ft<br>ft | Azimuth Adjustment<br>°<br>° | Placement<br>ft | | $C_AA_A$ Front<br>$ft^2$ | $C_AA_A$ Side<br>$ft^2$ | Weight<br>K |
|---|---|---|---|---|---|---|---|---|---|
| RADIO 4449 B5/B12 | A | From Leg | 4.00<br>0.00<br>2.00 | 0.0000 | 160.00 | No Ice<br>1/2" Ice<br>1" Ice<br>2" Ice | 1.64<br>1.80<br>1.97<br>2.33 | 1.30<br>1.45<br>1.60<br>1.92 | 0.07<br>0.09<br>0.11<br>0.16 |
| RADIO 4449 B5/B12 | B | From Leg | 4.00<br>0.00<br>2.00 | 0.0000 | 160.00 | No Ice<br>1/2" Ice<br>1" Ice<br>2" Ice | 1.64<br>1.80<br>1.97<br>2.33 | 1.30<br>1.45<br>1.60<br>1.92 | 0.07<br>0.09<br>0.11<br>0.16 |
| RADIO 4449 B5/B12 | C | From Leg | 4.00<br>0.00<br>2.00 | 0.0000 | 160.00 | No Ice<br>1/2" Ice<br>1" Ice<br>2" Ice | 1.64<br>1.80<br>1.97<br>2.33 | 1.30<br>1.45<br>1.60<br>1.92 | 0.07<br>0.09<br>0.11<br>0.16 |
| DC6-48-60-18-8F | A | From Leg | 4.00<br>0.00<br>2.00 | 0.0000 | 160.00 | No Ice<br>1/2" Ice<br>1" Ice<br>2" Ice | 1.21<br>1.89<br>2.11<br>2.57 | 1.21<br>1.89<br>2.11<br>2.57 | 0.03<br>0.05<br>0.08<br>0.14 |
| DC6-48-60-18-8F | A | From Leg | 4.00<br>0.00<br>2.00 | 0.0000 | 160.00 | No Ice<br>1/2" Ice<br>1" Ice<br>2" Ice | 1.21<br>1.89<br>2.11<br>2.57 | 1.21<br>1.89<br>2.11<br>2.57 | 0.03<br>0.05<br>0.08<br>0.14 |
| Platform Mount [LP 602-1] | C | None | | 0.0000 | 160.00 | No Ice<br>1/2" Ice<br>1" Ice<br>2" Ice | 31.07<br>34.82<br>38.48<br>45.60 | 31.07<br>34.82<br>38.48<br>45.60 | 1.34<br>1.97<br>2.67<br>4.31 |
| *** | | | | | | | | | |
| NNVV-65B-R4 w/ Mount Pipe | A | From Leg | 4.00<br>0.00<br>0.00 | 0.0000 | 148.00 | No Ice<br>1/2" Ice<br>1" Ice<br>2" Ice | 7.55<br>8.04<br>8.53<br>9.56 | 4.23<br>4.67<br>5.12<br>6.05 | 0.11<br>0.20<br>0.30<br>0.53 |
| NNVV-65B-R4 w/ Mount Pipe | B | From Leg | 4.00<br>0.00<br>0.00 | 0.0000 | 148.00 | No Ice<br>1/2" Ice<br>1" Ice<br>2" Ice | 7.55<br>8.04<br>8.53<br>9.56 | 4.23<br>4.67<br>5.12<br>6.05 | 0.11<br>0.20<br>0.30<br>0.53 |
| NNVV-65B-R4 w/ Mount Pipe | C | From Leg | 4.00<br>0.00<br>0.00 | 0.0000 | 148.00 | No Ice<br>1/2" Ice<br>1" Ice<br>2" Ice | 7.55<br>8.04<br>8.53<br>9.56 | 4.23<br>4.67<br>5.12<br>6.05 | 0.11<br>0.20<br>0.30<br>0.53 |
| 800MHZ RRH | A | From Leg | 4.00<br>0.00<br>0.00 | 0.0000 | 148.00 | No Ice<br>1/2" Ice<br>1" Ice<br>2" Ice | 2.13<br>2.32<br>2.51<br>2.92 | 1.77<br>1.95<br>2.13<br>2.51 | 0.05<br>0.07<br>0.10<br>0.16 |
| 800MHZ RRH | B | From Leg | 4.00<br>0.00<br>0.00 | 0.0000 | 148.00 | No Ice<br>1/2" Ice<br>1" Ice<br>2" Ice | 2.13<br>2.32<br>2.51<br>2.92 | 1.77<br>1.95<br>2.13<br>2.51 | 0.05<br>0.07<br>0.10<br>0.16 |
| 800MHZ RRH | C | From Leg | 4.00<br>0.00<br>0.00 | 0.0000 | 148.00 | No Ice<br>1/2" Ice<br>1" Ice<br>2" Ice | 2.13<br>2.32<br>2.51<br>2.92 | 1.77<br>1.95<br>2.13<br>2.51 | 0.05<br>0.07<br>0.10<br>0.16 |
| PCS 1900MHZ 4X45W-65MHZ | A | From Leg | 4.00<br>0.00<br>0.00 | 0.0000 | 148.00 | No Ice<br>1/2" Ice<br>1" Ice | 2.32<br>2.53<br>2.74<br>3.19 | 2.24<br>2.44<br>2.65<br>3.09 | 0.06<br>0.08<br>0.11<br>0.17 |

| Description | Face or Leg | Offset Type | Offsets: Horz Lateral Vert ft ft ft | Azimuth Adjustment ° | Placement ft | | $C_AA_A$ Front $ft^2$ | $C_AA_A$ Side $ft^2$ | Weight K |
|---|---|---|---|---|---|---|---|---|---|
| | | | | | | 2" Ice | | | |
| PCS 1900MHZ 4X45W-65MHZ | B | From Leg | 4.00 | 0.0000 | 148.00 | No Ice | 2.32 | 2.24 | 0.06 |
| | | | 0.00 | | | 1/2" | 2.53 | 2.44 | 0.08 |
| | | | 0.00 | | | Ice | 2.74 | 2.65 | 0.11 |
| | | | | | | 1" Ice | 3.19 | 3.09 | 0.17 |
| | | | | | | 2" Ice | | | |
| PCS 1900MHZ 4X45W-65MHZ | C | From Leg | 4.00 | 0.0000 | 148.00 | No Ice | 2.32 | 2.24 | 0.06 |
| | | | 0.00 | | | 1/2" | 2.53 | 2.44 | 0.08 |
| | | | 0.00 | | | Ice | 2.74 | 2.65 | 0.11 |
| | | | | | | 1" Ice | 3.19 | 3.09 | 0.17 |
| | | | | | | 2" Ice | | | |
| RRH2X50-800 | A | From Leg | 4.00 | 0.0000 | 148.00 | No Ice | 1.70 | 1.28 | 0.05 |
| | | | 0.00 | | | 1/2" | 1.86 | 1.43 | 0.07 |
| | | | 0.00 | | | Ice | 2.03 | 1.58 | 0.09 |
| | | | | | | 1" Ice | 2.40 | 1.91 | 0.14 |
| | | | | | | 2" Ice | | | |
| RRH2X50-800 | B | From Leg | 4.00 | 0.0000 | 148.00 | No Ice | 1.70 | 1.28 | 0.05 |
| | | | 0.00 | | | 1/2" | 1.86 | 1.43 | 0.07 |
| | | | 0.00 | | | Ice | 2.03 | 1.58 | 0.09 |
| | | | | | | 1" Ice | 2.40 | 1.91 | 0.14 |
| | | | | | | 2" Ice | | | |
| RRH2X50-800 | C | From Leg | 4.00 | 0.0000 | 148.00 | No Ice | 1.70 | 1.28 | 0.05 |
| | | | 0.00 | | | 1/2" | 1.86 | 1.43 | 0.07 |
| | | | 0.00 | | | Ice | 2.03 | 1.58 | 0.09 |
| | | | | | | 1" Ice | 2.40 | 1.91 | 0.14 |
| | | | | | | 2" Ice | | | |
| T-Arm Mount [TA 702-3] | C | None | | 0.0000 | 148.00 | No Ice | 4.75 | 4.75 | 0.34 |
| | | | | | | 1/2" | 5.82 | 5.82 | 0.43 |
| | | | | | | Ice | 6.98 | 6.98 | 0.55 |
| | | | | | | 1" Ice | 9.72 | 9.72 | 0.87 |
| | | | | | | 2" Ice | | | |
| *** | | | | | | | | | |
| MX08FRO665-21 | A | From Leg | 4.00 | 0.0000 | 138.00 | No Ice | 8.01 | 3.21 | 0.08 |
| | | | 0.00 | | | 1/2" | 8.53 | 3.66 | 0.16 |
| | | | 0.00 | | | Ice | 9.05 | 4.12 | 0.24 |
| | | | | | | 1" Ice | 10.14 | 5.08 | 0.42 |
| | | | | | | 2" Ice | | | |
| MX08FRO665-21 | B | From Leg | 4.00 | 0.0000 | 138.00 | No Ice | 8.01 | 3.21 | 0.08 |
| | | | 0.00 | | | 1/2" | 8.53 | 3.66 | 0.16 |
| | | | 0.00 | | | Ice | 9.05 | 4.12 | 0.24 |
| | | | | | | 1" Ice | 10.14 | 5.08 | 0.42 |
| | | | | | | 2" Ice | | | |
| MX08FRO665-21 | C | From Leg | 4.00 | 0.0000 | 138.00 | No Ice | 8.01 | 3.21 | 0.08 |
| | | | 0.00 | | | 1/2" | 8.53 | 3.66 | 0.16 |
| | | | 0.00 | | | Ice | 9.05 | 4.12 | 0.24 |
| | | | | | | 1" Ice | 10.14 | 5.08 | 0.42 |
| | | | | | | 2" Ice | | | |
| TA08025-B604 | A | From Leg | 4.00 | 0.0000 | 138.00 | No Ice | 1.96 | 0.98 | 0.06 |
| | | | 0.00 | | | 1/2" | 2.14 | 1.11 | 0.08 |
| | | | 0.00 | | | Ice | 2.32 | 1.25 | 0.10 |
| | | | | | | 1" Ice | 2.71 | 1.55 | 0.15 |
| | | | | | | 2" Ice | | | |
| TA08025-B604 | B | From Leg | 4.00 | 0.0000 | 138.00 | No Ice | 1.96 | 0.98 | 0.06 |
| | | | 0.00 | | | 1/2" | 2.14 | 1.11 | 0.08 |
| | | | 0.00 | | | Ice | 2.32 | 1.25 | 0.10 |
| | | | | | | 1" Ice | 2.71 | 1.55 | 0.15 |
| | | | | | | 2" Ice | | | |
| TA08025-B604 | C | From Leg | 4.00 | 0.0000 | 138.00 | No Ice | 1.96 | 0.98 | 0.06 |
| | | | 0.00 | | | 1/2" | 2.14 | 1.11 | 0.08 |
| | | | 0.00 | | | Ice | 2.32 | 1.25 | 0.10 |
| | | | | | | 1" Ice | 2.71 | 1.55 | 0.15 |
| | | | | | | 2" Ice | | | |
| TA08025-B605 | A | From Leg | 4.00 | 0.0000 | 138.00 | No Ice | 1.96 | 1.13 | 0.08 |
| | | | 0.00 | | | 1/2" | 2.14 | 1.27 | 0.09 |
| | | | 0.00 | | | Ice | 2.32 | 1.41 | 0.11 |

| Description | Face or Leg | Offset Type | Offsets: Horz Lateral Vert ft ft ft | Azimuth Adjustment ° | Placement ft | | $C_AA_A$ Front $ft^2$ | $C_AA_A$ Side $ft^2$ | Weight K |
|---|---|---|---|---|---|---|---|---|---|
| | | | | | | 1" Ice | 2.71 | 1.72 | 0.16 |
| | | | | | | 2" Ice | | | |
| TA08025-B605 | B | From Leg | 4.00 | 0.0000 | 138.00 | No Ice | 1.96 | 1.13 | 0.08 |
| | | | 0.00 | | | 1/2" | 2.14 | 1.27 | 0.09 |
| | | | 0.00 | | | Ice | 2.32 | 1.41 | 0.11 |
| | | | | | | 1" Ice | 2.71 | 1.72 | 0.16 |
| | | | | | | 2" Ice | | | |
| TA08025-B605 | C | From Leg | 4.00 | 0.0000 | 138.00 | No Ice | 1.96 | 1.13 | 0.08 |
| | | | 0.00 | | | 1/2" | 2.14 | 1.27 | 0.09 |
| | | | 0.00 | | | Ice | 2.32 | 1.41 | 0.11 |
| | | | | | | 1" Ice | 2.71 | 1.72 | 0.16 |
| | | | | | | 2" Ice | | | |
| RDIDC-9181-PF-48 | A | From Leg | 4.00 | 0.0000 | 138.00 | No Ice | 2.01 | 1.17 | 0.02 |
| | | | 0.00 | | | 1/2" | 2.19 | 1.31 | 0.04 |
| | | | 0.00 | | | Ice | 2.37 | 1.46 | 0.06 |
| | | | | | | 1" Ice | 2.76 | 1.78 | 0.11 |
| | | | | | | 2" Ice | | | |
| Commscope_MC-Pk8-DSH_Platform | C | None | | 0.0000 | 138.00 | No Ice | 34.24 | 34.24 | 1.75 |
| | | | | | | 1/2" | 62.95 | 62.95 | 2.10 |
| | | | | | | Ice | 91.66 | 91.66 | 2.45 |
| | | | | | | 1" Ice | 149.08 | 149.08 | 3.15 |
| | | | | | | 2" Ice | | | |
| (2) 8' x 2" Mount Pipe | A | From Leg | 4.00 | 0.0000 | 138.00 | No Ice | 1.90 | 1.90 | 0.03 |
| | | | 0.00 | | | 1/2" | 2.73 | 2.73 | 0.04 |
| | | | 0.00 | | | Ice | 3.40 | 3.40 | 0.06 |
| | | | | | | 1" Ice | 4.40 | 4.40 | 0.12 |
| | | | | | | 2" Ice | | | |
| (2) 8' x 2" Mount Pipe | B | From Leg | 4.00 | 0.0000 | 138.00 | No Ice | 1.90 | 1.90 | 0.03 |
| | | | 0.00 | | | 1/2" | 2.73 | 2.73 | 0.04 |
| | | | 0.00 | | | Ice | 3.40 | 3.40 | 0.06 |
| | | | | | | 1" Ice | 4.40 | 4.40 | 0.12 |
| | | | | | | 2" Ice | | | |
| (2) 8' x 2" Mount Pipe | C | From Leg | 4.00 | 0.0000 | 138.00 | No Ice | 1.90 | 1.90 | 0.03 |
| | | | 0.00 | | | 1/2" | 2.73 | 2.73 | 0.04 |
| | | | 0.00 | | | Ice | 3.40 | 3.40 | 0.06 |
| | | | | | | 1" Ice | 4.40 | 4.40 | 0.12 |
| | | | | | | 2" Ice | | | |
| *** | | | | | | | | | |
| LLPX310R w/ Mount Pipe | A | From Leg | 3.00 | 0.0000 | 124.00 | No Ice | 3.88 | 2.36 | 0.06 |
| | | | 0.00 | | | 1/2" | 4.29 | 2.73 | 0.09 |
| | | | 4.00 | | | Ice | 4.72 | 3.12 | 0.13 |
| | | | | | | 1" Ice | 5.61 | 3.94 | 0.24 |
| | | | | | | 2" Ice | | | |
| LLPX310R w/ Mount Pipe | B | From Leg | 3.00 | 0.0000 | 124.00 | No Ice | 3.88 | 2.36 | 0.06 |
| | | | 0.00 | | | 1/2" | 4.29 | 2.73 | 0.09 |
| | | | 4.00 | | | Ice | 4.72 | 3.12 | 0.13 |
| | | | | | | 1" Ice | 5.61 | 3.94 | 0.24 |
| | | | | | | 2" Ice | | | |
| LLPX310R w/ Mount Pipe | C | From Leg | 3.00 | 0.0000 | 124.00 | No Ice | 3.88 | 2.36 | 0.06 |
| | | | 0.00 | | | 1/2" | 4.29 | 2.73 | 0.09 |
| | | | 4.00 | | | Ice | 4.72 | 3.12 | 0.13 |
| | | | | | | 1" Ice | 5.61 | 3.94 | 0.24 |
| | | | | | | 2" Ice | | | |
| HORIZON DUO | A | From Leg | 3.00 | 0.0000 | 124.00 | No Ice | 0.47 | 0.29 | 0.01 |
| | | | 0.00 | | | 1/2" | 0.56 | 0.37 | 0.01 |
| | | | 4.00 | | | Ice | 0.65 | 0.44 | 0.02 |
| | | | | | | 1" Ice | 0.86 | 0.62 | 0.04 |
| | | | | | | 2" Ice | | | |
| HORIZON DUO | C | From Leg | 3.00 | 0.0000 | 124.00 | No Ice | 0.47 | 0.29 | 0.01 |
| | | | 0.00 | | | 1/2" | 0.56 | 0.37 | 0.01 |
| | | | 4.00 | | | Ice | 0.65 | 0.44 | 0.02 |
| | | | | | | 1" Ice | 0.86 | 0.62 | 0.04 |
| | | | | | | 2" Ice | | | |
| WIMAX DAP HEAD | A | From Leg | 3.00 | 0.0000 | 124.00 | No Ice | 1.55 | 0.68 | 0.03 |
| | | | 0.00 | | | | 1.70 | 0.80 | 0.04 |

| Description | Face or Leg | Offset Type | Offsets: Horz Lateral Vert ft ft ft | Azimuth Adjustment ° | Placement ft | | $C_AA_A$ Front $ft^2$ | $C_AA_A$ Side $ft^2$ | Weight K |
|---|---|---|---|---|---|---|---|---|---|
| | | | 4.00 | | | 1/2" Ice | 1.87 | 0.92 | 0.06 |
| | | | | | | 1" Ice | 2.22 | 1.19 | 0.09 |
| | | | | | | 2" Ice | | | |
| WIMAX DAP HEAD | B | From Leg | 3.00 | 0.0000 | 124.00 | No Ice | 1.55 | 0.68 | 0.03 |
| | | | 0.00 | | | 1/2" Ice | 1.70 | 0.80 | 0.04 |
| | | | 4.00 | | | 1" Ice | 1.87 | 0.92 | 0.06 |
| | | | | | | 2" Ice | 2.22 | 1.19 | 0.09 |
| WIMAX DAP HEAD | C | From Leg | 3.00 | 0.0000 | 124.00 | No Ice | 1.55 | 0.68 | 0.03 |
| | | | 0.00 | | | 1/2" Ice | 1.70 | 0.80 | 0.04 |
| | | | 4.00 | | | 1" Ice | 1.87 | 0.92 | 0.06 |
| | | | | | | 2" Ice | 2.22 | 1.19 | 0.09 |
| 2.375" OD x 5' Mount Pipe | A | From Leg | 3.00 | 0.0000 | 124.00 | No Ice | 1.19 | 1.19 | 0.02 |
| | | | 0.00 | | | 1/2" Ice | 1.50 | 1.50 | 0.03 |
| | | | 0.00 | | | 1" Ice | 1.81 | 1.81 | 0.04 |
| | | | | | | 2" Ice | 2.46 | 2.46 | 0.08 |
| 2.375" OD x 5' Mount Pipe | B | From Leg | 3.00 | 0.0000 | 124.00 | No Ice | 1.19 | 1.19 | 0.02 |
| | | | 0.00 | | | 1/2" Ice | 1.50 | 1.50 | 0.03 |
| | | | 0.00 | | | 1" Ice | 1.81 | 1.81 | 0.04 |
| | | | | | | 2" Ice | 2.46 | 2.46 | 0.08 |
| 2.375" OD x 5' Mount Pipe | C | From Leg | 3.00 | 0.0000 | 124.00 | No Ice | 1.19 | 1.19 | 0.02 |
| | | | 0.00 | | | 1/2" Ice | 1.50 | 1.50 | 0.03 |
| | | | 0.00 | | | 1" Ice | 1.81 | 1.81 | 0.04 |
| | | | | | | 2" Ice | 2.46 | 2.46 | 0.08 |
| Side Arm Mount [SO 701-3] | C | None | | 0.0000 | 124.00 | No Ice | 3.02 | 3.02 | 0.20 |
| | | | | | | 1/2" Ice | 4.18 | 4.18 | 0.24 |
| | | | | | | 1" Ice | 5.33 | 5.33 | 0.28 |
| | | | | | | 2" Ice | 7.63 | 7.63 | 0.36 |
| *** | | | | | | | | | |
| CXL 900-3LW | B | From Leg | 4.00 | 0.0000 | 118.00 | No Ice | 0.14 | 0.14 | 0.00 |
| | | | 0.00 | | | 1/2" Ice | 0.33 | 0.33 | 0.00 |
| | | | 1.00 | | | 1" Ice | 0.48 | 0.48 | 0.01 |
| | | | | | | 2" Ice | 0.81 | 0.81 | 0.02 |
| CAVITY FILTER | B | From Leg | 4.00 | 0.0000 | 118.00 | No Ice | 0.19 | 0.08 | 0.00 |
| | | | 0.00 | | | 1/2" Ice | 0.25 | 0.12 | 0.00 |
| | | | 1.00 | | | 1" Ice | 0.32 | 0.17 | 0.01 |
| | | | | | | 2" Ice | 0.47 | 0.29 | 0.02 |
| LNA | B | From Leg | 4.00 | 0.0000 | 118.00 | No Ice | 0.14 | 0.05 | 0.00 |
| | | | 0.00 | | | 1/2" Ice | 0.19 | 0.09 | 0.00 |
| | | | 1.00 | | | 1" Ice | 0.25 | 0.13 | 0.00 |
| | | | | | | 2" Ice | 0.39 | 0.24 | 0.01 |
| Side Arm Mount [SO 304-1] | B | From Leg | 0.00 | 0.0000 | 118.00 | No Ice | 0.31 | 0.88 | 0.02 |
| | | | 0.00 | | | 1/2" Ice | 0.50 | 1.26 | 0.03 |
| | | | 0.00 | | | 1" Ice | 0.73 | 1.67 | 0.05 |
| | | | | | | 2" Ice | 1.29 | 2.58 | 0.09 |
| *** | | | | | | | | | |
| MT6407-77A w/ Mount Pipe | A | From Leg | 4.00 | 0.0000 | 111.00 | No Ice | 4.91 | 2.68 | 0.10 |
| | | | 0.00 | | | 1/2" Ice | 5.26 | 3.14 | 0.14 |
| | | | 0.00 | | | 1" Ice | 5.61 | 3.62 | 0.18 |
| | | | | | | 2" Ice | 6.36 | 4.63 | 0.29 |
| MT6407-77A w/ Mount Pipe | B | From Leg | 4.00 | 0.0000 | 111.00 | No Ice | 4.91 | 2.68 | 0.10 |
| | | | 0.00 | | | 1/2" Ice | 5.26 | 3.14 | 0.14 |
| | | | 0.00 | | | 1" Ice | 5.61 | 3.62 | 0.18 |
| | | | | | | | 6.36 | 4.63 | 0.29 |

| Description | Face or Leg | Offset Type | Offsets: Horz Lateral Vert ft ft ft | Azimuth Adjustment ° | Placement ft | | $C_AA_A$ Front $ft^2$ | $C_AA_A$ Side $ft^2$ | Weight K |
|---|---|---|---|---|---|---|---|---|---|
| | | | | | | 2" Ice | | | |
| MT6407-77A w/ Mount Pipe | C | From Leg | 4.00 0.00 0.00 | 0.0000 | 111.00 | No Ice | 4.91 | 2.68 | 0.10 |
| | | | | | | 1/2" Ice | 5.26 | 3.14 | 0.14 |
| | | | | | | 1" Ice | 5.61 | 3.62 | 0.18 |
| | | | | | | 2" Ice | 6.36 | 4.63 | 0.29 |
| NHH-65B-R2B w/ Mount Pipe | A | From Leg | 4.00 0.00 0.00 | 0.0000 | 111.00 | No Ice | 4.09 | 3.29 | 0.07 |
| | | | | | | 1/2" Ice | 4.48 | 3.67 | 0.13 |
| | | | | | | 1" Ice | 4.88 | 4.06 | 0.21 |
| | | | | | | 2" Ice | 5.70 | 4.86 | 0.39 |
| NHH-65B-R2B w/ Mount Pipe | B | From Leg | 4.00 0.00 0.00 | 0.0000 | 111.00 | No Ice | 4.09 | 3.29 | 0.07 |
| | | | | | | 1/2" Ice | 4.48 | 3.67 | 0.13 |
| | | | | | | 1" Ice | 4.88 | 4.06 | 0.21 |
| | | | | | | 2" Ice | 5.70 | 4.86 | 0.39 |
| NHH-65B-R2B w/ Mount Pipe | C | From Leg | 4.00 0.00 0.00 | 0.0000 | 111.00 | No Ice | 4.09 | 3.29 | 0.07 |
| | | | | | | 1/2" Ice | 4.48 | 3.67 | 0.13 |
| | | | | | | 1" Ice | 4.88 | 4.06 | 0.21 |
| | | | | | | 2" Ice | 5.70 | 4.86 | 0.39 |
| NHHSS-65B-R2B w/ Mount Pipe | A | From Leg | 4.00 0.00 0.00 | 0.0000 | 111.00 | No Ice | 3.89 | 3.14 | 0.09 |
| | | | | | | 1/2" Ice | 4.27 | 3.50 | 0.15 |
| | | | | | | 1" Ice | 4.65 | 3.87 | 0.23 |
| | | | | | | 2" Ice | 5.43 | 4.63 | 0.41 |
| NHHSS-65B-R2B w/ Mount Pipe | B | From Leg | 4.00 0.00 0.00 | 0.0000 | 111.00 | No Ice | 3.89 | 3.14 | 0.09 |
| | | | | | | 1/2" Ice | 4.27 | 3.50 | 0.15 |
| | | | | | | 1" Ice | 4.65 | 3.87 | 0.23 |
| | | | | | | 2" Ice | 5.43 | 4.63 | 0.41 |
| NHHSS-65B-R2B w/ Mount Pipe | C | From Leg | 4.00 0.00 0.00 | 0.0000 | 111.00 | No Ice | 3.89 | 3.14 | 0.09 |
| | | | | | | 1/2" Ice | 4.27 | 3.50 | 0.15 |
| | | | | | | 1" Ice | 4.65 | 3.87 | 0.23 |
| | | | | | | 2" Ice | 5.43 | 4.63 | 0.41 |
| LNX-6514DS-A1M w/ Mount Pipe | A | From Leg | 4.00 0.00 0.00 | 0.0000 | 111.00 | No Ice | 4.09 | 3.30 | 0.06 |
| | | | | | | 1/2" Ice | 4.49 | 3.68 | 0.13 |
| | | | | | | 1" Ice | 4.89 | 4.06 | 0.20 |
| | | | | | | 2" Ice | 5.71 | 4.87 | 0.38 |
| LNX-6514DS-A1M w/ Mount Pipe | B | From Leg | 4.00 0.00 0.00 | 0.0000 | 111.00 | No Ice | 4.09 | 3.30 | 0.06 |
| | | | | | | 1/2" Ice | 4.49 | 3.68 | 0.13 |
| | | | | | | 1" Ice | 4.89 | 4.06 | 0.20 |
| | | | | | | 2" Ice | 5.71 | 4.87 | 0.38 |
| LNX-6514DS-A1M w/ Mount Pipe | C | From Leg | 4.00 0.00 0.00 | 0.0000 | 111.00 | No Ice | 4.09 | 3.30 | 0.06 |
| | | | | | | 1/2" Ice | 4.49 | 3.68 | 0.13 |
| | | | | | | 1" Ice | 4.89 | 4.06 | 0.20 |
| | | | | | | 2" Ice | 5.71 | 4.87 | 0.38 |
| RVZDC-6627-PF-48 | A | From Leg | 4.00 0.00 0.00 | 0.0000 | 111.00 | No Ice | 3.79 | 2.51 | 0.03 |
| | | | | | | 1/2" Ice | 4.04 | 2.73 | 0.06 |
| | | | | | | 1" Ice | 4.30 | 2.95 | 0.10 |
| | | | | | | 2" Ice | 4.84 | 3.42 | 0.18 |
| RVZDC-6627-PF-48 | B | From Leg | 4.00 0.00 0.00 | 0.0000 | 111.00 | No Ice | 3.79 | 2.51 | 0.03 |
| | | | | | | 1/2" Ice | 4.04 | 2.73 | 0.06 |
| | | | | | | 1" Ice | 4.30 | 2.95 | 0.10 |
| | | | | | | 2" Ice | 4.84 | 3.42 | 0.18 |
| RF4440D-13A | A | From Leg | 4.00 0.00 0.00 | 0.0000 | 111.00 | No Ice | 1.87 | 1.13 | 0.07 |
| | | | | | | 1/2" Ice | 2.03 | 1.27 | 0.09 |
| | | | | | | 1" Ice | 2.21 | 1.41 | 0.11 |
| | | | | | | 2" Ice | 2.59 | 1.72 | 0.16 |

| Description | Face or Leg | Offset Type | Offsets: Horz Lateral Vert ft ft ft | Azimuth Adjustment ° | Placement ft | | $C_AA_A$ Front $ft^2$ | $C_AA_A$ Side $ft^2$ | Weight K |
|---|---|---|---|---|---|---|---|---|---|
| | | | | | | 2" Ice | | | |
| RF4440D-13A | B | From Leg | 4.00 | 0.0000 | 111.00 | No Ice | 1.87 | 1.13 | 0.07 |
| | | | 0.00 | | | 1/2" | 2.03 | 1.27 | 0.09 |
| | | | 0.00 | | | Ice | 2.21 | 1.41 | 0.11 |
| | | | | | | 1" Ice | 2.59 | 1.72 | 0.16 |
| | | | | | | 2" Ice | | | |
| RF4440D-13A | C | From Leg | 4.00 | 0.0000 | 111.00 | No Ice | 1.87 | 1.13 | 0.07 |
| | | | 0.00 | | | 1/2" | 2.03 | 1.27 | 0.09 |
| | | | 0.00 | | | Ice | 2.21 | 1.41 | 0.11 |
| | | | | | | 1" Ice | 2.59 | 1.72 | 0.16 |
| | | | | | | 2" Ice | | | |
| CBRS RT4401-48A | A | From Leg | 4.00 | 0.0000 | 111.00 | No Ice | 0.99 | 0.50 | 0.02 |
| | | | 0.00 | | | 1/2" | 1.12 | 0.60 | 0.03 |
| | | | 0.00 | | | Ice | 1.26 | 0.70 | 0.04 |
| | | | | | | 1" Ice | 1.55 | 0.94 | 0.06 |
| | | | | | | 2" Ice | | | |
| CBRS RT4401-48A | B | From Leg | 4.00 | 0.0000 | 111.00 | No Ice | 0.99 | 0.50 | 0.02 |
| | | | 0.00 | | | 1/2" | 1.12 | 0.60 | 0.03 |
| | | | 0.00 | | | Ice | 1.26 | 0.70 | 0.04 |
| | | | | | | 1" Ice | 1.55 | 0.94 | 0.06 |
| | | | | | | 2" Ice | | | |
| CBRS RT4401-48A | C | From Leg | 4.00 | 0.0000 | 111.00 | No Ice | 0.99 | 0.50 | 0.02 |
| | | | 0.00 | | | 1/2" | 1.12 | 0.60 | 0.03 |
| | | | 0.00 | | | Ice | 1.26 | 0.70 | 0.04 |
| | | | | | | 1" Ice | 1.55 | 0.94 | 0.06 |
| | | | | | | 2" Ice | | | |
| RF4439D-25A | A | From Leg | 4.00 | 0.0000 | 111.00 | No Ice | 1.87 | 1.25 | 0.07 |
| | | | 0.00 | | | 1/2" | 2.03 | 1.39 | 0.09 |
| | | | 0.00 | | | Ice | 2.21 | 1.54 | 0.11 |
| | | | | | | 1" Ice | 2.59 | 1.87 | 0.17 |
| | | | | | | 2" Ice | | | |
| RF4439D-25A | B | From Leg | 4.00 | 0.0000 | 111.00 | No Ice | 1.87 | 1.25 | 0.07 |
| | | | 0.00 | | | 1/2" | 2.03 | 1.39 | 0.09 |
| | | | 0.00 | | | Ice | 2.21 | 1.54 | 0.11 |
| | | | | | | 1" Ice | 2.59 | 1.87 | 0.17 |
| | | | | | | 2" Ice | | | |
| RF4439D-25A | C | From Leg | 4.00 | 0.0000 | 111.00 | No Ice | 1.87 | 1.25 | 0.07 |
| | | | 0.00 | | | 1/2" | 2.03 | 1.39 | 0.09 |
| | | | 0.00 | | | Ice | 2.21 | 1.54 | 0.11 |
| | | | | | | 1" Ice | 2.59 | 1.87 | 0.17 |
| | | | | | | 2" Ice | | | |
| Platform Mount [LP 303-1] | C | None | | 0.0000 | 111.00 | No Ice | 14.69 | 14.69 | 1.25 |
| | | | | | | 1/2" | 18.01 | 18.01 | 1.57 |
| | | | | | | Ice | 21.34 | 21.34 | 1.94 |
| | | | | | | 1" Ice | 28.08 | 28.08 | 2.85 |
| | | | | | | 2" Ice | | | |
| *** | | | | | | | | | |
| Verizon_Mount Reinforcement Specifications | C | None | | 0.0000 | 111.00 | No Ice | 28.63 | 28.63 | 0.28 |
| | | | | | | 1/2" | 37.31 | 37.31 | 0.67 |
| | | | | | | Ice | 45.80 | 45.80 | 0.94 |
| | | | | | | 1" Ice | 62.38 | 62.38 | 1.63 |
| | | | | | | 2" Ice | | | |

# Dishes

| Description | Face or Leg | Dish Type | Offset Type | Offsets: Horz Lateral Vert ft | Azimuth Adjustment ° | 3 dB Beam Width ° | Elevation ft | Outside Diameter ft | | Aperture Area $ft^2$ | Weight K |
|---|---|---|---|---|---|---|---|---|---|---|---|
| VHLP800-11 | A | Paraboloid w/Shroud (HP) | From Leg | 3.00<br>0.00<br>4.00 | 60.0000 | | 124.00 | 2.80 | No Ice<br>1/2" Ice<br>1" Ice<br>2" Ice | 6.16<br>6.53<br>6.90<br>7.64 | 0.02<br>0.06<br>0.09<br>0.17 |
| VHLP800-11 | C | Paraboloid w/Shroud (HP) | From Leg | 3.00<br>0.00<br>4.00 | 10.0000 | | 124.00 | 2.80 | No Ice<br>1/2" Ice<br>1" Ice<br>2" Ice | 6.16<br>6.53<br>6.90<br>7.64 | 0.02<br>0.06<br>0.09<br>0.17 |

# Tower Pressures - No Ice

$G_H$ = 1.100

| Section Elevation ft | z ft | $K_Z$ | $q_z$ psf | $A_G$ $ft^2$ | Face | $A_F$ $ft^2$ | $A_R$ $ft^2$ | $A_{leg}$ $ft^2$ | Leg % | $C_AA_A$ In Face $ft^2$ | $C_AA_A$ Out Face $ft^2$ |
|---|---|---|---|---|---|---|---|---|---|---|---|
| L1 169.00-164.00 | 166.48 | 1.409 | 44 | 6.744 | A | 0.000 | 6.744 | 6.744 | 100.00 | 0.000 | 0.000 |
| | | | | | B | 0.000 | 6.744 | | 100.00 | 0.000 | 0.000 |
| | | | | | C | 0.000 | 6.744 | | 100.00 | 1.782 | 0.000 |
| L2 164.00-159.00 | 161.48 | 1.4 | 44 | 7.148 | A | 0.000 | 7.148 | 7.148 | 100.00 | 0.000 | 0.000 |
| | | | | | B | 0.000 | 7.148 | | 100.00 | 0.000 | 0.000 |
| | | | | | C | 0.000 | 7.148 | | 100.00 | 8.910 | 0.000 |
| L3 159.00-154.00 | 156.48 | 1.391 | 44 | 7.552 | A | 0.000 | 7.552 | 7.552 | 100.00 | 0.000 | 0.000 |
| | | | | | B | 0.000 | 7.552 | | 100.00 | 0.000 | 0.000 |
| | | | | | C | 0.000 | 7.552 | | 100.00 | 8.910 | 0.000 |
| L4 154.00-149.00 | 151.48 | 1.381 | 44 | 7.955 | A | 0.000 | 7.955 | 7.955 | 100.00 | 0.000 | 0.000 |
| | | | | | B | 0.000 | 7.955 | | 100.00 | 0.000 | 0.000 |
| | | | | | C | 0.000 | 7.955 | | 100.00 | 8.910 | 0.000 |
| L5 149.00-144.00 | 146.48 | 1.372 | 43 | 8.359 | A | 0.000 | 8.359 | 8.359 | 100.00 | 0.000 | 0.000 |
| | | | | | B | 0.000 | 8.359 | | 100.00 | 0.000 | 0.000 |
| | | | | | C | 0.000 | 8.359 | | 100.00 | 8.910 | 0.000 |
| L6 144.00-139.00 | 141.48 | 1.362 | 43 | 8.763 | A | 0.000 | 8.763 | 8.763 | 100.00 | 0.000 | 0.000 |
| | | | | | B | 0.000 | 8.763 | | 100.00 | 0.000 | 0.000 |
| | | | | | C | 0.000 | 8.763 | | 100.00 | 8.910 | 0.000 |
| L7 139.00-133.33 | 136.14 | 1.351 | 43 | 10.426 | A | 0.000 | 10.426 | 10.426 | 100.00 | 0.000 | 0.000 |
| | | | | | B | 0.000 | 10.426 | | 100.00 | 0.000 | 0.000 |
| | | | | | C | 0.000 | 10.426 | | 100.00 | 10.104 | 0.000 |
| L8 133.33-131.66 | 132.49 | 1.343 | 42 | 3.096 | A | 0.000 | 3.096 | 3.096 | 100.00 | 0.000 | 0.000 |
| | | | | | B | 0.000 | 3.096 | | 100.00 | 0.000 | 0.000 |
| | | | | | C | 0.000 | 3.096 | | 100.00 | 2.976 | 0.000 |
| L9 131.66-126.66 | 129.14 | 1.336 | 42 | 9.536 | A | 0.000 | 9.536 | 9.536 | 100.00 | 0.000 | 0.000 |
| | | | | | B | 0.000 | 9.536 | | 100.00 | 0.000 | 0.000 |
| | | | | | C | 0.000 | 9.536 | | 100.00 | 8.910 | 0.000 |
| L10 126.66-121.66 | 124.14 | 1.325 | 42 | 9.934 | A | 0.000 | 9.934 | 9.934 | 100.00 | 0.000 | 0.000 |
| | | | | | B | 0.000 | 9.934 | | 100.00 | 0.000 | 0.000 |
| | | | | | C | 0.000 | 9.934 | | 100.00 | 10.168 | 0.000 |
| L11 121.66-116.66 | 119.14 | 1.313 | 41 | 10.331 | A | 0.000 | 10.331 | 10.331 | 100.00 | 0.000 | 0.000 |
| | | | | | B | 0.000 | 10.331 | | 100.00 | 0.084 | 0.000 |
| | | | | | C | 0.000 | 10.331 | | 100.00 | 11.598 | 0.000 |
| L12 116.66-111.66 | 114.14 | 1.301 | 41 | 10.729 | A | 0.000 | 10.729 | 10.729 | 100.00 | 0.000 | 0.000 |
| | | | | | B | 0.000 | 10.729 | | 100.00 | 0.315 | 0.000 |
| | | | | | C | 0.000 | 10.729 | | 100.00 | 11.598 | 0.000 |
| L13 111.66-111.00 | 111.33 | 1.295 | 41 | 1.446 | A | 0.000 | 1.446 | 1.446 | 100.00 | 0.000 | 0.000 |
| | | | | | B | 0.000 | 1.446 | | 100.00 | 0.042 | 0.000 |
| | | | | | C | 0.000 | 1.446 | | 100.00 | 1.531 | 0.000 |
| L14 111.00-110.75 | 110.87 | 1.293 | 41 | 0.549 | A | 0.000 | 0.549 | 0.549 | 100.00 | 0.000 | 0.000 |
| | | | | | B | 0.000 | 0.549 | | 100.00 | 0.016 | 0.000 |
| | | | | | C | 0.000 | 0.549 | | 100.00 | 1.064 | 0.000 |
| L15 110.75-105.75 | 108.24 | 1.287 | 41 | 11.184 | A | 0.000 | 11.184 | 11.184 | 100.00 | 2.280 | 0.000 |
| | | | | | B | 0.000 | 11.184 | | 100.00 | 2.595 | 0.000 |
| | | | | | C | 0.000 | 11.184 | | 100.00 | 23.563 | 0.000 |

| Section Elevation ft | z ft | $K_Z$ | $q_z$ psf | $A_G$ ft² | Face | $A_F$ ft² | $A_R$ ft² | $A_{leg}$ ft² | Leg % | $C_AA_A$ In Face ft² | $C_AA_A$ Out Face ft² |
|---|---|---|---|---|---|---|---|---|---|---|---|
| L16 105.75-101.50 | 103.61 | 1.275 | 40 | 9.820 | A | 0.000 | 9.820 | 9.820 | 100.00 | 7.210 | 0.000 |
| | | | | | B | 0.000 | 9.820 | | 100.00 | 7.478 | 0.000 |
| | | | | | C | 0.000 | 9.820 | | 100.00 | 25.300 | 0.000 |
| L17 101.50-101.25 | 101.37 | 1.269 | 40 | 0.585 | A | 0.000 | 0.585 | 0.585 | 100.00 | 0.561 | 0.000 |
| | | | | | B | 0.000 | 0.585 | | 100.00 | 0.577 | 0.000 |
| | | | | | C | 0.000 | 0.585 | | 100.00 | 1.625 | 0.000 |
| L18 101.25-101.00 | 101.12 | 1.269 | 40 | 0.586 | A | 0.000 | 0.586 | 0.586 | 100.00 | 0.561 | 0.000 |
| | | | | | B | 0.000 | 0.586 | | 100.00 | 0.577 | 0.000 |
| | | | | | C | 0.000 | 0.586 | | 100.00 | 1.625 | 0.000 |
| L19 101.00-100.75 | 100.87 | 1.268 | 40 | 0.588 | A | 0.000 | 0.588 | 0.588 | 100.00 | 0.561 | 0.000 |
| | | | | | B | 0.000 | 0.588 | | 100.00 | 0.577 | 0.000 |
| | | | | | C | 0.000 | 0.588 | | 100.00 | 1.625 | 0.000 |
| L20 100.75-95.75 | 98.24 | 1.261 | 40 | 11.970 | A | 0.000 | 11.970 | 11.970 | 100.00 | 8.947 | 0.000 |
| | | | | | B | 0.000 | 11.970 | | 100.00 | 9.262 | 0.000 |
| | | | | | C | 0.000 | 11.970 | | 100.00 | 30.229 | 0.000 |
| L21 95.75-87.83 | 91.76 | 1.243 | 39 | 19.776 | A | 0.000 | 19.776 | 19.776 | 100.00 | 12.188 | 0.000 |
| | | | | | B | 0.000 | 19.776 | | 100.00 | 12.686 | 0.000 |
| | | | | | C | 0.000 | 19.776 | | 100.00 | 45.899 | 0.000 |
| L22 87.83-86.83 | 87.33 | 1.23 | 39 | 2.512 | A | 0.000 | 2.512 | 2.512 | 100.00 | 2.083 | 0.000 |
| | | | | | B | 0.000 | 2.512 | | 100.00 | 2.146 | 0.000 |
| | | | | | C | 0.000 | 2.512 | | 100.00 | 6.340 | 0.000 |
| L23 86.83-81.83 | 84.32 | 1.221 | 39 | 12.800 | A | 0.000 | 12.800 | 12.800 | 100.00 | 10.417 | 0.000 |
| | | | | | B | 0.000 | 12.800 | | 100.00 | 10.732 | 0.000 |
| | | | | | C | 0.000 | 12.800 | | 100.00 | 31.699 | 0.000 |
| L24 81.83-81.50 | 81.66 | 1.213 | 38 | 0.859 | A | 0.000 | 0.859 | 0.859 | 100.00 | 0.938 | 0.000 |
| | | | | | B | 0.000 | 0.859 | | 100.00 | 0.958 | 0.000 |
| | | | | | C | 0.000 | 0.859 | | 100.00 | 2.342 | 0.000 |
| L25 81.50-81.25 | 81.37 | 1.212 | 38 | 0.652 | A | 0.000 | 0.652 | 0.652 | 100.00 | 0.729 | 0.000 |
| | | | | | B | 0.000 | 0.652 | | 100.00 | 0.745 | 0.000 |
| | | | | | C | 0.000 | 0.652 | | 100.00 | 1.793 | 0.000 |
| L26 81.25-76.25 | 78.74 | 1.204 | 38 | 13.244 | A | 0.000 | 13.244 | 13.244 | 100.00 | 11.771 | 0.000 |
| | | | | | B | 0.000 | 13.244 | | 100.00 | 12.086 | 0.000 |
| | | | | | C | 0.000 | 13.244 | | 100.00 | 33.053 | 0.000 |
| L27 76.25-71.25 | 73.74 | 1.187 | 37 | 13.644 | A | 0.000 | 13.644 | 13.644 | 100.00 | 10.833 | 0.000 |
| | | | | | B | 0.000 | 13.644 | | 100.00 | 11.148 | 0.000 |
| | | | | | C | 0.000 | 13.644 | | 100.00 | 32.116 | 0.000 |
| L28 71.25-66.25 | 68.74 | 1.17 | 37 | 14.044 | A | 0.000 | 14.044 | 14.044 | 100.00 | 10.833 | 0.000 |
| | | | | | B | 0.000 | 14.044 | | 100.00 | 11.148 | 0.000 |
| | | | | | C | 0.000 | 14.044 | | 100.00 | 32.116 | 0.000 |
| L29 66.25-61.25 | 63.74 | 1.151 | 36 | 14.443 | A | 0.000 | 14.443 | 14.443 | 100.00 | 10.833 | 0.000 |
| | | | | | B | 0.000 | 14.443 | | 100.00 | 11.148 | 0.000 |
| | | | | | C | 0.000 | 14.443 | | 100.00 | 32.116 | 0.000 |
| L30 61.25-56.25 | 58.74 | 1.132 | 36 | 14.842 | A | 0.000 | 14.842 | 14.842 | 100.00 | 10.833 | 0.000 |
| | | | | | B | 0.000 | 14.842 | | 100.00 | 11.148 | 0.000 |
| | | | | | C | 0.000 | 14.842 | | 100.00 | 32.116 | 0.000 |
| L31 56.25-51.25 | 53.74 | 1.111 | 35 | 15.241 | A | 0.000 | 15.241 | 15.241 | 100.00 | 10.833 | 0.000 |
| | | | | | B | 0.000 | 15.241 | | 100.00 | 11.148 | 0.000 |
| | | | | | C | 0.000 | 15.241 | | 100.00 | 32.116 | 0.000 |
| L32 51.25-43.33 | 47.26 | 1.081 | 34 | 24.957 | A | 0.000 | 24.957 | 24.957 | 100.00 | 23.567 | 0.000 |
| | | | | | B | 0.000 | 24.957 | | 100.00 | 20.862 | 0.000 |
| | | | | | C | 0.000 | 24.957 | | 100.00 | 54.075 | 0.000 |
| L33 43.33-42.33 | 42.83 | 1.059 | 33 | 3.156 | A | 0.000 | 3.156 | 3.156 | 100.00 | 4.167 | 0.000 |
| | | | | | B | 0.000 | 3.156 | | 100.00 | 3.230 | 0.000 |
| | | | | | C | 0.000 | 3.156 | | 100.00 | 7.423 | 0.000 |
| L34 42.33-37.40 | 39.85 | 1.043 | 33 | 15.791 | A | 0.000 | 15.791 | 15.791 | 100.00 | 20.542 | 0.000 |
| | | | | | B | 0.000 | 15.791 | | 100.00 | 15.922 | 0.000 |
| | | | | | C | 0.000 | 15.791 | | 100.00 | 36.596 | 0.000 |
| L35 37.40-37.15 | 37.27 | 1.028 | 32 | 0.811 | A | 0.000 | 0.811 | 0.811 | 100.00 | 1.042 | 0.000 |
| | | | | | B | 0.000 | 0.811 | | 100.00 | 0.807 | 0.000 |
| | | | | | C | 0.000 | 0.811 | | 100.00 | 1.856 | 0.000 |
| L36 37.15-32.15 | 34.64 | 1.012 | 32 | 16.432 | A | 0.000 | 16.432 | 16.432 | 100.00 | 20.833 | 0.000 |
| | | | | | B | 0.000 | 16.432 | | 100.00 | 16.148 | 0.000 |
| | | | | | C | 0.000 | 16.432 | | 100.00 | 37.116 | 0.000 |
| L37 32.15-27.15 | 29.64 | 0.98 | 31 | 16.831 | A | 0.000 | 16.831 | 16.831 | 100.00 | 20.833 | 0.000 |
| | | | | | B | 0.000 | 16.831 | | 100.00 | 16.148 | 0.000 |
| | | | | | C | 0.000 | 16.831 | | 100.00 | 37.116 | 0.000 |
| L38 27.15-22.15 | 24.64 | 0.942 | 30 | 17.229 | A | 0.000 | 17.229 | 17.229 | 100.00 | 20.850 | 0.000 |
| | | | | | B | 0.000 | 17.229 | | 100.00 | 16.157 | 0.000 |

| Section Elevation ft | z ft | $K_Z$ | $q_z$ psf | $A_G$ ft² | Face | $A_F$ ft² | $A_R$ ft² | $A_{leg}$ ft² | Leg % | $C_AA_A$ In Face ft² | $C_AA_A$ Out Face ft² |
|---|---|---|---|---|---|---|---|---|---|---|---|
| | | | | | C | 0.000 | 17.229 | | 100.00 | 37.124 | 0.000 |
| L39 22.15-19.50 | 20.82 | 0.91 | 29 | 9.293 | A | 0.000 | 9.293 | 9.293 | 100.00 | 11.483 | 0.000 |
| | | | | | B | 0.000 | 9.293 | | 100.00 | 8.779 | 0.000 |
| | | | | | C | 0.000 | 9.293 | | 100.00 | 19.892 | 0.000 |
| L40 19.50-19.25 | 19.37 | 0.896 | 28 | 0.882 | A | 0.000 | 0.882 | 0.882 | 100.00 | 1.083 | 0.000 |
| | | | | | B | 0.000 | 0.882 | | 100.00 | 0.828 | 0.000 |
| | | | | | C | 0.000 | 0.882 | | 100.00 | 1.877 | 0.000 |
| L41 19.25-14.25 | 16.74 | 0.869 | 27 | 17.855 | A | 0.000 | 17.855 | 17.855 | 100.00 | 21.667 | 0.000 |
| | | | | | B | 0.000 | 17.855 | | 100.00 | 16.565 | 0.000 |
| | | | | | C | 0.000 | 17.855 | | 100.00 | 37.532 | 0.000 |
| L42 14.25-9.25 | 11.74 | 0.85 | 27 | 18.252 | A | 0.000 | 18.252 | 18.252 | 100.00 | 21.667 | 0.000 |
| | | | | | B | 0.000 | 18.252 | | 100.00 | 16.565 | 0.000 |
| | | | | | C | 0.000 | 18.252 | | 100.00 | 37.532 | 0.000 |
| L43 9.25-9.00 | 9.12 | 0.85 | 27 | 0.923 | A | 0.000 | 0.923 | 0.923 | 100.00 | 1.083 | 0.000 |
| | | | | | B | 0.000 | 0.923 | | 100.00 | 0.828 | 0.000 |
| | | | | | C | 0.000 | 0.923 | | 100.00 | 1.877 | 0.000 |
| L44 9.00-8.75 | 8.87 | 0.85 | 27 | 0.924 | A | 0.000 | 0.924 | 0.924 | 100.00 | 1.083 | 0.000 |
| | | | | | B | 0.000 | 0.924 | | 100.00 | 0.828 | 0.000 |
| | | | | | C | 0.000 | 0.924 | | 100.00 | 1.877 | 0.000 |
| L45 8.75-7.00 | 7.87 | 0.85 | 27 | 6.496 | A | 0.000 | 6.496 | 6.496 | 100.00 | 7.583 | 0.000 |
| | | | | | B | 0.000 | 6.496 | | 100.00 | 5.798 | 0.000 |
| | | | | | C | 0.000 | 6.496 | | 100.00 | 13.136 | 0.000 |
| L46 7.00-6.75 | 6.87 | 0.85 | 27 | 0.932 | A | 0.000 | 0.932 | 0.932 | 100.00 | 1.083 | 0.000 |
| | | | | | B | 0.000 | 0.932 | | 100.00 | 0.828 | 0.000 |
| | | | | | C | 0.000 | 0.932 | | 100.00 | 1.877 | 0.000 |
| L47 6.75-5.00 | 5.87 | 0.85 | 27 | 6.552 | A | 0.000 | 6.552 | 6.552 | 100.00 | 7.583 | 0.000 |
| | | | | | B | 0.000 | 6.552 | | 100.00 | 5.798 | 0.000 |
| | | | | | C | 0.000 | 6.552 | | 100.00 | 13.136 | 0.000 |
| L48 5.00-4.75 | 4.87 | 0.85 | 27 | 0.939 | A | 0.000 | 0.939 | 0.939 | 100.00 | 1.083 | 0.000 |
| | | | | | B | 0.000 | 0.939 | | 100.00 | 0.828 | 0.000 |
| | | | | | C | 0.000 | 0.939 | | 100.00 | 1.877 | 0.000 |
| L49 4.75-3.00 | 3.87 | 0.85 | 27 | 6.598 | A | 0.000 | 6.598 | 6.598 | 100.00 | 7.583 | 0.000 |
| | | | | | B | 0.000 | 6.598 | | 100.00 | 5.798 | 0.000 |
| | | | | | C | 0.000 | 6.598 | | 100.00 | 13.136 | 0.000 |
| L50 3.00-2.75 | 2.87 | 0.85 | 27 | 0.946 | A | 0.000 | 0.946 | 0.946 | 100.00 | 1.083 | 0.000 |
| | | | | | B | 0.000 | 0.946 | | 100.00 | 0.828 | 0.000 |
| | | | | | C | 0.000 | 0.946 | | 100.00 | 1.877 | 0.000 |
| L51 2.75-2.25 | 2.50 | 0.85 | 27 | 1.896 | A | 0.000 | 1.896 | 1.896 | 100.00 | 2.167 | 0.000 |
| | | | | | B | 0.000 | 1.896 | | 100.00 | 1.657 | 0.000 |
| | | | | | C | 0.000 | 1.896 | | 100.00 | 3.753 | 0.000 |
| L52 2.25-2.00 | 2.12 | 0.85 | 27 | 0.950 | A | 0.000 | 0.950 | 0.950 | 100.00 | 1.083 | 0.000 |
| | | | | | B | 0.000 | 0.950 | | 100.00 | 0.828 | 0.000 |
| | | | | | C | 0.000 | 0.950 | | 100.00 | 1.877 | 0.000 |
| L53 2.00-0.00 | 1.00 | 0.85 | 27 | 7.638 | A | 0.000 | 7.638 | 7.638 | 100.00 | 8.667 | 0.000 |
| | | | | | B | 0.000 | 7.638 | | 100.00 | 6.626 | 0.000 |
| | | | | | C | 0.000 | 7.638 | | 100.00 | 15.013 | 0.000 |

## Tower Pressure - With Ice

***$G_H$ = 1.100***

| Section Elevation ft | z ft | $K_Z$ | $q_z$ psf | $t_Z$ in | $A_G$ ft² | Face | $A_F$ ft² | $A_R$ ft² | $A_{leg}$ ft² | Leg % | $C_AA_A$ In Face ft² | $C_AA_A$ Out Face ft² |
|---|---|---|---|---|---|---|---|---|---|---|---|---|
| L1 169.00-164.00 | 166.48 | 1.409 | 8 | 1.4990 | 7.993 | A | 0.000 | 7.993 | 7.993 | 100.00 | 0.000 | 0.000 |
| | | | | | | B | 0.000 | 7.993 | | 100.00 | 0.000 | 0.000 |
| | | | | | | C | 0.000 | 7.993 | | 100.00 | 2.602 | 0.000 |
| L2 164.00-159.00 | 161.48 | 1.4 | 8 | 1.4944 | 8.393 | A | 0.000 | 8.393 | 8.393 | 100.00 | 0.000 | 0.000 |
| | | | | | | B | 0.000 | 8.393 | | 100.00 | 0.000 | 0.000 |
| | | | | | | C | 0.000 | 8.393 | | 100.00 | 13.006 | 0.000 |
| L3 159.00-154.00 | 156.48 | 1.391 | 8 | 1.4897 | 8.793 | A | 0.000 | 8.793 | 8.793 | 100.00 | 0.000 | 0.000 |
| | | | | | | B | 0.000 | 8.793 | | 100.00 | 0.000 | 0.000 |
| | | | | | | C | 0.000 | 8.793 | | 100.00 | 13.000 | 0.000 |

| Section Elevation ft | z ft | $K_Z$ | $q_z$ psf | $t_Z$ in | $A_G$ $ft^2$ | Face | $A_F$ $ft^2$ | $A_R$ $ft^2$ | $A_{leg}$ $ft^2$ | Leg % | $C_AA_A$ In Face $ft^2$ | $C_AA_A$ Out Face $ft^2$ |
|---|---|---|---|---|---|---|---|---|---|---|---|---|
| L4 154.00- | 151.48 | 1.381 | 8 | 1.4849 | 9.193 | A | 0.000 | 9.193 | 9.193 | 100.00 | 0.000 | 0.000 |
| 149.00 | | | | | | B | 0.000 | 9.193 | | 100.00 | 0.000 | 0.000 |
| | | | | | | C | 0.000 | 9.193 | | 100.00 | 12.994 | 0.000 |
| L5 149.00- | 146.48 | 1.372 | 8 | 1.4799 | 9.593 | A | 0.000 | 9.593 | 9.593 | 100.00 | 0.000 | 0.000 |
| 144.00 | | | | | | B | 0.000 | 9.593 | | 100.00 | 0.000 | 0.000 |
| | | | | | | C | 0.000 | 9.593 | | 100.00 | 12.987 | 0.000 |
| L6 144.00- | 141.48 | 1.362 | 8 | 1.4748 | 9.992 | A | 0.000 | 9.992 | 9.992 | 100.00 | 0.000 | 0.000 |
| 139.00 | | | | | | B | 0.000 | 9.992 | | 100.00 | 0.000 | 0.000 |
| | | | | | | C | 0.000 | 9.992 | | 100.00 | 12.981 | 0.000 |
| L7 139.00- | 136.14 | 1.351 | 8 | 1.4691 | 11.815 | A | 0.000 | 11.815 | 11.815 | 100.00 | 0.000 | 0.000 |
| 133.33 | | | | | | B | 0.000 | 11.815 | | 100.00 | 0.000 | 0.000 |
| | | | | | | C | 0.000 | 11.815 | | 100.00 | 14.712 | 0.000 |
| L8 133.33- | 132.49 | 1.343 | 8 | 1.4651 | 3.505 | A | 0.000 | 3.505 | 3.505 | 100.00 | 0.000 | 0.000 |
| 131.66 | | | | | | B | 0.000 | 3.505 | | 100.00 | 0.000 | 0.000 |
| | | | | | | C | 0.000 | 3.505 | | 100.00 | 4.333 | 0.000 |
| L9 131.66- | 129.14 | 1.336 | 8 | 1.4614 | 10.753 | A | 0.000 | 10.753 | 10.753 | 100.00 | 0.000 | 0.000 |
| 126.66 | | | | | | B | 0.000 | 10.753 | | 100.00 | 0.000 | 0.000 |
| | | | | | | C | 0.000 | 10.753 | | 100.00 | 12.964 | 0.000 |
| L10 126.66- | 124.14 | 1.325 | 8 | 1.4556 | 11.147 | A | 0.000 | 11.147 | 11.147 | 100.00 | 0.000 | 0.000 |
| 121.66 | | | | | | B | 0.000 | 11.147 | | 100.00 | 0.000 | 0.000 |
| | | | | | | C | 0.000 | 11.147 | | 100.00 | 16.025 | 0.000 |
| L11 121.66- | 119.14 | 1.313 | 8 | 1.4497 | 11.540 | A | 0.000 | 11.540 | 11.540 | 100.00 | 0.000 | 0.000 |
| 116.66 | | | | | | B | 0.000 | 11.540 | | 100.00 | 0.473 | 0.000 |
| | | | | | | C | 0.000 | 11.540 | | 100.00 | 19.493 | 0.000 |
| L12 116.66- | 114.14 | 1.301 | 7 | 1.4435 | 11.932 | A | 0.000 | 11.932 | 11.932 | 100.00 | 0.000 | 0.000 |
| 111.66 | | | | | | B | 0.000 | 11.932 | | 100.00 | 1.758 | 0.000 |
| | | | | | | C | 0.000 | 11.932 | | 100.00 | 19.471 | 0.000 |
| L13 111.66- | 111.33 | 1.295 | 7 | 1.4399 | 1.604 | A | 0.000 | 1.604 | 1.604 | 100.00 | 0.000 | 0.000 |
| 111.00 | | | | | | B | 0.000 | 1.604 | | 100.00 | 0.232 | 0.000 |
| | | | | | | C | 0.000 | 1.604 | | 100.00 | 2.568 | 0.000 |
| L14 111.00- | 110.87 | 1.293 | 7 | 1.4393 | 0.609 | A | 0.000 | 0.609 | 0.609 | 100.00 | 0.000 | 0.000 |
| 110.75 | | | | | | B | 0.000 | 0.609 | | 100.00 | 0.088 | 0.000 |
| | | | | | | C | 0.000 | 0.609 | | 100.00 | 1.730 | 0.000 |
| L15 110.75- | 108.24 | 1.287 | 7 | 1.4358 | 12.380 | A | 0.000 | 12.380 | 12.380 | 100.00 | 2.661 | 0.000 |
| 105.75 | | | | | | B | 0.000 | 12.380 | | 100.00 | 4.412 | 0.000 |
| | | | | | | C | 0.000 | 12.380 | | 100.00 | 37.249 | 0.000 |
| L16 105.75- | 103.61 | 1.275 | 7 | 1.4296 | 10.832 | A | 0.000 | 10.832 | 10.832 | 100.00 | 9.285 | 0.000 |
| 101.50 | | | | | | B | 0.000 | 10.832 | | 100.00 | 10.768 | 0.000 |
| | | | | | | C | 0.000 | 10.832 | | 100.00 | 38.653 | 0.000 |
| L17 101.50- | 101.37 | 1.269 | 7 | 1.4264 | 0.645 | A | 0.000 | 0.645 | 0.645 | 100.00 | 0.742 | 0.000 |
| 101.25 | | | | | | B | 0.000 | 0.645 | | 100.00 | 0.829 | 0.000 |
| | | | | | | C | 0.000 | 0.645 | | 100.00 | 2.469 | 0.000 |
| L18 101.25- | 101.12 | 1.269 | 7 | 1.4261 | 0.646 | A | 0.000 | 0.646 | 0.646 | 100.00 | 0.742 | 0.000 |
| 101.00 | | | | | | B | 0.000 | 0.646 | | 100.00 | 0.829 | 0.000 |
| | | | | | | C | 0.000 | 0.646 | | 100.00 | 2.468 | 0.000 |
| L19 101.00- | 100.87 | 1.268 | 7 | 1.4257 | 0.647 | A | 0.000 | 0.647 | 0.647 | 100.00 | 0.742 | 0.000 |
| 100.75 | | | | | | B | 0.000 | 0.647 | | 100.00 | 0.829 | 0.000 |
| | | | | | | C | 0.000 | 0.647 | | 100.00 | 2.468 | 0.000 |
| L20 100.75- | 98.24 | 1.261 | 7 | 1.4220 | 13.155 | A | 0.000 | 13.155 | 13.155 | 100.00 | 12.168 | 0.000 |
| 95.75 | | | | | | B | 0.000 | 13.155 | | 100.00 | 13.905 | 0.000 |
| | | | | | | C | 0.000 | 13.155 | | 100.00 | 46.676 | 0.000 |
| L21 95.75- | 91.76 | 1.243 | 7 | 1.4123 | 21.640 | A | 0.000 | 21.640 | 21.640 | 100.00 | 17.009 | 0.000 |
| 87.83 | | | | | | B | 0.000 | 21.640 | | 100.00 | 19.745 | 0.000 |
| | | | | | | C | 0.000 | 21.640 | | 100.00 | 71.581 | 0.000 |
| L22 87.83- | 87.33 | 1.23 | 7 | 1.4053 | 2.747 | A | 0.000 | 2.747 | 2.747 | 100.00 | 2.809 | 0.000 |
| 86.83 | | | | | | B | 0.000 | 2.747 | | 100.00 | 3.154 | 0.000 |
| | | | | | | C | 0.000 | 2.747 | | 100.00 | 9.699 | 0.000 |
| L23 86.83- | 84.32 | 1.221 | 7 | 1.4004 | 13.967 | A | 0.000 | 13.967 | 13.967 | 100.00 | 14.013 | 0.000 |
| 81.83 | | | | | | B | 0.000 | 13.967 | | 100.00 | 15.728 | 0.000 |
| | | | | | | C | 0.000 | 13.967 | | 100.00 | 48.396 | 0.000 |
| L24 81.83- | 81.66 | 1.213 | 7 | 1.3959 | 0.936 | A | 0.000 | 0.936 | 0.936 | 100.00 | 1.174 | 0.000 |
| 81.50 | | | | | | B | 0.000 | 0.936 | | 100.00 | 1.287 | 0.000 |
| | | | | | | C | 0.000 | 0.936 | | 100.00 | 3.442 | 0.000 |
| L25 81.50- | 81.37 | 1.212 | 7 | 1.3954 | 0.710 | A | 0.000 | 0.710 | 0.710 | 100.00 | 0.908 | 0.000 |
| 81.25 | | | | | | B | 0.000 | 0.710 | | 100.00 | 0.994 | 0.000 |
| | | | | | | C | 0.000 | 0.710 | | 100.00 | 2.626 | 0.000 |
| L26 81.25- | 78.74 | 1.204 | 7 | 1.3908 | 14.403 | A | 0.000 | 14.403 | 14.403 | 100.00 | 14.750 | 0.000 |
| 76.25 | | | | | | B | 0.000 | 14.403 | | 100.00 | 16.456 | 0.000 |

| Section Elevation ft | z ft | $K_Z$ | $q_z$ psf | $t_Z$ in | $A_G$ $ft^2$ | Face | $A_F$ $ft^2$ | $A_R$ $ft^2$ | $A_{leg}$ $ft^2$ | Leg % | $C_AA_A$ In Face $ft^2$ | $C_AA_A$ Out Face $ft^2$ |
|---|---|---|---|---|---|---|---|---|---|---|---|---|
| | | | | | | C | 0.000 | 14.403 | | 100.00 | 49.079 | 0.000 |
| L27 76.25-71.25 | 73.74 | 1.187 | 7 | 1.3817 | 14.796 | A | 0.000 | 14.796 | 14.796 | 100.00 | 13.597 | 0.000 |
| | | | | | | B | 0.000 | 14.796 | | 100.00 | 15.294 | 0.000 |
| | | | | | | C | 0.000 | 14.796 | | 100.00 | 47.873 | 0.000 |
| L28 71.25-66.25 | 68.74 | 1.17 | 7 | 1.3721 | 15.187 | A | 0.000 | 15.187 | 15.187 | 100.00 | 13.577 | 0.000 |
| | | | | | | B | 0.000 | 15.187 | | 100.00 | 15.265 | 0.000 |
| | | | | | | C | 0.000 | 15.187 | | 100.00 | 47.798 | 0.000 |
| L29 66.25-61.25 | 63.74 | 1.151 | 7 | 1.3618 | 15.578 | A | 0.000 | 15.578 | 15.578 | 100.00 | 13.557 | 0.000 |
| | | | | | | B | 0.000 | 15.578 | | 100.00 | 15.234 | 0.000 |
| | | | | | | C | 0.000 | 15.578 | | 100.00 | 47.718 | 0.000 |
| L30 61.25-56.25 | 58.74 | 1.132 | 7 | 1.3507 | 15.967 | A | 0.000 | 15.967 | 15.967 | 100.00 | 13.535 | 0.000 |
| | | | | | | B | 0.000 | 15.967 | | 100.00 | 15.200 | 0.000 |
| | | | | | | C | 0.000 | 15.967 | | 100.00 | 47.632 | 0.000 |
| L31 56.25-51.25 | 53.74 | 1.111 | 6 | 1.3387 | 16.357 | A | 0.000 | 16.357 | 16.357 | 100.00 | 13.511 | 0.000 |
| | | | | | | B | 0.000 | 16.357 | | 100.00 | 15.164 | 0.000 |
| | | | | | | C | 0.000 | 16.357 | | 100.00 | 47.540 | 0.000 |
| L32 51.25-43.33 | 47.26 | 1.081 | 6 | 1.3216 | 26.702 | A | 0.000 | 26.702 | 26.702 | 100.00 | 29.320 | 0.000 |
| | | | | | | B | 0.000 | 26.702 | | 100.00 | 27.926 | 0.000 |
| | | | | | | C | 0.000 | 26.702 | | 100.00 | 79.080 | 0.000 |
| L33 43.33-42.33 | 42.83 | 1.059 | 6 | 1.3087 | 3.376 | A | 0.000 | 3.376 | 3.376 | 100.00 | 5.224 | 0.000 |
| | | | | | | B | 0.000 | 3.376 | | 100.00 | 4.287 | 0.000 |
| | | | | | | C | 0.000 | 3.376 | | 100.00 | 10.746 | 0.000 |
| L34 42.33-37.40 | 39.85 | 1.043 | 6 | 1.2993 | 16.859 | A | 0.000 | 16.859 | 16.859 | 100.00 | 25.666 | 0.000 |
| | | | | | | B | 0.000 | 16.859 | | 100.00 | 21.047 | 0.000 |
| | | | | | | C | 0.000 | 16.859 | | 100.00 | 52.784 | 0.000 |
| L35 37.40-37.15 | 37.27 | 1.028 | 6 | 1.2906 | 0.865 | A | 0.000 | 0.865 | 0.865 | 100.00 | 1.300 | 0.000 |
| | | | | | | B | 0.000 | 0.865 | | 100.00 | 1.066 | 0.000 |
| | | | | | | C | 0.000 | 0.865 | | 100.00 | 2.673 | 0.000 |
| L36 37.15-32.15 | 34.64 | 1.012 | 6 | 1.2812 | 17.500 | A | 0.000 | 17.500 | 17.500 | 100.00 | 25.958 | 0.000 |
| | | | | | | B | 0.000 | 17.500 | | 100.00 | 21.273 | 0.000 |
| | | | | | | C | 0.000 | 17.500 | | 100.00 | 53.375 | 0.000 |
| L37 32.15-27.15 | 29.64 | 0.98 | 6 | 1.2614 | 17.882 | A | 0.000 | 17.882 | 17.882 | 100.00 | 25.879 | 0.000 |
| | | | | | | B | 0.000 | 17.882 | | 100.00 | 21.194 | 0.000 |
| | | | | | | C | 0.000 | 17.882 | | 100.00 | 53.202 | 0.000 |
| L38 27.15-22.15 | 24.64 | 0.942 | 5 | 1.2383 | 18.261 | A | 0.000 | 18.261 | 18.261 | 100.00 | 25.803 | 0.000 |
| | | | | | | B | 0.000 | 18.261 | | 100.00 | 21.110 | 0.000 |
| | | | | | | C | 0.000 | 18.261 | | 100.00 | 53.008 | 0.000 |
| L39 22.15-19.50 | 20.82 | 0.91 | 5 | 1.2176 | 9.831 | A | 0.000 | 9.831 | 9.831 | 100.00 | 14.065 | 0.000 |
| | | | | | | B | 0.000 | 9.831 | | 100.00 | 11.361 | 0.000 |
| | | | | | | C | 0.000 | 9.831 | | 100.00 | 28.215 | 0.000 |
| L40 19.50-19.25 | 19.37 | 0.896 | 5 | 1.2089 | 0.933 | A | 0.000 | 0.933 | 0.933 | 100.00 | 1.325 | 0.000 |
| | | | | | | B | 0.000 | 0.933 | | 100.00 | 1.070 | 0.000 |
| | | | | | | C | 0.000 | 0.933 | | 100.00 | 2.658 | 0.000 |
| L41 19.25-14.25 | 16.74 | 0.869 | 5 | 1.1913 | 18.848 | A | 0.000 | 18.848 | 18.848 | 100.00 | 26.432 | 0.000 |
| | | | | | | B | 0.000 | 18.848 | | 100.00 | 21.330 | 0.000 |
| | | | | | | C | 0.000 | 18.848 | | 100.00 | 53.005 | 0.000 |
| L42 14.25-9.25 | 11.74 | 0.85 | 5 | 1.1498 | 19.211 | A | 0.000 | 19.211 | 19.211 | 100.00 | 26.266 | 0.000 |
| | | | | | | B | 0.000 | 19.211 | | 100.00 | 21.164 | 0.000 |
| | | | | | | C | 0.000 | 19.211 | | 100.00 | 52.642 | 0.000 |
| L43 9.25-9.00 | 9.12 | 0.85 | 5 | 1.1212 | 0.970 | A | 0.000 | 0.970 | 0.970 | 100.00 | 1.308 | 0.000 |
| | | | | | | B | 0.000 | 0.970 | | 100.00 | 1.052 | 0.000 |
| | | | | | | C | 0.000 | 0.970 | | 100.00 | 2.620 | 0.000 |
| L44 9.00-8.75 | 8.87 | 0.85 | 5 | 1.1181 | 0.971 | A | 0.000 | 0.971 | 0.971 | 100.00 | 1.307 | 0.000 |
| | | | | | | B | 0.000 | 0.971 | | 100.00 | 1.052 | 0.000 |
| | | | | | | C | 0.000 | 0.971 | | 100.00 | 2.618 | 0.000 |
| L45 8.75-7.00 | 7.87 | 0.85 | 5 | 1.1048 | 6.818 | A | 0.000 | 6.818 | 6.818 | 100.00 | 9.130 | 0.000 |
| | | | | | | B | 0.000 | 6.818 | | 100.00 | 7.344 | 0.000 |
| | | | | | | C | 0.000 | 6.818 | | 100.00 | 18.287 | 0.000 |
| L46 7.00-6.75 | 6.87 | 0.85 | 5 | 1.0899 | 0.977 | A | 0.000 | 0.977 | 0.977 | 100.00 | 1.301 | 0.000 |
| | | | | | | B | 0.000 | 0.977 | | 100.00 | 1.046 | 0.000 |
| | | | | | | C | 0.000 | 0.977 | | 100.00 | 2.606 | 0.000 |
| L47 6.75-5.00 | 5.87 | 0.85 | 5 | 1.0729 | 6.865 | A | 0.000 | 6.865 | 6.865 | 100.00 | 9.085 | 0.000 |
| | | | | | | B | 0.000 | 6.865 | | 100.00 | 7.300 | 0.000 |
| | | | | | | C | 0.000 | 6.865 | | 100.00 | 18.189 | 0.000 |
| L48 5.00-4.75 | 4.87 | 0.85 | 5 | 1.0531 | 0.982 | A | 0.000 | 0.982 | 0.982 | 100.00 | 1.294 | 0.000 |
| | | | | | | B | 0.000 | 0.982 | | 100.00 | 1.039 | 0.000 |
| | | | | | | C | 0.000 | 0.982 | | 100.00 | 2.590 | 0.000 |
| L49 4.75-3.00 | 3.87 | 0.85 | 5 | 1.0291 | 6.898 | A | 0.000 | 6.898 | 6.898 | 100.00 | 9.024 | 0.000 |

| Section Elevation ft | z ft | $K_Z$ | $q_z$ psf | $t_Z$ in | $A_G$ ft² | Face | $A_F$ ft² | $A_R$ ft² | $A_{leg}$ ft² | Leg % | $C_AA_A$ In Face ft² | $C_AA_A$ Out Face ft² |
|---|---|---|---|---|---|---|---|---|---|---|---|---|
| | | | | | | B | 0.000 | 6.898 | | 100.00 | 7.239 | 0.000 |
| | | | | | | C | 0.000 | 6.898 | | 100.00 | 18.055 | 0.000 |
| L50 3.00-2.75 | 2.87 | 0.85 | 5 | 0.9989 | 0.988 | A | 0.000 | 0.988 | 0.988 | 100.00 | 1.283 | 0.000 |
| | | | | | | B | 0.000 | 0.988 | | 100.00 | 1.028 | 0.000 |
| | | | | | | C | 0.000 | 0.988 | | 100.00 | 2.566 | 0.000 |
| L51 2.75-2.25 | 2.50 | 0.85 | 5 | 0.9850 | 1.978 | A | 0.000 | 1.978 | 1.978 | 100.00 | 2.561 | 0.000 |
| | | | | | | B | 0.000 | 1.978 | | 100.00 | 2.051 | 0.000 |
| | | | | | | C | 0.000 | 1.978 | | 100.00 | 5.120 | 0.000 |
| L52 2.25-2.00 | 2.12 | 0.85 | 5 | 0.9692 | 0.991 | A | 0.000 | 0.991 | 0.991 | 100.00 | 1.277 | 0.000 |
| | | | | | | B | 0.000 | 0.991 | | 100.00 | 1.022 | 0.000 |
| | | | | | | C | 0.000 | 0.991 | | 100.00 | 2.553 | 0.000 |
| L53 2.00-0.00 | 1.00 | 0.85 | 5 | 0.8987 | 7.938 | A | 0.000 | 7.938 | 7.938 | 100.00 | 10.105 | 0.000 |
| | | | | | | B | 0.000 | 7.938 | | 100.00 | 8.064 | 0.000 |
| | | | | | | C | 0.000 | 7.938 | | 100.00 | 20.178 | 0.000 |

# Tower Pressure - Service

***$G_H$ = 1.100***

| Section Elevation ft | z ft | $K_Z$ | $q_z$ psf | $A_G$ ft² | Face | $A_F$ ft² | $A_R$ ft² | $A_{leg}$ ft² | Leg % | $C_AA_A$ In Face ft² | $C_AA_A$ Out Face ft² |
|---|---|---|---|---|---|---|---|---|---|---|---|
| L1 169.00- | 166.48 | 1.409 | 11 | 6.744 | A | 0.000 | 6.744 | 6.744 | 100.00 | 0.000 | 0.000 |
| 164.00 | | | | | B | 0.000 | 6.744 | | 100.00 | 0.000 | 0.000 |
| | | | | | C | 0.000 | 6.744 | | 100.00 | 1.782 | 0.000 |
| L2 164.00- | 161.48 | 1.4 | 11 | 7.148 | A | 0.000 | 7.148 | 7.148 | 100.00 | 0.000 | 0.000 |
| 159.00 | | | | | B | 0.000 | 7.148 | | 100.00 | 0.000 | 0.000 |
| | | | | | C | 0.000 | 7.148 | | 100.00 | 8.910 | 0.000 |
| L3 159.00- | 156.48 | 1.391 | 11 | 7.552 | A | 0.000 | 7.552 | 7.552 | 100.00 | 0.000 | 0.000 |
| 154.00 | | | | | B | 0.000 | 7.552 | | 100.00 | 0.000 | 0.000 |
| | | | | | C | 0.000 | 7.552 | | 100.00 | 8.910 | 0.000 |
| L4 154.00- | 151.48 | 1.381 | 11 | 7.955 | A | 0.000 | 7.955 | 7.955 | 100.00 | 0.000 | 0.000 |
| 149.00 | | | | | B | 0.000 | 7.955 | | 100.00 | 0.000 | 0.000 |
| | | | | | C | 0.000 | 7.955 | | 100.00 | 8.910 | 0.000 |
| L5 149.00- | 146.48 | 1.372 | 11 | 8.359 | A | 0.000 | 8.359 | 8.359 | 100.00 | 0.000 | 0.000 |
| 144.00 | | | | | B | 0.000 | 8.359 | | 100.00 | 0.000 | 0.000 |
| | | | | | C | 0.000 | 8.359 | | 100.00 | 8.910 | 0.000 |
| L6 144.00- | 141.48 | 1.362 | 11 | 8.763 | A | 0.000 | 8.763 | 8.763 | 100.00 | 0.000 | 0.000 |
| 139.00 | | | | | B | 0.000 | 8.763 | | 100.00 | 0.000 | 0.000 |
| | | | | | C | 0.000 | 8.763 | | 100.00 | 8.910 | 0.000 |
| L7 139.00- | 136.14 | 1.351 | 11 | 10.426 | A | 0.000 | 10.426 | 10.426 | 100.00 | 0.000 | 0.000 |
| 133.33 | | | | | B | 0.000 | 10.426 | | 100.00 | 0.000 | 0.000 |
| | | | | | C | 0.000 | 10.426 | | 100.00 | 10.104 | 0.000 |
| L8 133.33- | 132.49 | 1.343 | 10 | 3.096 | A | 0.000 | 3.096 | 3.096 | 100.00 | 0.000 | 0.000 |
| 131.66 | | | | | B | 0.000 | 3.096 | | 100.00 | 0.000 | 0.000 |
| | | | | | C | 0.000 | 3.096 | | 100.00 | 2.976 | 0.000 |
| L9 131.66- | 129.14 | 1.336 | 10 | 9.536 | A | 0.000 | 9.536 | 9.536 | 100.00 | 0.000 | 0.000 |
| 126.66 | | | | | B | 0.000 | 9.536 | | 100.00 | 0.000 | 0.000 |
| | | | | | C | 0.000 | 9.536 | | 100.00 | 8.910 | 0.000 |
| L10 126.66- | 124.14 | 1.325 | 10 | 9.934 | A | 0.000 | 9.934 | 9.934 | 100.00 | 0.000 | 0.000 |
| 121.66 | | | | | B | 0.000 | 9.934 | | 100.00 | 0.000 | 0.000 |
| | | | | | C | 0.000 | 9.934 | | 100.00 | 10.168 | 0.000 |
| L11 121.66- | 119.14 | 1.313 | 10 | 10.331 | A | 0.000 | 10.331 | 10.331 | 100.00 | 0.000 | 0.000 |
| 116.66 | | | | | B | 0.000 | 10.331 | | 100.00 | 0.084 | 0.000 |
| | | | | | C | 0.000 | 10.331 | | 100.00 | 11.598 | 0.000 |
| L12 116.66- | 114.14 | 1.301 | 10 | 10.729 | A | 0.000 | 10.729 | 10.729 | 100.00 | 0.000 | 0.000 |
| 111.66 | | | | | B | 0.000 | 10.729 | | 100.00 | 0.315 | 0.000 |
| | | | | | C | 0.000 | 10.729 | | 100.00 | 11.598 | 0.000 |
| L13 111.66- | 111.33 | 1.295 | 10 | 1.446 | A | 0.000 | 1.446 | 1.446 | 100.00 | 0.000 | 0.000 |
| 111.00 | | | | | B | 0.000 | 1.446 | | 100.00 | 0.042 | 0.000 |
| | | | | | C | 0.000 | 1.446 | | 100.00 | 1.531 | 0.000 |
| L14 111.00- | 110.87 | 1.293 | 10 | 0.549 | A | 0.000 | 0.549 | 0.549 | 100.00 | 0.000 | 0.000 |
| 110.75 | | | | | B | 0.000 | 0.549 | | 100.00 | 0.016 | 0.000 |

| Section Elevation ft | z ft | $K_Z$ | $q_z$ psf | $A_G$ ft² | Face | $A_F$ ft² | $A_R$ ft² | $A_{leg}$ ft² | Leg % | $C_AA_A$ In Face ft² | $C_AA_A$ Out Face ft² |
|---|---|---|---|---|---|---|---|---|---|---|---|
| | | | | | C | 0.000 | 0.549 | | 100.00 | 1.064 | 0.000 |
| L15 110.75-105.75 | 108.24 | 1.287 | 10 | 11.184 | A | 0.000 | 11.184 | 11.184 | 100.00 | 2.280 | 0.000 |
| | | | | | B | 0.000 | 11.184 | | 100.00 | 2.595 | 0.000 |
| | | | | | C | 0.000 | 11.184 | | 100.00 | 23.563 | 0.000 |
| L16 105.75-101.50 | 103.61 | 1.275 | 10 | 9.820 | A | 0.000 | 9.820 | 9.820 | 100.00 | 7.210 | 0.000 |
| | | | | | B | 0.000 | 9.820 | | 100.00 | 7.478 | 0.000 |
| | | | | | C | 0.000 | 9.820 | | 100.00 | 25.300 | 0.000 |
| L17 101.50-101.25 | 101.37 | 1.269 | 10 | 0.585 | A | 0.000 | 0.585 | 0.585 | 100.00 | 0.561 | 0.000 |
| | | | | | B | 0.000 | 0.585 | | 100.00 | 0.577 | 0.000 |
| | | | | | C | 0.000 | 0.585 | | 100.00 | 1.625 | 0.000 |
| L18 101.25-101.00 | 101.12 | 1.269 | 10 | 0.586 | A | 0.000 | 0.586 | 0.586 | 100.00 | 0.561 | 0.000 |
| | | | | | B | 0.000 | 0.586 | | 100.00 | 0.577 | 0.000 |
| | | | | | C | 0.000 | 0.586 | | 100.00 | 1.625 | 0.000 |
| L19 101.00-100.75 | 100.87 | 1.268 | 10 | 0.588 | A | 0.000 | 0.588 | 0.588 | 100.00 | 0.561 | 0.000 |
| | | | | | B | 0.000 | 0.588 | | 100.00 | 0.577 | 0.000 |
| | | | | | C | 0.000 | 0.588 | | 100.00 | 1.625 | 0.000 |
| L20 100.75-95.75 | 98.24 | 1.261 | 10 | 11.970 | A | 0.000 | 11.970 | 11.970 | 100.00 | 8.947 | 0.000 |
| | | | | | B | 0.000 | 11.970 | | 100.00 | 9.262 | 0.000 |
| | | | | | C | 0.000 | 11.970 | | 100.00 | 30.229 | 0.000 |
| L21 95.75-87.83 | 91.76 | 1.243 | 10 | 19.776 | A | 0.000 | 19.776 | 19.776 | 100.00 | 12.188 | 0.000 |
| | | | | | B | 0.000 | 19.776 | | 100.00 | 12.686 | 0.000 |
| | | | | | C | 0.000 | 19.776 | | 100.00 | 45.899 | 0.000 |
| L22 87.83-86.83 | 87.33 | 1.23 | 10 | 2.512 | A | 0.000 | 2.512 | 2.512 | 100.00 | 2.083 | 0.000 |
| | | | | | B | 0.000 | 2.512 | | 100.00 | 2.146 | 0.000 |
| | | | | | C | 0.000 | 2.512 | | 100.00 | 6.340 | 0.000 |
| L23 86.83-81.83 | 84.32 | 1.221 | 10 | 12.800 | A | 0.000 | 12.800 | 12.800 | 100.00 | 10.417 | 0.000 |
| | | | | | B | 0.000 | 12.800 | | 100.00 | 10.732 | 0.000 |
| | | | | | C | 0.000 | 12.800 | | 100.00 | 31.699 | 0.000 |
| L24 81.83-81.50 | 81.66 | 1.213 | 9 | 0.859 | A | 0.000 | 0.859 | 0.859 | 100.00 | 0.938 | 0.000 |
| | | | | | B | 0.000 | 0.859 | | 100.00 | 0.958 | 0.000 |
| | | | | | C | 0.000 | 0.859 | | 100.00 | 2.342 | 0.000 |
| L25 81.50-81.25 | 81.37 | 1.212 | 9 | 0.652 | A | 0.000 | 0.652 | 0.652 | 100.00 | 0.729 | 0.000 |
| | | | | | B | 0.000 | 0.652 | | 100.00 | 0.745 | 0.000 |
| | | | | | C | 0.000 | 0.652 | | 100.00 | 1.793 | 0.000 |
| L26 81.25-76.25 | 78.74 | 1.204 | 9 | 13.244 | A | 0.000 | 13.244 | 13.244 | 100.00 | 11.771 | 0.000 |
| | | | | | B | 0.000 | 13.244 | | 100.00 | 12.086 | 0.000 |
| | | | | | C | 0.000 | 13.244 | | 100.00 | 33.053 | 0.000 |
| L27 76.25-71.25 | 73.74 | 1.187 | 9 | 13.644 | A | 0.000 | 13.644 | 13.644 | 100.00 | 10.833 | 0.000 |
| | | | | | B | 0.000 | 13.644 | | 100.00 | 11.148 | 0.000 |
| | | | | | C | 0.000 | 13.644 | | 100.00 | 32.116 | 0.000 |
| L28 71.25-66.25 | 68.74 | 1.17 | 9 | 14.044 | A | 0.000 | 14.044 | 14.044 | 100.00 | 10.833 | 0.000 |
| | | | | | B | 0.000 | 14.044 | | 100.00 | 11.148 | 0.000 |
| | | | | | C | 0.000 | 14.044 | | 100.00 | 32.116 | 0.000 |
| L29 66.25-61.25 | 63.74 | 1.151 | 9 | 14.443 | A | 0.000 | 14.443 | 14.443 | 100.00 | 10.833 | 0.000 |
| | | | | | B | 0.000 | 14.443 | | 100.00 | 11.148 | 0.000 |
| | | | | | C | 0.000 | 14.443 | | 100.00 | 32.116 | 0.000 |
| L30 61.25-56.25 | 58.74 | 1.132 | 9 | 14.842 | A | 0.000 | 14.842 | 14.842 | 100.00 | 10.833 | 0.000 |
| | | | | | B | 0.000 | 14.842 | | 100.00 | 11.148 | 0.000 |
| | | | | | C | 0.000 | 14.842 | | 100.00 | 32.116 | 0.000 |
| L31 56.25-51.25 | 53.74 | 1.111 | 9 | 15.241 | A | 0.000 | 15.241 | 15.241 | 100.00 | 10.833 | 0.000 |
| | | | | | B | 0.000 | 15.241 | | 100.00 | 11.148 | 0.000 |
| | | | | | C | 0.000 | 15.241 | | 100.00 | 32.116 | 0.000 |
| L32 51.25-43.33 | 47.26 | 1.081 | 8 | 24.957 | A | 0.000 | 24.957 | 24.957 | 100.00 | 23.567 | 0.000 |
| | | | | | B | 0.000 | 24.957 | | 100.00 | 20.862 | 0.000 |
| | | | | | C | 0.000 | 24.957 | | 100.00 | 54.075 | 0.000 |
| L33 43.33-42.33 | 42.83 | 1.059 | 8 | 3.156 | A | 0.000 | 3.156 | 3.156 | 100.00 | 4.167 | 0.000 |
| | | | | | B | 0.000 | 3.156 | | 100.00 | 3.230 | 0.000 |
| | | | | | C | 0.000 | 3.156 | | 100.00 | 7.423 | 0.000 |
| L34 42.33-37.40 | 39.85 | 1.043 | 8 | 15.791 | A | 0.000 | 15.791 | 15.791 | 100.00 | 20.542 | 0.000 |
| | | | | | B | 0.000 | 15.791 | | 100.00 | 15.922 | 0.000 |
| | | | | | C | 0.000 | 15.791 | | 100.00 | 36.596 | 0.000 |
| L35 37.40-37.15 | 37.27 | 1.028 | 8 | 0.811 | A | 0.000 | 0.811 | 0.811 | 100.00 | 1.042 | 0.000 |
| | | | | | B | 0.000 | 0.811 | | 100.00 | 0.807 | 0.000 |
| | | | | | C | 0.000 | 0.811 | | 100.00 | 1.856 | 0.000 |
| L36 37.15-32.15 | 34.64 | 1.012 | 8 | 16.432 | A | 0.000 | 16.432 | 16.432 | 100.00 | 20.833 | 0.000 |
| | | | | | B | 0.000 | 16.432 | | 100.00 | 16.148 | 0.000 |
| | | | | | C | 0.000 | 16.432 | | 100.00 | 37.116 | 0.000 |

| Section Elevation ft | z ft | $K_Z$ | $q_z$ psf | $A_G$ ft² | Face | $A_F$ ft² | $A_R$ ft² | $A_{leg}$ ft² | Leg % | $C_AA_A$ In Face ft² | $C_AA_A$ Out Face ft² |
|---|---|---|---|---|---|---|---|---|---|---|---|
| L37 32.15-27.15 | 29.64 | 0.98 | 8 | 16.831 | A | 0.000 | 16.831 | 16.831 | 100.00 | 20.833 | 0.000 |
| | | | | | B | 0.000 | 16.831 | | 100.00 | 16.148 | 0.000 |
| | | | | | C | 0.000 | 16.831 | | 100.00 | 37.116 | 0.000 |
| L38 27.15-22.15 | 24.64 | 0.942 | 7 | 17.229 | A | 0.000 | 17.229 | 17.229 | 100.00 | 20.850 | 0.000 |
| | | | | | B | 0.000 | 17.229 | | 100.00 | 16.157 | 0.000 |
| | | | | | C | 0.000 | 17.229 | | 100.00 | 37.124 | 0.000 |
| L39 22.15-19.50 | 20.82 | 0.91 | 7 | 9.293 | A | 0.000 | 9.293 | 9.293 | 100.00 | 11.483 | 0.000 |
| | | | | | B | 0.000 | 9.293 | | 100.00 | 8.779 | 0.000 |
| | | | | | C | 0.000 | 9.293 | | 100.00 | 19.892 | 0.000 |
| L40 19.50-19.25 | 19.37 | 0.896 | 7 | 0.882 | A | 0.000 | 0.882 | 0.882 | 100.00 | 1.083 | 0.000 |
| | | | | | B | 0.000 | 0.882 | | 100.00 | 0.828 | 0.000 |
| | | | | | C | 0.000 | 0.882 | | 100.00 | 1.877 | 0.000 |
| L41 19.25-14.25 | 16.74 | 0.869 | 7 | 17.855 | A | 0.000 | 17.855 | 17.855 | 100.00 | 21.667 | 0.000 |
| | | | | | B | 0.000 | 17.855 | | 100.00 | 16.565 | 0.000 |
| | | | | | C | 0.000 | 17.855 | | 100.00 | 37.532 | 0.000 |
| L42 14.25-9.25 | 11.74 | 0.85 | 7 | 18.252 | A | 0.000 | 18.252 | 18.252 | 100.00 | 21.667 | 0.000 |
| | | | | | B | 0.000 | 18.252 | | 100.00 | 16.565 | 0.000 |
| | | | | | C | 0.000 | 18.252 | | 100.00 | 37.532 | 0.000 |
| L43 9.25-9.00 | 9.12 | 0.85 | 7 | 0.923 | A | 0.000 | 0.923 | 0.923 | 100.00 | 1.083 | 0.000 |
| | | | | | B | 0.000 | 0.923 | | 100.00 | 0.828 | 0.000 |
| | | | | | C | 0.000 | 0.923 | | 100.00 | 1.877 | 0.000 |
| L44 9.00-8.75 | 8.87 | 0.85 | 7 | 0.924 | A | 0.000 | 0.924 | 0.924 | 100.00 | 1.083 | 0.000 |
| | | | | | B | 0.000 | 0.924 | | 100.00 | 0.828 | 0.000 |
| | | | | | C | 0.000 | 0.924 | | 100.00 | 1.877 | 0.000 |
| L45 8.75-7.00 | 7.87 | 0.85 | 7 | 6.496 | A | 0.000 | 6.496 | 6.496 | 100.00 | 7.583 | 0.000 |
| | | | | | B | 0.000 | 6.496 | | 100.00 | 5.798 | 0.000 |
| | | | | | C | 0.000 | 6.496 | | 100.00 | 13.136 | 0.000 |
| L46 7.00-6.75 | 6.87 | 0.85 | 7 | 0.932 | A | 0.000 | 0.932 | 0.932 | 100.00 | 1.083 | 0.000 |
| | | | | | B | 0.000 | 0.932 | | 100.00 | 0.828 | 0.000 |
| | | | | | C | 0.000 | 0.932 | | 100.00 | 1.877 | 0.000 |
| L47 6.75-5.00 | 5.87 | 0.85 | 7 | 6.552 | A | 0.000 | 6.552 | 6.552 | 100.00 | 7.583 | 0.000 |
| | | | | | B | 0.000 | 6.552 | | 100.00 | 5.798 | 0.000 |
| | | | | | C | 0.000 | 6.552 | | 100.00 | 13.136 | 0.000 |
| L48 5.00-4.75 | 4.87 | 0.85 | 7 | 0.939 | A | 0.000 | 0.939 | 0.939 | 100.00 | 1.083 | 0.000 |
| | | | | | B | 0.000 | 0.939 | | 100.00 | 0.828 | 0.000 |
| | | | | | C | 0.000 | 0.939 | | 100.00 | 1.877 | 0.000 |
| L49 4.75-3.00 | 3.87 | 0.85 | 7 | 6.598 | A | 0.000 | 6.598 | 6.598 | 100.00 | 7.583 | 0.000 |
| | | | | | B | 0.000 | 6.598 | | 100.00 | 5.798 | 0.000 |
| | | | | | C | 0.000 | 6.598 | | 100.00 | 13.136 | 0.000 |
| L50 3.00-2.75 | 2.87 | 0.85 | 7 | 0.946 | A | 0.000 | 0.946 | 0.946 | 100.00 | 1.083 | 0.000 |
| | | | | | B | 0.000 | 0.946 | | 100.00 | 0.828 | 0.000 |
| | | | | | C | 0.000 | 0.946 | | 100.00 | 1.877 | 0.000 |
| L51 2.75-2.25 | 2.50 | 0.85 | 7 | 1.896 | A | 0.000 | 1.896 | 1.896 | 100.00 | 2.167 | 0.000 |
| | | | | | B | 0.000 | 1.896 | | 100.00 | 1.657 | 0.000 |
| | | | | | C | 0.000 | 1.896 | | 100.00 | 3.753 | 0.000 |
| L52 2.25-2.00 | 2.12 | 0.85 | 7 | 0.950 | A | 0.000 | 0.950 | 0.950 | 100.00 | 1.083 | 0.000 |
| | | | | | B | 0.000 | 0.950 | | 100.00 | 0.828 | 0.000 |
| | | | | | C | 0.000 | 0.950 | | 100.00 | 1.877 | 0.000 |
| L53 2.00-0.00 | 1.00 | 0.85 | 7 | 7.638 | A | 0.000 | 7.638 | 7.638 | 100.00 | 8.667 | 0.000 |
| | | | | | B | 0.000 | 7.638 | | 100.00 | 6.626 | 0.000 |
| | | | | | C | 0.000 | 7.638 | | 100.00 | 15.013 | 0.000 |

# Load Combinations

| Comb. No. | Description |
|---|---|
| 1 | Dead Only |
| 2 | 1.2 Dead+1.0 Wind 0 deg - No Ice |
| 3 | 0.9 Dead+1.0 Wind 0 deg - No Ice |
| 4 | 1.2 Dead+1.0 Wind 30 deg - No Ice |
| 5 | 0.9 Dead+1.0 Wind 30 deg - No Ice |
| 6 | 1.2 Dead+1.0 Wind 60 deg - No Ice |
| 7 | 0.9 Dead+1.0 Wind 60 deg - No Ice |
| 8 | 1.2 Dead+1.0 Wind 90 deg - No Ice |
| 9 | 0.9 Dead+1.0 Wind 90 deg - No Ice |

| Comb. No. | Description |
|---|---|
| 10 | 1.2 Dead+1.0 Wind 120 deg - No Ice |
| 11 | 0.9 Dead+1.0 Wind 120 deg - No Ice |
| 12 | 1.2 Dead+1.0 Wind 150 deg - No Ice |
| 13 | 0.9 Dead+1.0 Wind 150 deg - No Ice |
| 14 | 1.2 Dead+1.0 Wind 180 deg - No Ice |
| 15 | 0.9 Dead+1.0 Wind 180 deg - No Ice |
| 16 | 1.2 Dead+1.0 Wind 210 deg - No Ice |
| 17 | 0.9 Dead+1.0 Wind 210 deg - No Ice |
| 18 | 1.2 Dead+1.0 Wind 240 deg - No Ice |
| 19 | 0.9 Dead+1.0 Wind 240 deg - No Ice |
| 20 | 1.2 Dead+1.0 Wind 270 deg - No Ice |
| 21 | 0.9 Dead+1.0 Wind 270 deg - No Ice |
| 22 | 1.2 Dead+1.0 Wind 300 deg - No Ice |
| 23 | 0.9 Dead+1.0 Wind 300 deg - No Ice |
| 24 | 1.2 Dead+1.0 Wind 330 deg - No Ice |
| 25 | 0.9 Dead+1.0 Wind 330 deg - No Ice |
| 26 | 1.2 Dead+1.0 Ice+1.0 Temp |
| 27 | 1.2 Dead+1.0 Wind 0 deg+1.0 Ice+1.0 Temp |
| 28 | 1.2 Dead+1.0 Wind 30 deg+1.0 Ice+1.0 Temp |
| 29 | 1.2 Dead+1.0 Wind 60 deg+1.0 Ice+1.0 Temp |
| 30 | 1.2 Dead+1.0 Wind 90 deg+1.0 Ice+1.0 Temp |
| 31 | 1.2 Dead+1.0 Wind 120 deg+1.0 Ice+1.0 Temp |
| 32 | 1.2 Dead+1.0 Wind 150 deg+1.0 Ice+1.0 Temp |
| 33 | 1.2 Dead+1.0 Wind 180 deg+1.0 Ice+1.0 Temp |
| 34 | 1.2 Dead+1.0 Wind 210 deg+1.0 Ice+1.0 Temp |
| 35 | 1.2 Dead+1.0 Wind 240 deg+1.0 Ice+1.0 Temp |
| 36 | 1.2 Dead+1.0 Wind 270 deg+1.0 Ice+1.0 Temp |
| 37 | 1.2 Dead+1.0 Wind 300 deg+1.0 Ice+1.0 Temp |
| 38 | 1.2 Dead+1.0 Wind 330 deg+1.0 Ice+1.0 Temp |
| 39 | Dead+Wind 0 deg - Service |
| 40 | Dead+Wind 30 deg - Service |
| 41 | Dead+Wind 60 deg - Service |
| 42 | Dead+Wind 90 deg - Service |
| 43 | Dead+Wind 120 deg - Service |
| 44 | Dead+Wind 150 deg - Service |
| 45 | Dead+Wind 180 deg - Service |
| 46 | Dead+Wind 210 deg - Service |
| 47 | Dead+Wind 240 deg - Service |
| 48 | Dead+Wind 270 deg - Service |
| 49 | Dead+Wind 300 deg - Service |
| 50 | Dead+Wind 330 deg - Service |

# Maximum Member Forces

| Section No. | Elevation ft | Component Type | Condition | Gov. Load Comb. | Axial K | Major Axis Moment kip-ft | Minor Axis Moment kip-ft |
|---|---|---|---|---|---|---|---|
| L1 | 169 - 164 | Pole | Max Tension | 3 | 0.00 | -0.00 | -0.00 |
| | | | Max. Compression | 26 | -9.46 | 1.78 | -1.06 |
| | | | Max. Mx | 20 | -3.30 | 9.88 | -0.58 |
| | | | Max. My | 14 | -3.34 | 0.97 | -9.37 |
| | | | Max. Vy | 20 | -5.61 | 9.88 | -0.58 |
| | | | Max. Vx | 14 | 5.55 | 0.97 | -9.37 |
| | | | Max. Torque | 12 | | | -0.91 |
| L2 | 164 - 159 | Pole | Max Tension | 1 | 0.00 | 0.00 | 0.00 |
| | | | Max. Compression | 26 | -20.51 | 1.82 | -0.16 |
| | | | Max. Mx | 20 | -6.16 | 56.53 | -0.52 |
| | | | Max. My | 14 | -6.25 | 1.16 | -55.43 |
| | | | Max. Vy | 20 | -13.25 | 56.53 | -0.52 |
| | | | Max. Vx | 14 | 13.18 | 1.16 | -55.43 |
| | | | Max. Torque | 12 | | | -0.91 |
| L3 | 159 - 154 | Pole | Max Tension | 1 | 0.00 | 0.00 | 0.00 |
| | | | Max. Compression | 26 | -21.23 | 1.87 | -0.37 |
| | | | Max. Mx | 20 | -6.56 | 123.52 | -0.73 |
| | | | Max. My | 14 | -6.65 | 1.37 | -122.10 |
| | | | Max. Vy | 20 | -13.55 | 123.52 | -0.73 |
| | | | Max. Vx | 14 | 13.48 | 1.37 | -122.10 |

| Section No. | Elevation ft | Component Type | Condition | Gov. Load Comb. | Axial K | Major Axis Moment kip-ft | Minor Axis Moment kip-ft |
|---|---|---|---|---|---|---|---|
| | | | Max. Torque | 2 | | | 0.79 |
| L4 | 154 - 149 | Pole | Max Tension | 1 | 0.00 | 0.00 | 0.00 |
| | | | Max. Compression | 26 | -21.97 | 1.92 | -0.59 |
| | | | Max. Mx | 20 | -7.01 | 192.03 | -0.94 |
| | | | Max. My | 14 | -7.10 | 1.59 | -190.28 |
| | | | Max. Vy | 20 | -13.86 | 192.03 | -0.94 |
| | | | Max. Vx | 14 | 13.78 | 1.59 | -190.28 |
| | | | Max. Torque | 2 | | | 0.79 |
| L5 | 149 - 144 | Pole | Max Tension | 1 | 0.00 | 0.00 | 0.00 |
| | | | Max. Compression | 26 | -26.05 | 1.97 | -0.82 |
| | | | Max. Mx | 20 | -8.63 | 269.09 | -1.16 |
| | | | Max. My | 14 | -8.73 | 1.81 | -266.98 |
| | | | Max. Vy | 20 | -15.92 | 269.09 | -1.16 |
| | | | Max. Vx | 14 | 15.84 | 1.81 | -266.98 |
| | | | Max. Torque | 2 | | | 0.79 |
| L6 | 144 - 139 | Pole | Max Tension | 1 | 0.00 | 0.00 | 0.00 |
| | | | Max. Compression | 26 | -26.86 | 2.01 | -1.06 |
| | | | Max. Mx | 20 | -9.19 | 349.39 | -1.38 |
| | | | Max. My | 14 | -9.29 | 2.03 | -346.89 |
| | | | Max. Vy | 20 | -16.21 | 349.39 | -1.38 |
| | | | Max. Vx | 14 | 16.13 | 2.03 | -346.89 |
| | | | Max. Torque | 2 | | | 0.79 |
| L7 | 139 - 133.33 | Pole | Max Tension | 1 | 0.00 | 0.00 | 0.00 |
| | | | Max. Compression | 26 | -32.92 | 2.03 | -0.75 |
| | | | Max. Mx | 20 | -12.11 | 392.28 | -1.40 |
| | | | Max. My | 14 | -12.23 | 2.13 | -389.50 |
| | | | Max. Vy | 20 | -19.94 | 392.28 | -1.40 |
| | | | Max. Vx | 14 | 19.86 | 2.13 | -389.50 |
| | | | Max. Torque | 4 | | | 0.82 |
| L8 | 133.33 - 131.66 | Pole | Max Tension | 1 | 0.00 | 0.00 | 0.00 |
| | | | Max. Compression | 26 | -34.21 | 2.07 | -1.01 |
| | | | Max. Mx | 20 | -12.98 | 492.82 | -1.63 |
| | | | Max. My | 14 | -13.10 | 2.37 | -489.72 |
| | | | Max. Vy | 20 | -20.29 | 492.82 | -1.63 |
| | | | Max. Vx | 14 | 20.21 | 2.37 | -489.72 |
| | | | Max. Torque | 4 | | | 0.82 |
| L9 | 131.66 - 126.66 | Pole | Max Tension | 1 | 0.00 | 0.00 | 0.00 |
| | | | Max. Compression | 26 | -35.41 | 2.56 | -1.02 |
| | | | Max. Mx | 20 | -13.70 | 595.75 | -2.17 |
| | | | Max. My | 14 | -13.85 | 2.90 | -591.92 |
| | | | Max. Vy | 8 | 21.16 | -593.42 | 1.06 |
| | | | Max. Vx | 14 | 20.90 | 2.90 | -591.92 |
| | | | Max. Torque | 14 | | | -2.05 |
| L10 | 126.66 - 121.66 | Pole | Max Tension | 1 | 0.00 | 0.00 | 0.00 |
| | | | Max. Compression | 26 | -37.84 | 2.68 | -1.29 |
| | | | Max. Mx | 20 | -15.02 | 706.18 | -3.27 |
| | | | Max. My | 14 | -15.17 | 4.54 | -701.03 |
| | | | Max. Vy | 8 | 22.30 | -703.81 | 2.06 |
| | | | Max. Vx | 14 | 22.02 | 4.54 | -701.03 |
| | | | Max. Torque | 14 | | | -2.08 |
| L11 | 121.66 - 116.66 | Pole | Max Tension | 1 | 0.00 | 0.00 | 0.00 |
| | | | Max. Compression | 26 | -39.04 | 2.50 | -1.79 |
| | | | Max. Mx | 20 | -15.89 | 818.23 | -4.42 |
| | | | Max. My | 14 | -16.04 | 6.12 | -811.86 |
| | | | Max. Vy | 8 | 22.59 | -815.97 | 3.02 |
| | | | Max. Vx | 14 | 22.32 | 6.12 | -811.86 |
| | | | Max. Torque | 14 | | | -2.08 |
| L12 | 116.66 - 111.66 | Pole | Max Tension | 1 | 0.00 | 0.00 | 0.00 |
| | | | Max. Compression | 26 | -40.18 | 2.50 | -2.17 |
| | | | Max. Mx | 20 | -16.76 | 931.69 | -5.58 |
| | | | Max. My | 14 | -16.91 | 7.76 | -924.05 |
| | | | Max. Vy | 8 | 22.83 | -929.44 | 4.03 |
| | | | Max. Vx | 14 | 22.56 | 7.76 | -924.05 |
| | | | Max. Torque | 14 | | | -1.99 |

| Section No. | Elevation ft | Component Type | Condition | Gov. Load Comb. | Axial K | Major Axis Moment kip-ft | Minor Axis Moment kip-ft |
|---|---|---|---|---|---|---|---|
| L13 | 111.66 - 111 | Pole | Max Tension | 1 | 0.00 | 0.00 | 0.00 |
| | | | Max. Compression | 26 | -40.33 | 2.50 | -2.22 |
| | | | Max. Mx | 20 | -16.89 | 946.75 | -5.73 |
| | | | Max. My | 14 | -17.03 | 7.98 | -938.94 |
| | | | Max. Vy | 8 | 22.86 | -944.51 | 4.16 |
| | | | Max. Vx | 14 | 22.59 | 7.98 | -938.94 |
| | | | Max. Torque | 14 | | | -1.98 |
| L14 | 111 - 110.75 | Pole | Max Tension | 1 | 0.00 | 0.00 | 0.00 |
| | | | Max. Compression | 26 | -49.14 | 1.88 | -1.92 |
| | | | Max. Mx | 20 | -20.20 | 953.43 | -5.72 |
| | | | Max. My | 14 | -20.37 | 7.94 | -945.63 |
| | | | Max. Vy | 8 | 27.39 | -951.51 | 4.27 |
| | | | Max. Vx | 14 | 27.08 | 7.94 | -945.63 |
| | | | Max. Torque | 14 | | | -1.98 |
| L15 | 110.75 - 105.75 | Pole | Max Tension | 1 | 0.00 | 0.00 | 0.00 |
| | | | Max. Compression | 26 | -51.13 | 1.88 | -2.84 |
| | | | Max. Mx | 20 | -21.43 | 1092.18 | -6.91 |
| | | | Max. My | 14 | -21.64 | 9.49 | -1082.03 |
| | | | Max. Vy | 8 | 28.16 | -1090.27 | 5.06 |
| | | | Max. Vx | 14 | 27.42 | 9.49 | -1082.03 |
| | | | Max. Torque | 16 | | | -1.69 |
| L16 | 105.75 - 101.5 | Pole | Max Tension | 1 | 0.00 | 0.00 | 0.00 |
| | | | Max. Compression | 26 | -53.05 | 1.88 | -3.65 |
| | | | Max. Mx | 20 | -22.51 | 1213.22 | -7.93 |
| | | | Max. My | 14 | -22.75 | 10.81 | -1199.25 |
| | | | Max. Vy | 8 | 28.85 | -1211.33 | 5.73 |
| | | | Max. Vx | 14 | 27.69 | 10.81 | -1199.25 |
| | | | Max. Torque | 16 | | | -1.63 |
| L17 | 101.5 - 101.25 | Pole | Max Tension | 1 | 0.00 | 0.00 | 0.00 |
| | | | Max. Compression | 26 | -53.20 | 1.88 | -3.70 |
| | | | Max. Mx | 20 | -22.62 | 1220.43 | -7.99 |
| | | | Max. My | 14 | -22.86 | 10.89 | -1206.18 |
| | | | Max. Vy | 8 | 28.89 | -1218.54 | 5.77 |
| | | | Max. Vx | 2 | -27.70 | -8.18 | 1203.54 |
| | | | Max. Torque | 16 | | | -1.58 |
| L18 | 101.25 - 101 | Pole | Max Tension | 1 | 0.00 | 0.00 | 0.00 |
| | | | Max. Compression | 26 | -53.35 | 1.88 | -3.75 |
| | | | Max. Mx | 20 | -22.71 | 1227.65 | -8.05 |
| | | | Max. My | 14 | -22.96 | 10.97 | -1213.12 |
| | | | Max. Vy | 8 | 28.94 | -1225.77 | 5.81 |
| | | | Max. Vx | 2 | -27.72 | -8.25 | 1210.45 |
| | | | Max. Torque | 16 | | | -1.58 |
| L19 | 101 - 100.75 | Pole | Max Tension | 1 | 0.00 | 0.00 | 0.00 |
| | | | Max. Compression | 26 | -53.48 | 1.88 | -3.80 |
| | | | Max. Mx | 20 | -22.79 | 1234.89 | -8.11 |
| | | | Max. My | 14 | -23.03 | 11.05 | -1220.06 |
| | | | Max. Vy | 8 | 28.99 | -1233.00 | 5.85 |
| | | | Max. Vx | 2 | -27.74 | -8.31 | 1217.37 |
| | | | Max. Torque | 16 | | | -1.58 |
| L20 | 100.75 - 95.75 | Pole | Max Tension | 1 | 0.00 | 0.00 | 0.00 |
| | | | Max. Compression | 26 | -56.03 | 1.88 | -4.77 |
| | | | Max. Mx | 20 | -24.28 | 1381.91 | -9.31 |
| | | | Max. My | 14 | -24.56 | 12.60 | -1359.85 |
| | | | Max. Vy | 8 | 29.87 | -1380.04 | 6.62 |
| | | | Max. Vx | 14 | 28.11 | 12.60 | -1359.85 |
| | | | Max. Torque | 16 | | | -1.58 |
| L21 | 95.75 - 87.83 | Pole | Max Tension | 1 | 0.00 | 0.00 | 0.00 |
| | | | Max. Compression | 26 | -57.84 | 1.87 | -5.48 |
| | | | Max. Mx | 20 | -25.38 | 1490.18 | -10.18 |
| | | | Max. My | 14 | -25.68 | 13.71 | -1461.33 |
| | | | Max. Vy | 8 | 30.49 | -1488.33 | 7.17 |
| | | | Max. Vx | 14 | 28.37 | 13.71 | -1461.33 |
| | | | Max. Torque | 14 | | | -1.57 |

| Section No. | Elevation ft | Component Type | Condition | Gov. Load Comb. | Axial K | Major Axis Moment kip-ft | Minor Axis Moment kip-ft |
|---|---|---|---|---|---|---|---|
| L22 | 87.83 - 86.83 | Pole | Max Tension | 1 | 0.00 | 0.00 | 0.00 |
| | | | Max. Compression | 26 | -62.26 | 1.86 | -6.56 |
| | | | Max. Mx | 20 | -28.41 | 1655.62 | -11.47 |
| | | | Max. My | 14 | -28.74 | 15.37 | -1614.17 |
| | | | Max. Vy | 8 | 31.60 | -1653.79 | 7.99 |
| | | | Max. Vx | 14 | 28.90 | 15.37 | -1614.17 |
| | | | Max. Torque | 14 | | | -1.57 |
| L23 | 86.83 - 81.83 | Pole | Max Tension | 1 | 0.00 | 0.00 | 0.00 |
| | | | Max. Compression | 26 | -65.29 | 1.86 | -7.58 |
| | | | Max. Mx | 20 | -30.34 | 1815.78 | -12.69 |
| | | | Max. My | 14 | -30.70 | 16.92 | -1759.80 |
| | | | Max. Vy | 8 | 32.50 | -1813.96 | 8.76 |
| | | | Max. Vx | 14 | 29.29 | 16.92 | -1759.80 |
| | | | Max. Torque | 14 | | | -1.57 |
| L24 | 81.83 - 81.5 | Pole | Max Tension | 1 | 0.00 | 0.00 | 0.00 |
| | | | Max. Compression | 26 | -65.50 | 1.86 | -7.65 |
| | | | Max. Mx | 20 | -30.48 | 1826.51 | -12.78 |
| | | | Max. My | 14 | -30.84 | 17.03 | -1769.48 |
| | | | Max. Vy | 8 | 32.56 | -1824.70 | 8.81 |
| | | | Max. Vx | 14 | 29.32 | 17.03 | -1769.48 |
| | | | Max. Torque | 14 | | | -1.57 |
| L25 | 81.5 - 81.25 | Pole | Max Tension | 1 | 0.00 | 0.00 | 0.00 |
| | | | Max. Compression | 26 | -65.66 | 1.86 | -7.70 |
| | | | Max. Mx | 20 | -30.58 | 1834.65 | -12.84 |
| | | | Max. My | 14 | -30.94 | 17.10 | -1776.82 |
| | | | Max. Vy | 8 | 32.62 | -1832.84 | 8.85 |
| | | | Max. Vx | 2 | -29.36 | -13.76 | 1771.94 |
| | | | Max. Torque | 14 | | | -1.57 |
| L26 | 81.25 - 76.25 | Pole | Max Tension | 1 | 0.00 | 0.00 | 0.00 |
| | | | Max. Compression | 26 | -68.73 | 1.85 | -8.74 |
| | | | Max. Mx | 20 | -32.57 | 1999.83 | -14.06 |
| | | | Max. My | 14 | -32.94 | 18.65 | -1924.71 |
| | | | Max. Vy | 8 | 33.50 | -1998.04 | 9.60 |
| | | | Max. Vx | 14 | 29.74 | 18.65 | -1924.71 |
| | | | Max. Torque | 14 | | | -1.57 |
| L27 | 76.25 - 71.25 | Pole | Max Tension | 1 | 0.00 | 0.00 | 0.00 |
| | | | Max. Compression | 26 | -71.79 | 1.84 | -9.80 |
| | | | Max. Mx | 20 | -34.60 | 2169.46 | -15.30 |
| | | | Max. My | 14 | -34.98 | 20.21 | -2074.45 |
| | | | Max. Vy | 8 | 34.39 | -2167.69 | 10.35 |
| | | | Max. Vx | 16 | 30.15 | 1106.34 | -1886.20 |
| | | | Max. Torque | 14 | | | -1.57 |
| L28 | 71.25 - 66.25 | Pole | Max Tension | 1 | 0.00 | 0.00 | 0.00 |
| | | | Max. Compression | 26 | -74.88 | 1.82 | -10.87 |
| | | | Max. Mx | 20 | -36.67 | 2343.47 | -16.53 |
| | | | Max. My | 14 | -37.05 | 21.75 | -2225.99 |
| | | | Max. Vy | 8 | 35.26 | -2341.72 | 11.09 |
| | | | Max. Vx | 16 | 30.95 | 1195.89 | -2039.11 |
| | | | Max. Torque | 14 | | | -1.57 |
| L29 | 66.25 - 61.25 | Pole | Max Tension | 1 | 0.00 | 0.00 | 0.00 |
| | | | Max. Compression | 26 | -77.98 | 1.81 | -11.96 |
| | | | Max. Mx | 20 | -38.77 | 2521.81 | -17.78 |
| | | | Max. My | 14 | -39.15 | 23.29 | -2379.26 |
| | | | Max. Vy | 8 | 36.12 | -2520.08 | 11.82 |
| | | | Max. Vx | 16 | 31.73 | 1287.71 | -2195.98 |
| | | | Max. Torque | 14 | | | -1.56 |
| L30 | 61.25 - 56.25 | Pole | Max Tension | 1 | 0.00 | 0.00 | 0.00 |
| | | | Max. Compression | 26 | -81.11 | 1.80 | -13.07 |
| | | | Max. Mx | 20 | -40.90 | 2704.39 | -19.02 |
| | | | Max. My | 14 | -41.27 | 24.83 | -2534.20 |
| | | | Max. Vy | 8 | 36.96 | -2702.68 | 12.55 |
| | | | Max. Vx | 16 | 32.51 | 1381.78 | -2356.74 |

| Section No. | Elevation ft | Component Type | Condition | Gov. Load Comb. | Axial K | Major Axis Moment kip-ft | Minor Axis Moment kip-ft |
|---|---|---|---|---|---|---|---|
| | | | Max. Torque | 14 | | | -1.56 |
| L31 | 56.25 - 51.25 | Pole | Max Tension | 1 | 0.00 | 0.00 | 0.00 |
| | | | Max. Compression | 26 | -84.26 | 1.78 | -14.19 |
| | | | Max. Mx | 20 | -43.07 | 2891.13 | -20.27 |
| | | | Max. My | 14 | -43.42 | 26.37 | -2690.76 |
| | | | Max. Vy | 8 | 37.79 | -2889.45 | 13.26 |
| | | | Max. Vx | 16 | 33.26 | 1478.04 | -2521.31 |
| | | | Max. Torque | 14 | | | -1.56 |
| L32 | 51.25 - 43.33 | Pole | Max Tension | 1 | 0.00 | 0.00 | 0.00 |
| | | | Max. Compression | 26 | -85.95 | 1.78 | -14.77 |
| | | | Max. Mx | 20 | -44.20 | 2989.46 | -20.92 |
| | | | Max. My | 14 | -44.54 | 27.16 | -2772.46 |
| | | | Max. Vy | 8 | 38.20 | -2987.79 | 13.63 |
| | | | Max. Vx | 16 | 33.64 | 1528.74 | -2608.03 |
| | | | Max. Torque | 14 | | | -1.56 |
| L33 | 43.33 - 42.33 | Pole | Max Tension | 1 | 0.00 | 0.00 | 0.00 |
| | | | Max. Compression | 26 | -93.00 | 1.78 | -16.19 |
| | | | Max. Mx | 20 | -49.44 | 3235.04 | -22.50 |
| | | | Max. My | 14 | -49.77 | 29.09 | -2974.52 |
| | | | Max. Vy | 8 | 39.41 | -3233.39 | 14.52 |
| | | | Max. Vx | 16 | 34.74 | 1655.43 | -2824.75 |
| | | | Max. Torque | 14 | | | -1.56 |
| L34 | 42.33 - 37.4 | Pole | Max Tension | 1 | 0.00 | 0.00 | 0.00 |
| | | | Max. Compression | 26 | -96.79 | 1.79 | -17.29 |
| | | | Max. Mx | 20 | -52.08 | 3431.15 | -23.74 |
| | | | Max. My | 14 | -52.40 | 30.59 | -3133.97 |
| | | | Max. Vy | 8 | 40.20 | -3429.52 | 15.21 |
| | | | Max. Vx | 16 | 35.46 | 1756.64 | -2997.95 |
| | | | Max. Torque | 14 | | | -1.56 |
| L35 | 37.4 - 37.15 | Pole | Max Tension | 1 | 0.00 | 0.00 | 0.00 |
| | | | Max. Compression | 26 | -96.99 | 1.80 | -17.35 |
| | | | Max. Mx | 20 | -52.24 | 3441.20 | -23.80 |
| | | | Max. My | 14 | -52.54 | 30.67 | -3142.09 |
| | | | Max. Vy | 8 | 40.24 | -3439.57 | 15.24 |
| | | | Max. Vx | 16 | 35.48 | 1761.83 | -3006.83 |
| | | | Max. Torque | 14 | | | -1.56 |
| L36 | 37.15 - 32.15 | Pole | Max Tension | 1 | 0.00 | 0.00 | 0.00 |
| | | | Max. Compression | 26 | -100.85 | 1.81 | -18.47 |
| | | | Max. Mx | 20 | -54.94 | 3644.14 | -25.06 |
| | | | Max. My | 14 | -55.22 | 32.19 | -3305.34 |
| | | | Max. Vy | 8 | 41.00 | -3642.53 | 15.93 |
| | | | Max. Vx | 16 | 36.19 | 1866.60 | -3186.19 |
| | | | Max. Torque | 14 | | | -1.56 |
| L37 | 32.15 - 27.15 | Pole | Max Tension | 1 | 0.00 | 0.00 | 0.00 |
| | | | Max. Compression | 26 | -104.72 | 1.82 | -19.59 |
| | | | Max. Mx | 20 | -57.69 | 3850.79 | -26.31 |
| | | | Max. My | 14 | -57.94 | 33.69 | -3469.96 |
| | | | Max. Vy | 8 | 41.72 | -3849.21 | 16.61 |
| | | | Max. Vx | 16 | 36.85 | 1973.33 | -3368.96 |
| | | | Max. Torque | 14 | | | -1.56 |
| L38 | 27.15 - 22.15 | Pole | Max Tension | 1 | 0.00 | 0.00 | 0.00 |
| | | | Max. Compression | 26 | -108.60 | 1.82 | -20.67 |
| | | | Max. Mx | 20 | -60.47 | 4060.97 | -27.57 |
| | | | Max. My | 14 | -60.68 | 35.20 | -3635.83 |
| | | | Max. Vy | 8 | 42.41 | -4059.41 | 17.28 |
| | | | Max. Vx | 16 | 37.48 | 2081.92 | -3554.95 |
| | | | Max. Torque | 14 | | | -1.56 |
| L39 | 22.15 - 19.5 | Pole | Max Tension | 1 | 0.00 | 0.00 | 0.00 |
| | | | Max. Compression | 26 | -110.66 | 1.83 | -21.25 |
| | | | Max. Mx | 20 | -61.96 | 4173.73 | -28.23 |
| | | | Max. My | 14 | -62.14 | 35.99 | -3724.22 |
| | | | Max. Vy | 8 | 42.76 | -4172.19 | 17.63 |
| | | | Max. Vx | 16 | 37.80 | 2140.18 | -3654.78 |

| Section No. | Elevation ft | Component Type | Condition | Gov. Load Comb. | Axial K | Major Axis Moment kip-ft | Minor Axis Moment kip-ft |
|---|---|---|---|---|---|---|---|
| | | | Max. Torque | 14 | | | -1.56 |
| L40 | 19.5 - 19.25 | Pole | Max Tension | 1 | 0.00 | 0.00 | 0.00 |
| | | | Max. Compression | 26 | -110.87 | 1.83 | -21.31 |
| | | | Max. Mx | 20 | -62.13 | 4184.42 | -28.30 |
| | | | Max. My | 14 | -62.30 | 36.06 | -3732.57 |
| | | | Max. Vy | 8 | 42.78 | -4182.88 | 17.66 |
| | | | Max. Vx | 16 | 37.81 | 2145.71 | -3664.25 |
| | | | Max. Torque | 14 | | | -1.56 |
| L41 | 19.25 - 14.25 | Pole | Max Tension | 1 | 0.00 | 0.00 | 0.00 |
| | | | Max. Compression | 26 | -114.93 | 1.84 | -22.39 |
| | | | Max. Mx | 20 | -65.10 | 4399.77 | -29.55 |
| | | | Max. My | 14 | -65.24 | 37.55 | -3900.21 |
| | | | Max. Vy | 8 | 43.41 | -4398.25 | 18.31 |
| | | | Max. Vx | 16 | 38.39 | 2257.01 | -3854.98 |
| | | | Max. Torque | 14 | | | -1.56 |
| L42 | 14.25 - 9.25 | Pole | Max Tension | 1 | 0.00 | 0.00 | 0.00 |
| | | | Max. Compression | 26 | -118.97 | 1.85 | -23.47 |
| | | | Max. Mx | 20 | -68.12 | 4618.18 | -30.80 |
| | | | Max. My | 14 | -68.21 | 39.03 | -4068.86 |
| | | | Max. Vy | 8 | 44.02 | -4616.69 | 18.96 |
| | | | Max. Vx | 16 | 38.95 | 2369.92 | -4048.52 |
| | | | Max. Torque | 14 | | | -1.56 |
| L43 | 9.25 - 9 | Pole | Max Tension | 1 | 0.00 | 0.00 | 0.00 |
| | | | Max. Compression | 26 | -119.17 | 1.85 | -23.53 |
| | | | Max. Mx | 20 | -68.28 | 4629.18 | -30.87 |
| | | | Max. My | 14 | -68.36 | 39.10 | -4077.32 |
| | | | Max. Vy | 8 | 44.03 | -4627.69 | 18.99 |
| | | | Max. Vx | 16 | 38.96 | 2375.60 | -4058.27 |
| | | | Max. Torque | 14 | | | -1.56 |
| L44 | 9 - 8.75 | Pole | Max Tension | 1 | 0.00 | 0.00 | 0.00 |
| | | | Max. Compression | 26 | -119.38 | 1.85 | -23.58 |
| | | | Max. Mx | 20 | -68.44 | 4640.19 | -30.93 |
| | | | Max. My | 14 | -68.52 | 39.17 | -4085.78 |
| | | | Max. Vy | 8 | 44.06 | -4638.70 | 19.02 |
| | | | Max. Vx | 16 | 38.99 | 2381.30 | -4068.03 |
| | | | Max. Torque | 14 | | | -1.56 |
| L45 | 8.75 - 7 | Pole | Max Tension | 1 | 0.00 | 0.00 | 0.00 |
| | | | Max. Compression | 26 | -120.83 | 1.85 | -23.96 |
| | | | Max. Mx | 20 | -69.51 | 4717.46 | -31.37 |
| | | | Max. My | 14 | -69.58 | 39.69 | -4145.08 |
| | | | Max. Vy | 8 | 44.31 | -4715.98 | 19.24 |
| | | | Max. Vx | 16 | 39.21 | 2421.25 | -4136.52 |
| | | | Max. Torque | 14 | | | -1.56 |
| L46 | 7 - 6.75 | Pole | Max Tension | 1 | 0.00 | 0.00 | 0.00 |
| | | | Max. Compression | 26 | -121.03 | 1.85 | -24.01 |
| | | | Max. Mx | 20 | -69.69 | 4728.53 | -31.43 |
| | | | Max. My | 14 | -69.75 | 39.76 | -4153.56 |
| | | | Max. Vy | 8 | 44.31 | -4727.05 | 19.27 |
| | | | Max. Vx | 16 | 39.21 | 2426.97 | -4146.33 |
| | | | Max. Torque | 14 | | | -1.56 |
| L47 | 6.75 - 5 | Pole | Max Tension | 1 | 0.00 | 0.00 | 0.00 |
| | | | Max. Compression | 26 | -122.43 | 1.85 | -24.39 |
| | | | Max. Mx | 20 | -70.74 | 4806.22 | -31.87 |
| | | | Max. My | 16 | -70.73 | 2467.14 | -4215.21 |
| | | | Max. Vy | 8 | 44.55 | -4804.75 | 19.50 |
| | | | Max. Vx | 16 | 39.43 | 2467.14 | -4215.21 |
| | | | Max. Torque | 14 | | | -1.56 |
| L48 | 5 - 4.75 | Pole | Max Tension | 1 | 0.00 | 0.00 | 0.00 |
| | | | Max. Compression | 26 | -122.67 | 1.85 | -24.44 |
| | | | Max. Mx | 20 | -70.95 | 4817.35 | -31.93 |
| | | | Max. My | 16 | -70.95 | 2472.90 | -4225.07 |
| | | | Max. Vy | 8 | 44.55 | -4815.88 | 19.53 |
| | | | Max. Vx | 16 | 39.43 | 2472.90 | -4225.07 |
| | | | Max. Torque | 14 | | | -1.56 |
| L49 | 4.75 - 3 | Pole | Max Tension | 1 | 0.00 | 0.00 | 0.00 |
| | | | Max. Compression | 26 | -124.35 | 1.86 | -24.81 |
| | | | Max. Mx | 20 | -72.28 | 4895.48 | -32.37 |
| | | | Max. My | 16 | -72.27 | 2513.30 | -4294.36 |

| Section No. | Elevation ft | Component Type | Condition | Gov. Load Comb. | Axial K | Major Axis Moment kip-ft | Minor Axis Moment kip-ft |
|---|---|---|---|---|---|---|---|
| | | | Max. Vy | 8 | 44.80 | -4894.02 | 19.75 |
| | | | Max. Vx | 16 | 39.67 | 2513.30 | -4294.36 |
| | | | Max. Torque | 14 | | | -1.56 |
| L50 | 3 - 2.75 | Pole | Max Tension | 1 | 0.00 | 0.00 | 0.00 |
| | | | Max. Compression | 26 | -124.59 | 1.86 | -24.86 |
| | | | Max. Mx | 20 | -72.49 | 4906.68 | -32.43 |
| | | | Max. My | 16 | -72.49 | 2519.09 | -4304.29 |
| | | | Max. Vy | 8 | 44.81 | -4905.22 | 19.78 |
| | | | Max. Vx | 16 | 39.67 | 2519.09 | -4304.29 |
| | | | Max. Torque | 14 | | | -1.56 |
| L51 | 2.75 - 2.25 | Pole | Max Tension | 1 | 0.00 | 0.00 | 0.00 |
| | | | Max. Compression | 26 | -125.07 | 1.86 | -24.96 |
| | | | Max. Mx | 20 | -72.88 | 4929.10 | -32.55 |
| | | | Max. My | 16 | -72.88 | 2530.68 | -4324.17 |
| | | | Max. Vy | 8 | 44.88 | -4927.64 | 19.84 |
| | | | Max. Vx | 16 | 39.74 | 2530.68 | -4324.17 |
| | | | Max. Torque | 14 | | | -1.56 |
| L52 | 2.25 - 2 | Pole | Max Tension | 1 | 0.00 | 0.00 | 0.00 |
| | | | Max. Compression | 26 | -125.28 | 1.86 | -25.01 |
| | | | Max. Mx | 20 | -73.05 | 4940.32 | -32.62 |
| | | | Max. My | 16 | -73.05 | 2536.49 | -4334.12 |
| | | | Max. Vy | 8 | 44.91 | -4938.86 | 19.87 |
| | | | Max. Vx | 16 | 39.76 | 2536.49 | -4334.12 |
| | | | Max. Torque | 14 | | | -1.56 |
| L53 | 2 - 0 | Pole | Max Tension | 1 | 0.00 | 0.00 | 0.00 |
| | | | Max. Compression | 26 | -126.92 | 1.86 | -25.39 |
| | | | Max. Mx | 20 | -74.37 | 5030.37 | -33.12 |
| | | | Max. My | 16 | -74.36 | 2583.06 | -4414.00 |
| | | | Max. Vy | 8 | 45.18 | -5028.93 | 20.12 |
| | | | Max. Vx | 16 | 40.01 | 2583.06 | -4414.00 |
| | | | Max. Torque | 14 | | | -1.56 |

# Maximum Reactions

| Location | Condition | Gov. Load Comb. | Vertical K | Horizontal, X K | Horizontal, Z K |
|---|---|---|---|---|---|
| Pole | Max. Vert | 26 | 126.92 | -0.00 | 0.00 |
| | Max. $H_x$ | 20 | 74.38 | 45.15 | -0.19 |
| | Max. $H_z$ | 4 | 74.38 | -23.35 | 39.97 |
| | Max. $M_x$ | 4 | 4399.26 | -23.35 | 39.97 |
| | Max. $M_z$ | 8 | 5028.93 | -45.16 | 0.19 |
| | Max. Torsion | 24 | 1.46 | 20.79 | 35.99 |
| | Min. Vert | 3 | 55.78 | -0.26 | 34.14 |
| | Min. $H_x$ | 9 | 55.78 | -45.16 | 0.19 |
| | Min. $H_z$ | 16 | 74.38 | 23.35 | -39.99 |
| | Min. $M_x$ | 16 | -4414.00 | 23.35 | -39.99 |
| | Min. $M_z$ | 20 | -5030.37 | 45.15 | -0.19 |
| | Min. Torsion | 14 | -1.56 | 0.29 | -34.17 |

# Tower Mast Reaction Summary

| Load Combination | Vertical K | $Shear_x$ K | $Shear_z$ K | Overturning Moment, $M_x$ kip-ft | Overturning Moment, $M_z$ kip-ft | Torque kip-ft |
|---|---|---|---|---|---|---|
| Dead Only | 61.98 | 0.00 | -0.00 | 5.02 | 0.71 | 0.00 |
| 1.2 Dead+1.0 Wind 0 deg - No Ice | 74.38 | 0.26 | -34.15 | -4367.85 | -36.08 | -1.08 |
| 0.9 Dead+1.0 Wind 0 deg - No Ice | 55.78 | 0.26 | -34.14 | -4304.27 | -35.84 | -1.04 |

| Load Combination | Vertical K | $Shear_x$ K | $Shear_z$ K | Overturning Moment, $M_x$ kip-ft | Overturning Moment, $M_z$ kip-ft | Torque kip-ft |
|---|---|---|---|---|---|---|
| 1.2 Dead+1.0 Wind 30 deg - No Ice | 74.38 | 23.35 | -39.97 | -4399.26 | -2581.12 | 0.01 |
| 0.9 Dead+1.0 Wind 30 deg - No Ice | 55.78 | 23.35 | -39.97 | -4339.82 | -2545.59 | 0.04 |
| 1.2 Dead+1.0 Wind 60 deg - No Ice | 74.38 | 40.59 | -23.42 | -2560.58 | -4447.92 | 1.50 |
| 0.9 Dead+1.0 Wind 60 deg - No Ice | 55.78 | 40.59 | -23.42 | -2526.71 | -4386.65 | 1.52 |
| 1.2 Dead+1.0 Wind 90 deg - No Ice | 74.38 | 45.16 | -0.19 | -20.12 | -5028.93 | 1.49 |
| 0.9 Dead+1.0 Wind 90 deg - No Ice | 55.78 | 45.16 | -0.19 | -21.39 | -4959.20 | 1.48 |
| 1.2 Dead+1.0 Wind 120 deg - No Ice | 74.38 | 36.68 | 20.85 | 2439.41 | -4293.62 | 0.86 |
| 0.9 Dead+1.0 Wind 120 deg - No Ice | 55.78 | 36.68 | 20.85 | 2403.46 | -4233.39 | 0.83 |
| 1.2 Dead+1.0 Wind 150 deg - No Ice | 74.38 | 20.83 | 35.96 | 4237.73 | -2450.47 | 1.19 |
| 0.9 Dead+1.0 Wind 150 deg - No Ice | 55.78 | 20.83 | 35.96 | 4176.27 | -2416.11 | 1.15 |
| 1.2 Dead+1.0 Wind 180 deg - No Ice | 74.38 | -0.29 | 34.17 | 4383.57 | 41.73 | 1.56 |
| 0.9 Dead+1.0 Wind 180 deg - No Ice | 55.78 | -0.29 | 34.17 | 4316.76 | 40.89 | 1.52 |
| 1.2 Dead+1.0 Wind 210 deg - No Ice | 74.38 | -23.35 | 39.99 | 4414.00 | 2583.06 | 0.36 |
| 0.9 Dead+1.0 Wind 210 deg - No Ice | 55.78 | -23.35 | 39.99 | 4351.24 | 2546.97 | 0.33 |
| 1.2 Dead+1.0 Wind 240 deg - No Ice | 74.38 | -40.58 | 23.43 | 2574.52 | 4448.52 | -1.18 |
| 0.9 Dead+1.0 Wind 240 deg - No Ice | 55.78 | -40.58 | 23.43 | 2537.33 | 4386.71 | -1.19 |
| 1.2 Dead+1.0 Wind 270 deg - No Ice | 74.38 | -45.15 | 0.19 | 33.12 | 5030.37 | -1.28 |
| 0.9 Dead+1.0 Wind 270 deg - No Ice | 55.78 | -45.15 | 0.19 | 31.08 | 4959.89 | -1.28 |
| 1.2 Dead+1.0 Wind 300 deg - No Ice | 74.38 | -36.67 | -20.82 | -2423.14 | 4294.10 | -0.80 |
| 0.9 Dead+1.0 Wind 300 deg - No Ice | 55.78 | -36.67 | -20.82 | -2390.53 | 4233.31 | -0.77 |
| 1.2 Dead+1.0 Wind 330 deg - No Ice | 74.38 | -20.79 | -35.99 | -4229.04 | 2448.06 | -1.46 |
| 0.9 Dead+1.0 Wind 330 deg - No Ice | 55.78 | -20.79 | -35.99 | -4170.80 | 2413.18 | -1.43 |
| 1.2 Dead+1.0 Ice+1.0 Temp | 126.92 | 0.00 | -0.00 | 25.39 | 1.86 | 0.00 |
| 1.2 Dead+1.0 Wind 0 deg+1.0 Ice+1.0 Temp | 126.92 | 0.06 | -10.34 | -1366.70 | -6.93 | -0.28 |
| 1.2 Dead+1.0 Wind 30 deg+1.0 Ice+1.0 Temp | 126.92 | 6.22 | -10.67 | -1291.38 | -767.49 | 0.17 |
| 1.2 Dead+1.0 Wind 60 deg+1.0 Ice+1.0 Temp | 126.92 | 10.52 | -6.07 | -729.83 | -1306.89 | 0.43 |
| 1.2 Dead+1.0 Wind 90 deg+1.0 Ice+1.0 Temp | 126.92 | 11.89 | -0.04 | 19.20 | -1490.31 | 0.47 |
| 1.2 Dead+1.0 Wind 120 deg+1.0 Ice+1.0 Temp | 126.92 | 9.73 | 5.54 | 748.11 | -1268.31 | 0.19 |
| 1.2 Dead+1.0 Wind 150 deg+1.0 Ice+1.0 Temp | 126.92 | 5.63 | 9.73 | 1291.38 | -730.67 | 0.31 |
| 1.2 Dead+1.0 Wind 180 deg+1.0 Ice+1.0 Temp | 126.92 | -0.06 | 10.34 | 1418.42 | 11.54 | 0.39 |
| 1.2 Dead+1.0 Wind 210 deg+1.0 Ice+1.0 Temp | 126.92 | -6.22 | 10.68 | 1343.03 | 771.25 | -0.09 |
| 1.2 Dead+1.0 Wind 240 deg+1.0 Ice+1.0 Temp | 126.92 | -10.52 | 6.08 | 781.30 | 1310.34 | -0.36 |
| 1.2 Dead+1.0 Wind 270 deg+1.0 Ice+1.0 Temp | 126.92 | -11.89 | 0.04 | 32.06 | 1493.91 | -0.43 |
| 1.2 Dead+1.0 Wind 300 deg+1.0 Ice+1.0 Temp | 126.92 | -9.72 | -5.54 | -696.11 | 1271.74 | -0.18 |
| 1.2 Dead+1.0 Wind 330 deg+1.0 Ice+1.0 Temp | 126.92 | -5.62 | -9.74 | -1241.12 | 733.44 | -0.37 |

| Load Combination | Vertical K | $Shear_x$ K | $Shear_z$ K | Overturning Moment, $M_x$ kip-ft | Overturning Moment, $M_z$ kip-ft | Torque kip-ft |
|---|---|---|---|---|---|---|
| Dead+Wind 0 deg - Service | 61.98 | 0.07 | -8.46 | -1070.41 | -8.27 | -0.27 |
| Dead+Wind 30 deg - Service | 61.98 | 5.79 | -9.90 | -1078.90 | -634.57 | -0.00 |
| Dead+Wind 60 deg - Service | 61.98 | 10.06 | -5.80 | -626.44 | -1094.00 | 0.36 |
| Dead+Wind 90 deg - Service | 61.98 | 11.19 | -0.05 | -1.25 | -1236.74 | 0.36 |
| Dead+Wind 120 deg - Service | 61.98 | 9.09 | 5.16 | 603.91 | -1055.84 | 0.20 |
| Dead+Wind 150 deg - Service | 61.98 | 5.16 | 8.91 | 1046.34 | -602.31 | 0.29 |
| Dead+Wind 180 deg - Service | 61.98 | -0.07 | 8.46 | 1081.51 | 10.86 | 0.39 |
| Dead+Wind 210 deg - Service | 61.98 | -5.79 | 9.91 | 1089.92 | 636.25 | 0.10 |
| Dead+Wind 240 deg - Service | 61.98 | -10.05 | 5.80 | 637.26 | 1095.34 | -0.28 |
| Dead+Wind 270 deg - Service | 61.98 | -11.18 | 0.05 | 11.84 | 1238.24 | -0.30 |
| Dead+Wind 300 deg - Service | 61.98 | -9.08 | -5.16 | -592.51 | 1057.14 | -0.19 |
| Dead+Wind 330 deg - Service | 61.98 | -5.15 | -8.92 | -1036.80 | 602.91 | -0.36 |

# Solution Summary

| | Sum of Applied Forces | | | Sum of Reactions | | | |
|---|---|---|---|---|---|---|---|
| Load Comb. | PX K | PY K | PZ K | PX K | PY K | PZ K | % Error |
| 1 | 0.00 | -61.98 | 0.00 | -0.00 | 61.98 | 0.00 | 0.002% |
| 2 | 0.26 | -74.38 | -34.15 | -0.26 | 74.38 | 34.15 | 0.006% |
| 3 | 0.26 | -55.78 | -34.15 | -0.26 | 55.78 | 34.14 | 0.009% |
| 4 | 23.35 | -74.38 | -39.97 | -23.35 | 74.38 | 39.97 | 0.000% |
| 5 | 23.35 | -55.78 | -39.97 | -23.35 | 55.78 | 39.97 | 0.000% |
| 6 | 40.59 | -74.38 | -23.42 | -40.59 | 74.38 | 23.42 | 0.000% |
| 7 | 40.59 | -55.78 | -23.42 | -40.59 | 55.78 | 23.42 | 0.000% |
| 8 | 45.16 | -74.38 | -0.19 | -45.16 | 74.38 | 0.19 | 0.004% |
| 9 | 45.16 | -55.78 | -0.19 | -45.16 | 55.78 | 0.19 | 0.003% |
| 10 | 36.68 | -74.38 | 20.85 | -36.68 | 74.38 | -20.85 | 0.000% |
| 11 | 36.68 | -55.78 | 20.85 | -36.68 | 55.78 | -20.85 | 0.000% |
| 12 | 20.83 | -74.38 | 35.96 | -20.83 | 74.38 | -35.96 | 0.000% |
| 13 | 20.83 | -55.78 | 35.96 | -20.83 | 55.78 | -35.96 | 0.000% |
| 14 | -0.29 | -74.38 | 34.17 | 0.29 | 74.38 | -34.17 | 0.001% |
| 15 | -0.29 | -55.78 | 34.17 | 0.29 | 55.78 | -34.17 | 0.001% |
| 16 | -23.35 | -74.38 | 39.99 | 23.35 | 74.38 | -39.99 | 0.000% |
| 17 | -23.35 | -55.78 | 39.99 | 23.35 | 55.78 | -39.99 | 0.000% |
| 18 | -40.58 | -74.38 | 23.43 | 40.58 | 74.38 | -23.43 | 0.000% |
| 19 | -40.58 | -55.78 | 23.43 | 40.58 | 55.78 | -23.43 | 0.000% |
| 20 | -45.16 | -74.38 | 0.19 | 45.15 | 74.38 | -0.19 | 0.002% |
| 21 | -45.16 | -55.78 | 0.19 | 45.15 | 55.78 | -0.19 | 0.003% |
| 22 | -36.67 | -74.38 | -20.82 | 36.67 | 74.38 | 20.82 | 0.000% |
| 23 | -36.67 | -55.78 | -20.82 | 36.67 | 55.78 | 20.82 | 0.000% |
| 24 | -20.79 | -74.38 | -35.99 | 20.79 | 74.38 | 35.99 | 0.000% |
| 25 | -20.79 | -55.78 | -35.99 | 20.79 | 55.78 | 35.99 | 0.000% |
| 26 | 0.00 | -126.92 | 0.00 | -0.00 | 126.92 | 0.00 | 0.000% |
| 27 | 0.06 | -126.92 | -10.34 | -0.06 | 126.92 | 10.34 | 0.000% |
| 28 | 6.22 | -126.92 | -10.67 | -6.22 | 126.92 | 10.67 | 0.000% |
| 29 | 10.52 | -126.92 | -6.08 | -10.52 | 126.92 | 6.07 | 0.000% |
| 30 | 11.89 | -126.92 | -0.04 | -11.89 | 126.92 | 0.04 | 0.000% |
| 31 | 9.73 | -126.92 | 5.54 | -9.73 | 126.92 | -5.54 | 0.000% |
| 32 | 5.63 | -126.92 | 9.73 | -5.63 | 126.92 | -9.73 | 0.000% |
| 33 | -0.06 | -126.92 | 10.35 | 0.06 | 126.92 | -10.34 | 0.000% |
| 34 | -6.22 | -126.92 | 10.68 | 6.22 | 126.92 | -10.68 | 0.000% |
| 35 | -10.52 | -126.92 | 6.08 | 10.52 | 126.92 | -6.08 | 0.000% |
| 36 | -11.89 | -126.92 | 0.04 | 11.89 | 126.92 | -0.04 | 0.000% |
| 37 | -9.72 | -126.92 | -5.54 | 9.72 | 126.92 | 5.54 | 0.000% |
| 38 | -5.62 | -126.92 | -9.74 | 5.62 | 126.92 | 9.74 | 0.000% |
| 39 | 0.07 | -61.98 | -8.46 | -0.07 | 61.98 | 8.46 | 0.003% |
| 40 | 5.79 | -61.98 | -9.90 | -5.79 | 61.98 | 9.90 | 0.001% |

| Load Comb. | Sum of Applied Forces PX K | PY K | PZ K | Sum of Reactions PX K | PY K | PZ K | % Error |
|---|---|---|---|---|---|---|---|
| 41 | 10.06 | -61.98 | -5.80 | -10.06 | 61.98 | 5.80 | 0.001% |
| 42 | 11.19 | -61.98 | -0.05 | -11.19 | 61.98 | 0.05 | 0.003% |
| 43 | 9.09 | -61.98 | 5.16 | -9.09 | 61.98 | -5.16 | 0.001% |
| 44 | 5.16 | -61.98 | 8.91 | -5.16 | 61.98 | -8.91 | 0.001% |
| 45 | -0.07 | -61.98 | 8.47 | 0.07 | 61.98 | -8.46 | 0.003% |
| 46 | -5.79 | -61.98 | 9.91 | 5.79 | 61.98 | -9.91 | 0.001% |
| 47 | -10.05 | -61.98 | 5.80 | 10.05 | 61.98 | -5.80 | 0.001% |
| 48 | -11.19 | -61.98 | 0.05 | 11.18 | 61.98 | -0.05 | 0.003% |
| 49 | -9.08 | -61.98 | -5.16 | 9.08 | 61.98 | 5.16 | 0.001% |
| 50 | -5.15 | -61.98 | -8.92 | 5.15 | 61.98 | 8.92 | 0.001% |

# Non-Linear Convergence Results

| Load Combination | Converged? | Number of Cycles | Displacement Tolerance | Force Tolerance |
|---|---|---|---|---|
| 1 | Yes | 6 | 0.00000001 | 0.00000677 |
| 2 | Yes | 19 | 0.00007353 | 0.00010570 |
| 3 | Yes | 18 | 0.00008423 | 0.00011947 |
| 4 | Yes | 28 | 0.00000001 | 0.00000000 |
| 5 | Yes | 27 | 0.00000001 | 0.00000000 |
| 6 | Yes | 28 | 0.00000001 | 0.00000000 |
| 7 | Yes | 27 | 0.00000001 | 0.00000000 |
| 8 | Yes | 20 | 0.00004116 | 0.00013268 |
| 9 | Yes | 20 | 0.00002617 | 0.00010213 |
| 10 | Yes | 28 | 0.00000001 | 0.00000000 |
| 11 | Yes | 27 | 0.00000001 | 0.00000000 |
| 12 | Yes | 28 | 0.00000001 | 0.00000000 |
| 13 | Yes | 27 | 0.00000001 | 0.00000000 |
| 14 | Yes | 23 | 0.00000001 | 0.00009957 |
| 15 | Yes | 22 | 0.00000001 | 0.00012903 |
| 16 | Yes | 28 | 0.00000001 | 0.00000000 |
| 17 | Yes | 27 | 0.00000001 | 0.00000000 |
| 18 | Yes | 28 | 0.00000001 | 0.00000000 |
| 19 | Yes | 27 | 0.00000001 | 0.00000000 |
| 20 | Yes | 21 | 0.00002325 | 0.00010538 |
| 21 | Yes | 20 | 0.00002617 | 0.00012589 |
| 22 | Yes | 28 | 0.00000001 | 0.00000000 |
| 23 | Yes | 27 | 0.00000001 | 0.00000000 |
| 24 | Yes | 28 | 0.00000001 | 0.00000000 |
| 25 | Yes | 27 | 0.00000001 | 0.00000000 |
| 26 | Yes | 16 | 0.00000001 | 0.00011004 |
| 27 | Yes | 25 | 0.00000001 | 0.00011891 |
| 28 | Yes | 26 | 0.00000001 | 0.00011917 |
| 29 | Yes | 26 | 0.00000001 | 0.00011778 |
| 30 | Yes | 25 | 0.00000001 | 0.00012362 |
| 31 | Yes | 26 | 0.00000001 | 0.00011873 |
| 32 | Yes | 26 | 0.00000001 | 0.00011797 |
| 33 | Yes | 25 | 0.00000001 | 0.00012232 |
| 34 | Yes | 26 | 0.00000001 | 0.00012498 |
| 35 | Yes | 26 | 0.00000001 | 0.00012373 |
| 36 | Yes | 25 | 0.00000001 | 0.00012491 |
| 37 | Yes | 26 | 0.00000001 | 0.00011467 |
| 38 | Yes | 26 | 0.00000001 | 0.00011616 |
| 39 | Yes | 18 | 0.00010928 | 0.00005455 |
| 40 | Yes | 21 | 0.00000001 | 0.00013678 |
| 41 | Yes | 21 | 0.00000001 | 0.00014041 |
| 42 | Yes | 18 | 0.00010820 | 0.00004719 |
| 43 | Yes | 21 | 0.00000001 | 0.00013414 |
| 44 | Yes | 21 | 0.00000001 | 0.00012936 |
| 45 | Yes | 18 | 0.00010924 | 0.00008709 |
| 46 | Yes | 21 | 0.00000001 | 0.00014801 |
| 47 | Yes | 21 | 0.00000001 | 0.00014152 |
| 48 | Yes | 18 | 0.00010830 | 0.00004794 |
| 49 | Yes | 21 | 0.00000001 | 0.00013111 |
| 50 | Yes | 21 | 0.00000001 | 0.00013571 |

## Maximum Tower Deflections - Service Wind

| Section No. | Elevation ft | Horz. Deflection in | Gov. Load Comb. | Tilt ° | Twist ° |
|---|---|---|---|---|---|
| L1 | 169 - 164 | 40.036 | 47 | 2.5344 | 0.0063 |
| L2 | 164 - 159 | 37.383 | 47 | 2.5326 | 0.0062 |
| L3 | 159 - 154 | 34.742 | 47 | 2.5105 | 0.0056 |
| L4 | 154 - 149 | 32.142 | 47 | 2.4520 | 0.0050 |
| L5 | 149 - 144 | 29.619 | 47 | 2.3650 | 0.0045 |
| L6 | 144 - 139 | 27.199 | 47 | 2.2563 | 0.0041 |
| L7 | 139 - 133.33 | 24.902 | 47 | 2.1299 | 0.0037 |
| L8 | 136.66 - 131.66 | 23.874 | 47 | 2.0659 | 0.0035 |
| L9 | 131.66 - 126.66 | 21.750 | 47 | 1.9768 | 0.0033 |
| L10 | 126.66 - 121.66 | 19.752 | 47 | 1.8386 | 0.0030 |
| L11 | 121.66 - 116.66 | 17.903 | 47 | 1.6927 | 0.0024 |
| L12 | 116.66 - 111.66 | 16.210 | 47 | 1.5410 | 0.0018 |
| L13 | 111.66 - 111 | 14.678 | 47 | 1.3857 | 0.0014 |
| L14 | 111 - 110.75 | 14.487 | 47 | 1.3652 | 0.0013 |
| L15 | 110.75 - 105.75 | 14.416 | 47 | 1.3608 | 0.0013 |
| L16 | 105.75 - 101.5 | 13.039 | 47 | 1.2698 | 0.0011 |
| L17 | 101.5 - 101.25 | 11.944 | 47 | 1.1890 | 0.0010 |
| L18 | 101.25 - 101 | 11.882 | 47 | 1.1862 | 0.0010 |
| L19 | 101 - 100.75 | 11.820 | 47 | 1.1834 | 0.0010 |
| L20 | 100.75 - 95.75 | 11.758 | 47 | 1.1797 | 0.0010 |
| L21 | 95.75 - 87.83 | 10.563 | 47 | 1.1039 | 0.0009 |
| L22 | 92.16 - 86.83 | 9.754 | 47 | 1.0481 | 0.0008 |
| L23 | 86.83 - 81.83 | 8.605 | 47 | 1.0049 | 0.0007 |
| L24 | 81.83 - 81.5 | 7.587 | 47 | 0.9405 | 0.0006 |
| L25 | 81.5 - 81.25 | 7.522 | 47 | 0.9362 | 0.0006 |
| L26 | 81.25 - 76.25 | 7.473 | 47 | 0.9331 | 0.0006 |
| L27 | 76.25 - 71.25 | 6.529 | 47 | 0.8689 | 0.0006 |
| L28 | 71.25 - 66.25 | 5.654 | 47 | 0.8035 | 0.0005 |
| L29 | 66.25 - 61.25 | 4.847 | 47 | 0.7370 | 0.0004 |
| L30 | 61.25 - 56.25 | 4.111 | 47 | 0.6702 | 0.0004 |
| L31 | 56.25 - 51.25 | 3.444 | 47 | 0.6032 | 0.0003 |
| L32 | 51.25 - 43.33 | 2.848 | 47 | 0.5352 | 0.0003 |
| L33 | 48.66 - 42.33 | 2.567 | 47 | 0.5003 | 0.0003 |
| L34 | 42.33 - 37.4 | 1.930 | 47 | 0.4560 | 0.0002 |
| L35 | 37.4 - 37.15 | 1.488 | 47 | 0.3998 | 0.0002 |
| L36 | 37.15 - 32.15 | 1.467 | 47 | 0.3970 | 0.0002 |
| L37 | 32.15 - 27.15 | 1.082 | 47 | 0.3397 | 0.0002 |
| L38 | 27.15 - 22.15 | 0.756 | 47 | 0.2819 | 0.0001 |
| L39 | 22.15 - 19.5 | 0.491 | 47 | 0.2244 | 0.0001 |
| L40 | 19.5 - 19.25 | 0.375 | 47 | 0.1939 | 0.0001 |
| L41 | 19.25 - 14.25 | 0.365 | 47 | 0.1913 | 0.0001 |
| L42 | 14.25 - 9.25 | 0.193 | 47 | 0.1372 | 0.0001 |
| L43 | 9.25 - 9 | 0.077 | 47 | 0.0841 | 0.0000 |
| L44 | 9 - 8.75 | 0.073 | 47 | 0.0815 | 0.0000 |
| L45 | 8.75 - 7 | 0.069 | 47 | 0.0789 | 0.0000 |
| L46 | 7 - 6.75 | 0.043 | 47 | 0.0612 | 0.0000 |
| L47 | 6.75 - 5 | 0.040 | 47 | 0.0585 | 0.0000 |
| L48 | 5 - 4.75 | 0.022 | 47 | 0.0401 | 0.0000 |
| L49 | 4.75 - 3 | 0.020 | 47 | 0.0382 | 0.0000 |
| L50 | 3 - 2.75 | 0.008 | 47 | 0.0253 | 0.0000 |
| L51 | 2.75 - 2.25 | 0.007 | 47 | 0.0235 | 0.0000 |
| L52 | 2.25 - 2 | 0.005 | 47 | 0.0198 | 0.0000 |
| L53 | 2 - 0 | 0.004 | 47 | 0.0176 | 0.0000 |

## Critical Deflections and Radius of Curvature - Service Wind

| Elevation ft | Appurtenance | Gov. Load Comb. | Deflection in | Tilt ° | Twist ° | Radius of Curvature ft |
|---|---|---|---|---|---|---|
| 165.00 | AIR6449 B41_T-MOBILE w/ Mount Pipe | 47 | 37.913 | 2.5339 | 0.0063 | 27768 |
| 160.00 | HPA-65R-BUU-H8 w/ Mount Pipe | 47 | 35.268 | 2.5176 | 0.0057 | 8735 |
| 148.00 | NNVV-65B-R4 w/ Mount Pipe | 47 | 29.126 | 2.3447 | 0.0044 | 2819 |
| 138.00 | MX08FRO665-21 | 47 | 24.459 | 2.1013 | 0.0036 | 2540 |
| 128.00 | VHLP800-11 | 47 | 20.274 | 1.8791 | 0.0031 | 2074 |
| 124.00 | LLPX310R w/ Mount Pipe | 47 | 18.749 | 1.7608 | 0.0027 | 1958 |
| 118.00 | CXL 900-3LW | 47 | 16.648 | 1.5814 | 0.0020 | 1883 |
| 111.00 | MT6407-77A w/ Mount Pipe | 47 | 14.487 | 1.3652 | 0.0013 | 2332 |

# Maximum Tower Deflections - Design Wind

| Section No. | Elevation ft | Horz. Deflection in | Gov. Load Comb. | Tilt ° | Twist ° |
|---|---|---|---|---|---|
| L1 | 169 - 164 | 161.679 | 18 | 10.2526 | 0.0271 |
| L2 | 164 - 159 | 151.042 | 18 | 10.2472 | 0.0266 |
| L3 | 159 - 154 | 140.442 | 18 | 10.1657 | 0.0239 |
| L4 | 154 - 149 | 129.999 | 18 | 9.9346 | 0.0216 |
| L5 | 149 - 144 | 119.855 | 18 | 9.5871 | 0.0195 |
| L6 | 144 - 139 | 110.112 | 18 | 9.1508 | 0.0176 |
| L7 | 139 - 133.33 | 100.856 | 18 | 8.6416 | 0.0159 |
| L8 | 136.66 - 131.66 | 96.710 | 18 | 8.3835 | 0.0151 |
| L9 | 131.66 - 126.66 | 88.139 | 18 | 8.0233 | 0.0141 |
| L10 | 126.66 - 121.66 | 80.069 | 18 | 7.4640 | 0.0124 |
| L11 | 121.66 - 116.66 | 72.594 | 18 | 6.8731 | 0.0098 |
| L12 | 116.66 - 111.66 | 65.743 | 18 | 6.2581 | 0.0075 |
| L13 | 111.66 - 111 | 59.538 | 18 | 5.6283 | 0.0056 |
| L14 | 111 - 110.75 | 58.768 | 18 | 5.5450 | 0.0053 |
| L15 | 110.75 - 105.75 | 58.478 | 18 | 5.5273 | 0.0053 |
| L16 | 105.75 - 101.5 | 52.897 | 18 | 5.1576 | 0.0045 |
| L17 | 101.5 - 101.25 | 48.462 | 18 | 4.8297 | 0.0040 |
| L18 | 101.25 - 101 | 48.210 | 18 | 4.8184 | 0.0039 |
| L19 | 101 - 100.75 | 47.958 | 18 | 4.8070 | 0.0039 |
| L20 | 100.75 - 95.75 | 47.707 | 18 | 4.7920 | 0.0039 |
| L21 | 95.75 - 87.83 | 42.859 | 18 | 4.4839 | 0.0034 |
| L22 | 92.16 - 86.83 | 39.579 | 18 | 4.2572 | 0.0031 |
| L23 | 86.83 - 81.83 | 34.920 | 18 | 4.0819 | 0.0029 |
| L24 | 81.83 - 81.5 | 30.788 | 18 | 3.8200 | 0.0026 |
| L25 | 81.5 - 81.25 | 30.525 | 18 | 3.8028 | 0.0025 |
| L26 | 81.25 - 76.25 | 30.327 | 18 | 3.7901 | 0.0025 |
| L27 | 76.25 - 71.25 | 26.499 | 18 | 3.5293 | 0.0022 |
| L28 | 71.25 - 66.25 | 22.946 | 18 | 3.2636 | 0.0020 |
| L29 | 66.25 - 61.25 | 19.673 | 18 | 2.9932 | 0.0017 |
| L30 | 61.25 - 56.25 | 16.683 | 18 | 2.7218 | 0.0015 |
| L31 | 56.25 - 51.25 | 13.977 | 18 | 2.4496 | 0.0013 |
| L32 | 51.25 - 43.33 | 11.558 | 18 | 2.1731 | 0.0011 |
| L33 | 48.66 - 42.33 | 10.418 | 18 | 2.0313 | 0.0010 |
| L34 | 42.33 - 37.4 | 7.833 | 18 | 1.8515 | 0.0009 |
| L35 | 37.4 - 37.15 | 6.039 | 18 | 1.6232 | 0.0008 |
| L36 | 37.15 - 32.15 | 5.955 | 18 | 1.6117 | 0.0008 |
| L37 | 32.15 - 27.15 | 4.389 | 18 | 1.3788 | 0.0006 |
| L38 | 27.15 - 22.15 | 3.069 | 18 | 1.1442 | 0.0005 |
| L39 | 22.15 - 19.5 | 1.993 | 18 | 0.9107 | 0.0004 |
| L40 | 19.5 - 19.25 | 1.522 | 18 | 0.7871 | 0.0003 |
| L41 | 19.25 - 14.25 | 1.481 | 18 | 0.7763 | 0.0003 |
| L42 | 14.25 - 9.25 | 0.784 | 18 | 0.5568 | 0.0002 |
| L43 | 9.25 - 9 | 0.314 | 18 | 0.3412 | 0.0001 |
| L44 | 9 - 8.75 | 0.296 | 18 | 0.3305 | 0.0001 |
| L45 | 8.75 - 7 | 0.279 | 18 | 0.3201 | 0.0001 |
| L46 | 7 - 6.75 | 0.175 | 18 | 0.2482 | 0.0001 |
| L47 | 6.75 - 5 | 0.162 | 18 | 0.2373 | 0.0001 |
| L48 | 5 - 4.75 | 0.089 | 18 | 0.1625 | 0.0001 |
| L49 | 4.75 - 3 | 0.081 | 18 | 0.1550 | 0.0001 |

| Section No. | Elevation ft | Horz. Deflection in | Gov. Load Comb. | Tilt ° | Twist ° |
|---|---|---|---|---|---|
| L50 | 3 - 2.75 | 0.033 | 18 | 0.1025 | 0.0000 |
| L51 | 2.75 - 2.25 | 0.028 | 18 | 0.0951 | 0.0000 |
| L52 | 2.25 - 2 | 0.019 | 18 | 0.0803 | 0.0000 |
| L53 | 2 - 0 | 0.015 | 18 | 0.0715 | 0.0000 |

## Critical Deflections and Radius of Curvature - Design Wind

| Elevation ft | Appurtenance | Gov. Load Comb. | Deflection in | Tilt ° | Twist ° | Radius of Curvature ft |
|---|---|---|---|---|---|---|
| 165.00 | AIR6449 B41_T-MOBILE w/ Mount Pipe | 18 | 153.169 | 10.2516 | 0.0268 | 8574 |
| 160.00 | HPA-65R-BUU-H8 w/ Mount Pipe | 18 | 142.554 | 10.1929 | 0.0245 | 2420 |
| 148.00 | NNVV-65B-R4 w/ Mount Pipe | 18 | 117.872 | 9.5059 | 0.0191 | 740 |
| 138.00 | MX08FRO665-21 | 18 | 99.072 | 8.5262 | 0.0155 | 657 |
| 128.00 | VHLP800-11 | 18 | 82.176 | 7.6282 | 0.0130 | 530 |
| 124.00 | LLPX310R w/ Mount Pipe | 18 | 76.016 | 7.1492 | 0.0110 | 498 |
| 118.00 | CXL 900-3LW | 18 | 67.517 | 6.4220 | 0.0081 | 476 |
| 111.00 | MT6407-77A w/ Mount Pipe | 18 | 58.768 | 5.5450 | 0.0053 | 586 |

## *Compression Checks*

## Pole Design Data

| Section No. | Elevation ft | Size | L ft | $L_u$ ft | Kl/r | A $in^2$ | $P_u$ K |
|---|---|---|---|---|---|---|---|
| L1 | 169 - 164 (1) | TP16.4546x15.5x0.25 | 5.00 | 0.00 | 0.0 | 12.8583 | -3.29 |
| L2 | 164 - 159 (2) | TP17.4092x16.4546x0.25 | 5.00 | 0.00 | 0.0 | 13.6158 | -6.14 |
| L3 | 159 - 154 (3) | TP18.3638x17.4092x0.25 | 5.00 | 0.00 | 0.0 | 14.3733 | -6.54 |
| L4 | 154 - 149 (4) | TP19.3183x18.3638x0.25 | 5.00 | 0.00 | 0.0 | 15.1307 | -6.99 |
| L5 | 149 - 144 (5) | TP20.2729x19.3183x0.25 | 5.00 | 0.00 | 0.0 | 15.8882 | -8.61 |
| L6 | 144 - 139 (6) | TP21.2275x20.2729x0.25 | 5.00 | 0.00 | 0.0 | 16.6456 | -9.17 |
| L7 | 139 - 133.33 (7) | TP22.31x21.2275x0.25 | 5.67 | 0.00 | 0.0 | 17.0001 | -12.08 |
| L8 | 133.33 - 131.66 (8) | TP22.1148x21.1742x0.3125 | 5.00 | 0.00 | 0.0 | 21.6252 | -12.95 |
| L9 | 131.66 - 126.66 (9) | TP23.0554x22.1148x0.3125 | 5.00 | 0.00 | 0.0 | 22.5581 | -13.66 |
| L10 | 126.66 - 121.66 (10) | TP23.996x23.0554x0.3125 | 5.00 | 0.00 | 0.0 | 23.4911 | -14.99 |
| L11 | 121.66 - 116.66 (11) | TP24.9366x23.996x0.3125 | 5.00 | 0.00 | 0.0 | 24.4240 | -15.86 |
| L12 | 116.66 - 111.66 (12) | TP25.8772x24.9366x0.3125 | 5.00 | 0.00 | 0.0 | 25.3570 | -16.73 |
| L13 | 111.66 - 111 (13) | TP26.0013x25.8772x0.3125 | 0.66 | 0.00 | 0.0 | 25.4801 | -16.86 |
| L14 | 111 - 110.75 (14) | TP26.0484x26.0013x0.575 | 0.25 | 0.00 | 0.0 | 46.4902 | -20.17 |
| L15 | 110.75 - 105.75 (15) | TP26.9889x26.0484x0.5625 | 5.00 | 0.00 | 0.0 | 47.1811 | -21.38 |
| L16 | 105.75 - 101.5 (16) | TP27.7884x26.9889x0.55 | 4.25 | 0.00 | 0.0 | 47.5501 | -22.46 |
| L17 | 101.5 - 101.25 (17) | TP27.8355x27.7884x0.9875 | 0.25 | 0.00 | 0.0 | 84.1503 | -22.57 |
| L18 | 101.25 - 101 (18) | TP27.8825x27.8355x0.9875 | 0.25 | 0.00 | 0.0 | 84.2977 | -22.66 |
| L19 | 101 - 100.75 (19) | TP27.9295x27.8825x0.725 | 0.25 | 0.00 | 0.0 | 62.6017 | -22.73 |

| Section No. | Elevation ft | Size | L ft | $L_u$ ft | Kl/r | A $in^2$ | $P_u$ K |
|---|---|---|---|---|---|---|---|
| L20 | 100.75 - 95.75 (20) | TP28.8701x27.9295x0.7125 | 5.00 | 0.00 | 0.0 | 63.6777 | -24.22 |
| L21 | 95.75 - 87.83 (21) | TP30.36x28.8701x0.7 | 7.92 | 0.00 | 0.0 | 64.0888 | -25.32 |
| L22 | 87.83 - 86.83 (22) | TP29.9235x28.9205x0.9375 | 5.33 | 0.00 | 0.0 | 86.2516 | -28.34 |
| L23 | 86.83 - 81.83 (23) | TP30.8645x29.9235x0.925 | 5.00 | 0.00 | 0.0 | 87.9009 | -30.27 |
| L24 | 81.83 - 81.5 (24) | TP30.9266x30.8645x0.925 | 0.33 | 0.00 | 0.0 | 88.0832 | -30.41 |
| L25 | 81.5 - 81.25 (25) | TP30.9737x30.9266x0.95 | 0.25 | 0.00 | 0.0 | 90.5303 | -30.51 |
| L26 | 81.25 - 76.25 (26) | TP31.9146x30.9737x0.925 | 5.00 | 0.00 | 0.0 | 90.9840 | -32.50 |
| L27 | 76.25 - 71.25 (27) | TP32.8556x31.9146x0.9 | 5.00 | 0.00 | 0.0 | 91.2844 | -34.53 |
| L28 | 71.25 - 66.25 (28) | TP33.7966x32.8556x0.875 | 5.00 | 0.00 | 0.0 | 91.4314 | -36.60 |
| L29 | 66.25 - 61.25 (29) | TP34.7376x33.7966x0.8625 | 5.00 | 0.00 | 0.0 | 92.7355 | -38.70 |
| L30 | 61.25 - 56.25 (30) | TP35.6785x34.7376x0.85 | 5.00 | 0.00 | 0.0 | 93.9639 | -40.84 |
| L31 | 56.25 - 51.25 (31) | TP36.6195x35.6785x0.825 | 5.00 | 0.00 | 0.0 | 93.7297 | -43.01 |
| L32 | 51.25 - 43.33 (32) | TP38.11x36.6195x0.825 | 7.92 | 0.00 | 0.0 | 95.0060 | -44.14 |
| L33 | 43.33 - 42.33 (33) | TP37.5463x36.3569x1.0375 | 6.33 | 0.00 | 0.0 | 120.2240 | -49.38 |
| L34 | 42.33 - 37.4 (34) | TP38.4726x37.5463x1.025 | 4.93 | 0.00 | 0.0 | 121.8300 | -52.03 |
| L35 | 37.4 - 37.15 (35) | TP38.5196x38.4726x1.025 | 0.25 | 0.00 | 0.0 | 121.9830 | -52.18 |
| L36 | 37.15 - 32.15 (36) | TP39.4591x38.5196x1 | 5.00 | 0.00 | 0.0 | 122.0690 | -54.89 |
| L37 | 32.15 - 27.15 (37) | TP40.3986x39.4591x0.975 | 5.00 | 0.00 | 0.0 | 122.0020 | -57.65 |
| L38 | 27.15 - 22.15 (38) | TP41.3381x40.3986x0.9625 | 5.00 | 0.00 | 0.0 | 123.3460 | -60.44 |
| L39 | 22.15 - 19.5 (39) | TP41.836x41.3381x0.95 | 2.65 | 0.00 | 0.0 | 123.2840 | -61.93 |
| L40 | 19.5 - 19.25 (40) | TP41.883x41.836x1.025 | 0.25 | 0.00 | 0.0 | 132.9250 | -62.10 |
| L41 | 19.25 - 14.25 (41) | TP42.8225x41.883x1 | 5.00 | 0.00 | 0.0 | 132.7450 | -65.08 |
| L42 | 14.25 - 9.25 (42) | TP43.762x42.8225x1 | 5.00 | 0.00 | 0.0 | 135.7260 | -68.10 |
| L43 | 9.25 - 9 (43) | TP43.8089x43.762x1 | 0.25 | 0.00 | 0.0 | 135.8760 | -68.27 |
| L44 | 9 - 8.75 (44) | TP43.8559x43.8089x1.025 | 0.25 | 0.00 | 0.0 | 139.3440 | -68.42 |
| L45 | 8.75 - 7 (45) | TP44.1847x43.8559x1.025 | 1.75 | 0.00 | 0.0 | 140.4140 | -69.50 |
| L46 | 7 - 6.75 (46) | TP44.2317x44.1847x0.975 | 0.25 | 0.00 | 0.0 | 133.8640 | -69.68 |
| L47 | 6.75 - 5 (47) | TP44.5605x44.2317x0.975 | 1.75 | 0.00 | 0.0 | 134.8820 | -70.73 |
| L48 | 5 - 4.75 (48) | TP44.6075x44.5605x1.45 | 0.25 | 0.00 | 0.0 | 198.6240 | -70.95 |
| L49 | 4.75 - 3 (49) | TP44.9363x44.6075x1.425 | 1.75 | 0.00 | 0.0 | 196.7990 | -72.27 |
| L50 | 3 - 2.75 (50) | TP44.9833x44.9363x1.45 | 0.25 | 0.00 | 0.0 | 200.3530 | -72.49 |
| L51 | 2.75 - 2.25 (51) | TP45.0772x44.9833x1.45 | 0.50 | 0.00 | 0.0 | 200.7860 | -72.88 |
| L52 | 2.25 - 2 (52) | TP45.1242x45.0772x1.2 | 0.25 | 0.00 | 0.0 | 167.2990 | -73.05 |
| L53 | 2 - 0 (53) | TP45.5x45.1242x1.175 | 2.00 | 0.00 | 0.0 | 165.3080 | -74.36 |

# Pole Bending Design Data

| Section No. | Elevation ft | Size | $M_{ux}$ kip-ft |
|---|---|---|---|
| L1 | 169 - 164 (1) | TP16.4546x15.5x0.25 | 10.08 |

| Section No. | Elevation ft | Size | $M_{ux}$ kip-ft |
|---|---|---|---|
| L2 | 164 - 159 (2) | TP17.4092x16.4546x0.25 | 56.68 |
| L3 | 159 - 154 (3) | TP18.3638x17.4092x0.25 | 123.81 |
| L4 | 154 - 149 (4) | TP19.3183x18.3638x0.25 | 192.47 |
| L5 | 149 - 144 (5) | TP20.2729x19.3183x0.25 | 269.69 |
| L6 | 144 - 139 (6) | TP21.2275x20.2729x0.25 | 350.14 |
| L7 | 139 - 133.33 (7) | TP22.31x21.2275x0.25 | 393.06 |
| L8 | 133.33 - 131.66 (8) | TP22.1148x21.1742x0.3125 | 493.83 |
| L9 | 131.66 - 126.66 (9) | TP23.0554x22.1148x0.3125 | 597.00 |
| L10 | 126.66 - 121.66 (10) | TP23.996x23.0554x0.3125 | 707.86 |
| L11 | 121.66 - 116.66 (11) | TP24.9366x23.996x0.3125 | 820.38 |
| L12 | 116.66 - 111.66 (12) | TP25.8772x24.9366x0.3125 | 934.33 |
| L13 | 111.66 - 111 (13) | TP26.0013x25.8772x0.3125 | 949.46 |
| L14 | 111 - 110.75 (14) | TP26.0484x26.0013x0.575 | 956.14 |
| L15 | 110.75 - 105.75 (15) | TP26.9889x26.0484x0.5625 | 1095.78 |
| L16 | 105.75 - 101.5 (16) | TP27.7884x26.9889x0.55 | 1218.10 |
| L17 | 101.5 - 101.25 (17) | TP27.8355x27.7884x0.9875 | 1225.40 |
| L18 | 101.25 - 101 (18) | TP27.8825x27.8355x0.9875 | 1232.72 |
| L19 | 101 - 100.75 (19) | TP27.9295x27.8825x0.725 | 1240.03 |
| L20 | 100.75 - 95.75 (20) | TP28.8701x27.9295x0.7125 | 1389.03 |
| L21 | 95.75 - 87.83 (21) | TP30.36x28.8701x0.7 | 1498.93 |
| L22 | 87.83 - 86.83 (22) | TP29.9235x28.9205x0.9375 | 1667.10 |
| L23 | 86.83 - 81.83 (23) | TP30.8645x29.9235x0.925 | 1830.22 |
| L24 | 81.83 - 81.5 (24) | TP30.9266x30.8645x0.925 | 1841.17 |
| L25 | 81.5 - 81.25 (25) | TP30.9737x30.9266x0.95 | 1849.47 |
| L26 | 81.25 - 76.25 (26) | TP31.9146x30.9737x0.925 | 2018.02 |
| L27 | 76.25 - 71.25 (27) | TP32.8556x31.9146x0.9 | 2191.32 |
| L28 | 71.25 - 66.25 (28) | TP33.7966x32.8556x0.875 | 2369.31 |
| L29 | 66.25 - 61.25 (29) | TP34.7376x33.7966x0.8625 | 2551.90 |
| L30 | 61.25 - 56.25 (30) | TP35.6785x34.7376x0.85 | 2739.01 |
| L31 | 56.25 - 51.25 (31) | TP36.6195x35.6785x0.825 | 2930.55 |
| L32 | 51.25 - 43.33 (32) | TP38.11x36.6195x0.825 | 3031.48 |
| L33 | 43.33 - 42.33 (33) | TP37.5463x36.3569x1.0375 | 3283.81 |
| L34 | 42.33 - 37.4 (34) | TP38.4726x37.5463x1.025 | 3485.60 |
| L35 | 37.4 - 37.15 (35) | TP38.5196x38.4726x1.025 | 3495.95 |
| L36 | 37.15 - 32.15 (36) | TP39.4591x38.5196x1 | 3705.07 |
| L37 | 32.15 - 27.15 (37) | TP40.3986x39.4591x0.975 | 3918.28 |
| L38 | 27.15 - 22.15 (38) | TP41.3381x40.3986x0.9625 | 4135.38 |

| Section No. | Elevation ft | Size | $M_{ux}$ kip-ft |
|---|---|---|---|
| L39 | 22.15 - 19.5 (39) | TP41.836x41.3381x0.95 | 4251.95 |
| L40 | 19.5 - 19.25 (40) | TP41.883x41.836x1.025 | 4263.01 |
| L41 | 19.25 - 14.25 (41) | TP42.8225x41.883x1 | 4485.86 |
| L42 | 14.25 - 9.25 (42) | TP43.762x42.8225x1 | 4712.13 |
| L43 | 9.25 - 9 (43) | TP43.8089x43.762x1 | 4723.54 |
| L44 | 9 - 8.75 (44) | TP43.8559x43.8089x1.025 | 4734.95 |
| L45 | 8.75 - 7 (45) | TP44.1847x43.8559x1.025 | 4815.07 |
| L46 | 7 - 6.75 (46) | TP44.2317x44.1847x0.975 | 4826.54 |
| L47 | 6.75 - 5 (47) | TP44.5605x44.2317x0.975 | 4907.13 |
| L48 | 5 - 4.75 (48) | TP44.6075x44.5605x1.45 | 4918.68 |
| L49 | 4.75 - 3 (49) | TP44.9363x44.6075x1.425 | 4999.76 |
| L50 | 3 - 2.75 (50) | TP44.9833x44.9363x1.45 | 5011.38 |
| L51 | 2.75 - 2.25 (51) | TP45.0772x44.9833x1.45 | 5034.64 |
| L52 | 2.25 - 2 (52) | TP45.1242x45.0772x1.2 | 5046.29 |
| L53 | 2 - 0 (53) | TP45.5x45.1242x1.175 | 5139.80 |

# Pole Shear Design Data

| Section No. | Elevation ft | Size | Actual $V_u$ K |
|---|---|---|---|
| L1 | 169 - 164 (1) | TP16.4546x15.5x0.25 | 5.63 |
| L2 | 164 - 159 (2) | TP17.4092x16.4546x0.25 | 13.27 |
| L3 | 159 - 154 (3) | TP18.3638x17.4092x0.25 | 13.58 |
| L4 | 154 - 149 (4) | TP19.3183x18.3638x0.25 | 13.89 |
| L5 | 149 - 144 (5) | TP20.2729x19.3183x0.25 | 15.95 |
| L6 | 144 - 139 (6) | TP21.2275x20.2729x0.25 | 16.24 |
| L7 | 139 - 133.33 (7) | TP22.31x21.2275x0.25 | 19.98 |
| L8 | 133.33 - 131.66 (8) | TP22.1148x21.1742x0.3125 | 20.33 |
| L9 | 131.66 - 126.66 (9) | TP23.0554x22.1148x0.3125 | 21.24 |
| L10 | 126.66 - 121.66 (10) | TP23.996x23.0554x0.3125 | 22.38 |
| L11 | 121.66 - 116.66 (11) | TP24.9366x23.996x0.3125 | 22.68 |
| L12 | 116.66 - 111.66 (12) | TP25.8772x24.9366x0.3125 | 22.92 |
| L13 | 111.66 - 111 (13) | TP26.0013x25.8772x0.3125 | 22.95 |
| L14 | 111 - 110.75 (14) | TP26.0484x26.0013x0.575 | 27.49 |
| L15 | 110.75 - 105.75 (15) | TP26.9889x26.0484x0.5625 | 28.39 |
| L16 | 105.75 - 101.5 (16) | TP27.7884x26.9889x0.55 | 29.17 |
| L17 | 101.5 - 101.25 (17) | TP27.8355x27.7884x0.9875 | 29.25 |
| L18 | 101.25 - 101 (18) | TP27.8825x27.8355x0.9875 | 29.30 |
| L19 | 101 - 100.75 (19) | TP27.9295x27.8825x0.725 | 29.34 |
| L20 | 100.75 - 95.75 (20) | TP28.8701x27.9295x0.7125 | 30.27 |
| L21 | 95.75 - 87.83 (21) | TP30.36x28.8701x0.7 | 30.94 |
| L22 | 87.83 - 86.83 (22) | TP29.9235x28.9205x0.9375 | 32.13 |

| Section No. | Elevation ft | Size | Actual $V_u$ K |
|---|---|---|---|
| L23 | 86.83 - 81.83 (23) | TP30.8645x29.9235x0.925 | 33.11 |
| L24 | 81.83 - 81.5 (24) | TP30.9266x30.8645x0.925 | 33.18 |
| L25 | 81.5 - 81.25 (25) | TP30.9737x30.9266x0.95 | 33.24 |
| L26 | 81.25 - 76.25 (26) | TP31.9146x30.9737x0.925 | 34.19 |
| L27 | 76.25 - 71.25 (27) | TP32.8556x31.9146x0.9 | 35.13 |
| L28 | 71.25 - 66.25 (28) | TP33.7966x32.8556x0.875 | 36.06 |
| L29 | 66.25 - 61.25 (29) | TP34.7376x33.7966x0.8625 | 36.97 |
| L30 | 61.25 - 56.25 (30) | TP35.6785x34.7376x0.85 | 37.87 |
| L31 | 56.25 - 51.25 (31) | TP36.6195x35.6785x0.825 | 38.74 |
| L32 | 51.25 - 43.33 (32) | TP38.11x36.6195x0.825 | 39.19 |
| L33 | 43.33 - 42.33 (33) | TP37.5463x36.3569x1.0375 | 40.50 |
| L34 | 42.33 - 37.4 (34) | TP38.4726x37.5463x1.025 | 41.36 |
| L35 | 37.4 - 37.15 (35) | TP38.5196x38.4726x1.025 | 41.39 |
| L36 | 37.15 - 32.15 (36) | TP39.4591x38.5196x1 | 42.24 |
| L37 | 32.15 - 27.15 (37) | TP40.3986x39.4591x0.975 | 43.04 |
| L38 | 27.15 - 22.15 (38) | TP41.3381x40.3986x0.9625 | 43.80 |
| L39 | 22.15 - 19.5 (39) | TP41.836x41.3381x0.95 | 44.19 |
| L40 | 19.5 - 19.25 (40) | TP41.883x41.836x1.025 | 44.20 |
| L41 | 19.25 - 14.25 (41) | TP42.8225x41.883x1 | 44.91 |
| L42 | 14.25 - 9.25 (42) | TP43.762x42.8225x1 | 45.59 |
| L43 | 9.25 - 9 (43) | TP43.8089x43.762x1 | 45.60 |
| L44 | 9 - 8.75 (44) | TP43.8559x43.8089x1.025 | 45.64 |
| L45 | 8.75 - 7 (45) | TP44.1847x43.8559x1.025 | 45.91 |
| L46 | 7 - 6.75 (46) | TP44.2317x44.1847x0.975 | 45.91 |
| L47 | 6.75 - 5 (47) | TP44.5605x44.2317x0.975 | 46.18 |
| L48 | 5 - 4.75 (48) | TP44.6075x44.5605x1.45 | 46.18 |
| L49 | 4.75 - 3 (49) | TP44.9363x44.6075x1.425 | 46.47 |
| L50 | 3 - 2.75 (50) | TP44.9833x44.9363x1.45 | 46.47 |
| L51 | 2.75 - 2.25 (51) | TP45.0772x44.9833x1.45 | 46.55 |
| L52 | 2.25 - 2 (52) | TP45.1242x45.0772x1.2 | 46.59 |
| L53 | 2 - 0 (53) | TP45.5x45.1242x1.175 | 46.88 |

# APPENDIX B

# BASE LEVEL DRAWING

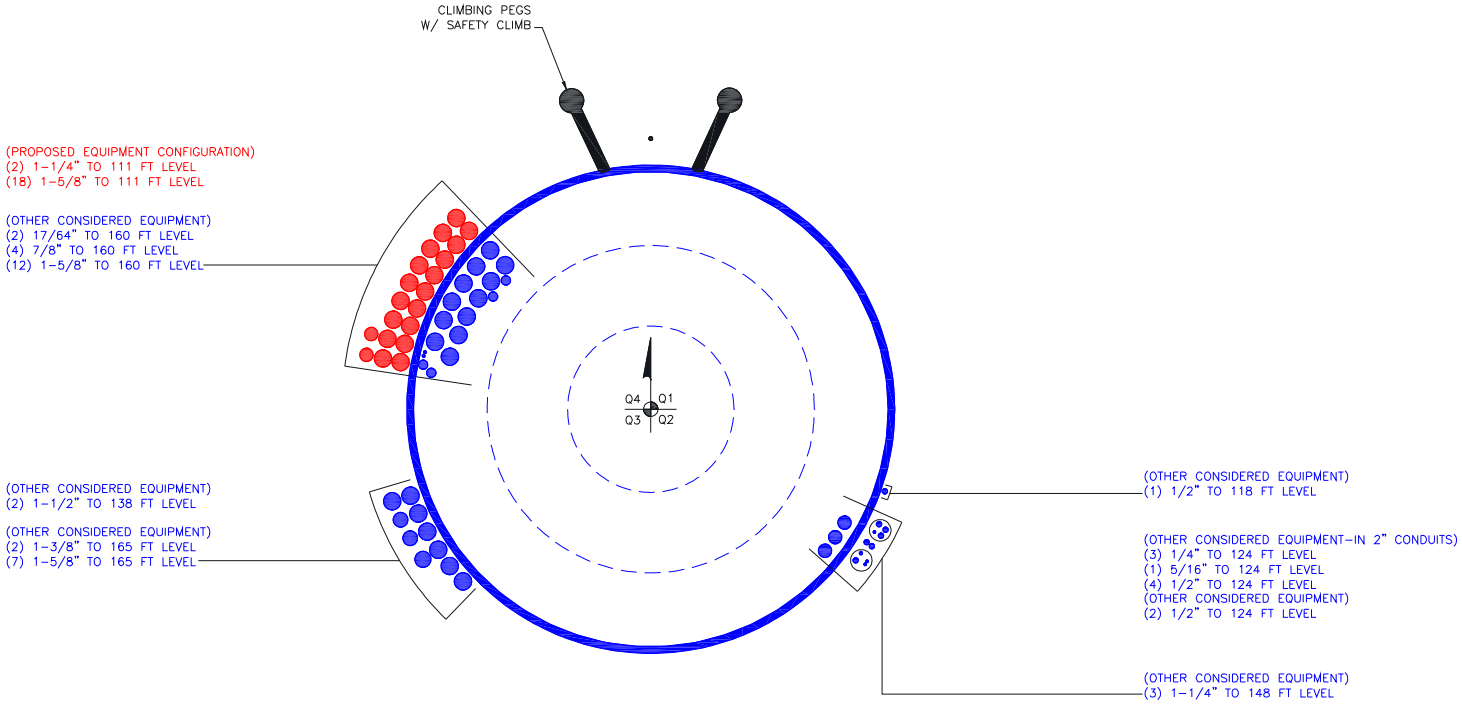
CLIMBING PEGS
W/ SAFETY CLIMB
(PROPOSED EQUIPMENT CONFIGURATION)
(2) 1-1/4" TO 111 FT LEVEL
(18) 1-5/8" TO 111 FT LEVEL
(OTHER CONSIDERED EQUIPMENT)
(2) 17/64" TO 160 FT LEVEL
(4) 7/8" TO 160 FT LEVEL
(12) 1-5/8" TO 160 FT LEVEL
Q4
Q1
Q3
Q2
(OTHER CONSIDERED EQUIPMENT)
(2) 1-1/2" TO 138 FT LEVEL
(OTHER CONSIDERED EQUIPMENT)
(2) 1-3/8" TO 165 FT LEVEL
(7) 1-5/8" TO 165 FT LEVEL
(OTHER CONSIDERED EQUIPMENT)
(1) 1/2" TO 118 FT LEVEL
(OTHER CONSIDERED EQUIPMENT-IN 2" CONDUITS)
(3) 1/4" TO 124 FT LEVEL
(1) 5/16" TO 124 FT LEVEL
(4) 1/2" TO 124 FT LEVEL
(OTHER CONSIDERED EQUIPMENT)
(2) 1/2" TO 124 FT LEVEL
(OTHER CONSIDERED EQUIPMENT)
(3) 1-1/4" TO 148 FT LEVEL

# APPENDIX C

# ADDITIONAL CALCULATIONS

# CCIpole

*per TIA-222- H*

Site BU: 828054

Work Order: 2115008

Copyright © 2019 Crown Castle

## Pole Geometry

| | Pole Height Above Base (ft) | Section Length (ft) | Lap Splice Length (ft) | Number of Sides | Top Diameter (in) | Bottom Diameter (in) | Wall Thickness (in) | Bend Radius (in) | Pole Material |
|---|---|---|---|---|---|---|---|---|---|
| 1 | 169 | 35.67 | 3.33 | 18 | 15.5 | 22.31 | 0.25 | Auto | A572-65 |
| 2 | 136.66 | 48.83 | 4.33 | 18 | 21.17 | 30.36 | 0.3125 | Auto | A572-65 |
| 3 | 92.16 | 48.83 | 5.33 | 18 | 28.92 | 38.11 | 0.375 | Auto | A572-65 |
| 4 | 48.66 | 48.66 | 0 | 18 | 36.36 | 45.5 | 0.375 | Auto | A572-65 |
| | | | | | | | | | |

## Reinforcement Configuration

| | Bottom Effective Elevation (ft) | Top Effective Elevation (ft) | Type | Model | Number | 1 | 2 | 3 | 4 | 5 | 6 | 7 | 8 | 9 | 10 | 11 | 12 | 13 | 14 | 15 | 16 | 17 | 18 |
|---|---|---|---|---|---|---|---|---|---|---|---|---|---|---|---|---|---|---|---|---|---|---|---|
| 1 | 2.25 | 19.5 | plate | CI-065125; (1) (1.1875) | 4 | | o | | | | o | | | | | o | | | | o | | | |
| 2 | 19.5 | 44.58 | plate | CI-060100; (1) (1.1875) | 4 | | o | | | | o | | | | | o | | | | o | | | |
| 3 | 3 | 5 | plate | FP 1.25 x 8_1 | 4 | | o | | | | o | | | | | o | | | | o | | | |
| 4 | 81.5 | 88.5 | plate | CI-045100; (1) (1.1875) | 3 | | | o | | | | | | o | | | | | | o | | | |
| 5 | 0 | 3 | plate | FP 1.25 x 6_1 | 6 | o | | | o | | | o | | | o | | | o | | | o | | |
| 6 | 101 | 111 | plate | CI-060100; (1) (1.1875) | 3 | | | o | | | | | | o | | | | | | o | | | |
| 7 | 0 | 37.4 | plate | FP 6 x 1.25; (1) (1.1875) | 4 | o | | | | | | o | | | o | | | | | | o | | |
| 8 | 0 | 7 | plate | FP 6 x 1.25; (1) (1.1875) | 2 | | | | o | | | | | | | | | o | | | | | |
| 9 | 9 | 37.4 | plate | FP 6 x 1.25; (1) (1.1875) | 2 | | | | o | | | | | | | | | o | | | | | |
| 10 | 7 | 9 | plate | FP 4 x 1.25_1 | 4 | | | o | | o | | | | | | | o | | o | | | | |
| 11 | 37.4 | 81.5 | plate | FP 6 x 1.25; (1) (1.1875) | 6 | o | | | o | | | o | | | o | | | o | | | o | | |
| 12 | 81.5 | 101.5 | plate | FP 4 x 1.25; (1) (1.1875) | 6 | o | | | o | | | o | | | o | | | o | | | o | | |
| 13 | | | | | | | | | | | | | | | | | | | | | | | |

## Reinforcement Details

| | B (in) | H (in) | Gross Area ($in^2$) | Pole Face to Centroid (in) | Bottom Termination Type | Bottom Termination Length (in) | Top Termination Type | Top Termination Length (in) | Lu (in) | Net Area (in2) | Bolt Hole Size (in) | Reinforcement Material |
|---|---|---|---|---|---|---|---|---|---|---|---|---|
| 1 | 6.5 | 1.25 | 8.125 | 0.625 | None | n/a | PC 8.8 - M20 (100) | 33.000 | 19.000 | 6.563 | 1.1875 | A572-65 |
| 2 | 6 | 1 | 6 | 0.5 | PC 8.8 - M20 (100) | 33 | PC 8.8 - M20 (100) | 33.000 | 16.000 | 4.750 | 1.1875 | A572-65 |
| 3 | 1.25 | 8 | 10 | 4 | Capacity Input | n/a | Capacity Input | n/a | 0.000 | 10.000 | 0.0000 | A572-65 |
| 4 | 4.5 | 1 | 4.5 | 0.5 | PC 8.8 - M20 (100) | 18 | PC 8.8 - M20 (100) | 18.000 | 20.000 | 3.250 | 1.1875 | A572-65 |
| 5 | 1.25 | 6 | 7.5 | 3 | None | n/a | None | n/a | 0.000 | 7.500 | 0.0000 | A572-65 |
| 6 | 6 | 1 | 6 | 0.5 | PC 8.8 - M20 (100) | 33 | PC 8.8 - M20 (100) | 33.000 | 16.000 | 4.750 | 1.1875 | A572-65 |
| 7 | 6 | 1.25 | 7.5 | 0.625 | PC 8.8 - M20 (100) | 36 | PC 8.8 - M20 (100) | 36.000 | 12.000 | 5.938 | 1.1875 | A572-65 |
| 8 | 6 | 1.25 | 7.5 | 0.625 | PC 8.8 - M20 (100) | 36 | PC 8.8 - M20 (100) | 36.000 | 12.000 | 5.938 | 1.1875 | A572-65 |
| 9 | 6 | 1.25 | 7.5 | 0.625 | PC 8.8 - M20 (100) | 36 | PC 8.8 - M20 (100) | 36.000 | 12.000 | 5.938 | 1.1875 | A572-65 |
| 10 | 4 | 1.25 | 5 | 0.625 | None | n/a | None | n/a | 12.000 | 5.000 | 0.0000 | A572-65 |
| 11 | 6 | 1.25 | 7.5 | 0.625 | PC 8.8 - M20 (100) | 36 | PC 8.8 - M20 (100) | 36.000 | 12.000 | 5.938 | 1.1875 | A572-65 |
| 12 | 4 | 1.25 | 5 | 0.625 | PC 8.8 - M20 (100) | 30 | PC 8.8 - M20 (100) | 30.000 | 18.000 | 3.438 | 1.1875 | A572-65 |

## Connection Details for Custom Reinforcements

| Reinforcement | End | # Bolts | N or X | Bolt Spacing (in) | Edge Dist (in) | Weld Grade (ksi) | Transverse (Horiz.) Weld Type | Horiz. Weld Length (in) | Horiz. Groove Depth (in) | Horiz. Groove Angle (deg) | Horiz. Fillet Size (in) | Vertical Weld Length (in) | Vertical Fillet Size (in) | Rev H Connection Capacity (kip) |
|---|---|---|---|---|---|---|---|---|---|---|---|---|---|---|
| CCI-065125; (1) (1.1875)_1 | Top | 11 | N | 3 | 3 | - | - | - | - | - | - | - | - | - |
| | Bottom | - | - | - | - | | | | - | - | | - | - | - |
| CCI-060100; (1) (1.1875)_1 | Top | 11 | N | 3 | 3 | - | - | - | - | - | - | - | - | - |
| | Bottom | 11 | N | 3 | 3 | - | - | - | - | - | - | - | - | - |
| FP 1.25 x 8_1 | Top | | | | | - | - | - | - | - | - | - | - | 475.31 |
| | Bottom | - | - | - | - | | | | - | - | | - | - | 475.31 |
| CCI-045100; (1) (1.1875)_1 | Top | 6 | N | 3 | 3 | - | - | - | - | - | - | - | - | - |
| | Bottom | 6 | N | 3 | 3 | - | - | - | - | - | - | - | - | - |
| FP 1.25 x 6_1 | Top | | | | | - | - | - | - | - | - | - | - | - |
| | Bottom | - | - | - | - | | | | - | - | | - | - | - |
| FP 6 x 1.25; (1) (1.1875)_1 | Top | 12 | N | 3 | 3 | - | - | - | - | - | - | - | - | - |
| | Bottom | 12 | N | 3 | 3 | - | - | - | - | - | - | - | - | - |
| FP 4 x 1.25_1 | Top | | | | | - | - | - | - | - | - | - | - | - |
| | Bottom | - | - | - | - | | | | - | - | | - | - | - |
| FP 4 x 1.25; (1) (1.1875)_1 | Top | 10 | N | 3 | 3 | - | - | - | - | - | - | - | - | - |
| | Bottom | 10 | N | 3 | 3 | - | - | - | - | - | - | - | - | - |

# TNX Geometry Input

Increment (ft): 5 Export to TNX

| | Section Height (ft) | Section Length (ft) | Lap Splice Length (ft) | Number of Sides | Top Diameter (in) | Bottom Diameter (in) | Wall Thickness (in) | Tapered Pole Grade | Weight Multiplier |
|---|---|---|---|---|---|---|---|---|---|
| 1 | 169 - 164 | 5 | | 18 | 15.500 | 16.455 | 0.25 | A572-65 | 1.000 |
| 2 | 164 - 159 | 5 | | 18 | 16.455 | 17.409 | 0.25 | A572-65 | 1.000 |
| 3 | 159 - 154 | 5 | | 18 | 17.409 | 18.364 | 0.25 | A572-65 | 1.000 |
| 4 | 154 - 149 | 5 | | 18 | 18.364 | 19.318 | 0.25 | A572-65 | 1.000 |
| 5 | 149 - 144 | 5 | | 18 | 19.318 | 20.273 | 0.25 | A572-65 | 1.000 |
| 6 | 144 - 139 | 5 | | 18 | 20.273 | 21.228 | 0.25 | A572-65 | 1.000 |
| 7 | 139 - 136.66 | 5.67 | 3.33 | 18 | 21.228 | 22.310 | 0.25 | A572-65 | 1.000 |
| 8 | 136.66 - 131.66 | 5 | | 18 | 21.174 | 22.115 | 0.3125 | A572-65 | 1.000 |
| 9 | 131.66 - 126.66 | 5 | | 18 | 22.115 | 23.055 | 0.3125 | A572-65 | 1.000 |
| 10 | 126.66 - 121.66 | 5 | | 18 | 23.055 | 23.996 | 0.3125 | A572-65 | 1.000 |
| 11 | 121.66 - 116.66 | 5 | | 18 | 23.996 | 24.937 | 0.3125 | A572-65 | 1.000 |
| 12 | 116.66 - 111.66 | 5 | | 18 | 24.937 | 25.877 | 0.3125 | A572-65 | 1.000 |
| 13 | 111.66 - 111 | 0.66 | | 18 | 25.877 | 26.001 | 0.3125 | A572-65 | 1.000 |
| 14 | 111 - 110.75 | 0.25 | | 18 | 26.001 | 26.048 | 0.575 | A572-65 | 0.936 |
| 15 | 110.75 - 105.75 | 5 | | 18 | 26.048 | 26.989 | 0.5625 | A572-65 | 0.942 |
| 16 | 105.75 - 101.5 | 4.25 | | 18 | 26.989 | 27.788 | 0.55 | A572-65 | 0.952 |
| 17 | 101.5 - 101.25 | 0.25 | | 18 | 27.788 | 27.835 | 0.9875 | A572-65 | 0.895 |
| 18 | 101.25 - 101 | 0.25 | | 18 | 27.835 | 27.882 | 0.9875 | A572-65 | 0.894 |
| 19 | 101 - 100.75 | 0.25 | | 18 | 27.882 | 27.930 | 0.725 | A572-65 | 0.917 |
| 20 | 100.75 - 95.75 | 5 | | 18 | 27.930 | 28.870 | 0.7125 | A572-65 | 0.916 |
| 21 | 95.75 - 92.16 | 7.92 | 4.33 | 18 | 28.870 | 30.360 | 0.7 | A572-65 | 0.921 |
| 22 | 92.16 - 86.83 | 5.33 | | 18 | 28.920 | 29.924 | 0.9375 | A572-65 | 0.912 |
| 23 | 86.83 - 81.83 | 5 | | 18 | 29.924 | 30.865 | 0.925 | A572-65 | 0.908 |
| 24 | 81.83 - 81.5 | 0.33 | | 18 | 30.865 | 30.927 | 0.925 | A572-65 | 0.907 |
| 25 | 81.5 - 81.25 | 0.25 | | 18 | 30.927 | 30.974 | 0.95 | A572-65 | 0.899 |
| 26 | 81.25 - 76.25 | 5 | | 18 | 30.974 | 31.915 | 0.925 | A572-65 | 0.907 |
| 27 | 76.25 - 71.25 | 5 | | 18 | 31.915 | 32.856 | 0.9 | A572-65 | 0.916 |
| 28 | 71.25 - 66.25 | 5 | | 18 | 32.856 | 33.797 | 0.875 | A572-65 | 0.927 |
| 29 | 66.25 - 61.25 | 5 | | 18 | 33.797 | 34.738 | 0.8625 | A572-65 | 0.926 |
| 30 | 61.25 - 56.25 | 5 | | 18 | 34.738 | 35.679 | 0.85 | A572-65 | 0.926 |
| 31 | 56.25 - 51.25 | 5 | | 18 | 35.679 | 36.619 | 0.825 | A572-65 | 0.940 |
| 32 | 51.25 - 48.66 | 7.92 | 5.33 | 18 | 36.619 | 38.110 | 0.825 | A572-65 | 0.934 |
| 33 | 48.66 - 42.33 | 6.33 | | 18 | 36.357 | 37.546 | 1.0375 | A572-65 | 0.942 |
| 34 | 42.33 - 37.4 | 4.93 | | 18 | 37.546 | 38.473 | 1.025 | A572-65 | 0.939 |
| 35 | 37.4 - 37.15 | 0.25 | | 18 | 38.473 | 38.520 | 1.025 | A572-65 | 0.938 |
| 36 | 37.15 - 32.15 | 5 | | 18 | 38.520 | 39.459 | 1 | A572-65 | 0.946 |
| 37 | 32.15 - 27.15 | 5 | | 18 | 39.459 | 40.399 | 0.975 | A572-65 | 0.956 |
| 38 | 27.15 - 22.15 | 5 | | 18 | 40.399 | 41.338 | 0.9625 | A572-65 | 0.955 |
| 39 | 22.15 - 19.5 | 2.65 | | 18 | 41.338 | 41.836 | 0.95 | A572-65 | 0.960 |
| 40 | 19.5 - 19.25 | 0.25 | | 18 | 41.836 | 41.883 | 1.025 | A572-65 | 0.955 |
| 41 | 19.25 - 14.25 | 5 | | 18 | 41.883 | 42.822 | 1 | A572-65 | 0.964 |
| 42 | 14.25 - 9.25 | 5 | | 18 | 42.822 | 43.762 | 1 | A572-65 | 0.952 |
| 43 | 9.25 - 9 | 0.25 | | 18 | 43.762 | 43.809 | 1 | A572-65 | 0.951 |
| 44 | 9 - 8.75 | 0.25 | | 18 | 43.809 | 43.856 | 1.025 | A572-65 | 0.963 |
| 45 | 8.75 - 7 | 1.75 | | 18 | 43.856 | 44.185 | 1.025 | A572-65 | 0.959 |
| 46 | 7 - 6.75 | 0.25 | | 18 | 44.185 | 44.232 | 0.975 | A572-65 | 0.969 |
| 47 | 6.75 - 5 | 1.75 | | 18 | 44.232 | 44.561 | 0.975 | A572-65 | 0.965 |
| 48 | 5 - 4.75 | 0.25 | | 18 | 44.561 | 44.607 | 1.45 | A572-65 | 0.857 |
| 49 | 4.75 - 3 | 1.75 | | 18 | 44.607 | 44.936 | 1.425 | A572-65 | 0.867 |
| 50 | 3 - 2.75 | 0.25 | | 18 | 44.936 | 44.983 | 1.45 | A572-65 | 0.876 |
| 51 | 2.75 - 2.25 | 0.5 | | 18 | 44.983 | 45.077 | 1.45 | A572-65 | 0.875 |
| 52 | 2.25 - 2 | 0.25 | | 18 | 45.077 | 45.124 | 1.2 | A572-65 | 0.856 |
| 53 | 2 - 0 | 2 | | 18 | 45.124 | 45.500 | 1.175 | A572-65 | 0.869 |

# TNX Section Forces

| Increment (ft): 5 | | TNX Output | | |
|---|---|---|---|---|
| | Section Height (ft) | $P_u$ (K) | $M_{ux}$ (kip-ft) | $V_u$ (K) |
| 1 | 169 - 164 | 3.29 | 10.08 | 5.63 |
| 2 | 164 - 159 | 6.14 | 56.68 | 13.27 |
| 3 | 159 - 154 | 6.54 | 123.81 | 13.58 |
| 4 | 154 - 149 | 6.99 | 192.47 | 13.89 |
| 5 | 149 - 144 | 8.61 | 269.69 | 15.95 |
| 6 | 144 - 139 | 9.17 | 350.14 | 16.24 |
| 7 | 139 - 136.66 | 12.08 | 393.06 | 19.98 |
| 8 | 136.66 - 131.66 | 12.95 | 493.83 | 20.33 |
| 9 | 131.66 - 126.66 | 13.66 | 597.00 | 21.24 |
| 10 | 126.66 - 121.66 | 14.99 | 707.86 | 22.38 |
| 11 | 121.66 - 116.66 | 15.86 | 820.38 | 22.68 |
| 12 | 116.66 - 111.66 | 16.73 | 934.32 | 22.92 |
| 13 | 111.66 - 111 | 16.86 | 949.46 | 22.95 |
| 14 | 111 - 110.75 | 20.17 | 956.14 | 27.49 |
| 15 | 110.75 - 105.75 | 21.38 | 1095.79 | 28.39 |
| 16 | 105.75 - 101.5 | 22.46 | 1218.10 | 29.17 |
| 17 | 101.5 - 101.25 | 22.57 | 1225.40 | 29.25 |
| 18 | 101.25 - 101 | 22.66 | 1232.71 | 29.30 |
| 19 | 101 - 100.75 | 22.73 | 1240.04 | 29.34 |
| 20 | 100.75 - 95.75 | 24.22 | 1389.02 | 30.27 |
| 21 | 95.75 - 92.16 | 25.31 | 1498.92 | 30.94 |
| 22 | 92.16 - 86.83 | 28.34 | 1667.10 | 32.13 |
| 23 | 86.83 - 81.83 | 30.27 | 1830.22 | 33.11 |
| 24 | 81.83 - 81.5 | 30.41 | 1841.17 | 33.18 |
| 25 | 81.5 - 81.25 | 30.51 | 1849.47 | 33.24 |
| 26 | 81.25 - 76.25 | 32.50 | 2018.01 | 34.19 |
| 27 | 76.25 - 71.25 | 34.53 | 2191.32 | 35.13 |
| 28 | 71.25 - 66.25 | 36.60 | 2369.31 | 36.06 |
| 29 | 66.25 - 61.25 | 38.70 | 2551.90 | 36.97 |
| 30 | 61.25 - 56.25 | 40.84 | 2739.01 | 37.87 |
| 31 | 56.25 - 51.25 | 43.01 | 2930.55 | 38.74 |
| 32 | 51.25 - 48.66 | 44.14 | 3031.48 | 39.19 |
| 33 | 48.66 - 42.33 | 49.38 | 3283.81 | 40.50 |
| 34 | 42.33 - 37.4 | 52.03 | 3485.60 | 41.36 |
| 35 | 37.4 - 37.15 | 52.18 | 3495.95 | 41.39 |
| 36 | 37.15 - 32.15 | 54.89 | 3705.06 | 42.24 |
| 37 | 32.15 - 27.15 | 57.65 | 3918.27 | 43.04 |
| 38 | 27.15 - 22.15 | 60.44 | 4135.37 | 43.80 |
| 39 | 22.15 - 19.5 | 61.93 | 4251.95 | 44.19 |
| 40 | 19.5 - 19.25 | 62.10 | 4263.00 | 44.20 |
| 41 | 19.25 - 14.25 | 65.08 | 4485.86 | 44.91 |
| 42 | 14.25 - 9.25 | 68.10 | 4712.14 | 45.59 |
| 43 | 9.25 - 9 | 68.27 | 4723.54 | 45.60 |
| 44 | 9 - 8.75 | 68.42 | 4734.95 | 45.64 |
| 45 | 8.75 - 7 | 69.50 | 4815.06 | 45.91 |
| 46 | 7 - 6.75 | 69.68 | 4826.54 | 45.91 |
| 47 | 6.75 - 5 | 70.73 | 4907.13 | 46.18 |
| 48 | 5 - 4.75 | 70.95 | 4918.67 | 46.18 |
| 49 | 4.75 - 3 | 72.27 | 4999.76 | 46.47 |
| 50 | 3 - 2.75 | 72.49 | 5011.38 | 46.47 |
| 51 | 2.75 - 2.25 | 72.88 | 5034.65 | 46.55 |
| 52 | 2.25 - 2 | 73.05 | 5046.29 | 46.59 |
| 53 | 2 - 0 | 74.36 | 5139.80 | 46.88 |

# Analysis Results

| Elevation (ft) | Component Type | Size | Critical Element | % Capacity | Pass / Fail |
|---|---|---|---|---|---|
| 169 - 164 | Pole | TP16.455x15.5x0.25 | Pole | 3.5% | Pass |
| 164 - 159 | Pole | TP17.409x16.455x0.25 | Pole | 16.2% | Pass |
| 159 - 154 | Pole | TP18.364x17.409x0.25 | Pole | 30.8% | Pass |
| 154 - 149 | Pole | TP19.318x18.364x0.25 | Pole | 42.8% | Pass |
| 149 - 144 | Pole | TP20.273x19.318x0.25 | Pole | 54.3% | Pass |
| 144 - 139 | Pole | TP21.228x20.273x0.25 | Pole | 63.9% | Pass |
| 139 - 136.66 | Pole | TP22.31x21.228x0.25 | Pole | 69.1% | Pass |
| 136.66 - 131.66 | Pole | TP22.115x21.174x0.3125 | Pole | 66.9% | Pass |
| 131.66 - 126.66 | Pole | TP23.055x22.115x0.3125 | Pole | 74.2% | Pass |
| 126.66 - 121.66 | Pole | TP23.996x23.055x0.3125 | Pole | 81.0% | Pass |
| 121.66 - 116.66 | Pole | TP24.937x23.996x0.3125 | Pole | 86.7% | Pass |
| 116.66 - 111.66 | Pole | TP25.877x24.937x0.3125 | Pole | 91.5% | Pass |
| 111.66 - 111 | Pole | TP26.001x25.877x0.3125 | Pole | 92.1% | Pass |
| 111 - 110.75 | Pole + Reinf. | TP26.048x26.001x0.575 | Reinf. 6 Tension Rupture | 82.6% | Pass |
| 110.75 - 105.75 | Pole + Reinf. | TP26.989x26.048x0.5625 | Reinf. 6 Tension Rupture | 89.4% | Pass |
| 105.75 - 101.5 | Pole + Reinf. | TP27.788x26.989x0.55 | Reinf. 6 Tension Rupture | 94.9% | Pass |
| 101.5 - 101.25 | Pole + Reinf. | TP27.835x27.788x0.9875 | Reinf. 12 Tension Rupture | 64.6% | Pass |
| 101.25 - 101 | Pole + Reinf. | TP27.882x27.835x0.9875 | Reinf. 12 Tension Rupture | 64.9% | Pass |
| 101 - 100.75 | Pole + Reinf. | TP27.93x27.882x0.725 | Reinf. 12 Tension Rupture | 86.4% | Pass |
| 100.75 - 95.75 | Pole + Reinf. | TP28.87x27.93x0.7125 | Reinf. 12 Tension Rupture | 92.2% | Pass |
| 95.75 - 92.16 | Pole + Reinf. | TP30.36x28.87x0.7 | Reinf. 12 Tension Rupture | 96.1% | Pass |
| 92.16 - 86.83 | Pole + Reinf. | TP29.924x28.92x0.9375 | Reinf. 12 Tension Rupture | 79.2% | Pass |
| 86.83 - 81.83 | Pole + Reinf. | TP30.865x29.924x0.925 | Reinf. 12 Tension Rupture | 83.2% | Pass |
| 81.83 - 81.5 | Pole + Reinf. | TP30.927x30.865x0.925 | Reinf. 12 Tension Rupture | 83.4% | Pass |
| 81.5 - 81.25 | Pole + Reinf. | TP30.974x30.927x0.95 | Reinf. 11 Tension Rupture | 70.8% | Pass |
| 81.25 - 76.25 | Pole + Reinf. | TP31.915x30.974x0.925 | Reinf. 11 Tension Rupture | 74.1% | Pass |
| 76.25 - 71.25 | Pole + Reinf. | TP32.856x31.915x0.9 | Reinf. 11 Tension Rupture | 77.1% | Pass |
| 71.25 - 66.25 | Pole + Reinf. | TP33.797x32.856x0.875 | Reinf. 11 Tension Rupture | 80.1% | Pass |
| 66.25 - 61.25 | Pole + Reinf. | TP34.738x33.797x0.8625 | Reinf. 11 Tension Rupture | 82.9% | Pass |
| 61.25 - 56.25 | Pole + Reinf. | TP35.679x34.738x0.85 | Reinf. 11 Tension Rupture | 85.6% | Pass |
| 56.25 - 51.25 | Pole + Reinf. | TP36.619x35.679x0.825 | Reinf. 11 Tension Rupture | 88.1% | Pass |
| 51.25 - 48.66 | Pole + Reinf. | TP38.11x36.619x0.825 | Reinf. 11 Tension Rupture | 89.4% | Pass |
| 48.66 - 42.33 | Pole + Reinf. | TP37.546x36.357x1.0375 | Reinf. 11 Tension Rupture | 76.1% | Pass |
| 42.33 - 37.4 | Pole + Reinf. | TP38.473x37.546x1.025 | Reinf. 11 Tension Rupture | 78.2% | Pass |
| 37.4 - 37.15 | Pole + Reinf. | TP38.52x38.473x1.025 | Reinf. 7 Tension Rupture | 78.3% | Pass |
| 37.15 - 32.15 | Pole + Reinf. | TP39.459x38.52x1 | Reinf. 7 Tension Rupture | 80.2% | Pass |
| 32.15 - 27.15 | Pole + Reinf. | TP40.399x39.459x0.975 | Reinf. 7 Tension Rupture | 82.1% | Pass |
| 27.15 - 22.15 | Pole + Reinf. | TP41.338x40.399x0.9625 | Reinf. 7 Tension Rupture | 83.9% | Pass |
| 22.15 - 19.5 | Pole + Reinf. | TP41.836x41.338x0.95 | Reinf. 7 Tension Rupture | 84.9% | Pass |
| 19.5 - 19.25 | Pole + Reinf. | TP41.883x41.836x1.025 | Reinf. 7 Tension Rupture | 79.4% | Pass |
| 19.25 - 14.25 | Pole + Reinf. | TP42.822x41.883x1 | Reinf. 7 Tension Rupture | 81.0% | Pass |
| 14.25 - 9.25 | Pole + Reinf. | TP43.762x42.822x1 | Reinf. 7 Tension Rupture | 82.6% | Pass |
| 9.25 - 9 | Pole + Reinf. | TP43.809x43.762x1 | Reinf. 7 Tension Rupture | 82.7% | Pass |
| 9 - 8.75 | Pole + Reinf. | TP43.856x43.809x1.025 | Reinf. 7 Tension Rupture | 79.7% | Pass |
| 8.75 - 7 | Pole + Reinf. | TP44.185x43.856x1.025 | Reinf. 7 Tension Rupture | 80.2% | Pass |
| 7 - 6.75 | Pole + Reinf. | TP44.232x44.185x0.975 | Reinf. 7 Tension Rupture | 83.4% | Pass |
| 6.75 - 5 | Pole + Reinf. | TP44.561x44.232x0.975 | Reinf. 7 Tension Rupture | 83.9% | Pass |
| 5 - 4.75 | Pole + Reinf. | TP44.607x44.561x1.45 | Reinf. 3 Connection | 66.2% | Pass |
| 4.75 - 3 | Pole + Reinf. | TP44.936x44.607x1.425 | Reinf. 3 Connection | 66.7% | Pass |
| 3 - 2.75 | Pole + Reinf. | TP44.983x44.936x1.45 | Reinf. 7 Tension Rupture | 58.9% | Pass |
| 2.75 - 2.25 | Pole + Reinf. | TP45.077x44.983x1.45 | Reinf. 7 Tension Rupture | 59.1% | Pass |
| 2.25 - 2 | Pole + Reinf. | TP45.124x45.077x1.2 | Reinf. 8 Tension Rupture | 70.9% | Pass |
| 2 - 0 | Pole + Reinf. | TP45.5x45.124x1.175 | Reinf. 8 Tension Rupture | 71.5% | Pass |
| | | | | Summary | |
| | | | Pole | 92.1% | Pass |
| | | | Reinforcement | 96.1% | Pass |
| | | | Overall | 96.1% | Pass |

# Additional Calculations

| Section Elevation (ft) | Moment of Inertia ($in^4$) | | | Area ($in^2$) | | | % Capacity* | | | | | | | | | | | | |
|---|---|---|---|---|---|---|---|---|---|---|---|---|---|---|---|---|---|---|---|
| | Pole | Reinf. | Total | Pole | Reinf. | Total | Pole | R1 | R2 | R3 | R4 | R5 | R6 | R7 | R8 | R9 | R10 | R11 | R12 |
| 169 - 164 | 426 | n/a | 426 | 12.86 | n/a | 12.86 | 3.5% | | | | | | | | | | | | |
| 164 - 159 | 506 | n/a | 506 | 13.62 | n/a | 13.62 | 16.2% | | | | | | | | | | | | |
| 159 - 154 | 596 | n/a | 596 | 14.37 | n/a | 14.37 | 30.8% | | | | | | | | | | | | |
| 154 - 149 | 695 | n/a | 695 | 15.13 | n/a | 15.13 | 42.8% | | | | | | | | | | | | |
| 149 - 144 | 804 | n/a | 804 | 15.89 | n/a | 15.89 | 54.3% | | | | | | | | | | | | |
| 144 - 139 | 925 | n/a | 925 | 16.65 | n/a | 16.65 | 63.9% | | | | | | | | | | | | |
| 139 - 136.66 | 985 | n/a | 985 | 17.00 | n/a | 17.00 | 69.1% | | | | | | | | | | | | |
| 136.66 - 131.66 | 1298 | n/a | 1298 | 21.62 | n/a | 21.62 | 66.9% | | | | | | | | | | | | |
| 131.66 - 126.66 | 1474 | n/a | 1474 | 22.56 | n/a | 22.56 | 74.2% | | | | | | | | | | | | |
| 126.66 - 121.66 | 1664 | n/a | 1664 | 23.49 | n/a | 23.49 | 81.0% | | | | | | | | | | | | |
| 121.66 - 116.66 | 1870 | n/a | 1870 | 24.42 | n/a | 24.42 | 86.7% | | | | | | | | | | | | |
| 116.66 - 111.66 | 2093 | n/a | 2093 | 25.36 | n/a | 25.36 | 91.5% | | | | | | | | | | | | |
| 111.66 - 111 | 2124 | n/a | 2124 | 25.48 | n/a | 25.48 | 92.1% | | | | | | | | | | | | |
| 111 - 110.75 | 2135 | 1674 | 3809 | 25.53 | 18.00 | 43.53 | 51.2% | | | | | | 82.6% | | | | | | |
| 110.75 - 105.75 | 2378 | 1790 | 4168 | 26.46 | 18.00 | 44.46 | 55.5% | | | | | | 89.4% | | | | | | |
| 105.75 - 101.5 | 2598 | 1892 | 4491 | 27.25 | 18.00 | 45.25 | 58.9% | | | | | | 94.9% | | | | | | |
| 101.5 - 101.25 | 2612 | 5093 | 7705 | 27.30 | 48.00 | 75.30 | 34.6% | | | | | | 55.7% | | | | | | 64.6% |
| 101.25 - 101 | 2625 | 5109 | 7734 | 27.35 | 48.00 | 75.35 | 34.7% | | | | | | 55.9% | | | | | | 64.9% |
| 101 - 100.75 | 2639 | 3215 | 5853 | 27.39 | 30.00 | 57.39 | 46.2% | | | | | | | | | | | | 86.4% |
| 100.75 - 95.75 | 2918 | 3424 | 6342 | 28.32 | 30.00 | 58.32 | 49.4% | | | | | | | | | | | | 92.2% |
| 95.75 - 92.16 | 3129 | 3578 | 6708 | 28.99 | 30.00 | 58.99 | 51.6% | | | | | | | | | | | | 96.1% |
| 92.16 - 86.83 | 3878 | 5292 | 9170 | 35.17 | 43.50 | 78.67 | 42.5% | | | | 74.8% | | | | | | | | 79.2% |
| 86.83 - 81.83 | 4261 | 5615 | 9876 | 36.29 | 43.50 | 79.79 | 44.7% | | | | 78.6% | | | | | | | | 83.2% |
| 81.83 - 81.5 | 4287 | 5636 | 9923 | 36.36 | 43.50 | 79.86 | 44.8% | | | | 78.8% | | | | | | | | 83.4% |
| 81.5 - 81.25 | 4307 | 5911 | 10218 | 36.42 | 45.00 | 81.42 | 43.8% | | | | | | | | | | | 70.8% | |
| 81.25 - 76.25 | 4716 | 6257 | 10974 | 37.54 | 45.00 | 82.54 | 45.8% | | | | | | | | | | | 74.1% | |
| 76.25 - 71.25 | 5151 | 6613 | 11765 | 38.66 | 45.00 | 83.66 | 47.8% | | | | | | | | | | | 77.1% | |
| 71.25 - 66.25 | 5612 | 6979 | 12591 | 39.78 | 45.00 | 84.78 | 49.7% | | | | | | | | | | | 80.1% | |
| 66.25 - 61.25 | 6099 | 7355 | 13455 | 40.90 | 45.00 | 85.90 | 51.5% | | | | | | | | | | | 82.9% | |
| 61.25 - 56.25 | 6614 | 7741 | 14356 | 42.02 | 45.00 | 87.02 | 53.2% | | | | | | | | | | | 85.6% | |
| 56.25 - 51.25 | 7157 | 8137 | 15295 | 43.14 | 45.00 | 88.14 | 55.1% | | | | | | | | | | | 88.1% | |
| 51.25 - 48.66 | 7450 | 8346 | 15796 | 43.72 | 45.00 | 88.72 | 56.1% | | | | | | | | | | | 89.4% | |
| 48.66 - 42.33 | 7721 | 12538 | 20258 | 44.24 | 69.00 | 113.24 | 48.6% | | 73.9% | | | | | | | | | 76.1% | |
| 42.33 - 37.4 | 8312 | 13139 | 21452 | 45.34 | 69.00 | 114.34 | 50.3% | | 75.9% | | | | | | | | | 78.2% | |
| 37.4 - 37.15 | 8343 | 13170 | 21513 | 45.40 | 69.00 | 114.40 | 50.4% | | 76.0% | | | | | 78.3% | | 74.0% | | | |
| 37.15 - 32.15 | 8975 | 13796 | 22771 | 46.52 | 69.00 | 115.52 | 52.0% | | 77.9% | | | | | 80.2% | | 75.9% | | | |
| 32.15 - 27.15 | 9638 | 14436 | 24074 | 47.64 | 69.00 | 116.64 | 53.6% | | 79.8% | | | | | 82.1% | | 77.8% | | | |
| 27.15 - 22.15 | 10332 | 15091 | 25423 | 48.75 | 69.00 | 117.75 | 55.2% | | 81.6% | | | | | 83.9% | | 79.5% | | | |
| 22.15 - 19.5 | 10714 | 15444 | 26158 | 49.35 | 69.00 | 118.35 | 56.0% | | 82.5% | | | | | 84.9% | | 80.4% | | | |
| 19.5 - 19.25 | 10750 | 17315 | 28066 | 49.40 | 77.50 | 126.90 | 52.4% | 75.6% | | | | | | 79.4% | | 74.1% | | | |
| 19.25 - 14.25 | 11497 | 18072 | 29569 | 50.52 | 77.50 | 128.02 | 53.9% | 77.2% | | | | | | 81.0% | | 75.7% | | | |
| 14.25 - 9.25 | 12277 | 18845 | 31122 | 51.64 | 77.50 | 129.14 | 55.3% | 78.7% | | | | | | 82.6% | | 77.2% | | | |
| 9.25 - 9 | 12317 | 18884 | 31201 | 51.70 | 77.50 | 129.20 | 55.4% | 78.8% | | | | | | 82.7% | | 77.3% | | | |
| 9 - 8.75 | 12357 | 20125 | 32482 | 51.75 | 82.50 | 134.25 | 53.4% | 75.9% | | | | | | 79.7% | | | 65.5% | | |
| 8.75 - 7 | 12640 | 20418 | 33058 | 52.14 | 82.50 | 134.64 | 53.9% | 76.4% | | | | | | 80.2% | | | 65.9% | | |
| 7 - 6.75 | 12680 | 19237 | 31918 | 52.20 | 77.50 | 129.70 | 56.0% | 79.4% | | | | | | 83.4% | 77.9% | | | | |
| 6.75 - 5 | 12968 | 19515 | 32482 | 52.59 | 77.50 | 130.09 | 56.5% | 80.0% | | | | | | 83.9% | 78.5% | | | | |
| 5 - 4.75 | 13009 | 33772 | 46781 | 52.65 | 117.50 | 170.15 | 39.6% | 56.7% | | 66.2% | | | | 60.9% | 53.6% | | | | |
| 4.75 - 3 | 13301 | 34230 | 47531 | 53.04 | 117.50 | 170.54 | 40.0% | 57.2% | | 66.7% | | | | 61.4% | 54.0% | | | | |
| 3 - 2.75 | 13343 | 34565 | 47909 | 53.09 | 122.50 | 175.59 | 39.9% | 56.7% | | | | 52.9% | | 58.9% | 56.3% | | | | |
| 2.75 - 2.25 | 13428 | 34700 | 48127 | 53.20 | 122.50 | 175.70 | 40.0% | 56.8% | | | | 53.0% | | 59.1% | 56.4% | | | | |
| 2.25 - 2 | 13470 | 26940 | 40410 | 53.26 | 90.00 | 143.26 | 47.4% | | | | | 63.6% | | 70.9% | 70.9% | | | | |
| 2 - 0 | 13812 | 27354 | 41166 | 53.71 | 90.00 | 143.71 | 48.0% | | | | | 64.1% | | 71.5% | 71.5% | | | | |

*Note: Section capacity checked using 5 degree increments.*
*Rating per TIA-222-H Section 15.5.*

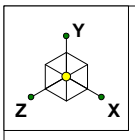


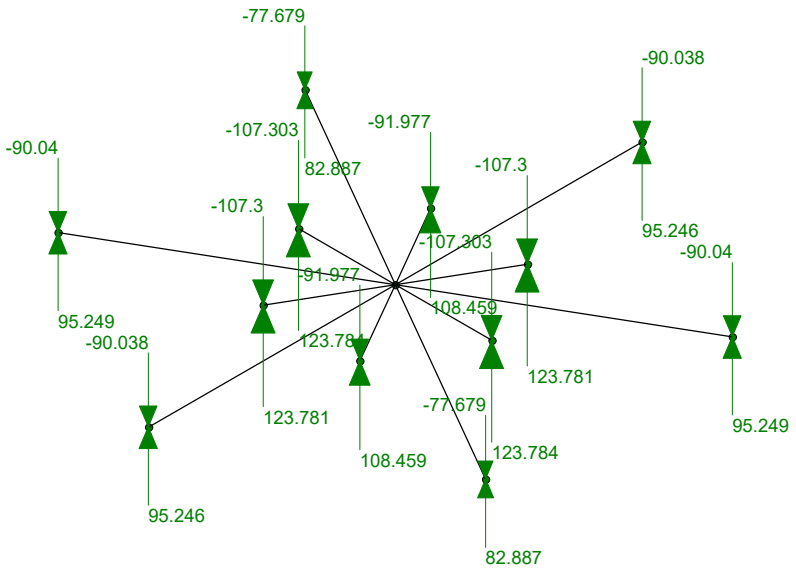


Envelope Only Solution
Y-direction Reaction Units are k and k-ft (Enveloped)

| | | |
|---|---|---|
| Paul J. Ford and Company | BU 828054 / South Windsor- Rt 5 | SK - 1 |
| JGF/KMJ | | May 18, 2022 at 3:54 PM |
| 37522-0173.001.7805 | | 37522-0173.001.7805_ Foundation... |

## (Global) Model Settings

| | |
|---|---|
| Display Sections for Member Calcs | 2 |
| Max Internal Sections for Member Calcs | 100 |
| Include Shear Deformation? | Yes |
| Increase Nailing Capacity for Wind? | Yes |
| Include Warping? | Yes |
| Trans Load Btwn Intersecting Wood Wall? | Yes |
| Area Load Mesh (in^2) | 144 |
| Merge Tolerance (in) | .12 |
| P-Delta Analysis Tolerance | 0.50% |
| Include P-Delta for Walls? | Yes |
| Automatically Iterate Stiffness for Walls? | Yes |
| Max Iterations for Wall Stiffness | 3 |
| Gravity Acceleration (ft/sec^2) | 32.2 |
| Wall Mesh Size (in) | 12 |
| Eigensolution Convergence Tol. (1.E-) | 4 |
| Vertical Axis | Y |
| Global Member Orientation Plane | XZ |
| Static Solver | Sparse Accelerated |
| Dynamic Solver | Accelerated Solver |

| | |
|---|---|
| Hot Rolled Steel Code | None |
| RISAConnection Code | None |
| Cold Formed Steel Code | None |
| Wood Code | None |
| Wood Temperature | < 100F |
| Concrete Code | None |
| Masonry Code | None |
| Aluminum Code | None - Building |
| Stainless Steel Code | None |

| | |
|---|---|
| Number of Shear Regions | 4 |
| Region Spacing Increment (in) | 4 |
| Biaxial Column Method | Exact Integration |
| Parme Beta Factor (PCA) | .65 |
| Concrete Stress Block | Rectangular |
| Use Cracked Sections? | Yes |
| Use Cracked Sections Slab? | No |
| Bad Framing Warnings? | No |
| Unused Force Warnings? | Yes |
| Min 1 Bar Diam. Spacing? | No |
| Concrete Rebar Set | REBAR_SET_ASTMA615 |
| Min % Steel for Column | 1 |
| Max % Steel for Column | 8 |

## (Global) Model Settings, Continued

| | |
|---|---|
| Seismic Code | None |
| Seismic Base Elevation (ft) | Not Entered |
| Add Base Weight? | Yes |
| Ct X | .02 |
| Ct Z | .02 |
| T X (sec) | Not Entered |
| T Z (sec) | Not Entered |
| R X | 3 |
| R Z | 3 |
| | |

## Basic Load Cases

| | BLC Description | Category | X Gravity | Y Gravity | Z Gravity | Joint | Point | Distributed | Area(Me... | Surface(P... |
|---|---|---|---|---|---|---|---|---|---|---|
| 1 | Dead | None | | -1 | | 1 | | | | |
| 2 | WInd 0 | None | | | | 1 | | | | |
| 3 | Wind 30 | None | | | | 2 | | | | |
| 4 | Wind 45 | None | | | | 2 | | | | |
| 5 | Wind 60 | None | | | | 2 | | | | |
| 6 | Wind 90 | None | | | | 1 | | | | |

## Load Combinations

| | Description | Sol... | P... | S... | B... | Factor | BLC | Fa... | B... | Fa... | B... | Fa... | B... | Fa... | B... | Fa... | B... | Fa... | B... | Fa... | B... | Fa... | B... | Fa... |
|---|---|---|---|---|---|---|---|---|---|---|---|---|---|---|---|---|---|---|---|---|---|---|---|---|
| 1 | 1.2 Dead + Wind 0 | Yes | Y | | 1 | 1.2 | 2 | 1 | | | | | | | | | | | | | | | | |
| 2 | 0.9 Dead + Wind 0 | Yes | Y | | 1 | .9 | 2 | 1 | | | | | | | | | | | | | | | | |
| 3 | 1.2 Dead + Wind 30 | Yes | Y | | 1 | 1.2 | 3 | 1 | | | | | | | | | | | | | | | | |
| 4 | 0.9 Dead + Wind 30 | Yes | Y | | 1 | .9 | 3 | 1 | | | | | | | | | | | | | | | | |
| 5 | 1.2 Dead + Wind 45 | Yes | Y | | 1 | 1.2 | 4 | 1 | | | | | | | | | | | | | | | | |
| 6 | 0.9 Dead + Wind 45 | Yes | Y | | 1 | .9 | 4 | 1 | | | | | | | | | | | | | | | | |
| 7 | 1.2 Dead + Wind 60 | Yes | Y | | 1 | 1.2 | 5 | 1 | | | | | | | | | | | | | | | | |
| 8 | 0.9 Dead + Wind 60 | Yes | Y | | 1 | .9 | 5 | 1 | | | | | | | | | | | | | | | | |
| 9 | 1.2 Dead + Wind 90 | Yes | Y | | 1 | 1.2 | 6 | 1 | | | | | | | | | | | | | | | | |
| 10 | 0.9 Dead + Wind 90 | Yes | Y | | 1 | .9 | 6 | 1 | | | | | | | | | | | | | | | | |
| 11 | 1.2 Dead + Wind 1... | Yes | Y | | 1 | 1.2 | 2 | -1 | | | | | | | | | | | | | | | | |
| 12 | 0.9 Dead + Wind 1... | Yes | Y | | 1 | .9 | 2 | -1 | | | | | | | | | | | | | | | | |
| 13 | 1.2 Dead + Wind 2... | Yes | Y | | 1 | 1.2 | 3 | -1 | | | | | | | | | | | | | | | | |
| 14 | 0.9 Dead + Wind 2... | Yes | Y | | 1 | .9 | 3 | -1 | | | | | | | | | | | | | | | | |
| 15 | 1.2 Dead + Wind 2... | Yes | Y | | 1 | 1.2 | 4 | -1 | | | | | | | | | | | | | | | | |
| 16 | 0.9 Dead + Wind 2... | Yes | Y | | 1 | .9 | 4 | -1 | | | | | | | | | | | | | | | | |
| 17 | 1.2 Dead + Wind 2... | Yes | Y | | 1 | 1.2 | 5 | -1 | | | | | | | | | | | | | | | | |
| 18 | 0.9 Dead + Wind 2... | Yes | Y | | 1 | .9 | 5 | -1 | | | | | | | | | | | | | | | | |
| 19 | 1.2 Dead + Wind 2... | Yes | Y | | 1 | 1.2 | 6 | -1 | | | | | | | | | | | | | | | | |
| 20 | 0.9 Dead + Wind 2... | Yes | Y | | 1 | .9 | 6 | -1 | | | | | | | | | | | | | | | | |

## Joint Boundary Conditions

| | Joint Label | X [k/in] | Y [k/in] | Z [k/in] | X Rot.[k-ft/rad] | Y Rot.[k-ft/rad] | Z Rot.[k-ft/rad] |
|---|---|---|---|---|---|---|---|
| 1 | N14 | Reaction | S973.92 | Reaction | | | |
| 2 | N16 | Reaction | S973.92 | Reaction | | | |
| 3 | N18 | Reaction | S973.92 | Reaction | | | |
| 4 | N8A | Reaction | S973.92 | Reaction | | | |
| 5 | N10A | Reaction | S973.92 | Reaction | | | |
| 6 | N12A | Reaction | S973.92 | Reaction | | | |
| 7 | N10 | Reaction | S307.85 | Reaction | | | |
| 8 | N8 | Reaction | S307.85 | Reaction | | | |
| 9 | N6 | Reaction | S307.85 | Reaction | | | |

## Joint Boundary Conditions (Continued)

| | Joint Label | X [k/in] | Y [k/in] | Z [k/in] | X Rot.[k-ft/rad] | Y Rot.[k-ft/rad] | Z Rot.[k-ft/rad] |
|---|---|---|---|---|---|---|---|
| 10 | N4 | Reaction | S307.85 | Reaction | | | |
| 11 | N2 | Reaction | S307.85 | Reaction | | | |
| 12 | N12 | Reaction | S307.85 | Reaction | | | |
| 13 | CENTER | | | | | | |

## Joint Loads and Enforced Displacements (BLC 1 : Dead)

| | Joint Label | L,D,M | Direction | Magnitude[(k,k-ft), (in,rad), (k*s^2/ft... |
|---|---|---|---|---|
| 1 | CENTER | L | Y | -61.97 |

## Joint Loads and Enforced Displacements (BLC 2 : WInd 0)

| | Joint Label | L,D,M | Direction | Magnitude[(k,k-ft), (in,rad), (k*s^2/ft... |
|---|---|---|---|---|
| 1 | CENTER | L | Mx | 5139.8 |

## Joint Loads and Enforced Displacements (BLC 3 : Wind 30)

| | Joint Label | L,D,M | Direction | Magnitude[(k,k-ft), (in,rad), (k*s^2/ft... |
|---|---|---|---|---|
| 1 | CENTER | L | Mx | 4451.197 |
| 2 | CENTER | L | Mz | 2569.9 |

## Joint Loads and Enforced Displacements (BLC 4 : Wind 45)

| | Joint Label | L,D,M | Direction | Magnitude[(k,k-ft), (in,rad), (k*s^2/ft... |
|---|---|---|---|---|
| 1 | CENTER | L | Mx | 3634.387 |
| 2 | CENTER | L | Mz | 3634.387 |

## Joint Loads and Enforced Displacements (BLC 5 : Wind 60)

| | Joint Label | L,D,M | Direction | Magnitude[(k,k-ft), (in,rad), (k*s^2/ft... |
|---|---|---|---|---|
| 1 | CENTER | L | Mx | 2569.9 |
| 2 | CENTER | L | Mz | 4451.197 |

## Joint Loads and Enforced Displacements (BLC 6 : Wind 90)

| | Joint Label | L,D,M | Direction | Magnitude[(k,k-ft), (in,rad), (k*s^2/ft... |
|---|---|---|---|---|
| 1 | CENTER | L | Mz | 5139.8 |

## General Material Properties

| | Label | E [ksi] | G [ksi] | Nu | Therm (/1E5 F) | Density[k/ft^3] |
|---|---|---|---|---|---|---|
| 1 | gen_Conc3NW | 3155 | 1372 | .15 | .6 | .145 |
| 2 | gen_Conc4NW | 3644 | 1584 | .15 | .6 | .145 |
| 3 | gen_Conc3LW | 2085 | 906 | .15 | .6 | .11 |
| 4 | gen_Conc4LW | 2408 | 1047 | .15 | .6 | .11 |
| 5 | gen_Alum | 10600 | 4077 | .3 | 1.29 | .173 |
| 6 | gen_Steel | 29000 | 11154 | .3 | .65 | .49 |
| 7 | RIGID | 1e+6 | | .3 | 0 | 0 |

PAUL J. FORD & COMPANY

| | |
|---|---|
| Date: | 5/18/2022 |
| Job #: | 37522-0173.001.7805 |

| Applied Reactions for RISA 3D | | |
|---|---|---|
| TNX Moment = | 5139.8 | k-ft |
| TNX Axial = | 74.36 | kips |
| TNX Shear = | 46.88 | kips |
| Total Unfactored Axial = | **61.97** | **kips** |
| Side Bending Moment = | **5139.8** | **k-ft** |
| Corner Bending Moment (Mx) = | **3634.4** | **k-ft** |
| Corner Bending Moment (Mz)= | **3634.4** | **k-ft** |

| Micropile Spring Constant | | |
|---|---|---|
| Number of Piles = | 6 | |
| B.C. = | 117.5 | in |
| Ag = | 4.03 | $in^2$ |
| E = | 29000 | ksi |
| Lu = | 10 | ft |
| k = An*E / Lu = | 973.92 | k/in |

| Helical Anchor Spring Constant | | |
|---|---|---|
| Number of Piles = | 6 | |
| B.C. = | 300 | in |
| Ag = | 8.28 | $in^2$ |
| E = | 29000 | ksi |
| Lu = | 65 | ft |
| k = An*E / Lu = | 307.85 | k/in |

| Micropile Capacity | | |
|---|---|---|
| Max Tension from RISA = | 123.784 | kips |
| Anchor Type = | Micropile | |
| Ultimate Load, Pu' = | 418 | kips |
| An = | [redacted] | $in^2$ |
| Capacity (Kips)= 0.8*Pu = | 334.4 | |
| **Ratio = 123.784 / 334.4 =** | **35.3%** | |

| Helical Anchor Capacity | | |
|---|---|---|
| Max Tension from RISA = | 95.249 | kips |
| Anchors per | 2 | |
| Helical Anchor Type = | RD4500.337 | |
| Design Torque = | 21000 | ft-lbs |
| Ultimate Capacity = | 140 | kips |
| Installed Torque = | 15000 | ft-lbs |
| Installed Capacity = | 100 | kips |
| Total Capacity = | 105 | kips |
| **Ratio = 95.249 / 105 =** | **86.4%** | |

*Structural ratings per TIA-222-H Section 15.5

| | | | Load Distribution |
|---|---|---|---|
| Micropile Effective Moment = | 43634 | k-in | 33.7% |
| Anchor Effective Moment = | 85724 | k-in | 66.3% |
| Total Effective Moment = | 129358 | k-in | |

**Reaction for Helical Load transfer at Base plate:**

| | | |
|---|---|---|
| **Moment =** | **3406.1** | **k-ft** |
| **Axial =** | **49.3** | **kips** |
| **Shear =** | **46.9** | **kips** |

# ASCE 7 Hazards Report

**Address:**
No Address at This Location

**Standard:** ASCE/SEI 7-16
**Risk Category:** II
**Soil Class:** D - Default (see Section 11.4.3)

**Elevation:** 70.37 ft (NAVD 88)
**Latitude:** 41.833444
**Longitude:** -72.603056

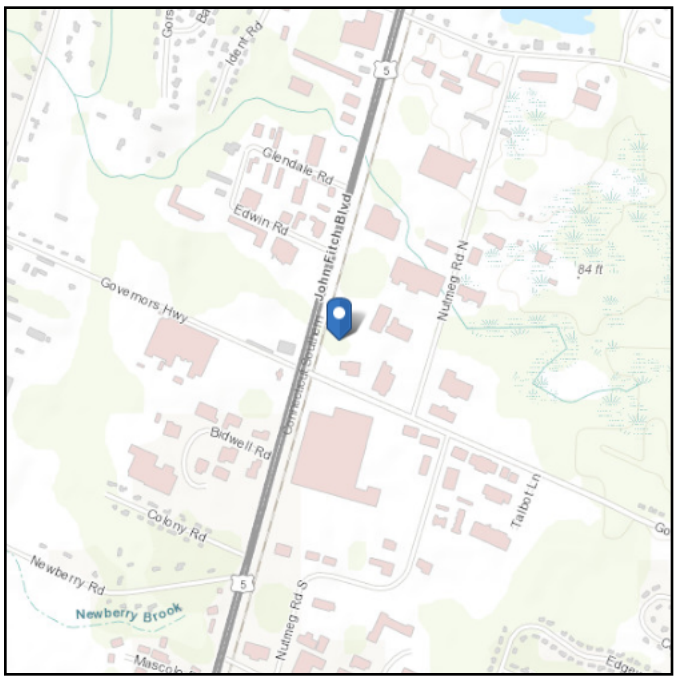


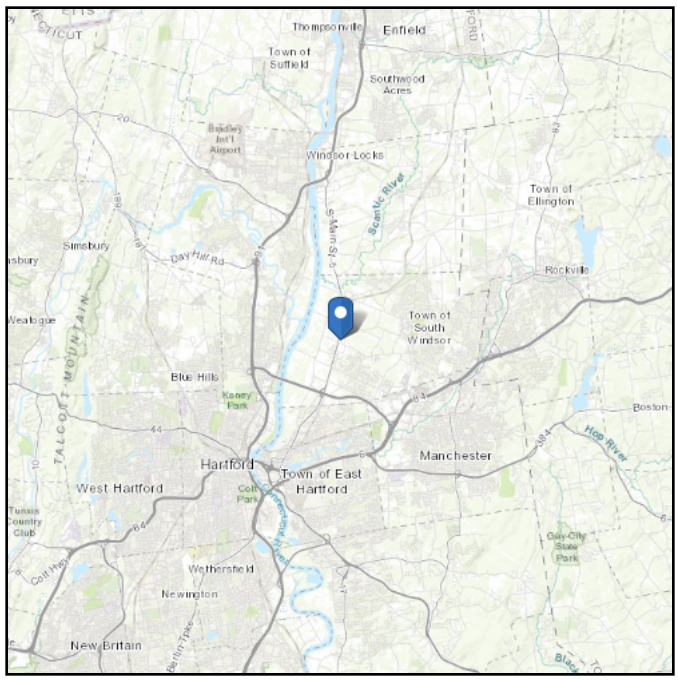


## Wind

**Results:**

| | |
|---|---|
| Wind Speed | 117 Vmph |
| 10-year MRI | 75 Vmph |
| 25-year MRI | 84 Vmph |
| 50-year MRI | 90 Vmph |
| 100-year MRI | 97 Vmph |

| | |
|---|---|
| Data Source: | ASCE/SEI 7-16, Fig. 26.5-1B and Figs. CC.2-1–CC.2-4, and Section 26.5.2 |
| Date Accessed: | Fri May 13 2022 |

Value provided is 3-second gust wind speeds at 33 ft above ground for Exposure C Category, based on linear interpolation between contours. Wind speeds are interpolated in accordance with the 7-16 Standard. Wind speeds correspond to approximately a 7% probability of exceedance in 50 years (annual exceedance probability = 0.00143, MRI = 700 years).

Site is in a hurricane-prone region as defined in ASCE/SEI 7-16 Section 26.2. Glazed openings need not be protected against wind-borne debris.

# Seismic

**Site Soil Class:** D - Default (see Section 11.4.3)

**Results:**

| | | | |
|---|---|---|---|
| $S_S$ : | 0.184 | $S_{D1}$ : | 0.088 |
| $S_1$ : | 0.055 | $T_L$ : | 6 |
| $F_a$ : | 1.6 | PGA : | 0.098 |
| $F_v$ : | 2.4 | $PGA_M$ : | 0.157 |
| $S_{MS}$ : | 0.294 | $F_{PGA}$ : | 1.6 |
| $S_{M1}$ : | 0.132 | $I_e$ : | 1 |
| $S_{DS}$ : | 0.196 | $C_v$ : | 0.7 |

**Seismic Design Category** B

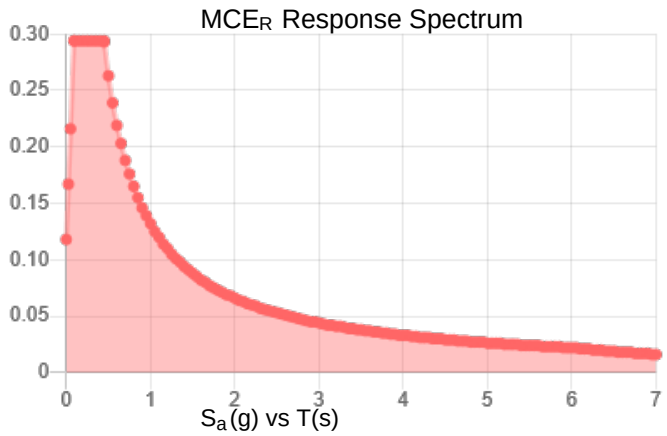


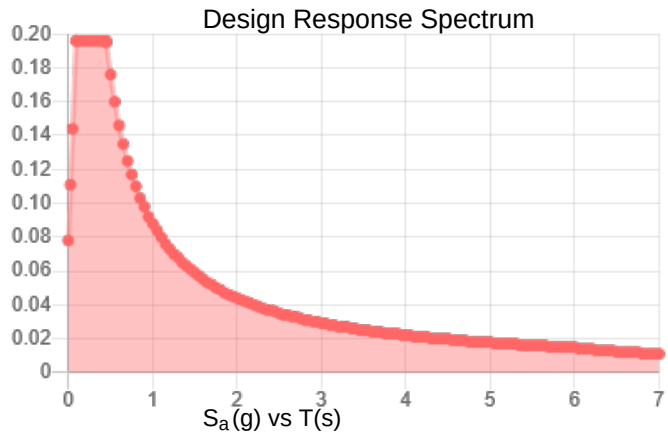


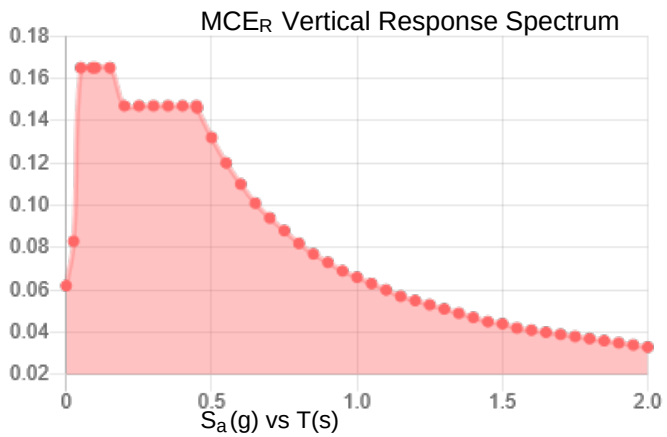


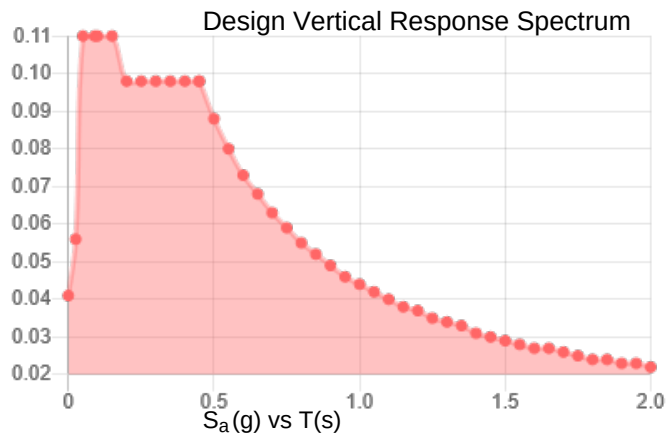


**Data Accessed:** **Fri May 13 2022**

**Date Source:**

**USGS Seismic Design Maps based on ASCE/SEI 7-16 and ASCE/SEI 7-16 Table 1.5-2. Additional data for site-specific ground motion procedures in accordance with ASCE/SEI 7-16 Ch. 21 are available from USGS.**

# Ice

**Results:**

| | |
|---|---|
| Ice Thickness: | 1.50 in. |
| Concurrent Temperature: | 5 F |
| Gust Speed | 50 mph |
| **Data Source:** | Standard ASCE/SEI 7-16, Figs. 10-2 through 10-8 |
| **Date Accessed:** | Fri May 13 2022 |

Ice thicknesses on structures in exposed locations at elevations higher than the surrounding terrain and in valleys and gorges may exceed the mapped values.

Values provided are equivalent radial ice thicknesses due to freezing rain with concurrent 3-second gust speeds, for a 500-year mean recurrence interval, and temperatures concurrent with ice thicknesses due to freezing rain. Thicknesses for ice accretions caused by other sources shall be obtained from local meteorological studies. Ice thicknesses in exposed locations at elevations higher than the surrounding terrain and in valleys and gorges may exceed the mapped values.

The ASCE 7 Hazard Tool is provided for your convenience, for informational purposes only, and is provided “as is” and without warranties of any kind. The location data included herein has been obtained from information developed, produced, and maintained by third party providers; or has been extrapolated from maps incorporated in the ASCE 7 standard. While ASCE has made every effort to use data obtained from reliable sources or methodologies, ASCE does not make any representations or warranties as to the accuracy, completeness, reliability, currency, or quality of any data provided herein. Any third-party links provided by this Tool should not be construed as an endorsement, affiliation, relationship, or sponsorship of such third-party content by or from ASCE.

ASCE does not intend, nor should anyone interpret, the results provided by this Tool to replace the sound judgment of a competent professional, having knowledge and experience in the appropriate field(s) of practice, nor to substitute for the standard of care required of such professionals in interpreting and applying the contents of this Tool or the ASCE 7 standard.

In using this Tool, you expressly assume all risks associated with your use. Under no circumstances shall ASCE or its officers, directors, employees, members, affiliates, or agents be liable to you or any other person for any direct, indirect, special, incidental, or consequential damages arising from or related to your use of, or reliance on, the Tool or any information obtained therein. To the fullest extent permitted by law, you agree to release and hold harmless ASCE from any and all liability of any nature arising out of or resulting from any use of data provided by the ASCE 7 Hazard Tool.

# Exhibit E

## Mount Analysis

Maser Consulting Connecticut
1055 Washington Boulevard
Stamford, CT 06901
203.324.0800
peter.albano@colliersengineering.com

# Post-Modification Antenna Mount Analysis Report and PMI Requirements

Mount Fix

SMART Tool Project #: 10145262
Maser Consulting Connecticut Project #: 22777026A

April 25, 2022

| | | |
|---|---|---|
| ***Site Information*** | *Site ID:* | *467434-VZW / SOUTH WINDSOR 2 CT* |
| | *Site Name:* | *SOUTH WINDSOR 2 CT* |
| | *Carrier Name:* | *Verizon Wireless* |
| | *Address:* | *300 Governors Highway*<br>*South Windsor, Connecticut 06074*<br>*Hartford County* |
| | *Latitude:* | *41.833496°* |
| | *Longitude:* | *-72.603026°* |
| ***Structure Information*** | *Tower Type:* | *Monopole* |
| | *Mount Type:* | *12.50-Ft Platform* |

**FUZE ID # 16092601**

## Analysis Results

Platform: **62.3 % Pass w/ Modifications***

***Antennas and equipment to be installed in compliance with PMI Requirements of this mount analysis.**

******Contractor PMI Requirements*:**
***Included at the end of this MA report***
***Available & Submitted via portal at https://pmi.vzwsmart.com***
***For additional questions and support, please reach out to:***
***pmisupport@colliersengineering.com***

Report Prepared By: David Anuka

STATE OF CONNECTICUT
DEJIAN XU
No. 33733
LICENSED
PROFESSIONAL ENGINEER

*04/25/2022*

## Executive Summary:

The objective of this report is to summarize the analysis results of the antenna support mount including the proposed modifications at the subject facility for the final wireless telecommunications configuration, per the applicable codes and standards.

This analysis is inclusive of the mount structure only and does not address the structural capacity of the supporting structure. This mounting frame was not analyzed as an anchor attachment point for fall protection. All climbing activities are required to have a fall protection plan completed by a competent person.

## Sources of Information:

| Document Type | Remarks |
|---|---|
| *Radio Frequency Data Sheet (RFDS)* | *Verizon RFDS, Site ID: 600189, dated March 28, 2022* |
| *Mount Mapping Report* | *Onsight Services LLC, Site #: 467434, dated April 7, 2022* |
| *Previous Mount Analysis* | *Colliers Engineering & Design, Project #: 22777026A, dated April 15, 2022* |
| *Mount Modification Documents* | *Colliers Engineering & Design, Project #: 22777026A, dated April 25, 2022* |

## Analysis Criteria:

| | | |
|---|---|---|
| Codes and Standards: | ANSI/TIA-222-H | |
| Wind Parameters: | Basic Wind Speed (Ultimate 3-sec. Gust), $V_{ULT}$: | 117 mph |
| | Ice Wind Speed (3-sec. Gust): | 50 mph |
| | Design Ice Thickness: | 1.50 in |
| | Risk Category: | II |
| | Exposure Category: | C |
| | Topographic Category: | 1 |
| | Topographic Feature Considered: | N/A |
| | Topographic Method: | N/A |
| | Ground Elevation Factor, $K_e$: | 0.997 |
| Seismic Parameters: | $S_S$: | 0.184 g |
| | $S_1$: | 0.055 g |
| Maintenance Parameters: | Wind Speed (3-sec. Gust): | 30 mph |
| | Maintenance Live Load, Lv: | 250 lbs. |
| | Maintenance Live Load, Lm: | 500 lbs. |
| Analysis Software: | RISA-3D (V17) | |

## Final Loading Configuration:

The following equipment has been considered for the analysis of the mount:

| Mount Elevation (ft) | Equipment Elevation (ft) | Quantity | Manufacturer | Model | Status |
|---|---|---|---|---|---|
| 110.75 | 112.00 | 3 | Commscope | NHH-65B-R2B | Added |
| | | 3 | Commscope | NHHSS-65B-R2BT4 | |
| | | 3 | Samsung | MT6407-77A | |
| | | 2 | Raycap | RVZDC-6627-PF-48 | |
| | | 3 | Samsung | RF4440d-13A | |
| | | 3 | Samsung | RF4439d-25A | |
| | | 3 | Samsung | CBRS RHH-RT4401-48A | |
| | | 3 | Commscope | LNX-6514DS-A1M | Retained |

It is acceptable to install up to any three (3) of the OVP model numbers listed below as required at any location other than the mount face without affecting the structural capacity of the mount. If OVP units are installed on the mount face, a mount re-analysis may be required unless replacing an existing OVP.

| Model Number | Ports | AKA |
|---|---|---|
| DB-B1-6C-12AB-0Z | 6 | OVP-6 |
| RVZDC-6627-PF-48 | 12 | OVP-12 |

## Standard Conditions:

1. All engineering services are performed on the basis that the information provided to Maser Consulting Connecticut and used in this analysis is current and correct. The existing equipment loading has been applied at locations determined from the supplied documentation. Any deviation from the loading locations specified in this report shall be communicated to Maser Consulting Connecticut to verify deviation will not adversely impact the analysis.

2. Mounts are assumed to have been properly fabricated, installed and maintained in good condition, twist free and plumb in accordance with its original design and manufacturer's specifications.

   Obvious safety and structural issues/deficiencies noticed at the time of the mount mapping and reported in the Mount Mapping Report are assumed to be corrected and documented as part of the PMI process and are not considered in the mount analysis.

   The mount analysis and the mount mapping are not a condition assessment of the mount. Proper maintenance and condition assessments are still required post analysis.

3. For mount analyses completed from other data sources (including new replacement mounts) and not specifically mapped in accordance with the NSTD-446 Standard, the mounts are assumed to have been properly fabricated, installed and maintained in good condition, twist free and plumb in accordance with its original design and manufacturer's specifications.

4. All member connections are assumed to have been designed to meet or exceed the load carrying capacity of the connected member unless otherwise specified in this report.

5. The mount was checked up to, and including, the bolts that fasten it to the mount collar/attachment and threaded rod connections in collar members if applicable. Local deformation and interaction between the mount collar/attachment and the supporting tower structure are outside the scope of this analysis.

6. All services are performed, results obtained, and recommendations made in accordance with generally accepted engineering principles and practices. Maser Consulting Connecticut is not responsible for the conclusion, opinions, and recommendations made by others based on the information supplied.

7. Structural Steel Grades have been assumed as follows, if applicable, unless otherwise noted in this analysis:
   - Channel, Solid Round, Angle, Plate — ASTM A36 (Gr. 36)
   - HSS (Rectangular) — ASTM 500 (Gr. B-46)
   - Pipe — ASTM A53 (Gr. B-35)
   - Threaded Rod — F1554 (Gr. 36)
   - Bolts — ASTM A325

8. Any mount modifications listed under Sources of Information are assumed to have been installed per the design specifications.

**Discrepancies between in-field conditions and the assumptions listed above may render this analysis invalid unless explicitly approved by Maser Consulting Connecticut.**

## Analysis Results:

| Component | Utilization % | Pass/Fail |
|---|---|---|
| Standoff Horizontal | 19.3 % | Pass |
| Corner Plate | 45.6 % | Pass |
| Face Horizontal | 15.2 % | Pass |
| Grating Angle | 31.3 % | Pass |
| Cross Member | 62.3 % | Pass |
| Mount Pipe | 26.1 % | Pass |
| Mount Pipe 2.5 | 19.3 % | Pass |
| MOD Support Rail | 13.0 % | Pass |
| MOD Support Rail Angle | 25.0 % | Pass |
| MOD Kicker | 12.9 % | Pass |
| Connection Check | 44.3 % | Pass |

| | |
|---|---|
| **Structure Rating – *(Controlling Utilization of all Components)*** | **62.3%** |

## Mount Steel (EPA)a per ANSI/TIA-222-H Section 2.6.11.2:

| Ice Thickness (In) | Mount Pipes Excluded | | Mount Pipes Included | |
|---|---|---|---|---|
| | Front (EPA)a (Sq. Ft.) | Side (EPA)a (Sq. Ft.) | Front (EPA)a (Sq. Ft.) | Side (EPA)a (Sq. Ft.) |
| 0 | 28.4 | 28.4 | 42.8 | 42.8 |
| 0.5 | 36.5 | 36.5 | 56.7 | 56.7 |
| 1 | 43.7 | 43.7 | 69.6 | 69.6 |

Notes:
- (EPA)a values listed above may be used in the absence of more precise information
- (EPA)a values in the table above include 3 sector(s).
- Ka factors included in (EPA)a calculations

## Requirements:

The existing mount will be **SUFFICIENT** for the final loading configuration (Attachment 2) after the modifications detailed in Attachment 3 are successfully completed.

ANSI/ASSP rigging plan review services compliant with the requirements of ANSI/TIA 322 are available for a Construction Class IV site or other, if required. Separate review fees will apply.

## Attachments:

1. **Contractor Required PMI Report Deliverables**
2. Antenna Placement Diagrams
3. Mount Modification Drawings
4. Mount Photos
5. Mount Mapping Report (for reference only)
6. Analysis Calculations

# Mount Desktop – Post Modification Inspection (PMI) Report Requirements

## Documents & Photos Required from Contractor – Mount Modification

Electronic pdf version of this can be downloaded at https://pmi.vzwsmart.com
For additional questions and support, please reach out to pmisupport@colliersengineering.com

---

PSLC #: 467434 SMART Project #: 10145262 Fuze Project ID: 16092601

**Purpose** – to upload the proper documentation to the SMART Tool in order to allow the SMART Tool engineering vendor to complete the required Mount Desktop review of the Post Modification Inspection Report.

- Contractor is responsible for making certain the photos provided as noted below provide confirmation that the modification was completed in accordance with the modification drawings.
- Contractor shall relay any data that can impact the performance of the mount or the mount modification, this includes safety issues.

**Base Requirements:**

- If installation of the modification will cause damage to the structure, the climbing facility, or safety climb if present or any installed system, SMART Tool vendor to be notified prior to install. Any special photos outside of the standard requirements will be indicated on the drawings.
- Provide "as built drawings" showing contractor's name, preparer's signature, and date. Any deviations from the drawings (proposed modification) shall be shown. NOTE: If loading is different than what is conveyed in the post-modification passing mount analysis (MA) contact the SMART Tool vendor immediately.
- Each photo shall be time and date stamped.
- Photos should be high resolution.
- Contractor shall ensure that the safety climb wire rope is not adversely impacted by the install of the modification components. This may involve the install of wire rope guides, or other items to protect the wire rope. If there is conflict, contact the SMART Tool engineer for recommendations.
- The PMI can be accessed at the following portal: **https://pmi.vzwsmart.com**

**Photo Requirements:**

- *Photos taken at ground level*
  - Photo of Gate Signs showing the tower owner, site name, and number.
  - Overall tower structure after installation of the modifications.
  - Photos of the mount after installation of the modifications; if the mounts are at different rad elevations, pictures must be provided for all elevations that the modifications were installed

- *Photos taken at Mount Elevation*
  - Photos showing the safety climb wire rope above and below the mount prior to modification.
  - Photos showing the climbing facility and safety climb if present.

- Photos showing each individual sector after installation of modifications. Each entire sector must be in one photo to show the interconnection of members.
    - These photos shall also certify that the placement and geometry of the equipment on the mount is as depicted in the antenna placement diagram in this form.
- Photos that show the model number of each antenna and piece of equipment installed per sector.
- Photos of each installed modification per the modification drawings; pictures shall also include connection hardware (U-bolts, bolts, nuts, all-threaded rods, etc.)
- Photos showing the distances (relative distance between collars) of the installed modifications from the appropriate reference locations shown in the modification drawings.
- Photos showing the installed modifications onto the tower (i.e. ring/collar mounts, tie-backs, V-bracing kits, etc.); if the existing mount elevation needs to be changed according to the modification drawings, an elevation measurement shall be provided before the elevation change.

**Material Certification:**

- Materials utilized must be as per specification on the drawings or the equivalent as validated by the SMART Tool vendor.
    - If the materials are as specified on the drawings
        - The contractor shall provide the packing list, or the materials certifications for the materials utilized to perform the mount modification
        - Commscope, Metrosite, Perfect Vision, Sabre, and Site Pro have all agreed to support Verizon vendors with the necessary material certifications
    - If seeking permission to use an equivalent
        - It is required that the SMART Tool engineering vendor approval of such is included in the contractor submission package. There may be an additional charge for approval if the equivalent submission doesn't meet specifications as prescribed in the drawings.

☐ All hardware has been properly installed, and the existing hardware was inspected.

☐ The material utilized was as specified on the SMART Tool engineering vendor Mount Modification Drawings and included in the material certification folder is a packing list or invoice for these materials.

OR

☐ The material utilized was approved by a SMART Tool engineering vendor as an "equivalent" and this approval is included as part of the contractor submission.

**Antenna & Equipment Placement and Geometry Confirmation:**

☐ The contractor certifies that the photos support and the equipment on the mount is as depicted on the sketch and table included in this form and with the mount analysis provided.

OR

☐ The contractor notes that the equipment on the mount is not in accordance with the sketch and has noted the differences below and provided photo documentation of any alterations.

**Comments:**

**Was the mount modification completed in conjunction with the equipment change / installation?**

☐ Yes ☐ No

**Special Instructions / Validation as required from the MA or Mod Drawings:**

**Issue:**

N/A

**Response:**

**Special Instruction Confirmation:**

☐ The contractor has read and acknowledges the above special instructions.

**Comments:**

**Contractor certifies that the climbing facility / safety climb was not damaged prior to starting work:**

☐ Yes ☐ No

**Contractor certifies no new damage created during the current installation:**

☐ Yes ☐ No

**Contractor to certify the condition of the safety climb and verify no damage when leaving the site:**

☐ Safety Climb in Good Condition ☐ Safety Climb Damaged

**Comments:**

| |
|---|
| |

**Certifying Individual:**

| | |
|---|---|
| Company: | |
| Employee Name: | |
| Contact Phone: | |
| Email: | |
| Date: | |

S r **A** 1 2 22

S r r T M 1 1 2 2

M E 11 . P 1

**Plan View**

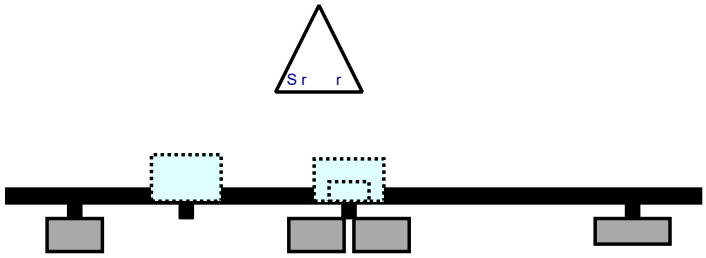


**Front View -** L S r r

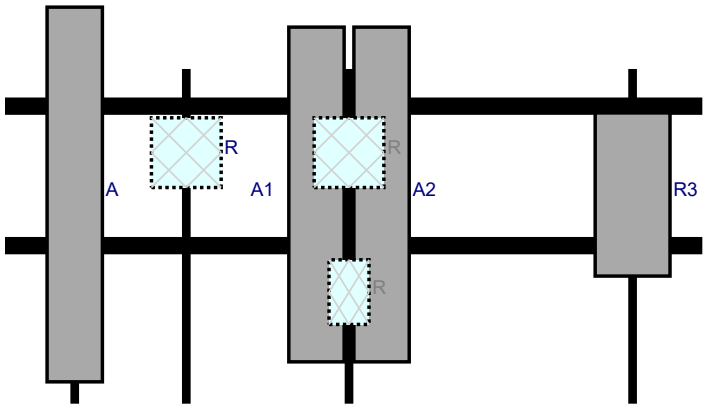


3 2 1

| R | M d | d | D | P | P | A | . A | A | | | |
|---|---|---|---|---|---|---|---|---|---|---|---|
| | | | r L. | | P | P | r T. | O | S | | d |
| R3 | MT A | 3 .1 | 1 .1 | 13 | 1 | | r | 2 | Add d | | |
| A1 | B R2B | 2 | 11. | | 2 | | r | 2 | Add d | | |
| A2 | SS B R2BT | 2 | 11. | | 2 | | r | 2 | Add d | | |
| R | R d 13A | 1 | 1 | | 2 | | B d | 1 | Add d | | |
| R | BRS RR RT 1 A | 13. | . | | 2 | | B d | | Add d | | |
| R | R 3 d 2 A | 1 | 1 | 3 | 3 | | B d | 1 | Add d | | |
| A | L 1 DS A1M | . | 11. | 1 | | | r | 2 | R d | | 2 22 |
| O P | R D 2 P | 2 . | 1 . | | M r | | | | Add d | | |

S r **B** 1 2 22

S r r T M 1 1 2 2

M E 11 . P 2

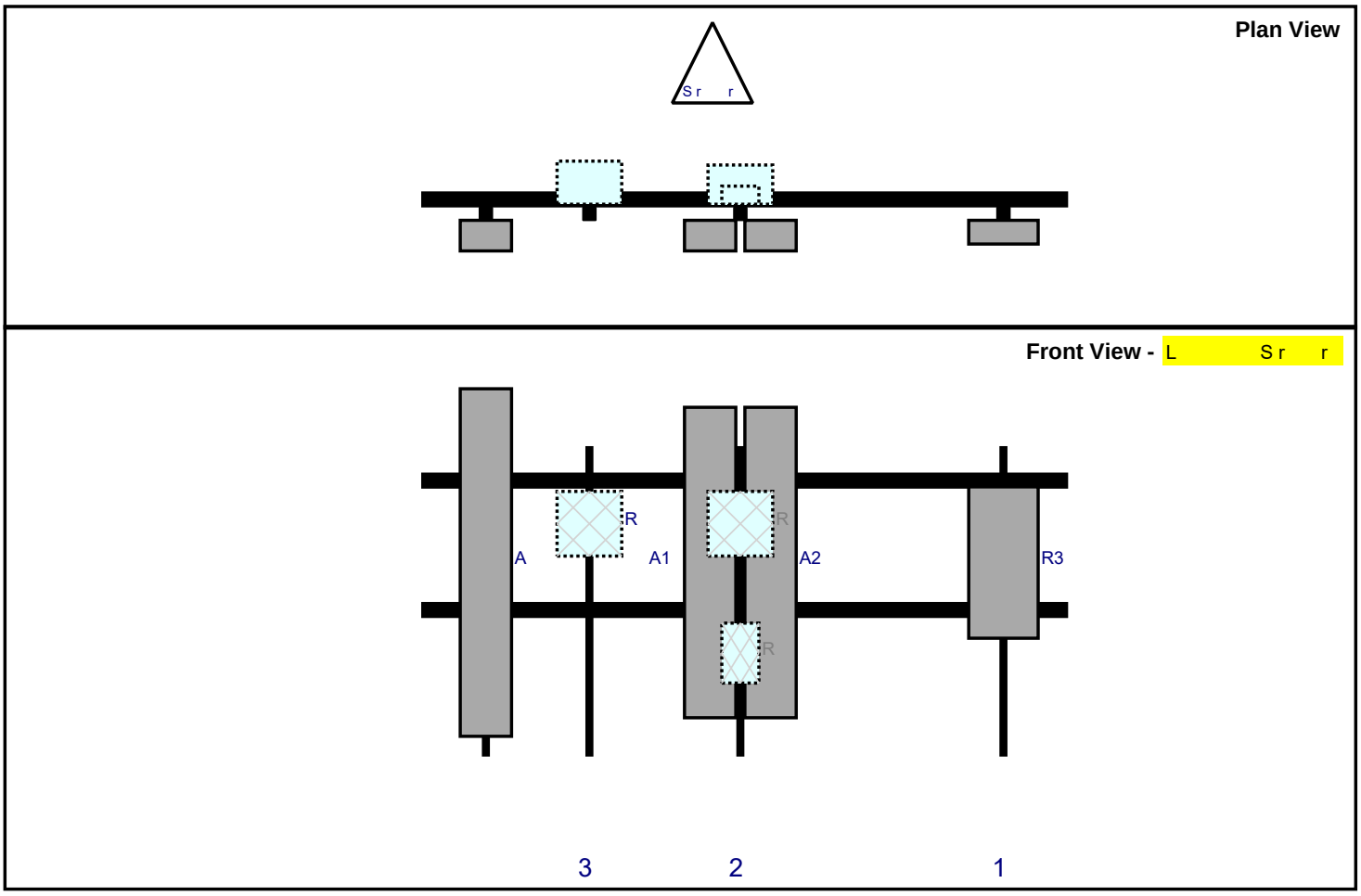


| R | M d | d | D | P | P | A | . A | A | | | | |
|---|---|---|---|---|---|---|---|---|---|---|---|---|
| | | | r L. | | P | P | r T. | O | S | | | d |
| R3 | MT A | 3 .1 | 1 .1 | 13 | 1 | | r | 2 | | Add d | | |
| A1 | B R2B | 2 | 11. | | 2 | | r | 2 | | Add d | | |
| A2 | SS B R2BT | 2 | 11. | | 2 | | r | 2 | | Add d | | |
| R | R d 13A | 1 | 1 | | 2 | | B | d 1 | | Add d | | |
| R | BRS RR RT 1 A | 13. | . | | 2 | | B | d | | Add d | | |
| R | R 3 d 2 A | 1 | 1 | 3 | 3 | | B | d 1 | | Add d | | |
| A | L 1 DS A1M | . | 11. | 1 | | | r | 2 | | R d | | 2 22 |

S r **C** 1 2 22

S r r T M 1 1 2 2

M E 11 . P 3

**Plan View**

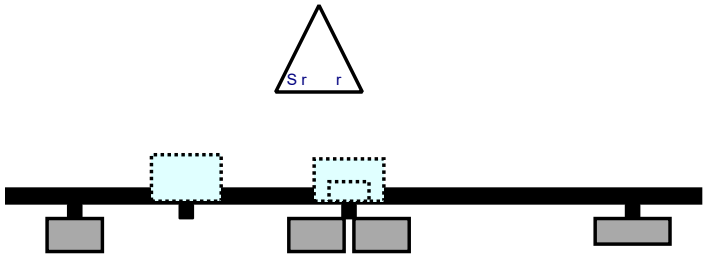


**Front View -** L S r r

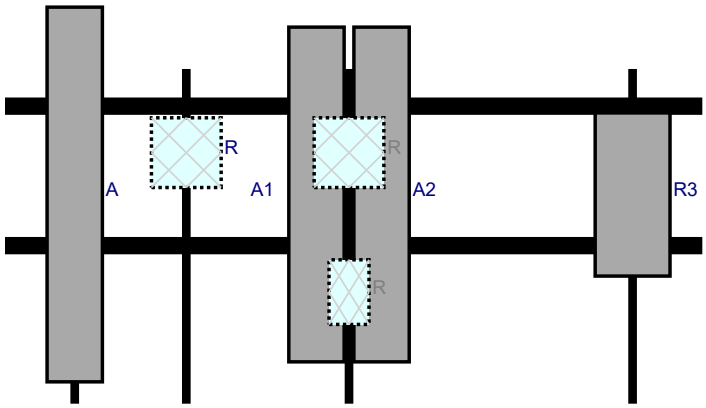


| R | M d | d | D | P | P | A | . A | A | S | d |
|---|---|---|---|---|---|---|---|---|---|---|
| | | | r L. | | P | P | r T. | O | | |
| R3 | MT A | 3 .1 | 1 .1 | 13 | 1 | r | 2 | | Add d | |
| A1 | B R2B | 2 | 11. | | 2 | r | 2 | | Add d | |
| A2 | SS B R2BT | 2 | 11. | | 2 | r | 2 | | Add d | |
| R | R d 13A | 1 | 1 | | 2 | B d | 1 | | Add d | |
| R | BRS RR RT 1 A | 13. | . | | 2 | B d | | | Add d | |
| R | R 3 d 2 A | 1 | 1 | 3 | 3 | B d | 1 | | Add d | |
| A | L 1 DS A1M | . | 11. | 1 | | r | 2 | | R d | 2 22 |

1A
ALPHA
1B

V4.1 Updated on 12-17-2021

# Antenna Mount Mapping Form (PATENT PENDING)

| | | | |
|---|---|---|---|
| | | | FCC # |
| **Tower Owner:** | CROWN CASTLE | **Mapping Date:** | 4/7/2022 |
| **Site Name:** | SOUTH WINDSOR 2 CT | **Tower Type:** | MONOPOLE |
| **Site Number or ID:** | 467434 | **Tower Height (Ft.):** | 165 |
| **Mapping Contractor:** | Onsight Services LLC | **Mount Elevation (Ft.):** | 115.5 |

This antenna mapping form is the property of TES and under **PATENT PENDING**. The formation contained herein is considered confidential in nature and is to be used only for the specific customer it was intended for. Reproduction, transmission, publication, modification or disclosure by any method is prohibited except by express written permission of TES. All means and methods are the responsibility of the contractor and the work shall be compliant with ANSI/ASSE A 10.48, OSHA, FCC, FAA and other safety requirements that may apply. TES is not warrantying the usability of the safety climb as it must be assessed prior to each use in compliance with OSHA requirements.

Site Number:

**TOP VIEW**

*All measurements / offsets given in inches*

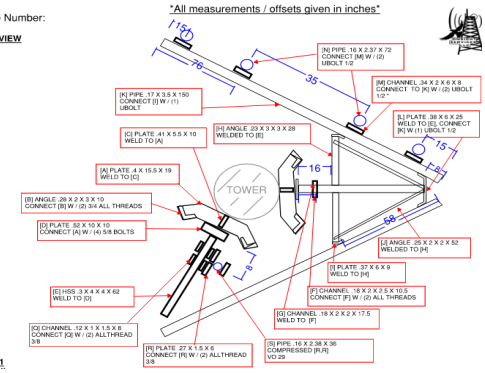


**Mount Pipe Configuration and Geometries [Unit = Inches]**

| Sector / Position | Mount Pipe Size & Length | Vertical Offset Dimension "u" | Horizontal Offset "C1, C2, C3, etc." | Sector / Position | Mount Pipe Size & Length | Vertical Offset Dimension "u" | Horizontal Offset "C1, C2, C3, etc." |
|---|---|---|---|---|---|---|---|
| A1 | .16 X 2.37 OD X 72 | 38.00 | 15.00 | C1 | .16 X 2.37 OD X 72 | 38.00 | 15.00 |
| A2 | .16 X 2.37 OD X 72 | 38.00 | 76.00 | C2 | .16 X 2.37 OD X 72 | 38.00 | 76.00 |
| A3 | .16 X 2.37 OD X 72 | 38.00 | 111.00 | C3 | .16 X 2.37 OD X 72 | 38.00 | 111.00 |
| A4 | .16 X 2.37 OD X 72 | 38.00 | 135.00 | C4 | .16 X 2.37 OD X 72 | 38.00 | 135.00 |
| A5 | | | | C5 | | | |
| A6 | | | | C6 | | | |
| B1 | .16 X 2.37 OD X 72 | 38.00 | 15.00 | D1 | | | |
| B2 | .16 X 2.37 OD X 72 | 38.00 | 76.00 | D2 | | | |
| B3 | .16 X 2.37 OD X 72 | 38.00 | 111.00 | D3 | | | |
| B4 | .16 X 2.37 OD X 72 | 38.00 | 135.00 | D4 | | | |
| B5 | | | | D5 | | | |
| B6 | | | | D6 | | | |
| Distance from top of bottom support rail to lowest tip of ant./eqpt. of Carrier above. (N/A if > 10 ft.) : | | | | | | | |
| Distance from top of bottom support rail to highest tip of ant./eqpt. of Carrier below. (N/A if > 10 ft.) : | | | | | | | |
| Please enter additional infomation or comments below. | | | | | | | |
| | | | | | | | |
| | | | | | | | |
| | | | | | | | |
| Tower Face Width at Mount Elev. (ft.): | | | Tower Leg Size or Pole Shaft Diameter at Mount Elev. (in.): | | | | 28.6 |

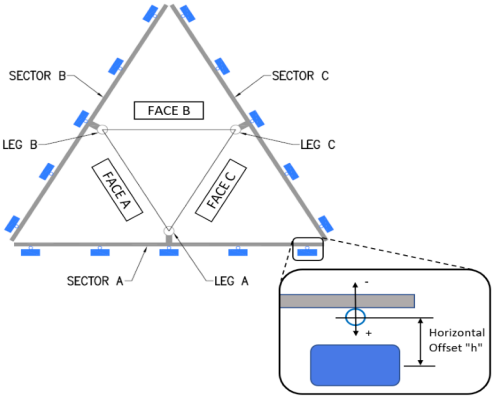


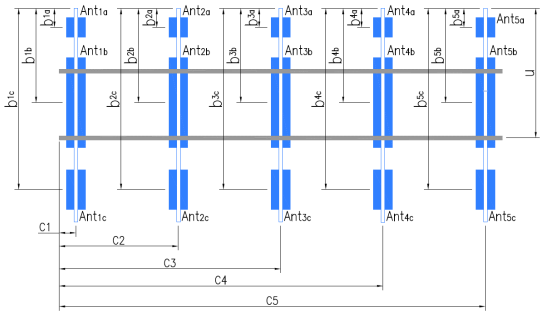


**Antenna Layout (Looking Out From Tower)**

| | Enter antenna model. If not labeled, enter "Unknown". | | | | | | Mounting Locations [Units are inches and degrees] | | | Photos of antennas |
|---|---|---|---|---|---|---|---|---|---|---|
| Ants. Items | Antenna Models if Known | Width (in.) | Depth (in.) | Height (in.) | Coax Size and Qty | Antenna Center-line (Ft.) | Vertical Distances"$b_{1a}$, $b_{2a}$, $b_{3a}$, $b_{1b}$...." (Inches) | Horiz. Offset "h" (Use "-" if Ant. is behind) | Antenna Azimuth (Degrees) | Photo Numbers |
| **Sector A** | | | | | | | | | | |
| $Ant_{1a}$ | HBXX-6517DS-A2M | | | | | 118.3 | 20.00 | 8.00 | | 207 |
| $Ant_{1b}$ | B4 RRH2X60-4R | | | | | 118.3 | 14.00 | 6.00 | | 215 |
| $Ant_{1c}$ | | | | | | | | | | |
| $Ant_{2a}$ | UNKNOWN | 12.00 | 7.50 | 73.00 | | 115.9 | 32.00 | 7.00 | | 221 |
| $Ant_{2b}$ | | | | | | | | | | |
| $Ant_{2c}$ | | | | | | | | | | |
| $Ant_{3a}$ | HBXX-6517DS-A2M | | | | | 116.5 | 24.00 | 8.00 | | 232 |
| $Ant_{3b}$ | | | | | | | | | | |
| $Ant_{3c}$ | | | | | | | | | | |
| $Ant_{4a}$ | UNKNOWN | 12.00 | 7.50 | 73.00 | | 115.9 | 32.00 | 7.00 | | 221 |
| $Ant_{4b}$ | | | | | | | | | | |
| $Ant_{4c}$ | | | | | | | | | | |
| $Ant_{5a}$ | | | | | | | | | | |
| $Ant_{5b}$ | | | | | | | | | | |
| $Ant_{5c}$ | | | | | | | | | | |
| Ant on Standoff | | | | | | | | | | |
| Ant on Standoff | | | | | | | | | | |
| Ant on Tower | | | | | | | | | | |
| Ant on Tower | | | | | | | | | | |

| Mount Azimuth (Degree) for Each Sector | | | Tower Leg Azimuth (Degree) for Each Sector | | |
|---|---|---|---|---|---|
| Sector A: | 20.00 | Deg | Leg A: | | Deg |
| Sector B: | 140.00 | Deg | Leg B: | | Deg |
| Sector C: | 260.00 | Deg | Leg C: | | Deg |
| Sector D: | | Deg | Leg D: | | Deg |

| Climbing Facility Information | | |
|---|---|---|
| Location: | 40.00 | Deg |
| Climbing Facility | Corrosion Type: | Good condition. |
| | Access: | Climbing path was unobstructed. |
| | Condition: | Good condition. |

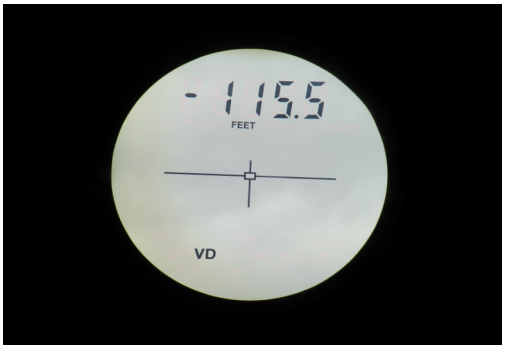


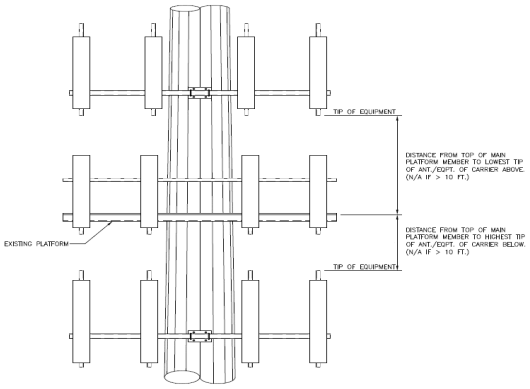


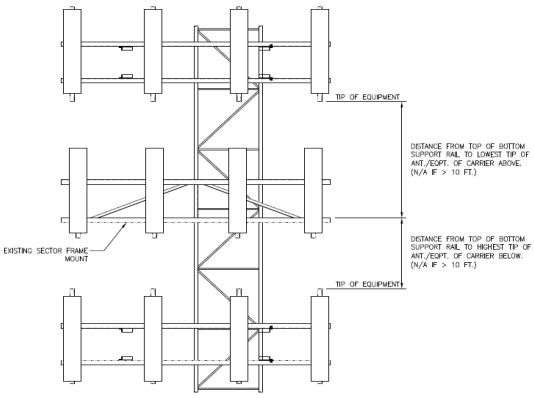


| | | | | | | | | | | |
|---|---|---|---|---|---|---|---|---|---|---|
| **Sector B** | | | | | | | | | | |
| $Ant_{1a}$ | HBXX-6517DS-A2M | | | | | 118.3 | 20.00 | 8.00 | | 207 |
| $Ant_{1b}$ | B4 RRH2X60-4R | | | | | 118.3 | 14.00 | 6.00 | | 215 |
| $Ant_{1c}$ | | | | | | | | | | |
| $Ant_{2a}$ | UNKNOWN | 12.00 | 7.50 | 73.00 | | 115.9 | 32.00 | 7.00 | | 221 |
| $Ant_{2b}$ | | | | | | | | | | |
| $Ant_{2c}$ | | | | | | | | | | |
| $Ant_{3a}$ | HBXX-6517DS-A2M | | | | | 116.5 | 24.00 | 8.00 | | 232 |
| $Ant_{3b}$ | | | | | | | | | | |
| $Ant_{3c}$ | | | | | | | | | | |
| $Ant_{4a}$ | UNKNOWN | 12.00 | 7.50 | 73.00 | | 115.9 | 32.00 | 7.00 | | 221 |
| $Ant_{4b}$ | | | | | | | | | | |
| $Ant_{4c}$ | | | | | | | | | | |
| $Ant_{5a}$ | | | | | | | | | | |
| $Ant_{5b}$ | | | | | | | | | | |
| $Ant_{5c}$ | | | | | | | | | | |
| Ant on Standoff | RRFDC-3315-PF-48 | | | | | 118.3 | 0.00 | 7.00 | | 178 |
| Ant on Standoff | RRFDC-3315-PF-48 | | | | | 118.3 | 0.00 | 7.00 | | 178 |
| Ant on Tower | | | | | | | | | | |
| Ant on Tower | | | | | | | | | | |
| **Sector C** | | | | | | | | | | |
| $Ant_{1a}$ | HBXX-6517DS-A2M | | | | | 118.3 | 20.00 | 8.00 | | 207 |
| $Ant_{1b}$ | B4 RRH2X60-4R | | | | | 118.3 | 14.00 | 6.00 | | 215 |
| $Ant_{1c}$ | | | | | | | | | | |
| $Ant_{2a}$ | UNKNOWN | 12.00 | 7.50 | 73.00 | | 115.9 | 32.00 | 7.00 | | 221 |
| $Ant_{2b}$ | | | | | | | | | | |
| $Ant_{2c}$ | | | | | | | | | | |
| $Ant_{3a}$ | HBXX-6517DS-A2M | | | | | 116.5 | 24.00 | 8.00 | | 232 |
| $Ant_{3b}$ | | | | | | | | | | |
| $Ant_{3c}$ | | | | | | | | | | |
| $Ant_{4a}$ | UNKNOWN | 12.00 | 7.50 | 73.00 | | 115.9 | 32.00 | 7.00 | | 221 |
| $Ant_{4b}$ | | | | | | | | | | |
| $Ant_{4c}$ | | | | | | | | | | |
| $Ant_{5a}$ | | | | | | | | | | |
| $Ant_{5b}$ | | | | | | | | | | |
| $Ant_{5c}$ | | | | | | | | | | |
| Ant on Standoff | | | | | | | | | | |
| Ant on Standoff | | | | | | | | | | |
| Ant on Tower | | | | | | | | | | |
| Ant on Tower | | | | | | | | | | |
| **Sector D** | | | | | | | | | | |
| $Ant_{1a}$ | | | | | | | | | | |
| $Ant_{1b}$ | | | | | | | | | | |
| $Ant_{1c}$ | | | | | | | | | | |
| $Ant_{2a}$ | | | | | | | | | | |
| $Ant_{2b}$ | | | | | | | | | | |
| $Ant_{2c}$ | | | | | | | | | | |
| $Ant_{3a}$ | | | | | | | | | | |
| $Ant_{3b}$ | | | | | | | | | | |
| $Ant_{3c}$ | | | | | | | | | | |
| $Ant_{4a}$ | | | | | | | | | | |
| $Ant_{4b}$ | | | | | | | | | | |
| $Ant_{4c}$ | | | | | | | | | | |
| $Ant_{5a}$ | | | | | | | | | | |
| $Ant_{5b}$ | | | | | | | | | | |
| $Ant_{5c}$ | | | | | | | | | | |
| Ant on Standoff | | | | | | | | | | |
| Ant on Standoff | | | | | | | | | | |
| Ant on Tower | | | | | | | | | | |
| Ant on Tower | | | | | | | | | | |

| Observed Safety and Structural Issues During the Mount Mapping | | |
|---|---|---|
| Issue # | Description of Issue | Photo # |
| 1 | | |
| 2 | | |
| 3 | | |
| 4 | | |
| 5 | | |
| 6 | | |
| 7 | | |
| 8 | | |

**Mapping Notes**

1. Please report any visible structural or safety issues observed on the antenna mounts (Damaged members, loose connections, tilting mounts, safety climb issues, etc.)
2. If the thickness of the existing pipes or tubing can't be obtained from a general tool (such as Caliper), please use an ultrasonic measurement tool (thickness gauge) to measure the thickness.
3. Please create all required detail sketches of the mounts and insert them into the "Sketches" tab.
4. Please measure and enter the bolt sizes and types under the Members Box in the spreadsheet of the mount type.
5. Take and label the photos of the tower, mounts, connections, antennas and all measurements. Minimum 50 photos are required.
6. Please measure and report the size and length of all existing antenna mounting pipes.
7. Please measure and report the antenna information for all sectors.
8. Don't delete or rearrange any sheet or contents of any sheet from this mapping form.

**Standard Conditions**

1. Obvious safety and structural issues/deficiencies noticed at the time of the mount mapping are to be reported in this mapping. However, this mount mapping is not a condition assessment of the mount.

V4.1 Updated on 12-17-2021

| SMART Tool© Vendor | Antenna Mount Mapping Form (PATENT PENDING) | | | FCC # |
|---|---|---|---|---|
| | **Tower Owner:** | CROWN CASTLE | **Mapping Date:** | 4/7/2022 |
| | **Site Name:** | SOUTH WINDSOR 2 CT | **Tower Type:** | MONOPOLE |
| | **Site Number or ID:** | 467434 | **Tower Height (Ft.):** | 165 |
| | **Mapping Contractor:** | Onsight Services LLC | **Mount Elevation (Ft.):** | 115.5 |

This antenna mapping form is the property of TES and under PATENT PENDING. The formation contained herein is considered confidential in nature and is to be used only for the specific customer it was intended for. Reproduction, transmission, publication, modification or disclosure by any method is prohibited except by express written permission of TES. All means and methods are the responsibility of the contractor and the work shall be compliant with ANSI/ASSE A 10.48, OSHA, FCC, FAA and other safety requirements that may apply. TES is not warrantying the usability of the safety climb as it must be assessed prior to each use in compliance with OSHA requirements.

**Please Insert Sketches of the Antenna Mount**

Site Number:

**TOP VIEW**

*All measurements / offsets given in inches*

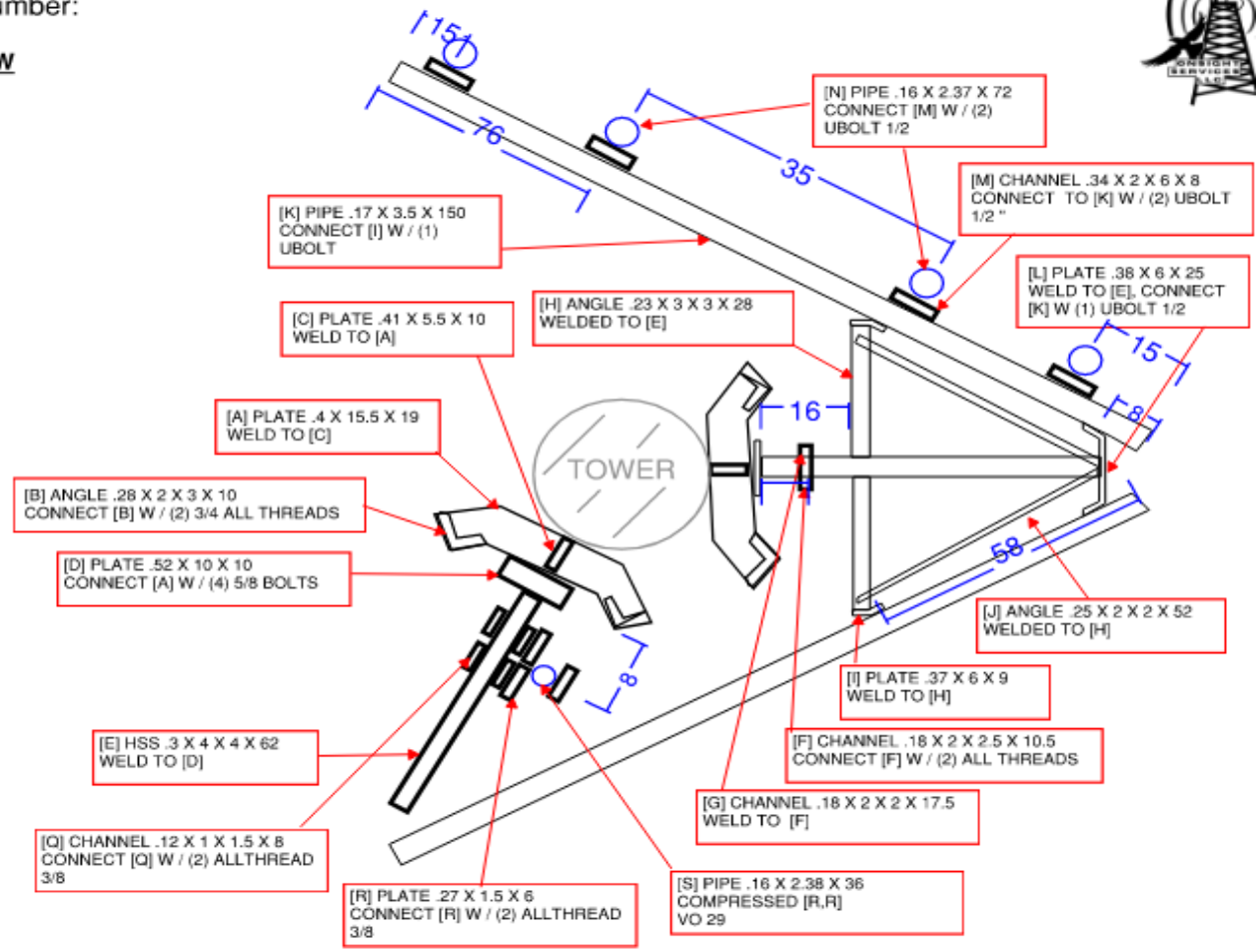


**PIPE 1**

Please Insert Sketches of the Antenna Mount, cont'd

**PIPE 1 DETAIL**

3/8

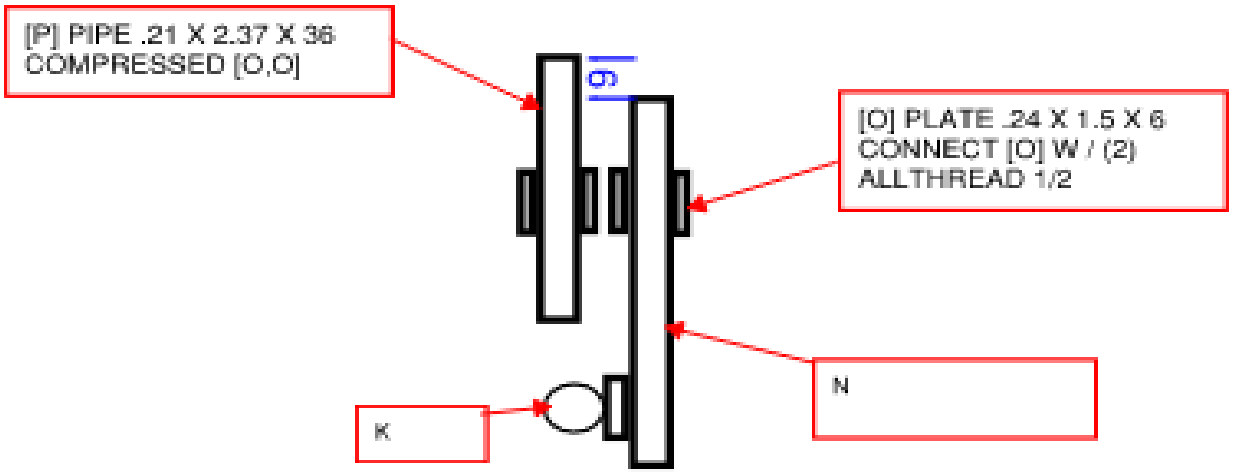

**Please Insert Sketches of the Antenna Mount, cont'd**

**AZIMUTH**

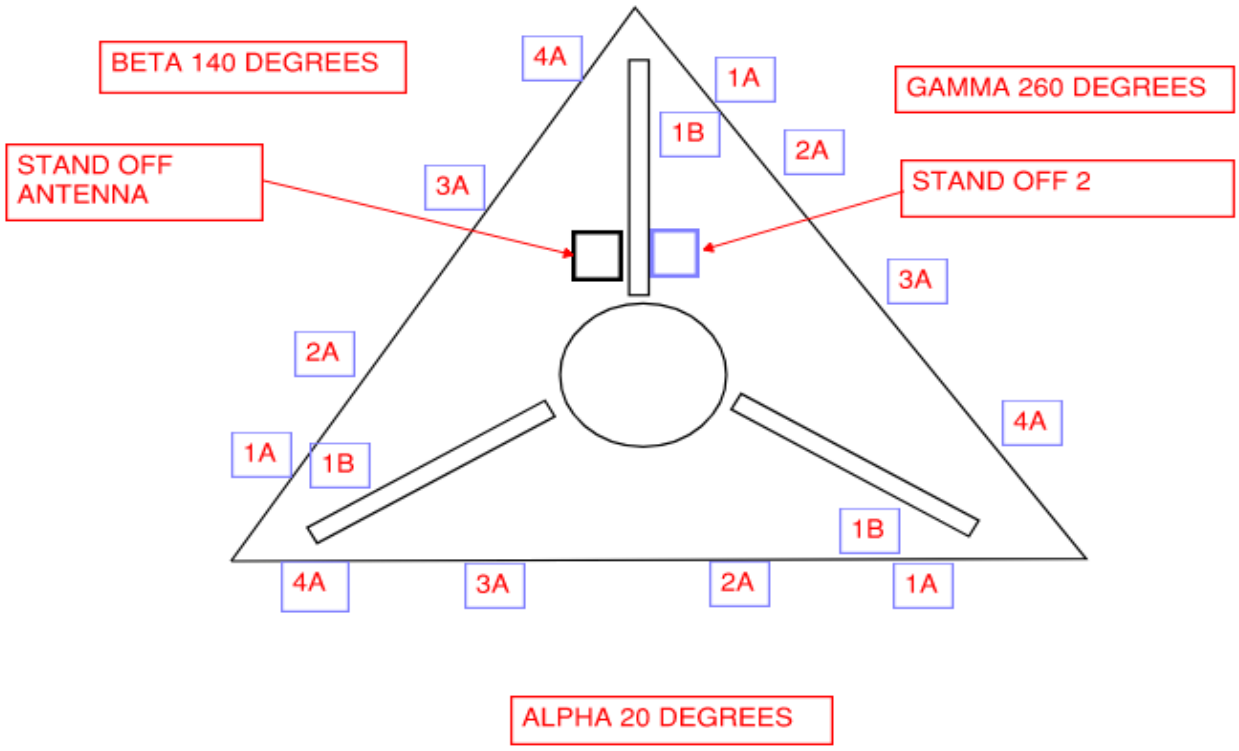

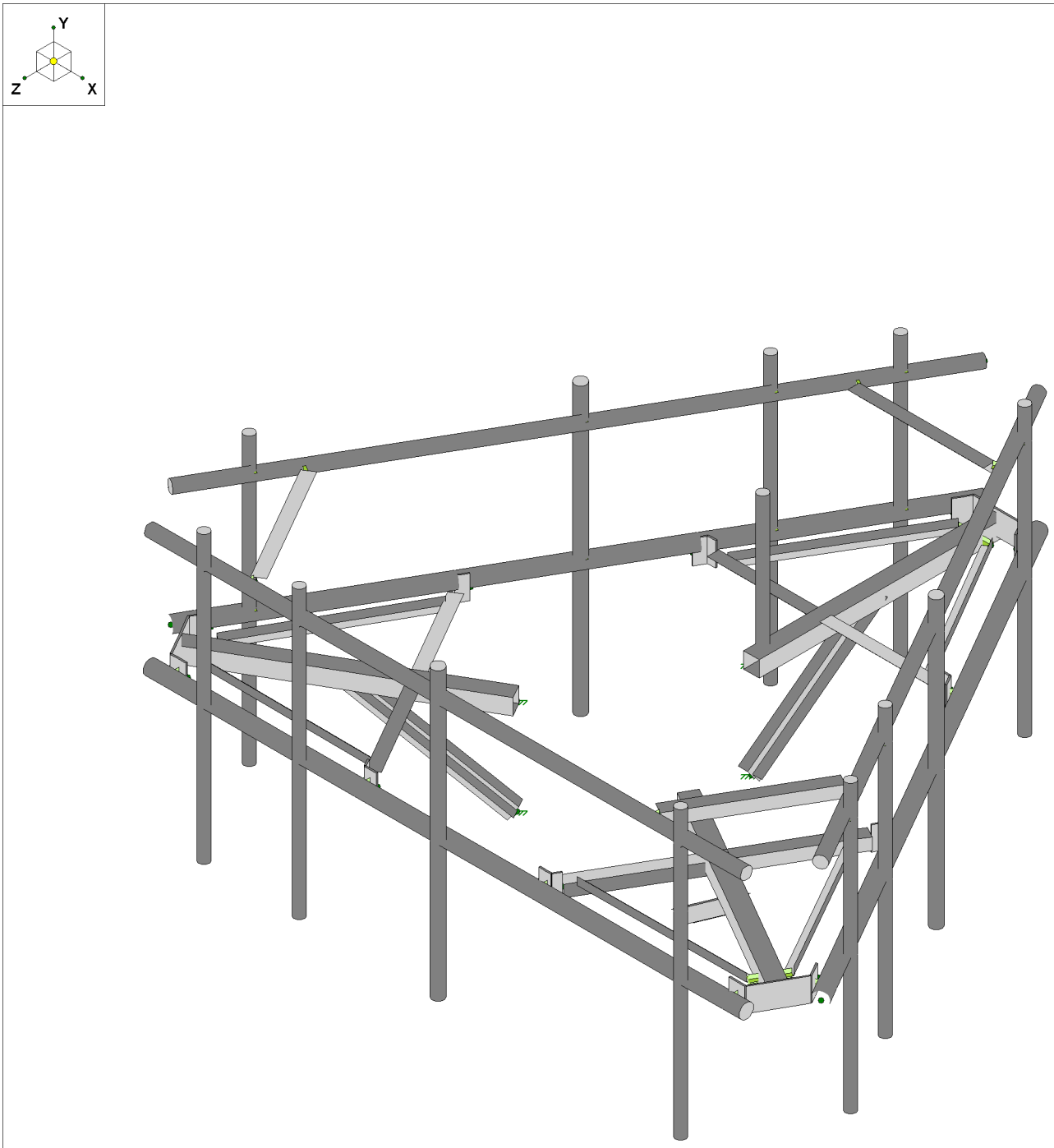


Envelope Only Solution

| | | |
|---|---|---|
| | | SK - 1 |
| | | Apr 19, 2022 at 2:10 PM |
| | | 467434-VZW_MT_LO_H.r3d |

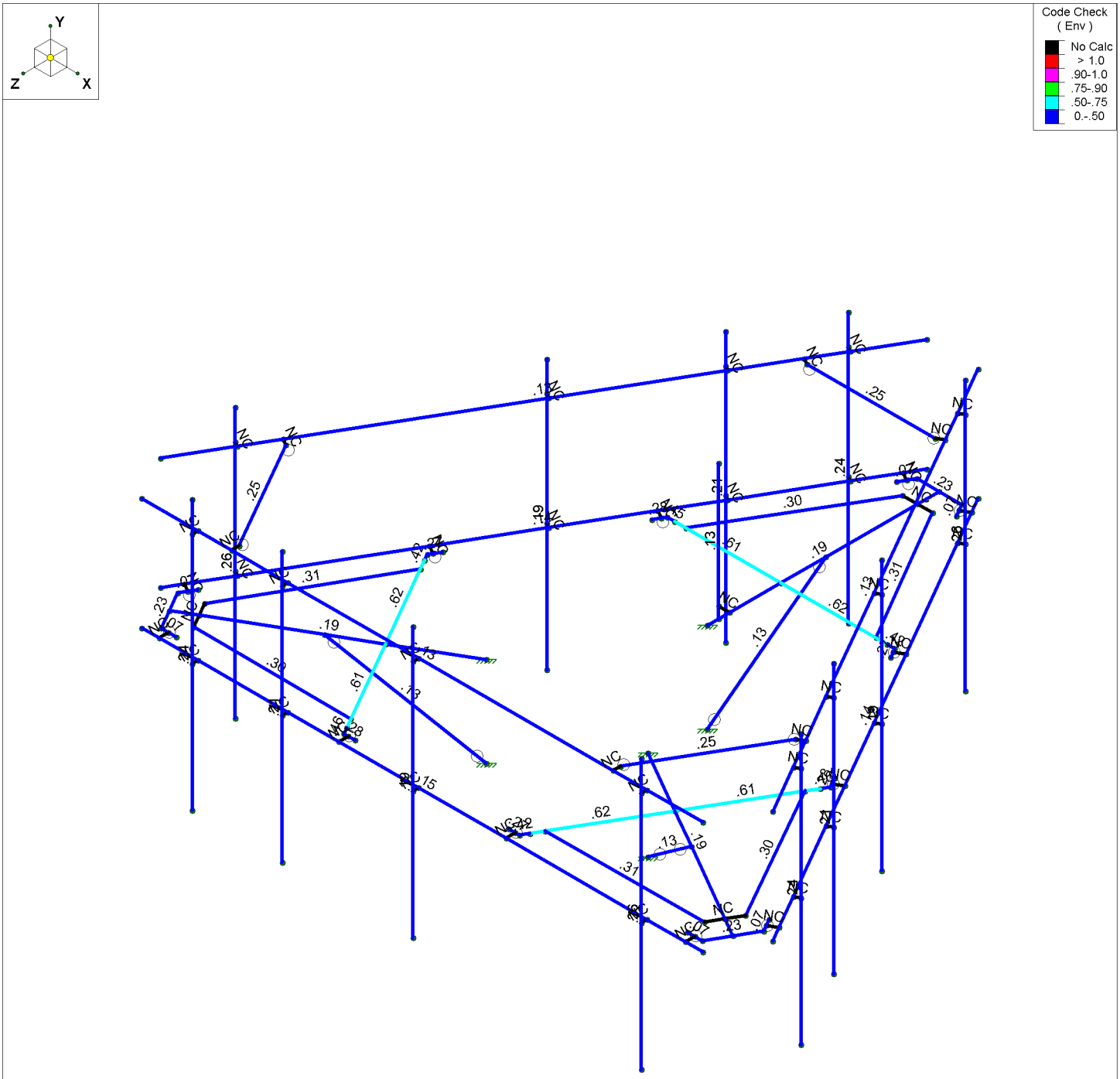


Member Code Checks Displayed (Enveloped)
Envelope Only Solution

| | | |
|---|---|---|
| | | SK - 2 |
| | | Apr 19, 2022 at 2:10 PM |
| | | 467434-VZW_MT_LO_H.r3d |

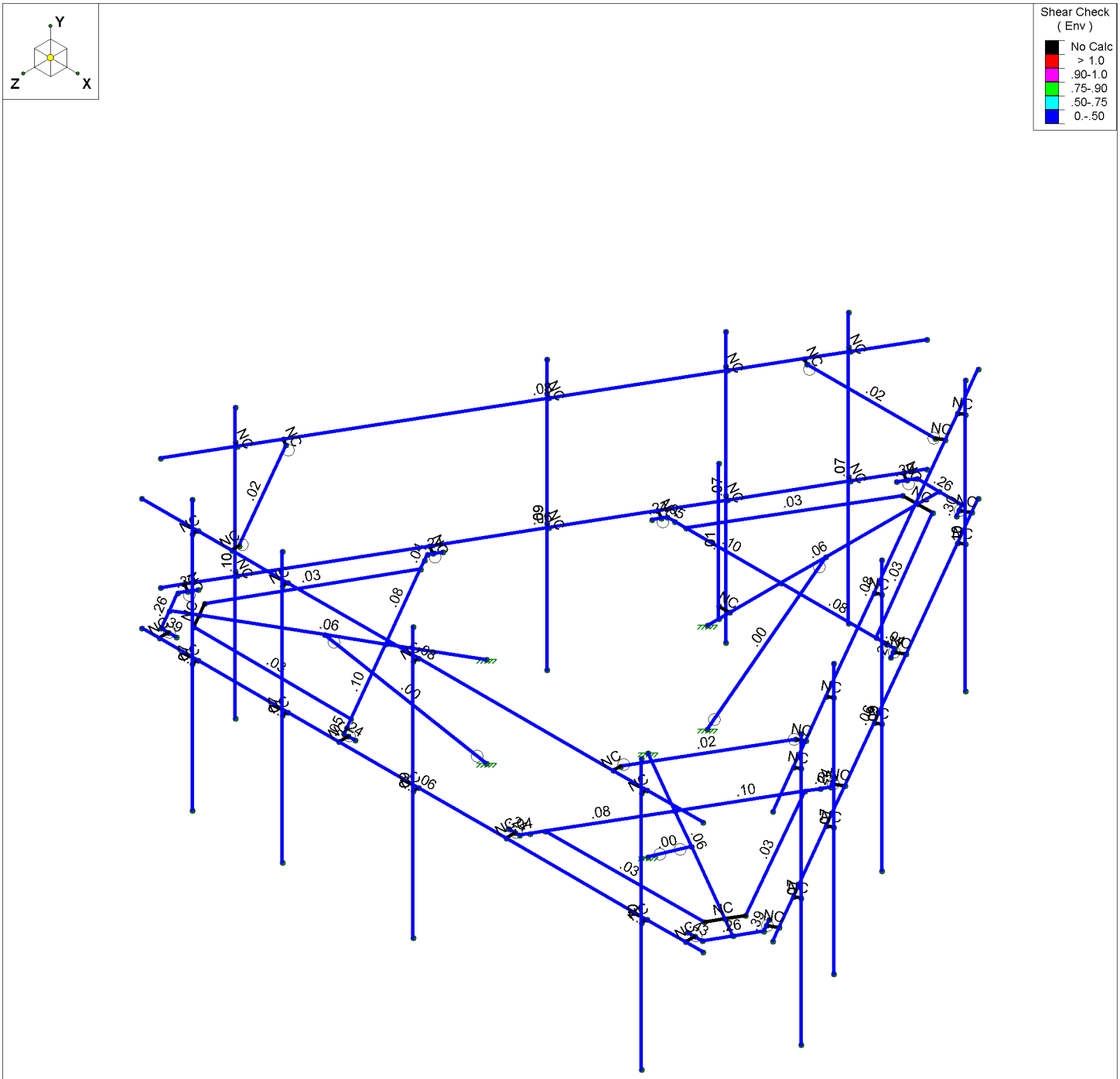


Member Shear Checks Displayed (Enveloped)
Envelope Only Solution

| | | |
|---|---|---|
| | | SK - 3 |
| | | Apr 19, 2022 at 2:10 PM |
| | | 467434-VZW_MT_LO_H.r3d |

## Basic Load Cases

| | BLC Description | Category | X Gravity | Y Gravity | Z Gravity | Joint | Point | Distributed | Area(Me... | Surface(P... |
|---|---|---|---|---|---|---|---|---|---|---|
| 1 | Antenna D | None | | | | | 102 | | | |
| 2 | Antenna Di | None | | | | | 102 | | | |
| 3 | Antenna Wo (0 Deg) | None | | | | | 102 | | | |
| 4 | Antenna Wo (30 Deg) | None | | | | | 102 | | | |
| 5 | Antenna Wo (60 Deg) | None | | | | | 102 | | | |
| 6 | Antenna Wo (90 Deg) | None | | | | | 102 | | | |
| 7 | Antenna Wo (120 Deg) | None | | | | | 102 | | | |
| 8 | Antenna Wo (150 Deg) | None | | | | | 102 | | | |
| 9 | Antenna Wo (180 Deg) | None | | | | | 102 | | | |
| 10 | Antenna Wo (210 Deg) | None | | | | | 102 | | | |
| 11 | Antenna Wo (240 Deg) | None | | | | | 102 | | | |
| 12 | Antenna Wo (270 Deg) | None | | | | | 102 | | | |
| 13 | Antenna Wo (300 Deg) | None | | | | | 102 | | | |
| 14 | Antenna Wo (330 Deg) | None | | | | | 102 | | | |
| 15 | Antenna Wi (0 Deg) | None | | | | | 102 | | | |
| 16 | Antenna Wi (30 Deg) | None | | | | | 102 | | | |
| 17 | Antenna Wi (60 Deg) | None | | | | | 102 | | | |
| 18 | Antenna Wi (90 Deg) | None | | | | | 102 | | | |
| 19 | Antenna Wi (120 Deg) | None | | | | | 102 | | | |
| 20 | Antenna Wi (150 Deg) | None | | | | | 102 | | | |
| 21 | Antenna Wi (180 Deg) | None | | | | | 102 | | | |
| 22 | Antenna Wi (210 Deg) | None | | | | | 102 | | | |
| 23 | Antenna Wi (240 Deg) | None | | | | | 102 | | | |
| 24 | Antenna Wi (270 Deg) | None | | | | | 102 | | | |
| 25 | Antenna Wi (300 Deg) | None | | | | | 102 | | | |
| 26 | Antenna Wi (330 Deg) | None | | | | | 102 | | | |
| 27 | Antenna Wm (0 Deg) | None | | | | | 102 | | | |
| 28 | Antenna Wm (30 Deg) | None | | | | | 102 | | | |
| 29 | Antenna Wm (60 Deg) | None | | | | | 102 | | | |
| 30 | Antenna Wm (90 Deg) | None | | | | | 102 | | | |
| 31 | Antenna Wm (120 De... | None | | | | | 102 | | | |
| 32 | Antenna Wm (150 De... | None | | | | | 102 | | | |
| 33 | Antenna Wm (180 De... | None | | | | | 102 | | | |
| 34 | Antenna Wm (210 De... | None | | | | | 102 | | | |
| 35 | Antenna Wm (240 De... | None | | | | | 102 | | | |
| 36 | Antenna Wm (270 De... | None | | | | | 102 | | | |
| 37 | Antenna Wm (300 De... | None | | | | | 102 | | | |
| 38 | Antenna Wm (330 De... | None | | | | | 102 | | | |
| 39 | Structure D | None | | -1 | | | | | 3 | |
| 40 | Structure Di | None | | | | | | 61 | 3 | |
| 41 | Structure Wo (0 Deg) | None | | | | | | 122 | | |
| 42 | Structure Wo (30 Deg) | None | | | | | | 122 | | |
| 43 | Structure Wo (60 Deg) | None | | | | | | 122 | | |
| 44 | Structure Wo (90 Deg) | None | | | | | | 122 | | |
| 45 | Structure Wo (120 D... | None | | | | | | 122 | | |
| 46 | Structure Wo (150 D... | None | | | | | | 122 | | |
| 47 | Structure Wo (180 D... | None | | | | | | 122 | | |
| 48 | Structure Wo (210 D... | None | | | | | | 122 | | |

## Basic Load Cases (Continued)

| | BLC Description | Category | X Gravity | Y Gravity | Z Gravity | Joint | Point | Distributed | Area(Me... | Surface(P... |
|---|---|---|---|---|---|---|---|---|---|---|
| 49 | Structure Wo (240 D... | None | | | | | | 122 | | |
| 50 | Structure Wo (270 D... | None | | | | | | 122 | | |
| 51 | Structure Wo (300 D... | None | | | | | | 122 | | |
| 52 | Structure Wo (330 D... | None | | | | | | 122 | | |
| 53 | Structure Wi (0 Deg) | None | | | | | | 122 | | |
| 54 | Structure Wi (30 Deg) | None | | | | | | 122 | | |
| 55 | Structure Wi (60 Deg) | None | | | | | | 122 | | |
| 56 | Structure Wi (90 Deg) | None | | | | | | 122 | | |
| 57 | Structure Wi (120 De... | None | | | | | | 122 | | |
| 58 | Structure Wi (150 De... | None | | | | | | 122 | | |
| 59 | Structure Wi (180 De... | None | | | | | | 122 | | |
| 60 | Structure Wi (210 De... | None | | | | | | 122 | | |
| 61 | Structure Wi (240 De... | None | | | | | | 122 | | |
| 62 | Structure Wi (270 De... | None | | | | | | 122 | | |
| 63 | Structure Wi (300 De... | None | | | | | | 122 | | |
| 64 | Structure Wi (330 De... | None | | | | | | 122 | | |
| 65 | Structure Wm (0 Deg) | None | | | | | | 122 | | |
| 66 | Structure Wm (30 D... | None | | | | | | 122 | | |
| 67 | Structure Wm (60 D... | None | | | | | | 122 | | |
| 68 | Structure Wm (90 D... | None | | | | | | 122 | | |
| 69 | Structure Wm (120 ... | None | | | | | | 122 | | |
| 70 | Structure Wm (150 ... | None | | | | | | 122 | | |
| 71 | Structure Wm (180 ... | None | | | | | | 122 | | |
| 72 | Structure Wm (210 ... | None | | | | | | 122 | | |
| 73 | Structure Wm (240 ... | None | | | | | | 122 | | |
| 74 | Structure Wm (270 ... | None | | | | | | 122 | | |
| 75 | Structure Wm (300 ... | None | | | | | | 122 | | |
| 76 | Structure Wm (330 ... | None | | | | | | 122 | | |
| 77 | Lm1 | None | | | | | 1 | | | |
| 78 | Lm2 | None | | | | | 1 | | | |
| 79 | Lv1 | None | | | | | 1 | | | |
| 80 | Lv2 | None | | | | | 1 | | | |
| 81 | Antenna Ev | None | | | | | 102 | | | |
| 82 | Antenna Eh (0 Deg) | None | | | | | 68 | | | |
| 83 | Antenna Eh (90 Deg) | None | | | | | 68 | | | |
| 84 | Structure Ev | ELY | | -.039 | | | | | 3 | |
| 85 | Structure Eh (0 Deg) | ELZ | | | -.098 | | | | 3 | |
| 86 | Structure Eh (90 Deg) | ELX | .098 | | | | | | 3 | |
| 87 | BLC 39 Transient Are... | None | | | | | | 51 | | |
| 88 | BLC 40 Transient Are... | None | | | | | | 51 | | |
| 89 | BLC 84 Transient Are... | None | | | | | | 42 | | |
| 90 | BLC 85 Transient Are... | None | | | | | | 51 | | |
| 91 | BLC 86 Transient Are... | None | | | | | | 51 | | |

## Load Combinations

| | Description | S... | PDelta | S... | B... | Fac... | B... | Fac... | B... | Fac... | B... | Fac... | B... | Fac... | B... | Fac... | B... | Fac... | B... | Fac... | B... | Fac... | B... | Fac... |
|---|---|---|---|---|---|---|---|---|---|---|---|---|---|---|---|---|---|---|---|---|---|---|---|---|
| 1 | 1.2D+1.0Wo (0 Deg) | Yes | Y | | 1 | 1.2 | 39 | 1.2 | 3 | 1 | 41 | 1 | | | | | | | | | | | | |
| 2 | 1.2D+1.0Wo (30 Deg) | Yes | Y | | 1 | 1.2 | 39 | 1.2 | 4 | 1 | 42 | 1 | | | | | | | | | | | | |
| 3 | 1.2D+1.0Wo (60 Deg) | Yes | Y | | 1 | 1.2 | 39 | 1.2 | 5 | 1 | 43 | 1 | | | | | | | | | | | | |
| 4 | 1.2D+1.0Wo (90 Deg) | Yes | Y | | 1 | 1.2 | 39 | 1.2 | 6 | 1 | 44 | 1 | | | | | | | | | | | | |

## Load Combinations (Continued)

| | Description | S... | PDelta | S... | B... | Fac... | B... | Fac... | B... | Fac... | B... | Fac... | B... | Fac... | B... | Fac... | B... | Fac... | B... | Fac... | B... | Fac... | B... | Fac... |
|---|---|---|---|---|---|---|---|---|---|---|---|---|---|---|---|---|---|---|---|---|---|---|---|---|
| 5 | 1.2D+1.0Wo (120 De... | Yes | Y | | 1 | 1.2 | 39 | 1.2 | 7 | 1 | 45 | 1 | | | | | | | | | | | | |
| 6 | 1.2D+1.0Wo (150 De... | Yes | Y | | 1 | 1.2 | 39 | 1.2 | 8 | 1 | 46 | 1 | | | | | | | | | | | | |
| 7 | 1.2D+1.0Wo (180 De... | Yes | Y | | 1 | 1.2 | 39 | 1.2 | 9 | 1 | 47 | 1 | | | | | | | | | | | | |
| 8 | 1.2D+1.0Wo (210 De... | Yes | Y | | 1 | 1.2 | 39 | 1.2 | 10 | 1 | 48 | 1 | | | | | | | | | | | | |
| 9 | 1.2D+1.0Wo (240 De... | Yes | Y | | 1 | 1.2 | 39 | 1.2 | 11 | 1 | 49 | 1 | | | | | | | | | | | | |
| 10 | 1.2D+1.0Wo (270 De... | Yes | Y | | 1 | 1.2 | 39 | 1.2 | 12 | 1 | 50 | 1 | | | | | | | | | | | | |
| 11 | 1.2D+1.0Wo (300 De... | Yes | Y | | 1 | 1.2 | 39 | 1.2 | 13 | 1 | 51 | 1 | | | | | | | | | | | | |
| 12 | 1.2D+1.0Wo (330 De... | Yes | Y | | 1 | 1.2 | 39 | 1.2 | 14 | 1 | 52 | 1 | | | | | | | | | | | | |
| 13 | 1.2D + 1.0Di + 1.0Wi... | Yes | Y | | 1 | 1.2 | 39 | 1.2 | 2 | 1 | 40 | 1 | 15 | 1 | 53 | 1 | | | | | | | | |
| 14 | 1.2D + 1.0Di + 1.0Wi... | Yes | Y | | 1 | 1.2 | 39 | 1.2 | 2 | 1 | 40 | 1 | 16 | 1 | 54 | 1 | | | | | | | | |
| 15 | 1.2D + 1.0Di + 1.0Wi... | Yes | Y | | 1 | 1.2 | 39 | 1.2 | 2 | 1 | 40 | 1 | 17 | 1 | 55 | 1 | | | | | | | | |
| 16 | 1.2D + 1.0Di + 1.0Wi... | Yes | Y | | 1 | 1.2 | 39 | 1.2 | 2 | 1 | 40 | 1 | 18 | 1 | 56 | 1 | | | | | | | | |
| 17 | 1.2D + 1.0Di + 1.0Wi... | Yes | Y | | 1 | 1.2 | 39 | 1.2 | 2 | 1 | 40 | 1 | 19 | 1 | 57 | 1 | | | | | | | | |
| 18 | 1.2D + 1.0Di + 1.0Wi... | Yes | Y | | 1 | 1.2 | 39 | 1.2 | 2 | 1 | 40 | 1 | 20 | 1 | 58 | 1 | | | | | | | | |
| 19 | 1.2D + 1.0Di + 1.0Wi... | Yes | Y | | 1 | 1.2 | 39 | 1.2 | 2 | 1 | 40 | 1 | 21 | 1 | 59 | 1 | | | | | | | | |
| 20 | 1.2D + 1.0Di + 1.0Wi... | Yes | Y | | 1 | 1.2 | 39 | 1.2 | 2 | 1 | 40 | 1 | 22 | 1 | 60 | 1 | | | | | | | | |
| 21 | 1.2D + 1.0Di + 1.0Wi... | Yes | Y | | 1 | 1.2 | 39 | 1.2 | 2 | 1 | 40 | 1 | 23 | 1 | 61 | 1 | | | | | | | | |
| 22 | 1.2D + 1.0Di + 1.0Wi... | Yes | Y | | 1 | 1.2 | 39 | 1.2 | 2 | 1 | 40 | 1 | 24 | 1 | 62 | 1 | | | | | | | | |
| 23 | 1.2D + 1.0Di + 1.0Wi... | Yes | Y | | 1 | 1.2 | 39 | 1.2 | 2 | 1 | 40 | 1 | 25 | 1 | 63 | 1 | | | | | | | | |
| 24 | 1.2D + 1.0Di + 1.0Wi... | Yes | Y | | 1 | 1.2 | 39 | 1.2 | 2 | 1 | 40 | 1 | 26 | 1 | 64 | 1 | | | | | | | | |
| 25 | 1.2D + 1.5Lm1 + 1.0... | Yes | Y | | 1 | 1.2 | 39 | 1.2 | 77 | 1.5 | 27 | 1 | 65 | 1 | | | | | | | | | | |
| 26 | 1.2D + 1.5Lm1 + 1.0... | Yes | Y | | 1 | 1.2 | 39 | 1.2 | 77 | 1.5 | 28 | 1 | 66 | 1 | | | | | | | | | | |
| 27 | 1.2D + 1.5Lm1 + 1.0... | Yes | Y | | 1 | 1.2 | 39 | 1.2 | 77 | 1.5 | 29 | 1 | 67 | 1 | | | | | | | | | | |
| 28 | 1.2D + 1.5Lm1 + 1.0... | Yes | Y | | 1 | 1.2 | 39 | 1.2 | 77 | 1.5 | 30 | 1 | 68 | 1 | | | | | | | | | | |
| 29 | 1.2D + 1.5Lm1 + 1.0... | Yes | Y | | 1 | 1.2 | 39 | 1.2 | 77 | 1.5 | 31 | 1 | 69 | 1 | | | | | | | | | | |
| 30 | 1.2D + 1.5Lm1 + 1.0... | Yes | Y | | 1 | 1.2 | 39 | 1.2 | 77 | 1.5 | 32 | 1 | 70 | 1 | | | | | | | | | | |
| 31 | 1.2D + 1.5Lm1 + 1.0... | Yes | Y | | 1 | 1.2 | 39 | 1.2 | 77 | 1.5 | 33 | 1 | 71 | 1 | | | | | | | | | | |
| 32 | 1.2D + 1.5Lm1 + 1.0... | Yes | Y | | 1 | 1.2 | 39 | 1.2 | 77 | 1.5 | 34 | 1 | 72 | 1 | | | | | | | | | | |
| 33 | 1.2D + 1.5Lm1 + 1.0... | Yes | Y | | 1 | 1.2 | 39 | 1.2 | 77 | 1.5 | 35 | 1 | 73 | 1 | | | | | | | | | | |
| 34 | 1.2D + 1.5Lm1 + 1.0... | Yes | Y | | 1 | 1.2 | 39 | 1.2 | 77 | 1.5 | 36 | 1 | 74 | 1 | | | | | | | | | | |
| 35 | 1.2D + 1.5Lm1 + 1.0... | Yes | Y | | 1 | 1.2 | 39 | 1.2 | 77 | 1.5 | 37 | 1 | 75 | 1 | | | | | | | | | | |
| 36 | 1.2D + 1.5Lm1 + 1.0... | Yes | Y | | 1 | 1.2 | 39 | 1.2 | 77 | 1.5 | 38 | 1 | 76 | 1 | | | | | | | | | | |
| 37 | 1.2D + 1.5Lm2 + 1.0... | Yes | Y | | 1 | 1.2 | 39 | 1.2 | 78 | 1.5 | 27 | 1 | 65 | 1 | | | | | | | | | | |
| 38 | 1.2D + 1.5Lm2 + 1.0... | Yes | Y | | 1 | 1.2 | 39 | 1.2 | 78 | 1.5 | 28 | 1 | 66 | 1 | | | | | | | | | | |
| 39 | 1.2D + 1.5Lm2 + 1.0... | Yes | Y | | 1 | 1.2 | 39 | 1.2 | 78 | 1.5 | 29 | 1 | 67 | 1 | | | | | | | | | | |
| 40 | 1.2D + 1.5Lm2 + 1.0... | Yes | Y | | 1 | 1.2 | 39 | 1.2 | 78 | 1.5 | 30 | 1 | 68 | 1 | | | | | | | | | | |
| 41 | 1.2D + 1.5Lm2 + 1.0... | Yes | Y | | 1 | 1.2 | 39 | 1.2 | 78 | 1.5 | 31 | 1 | 69 | 1 | | | | | | | | | | |
| 42 | 1.2D + 1.5Lm2 + 1.0... | Yes | Y | | 1 | 1.2 | 39 | 1.2 | 78 | 1.5 | 32 | 1 | 70 | 1 | | | | | | | | | | |
| 43 | 1.2D + 1.5Lm2 + 1.0... | Yes | Y | | 1 | 1.2 | 39 | 1.2 | 78 | 1.5 | 33 | 1 | 71 | 1 | | | | | | | | | | |
| 44 | 1.2D + 1.5Lm2 + 1.0... | Yes | Y | | 1 | 1.2 | 39 | 1.2 | 78 | 1.5 | 34 | 1 | 72 | 1 | | | | | | | | | | |
| 45 | 1.2D + 1.5Lm2 + 1.0... | Yes | Y | | 1 | 1.2 | 39 | 1.2 | 78 | 1.5 | 35 | 1 | 73 | 1 | | | | | | | | | | |
| 46 | 1.2D + 1.5Lm2 + 1.0... | Yes | Y | | 1 | 1.2 | 39 | 1.2 | 78 | 1.5 | 36 | 1 | 74 | 1 | | | | | | | | | | |
| 47 | 1.2D + 1.5Lm2 + 1.0... | Yes | Y | | 1 | 1.2 | 39 | 1.2 | 78 | 1.5 | 37 | 1 | 75 | 1 | | | | | | | | | | |
| 48 | 1.2D + 1.5Lm2 + 1.0... | Yes | Y | | 1 | 1.2 | 39 | 1.2 | 78 | 1.5 | 38 | 1 | 76 | 1 | | | | | | | | | | |
| 49 | 1.2D + 1.5Lv1 | Yes | Y | | 1 | 1.2 | 39 | 1.2 | 79 | 1.5 | | | | | | | | | | | | | | |
| 50 | 1.2D + 1.5Lv2 | Yes | Y | | 1 | 1.2 | 39 | 1.2 | 80 | 1.5 | | | | | | | | | | | | | | |
| 51 | 1.4D | Yes | Y | | 1 | 1.4 | 39 | 1.4 | | | | | | | | | | | | | | | | |
| 52 | 1.2D + 1.0Ev + 1.0E... | Yes | Y | | 1 | 1.2 | 39 | 1.2 | 81 | 1 | E... | 1 | 82 | 1 | 83 | | ELZ | 1 | E... | | | | | |
| 53 | 1.2D + 1.0Ev + 1.0E... | Yes | Y | | 1 | 1.2 | 39 | 1.2 | 81 | 1 | E... | 1 | 82 | .866 | 83 | .5 | ELZ | .866 | E... | .5 | | | | |
| 54 | 1.2D + 1.0Ev + 1.0E... | Yes | Y | | 1 | 1.2 | 39 | 1.2 | 81 | 1 | E... | 1 | 82 | .5 | 83 | .866 | ELZ | .5 | E... | .866 | | | | |
| 55 | 1.2D + 1.0Ev + 1.0E... | Yes | Y | | 1 | 1.2 | 39 | 1.2 | 81 | 1 | E... | 1 | 82 | | 83 | 1 | ELZ | | E... | 1 | | | | |
| 56 | 1.2D + 1.0Ev + 1.0E... | Yes | Y | | 1 | 1.2 | 39 | 1.2 | 81 | 1 | E... | 1 | 82 | -.5 | 83 | .866 | ELZ | -.5 | E... | .866 | | | | |

## Load Combinations (Continued)

| | Description | S... | PDelta | S... | B... | Fac... | B... | Fac... | B... | Fac... | B... | Fac... | B... | Fac... | B... | Fac... | B... | Fac... | B... | Fac... | B... | Fac... | B... | Fac... |
|---|---|---|---|---|---|---|---|---|---|---|---|---|---|---|---|---|---|---|---|---|---|---|---|---|
| 57 | 1.2D + 1.0Ev + 1.0E... | Yes | Y | | 1 | 1.2 | 39 | 1.2 | 81 | 1 | E... | 1 | 82 | -.866 | 83 | .5 | ELZ | -.866 | E... | .5 | | | | |
| 58 | 1.2D + 1.0Ev + 1.0E... | Yes | Y | | 1 | 1.2 | 39 | 1.2 | 81 | 1 | E... | 1 | 82 | -1 | 83 | | ELZ | -1 | E... | | | | | |
| 59 | 1.2D + 1.0Ev + 1.0E... | Yes | Y | | 1 | 1.2 | 39 | 1.2 | 81 | 1 | E... | 1 | 82 | -.866 | 83 | -.5 | ELZ | -.866 | E... | -.5 | | | | |
| 60 | 1.2D + 1.0Ev + 1.0E... | Yes | Y | | 1 | 1.2 | 39 | 1.2 | 81 | 1 | E... | 1 | 82 | -.5 | 83 | -.866 | ELZ | -.5 | E... | -.866 | | | | |
| 61 | 1.2D + 1.0Ev + 1.0E... | Yes | Y | | 1 | 1.2 | 39 | 1.2 | 81 | 1 | E... | 1 | 82 | | 83 | -1 | ELZ | | E... | -1 | | | | |
| 62 | 1.2D + 1.0Ev + 1.0E... | Yes | Y | | 1 | 1.2 | 39 | 1.2 | 81 | 1 | E... | 1 | 82 | .5 | 83 | -.866 | ELZ | .5 | E... | -.866 | | | | |
| 63 | 1.2D + 1.0Ev + 1.0E... | Yes | Y | | 1 | 1.2 | 39 | 1.2 | 81 | 1 | E... | 1 | 82 | .866 | 83 | -.5 | ELZ | .866 | E... | -.5 | | | | |
| 64 | 0.9D - 1.0Ev + 1.0Eh... | Yes | Y | | 1 | .9 | 39 | .9 | 81 | -1 | E... | -1 | 82 | 1 | 83 | | ELZ | 1 | E... | | | | | |
| 65 | 0.9D - 1.0Ev + 1.0Eh... | Yes | Y | | 1 | .9 | 39 | .9 | 81 | -1 | E... | -1 | 82 | .866 | 83 | .5 | ELZ | .866 | E... | .5 | | | | |
| 66 | 0.9D - 1.0Ev + 1.0Eh... | Yes | Y | | 1 | .9 | 39 | .9 | 81 | -1 | E... | -1 | 82 | .5 | 83 | .866 | ELZ | .5 | E... | .866 | | | | |
| 67 | 0.9D - 1.0Ev + 1.0Eh... | Yes | Y | | 1 | .9 | 39 | .9 | 81 | -1 | E... | -1 | 82 | | 83 | 1 | ELZ | | E... | 1 | | | | |
| 68 | 0.9D - 1.0Ev + 1.0Eh... | Yes | Y | | 1 | .9 | 39 | .9 | 81 | -1 | E... | -1 | 82 | -.5 | 83 | .866 | ELZ | -.5 | E... | .866 | | | | |
| 69 | 0.9D - 1.0Ev + 1.0Eh... | Yes | Y | | 1 | .9 | 39 | .9 | 81 | -1 | E... | -1 | 82 | -.866 | 83 | .5 | ELZ | -.866 | E... | .5 | | | | |
| 70 | 0.9D - 1.0Ev + 1.0Eh... | Yes | Y | | 1 | .9 | 39 | .9 | 81 | -1 | E... | -1 | 82 | -1 | 83 | | ELZ | -1 | E... | | | | | |
| 71 | 0.9D - 1.0Ev + 1.0Eh... | Yes | Y | | 1 | .9 | 39 | .9 | 81 | -1 | E... | -1 | 82 | -.866 | 83 | -.5 | ELZ | -.866 | E... | -.5 | | | | |
| 72 | 0.9D - 1.0Ev + 1.0Eh... | Yes | Y | | 1 | .9 | 39 | .9 | 81 | -1 | E... | -1 | 82 | -.5 | 83 | -.866 | ELZ | -.5 | E... | -.866 | | | | |
| 73 | 0.9D - 1.0Ev + 1.0Eh... | Yes | Y | | 1 | .9 | 39 | .9 | 81 | -1 | E... | -1 | 82 | | 83 | -1 | ELZ | | E... | -1 | | | | |
| 74 | 0.9D - 1.0Ev + 1.0Eh... | Yes | Y | | 1 | .9 | 39 | .9 | 81 | -1 | E... | -1 | 82 | .5 | 83 | -.866 | ELZ | .5 | E... | -.866 | | | | |
| 75 | 0.9D - 1.0Ev + 1.0Eh... | Yes | Y | | 1 | .9 | 39 | .9 | 81 | -1 | E... | -1 | 82 | .866 | 83 | -.5 | ELZ | .866 | E... | -.5 | | | | |

## Joint Coordinates and Temperatures

| | Label | X [ft] | Y [ft] | Z [ft] | Temp [F] | Detach From Diap... |
|---|---|---|---|---|---|---|
| 1 | N2 | -0. | 0 | -2.083333 | 0 | |
| 2 | N3 | -0. | 0 | -7.25 | 0 | |
| 3 | N8A | .5 | 0 | -7.25 | 0 | |
| 4 | N9A | -.5 | 0 | -7.25 | 0 | |
| 5 | N14A | -6.25 | 0 | 4.266346 | 0 | |
| 6 | N15A | 6.25 | 0 | 4.266346 | 0 | |
| 7 | N28 | 6.819764 | 0 | 3.279486 | 0 | |
| 8 | N29 | 0.569764 | 0 | -7.545832 | 0 | |
| 9 | N33 | 0.666667 | 0 | -6.961325 | 0 | |
| 10 | N38 | -0.569764 | 0 | -7.545832 | 0 | |
| 11 | N39 | -6.819764 | 0 | 3.279486 | 0 | |
| 12 | N42 | -0.666667 | 0 | -6.961325 | 0 | |
| 13 | N44A | -0. | 0 | -6.764583 | 0 | |
| 14 | N45A | 0.333333 | 0 | -6.764583 | 0 | |
| 15 | N46A | -0.333333 | 0 | -6.764583 | 0 | |
| 16 | N53 | -0. | 0 | -3.722917 | 0 | |
| 17 | N56A | -2.118678 | 0 | -3.722917 | 0 | |
| 18 | N57A | 2.118678 | 0 | -3.722917 | 0 | |
| 19 | N122A | 5 | 0 | 4.266346 | 0 | |
| 20 | N125 | 5 | 0 | 4.391346 | 0 | |
| 21 | N196B | 0.763023 | 0 | -7.211098 | 0 | |
| 22 | N197B | 2.535345 | 0 | -3.722917 | 0 | |
| 23 | N198A | 2.660345 | 0 | -3.50641 | 0 | |
| 24 | N199A | 2.368667 | 0 | -3.722917 | 0 | |
| 25 | N200A | 2.582594 | 0 | -3.641079 | 0 | |
| 26 | N201A | 2.763779 | 0 | -3.745686 | 0 | |
| 27 | N209 | -0.763023 | 0 | -7.211098 | 0 | |
| 28 | N216 | -2.535345 | 0 | -3.722917 | 0 | |

## Joint Coordinates and Temperatures (Continued)

| | Label | X [ft] | Y [ft] | Z [ft] | Temp [F] | Detach From Diap... |
|---|---|---|---|---|---|---|
| 29 | N217 | -2.660345 | 0 | -3.50641 | 0 | |
| 30 | N218 | -2.368667 | 0 | -3.722917 | 0 | |
| 31 | N219 | -2.582594 | 0 | -3.641079 | 0 | |
| 32 | N220 | -2.763779 | 0 | -3.745686 | 0 | |
| 33 | N94A | 0.582601 | 0 | -7.106931 | 0 | |
| 34 | N96A | -0.582601 | 0 | -7.106931 | 0 | |
| 35 | N95A | -1.80422 | 0 | 1.041667 | 0 | |
| 36 | N96B | -6.278684 | 0 | 3.625 | 0 | |
| 37 | N97A | -6.528684 | 0 | 3.191987 | 0 | |
| 38 | N98A | -6.028684 | 0 | 4.058013 | 0 | |
| 39 | N101A | -6.362018 | 0 | 2.903312 | 0 | |
| 40 | N102A | -5.695351 | 0 | 4.058013 | 0 | |
| 41 | N103A | -5.858301 | 0 | 3.382292 | 0 | |
| 42 | N104A | -6.024968 | 0 | 3.093617 | 0 | |
| 43 | N105A | -5.691634 | 0 | 3.670967 | 0 | |
| 44 | N106A | -3.22414 | 0 | 1.861458 | 0 | |
| 45 | N107A | -2.164801 | 0 | 3.696287 | 0 | |
| 46 | N108A | -4.283479 | 0 | 0.026629 | 0 | |
| 47 | N115A | -6.626505 | 0 | 2.944752 | 0 | |
| 48 | N116A | -4.491813 | 0 | -0.334215 | 0 | |
| 49 | N117A | -4.366813 | 0 | -0.550721 | 0 | |
| 50 | N118A | -4.408474 | 0 | -0.189867 | 0 | |
| 51 | N119A | -4.444564 | 0 | -0.416052 | 0 | |
| 52 | N120A | -4.625749 | 0 | -0.52066 | 0 | |
| 53 | N121A | -5.863482 | 0 | 4.266346 | 0 | |
| 54 | N122B | -1.956468 | 0 | 4.057131 | 0 | |
| 55 | N123B | -1.706468 | 0 | 4.057131 | 0 | |
| 56 | N124B | -2.039807 | 0 | 3.912784 | 0 | |
| 57 | N125B | -1.86197 | 0 | 4.057131 | 0 | |
| 58 | N126A | -1.86197 | 0 | 4.266346 | 0 | |
| 59 | N127A | -6.446083 | 0 | 3.048918 | 0 | |
| 60 | N128A | -5.863482 | 0 | 4.058013 | 0 | |
| 61 | N130A | 1.80422 | 0 | 1.041667 | 0 | |
| 62 | N131A | 6.278684 | 0 | 3.625 | 0 | |
| 63 | N132A | 6.028684 | 0 | 4.058013 | 0 | |
| 64 | N133 | 6.528684 | 0 | 3.191987 | 0 | |
| 65 | N136 | 5.695351 | 0 | 4.058013 | 0 | |
| 66 | N137 | 6.362018 | 0 | 2.903312 | 0 | |
| 67 | N138 | 5.858301 | 0 | 3.382292 | 0 | |
| 68 | N139 | 5.691634 | 0 | 3.670967 | 0 | |
| 69 | N140 | 6.024968 | 0 | 3.093617 | 0 | |
| 70 | N141 | 3.22414 | 0 | 1.861458 | 0 | |
| 71 | N142 | 4.283479 | 0 | 0.026629 | 0 | |
| 72 | N143 | 2.164801 | 0 | 3.696287 | 0 | |
| 73 | N150 | 5.863482 | 0 | 4.266346 | 0 | |
| 74 | N151 | 1.956468 | 0 | 4.057131 | 0 | |
| 75 | N152 | 1.706468 | 0 | 4.057131 | 0 | |
| 76 | N153 | 2.039807 | 0 | 3.912784 | 0 | |
| 77 | N154 | 1.86197 | 0 | 4.057131 | 0 | |
| 78 | N155 | 1.86197 | 0 | 4.266346 | 0 | |
| 79 | N156 | 6.626505 | 0 | 2.944752 | 0 | |
| 80 | N157 | 4.491813 | 0 | -0.334215 | 0 | |

## Joint Coordinates and Temperatures (Continued)

| | Label | X [ft] | Y [ft] | Z [ft] | Temp [F] | Detach From Diap... |
|---|---|---|---|---|---|---|
| 81 | N158 | 4.366813 | 0 | -0.550721 | 0 | |
| 82 | N159 | 4.408474 | 0 | -0.189867 | 0 | |
| 83 | N160 | 4.444564 | 0 | -0.416052 | 0 | |
| 84 | N161 | 4.625749 | 0 | -0.52066 | 0 | |
| 85 | N162 | 5.863482 | 0 | 4.058013 | 0 | |
| 86 | N163 | 6.446083 | 0 | 3.048918 | 0 | |
| 87 | N87 | 5 | 3.166667 | 4.391346 | 0 | |
| 88 | N88 | 5 | -2.833333 | 4.391346 | 0 | |
| 89 | N89 | -0.083333 | 0 | 4.266346 | 0 | |
| 90 | N90 | -0.083333 | 0 | 4.391346 | 0 | |
| 91 | N91 | -0.083333 | 3.166667 | 4.391346 | 0 | |
| 92 | N92 | -0.083333 | -2.833333 | 4.391346 | 0 | |
| 93 | N93 | -3 | 0 | 4.266346 | 0 | |
| 94 | N94 | -3 | 0 | 4.391346 | 0 | |
| 95 | N95 | -3 | 3.166667 | 4.391346 | 0 | |
| 96 | N96 | -3 | -2.833333 | 4.391346 | 0 | |
| 97 | N97 | -5 | 0 | 4.266346 | 0 | |
| 98 | N98 | -5 | 0 | 4.391346 | 0 | |
| 99 | N99 | -5 | 3.166667 | 4.391346 | 0 | |
| 100 | N100 | -5 | -2.833333 | 4.391346 | 0 | |
| 101 | N101 | 1.194764 | 0 | -6.4633 | 0 | |
| 102 | N102 | 1.303017 | 0 | -6.5258 | 0 | |
| 103 | N103 | 1.303017 | 3.166667 | -6.5258 | 0 | |
| 104 | N104 | 1.303017 | -2.833333 | -6.5258 | 0 | |
| 105 | N105 | 3.736431 | 0 | -2.061004 | 0 | |
| 106 | N106 | 3.844684 | 0 | -2.123504 | 0 | |
| 107 | N107 | 3.844684 | 3.166667 | -2.123504 | 0 | |
| 108 | N108 | 3.844684 | -2.833333 | -2.123504 | 0 | |
| 109 | N109 | 5.194764 | 0 | 0.464903 | 0 | |
| 110 | N110 | 5.303017 | 0 | 0.402403 | 0 | |
| 111 | N111 | 5.303017 | 3.166667 | 0.402403 | 0 | |
| 112 | N112 | 5.303017 | -2.833333 | 0.402403 | 0 | |
| 113 | N113 | 6.194764 | 0 | 2.196954 | 0 | |
| 114 | N114 | 6.303017 | 0 | 2.134454 | 0 | |
| 115 | N115 | 6.303017 | 3.166667 | 2.134454 | 0 | |
| 116 | N116 | 6.303017 | -2.833333 | 2.134454 | 0 | |
| 117 | N117 | -6.194764 | 0 | 2.196954 | 0 | |
| 118 | N118 | -6.303017 | 0 | 2.134454 | 0 | |
| 119 | N119 | -6.303017 | 3.166667 | 2.134454 | 0 | |
| 120 | N120 | -6.303017 | -2.833333 | 2.134454 | 0 | |
| 121 | N121 | -3.653097 | 0 | -2.205342 | 0 | |
| 122 | N122 | -3.761351 | 0 | -2.267842 | 0 | |
| 123 | N123 | -3.761351 | 3.166667 | -2.267842 | 0 | |
| 124 | N124 | -3.761351 | -2.833333 | -2.267842 | 0 | |
| 125 | N125A | -2.194764 | 0 | -4.731249 | 0 | |
| 126 | N126 | -2.303017 | 0 | -4.793749 | 0 | |
| 127 | N127 | -2.303017 | 3.166667 | -4.793749 | 0 | |
| 128 | N128 | -2.303017 | -2.833333 | -4.793749 | 0 | |
| 129 | N129 | -1.194764 | 0 | -6.4633 | 0 | |
| 130 | N130 | -1.303017 | 0 | -6.5258 | 0 | |
| 131 | N131 | -1.303017 | 3.166667 | -6.5258 | 0 | |
| 132 | N132 | -1.303017 | -2.833333 | -6.5258 | 0 | |

## Joint Coordinates and Temperatures (Continued)

| | Label | X [ft] | Y [ft] | Z [ft] | Temp [F] | Detach From Diap... |
|---|---|---|---|---|---|---|
| 133 | N133A | -0. | 0 | -2.583333 | 0 | |
| 134 | N134 | -.25 | 0 | -2.583333 | 0 | |
| 135 | N135 | -.25 | 2.75 | -2.583333 | 0 | |
| 136 | N136A | -.25 | -.25 | -2.583333 | 0 | |
| 137 | N137A | -6.25 | 2.5 | 4.266346 | 0 | |
| 138 | N138A | 6.25 | 2.5 | 4.266346 | 0 | |
| 139 | N139A | 5 | 2.5 | 4.266346 | 0 | |
| 140 | N140A | 5 | 2.5 | 4.391346 | 0 | |
| 141 | N141A | -0.083333 | 2.5 | 4.266346 | 0 | |
| 142 | N142A | -0.083333 | 2.5 | 4.391346 | 0 | |
| 143 | N143A | -3 | 2.5 | 4.266346 | 0 | |
| 144 | N144 | -3 | 2.5 | 4.391346 | 0 | |
| 145 | N145 | -5 | 2.5 | 4.266346 | 0 | |
| 146 | N146 | -5 | 2.5 | 4.391346 | 0 | |
| 147 | N147 | -4.25 | 2.5 | 4.266346 | 0 | |
| 148 | N148 | 4.25 | 2.5 | 4.266346 | 0 | |
| 149 | N149 | -4.25 | 2.5 | 4.099679 | 0 | |
| 150 | N150A | 4.25 | 2.5 | 4.099679 | 0 | |
| 151 | N151A | 6.819764 | 2.5 | 3.279486 | 0 | |
| 152 | N152A | 0.569764 | 2.5 | -7.545832 | 0 | |
| 153 | N153A | 1.194764 | 2.5 | -6.4633 | 0 | |
| 154 | N154A | 1.303017 | 2.5 | -6.5258 | 0 | |
| 155 | N155A | 3.736431 | 2.5 | -2.061004 | 0 | |
| 156 | N156A | 3.844684 | 2.5 | -2.123504 | 0 | |
| 157 | N157A | 5.194764 | 2.5 | 0.464903 | 0 | |
| 158 | N158A | 5.303017 | 2.5 | 0.402403 | 0 | |
| 159 | N159A | 6.194764 | 2.5 | 2.196954 | 0 | |
| 160 | N160A | 6.303017 | 2.5 | 2.134454 | 0 | |
| 161 | N161A | 5.819764 | 2.5 | 1.547435 | 0 | |
| 162 | N162A | 1.569764 | 2.5 | -5.813781 | 0 | |
| 163 | N163A | 5.675426 | 2.5 | 1.630768 | 0 | |
| 164 | N164 | 1.425426 | 2.5 | -5.730448 | 0 | |
| 165 | N165 | -0.569764 | 2.5 | -7.545832 | 0 | |
| 166 | N166 | -6.819764 | 2.5 | 3.279486 | 0 | |
| 167 | N167 | -6.194764 | 2.5 | 2.196954 | 0 | |
| 168 | N168 | -6.303017 | 2.5 | 2.134454 | 0 | |
| 169 | N169 | -3.653097 | 2.5 | -2.205342 | 0 | |
| 170 | N170 | -3.761351 | 2.5 | -2.267842 | 0 | |
| 171 | N171 | -2.194764 | 2.5 | -4.731249 | 0 | |
| 172 | N172 | -2.303017 | 2.5 | -4.793749 | 0 | |
| 173 | N173 | -1.194764 | 2.5 | -6.4633 | 0 | |
| 174 | N174 | -1.303017 | 2.5 | -6.5258 | 0 | |
| 175 | N175 | -1.569764 | 2.5 | -5.813781 | 0 | |
| 176 | N176 | -5.819764 | 2.5 | 1.547435 | 0 | |
| 177 | N177 | -1.425426 | 2.5 | -5.730448 | 0 | |
| 178 | N178 | -5.675426 | 2.5 | 1.630768 | 0 | |
| 179 | N179 | 5 | 1.25 | 4.391346 | 0 | |
| 180 | N180 | -0. | -2 | -2.083333 | 0 | |
| 181 | N181 | -1.80422 | -2 | 1.041667 | 0 | |
| 182 | N182 | 1.80422 | -2 | 1.041667 | 0 | |
| 183 | N183 | -0. | 0 | -4.722917 | 0 | |
| 184 | N185 | -4.090166 | 0 | 2.361458 | 0 | |

## Joint Coordinates and Temperatures (Continued)

| | Label | X [ft] | Y [ft] | Z [ft] | Temp [F] | Detach From Diap... |
|---|---|---|---|---|---|---|
| 185 | N187 | 4.090166 | 0 | 2.361458 | 0 | |

## Hot Rolled Steel Section Sets

| | Label | Shape | Type | Design List | Material | Design R... | A [in2] | Iyy [in4] | Izz [in4] | J [in4] |
|---|---|---|---|---|---|---|---|---|---|---|
| 1 | Standoff Off | HSS4X4X5 | None | None | A500 Gr. B 46 | Typical | 4.1 | 9.14 | 9.14 | 15.3 |
| 2 | Face Horizontal | PIPE_3.0 | None | None | A53 Gr. B | Typical | 2.07 | 2.85 | 2.85 | 5.69 |
| 3 | Cross Member | L3X3X4 | None | None | A36 Gr.36 | Typical | 1.44 | 1.23 | 1.23 | .031 |
| 4 | Grating Angle | L2x2x4 | None | None | A36 Gr.36 | Typical | .944 | .346 | .346 | .021 |
| 5 | Mount Pipe | PIPE_2.0 | None | None | A53 Gr. B | Typical | 1.02 | .627 | .627 | 1.25 |
| 6 | Mount Pipe 2.5 | PIPE_2.5 | None | None | A53 Gr. B | Typical | 1.61 | 1.45 | 1.45 | 2.89 |
| 7 | Corner Plate | PL3/8x6 | None | None | A36 Gr.36 | Typical | 2.25 | .026 | 6.75 | .101 |
| 8 | MOD Support Rail | PIPE_2.5 | None | None | A53 Gr. B | Typical | 1.61 | 1.45 | 1.45 | 2.89 |
| 9 | MOD Support Rail ... | L3X3X4 | None | None | A36 Gr.36 | Typical | 1.44 | 1.23 | 1.23 | .031 |
| 10 | MOD Kicker | LL3x3x3x0 | None | None | A36 Gr.36 | Typical | 2.18 | 3.35 | 1.9 | .027 |

## Hot Rolled Steel Properties

| | Label | E [ksi] | G [ksi] | Nu | Therm (/1E... | Density[k/ft... | Yield[ksi] | Ry | Fu[ksi] | Rt |
|---|---|---|---|---|---|---|---|---|---|---|
| 1 | A36 Gr.36 | 29000 | 11154 | .3 | .65 | .49 | 36 | 1.5 | 58 | 1.2 |
| 2 | A53 Gr. B | 29000 | 11154 | .3 | .65 | .49 | 35 | 1.5 | 60 | 1.2 |
| 3 | A572 Gr.50 | 29000 | 11154 | .3 | .65 | .49 | 50 | 1.1 | 65 | 1.1 |
| 4 | A992 | 29000 | 11154 | .3 | .65 | .49 | 50 | 1.1 | 65 | 1.1 |
| 5 | A500 Gr. B 42 | 29000 | 11154 | .3 | .65 | .49 | 42 | 1.4 | 58 | 1.3 |
| 6 | A500 Gr. B 46 | 29000 | 11154 | .3 | .65 | .49 | 46 | 1.4 | 58 | 1.3 |

## Member Primary Data

| | Label | I Joint | J Joint | K Joint | Rotate(d... | Section/Shape | Type | Design List | Material | Design Rul... |
|---|---|---|---|---|---|---|---|---|---|---|
| 1 | M1 | N2 | N3 | | | Standoff Off | None | None | A500 Gr... | Typical |
| 2 | M4 | N9A | N8A | | | Corner Plate | None | None | A36 Gr.36 | Typical |
| 3 | M7 | N14A | N15A | | | Face Horizontal | None | None | A53 Gr. B | Typical |
| 4 | M15 | N28 | N29 | | | Face Horizontal | None | None | A53 Gr. B | Typical |
| 5 | M17 | N8A | N33 | | | Corner Plate | None | None | A36 Gr.36 | Typical |
| 6 | M20 | N38 | N39 | | | Face Horizontal | None | None | A53 Gr. B | Typical |
| 7 | M21 | N9A | N42 | | | Corner Plate | None | None | A36 Gr.36 | Typical |
| 8 | M25 | N46A | N45A | | | RIGID | None | None | RIGID | Typical |
| 9 | M29 | N57A | N45A | | 270 | Grating Angle | None | None | A36 Gr.36 | Typical |
| 10 | M30 | N46A | N56A | | 270 | Grating Angle | None | None | A36 Gr.36 | Typical |
| 11 | M75 | N122A | N125 | | | RIGID | None | None | RIGID | Typical |
| 12 | M107A | N94A | N196B | | | RIGID | None | None | RIGID | Typical |
| 13 | M108A | N198A | N197B | | | Corner Plate | None | None | A36 Gr.36 | Typical |
| 14 | M109A | N197B | N199A | | | Corner Plate | None | None | A36 Gr.36 | Typical |
| 15 | M110 | N200A | N201A | | | RIGID | None | None | RIGID | Typical |
| 16 | M114C | N96A | N209 | | | RIGID | None | None | RIGID | Typical |
| 17 | M119 | N217 | N216 | | | Corner Plate | None | None | A36 Gr.36 | Typical |
| 18 | M120 | N216 | N218 | | | Corner Plate | None | None | A36 Gr.36 | Typical |
| 19 | M121 | N219 | N220 | | | RIGID | None | None | RIGID | Typical |
| 20 | M122 | N53 | N199A | | 90 | Cross Member | None | None | A36 Gr.36 | Typical |
| 21 | M125 | N53 | N218 | | 180 | Cross Member | None | None | A36 Gr.36 | Typical |

## Member Primary Data (Continued)

| | Label | I Joint | J Joint | K Joint | Rotate(d... | Section/Shape | Type | Design List | Material | Design Rul... |
|---|---|---|---|---|---|---|---|---|---|---|
| 22 | M51 | N95A | N96B | | | Standoff Off | None | None | A500 Gr.... | Typical |
| 23 | M52 | N98A | N97A | | | Corner Plate | None | None | A36 Gr.36 | Typical |
| 24 | M54 | N97A | N101A | | | Corner Plate | None | None | A36 Gr.36 | Typical |
| 25 | M55 | N98A | N102A | | | Corner Plate | None | None | A36 Gr.36 | Typical |
| 26 | M56 | N105A | N104A | | | RIGID | None | None | RIGID | Typical |
| 27 | M57A | N108A | N104A | | 270 | Grating Angle | None | None | A36 Gr.36 | Typical |
| 28 | M58A | N105A | N107A | | 270 | Grating Angle | None | None | A36 Gr.36 | Typical |
| 29 | M62 | N127A | N115A | | | RIGID | None | None | RIGID | Typical |
| 30 | M63 | N117A | N116A | | | Corner Plate | None | None | A36 Gr.36 | Typical |
| 31 | M64A | N116A | N118A | | | Corner Plate | None | None | A36 Gr.36 | Typical |
| 32 | M65A | N119A | N120A | | | RIGID | None | None | RIGID | Typical |
| 33 | M66A | N128A | N121A | | | RIGID | None | None | RIGID | Typical |
| 34 | M67 | N123B | N122B | | | Corner Plate | None | None | A36 Gr.36 | Typical |
| 35 | M68 | N122B | N124B | | | Corner Plate | None | None | A36 Gr.36 | Typical |
| 36 | M69 | N125B | N126A | | | RIGID | None | None | RIGID | Typical |
| 37 | M70A | N106A | N118A | | 90 | Cross Member | None | None | A36 Gr.36 | Typical |
| 38 | M71 | N106A | N124B | | 180 | Cross Member | None | None | A36 Gr.36 | Typical |
| 39 | M72A | N130A | N131A | | | Standoff Off | None | None | A500 Gr.... | Typical |
| 40 | M73A | N133 | N132A | | | Corner Plate | None | None | A36 Gr.36 | Typical |
| 41 | M75A | N132A | N136 | | | Corner Plate | None | None | A36 Gr.36 | Typical |
| 42 | M76 | N133 | N137 | | | Corner Plate | None | None | A36 Gr.36 | Typical |
| 43 | M77 | N140 | N139 | | | RIGID | None | None | RIGID | Typical |
| 44 | M78A | N143 | N139 | | 270 | Grating Angle | None | None | A36 Gr.36 | Typical |
| 45 | M79 | N140 | N142 | | 270 | Grating Angle | None | None | A36 Gr.36 | Typical |
| 46 | M83 | N162 | N150 | | | RIGID | None | None | RIGID | Typical |
| 47 | M84 | N152 | N151 | | | Corner Plate | None | None | A36 Gr.36 | Typical |
| 48 | M85 | N151 | N153 | | | Corner Plate | None | None | A36 Gr.36 | Typical |
| 49 | M86 | N154 | N155 | | | RIGID | None | None | RIGID | Typical |
| 50 | M87 | N163 | N156 | | | RIGID | None | None | RIGID | Typical |
| 51 | M88 | N158 | N157 | | | Corner Plate | None | None | A36 Gr.36 | Typical |
| 52 | M89 | N157 | N159 | | | Corner Plate | None | None | A36 Gr.36 | Typical |
| 53 | M90 | N160 | N161 | | | RIGID | None | None | RIGID | Typical |
| 54 | M91 | N141 | N153 | | 90 | Cross Member | None | None | A36 Gr.36 | Typical |
| 55 | M92 | N141 | N159 | | 180 | Cross Member | None | None | A36 Gr.36 | Typical |
| 56 | MP1A | N87 | N88 | | | Mount Pipe | None | None | A53 Gr. B | Typical |
| 57 | M57 | N89 | N90 | | | RIGID | None | None | RIGID | Typical |
| 58 | MP2A | N91 | N92 | | | Mount Pipe 2.5 | None | None | A53 Gr. B | Typical |
| 59 | M59 | N93 | N94 | | | RIGID | None | None | RIGID | Typical |
| 60 | MP3A | N95 | N96 | | | Mount Pipe | None | None | A53 Gr. B | Typical |
| 61 | M61 | N97 | N98 | | | RIGID | None | None | RIGID | Typical |
| 62 | MP4A | N99 | N100 | | | Mount Pipe | None | None | A53 Gr. B | Typical |
| 63 | M63A | N101 | N102 | | | RIGID | None | None | RIGID | Typical |
| 64 | MP1C | N103 | N104 | | | Mount Pipe | None | None | A53 Gr. B | Typical |
| 65 | M65 | N105 | N106 | | | RIGID | None | None | RIGID | Typical |
| 66 | MP2C | N107 | N108 | | | Mount Pipe 2.5 | None | None | A53 Gr. B | Typical |
| 67 | M67A | N109 | N110 | | | RIGID | None | None | RIGID | Typical |
| 68 | MP3C | N111 | N112 | | | Mount Pipe | None | None | A53 Gr. B | Typical |
| 69 | M69A | N113 | N114 | | | RIGID | None | None | RIGID | Typical |
| 70 | MP4C | N115 | N116 | | | Mount Pipe | None | None | A53 Gr. B | Typical |
| 71 | M71A | N117 | N118 | | | RIGID | None | None | RIGID | Typical |
| 72 | MP1B | N119 | N120 | | | Mount Pipe | None | None | A53 Gr. B | Typical |
| 73 | M73 | N121 | N122 | | | RIGID | None | None | RIGID | Typical |

## Member Primary Data (Continued)

| | Label | I Joint | J Joint | K Joint | Rotate(d... | Section/Shape | Type | Design List | Material | Design Rul... |
|---|---|---|---|---|---|---|---|---|---|---|
| 74 | MP2B | N123 | N124 | | | Mount Pipe 2.5 | None | None | A53 Gr. B | Typical |
| 75 | M75B | N125A | N126 | | | RIGID | None | None | RIGID | Typical |
| 76 | MP3B | N127 | N128 | | | Mount Pipe | None | None | A53 Gr. B | Typical |
| 77 | M77A | N129 | N130 | | | RIGID | None | None | RIGID | Typical |
| 78 | MP4B | N131 | N132 | | | Mount Pipe | None | None | A53 Gr. B | Typical |
| 79 | M79A | N133A | N134 | | | RIGID | None | None | RIGID | Typical |
| 80 | OVP | N135 | N136A | | | Mount Pipe | None | None | A53 Gr. B | Typical |
| 81 | M81 | N139A | N140A | | | RIGID | None | None | RIGID | Typical |
| 82 | M82 | N141A | N142A | | | RIGID | None | None | RIGID | Typical |
| 83 | M83A | N143A | N144 | | | RIGID | None | None | RIGID | Typical |
| 84 | M84A | N145 | N146 | | | RIGID | None | None | RIGID | Typical |
| 85 | M85A | N137A | N138A | | | MOD Support Rail | None | None | A53 Gr. B | Typical |
| 86 | M86A | N147 | N149 | | | RIGID | None | None | RIGID | Typical |
| 87 | M87A | N148 | N150A | | | RIGID | None | None | RIGID | Typical |
| 88 | M88A | N153A | N154A | | | RIGID | None | None | RIGID | Typical |
| 89 | M89A | N155A | N156A | | | RIGID | None | None | RIGID | Typical |
| 90 | M90A | N157A | N158A | | | RIGID | None | None | RIGID | Typical |
| 91 | M91A | N159A | N160A | | | RIGID | None | None | RIGID | Typical |
| 92 | M92A | N151A | N152A | | | MOD Support Rail | None | None | A53 Gr. B | Typical |
| 93 | M93 | N161A | N163A | | | RIGID | None | None | RIGID | Typical |
| 94 | M94 | N162A | N164 | | | RIGID | None | None | RIGID | Typical |
| 95 | M95 | N167 | N168 | | | RIGID | None | None | RIGID | Typical |
| 96 | M96 | N169 | N170 | | | RIGID | None | None | RIGID | Typical |
| 97 | M97 | N171 | N172 | | | RIGID | None | None | RIGID | Typical |
| 98 | M98 | N173 | N174 | | | RIGID | None | None | RIGID | Typical |
| 99 | M99 | N165 | N166 | | | MOD Support Rail | None | None | A53 Gr. B | Typical |
| 100 | M100 | N175 | N177 | | | RIGID | None | None | RIGID | Typical |
| 101 | M101 | N176 | N178 | | | RIGID | None | None | RIGID | Typical |
| 102 | M102 | N149 | N178 | | 90 | MOD Support Rail Angle | None | None | A36 Gr.36 | Typical |
| 103 | M103 | N150A | N163A | | 180 | MOD Support Rail Angle | None | None | A36 Gr.36 | Typical |
| 104 | M104 | N164 | N177 | | 180 | MOD Support Rail Angle | None | None | A36 Gr.36 | Typical |
| 105 | M105 | N183 | N180 | | | MOD Kicker | None | None | A36 Gr.36 | Typical |
| 106 | M106 | N185 | N181 | | | MOD Kicker | None | None | A36 Gr.36 | Typical |
| 107 | M107 | N187 | N182 | | | MOD Kicker | None | None | A36 Gr.36 | Typical |

## Member Advanced Data

| | Label | I Release | J Release | I Offset[in] | J Offset[in] | T/C Only | Physical | Defl Rat... | Analysis ... | Inactive | Seismic... |
|---|---|---|---|---|---|---|---|---|---|---|---|
| 1 | M1 | | | | | | Yes | ** NA ** | | | None |
| 2 | M4 | | | | | | Yes | ** NA ** | | | None |
| 3 | M7 | | | | | | Yes | ** NA ** | | | None |
| 4 | M15 | | | | | | Yes | ** NA ** | | | None |
| 5 | M17 | | | | | | Yes | ** NA ** | | | None |
| 6 | M20 | | | | | | Yes | ** NA ** | | | None |
| 7 | M21 | | | | | | Yes | ** NA ** | | | None |
| 8 | M25 | | | | | | Yes | ** NA ** | | | None |
| 9 | M29 | | | | | | Yes | ** NA ** | | | None |
| 10 | M30 | | | | | | Yes | ** NA ** | | | None |
| 11 | M75 | | | | | | Yes | ** NA ** | | | None |
| 12 | M107A | | BenPIN | | | | Yes | ** NA ** | | | None |
| 13 | M108A | | | | | | Yes | ** NA ** | | | None |

## Member Advanced Data (Continued)

| | Label | I Release | J Release | I Offset[in] | J Offset[in] | T/C Only | Physical | Defl Rat... | Analysis ... | Inactive | Seismic... |
|---|---|---|---|---|---|---|---|---|---|---|---|
| 14 | M109A | | | | | | Yes | ** NA ** | | | None |
| 15 | M110 | | BenPIN | | | | Yes | ** NA ** | | | None |
| 16 | M114C | | BenPIN | | | | Yes | ** NA ** | | | None |
| 17 | M119 | | | | | | Yes | ** NA ** | | | None |
| 18 | M120 | | | | | | Yes | ** NA ** | | | None |
| 19 | M121 | | BenPIN | | | | Yes | ** NA ** | | | None |
| 20 | M122 | | | | | | Yes | ** NA ** | | | None |
| 21 | M125 | | | | | | Yes | ** NA ** | | | None |
| 22 | M51 | | | | | | Yes | ** NA ** | | | None |
| 23 | M52 | | | | | | Yes | ** NA ** | | | None |
| 24 | M54 | | | | | | Yes | ** NA ** | | | None |
| 25 | M55 | | | | | | Yes | ** NA ** | | | None |
| 26 | M56 | | | | | | Yes | ** NA ** | | | None |
| 27 | M57A | | | | | | Yes | ** NA ** | | | None |
| 28 | M58A | | | | | | Yes | ** NA ** | | | None |
| 29 | M62 | | BenPIN | | | | Yes | ** NA ** | | | None |
| 30 | M63 | | | | | | Yes | ** NA ** | | | None |
| 31 | M64A | | | | | | Yes | ** NA ** | | | None |
| 32 | M65A | | BenPIN | | | | Yes | ** NA ** | | | None |
| 33 | M66A | | BenPIN | | | | Yes | ** NA ** | | | None |
| 34 | M67 | | | | | | Yes | ** NA ** | | | None |
| 35 | M68 | | | | | | Yes | ** NA ** | | | None |
| 36 | M69 | | BenPIN | | | | Yes | ** NA ** | | | None |
| 37 | M70A | | | | | | Yes | ** NA ** | | | None |
| 38 | M71 | | | | | | Yes | ** NA ** | | | None |
| 39 | M72A | | | | | | Yes | ** NA ** | | | None |
| 40 | M73A | | | | | | Yes | ** NA ** | | | None |
| 41 | M75A | | | | | | Yes | ** NA ** | | | None |
| 42 | M76 | | | | | | Yes | ** NA ** | | | None |
| 43 | M77 | | | | | | Yes | ** NA ** | | | None |
| 44 | M78A | | | | | | Yes | ** NA ** | | | None |
| 45 | M79 | | | | | | Yes | ** NA ** | | | None |
| 46 | M83 | | BenPIN | | | | Yes | ** NA ** | | | None |
| 47 | M84 | | | | | | Yes | ** NA ** | | | None |
| 48 | M85 | | | | | | Yes | ** NA ** | | | None |
| 49 | M86 | | BenPIN | | | | Yes | ** NA ** | | | None |
| 50 | M87 | | BenPIN | | | | Yes | ** NA ** | | | None |
| 51 | M88 | | | | | | Yes | ** NA ** | | | None |
| 52 | M89 | | | | | | Yes | ** NA ** | | | None |
| 53 | M90 | | BenPIN | | | | Yes | ** NA ** | | | None |
| 54 | M91 | | | | | | Yes | ** NA ** | | | None |
| 55 | M92 | | | | | | Yes | ** NA ** | | | None |
| 56 | MP1A | | | | | | Yes | ** NA ** | | | None |
| 57 | M57 | | | | | | Yes | ** NA ** | | | None |
| 58 | MP2A | | | | | | Yes | ** NA ** | | | None |
| 59 | M59 | | | | | | Yes | ** NA ** | | | None |
| 60 | MP3A | | | | | | Yes | ** NA ** | | | None |
| 61 | M61 | | | | | | Yes | ** NA ** | | | None |
| 62 | MP4A | | | | | | Yes | ** NA ** | | | None |
| 63 | M63A | | | | | | Yes | ** NA ** | | | None |
| 64 | MP1C | | | | | | Yes | ** NA ** | | | None |
| 65 | M65 | | | | | | Yes | ** NA ** | | | None |

## Member Advanced Data (Continued)

| | Label | I Release | J Release | I Offset[in] | J Offset[in] | T/C Only | Physical | Defl Rat... | Analysis ... | Inactive | Seismic... |
|---|---|---|---|---|---|---|---|---|---|---|---|
| 66 | MP2C | | | | | | Yes | ** NA ** | | | None |
| 67 | M67A | | | | | | Yes | ** NA ** | | | None |
| 68 | MP3C | | | | | | Yes | ** NA ** | | | None |
| 69 | M69A | | | | | | Yes | ** NA ** | | | None |
| 70 | MP4C | | | | | | Yes | ** NA ** | | | None |
| 71 | M71A | | | | | | Yes | ** NA ** | | | None |
| 72 | MP1B | | | | | | Yes | ** NA ** | | | None |
| 73 | M73 | | | | | | Yes | ** NA ** | | | None |
| 74 | MP2B | | | | | | Yes | ** NA ** | | | None |
| 75 | M75B | | | | | | Yes | ** NA ** | | | None |
| 76 | MP3B | | | | | | Yes | ** NA ** | | | None |
| 77 | M77A | | | | | | Yes | ** NA ** | | | None |
| 78 | MP4B | | | | | | Yes | ** NA ** | | | None |
| 79 | M79A | | | | | | Yes | ** NA ** | | | None |
| 80 | OVP | | | | | | Yes | ** NA ** | | | None |
| 81 | M81 | | | | | | Yes | ** NA ** | | | None |
| 82 | M82 | | | | | | Yes | ** NA ** | | | None |
| 83 | M83A | | | | | | Yes | ** NA ** | | | None |
| 84 | M84A | | | | | | Yes | ** NA ** | | | None |
| 85 | M85A | | | | | | Yes | ** NA ** | | | None |
| 86 | M86A | OOOOOX | | | | | Yes | ** NA ** | | | None |
| 87 | M87A | OOOOOX | | | | | Yes | ** NA ** | | | None |
| 88 | M88A | | | | | | Yes | ** NA ** | | | None |
| 89 | M89A | | | | | | Yes | ** NA ** | | | None |
| 90 | M90A | | | | | | Yes | ** NA ** | | | None |
| 91 | M91A | | | | | | Yes | ** NA ** | | | None |
| 92 | M92A | | | | | | Yes | ** NA ** | | | None |
| 93 | M93 | OOOOOX | | | | | Yes | ** NA ** | | | None |
| 94 | M94 | OOOOOX | | | | | Yes | ** NA ** | | | None |
| 95 | M95 | | | | | | Yes | ** NA ** | | | None |
| 96 | M96 | | | | | | Yes | ** NA ** | | | None |
| 97 | M97 | | | | | | Yes | ** NA ** | | | None |
| 98 | M98 | | | | | | Yes | ** NA ** | | | None |
| 99 | M99 | | | | | | Yes | ** NA ** | | | None |
| 100 | M100 | OOOOOX | | | | | Yes | ** NA ** | | | None |
| 101 | M101 | OOOOOX | | | | | Yes | ** NA ** | | | None |
| 102 | M102 | | | | | | Yes | ** NA ** | | | None |
| 103 | M103 | | | | | | Yes | ** NA ** | | | None |
| 104 | M104 | | | | | | Yes | ** NA ** | | | None |
| 105 | M105 | BenPIN | BenPIN | | | | Yes | ** NA ** | | | None |
| 106 | M106 | BenPIN | BenPIN | | | | Yes | ** NA ** | | | None |
| 107 | M107 | BenPIN | BenPIN | | | | Yes | ** NA ** | | | None |

## Member Point Loads (BLC 1 : Antenna D)

| | Member Label | Direction | Magnitude[lb,k-ft] | Location[ft,%] |
|---|---|---|---|---|
| 1 | MP2A | Y | -21.85 | .25 |
| 2 | MP2A | My | -.011 | .25 |
| 3 | MP2A | Mz | -.013 | .25 |
| 4 | MP2A | Y | -21.85 | 4.25 |
| 5 | MP2A | My | -.011 | 4.25 |

## Member Point Loads (BLC 1 : Antenna D) (Continued)

| | Member Label | Direction | Magnitude[lb,k-ft] | Location[ft,%] |
|---|---|---|---|---|
| 6 | MP2A | Mz | -.013 | 4.25 |
| 7 | MP2B | Y | -21.85 | .25 |
| 8 | MP2B | My | .017 | .25 |
| 9 | MP2B | Mz | -.003 | .25 |
| 10 | MP2B | Y | -21.85 | 4.25 |
| 11 | MP2B | My | .017 | 4.25 |
| 12 | MP2B | Mz | -.003 | 4.25 |
| 13 | MP2C | Y | -21.85 | .25 |
| 14 | MP2C | My | -.006 | .25 |
| 15 | MP2C | Mz | .016 | .25 |
| 16 | MP2C | Y | -21.85 | 4.25 |
| 17 | MP2C | My | -.006 | 4.25 |
| 18 | MP2C | Mz | .016 | 4.25 |
| 19 | MP2A | Y | -32.3 | .25 |
| 20 | MP2A | My | -.016 | .25 |
| 21 | MP2A | Mz | .019 | .25 |
| 22 | MP2A | Y | -32.3 | 4.25 |
| 23 | MP2A | My | -.016 | 4.25 |
| 24 | MP2A | Mz | .019 | 4.25 |
| 25 | MP2B | Y | -32.3 | .25 |
| 26 | MP2B | My | -.008 | .25 |
| 27 | MP2B | Mz | -.023 | .25 |
| 28 | MP2B | Y | -32.3 | 4.25 |
| 29 | MP2B | My | -.008 | 4.25 |
| 30 | MP2B | Mz | -.023 | 4.25 |
| 31 | MP2C | Y | -32.3 | .25 |
| 32 | MP2C | My | .024 | .25 |
| 33 | MP2C | Mz | .005 | .25 |
| 34 | MP2C | Y | -32.3 | 4.25 |
| 35 | MP2C | My | .024 | 4.25 |
| 36 | MP2C | Mz | .005 | 4.25 |
| 37 | MP1A | Y | -43.55 | 1.25 |
| 38 | MP1A | My | -.022 | 1.25 |
| 39 | MP1A | Mz | 0 | 1.25 |
| 40 | MP1A | Y | -43.55 | 3.25 |
| 41 | MP1A | My | -.022 | 3.25 |
| 42 | MP1A | Mz | 0 | 3.25 |
| 43 | MP1B | Y | -43.55 | 1.25 |
| 44 | MP1B | My | .011 | 1.25 |
| 45 | MP1B | Mz | -.019 | 1.25 |
| 46 | MP1B | Y | -43.55 | 3.25 |
| 47 | MP1B | My | .011 | 3.25 |
| 48 | MP1B | Mz | -.019 | 3.25 |
| 49 | MP1C | Y | -43.55 | 1.25 |
| 50 | MP1C | My | .011 | 1.25 |
| 51 | MP1C | Mz | .019 | 1.25 |
| 52 | MP1C | Y | -43.55 | 3.25 |
| 53 | MP1C | My | .011 | 3.25 |
| 54 | MP1C | Mz | .019 | 3.25 |
| 55 | OVP | Y | -32 | 1 |
| 56 | OVP | My | 0 | 1 |
| 57 | OVP | Mz | 0 | 1 |

## Member Point Loads (BLC 1 : Antenna D) (Continued)

| | Member Label | Direction | Magnitude[lb,k-ft] | Location[ft,%] |
|---|---|---|---|---|
| 58 | MP2A | Y | -70.3 | 1.5 |
| 59 | MP2A | My | .035 | 1.5 |
| 60 | MP2A | Mz | 0 | 1.5 |
| 61 | MP2B | Y | -70.3 | 1.5 |
| 62 | MP2B | My | -.018 | 1.5 |
| 63 | MP2B | Mz | .03 | 1.5 |
| 64 | MP2C | Y | -70.3 | 1.5 |
| 65 | MP2C | My | -.018 | 1.5 |
| 66 | MP2C | Mz | -.03 | 1.5 |
| 67 | MP3A | Y | -74.7 | 1.5 |
| 68 | MP3A | My | .037 | 1.5 |
| 69 | MP3A | Mz | 0 | 1.5 |
| 70 | MP3B | Y | -74.7 | 1.5 |
| 71 | MP3B | My | -.019 | 1.5 |
| 72 | MP3B | Mz | .032 | 1.5 |
| 73 | MP3C | Y | -74.7 | 1.5 |
| 74 | MP3C | My | -.019 | 1.5 |
| 75 | MP3C | Mz | -.032 | 1.5 |
| 76 | MP4A | Y | -22.95 | .25 |
| 77 | MP4A | My | -.011 | .25 |
| 78 | MP4A | Mz | 0 | .25 |
| 79 | MP4A | Y | -22.95 | 4.25 |
| 80 | MP4A | My | -.011 | 4.25 |
| 81 | MP4A | Mz | 0 | 4.25 |
| 82 | MP4B | Y | -22.95 | .25 |
| 83 | MP4B | My | .006 | .25 |
| 84 | MP4B | Mz | -.01 | .25 |
| 85 | MP4B | Y | -22.95 | 4.25 |
| 86 | MP4B | My | .006 | 4.25 |
| 87 | MP4B | Mz | -.01 | 4.25 |
| 88 | MP4C | Y | -22.95 | .25 |
| 89 | MP4C | My | .006 | .25 |
| 90 | MP4C | Mz | .01 | .25 |
| 91 | MP4C | Y | -22.95 | 4.25 |
| 92 | MP4C | My | .006 | 4.25 |
| 93 | MP4C | Mz | .01 | 4.25 |
| 94 | MP2A | Y | -18.7 | 4 |
| 95 | MP2A | My | .009 | 4 |
| 96 | MP2A | Mz | 0 | 4 |
| 97 | MP2B | Y | -18.7 | 4 |
| 98 | MP2B | My | -.005 | 4 |
| 99 | MP2B | Mz | .008 | 4 |
| 100 | MP2C | Y | -18.7 | 4 |
| 101 | MP2C | My | -.005 | 4 |
| 102 | MP2C | Mz | -.008 | 4 |

## Member Point Loads (BLC 2 : Antenna Di)

| | Member Label | Direction | Magnitude[lb,k-ft] | Location[ft,%] |
|---|---|---|---|---|
| 1 | MP2A | Y | -93.303 | .25 |
| 2 | MP2A | My | -.047 | .25 |
| 3 | MP2A | Mz | -.054 | .25 |

## Member Point Loads (BLC 2 : Antenna Di) (Continued)

| | Member Label | Direction | Magnitude[lb,k-ft] | Location[ft,%] |
|---|---|---|---|---|
| 4 | MP2A | Y | -93.303 | 4.25 |
| 5 | MP2A | My | -.047 | 4.25 |
| 6 | MP2A | Mz | -.054 | 4.25 |
| 7 | MP2B | Y | -93.303 | .25 |
| 8 | MP2B | My | .07 | .25 |
| 9 | MP2B | Mz | -.013 | .25 |
| 10 | MP2B | Y | -93.303 | 4.25 |
| 11 | MP2B | My | .07 | 4.25 |
| 12 | MP2B | Mz | -.013 | 4.25 |
| 13 | MP2C | Y | -93.303 | .25 |
| 14 | MP2C | My | -.024 | .25 |
| 15 | MP2C | Mz | .068 | .25 |
| 16 | MP2C | Y | -93.303 | 4.25 |
| 17 | MP2C | My | -.024 | 4.25 |
| 18 | MP2C | Mz | .068 | 4.25 |
| 19 | MP2A | Y | -93.303 | .25 |
| 20 | MP2A | My | -.047 | .25 |
| 21 | MP2A | Mz | .054 | .25 |
| 22 | MP2A | Y | -93.303 | 4.25 |
| 23 | MP2A | My | -.047 | 4.25 |
| 24 | MP2A | Mz | .054 | 4.25 |
| 25 | MP2B | Y | -93.303 | .25 |
| 26 | MP2B | My | -.024 | .25 |
| 27 | MP2B | Mz | -.068 | .25 |
| 28 | MP2B | Y | -93.303 | 4.25 |
| 29 | MP2B | My | -.024 | 4.25 |
| 30 | MP2B | Mz | -.068 | 4.25 |
| 31 | MP2C | Y | -93.303 | .25 |
| 32 | MP2C | My | .07 | .25 |
| 33 | MP2C | Mz | .013 | .25 |
| 34 | MP2C | Y | -93.303 | 4.25 |
| 35 | MP2C | My | .07 | 4.25 |
| 36 | MP2C | Mz | .013 | 4.25 |
| 37 | MP1A | Y | -55.06 | 1.25 |
| 38 | MP1A | My | -.028 | 1.25 |
| 39 | MP1A | Mz | 0 | 1.25 |
| 40 | MP1A | Y | -55.06 | 3.25 |
| 41 | MP1A | My | -.028 | 3.25 |
| 42 | MP1A | Mz | 0 | 3.25 |
| 43 | MP1B | Y | -55.06 | 1.25 |
| 44 | MP1B | My | .014 | 1.25 |
| 45 | MP1B | Mz | -.024 | 1.25 |
| 46 | MP1B | Y | -55.06 | 3.25 |
| 47 | MP1B | My | .014 | 3.25 |
| 48 | MP1B | Mz | -.024 | 3.25 |
| 49 | MP1C | Y | -55.06 | 1.25 |
| 50 | MP1C | My | .014 | 1.25 |
| 51 | MP1C | Mz | .024 | 1.25 |
| 52 | MP1C | Y | -55.06 | 3.25 |
| 53 | MP1C | My | .014 | 3.25 |
| 54 | MP1C | Mz | .024 | 3.25 |
| 55 | OVP | Y | -134.777 | 1 |

## Member Point Loads (BLC 2 : Antenna Di) (Continued)

| | Member Label | Direction | Magnitude[lb,k-ft] | Location[ft,%] |
|---|---|---|---|---|
| 56 | OVP | My | 0 | 1 |
| 57 | OVP | Mz | 0 | 1 |
| 58 | MP2A | Y | -66.718 | 1.5 |
| 59 | MP2A | My | .033 | 1.5 |
| 60 | MP2A | Mz | 0 | 1.5 |
| 61 | MP2B | Y | -66.718 | 1.5 |
| 62 | MP2B | My | -.017 | 1.5 |
| 63 | MP2B | Mz | .029 | 1.5 |
| 64 | MP2C | Y | -66.718 | 1.5 |
| 65 | MP2C | My | -.017 | 1.5 |
| 66 | MP2C | Mz | -.029 | 1.5 |
| 67 | MP3A | Y | -69.944 | 1.5 |
| 68 | MP3A | My | .035 | 1.5 |
| 69 | MP3A | Mz | 0 | 1.5 |
| 70 | MP3B | Y | -69.944 | 1.5 |
| 71 | MP3B | My | -.017 | 1.5 |
| 72 | MP3B | Mz | .03 | 1.5 |
| 73 | MP3C | Y | -69.944 | 1.5 |
| 74 | MP3C | My | -.017 | 1.5 |
| 75 | MP3C | Mz | -.03 | 1.5 |
| 76 | MP4A | Y | -103.523 | .25 |
| 77 | MP4A | My | -.052 | .25 |
| 78 | MP4A | Mz | 0 | .25 |
| 79 | MP4A | Y | -103.523 | 4.25 |
| 80 | MP4A | My | -.052 | 4.25 |
| 81 | MP4A | Mz | 0 | 4.25 |
| 82 | MP4B | Y | -103.523 | .25 |
| 83 | MP4B | My | .026 | .25 |
| 84 | MP4B | Mz | -.045 | .25 |
| 85 | MP4B | Y | -103.523 | 4.25 |
| 86 | MP4B | My | .026 | 4.25 |
| 87 | MP4B | Mz | -.045 | 4.25 |
| 88 | MP4C | Y | -103.523 | .25 |
| 89 | MP4C | My | .026 | .25 |
| 90 | MP4C | Mz | .045 | .25 |
| 91 | MP4C | Y | -103.523 | 4.25 |
| 92 | MP4C | My | .026 | 4.25 |
| 93 | MP4C | Mz | .045 | 4.25 |
| 94 | MP2A | Y | -31.939 | 4 |
| 95 | MP2A | My | .016 | 4 |
| 96 | MP2A | Mz | 0 | 4 |
| 97 | MP2B | Y | -31.939 | 4 |
| 98 | MP2B | My | -.008 | 4 |
| 99 | MP2B | Mz | .014 | 4 |
| 100 | MP2C | Y | -31.939 | 4 |
| 101 | MP2C | My | -.008 | 4 |
| 102 | MP2C | Mz | -.014 | 4 |

## Member Point Loads (BLC 3 : Antenna Wo (0 Deg))

| | Member Label | Direction | Magnitude[lb,k-ft] | Location[ft,%] |
|---|---|---|---|---|
| 1 | MP2A | X | 0 | .25 |

## Member Point Loads (BLC 3 : Antenna Wo (0 Deg)) (Continued)

| | Member Label | Direction | Magnitude[lb,k-ft] | Location[ft,%] |
|---|---|---|---|---|
| 2 | MP2A | Z | -104.925 | .25 |
| 3 | MP2A | Mx | .061 | .25 |
| 4 | MP2A | X | 0 | 4.25 |
| 5 | MP2A | Z | -104.925 | 4.25 |
| 6 | MP2A | Mx | .061 | 4.25 |
| 7 | MP2B | X | 0 | .25 |
| 8 | MP2B | Z | -59.999 | .25 |
| 9 | MP2B | Mx | .008 | .25 |
| 10 | MP2B | X | 0 | 4.25 |
| 11 | MP2B | Z | -59.999 | 4.25 |
| 12 | MP2B | Mx | .008 | 4.25 |
| 13 | MP2C | X | 0 | .25 |
| 14 | MP2C | Z | -59.999 | .25 |
| 15 | MP2C | Mx | -.043 | .25 |
| 16 | MP2C | X | 0 | 4.25 |
| 17 | MP2C | Z | -59.999 | 4.25 |
| 18 | MP2C | Mx | -.043 | 4.25 |
| 19 | MP2A | X | 0 | .25 |
| 20 | MP2A | Z | -155.552 | .25 |
| 21 | MP2A | Mx | -.091 | .25 |
| 22 | MP2A | X | 0 | 4.25 |
| 23 | MP2A | Z | -155.552 | 4.25 |
| 24 | MP2A | Mx | -.091 | 4.25 |
| 25 | MP2B | X | 0 | .25 |
| 26 | MP2B | Z | -116.301 | .25 |
| 27 | MP2B | Mx | .084 | .25 |
| 28 | MP2B | X | 0 | 4.25 |
| 29 | MP2B | Z | -116.301 | 4.25 |
| 30 | MP2B | Mx | .084 | 4.25 |
| 31 | MP2C | X | 0 | .25 |
| 32 | MP2C | Z | -116.301 | .25 |
| 33 | MP2C | Mx | -.016 | .25 |
| 34 | MP2C | X | 0 | 4.25 |
| 35 | MP2C | Z | -116.301 | 4.25 |
| 36 | MP2C | Mx | -.016 | 4.25 |
| 37 | MP1A | X | 0 | 1.25 |
| 38 | MP1A | Z | -75.747 | 1.25 |
| 39 | MP1A | Mx | 0 | 1.25 |
| 40 | MP1A | X | 0 | 3.25 |
| 41 | MP1A | Z | -75.747 | 3.25 |
| 42 | MP1A | Mx | 0 | 3.25 |
| 43 | MP1B | X | 0 | 1.25 |
| 44 | MP1B | Z | -38.501 | 1.25 |
| 45 | MP1B | Mx | .017 | 1.25 |
| 46 | MP1B | X | 0 | 3.25 |
| 47 | MP1B | Z | -38.501 | 3.25 |
| 48 | MP1B | Mx | .017 | 3.25 |
| 49 | MP1C | X | 0 | 1.25 |
| 50 | MP1C | Z | -38.501 | 1.25 |
| 51 | MP1C | Mx | -.017 | 1.25 |
| 52 | MP1C | X | 0 | 3.25 |
| 53 | MP1C | Z | -38.501 | 3.25 |

## Member Point Loads (BLC 3 : Antenna Wo (0 Deg)) (Continued)

| | Member Label | Direction | Magnitude[lb,k-ft] | Location[ft,%] |
|---|---|---|---|---|
| 54 | MP1C | Mx | -.017 | 3.25 |
| 55 | OVP | X | 0 | 1 |
| 56 | OVP | Z | -122.509 | 1 |
| 57 | OVP | Mx | 0 | 1 |
| 58 | MP2A | X | 0 | 1.5 |
| 59 | MP2A | Z | -72.269 | 1.5 |
| 60 | MP2A | Mx | 0 | 1.5 |
| 61 | MP2B | X | 0 | 1.5 |
| 62 | MP2B | Z | -51.037 | 1.5 |
| 63 | MP2B | Mx | -.022 | 1.5 |
| 64 | MP2C | X | 0 | 1.5 |
| 65 | MP2C | Z | -51.037 | 1.5 |
| 66 | MP2C | Mx | .022 | 1.5 |
| 67 | MP3A | X | 0 | 1.5 |
| 68 | MP3A | Z | -72.269 | 1.5 |
| 69 | MP3A | Mx | 0 | 1.5 |
| 70 | MP3B | X | 0 | 1.5 |
| 71 | MP3B | Z | -54.298 | 1.5 |
| 72 | MP3B | Mx | -.024 | 1.5 |
| 73 | MP3C | X | 0 | 1.5 |
| 74 | MP3C | Z | -54.298 | 1.5 |
| 75 | MP3C | Mx | .024 | 1.5 |
| 76 | MP4A | X | 0 | .25 |
| 77 | MP4A | Z | -178.353 | .25 |
| 78 | MP4A | Mx | 0 | .25 |
| 79 | MP4A | X | 0 | 4.25 |
| 80 | MP4A | Z | -178.353 | 4.25 |
| 81 | MP4A | Mx | 0 | 4.25 |
| 82 | MP4B | X | 0 | .25 |
| 83 | MP4B | Z | -133.574 | .25 |
| 84 | MP4B | Mx | .058 | .25 |
| 85 | MP4B | X | 0 | 4.25 |
| 86 | MP4B | Z | -133.574 | 4.25 |
| 87 | MP4B | Mx | .058 | 4.25 |
| 88 | MP4C | X | 0 | .25 |
| 89 | MP4C | Z | -133.574 | .25 |
| 90 | MP4C | Mx | -.058 | .25 |
| 91 | MP4C | X | 0 | 4.25 |
| 92 | MP4C | Z | -133.574 | 4.25 |
| 93 | MP4C | Mx | -.058 | 4.25 |
| 94 | MP2A | X | 0 | 4 |
| 95 | MP2A | Z | -27.825 | 4 |
| 96 | MP2A | Mx | 0 | 4 |
| 97 | MP2B | X | 0 | 4 |
| 98 | MP2B | Z | -16.811 | 4 |
| 99 | MP2B | Mx | -.007 | 4 |
| 100 | MP2C | X | 0 | 4 |
| 101 | MP2C | Z | -16.811 | 4 |
| 102 | MP2C | Mx | .007 | 4 |

## Member Point Loads (BLC 4 : Antenna Wo (30 Deg))

| Member Label | Direction | Magnitude[lb,k-ft] | Location[ft,%] |
|---|---|---|---|

## Member Point Loads (BLC 4 : Antenna Wo (30 Deg)) (Continued)

| | Member Label | Direction | Magnitude[lb,k-ft] | Location[ft,%] |
|---|---|---|---|---|
| 1 | MP2A | X | 44.975 | .25 |
| 2 | MP2A | Z | -77.899 | .25 |
| 3 | MP2A | Mx | .023 | .25 |
| 4 | MP2A | X | 44.975 | 4.25 |
| 5 | MP2A | Z | -77.899 | 4.25 |
| 6 | MP2A | Mx | .023 | 4.25 |
| 7 | MP2B | X | 22.512 | .25 |
| 8 | MP2B | Z | -38.991 | .25 |
| 9 | MP2B | Mx | .023 | .25 |
| 10 | MP2B | X | 22.512 | 4.25 |
| 11 | MP2B | Z | -38.991 | 4.25 |
| 12 | MP2B | Mx | .023 | 4.25 |
| 13 | MP2C | X | 44.975 | .25 |
| 14 | MP2C | Z | -77.899 | .25 |
| 15 | MP2C | Mx | -.068 | .25 |
| 16 | MP2C | X | 44.975 | 4.25 |
| 17 | MP2C | Z | -77.899 | 4.25 |
| 18 | MP2C | Mx | -.068 | 4.25 |
| 19 | MP2A | X | 71.234 | .25 |
| 20 | MP2A | Z | -123.381 | .25 |
| 21 | MP2A | Mx | -.108 | .25 |
| 22 | MP2A | X | 71.234 | 4.25 |
| 23 | MP2A | Z | -123.381 | 4.25 |
| 24 | MP2A | Mx | -.108 | 4.25 |
| 25 | MP2B | X | 51.609 | .25 |
| 26 | MP2B | Z | -89.389 | .25 |
| 27 | MP2B | Mx | .052 | .25 |
| 28 | MP2B | X | 51.609 | 4.25 |
| 29 | MP2B | Z | -89.389 | 4.25 |
| 30 | MP2B | Mx | .052 | 4.25 |
| 31 | MP2C | X | 71.234 | .25 |
| 32 | MP2C | Z | -123.381 | .25 |
| 33 | MP2C | Mx | .036 | .25 |
| 34 | MP2C | X | 71.234 | 4.25 |
| 35 | MP2C | Z | -123.381 | 4.25 |
| 36 | MP2C | Mx | .036 | 4.25 |
| 37 | MP1A | X | 31.666 | 1.25 |
| 38 | MP1A | Z | -54.847 | 1.25 |
| 39 | MP1A | Mx | -.016 | 1.25 |
| 40 | MP1A | X | 31.666 | 3.25 |
| 41 | MP1A | Z | -54.847 | 3.25 |
| 42 | MP1A | Mx | -.016 | 3.25 |
| 43 | MP1B | X | 13.043 | 1.25 |
| 44 | MP1B | Z | -22.591 | 1.25 |
| 45 | MP1B | Mx | .013 | 1.25 |
| 46 | MP1B | X | 13.043 | 3.25 |
| 47 | MP1B | Z | -22.591 | 3.25 |
| 48 | MP1B | Mx | .013 | 3.25 |
| 49 | MP1C | X | 31.666 | 1.25 |
| 50 | MP1C | Z | -54.847 | 1.25 |
| 51 | MP1C | Mx | -.016 | 1.25 |
| 52 | MP1C | X | 31.666 | 3.25 |

## Member Point Loads (BLC 4 : Antenna Wo (30 Deg)) (Continued)

| | Member Label | Direction | Magnitude[lb,k-ft] | Location[ft,%] |
|---|---|---|---|---|
| 53 | MP1C | Z | -54.847 | 3.25 |
| 54 | MP1C | Mx | -.016 | 3.25 |
| 55 | OVP | X | 57.583 | 1 |
| 56 | OVP | Z | -99.737 | 1 |
| 57 | OVP | Mx | 0 | 1 |
| 58 | MP2A | X | 32.596 | 1.5 |
| 59 | MP2A | Z | -56.458 | 1.5 |
| 60 | MP2A | Mx | .016 | 1.5 |
| 61 | MP2B | X | 21.98 | 1.5 |
| 62 | MP2B | Z | -38.071 | 1.5 |
| 63 | MP2B | Mx | -.022 | 1.5 |
| 64 | MP2C | X | 32.596 | 1.5 |
| 65 | MP2C | Z | -56.458 | 1.5 |
| 66 | MP2C | Mx | .016 | 1.5 |
| 67 | MP3A | X | 33.139 | 1.5 |
| 68 | MP3A | Z | -57.399 | 1.5 |
| 69 | MP3A | Mx | .017 | 1.5 |
| 70 | MP3B | X | 24.154 | 1.5 |
| 71 | MP3B | Z | -41.836 | 1.5 |
| 72 | MP3B | Mx | -.024 | 1.5 |
| 73 | MP3C | X | 33.139 | 1.5 |
| 74 | MP3C | Z | -57.399 | 1.5 |
| 75 | MP3C | Mx | .017 | 1.5 |
| 76 | MP4A | X | 81.713 | .25 |
| 77 | MP4A | Z | -141.532 | .25 |
| 78 | MP4A | Mx | -.041 | .25 |
| 79 | MP4A | X | 81.713 | 4.25 |
| 80 | MP4A | Z | -141.532 | 4.25 |
| 81 | MP4A | Mx | -.041 | 4.25 |
| 82 | MP4B | X | 59.324 | .25 |
| 83 | MP4B | Z | -102.752 | .25 |
| 84 | MP4B | Mx | .059 | .25 |
| 85 | MP4B | X | 59.324 | 4.25 |
| 86 | MP4B | Z | -102.752 | 4.25 |
| 87 | MP4B | Mx | .059 | 4.25 |
| 88 | MP4C | X | 81.713 | .25 |
| 89 | MP4C | Z | -141.532 | .25 |
| 90 | MP4C | Mx | -.041 | .25 |
| 91 | MP4C | X | 81.713 | 4.25 |
| 92 | MP4C | Z | -141.532 | 4.25 |
| 93 | MP4C | Mx | -.041 | 4.25 |
| 94 | MP2A | X | 12.077 | 4 |
| 95 | MP2A | Z | -20.918 | 4 |
| 96 | MP2A | Mx | .006 | 4 |
| 97 | MP2B | X | 6.57 | 4 |
| 98 | MP2B | Z | -11.379 | 4 |
| 99 | MP2B | Mx | -.007 | 4 |
| 100 | MP2C | X | 12.077 | 4 |
| 101 | MP2C | Z | -20.918 | 4 |
| 102 | MP2C | Mx | .006 | 4 |

## Member Point Loads (BLC 5 : Antenna Wo (60 Deg))

| | Member Label | Direction | Magnitude[lb,k-ft] | Location[ft,%] |
|---|---|---|---|---|
| 1 | MP2A | X | 51.96 | .25 |
| 2 | MP2A | Z | -29.999 | .25 |
| 3 | MP2A | Mx | -.008 | .25 |
| 4 | MP2A | X | 51.96 | 4.25 |
| 5 | MP2A | Z | -29.999 | 4.25 |
| 6 | MP2A | Mx | -.008 | 4.25 |
| 7 | MP2B | X | 51.96 | .25 |
| 8 | MP2B | Z | -29.999 | .25 |
| 9 | MP2B | Mx | .043 | .25 |
| 10 | MP2B | X | 51.96 | 4.25 |
| 11 | MP2B | Z | -29.999 | 4.25 |
| 12 | MP2B | Mx | .043 | 4.25 |
| 13 | MP2C | X | 90.868 | .25 |
| 14 | MP2C | Z | -52.462 | .25 |
| 15 | MP2C | Mx | -.061 | .25 |
| 16 | MP2C | X | 90.868 | 4.25 |
| 17 | MP2C | Z | -52.462 | 4.25 |
| 18 | MP2C | Mx | -.061 | 4.25 |
| 19 | MP2A | X | 100.72 | .25 |
| 20 | MP2A | Z | -58.151 | .25 |
| 21 | MP2A | Mx | -.084 | .25 |
| 22 | MP2A | X | 100.72 | 4.25 |
| 23 | MP2A | Z | -58.151 | 4.25 |
| 24 | MP2A | Mx | -.084 | 4.25 |
| 25 | MP2B | X | 100.72 | .25 |
| 26 | MP2B | Z | -58.151 | .25 |
| 27 | MP2B | Mx | .016 | .25 |
| 28 | MP2B | X | 100.72 | 4.25 |
| 29 | MP2B | Z | -58.151 | 4.25 |
| 30 | MP2B | Mx | .016 | 4.25 |
| 31 | MP2C | X | 134.712 | .25 |
| 32 | MP2C | Z | -77.776 | .25 |
| 33 | MP2C | Mx | .091 | .25 |
| 34 | MP2C | X | 134.712 | 4.25 |
| 35 | MP2C | Z | -77.776 | 4.25 |
| 36 | MP2C | Mx | .091 | 4.25 |
| 37 | MP1A | X | 33.343 | 1.25 |
| 38 | MP1A | Z | -19.251 | 1.25 |
| 39 | MP1A | Mx | -.017 | 1.25 |
| 40 | MP1A | X | 33.343 | 3.25 |
| 41 | MP1A | Z | -19.251 | 3.25 |
| 42 | MP1A | Mx | -.017 | 3.25 |
| 43 | MP1B | X | 33.343 | 1.25 |
| 44 | MP1B | Z | -19.251 | 1.25 |
| 45 | MP1B | Mx | .017 | 1.25 |
| 46 | MP1B | X | 33.343 | 3.25 |
| 47 | MP1B | Z | -19.251 | 3.25 |
| 48 | MP1B | Mx | .017 | 3.25 |
| 49 | MP1C | X | 65.599 | 1.25 |
| 50 | MP1C | Z | -37.873 | 1.25 |
| 51 | MP1C | Mx | 0 | 1.25 |
| 52 | MP1C | X | 65.599 | 3.25 |

## Member Point Loads (BLC 5 : Antenna Wo (60 Deg)) (Continued)

| | Member Label | Direction | Magnitude[lb,k-ft] | Location[ft,%] |
|---|---|---|---|---|
| 53 | MP1C | Z | -37.873 | 3.25 |
| 54 | MP1C | Mx | 0 | 3.25 |
| 55 | OVP | X | 87.019 | 1 |
| 56 | OVP | Z | -50.24 | 1 |
| 57 | OVP | Mx | 0 | 1 |
| 58 | MP2A | X | 44.2 | 1.5 |
| 59 | MP2A | Z | -25.519 | 1.5 |
| 60 | MP2A | Mx | .022 | 1.5 |
| 61 | MP2B | X | 44.2 | 1.5 |
| 62 | MP2B | Z | -25.519 | 1.5 |
| 63 | MP2B | Mx | -.022 | 1.5 |
| 64 | MP2C | X | 62.587 | 1.5 |
| 65 | MP2C | Z | -36.134 | 1.5 |
| 66 | MP2C | Mx | 0 | 1.5 |
| 67 | MP3A | X | 47.024 | 1.5 |
| 68 | MP3A | Z | -27.149 | 1.5 |
| 69 | MP3A | Mx | .024 | 1.5 |
| 70 | MP3B | X | 47.024 | 1.5 |
| 71 | MP3B | Z | -27.149 | 1.5 |
| 72 | MP3B | Mx | -.024 | 1.5 |
| 73 | MP3C | X | 62.587 | 1.5 |
| 74 | MP3C | Z | -36.134 | 1.5 |
| 75 | MP3C | Mx | 0 | 1.5 |
| 76 | MP4A | X | 115.678 | .25 |
| 77 | MP4A | Z | -66.787 | .25 |
| 78 | MP4A | Mx | -.058 | .25 |
| 79 | MP4A | X | 115.678 | 4.25 |
| 80 | MP4A | Z | -66.787 | 4.25 |
| 81 | MP4A | Mx | -.058 | 4.25 |
| 82 | MP4B | X | 115.678 | .25 |
| 83 | MP4B | Z | -66.787 | .25 |
| 84 | MP4B | Mx | .058 | .25 |
| 85 | MP4B | X | 115.678 | 4.25 |
| 86 | MP4B | Z | -66.787 | 4.25 |
| 87 | MP4B | Mx | .058 | 4.25 |
| 88 | MP4C | X | 154.458 | .25 |
| 89 | MP4C | Z | -89.177 | .25 |
| 90 | MP4C | Mx | 0 | .25 |
| 91 | MP4C | X | 154.458 | 4.25 |
| 92 | MP4C | Z | -89.177 | 4.25 |
| 93 | MP4C | Mx | 0 | 4.25 |
| 94 | MP2A | X | 14.559 | 4 |
| 95 | MP2A | Z | -8.406 | 4 |
| 96 | MP2A | Mx | .007 | 4 |
| 97 | MP2B | X | 14.559 | 4 |
| 98 | MP2B | Z | -8.406 | 4 |
| 99 | MP2B | Mx | -.007 | 4 |
| 100 | MP2C | X | 24.098 | 4 |
| 101 | MP2C | Z | -13.913 | 4 |
| 102 | MP2C | Mx | 0 | 4 |

## Member Point Loads (BLC 6 : Antenna Wo (90 Deg))

| | Member Label | Direction | Magnitude[lb,k-ft] | Location[ft,%] |
|---|---|---|---|---|
| 1 | MP2A | X | 45.023 | .25 |
| 2 | MP2A | Z | 0 | .25 |
| 3 | MP2A | Mx | -.023 | .25 |
| 4 | MP2A | X | 45.023 | 4.25 |
| 5 | MP2A | Z | 0 | 4.25 |
| 6 | MP2A | Mx | -.023 | 4.25 |
| 7 | MP2B | X | 89.949 | .25 |
| 8 | MP2B | Z | 0 | .25 |
| 9 | MP2B | Mx | .068 | .25 |
| 10 | MP2B | X | 89.949 | 4.25 |
| 11 | MP2B | Z | 0 | 4.25 |
| 12 | MP2B | Mx | .068 | 4.25 |
| 13 | MP2C | X | 89.949 | .25 |
| 14 | MP2C | Z | 0 | .25 |
| 15 | MP2C | Mx | -.023 | .25 |
| 16 | MP2C | X | 89.949 | 4.25 |
| 17 | MP2C | Z | 0 | 4.25 |
| 18 | MP2C | Mx | -.023 | 4.25 |
| 19 | MP2A | X | 103.218 | .25 |
| 20 | MP2A | Z | 0 | .25 |
| 21 | MP2A | Mx | -.052 | .25 |
| 22 | MP2A | X | 103.218 | 4.25 |
| 23 | MP2A | Z | 0 | 4.25 |
| 24 | MP2A | Mx | -.052 | 4.25 |
| 25 | MP2B | X | 142.468 | .25 |
| 26 | MP2B | Z | 0 | .25 |
| 27 | MP2B | Mx | -.036 | .25 |
| 28 | MP2B | X | 142.468 | 4.25 |
| 29 | MP2B | Z | 0 | 4.25 |
| 30 | MP2B | Mx | -.036 | 4.25 |
| 31 | MP2C | X | 142.468 | .25 |
| 32 | MP2C | Z | 0 | .25 |
| 33 | MP2C | Mx | .108 | .25 |
| 34 | MP2C | X | 142.468 | 4.25 |
| 35 | MP2C | Z | 0 | 4.25 |
| 36 | MP2C | Mx | .108 | 4.25 |
| 37 | MP1A | X | 26.086 | 1.25 |
| 38 | MP1A | Z | 0 | 1.25 |
| 39 | MP1A | Mx | -.013 | 1.25 |
| 40 | MP1A | X | 26.086 | 3.25 |
| 41 | MP1A | Z | 0 | 3.25 |
| 42 | MP1A | Mx | -.013 | 3.25 |
| 43 | MP1B | X | 63.332 | 1.25 |
| 44 | MP1B | Z | 0 | 1.25 |
| 45 | MP1B | Mx | .016 | 1.25 |
| 46 | MP1B | X | 63.332 | 3.25 |
| 47 | MP1B | Z | 0 | 3.25 |
| 48 | MP1B | Mx | .016 | 3.25 |
| 49 | MP1C | X | 63.332 | 1.25 |
| 50 | MP1C | Z | 0 | 1.25 |
| 51 | MP1C | Mx | .016 | 1.25 |
| 52 | MP1C | X | 63.332 | 3.25 |

## Member Point Loads (BLC 6 : Antenna Wo (90 Deg)) (Continued)

| | Member Label | Direction | Magnitude[lb,k-ft] | Location[ft,%] |
|---|---|---|---|---|
| 53 | MP1C | Z | 0 | 3.25 |
| 54 | MP1C | Mx | .016 | 3.25 |
| 55 | OVP | X | 93.138 | 1 |
| 56 | OVP | Z | 0 | 1 |
| 57 | OVP | Mx | 0 | 1 |
| 58 | MP2A | X | 43.96 | 1.5 |
| 59 | MP2A | Z | 0 | 1.5 |
| 60 | MP2A | Mx | .022 | 1.5 |
| 61 | MP2B | X | 65.192 | 1.5 |
| 62 | MP2B | Z | 0 | 1.5 |
| 63 | MP2B | Mx | -.016 | 1.5 |
| 64 | MP2C | X | 65.192 | 1.5 |
| 65 | MP2C | Z | 0 | 1.5 |
| 66 | MP2C | Mx | -.016 | 1.5 |
| 67 | MP3A | X | 48.308 | 1.5 |
| 68 | MP3A | Z | 0 | 1.5 |
| 69 | MP3A | Mx | .024 | 1.5 |
| 70 | MP3B | X | 66.279 | 1.5 |
| 71 | MP3B | Z | 0 | 1.5 |
| 72 | MP3B | Mx | -.017 | 1.5 |
| 73 | MP3C | X | 66.279 | 1.5 |
| 74 | MP3C | Z | 0 | 1.5 |
| 75 | MP3C | Mx | -.017 | 1.5 |
| 76 | MP4A | X | 118.647 | .25 |
| 77 | MP4A | Z | 0 | .25 |
| 78 | MP4A | Mx | -.059 | .25 |
| 79 | MP4A | X | 118.647 | 4.25 |
| 80 | MP4A | Z | 0 | 4.25 |
| 81 | MP4A | Mx | -.059 | 4.25 |
| 82 | MP4B | X | 163.427 | .25 |
| 83 | MP4B | Z | 0 | .25 |
| 84 | MP4B | Mx | .041 | .25 |
| 85 | MP4B | X | 163.427 | 4.25 |
| 86 | MP4B | Z | 0 | 4.25 |
| 87 | MP4B | Mx | .041 | 4.25 |
| 88 | MP4C | X | 163.427 | .25 |
| 89 | MP4C | Z | 0 | .25 |
| 90 | MP4C | Mx | .041 | .25 |
| 91 | MP4C | X | 163.427 | 4.25 |
| 92 | MP4C | Z | 0 | 4.25 |
| 93 | MP4C | Mx | .041 | 4.25 |
| 94 | MP2A | X | 13.14 | 4 |
| 95 | MP2A | Z | 0 | 4 |
| 96 | MP2A | Mx | .007 | 4 |
| 97 | MP2B | X | 24.154 | 4 |
| 98 | MP2B | Z | 0 | 4 |
| 99 | MP2B | Mx | -.006 | 4 |
| 100 | MP2C | X | 24.154 | 4 |
| 101 | MP2C | Z | 0 | 4 |
| 102 | MP2C | Mx | -.006 | 4 |

## Member Point Loads (BLC 7 : Antenna Wo (120 Deg))

| | Member Label | Direction | Magnitude[lb,k-ft] | Location[ft,%] |
|---|---|---|---|---|
| 1 | MP2A | X | 51.96 | .25 |
| 2 | MP2A | Z | 29.999 | .25 |
| 3 | MP2A | Mx | -.043 | .25 |
| 4 | MP2A | X | 51.96 | 4.25 |
| 5 | MP2A | Z | 29.999 | 4.25 |
| 6 | MP2A | Mx | -.043 | 4.25 |
| 7 | MP2B | X | 90.868 | .25 |
| 8 | MP2B | Z | 52.462 | .25 |
| 9 | MP2B | Mx | .061 | .25 |
| 10 | MP2B | X | 90.868 | 4.25 |
| 11 | MP2B | Z | 52.462 | 4.25 |
| 12 | MP2B | Mx | .061 | 4.25 |
| 13 | MP2C | X | 51.96 | .25 |
| 14 | MP2C | Z | 29.999 | .25 |
| 15 | MP2C | Mx | .008 | .25 |
| 16 | MP2C | X | 51.96 | 4.25 |
| 17 | MP2C | Z | 29.999 | 4.25 |
| 18 | MP2C | Mx | .008 | 4.25 |
| 19 | MP2A | X | 100.72 | .25 |
| 20 | MP2A | Z | 58.151 | .25 |
| 21 | MP2A | Mx | -.016 | .25 |
| 22 | MP2A | X | 100.72 | 4.25 |
| 23 | MP2A | Z | 58.151 | 4.25 |
| 24 | MP2A | Mx | -.016 | 4.25 |
| 25 | MP2B | X | 134.712 | .25 |
| 26 | MP2B | Z | 77.776 | .25 |
| 27 | MP2B | Mx | -.091 | .25 |
| 28 | MP2B | X | 134.712 | 4.25 |
| 29 | MP2B | Z | 77.776 | 4.25 |
| 30 | MP2B | Mx | -.091 | 4.25 |
| 31 | MP2C | X | 100.72 | .25 |
| 32 | MP2C | Z | 58.151 | .25 |
| 33 | MP2C | Mx | .084 | .25 |
| 34 | MP2C | X | 100.72 | 4.25 |
| 35 | MP2C | Z | 58.151 | 4.25 |
| 36 | MP2C | Mx | .084 | 4.25 |
| 37 | MP1A | X | 33.343 | 1.25 |
| 38 | MP1A | Z | 19.251 | 1.25 |
| 39 | MP1A | Mx | -.017 | 1.25 |
| 40 | MP1A | X | 33.343 | 3.25 |
| 41 | MP1A | Z | 19.251 | 3.25 |
| 42 | MP1A | Mx | -.017 | 3.25 |
| 43 | MP1B | X | 65.599 | 1.25 |
| 44 | MP1B | Z | 37.873 | 1.25 |
| 45 | MP1B | Mx | 0 | 1.25 |
| 46 | MP1B | X | 65.599 | 3.25 |
| 47 | MP1B | Z | 37.873 | 3.25 |
| 48 | MP1B | Mx | 0 | 3.25 |
| 49 | MP1C | X | 33.343 | 1.25 |
| 50 | MP1C | Z | 19.251 | 1.25 |
| 51 | MP1C | Mx | .017 | 1.25 |
| 52 | MP1C | X | 33.343 | 3.25 |

## Member Point Loads (BLC 7 : Antenna Wo (120 Deg)) (Continued)

| | Member Label | Direction | Magnitude[lb,k-ft] | Location[ft,%] |
|---|---|---|---|---|
| 53 | MP1C | Z | 19.251 | 3.25 |
| 54 | MP1C | Mx | .017 | 3.25 |
| 55 | OVP | X | 87.019 | 1 |
| 56 | OVP | Z | 50.24 | 1 |
| 57 | OVP | Mx | 0 | 1 |
| 58 | MP2A | X | 44.2 | 1.5 |
| 59 | MP2A | Z | 25.519 | 1.5 |
| 60 | MP2A | Mx | .022 | 1.5 |
| 61 | MP2B | X | 62.587 | 1.5 |
| 62 | MP2B | Z | 36.134 | 1.5 |
| 63 | MP2B | Mx | 0 | 1.5 |
| 64 | MP2C | X | 44.2 | 1.5 |
| 65 | MP2C | Z | 25.519 | 1.5 |
| 66 | MP2C | Mx | -.022 | 1.5 |
| 67 | MP3A | X | 47.024 | 1.5 |
| 68 | MP3A | Z | 27.149 | 1.5 |
| 69 | MP3A | Mx | .024 | 1.5 |
| 70 | MP3B | X | 62.587 | 1.5 |
| 71 | MP3B | Z | 36.134 | 1.5 |
| 72 | MP3B | Mx | 0 | 1.5 |
| 73 | MP3C | X | 47.024 | 1.5 |
| 74 | MP3C | Z | 27.149 | 1.5 |
| 75 | MP3C | Mx | -.024 | 1.5 |
| 76 | MP4A | X | 115.678 | .25 |
| 77 | MP4A | Z | 66.787 | .25 |
| 78 | MP4A | Mx | -.058 | .25 |
| 79 | MP4A | X | 115.678 | 4.25 |
| 80 | MP4A | Z | 66.787 | 4.25 |
| 81 | MP4A | Mx | -.058 | 4.25 |
| 82 | MP4B | X | 154.458 | .25 |
| 83 | MP4B | Z | 89.177 | .25 |
| 84 | MP4B | Mx | 0 | .25 |
| 85 | MP4B | X | 154.458 | 4.25 |
| 86 | MP4B | Z | 89.177 | 4.25 |
| 87 | MP4B | Mx | 0 | 4.25 |
| 88 | MP4C | X | 115.678 | .25 |
| 89 | MP4C | Z | 66.787 | .25 |
| 90 | MP4C | Mx | .058 | .25 |
| 91 | MP4C | X | 115.678 | 4.25 |
| 92 | MP4C | Z | 66.787 | 4.25 |
| 93 | MP4C | Mx | .058 | 4.25 |
| 94 | MP2A | X | 14.559 | 4 |
| 95 | MP2A | Z | 8.406 | 4 |
| 96 | MP2A | Mx | .007 | 4 |
| 97 | MP2B | X | 24.098 | 4 |
| 98 | MP2B | Z | 13.913 | 4 |
| 99 | MP2B | Mx | 0 | 4 |
| 100 | MP2C | X | 14.559 | 4 |
| 101 | MP2C | Z | 8.406 | 4 |
| 102 | MP2C | Mx | -.007 | 4 |

## Member Point Loads (BLC 8 : Antenna Wo (150 Deg))

| | Member Label | Direction | Magnitude[lb,k-ft] | Location[ft,%] |
|---|---|---|---|---|
| 1 | MP2A | X | 44.975 | .25 |
| 2 | MP2A | Z | 77.899 | .25 |
| 3 | MP2A | Mx | -.068 | .25 |
| 4 | MP2A | X | 44.975 | 4.25 |
| 5 | MP2A | Z | 77.899 | 4.25 |
| 6 | MP2A | Mx | -.068 | 4.25 |
| 7 | MP2B | X | 44.975 | .25 |
| 8 | MP2B | Z | 77.899 | .25 |
| 9 | MP2B | Mx | .023 | .25 |
| 10 | MP2B | X | 44.975 | 4.25 |
| 11 | MP2B | Z | 77.899 | 4.25 |
| 12 | MP2B | Mx | .023 | 4.25 |
| 13 | MP2C | X | 22.512 | .25 |
| 14 | MP2C | Z | 38.991 | .25 |
| 15 | MP2C | Mx | .023 | .25 |
| 16 | MP2C | X | 22.512 | 4.25 |
| 17 | MP2C | Z | 38.991 | 4.25 |
| 18 | MP2C | Mx | .023 | 4.25 |
| 19 | MP2A | X | 71.234 | .25 |
| 20 | MP2A | Z | 123.381 | .25 |
| 21 | MP2A | Mx | .036 | .25 |
| 22 | MP2A | X | 71.234 | 4.25 |
| 23 | MP2A | Z | 123.381 | 4.25 |
| 24 | MP2A | Mx | .036 | 4.25 |
| 25 | MP2B | X | 71.234 | .25 |
| 26 | MP2B | Z | 123.381 | .25 |
| 27 | MP2B | Mx | -.108 | .25 |
| 28 | MP2B | X | 71.234 | 4.25 |
| 29 | MP2B | Z | 123.381 | 4.25 |
| 30 | MP2B | Mx | -.108 | 4.25 |
| 31 | MP2C | X | 51.609 | .25 |
| 32 | MP2C | Z | 89.389 | .25 |
| 33 | MP2C | Mx | .052 | .25 |
| 34 | MP2C | X | 51.609 | 4.25 |
| 35 | MP2C | Z | 89.389 | 4.25 |
| 36 | MP2C | Mx | .052 | 4.25 |
| 37 | MP1A | X | 31.666 | 1.25 |
| 38 | MP1A | Z | 54.847 | 1.25 |
| 39 | MP1A | Mx | -.016 | 1.25 |
| 40 | MP1A | X | 31.666 | 3.25 |
| 41 | MP1A | Z | 54.847 | 3.25 |
| 42 | MP1A | Mx | -.016 | 3.25 |
| 43 | MP1B | X | 31.666 | 1.25 |
| 44 | MP1B | Z | 54.847 | 1.25 |
| 45 | MP1B | Mx | -.016 | 1.25 |
| 46 | MP1B | X | 31.666 | 3.25 |
| 47 | MP1B | Z | 54.847 | 3.25 |
| 48 | MP1B | Mx | -.016 | 3.25 |
| 49 | MP1C | X | 13.043 | 1.25 |
| 50 | MP1C | Z | 22.591 | 1.25 |
| 51 | MP1C | Mx | .013 | 1.25 |
| 52 | MP1C | X | 13.043 | 3.25 |

## Member Point Loads (BLC 8 : Antenna Wo (150 Deg)) (Continued)

| | Member Label | Direction | Magnitude[lb,k-ft] | Location[ft,%] |
|---|---|---|---|---|
| 53 | MP1C | Z | 22.591 | 3.25 |
| 54 | MP1C | Mx | .013 | 3.25 |
| 55 | OVP | X | 57.583 | 1 |
| 56 | OVP | Z | 99.737 | 1 |
| 57 | OVP | Mx | 0 | 1 |
| 58 | MP2A | X | 32.596 | 1.5 |
| 59 | MP2A | Z | 56.458 | 1.5 |
| 60 | MP2A | Mx | .016 | 1.5 |
| 61 | MP2B | X | 32.596 | 1.5 |
| 62 | MP2B | Z | 56.458 | 1.5 |
| 63 | MP2B | Mx | .016 | 1.5 |
| 64 | MP2C | X | 21.98 | 1.5 |
| 65 | MP2C | Z | 38.071 | 1.5 |
| 66 | MP2C | Mx | -.022 | 1.5 |
| 67 | MP3A | X | 33.139 | 1.5 |
| 68 | MP3A | Z | 57.399 | 1.5 |
| 69 | MP3A | Mx | .017 | 1.5 |
| 70 | MP3B | X | 33.139 | 1.5 |
| 71 | MP3B | Z | 57.399 | 1.5 |
| 72 | MP3B | Mx | .017 | 1.5 |
| 73 | MP3C | X | 24.154 | 1.5 |
| 74 | MP3C | Z | 41.836 | 1.5 |
| 75 | MP3C | Mx | -.024 | 1.5 |
| 76 | MP4A | X | 81.713 | .25 |
| 77 | MP4A | Z | 141.532 | .25 |
| 78 | MP4A | Mx | -.041 | .25 |
| 79 | MP4A | X | 81.713 | 4.25 |
| 80 | MP4A | Z | 141.532 | 4.25 |
| 81 | MP4A | Mx | -.041 | 4.25 |
| 82 | MP4B | X | 81.713 | .25 |
| 83 | MP4B | Z | 141.532 | .25 |
| 84 | MP4B | Mx | -.041 | .25 |
| 85 | MP4B | X | 81.713 | 4.25 |
| 86 | MP4B | Z | 141.532 | 4.25 |
| 87 | MP4B | Mx | -.041 | 4.25 |
| 88 | MP4C | X | 59.324 | .25 |
| 89 | MP4C | Z | 102.752 | .25 |
| 90 | MP4C | Mx | .059 | .25 |
| 91 | MP4C | X | 59.324 | 4.25 |
| 92 | MP4C | Z | 102.752 | 4.25 |
| 93 | MP4C | Mx | .059 | 4.25 |
| 94 | MP2A | X | 12.077 | 4 |
| 95 | MP2A | Z | 20.918 | 4 |
| 96 | MP2A | Mx | .006 | 4 |
| 97 | MP2B | X | 12.077 | 4 |
| 98 | MP2B | Z | 20.918 | 4 |
| 99 | MP2B | Mx | .006 | 4 |
| 100 | MP2C | X | 6.57 | 4 |
| 101 | MP2C | Z | 11.379 | 4 |
| 102 | MP2C | Mx | -.007 | 4 |

## Member Point Loads (BLC 9 : Antenna Wo (180 Deg))

| | Member Label | Direction | Magnitude[lb,k-ft] | Location[ft,%] |
|---|---|---|---|---|
| 1 | MP2A | X | 0 | .25 |
| 2 | MP2A | Z | 104.925 | .25 |
| 3 | MP2A | Mx | -.061 | .25 |
| 4 | MP2A | X | 0 | 4.25 |
| 5 | MP2A | Z | 104.925 | 4.25 |
| 6 | MP2A | Mx | -.061 | 4.25 |
| 7 | MP2B | X | 0 | .25 |
| 8 | MP2B | Z | 59.999 | .25 |
| 9 | MP2B | Mx | -.008 | .25 |
| 10 | MP2B | X | 0 | 4.25 |
| 11 | MP2B | Z | 59.999 | 4.25 |
| 12 | MP2B | Mx | -.008 | 4.25 |
| 13 | MP2C | X | 0 | .25 |
| 14 | MP2C | Z | 59.999 | .25 |
| 15 | MP2C | Mx | .043 | .25 |
| 16 | MP2C | X | 0 | 4.25 |
| 17 | MP2C | Z | 59.999 | 4.25 |
| 18 | MP2C | Mx | .043 | 4.25 |
| 19 | MP2A | X | 0 | .25 |
| 20 | MP2A | Z | 155.552 | .25 |
| 21 | MP2A | Mx | .091 | .25 |
| 22 | MP2A | X | 0 | 4.25 |
| 23 | MP2A | Z | 155.552 | 4.25 |
| 24 | MP2A | Mx | .091 | 4.25 |
| 25 | MP2B | X | 0 | .25 |
| 26 | MP2B | Z | 116.301 | .25 |
| 27 | MP2B | Mx | -.084 | .25 |
| 28 | MP2B | X | 0 | 4.25 |
| 29 | MP2B | Z | 116.301 | 4.25 |
| 30 | MP2B | Mx | -.084 | 4.25 |
| 31 | MP2C | X | 0 | .25 |
| 32 | MP2C | Z | 116.301 | .25 |
| 33 | MP2C | Mx | .016 | .25 |
| 34 | MP2C | X | 0 | 4.25 |
| 35 | MP2C | Z | 116.301 | 4.25 |
| 36 | MP2C | Mx | .016 | 4.25 |
| 37 | MP1A | X | 0 | 1.25 |
| 38 | MP1A | Z | 75.747 | 1.25 |
| 39 | MP1A | Mx | 0 | 1.25 |
| 40 | MP1A | X | 0 | 3.25 |
| 41 | MP1A | Z | 75.747 | 3.25 |
| 42 | MP1A | Mx | 0 | 3.25 |
| 43 | MP1B | X | 0 | 1.25 |
| 44 | MP1B | Z | 38.501 | 1.25 |
| 45 | MP1B | Mx | -.017 | 1.25 |
| 46 | MP1B | X | 0 | 3.25 |
| 47 | MP1B | Z | 38.501 | 3.25 |
| 48 | MP1B | Mx | -.017 | 3.25 |
| 49 | MP1C | X | 0 | 1.25 |
| 50 | MP1C | Z | 38.501 | 1.25 |
| 51 | MP1C | Mx | .017 | 1.25 |
| 52 | MP1C | X | 0 | 3.25 |

## Member Point Loads (BLC 9 : Antenna Wo (180 Deg)) (Continued)

| | Member Label | Direction | Magnitude[lb,k-ft] | Location[ft,%] |
|---|---|---|---|---|
| 53 | MP1C | Z | 38.501 | 3.25 |
| 54 | MP1C | Mx | .017 | 3.25 |
| 55 | OVP | X | 0 | 1 |
| 56 | OVP | Z | 122.509 | 1 |
| 57 | OVP | Mx | 0 | 1 |
| 58 | MP2A | X | 0 | 1.5 |
| 59 | MP2A | Z | 72.269 | 1.5 |
| 60 | MP2A | Mx | 0 | 1.5 |
| 61 | MP2B | X | 0 | 1.5 |
| 62 | MP2B | Z | 51.037 | 1.5 |
| 63 | MP2B | Mx | .022 | 1.5 |
| 64 | MP2C | X | 0 | 1.5 |
| 65 | MP2C | Z | 51.037 | 1.5 |
| 66 | MP2C | Mx | -.022 | 1.5 |
| 67 | MP3A | X | 0 | 1.5 |
| 68 | MP3A | Z | 72.269 | 1.5 |
| 69 | MP3A | Mx | 0 | 1.5 |
| 70 | MP3B | X | 0 | 1.5 |
| 71 | MP3B | Z | 54.298 | 1.5 |
| 72 | MP3B | Mx | .024 | 1.5 |
| 73 | MP3C | X | 0 | 1.5 |
| 74 | MP3C | Z | 54.298 | 1.5 |
| 75 | MP3C | Mx | -.024 | 1.5 |
| 76 | MP4A | X | 0 | .25 |
| 77 | MP4A | Z | 178.353 | .25 |
| 78 | MP4A | Mx | 0 | .25 |
| 79 | MP4A | X | 0 | 4.25 |
| 80 | MP4A | Z | 178.353 | 4.25 |
| 81 | MP4A | Mx | 0 | 4.25 |
| 82 | MP4B | X | 0 | .25 |
| 83 | MP4B | Z | 133.574 | .25 |
| 84 | MP4B | Mx | -.058 | .25 |
| 85 | MP4B | X | 0 | 4.25 |
| 86 | MP4B | Z | 133.574 | 4.25 |
| 87 | MP4B | Mx | -.058 | 4.25 |
| 88 | MP4C | X | 0 | .25 |
| 89 | MP4C | Z | 133.574 | .25 |
| 90 | MP4C | Mx | .058 | .25 |
| 91 | MP4C | X | 0 | 4.25 |
| 92 | MP4C | Z | 133.574 | 4.25 |
| 93 | MP4C | Mx | .058 | 4.25 |
| 94 | MP2A | X | 0 | 4 |
| 95 | MP2A | Z | 27.825 | 4 |
| 96 | MP2A | Mx | 0 | 4 |
| 97 | MP2B | X | 0 | 4 |
| 98 | MP2B | Z | 16.811 | 4 |
| 99 | MP2B | Mx | .007 | 4 |
| 100 | MP2C | X | 0 | 4 |
| 101 | MP2C | Z | 16.811 | 4 |
| 102 | MP2C | Mx | -.007 | 4 |

## Member Point Loads (BLC 10 : Antenna Wo (210 Deg))

| | Member Label | Direction | Magnitude[lb,k-ft] | Location[ft,%] |
|---|---|---|---|---|
| 1 | MP2A | X | -44.975 | .25 |
| 2 | MP2A | Z | 77.899 | .25 |
| 3 | MP2A | Mx | -.023 | .25 |
| 4 | MP2A | X | -44.975 | 4.25 |
| 5 | MP2A | Z | 77.899 | 4.25 |
| 6 | MP2A | Mx | -.023 | 4.25 |
| 7 | MP2B | X | -22.512 | .25 |
| 8 | MP2B | Z | 38.991 | .25 |
| 9 | MP2B | Mx | -.023 | .25 |
| 10 | MP2B | X | -22.512 | 4.25 |
| 11 | MP2B | Z | 38.991 | 4.25 |
| 12 | MP2B | Mx | -.023 | 4.25 |
| 13 | MP2C | X | -44.975 | .25 |
| 14 | MP2C | Z | 77.899 | .25 |
| 15 | MP2C | Mx | .068 | .25 |
| 16 | MP2C | X | -44.975 | 4.25 |
| 17 | MP2C | Z | 77.899 | 4.25 |
| 18 | MP2C | Mx | .068 | 4.25 |
| 19 | MP2A | X | -71.234 | .25 |
| 20 | MP2A | Z | 123.381 | .25 |
| 21 | MP2A | Mx | .108 | .25 |
| 22 | MP2A | X | -71.234 | 4.25 |
| 23 | MP2A | Z | 123.381 | 4.25 |
| 24 | MP2A | Mx | .108 | 4.25 |
| 25 | MP2B | X | -51.609 | .25 |
| 26 | MP2B | Z | 89.389 | .25 |
| 27 | MP2B | Mx | -.052 | .25 |
| 28 | MP2B | X | -51.609 | 4.25 |
| 29 | MP2B | Z | 89.389 | 4.25 |
| 30 | MP2B | Mx | -.052 | 4.25 |
| 31 | MP2C | X | -71.234 | .25 |
| 32 | MP2C | Z | 123.381 | .25 |
| 33 | MP2C | Mx | -.036 | .25 |
| 34 | MP2C | X | -71.234 | 4.25 |
| 35 | MP2C | Z | 123.381 | 4.25 |
| 36 | MP2C | Mx | -.036 | 4.25 |
| 37 | MP1A | X | -31.666 | 1.25 |
| 38 | MP1A | Z | 54.847 | 1.25 |
| 39 | MP1A | Mx | .016 | 1.25 |
| 40 | MP1A | X | -31.666 | 3.25 |
| 41 | MP1A | Z | 54.847 | 3.25 |
| 42 | MP1A | Mx | .016 | 3.25 |
| 43 | MP1B | X | -13.043 | 1.25 |
| 44 | MP1B | Z | 22.591 | 1.25 |
| 45 | MP1B | Mx | -.013 | 1.25 |
| 46 | MP1B | X | -13.043 | 3.25 |
| 47 | MP1B | Z | 22.591 | 3.25 |
| 48 | MP1B | Mx | -.013 | 3.25 |
| 49 | MP1C | X | -31.666 | 1.25 |
| 50 | MP1C | Z | 54.847 | 1.25 |
| 51 | MP1C | Mx | .016 | 1.25 |
| 52 | MP1C | X | -31.666 | 3.25 |

## Member Point Loads (BLC 10 : Antenna Wo (210 Deg)) (Continued)

| | Member Label | Direction | Magnitude[lb,k-ft] | Location[ft,%] |
|---|---|---|---|---|
| 53 | MP1C | Z | 54.847 | 3.25 |
| 54 | MP1C | Mx | .016 | 3.25 |
| 55 | OVP | X | -57.583 | 1 |
| 56 | OVP | Z | 99.737 | 1 |
| 57 | OVP | Mx | 0 | 1 |
| 58 | MP2A | X | -32.596 | 1.5 |
| 59 | MP2A | Z | 56.458 | 1.5 |
| 60 | MP2A | Mx | -.016 | 1.5 |
| 61 | MP2B | X | -21.98 | 1.5 |
| 62 | MP2B | Z | 38.071 | 1.5 |
| 63 | MP2B | Mx | .022 | 1.5 |
| 64 | MP2C | X | -32.596 | 1.5 |
| 65 | MP2C | Z | 56.458 | 1.5 |
| 66 | MP2C | Mx | -.016 | 1.5 |
| 67 | MP3A | X | -33.139 | 1.5 |
| 68 | MP3A | Z | 57.399 | 1.5 |
| 69 | MP3A | Mx | -.017 | 1.5 |
| 70 | MP3B | X | -24.154 | 1.5 |
| 71 | MP3B | Z | 41.836 | 1.5 |
| 72 | MP3B | Mx | .024 | 1.5 |
| 73 | MP3C | X | -33.139 | 1.5 |
| 74 | MP3C | Z | 57.399 | 1.5 |
| 75 | MP3C | Mx | -.017 | 1.5 |
| 76 | MP4A | X | -81.713 | .25 |
| 77 | MP4A | Z | 141.532 | .25 |
| 78 | MP4A | Mx | .041 | .25 |
| 79 | MP4A | X | -81.713 | 4.25 |
| 80 | MP4A | Z | 141.532 | 4.25 |
| 81 | MP4A | Mx | .041 | 4.25 |
| 82 | MP4B | X | -59.324 | .25 |
| 83 | MP4B | Z | 102.752 | .25 |
| 84 | MP4B | Mx | -.059 | .25 |
| 85 | MP4B | X | -59.324 | 4.25 |
| 86 | MP4B | Z | 102.752 | 4.25 |
| 87 | MP4B | Mx | -.059 | 4.25 |
| 88 | MP4C | X | -81.713 | .25 |
| 89 | MP4C | Z | 141.532 | .25 |
| 90 | MP4C | Mx | .041 | .25 |
| 91 | MP4C | X | -81.713 | 4.25 |
| 92 | MP4C | Z | 141.532 | 4.25 |
| 93 | MP4C | Mx | .041 | 4.25 |
| 94 | MP2A | X | -12.077 | 4 |
| 95 | MP2A | Z | 20.918 | 4 |
| 96 | MP2A | Mx | -.006 | 4 |
| 97 | MP2B | X | -6.57 | 4 |
| 98 | MP2B | Z | 11.379 | 4 |
| 99 | MP2B | Mx | .007 | 4 |
| 100 | MP2C | X | -12.077 | 4 |
| 101 | MP2C | Z | 20.918 | 4 |
| 102 | MP2C | Mx | -.006 | 4 |

## Member Point Loads (BLC 11 : Antenna Wo (240 Deg))

| | Member Label | Direction | Magnitude[lb,k-ft] | Location[ft,%] |
|---|---|---|---|---|
| 1 | MP2A | X | -51.96 | .25 |
| 2 | MP2A | Z | 29.999 | .25 |
| 3 | MP2A | Mx | .008 | .25 |
| 4 | MP2A | X | -51.96 | 4.25 |
| 5 | MP2A | Z | 29.999 | 4.25 |
| 6 | MP2A | Mx | .008 | 4.25 |
| 7 | MP2B | X | -51.96 | .25 |
| 8 | MP2B | Z | 29.999 | .25 |
| 9 | MP2B | Mx | -.043 | .25 |
| 10 | MP2B | X | -51.96 | 4.25 |
| 11 | MP2B | Z | 29.999 | 4.25 |
| 12 | MP2B | Mx | -.043 | 4.25 |
| 13 | MP2C | X | -90.868 | .25 |
| 14 | MP2C | Z | 52.462 | .25 |
| 15 | MP2C | Mx | .061 | .25 |
| 16 | MP2C | X | -90.868 | 4.25 |
| 17 | MP2C | Z | 52.462 | 4.25 |
| 18 | MP2C | Mx | .061 | 4.25 |
| 19 | MP2A | X | -100.72 | .25 |
| 20 | MP2A | Z | 58.151 | .25 |
| 21 | MP2A | Mx | .084 | .25 |
| 22 | MP2A | X | -100.72 | 4.25 |
| 23 | MP2A | Z | 58.151 | 4.25 |
| 24 | MP2A | Mx | .084 | 4.25 |
| 25 | MP2B | X | -100.72 | .25 |
| 26 | MP2B | Z | 58.151 | .25 |
| 27 | MP2B | Mx | -.016 | .25 |
| 28 | MP2B | X | -100.72 | 4.25 |
| 29 | MP2B | Z | 58.151 | 4.25 |
| 30 | MP2B | Mx | -.016 | 4.25 |
| 31 | MP2C | X | -134.712 | .25 |
| 32 | MP2C | Z | 77.776 | .25 |
| 33 | MP2C | Mx | -.091 | .25 |
| 34 | MP2C | X | -134.712 | 4.25 |
| 35 | MP2C | Z | 77.776 | 4.25 |
| 36 | MP2C | Mx | -.091 | 4.25 |
| 37 | MP1A | X | -33.343 | 1.25 |
| 38 | MP1A | Z | 19.251 | 1.25 |
| 39 | MP1A | Mx | .017 | 1.25 |
| 40 | MP1A | X | -33.343 | 3.25 |
| 41 | MP1A | Z | 19.251 | 3.25 |
| 42 | MP1A | Mx | .017 | 3.25 |
| 43 | MP1B | X | -33.343 | 1.25 |
| 44 | MP1B | Z | 19.251 | 1.25 |
| 45 | MP1B | Mx | -.017 | 1.25 |
| 46 | MP1B | X | -33.343 | 3.25 |
| 47 | MP1B | Z | 19.251 | 3.25 |
| 48 | MP1B | Mx | -.017 | 3.25 |
| 49 | MP1C | X | -65.599 | 1.25 |
| 50 | MP1C | Z | 37.873 | 1.25 |
| 51 | MP1C | Mx | 0 | 1.25 |
| 52 | MP1C | X | -65.599 | 3.25 |

## Member Point Loads (BLC 11 : Antenna Wo (240 Deg)) (Continued)

| | Member Label | Direction | Magnitude[lb,k-ft] | Location[ft,%] |
|---|---|---|---|---|
| 53 | MP1C | Z | 37.873 | 3.25 |
| 54 | MP1C | Mx | 0 | 3.25 |
| 55 | OVP | X | -87.019 | 1 |
| 56 | OVP | Z | 50.24 | 1 |
| 57 | OVP | Mx | 0 | 1 |
| 58 | MP2A | X | -44.2 | 1.5 |
| 59 | MP2A | Z | 25.519 | 1.5 |
| 60 | MP2A | Mx | -.022 | 1.5 |
| 61 | MP2B | X | -44.2 | 1.5 |
| 62 | MP2B | Z | 25.519 | 1.5 |
| 63 | MP2B | Mx | .022 | 1.5 |
| 64 | MP2C | X | -62.587 | 1.5 |
| 65 | MP2C | Z | 36.134 | 1.5 |
| 66 | MP2C | Mx | 0 | 1.5 |
| 67 | MP3A | X | -47.024 | 1.5 |
| 68 | MP3A | Z | 27.149 | 1.5 |
| 69 | MP3A | Mx | -.024 | 1.5 |
| 70 | MP3B | X | -47.024 | 1.5 |
| 71 | MP3B | Z | 27.149 | 1.5 |
| 72 | MP3B | Mx | .024 | 1.5 |
| 73 | MP3C | X | -62.587 | 1.5 |
| 74 | MP3C | Z | 36.134 | 1.5 |
| 75 | MP3C | Mx | 0 | 1.5 |
| 76 | MP4A | X | -115.678 | .25 |
| 77 | MP4A | Z | 66.787 | .25 |
| 78 | MP4A | Mx | .058 | .25 |
| 79 | MP4A | X | -115.678 | 4.25 |
| 80 | MP4A | Z | 66.787 | 4.25 |
| 81 | MP4A | Mx | .058 | 4.25 |
| 82 | MP4B | X | -115.678 | .25 |
| 83 | MP4B | Z | 66.787 | .25 |
| 84 | MP4B | Mx | -.058 | .25 |
| 85 | MP4B | X | -115.678 | 4.25 |
| 86 | MP4B | Z | 66.787 | 4.25 |
| 87 | MP4B | Mx | -.058 | 4.25 |
| 88 | MP4C | X | -154.458 | .25 |
| 89 | MP4C | Z | 89.177 | .25 |
| 90 | MP4C | Mx | 0 | .25 |
| 91 | MP4C | X | -154.458 | 4.25 |
| 92 | MP4C | Z | 89.177 | 4.25 |
| 93 | MP4C | Mx | 0 | 4.25 |
| 94 | MP2A | X | -14.559 | 4 |
| 95 | MP2A | Z | 8.406 | 4 |
| 96 | MP2A | Mx | -.007 | 4 |
| 97 | MP2B | X | -14.559 | 4 |
| 98 | MP2B | Z | 8.406 | 4 |
| 99 | MP2B | Mx | .007 | 4 |
| 100 | MP2C | X | -24.098 | 4 |
| 101 | MP2C | Z | 13.913 | 4 |
| 102 | MP2C | Mx | 0 | 4 |

## Member Point Loads (BLC 12 : Antenna Wo (270 Deg))

| | Member Label | Direction | Magnitude[lb,k-ft] | Location[ft,%] |
|---|---|---|---|---|
| 1 | MP2A | X | -45.023 | .25 |
| 2 | MP2A | Z | 0 | .25 |
| 3 | MP2A | Mx | .023 | .25 |
| 4 | MP2A | X | -45.023 | 4.25 |
| 5 | MP2A | Z | 0 | 4.25 |
| 6 | MP2A | Mx | .023 | 4.25 |
| 7 | MP2B | X | -89.949 | .25 |
| 8 | MP2B | Z | 0 | .25 |
| 9 | MP2B | Mx | -.068 | .25 |
| 10 | MP2B | X | -89.949 | 4.25 |
| 11 | MP2B | Z | 0 | 4.25 |
| 12 | MP2B | Mx | -.068 | 4.25 |
| 13 | MP2C | X | -89.949 | .25 |
| 14 | MP2C | Z | 0 | .25 |
| 15 | MP2C | Mx | .023 | .25 |
| 16 | MP2C | X | -89.949 | 4.25 |
| 17 | MP2C | Z | 0 | 4.25 |
| 18 | MP2C | Mx | .023 | 4.25 |
| 19 | MP2A | X | -103.218 | .25 |
| 20 | MP2A | Z | 0 | .25 |
| 21 | MP2A | Mx | .052 | .25 |
| 22 | MP2A | X | -103.218 | 4.25 |
| 23 | MP2A | Z | 0 | 4.25 |
| 24 | MP2A | Mx | .052 | 4.25 |
| 25 | MP2B | X | -142.468 | .25 |
| 26 | MP2B | Z | 0 | .25 |
| 27 | MP2B | Mx | .036 | .25 |
| 28 | MP2B | X | -142.468 | 4.25 |
| 29 | MP2B | Z | 0 | 4.25 |
| 30 | MP2B | Mx | .036 | 4.25 |
| 31 | MP2C | X | -142.468 | .25 |
| 32 | MP2C | Z | 0 | .25 |
| 33 | MP2C | Mx | -.108 | .25 |
| 34 | MP2C | X | -142.468 | 4.25 |
| 35 | MP2C | Z | 0 | 4.25 |
| 36 | MP2C | Mx | -.108 | 4.25 |
| 37 | MP1A | X | -26.086 | 1.25 |
| 38 | MP1A | Z | 0 | 1.25 |
| 39 | MP1A | Mx | .013 | 1.25 |
| 40 | MP1A | X | -26.086 | 3.25 |
| 41 | MP1A | Z | 0 | 3.25 |
| 42 | MP1A | Mx | .013 | 3.25 |
| 43 | MP1B | X | -63.332 | 1.25 |
| 44 | MP1B | Z | 0 | 1.25 |
| 45 | MP1B | Mx | -.016 | 1.25 |
| 46 | MP1B | X | -63.332 | 3.25 |
| 47 | MP1B | Z | 0 | 3.25 |
| 48 | MP1B | Mx | -.016 | 3.25 |
| 49 | MP1C | X | -63.332 | 1.25 |
| 50 | MP1C | Z | 0 | 1.25 |
| 51 | MP1C | Mx | -.016 | 1.25 |
| 52 | MP1C | X | -63.332 | 3.25 |

## Member Point Loads (BLC 12 : Antenna Wo (270 Deg)) (Continued)

| | Member Label | Direction | Magnitude[lb,k-ft] | Location[ft,%] |
|---|---|---|---|---|
| 53 | MP1C | Z | 0 | 3.25 |
| 54 | MP1C | Mx | -.016 | 3.25 |
| 55 | OVP | X | -93.138 | 1 |
| 56 | OVP | Z | 0 | 1 |
| 57 | OVP | Mx | 0 | 1 |
| 58 | MP2A | X | -43.96 | 1.5 |
| 59 | MP2A | Z | 0 | 1.5 |
| 60 | MP2A | Mx | -.022 | 1.5 |
| 61 | MP2B | X | -65.192 | 1.5 |
| 62 | MP2B | Z | 0 | 1.5 |
| 63 | MP2B | Mx | .016 | 1.5 |
| 64 | MP2C | X | -65.192 | 1.5 |
| 65 | MP2C | Z | 0 | 1.5 |
| 66 | MP2C | Mx | .016 | 1.5 |
| 67 | MP3A | X | -48.308 | 1.5 |
| 68 | MP3A | Z | 0 | 1.5 |
| 69 | MP3A | Mx | -.024 | 1.5 |
| 70 | MP3B | X | -66.279 | 1.5 |
| 71 | MP3B | Z | 0 | 1.5 |
| 72 | MP3B | Mx | .017 | 1.5 |
| 73 | MP3C | X | -66.279 | 1.5 |
| 74 | MP3C | Z | 0 | 1.5 |
| 75 | MP3C | Mx | .017 | 1.5 |
| 76 | MP4A | X | -118.647 | .25 |
| 77 | MP4A | Z | 0 | .25 |
| 78 | MP4A | Mx | .059 | .25 |
| 79 | MP4A | X | -118.647 | 4.25 |
| 80 | MP4A | Z | 0 | 4.25 |
| 81 | MP4A | Mx | .059 | 4.25 |
| 82 | MP4B | X | -163.427 | .25 |
| 83 | MP4B | Z | 0 | .25 |
| 84 | MP4B | Mx | -.041 | .25 |
| 85 | MP4B | X | -163.427 | 4.25 |
| 86 | MP4B | Z | 0 | 4.25 |
| 87 | MP4B | Mx | -.041 | 4.25 |
| 88 | MP4C | X | -163.427 | .25 |
| 89 | MP4C | Z | 0 | .25 |
| 90 | MP4C | Mx | -.041 | .25 |
| 91 | MP4C | X | -163.427 | 4.25 |
| 92 | MP4C | Z | 0 | 4.25 |
| 93 | MP4C | Mx | -.041 | 4.25 |
| 94 | MP2A | X | -13.14 | 4 |
| 95 | MP2A | Z | 0 | 4 |
| 96 | MP2A | Mx | -.007 | 4 |
| 97 | MP2B | X | -24.154 | 4 |
| 98 | MP2B | Z | 0 | 4 |
| 99 | MP2B | Mx | .006 | 4 |
| 100 | MP2C | X | -24.154 | 4 |
| 101 | MP2C | Z | 0 | 4 |
| 102 | MP2C | Mx | .006 | 4 |

## Member Point Loads (BLC 13 : Antenna Wo (300 Deg))

| | Member Label | Direction | Magnitude[lb,k-ft] | Location[ft,%] |
|---|---|---|---|---|
| 1 | MP2A | X | -51.96 | .25 |
| 2 | MP2A | Z | -29.999 | .25 |
| 3 | MP2A | Mx | .043 | .25 |
| 4 | MP2A | X | -51.96 | 4.25 |
| 5 | MP2A | Z | -29.999 | 4.25 |
| 6 | MP2A | Mx | .043 | 4.25 |
| 7 | MP2B | X | -90.868 | .25 |
| 8 | MP2B | Z | -52.462 | .25 |
| 9 | MP2B | Mx | -.061 | .25 |
| 10 | MP2B | X | -90.868 | 4.25 |
| 11 | MP2B | Z | -52.462 | 4.25 |
| 12 | MP2B | Mx | -.061 | 4.25 |
| 13 | MP2C | X | -51.96 | .25 |
| 14 | MP2C | Z | -29.999 | .25 |
| 15 | MP2C | Mx | -.008 | .25 |
| 16 | MP2C | X | -51.96 | 4.25 |
| 17 | MP2C | Z | -29.999 | 4.25 |
| 18 | MP2C | Mx | -.008 | 4.25 |
| 19 | MP2A | X | -100.72 | .25 |
| 20 | MP2A | Z | -58.151 | .25 |
| 21 | MP2A | Mx | .016 | .25 |
| 22 | MP2A | X | -100.72 | 4.25 |
| 23 | MP2A | Z | -58.151 | 4.25 |
| 24 | MP2A | Mx | .016 | 4.25 |
| 25 | MP2B | X | -134.712 | .25 |
| 26 | MP2B | Z | -77.776 | .25 |
| 27 | MP2B | Mx | .091 | .25 |
| 28 | MP2B | X | -134.712 | 4.25 |
| 29 | MP2B | Z | -77.776 | 4.25 |
| 30 | MP2B | Mx | .091 | 4.25 |
| 31 | MP2C | X | -100.72 | .25 |
| 32 | MP2C | Z | -58.151 | .25 |
| 33 | MP2C | Mx | -.084 | .25 |
| 34 | MP2C | X | -100.72 | 4.25 |
| 35 | MP2C | Z | -58.151 | 4.25 |
| 36 | MP2C | Mx | -.084 | 4.25 |
| 37 | MP1A | X | -33.343 | 1.25 |
| 38 | MP1A | Z | -19.251 | 1.25 |
| 39 | MP1A | Mx | .017 | 1.25 |
| 40 | MP1A | X | -33.343 | 3.25 |
| 41 | MP1A | Z | -19.251 | 3.25 |
| 42 | MP1A | Mx | .017 | 3.25 |
| 43 | MP1B | X | -65.599 | 1.25 |
| 44 | MP1B | Z | -37.873 | 1.25 |
| 45 | MP1B | Mx | 0 | 1.25 |
| 46 | MP1B | X | -65.599 | 3.25 |
| 47 | MP1B | Z | -37.873 | 3.25 |
| 48 | MP1B | Mx | 0 | 3.25 |
| 49 | MP1C | X | -33.343 | 1.25 |
| 50 | MP1C | Z | -19.251 | 1.25 |
| 51 | MP1C | Mx | -.017 | 1.25 |
| 52 | MP1C | X | -33.343 | 3.25 |

## Member Point Loads (BLC 13 : Antenna Wo (300 Deg)) (Continued)

| | Member Label | Direction | Magnitude[lb,k-ft] | Location[ft,%] |
|---|---|---|---|---|
| 53 | MP1C | Z | -19.251 | 3.25 |
| 54 | MP1C | Mx | -.017 | 3.25 |
| 55 | OVP | X | -87.019 | 1 |
| 56 | OVP | Z | -50.24 | 1 |
| 57 | OVP | Mx | 0 | 1 |
| 58 | MP2A | X | -44.2 | 1.5 |
| 59 | MP2A | Z | -25.519 | 1.5 |
| 60 | MP2A | Mx | -.022 | 1.5 |
| 61 | MP2B | X | -62.587 | 1.5 |
| 62 | MP2B | Z | -36.134 | 1.5 |
| 63 | MP2B | Mx | 0 | 1.5 |
| 64 | MP2C | X | -44.2 | 1.5 |
| 65 | MP2C | Z | -25.519 | 1.5 |
| 66 | MP2C | Mx | .022 | 1.5 |
| 67 | MP3A | X | -47.024 | 1.5 |
| 68 | MP3A | Z | -27.149 | 1.5 |
| 69 | MP3A | Mx | -.024 | 1.5 |
| 70 | MP3B | X | -62.587 | 1.5 |
| 71 | MP3B | Z | -36.134 | 1.5 |
| 72 | MP3B | Mx | 0 | 1.5 |
| 73 | MP3C | X | -47.024 | 1.5 |
| 74 | MP3C | Z | -27.149 | 1.5 |
| 75 | MP3C | Mx | .024 | 1.5 |
| 76 | MP4A | X | -115.678 | .25 |
| 77 | MP4A | Z | -66.787 | .25 |
| 78 | MP4A | Mx | .058 | .25 |
| 79 | MP4A | X | -115.678 | 4.25 |
| 80 | MP4A | Z | -66.787 | 4.25 |
| 81 | MP4A | Mx | .058 | 4.25 |
| 82 | MP4B | X | -154.458 | .25 |
| 83 | MP4B | Z | -89.177 | .25 |
| 84 | MP4B | Mx | 0 | .25 |
| 85 | MP4B | X | -154.458 | 4.25 |
| 86 | MP4B | Z | -89.177 | 4.25 |
| 87 | MP4B | Mx | 0 | 4.25 |
| 88 | MP4C | X | -115.678 | .25 |
| 89 | MP4C | Z | -66.787 | .25 |
| 90 | MP4C | Mx | -.058 | .25 |
| 91 | MP4C | X | -115.678 | 4.25 |
| 92 | MP4C | Z | -66.787 | 4.25 |
| 93 | MP4C | Mx | -.058 | 4.25 |
| 94 | MP2A | X | -14.559 | 4 |
| 95 | MP2A | Z | -8.406 | 4 |
| 96 | MP2A | Mx | -.007 | 4 |
| 97 | MP2B | X | -24.098 | 4 |
| 98 | MP2B | Z | -13.913 | 4 |
| 99 | MP2B | Mx | 0 | 4 |
| 100 | MP2C | X | -14.559 | 4 |
| 101 | MP2C | Z | -8.406 | 4 |
| 102 | MP2C | Mx | .007 | 4 |

## Member Point Loads (BLC 14 : Antenna Wo (330 Deg))

| | Member Label | Direction | Magnitude[lb,k-ft] | Location[ft,%] |
|---|---|---|---|---|
| 1 | MP2A | X | -44.975 | .25 |
| 2 | MP2A | Z | -77.899 | .25 |
| 3 | MP2A | Mx | .068 | .25 |
| 4 | MP2A | X | -44.975 | 4.25 |
| 5 | MP2A | Z | -77.899 | 4.25 |
| 6 | MP2A | Mx | .068 | 4.25 |
| 7 | MP2B | X | -44.975 | .25 |
| 8 | MP2B | Z | -77.899 | .25 |
| 9 | MP2B | Mx | -.023 | .25 |
| 10 | MP2B | X | -44.975 | 4.25 |
| 11 | MP2B | Z | -77.899 | 4.25 |
| 12 | MP2B | Mx | -.023 | 4.25 |
| 13 | MP2C | X | -22.512 | .25 |
| 14 | MP2C | Z | -38.991 | .25 |
| 15 | MP2C | Mx | -.023 | .25 |
| 16 | MP2C | X | -22.512 | 4.25 |
| 17 | MP2C | Z | -38.991 | 4.25 |
| 18 | MP2C | Mx | -.023 | 4.25 |
| 19 | MP2A | X | -71.234 | .25 |
| 20 | MP2A | Z | -123.381 | .25 |
| 21 | MP2A | Mx | -.036 | .25 |
| 22 | MP2A | X | -71.234 | 4.25 |
| 23 | MP2A | Z | -123.381 | 4.25 |
| 24 | MP2A | Mx | -.036 | 4.25 |
| 25 | MP2B | X | -71.234 | .25 |
| 26 | MP2B | Z | -123.381 | .25 |
| 27 | MP2B | Mx | .108 | .25 |
| 28 | MP2B | X | -71.234 | 4.25 |
| 29 | MP2B | Z | -123.381 | 4.25 |
| 30 | MP2B | Mx | .108 | 4.25 |
| 31 | MP2C | X | -51.609 | .25 |
| 32 | MP2C | Z | -89.389 | .25 |
| 33 | MP2C | Mx | -.052 | .25 |
| 34 | MP2C | X | -51.609 | 4.25 |
| 35 | MP2C | Z | -89.389 | 4.25 |
| 36 | MP2C | Mx | -.052 | 4.25 |
| 37 | MP1A | X | -31.666 | 1.25 |
| 38 | MP1A | Z | -54.847 | 1.25 |
| 39 | MP1A | Mx | .016 | 1.25 |
| 40 | MP1A | X | -31.666 | 3.25 |
| 41 | MP1A | Z | -54.847 | 3.25 |
| 42 | MP1A | Mx | .016 | 3.25 |
| 43 | MP1B | X | -31.666 | 1.25 |
| 44 | MP1B | Z | -54.847 | 1.25 |
| 45 | MP1B | Mx | .016 | 1.25 |
| 46 | MP1B | X | -31.666 | 3.25 |
| 47 | MP1B | Z | -54.847 | 3.25 |
| 48 | MP1B | Mx | .016 | 3.25 |
| 49 | MP1C | X | -13.043 | 1.25 |
| 50 | MP1C | Z | -22.591 | 1.25 |
| 51 | MP1C | Mx | -.013 | 1.25 |
| 52 | MP1C | X | -13.043 | 3.25 |

## Member Point Loads (BLC 14 : Antenna Wo (330 Deg)) (Continued)

| | Member Label | Direction | Magnitude[lb,k-ft] | Location[ft,%] |
|---|---|---|---|---|
| 53 | MP1C | Z | -22.591 | 3.25 |
| 54 | MP1C | Mx | -.013 | 3.25 |
| 55 | OVP | X | -57.583 | 1 |
| 56 | OVP | Z | -99.737 | 1 |
| 57 | OVP | Mx | 0 | 1 |
| 58 | MP2A | X | -32.596 | 1.5 |
| 59 | MP2A | Z | -56.458 | 1.5 |
| 60 | MP2A | Mx | -.016 | 1.5 |
| 61 | MP2B | X | -32.596 | 1.5 |
| 62 | MP2B | Z | -56.458 | 1.5 |
| 63 | MP2B | Mx | -.016 | 1.5 |
| 64 | MP2C | X | -21.98 | 1.5 |
| 65 | MP2C | Z | -38.071 | 1.5 |
| 66 | MP2C | Mx | .022 | 1.5 |
| 67 | MP3A | X | -33.139 | 1.5 |
| 68 | MP3A | Z | -57.399 | 1.5 |
| 69 | MP3A | Mx | -.017 | 1.5 |
| 70 | MP3B | X | -33.139 | 1.5 |
| 71 | MP3B | Z | -57.399 | 1.5 |
| 72 | MP3B | Mx | -.017 | 1.5 |
| 73 | MP3C | X | -24.154 | 1.5 |
| 74 | MP3C | Z | -41.836 | 1.5 |
| 75 | MP3C | Mx | .024 | 1.5 |
| 76 | MP4A | X | -81.713 | .25 |
| 77 | MP4A | Z | -141.532 | .25 |
| 78 | MP4A | Mx | .041 | .25 |
| 79 | MP4A | X | -81.713 | 4.25 |
| 80 | MP4A | Z | -141.532 | 4.25 |
| 81 | MP4A | Mx | .041 | 4.25 |
| 82 | MP4B | X | -81.713 | .25 |
| 83 | MP4B | Z | -141.532 | .25 |
| 84 | MP4B | Mx | .041 | .25 |
| 85 | MP4B | X | -81.713 | 4.25 |
| 86 | MP4B | Z | -141.532 | 4.25 |
| 87 | MP4B | Mx | .041 | 4.25 |
| 88 | MP4C | X | -59.324 | .25 |
| 89 | MP4C | Z | -102.752 | .25 |
| 90 | MP4C | Mx | -.059 | .25 |
| 91 | MP4C | X | -59.324 | 4.25 |
| 92 | MP4C | Z | -102.752 | 4.25 |
| 93 | MP4C | Mx | -.059 | 4.25 |
| 94 | MP2A | X | -12.077 | 4 |
| 95 | MP2A | Z | -20.918 | 4 |
| 96 | MP2A | Mx | -.006 | 4 |
| 97 | MP2B | X | -12.077 | 4 |
| 98 | MP2B | Z | -20.918 | 4 |
| 99 | MP2B | Mx | -.006 | 4 |
| 100 | MP2C | X | -6.57 | 4 |
| 101 | MP2C | Z | -11.379 | 4 |
| 102 | MP2C | Mx | .007 | 4 |

## Member Point Loads (BLC 15 : Antenna Wi (0 Deg))

| | Member Label | Direction | Magnitude[lb,k-ft] | Location[ft,%] |
|---|---|---|---|---|
| 1 | MP2A | X | 0 | .25 |
| 2 | MP2A | Z | -32.928 | .25 |
| 3 | MP2A | Mx | .019 | .25 |
| 4 | MP2A | X | 0 | 4.25 |
| 5 | MP2A | Z | -32.928 | 4.25 |
| 6 | MP2A | Mx | .019 | 4.25 |
| 7 | MP2B | X | 0 | .25 |
| 8 | MP2B | Z | -25.574 | .25 |
| 9 | MP2B | Mx | .004 | .25 |
| 10 | MP2B | X | 0 | 4.25 |
| 11 | MP2B | Z | -25.574 | 4.25 |
| 12 | MP2B | Mx | .004 | 4.25 |
| 13 | MP2C | X | 0 | .25 |
| 14 | MP2C | Z | -25.574 | .25 |
| 15 | MP2C | Mx | -.019 | .25 |
| 16 | MP2C | X | 0 | 4.25 |
| 17 | MP2C | Z | -25.574 | 4.25 |
| 18 | MP2C | Mx | -.019 | 4.25 |
| 19 | MP2A | X | 0 | .25 |
| 20 | MP2A | Z | -32.928 | .25 |
| 21 | MP2A | Mx | -.019 | .25 |
| 22 | MP2A | X | 0 | 4.25 |
| 23 | MP2A | Z | -32.928 | 4.25 |
| 24 | MP2A | Mx | -.019 | 4.25 |
| 25 | MP2B | X | 0 | .25 |
| 26 | MP2B | Z | -25.574 | .25 |
| 27 | MP2B | Mx | .019 | .25 |
| 28 | MP2B | X | 0 | 4.25 |
| 29 | MP2B | Z | -25.574 | 4.25 |
| 30 | MP2B | Mx | .019 | 4.25 |
| 31 | MP2C | X | 0 | .25 |
| 32 | MP2C | Z | -25.574 | .25 |
| 33 | MP2C | Mx | -.004 | .25 |
| 34 | MP2C | X | 0 | 4.25 |
| 35 | MP2C | Z | -25.574 | 4.25 |
| 36 | MP2C | Mx | -.004 | 4.25 |
| 37 | MP1A | X | 0 | 1.25 |
| 38 | MP1A | Z | -19.79 | 1.25 |
| 39 | MP1A | Mx | 0 | 1.25 |
| 40 | MP1A | X | 0 | 3.25 |
| 41 | MP1A | Z | -19.79 | 3.25 |
| 42 | MP1A | Mx | 0 | 3.25 |
| 43 | MP1B | X | 0 | 1.25 |
| 44 | MP1B | Z | -11.522 | 1.25 |
| 45 | MP1B | Mx | .005 | 1.25 |
| 46 | MP1B | X | 0 | 3.25 |
| 47 | MP1B | Z | -11.522 | 3.25 |
| 48 | MP1B | Mx | .005 | 3.25 |
| 49 | MP1C | X | 0 | 1.25 |
| 50 | MP1C | Z | -11.522 | 1.25 |
| 51 | MP1C | Mx | -.005 | 1.25 |
| 52 | MP1C | X | 0 | 3.25 |

## Member Point Loads (BLC 15 : Antenna Wi (0 Deg)) (Continued)

| | Member Label | Direction | Magnitude[lb,k-ft] | Location[ft,%] |
|---|---|---|---|---|
| 53 | MP1C | Z | -11.522 | 3.25 |
| 54 | MP1C | Mx | -.005 | 3.25 |
| 55 | OVP | X | 0 | 1 |
| 56 | OVP | Z | -34.366 | 1 |
| 57 | OVP | Mx | 0 | 1 |
| 58 | MP2A | X | 0 | 1.5 |
| 59 | MP2A | Z | -17.112 | 1.5 |
| 60 | MP2A | Mx | 0 | 1.5 |
| 61 | MP2B | X | 0 | 1.5 |
| 62 | MP2B | Z | -12.694 | 1.5 |
| 63 | MP2B | Mx | -.005 | 1.5 |
| 64 | MP2C | X | 0 | 1.5 |
| 65 | MP2C | Z | -12.694 | 1.5 |
| 66 | MP2C | Mx | .005 | 1.5 |
| 67 | MP3A | X | 0 | 1.5 |
| 68 | MP3A | Z | -17.112 | 1.5 |
| 69 | MP3A | Mx | 0 | 1.5 |
| 70 | MP3B | X | 0 | 1.5 |
| 71 | MP3B | Z | -13.368 | 1.5 |
| 72 | MP3B | Mx | -.006 | 1.5 |
| 73 | MP3C | X | 0 | 1.5 |
| 74 | MP3C | Z | -13.368 | 1.5 |
| 75 | MP3C | Mx | .006 | 1.5 |
| 76 | MP4A | X | 0 | .25 |
| 77 | MP4A | Z | -37.434 | .25 |
| 78 | MP4A | Mx | 0 | .25 |
| 79 | MP4A | X | 0 | 4.25 |
| 80 | MP4A | Z | -37.434 | 4.25 |
| 81 | MP4A | Mx | 0 | 4.25 |
| 82 | MP4B | X | 0 | .25 |
| 83 | MP4B | Z | -29.1 | .25 |
| 84 | MP4B | Mx | .013 | .25 |
| 85 | MP4B | X | 0 | 4.25 |
| 86 | MP4B | Z | -29.1 | 4.25 |
| 87 | MP4B | Mx | .013 | 4.25 |
| 88 | MP4C | X | 0 | .25 |
| 89 | MP4C | Z | -29.1 | .25 |
| 90 | MP4C | Mx | -.013 | .25 |
| 91 | MP4C | X | 0 | 4.25 |
| 92 | MP4C | Z | -29.1 | 4.25 |
| 93 | MP4C | Mx | -.013 | 4.25 |
| 94 | MP2A | X | 0 | 4 |
| 95 | MP2A | Z | -10.038 | 4 |
| 96 | MP2A | Mx | 0 | 4 |
| 97 | MP2B | X | 0 | 4 |
| 98 | MP2B | Z | -6.957 | 4 |
| 99 | MP2B | Mx | -.003 | 4 |
| 100 | MP2C | X | 0 | 4 |
| 101 | MP2C | Z | -6.957 | 4 |
| 102 | MP2C | Mx | .003 | 4 |

## Member Point Loads (BLC 16 : Antenna Wi (30 Deg))

| | Member Label | Direction | Magnitude[lb,k-ft] | Location[ft,%] |
|---|---|---|---|---|
| 1 | MP2A | X | 15.238 | .25 |
| 2 | MP2A | Z | -26.393 | .25 |
| 3 | MP2A | Mx | .008 | .25 |
| 4 | MP2A | X | 15.238 | 4.25 |
| 5 | MP2A | Z | -26.393 | 4.25 |
| 6 | MP2A | Mx | .008 | 4.25 |
| 7 | MP2B | X | 11.561 | .25 |
| 8 | MP2B | Z | -20.025 | .25 |
| 9 | MP2B | Mx | .012 | .25 |
| 10 | MP2B | X | 11.561 | 4.25 |
| 11 | MP2B | Z | -20.025 | 4.25 |
| 12 | MP2B | Mx | .012 | 4.25 |
| 13 | MP2C | X | 15.238 | .25 |
| 14 | MP2C | Z | -26.393 | .25 |
| 15 | MP2C | Mx | -.023 | .25 |
| 16 | MP2C | X | 15.238 | 4.25 |
| 17 | MP2C | Z | -26.393 | 4.25 |
| 18 | MP2C | Mx | -.023 | 4.25 |
| 19 | MP2A | X | 15.238 | .25 |
| 20 | MP2A | Z | -26.393 | .25 |
| 21 | MP2A | Mx | -.023 | .25 |
| 22 | MP2A | X | 15.238 | 4.25 |
| 23 | MP2A | Z | -26.393 | 4.25 |
| 24 | MP2A | Mx | -.023 | 4.25 |
| 25 | MP2B | X | 11.561 | .25 |
| 26 | MP2B | Z | -20.025 | .25 |
| 27 | MP2B | Mx | .012 | .25 |
| 28 | MP2B | X | 11.561 | 4.25 |
| 29 | MP2B | Z | -20.025 | 4.25 |
| 30 | MP2B | Mx | .012 | 4.25 |
| 31 | MP2C | X | 15.238 | .25 |
| 32 | MP2C | Z | -26.393 | .25 |
| 33 | MP2C | Mx | .008 | .25 |
| 34 | MP2C | X | 15.238 | 4.25 |
| 35 | MP2C | Z | -26.393 | 4.25 |
| 36 | MP2C | Mx | .008 | 4.25 |
| 37 | MP1A | X | 8.517 | 1.25 |
| 38 | MP1A | Z | -14.752 | 1.25 |
| 39 | MP1A | Mx | -.004 | 1.25 |
| 40 | MP1A | X | 8.517 | 3.25 |
| 41 | MP1A | Z | -14.752 | 3.25 |
| 42 | MP1A | Mx | -.004 | 3.25 |
| 43 | MP1B | X | 4.383 | 1.25 |
| 44 | MP1B | Z | -7.591 | 1.25 |
| 45 | MP1B | Mx | .004 | 1.25 |
| 46 | MP1B | X | 4.383 | 3.25 |
| 47 | MP1B | Z | -7.591 | 3.25 |
| 48 | MP1B | Mx | .004 | 3.25 |
| 49 | MP1C | X | 8.517 | 1.25 |
| 50 | MP1C | Z | -14.752 | 1.25 |
| 51 | MP1C | Mx | -.004 | 1.25 |
| 52 | MP1C | X | 8.517 | 3.25 |

## Member Point Loads (BLC 16 : Antenna Wi (30 Deg)) (Continued)

| | Member Label | Direction | Magnitude[lb,k-ft] | Location[ft,%] |
|---|---|---|---|---|
| 53 | MP1C | Z | -14.752 | 3.25 |
| 54 | MP1C | Mx | -.004 | 3.25 |
| 55 | OVP | X | 16.281 | 1 |
| 56 | OVP | Z | -28.199 | 1 |
| 57 | OVP | Mx | 0 | 1 |
| 58 | MP2A | X | 7.82 | 1.5 |
| 59 | MP2A | Z | -13.544 | 1.5 |
| 60 | MP2A | Mx | .004 | 1.5 |
| 61 | MP2B | X | 5.611 | 1.5 |
| 62 | MP2B | Z | -9.718 | 1.5 |
| 63 | MP2B | Mx | -.006 | 1.5 |
| 64 | MP2C | X | 7.82 | 1.5 |
| 65 | MP2C | Z | -13.544 | 1.5 |
| 66 | MP2C | Mx | .004 | 1.5 |
| 67 | MP3A | X | 7.932 | 1.5 |
| 68 | MP3A | Z | -13.739 | 1.5 |
| 69 | MP3A | Mx | .004 | 1.5 |
| 70 | MP3B | X | 6.06 | 1.5 |
| 71 | MP3B | Z | -10.496 | 1.5 |
| 72 | MP3B | Mx | -.006 | 1.5 |
| 73 | MP3C | X | 7.932 | 1.5 |
| 74 | MP3C | Z | -13.739 | 1.5 |
| 75 | MP3C | Mx | .004 | 1.5 |
| 76 | MP4A | X | 17.328 | .25 |
| 77 | MP4A | Z | -30.013 | .25 |
| 78 | MP4A | Mx | -.009 | .25 |
| 79 | MP4A | X | 17.328 | 4.25 |
| 80 | MP4A | Z | -30.013 | 4.25 |
| 81 | MP4A | Mx | -.009 | 4.25 |
| 82 | MP4B | X | 13.161 | .25 |
| 83 | MP4B | Z | -22.796 | .25 |
| 84 | MP4B | Mx | .013 | .25 |
| 85 | MP4B | X | 13.161 | 4.25 |
| 86 | MP4B | Z | -22.796 | 4.25 |
| 87 | MP4B | Mx | .013 | 4.25 |
| 88 | MP4C | X | 17.328 | .25 |
| 89 | MP4C | Z | -30.013 | .25 |
| 90 | MP4C | Mx | -.009 | .25 |
| 91 | MP4C | X | 17.328 | 4.25 |
| 92 | MP4C | Z | -30.013 | 4.25 |
| 93 | MP4C | Mx | -.009 | 4.25 |
| 94 | MP2A | X | 4.506 | 4 |
| 95 | MP2A | Z | -7.804 | 4 |
| 96 | MP2A | Mx | .002 | 4 |
| 97 | MP2B | X | 2.965 | 4 |
| 98 | MP2B | Z | -5.135 | 4 |
| 99 | MP2B | Mx | -.003 | 4 |
| 100 | MP2C | X | 4.506 | 4 |
| 101 | MP2C | Z | -7.804 | 4 |
| 102 | MP2C | Mx | .002 | 4 |

## Member Point Loads (BLC 17 : Antenna Wi (60 Deg))

| | Member Label | Direction | Magnitude[lb,k-ft] | Location[ft,%] |
|---|---|---|---|---|
| 1 | MP2A | X | 22.148 | .25 |
| 2 | MP2A | Z | -12.787 | .25 |
| 3 | MP2A | Mx | -.004 | .25 |
| 4 | MP2A | X | 22.148 | 4.25 |
| 5 | MP2A | Z | -12.787 | 4.25 |
| 6 | MP2A | Mx | -.004 | 4.25 |
| 7 | MP2B | X | 22.148 | .25 |
| 8 | MP2B | Z | -12.787 | .25 |
| 9 | MP2B | Mx | .019 | .25 |
| 10 | MP2B | X | 22.148 | 4.25 |
| 11 | MP2B | Z | -12.787 | 4.25 |
| 12 | MP2B | Mx | .019 | 4.25 |
| 13 | MP2C | X | 28.516 | .25 |
| 14 | MP2C | Z | -16.464 | .25 |
| 15 | MP2C | Mx | -.019 | .25 |
| 16 | MP2C | X | 28.516 | 4.25 |
| 17 | MP2C | Z | -16.464 | 4.25 |
| 18 | MP2C | Mx | -.019 | 4.25 |
| 19 | MP2A | X | 22.148 | .25 |
| 20 | MP2A | Z | -12.787 | .25 |
| 21 | MP2A | Mx | -.019 | .25 |
| 22 | MP2A | X | 22.148 | 4.25 |
| 23 | MP2A | Z | -12.787 | 4.25 |
| 24 | MP2A | Mx | -.019 | 4.25 |
| 25 | MP2B | X | 22.148 | .25 |
| 26 | MP2B | Z | -12.787 | .25 |
| 27 | MP2B | Mx | .004 | .25 |
| 28 | MP2B | X | 22.148 | 4.25 |
| 29 | MP2B | Z | -12.787 | 4.25 |
| 30 | MP2B | Mx | .004 | 4.25 |
| 31 | MP2C | X | 28.516 | .25 |
| 32 | MP2C | Z | -16.464 | .25 |
| 33 | MP2C | Mx | .019 | .25 |
| 34 | MP2C | X | 28.516 | 4.25 |
| 35 | MP2C | Z | -16.464 | 4.25 |
| 36 | MP2C | Mx | .019 | 4.25 |
| 37 | MP1A | X | 9.978 | 1.25 |
| 38 | MP1A | Z | -5.761 | 1.25 |
| 39 | MP1A | Mx | -.005 | 1.25 |
| 40 | MP1A | X | 9.978 | 3.25 |
| 41 | MP1A | Z | -5.761 | 3.25 |
| 42 | MP1A | Mx | -.005 | 3.25 |
| 43 | MP1B | X | 9.978 | 1.25 |
| 44 | MP1B | Z | -5.761 | 1.25 |
| 45 | MP1B | Mx | .005 | 1.25 |
| 46 | MP1B | X | 9.978 | 3.25 |
| 47 | MP1B | Z | -5.761 | 3.25 |
| 48 | MP1B | Mx | .005 | 3.25 |
| 49 | MP1C | X | 17.138 | 1.25 |
| 50 | MP1C | Z | -9.895 | 1.25 |
| 51 | MP1C | Mx | 0 | 1.25 |
| 52 | MP1C | X | 17.138 | 3.25 |

## Member Point Loads (BLC 17 : Antenna Wi (60 Deg)) (Continued)

| | Member Label | Direction | Magnitude[lb,k-ft] | Location[ft,%] |
|---|---|---|---|---|
| 53 | MP1C | Z | -9.895 | 3.25 |
| 54 | MP1C | Mx | 0 | 3.25 |
| 55 | OVP | X | 25.073 | 1 |
| 56 | OVP | Z | -14.476 | 1 |
| 57 | OVP | Mx | 0 | 1 |
| 58 | MP2A | X | 10.994 | 1.5 |
| 59 | MP2A | Z | -6.347 | 1.5 |
| 60 | MP2A | Mx | .005 | 1.5 |
| 61 | MP2B | X | 10.994 | 1.5 |
| 62 | MP2B | Z | -6.347 | 1.5 |
| 63 | MP2B | Mx | -.005 | 1.5 |
| 64 | MP2C | X | 14.82 | 1.5 |
| 65 | MP2C | Z | -8.556 | 1.5 |
| 66 | MP2C | Mx | 0 | 1.5 |
| 67 | MP3A | X | 11.577 | 1.5 |
| 68 | MP3A | Z | -6.684 | 1.5 |
| 69 | MP3A | Mx | .006 | 1.5 |
| 70 | MP3B | X | 11.577 | 1.5 |
| 71 | MP3B | Z | -6.684 | 1.5 |
| 72 | MP3B | Mx | -.006 | 1.5 |
| 73 | MP3C | X | 14.82 | 1.5 |
| 74 | MP3C | Z | -8.556 | 1.5 |
| 75 | MP3C | Mx | 0 | 1.5 |
| 76 | MP4A | X | 25.201 | .25 |
| 77 | MP4A | Z | -14.55 | .25 |
| 78 | MP4A | Mx | -.013 | .25 |
| 79 | MP4A | X | 25.201 | 4.25 |
| 80 | MP4A | Z | -14.55 | 4.25 |
| 81 | MP4A | Mx | -.013 | 4.25 |
| 82 | MP4B | X | 25.201 | .25 |
| 83 | MP4B | Z | -14.55 | .25 |
| 84 | MP4B | Mx | .013 | .25 |
| 85 | MP4B | X | 25.201 | 4.25 |
| 86 | MP4B | Z | -14.55 | 4.25 |
| 87 | MP4B | Mx | .013 | 4.25 |
| 88 | MP4C | X | 32.419 | .25 |
| 89 | MP4C | Z | -18.717 | .25 |
| 90 | MP4C | Mx | 0 | .25 |
| 91 | MP4C | X | 32.419 | 4.25 |
| 92 | MP4C | Z | -18.717 | 4.25 |
| 93 | MP4C | Mx | 0 | 4.25 |
| 94 | MP2A | X | 6.025 | 4 |
| 95 | MP2A | Z | -3.478 | 4 |
| 96 | MP2A | Mx | .003 | 4 |
| 97 | MP2B | X | 6.025 | 4 |
| 98 | MP2B | Z | -3.478 | 4 |
| 99 | MP2B | Mx | -.003 | 4 |
| 100 | MP2C | X | 8.693 | 4 |
| 101 | MP2C | Z | -5.019 | 4 |
| 102 | MP2C | Mx | 0 | 4 |

## Member Point Loads (BLC 18 : Antenna Wi (90 Deg))

| | Member Label | Direction | Magnitude[lb,k-ft] | Location[ft,%] |
|---|---|---|---|---|
| 1 | MP2A | X | 23.123 | .25 |
| 2 | MP2A | Z | 0 | .25 |
| 3 | MP2A | Mx | -.012 | .25 |
| 4 | MP2A | X | 23.123 | 4.25 |
| 5 | MP2A | Z | 0 | 4.25 |
| 6 | MP2A | Mx | -.012 | 4.25 |
| 7 | MP2B | X | 30.476 | .25 |
| 8 | MP2B | Z | 0 | .25 |
| 9 | MP2B | Mx | .023 | .25 |
| 10 | MP2B | X | 30.476 | 4.25 |
| 11 | MP2B | Z | 0 | 4.25 |
| 12 | MP2B | Mx | .023 | 4.25 |
| 13 | MP2C | X | 30.476 | .25 |
| 14 | MP2C | Z | 0 | .25 |
| 15 | MP2C | Mx | -.008 | .25 |
| 16 | MP2C | X | 30.476 | 4.25 |
| 17 | MP2C | Z | 0 | 4.25 |
| 18 | MP2C | Mx | -.008 | 4.25 |
| 19 | MP2A | X | 23.123 | .25 |
| 20 | MP2A | Z | 0 | .25 |
| 21 | MP2A | Mx | -.012 | .25 |
| 22 | MP2A | X | 23.123 | 4.25 |
| 23 | MP2A | Z | 0 | 4.25 |
| 24 | MP2A | Mx | -.012 | 4.25 |
| 25 | MP2B | X | 30.476 | .25 |
| 26 | MP2B | Z | 0 | .25 |
| 27 | MP2B | Mx | -.008 | .25 |
| 28 | MP2B | X | 30.476 | 4.25 |
| 29 | MP2B | Z | 0 | 4.25 |
| 30 | MP2B | Mx | -.008 | 4.25 |
| 31 | MP2C | X | 30.476 | .25 |
| 32 | MP2C | Z | 0 | .25 |
| 33 | MP2C | Mx | .023 | .25 |
| 34 | MP2C | X | 30.476 | 4.25 |
| 35 | MP2C | Z | 0 | 4.25 |
| 36 | MP2C | Mx | .023 | 4.25 |
| 37 | MP1A | X | 8.766 | 1.25 |
| 38 | MP1A | Z | 0 | 1.25 |
| 39 | MP1A | Mx | -.004 | 1.25 |
| 40 | MP1A | X | 8.766 | 3.25 |
| 41 | MP1A | Z | 0 | 3.25 |
| 42 | MP1A | Mx | -.004 | 3.25 |
| 43 | MP1B | X | 17.034 | 1.25 |
| 44 | MP1B | Z | 0 | 1.25 |
| 45 | MP1B | Mx | .004 | 1.25 |
| 46 | MP1B | X | 17.034 | 3.25 |
| 47 | MP1B | Z | 0 | 3.25 |
| 48 | MP1B | Mx | .004 | 3.25 |
| 49 | MP1C | X | 17.034 | 1.25 |
| 50 | MP1C | Z | 0 | 1.25 |
| 51 | MP1C | Mx | .004 | 1.25 |
| 52 | MP1C | X | 17.034 | 3.25 |

## Member Point Loads (BLC 18 : Antenna Wi (90 Deg)) (Continued)

| | Member Label | Direction | Magnitude[lb,k-ft] | Location[ft,%] |
|---|---|---|---|---|
| 53 | MP1C | Z | 0 | 3.25 |
| 54 | MP1C | Mx | .004 | 3.25 |
| 55 | OVP | X | 27.146 | 1 |
| 56 | OVP | Z | 0 | 1 |
| 57 | OVP | Mx | 0 | 1 |
| 58 | MP2A | X | 11.222 | 1.5 |
| 59 | MP2A | Z | 0 | 1.5 |
| 60 | MP2A | Mx | .006 | 1.5 |
| 61 | MP2B | X | 15.64 | 1.5 |
| 62 | MP2B | Z | 0 | 1.5 |
| 63 | MP2B | Mx | -.004 | 1.5 |
| 64 | MP2C | X | 15.64 | 1.5 |
| 65 | MP2C | Z | 0 | 1.5 |
| 66 | MP2C | Mx | -.004 | 1.5 |
| 67 | MP3A | X | 12.12 | 1.5 |
| 68 | MP3A | Z | 0 | 1.5 |
| 69 | MP3A | Mx | .006 | 1.5 |
| 70 | MP3B | X | 15.864 | 1.5 |
| 71 | MP3B | Z | 0 | 1.5 |
| 72 | MP3B | Mx | -.004 | 1.5 |
| 73 | MP3C | X | 15.864 | 1.5 |
| 74 | MP3C | Z | 0 | 1.5 |
| 75 | MP3C | Mx | -.004 | 1.5 |
| 76 | MP4A | X | 26.322 | .25 |
| 77 | MP4A | Z | 0 | .25 |
| 78 | MP4A | Mx | -.013 | .25 |
| 79 | MP4A | X | 26.322 | 4.25 |
| 80 | MP4A | Z | 0 | 4.25 |
| 81 | MP4A | Mx | -.013 | 4.25 |
| 82 | MP4B | X | 34.656 | .25 |
| 83 | MP4B | Z | 0 | .25 |
| 84 | MP4B | Mx | .009 | .25 |
| 85 | MP4B | X | 34.656 | 4.25 |
| 86 | MP4B | Z | 0 | 4.25 |
| 87 | MP4B | Mx | .009 | 4.25 |
| 88 | MP4C | X | 34.656 | .25 |
| 89 | MP4C | Z | 0 | .25 |
| 90 | MP4C | Mx | .009 | .25 |
| 91 | MP4C | X | 34.656 | 4.25 |
| 92 | MP4C | Z | 0 | 4.25 |
| 93 | MP4C | Mx | .009 | 4.25 |
| 94 | MP2A | X | 5.93 | 4 |
| 95 | MP2A | Z | 0 | 4 |
| 96 | MP2A | Mx | .003 | 4 |
| 97 | MP2B | X | 9.011 | 4 |
| 98 | MP2B | Z | 0 | 4 |
| 99 | MP2B | Mx | -.002 | 4 |
| 100 | MP2C | X | 9.011 | 4 |
| 101 | MP2C | Z | 0 | 4 |
| 102 | MP2C | Mx | -.002 | 4 |

## Member Point Loads (BLC 19 : Antenna Wi (120 Deg))

| | Member Label | Direction | Magnitude[lb,k-ft] | Location[ft,%] |
|---|---|---|---|---|
| 1 | MP2A | X | 22.148 | .25 |
| 2 | MP2A | Z | 12.787 | .25 |
| 3 | MP2A | Mx | -.019 | .25 |
| 4 | MP2A | X | 22.148 | 4.25 |
| 5 | MP2A | Z | 12.787 | 4.25 |
| 6 | MP2A | Mx | -.019 | 4.25 |
| 7 | MP2B | X | 28.516 | .25 |
| 8 | MP2B | Z | 16.464 | .25 |
| 9 | MP2B | Mx | .019 | .25 |
| 10 | MP2B | X | 28.516 | 4.25 |
| 11 | MP2B | Z | 16.464 | 4.25 |
| 12 | MP2B | Mx | .019 | 4.25 |
| 13 | MP2C | X | 22.148 | .25 |
| 14 | MP2C | Z | 12.787 | .25 |
| 15 | MP2C | Mx | .004 | .25 |
| 16 | MP2C | X | 22.148 | 4.25 |
| 17 | MP2C | Z | 12.787 | 4.25 |
| 18 | MP2C | Mx | .004 | 4.25 |
| 19 | MP2A | X | 22.148 | .25 |
| 20 | MP2A | Z | 12.787 | .25 |
| 21 | MP2A | Mx | -.004 | .25 |
| 22 | MP2A | X | 22.148 | 4.25 |
| 23 | MP2A | Z | 12.787 | 4.25 |
| 24 | MP2A | Mx | -.004 | 4.25 |
| 25 | MP2B | X | 28.516 | .25 |
| 26 | MP2B | Z | 16.464 | .25 |
| 27 | MP2B | Mx | -.019 | .25 |
| 28 | MP2B | X | 28.516 | 4.25 |
| 29 | MP2B | Z | 16.464 | 4.25 |
| 30 | MP2B | Mx | -.019 | 4.25 |
| 31 | MP2C | X | 22.148 | .25 |
| 32 | MP2C | Z | 12.787 | .25 |
| 33 | MP2C | Mx | .019 | .25 |
| 34 | MP2C | X | 22.148 | 4.25 |
| 35 | MP2C | Z | 12.787 | 4.25 |
| 36 | MP2C | Mx | .019 | 4.25 |
| 37 | MP1A | X | 9.978 | 1.25 |
| 38 | MP1A | Z | 5.761 | 1.25 |
| 39 | MP1A | Mx | -.005 | 1.25 |
| 40 | MP1A | X | 9.978 | 3.25 |
| 41 | MP1A | Z | 5.761 | 3.25 |
| 42 | MP1A | Mx | -.005 | 3.25 |
| 43 | MP1B | X | 17.138 | 1.25 |
| 44 | MP1B | Z | 9.895 | 1.25 |
| 45 | MP1B | Mx | 0 | 1.25 |
| 46 | MP1B | X | 17.138 | 3.25 |
| 47 | MP1B | Z | 9.895 | 3.25 |
| 48 | MP1B | Mx | 0 | 3.25 |
| 49 | MP1C | X | 9.978 | 1.25 |
| 50 | MP1C | Z | 5.761 | 1.25 |
| 51 | MP1C | Mx | .005 | 1.25 |
| 52 | MP1C | X | 9.978 | 3.25 |

## Member Point Loads (BLC 19 : Antenna Wi (120 Deg)) (Continued)

| | Member Label | Direction | Magnitude[lb,k-ft] | Location[ft,%] |
|---|---|---|---|---|
| 53 | MP1C | Z | 5.761 | 3.25 |
| 54 | MP1C | Mx | .005 | 3.25 |
| 55 | OVP | X | 25.073 | 1 |
| 56 | OVP | Z | 14.476 | 1 |
| 57 | OVP | Mx | 0 | 1 |
| 58 | MP2A | X | 10.994 | 1.5 |
| 59 | MP2A | Z | 6.347 | 1.5 |
| 60 | MP2A | Mx | .005 | 1.5 |
| 61 | MP2B | X | 14.82 | 1.5 |
| 62 | MP2B | Z | 8.556 | 1.5 |
| 63 | MP2B | Mx | 0 | 1.5 |
| 64 | MP2C | X | 10.994 | 1.5 |
| 65 | MP2C | Z | 6.347 | 1.5 |
| 66 | MP2C | Mx | -.005 | 1.5 |
| 67 | MP3A | X | 11.577 | 1.5 |
| 68 | MP3A | Z | 6.684 | 1.5 |
| 69 | MP3A | Mx | .006 | 1.5 |
| 70 | MP3B | X | 14.82 | 1.5 |
| 71 | MP3B | Z | 8.556 | 1.5 |
| 72 | MP3B | Mx | 0 | 1.5 |
| 73 | MP3C | X | 11.577 | 1.5 |
| 74 | MP3C | Z | 6.684 | 1.5 |
| 75 | MP3C | Mx | -.006 | 1.5 |
| 76 | MP4A | X | 25.201 | .25 |
| 77 | MP4A | Z | 14.55 | .25 |
| 78 | MP4A | Mx | -.013 | .25 |
| 79 | MP4A | X | 25.201 | 4.25 |
| 80 | MP4A | Z | 14.55 | 4.25 |
| 81 | MP4A | Mx | -.013 | 4.25 |
| 82 | MP4B | X | 32.419 | .25 |
| 83 | MP4B | Z | 18.717 | .25 |
| 84 | MP4B | Mx | 0 | .25 |
| 85 | MP4B | X | 32.419 | 4.25 |
| 86 | MP4B | Z | 18.717 | 4.25 |
| 87 | MP4B | Mx | 0 | 4.25 |
| 88 | MP4C | X | 25.201 | .25 |
| 89 | MP4C | Z | 14.55 | .25 |
| 90 | MP4C | Mx | .013 | .25 |
| 91 | MP4C | X | 25.201 | 4.25 |
| 92 | MP4C | Z | 14.55 | 4.25 |
| 93 | MP4C | Mx | .013 | 4.25 |
| 94 | MP2A | X | 6.025 | 4 |
| 95 | MP2A | Z | 3.478 | 4 |
| 96 | MP2A | Mx | .003 | 4 |
| 97 | MP2B | X | 8.693 | 4 |
| 98 | MP2B | Z | 5.019 | 4 |
| 99 | MP2B | Mx | 0 | 4 |
| 100 | MP2C | X | 6.025 | 4 |
| 101 | MP2C | Z | 3.478 | 4 |
| 102 | MP2C | Mx | -.003 | 4 |

## Member Point Loads (BLC 20 : Antenna Wi (150 Deg))

| | Member Label | Direction | Magnitude[lb,k-ft] | Location[ft,%] |
|---|---|---|---|---|
| 1 | MP2A | X | 15.238 | .25 |
| 2 | MP2A | Z | 26.393 | .25 |
| 3 | MP2A | Mx | -.023 | .25 |
| 4 | MP2A | X | 15.238 | 4.25 |
| 5 | MP2A | Z | 26.393 | 4.25 |
| 6 | MP2A | Mx | -.023 | 4.25 |
| 7 | MP2B | X | 15.238 | .25 |
| 8 | MP2B | Z | 26.393 | .25 |
| 9 | MP2B | Mx | .008 | .25 |
| 10 | MP2B | X | 15.238 | 4.25 |
| 11 | MP2B | Z | 26.393 | 4.25 |
| 12 | MP2B | Mx | .008 | 4.25 |
| 13 | MP2C | X | 11.561 | .25 |
| 14 | MP2C | Z | 20.025 | .25 |
| 15 | MP2C | Mx | .012 | .25 |
| 16 | MP2C | X | 11.561 | 4.25 |
| 17 | MP2C | Z | 20.025 | 4.25 |
| 18 | MP2C | Mx | .012 | 4.25 |
| 19 | MP2A | X | 15.238 | .25 |
| 20 | MP2A | Z | 26.393 | .25 |
| 21 | MP2A | Mx | .008 | .25 |
| 22 | MP2A | X | 15.238 | 4.25 |
| 23 | MP2A | Z | 26.393 | 4.25 |
| 24 | MP2A | Mx | .008 | 4.25 |
| 25 | MP2B | X | 15.238 | .25 |
| 26 | MP2B | Z | 26.393 | .25 |
| 27 | MP2B | Mx | -.023 | .25 |
| 28 | MP2B | X | 15.238 | 4.25 |
| 29 | MP2B | Z | 26.393 | 4.25 |
| 30 | MP2B | Mx | -.023 | 4.25 |
| 31 | MP2C | X | 11.561 | .25 |
| 32 | MP2C | Z | 20.025 | .25 |
| 33 | MP2C | Mx | .012 | .25 |
| 34 | MP2C | X | 11.561 | 4.25 |
| 35 | MP2C | Z | 20.025 | 4.25 |
| 36 | MP2C | Mx | .012 | 4.25 |
| 37 | MP1A | X | 8.517 | 1.25 |
| 38 | MP1A | Z | 14.752 | 1.25 |
| 39 | MP1A | Mx | -.004 | 1.25 |
| 40 | MP1A | X | 8.517 | 3.25 |
| 41 | MP1A | Z | 14.752 | 3.25 |
| 42 | MP1A | Mx | -.004 | 3.25 |
| 43 | MP1B | X | 8.517 | 1.25 |
| 44 | MP1B | Z | 14.752 | 1.25 |
| 45 | MP1B | Mx | -.004 | 1.25 |
| 46 | MP1B | X | 8.517 | 3.25 |
| 47 | MP1B | Z | 14.752 | 3.25 |
| 48 | MP1B | Mx | -.004 | 3.25 |
| 49 | MP1C | X | 4.383 | 1.25 |
| 50 | MP1C | Z | 7.591 | 1.25 |
| 51 | MP1C | Mx | .004 | 1.25 |
| 52 | MP1C | X | 4.383 | 3.25 |

## Member Point Loads (BLC 20 : Antenna Wi (150 Deg)) (Continued)

| | Member Label | Direction | Magnitude[lb,k-ft] | Location[ft,%] |
|---|---|---|---|---|
| 53 | MP1C | Z | 7.591 | 3.25 |
| 54 | MP1C | Mx | .004 | 3.25 |
| 55 | OVP | X | 16.281 | 1 |
| 56 | OVP | Z | 28.199 | 1 |
| 57 | OVP | Mx | 0 | 1 |
| 58 | MP2A | X | 7.82 | 1.5 |
| 59 | MP2A | Z | 13.544 | 1.5 |
| 60 | MP2A | Mx | .004 | 1.5 |
| 61 | MP2B | X | 7.82 | 1.5 |
| 62 | MP2B | Z | 13.544 | 1.5 |
| 63 | MP2B | Mx | .004 | 1.5 |
| 64 | MP2C | X | 5.611 | 1.5 |
| 65 | MP2C | Z | 9.718 | 1.5 |
| 66 | MP2C | Mx | -.006 | 1.5 |
| 67 | MP3A | X | 7.932 | 1.5 |
| 68 | MP3A | Z | 13.739 | 1.5 |
| 69 | MP3A | Mx | .004 | 1.5 |
| 70 | MP3B | X | 7.932 | 1.5 |
| 71 | MP3B | Z | 13.739 | 1.5 |
| 72 | MP3B | Mx | .004 | 1.5 |
| 73 | MP3C | X | 6.06 | 1.5 |
| 74 | MP3C | Z | 10.496 | 1.5 |
| 75 | MP3C | Mx | -.006 | 1.5 |
| 76 | MP4A | X | 17.328 | .25 |
| 77 | MP4A | Z | 30.013 | .25 |
| 78 | MP4A | Mx | -.009 | .25 |
| 79 | MP4A | X | 17.328 | 4.25 |
| 80 | MP4A | Z | 30.013 | 4.25 |
| 81 | MP4A | Mx | -.009 | 4.25 |
| 82 | MP4B | X | 17.328 | .25 |
| 83 | MP4B | Z | 30.013 | .25 |
| 84 | MP4B | Mx | -.009 | .25 |
| 85 | MP4B | X | 17.328 | 4.25 |
| 86 | MP4B | Z | 30.013 | 4.25 |
| 87 | MP4B | Mx | -.009 | 4.25 |
| 88 | MP4C | X | 13.161 | .25 |
| 89 | MP4C | Z | 22.796 | .25 |
| 90 | MP4C | Mx | .013 | .25 |
| 91 | MP4C | X | 13.161 | 4.25 |
| 92 | MP4C | Z | 22.796 | 4.25 |
| 93 | MP4C | Mx | .013 | 4.25 |
| 94 | MP2A | X | 4.506 | 4 |
| 95 | MP2A | Z | 7.804 | 4 |
| 96 | MP2A | Mx | .002 | 4 |
| 97 | MP2B | X | 4.506 | 4 |
| 98 | MP2B | Z | 7.804 | 4 |
| 99 | MP2B | Mx | .002 | 4 |
| 100 | MP2C | X | 2.965 | 4 |
| 101 | MP2C | Z | 5.135 | 4 |
| 102 | MP2C | Mx | -.003 | 4 |

## Member Point Loads (BLC 21 : Antenna Wi (180 Deg))

| | Member Label | Direction | Magnitude[lb,k-ft] | Location[ft,%] |
|---|---|---|---|---|
| 1 | MP2A | X | 0 | .25 |
| 2 | MP2A | Z | 32.928 | .25 |
| 3 | MP2A | Mx | -.019 | .25 |
| 4 | MP2A | X | 0 | 4.25 |
| 5 | MP2A | Z | 32.928 | 4.25 |
| 6 | MP2A | Mx | -.019 | 4.25 |
| 7 | MP2B | X | 0 | .25 |
| 8 | MP2B | Z | 25.574 | .25 |
| 9 | MP2B | Mx | -.004 | .25 |
| 10 | MP2B | X | 0 | 4.25 |
| 11 | MP2B | Z | 25.574 | 4.25 |
| 12 | MP2B | Mx | -.004 | 4.25 |
| 13 | MP2C | X | 0 | .25 |
| 14 | MP2C | Z | 25.574 | .25 |
| 15 | MP2C | Mx | .019 | .25 |
| 16 | MP2C | X | 0 | 4.25 |
| 17 | MP2C | Z | 25.574 | 4.25 |
| 18 | MP2C | Mx | .019 | 4.25 |
| 19 | MP2A | X | 0 | .25 |
| 20 | MP2A | Z | 32.928 | .25 |
| 21 | MP2A | Mx | .019 | .25 |
| 22 | MP2A | X | 0 | 4.25 |
| 23 | MP2A | Z | 32.928 | 4.25 |
| 24 | MP2A | Mx | .019 | 4.25 |
| 25 | MP2B | X | 0 | .25 |
| 26 | MP2B | Z | 25.574 | .25 |
| 27 | MP2B | Mx | -.019 | .25 |
| 28 | MP2B | X | 0 | 4.25 |
| 29 | MP2B | Z | 25.574 | 4.25 |
| 30 | MP2B | Mx | -.019 | 4.25 |
| 31 | MP2C | X | 0 | .25 |
| 32 | MP2C | Z | 25.574 | .25 |
| 33 | MP2C | Mx | .004 | .25 |
| 34 | MP2C | X | 0 | 4.25 |
| 35 | MP2C | Z | 25.574 | 4.25 |
| 36 | MP2C | Mx | .004 | 4.25 |
| 37 | MP1A | X | 0 | 1.25 |
| 38 | MP1A | Z | 19.79 | 1.25 |
| 39 | MP1A | Mx | 0 | 1.25 |
| 40 | MP1A | X | 0 | 3.25 |
| 41 | MP1A | Z | 19.79 | 3.25 |
| 42 | MP1A | Mx | 0 | 3.25 |
| 43 | MP1B | X | 0 | 1.25 |
| 44 | MP1B | Z | 11.522 | 1.25 |
| 45 | MP1B | Mx | -.005 | 1.25 |
| 46 | MP1B | X | 0 | 3.25 |
| 47 | MP1B | Z | 11.522 | 3.25 |
| 48 | MP1B | Mx | -.005 | 3.25 |
| 49 | MP1C | X | 0 | 1.25 |
| 50 | MP1C | Z | 11.522 | 1.25 |
| 51 | MP1C | Mx | .005 | 1.25 |
| 52 | MP1C | X | 0 | 3.25 |

## Member Point Loads (BLC 21 : Antenna Wi (180 Deg)) (Continued)

| | Member Label | Direction | Magnitude[lb,k-ft] | Location[ft,%] |
|---|---|---|---|---|
| 53 | MP1C | Z | 11.522 | 3.25 |
| 54 | MP1C | Mx | .005 | 3.25 |
| 55 | OVP | X | 0 | 1 |
| 56 | OVP | Z | 34.366 | 1 |
| 57 | OVP | Mx | 0 | 1 |
| 58 | MP2A | X | 0 | 1.5 |
| 59 | MP2A | Z | 17.112 | 1.5 |
| 60 | MP2A | Mx | 0 | 1.5 |
| 61 | MP2B | X | 0 | 1.5 |
| 62 | MP2B | Z | 12.694 | 1.5 |
| 63 | MP2B | Mx | .005 | 1.5 |
| 64 | MP2C | X | 0 | 1.5 |
| 65 | MP2C | Z | 12.694 | 1.5 |
| 66 | MP2C | Mx | -.005 | 1.5 |
| 67 | MP3A | X | 0 | 1.5 |
| 68 | MP3A | Z | 17.112 | 1.5 |
| 69 | MP3A | Mx | 0 | 1.5 |
| 70 | MP3B | X | 0 | 1.5 |
| 71 | MP3B | Z | 13.368 | 1.5 |
| 72 | MP3B | Mx | .006 | 1.5 |
| 73 | MP3C | X | 0 | 1.5 |
| 74 | MP3C | Z | 13.368 | 1.5 |
| 75 | MP3C | Mx | -.006 | 1.5 |
| 76 | MP4A | X | 0 | .25 |
| 77 | MP4A | Z | 37.434 | .25 |
| 78 | MP4A | Mx | 0 | .25 |
| 79 | MP4A | X | 0 | 4.25 |
| 80 | MP4A | Z | 37.434 | 4.25 |
| 81 | MP4A | Mx | 0 | 4.25 |
| 82 | MP4B | X | 0 | .25 |
| 83 | MP4B | Z | 29.1 | .25 |
| 84 | MP4B | Mx | -.013 | .25 |
| 85 | MP4B | X | 0 | 4.25 |
| 86 | MP4B | Z | 29.1 | 4.25 |
| 87 | MP4B | Mx | -.013 | 4.25 |
| 88 | MP4C | X | 0 | .25 |
| 89 | MP4C | Z | 29.1 | .25 |
| 90 | MP4C | Mx | .013 | .25 |
| 91 | MP4C | X | 0 | 4.25 |
| 92 | MP4C | Z | 29.1 | 4.25 |
| 93 | MP4C | Mx | .013 | 4.25 |
| 94 | MP2A | X | 0 | 4 |
| 95 | MP2A | Z | 10.038 | 4 |
| 96 | MP2A | Mx | 0 | 4 |
| 97 | MP2B | X | 0 | 4 |
| 98 | MP2B | Z | 6.957 | 4 |
| 99 | MP2B | Mx | .003 | 4 |
| 100 | MP2C | X | 0 | 4 |
| 101 | MP2C | Z | 6.957 | 4 |
| 102 | MP2C | Mx | -.003 | 4 |

## Member Point Loads (BLC 22 : Antenna Wi (210 Deg))

| | Member Label | Direction | Magnitude[lb,k-ft] | Location[ft,%] |
|---|---|---|---|---|
| 1 | MP2A | X | -15.238 | .25 |
| 2 | MP2A | Z | 26.393 | .25 |
| 3 | MP2A | Mx | -.008 | .25 |
| 4 | MP2A | X | -15.238 | 4.25 |
| 5 | MP2A | Z | 26.393 | 4.25 |
| 6 | MP2A | Mx | -.008 | 4.25 |
| 7 | MP2B | X | -11.561 | .25 |
| 8 | MP2B | Z | 20.025 | .25 |
| 9 | MP2B | Mx | -.012 | .25 |
| 10 | MP2B | X | -11.561 | 4.25 |
| 11 | MP2B | Z | 20.025 | 4.25 |
| 12 | MP2B | Mx | -.012 | 4.25 |
| 13 | MP2C | X | -15.238 | .25 |
| 14 | MP2C | Z | 26.393 | .25 |
| 15 | MP2C | Mx | .023 | .25 |
| 16 | MP2C | X | -15.238 | 4.25 |
| 17 | MP2C | Z | 26.393 | 4.25 |
| 18 | MP2C | Mx | .023 | 4.25 |
| 19 | MP2A | X | -15.238 | .25 |
| 20 | MP2A | Z | 26.393 | .25 |
| 21 | MP2A | Mx | .023 | .25 |
| 22 | MP2A | X | -15.238 | 4.25 |
| 23 | MP2A | Z | 26.393 | 4.25 |
| 24 | MP2A | Mx | .023 | 4.25 |
| 25 | MP2B | X | -11.561 | .25 |
| 26 | MP2B | Z | 20.025 | .25 |
| 27 | MP2B | Mx | -.012 | .25 |
| 28 | MP2B | X | -11.561 | 4.25 |
| 29 | MP2B | Z | 20.025 | 4.25 |
| 30 | MP2B | Mx | -.012 | 4.25 |
| 31 | MP2C | X | -15.238 | .25 |
| 32 | MP2C | Z | 26.393 | .25 |
| 33 | MP2C | Mx | -.008 | .25 |
| 34 | MP2C | X | -15.238 | 4.25 |
| 35 | MP2C | Z | 26.393 | 4.25 |
| 36 | MP2C | Mx | -.008 | 4.25 |
| 37 | MP1A | X | -8.517 | 1.25 |
| 38 | MP1A | Z | 14.752 | 1.25 |
| 39 | MP1A | Mx | .004 | 1.25 |
| 40 | MP1A | X | -8.517 | 3.25 |
| 41 | MP1A | Z | 14.752 | 3.25 |
| 42 | MP1A | Mx | .004 | 3.25 |
| 43 | MP1B | X | -4.383 | 1.25 |
| 44 | MP1B | Z | 7.591 | 1.25 |
| 45 | MP1B | Mx | -.004 | 1.25 |
| 46 | MP1B | X | -4.383 | 3.25 |
| 47 | MP1B | Z | 7.591 | 3.25 |
| 48 | MP1B | Mx | -.004 | 3.25 |
| 49 | MP1C | X | -8.517 | 1.25 |
| 50 | MP1C | Z | 14.752 | 1.25 |
| 51 | MP1C | Mx | .004 | 1.25 |
| 52 | MP1C | X | -8.517 | 3.25 |

## Member Point Loads (BLC 22 : Antenna Wi (210 Deg)) (Continued)

| | Member Label | Direction | Magnitude[lb,k-ft] | Location[ft,%] |
|---|---|---|---|---|
| 53 | MP1C | Z | 14.752 | 3.25 |
| 54 | MP1C | Mx | .004 | 3.25 |
| 55 | OVP | X | -16.281 | 1 |
| 56 | OVP | Z | 28.199 | 1 |
| 57 | OVP | Mx | 0 | 1 |
| 58 | MP2A | X | -7.82 | 1.5 |
| 59 | MP2A | Z | 13.544 | 1.5 |
| 60 | MP2A | Mx | -.004 | 1.5 |
| 61 | MP2B | X | -5.611 | 1.5 |
| 62 | MP2B | Z | 9.718 | 1.5 |
| 63 | MP2B | Mx | .006 | 1.5 |
| 64 | MP2C | X | -7.82 | 1.5 |
| 65 | MP2C | Z | 13.544 | 1.5 |
| 66 | MP2C | Mx | -.004 | 1.5 |
| 67 | MP3A | X | -7.932 | 1.5 |
| 68 | MP3A | Z | 13.739 | 1.5 |
| 69 | MP3A | Mx | -.004 | 1.5 |
| 70 | MP3B | X | -6.06 | 1.5 |
| 71 | MP3B | Z | 10.496 | 1.5 |
| 72 | MP3B | Mx | .006 | 1.5 |
| 73 | MP3C | X | -7.932 | 1.5 |
| 74 | MP3C | Z | 13.739 | 1.5 |
| 75 | MP3C | Mx | -.004 | 1.5 |
| 76 | MP4A | X | -17.328 | .25 |
| 77 | MP4A | Z | 30.013 | .25 |
| 78 | MP4A | Mx | .009 | .25 |
| 79 | MP4A | X | -17.328 | 4.25 |
| 80 | MP4A | Z | 30.013 | 4.25 |
| 81 | MP4A | Mx | .009 | 4.25 |
| 82 | MP4B | X | -13.161 | .25 |
| 83 | MP4B | Z | 22.796 | .25 |
| 84 | MP4B | Mx | -.013 | .25 |
| 85 | MP4B | X | -13.161 | 4.25 |
| 86 | MP4B | Z | 22.796 | 4.25 |
| 87 | MP4B | Mx | -.013 | 4.25 |
| 88 | MP4C | X | -17.328 | .25 |
| 89 | MP4C | Z | 30.013 | .25 |
| 90 | MP4C | Mx | .009 | .25 |
| 91 | MP4C | X | -17.328 | 4.25 |
| 92 | MP4C | Z | 30.013 | 4.25 |
| 93 | MP4C | Mx | .009 | 4.25 |
| 94 | MP2A | X | -4.506 | 4 |
| 95 | MP2A | Z | 7.804 | 4 |
| 96 | MP2A | Mx | -.002 | 4 |
| 97 | MP2B | X | -2.965 | 4 |
| 98 | MP2B | Z | 5.135 | 4 |
| 99 | MP2B | Mx | .003 | 4 |
| 100 | MP2C | X | -4.506 | 4 |
| 101 | MP2C | Z | 7.804 | 4 |
| 102 | MP2C | Mx | -.002 | 4 |

## Member Point Loads (BLC 23 : Antenna Wi (240 Deg))

| | Member Label | Direction | Magnitude[lb,k-ft] | Location[ft,%] |
|---|---|---|---|---|
| 1 | MP2A | X | -22.148 | .25 |
| 2 | MP2A | Z | 12.787 | .25 |
| 3 | MP2A | Mx | .004 | .25 |
| 4 | MP2A | X | -22.148 | 4.25 |
| 5 | MP2A | Z | 12.787 | 4.25 |
| 6 | MP2A | Mx | .004 | 4.25 |
| 7 | MP2B | X | -22.148 | .25 |
| 8 | MP2B | Z | 12.787 | .25 |
| 9 | MP2B | Mx | -.019 | .25 |
| 10 | MP2B | X | -22.148 | 4.25 |
| 11 | MP2B | Z | 12.787 | 4.25 |
| 12 | MP2B | Mx | -.019 | 4.25 |
| 13 | MP2C | X | -28.516 | .25 |
| 14 | MP2C | Z | 16.464 | .25 |
| 15 | MP2C | Mx | .019 | .25 |
| 16 | MP2C | X | -28.516 | 4.25 |
| 17 | MP2C | Z | 16.464 | 4.25 |
| 18 | MP2C | Mx | .019 | 4.25 |
| 19 | MP2A | X | -22.148 | .25 |
| 20 | MP2A | Z | 12.787 | .25 |
| 21 | MP2A | Mx | .019 | .25 |
| 22 | MP2A | X | -22.148 | 4.25 |
| 23 | MP2A | Z | 12.787 | 4.25 |
| 24 | MP2A | Mx | .019 | 4.25 |
| 25 | MP2B | X | -22.148 | .25 |
| 26 | MP2B | Z | 12.787 | .25 |
| 27 | MP2B | Mx | -.004 | .25 |
| 28 | MP2B | X | -22.148 | 4.25 |
| 29 | MP2B | Z | 12.787 | 4.25 |
| 30 | MP2B | Mx | -.004 | 4.25 |
| 31 | MP2C | X | -28.516 | .25 |
| 32 | MP2C | Z | 16.464 | .25 |
| 33 | MP2C | Mx | -.019 | .25 |
| 34 | MP2C | X | -28.516 | 4.25 |
| 35 | MP2C | Z | 16.464 | 4.25 |
| 36 | MP2C | Mx | -.019 | 4.25 |
| 37 | MP1A | X | -9.978 | 1.25 |
| 38 | MP1A | Z | 5.761 | 1.25 |
| 39 | MP1A | Mx | .005 | 1.25 |
| 40 | MP1A | X | -9.978 | 3.25 |
| 41 | MP1A | Z | 5.761 | 3.25 |
| 42 | MP1A | Mx | .005 | 3.25 |
| 43 | MP1B | X | -9.978 | 1.25 |
| 44 | MP1B | Z | 5.761 | 1.25 |
| 45 | MP1B | Mx | -.005 | 1.25 |
| 46 | MP1B | X | -9.978 | 3.25 |
| 47 | MP1B | Z | 5.761 | 3.25 |
| 48 | MP1B | Mx | -.005 | 3.25 |
| 49 | MP1C | X | -17.138 | 1.25 |
| 50 | MP1C | Z | 9.895 | 1.25 |
| 51 | MP1C | Mx | 0 | 1.25 |
| 52 | MP1C | X | -17.138 | 3.25 |

## Member Point Loads (BLC 23 : Antenna Wi (240 Deg)) (Continued)

| | Member Label | Direction | Magnitude[lb,k-ft] | Location[ft,%] |
|---|---|---|---|---|
| 53 | MP1C | Z | 9.895 | 3.25 |
| 54 | MP1C | Mx | 0 | 3.25 |
| 55 | OVP | X | -25.073 | 1 |
| 56 | OVP | Z | 14.476 | 1 |
| 57 | OVP | Mx | 0 | 1 |
| 58 | MP2A | X | -10.994 | 1.5 |
| 59 | MP2A | Z | 6.347 | 1.5 |
| 60 | MP2A | Mx | -.005 | 1.5 |
| 61 | MP2B | X | -10.994 | 1.5 |
| 62 | MP2B | Z | 6.347 | 1.5 |
| 63 | MP2B | Mx | .005 | 1.5 |
| 64 | MP2C | X | -14.82 | 1.5 |
| 65 | MP2C | Z | 8.556 | 1.5 |
| 66 | MP2C | Mx | 0 | 1.5 |
| 67 | MP3A | X | -11.577 | 1.5 |
| 68 | MP3A | Z | 6.684 | 1.5 |
| 69 | MP3A | Mx | -.006 | 1.5 |
| 70 | MP3B | X | -11.577 | 1.5 |
| 71 | MP3B | Z | 6.684 | 1.5 |
| 72 | MP3B | Mx | .006 | 1.5 |
| 73 | MP3C | X | -14.82 | 1.5 |
| 74 | MP3C | Z | 8.556 | 1.5 |
| 75 | MP3C | Mx | 0 | 1.5 |
| 76 | MP4A | X | -25.201 | .25 |
| 77 | MP4A | Z | 14.55 | .25 |
| 78 | MP4A | Mx | .013 | .25 |
| 79 | MP4A | X | -25.201 | 4.25 |
| 80 | MP4A | Z | 14.55 | 4.25 |
| 81 | MP4A | Mx | .013 | 4.25 |
| 82 | MP4B | X | -25.201 | .25 |
| 83 | MP4B | Z | 14.55 | .25 |
| 84 | MP4B | Mx | -.013 | .25 |
| 85 | MP4B | X | -25.201 | 4.25 |
| 86 | MP4B | Z | 14.55 | 4.25 |
| 87 | MP4B | Mx | -.013 | 4.25 |
| 88 | MP4C | X | -32.419 | .25 |
| 89 | MP4C | Z | 18.717 | .25 |
| 90 | MP4C | Mx | 0 | .25 |
| 91 | MP4C | X | -32.419 | 4.25 |
| 92 | MP4C | Z | 18.717 | 4.25 |
| 93 | MP4C | Mx | 0 | 4.25 |
| 94 | MP2A | X | -6.025 | 4 |
| 95 | MP2A | Z | 3.478 | 4 |
| 96 | MP2A | Mx | -.003 | 4 |
| 97 | MP2B | X | -6.025 | 4 |
| 98 | MP2B | Z | 3.478 | 4 |
| 99 | MP2B | Mx | .003 | 4 |
| 100 | MP2C | X | -8.693 | 4 |
| 101 | MP2C | Z | 5.019 | 4 |
| 102 | MP2C | Mx | 0 | 4 |

## Member Point Loads (BLC 24 : Antenna Wi (270 Deg))

| | Member Label | Direction | Magnitude[lb,k-ft] | Location[ft,%] |
|---|---|---|---|---|
| 1 | MP2A | X | -23.123 | .25 |
| 2 | MP2A | Z | 0 | .25 |
| 3 | MP2A | Mx | .012 | .25 |
| 4 | MP2A | X | -23.123 | 4.25 |
| 5 | MP2A | Z | 0 | 4.25 |
| 6 | MP2A | Mx | .012 | 4.25 |
| 7 | MP2B | X | -30.476 | .25 |
| 8 | MP2B | Z | 0 | .25 |
| 9 | MP2B | Mx | -.023 | .25 |
| 10 | MP2B | X | -30.476 | 4.25 |
| 11 | MP2B | Z | 0 | 4.25 |
| 12 | MP2B | Mx | -.023 | 4.25 |
| 13 | MP2C | X | -30.476 | .25 |
| 14 | MP2C | Z | 0 | .25 |
| 15 | MP2C | Mx | .008 | .25 |
| 16 | MP2C | X | -30.476 | 4.25 |
| 17 | MP2C | Z | 0 | 4.25 |
| 18 | MP2C | Mx | .008 | 4.25 |
| 19 | MP2A | X | -23.123 | .25 |
| 20 | MP2A | Z | 0 | .25 |
| 21 | MP2A | Mx | .012 | .25 |
| 22 | MP2A | X | -23.123 | 4.25 |
| 23 | MP2A | Z | 0 | 4.25 |
| 24 | MP2A | Mx | .012 | 4.25 |
| 25 | MP2B | X | -30.476 | .25 |
| 26 | MP2B | Z | 0 | .25 |
| 27 | MP2B | Mx | .008 | .25 |
| 28 | MP2B | X | -30.476 | 4.25 |
| 29 | MP2B | Z | 0 | 4.25 |
| 30 | MP2B | Mx | .008 | 4.25 |
| 31 | MP2C | X | -30.476 | .25 |
| 32 | MP2C | Z | 0 | .25 |
| 33 | MP2C | Mx | -.023 | .25 |
| 34 | MP2C | X | -30.476 | 4.25 |
| 35 | MP2C | Z | 0 | 4.25 |
| 36 | MP2C | Mx | -.023 | 4.25 |
| 37 | MP1A | X | -8.766 | 1.25 |
| 38 | MP1A | Z | 0 | 1.25 |
| 39 | MP1A | Mx | .004 | 1.25 |
| 40 | MP1A | X | -8.766 | 3.25 |
| 41 | MP1A | Z | 0 | 3.25 |
| 42 | MP1A | Mx | .004 | 3.25 |
| 43 | MP1B | X | -17.034 | 1.25 |
| 44 | MP1B | Z | 0 | 1.25 |
| 45 | MP1B | Mx | -.004 | 1.25 |
| 46 | MP1B | X | -17.034 | 3.25 |
| 47 | MP1B | Z | 0 | 3.25 |
| 48 | MP1B | Mx | -.004 | 3.25 |
| 49 | MP1C | X | -17.034 | 1.25 |
| 50 | MP1C | Z | 0 | 1.25 |
| 51 | MP1C | Mx | -.004 | 1.25 |
| 52 | MP1C | X | -17.034 | 3.25 |

## Member Point Loads (BLC 24 : Antenna Wi (270 Deg)) (Continued)

| | Member Label | Direction | Magnitude[lb,k-ft] | Location[ft,%] |
|---|---|---|---|---|
| 53 | MP1C | Z | 0 | 3.25 |
| 54 | MP1C | Mx | -.004 | 3.25 |
| 55 | OVP | X | -27.146 | 1 |
| 56 | OVP | Z | 0 | 1 |
| 57 | OVP | Mx | 0 | 1 |
| 58 | MP2A | X | -11.222 | 1.5 |
| 59 | MP2A | Z | 0 | 1.5 |
| 60 | MP2A | Mx | -.006 | 1.5 |
| 61 | MP2B | X | -15.64 | 1.5 |
| 62 | MP2B | Z | 0 | 1.5 |
| 63 | MP2B | Mx | .004 | 1.5 |
| 64 | MP2C | X | -15.64 | 1.5 |
| 65 | MP2C | Z | 0 | 1.5 |
| 66 | MP2C | Mx | .004 | 1.5 |
| 67 | MP3A | X | -12.12 | 1.5 |
| 68 | MP3A | Z | 0 | 1.5 |
| 69 | MP3A | Mx | -.006 | 1.5 |
| 70 | MP3B | X | -15.864 | 1.5 |
| 71 | MP3B | Z | 0 | 1.5 |
| 72 | MP3B | Mx | .004 | 1.5 |
| 73 | MP3C | X | -15.864 | 1.5 |
| 74 | MP3C | Z | 0 | 1.5 |
| 75 | MP3C | Mx | .004 | 1.5 |
| 76 | MP4A | X | -26.322 | .25 |
| 77 | MP4A | Z | 0 | .25 |
| 78 | MP4A | Mx | .013 | .25 |
| 79 | MP4A | X | -26.322 | 4.25 |
| 80 | MP4A | Z | 0 | 4.25 |
| 81 | MP4A | Mx | .013 | 4.25 |
| 82 | MP4B | X | -34.656 | .25 |
| 83 | MP4B | Z | 0 | .25 |
| 84 | MP4B | Mx | -.009 | .25 |
| 85 | MP4B | X | -34.656 | 4.25 |
| 86 | MP4B | Z | 0 | 4.25 |
| 87 | MP4B | Mx | -.009 | 4.25 |
| 88 | MP4C | X | -34.656 | .25 |
| 89 | MP4C | Z | 0 | .25 |
| 90 | MP4C | Mx | -.009 | .25 |
| 91 | MP4C | X | -34.656 | 4.25 |
| 92 | MP4C | Z | 0 | 4.25 |
| 93 | MP4C | Mx | -.009 | 4.25 |
| 94 | MP2A | X | -5.93 | 4 |
| 95 | MP2A | Z | 0 | 4 |
| 96 | MP2A | Mx | -.003 | 4 |
| 97 | MP2B | X | -9.011 | 4 |
| 98 | MP2B | Z | 0 | 4 |
| 99 | MP2B | Mx | .002 | 4 |
| 100 | MP2C | X | -9.011 | 4 |
| 101 | MP2C | Z | 0 | 4 |
| 102 | MP2C | Mx | .002 | 4 |

## Member Point Loads (BLC 25 : Antenna Wi (300 Deg))

| | Member Label | Direction | Magnitude[lb,k-ft] | Location[ft,%] |
|---|---|---|---|---|
| 1 | MP2A | X | -22.148 | .25 |
| 2 | MP2A | Z | -12.787 | .25 |
| 3 | MP2A | Mx | .019 | .25 |
| 4 | MP2A | X | -22.148 | 4.25 |
| 5 | MP2A | Z | -12.787 | 4.25 |
| 6 | MP2A | Mx | .019 | 4.25 |
| 7 | MP2B | X | -28.516 | .25 |
| 8 | MP2B | Z | -16.464 | .25 |
| 9 | MP2B | Mx | -.019 | .25 |
| 10 | MP2B | X | -28.516 | 4.25 |
| 11 | MP2B | Z | -16.464 | 4.25 |
| 12 | MP2B | Mx | -.019 | 4.25 |
| 13 | MP2C | X | -22.148 | .25 |
| 14 | MP2C | Z | -12.787 | .25 |
| 15 | MP2C | Mx | -.004 | .25 |
| 16 | MP2C | X | -22.148 | 4.25 |
| 17 | MP2C | Z | -12.787 | 4.25 |
| 18 | MP2C | Mx | -.004 | 4.25 |
| 19 | MP2A | X | -22.148 | .25 |
| 20 | MP2A | Z | -12.787 | .25 |
| 21 | MP2A | Mx | .004 | .25 |
| 22 | MP2A | X | -22.148 | 4.25 |
| 23 | MP2A | Z | -12.787 | 4.25 |
| 24 | MP2A | Mx | .004 | 4.25 |
| 25 | MP2B | X | -28.516 | .25 |
| 26 | MP2B | Z | -16.464 | .25 |
| 27 | MP2B | Mx | .019 | .25 |
| 28 | MP2B | X | -28.516 | 4.25 |
| 29 | MP2B | Z | -16.464 | 4.25 |
| 30 | MP2B | Mx | .019 | 4.25 |
| 31 | MP2C | X | -22.148 | .25 |
| 32 | MP2C | Z | -12.787 | .25 |
| 33 | MP2C | Mx | -.019 | .25 |
| 34 | MP2C | X | -22.148 | 4.25 |
| 35 | MP2C | Z | -12.787 | 4.25 |
| 36 | MP2C | Mx | -.019 | 4.25 |
| 37 | MP1A | X | -9.978 | 1.25 |
| 38 | MP1A | Z | -5.761 | 1.25 |
| 39 | MP1A | Mx | .005 | 1.25 |
| 40 | MP1A | X | -9.978 | 3.25 |
| 41 | MP1A | Z | -5.761 | 3.25 |
| 42 | MP1A | Mx | .005 | 3.25 |
| 43 | MP1B | X | -17.138 | 1.25 |
| 44 | MP1B | Z | -9.895 | 1.25 |
| 45 | MP1B | Mx | 0 | 1.25 |
| 46 | MP1B | X | -17.138 | 3.25 |
| 47 | MP1B | Z | -9.895 | 3.25 |
| 48 | MP1B | Mx | 0 | 3.25 |
| 49 | MP1C | X | -9.978 | 1.25 |
| 50 | MP1C | Z | -5.761 | 1.25 |
| 51 | MP1C | Mx | -.005 | 1.25 |
| 52 | MP1C | X | -9.978 | 3.25 |

## Member Point Loads (BLC 25 : Antenna Wi (300 Deg)) (Continued)

| | Member Label | Direction | Magnitude[lb,k-ft] | Location[ft,%] |
|---|---|---|---|---|
| 53 | MP1C | Z | -5.761 | 3.25 |
| 54 | MP1C | Mx | -.005 | 3.25 |
| 55 | OVP | X | -25.073 | 1 |
| 56 | OVP | Z | -14.476 | 1 |
| 57 | OVP | Mx | 0 | 1 |
| 58 | MP2A | X | -10.994 | 1.5 |
| 59 | MP2A | Z | -6.347 | 1.5 |
| 60 | MP2A | Mx | -.005 | 1.5 |
| 61 | MP2B | X | -14.82 | 1.5 |
| 62 | MP2B | Z | -8.556 | 1.5 |
| 63 | MP2B | Mx | 0 | 1.5 |
| 64 | MP2C | X | -10.994 | 1.5 |
| 65 | MP2C | Z | -6.347 | 1.5 |
| 66 | MP2C | Mx | .005 | 1.5 |
| 67 | MP3A | X | -11.577 | 1.5 |
| 68 | MP3A | Z | -6.684 | 1.5 |
| 69 | MP3A | Mx | -.006 | 1.5 |
| 70 | MP3B | X | -14.82 | 1.5 |
| 71 | MP3B | Z | -8.556 | 1.5 |
| 72 | MP3B | Mx | 0 | 1.5 |
| 73 | MP3C | X | -11.577 | 1.5 |
| 74 | MP3C | Z | -6.684 | 1.5 |
| 75 | MP3C | Mx | .006 | 1.5 |
| 76 | MP4A | X | -25.201 | .25 |
| 77 | MP4A | Z | -14.55 | .25 |
| 78 | MP4A | Mx | .013 | .25 |
| 79 | MP4A | X | -25.201 | 4.25 |
| 80 | MP4A | Z | -14.55 | 4.25 |
| 81 | MP4A | Mx | .013 | 4.25 |
| 82 | MP4B | X | -32.419 | .25 |
| 83 | MP4B | Z | -18.717 | .25 |
| 84 | MP4B | Mx | 0 | .25 |
| 85 | MP4B | X | -32.419 | 4.25 |
| 86 | MP4B | Z | -18.717 | 4.25 |
| 87 | MP4B | Mx | 0 | 4.25 |
| 88 | MP4C | X | -25.201 | .25 |
| 89 | MP4C | Z | -14.55 | .25 |
| 90 | MP4C | Mx | -.013 | .25 |
| 91 | MP4C | X | -25.201 | 4.25 |
| 92 | MP4C | Z | -14.55 | 4.25 |
| 93 | MP4C | Mx | -.013 | 4.25 |
| 94 | MP2A | X | -6.025 | 4 |
| 95 | MP2A | Z | -3.478 | 4 |
| 96 | MP2A | Mx | -.003 | 4 |
| 97 | MP2B | X | -8.693 | 4 |
| 98 | MP2B | Z | -5.019 | 4 |
| 99 | MP2B | Mx | 0 | 4 |
| 100 | MP2C | X | -6.025 | 4 |
| 101 | MP2C | Z | -3.478 | 4 |
| 102 | MP2C | Mx | .003 | 4 |

## Member Point Loads (BLC 26 : Antenna Wi (330 Deg))

| | Member Label | Direction | Magnitude[lb,k-ft] | Location[ft,%] |
|---|---|---|---|---|
| 1 | MP2A | X | -15.238 | .25 |
| 2 | MP2A | Z | -26.393 | .25 |
| 3 | MP2A | Mx | .023 | .25 |
| 4 | MP2A | X | -15.238 | 4.25 |
| 5 | MP2A | Z | -26.393 | 4.25 |
| 6 | MP2A | Mx | .023 | 4.25 |
| 7 | MP2B | X | -15.238 | .25 |
| 8 | MP2B | Z | -26.393 | .25 |
| 9 | MP2B | Mx | -.008 | .25 |
| 10 | MP2B | X | -15.238 | 4.25 |
| 11 | MP2B | Z | -26.393 | 4.25 |
| 12 | MP2B | Mx | -.008 | 4.25 |
| 13 | MP2C | X | -11.561 | .25 |
| 14 | MP2C | Z | -20.025 | .25 |
| 15 | MP2C | Mx | -.012 | .25 |
| 16 | MP2C | X | -11.561 | 4.25 |
| 17 | MP2C | Z | -20.025 | 4.25 |
| 18 | MP2C | Mx | -.012 | 4.25 |
| 19 | MP2A | X | -15.238 | .25 |
| 20 | MP2A | Z | -26.393 | .25 |
| 21 | MP2A | Mx | -.008 | .25 |
| 22 | MP2A | X | -15.238 | 4.25 |
| 23 | MP2A | Z | -26.393 | 4.25 |
| 24 | MP2A | Mx | -.008 | 4.25 |
| 25 | MP2B | X | -15.238 | .25 |
| 26 | MP2B | Z | -26.393 | .25 |
| 27 | MP2B | Mx | .023 | .25 |
| 28 | MP2B | X | -15.238 | 4.25 |
| 29 | MP2B | Z | -26.393 | 4.25 |
| 30 | MP2B | Mx | .023 | 4.25 |
| 31 | MP2C | X | -11.561 | .25 |
| 32 | MP2C | Z | -20.025 | .25 |
| 33 | MP2C | Mx | -.012 | .25 |
| 34 | MP2C | X | -11.561 | 4.25 |
| 35 | MP2C | Z | -20.025 | 4.25 |
| 36 | MP2C | Mx | -.012 | 4.25 |
| 37 | MP1A | X | -8.517 | 1.25 |
| 38 | MP1A | Z | -14.752 | 1.25 |
| 39 | MP1A | Mx | .004 | 1.25 |
| 40 | MP1A | X | -8.517 | 3.25 |
| 41 | MP1A | Z | -14.752 | 3.25 |
| 42 | MP1A | Mx | .004 | 3.25 |
| 43 | MP1B | X | -8.517 | 1.25 |
| 44 | MP1B | Z | -14.752 | 1.25 |
| 45 | MP1B | Mx | .004 | 1.25 |
| 46 | MP1B | X | -8.517 | 3.25 |
| 47 | MP1B | Z | -14.752 | 3.25 |
| 48 | MP1B | Mx | .004 | 3.25 |
| 49 | MP1C | X | -4.383 | 1.25 |
| 50 | MP1C | Z | -7.591 | 1.25 |
| 51 | MP1C | Mx | -.004 | 1.25 |
| 52 | MP1C | X | -4.383 | 3.25 |

## Member Point Loads (BLC 26 : Antenna Wi (330 Deg)) (Continued)

| | Member Label | Direction | Magnitude[lb,k-ft] | Location[ft,%] |
|---|---|---|---|---|
| 53 | MP1C | Z | -7.591 | 3.25 |
| 54 | MP1C | Mx | -.004 | 3.25 |
| 55 | OVP | X | -16.281 | 1 |
| 56 | OVP | Z | -28.199 | 1 |
| 57 | OVP | Mx | 0 | 1 |
| 58 | MP2A | X | -7.82 | 1.5 |
| 59 | MP2A | Z | -13.544 | 1.5 |
| 60 | MP2A | Mx | -.004 | 1.5 |
| 61 | MP2B | X | -7.82 | 1.5 |
| 62 | MP2B | Z | -13.544 | 1.5 |
| 63 | MP2B | Mx | -.004 | 1.5 |
| 64 | MP2C | X | -5.611 | 1.5 |
| 65 | MP2C | Z | -9.718 | 1.5 |
| 66 | MP2C | Mx | .006 | 1.5 |
| 67 | MP3A | X | -7.932 | 1.5 |
| 68 | MP3A | Z | -13.739 | 1.5 |
| 69 | MP3A | Mx | -.004 | 1.5 |
| 70 | MP3B | X | -7.932 | 1.5 |
| 71 | MP3B | Z | -13.739 | 1.5 |
| 72 | MP3B | Mx | -.004 | 1.5 |
| 73 | MP3C | X | -6.06 | 1.5 |
| 74 | MP3C | Z | -10.496 | 1.5 |
| 75 | MP3C | Mx | .006 | 1.5 |
| 76 | MP4A | X | -17.328 | .25 |
| 77 | MP4A | Z | -30.013 | .25 |
| 78 | MP4A | Mx | .009 | .25 |
| 79 | MP4A | X | -17.328 | 4.25 |
| 80 | MP4A | Z | -30.013 | 4.25 |
| 81 | MP4A | Mx | .009 | 4.25 |
| 82 | MP4B | X | -17.328 | .25 |
| 83 | MP4B | Z | -30.013 | .25 |
| 84 | MP4B | Mx | .009 | .25 |
| 85 | MP4B | X | -17.328 | 4.25 |
| 86 | MP4B | Z | -30.013 | 4.25 |
| 87 | MP4B | Mx | .009 | 4.25 |
| 88 | MP4C | X | -13.161 | .25 |
| 89 | MP4C | Z | -22.796 | .25 |
| 90 | MP4C | Mx | -.013 | .25 |
| 91 | MP4C | X | -13.161 | 4.25 |
| 92 | MP4C | Z | -22.796 | 4.25 |
| 93 | MP4C | Mx | -.013 | 4.25 |
| 94 | MP2A | X | -4.506 | 4 |
| 95 | MP2A | Z | -7.804 | 4 |
| 96 | MP2A | Mx | -.002 | 4 |
| 97 | MP2B | X | -4.506 | 4 |
| 98 | MP2B | Z | -7.804 | 4 |
| 99 | MP2B | Mx | -.002 | 4 |
| 100 | MP2C | X | -2.965 | 4 |
| 101 | MP2C | Z | -5.135 | 4 |
| 102 | MP2C | Mx | .003 | 4 |

## Member Point Loads (BLC 27 : Antenna Wm (0 Deg))

| | Member Label | Direction | Magnitude[lb,k-ft] | Location[ft,%] |
|---|---|---|---|---|
| 1 | MP2A | X | 0 | .25 |
| 2 | MP2A | Z | -6.898 | .25 |
| 3 | MP2A | Mx | .004 | .25 |
| 4 | MP2A | X | 0 | 4.25 |
| 5 | MP2A | Z | -6.898 | 4.25 |
| 6 | MP2A | Mx | .004 | 4.25 |
| 7 | MP2B | X | 0 | .25 |
| 8 | MP2B | Z | -3.945 | .25 |
| 9 | MP2B | Mx | .000558 | .25 |
| 10 | MP2B | X | 0 | 4.25 |
| 11 | MP2B | Z | -3.945 | 4.25 |
| 12 | MP2B | Mx | .000558 | 4.25 |
| 13 | MP2C | X | 0 | .25 |
| 14 | MP2C | Z | -3.945 | .25 |
| 15 | MP2C | Mx | -.003 | .25 |
| 16 | MP2C | X | 0 | 4.25 |
| 17 | MP2C | Z | -3.945 | 4.25 |
| 18 | MP2C | Mx | -.003 | 4.25 |
| 19 | MP2A | X | 0 | .25 |
| 20 | MP2A | Z | -10.227 | .25 |
| 21 | MP2A | Mx | -.006 | .25 |
| 22 | MP2A | X | 0 | 4.25 |
| 23 | MP2A | Z | -10.227 | 4.25 |
| 24 | MP2A | Mx | -.006 | 4.25 |
| 25 | MP2B | X | 0 | .25 |
| 26 | MP2B | Z | -7.646 | .25 |
| 27 | MP2B | Mx | .006 | .25 |
| 28 | MP2B | X | 0 | 4.25 |
| 29 | MP2B | Z | -7.646 | 4.25 |
| 30 | MP2B | Mx | .006 | 4.25 |
| 31 | MP2C | X | 0 | .25 |
| 32 | MP2C | Z | -7.646 | .25 |
| 33 | MP2C | Mx | -.001 | .25 |
| 34 | MP2C | X | 0 | 4.25 |
| 35 | MP2C | Z | -7.646 | 4.25 |
| 36 | MP2C | Mx | -.001 | 4.25 |
| 37 | MP1A | X | 0 | 1.25 |
| 38 | MP1A | Z | -4.98 | 1.25 |
| 39 | MP1A | Mx | 0 | 1.25 |
| 40 | MP1A | X | 0 | 3.25 |
| 41 | MP1A | Z | -4.98 | 3.25 |
| 42 | MP1A | Mx | 0 | 3.25 |
| 43 | MP1B | X | 0 | 1.25 |
| 44 | MP1B | Z | -2.531 | 1.25 |
| 45 | MP1B | Mx | .001 | 1.25 |
| 46 | MP1B | X | 0 | 3.25 |
| 47 | MP1B | Z | -2.531 | 3.25 |
| 48 | MP1B | Mx | .001 | 3.25 |
| 49 | MP1C | X | 0 | 1.25 |
| 50 | MP1C | Z | -2.531 | 1.25 |
| 51 | MP1C | Mx | -.001 | 1.25 |
| 52 | MP1C | X | 0 | 3.25 |

## Member Point Loads (BLC 27 : Antenna Wm (0 Deg)) (Continued)

| | Member Label | Direction | Magnitude[lb,k-ft] | Location[ft,%] |
|---|---|---|---|---|
| 53 | MP1C | Z | -2.531 | 3.25 |
| 54 | MP1C | Mx | -.001 | 3.25 |
| 55 | OVP | X | 0 | 1 |
| 56 | OVP | Z | -8.055 | 1 |
| 57 | OVP | Mx | 0 | 1 |
| 58 | MP2A | X | 0 | 1.5 |
| 59 | MP2A | Z | -4.751 | 1.5 |
| 60 | MP2A | Mx | 0 | 1.5 |
| 61 | MP2B | X | 0 | 1.5 |
| 62 | MP2B | Z | -3.356 | 1.5 |
| 63 | MP2B | Mx | -.001 | 1.5 |
| 64 | MP2C | X | 0 | 1.5 |
| 65 | MP2C | Z | -3.356 | 1.5 |
| 66 | MP2C | Mx | .001 | 1.5 |
| 67 | MP3A | X | 0 | 1.5 |
| 68 | MP3A | Z | -4.751 | 1.5 |
| 69 | MP3A | Mx | 0 | 1.5 |
| 70 | MP3B | X | 0 | 1.5 |
| 71 | MP3B | Z | -3.57 | 1.5 |
| 72 | MP3B | Mx | -.002 | 1.5 |
| 73 | MP3C | X | 0 | 1.5 |
| 74 | MP3C | Z | -3.57 | 1.5 |
| 75 | MP3C | Mx | .002 | 1.5 |
| 76 | MP4A | X | 0 | .25 |
| 77 | MP4A | Z | -11.726 | .25 |
| 78 | MP4A | Mx | 0 | .25 |
| 79 | MP4A | X | 0 | 4.25 |
| 80 | MP4A | Z | -11.726 | 4.25 |
| 81 | MP4A | Mx | 0 | 4.25 |
| 82 | MP4B | X | 0 | .25 |
| 83 | MP4B | Z | -8.782 | .25 |
| 84 | MP4B | Mx | .004 | .25 |
| 85 | MP4B | X | 0 | 4.25 |
| 86 | MP4B | Z | -8.782 | 4.25 |
| 87 | MP4B | Mx | .004 | 4.25 |
| 88 | MP4C | X | 0 | .25 |
| 89 | MP4C | Z | -8.782 | .25 |
| 90 | MP4C | Mx | -.004 | .25 |
| 91 | MP4C | X | 0 | 4.25 |
| 92 | MP4C | Z | -8.782 | 4.25 |
| 93 | MP4C | Mx | -.004 | 4.25 |
| 94 | MP2A | X | 0 | 4 |
| 95 | MP2A | Z | -1.829 | 4 |
| 96 | MP2A | Mx | 0 | 4 |
| 97 | MP2B | X | 0 | 4 |
| 98 | MP2B | Z | -1.105 | 4 |
| 99 | MP2B | Mx | -.000478 | 4 |
| 100 | MP2C | X | 0 | 4 |
| 101 | MP2C | Z | -1.105 | 4 |
| 102 | MP2C | Mx | .000478 | 4 |

## Member Point Loads (BLC 28 : Antenna Wm (30 Deg))

| | Member Label | Direction | Magnitude[lb,k-ft] | Location[ft,%] |
|---|---|---|---|---|
| 1 | MP2A | X | 2.957 | .25 |
| 2 | MP2A | Z | -5.122 | .25 |
| 3 | MP2A | Mx | .002 | .25 |
| 4 | MP2A | X | 2.957 | 4.25 |
| 5 | MP2A | Z | -5.122 | 4.25 |
| 6 | MP2A | Mx | .002 | 4.25 |
| 7 | MP2B | X | 1.48 | .25 |
| 8 | MP2B | Z | -2.564 | .25 |
| 9 | MP2B | Mx | .001 | .25 |
| 10 | MP2B | X | 1.48 | 4.25 |
| 11 | MP2B | Z | -2.564 | 4.25 |
| 12 | MP2B | Mx | .001 | 4.25 |
| 13 | MP2C | X | 2.957 | .25 |
| 14 | MP2C | Z | -5.122 | .25 |
| 15 | MP2C | Mx | -.004 | .25 |
| 16 | MP2C | X | 2.957 | 4.25 |
| 17 | MP2C | Z | -5.122 | 4.25 |
| 18 | MP2C | Mx | -.004 | 4.25 |
| 19 | MP2A | X | 4.683 | .25 |
| 20 | MP2A | Z | -8.112 | .25 |
| 21 | MP2A | Mx | -.007 | .25 |
| 22 | MP2A | X | 4.683 | 4.25 |
| 23 | MP2A | Z | -8.112 | 4.25 |
| 24 | MP2A | Mx | -.007 | 4.25 |
| 25 | MP2B | X | 3.393 | .25 |
| 26 | MP2B | Z | -5.877 | .25 |
| 27 | MP2B | Mx | .003 | .25 |
| 28 | MP2B | X | 3.393 | 4.25 |
| 29 | MP2B | Z | -5.877 | 4.25 |
| 30 | MP2B | Mx | .003 | 4.25 |
| 31 | MP2C | X | 4.683 | .25 |
| 32 | MP2C | Z | -8.112 | .25 |
| 33 | MP2C | Mx | .002 | .25 |
| 34 | MP2C | X | 4.683 | 4.25 |
| 35 | MP2C | Z | -8.112 | 4.25 |
| 36 | MP2C | Mx | .002 | 4.25 |
| 37 | MP1A | X | 2.082 | 1.25 |
| 38 | MP1A | Z | -3.606 | 1.25 |
| 39 | MP1A | Mx | -.001 | 1.25 |
| 40 | MP1A | X | 2.082 | 3.25 |
| 41 | MP1A | Z | -3.606 | 3.25 |
| 42 | MP1A | Mx | -.001 | 3.25 |
| 43 | MP1B | X | .858 | 1.25 |
| 44 | MP1B | Z | -1.485 | 1.25 |
| 45 | MP1B | Mx | .000858 | 1.25 |
| 46 | MP1B | X | .858 | 3.25 |
| 47 | MP1B | Z | -1.485 | 3.25 |
| 48 | MP1B | Mx | .000858 | 3.25 |
| 49 | MP1C | X | 2.082 | 1.25 |
| 50 | MP1C | Z | -3.606 | 1.25 |
| 51 | MP1C | Mx | -.001 | 1.25 |
| 52 | MP1C | X | 2.082 | 3.25 |

## Member Point Loads (BLC 28 : Antenna Wm (30 Deg)) (Continued)

| | Member Label | Direction | Magnitude[lb,k-ft] | Location[ft,%] |
|---|---|---|---|---|
| 53 | MP1C | Z | -3.606 | 3.25 |
| 54 | MP1C | Mx | -.001 | 3.25 |
| 55 | OVP | X | 3.786 | 1 |
| 56 | OVP | Z | -6.557 | 1 |
| 57 | OVP | Mx | 0 | 1 |
| 58 | MP2A | X | 2.143 | 1.5 |
| 59 | MP2A | Z | -3.712 | 1.5 |
| 60 | MP2A | Mx | .001 | 1.5 |
| 61 | MP2B | X | 1.445 | 1.5 |
| 62 | MP2B | Z | -2.503 | 1.5 |
| 63 | MP2B | Mx | -.001 | 1.5 |
| 64 | MP2C | X | 2.143 | 1.5 |
| 65 | MP2C | Z | -3.712 | 1.5 |
| 66 | MP2C | Mx | .001 | 1.5 |
| 67 | MP3A | X | 2.179 | 1.5 |
| 68 | MP3A | Z | -3.774 | 1.5 |
| 69 | MP3A | Mx | .001 | 1.5 |
| 70 | MP3B | X | 1.588 | 1.5 |
| 71 | MP3B | Z | -2.751 | 1.5 |
| 72 | MP3B | Mx | -.002 | 1.5 |
| 73 | MP3C | X | 2.179 | 1.5 |
| 74 | MP3C | Z | -3.774 | 1.5 |
| 75 | MP3C | Mx | .001 | 1.5 |
| 76 | MP4A | X | 5.372 | .25 |
| 77 | MP4A | Z | -9.305 | .25 |
| 78 | MP4A | Mx | -.003 | .25 |
| 79 | MP4A | X | 5.372 | 4.25 |
| 80 | MP4A | Z | -9.305 | 4.25 |
| 81 | MP4A | Mx | -.003 | 4.25 |
| 82 | MP4B | X | 3.9 | .25 |
| 83 | MP4B | Z | -6.756 | .25 |
| 84 | MP4B | Mx | .004 | .25 |
| 85 | MP4B | X | 3.9 | 4.25 |
| 86 | MP4B | Z | -6.756 | 4.25 |
| 87 | MP4B | Mx | .004 | 4.25 |
| 88 | MP4C | X | 5.372 | .25 |
| 89 | MP4C | Z | -9.305 | .25 |
| 90 | MP4C | Mx | -.003 | .25 |
| 91 | MP4C | X | 5.372 | 4.25 |
| 92 | MP4C | Z | -9.305 | 4.25 |
| 93 | MP4C | Mx | -.003 | 4.25 |
| 94 | MP2A | X | .794 | 4 |
| 95 | MP2A | Z | -1.375 | 4 |
| 96 | MP2A | Mx | .000397 | 4 |
| 97 | MP2B | X | .432 | 4 |
| 98 | MP2B | Z | -.748 | 4 |
| 99 | MP2B | Mx | -.000432 | 4 |
| 100 | MP2C | X | .794 | 4 |
| 101 | MP2C | Z | -1.375 | 4 |
| 102 | MP2C | Mx | .000397 | 4 |

## Member Point Loads (BLC 29 : Antenna Wm (60 Deg))

| | Member Label | Direction | Magnitude[lb,k-ft] | Location[ft,%] |
|---|---|---|---|---|
| 1 | MP2A | X | 3.416 | .25 |
| 2 | MP2A | Z | -1.972 | .25 |
| 3 | MP2A | Mx | -.000558 | .25 |
| 4 | MP2A | X | 3.416 | 4.25 |
| 5 | MP2A | Z | -1.972 | 4.25 |
| 6 | MP2A | Mx | -.000558 | 4.25 |
| 7 | MP2B | X | 3.416 | .25 |
| 8 | MP2B | Z | -1.972 | .25 |
| 9 | MP2B | Mx | .003 | .25 |
| 10 | MP2B | X | 3.416 | 4.25 |
| 11 | MP2B | Z | -1.972 | 4.25 |
| 12 | MP2B | Mx | .003 | 4.25 |
| 13 | MP2C | X | 5.974 | .25 |
| 14 | MP2C | Z | -3.449 | .25 |
| 15 | MP2C | Mx | -.004 | .25 |
| 16 | MP2C | X | 5.974 | 4.25 |
| 17 | MP2C | Z | -3.449 | 4.25 |
| 18 | MP2C | Mx | -.004 | 4.25 |
| 19 | MP2A | X | 6.622 | .25 |
| 20 | MP2A | Z | -3.823 | .25 |
| 21 | MP2A | Mx | -.006 | .25 |
| 22 | MP2A | X | 6.622 | 4.25 |
| 23 | MP2A | Z | -3.823 | 4.25 |
| 24 | MP2A | Mx | -.006 | 4.25 |
| 25 | MP2B | X | 6.622 | .25 |
| 26 | MP2B | Z | -3.823 | .25 |
| 27 | MP2B | Mx | .001 | .25 |
| 28 | MP2B | X | 6.622 | 4.25 |
| 29 | MP2B | Z | -3.823 | 4.25 |
| 30 | MP2B | Mx | .001 | 4.25 |
| 31 | MP2C | X | 8.857 | .25 |
| 32 | MP2C | Z | -5.113 | .25 |
| 33 | MP2C | Mx | .006 | .25 |
| 34 | MP2C | X | 8.857 | 4.25 |
| 35 | MP2C | Z | -5.113 | 4.25 |
| 36 | MP2C | Mx | .006 | 4.25 |
| 37 | MP1A | X | 2.192 | 1.25 |
| 38 | MP1A | Z | -1.266 | 1.25 |
| 39 | MP1A | Mx | -.001 | 1.25 |
| 40 | MP1A | X | 2.192 | 3.25 |
| 41 | MP1A | Z | -1.266 | 3.25 |
| 42 | MP1A | Mx | -.001 | 3.25 |
| 43 | MP1B | X | 2.192 | 1.25 |
| 44 | MP1B | Z | -1.266 | 1.25 |
| 45 | MP1B | Mx | .001 | 1.25 |
| 46 | MP1B | X | 2.192 | 3.25 |
| 47 | MP1B | Z | -1.266 | 3.25 |
| 48 | MP1B | Mx | .001 | 3.25 |
| 49 | MP1C | X | 4.313 | 1.25 |
| 50 | MP1C | Z | -2.49 | 1.25 |
| 51 | MP1C | Mx | 0 | 1.25 |
| 52 | MP1C | X | 4.313 | 3.25 |

## Member Point Loads (BLC 29 : Antenna Wm (60 Deg)) (Continued)

| | Member Label | Direction | Magnitude[lb,k-ft] | Location[ft,%] |
|---|---|---|---|---|
| 53 | MP1C | Z | -2.49 | 3.25 |
| 54 | MP1C | Mx | 0 | 3.25 |
| 55 | OVP | X | 5.721 | 1 |
| 56 | OVP | Z | -3.303 | 1 |
| 57 | OVP | Mx | 0 | 1 |
| 58 | MP2A | X | 2.906 | 1.5 |
| 59 | MP2A | Z | -1.678 | 1.5 |
| 60 | MP2A | Mx | .001 | 1.5 |
| 61 | MP2B | X | 2.906 | 1.5 |
| 62 | MP2B | Z | -1.678 | 1.5 |
| 63 | MP2B | Mx | -.001 | 1.5 |
| 64 | MP2C | X | 4.115 | 1.5 |
| 65 | MP2C | Z | -2.376 | 1.5 |
| 66 | MP2C | Mx | 0 | 1.5 |
| 67 | MP3A | X | 3.092 | 1.5 |
| 68 | MP3A | Z | -1.785 | 1.5 |
| 69 | MP3A | Mx | .002 | 1.5 |
| 70 | MP3B | X | 3.092 | 1.5 |
| 71 | MP3B | Z | -1.785 | 1.5 |
| 72 | MP3B | Mx | -.002 | 1.5 |
| 73 | MP3C | X | 4.115 | 1.5 |
| 74 | MP3C | Z | -2.376 | 1.5 |
| 75 | MP3C | Mx | 0 | 1.5 |
| 76 | MP4A | X | 7.605 | .25 |
| 77 | MP4A | Z | -4.391 | .25 |
| 78 | MP4A | Mx | -.004 | .25 |
| 79 | MP4A | X | 7.605 | 4.25 |
| 80 | MP4A | Z | -4.391 | 4.25 |
| 81 | MP4A | Mx | -.004 | 4.25 |
| 82 | MP4B | X | 7.605 | .25 |
| 83 | MP4B | Z | -4.391 | .25 |
| 84 | MP4B | Mx | .004 | .25 |
| 85 | MP4B | X | 7.605 | 4.25 |
| 86 | MP4B | Z | -4.391 | 4.25 |
| 87 | MP4B | Mx | .004 | 4.25 |
| 88 | MP4C | X | 10.155 | .25 |
| 89 | MP4C | Z | -5.863 | .25 |
| 90 | MP4C | Mx | 0 | .25 |
| 91 | MP4C | X | 10.155 | 4.25 |
| 92 | MP4C | Z | -5.863 | 4.25 |
| 93 | MP4C | Mx | 0 | 4.25 |
| 94 | MP2A | X | .957 | 4 |
| 95 | MP2A | Z | -.553 | 4 |
| 96 | MP2A | Mx | .000478 | 4 |
| 97 | MP2B | X | .957 | 4 |
| 98 | MP2B | Z | -.553 | 4 |
| 99 | MP2B | Mx | -.000479 | 4 |
| 100 | MP2C | X | 1.584 | 4 |
| 101 | MP2C | Z | -.915 | 4 |
| 102 | MP2C | Mx | 0 | 4 |

## Member Point Loads (BLC 30 : Antenna Wm (90 Deg))

| | Member Label | Direction | Magnitude[lb,k-ft] | Location[ft,%] |
|---|---|---|---|---|
| 1 | MP2A | X | 2.96 | .25 |
| 2 | MP2A | Z | 0 | .25 |
| 3 | MP2A | Mx | -.001 | .25 |
| 4 | MP2A | X | 2.96 | 4.25 |
| 5 | MP2A | Z | 0 | 4.25 |
| 6 | MP2A | Mx | -.001 | 4.25 |
| 7 | MP2B | X | 5.914 | .25 |
| 8 | MP2B | Z | 0 | .25 |
| 9 | MP2B | Mx | .004 | .25 |
| 10 | MP2B | X | 5.914 | 4.25 |
| 11 | MP2B | Z | 0 | 4.25 |
| 12 | MP2B | Mx | .004 | 4.25 |
| 13 | MP2C | X | 5.914 | .25 |
| 14 | MP2C | Z | 0 | .25 |
| 15 | MP2C | Mx | -.002 | .25 |
| 16 | MP2C | X | 5.914 | 4.25 |
| 17 | MP2C | Z | 0 | 4.25 |
| 18 | MP2C | Mx | -.002 | 4.25 |
| 19 | MP2A | X | 6.786 | .25 |
| 20 | MP2A | Z | 0 | .25 |
| 21 | MP2A | Mx | -.003 | .25 |
| 22 | MP2A | X | 6.786 | 4.25 |
| 23 | MP2A | Z | 0 | 4.25 |
| 24 | MP2A | Mx | -.003 | 4.25 |
| 25 | MP2B | X | 9.367 | .25 |
| 26 | MP2B | Z | 0 | .25 |
| 27 | MP2B | Mx | -.002 | .25 |
| 28 | MP2B | X | 9.367 | 4.25 |
| 29 | MP2B | Z | 0 | 4.25 |
| 30 | MP2B | Mx | -.002 | 4.25 |
| 31 | MP2C | X | 9.367 | .25 |
| 32 | MP2C | Z | 0 | .25 |
| 33 | MP2C | Mx | .007 | .25 |
| 34 | MP2C | X | 9.367 | 4.25 |
| 35 | MP2C | Z | 0 | 4.25 |
| 36 | MP2C | Mx | .007 | 4.25 |
| 37 | MP1A | X | 1.715 | 1.25 |
| 38 | MP1A | Z | 0 | 1.25 |
| 39 | MP1A | Mx | -.000858 | 1.25 |
| 40 | MP1A | X | 1.715 | 3.25 |
| 41 | MP1A | Z | 0 | 3.25 |
| 42 | MP1A | Mx | -.000858 | 3.25 |
| 43 | MP1B | X | 4.164 | 1.25 |
| 44 | MP1B | Z | 0 | 1.25 |
| 45 | MP1B | Mx | .001 | 1.25 |
| 46 | MP1B | X | 4.164 | 3.25 |
| 47 | MP1B | Z | 0 | 3.25 |
| 48 | MP1B | Mx | .001 | 3.25 |
| 49 | MP1C | X | 4.164 | 1.25 |
| 50 | MP1C | Z | 0 | 1.25 |
| 51 | MP1C | Mx | .001 | 1.25 |
| 52 | MP1C | X | 4.164 | 3.25 |

## Member Point Loads (BLC 30 : Antenna Wm (90 Deg)) (Continued)

| | Member Label | Direction | Magnitude[lb,k-ft] | Location[ft,%] |
|---|---|---|---|---|
| 53 | MP1C | Z | 0 | 3.25 |
| 54 | MP1C | Mx | .001 | 3.25 |
| 55 | OVP | X | 6.123 | 1 |
| 56 | OVP | Z | 0 | 1 |
| 57 | OVP | Mx | 0 | 1 |
| 58 | MP2A | X | 2.89 | 1.5 |
| 59 | MP2A | Z | 0 | 1.5 |
| 60 | MP2A | Mx | .001 | 1.5 |
| 61 | MP2B | X | 4.286 | 1.5 |
| 62 | MP2B | Z | 0 | 1.5 |
| 63 | MP2B | Mx | -.001 | 1.5 |
| 64 | MP2C | X | 4.286 | 1.5 |
| 65 | MP2C | Z | 0 | 1.5 |
| 66 | MP2C | Mx | -.001 | 1.5 |
| 67 | MP3A | X | 3.176 | 1.5 |
| 68 | MP3A | Z | 0 | 1.5 |
| 69 | MP3A | Mx | .002 | 1.5 |
| 70 | MP3B | X | 4.358 | 1.5 |
| 71 | MP3B | Z | 0 | 1.5 |
| 72 | MP3B | Mx | -.001 | 1.5 |
| 73 | MP3C | X | 4.358 | 1.5 |
| 74 | MP3C | Z | 0 | 1.5 |
| 75 | MP3C | Mx | -.001 | 1.5 |
| 76 | MP4A | X | 7.801 | .25 |
| 77 | MP4A | Z | 0 | .25 |
| 78 | MP4A | Mx | -.004 | .25 |
| 79 | MP4A | X | 7.801 | 4.25 |
| 80 | MP4A | Z | 0 | 4.25 |
| 81 | MP4A | Mx | -.004 | 4.25 |
| 82 | MP4B | X | 10.745 | .25 |
| 83 | MP4B | Z | 0 | .25 |
| 84 | MP4B | Mx | .003 | .25 |
| 85 | MP4B | X | 10.745 | 4.25 |
| 86 | MP4B | Z | 0 | 4.25 |
| 87 | MP4B | Mx | .003 | 4.25 |
| 88 | MP4C | X | 10.745 | .25 |
| 89 | MP4C | Z | 0 | .25 |
| 90 | MP4C | Mx | .003 | .25 |
| 91 | MP4C | X | 10.745 | 4.25 |
| 92 | MP4C | Z | 0 | 4.25 |
| 93 | MP4C | Mx | .003 | 4.25 |
| 94 | MP2A | X | .864 | 4 |
| 95 | MP2A | Z | 0 | 4 |
| 96 | MP2A | Mx | .000432 | 4 |
| 97 | MP2B | X | 1.588 | 4 |
| 98 | MP2B | Z | 0 | 4 |
| 99 | MP2B | Mx | -.000397 | 4 |
| 100 | MP2C | X | 1.588 | 4 |
| 101 | MP2C | Z | 0 | 4 |
| 102 | MP2C | Mx | -.000397 | 4 |

## Member Point Loads (BLC 31 : Antenna Wm (120 Deg))

| | Member Label | Direction | Magnitude[lb,k-ft] | Location[ft,%] |
|---|---|---|---|---|
| 1 | MP2A | X | 3.416 | .25 |
| 2 | MP2A | Z | 1.972 | .25 |
| 3 | MP2A | Mx | -.003 | .25 |
| 4 | MP2A | X | 3.416 | 4.25 |
| 5 | MP2A | Z | 1.972 | 4.25 |
| 6 | MP2A | Mx | -.003 | 4.25 |
| 7 | MP2B | X | 5.974 | .25 |
| 8 | MP2B | Z | 3.449 | .25 |
| 9 | MP2B | Mx | .004 | .25 |
| 10 | MP2B | X | 5.974 | 4.25 |
| 11 | MP2B | Z | 3.449 | 4.25 |
| 12 | MP2B | Mx | .004 | 4.25 |
| 13 | MP2C | X | 3.416 | .25 |
| 14 | MP2C | Z | 1.972 | .25 |
| 15 | MP2C | Mx | .000557 | .25 |
| 16 | MP2C | X | 3.416 | 4.25 |
| 17 | MP2C | Z | 1.972 | 4.25 |
| 18 | MP2C | Mx | .000557 | 4.25 |
| 19 | MP2A | X | 6.622 | .25 |
| 20 | MP2A | Z | 3.823 | .25 |
| 21 | MP2A | Mx | -.001 | .25 |
| 22 | MP2A | X | 6.622 | 4.25 |
| 23 | MP2A | Z | 3.823 | 4.25 |
| 24 | MP2A | Mx | -.001 | 4.25 |
| 25 | MP2B | X | 8.857 | .25 |
| 26 | MP2B | Z | 5.113 | .25 |
| 27 | MP2B | Mx | -.006 | .25 |
| 28 | MP2B | X | 8.857 | 4.25 |
| 29 | MP2B | Z | 5.113 | 4.25 |
| 30 | MP2B | Mx | -.006 | 4.25 |
| 31 | MP2C | X | 6.622 | .25 |
| 32 | MP2C | Z | 3.823 | .25 |
| 33 | MP2C | Mx | .006 | .25 |
| 34 | MP2C | X | 6.622 | 4.25 |
| 35 | MP2C | Z | 3.823 | 4.25 |
| 36 | MP2C | Mx | .006 | 4.25 |
| 37 | MP1A | X | 2.192 | 1.25 |
| 38 | MP1A | Z | 1.266 | 1.25 |
| 39 | MP1A | Mx | -.001 | 1.25 |
| 40 | MP1A | X | 2.192 | 3.25 |
| 41 | MP1A | Z | 1.266 | 3.25 |
| 42 | MP1A | Mx | -.001 | 3.25 |
| 43 | MP1B | X | 4.313 | 1.25 |
| 44 | MP1B | Z | 2.49 | 1.25 |
| 45 | MP1B | Mx | 0 | 1.25 |
| 46 | MP1B | X | 4.313 | 3.25 |
| 47 | MP1B | Z | 2.49 | 3.25 |
| 48 | MP1B | Mx | 0 | 3.25 |
| 49 | MP1C | X | 2.192 | 1.25 |
| 50 | MP1C | Z | 1.266 | 1.25 |
| 51 | MP1C | Mx | .001 | 1.25 |
| 52 | MP1C | X | 2.192 | 3.25 |

## Member Point Loads (BLC 31 : Antenna Wm (120 Deg)) (Continued)

| | Member Label | Direction | Magnitude[lb,k-ft] | Location[ft,%] |
|---|---|---|---|---|
| 53 | MP1C | Z | 1.266 | 3.25 |
| 54 | MP1C | Mx | .001 | 3.25 |
| 55 | OVP | X | 5.721 | 1 |
| 56 | OVP | Z | 3.303 | 1 |
| 57 | OVP | Mx | 0 | 1 |
| 58 | MP2A | X | 2.906 | 1.5 |
| 59 | MP2A | Z | 1.678 | 1.5 |
| 60 | MP2A | Mx | .001 | 1.5 |
| 61 | MP2B | X | 4.115 | 1.5 |
| 62 | MP2B | Z | 2.376 | 1.5 |
| 63 | MP2B | Mx | 0 | 1.5 |
| 64 | MP2C | X | 2.906 | 1.5 |
| 65 | MP2C | Z | 1.678 | 1.5 |
| 66 | MP2C | Mx | -.001 | 1.5 |
| 67 | MP3A | X | 3.092 | 1.5 |
| 68 | MP3A | Z | 1.785 | 1.5 |
| 69 | MP3A | Mx | .002 | 1.5 |
| 70 | MP3B | X | 4.115 | 1.5 |
| 71 | MP3B | Z | 2.376 | 1.5 |
| 72 | MP3B | Mx | 0 | 1.5 |
| 73 | MP3C | X | 3.092 | 1.5 |
| 74 | MP3C | Z | 1.785 | 1.5 |
| 75 | MP3C | Mx | -.002 | 1.5 |
| 76 | MP4A | X | 7.605 | .25 |
| 77 | MP4A | Z | 4.391 | .25 |
| 78 | MP4A | Mx | -.004 | .25 |
| 79 | MP4A | X | 7.605 | 4.25 |
| 80 | MP4A | Z | 4.391 | 4.25 |
| 81 | MP4A | Mx | -.004 | 4.25 |
| 82 | MP4B | X | 10.155 | .25 |
| 83 | MP4B | Z | 5.863 | .25 |
| 84 | MP4B | Mx | 0 | .25 |
| 85 | MP4B | X | 10.155 | 4.25 |
| 86 | MP4B | Z | 5.863 | 4.25 |
| 87 | MP4B | Mx | 0 | 4.25 |
| 88 | MP4C | X | 7.605 | .25 |
| 89 | MP4C | Z | 4.391 | .25 |
| 90 | MP4C | Mx | .004 | .25 |
| 91 | MP4C | X | 7.605 | 4.25 |
| 92 | MP4C | Z | 4.391 | 4.25 |
| 93 | MP4C | Mx | .004 | 4.25 |
| 94 | MP2A | X | .957 | 4 |
| 95 | MP2A | Z | .553 | 4 |
| 96 | MP2A | Mx | .000478 | 4 |
| 97 | MP2B | X | 1.584 | 4 |
| 98 | MP2B | Z | .915 | 4 |
| 99 | MP2B | Mx | 0 | 4 |
| 100 | MP2C | X | .957 | 4 |
| 101 | MP2C | Z | .553 | 4 |
| 102 | MP2C | Mx | -.000479 | 4 |

## Member Point Loads (BLC 32 : Antenna Wm (150 Deg))

| | Member Label | Direction | Magnitude[lb,k-ft] | Location[ft,%] |
|---|---|---|---|---|
| 1 | MP2A | X | 2.957 | .25 |
| 2 | MP2A | Z | 5.122 | .25 |
| 3 | MP2A | Mx | -.004 | .25 |
| 4 | MP2A | X | 2.957 | 4.25 |
| 5 | MP2A | Z | 5.122 | 4.25 |
| 6 | MP2A | Mx | -.004 | 4.25 |
| 7 | MP2B | X | 2.957 | .25 |
| 8 | MP2B | Z | 5.122 | .25 |
| 9 | MP2B | Mx | .002 | .25 |
| 10 | MP2B | X | 2.957 | 4.25 |
| 11 | MP2B | Z | 5.122 | 4.25 |
| 12 | MP2B | Mx | .002 | 4.25 |
| 13 | MP2C | X | 1.48 | .25 |
| 14 | MP2C | Z | 2.564 | .25 |
| 15 | MP2C | Mx | .001 | .25 |
| 16 | MP2C | X | 1.48 | 4.25 |
| 17 | MP2C | Z | 2.564 | 4.25 |
| 18 | MP2C | Mx | .001 | 4.25 |
| 19 | MP2A | X | 4.683 | .25 |
| 20 | MP2A | Z | 8.112 | .25 |
| 21 | MP2A | Mx | .002 | .25 |
| 22 | MP2A | X | 4.683 | 4.25 |
| 23 | MP2A | Z | 8.112 | 4.25 |
| 24 | MP2A | Mx | .002 | 4.25 |
| 25 | MP2B | X | 4.683 | .25 |
| 26 | MP2B | Z | 8.112 | .25 |
| 27 | MP2B | Mx | -.007 | .25 |
| 28 | MP2B | X | 4.683 | 4.25 |
| 29 | MP2B | Z | 8.112 | 4.25 |
| 30 | MP2B | Mx | -.007 | 4.25 |
| 31 | MP2C | X | 3.393 | .25 |
| 32 | MP2C | Z | 5.877 | .25 |
| 33 | MP2C | Mx | .003 | .25 |
| 34 | MP2C | X | 3.393 | 4.25 |
| 35 | MP2C | Z | 5.877 | 4.25 |
| 36 | MP2C | Mx | .003 | 4.25 |
| 37 | MP1A | X | 2.082 | 1.25 |
| 38 | MP1A | Z | 3.606 | 1.25 |
| 39 | MP1A | Mx | -.001 | 1.25 |
| 40 | MP1A | X | 2.082 | 3.25 |
| 41 | MP1A | Z | 3.606 | 3.25 |
| 42 | MP1A | Mx | -.001 | 3.25 |
| 43 | MP1B | X | 2.082 | 1.25 |
| 44 | MP1B | Z | 3.606 | 1.25 |
| 45 | MP1B | Mx | -.001 | 1.25 |
| 46 | MP1B | X | 2.082 | 3.25 |
| 47 | MP1B | Z | 3.606 | 3.25 |
| 48 | MP1B | Mx | -.001 | 3.25 |
| 49 | MP1C | X | .858 | 1.25 |
| 50 | MP1C | Z | 1.485 | 1.25 |
| 51 | MP1C | Mx | .000858 | 1.25 |
| 52 | MP1C | X | .858 | 3.25 |

## Member Point Loads (BLC 32 : Antenna Wm (150 Deg)) (Continued)

| | Member Label | Direction | Magnitude[lb,k-ft] | Location[ft,%] |
|---|---|---|---|---|
| 53 | MP1C | Z | 1.485 | 3.25 |
| 54 | MP1C | Mx | .000858 | 3.25 |
| 55 | OVP | X | 3.786 | 1 |
| 56 | OVP | Z | 6.557 | 1 |
| 57 | OVP | Mx | 0 | 1 |
| 58 | MP2A | X | 2.143 | 1.5 |
| 59 | MP2A | Z | 3.712 | 1.5 |
| 60 | MP2A | Mx | .001 | 1.5 |
| 61 | MP2B | X | 2.143 | 1.5 |
| 62 | MP2B | Z | 3.712 | 1.5 |
| 63 | MP2B | Mx | .001 | 1.5 |
| 64 | MP2C | X | 1.445 | 1.5 |
| 65 | MP2C | Z | 2.503 | 1.5 |
| 66 | MP2C | Mx | -.001 | 1.5 |
| 67 | MP3A | X | 2.179 | 1.5 |
| 68 | MP3A | Z | 3.774 | 1.5 |
| 69 | MP3A | Mx | .001 | 1.5 |
| 70 | MP3B | X | 2.179 | 1.5 |
| 71 | MP3B | Z | 3.774 | 1.5 |
| 72 | MP3B | Mx | .001 | 1.5 |
| 73 | MP3C | X | 1.588 | 1.5 |
| 74 | MP3C | Z | 2.751 | 1.5 |
| 75 | MP3C | Mx | -.002 | 1.5 |
| 76 | MP4A | X | 5.372 | .25 |
| 77 | MP4A | Z | 9.305 | .25 |
| 78 | MP4A | Mx | -.003 | .25 |
| 79 | MP4A | X | 5.372 | 4.25 |
| 80 | MP4A | Z | 9.305 | 4.25 |
| 81 | MP4A | Mx | -.003 | 4.25 |
| 82 | MP4B | X | 5.372 | .25 |
| 83 | MP4B | Z | 9.305 | .25 |
| 84 | MP4B | Mx | -.003 | .25 |
| 85 | MP4B | X | 5.372 | 4.25 |
| 86 | MP4B | Z | 9.305 | 4.25 |
| 87 | MP4B | Mx | -.003 | 4.25 |
| 88 | MP4C | X | 3.9 | .25 |
| 89 | MP4C | Z | 6.756 | .25 |
| 90 | MP4C | Mx | .004 | .25 |
| 91 | MP4C | X | 3.9 | 4.25 |
| 92 | MP4C | Z | 6.756 | 4.25 |
| 93 | MP4C | Mx | .004 | 4.25 |
| 94 | MP2A | X | .794 | 4 |
| 95 | MP2A | Z | 1.375 | 4 |
| 96 | MP2A | Mx | .000397 | 4 |
| 97 | MP2B | X | .794 | 4 |
| 98 | MP2B | Z | 1.375 | 4 |
| 99 | MP2B | Mx | .000397 | 4 |
| 100 | MP2C | X | .432 | 4 |
| 101 | MP2C | Z | .748 | 4 |
| 102 | MP2C | Mx | -.000432 | 4 |

## Member Point Loads (BLC 33 : Antenna Wm (180 Deg))

| | Member Label | Direction | Magnitude[lb,k-ft] | Location[ft,%] |
|---|---|---|---|---|
| 1 | MP2A | X | 0 | .25 |
| 2 | MP2A | Z | 6.898 | .25 |
| 3 | MP2A | Mx | -.004 | .25 |
| 4 | MP2A | X | 0 | 4.25 |
| 5 | MP2A | Z | 6.898 | 4.25 |
| 6 | MP2A | Mx | -.004 | 4.25 |
| 7 | MP2B | X | 0 | .25 |
| 8 | MP2B | Z | 3.945 | .25 |
| 9 | MP2B | Mx | -.000558 | .25 |
| 10 | MP2B | X | 0 | 4.25 |
| 11 | MP2B | Z | 3.945 | 4.25 |
| 12 | MP2B | Mx | -.000558 | 4.25 |
| 13 | MP2C | X | 0 | .25 |
| 14 | MP2C | Z | 3.945 | .25 |
| 15 | MP2C | Mx | .003 | .25 |
| 16 | MP2C | X | 0 | 4.25 |
| 17 | MP2C | Z | 3.945 | 4.25 |
| 18 | MP2C | Mx | .003 | 4.25 |
| 19 | MP2A | X | 0 | .25 |
| 20 | MP2A | Z | 10.227 | .25 |
| 21 | MP2A | Mx | .006 | .25 |
| 22 | MP2A | X | 0 | 4.25 |
| 23 | MP2A | Z | 10.227 | 4.25 |
| 24 | MP2A | Mx | .006 | 4.25 |
| 25 | MP2B | X | 0 | .25 |
| 26 | MP2B | Z | 7.646 | .25 |
| 27 | MP2B | Mx | -.006 | .25 |
| 28 | MP2B | X | 0 | 4.25 |
| 29 | MP2B | Z | 7.646 | 4.25 |
| 30 | MP2B | Mx | -.006 | 4.25 |
| 31 | MP2C | X | 0 | .25 |
| 32 | MP2C | Z | 7.646 | .25 |
| 33 | MP2C | Mx | .001 | .25 |
| 34 | MP2C | X | 0 | 4.25 |
| 35 | MP2C | Z | 7.646 | 4.25 |
| 36 | MP2C | Mx | .001 | 4.25 |
| 37 | MP1A | X | 0 | 1.25 |
| 38 | MP1A | Z | 4.98 | 1.25 |
| 39 | MP1A | Mx | 0 | 1.25 |
| 40 | MP1A | X | 0 | 3.25 |
| 41 | MP1A | Z | 4.98 | 3.25 |
| 42 | MP1A | Mx | 0 | 3.25 |
| 43 | MP1B | X | 0 | 1.25 |
| 44 | MP1B | Z | 2.531 | 1.25 |
| 45 | MP1B | Mx | -.001 | 1.25 |
| 46 | MP1B | X | 0 | 3.25 |
| 47 | MP1B | Z | 2.531 | 3.25 |
| 48 | MP1B | Mx | -.001 | 3.25 |
| 49 | MP1C | X | 0 | 1.25 |
| 50 | MP1C | Z | 2.531 | 1.25 |
| 51 | MP1C | Mx | .001 | 1.25 |
| 52 | MP1C | X | 0 | 3.25 |

## Member Point Loads (BLC 33 : Antenna Wm (180 Deg)) (Continued)

| | Member Label | Direction | Magnitude[lb,k-ft] | Location[ft,%] |
|---|---|---|---|---|
| 53 | MP1C | Z | 2.531 | 3.25 |
| 54 | MP1C | Mx | .001 | 3.25 |
| 55 | OVP | X | 0 | 1 |
| 56 | OVP | Z | 8.055 | 1 |
| 57 | OVP | Mx | 0 | 1 |
| 58 | MP2A | X | 0 | 1.5 |
| 59 | MP2A | Z | 4.751 | 1.5 |
| 60 | MP2A | Mx | 0 | 1.5 |
| 61 | MP2B | X | 0 | 1.5 |
| 62 | MP2B | Z | 3.356 | 1.5 |
| 63 | MP2B | Mx | .001 | 1.5 |
| 64 | MP2C | X | 0 | 1.5 |
| 65 | MP2C | Z | 3.356 | 1.5 |
| 66 | MP2C | Mx | -.001 | 1.5 |
| 67 | MP3A | X | 0 | 1.5 |
| 68 | MP3A | Z | 4.751 | 1.5 |
| 69 | MP3A | Mx | 0 | 1.5 |
| 70 | MP3B | X | 0 | 1.5 |
| 71 | MP3B | Z | 3.57 | 1.5 |
| 72 | MP3B | Mx | .002 | 1.5 |
| 73 | MP3C | X | 0 | 1.5 |
| 74 | MP3C | Z | 3.57 | 1.5 |
| 75 | MP3C | Mx | -.002 | 1.5 |
| 76 | MP4A | X | 0 | .25 |
| 77 | MP4A | Z | 11.726 | .25 |
| 78 | MP4A | Mx | 0 | .25 |
| 79 | MP4A | X | 0 | 4.25 |
| 80 | MP4A | Z | 11.726 | 4.25 |
| 81 | MP4A | Mx | 0 | 4.25 |
| 82 | MP4B | X | 0 | .25 |
| 83 | MP4B | Z | 8.782 | .25 |
| 84 | MP4B | Mx | -.004 | .25 |
| 85 | MP4B | X | 0 | 4.25 |
| 86 | MP4B | Z | 8.782 | 4.25 |
| 87 | MP4B | Mx | -.004 | 4.25 |
| 88 | MP4C | X | 0 | .25 |
| 89 | MP4C | Z | 8.782 | .25 |
| 90 | MP4C | Mx | .004 | .25 |
| 91 | MP4C | X | 0 | 4.25 |
| 92 | MP4C | Z | 8.782 | 4.25 |
| 93 | MP4C | Mx | .004 | 4.25 |
| 94 | MP2A | X | 0 | 4 |
| 95 | MP2A | Z | 1.829 | 4 |
| 96 | MP2A | Mx | 0 | 4 |
| 97 | MP2B | X | 0 | 4 |
| 98 | MP2B | Z | 1.105 | 4 |
| 99 | MP2B | Mx | .000478 | 4 |
| 100 | MP2C | X | 0 | 4 |
| 101 | MP2C | Z | 1.105 | 4 |
| 102 | MP2C | Mx | -.000478 | 4 |

## Member Point Loads (BLC 34 : Antenna Wm (210 Deg))

| | Member Label | Direction | Magnitude[lb,k-ft] | Location[ft,%] |
|---|---|---|---|---|
| 1 | MP2A | X | -2.957 | .25 |
| 2 | MP2A | Z | 5.122 | .25 |
| 3 | MP2A | Mx | -.002 | .25 |
| 4 | MP2A | X | -2.957 | 4.25 |
| 5 | MP2A | Z | 5.122 | 4.25 |
| 6 | MP2A | Mx | -.002 | 4.25 |
| 7 | MP2B | X | -1.48 | .25 |
| 8 | MP2B | Z | 2.564 | .25 |
| 9 | MP2B | Mx | -.001 | .25 |
| 10 | MP2B | X | -1.48 | 4.25 |
| 11 | MP2B | Z | 2.564 | 4.25 |
| 12 | MP2B | Mx | -.001 | 4.25 |
| 13 | MP2C | X | -2.957 | .25 |
| 14 | MP2C | Z | 5.122 | .25 |
| 15 | MP2C | Mx | .004 | .25 |
| 16 | MP2C | X | -2.957 | 4.25 |
| 17 | MP2C | Z | 5.122 | 4.25 |
| 18 | MP2C | Mx | .004 | 4.25 |
| 19 | MP2A | X | -4.683 | .25 |
| 20 | MP2A | Z | 8.112 | .25 |
| 21 | MP2A | Mx | .007 | .25 |
| 22 | MP2A | X | -4.683 | 4.25 |
| 23 | MP2A | Z | 8.112 | 4.25 |
| 24 | MP2A | Mx | .007 | 4.25 |
| 25 | MP2B | X | -3.393 | .25 |
| 26 | MP2B | Z | 5.877 | .25 |
| 27 | MP2B | Mx | -.003 | .25 |
| 28 | MP2B | X | -3.393 | 4.25 |
| 29 | MP2B | Z | 5.877 | 4.25 |
| 30 | MP2B | Mx | -.003 | 4.25 |
| 31 | MP2C | X | -4.683 | .25 |
| 32 | MP2C | Z | 8.112 | .25 |
| 33 | MP2C | Mx | -.002 | .25 |
| 34 | MP2C | X | -4.683 | 4.25 |
| 35 | MP2C | Z | 8.112 | 4.25 |
| 36 | MP2C | Mx | -.002 | 4.25 |
| 37 | MP1A | X | -2.082 | 1.25 |
| 38 | MP1A | Z | 3.606 | 1.25 |
| 39 | MP1A | Mx | .001 | 1.25 |
| 40 | MP1A | X | -2.082 | 3.25 |
| 41 | MP1A | Z | 3.606 | 3.25 |
| 42 | MP1A | Mx | .001 | 3.25 |
| 43 | MP1B | X | -.858 | 1.25 |
| 44 | MP1B | Z | 1.485 | 1.25 |
| 45 | MP1B | Mx | -.000858 | 1.25 |
| 46 | MP1B | X | -.858 | 3.25 |
| 47 | MP1B | Z | 1.485 | 3.25 |
| 48 | MP1B | Mx | -.000858 | 3.25 |
| 49 | MP1C | X | -2.082 | 1.25 |
| 50 | MP1C | Z | 3.606 | 1.25 |
| 51 | MP1C | Mx | .001 | 1.25 |
| 52 | MP1C | X | -2.082 | 3.25 |

## Member Point Loads (BLC 34 : Antenna Wm (210 Deg)) (Continued)

| | Member Label | Direction | Magnitude[lb,k-ft] | Location[ft,%] |
|---|---|---|---|---|
| 53 | MP1C | Z | 3.606 | 3.25 |
| 54 | MP1C | Mx | .001 | 3.25 |
| 55 | OVP | X | -3.786 | 1 |
| 56 | OVP | Z | 6.557 | 1 |
| 57 | OVP | Mx | 0 | 1 |
| 58 | MP2A | X | -2.143 | 1.5 |
| 59 | MP2A | Z | 3.712 | 1.5 |
| 60 | MP2A | Mx | -.001 | 1.5 |
| 61 | MP2B | X | -1.445 | 1.5 |
| 62 | MP2B | Z | 2.503 | 1.5 |
| 63 | MP2B | Mx | .001 | 1.5 |
| 64 | MP2C | X | -2.143 | 1.5 |
| 65 | MP2C | Z | 3.712 | 1.5 |
| 66 | MP2C | Mx | -.001 | 1.5 |
| 67 | MP3A | X | -2.179 | 1.5 |
| 68 | MP3A | Z | 3.774 | 1.5 |
| 69 | MP3A | Mx | -.001 | 1.5 |
| 70 | MP3B | X | -1.588 | 1.5 |
| 71 | MP3B | Z | 2.751 | 1.5 |
| 72 | MP3B | Mx | .002 | 1.5 |
| 73 | MP3C | X | -2.179 | 1.5 |
| 74 | MP3C | Z | 3.774 | 1.5 |
| 75 | MP3C | Mx | -.001 | 1.5 |
| 76 | MP4A | X | -5.372 | .25 |
| 77 | MP4A | Z | 9.305 | .25 |
| 78 | MP4A | Mx | .003 | .25 |
| 79 | MP4A | X | -5.372 | 4.25 |
| 80 | MP4A | Z | 9.305 | 4.25 |
| 81 | MP4A | Mx | .003 | 4.25 |
| 82 | MP4B | X | -3.9 | .25 |
| 83 | MP4B | Z | 6.756 | .25 |
| 84 | MP4B | Mx | -.004 | .25 |
| 85 | MP4B | X | -3.9 | 4.25 |
| 86 | MP4B | Z | 6.756 | 4.25 |
| 87 | MP4B | Mx | -.004 | 4.25 |
| 88 | MP4C | X | -5.372 | .25 |
| 89 | MP4C | Z | 9.305 | .25 |
| 90 | MP4C | Mx | .003 | .25 |
| 91 | MP4C | X | -5.372 | 4.25 |
| 92 | MP4C | Z | 9.305 | 4.25 |
| 93 | MP4C | Mx | .003 | 4.25 |
| 94 | MP2A | X | -.794 | 4 |
| 95 | MP2A | Z | 1.375 | 4 |
| 96 | MP2A | Mx | -.000397 | 4 |
| 97 | MP2B | X | -.432 | 4 |
| 98 | MP2B | Z | .748 | 4 |
| 99 | MP2B | Mx | .000432 | 4 |
| 100 | MP2C | X | -.794 | 4 |
| 101 | MP2C | Z | 1.375 | 4 |
| 102 | MP2C | Mx | -.000397 | 4 |

## Member Point Loads (BLC 35 : Antenna Wm (240 Deg))

| | Member Label | Direction | Magnitude[lb,k-ft] | Location[ft,%] |
|---|---|---|---|---|
| 1 | MP2A | X | -3.416 | .25 |
| 2 | MP2A | Z | 1.972 | .25 |
| 3 | MP2A | Mx | .000558 | .25 |
| 4 | MP2A | X | -3.416 | 4.25 |
| 5 | MP2A | Z | 1.972 | 4.25 |
| 6 | MP2A | Mx | .000558 | 4.25 |
| 7 | MP2B | X | -3.416 | .25 |
| 8 | MP2B | Z | 1.972 | .25 |
| 9 | MP2B | Mx | -.003 | .25 |
| 10 | MP2B | X | -3.416 | 4.25 |
| 11 | MP2B | Z | 1.972 | 4.25 |
| 12 | MP2B | Mx | -.003 | 4.25 |
| 13 | MP2C | X | -5.974 | .25 |
| 14 | MP2C | Z | 3.449 | .25 |
| 15 | MP2C | Mx | .004 | .25 |
| 16 | MP2C | X | -5.974 | 4.25 |
| 17 | MP2C | Z | 3.449 | 4.25 |
| 18 | MP2C | Mx | .004 | 4.25 |
| 19 | MP2A | X | -6.622 | .25 |
| 20 | MP2A | Z | 3.823 | .25 |
| 21 | MP2A | Mx | .006 | .25 |
| 22 | MP2A | X | -6.622 | 4.25 |
| 23 | MP2A | Z | 3.823 | 4.25 |
| 24 | MP2A | Mx | .006 | 4.25 |
| 25 | MP2B | X | -6.622 | .25 |
| 26 | MP2B | Z | 3.823 | .25 |
| 27 | MP2B | Mx | -.001 | .25 |
| 28 | MP2B | X | -6.622 | 4.25 |
| 29 | MP2B | Z | 3.823 | 4.25 |
| 30 | MP2B | Mx | -.001 | 4.25 |
| 31 | MP2C | X | -8.857 | .25 |
| 32 | MP2C | Z | 5.113 | .25 |
| 33 | MP2C | Mx | -.006 | .25 |
| 34 | MP2C | X | -8.857 | 4.25 |
| 35 | MP2C | Z | 5.113 | 4.25 |
| 36 | MP2C | Mx | -.006 | 4.25 |
| 37 | MP1A | X | -2.192 | 1.25 |
| 38 | MP1A | Z | 1.266 | 1.25 |
| 39 | MP1A | Mx | .001 | 1.25 |
| 40 | MP1A | X | -2.192 | 3.25 |
| 41 | MP1A | Z | 1.266 | 3.25 |
| 42 | MP1A | Mx | .001 | 3.25 |
| 43 | MP1B | X | -2.192 | 1.25 |
| 44 | MP1B | Z | 1.266 | 1.25 |
| 45 | MP1B | Mx | -.001 | 1.25 |
| 46 | MP1B | X | -2.192 | 3.25 |
| 47 | MP1B | Z | 1.266 | 3.25 |
| 48 | MP1B | Mx | -.001 | 3.25 |
| 49 | MP1C | X | -4.313 | 1.25 |
| 50 | MP1C | Z | 2.49 | 1.25 |
| 51 | MP1C | Mx | 0 | 1.25 |
| 52 | MP1C | X | -4.313 | 3.25 |

## Member Point Loads (BLC 35 : Antenna Wm (240 Deg)) (Continued)

| | Member Label | Direction | Magnitude[lb,k-ft] | Location[ft,%] |
|---|---|---|---|---|
| 53 | MP1C | Z | 2.49 | 3.25 |
| 54 | MP1C | Mx | 0 | 3.25 |
| 55 | OVP | X | -5.721 | 1 |
| 56 | OVP | Z | 3.303 | 1 |
| 57 | OVP | Mx | 0 | 1 |
| 58 | MP2A | X | -2.906 | 1.5 |
| 59 | MP2A | Z | 1.678 | 1.5 |
| 60 | MP2A | Mx | -.001 | 1.5 |
| 61 | MP2B | X | -2.906 | 1.5 |
| 62 | MP2B | Z | 1.678 | 1.5 |
| 63 | MP2B | Mx | .001 | 1.5 |
| 64 | MP2C | X | -4.115 | 1.5 |
| 65 | MP2C | Z | 2.376 | 1.5 |
| 66 | MP2C | Mx | 0 | 1.5 |
| 67 | MP3A | X | -3.092 | 1.5 |
| 68 | MP3A | Z | 1.785 | 1.5 |
| 69 | MP3A | Mx | -.002 | 1.5 |
| 70 | MP3B | X | -3.092 | 1.5 |
| 71 | MP3B | Z | 1.785 | 1.5 |
| 72 | MP3B | Mx | .002 | 1.5 |
| 73 | MP3C | X | -4.115 | 1.5 |
| 74 | MP3C | Z | 2.376 | 1.5 |
| 75 | MP3C | Mx | 0 | 1.5 |
| 76 | MP4A | X | -7.605 | .25 |
| 77 | MP4A | Z | 4.391 | .25 |
| 78 | MP4A | Mx | .004 | .25 |
| 79 | MP4A | X | -7.605 | 4.25 |
| 80 | MP4A | Z | 4.391 | 4.25 |
| 81 | MP4A | Mx | .004 | 4.25 |
| 82 | MP4B | X | -7.605 | .25 |
| 83 | MP4B | Z | 4.391 | .25 |
| 84 | MP4B | Mx | -.004 | .25 |
| 85 | MP4B | X | -7.605 | 4.25 |
| 86 | MP4B | Z | 4.391 | 4.25 |
| 87 | MP4B | Mx | -.004 | 4.25 |
| 88 | MP4C | X | -10.155 | .25 |
| 89 | MP4C | Z | 5.863 | .25 |
| 90 | MP4C | Mx | 0 | .25 |
| 91 | MP4C | X | -10.155 | 4.25 |
| 92 | MP4C | Z | 5.863 | 4.25 |
| 93 | MP4C | Mx | 0 | 4.25 |
| 94 | MP2A | X | -.957 | 4 |
| 95 | MP2A | Z | .553 | 4 |
| 96 | MP2A | Mx | -.000478 | 4 |
| 97 | MP2B | X | -.957 | 4 |
| 98 | MP2B | Z | .553 | 4 |
| 99 | MP2B | Mx | .000479 | 4 |
| 100 | MP2C | X | -1.584 | 4 |
| 101 | MP2C | Z | .915 | 4 |
| 102 | MP2C | Mx | 0 | 4 |

## Member Point Loads (BLC 36 : Antenna Wm (270 Deg))

| | Member Label | Direction | Magnitude[lb,k-ft] | Location[ft,%] |
|---|---|---|---|---|
| 1 | MP2A | X | -2.96 | .25 |
| 2 | MP2A | Z | 0 | .25 |
| 3 | MP2A | Mx | .001 | .25 |
| 4 | MP2A | X | -2.96 | 4.25 |
| 5 | MP2A | Z | 0 | 4.25 |
| 6 | MP2A | Mx | .001 | 4.25 |
| 7 | MP2B | X | -5.914 | .25 |
| 8 | MP2B | Z | 0 | .25 |
| 9 | MP2B | Mx | -.004 | .25 |
| 10 | MP2B | X | -5.914 | 4.25 |
| 11 | MP2B | Z | 0 | 4.25 |
| 12 | MP2B | Mx | -.004 | 4.25 |
| 13 | MP2C | X | -5.914 | .25 |
| 14 | MP2C | Z | 0 | .25 |
| 15 | MP2C | Mx | .002 | .25 |
| 16 | MP2C | X | -5.914 | 4.25 |
| 17 | MP2C | Z | 0 | 4.25 |
| 18 | MP2C | Mx | .002 | 4.25 |
| 19 | MP2A | X | -6.786 | .25 |
| 20 | MP2A | Z | 0 | .25 |
| 21 | MP2A | Mx | .003 | .25 |
| 22 | MP2A | X | -6.786 | 4.25 |
| 23 | MP2A | Z | 0 | 4.25 |
| 24 | MP2A | Mx | .003 | 4.25 |
| 25 | MP2B | X | -9.367 | .25 |
| 26 | MP2B | Z | 0 | .25 |
| 27 | MP2B | Mx | .002 | .25 |
| 28 | MP2B | X | -9.367 | 4.25 |
| 29 | MP2B | Z | 0 | 4.25 |
| 30 | MP2B | Mx | .002 | 4.25 |
| 31 | MP2C | X | -9.367 | .25 |
| 32 | MP2C | Z | 0 | .25 |
| 33 | MP2C | Mx | -.007 | .25 |
| 34 | MP2C | X | -9.367 | 4.25 |
| 35 | MP2C | Z | 0 | 4.25 |
| 36 | MP2C | Mx | -.007 | 4.25 |
| 37 | MP1A | X | -1.715 | 1.25 |
| 38 | MP1A | Z | 0 | 1.25 |
| 39 | MP1A | Mx | .000858 | 1.25 |
| 40 | MP1A | X | -1.715 | 3.25 |
| 41 | MP1A | Z | 0 | 3.25 |
| 42 | MP1A | Mx | .000858 | 3.25 |
| 43 | MP1B | X | -4.164 | 1.25 |
| 44 | MP1B | Z | 0 | 1.25 |
| 45 | MP1B | Mx | -.001 | 1.25 |
| 46 | MP1B | X | -4.164 | 3.25 |
| 47 | MP1B | Z | 0 | 3.25 |
| 48 | MP1B | Mx | -.001 | 3.25 |
| 49 | MP1C | X | -4.164 | 1.25 |
| 50 | MP1C | Z | 0 | 1.25 |
| 51 | MP1C | Mx | -.001 | 1.25 |
| 52 | MP1C | X | -4.164 | 3.25 |

## Member Point Loads (BLC 36 : Antenna Wm (270 Deg)) (Continued)

| | Member Label | Direction | Magnitude[lb,k-ft] | Location[ft,%] |
|---|---|---|---|---|
| 53 | MP1C | Z | 0 | 3.25 |
| 54 | MP1C | Mx | -.001 | 3.25 |
| 55 | OVP | X | -6.123 | 1 |
| 56 | OVP | Z | 0 | 1 |
| 57 | OVP | Mx | 0 | 1 |
| 58 | MP2A | X | -2.89 | 1.5 |
| 59 | MP2A | Z | 0 | 1.5 |
| 60 | MP2A | Mx | -.001 | 1.5 |
| 61 | MP2B | X | -4.286 | 1.5 |
| 62 | MP2B | Z | 0 | 1.5 |
| 63 | MP2B | Mx | .001 | 1.5 |
| 64 | MP2C | X | -4.286 | 1.5 |
| 65 | MP2C | Z | 0 | 1.5 |
| 66 | MP2C | Mx | .001 | 1.5 |
| 67 | MP3A | X | -3.176 | 1.5 |
| 68 | MP3A | Z | 0 | 1.5 |
| 69 | MP3A | Mx | -.002 | 1.5 |
| 70 | MP3B | X | -4.358 | 1.5 |
| 71 | MP3B | Z | 0 | 1.5 |
| 72 | MP3B | Mx | .001 | 1.5 |
| 73 | MP3C | X | -4.358 | 1.5 |
| 74 | MP3C | Z | 0 | 1.5 |
| 75 | MP3C | Mx | .001 | 1.5 |
| 76 | MP4A | X | -7.801 | .25 |
| 77 | MP4A | Z | 0 | .25 |
| 78 | MP4A | Mx | .004 | .25 |
| 79 | MP4A | X | -7.801 | 4.25 |
| 80 | MP4A | Z | 0 | 4.25 |
| 81 | MP4A | Mx | .004 | 4.25 |
| 82 | MP4B | X | -10.745 | .25 |
| 83 | MP4B | Z | 0 | .25 |
| 84 | MP4B | Mx | -.003 | .25 |
| 85 | MP4B | X | -10.745 | 4.25 |
| 86 | MP4B | Z | 0 | 4.25 |
| 87 | MP4B | Mx | -.003 | 4.25 |
| 88 | MP4C | X | -10.745 | .25 |
| 89 | MP4C | Z | 0 | .25 |
| 90 | MP4C | Mx | -.003 | .25 |
| 91 | MP4C | X | -10.745 | 4.25 |
| 92 | MP4C | Z | 0 | 4.25 |
| 93 | MP4C | Mx | -.003 | 4.25 |
| 94 | MP2A | X | -.864 | 4 |
| 95 | MP2A | Z | 0 | 4 |
| 96 | MP2A | Mx | -.000432 | 4 |
| 97 | MP2B | X | -1.588 | 4 |
| 98 | MP2B | Z | 0 | 4 |
| 99 | MP2B | Mx | .000397 | 4 |
| 100 | MP2C | X | -1.588 | 4 |
| 101 | MP2C | Z | 0 | 4 |
| 102 | MP2C | Mx | .000397 | 4 |

## Member Point Loads (BLC 37 : Antenna Wm (300 Deg))

| | Member Label | Direction | Magnitude[lb,k-ft] | Location[ft,%] |
|---|---|---|---|---|
| 1 | MP2A | X | -3.416 | .25 |
| 2 | MP2A | Z | -1.972 | .25 |
| 3 | MP2A | Mx | .003 | .25 |
| 4 | MP2A | X | -3.416 | 4.25 |
| 5 | MP2A | Z | -1.972 | 4.25 |
| 6 | MP2A | Mx | .003 | 4.25 |
| 7 | MP2B | X | -5.974 | .25 |
| 8 | MP2B | Z | -3.449 | .25 |
| 9 | MP2B | Mx | -.004 | .25 |
| 10 | MP2B | X | -5.974 | 4.25 |
| 11 | MP2B | Z | -3.449 | 4.25 |
| 12 | MP2B | Mx | -.004 | 4.25 |
| 13 | MP2C | X | -3.416 | .25 |
| 14 | MP2C | Z | -1.972 | .25 |
| 15 | MP2C | Mx | -.000557 | .25 |
| 16 | MP2C | X | -3.416 | 4.25 |
| 17 | MP2C | Z | -1.972 | 4.25 |
| 18 | MP2C | Mx | -.000557 | 4.25 |
| 19 | MP2A | X | -6.622 | .25 |
| 20 | MP2A | Z | -3.823 | .25 |
| 21 | MP2A | Mx | .001 | .25 |
| 22 | MP2A | X | -6.622 | 4.25 |
| 23 | MP2A | Z | -3.823 | 4.25 |
| 24 | MP2A | Mx | .001 | 4.25 |
| 25 | MP2B | X | -8.857 | .25 |
| 26 | MP2B | Z | -5.113 | .25 |
| 27 | MP2B | Mx | .006 | .25 |
| 28 | MP2B | X | -8.857 | 4.25 |
| 29 | MP2B | Z | -5.113 | 4.25 |
| 30 | MP2B | Mx | .006 | 4.25 |
| 31 | MP2C | X | -6.622 | .25 |
| 32 | MP2C | Z | -3.823 | .25 |
| 33 | MP2C | Mx | -.006 | .25 |
| 34 | MP2C | X | -6.622 | 4.25 |
| 35 | MP2C | Z | -3.823 | 4.25 |
| 36 | MP2C | Mx | -.006 | 4.25 |
| 37 | MP1A | X | -2.192 | 1.25 |
| 38 | MP1A | Z | -1.266 | 1.25 |
| 39 | MP1A | Mx | .001 | 1.25 |
| 40 | MP1A | X | -2.192 | 3.25 |
| 41 | MP1A | Z | -1.266 | 3.25 |
| 42 | MP1A | Mx | .001 | 3.25 |
| 43 | MP1B | X | -4.313 | 1.25 |
| 44 | MP1B | Z | -2.49 | 1.25 |
| 45 | MP1B | Mx | 0 | 1.25 |
| 46 | MP1B | X | -4.313 | 3.25 |
| 47 | MP1B | Z | -2.49 | 3.25 |
| 48 | MP1B | Mx | 0 | 3.25 |
| 49 | MP1C | X | -2.192 | 1.25 |
| 50 | MP1C | Z | -1.266 | 1.25 |
| 51 | MP1C | Mx | -.001 | 1.25 |
| 52 | MP1C | X | -2.192 | 3.25 |

## Member Point Loads (BLC 37 : Antenna Wm (300 Deg)) (Continued)

| | Member Label | Direction | Magnitude[lb,k-ft] | Location[ft,%] |
|---|---|---|---|---|
| 53 | MP1C | Z | -1.266 | 3.25 |
| 54 | MP1C | Mx | -.001 | 3.25 |
| 55 | OVP | X | -5.721 | 1 |
| 56 | OVP | Z | -3.303 | 1 |
| 57 | OVP | Mx | 0 | 1 |
| 58 | MP2A | X | -2.906 | 1.5 |
| 59 | MP2A | Z | -1.678 | 1.5 |
| 60 | MP2A | Mx | -.001 | 1.5 |
| 61 | MP2B | X | -4.115 | 1.5 |
| 62 | MP2B | Z | -2.376 | 1.5 |
| 63 | MP2B | Mx | 0 | 1.5 |
| 64 | MP2C | X | -2.906 | 1.5 |
| 65 | MP2C | Z | -1.678 | 1.5 |
| 66 | MP2C | Mx | .001 | 1.5 |
| 67 | MP3A | X | -3.092 | 1.5 |
| 68 | MP3A | Z | -1.785 | 1.5 |
| 69 | MP3A | Mx | -.002 | 1.5 |
| 70 | MP3B | X | -4.115 | 1.5 |
| 71 | MP3B | Z | -2.376 | 1.5 |
| 72 | MP3B | Mx | 0 | 1.5 |
| 73 | MP3C | X | -3.092 | 1.5 |
| 74 | MP3C | Z | -1.785 | 1.5 |
| 75 | MP3C | Mx | .002 | 1.5 |
| 76 | MP4A | X | -7.605 | .25 |
| 77 | MP4A | Z | -4.391 | .25 |
| 78 | MP4A | Mx | .004 | .25 |
| 79 | MP4A | X | -7.605 | 4.25 |
| 80 | MP4A | Z | -4.391 | 4.25 |
| 81 | MP4A | Mx | .004 | 4.25 |
| 82 | MP4B | X | -10.155 | .25 |
| 83 | MP4B | Z | -5.863 | .25 |
| 84 | MP4B | Mx | 0 | .25 |
| 85 | MP4B | X | -10.155 | 4.25 |
| 86 | MP4B | Z | -5.863 | 4.25 |
| 87 | MP4B | Mx | 0 | 4.25 |
| 88 | MP4C | X | -7.605 | .25 |
| 89 | MP4C | Z | -4.391 | .25 |
| 90 | MP4C | Mx | -.004 | .25 |
| 91 | MP4C | X | -7.605 | 4.25 |
| 92 | MP4C | Z | -4.391 | 4.25 |
| 93 | MP4C | Mx | -.004 | 4.25 |
| 94 | MP2A | X | -.957 | 4 |
| 95 | MP2A | Z | -.553 | 4 |
| 96 | MP2A | Mx | -.000478 | 4 |
| 97 | MP2B | X | -1.584 | 4 |
| 98 | MP2B | Z | -.915 | 4 |
| 99 | MP2B | Mx | 0 | 4 |
| 100 | MP2C | X | -.957 | 4 |
| 101 | MP2C | Z | -.553 | 4 |
| 102 | MP2C | Mx | .000479 | 4 |

## Member Point Loads (BLC 38 : Antenna Wm (330 Deg))

| | Member Label | Direction | Magnitude[lb,k-ft] | Location[ft,%] |
|---|---|---|---|---|
| 1 | MP2A | X | -2.957 | .25 |
| 2 | MP2A | Z | -5.122 | .25 |
| 3 | MP2A | Mx | .004 | .25 |
| 4 | MP2A | X | -2.957 | 4.25 |
| 5 | MP2A | Z | -5.122 | 4.25 |
| 6 | MP2A | Mx | .004 | 4.25 |
| 7 | MP2B | X | -2.957 | .25 |
| 8 | MP2B | Z | -5.122 | .25 |
| 9 | MP2B | Mx | -.002 | .25 |
| 10 | MP2B | X | -2.957 | 4.25 |
| 11 | MP2B | Z | -5.122 | 4.25 |
| 12 | MP2B | Mx | -.002 | 4.25 |
| 13 | MP2C | X | -1.48 | .25 |
| 14 | MP2C | Z | -2.564 | .25 |
| 15 | MP2C | Mx | -.001 | .25 |
| 16 | MP2C | X | -1.48 | 4.25 |
| 17 | MP2C | Z | -2.564 | 4.25 |
| 18 | MP2C | Mx | -.001 | 4.25 |
| 19 | MP2A | X | -4.683 | .25 |
| 20 | MP2A | Z | -8.112 | .25 |
| 21 | MP2A | Mx | -.002 | .25 |
| 22 | MP2A | X | -4.683 | 4.25 |
| 23 | MP2A | Z | -8.112 | 4.25 |
| 24 | MP2A | Mx | -.002 | 4.25 |
| 25 | MP2B | X | -4.683 | .25 |
| 26 | MP2B | Z | -8.112 | .25 |
| 27 | MP2B | Mx | .007 | .25 |
| 28 | MP2B | X | -4.683 | 4.25 |
| 29 | MP2B | Z | -8.112 | 4.25 |
| 30 | MP2B | Mx | .007 | 4.25 |
| 31 | MP2C | X | -3.393 | .25 |
| 32 | MP2C | Z | -5.877 | .25 |
| 33 | MP2C | Mx | -.003 | .25 |
| 34 | MP2C | X | -3.393 | 4.25 |
| 35 | MP2C | Z | -5.877 | 4.25 |
| 36 | MP2C | Mx | -.003 | 4.25 |
| 37 | MP1A | X | -2.082 | 1.25 |
| 38 | MP1A | Z | -3.606 | 1.25 |
| 39 | MP1A | Mx | .001 | 1.25 |
| 40 | MP1A | X | -2.082 | 3.25 |
| 41 | MP1A | Z | -3.606 | 3.25 |
| 42 | MP1A | Mx | .001 | 3.25 |
| 43 | MP1B | X | -2.082 | 1.25 |
| 44 | MP1B | Z | -3.606 | 1.25 |
| 45 | MP1B | Mx | .001 | 1.25 |
| 46 | MP1B | X | -2.082 | 3.25 |
| 47 | MP1B | Z | -3.606 | 3.25 |
| 48 | MP1B | Mx | .001 | 3.25 |
| 49 | MP1C | X | -.858 | 1.25 |
| 50 | MP1C | Z | -1.485 | 1.25 |
| 51 | MP1C | Mx | -.000858 | 1.25 |
| 52 | MP1C | X | -.858 | 3.25 |

## Member Point Loads (BLC 38 : Antenna Wm (330 Deg)) (Continued)

| | Member Label | Direction | Magnitude[lb,k-ft] | Location[ft,%] |
|---|---|---|---|---|
| 53 | MP1C | Z | -1.485 | 3.25 |
| 54 | MP1C | Mx | -.000858 | 3.25 |
| 55 | OVP | X | -3.786 | 1 |
| 56 | OVP | Z | -6.557 | 1 |
| 57 | OVP | Mx | 0 | 1 |
| 58 | MP2A | X | -2.143 | 1.5 |
| 59 | MP2A | Z | -3.712 | 1.5 |
| 60 | MP2A | Mx | -.001 | 1.5 |
| 61 | MP2B | X | -2.143 | 1.5 |
| 62 | MP2B | Z | -3.712 | 1.5 |
| 63 | MP2B | Mx | -.001 | 1.5 |
| 64 | MP2C | X | -1.445 | 1.5 |
| 65 | MP2C | Z | -2.503 | 1.5 |
| 66 | MP2C | Mx | .001 | 1.5 |
| 67 | MP3A | X | -2.179 | 1.5 |
| 68 | MP3A | Z | -3.774 | 1.5 |
| 69 | MP3A | Mx | -.001 | 1.5 |
| 70 | MP3B | X | -2.179 | 1.5 |
| 71 | MP3B | Z | -3.774 | 1.5 |
| 72 | MP3B | Mx | -.001 | 1.5 |
| 73 | MP3C | X | -1.588 | 1.5 |
| 74 | MP3C | Z | -2.751 | 1.5 |
| 75 | MP3C | Mx | .002 | 1.5 |
| 76 | MP4A | X | -5.372 | .25 |
| 77 | MP4A | Z | -9.305 | .25 |
| 78 | MP4A | Mx | .003 | .25 |
| 79 | MP4A | X | -5.372 | 4.25 |
| 80 | MP4A | Z | -9.305 | 4.25 |
| 81 | MP4A | Mx | .003 | 4.25 |
| 82 | MP4B | X | -5.372 | .25 |
| 83 | MP4B | Z | -9.305 | .25 |
| 84 | MP4B | Mx | .003 | .25 |
| 85 | MP4B | X | -5.372 | 4.25 |
| 86 | MP4B | Z | -9.305 | 4.25 |
| 87 | MP4B | Mx | .003 | 4.25 |
| 88 | MP4C | X | -3.9 | .25 |
| 89 | MP4C | Z | -6.756 | .25 |
| 90 | MP4C | Mx | -.004 | .25 |
| 91 | MP4C | X | -3.9 | 4.25 |
| 92 | MP4C | Z | -6.756 | 4.25 |
| 93 | MP4C | Mx | -.004 | 4.25 |
| 94 | MP2A | X | -.794 | 4 |
| 95 | MP2A | Z | -1.375 | 4 |
| 96 | MP2A | Mx | -.000397 | 4 |
| 97 | MP2B | X | -.794 | 4 |
| 98 | MP2B | Z | -1.375 | 4 |
| 99 | MP2B | Mx | -.000397 | 4 |
| 100 | MP2C | X | -.432 | 4 |
| 101 | MP2C | Z | -.748 | 4 |
| 102 | MP2C | Mx | .000432 | 4 |

## Member Point Loads (BLC 77 : Lm1)

| | Member Label | Direction | Magnitude[lb,k-ft] | Location[ft,%] |
|---|---|---|---|---|
| 1 | M57 | Y | -500 | 0 |

## Member Point Loads (BLC 78 : Lm2)

| | Member Label | Direction | Magnitude[lb,k-ft] | Location[ft,%] |
|---|---|---|---|---|
| 1 | M75 | Y | -500 | 0 |

## Member Point Loads (BLC 79 : Lv1)

| | Member Label | Direction | Magnitude[lb,k-ft] | Location[ft,%] |
|---|---|---|---|---|
| 1 | M7 | Y | -250 | %50 |

## Member Point Loads (BLC 80 : Lv2)

| | Member Label | Direction | Magnitude[lb,k-ft] | Location[ft,%] |
|---|---|---|---|---|
| 1 | M7 | Y | -250 | 0 |

## Member Point Loads (BLC 81 : Antenna Ev)

| | Member Label | Direction | Magnitude[lb,k-ft] | Location[ft,%] |
|---|---|---|---|---|
| 1 | MP2A | Y | -.858 | .25 |
| 2 | MP2A | My | -.000429 | .25 |
| 3 | MP2A | Mz | -.0005 | .25 |
| 4 | MP2A | Y | -.858 | 4.25 |
| 5 | MP2A | My | -.000429 | 4.25 |
| 6 | MP2A | Mz | -.0005 | 4.25 |
| 7 | MP2B | Y | -.858 | .25 |
| 8 | MP2B | My | .000648 | .25 |
| 9 | MP2B | Mz | -.000121 | .25 |
| 10 | MP2B | Y | -.858 | 4.25 |
| 11 | MP2B | My | .000648 | 4.25 |
| 12 | MP2B | Mz | -.000121 | 4.25 |
| 13 | MP2C | Y | -.858 | .25 |
| 14 | MP2C | My | -.000219 | .25 |
| 15 | MP2C | Mz | .000622 | .25 |
| 16 | MP2C | Y | -.858 | 4.25 |
| 17 | MP2C | My | -.000219 | 4.25 |
| 18 | MP2C | Mz | .000622 | 4.25 |
| 19 | MP2A | Y | -1.268 | .25 |
| 20 | MP2A | My | -.000634 | .25 |
| 21 | MP2A | Mz | .00074 | .25 |
| 22 | MP2A | Y | -1.268 | 4.25 |
| 23 | MP2A | My | -.000634 | 4.25 |
| 24 | MP2A | Mz | .00074 | 4.25 |
| 25 | MP2B | Y | -1.268 | .25 |
| 26 | MP2B | My | -.000324 | .25 |
| 27 | MP2B | Mz | -.000919 | .25 |
| 28 | MP2B | Y | -1.268 | 4.25 |
| 29 | MP2B | My | -.000324 | 4.25 |
| 30 | MP2B | Mz | -.000919 | 4.25 |
| 31 | MP2C | Y | -1.268 | .25 |
| 32 | MP2C | My | .000957 | .25 |
| 33 | MP2C | Mz | .000179 | .25 |
| 34 | MP2C | Y | -1.268 | 4.25 |

## Member Point Loads (BLC 81 : Antenna Ev) (Continued)

| | Member Label | Direction | Magnitude[lb,k-ft] | Location[ft,%] |
|---|---|---|---|---|
| 35 | MP2C | My | .000957 | 4.25 |
| 36 | MP2C | Mz | .000179 | 4.25 |
| 37 | MP1A | Y | -1.709 | 1.25 |
| 38 | MP1A | My | -.000855 | 1.25 |
| 39 | MP1A | Mz | 0 | 1.25 |
| 40 | MP1A | Y | -1.709 | 3.25 |
| 41 | MP1A | My | -.000855 | 3.25 |
| 42 | MP1A | Mz | 0 | 3.25 |
| 43 | MP1B | Y | -1.709 | 1.25 |
| 44 | MP1B | My | .000427 | 1.25 |
| 45 | MP1B | Mz | -.00074 | 1.25 |
| 46 | MP1B | Y | -1.709 | 3.25 |
| 47 | MP1B | My | .000427 | 3.25 |
| 48 | MP1B | Mz | -.00074 | 3.25 |
| 49 | MP1C | Y | -1.709 | 1.25 |
| 50 | MP1C | My | .000427 | 1.25 |
| 51 | MP1C | Mz | .00074 | 1.25 |
| 52 | MP1C | Y | -1.709 | 3.25 |
| 53 | MP1C | My | .000427 | 3.25 |
| 54 | MP1C | Mz | .00074 | 3.25 |
| 55 | OVP | Y | -1.256 | 1 |
| 56 | OVP | My | 0 | 1 |
| 57 | OVP | Mz | 0 | 1 |
| 58 | MP2A | Y | -2.76 | 1.5 |
| 59 | MP2A | My | .001 | 1.5 |
| 60 | MP2A | Mz | 0 | 1.5 |
| 61 | MP2B | Y | -2.76 | 1.5 |
| 62 | MP2B | My | -.00069 | 1.5 |
| 63 | MP2B | Mz | .001 | 1.5 |
| 64 | MP2C | Y | -2.76 | 1.5 |
| 65 | MP2C | My | -.00069 | 1.5 |
| 66 | MP2C | Mz | -.001 | 1.5 |
| 67 | MP3A | Y | -2.932 | 1.5 |
| 68 | MP3A | My | .001 | 1.5 |
| 69 | MP3A | Mz | 0 | 1.5 |
| 70 | MP3B | Y | -2.932 | 1.5 |
| 71 | MP3B | My | -.000733 | 1.5 |
| 72 | MP3B | Mz | .001 | 1.5 |
| 73 | MP3C | Y | -2.932 | 1.5 |
| 74 | MP3C | My | -.000733 | 1.5 |
| 75 | MP3C | Mz | -.001 | 1.5 |
| 76 | MP4A | Y | -.901 | .25 |
| 77 | MP4A | My | -.00045 | .25 |
| 78 | MP4A | Mz | 0 | .25 |
| 79 | MP4A | Y | -.901 | 4.25 |
| 80 | MP4A | My | -.00045 | 4.25 |
| 81 | MP4A | Mz | 0 | 4.25 |
| 82 | MP4B | Y | -.901 | .25 |
| 83 | MP4B | My | .000225 | .25 |
| 84 | MP4B | Mz | -.00039 | .25 |
| 85 | MP4B | Y | -.901 | 4.25 |
| 86 | MP4B | My | .000225 | 4.25 |

## Member Point Loads (BLC 81 : Antenna Ev) (Continued)

| | Member Label | Direction | Magnitude[lb,k-ft] | Location[ft,%] |
|---|---|---|---|---|
| 87 | MP4B | Mz | -.00039 | 4.25 |
| 88 | MP4C | Y | -.901 | .25 |
| 89 | MP4C | My | .000225 | .25 |
| 90 | MP4C | Mz | .00039 | .25 |
| 91 | MP4C | Y | -.901 | 4.25 |
| 92 | MP4C | My | .000225 | 4.25 |
| 93 | MP4C | Mz | .00039 | 4.25 |
| 94 | MP2A | Y | -.734 | 4 |
| 95 | MP2A | My | .000367 | 4 |
| 96 | MP2A | Mz | 0 | 4 |
| 97 | MP2B | Y | -.734 | 4 |
| 98 | MP2B | My | -.000184 | 4 |
| 99 | MP2B | Mz | .000318 | 4 |
| 100 | MP2C | Y | -.734 | 4 |
| 101 | MP2C | My | -.000184 | 4 |
| 102 | MP2C | Mz | -.000318 | 4 |

## Member Point Loads (BLC 82 : Antenna Eh (0 Deg))

| | Member Label | Direction | Magnitude[lb,k-ft] | Location[ft,%] |
|---|---|---|---|---|
| 1 | MP2A | Z | -2.144 | .25 |
| 2 | MP2A | Mx | .001 | .25 |
| 3 | MP2A | Z | -2.144 | 4.25 |
| 4 | MP2A | Mx | .001 | 4.25 |
| 5 | MP2B | Z | -2.144 | .25 |
| 6 | MP2B | Mx | .000303 | .25 |
| 7 | MP2B | Z | -2.144 | 4.25 |
| 8 | MP2B | Mx | .000303 | 4.25 |
| 9 | MP2C | Z | -2.144 | .25 |
| 10 | MP2C | Mx | -.002 | .25 |
| 11 | MP2C | Z | -2.144 | 4.25 |
| 12 | MP2C | Mx | -.002 | 4.25 |
| 13 | MP2A | Z | -3.17 | .25 |
| 14 | MP2A | Mx | -.002 | .25 |
| 15 | MP2A | Z | -3.17 | 4.25 |
| 16 | MP2A | Mx | -.002 | 4.25 |
| 17 | MP2B | Z | -3.17 | .25 |
| 18 | MP2B | Mx | .002 | .25 |
| 19 | MP2B | Z | -3.17 | 4.25 |
| 20 | MP2B | Mx | .002 | 4.25 |
| 21 | MP2C | Z | -3.17 | .25 |
| 22 | MP2C | Mx | -.000448 | .25 |
| 23 | MP2C | Z | -3.17 | 4.25 |
| 24 | MP2C | Mx | -.000448 | 4.25 |
| 25 | MP1A | Z | -4.274 | 1.25 |
| 26 | MP1A | Mx | 0 | 1.25 |
| 27 | MP1A | Z | -4.274 | 3.25 |
| 28 | MP1A | Mx | 0 | 3.25 |
| 29 | MP1B | Z | -4.274 | 1.25 |
| 30 | MP1B | Mx | .002 | 1.25 |
| 31 | MP1B | Z | -4.274 | 3.25 |
| 32 | MP1B | Mx | .002 | 3.25 |

## Member Point Loads (BLC 82 : Antenna Eh (0 Deg)) (Continued)

| | Member Label | Direction | Magnitude[lb,k-ft] | Location[ft,%] |
|---|---|---|---|---|
| 33 | MP1C | Z | -4.274 | 1.25 |
| 34 | MP1C | Mx | -.002 | 1.25 |
| 35 | MP1C | Z | -4.274 | 3.25 |
| 36 | MP1C | Mx | -.002 | 3.25 |
| 37 | OVP | Z | -3.14 | 1 |
| 38 | OVP | Mx | 0 | 1 |
| 39 | MP2A | Z | -6.899 | 1.5 |
| 40 | MP2A | Mx | 0 | 1.5 |
| 41 | MP2B | Z | -6.899 | 1.5 |
| 42 | MP2B | Mx | -.003 | 1.5 |
| 43 | MP2C | Z | -6.899 | 1.5 |
| 44 | MP2C | Mx | .003 | 1.5 |
| 45 | MP3A | Z | -7.331 | 1.5 |
| 46 | MP3A | Mx | 0 | 1.5 |
| 47 | MP3B | Z | -7.331 | 1.5 |
| 48 | MP3B | Mx | -.003 | 1.5 |
| 49 | MP3C | Z | -7.331 | 1.5 |
| 50 | MP3C | Mx | .003 | 1.5 |
| 51 | MP4A | Z | -2.252 | .25 |
| 52 | MP4A | Mx | 0 | .25 |
| 53 | MP4A | Z | -2.252 | 4.25 |
| 54 | MP4A | Mx | 0 | 4.25 |
| 55 | MP4B | Z | -2.252 | .25 |
| 56 | MP4B | Mx | .000975 | .25 |
| 57 | MP4B | Z | -2.252 | 4.25 |
| 58 | MP4B | Mx | .000975 | 4.25 |
| 59 | MP4C | Z | -2.252 | .25 |
| 60 | MP4C | Mx | -.000975 | .25 |
| 61 | MP4C | Z | -2.252 | 4.25 |
| 62 | MP4C | Mx | -.000975 | 4.25 |
| 63 | MP2A | Z | -1.835 | 4 |
| 64 | MP2A | Mx | 0 | 4 |
| 65 | MP2B | Z | -1.835 | 4 |
| 66 | MP2B | Mx | -.000795 | 4 |
| 67 | MP2C | Z | -1.835 | 4 |
| 68 | MP2C | Mx | .000795 | 4 |

## Member Point Loads (BLC 83 : Antenna Eh (90 Deg))

| | Member Label | Direction | Magnitude[lb,k-ft] | Location[ft,%] |
|---|---|---|---|---|
| 1 | MP2A | X | 2.144 | .25 |
| 2 | MP2A | Mx | -.001 | .25 |
| 3 | MP2A | X | 2.144 | 4.25 |
| 4 | MP2A | Mx | -.001 | 4.25 |
| 5 | MP2B | X | 2.144 | .25 |
| 6 | MP2B | Mx | .002 | .25 |
| 7 | MP2B | X | 2.144 | 4.25 |
| 8 | MP2B | Mx | .002 | 4.25 |
| 9 | MP2C | X | 2.144 | .25 |
| 10 | MP2C | Mx | -.000547 | .25 |
| 11 | MP2C | X | 2.144 | 4.25 |
| 12 | MP2C | Mx | -.000547 | 4.25 |

## Member Point Loads (BLC 83 : Antenna Eh (90 Deg)) (Continued)

| | Member Label | Direction | Magnitude[lb,k-ft] | Location[ft,%] |
|---|---|---|---|---|
| 13 | MP2A | X | 3.17 | .25 |
| 14 | MP2A | Mx | -.002 | .25 |
| 15 | MP2A | X | 3.17 | 4.25 |
| 16 | MP2A | Mx | -.002 | 4.25 |
| 17 | MP2B | X | 3.17 | .25 |
| 18 | MP2B | Mx | -.000809 | .25 |
| 19 | MP2B | X | 3.17 | 4.25 |
| 20 | MP2B | Mx | -.000809 | 4.25 |
| 21 | MP2C | X | 3.17 | .25 |
| 22 | MP2C | Mx | .002 | .25 |
| 23 | MP2C | X | 3.17 | 4.25 |
| 24 | MP2C | Mx | .002 | 4.25 |
| 25 | MP1A | X | 4.274 | 1.25 |
| 26 | MP1A | Mx | -.002 | 1.25 |
| 27 | MP1A | X | 4.274 | 3.25 |
| 28 | MP1A | Mx | -.002 | 3.25 |
| 29 | MP1B | X | 4.274 | 1.25 |
| 30 | MP1B | Mx | .001 | 1.25 |
| 31 | MP1B | X | 4.274 | 3.25 |
| 32 | MP1B | Mx | .001 | 3.25 |
| 33 | MP1C | X | 4.274 | 1.25 |
| 34 | MP1C | Mx | .001 | 1.25 |
| 35 | MP1C | X | 4.274 | 3.25 |
| 36 | MP1C | Mx | .001 | 3.25 |
| 37 | OVP | X | 3.14 | 1 |
| 38 | OVP | Mx | 0 | 1 |
| 39 | MP2A | X | 6.899 | 1.5 |
| 40 | MP2A | Mx | .003 | 1.5 |
| 41 | MP2B | X | 6.899 | 1.5 |
| 42 | MP2B | Mx | -.002 | 1.5 |
| 43 | MP2C | X | 6.899 | 1.5 |
| 44 | MP2C | Mx | -.002 | 1.5 |
| 45 | MP3A | X | 7.331 | 1.5 |
| 46 | MP3A | Mx | .004 | 1.5 |
| 47 | MP3B | X | 7.331 | 1.5 |
| 48 | MP3B | Mx | -.002 | 1.5 |
| 49 | MP3C | X | 7.331 | 1.5 |
| 50 | MP3C | Mx | -.002 | 1.5 |
| 51 | MP4A | X | 2.252 | .25 |
| 52 | MP4A | Mx | -.001 | .25 |
| 53 | MP4A | X | 2.252 | 4.25 |
| 54 | MP4A | Mx | -.001 | 4.25 |
| 55 | MP4B | X | 2.252 | .25 |
| 56 | MP4B | Mx | .000563 | .25 |
| 57 | MP4B | X | 2.252 | 4.25 |
| 58 | MP4B | Mx | .000563 | 4.25 |
| 59 | MP4C | X | 2.252 | .25 |
| 60 | MP4C | Mx | .000563 | .25 |
| 61 | MP4C | X | 2.252 | 4.25 |
| 62 | MP4C | Mx | .000563 | 4.25 |
| 63 | MP2A | X | 1.835 | 4 |
| 64 | MP2A | Mx | .000918 | 4 |

## Member Point Loads (BLC 83 : Antenna Eh (90 Deg)) (Continued)

| | Member Label | Direction | Magnitude[lb,k-ft] | Location[ft,%] |
|---|---|---|---|---|
| 65 | MP2B | X | 1.835 | 4 |
| 66 | MP2B | Mx | -.000459 | 4 |
| 67 | MP2C | X | 1.835 | 4 |
| 68 | MP2C | Mx | -.000459 | 4 |

## Member Distributed Loads (BLC 40 : Structure Di)

| | Member Label | Direction | Start Magnitude[lb/ft,... | End Magnitude[lb/ft,F... | Start Location[ft,%] | End Location[ft,%] |
|---|---|---|---|---|---|---|
| 1 | M1 | Y | -15.203 | -15.203 | 0 | %100 |
| 2 | M4 | Y | -15.937 | -15.937 | 0 | %100 |
| 3 | M7 | Y | -10.742 | -10.742 | 0 | %100 |
| 4 | M15 | Y | -10.742 | -10.742 | 0 | %100 |
| 5 | M17 | Y | -15.937 | -15.937 | 0 | %100 |
| 6 | M20 | Y | -10.742 | -10.742 | 0 | %100 |
| 7 | M21 | Y | -15.937 | -15.937 | 0 | %100 |
| 8 | M29 | Y | -9.353 | -9.353 | 0 | %100 |
| 9 | M30 | Y | -9.353 | -9.353 | 0 | %100 |
| 10 | M108A | Y | -15.937 | -15.937 | 0 | %100 |
| 11 | M109A | Y | -15.937 | -15.937 | 0 | %100 |
| 12 | M119 | Y | -15.937 | -15.937 | 0 | %100 |
| 13 | M120 | Y | -15.937 | -15.937 | 0 | %100 |
| 14 | M122 | Y | -12.278 | -12.278 | 0 | %100 |
| 15 | M125 | Y | -12.278 | -12.278 | 0 | %100 |
| 16 | M51 | Y | -15.203 | -15.203 | 0 | %100 |
| 17 | M52 | Y | -15.937 | -15.937 | 0 | %100 |
| 18 | M54 | Y | -15.937 | -15.937 | 0 | %100 |
| 19 | M55 | Y | -15.937 | -15.937 | 0 | %100 |
| 20 | M57A | Y | -9.353 | -9.353 | 0 | %100 |
| 21 | M58A | Y | -9.353 | -9.353 | 0 | %100 |
| 22 | M63 | Y | -15.937 | -15.937 | 0 | %100 |
| 23 | M64A | Y | -15.937 | -15.937 | 0 | %100 |
| 24 | M67 | Y | -15.937 | -15.937 | 0 | %100 |
| 25 | M68 | Y | -15.937 | -15.937 | 0 | %100 |
| 26 | M70A | Y | -12.278 | -12.278 | 0 | %100 |
| 27 | M71 | Y | -12.278 | -12.278 | 0 | %100 |
| 28 | M72A | Y | -15.203 | -15.203 | 0 | %100 |
| 29 | M73A | Y | -15.937 | -15.937 | 0 | %100 |
| 30 | M75A | Y | -15.937 | -15.937 | 0 | %100 |
| 31 | M76 | Y | -15.937 | -15.937 | 0 | %100 |
| 32 | M78A | Y | -9.353 | -9.353 | 0 | %100 |
| 33 | M79 | Y | -9.353 | -9.353 | 0 | %100 |
| 34 | M84 | Y | -15.937 | -15.937 | 0 | %100 |
| 35 | M85 | Y | -15.937 | -15.937 | 0 | %100 |
| 36 | M88 | Y | -15.937 | -15.937 | 0 | %100 |
| 37 | M89 | Y | -15.937 | -15.937 | 0 | %100 |
| 38 | M91 | Y | -12.278 | -12.278 | 0 | %100 |
| 39 | M92 | Y | -12.278 | -12.278 | 0 | %100 |
| 40 | MP1A | Y | -8.415 | -8.415 | 0 | %100 |
| 41 | MP2A | Y | -9.449 | -9.449 | 0 | %100 |
| 42 | MP3A | Y | -8.415 | -8.415 | 0 | %100 |
| 43 | MP4A | Y | -8.415 | -8.415 | 0 | %100 |

## Member Distributed Loads (BLC 40 : Structure Di) (Continued)

| | Member Label | Direction | Start Magnitude[lb/ft,... | End Magnitude[lb/ft,F... | Start Location[ft,%] | End Location[ft,%] |
|---|---|---|---|---|---|---|
| 44 | MP1C | Y | -8.415 | -8.415 | 0 | %100 |
| 45 | MP2C | Y | -9.449 | -9.449 | 0 | %100 |
| 46 | MP3C | Y | -8.415 | -8.415 | 0 | %100 |
| 47 | MP4C | Y | -8.415 | -8.415 | 0 | %100 |
| 48 | MP1B | Y | -8.415 | -8.415 | 0 | %100 |
| 49 | MP2B | Y | -9.449 | -9.449 | 0 | %100 |
| 50 | MP3B | Y | -8.415 | -8.415 | 0 | %100 |
| 51 | MP4B | Y | -8.415 | -8.415 | 0 | %100 |
| 52 | OVP | Y | -8.415 | -8.415 | 0 | %100 |
| 53 | M85A | Y | -9.449 | -9.449 | 0 | %100 |
| 54 | M92A | Y | -9.449 | -9.449 | 0 | %100 |
| 55 | M99 | Y | -9.449 | -9.449 | 0 | %100 |
| 56 | M102 | Y | -12.278 | -12.278 | 0 | %100 |
| 57 | M103 | Y | -12.278 | -12.278 | 0 | %100 |
| 58 | M104 | Y | -12.278 | -12.278 | 0 | %100 |
| 59 | M105 | Y | -15.913 | -15.913 | 0 | %100 |
| 60 | M106 | Y | -15.913 | -15.913 | 0 | %100 |
| 61 | M107 | Y | -15.913 | -15.913 | 0 | %100 |

## Member Distributed Loads (BLC 41 : Structure Wo (0 Deg))

| | Member Label | Direction | Start Magnitude[lb/ft,... | End Magnitude[lb/ft,F... | Start Location[ft,%] | End Location[ft,%] |
|---|---|---|---|---|---|---|
| 1 | M1 | X | 0 | 0 | 0 | %100 |
| 2 | M1 | Z | 0 | 0 | 0 | %100 |
| 3 | M4 | X | 0 | 0 | 0 | %100 |
| 4 | M4 | Z | -23.188 | -23.188 | 0 | %100 |
| 5 | M7 | X | 0 | 0 | 0 | %100 |
| 6 | M7 | Z | -13.526 | -13.526 | 0 | %100 |
| 7 | M15 | X | 0 | 0 | 0 | %100 |
| 8 | M15 | Z | -3.382 | -3.382 | 0 | %100 |
| 9 | M17 | X | 0 | 0 | 0 | %100 |
| 10 | M17 | Z | -5.797 | -5.797 | 0 | %100 |
| 11 | M20 | X | 0 | 0 | 0 | %100 |
| 12 | M20 | Z | -3.382 | -3.382 | 0 | %100 |
| 13 | M21 | X | 0 | 0 | 0 | %100 |
| 14 | M21 | Z | -5.797 | -5.797 | 0 | %100 |
| 15 | M29 | X | 0 | 0 | 0 | %100 |
| 16 | M29 | Z | -3.09 | -3.09 | 0 | %100 |
| 17 | M30 | X | 0 | 0 | 0 | %100 |
| 18 | M30 | Z | -3.09 | -3.09 | 0 | %100 |
| 19 | M108A | X | 0 | 0 | 0 | %100 |
| 20 | M108A | Z | -5.797 | -5.797 | 0 | %100 |
| 21 | M109A | X | 0 | 0 | 0 | %100 |
| 22 | M109A | Z | -23.617 | -23.617 | 0 | %100 |
| 23 | M119 | X | 0 | 0 | 0 | %100 |
| 24 | M119 | Z | -5.797 | -5.797 | 0 | %100 |
| 25 | M120 | X | 0 | 0 | 0 | %100 |
| 26 | M120 | Z | -23.617 | -23.617 | 0 | %100 |
| 27 | M122 | X | 0 | 0 | 0 | %100 |
| 28 | M122 | Z | -14.323 | -14.323 | 0 | %100 |
| 29 | M125 | X | 0 | 0 | 0 | %100 |
| 30 | M125 | Z | -14.323 | -14.323 | 0 | %100 |

## Member Distributed Loads (BLC 41 : Structure Wo (0 Deg)) (Continued)

| | Member Label | Direction | Start Magnitude[lb/ft,... | End Magnitude[lb/ft,F... | Start Location[ft,%] | End Location[ft,%] |
|---|---|---|---|---|---|---|
| 31 | M51 | X | 0 | 0 | 0 | %100 |
| 32 | M51 | Z | -10.292 | -10.292 | 0 | %100 |
| 33 | M52 | X | 0 | 0 | 0 | %100 |
| 34 | M52 | Z | -5.797 | -5.797 | 0 | %100 |
| 35 | M54 | X | 0 | 0 | 0 | %100 |
| 36 | M54 | Z | -5.797 | -5.797 | 0 | %100 |
| 37 | M55 | X | 0 | 0 | 0 | %100 |
| 38 | M55 | Z | -23.188 | -23.188 | 0 | %100 |
| 39 | M57A | X | 0 | 0 | 0 | %100 |
| 40 | M57A | Z | -2.94 | -2.94 | 0 | %100 |
| 41 | M58A | X | 0 | 0 | 0 | %100 |
| 42 | M58A | Z | -12.057 | -12.057 | 0 | %100 |
| 43 | M63 | X | 0 | 0 | 0 | %100 |
| 44 | M63 | Z | -5.797 | -5.797 | 0 | %100 |
| 45 | M64A | X | 0 | 0 | 0 | %100 |
| 46 | M64A | Z | -5.904 | -5.904 | 0 | %100 |
| 47 | M67 | X | 0 | 0 | 0 | %100 |
| 48 | M67 | Z | -23.188 | -23.188 | 0 | %100 |
| 49 | M68 | X | 0 | 0 | 0 | %100 |
| 50 | M68 | Z | -5.904 | -5.904 | 0 | %100 |
| 51 | M70A | X | 0 | 0 | 0 | %100 |
| 52 | M70A | Z | -3.581 | -3.581 | 0 | %100 |
| 53 | M71 | X | 0 | 0 | 0 | %100 |
| 54 | M71 | Z | -3.581 | -3.581 | 0 | %100 |
| 55 | M72A | X | 0 | 0 | 0 | %100 |
| 56 | M72A | Z | -10.292 | -10.292 | 0 | %100 |
| 57 | M73A | X | 0 | 0 | 0 | %100 |
| 58 | M73A | Z | -5.797 | -5.797 | 0 | %100 |
| 59 | M75A | X | 0 | 0 | 0 | %100 |
| 60 | M75A | Z | -23.188 | -23.188 | 0 | %100 |
| 61 | M76 | X | 0 | 0 | 0 | %100 |
| 62 | M76 | Z | -5.797 | -5.797 | 0 | %100 |
| 63 | M78A | X | 0 | 0 | 0 | %100 |
| 64 | M78A | Z | -12.057 | -12.057 | 0 | %100 |
| 65 | M79 | X | 0 | 0 | 0 | %100 |
| 66 | M79 | Z | -2.94 | -2.94 | 0 | %100 |
| 67 | M84 | X | 0 | 0 | 0 | %100 |
| 68 | M84 | Z | -23.188 | -23.188 | 0 | %100 |
| 69 | M85 | X | 0 | 0 | 0 | %100 |
| 70 | M85 | Z | -5.904 | -5.904 | 0 | %100 |
| 71 | M88 | X | 0 | 0 | 0 | %100 |
| 72 | M88 | Z | -5.797 | -5.797 | 0 | %100 |
| 73 | M89 | X | 0 | 0 | 0 | %100 |
| 74 | M89 | Z | -5.904 | -5.904 | 0 | %100 |
| 75 | M91 | X | 0 | 0 | 0 | %100 |
| 76 | M91 | Z | -3.581 | -3.581 | 0 | %100 |
| 77 | M92 | X | 0 | 0 | 0 | %100 |
| 78 | M92 | Z | -3.581 | -3.581 | 0 | %100 |
| 79 | MP1A | X | 0 | 0 | 0 | %100 |
| 80 | MP1A | Z | -9.179 | -9.179 | 0 | %100 |
| 81 | MP2A | X | 0 | 0 | 0 | %100 |
| 82 | MP2A | Z | -11.111 | -11.111 | 0 | %100 |

## Member Distributed Loads (BLC 41 : Structure Wo (0 Deg)) (Continued)

| | Member Label | Direction | Start Magnitude[lb/ft,... | End Magnitude[lb/ft,F... | Start Location[ft,%] | End Location[ft,%] |
|---|---|---|---|---|---|---|
| 83 | MP3A | X | 0 | 0 | 0 | %100 |
| 84 | MP3A | Z | -9.179 | -9.179 | 0 | %100 |
| 85 | MP4A | X | 0 | 0 | 0 | %100 |
| 86 | MP4A | Z | -9.179 | -9.179 | 0 | %100 |
| 87 | MP1C | X | 0 | 0 | 0 | %100 |
| 88 | MP1C | Z | -9.179 | -9.179 | 0 | %100 |
| 89 | MP2C | X | 0 | 0 | 0 | %100 |
| 90 | MP2C | Z | -11.111 | -11.111 | 0 | %100 |
| 91 | MP3C | X | 0 | 0 | 0 | %100 |
| 92 | MP3C | Z | -9.179 | -9.179 | 0 | %100 |
| 93 | MP4C | X | 0 | 0 | 0 | %100 |
| 94 | MP4C | Z | -9.179 | -9.179 | 0 | %100 |
| 95 | MP1B | X | 0 | 0 | 0 | %100 |
| 96 | MP1B | Z | -9.179 | -9.179 | 0 | %100 |
| 97 | MP2B | X | 0 | 0 | 0 | %100 |
| 98 | MP2B | Z | -11.111 | -11.111 | 0 | %100 |
| 99 | MP3B | X | 0 | 0 | 0 | %100 |
| 100 | MP3B | Z | -9.179 | -9.179 | 0 | %100 |
| 101 | MP4B | X | 0 | 0 | 0 | %100 |
| 102 | MP4B | Z | -9.179 | -9.179 | 0 | %100 |
| 103 | OVP | X | 0 | 0 | 0 | %100 |
| 104 | OVP | Z | -7.506 | -7.506 | 0 | %100 |
| 105 | M85A | X | 0 | 0 | 0 | %100 |
| 106 | M85A | Z | -11.111 | -11.111 | 0 | %100 |
| 107 | M92A | X | 0 | 0 | 0 | %100 |
| 108 | M92A | Z | -2.778 | -2.778 | 0 | %100 |
| 109 | M99 | X | 0 | 0 | 0 | %100 |
| 110 | M99 | Z | -2.778 | -2.778 | 0 | %100 |
| 111 | M102 | X | 0 | 0 | 0 | %100 |
| 112 | M102 | Z | -3.736 | -3.736 | 0 | %100 |
| 113 | M103 | X | 0 | 0 | 0 | %100 |
| 114 | M103 | Z | -3.736 | -3.736 | 0 | %100 |
| 115 | M104 | X | 0 | 0 | 0 | %100 |
| 116 | M104 | Z | -14.944 | -14.944 | 0 | %100 |
| 117 | M105 | X | 0 | 0 | 0 | %100 |
| 118 | M105 | Z | -9.749 | -9.749 | 0 | %100 |
| 119 | M106 | X | 0 | 0 | 0 | %100 |
| 120 | M106 | Z | -14.091 | -14.091 | 0 | %100 |
| 121 | M107 | X | 0 | 0 | 0 | %100 |
| 122 | M107 | Z | -14.091 | -14.091 | 0 | %100 |

## Member Distributed Loads (BLC 42 : Structure Wo (30 Deg))

| | Member Label | Direction | Start Magnitude[lb/ft,... | End Magnitude[lb/ft,F... | Start Location[ft,%] | End Location[ft,%] |
|---|---|---|---|---|---|---|
| 1 | M1 | X | 1.715 | 1.715 | 0 | %100 |
| 2 | M1 | Z | -2.971 | -2.971 | 0 | %100 |
| 3 | M4 | X | 8.695 | 8.695 | 0 | %100 |
| 4 | M4 | Z | -15.061 | -15.061 | 0 | %100 |
| 5 | M7 | X | 5.072 | 5.072 | 0 | %100 |
| 6 | M7 | Z | -8.786 | -8.786 | 0 | %100 |
| 7 | M15 | X | 5.072 | 5.072 | 0 | %100 |
| 8 | M15 | Z | -8.786 | -8.786 | 0 | %100 |

## Member Distributed Loads (BLC 42 : Structure Wo (30 Deg)) (Continued)

| | Member Label | Direction | Start Magnitude[lb/ft,... | End Magnitude[lb/ft,F... | Start Location[ft,%] | End Location[ft,%] |
|---|---|---|---|---|---|---|
| 9 | M17 | X | 8.695 | 8.695 | 0 | %100 |
| 10 | M17 | Z | -15.061 | -15.061 | 0 | %100 |
| 11 | M20 | X | 0 | 0 | 0 | %100 |
| 12 | M20 | Z | 0 | 0 | 0 | %100 |
| 13 | M21 | X | 0 | 0 | 0 | %100 |
| 14 | M21 | Z | 0 | 0 | 0 | %100 |
| 15 | M29 | X | 4.559 | 4.559 | 0 | %100 |
| 16 | M29 | Z | -7.897 | -7.897 | 0 | %100 |
| 17 | M30 | X | .000311 | .000311 | 0 | %100 |
| 18 | M30 | Z | -.000538 | -.000538 | 0 | %100 |
| 19 | M108A | X | 8.695 | 8.695 | 0 | %100 |
| 20 | M108A | Z | -15.061 | -15.061 | 0 | %100 |
| 21 | M109A | X | 8.856 | 8.856 | 0 | %100 |
| 22 | M109A | Z | -15.34 | -15.34 | 0 | %100 |
| 23 | M119 | X | 0 | 0 | 0 | %100 |
| 24 | M119 | Z | 0 | 0 | 0 | %100 |
| 25 | M120 | X | 8.856 | 8.856 | 0 | %100 |
| 26 | M120 | Z | -15.34 | -15.34 | 0 | %100 |
| 27 | M122 | X | 5.371 | 5.371 | 0 | %100 |
| 28 | M122 | Z | -9.303 | -9.303 | 0 | %100 |
| 29 | M125 | X | 5.371 | 5.371 | 0 | %100 |
| 30 | M125 | Z | -9.303 | -9.303 | 0 | %100 |
| 31 | M51 | X | 1.715 | 1.715 | 0 | %100 |
| 32 | M51 | Z | -2.971 | -2.971 | 0 | %100 |
| 33 | M52 | X | 8.695 | 8.695 | 0 | %100 |
| 34 | M52 | Z | -15.061 | -15.061 | 0 | %100 |
| 35 | M54 | X | 0 | 0 | 0 | %100 |
| 36 | M54 | Z | 0 | 0 | 0 | %100 |
| 37 | M55 | X | 8.695 | 8.695 | 0 | %100 |
| 38 | M55 | Z | -15.061 | -15.061 | 0 | %100 |
| 39 | M57A | X | .000311 | .000311 | 0 | %100 |
| 40 | M57A | Z | -.000538 | -.000538 | 0 | %100 |
| 41 | M58A | X | 4.559 | 4.559 | 0 | %100 |
| 42 | M58A | Z | -7.897 | -7.897 | 0 | %100 |
| 43 | M63 | X | 0 | 0 | 0 | %100 |
| 44 | M63 | Z | 0 | 0 | 0 | %100 |
| 45 | M64A | X | 8.856 | 8.856 | 0 | %100 |
| 46 | M64A | Z | -15.34 | -15.34 | 0 | %100 |
| 47 | M67 | X | 8.695 | 8.695 | 0 | %100 |
| 48 | M67 | Z | -15.061 | -15.061 | 0 | %100 |
| 49 | M68 | X | 8.856 | 8.856 | 0 | %100 |
| 50 | M68 | Z | -15.34 | -15.34 | 0 | %100 |
| 51 | M70A | X | 5.371 | 5.371 | 0 | %100 |
| 52 | M70A | Z | -9.303 | -9.303 | 0 | %100 |
| 53 | M71 | X | 5.371 | 5.371 | 0 | %100 |
| 54 | M71 | Z | -9.303 | -9.303 | 0 | %100 |
| 55 | M72A | X | 6.862 | 6.862 | 0 | %100 |
| 56 | M72A | Z | -11.885 | -11.885 | 0 | %100 |
| 57 | M73A | X | 0 | 0 | 0 | %100 |
| 58 | M73A | Z | 0 | 0 | 0 | %100 |
| 59 | M75A | X | 8.695 | 8.695 | 0 | %100 |
| 60 | M75A | Z | -15.061 | -15.061 | 0 | %100 |

## Member Distributed Loads (BLC 42 : Structure Wo (30 Deg)) (Continued)

| | Member Label | Direction | Start Magnitude[lb/ft,... | End Magnitude[lb/ft,F... | Start Location[ft,%] | End Location[ft,%] |
|---|---|---|---|---|---|---|
| 61 | M76 | X | 8.695 | 8.695 | 0 | %100 |
| 62 | M76 | Z | -15.061 | -15.061 | 0 | %100 |
| 63 | M78A | X | 4.484 | 4.484 | 0 | %100 |
| 64 | M78A | Z | -7.767 | -7.767 | 0 | %100 |
| 65 | M79 | X | 4.484 | 4.484 | 0 | %100 |
| 66 | M79 | Z | -7.767 | -7.767 | 0 | %100 |
| 67 | M84 | X | 8.695 | 8.695 | 0 | %100 |
| 68 | M84 | Z | -15.061 | -15.061 | 0 | %100 |
| 69 | M85 | X | 0 | 0 | 0 | %100 |
| 70 | M85 | Z | 0 | 0 | 0 | %100 |
| 71 | M88 | X | 8.695 | 8.695 | 0 | %100 |
| 72 | M88 | Z | -15.061 | -15.061 | 0 | %100 |
| 73 | M89 | X | 0 | 0 | 0 | %100 |
| 74 | M89 | Z | 0 | 0 | 0 | %100 |
| 75 | M91 | X | 0 | 0 | 0 | %100 |
| 76 | M91 | Z | 0 | 0 | 0 | %100 |
| 77 | M92 | X | 0 | 0 | 0 | %100 |
| 78 | M92 | Z | 0 | 0 | 0 | %100 |
| 79 | MP1A | X | 4.589 | 4.589 | 0 | %100 |
| 80 | MP1A | Z | -7.949 | -7.949 | 0 | %100 |
| 81 | MP2A | X | 5.555 | 5.555 | 0 | %100 |
| 82 | MP2A | Z | -9.622 | -9.622 | 0 | %100 |
| 83 | MP3A | X | 4.589 | 4.589 | 0 | %100 |
| 84 | MP3A | Z | -7.949 | -7.949 | 0 | %100 |
| 85 | MP4A | X | 4.589 | 4.589 | 0 | %100 |
| 86 | MP4A | Z | -7.949 | -7.949 | 0 | %100 |
| 87 | MP1C | X | 4.589 | 4.589 | 0 | %100 |
| 88 | MP1C | Z | -7.949 | -7.949 | 0 | %100 |
| 89 | MP2C | X | 5.555 | 5.555 | 0 | %100 |
| 90 | MP2C | Z | -9.622 | -9.622 | 0 | %100 |
| 91 | MP3C | X | 4.589 | 4.589 | 0 | %100 |
| 92 | MP3C | Z | -7.949 | -7.949 | 0 | %100 |
| 93 | MP4C | X | 4.589 | 4.589 | 0 | %100 |
| 94 | MP4C | Z | -7.949 | -7.949 | 0 | %100 |
| 95 | MP1B | X | 4.589 | 4.589 | 0 | %100 |
| 96 | MP1B | Z | -7.949 | -7.949 | 0 | %100 |
| 97 | MP2B | X | 5.555 | 5.555 | 0 | %100 |
| 98 | MP2B | Z | -9.622 | -9.622 | 0 | %100 |
| 99 | MP3B | X | 4.589 | 4.589 | 0 | %100 |
| 100 | MP3B | Z | -7.949 | -7.949 | 0 | %100 |
| 101 | MP4B | X | 4.589 | 4.589 | 0 | %100 |
| 102 | MP4B | Z | -7.949 | -7.949 | 0 | %100 |
| 103 | OVP | X | 3.753 | 3.753 | 0 | %100 |
| 104 | OVP | Z | -6.5 | -6.5 | 0 | %100 |
| 105 | M85A | X | 4.167 | 4.167 | 0 | %100 |
| 106 | M85A | Z | -7.217 | -7.217 | 0 | %100 |
| 107 | M92A | X | 4.167 | 4.167 | 0 | %100 |
| 108 | M92A | Z | -7.217 | -7.217 | 0 | %100 |
| 109 | M99 | X | 0 | 0 | 0 | %100 |
| 110 | M99 | Z | 0 | 0 | 0 | %100 |
| 111 | M102 | X | 5.604 | 5.604 | 0 | %100 |
| 112 | M102 | Z | -9.707 | -9.707 | 0 | %100 |

## Member Distributed Loads (BLC 42 : Structure Wo (30 Deg)) (Continued)

| | Member Label | Direction | Start Magnitude[lb/ft,... | End Magnitude[lb/ft,F... | Start Location[ft,%] | End Location[ft,%] |
|---|---|---|---|---|---|---|
| 113 | M103 | X | 0 | 0 | 0 | %100 |
| 114 | M103 | Z | 0 | 0 | 0 | %100 |
| 115 | M104 | X | 5.604 | 5.604 | 0 | %100 |
| 116 | M104 | Z | -9.707 | -9.707 | 0 | %100 |
| 117 | M105 | X | 5.598 | 5.598 | 0 | %100 |
| 118 | M105 | Z | -9.696 | -9.696 | 0 | %100 |
| 119 | M106 | X | 5.598 | 5.598 | 0 | %100 |
| 120 | M106 | Z | -9.696 | -9.696 | 0 | %100 |
| 121 | M107 | X | 7.769 | 7.769 | 0 | %100 |
| 122 | M107 | Z | -13.456 | -13.456 | 0 | %100 |

## Member Distributed Loads (BLC 43 : Structure Wo (60 Deg))

| | Member Label | Direction | Start Magnitude[lb/ft,... | End Magnitude[lb/ft,F... | Start Location[ft,%] | End Location[ft,%] |
|---|---|---|---|---|---|---|
| 1 | M1 | X | 8.913 | 8.913 | 0 | %100 |
| 2 | M1 | Z | -5.146 | -5.146 | 0 | %100 |
| 3 | M4 | X | 5.02 | 5.02 | 0 | %100 |
| 4 | M4 | Z | -2.898 | -2.898 | 0 | %100 |
| 5 | M7 | X | 2.929 | 2.929 | 0 | %100 |
| 6 | M7 | Z | -1.691 | -1.691 | 0 | %100 |
| 7 | M15 | X | 11.714 | 11.714 | 0 | %100 |
| 8 | M15 | Z | -6.763 | -6.763 | 0 | %100 |
| 9 | M17 | X | 20.081 | 20.081 | 0 | %100 |
| 10 | M17 | Z | -11.594 | -11.594 | 0 | %100 |
| 11 | M20 | X | 2.929 | 2.929 | 0 | %100 |
| 12 | M20 | Z | -1.691 | -1.691 | 0 | %100 |
| 13 | M21 | X | 5.02 | 5.02 | 0 | %100 |
| 14 | M21 | Z | -2.898 | -2.898 | 0 | %100 |
| 15 | M29 | X | 10.442 | 10.442 | 0 | %100 |
| 16 | M29 | Z | -6.029 | -6.029 | 0 | %100 |
| 17 | M30 | X | 2.546 | 2.546 | 0 | %100 |
| 18 | M30 | Z | -1.47 | -1.47 | 0 | %100 |
| 19 | M108A | X | 20.081 | 20.081 | 0 | %100 |
| 20 | M108A | Z | -11.594 | -11.594 | 0 | %100 |
| 21 | M109A | X | 5.113 | 5.113 | 0 | %100 |
| 22 | M109A | Z | -2.952 | -2.952 | 0 | %100 |
| 23 | M119 | X | 5.02 | 5.02 | 0 | %100 |
| 24 | M119 | Z | -2.898 | -2.898 | 0 | %100 |
| 25 | M120 | X | 5.113 | 5.113 | 0 | %100 |
| 26 | M120 | Z | -2.952 | -2.952 | 0 | %100 |
| 27 | M122 | X | 3.101 | 3.101 | 0 | %100 |
| 28 | M122 | Z | -1.79 | -1.79 | 0 | %100 |
| 29 | M125 | X | 3.101 | 3.101 | 0 | %100 |
| 30 | M125 | Z | -1.79 | -1.79 | 0 | %100 |
| 31 | M51 | X | 0 | 0 | 0 | %100 |
| 32 | M51 | Z | 0 | 0 | 0 | %100 |
| 33 | M52 | X | 20.081 | 20.081 | 0 | %100 |
| 34 | M52 | Z | -11.594 | -11.594 | 0 | %100 |
| 35 | M54 | X | 5.02 | 5.02 | 0 | %100 |
| 36 | M54 | Z | -2.898 | -2.898 | 0 | %100 |
| 37 | M55 | X | 5.02 | 5.02 | 0 | %100 |
| 38 | M55 | Z | -2.898 | -2.898 | 0 | %100 |

## Member Distributed Loads (BLC 43 : Structure Wo (60 Deg)) (Continued)

| | Member Label | Direction | Start Magnitude[lb/ft,... | End Magnitude[lb/ft,F... | Start Location[ft,%] | End Location[ft,%] |
|---|---|---|---|---|---|---|
| 39 | M57A | X | 2.676 | 2.676 | 0 | %100 |
| 40 | M57A | Z | -1.545 | -1.545 | 0 | %100 |
| 41 | M58A | X | 2.676 | 2.676 | 0 | %100 |
| 42 | M58A | Z | -1.545 | -1.545 | 0 | %100 |
| 43 | M63 | X | 5.02 | 5.02 | 0 | %100 |
| 44 | M63 | Z | -2.898 | -2.898 | 0 | %100 |
| 45 | M64A | X | 20.453 | 20.453 | 0 | %100 |
| 46 | M64A | Z | -11.809 | -11.809 | 0 | %100 |
| 47 | M67 | X | 5.02 | 5.02 | 0 | %100 |
| 48 | M67 | Z | -2.898 | -2.898 | 0 | %100 |
| 49 | M68 | X | 20.453 | 20.453 | 0 | %100 |
| 50 | M68 | Z | -11.809 | -11.809 | 0 | %100 |
| 51 | M70A | X | 12.404 | 12.404 | 0 | %100 |
| 52 | M70A | Z | -7.162 | -7.162 | 0 | %100 |
| 53 | M71 | X | 12.404 | 12.404 | 0 | %100 |
| 54 | M71 | Z | -7.162 | -7.162 | 0 | %100 |
| 55 | M72A | X | 8.913 | 8.913 | 0 | %100 |
| 56 | M72A | Z | -5.146 | -5.146 | 0 | %100 |
| 57 | M73A | X | 5.02 | 5.02 | 0 | %100 |
| 58 | M73A | Z | -2.898 | -2.898 | 0 | %100 |
| 59 | M75A | X | 5.02 | 5.02 | 0 | %100 |
| 60 | M75A | Z | -2.898 | -2.898 | 0 | %100 |
| 61 | M76 | X | 20.081 | 20.081 | 0 | %100 |
| 62 | M76 | Z | -11.594 | -11.594 | 0 | %100 |
| 63 | M78A | X | 2.546 | 2.546 | 0 | %100 |
| 64 | M78A | Z | -1.47 | -1.47 | 0 | %100 |
| 65 | M79 | X | 10.442 | 10.442 | 0 | %100 |
| 66 | M79 | Z | -6.029 | -6.029 | 0 | %100 |
| 67 | M84 | X | 5.02 | 5.02 | 0 | %100 |
| 68 | M84 | Z | -2.898 | -2.898 | 0 | %100 |
| 69 | M85 | X | 5.113 | 5.113 | 0 | %100 |
| 70 | M85 | Z | -2.952 | -2.952 | 0 | %100 |
| 71 | M88 | X | 20.081 | 20.081 | 0 | %100 |
| 72 | M88 | Z | -11.594 | -11.594 | 0 | %100 |
| 73 | M89 | X | 5.113 | 5.113 | 0 | %100 |
| 74 | M89 | Z | -2.952 | -2.952 | 0 | %100 |
| 75 | M91 | X | 3.101 | 3.101 | 0 | %100 |
| 76 | M91 | Z | -1.79 | -1.79 | 0 | %100 |
| 77 | M92 | X | 3.101 | 3.101 | 0 | %100 |
| 78 | M92 | Z | -1.79 | -1.79 | 0 | %100 |
| 79 | MP1A | X | 7.949 | 7.949 | 0 | %100 |
| 80 | MP1A | Z | -4.589 | -4.589 | 0 | %100 |
| 81 | MP2A | X | 9.622 | 9.622 | 0 | %100 |
| 82 | MP2A | Z | -5.555 | -5.555 | 0 | %100 |
| 83 | MP3A | X | 7.949 | 7.949 | 0 | %100 |
| 84 | MP3A | Z | -4.589 | -4.589 | 0 | %100 |
| 85 | MP4A | X | 7.949 | 7.949 | 0 | %100 |
| 86 | MP4A | Z | -4.589 | -4.589 | 0 | %100 |
| 87 | MP1C | X | 7.949 | 7.949 | 0 | %100 |
| 88 | MP1C | Z | -4.589 | -4.589 | 0 | %100 |
| 89 | MP2C | X | 9.622 | 9.622 | 0 | %100 |
| 90 | MP2C | Z | -5.555 | -5.555 | 0 | %100 |

## Member Distributed Loads (BLC 43 : Structure Wo (60 Deg)) (Continued)

| | Member Label | Direction | Start Magnitude[lb/ft,... | End Magnitude[lb/ft,F... | Start Location[ft,%] | End Location[ft,%] |
|---|---|---|---|---|---|---|
| 91 | MP3C | X | 7.949 | 7.949 | 0 | %100 |
| 92 | MP3C | Z | -4.589 | -4.589 | 0 | %100 |
| 93 | MP4C | X | 7.949 | 7.949 | 0 | %100 |
| 94 | MP4C | Z | -4.589 | -4.589 | 0 | %100 |
| 95 | MP1B | X | 7.949 | 7.949 | 0 | %100 |
| 96 | MP1B | Z | -4.589 | -4.589 | 0 | %100 |
| 97 | MP2B | X | 9.622 | 9.622 | 0 | %100 |
| 98 | MP2B | Z | -5.555 | -5.555 | 0 | %100 |
| 99 | MP3B | X | 7.949 | 7.949 | 0 | %100 |
| 100 | MP3B | Z | -4.589 | -4.589 | 0 | %100 |
| 101 | MP4B | X | 7.949 | 7.949 | 0 | %100 |
| 102 | MP4B | Z | -4.589 | -4.589 | 0 | %100 |
| 103 | OVP | X | 6.5 | 6.5 | 0 | %100 |
| 104 | OVP | Z | -3.753 | -3.753 | 0 | %100 |
| 105 | M85A | X | 2.406 | 2.406 | 0 | %100 |
| 106 | M85A | Z | -1.389 | -1.389 | 0 | %100 |
| 107 | M92A | X | 9.622 | 9.622 | 0 | %100 |
| 108 | M92A | Z | -5.555 | -5.555 | 0 | %100 |
| 109 | M99 | X | 2.406 | 2.406 | 0 | %100 |
| 110 | M99 | Z | -1.389 | -1.389 | 0 | %100 |
| 111 | M102 | X | 12.942 | 12.942 | 0 | %100 |
| 112 | M102 | Z | -7.472 | -7.472 | 0 | %100 |
| 113 | M103 | X | 3.236 | 3.236 | 0 | %100 |
| 114 | M103 | Z | -1.868 | -1.868 | 0 | %100 |
| 115 | M104 | X | 3.236 | 3.236 | 0 | %100 |
| 116 | M104 | Z | -1.868 | -1.868 | 0 | %100 |
| 117 | M105 | X | 12.203 | 12.203 | 0 | %100 |
| 118 | M105 | Z | -7.045 | -7.045 | 0 | %100 |
| 119 | M106 | X | 8.442 | 8.442 | 0 | %100 |
| 120 | M106 | Z | -4.874 | -4.874 | 0 | %100 |
| 121 | M107 | X | 12.203 | 12.203 | 0 | %100 |
| 122 | M107 | Z | -7.045 | -7.045 | 0 | %100 |

## Member Distributed Loads (BLC 44 : Structure Wo (90 Deg))

| | Member Label | Direction | Start Magnitude[lb/ft,... | End Magnitude[lb/ft,F... | Start Location[ft,%] | End Location[ft,%] |
|---|---|---|---|---|---|---|
| 1 | M1 | X | 13.723 | 13.723 | 0 | %100 |
| 2 | M1 | Z | 0 | 0 | 0 | %100 |
| 3 | M4 | X | 0 | 0 | 0 | %100 |
| 4 | M4 | Z | 0 | 0 | 0 | %100 |
| 5 | M7 | X | 0 | 0 | 0 | %100 |
| 6 | M7 | Z | 0 | 0 | 0 | %100 |
| 7 | M15 | X | 10.145 | 10.145 | 0 | %100 |
| 8 | M15 | Z | 0 | 0 | 0 | %100 |
| 9 | M17 | X | 17.391 | 17.391 | 0 | %100 |
| 10 | M17 | Z | 0 | 0 | 0 | %100 |
| 11 | M20 | X | 10.145 | 10.145 | 0 | %100 |
| 12 | M20 | Z | 0 | 0 | 0 | %100 |
| 13 | M21 | X | 17.391 | 17.391 | 0 | %100 |
| 14 | M21 | Z | 0 | 0 | 0 | %100 |
| 15 | M29 | X | 8.968 | 8.968 | 0 | %100 |
| 16 | M29 | Z | 0 | 0 | 0 | %100 |

## Member Distributed Loads (BLC 44 : Structure Wo (90 Deg)) (Continued)

| | Member Label | Direction | Start Magnitude[lb/ft,... | End Magnitude[lb/ft,F... | Start Location[ft,%] | End Location[ft,%] |
|---|---|---|---|---|---|---|
| 17 | M30 | X | 8.968 | 8.968 | 0 | %100 |
| 18 | M30 | Z | 0 | 0 | 0 | %100 |
| 19 | M108A | X | 17.391 | 17.391 | 0 | %100 |
| 20 | M108A | Z | 0 | 0 | 0 | %100 |
| 21 | M109A | X | 0 | 0 | 0 | %100 |
| 22 | M109A | Z | 0 | 0 | 0 | %100 |
| 23 | M119 | X | 17.391 | 17.391 | 0 | %100 |
| 24 | M119 | Z | 0 | 0 | 0 | %100 |
| 25 | M120 | X | 0 | 0 | 0 | %100 |
| 26 | M120 | Z | 0 | 0 | 0 | %100 |
| 27 | M122 | X | 0 | 0 | 0 | %100 |
| 28 | M122 | Z | 0 | 0 | 0 | %100 |
| 29 | M125 | X | 0 | 0 | 0 | %100 |
| 30 | M125 | Z | 0 | 0 | 0 | %100 |
| 31 | M51 | X | 3.431 | 3.431 | 0 | %100 |
| 32 | M51 | Z | 0 | 0 | 0 | %100 |
| 33 | M52 | X | 17.391 | 17.391 | 0 | %100 |
| 34 | M52 | Z | 0 | 0 | 0 | %100 |
| 35 | M54 | X | 17.391 | 17.391 | 0 | %100 |
| 36 | M54 | Z | 0 | 0 | 0 | %100 |
| 37 | M55 | X | 0 | 0 | 0 | %100 |
| 38 | M55 | Z | 0 | 0 | 0 | %100 |
| 39 | M57A | X | 9.118 | 9.118 | 0 | %100 |
| 40 | M57A | Z | 0 | 0 | 0 | %100 |
| 41 | M58A | X | .000621 | .000621 | 0 | %100 |
| 42 | M58A | Z | 0 | 0 | 0 | %100 |
| 43 | M63 | X | 17.391 | 17.391 | 0 | %100 |
| 44 | M63 | Z | 0 | 0 | 0 | %100 |
| 45 | M64A | X | 17.713 | 17.713 | 0 | %100 |
| 46 | M64A | Z | 0 | 0 | 0 | %100 |
| 47 | M67 | X | 0 | 0 | 0 | %100 |
| 48 | M67 | Z | 0 | 0 | 0 | %100 |
| 49 | M68 | X | 17.713 | 17.713 | 0 | %100 |
| 50 | M68 | Z | 0 | 0 | 0 | %100 |
| 51 | M70A | X | 10.742 | 10.742 | 0 | %100 |
| 52 | M70A | Z | 0 | 0 | 0 | %100 |
| 53 | M71 | X | 10.742 | 10.742 | 0 | %100 |
| 54 | M71 | Z | 0 | 0 | 0 | %100 |
| 55 | M72A | X | 3.431 | 3.431 | 0 | %100 |
| 56 | M72A | Z | 0 | 0 | 0 | %100 |
| 57 | M73A | X | 17.391 | 17.391 | 0 | %100 |
| 58 | M73A | Z | 0 | 0 | 0 | %100 |
| 59 | M75A | X | 0 | 0 | 0 | %100 |
| 60 | M75A | Z | 0 | 0 | 0 | %100 |
| 61 | M76 | X | 17.391 | 17.391 | 0 | %100 |
| 62 | M76 | Z | 0 | 0 | 0 | %100 |
| 63 | M78A | X | .000621 | .000621 | 0 | %100 |
| 64 | M78A | Z | 0 | 0 | 0 | %100 |
| 65 | M79 | X | 9.118 | 9.118 | 0 | %100 |
| 66 | M79 | Z | 0 | 0 | 0 | %100 |
| 67 | M84 | X | 0 | 0 | 0 | %100 |
| 68 | M84 | Z | 0 | 0 | 0 | %100 |

## Member Distributed Loads (BLC 44 : Structure Wo (90 Deg)) (Continued)

| | Member Label | Direction | Start Magnitude[lb/ft,... | End Magnitude[lb/ft,F... | Start Location[ft,%] | End Location[ft,%] |
|---|---|---|---|---|---|---|
| 69 | M85 | X | 17.713 | 17.713 | 0 | %100 |
| 70 | M85 | Z | 0 | 0 | 0 | %100 |
| 71 | M88 | X | 17.391 | 17.391 | 0 | %100 |
| 72 | M88 | Z | 0 | 0 | 0 | %100 |
| 73 | M89 | X | 17.713 | 17.713 | 0 | %100 |
| 74 | M89 | Z | 0 | 0 | 0 | %100 |
| 75 | M91 | X | 10.742 | 10.742 | 0 | %100 |
| 76 | M91 | Z | 0 | 0 | 0 | %100 |
| 77 | M92 | X | 10.742 | 10.742 | 0 | %100 |
| 78 | M92 | Z | 0 | 0 | 0 | %100 |
| 79 | MP1A | X | 9.179 | 9.179 | 0 | %100 |
| 80 | MP1A | Z | 0 | 0 | 0 | %100 |
| 81 | MP2A | X | 11.111 | 11.111 | 0 | %100 |
| 82 | MP2A | Z | 0 | 0 | 0 | %100 |
| 83 | MP3A | X | 9.179 | 9.179 | 0 | %100 |
| 84 | MP3A | Z | 0 | 0 | 0 | %100 |
| 85 | MP4A | X | 9.179 | 9.179 | 0 | %100 |
| 86 | MP4A | Z | 0 | 0 | 0 | %100 |
| 87 | MP1C | X | 9.179 | 9.179 | 0 | %100 |
| 88 | MP1C | Z | 0 | 0 | 0 | %100 |
| 89 | MP2C | X | 11.111 | 11.111 | 0 | %100 |
| 90 | MP2C | Z | 0 | 0 | 0 | %100 |
| 91 | MP3C | X | 9.179 | 9.179 | 0 | %100 |
| 92 | MP3C | Z | 0 | 0 | 0 | %100 |
| 93 | MP4C | X | 9.179 | 9.179 | 0 | %100 |
| 94 | MP4C | Z | 0 | 0 | 0 | %100 |
| 95 | MP1B | X | 9.179 | 9.179 | 0 | %100 |
| 96 | MP1B | Z | 0 | 0 | 0 | %100 |
| 97 | MP2B | X | 11.111 | 11.111 | 0 | %100 |
| 98 | MP2B | Z | 0 | 0 | 0 | %100 |
| 99 | MP3B | X | 9.179 | 9.179 | 0 | %100 |
| 100 | MP3B | Z | 0 | 0 | 0 | %100 |
| 101 | MP4B | X | 9.179 | 9.179 | 0 | %100 |
| 102 | MP4B | Z | 0 | 0 | 0 | %100 |
| 103 | OVP | X | 7.506 | 7.506 | 0 | %100 |
| 104 | OVP | Z | 0 | 0 | 0 | %100 |
| 105 | M85A | X | 0 | 0 | 0 | %100 |
| 106 | M85A | Z | 0 | 0 | 0 | %100 |
| 107 | M92A | X | 8.333 | 8.333 | 0 | %100 |
| 108 | M92A | Z | 0 | 0 | 0 | %100 |
| 109 | M99 | X | 8.333 | 8.333 | 0 | %100 |
| 110 | M99 | Z | 0 | 0 | 0 | %100 |
| 111 | M102 | X | 11.208 | 11.208 | 0 | %100 |
| 112 | M102 | Z | 0 | 0 | 0 | %100 |
| 113 | M103 | X | 11.208 | 11.208 | 0 | %100 |
| 114 | M103 | Z | 0 | 0 | 0 | %100 |
| 115 | M104 | X | 0 | 0 | 0 | %100 |
| 116 | M104 | Z | 0 | 0 | 0 | %100 |
| 117 | M105 | X | 15.538 | 15.538 | 0 | %100 |
| 118 | M105 | Z | 0 | 0 | 0 | %100 |
| 119 | M106 | X | 11.196 | 11.196 | 0 | %100 |
| 120 | M106 | Z | 0 | 0 | 0 | %100 |

## Member Distributed Loads (BLC 44 : Structure Wo (90 Deg)) (Continued)

| | Member Label | Direction | Start Magnitude[lb/ft,... | End Magnitude[lb/ft,F... | Start Location[ft,%] | End Location[ft,%] |
|---|---|---|---|---|---|---|
| 121 | M107 | X | 11.196 | 11.196 | 0 | %100 |
| 122 | M107 | Z | 0 | 0 | 0 | %100 |

## Member Distributed Loads (BLC 45 : Structure Wo (120 Deg))

| | Member Label | Direction | Start Magnitude[lb/ft,... | End Magnitude[lb/ft,F... | Start Location[ft,%] | End Location[ft,%] |
|---|---|---|---|---|---|---|
| 1 | M1 | X | 8.913 | 8.913 | 0 | %100 |
| 2 | M1 | Z | 5.146 | 5.146 | 0 | %100 |
| 3 | M4 | X | 5.02 | 5.02 | 0 | %100 |
| 4 | M4 | Z | 2.898 | 2.898 | 0 | %100 |
| 5 | M7 | X | 2.929 | 2.929 | 0 | %100 |
| 6 | M7 | Z | 1.691 | 1.691 | 0 | %100 |
| 7 | M15 | X | 2.929 | 2.929 | 0 | %100 |
| 8 | M15 | Z | 1.691 | 1.691 | 0 | %100 |
| 9 | M17 | X | 5.02 | 5.02 | 0 | %100 |
| 10 | M17 | Z | 2.898 | 2.898 | 0 | %100 |
| 11 | M20 | X | 11.714 | 11.714 | 0 | %100 |
| 12 | M20 | Z | 6.763 | 6.763 | 0 | %100 |
| 13 | M21 | X | 20.081 | 20.081 | 0 | %100 |
| 14 | M21 | Z | 11.594 | 11.594 | 0 | %100 |
| 15 | M29 | X | 2.546 | 2.546 | 0 | %100 |
| 16 | M29 | Z | 1.47 | 1.47 | 0 | %100 |
| 17 | M30 | X | 10.442 | 10.442 | 0 | %100 |
| 18 | M30 | Z | 6.029 | 6.029 | 0 | %100 |
| 19 | M108A | X | 5.02 | 5.02 | 0 | %100 |
| 20 | M108A | Z | 2.898 | 2.898 | 0 | %100 |
| 21 | M109A | X | 5.113 | 5.113 | 0 | %100 |
| 22 | M109A | Z | 2.952 | 2.952 | 0 | %100 |
| 23 | M119 | X | 20.081 | 20.081 | 0 | %100 |
| 24 | M119 | Z | 11.594 | 11.594 | 0 | %100 |
| 25 | M120 | X | 5.113 | 5.113 | 0 | %100 |
| 26 | M120 | Z | 2.952 | 2.952 | 0 | %100 |
| 27 | M122 | X | 3.101 | 3.101 | 0 | %100 |
| 28 | M122 | Z | 1.79 | 1.79 | 0 | %100 |
| 29 | M125 | X | 3.101 | 3.101 | 0 | %100 |
| 30 | M125 | Z | 1.79 | 1.79 | 0 | %100 |
| 31 | M51 | X | 8.913 | 8.913 | 0 | %100 |
| 32 | M51 | Z | 5.146 | 5.146 | 0 | %100 |
| 33 | M52 | X | 5.02 | 5.02 | 0 | %100 |
| 34 | M52 | Z | 2.898 | 2.898 | 0 | %100 |
| 35 | M54 | X | 20.081 | 20.081 | 0 | %100 |
| 36 | M54 | Z | 11.594 | 11.594 | 0 | %100 |
| 37 | M55 | X | 5.02 | 5.02 | 0 | %100 |
| 38 | M55 | Z | 2.898 | 2.898 | 0 | %100 |
| 39 | M57A | X | 10.442 | 10.442 | 0 | %100 |
| 40 | M57A | Z | 6.029 | 6.029 | 0 | %100 |
| 41 | M58A | X | 2.546 | 2.546 | 0 | %100 |
| 42 | M58A | Z | 1.47 | 1.47 | 0 | %100 |
| 43 | M63 | X | 20.081 | 20.081 | 0 | %100 |
| 44 | M63 | Z | 11.594 | 11.594 | 0 | %100 |
| 45 | M64A | X | 5.113 | 5.113 | 0 | %100 |
| 46 | M64A | Z | 2.952 | 2.952 | 0 | %100 |

## Member Distributed Loads (BLC 45 : Structure Wo (120 Deg)) (Continued)

| | Member Label | Direction | Start Magnitude[lb/ft,... | End Magnitude[lb/ft,F... | Start Location[ft,%] | End Location[ft,%] |
|---|---|---|---|---|---|---|
| 47 | M67 | X | 5.02 | 5.02 | 0 | %100 |
| 48 | M67 | Z | 2.898 | 2.898 | 0 | %100 |
| 49 | M68 | X | 5.113 | 5.113 | 0 | %100 |
| 50 | M68 | Z | 2.952 | 2.952 | 0 | %100 |
| 51 | M70A | X | 3.101 | 3.101 | 0 | %100 |
| 52 | M70A | Z | 1.79 | 1.79 | 0 | %100 |
| 53 | M71 | X | 3.101 | 3.101 | 0 | %100 |
| 54 | M71 | Z | 1.79 | 1.79 | 0 | %100 |
| 55 | M72A | X | 0 | 0 | 0 | %100 |
| 56 | M72A | Z | 0 | 0 | 0 | %100 |
| 57 | M73A | X | 20.081 | 20.081 | 0 | %100 |
| 58 | M73A | Z | 11.594 | 11.594 | 0 | %100 |
| 59 | M75A | X | 5.02 | 5.02 | 0 | %100 |
| 60 | M75A | Z | 2.898 | 2.898 | 0 | %100 |
| 61 | M76 | X | 5.02 | 5.02 | 0 | %100 |
| 62 | M76 | Z | 2.898 | 2.898 | 0 | %100 |
| 63 | M78A | X | 2.676 | 2.676 | 0 | %100 |
| 64 | M78A | Z | 1.545 | 1.545 | 0 | %100 |
| 65 | M79 | X | 2.676 | 2.676 | 0 | %100 |
| 66 | M79 | Z | 1.545 | 1.545 | 0 | %100 |
| 67 | M84 | X | 5.02 | 5.02 | 0 | %100 |
| 68 | M84 | Z | 2.898 | 2.898 | 0 | %100 |
| 69 | M85 | X | 20.453 | 20.453 | 0 | %100 |
| 70 | M85 | Z | 11.809 | 11.809 | 0 | %100 |
| 71 | M88 | X | 5.02 | 5.02 | 0 | %100 |
| 72 | M88 | Z | 2.898 | 2.898 | 0 | %100 |
| 73 | M89 | X | 20.453 | 20.453 | 0 | %100 |
| 74 | M89 | Z | 11.809 | 11.809 | 0 | %100 |
| 75 | M91 | X | 12.404 | 12.404 | 0 | %100 |
| 76 | M91 | Z | 7.162 | 7.162 | 0 | %100 |
| 77 | M92 | X | 12.404 | 12.404 | 0 | %100 |
| 78 | M92 | Z | 7.162 | 7.162 | 0 | %100 |
| 79 | MP1A | X | 7.949 | 7.949 | 0 | %100 |
| 80 | MP1A | Z | 4.589 | 4.589 | 0 | %100 |
| 81 | MP2A | X | 9.622 | 9.622 | 0 | %100 |
| 82 | MP2A | Z | 5.555 | 5.555 | 0 | %100 |
| 83 | MP3A | X | 7.949 | 7.949 | 0 | %100 |
| 84 | MP3A | Z | 4.589 | 4.589 | 0 | %100 |
| 85 | MP4A | X | 7.949 | 7.949 | 0 | %100 |
| 86 | MP4A | Z | 4.589 | 4.589 | 0 | %100 |
| 87 | MP1C | X | 7.949 | 7.949 | 0 | %100 |
| 88 | MP1C | Z | 4.589 | 4.589 | 0 | %100 |
| 89 | MP2C | X | 9.622 | 9.622 | 0 | %100 |
| 90 | MP2C | Z | 5.555 | 5.555 | 0 | %100 |
| 91 | MP3C | X | 7.949 | 7.949 | 0 | %100 |
| 92 | MP3C | Z | 4.589 | 4.589 | 0 | %100 |
| 93 | MP4C | X | 7.949 | 7.949 | 0 | %100 |
| 94 | MP4C | Z | 4.589 | 4.589 | 0 | %100 |
| 95 | MP1B | X | 7.949 | 7.949 | 0 | %100 |
| 96 | MP1B | Z | 4.589 | 4.589 | 0 | %100 |
| 97 | MP2B | X | 9.622 | 9.622 | 0 | %100 |
| 98 | MP2B | Z | 5.555 | 5.555 | 0 | %100 |

## Member Distributed Loads (BLC 45 : Structure Wo (120 Deg)) (Continued)

| | Member Label | Direction | Start Magnitude[lb/ft,... | End Magnitude[lb/ft,F... | Start Location[ft,%] | End Location[ft,%] |
|---|---|---|---|---|---|---|
| 99 | MP3B | X | 7.949 | 7.949 | 0 | %100 |
| 100 | MP3B | Z | 4.589 | 4.589 | 0 | %100 |
| 101 | MP4B | X | 7.949 | 7.949 | 0 | %100 |
| 102 | MP4B | Z | 4.589 | 4.589 | 0 | %100 |
| 103 | OVP | X | 6.5 | 6.5 | 0 | %100 |
| 104 | OVP | Z | 3.753 | 3.753 | 0 | %100 |
| 105 | M85A | X | 2.406 | 2.406 | 0 | %100 |
| 106 | M85A | Z | 1.389 | 1.389 | 0 | %100 |
| 107 | M92A | X | 2.406 | 2.406 | 0 | %100 |
| 108 | M92A | Z | 1.389 | 1.389 | 0 | %100 |
| 109 | M99 | X | 9.622 | 9.622 | 0 | %100 |
| 110 | M99 | Z | 5.555 | 5.555 | 0 | %100 |
| 111 | M102 | X | 3.236 | 3.236 | 0 | %100 |
| 112 | M102 | Z | 1.868 | 1.868 | 0 | %100 |
| 113 | M103 | X | 12.942 | 12.942 | 0 | %100 |
| 114 | M103 | Z | 7.472 | 7.472 | 0 | %100 |
| 115 | M104 | X | 3.236 | 3.236 | 0 | %100 |
| 116 | M104 | Z | 1.868 | 1.868 | 0 | %100 |
| 117 | M105 | X | 12.203 | 12.203 | 0 | %100 |
| 118 | M105 | Z | 7.045 | 7.045 | 0 | %100 |
| 119 | M106 | X | 12.203 | 12.203 | 0 | %100 |
| 120 | M106 | Z | 7.045 | 7.045 | 0 | %100 |
| 121 | M107 | X | 8.442 | 8.442 | 0 | %100 |
| 122 | M107 | Z | 4.874 | 4.874 | 0 | %100 |

## Member Distributed Loads (BLC 46 : Structure Wo (150 Deg))

| | Member Label | Direction | Start Magnitude[lb/ft,... | End Magnitude[lb/ft,F... | Start Location[ft,%] | End Location[ft,%] |
|---|---|---|---|---|---|---|
| 1 | M1 | X | 1.715 | 1.715 | 0 | %100 |
| 2 | M1 | Z | 2.971 | 2.971 | 0 | %100 |
| 3 | M4 | X | 8.695 | 8.695 | 0 | %100 |
| 4 | M4 | Z | 15.061 | 15.061 | 0 | %100 |
| 5 | M7 | X | 5.072 | 5.072 | 0 | %100 |
| 6 | M7 | Z | 8.786 | 8.786 | 0 | %100 |
| 7 | M15 | X | 0 | 0 | 0 | %100 |
| 8 | M15 | Z | 0 | 0 | 0 | %100 |
| 9 | M17 | X | 0 | 0 | 0 | %100 |
| 10 | M17 | Z | 0 | 0 | 0 | %100 |
| 11 | M20 | X | 5.072 | 5.072 | 0 | %100 |
| 12 | M20 | Z | 8.786 | 8.786 | 0 | %100 |
| 13 | M21 | X | 8.695 | 8.695 | 0 | %100 |
| 14 | M21 | Z | 15.061 | 15.061 | 0 | %100 |
| 15 | M29 | X | .000311 | .000311 | 0 | %100 |
| 16 | M29 | Z | .000538 | .000538 | 0 | %100 |
| 17 | M30 | X | 4.559 | 4.559 | 0 | %100 |
| 18 | M30 | Z | 7.897 | 7.897 | 0 | %100 |
| 19 | M108A | X | 0 | 0 | 0 | %100 |
| 20 | M108A | Z | 0 | 0 | 0 | %100 |
| 21 | M109A | X | 8.856 | 8.856 | 0 | %100 |
| 22 | M109A | Z | 15.34 | 15.34 | 0 | %100 |
| 23 | M119 | X | 8.695 | 8.695 | 0 | %100 |
| 24 | M119 | Z | 15.061 | 15.061 | 0 | %100 |

## Member Distributed Loads (BLC 46 : Structure Wo (150 Deg)) (Continued)

| | Member Label | Direction | Start Magnitude[lb/ft,... | End Magnitude[lb/ft,F... | Start Location[ft,%] | End Location[ft,%] |
|---|---|---|---|---|---|---|
| 25 | M120 | X | 8.856 | 8.856 | 0 | %100 |
| 26 | M120 | Z | 15.34 | 15.34 | 0 | %100 |
| 27 | M122 | X | 5.371 | 5.371 | 0 | %100 |
| 28 | M122 | Z | 9.303 | 9.303 | 0 | %100 |
| 29 | M125 | X | 5.371 | 5.371 | 0 | %100 |
| 30 | M125 | Z | 9.303 | 9.303 | 0 | %100 |
| 31 | M51 | X | 6.862 | 6.862 | 0 | %100 |
| 32 | M51 | Z | 11.885 | 11.885 | 0 | %100 |
| 33 | M52 | X | 0 | 0 | 0 | %100 |
| 34 | M52 | Z | 0 | 0 | 0 | %100 |
| 35 | M54 | X | 8.695 | 8.695 | 0 | %100 |
| 36 | M54 | Z | 15.061 | 15.061 | 0 | %100 |
| 37 | M55 | X | 8.695 | 8.695 | 0 | %100 |
| 38 | M55 | Z | 15.061 | 15.061 | 0 | %100 |
| 39 | M57A | X | 4.484 | 4.484 | 0 | %100 |
| 40 | M57A | Z | 7.767 | 7.767 | 0 | %100 |
| 41 | M58A | X | 4.484 | 4.484 | 0 | %100 |
| 42 | M58A | Z | 7.767 | 7.767 | 0 | %100 |
| 43 | M63 | X | 8.695 | 8.695 | 0 | %100 |
| 44 | M63 | Z | 15.061 | 15.061 | 0 | %100 |
| 45 | M64A | X | 0 | 0 | 0 | %100 |
| 46 | M64A | Z | 0 | 0 | 0 | %100 |
| 47 | M67 | X | 8.695 | 8.695 | 0 | %100 |
| 48 | M67 | Z | 15.061 | 15.061 | 0 | %100 |
| 49 | M68 | X | 0 | 0 | 0 | %100 |
| 50 | M68 | Z | 0 | 0 | 0 | %100 |
| 51 | M70A | X | 0 | 0 | 0 | %100 |
| 52 | M70A | Z | 0 | 0 | 0 | %100 |
| 53 | M71 | X | 0 | 0 | 0 | %100 |
| 54 | M71 | Z | 0 | 0 | 0 | %100 |
| 55 | M72A | X | 1.715 | 1.715 | 0 | %100 |
| 56 | M72A | Z | 2.971 | 2.971 | 0 | %100 |
| 57 | M73A | X | 8.695 | 8.695 | 0 | %100 |
| 58 | M73A | Z | 15.061 | 15.061 | 0 | %100 |
| 59 | M75A | X | 8.695 | 8.695 | 0 | %100 |
| 60 | M75A | Z | 15.061 | 15.061 | 0 | %100 |
| 61 | M76 | X | 0 | 0 | 0 | %100 |
| 62 | M76 | Z | 0 | 0 | 0 | %100 |
| 63 | M78A | X | 4.559 | 4.559 | 0 | %100 |
| 64 | M78A | Z | 7.897 | 7.897 | 0 | %100 |
| 65 | M79 | X | .000311 | .000311 | 0 | %100 |
| 66 | M79 | Z | .000538 | .000538 | 0 | %100 |
| 67 | M84 | X | 8.695 | 8.695 | 0 | %100 |
| 68 | M84 | Z | 15.061 | 15.061 | 0 | %100 |
| 69 | M85 | X | 8.856 | 8.856 | 0 | %100 |
| 70 | M85 | Z | 15.34 | 15.34 | 0 | %100 |
| 71 | M88 | X | 0 | 0 | 0 | %100 |
| 72 | M88 | Z | 0 | 0 | 0 | %100 |
| 73 | M89 | X | 8.856 | 8.856 | 0 | %100 |
| 74 | M89 | Z | 15.34 | 15.34 | 0 | %100 |
| 75 | M91 | X | 5.371 | 5.371 | 0 | %100 |
| 76 | M91 | Z | 9.303 | 9.303 | 0 | %100 |

## Member Distributed Loads (BLC 46 : Structure Wo (150 Deg)) (Continued)

| | Member Label | Direction | Start Magnitude[lb/ft,... | End Magnitude[lb/ft,F... | Start Location[ft,%] | End Location[ft,%] |
|---|---|---|---|---|---|---|
| 77 | M92 | X | 5.371 | 5.371 | 0 | %100 |
| 78 | M92 | Z | 9.303 | 9.303 | 0 | %100 |
| 79 | MP1A | X | 4.589 | 4.589 | 0 | %100 |
| 80 | MP1A | Z | 7.949 | 7.949 | 0 | %100 |
| 81 | MP2A | X | 5.555 | 5.555 | 0 | %100 |
| 82 | MP2A | Z | 9.622 | 9.622 | 0 | %100 |
| 83 | MP3A | X | 4.589 | 4.589 | 0 | %100 |
| 84 | MP3A | Z | 7.949 | 7.949 | 0 | %100 |
| 85 | MP4A | X | 4.589 | 4.589 | 0 | %100 |
| 86 | MP4A | Z | 7.949 | 7.949 | 0 | %100 |
| 87 | MP1C | X | 4.589 | 4.589 | 0 | %100 |
| 88 | MP1C | Z | 7.949 | 7.949 | 0 | %100 |
| 89 | MP2C | X | 5.555 | 5.555 | 0 | %100 |
| 90 | MP2C | Z | 9.622 | 9.622 | 0 | %100 |
| 91 | MP3C | X | 4.589 | 4.589 | 0 | %100 |
| 92 | MP3C | Z | 7.949 | 7.949 | 0 | %100 |
| 93 | MP4C | X | 4.589 | 4.589 | 0 | %100 |
| 94 | MP4C | Z | 7.949 | 7.949 | 0 | %100 |
| 95 | MP1B | X | 4.589 | 4.589 | 0 | %100 |
| 96 | MP1B | Z | 7.949 | 7.949 | 0 | %100 |
| 97 | MP2B | X | 5.555 | 5.555 | 0 | %100 |
| 98 | MP2B | Z | 9.622 | 9.622 | 0 | %100 |
| 99 | MP3B | X | 4.589 | 4.589 | 0 | %100 |
| 100 | MP3B | Z | 7.949 | 7.949 | 0 | %100 |
| 101 | MP4B | X | 4.589 | 4.589 | 0 | %100 |
| 102 | MP4B | Z | 7.949 | 7.949 | 0 | %100 |
| 103 | OVP | X | 3.753 | 3.753 | 0 | %100 |
| 104 | OVP | Z | 6.5 | 6.5 | 0 | %100 |
| 105 | M85A | X | 4.167 | 4.167 | 0 | %100 |
| 106 | M85A | Z | 7.217 | 7.217 | 0 | %100 |
| 107 | M92A | X | 0 | 0 | 0 | %100 |
| 108 | M92A | Z | 0 | 0 | 0 | %100 |
| 109 | M99 | X | 4.167 | 4.167 | 0 | %100 |
| 110 | M99 | Z | 7.217 | 7.217 | 0 | %100 |
| 111 | M102 | X | 0 | 0 | 0 | %100 |
| 112 | M102 | Z | 0 | 0 | 0 | %100 |
| 113 | M103 | X | 5.604 | 5.604 | 0 | %100 |
| 114 | M103 | Z | 9.707 | 9.707 | 0 | %100 |
| 115 | M104 | X | 5.604 | 5.604 | 0 | %100 |
| 116 | M104 | Z | 9.707 | 9.707 | 0 | %100 |
| 117 | M105 | X | 5.598 | 5.598 | 0 | %100 |
| 118 | M105 | Z | 9.696 | 9.696 | 0 | %100 |
| 119 | M106 | X | 7.769 | 7.769 | 0 | %100 |
| 120 | M106 | Z | 13.456 | 13.456 | 0 | %100 |
| 121 | M107 | X | 5.598 | 5.598 | 0 | %100 |
| 122 | M107 | Z | 9.696 | 9.696 | 0 | %100 |

## Member Distributed Loads (BLC 47 : Structure Wo (180 Deg))

| | Member Label | Direction | Start Magnitude[lb/ft,... | End Magnitude[lb/ft,F... | Start Location[ft,%] | End Location[ft,%] |
|---|---|---|---|---|---|---|
| 1 | M1 | X | 0 | 0 | 0 | %100 |
| 2 | M1 | Z | 0 | 0 | 0 | %100 |

## Member Distributed Loads (BLC 47 : Structure Wo (180 Deg)) (Continued)

| | Member Label | Direction | Start Magnitude[lb/ft,... | End Magnitude[lb/ft,F... | Start Location[ft,%] | End Location[ft,%] |
|---|---|---|---|---|---|---|
| 3 | M4 | X | 0 | 0 | 0 | %100 |
| 4 | M4 | Z | 23.188 | 23.188 | 0 | %100 |
| 5 | M7 | X | 0 | 0 | 0 | %100 |
| 6 | M7 | Z | 13.526 | 13.526 | 0 | %100 |
| 7 | M15 | X | 0 | 0 | 0 | %100 |
| 8 | M15 | Z | 3.382 | 3.382 | 0 | %100 |
| 9 | M17 | X | 0 | 0 | 0 | %100 |
| 10 | M17 | Z | 5.797 | 5.797 | 0 | %100 |
| 11 | M20 | X | 0 | 0 | 0 | %100 |
| 12 | M20 | Z | 3.382 | 3.382 | 0 | %100 |
| 13 | M21 | X | 0 | 0 | 0 | %100 |
| 14 | M21 | Z | 5.797 | 5.797 | 0 | %100 |
| 15 | M29 | X | 0 | 0 | 0 | %100 |
| 16 | M29 | Z | 3.09 | 3.09 | 0 | %100 |
| 17 | M30 | X | 0 | 0 | 0 | %100 |
| 18 | M30 | Z | 3.09 | 3.09 | 0 | %100 |
| 19 | M108A | X | 0 | 0 | 0 | %100 |
| 20 | M108A | Z | 5.797 | 5.797 | 0 | %100 |
| 21 | M109A | X | 0 | 0 | 0 | %100 |
| 22 | M109A | Z | 23.617 | 23.617 | 0 | %100 |
| 23 | M119 | X | 0 | 0 | 0 | %100 |
| 24 | M119 | Z | 5.797 | 5.797 | 0 | %100 |
| 25 | M120 | X | 0 | 0 | 0 | %100 |
| 26 | M120 | Z | 23.617 | 23.617 | 0 | %100 |
| 27 | M122 | X | 0 | 0 | 0 | %100 |
| 28 | M122 | Z | 14.323 | 14.323 | 0 | %100 |
| 29 | M125 | X | 0 | 0 | 0 | %100 |
| 30 | M125 | Z | 14.323 | 14.323 | 0 | %100 |
| 31 | M51 | X | 0 | 0 | 0 | %100 |
| 32 | M51 | Z | 10.292 | 10.292 | 0 | %100 |
| 33 | M52 | X | 0 | 0 | 0 | %100 |
| 34 | M52 | Z | 5.797 | 5.797 | 0 | %100 |
| 35 | M54 | X | 0 | 0 | 0 | %100 |
| 36 | M54 | Z | 5.797 | 5.797 | 0 | %100 |
| 37 | M55 | X | 0 | 0 | 0 | %100 |
| 38 | M55 | Z | 23.188 | 23.188 | 0 | %100 |
| 39 | M57A | X | 0 | 0 | 0 | %100 |
| 40 | M57A | Z | 2.94 | 2.94 | 0 | %100 |
| 41 | M58A | X | 0 | 0 | 0 | %100 |
| 42 | M58A | Z | 12.057 | 12.057 | 0 | %100 |
| 43 | M63 | X | 0 | 0 | 0 | %100 |
| 44 | M63 | Z | 5.797 | 5.797 | 0 | %100 |
| 45 | M64A | X | 0 | 0 | 0 | %100 |
| 46 | M64A | Z | 5.904 | 5.904 | 0 | %100 |
| 47 | M67 | X | 0 | 0 | 0 | %100 |
| 48 | M67 | Z | 23.188 | 23.188 | 0 | %100 |
| 49 | M68 | X | 0 | 0 | 0 | %100 |
| 50 | M68 | Z | 5.904 | 5.904 | 0 | %100 |
| 51 | M70A | X | 0 | 0 | 0 | %100 |
| 52 | M70A | Z | 3.581 | 3.581 | 0 | %100 |
| 53 | M71 | X | 0 | 0 | 0 | %100 |
| 54 | M71 | Z | 3.581 | 3.581 | 0 | %100 |

## Member Distributed Loads (BLC 47 : Structure Wo (180 Deg)) (Continued)

| | Member Label | Direction | Start Magnitude[lb/ft,... | End Magnitude[lb/ft,F... | Start Location[ft,%] | End Location[ft,%] |
|---|---|---|---|---|---|---|
| 55 | M72A | X | 0 | 0 | 0 | %100 |
| 56 | M72A | Z | 10.292 | 10.292 | 0 | %100 |
| 57 | M73A | X | 0 | 0 | 0 | %100 |
| 58 | M73A | Z | 5.797 | 5.797 | 0 | %100 |
| 59 | M75A | X | 0 | 0 | 0 | %100 |
| 60 | M75A | Z | 23.188 | 23.188 | 0 | %100 |
| 61 | M76 | X | 0 | 0 | 0 | %100 |
| 62 | M76 | Z | 5.797 | 5.797 | 0 | %100 |
| 63 | M78A | X | 0 | 0 | 0 | %100 |
| 64 | M78A | Z | 12.057 | 12.057 | 0 | %100 |
| 65 | M79 | X | 0 | 0 | 0 | %100 |
| 66 | M79 | Z | 2.94 | 2.94 | 0 | %100 |
| 67 | M84 | X | 0 | 0 | 0 | %100 |
| 68 | M84 | Z | 23.188 | 23.188 | 0 | %100 |
| 69 | M85 | X | 0 | 0 | 0 | %100 |
| 70 | M85 | Z | 5.904 | 5.904 | 0 | %100 |
| 71 | M88 | X | 0 | 0 | 0 | %100 |
| 72 | M88 | Z | 5.797 | 5.797 | 0 | %100 |
| 73 | M89 | X | 0 | 0 | 0 | %100 |
| 74 | M89 | Z | 5.904 | 5.904 | 0 | %100 |
| 75 | M91 | X | 0 | 0 | 0 | %100 |
| 76 | M91 | Z | 3.581 | 3.581 | 0 | %100 |
| 77 | M92 | X | 0 | 0 | 0 | %100 |
| 78 | M92 | Z | 3.581 | 3.581 | 0 | %100 |
| 79 | MP1A | X | 0 | 0 | 0 | %100 |
| 80 | MP1A | Z | 9.179 | 9.179 | 0 | %100 |
| 81 | MP2A | X | 0 | 0 | 0 | %100 |
| 82 | MP2A | Z | 11.111 | 11.111 | 0 | %100 |
| 83 | MP3A | X | 0 | 0 | 0 | %100 |
| 84 | MP3A | Z | 9.179 | 9.179 | 0 | %100 |
| 85 | MP4A | X | 0 | 0 | 0 | %100 |
| 86 | MP4A | Z | 9.179 | 9.179 | 0 | %100 |
| 87 | MP1C | X | 0 | 0 | 0 | %100 |
| 88 | MP1C | Z | 9.179 | 9.179 | 0 | %100 |
| 89 | MP2C | X | 0 | 0 | 0 | %100 |
| 90 | MP2C | Z | 11.111 | 11.111 | 0 | %100 |
| 91 | MP3C | X | 0 | 0 | 0 | %100 |
| 92 | MP3C | Z | 9.179 | 9.179 | 0 | %100 |
| 93 | MP4C | X | 0 | 0 | 0 | %100 |
| 94 | MP4C | Z | 9.179 | 9.179 | 0 | %100 |
| 95 | MP1B | X | 0 | 0 | 0 | %100 |
| 96 | MP1B | Z | 9.179 | 9.179 | 0 | %100 |
| 97 | MP2B | X | 0 | 0 | 0 | %100 |
| 98 | MP2B | Z | 11.111 | 11.111 | 0 | %100 |
| 99 | MP3B | X | 0 | 0 | 0 | %100 |
| 100 | MP3B | Z | 9.179 | 9.179 | 0 | %100 |
| 101 | MP4B | X | 0 | 0 | 0 | %100 |
| 102 | MP4B | Z | 9.179 | 9.179 | 0 | %100 |
| 103 | OVP | X | 0 | 0 | 0 | %100 |
| 104 | OVP | Z | 7.506 | 7.506 | 0 | %100 |
| 105 | M85A | X | 0 | 0 | 0 | %100 |
| 106 | M85A | Z | 11.111 | 11.111 | 0 | %100 |

## Member Distributed Loads (BLC 47 : Structure Wo (180 Deg)) (Continued)

| | Member Label | Direction | Start Magnitude[lb/ft,... | End Magnitude[lb/ft,F... | Start Location[ft,%] | End Location[ft,%] |
|---|---|---|---|---|---|---|
| 107 | M92A | X | 0 | 0 | 0 | %100 |
| 108 | M92A | Z | 2.778 | 2.778 | 0 | %100 |
| 109 | M99 | X | 0 | 0 | 0 | %100 |
| 110 | M99 | Z | 2.778 | 2.778 | 0 | %100 |
| 111 | M102 | X | 0 | 0 | 0 | %100 |
| 112 | M102 | Z | 3.736 | 3.736 | 0 | %100 |
| 113 | M103 | X | 0 | 0 | 0 | %100 |
| 114 | M103 | Z | 3.736 | 3.736 | 0 | %100 |
| 115 | M104 | X | 0 | 0 | 0 | %100 |
| 116 | M104 | Z | 14.944 | 14.944 | 0 | %100 |
| 117 | M105 | X | 0 | 0 | 0 | %100 |
| 118 | M105 | Z | 9.749 | 9.749 | 0 | %100 |
| 119 | M106 | X | 0 | 0 | 0 | %100 |
| 120 | M106 | Z | 14.091 | 14.091 | 0 | %100 |
| 121 | M107 | X | 0 | 0 | 0 | %100 |
| 122 | M107 | Z | 14.091 | 14.091 | 0 | %100 |

## Member Distributed Loads (BLC 48 : Structure Wo (210 Deg))

| | Member Label | Direction | Start Magnitude[lb/ft,... | End Magnitude[lb/ft,F... | Start Location[ft,%] | End Location[ft,%] |
|---|---|---|---|---|---|---|
| 1 | M1 | X | -1.715 | -1.715 | 0 | %100 |
| 2 | M1 | Z | 2.971 | 2.971 | 0 | %100 |
| 3 | M4 | X | -8.695 | -8.695 | 0 | %100 |
| 4 | M4 | Z | 15.061 | 15.061 | 0 | %100 |
| 5 | M7 | X | -5.072 | -5.072 | 0 | %100 |
| 6 | M7 | Z | 8.786 | 8.786 | 0 | %100 |
| 7 | M15 | X | -5.072 | -5.072 | 0 | %100 |
| 8 | M15 | Z | 8.786 | 8.786 | 0 | %100 |
| 9 | M17 | X | -8.695 | -8.695 | 0 | %100 |
| 10 | M17 | Z | 15.061 | 15.061 | 0 | %100 |
| 11 | M20 | X | 0 | 0 | 0 | %100 |
| 12 | M20 | Z | 0 | 0 | 0 | %100 |
| 13 | M21 | X | 0 | 0 | 0 | %100 |
| 14 | M21 | Z | 0 | 0 | 0 | %100 |
| 15 | M29 | X | -4.559 | -4.559 | 0 | %100 |
| 16 | M29 | Z | 7.897 | 7.897 | 0 | %100 |
| 17 | M30 | X | -.000311 | -.000311 | 0 | %100 |
| 18 | M30 | Z | .000538 | .000538 | 0 | %100 |
| 19 | M108A | X | -8.695 | -8.695 | 0 | %100 |
| 20 | M108A | Z | 15.061 | 15.061 | 0 | %100 |
| 21 | M109A | X | -8.856 | -8.856 | 0 | %100 |
| 22 | M109A | Z | 15.34 | 15.34 | 0 | %100 |
| 23 | M119 | X | 0 | 0 | 0 | %100 |
| 24 | M119 | Z | 0 | 0 | 0 | %100 |
| 25 | M120 | X | -8.856 | -8.856 | 0 | %100 |
| 26 | M120 | Z | 15.34 | 15.34 | 0 | %100 |
| 27 | M122 | X | -5.371 | -5.371 | 0 | %100 |
| 28 | M122 | Z | 9.303 | 9.303 | 0 | %100 |
| 29 | M125 | X | -5.371 | -5.371 | 0 | %100 |
| 30 | M125 | Z | 9.303 | 9.303 | 0 | %100 |
| 31 | M51 | X | -1.715 | -1.715 | 0 | %100 |
| 32 | M51 | Z | 2.971 | 2.971 | 0 | %100 |

## Member Distributed Loads (BLC 48 : Structure Wo (210 Deg)) (Continued)

| | Member Label | Direction | Start Magnitude[lb/ft,... | End Magnitude[lb/ft,F... | Start Location[ft,%] | End Location[ft,%] |
|---|---|---|---|---|---|---|
| 33 | M52 | X | -8.695 | -8.695 | 0 | %100 |
| 34 | M52 | Z | 15.061 | 15.061 | 0 | %100 |
| 35 | M54 | X | 0 | 0 | 0 | %100 |
| 36 | M54 | Z | 0 | 0 | 0 | %100 |
| 37 | M55 | X | -8.695 | -8.695 | 0 | %100 |
| 38 | M55 | Z | 15.061 | 15.061 | 0 | %100 |
| 39 | M57A | X | -.000311 | -.000311 | 0 | %100 |
| 40 | M57A | Z | .000538 | .000538 | 0 | %100 |
| 41 | M58A | X | -4.559 | -4.559 | 0 | %100 |
| 42 | M58A | Z | 7.897 | 7.897 | 0 | %100 |
| 43 | M63 | X | 0 | 0 | 0 | %100 |
| 44 | M63 | Z | 0 | 0 | 0 | %100 |
| 45 | M64A | X | -8.856 | -8.856 | 0 | %100 |
| 46 | M64A | Z | 15.34 | 15.34 | 0 | %100 |
| 47 | M67 | X | -8.695 | -8.695 | 0 | %100 |
| 48 | M67 | Z | 15.061 | 15.061 | 0 | %100 |
| 49 | M68 | X | -8.856 | -8.856 | 0 | %100 |
| 50 | M68 | Z | 15.34 | 15.34 | 0 | %100 |
| 51 | M70A | X | -5.371 | -5.371 | 0 | %100 |
| 52 | M70A | Z | 9.303 | 9.303 | 0 | %100 |
| 53 | M71 | X | -5.371 | -5.371 | 0 | %100 |
| 54 | M71 | Z | 9.303 | 9.303 | 0 | %100 |
| 55 | M72A | X | -6.862 | -6.862 | 0 | %100 |
| 56 | M72A | Z | 11.885 | 11.885 | 0 | %100 |
| 57 | M73A | X | 0 | 0 | 0 | %100 |
| 58 | M73A | Z | 0 | 0 | 0 | %100 |
| 59 | M75A | X | -8.695 | -8.695 | 0 | %100 |
| 60 | M75A | Z | 15.061 | 15.061 | 0 | %100 |
| 61 | M76 | X | -8.695 | -8.695 | 0 | %100 |
| 62 | M76 | Z | 15.061 | 15.061 | 0 | %100 |
| 63 | M78A | X | -4.484 | -4.484 | 0 | %100 |
| 64 | M78A | Z | 7.767 | 7.767 | 0 | %100 |
| 65 | M79 | X | -4.484 | -4.484 | 0 | %100 |
| 66 | M79 | Z | 7.767 | 7.767 | 0 | %100 |
| 67 | M84 | X | -8.695 | -8.695 | 0 | %100 |
| 68 | M84 | Z | 15.061 | 15.061 | 0 | %100 |
| 69 | M85 | X | 0 | 0 | 0 | %100 |
| 70 | M85 | Z | 0 | 0 | 0 | %100 |
| 71 | M88 | X | -8.695 | -8.695 | 0 | %100 |
| 72 | M88 | Z | 15.061 | 15.061 | 0 | %100 |
| 73 | M89 | X | 0 | 0 | 0 | %100 |
| 74 | M89 | Z | 0 | 0 | 0 | %100 |
| 75 | M91 | X | 0 | 0 | 0 | %100 |
| 76 | M91 | Z | 0 | 0 | 0 | %100 |
| 77 | M92 | X | 0 | 0 | 0 | %100 |
| 78 | M92 | Z | 0 | 0 | 0 | %100 |
| 79 | MP1A | X | -4.589 | -4.589 | 0 | %100 |
| 80 | MP1A | Z | 7.949 | 7.949 | 0 | %100 |
| 81 | MP2A | X | -5.555 | -5.555 | 0 | %100 |
| 82 | MP2A | Z | 9.622 | 9.622 | 0 | %100 |
| 83 | MP3A | X | -4.589 | -4.589 | 0 | %100 |
| 84 | MP3A | Z | 7.949 | 7.949 | 0 | %100 |

## Member Distributed Loads (BLC 48 : Structure Wo (210 Deg)) (Continued)

| | Member Label | Direction | Start Magnitude[lb/ft,... | End Magnitude[lb/ft,F... | Start Location[ft,%] | End Location[ft,%] |
|---|---|---|---|---|---|---|
| 85 | MP4A | X | -4.589 | -4.589 | 0 | %100 |
| 86 | MP4A | Z | 7.949 | 7.949 | 0 | %100 |
| 87 | MP1C | X | -4.589 | -4.589 | 0 | %100 |
| 88 | MP1C | Z | 7.949 | 7.949 | 0 | %100 |
| 89 | MP2C | X | -5.555 | -5.555 | 0 | %100 |
| 90 | MP2C | Z | 9.622 | 9.622 | 0 | %100 |
| 91 | MP3C | X | -4.589 | -4.589 | 0 | %100 |
| 92 | MP3C | Z | 7.949 | 7.949 | 0 | %100 |
| 93 | MP4C | X | -4.589 | -4.589 | 0 | %100 |
| 94 | MP4C | Z | 7.949 | 7.949 | 0 | %100 |
| 95 | MP1B | X | -4.589 | -4.589 | 0 | %100 |
| 96 | MP1B | Z | 7.949 | 7.949 | 0 | %100 |
| 97 | MP2B | X | -5.555 | -5.555 | 0 | %100 |
| 98 | MP2B | Z | 9.622 | 9.622 | 0 | %100 |
| 99 | MP3B | X | -4.589 | -4.589 | 0 | %100 |
| 100 | MP3B | Z | 7.949 | 7.949 | 0 | %100 |
| 101 | MP4B | X | -4.589 | -4.589 | 0 | %100 |
| 102 | MP4B | Z | 7.949 | 7.949 | 0 | %100 |
| 103 | OVP | X | -3.753 | -3.753 | 0 | %100 |
| 104 | OVP | Z | 6.5 | 6.5 | 0 | %100 |
| 105 | M85A | X | -4.167 | -4.167 | 0 | %100 |
| 106 | M85A | Z | 7.217 | 7.217 | 0 | %100 |
| 107 | M92A | X | -4.167 | -4.167 | 0 | %100 |
| 108 | M92A | Z | 7.217 | 7.217 | 0 | %100 |
| 109 | M99 | X | 0 | 0 | 0 | %100 |
| 110 | M99 | Z | 0 | 0 | 0 | %100 |
| 111 | M102 | X | -5.604 | -5.604 | 0 | %100 |
| 112 | M102 | Z | 9.707 | 9.707 | 0 | %100 |
| 113 | M103 | X | 0 | 0 | 0 | %100 |
| 114 | M103 | Z | 0 | 0 | 0 | %100 |
| 115 | M104 | X | -5.604 | -5.604 | 0 | %100 |
| 116 | M104 | Z | 9.707 | 9.707 | 0 | %100 |
| 117 | M105 | X | -5.598 | -5.598 | 0 | %100 |
| 118 | M105 | Z | 9.696 | 9.696 | 0 | %100 |
| 119 | M106 | X | -5.598 | -5.598 | 0 | %100 |
| 120 | M106 | Z | 9.696 | 9.696 | 0 | %100 |
| 121 | M107 | X | -7.769 | -7.769 | 0 | %100 |
| 122 | M107 | Z | 13.456 | 13.456 | 0 | %100 |

## Member Distributed Loads (BLC 49 : Structure Wo (240 Deg))

| | Member Label | Direction | Start Magnitude[lb/ft,... | End Magnitude[lb/ft,F... | Start Location[ft,%] | End Location[ft,%] |
|---|---|---|---|---|---|---|
| 1 | M1 | X | -8.913 | -8.913 | 0 | %100 |
| 2 | M1 | Z | 5.146 | 5.146 | 0 | %100 |
| 3 | M4 | X | -5.02 | -5.02 | 0 | %100 |
| 4 | M4 | Z | 2.898 | 2.898 | 0 | %100 |
| 5 | M7 | X | -2.929 | -2.929 | 0 | %100 |
| 6 | M7 | Z | 1.691 | 1.691 | 0 | %100 |
| 7 | M15 | X | -11.714 | -11.714 | 0 | %100 |
| 8 | M15 | Z | 6.763 | 6.763 | 0 | %100 |
| 9 | M17 | X | -20.081 | -20.081 | 0 | %100 |
| 10 | M17 | Z | 11.594 | 11.594 | 0 | %100 |

## Member Distributed Loads (BLC 49 : Structure Wo (240 Deg)) (Continued)

| | Member Label | Direction | Start Magnitude[lb/ft,... | End Magnitude[lb/ft,F... | Start Location[ft,%] | End Location[ft,%] |
|---|---|---|---|---|---|---|
| 11 | M20 | X | -2.929 | -2.929 | 0 | %100 |
| 12 | M20 | Z | 1.691 | 1.691 | 0 | %100 |
| 13 | M21 | X | -5.02 | -5.02 | 0 | %100 |
| 14 | M21 | Z | 2.898 | 2.898 | 0 | %100 |
| 15 | M29 | X | -10.442 | -10.442 | 0 | %100 |
| 16 | M29 | Z | 6.029 | 6.029 | 0 | %100 |
| 17 | M30 | X | -2.546 | -2.546 | 0 | %100 |
| 18 | M30 | Z | 1.47 | 1.47 | 0 | %100 |
| 19 | M108A | X | -20.081 | -20.081 | 0 | %100 |
| 20 | M108A | Z | 11.594 | 11.594 | 0 | %100 |
| 21 | M109A | X | -5.113 | -5.113 | 0 | %100 |
| 22 | M109A | Z | 2.952 | 2.952 | 0 | %100 |
| 23 | M119 | X | -5.02 | -5.02 | 0 | %100 |
| 24 | M119 | Z | 2.898 | 2.898 | 0 | %100 |
| 25 | M120 | X | -5.113 | -5.113 | 0 | %100 |
| 26 | M120 | Z | 2.952 | 2.952 | 0 | %100 |
| 27 | M122 | X | -3.101 | -3.101 | 0 | %100 |
| 28 | M122 | Z | 1.79 | 1.79 | 0 | %100 |
| 29 | M125 | X | -3.101 | -3.101 | 0 | %100 |
| 30 | M125 | Z | 1.79 | 1.79 | 0 | %100 |
| 31 | M51 | X | 0 | 0 | 0 | %100 |
| 32 | M51 | Z | 0 | 0 | 0 | %100 |
| 33 | M52 | X | -20.081 | -20.081 | 0 | %100 |
| 34 | M52 | Z | 11.594 | 11.594 | 0 | %100 |
| 35 | M54 | X | -5.02 | -5.02 | 0 | %100 |
| 36 | M54 | Z | 2.898 | 2.898 | 0 | %100 |
| 37 | M55 | X | -5.02 | -5.02 | 0 | %100 |
| 38 | M55 | Z | 2.898 | 2.898 | 0 | %100 |
| 39 | M57A | X | -2.676 | -2.676 | 0 | %100 |
| 40 | M57A | Z | 1.545 | 1.545 | 0 | %100 |
| 41 | M58A | X | -2.676 | -2.676 | 0 | %100 |
| 42 | M58A | Z | 1.545 | 1.545 | 0 | %100 |
| 43 | M63 | X | -5.02 | -5.02 | 0 | %100 |
| 44 | M63 | Z | 2.898 | 2.898 | 0 | %100 |
| 45 | M64A | X | -20.453 | -20.453 | 0 | %100 |
| 46 | M64A | Z | 11.809 | 11.809 | 0 | %100 |
| 47 | M67 | X | -5.02 | -5.02 | 0 | %100 |
| 48 | M67 | Z | 2.898 | 2.898 | 0 | %100 |
| 49 | M68 | X | -20.453 | -20.453 | 0 | %100 |
| 50 | M68 | Z | 11.809 | 11.809 | 0 | %100 |
| 51 | M70A | X | -12.404 | -12.404 | 0 | %100 |
| 52 | M70A | Z | 7.162 | 7.162 | 0 | %100 |
| 53 | M71 | X | -12.404 | -12.404 | 0 | %100 |
| 54 | M71 | Z | 7.162 | 7.162 | 0 | %100 |
| 55 | M72A | X | -8.913 | -8.913 | 0 | %100 |
| 56 | M72A | Z | 5.146 | 5.146 | 0 | %100 |
| 57 | M73A | X | -5.02 | -5.02 | 0 | %100 |
| 58 | M73A | Z | 2.898 | 2.898 | 0 | %100 |
| 59 | M75A | X | -5.02 | -5.02 | 0 | %100 |
| 60 | M75A | Z | 2.898 | 2.898 | 0 | %100 |
| 61 | M76 | X | -20.081 | -20.081 | 0 | %100 |
| 62 | M76 | Z | 11.594 | 11.594 | 0 | %100 |

## Member Distributed Loads (BLC 49 : Structure Wo (240 Deg)) (Continued)

| | Member Label | Direction | Start Magnitude[lb/ft,... | End Magnitude[lb/ft,F... | Start Location[ft,%] | End Location[ft,%] |
|---|---|---|---|---|---|---|
| 63 | M78A | X | -2.546 | -2.546 | 0 | %100 |
| 64 | M78A | Z | 1.47 | 1.47 | 0 | %100 |
| 65 | M79 | X | -10.442 | -10.442 | 0 | %100 |
| 66 | M79 | Z | 6.029 | 6.029 | 0 | %100 |
| 67 | M84 | X | -5.02 | -5.02 | 0 | %100 |
| 68 | M84 | Z | 2.898 | 2.898 | 0 | %100 |
| 69 | M85 | X | -5.113 | -5.113 | 0 | %100 |
| 70 | M85 | Z | 2.952 | 2.952 | 0 | %100 |
| 71 | M88 | X | -20.081 | -20.081 | 0 | %100 |
| 72 | M88 | Z | 11.594 | 11.594 | 0 | %100 |
| 73 | M89 | X | -5.113 | -5.113 | 0 | %100 |
| 74 | M89 | Z | 2.952 | 2.952 | 0 | %100 |
| 75 | M91 | X | -3.101 | -3.101 | 0 | %100 |
| 76 | M91 | Z | 1.79 | 1.79 | 0 | %100 |
| 77 | M92 | X | -3.101 | -3.101 | 0 | %100 |
| 78 | M92 | Z | 1.79 | 1.79 | 0 | %100 |
| 79 | MP1A | X | -7.949 | -7.949 | 0 | %100 |
| 80 | MP1A | Z | 4.589 | 4.589 | 0 | %100 |
| 81 | MP2A | X | -9.622 | -9.622 | 0 | %100 |
| 82 | MP2A | Z | 5.555 | 5.555 | 0 | %100 |
| 83 | MP3A | X | -7.949 | -7.949 | 0 | %100 |
| 84 | MP3A | Z | 4.589 | 4.589 | 0 | %100 |
| 85 | MP4A | X | -7.949 | -7.949 | 0 | %100 |
| 86 | MP4A | Z | 4.589 | 4.589 | 0 | %100 |
| 87 | MP1C | X | -7.949 | -7.949 | 0 | %100 |
| 88 | MP1C | Z | 4.589 | 4.589 | 0 | %100 |
| 89 | MP2C | X | -9.622 | -9.622 | 0 | %100 |
| 90 | MP2C | Z | 5.555 | 5.555 | 0 | %100 |
| 91 | MP3C | X | -7.949 | -7.949 | 0 | %100 |
| 92 | MP3C | Z | 4.589 | 4.589 | 0 | %100 |
| 93 | MP4C | X | -7.949 | -7.949 | 0 | %100 |
| 94 | MP4C | Z | 4.589 | 4.589 | 0 | %100 |
| 95 | MP1B | X | -7.949 | -7.949 | 0 | %100 |
| 96 | MP1B | Z | 4.589 | 4.589 | 0 | %100 |
| 97 | MP2B | X | -9.622 | -9.622 | 0 | %100 |
| 98 | MP2B | Z | 5.555 | 5.555 | 0 | %100 |
| 99 | MP3B | X | -7.949 | -7.949 | 0 | %100 |
| 100 | MP3B | Z | 4.589 | 4.589 | 0 | %100 |
| 101 | MP4B | X | -7.949 | -7.949 | 0 | %100 |
| 102 | MP4B | Z | 4.589 | 4.589 | 0 | %100 |
| 103 | OVP | X | -6.5 | -6.5 | 0 | %100 |
| 104 | OVP | Z | 3.753 | 3.753 | 0 | %100 |
| 105 | M85A | X | -2.406 | -2.406 | 0 | %100 |
| 106 | M85A | Z | 1.389 | 1.389 | 0 | %100 |
| 107 | M92A | X | -9.622 | -9.622 | 0 | %100 |
| 108 | M92A | Z | 5.555 | 5.555 | 0 | %100 |
| 109 | M99 | X | -2.406 | -2.406 | 0 | %100 |
| 110 | M99 | Z | 1.389 | 1.389 | 0 | %100 |
| 111 | M102 | X | -12.942 | -12.942 | 0 | %100 |
| 112 | M102 | Z | 7.472 | 7.472 | 0 | %100 |
| 113 | M103 | X | -3.236 | -3.236 | 0 | %100 |
| 114 | M103 | Z | 1.868 | 1.868 | 0 | %100 |

## Member Distributed Loads (BLC 49 : Structure Wo (240 Deg)) (Continued)

| | Member Label | Direction | Start Magnitude[lb/ft,... | End Magnitude[lb/ft,F... | Start Location[ft,%] | End Location[ft,%] |
|---|---|---|---|---|---|---|
| 115 | M104 | X | -3.236 | -3.236 | 0 | %100 |
| 116 | M104 | Z | 1.868 | 1.868 | 0 | %100 |
| 117 | M105 | X | -12.203 | -12.203 | 0 | %100 |
| 118 | M105 | Z | 7.045 | 7.045 | 0 | %100 |
| 119 | M106 | X | -8.442 | -8.442 | 0 | %100 |
| 120 | M106 | Z | 4.874 | 4.874 | 0 | %100 |
| 121 | M107 | X | -12.203 | -12.203 | 0 | %100 |
| 122 | M107 | Z | 7.045 | 7.045 | 0 | %100 |

## Member Distributed Loads (BLC 50 : Structure Wo (270 Deg))

| | Member Label | Direction | Start Magnitude[lb/ft,... | End Magnitude[lb/ft,F... | Start Location[ft,%] | End Location[ft,%] |
|---|---|---|---|---|---|---|
| 1 | M1 | X | -13.723 | -13.723 | 0 | %100 |
| 2 | M1 | Z | 0 | 0 | 0 | %100 |
| 3 | M4 | X | 0 | 0 | 0 | %100 |
| 4 | M4 | Z | 0 | 0 | 0 | %100 |
| 5 | M7 | X | 0 | 0 | 0 | %100 |
| 6 | M7 | Z | 0 | 0 | 0 | %100 |
| 7 | M15 | X | -10.145 | -10.145 | 0 | %100 |
| 8 | M15 | Z | 0 | 0 | 0 | %100 |
| 9 | M17 | X | -17.391 | -17.391 | 0 | %100 |
| 10 | M17 | Z | 0 | 0 | 0 | %100 |
| 11 | M20 | X | -10.145 | -10.145 | 0 | %100 |
| 12 | M20 | Z | 0 | 0 | 0 | %100 |
| 13 | M21 | X | -17.391 | -17.391 | 0 | %100 |
| 14 | M21 | Z | 0 | 0 | 0 | %100 |
| 15 | M29 | X | -8.968 | -8.968 | 0 | %100 |
| 16 | M29 | Z | 0 | 0 | 0 | %100 |
| 17 | M30 | X | -8.968 | -8.968 | 0 | %100 |
| 18 | M30 | Z | 0 | 0 | 0 | %100 |
| 19 | M108A | X | -17.391 | -17.391 | 0 | %100 |
| 20 | M108A | Z | 0 | 0 | 0 | %100 |
| 21 | M109A | X | 0 | 0 | 0 | %100 |
| 22 | M109A | Z | 0 | 0 | 0 | %100 |
| 23 | M119 | X | -17.391 | -17.391 | 0 | %100 |
| 24 | M119 | Z | 0 | 0 | 0 | %100 |
| 25 | M120 | X | 0 | 0 | 0 | %100 |
| 26 | M120 | Z | 0 | 0 | 0 | %100 |
| 27 | M122 | X | 0 | 0 | 0 | %100 |
| 28 | M122 | Z | 0 | 0 | 0 | %100 |
| 29 | M125 | X | 0 | 0 | 0 | %100 |
| 30 | M125 | Z | 0 | 0 | 0 | %100 |
| 31 | M51 | X | -3.431 | -3.431 | 0 | %100 |
| 32 | M51 | Z | 0 | 0 | 0 | %100 |
| 33 | M52 | X | -17.391 | -17.391 | 0 | %100 |
| 34 | M52 | Z | 0 | 0 | 0 | %100 |
| 35 | M54 | X | -17.391 | -17.391 | 0 | %100 |
| 36 | M54 | Z | 0 | 0 | 0 | %100 |
| 37 | M55 | X | 0 | 0 | 0 | %100 |
| 38 | M55 | Z | 0 | 0 | 0 | %100 |
| 39 | M57A | X | -9.118 | -9.118 | 0 | %100 |
| 40 | M57A | Z | 0 | 0 | 0 | %100 |

## Member Distributed Loads (BLC 50 : Structure Wo (270 Deg)) (Continued)

| | Member Label | Direction | Start Magnitude[lb/ft,... | End Magnitude[lb/ft,F... | Start Location[ft,%] | End Location[ft,%] |
|---|---|---|---|---|---|---|
| 41 | M58A | X | -.000621 | -.000621 | 0 | %100 |
| 42 | M58A | Z | 0 | 0 | 0 | %100 |
| 43 | M63 | X | -17.391 | -17.391 | 0 | %100 |
| 44 | M63 | Z | 0 | 0 | 0 | %100 |
| 45 | M64A | X | -17.713 | -17.713 | 0 | %100 |
| 46 | M64A | Z | 0 | 0 | 0 | %100 |
| 47 | M67 | X | 0 | 0 | 0 | %100 |
| 48 | M67 | Z | 0 | 0 | 0 | %100 |
| 49 | M68 | X | -17.713 | -17.713 | 0 | %100 |
| 50 | M68 | Z | 0 | 0 | 0 | %100 |
| 51 | M70A | X | -10.742 | -10.742 | 0 | %100 |
| 52 | M70A | Z | 0 | 0 | 0 | %100 |
| 53 | M71 | X | -10.742 | -10.742 | 0 | %100 |
| 54 | M71 | Z | 0 | 0 | 0 | %100 |
| 55 | M72A | X | -3.431 | -3.431 | 0 | %100 |
| 56 | M72A | Z | 0 | 0 | 0 | %100 |
| 57 | M73A | X | -17.391 | -17.391 | 0 | %100 |
| 58 | M73A | Z | 0 | 0 | 0 | %100 |
| 59 | M75A | X | 0 | 0 | 0 | %100 |
| 60 | M75A | Z | 0 | 0 | 0 | %100 |
| 61 | M76 | X | -17.391 | -17.391 | 0 | %100 |
| 62 | M76 | Z | 0 | 0 | 0 | %100 |
| 63 | M78A | X | -.000621 | -.000621 | 0 | %100 |
| 64 | M78A | Z | 0 | 0 | 0 | %100 |
| 65 | M79 | X | -9.118 | -9.118 | 0 | %100 |
| 66 | M79 | Z | 0 | 0 | 0 | %100 |
| 67 | M84 | X | 0 | 0 | 0 | %100 |
| 68 | M84 | Z | 0 | 0 | 0 | %100 |
| 69 | M85 | X | -17.713 | -17.713 | 0 | %100 |
| 70 | M85 | Z | 0 | 0 | 0 | %100 |
| 71 | M88 | X | -17.391 | -17.391 | 0 | %100 |
| 72 | M88 | Z | 0 | 0 | 0 | %100 |
| 73 | M89 | X | -17.713 | -17.713 | 0 | %100 |
| 74 | M89 | Z | 0 | 0 | 0 | %100 |
| 75 | M91 | X | -10.742 | -10.742 | 0 | %100 |
| 76 | M91 | Z | 0 | 0 | 0 | %100 |
| 77 | M92 | X | -10.742 | -10.742 | 0 | %100 |
| 78 | M92 | Z | 0 | 0 | 0 | %100 |
| 79 | MP1A | X | -9.179 | -9.179 | 0 | %100 |
| 80 | MP1A | Z | 0 | 0 | 0 | %100 |
| 81 | MP2A | X | -11.111 | -11.111 | 0 | %100 |
| 82 | MP2A | Z | 0 | 0 | 0 | %100 |
| 83 | MP3A | X | -9.179 | -9.179 | 0 | %100 |
| 84 | MP3A | Z | 0 | 0 | 0 | %100 |
| 85 | MP4A | X | -9.179 | -9.179 | 0 | %100 |
| 86 | MP4A | Z | 0 | 0 | 0 | %100 |
| 87 | MP1C | X | -9.179 | -9.179 | 0 | %100 |
| 88 | MP1C | Z | 0 | 0 | 0 | %100 |
| 89 | MP2C | X | -11.111 | -11.111 | 0 | %100 |
| 90 | MP2C | Z | 0 | 0 | 0 | %100 |
| 91 | MP3C | X | -9.179 | -9.179 | 0 | %100 |
| 92 | MP3C | Z | 0 | 0 | 0 | %100 |

## Member Distributed Loads (BLC 50 : Structure Wo (270 Deg)) (Continued)

| | Member Label | Direction | Start Magnitude[lb/ft,... | End Magnitude[lb/ft,F... | Start Location[ft,%] | End Location[ft,%] |
|---|---|---|---|---|---|---|
| 93 | MP4C | X | -9.179 | -9.179 | 0 | %100 |
| 94 | MP4C | Z | 0 | 0 | 0 | %100 |
| 95 | MP1B | X | -9.179 | -9.179 | 0 | %100 |
| 96 | MP1B | Z | 0 | 0 | 0 | %100 |
| 97 | MP2B | X | -11.111 | -11.111 | 0 | %100 |
| 98 | MP2B | Z | 0 | 0 | 0 | %100 |
| 99 | MP3B | X | -9.179 | -9.179 | 0 | %100 |
| 100 | MP3B | Z | 0 | 0 | 0 | %100 |
| 101 | MP4B | X | -9.179 | -9.179 | 0 | %100 |
| 102 | MP4B | Z | 0 | 0 | 0 | %100 |
| 103 | OVP | X | -7.506 | -7.506 | 0 | %100 |
| 104 | OVP | Z | 0 | 0 | 0 | %100 |
| 105 | M85A | X | 0 | 0 | 0 | %100 |
| 106 | M85A | Z | 0 | 0 | 0 | %100 |
| 107 | M92A | X | -8.333 | -8.333 | 0 | %100 |
| 108 | M92A | Z | 0 | 0 | 0 | %100 |
| 109 | M99 | X | -8.333 | -8.333 | 0 | %100 |
| 110 | M99 | Z | 0 | 0 | 0 | %100 |
| 111 | M102 | X | -11.208 | -11.208 | 0 | %100 |
| 112 | M102 | Z | 0 | 0 | 0 | %100 |
| 113 | M103 | X | -11.208 | -11.208 | 0 | %100 |
| 114 | M103 | Z | 0 | 0 | 0 | %100 |
| 115 | M104 | X | 0 | 0 | 0 | %100 |
| 116 | M104 | Z | 0 | 0 | 0 | %100 |
| 117 | M105 | X | -15.538 | -15.538 | 0 | %100 |
| 118 | M105 | Z | 0 | 0 | 0 | %100 |
| 119 | M106 | X | -11.196 | -11.196 | 0 | %100 |
| 120 | M106 | Z | 0 | 0 | 0 | %100 |
| 121 | M107 | X | -11.196 | -11.196 | 0 | %100 |
| 122 | M107 | Z | 0 | 0 | 0 | %100 |

## Member Distributed Loads (BLC 51 : Structure Wo (300 Deg))

| | Member Label | Direction | Start Magnitude[lb/ft,... | End Magnitude[lb/ft,F... | Start Location[ft,%] | End Location[ft,%] |
|---|---|---|---|---|---|---|
| 1 | M1 | X | -8.913 | -8.913 | 0 | %100 |
| 2 | M1 | Z | -5.146 | -5.146 | 0 | %100 |
| 3 | M4 | X | -5.02 | -5.02 | 0 | %100 |
| 4 | M4 | Z | -2.898 | -2.898 | 0 | %100 |
| 5 | M7 | X | -2.929 | -2.929 | 0 | %100 |
| 6 | M7 | Z | -1.691 | -1.691 | 0 | %100 |
| 7 | M15 | X | -2.929 | -2.929 | 0 | %100 |
| 8 | M15 | Z | -1.691 | -1.691 | 0 | %100 |
| 9 | M17 | X | -5.02 | -5.02 | 0 | %100 |
| 10 | M17 | Z | -2.898 | -2.898 | 0 | %100 |
| 11 | M20 | X | -11.714 | -11.714 | 0 | %100 |
| 12 | M20 | Z | -6.763 | -6.763 | 0 | %100 |
| 13 | M21 | X | -20.081 | -20.081 | 0 | %100 |
| 14 | M21 | Z | -11.594 | -11.594 | 0 | %100 |
| 15 | M29 | X | -2.546 | -2.546 | 0 | %100 |
| 16 | M29 | Z | -1.47 | -1.47 | 0 | %100 |
| 17 | M30 | X | -10.442 | -10.442 | 0 | %100 |
| 18 | M30 | Z | -6.029 | -6.029 | 0 | %100 |

## Member Distributed Loads (BLC 51 : Structure Wo (300 Deg)) (Continued)

| | Member Label | Direction | Start Magnitude[lb/ft,... | End Magnitude[lb/ft,F... | Start Location[ft,%] | End Location[ft,%] |
|---|---|---|---|---|---|---|
| 19 | M108A | X | -5.02 | -5.02 | 0 | %100 |
| 20 | M108A | Z | -2.898 | -2.898 | 0 | %100 |
| 21 | M109A | X | -5.113 | -5.113 | 0 | %100 |
| 22 | M109A | Z | -2.952 | -2.952 | 0 | %100 |
| 23 | M119 | X | -20.081 | -20.081 | 0 | %100 |
| 24 | M119 | Z | -11.594 | -11.594 | 0 | %100 |
| 25 | M120 | X | -5.113 | -5.113 | 0 | %100 |
| 26 | M120 | Z | -2.952 | -2.952 | 0 | %100 |
| 27 | M122 | X | -3.101 | -3.101 | 0 | %100 |
| 28 | M122 | Z | -1.79 | -1.79 | 0 | %100 |
| 29 | M125 | X | -3.101 | -3.101 | 0 | %100 |
| 30 | M125 | Z | -1.79 | -1.79 | 0 | %100 |
| 31 | M51 | X | -8.913 | -8.913 | 0 | %100 |
| 32 | M51 | Z | -5.146 | -5.146 | 0 | %100 |
| 33 | M52 | X | -5.02 | -5.02 | 0 | %100 |
| 34 | M52 | Z | -2.898 | -2.898 | 0 | %100 |
| 35 | M54 | X | -20.081 | -20.081 | 0 | %100 |
| 36 | M54 | Z | -11.594 | -11.594 | 0 | %100 |
| 37 | M55 | X | -5.02 | -5.02 | 0 | %100 |
| 38 | M55 | Z | -2.898 | -2.898 | 0 | %100 |
| 39 | M57A | X | -10.442 | -10.442 | 0 | %100 |
| 40 | M57A | Z | -6.029 | -6.029 | 0 | %100 |
| 41 | M58A | X | -2.546 | -2.546 | 0 | %100 |
| 42 | M58A | Z | -1.47 | -1.47 | 0 | %100 |
| 43 | M63 | X | -20.081 | -20.081 | 0 | %100 |
| 44 | M63 | Z | -11.594 | -11.594 | 0 | %100 |
| 45 | M64A | X | -5.113 | -5.113 | 0 | %100 |
| 46 | M64A | Z | -2.952 | -2.952 | 0 | %100 |
| 47 | M67 | X | -5.02 | -5.02 | 0 | %100 |
| 48 | M67 | Z | -2.898 | -2.898 | 0 | %100 |
| 49 | M68 | X | -5.113 | -5.113 | 0 | %100 |
| 50 | M68 | Z | -2.952 | -2.952 | 0 | %100 |
| 51 | M70A | X | -3.101 | -3.101 | 0 | %100 |
| 52 | M70A | Z | -1.79 | -1.79 | 0 | %100 |
| 53 | M71 | X | -3.101 | -3.101 | 0 | %100 |
| 54 | M71 | Z | -1.79 | -1.79 | 0 | %100 |
| 55 | M72A | X | 0 | 0 | 0 | %100 |
| 56 | M72A | Z | 0 | 0 | 0 | %100 |
| 57 | M73A | X | -20.081 | -20.081 | 0 | %100 |
| 58 | M73A | Z | -11.594 | -11.594 | 0 | %100 |
| 59 | M75A | X | -5.02 | -5.02 | 0 | %100 |
| 60 | M75A | Z | -2.898 | -2.898 | 0 | %100 |
| 61 | M76 | X | -5.02 | -5.02 | 0 | %100 |
| 62 | M76 | Z | -2.898 | -2.898 | 0 | %100 |
| 63 | M78A | X | -2.676 | -2.676 | 0 | %100 |
| 64 | M78A | Z | -1.545 | -1.545 | 0 | %100 |
| 65 | M79 | X | -2.676 | -2.676 | 0 | %100 |
| 66 | M79 | Z | -1.545 | -1.545 | 0 | %100 |
| 67 | M84 | X | -5.02 | -5.02 | 0 | %100 |
| 68 | M84 | Z | -2.898 | -2.898 | 0 | %100 |
| 69 | M85 | X | -20.453 | -20.453 | 0 | %100 |
| 70 | M85 | Z | -11.809 | -11.809 | 0 | %100 |

## Member Distributed Loads (BLC 51 : Structure Wo (300 Deg)) (Continued)

| | Member Label | Direction | Start Magnitude[lb/ft,... | End Magnitude[lb/ft,F... | Start Location[ft,%] | End Location[ft,%] |
|---|---|---|---|---|---|---|
| 71 | M88 | X | -5.02 | -5.02 | 0 | %100 |
| 72 | M88 | Z | -2.898 | -2.898 | 0 | %100 |
| 73 | M89 | X | -20.453 | -20.453 | 0 | %100 |
| 74 | M89 | Z | -11.809 | -11.809 | 0 | %100 |
| 75 | M91 | X | -12.404 | -12.404 | 0 | %100 |
| 76 | M91 | Z | -7.162 | -7.162 | 0 | %100 |
| 77 | M92 | X | -12.404 | -12.404 | 0 | %100 |
| 78 | M92 | Z | -7.162 | -7.162 | 0 | %100 |
| 79 | MP1A | X | -7.949 | -7.949 | 0 | %100 |
| 80 | MP1A | Z | -4.589 | -4.589 | 0 | %100 |
| 81 | MP2A | X | -9.622 | -9.622 | 0 | %100 |
| 82 | MP2A | Z | -5.555 | -5.555 | 0 | %100 |
| 83 | MP3A | X | -7.949 | -7.949 | 0 | %100 |
| 84 | MP3A | Z | -4.589 | -4.589 | 0 | %100 |
| 85 | MP4A | X | -7.949 | -7.949 | 0 | %100 |
| 86 | MP4A | Z | -4.589 | -4.589 | 0 | %100 |
| 87 | MP1C | X | -7.949 | -7.949 | 0 | %100 |
| 88 | MP1C | Z | -4.589 | -4.589 | 0 | %100 |
| 89 | MP2C | X | -9.622 | -9.622 | 0 | %100 |
| 90 | MP2C | Z | -5.555 | -5.555 | 0 | %100 |
| 91 | MP3C | X | -7.949 | -7.949 | 0 | %100 |
| 92 | MP3C | Z | -4.589 | -4.589 | 0 | %100 |
| 93 | MP4C | X | -7.949 | -7.949 | 0 | %100 |
| 94 | MP4C | Z | -4.589 | -4.589 | 0 | %100 |
| 95 | MP1B | X | -7.949 | -7.949 | 0 | %100 |
| 96 | MP1B | Z | -4.589 | -4.589 | 0 | %100 |
| 97 | MP2B | X | -9.622 | -9.622 | 0 | %100 |
| 98 | MP2B | Z | -5.555 | -5.555 | 0 | %100 |
| 99 | MP3B | X | -7.949 | -7.949 | 0 | %100 |
| 100 | MP3B | Z | -4.589 | -4.589 | 0 | %100 |
| 101 | MP4B | X | -7.949 | -7.949 | 0 | %100 |
| 102 | MP4B | Z | -4.589 | -4.589 | 0 | %100 |
| 103 | OVP | X | -6.5 | -6.5 | 0 | %100 |
| 104 | OVP | Z | -3.753 | -3.753 | 0 | %100 |
| 105 | M85A | X | -2.406 | -2.406 | 0 | %100 |
| 106 | M85A | Z | -1.389 | -1.389 | 0 | %100 |
| 107 | M92A | X | -2.406 | -2.406 | 0 | %100 |
| 108 | M92A | Z | -1.389 | -1.389 | 0 | %100 |
| 109 | M99 | X | -9.622 | -9.622 | 0 | %100 |
| 110 | M99 | Z | -5.555 | -5.555 | 0 | %100 |
| 111 | M102 | X | -3.236 | -3.236 | 0 | %100 |
| 112 | M102 | Z | -1.868 | -1.868 | 0 | %100 |
| 113 | M103 | X | -12.942 | -12.942 | 0 | %100 |
| 114 | M103 | Z | -7.472 | -7.472 | 0 | %100 |
| 115 | M104 | X | -3.236 | -3.236 | 0 | %100 |
| 116 | M104 | Z | -1.868 | -1.868 | 0 | %100 |
| 117 | M105 | X | -12.203 | -12.203 | 0 | %100 |
| 118 | M105 | Z | -7.045 | -7.045 | 0 | %100 |
| 119 | M106 | X | -12.203 | -12.203 | 0 | %100 |
| 120 | M106 | Z | -7.045 | -7.045 | 0 | %100 |
| 121 | M107 | X | -8.442 | -8.442 | 0 | %100 |
| 122 | M107 | Z | -4.874 | -4.874 | 0 | %100 |

## Member Distributed Loads (BLC 52 : Structure Wo (330 Deg))

| | Member Label | Direction | Start Magnitude[lb/ft,... | End Magnitude[lb/ft,F... | Start Location[ft,%] | End Location[ft,%] |
|---|---|---|---|---|---|---|
| 1 | M1 | X | -1.715 | -1.715 | 0 | %100 |
| 2 | M1 | Z | -2.971 | -2.971 | 0 | %100 |
| 3 | M4 | X | -8.695 | -8.695 | 0 | %100 |
| 4 | M4 | Z | -15.061 | -15.061 | 0 | %100 |
| 5 | M7 | X | -5.072 | -5.072 | 0 | %100 |
| 6 | M7 | Z | -8.786 | -8.786 | 0 | %100 |
| 7 | M15 | X | 0 | 0 | 0 | %100 |
| 8 | M15 | Z | 0 | 0 | 0 | %100 |
| 9 | M17 | X | 0 | 0 | 0 | %100 |
| 10 | M17 | Z | 0 | 0 | 0 | %100 |
| 11 | M20 | X | -5.072 | -5.072 | 0 | %100 |
| 12 | M20 | Z | -8.786 | -8.786 | 0 | %100 |
| 13 | M21 | X | -8.695 | -8.695 | 0 | %100 |
| 14 | M21 | Z | -15.061 | -15.061 | 0 | %100 |
| 15 | M29 | X | -.000311 | -.000311 | 0 | %100 |
| 16 | M29 | Z | -.000538 | -.000538 | 0 | %100 |
| 17 | M30 | X | -4.559 | -4.559 | 0 | %100 |
| 18 | M30 | Z | -7.897 | -7.897 | 0 | %100 |
| 19 | M108A | X | 0 | 0 | 0 | %100 |
| 20 | M108A | Z | 0 | 0 | 0 | %100 |
| 21 | M109A | X | -8.856 | -8.856 | 0 | %100 |
| 22 | M109A | Z | -15.34 | -15.34 | 0 | %100 |
| 23 | M119 | X | -8.695 | -8.695 | 0 | %100 |
| 24 | M119 | Z | -15.061 | -15.061 | 0 | %100 |
| 25 | M120 | X | -8.856 | -8.856 | 0 | %100 |
| 26 | M120 | Z | -15.34 | -15.34 | 0 | %100 |
| 27 | M122 | X | -5.371 | -5.371 | 0 | %100 |
| 28 | M122 | Z | -9.303 | -9.303 | 0 | %100 |
| 29 | M125 | X | -5.371 | -5.371 | 0 | %100 |
| 30 | M125 | Z | -9.303 | -9.303 | 0 | %100 |
| 31 | M51 | X | -6.862 | -6.862 | 0 | %100 |
| 32 | M51 | Z | -11.885 | -11.885 | 0 | %100 |
| 33 | M52 | X | 0 | 0 | 0 | %100 |
| 34 | M52 | Z | 0 | 0 | 0 | %100 |
| 35 | M54 | X | -8.695 | -8.695 | 0 | %100 |
| 36 | M54 | Z | -15.061 | -15.061 | 0 | %100 |
| 37 | M55 | X | -8.695 | -8.695 | 0 | %100 |
| 38 | M55 | Z | -15.061 | -15.061 | 0 | %100 |
| 39 | M57A | X | -4.484 | -4.484 | 0 | %100 |
| 40 | M57A | Z | -7.767 | -7.767 | 0 | %100 |
| 41 | M58A | X | -4.484 | -4.484 | 0 | %100 |
| 42 | M58A | Z | -7.767 | -7.767 | 0 | %100 |
| 43 | M63 | X | -8.695 | -8.695 | 0 | %100 |
| 44 | M63 | Z | -15.061 | -15.061 | 0 | %100 |
| 45 | M64A | X | 0 | 0 | 0 | %100 |
| 46 | M64A | Z | 0 | 0 | 0 | %100 |
| 47 | M67 | X | -8.695 | -8.695 | 0 | %100 |
| 48 | M67 | Z | -15.061 | -15.061 | 0 | %100 |
| 49 | M68 | X | 0 | 0 | 0 | %100 |
| 50 | M68 | Z | 0 | 0 | 0 | %100 |
| 51 | M70A | X | 0 | 0 | 0 | %100 |
| 52 | M70A | Z | 0 | 0 | 0 | %100 |

## Member Distributed Loads (BLC 52 : Structure Wo (330 Deg)) (Continued)

| | Member Label | Direction | Start Magnitude[lb/ft,... | End Magnitude[lb/ft,F... | Start Location[ft,%] | End Location[ft,%] |
|---|---|---|---|---|---|---|
| 53 | M71 | X | 0 | 0 | 0 | %100 |
| 54 | M71 | Z | 0 | 0 | 0 | %100 |
| 55 | M72A | X | -1.715 | -1.715 | 0 | %100 |
| 56 | M72A | Z | -2.971 | -2.971 | 0 | %100 |
| 57 | M73A | X | -8.695 | -8.695 | 0 | %100 |
| 58 | M73A | Z | -15.061 | -15.061 | 0 | %100 |
| 59 | M75A | X | -8.695 | -8.695 | 0 | %100 |
| 60 | M75A | Z | -15.061 | -15.061 | 0 | %100 |
| 61 | M76 | X | 0 | 0 | 0 | %100 |
| 62 | M76 | Z | 0 | 0 | 0 | %100 |
| 63 | M78A | X | -4.559 | -4.559 | 0 | %100 |
| 64 | M78A | Z | -7.897 | -7.897 | 0 | %100 |
| 65 | M79 | X | -.000311 | -.000311 | 0 | %100 |
| 66 | M79 | Z | -.000538 | -.000538 | 0 | %100 |
| 67 | M84 | X | -8.695 | -8.695 | 0 | %100 |
| 68 | M84 | Z | -15.061 | -15.061 | 0 | %100 |
| 69 | M85 | X | -8.856 | -8.856 | 0 | %100 |
| 70 | M85 | Z | -15.34 | -15.34 | 0 | %100 |
| 71 | M88 | X | 0 | 0 | 0 | %100 |
| 72 | M88 | Z | 0 | 0 | 0 | %100 |
| 73 | M89 | X | -8.856 | -8.856 | 0 | %100 |
| 74 | M89 | Z | -15.34 | -15.34 | 0 | %100 |
| 75 | M91 | X | -5.371 | -5.371 | 0 | %100 |
| 76 | M91 | Z | -9.303 | -9.303 | 0 | %100 |
| 77 | M92 | X | -5.371 | -5.371 | 0 | %100 |
| 78 | M92 | Z | -9.303 | -9.303 | 0 | %100 |
| 79 | MP1A | X | -4.589 | -4.589 | 0 | %100 |
| 80 | MP1A | Z | -7.949 | -7.949 | 0 | %100 |
| 81 | MP2A | X | -5.555 | -5.555 | 0 | %100 |
| 82 | MP2A | Z | -9.622 | -9.622 | 0 | %100 |
| 83 | MP3A | X | -4.589 | -4.589 | 0 | %100 |
| 84 | MP3A | Z | -7.949 | -7.949 | 0 | %100 |
| 85 | MP4A | X | -4.589 | -4.589 | 0 | %100 |
| 86 | MP4A | Z | -7.949 | -7.949 | 0 | %100 |
| 87 | MP1C | X | -4.589 | -4.589 | 0 | %100 |
| 88 | MP1C | Z | -7.949 | -7.949 | 0 | %100 |
| 89 | MP2C | X | -5.555 | -5.555 | 0 | %100 |
| 90 | MP2C | Z | -9.622 | -9.622 | 0 | %100 |
| 91 | MP3C | X | -4.589 | -4.589 | 0 | %100 |
| 92 | MP3C | Z | -7.949 | -7.949 | 0 | %100 |
| 93 | MP4C | X | -4.589 | -4.589 | 0 | %100 |
| 94 | MP4C | Z | -7.949 | -7.949 | 0 | %100 |
| 95 | MP1B | X | -4.589 | -4.589 | 0 | %100 |
| 96 | MP1B | Z | -7.949 | -7.949 | 0 | %100 |
| 97 | MP2B | X | -5.555 | -5.555 | 0 | %100 |
| 98 | MP2B | Z | -9.622 | -9.622 | 0 | %100 |
| 99 | MP3B | X | -4.589 | -4.589 | 0 | %100 |
| 100 | MP3B | Z | -7.949 | -7.949 | 0 | %100 |
| 101 | MP4B | X | -4.589 | -4.589 | 0 | %100 |
| 102 | MP4B | Z | -7.949 | -7.949 | 0 | %100 |
| 103 | OVP | X | -3.753 | -3.753 | 0 | %100 |
| 104 | OVP | Z | -6.5 | -6.5 | 0 | %100 |

## Member Distributed Loads (BLC 52 : Structure Wo (330 Deg)) (Continued)

| | Member Label | Direction | Start Magnitude[lb/ft,... | End Magnitude[lb/ft,F... | Start Location[ft,%] | End Location[ft,%] |
|---|---|---|---|---|---|---|
| 105 | M85A | X | -4.167 | -4.167 | 0 | %100 |
| 106 | M85A | Z | -7.217 | -7.217 | 0 | %100 |
| 107 | M92A | X | 0 | 0 | 0 | %100 |
| 108 | M92A | Z | 0 | 0 | 0 | %100 |
| 109 | M99 | X | -4.167 | -4.167 | 0 | %100 |
| 110 | M99 | Z | -7.217 | -7.217 | 0 | %100 |
| 111 | M102 | X | 0 | 0 | 0 | %100 |
| 112 | M102 | Z | 0 | 0 | 0 | %100 |
| 113 | M103 | X | -5.604 | -5.604 | 0 | %100 |
| 114 | M103 | Z | -9.707 | -9.707 | 0 | %100 |
| 115 | M104 | X | -5.604 | -5.604 | 0 | %100 |
| 116 | M104 | Z | -9.707 | -9.707 | 0 | %100 |
| 117 | M105 | X | -5.598 | -5.598 | 0 | %100 |
| 118 | M105 | Z | -9.696 | -9.696 | 0 | %100 |
| 119 | M106 | X | -7.769 | -7.769 | 0 | %100 |
| 120 | M106 | Z | -13.456 | -13.456 | 0 | %100 |
| 121 | M107 | X | -5.598 | -5.598 | 0 | %100 |
| 122 | M107 | Z | -9.696 | -9.696 | 0 | %100 |

## Member Distributed Loads (BLC 53 : Structure Wi (0 Deg))

| | Member Label | Direction | Start Magnitude[lb/ft,... | End Magnitude[lb/ft,F... | Start Location[ft,%] | End Location[ft,%] |
|---|---|---|---|---|---|---|
| 1 | M1 | X | 0 | 0 | 0 | %100 |
| 2 | M1 | Z | 0 | 0 | 0 | %100 |
| 3 | M4 | X | 0 | 0 | 0 | %100 |
| 4 | M4 | Z | -5.675 | -5.675 | 0 | %100 |
| 5 | M7 | X | 0 | 0 | 0 | %100 |
| 6 | M7 | Z | -4.86 | -4.86 | 0 | %100 |
| 7 | M15 | X | 0 | 0 | 0 | %100 |
| 8 | M15 | Z | -1.215 | -1.215 | 0 | %100 |
| 9 | M17 | X | 0 | 0 | 0 | %100 |
| 10 | M17 | Z | -1.407 | -1.407 | 0 | %100 |
| 11 | M20 | X | 0 | 0 | 0 | %100 |
| 12 | M20 | Z | -1.215 | -1.215 | 0 | %100 |
| 13 | M21 | X | 0 | 0 | 0 | %100 |
| 14 | M21 | Z | -1.407 | -1.407 | 0 | %100 |
| 15 | M29 | X | 0 | 0 | 0 | %100 |
| 16 | M29 | Z | -1.035 | -1.035 | 0 | %100 |
| 17 | M30 | X | 0 | 0 | 0 | %100 |
| 18 | M30 | Z | -1.035 | -1.035 | 0 | %100 |
| 19 | M108A | X | 0 | 0 | 0 | %100 |
| 20 | M108A | Z | -1.407 | -1.407 | 0 | %100 |
| 21 | M109A | X | 0 | 0 | 0 | %100 |
| 22 | M109A | Z | -5.707 | -5.707 | 0 | %100 |
| 23 | M119 | X | 0 | 0 | 0 | %100 |
| 24 | M119 | Z | -1.407 | -1.407 | 0 | %100 |
| 25 | M120 | X | 0 | 0 | 0 | %100 |
| 26 | M120 | Z | -5.707 | -5.707 | 0 | %100 |
| 27 | M122 | X | 0 | 0 | 0 | %100 |
| 28 | M122 | Z | -4.271 | -4.271 | 0 | %100 |
| 29 | M125 | X | 0 | 0 | 0 | %100 |
| 30 | M125 | Z | -4.271 | -4.271 | 0 | %100 |

## Member Distributed Loads (BLC 53 : Structure Wi (0 Deg)) (Continued)

| | Member Label | Direction | Start Magnitude[lb/ft,... | End Magnitude[lb/ft,F... | Start Location[ft,%] | End Location[ft,%] |
|---|---|---|---|---|---|---|
| 31 | M51 | X | 0 | 0 | 0 | %100 |
| 32 | M51 | Z | -3.45 | -3.45 | 0 | %100 |
| 33 | M52 | X | 0 | 0 | 0 | %100 |
| 34 | M52 | Z | -1.419 | -1.419 | 0 | %100 |
| 35 | M54 | X | 0 | 0 | 0 | %100 |
| 36 | M54 | Z | -1.407 | -1.407 | 0 | %100 |
| 37 | M55 | X | 0 | 0 | 0 | %100 |
| 38 | M55 | Z | -5.629 | -5.629 | 0 | %100 |
| 39 | M57A | X | 0 | 0 | 0 | %100 |
| 40 | M57A | Z | -.985 | -.985 | 0 | %100 |
| 41 | M58A | X | 0 | 0 | 0 | %100 |
| 42 | M58A | Z | -4.039 | -4.039 | 0 | %100 |
| 43 | M63 | X | 0 | 0 | 0 | %100 |
| 44 | M63 | Z | -1.407 | -1.407 | 0 | %100 |
| 45 | M64A | X | 0 | 0 | 0 | %100 |
| 46 | M64A | Z | -1.427 | -1.427 | 0 | %100 |
| 47 | M67 | X | 0 | 0 | 0 | %100 |
| 48 | M67 | Z | -5.629 | -5.629 | 0 | %100 |
| 49 | M68 | X | 0 | 0 | 0 | %100 |
| 50 | M68 | Z | -1.427 | -1.427 | 0 | %100 |
| 51 | M70A | X | 0 | 0 | 0 | %100 |
| 52 | M70A | Z | -1.068 | -1.068 | 0 | %100 |
| 53 | M71 | X | 0 | 0 | 0 | %100 |
| 54 | M71 | Z | -1.068 | -1.068 | 0 | %100 |
| 55 | M72A | X | 0 | 0 | 0 | %100 |
| 56 | M72A | Z | -3.45 | -3.45 | 0 | %100 |
| 57 | M73A | X | 0 | 0 | 0 | %100 |
| 58 | M73A | Z | -1.419 | -1.419 | 0 | %100 |
| 59 | M75A | X | 0 | 0 | 0 | %100 |
| 60 | M75A | Z | -5.629 | -5.629 | 0 | %100 |
| 61 | M76 | X | 0 | 0 | 0 | %100 |
| 62 | M76 | Z | -1.407 | -1.407 | 0 | %100 |
| 63 | M78A | X | 0 | 0 | 0 | %100 |
| 64 | M78A | Z | -4.039 | -4.039 | 0 | %100 |
| 65 | M79 | X | 0 | 0 | 0 | %100 |
| 66 | M79 | Z | -.985 | -.985 | 0 | %100 |
| 67 | M84 | X | 0 | 0 | 0 | %100 |
| 68 | M84 | Z | -5.629 | -5.629 | 0 | %100 |
| 69 | M85 | X | 0 | 0 | 0 | %100 |
| 70 | M85 | Z | -1.427 | -1.427 | 0 | %100 |
| 71 | M88 | X | 0 | 0 | 0 | %100 |
| 72 | M88 | Z | -1.407 | -1.407 | 0 | %100 |
| 73 | M89 | X | 0 | 0 | 0 | %100 |
| 74 | M89 | Z | -1.427 | -1.427 | 0 | %100 |
| 75 | M91 | X | 0 | 0 | 0 | %100 |
| 76 | M91 | Z | -1.068 | -1.068 | 0 | %100 |
| 77 | M92 | X | 0 | 0 | 0 | %100 |
| 78 | M92 | Z | -1.068 | -1.068 | 0 | %100 |
| 79 | MP1A | X | 0 | 0 | 0 | %100 |
| 80 | MP1A | Z | -3.901 | -3.901 | 0 | %100 |
| 81 | MP2A | X | 0 | 0 | 0 | %100 |
| 82 | MP2A | Z | -4.254 | -4.254 | 0 | %100 |

## Member Distributed Loads (BLC 53 : Structure Wi (0 Deg)) (Continued)

| | Member Label | Direction | Start Magnitude[lb/ft,... | End Magnitude[lb/ft,F... | Start Location[ft,%] | End Location[ft,%] |
|---|---|---|---|---|---|---|
| 83 | MP3A | X | 0 | 0 | 0 | %100 |
| 84 | MP3A | Z | -3.901 | -3.901 | 0 | %100 |
| 85 | MP4A | X | 0 | 0 | 0 | %100 |
| 86 | MP4A | Z | -3.901 | -3.901 | 0 | %100 |
| 87 | MP1C | X | 0 | 0 | 0 | %100 |
| 88 | MP1C | Z | -3.901 | -3.901 | 0 | %100 |
| 89 | MP2C | X | 0 | 0 | 0 | %100 |
| 90 | MP2C | Z | -4.254 | -4.254 | 0 | %100 |
| 91 | MP3C | X | 0 | 0 | 0 | %100 |
| 92 | MP3C | Z | -3.901 | -3.901 | 0 | %100 |
| 93 | MP4C | X | 0 | 0 | 0 | %100 |
| 94 | MP4C | Z | -3.901 | -3.901 | 0 | %100 |
| 95 | MP1B | X | 0 | 0 | 0 | %100 |
| 96 | MP1B | Z | -3.901 | -3.901 | 0 | %100 |
| 97 | MP2B | X | 0 | 0 | 0 | %100 |
| 98 | MP2B | Z | -4.254 | -4.254 | 0 | %100 |
| 99 | MP3B | X | 0 | 0 | 0 | %100 |
| 100 | MP3B | Z | -3.901 | -3.901 | 0 | %100 |
| 101 | MP4B | X | 0 | 0 | 0 | %100 |
| 102 | MP4B | Z | -3.901 | -3.901 | 0 | %100 |
| 103 | OVP | X | 0 | 0 | 0 | %100 |
| 104 | OVP | Z | -3.125 | -3.125 | 0 | %100 |
| 105 | M85A | X | 0 | 0 | 0 | %100 |
| 106 | M85A | Z | -4.419 | -4.419 | 0 | %100 |
| 107 | M92A | X | 0 | 0 | 0 | %100 |
| 108 | M92A | Z | -1.105 | -1.105 | 0 | %100 |
| 109 | M99 | X | 0 | 0 | 0 | %100 |
| 110 | M99 | Z | -1.105 | -1.105 | 0 | %100 |
| 111 | M102 | X | 0 | 0 | 0 | %100 |
| 112 | M102 | Z | -1.115 | -1.115 | 0 | %100 |
| 113 | M103 | X | 0 | 0 | 0 | %100 |
| 114 | M103 | Z | -1.115 | -1.115 | 0 | %100 |
| 115 | M104 | X | 0 | 0 | 0 | %100 |
| 116 | M104 | Z | -4.46 | -4.46 | 0 | %100 |
| 117 | M105 | X | 0 | 0 | 0 | %100 |
| 118 | M105 | Z | -2.438 | -2.438 | 0 | %100 |
| 119 | M106 | X | 0 | 0 | 0 | %100 |
| 120 | M106 | Z | -4.09 | -4.09 | 0 | %100 |
| 121 | M107 | X | 0 | 0 | 0 | %100 |
| 122 | M107 | Z | -4.09 | -4.09 | 0 | %100 |

## Member Distributed Loads (BLC 54 : Structure Wi (30 Deg))

| | Member Label | Direction | Start Magnitude[lb/ft,... | End Magnitude[lb/ft,F... | Start Location[ft,%] | End Location[ft,%] |
|---|---|---|---|---|---|---|
| 1 | M1 | X | .575 | .575 | 0 | %100 |
| 2 | M1 | Z | -.996 | -.996 | 0 | %100 |
| 3 | M4 | X | 2.128 | 2.128 | 0 | %100 |
| 4 | M4 | Z | -3.686 | -3.686 | 0 | %100 |
| 5 | M7 | X | 1.823 | 1.823 | 0 | %100 |
| 6 | M7 | Z | -3.157 | -3.157 | 0 | %100 |
| 7 | M15 | X | 1.823 | 1.823 | 0 | %100 |
| 8 | M15 | Z | -3.157 | -3.157 | 0 | %100 |

## Member Distributed Loads (BLC 54 : Structure Wi (30 Deg)) (Continued)

| | Member Label | Direction | Start Magnitude[lb/ft,... | End Magnitude[lb/ft,F... | Start Location[ft,%] | End Location[ft,%] |
|---|---|---|---|---|---|---|
| 9 | M17 | X | 2.111 | 2.111 | 0 | %100 |
| 10 | M17 | Z | -3.656 | -3.656 | 0 | %100 |
| 11 | M20 | X | 0 | 0 | 0 | %100 |
| 12 | M20 | Z | 0 | 0 | 0 | %100 |
| 13 | M21 | X | 0 | 0 | 0 | %100 |
| 14 | M21 | Z | 0 | 0 | 0 | %100 |
| 15 | M29 | X | 1.527 | 1.527 | 0 | %100 |
| 16 | M29 | Z | -2.645 | -2.645 | 0 | %100 |
| 17 | M30 | X | .000104 | .000104 | 0 | %100 |
| 18 | M30 | Z | -.00018 | -.00018 | 0 | %100 |
| 19 | M108A | X | 2.111 | 2.111 | 0 | %100 |
| 20 | M108A | Z | -3.656 | -3.656 | 0 | %100 |
| 21 | M109A | X | 2.14 | 2.14 | 0 | %100 |
| 22 | M109A | Z | -3.707 | -3.707 | 0 | %100 |
| 23 | M119 | X | 0 | 0 | 0 | %100 |
| 24 | M119 | Z | 0 | 0 | 0 | %100 |
| 25 | M120 | X | 2.14 | 2.14 | 0 | %100 |
| 26 | M120 | Z | -3.707 | -3.707 | 0 | %100 |
| 27 | M122 | X | 1.602 | 1.602 | 0 | %100 |
| 28 | M122 | Z | -2.774 | -2.774 | 0 | %100 |
| 29 | M125 | X | 1.602 | 1.602 | 0 | %100 |
| 30 | M125 | Z | -2.774 | -2.774 | 0 | %100 |
| 31 | M51 | X | .575 | .575 | 0 | %100 |
| 32 | M51 | Z | -.996 | -.996 | 0 | %100 |
| 33 | M52 | X | 2.128 | 2.128 | 0 | %100 |
| 34 | M52 | Z | -3.686 | -3.686 | 0 | %100 |
| 35 | M54 | X | 0 | 0 | 0 | %100 |
| 36 | M54 | Z | 0 | 0 | 0 | %100 |
| 37 | M55 | X | 2.111 | 2.111 | 0 | %100 |
| 38 | M55 | Z | -3.656 | -3.656 | 0 | %100 |
| 39 | M57A | X | .000104 | .000104 | 0 | %100 |
| 40 | M57A | Z | -.00018 | -.00018 | 0 | %100 |
| 41 | M58A | X | 1.527 | 1.527 | 0 | %100 |
| 42 | M58A | Z | -2.645 | -2.645 | 0 | %100 |
| 43 | M63 | X | 0 | 0 | 0 | %100 |
| 44 | M63 | Z | 0 | 0 | 0 | %100 |
| 45 | M64A | X | 2.14 | 2.14 | 0 | %100 |
| 46 | M64A | Z | -3.707 | -3.707 | 0 | %100 |
| 47 | M67 | X | 2.111 | 2.111 | 0 | %100 |
| 48 | M67 | Z | -3.656 | -3.656 | 0 | %100 |
| 49 | M68 | X | 2.14 | 2.14 | 0 | %100 |
| 50 | M68 | Z | -3.707 | -3.707 | 0 | %100 |
| 51 | M70A | X | 1.602 | 1.602 | 0 | %100 |
| 52 | M70A | Z | -2.774 | -2.774 | 0 | %100 |
| 53 | M71 | X | 1.602 | 1.602 | 0 | %100 |
| 54 | M71 | Z | -2.774 | -2.774 | 0 | %100 |
| 55 | M72A | X | 2.3 | 2.3 | 0 | %100 |
| 56 | M72A | Z | -3.984 | -3.984 | 0 | %100 |
| 57 | M73A | X | 0 | 0 | 0 | %100 |
| 58 | M73A | Z | 0 | 0 | 0 | %100 |
| 59 | M75A | X | 2.111 | 2.111 | 0 | %100 |
| 60 | M75A | Z | -3.656 | -3.656 | 0 | %100 |

## Member Distributed Loads (BLC 54 : Structure Wi (30 Deg)) (Continued)

| | Member Label | Direction | Start Magnitude[lb/ft,... | End Magnitude[lb/ft,F... | Start Location[ft,%] | End Location[ft,%] |
|---|---|---|---|---|---|---|
| 61 | M76 | X | 2.111 | 2.111 | 0 | %100 |
| 62 | M76 | Z | -3.656 | -3.656 | 0 | %100 |
| 63 | M78A | X | 1.502 | 1.502 | 0 | %100 |
| 64 | M78A | Z | -2.601 | -2.601 | 0 | %100 |
| 65 | M79 | X | 1.502 | 1.502 | 0 | %100 |
| 66 | M79 | Z | -2.601 | -2.601 | 0 | %100 |
| 67 | M84 | X | 2.111 | 2.111 | 0 | %100 |
| 68 | M84 | Z | -3.656 | -3.656 | 0 | %100 |
| 69 | M85 | X | 0 | 0 | 0 | %100 |
| 70 | M85 | Z | 0 | 0 | 0 | %100 |
| 71 | M88 | X | 2.111 | 2.111 | 0 | %100 |
| 72 | M88 | Z | -3.656 | -3.656 | 0 | %100 |
| 73 | M89 | X | 0 | 0 | 0 | %100 |
| 74 | M89 | Z | 0 | 0 | 0 | %100 |
| 75 | M91 | X | 0 | 0 | 0 | %100 |
| 76 | M91 | Z | 0 | 0 | 0 | %100 |
| 77 | M92 | X | 0 | 0 | 0 | %100 |
| 78 | M92 | Z | 0 | 0 | 0 | %100 |
| 79 | MP1A | X | 1.95 | 1.95 | 0 | %100 |
| 80 | MP1A | Z | -3.378 | -3.378 | 0 | %100 |
| 81 | MP2A | X | 2.127 | 2.127 | 0 | %100 |
| 82 | MP2A | Z | -3.684 | -3.684 | 0 | %100 |
| 83 | MP3A | X | 1.95 | 1.95 | 0 | %100 |
| 84 | MP3A | Z | -3.378 | -3.378 | 0 | %100 |
| 85 | MP4A | X | 1.95 | 1.95 | 0 | %100 |
| 86 | MP4A | Z | -3.378 | -3.378 | 0 | %100 |
| 87 | MP1C | X | 1.95 | 1.95 | 0 | %100 |
| 88 | MP1C | Z | -3.378 | -3.378 | 0 | %100 |
| 89 | MP2C | X | 2.127 | 2.127 | 0 | %100 |
| 90 | MP2C | Z | -3.684 | -3.684 | 0 | %100 |
| 91 | MP3C | X | 1.95 | 1.95 | 0 | %100 |
| 92 | MP3C | Z | -3.378 | -3.378 | 0 | %100 |
| 93 | MP4C | X | 1.95 | 1.95 | 0 | %100 |
| 94 | MP4C | Z | -3.378 | -3.378 | 0 | %100 |
| 95 | MP1B | X | 1.95 | 1.95 | 0 | %100 |
| 96 | MP1B | Z | -3.378 | -3.378 | 0 | %100 |
| 97 | MP2B | X | 2.127 | 2.127 | 0 | %100 |
| 98 | MP2B | Z | -3.684 | -3.684 | 0 | %100 |
| 99 | MP3B | X | 1.95 | 1.95 | 0 | %100 |
| 100 | MP3B | Z | -3.378 | -3.378 | 0 | %100 |
| 101 | MP4B | X | 1.95 | 1.95 | 0 | %100 |
| 102 | MP4B | Z | -3.378 | -3.378 | 0 | %100 |
| 103 | OVP | X | 1.562 | 1.562 | 0 | %100 |
| 104 | OVP | Z | -2.706 | -2.706 | 0 | %100 |
| 105 | M85A | X | 1.657 | 1.657 | 0 | %100 |
| 106 | M85A | Z | -2.87 | -2.87 | 0 | %100 |
| 107 | M92A | X | 1.657 | 1.657 | 0 | %100 |
| 108 | M92A | Z | -2.87 | -2.87 | 0 | %100 |
| 109 | M99 | X | 0 | 0 | 0 | %100 |
| 110 | M99 | Z | 0 | 0 | 0 | %100 |
| 111 | M102 | X | 1.672 | 1.672 | 0 | %100 |
| 112 | M102 | Z | -2.897 | -2.897 | 0 | %100 |

## Member Distributed Loads (BLC 54 : Structure Wi (30 Deg)) (Continued)

| | Member Label | Direction | Start Magnitude[lb/ft,... | End Magnitude[lb/ft,F... | Start Location[ft,%] | End Location[ft,%] |
|---|---|---|---|---|---|---|
| 113 | M103 | X | 0 | 0 | 0 | %100 |
| 114 | M103 | Z | 0 | 0 | 0 | %100 |
| 115 | M104 | X | 1.672 | 1.672 | 0 | %100 |
| 116 | M104 | Z | -2.897 | -2.897 | 0 | %100 |
| 117 | M105 | X | 1.494 | 1.494 | 0 | %100 |
| 118 | M105 | Z | -2.588 | -2.588 | 0 | %100 |
| 119 | M106 | X | 1.494 | 1.494 | 0 | %100 |
| 120 | M106 | Z | -2.588 | -2.588 | 0 | %100 |
| 121 | M107 | X | 2.32 | 2.32 | 0 | %100 |
| 122 | M107 | Z | -4.019 | -4.019 | 0 | %100 |

## Member Distributed Loads (BLC 55 : Structure Wi (60 Deg))

| | Member Label | Direction | Start Magnitude[lb/ft,... | End Magnitude[lb/ft,F... | Start Location[ft,%] | End Location[ft,%] |
|---|---|---|---|---|---|---|
| 1 | M1 | X | 2.988 | 2.988 | 0 | %100 |
| 2 | M1 | Z | -1.725 | -1.725 | 0 | %100 |
| 3 | M4 | X | 1.229 | 1.229 | 0 | %100 |
| 4 | M4 | Z | -.709 | -.709 | 0 | %100 |
| 5 | M7 | X | 1.052 | 1.052 | 0 | %100 |
| 6 | M7 | Z | -.608 | -.608 | 0 | %100 |
| 7 | M15 | X | 4.209 | 4.209 | 0 | %100 |
| 8 | M15 | Z | -2.43 | -2.43 | 0 | %100 |
| 9 | M17 | X | 4.875 | 4.875 | 0 | %100 |
| 10 | M17 | Z | -2.814 | -2.814 | 0 | %100 |
| 11 | M20 | X | 1.052 | 1.052 | 0 | %100 |
| 12 | M20 | Z | -.608 | -.608 | 0 | %100 |
| 13 | M21 | X | 1.219 | 1.219 | 0 | %100 |
| 14 | M21 | Z | -.704 | -.704 | 0 | %100 |
| 15 | M29 | X | 3.498 | 3.498 | 0 | %100 |
| 16 | M29 | Z | -2.019 | -2.019 | 0 | %100 |
| 17 | M30 | X | .853 | .853 | 0 | %100 |
| 18 | M30 | Z | -.492 | -.492 | 0 | %100 |
| 19 | M108A | X | 4.875 | 4.875 | 0 | %100 |
| 20 | M108A | Z | -2.814 | -2.814 | 0 | %100 |
| 21 | M109A | X | 1.236 | 1.236 | 0 | %100 |
| 22 | M109A | Z | -.713 | -.713 | 0 | %100 |
| 23 | M119 | X | 1.219 | 1.219 | 0 | %100 |
| 24 | M119 | Z | -.704 | -.704 | 0 | %100 |
| 25 | M120 | X | 1.236 | 1.236 | 0 | %100 |
| 26 | M120 | Z | -.713 | -.713 | 0 | %100 |
| 27 | M122 | X | .925 | .925 | 0 | %100 |
| 28 | M122 | Z | -.534 | -.534 | 0 | %100 |
| 29 | M125 | X | .925 | .925 | 0 | %100 |
| 30 | M125 | Z | -.534 | -.534 | 0 | %100 |
| 31 | M51 | X | 0 | 0 | 0 | %100 |
| 32 | M51 | Z | 0 | 0 | 0 | %100 |
| 33 | M52 | X | 4.915 | 4.915 | 0 | %100 |
| 34 | M52 | Z | -2.838 | -2.838 | 0 | %100 |
| 35 | M54 | X | 1.219 | 1.219 | 0 | %100 |
| 36 | M54 | Z | -.704 | -.704 | 0 | %100 |
| 37 | M55 | X | 1.219 | 1.219 | 0 | %100 |
| 38 | M55 | Z | -.704 | -.704 | 0 | %100 |

## Member Distributed Loads (BLC 55 : Structure Wi (60 Deg)) (Continued)

| | Member Label | Direction | Start Magnitude[lb/ft,... | End Magnitude[lb/ft,F... | Start Location[ft,%] | End Location[ft,%] |
|---|---|---|---|---|---|---|
| 39 | M57A | X | .896 | .896 | 0 | %100 |
| 40 | M57A | Z | -.517 | -.517 | 0 | %100 |
| 41 | M58A | X | .896 | .896 | 0 | %100 |
| 42 | M58A | Z | -.517 | -.517 | 0 | %100 |
| 43 | M63 | X | 1.219 | 1.219 | 0 | %100 |
| 44 | M63 | Z | -.704 | -.704 | 0 | %100 |
| 45 | M64A | X | 4.943 | 4.943 | 0 | %100 |
| 46 | M64A | Z | -2.854 | -2.854 | 0 | %100 |
| 47 | M67 | X | 1.219 | 1.219 | 0 | %100 |
| 48 | M67 | Z | -.704 | -.704 | 0 | %100 |
| 49 | M68 | X | 4.943 | 4.943 | 0 | %100 |
| 50 | M68 | Z | -2.854 | -2.854 | 0 | %100 |
| 51 | M70A | X | 3.699 | 3.699 | 0 | %100 |
| 52 | M70A | Z | -2.135 | -2.135 | 0 | %100 |
| 53 | M71 | X | 3.699 | 3.699 | 0 | %100 |
| 54 | M71 | Z | -2.135 | -2.135 | 0 | %100 |
| 55 | M72A | X | 2.988 | 2.988 | 0 | %100 |
| 56 | M72A | Z | -1.725 | -1.725 | 0 | %100 |
| 57 | M73A | X | 1.229 | 1.229 | 0 | %100 |
| 58 | M73A | Z | -.709 | -.709 | 0 | %100 |
| 59 | M75A | X | 1.219 | 1.219 | 0 | %100 |
| 60 | M75A | Z | -.704 | -.704 | 0 | %100 |
| 61 | M76 | X | 4.875 | 4.875 | 0 | %100 |
| 62 | M76 | Z | -2.814 | -2.814 | 0 | %100 |
| 63 | M78A | X | .853 | .853 | 0 | %100 |
| 64 | M78A | Z | -.492 | -.492 | 0 | %100 |
| 65 | M79 | X | 3.498 | 3.498 | 0 | %100 |
| 66 | M79 | Z | -2.019 | -2.019 | 0 | %100 |
| 67 | M84 | X | 1.219 | 1.219 | 0 | %100 |
| 68 | M84 | Z | -.704 | -.704 | 0 | %100 |
| 69 | M85 | X | 1.236 | 1.236 | 0 | %100 |
| 70 | M85 | Z | -.713 | -.713 | 0 | %100 |
| 71 | M88 | X | 4.875 | 4.875 | 0 | %100 |
| 72 | M88 | Z | -2.814 | -2.814 | 0 | %100 |
| 73 | M89 | X | 1.236 | 1.236 | 0 | %100 |
| 74 | M89 | Z | -.713 | -.713 | 0 | %100 |
| 75 | M91 | X | .925 | .925 | 0 | %100 |
| 76 | M91 | Z | -.534 | -.534 | 0 | %100 |
| 77 | M92 | X | .925 | .925 | 0 | %100 |
| 78 | M92 | Z | -.534 | -.534 | 0 | %100 |
| 79 | MP1A | X | 3.378 | 3.378 | 0 | %100 |
| 80 | MP1A | Z | -1.95 | -1.95 | 0 | %100 |
| 81 | MP2A | X | 3.684 | 3.684 | 0 | %100 |
| 82 | MP2A | Z | -2.127 | -2.127 | 0 | %100 |
| 83 | MP3A | X | 3.378 | 3.378 | 0 | %100 |
| 84 | MP3A | Z | -1.95 | -1.95 | 0 | %100 |
| 85 | MP4A | X | 3.378 | 3.378 | 0 | %100 |
| 86 | MP4A | Z | -1.95 | -1.95 | 0 | %100 |
| 87 | MP1C | X | 3.378 | 3.378 | 0 | %100 |
| 88 | MP1C | Z | -1.95 | -1.95 | 0 | %100 |
| 89 | MP2C | X | 3.684 | 3.684 | 0 | %100 |
| 90 | MP2C | Z | -2.127 | -2.127 | 0 | %100 |

## Member Distributed Loads (BLC 55 : Structure Wi (60 Deg)) (Continued)

| | Member Label | Direction | Start Magnitude[lb/ft,... | End Magnitude[lb/ft,F... | Start Location[ft,%] | End Location[ft,%] |
|---|---|---|---|---|---|---|
| 91 | MP3C | X | 3.378 | 3.378 | 0 | %100 |
| 92 | MP3C | Z | -1.95 | -1.95 | 0 | %100 |
| 93 | MP4C | X | 3.378 | 3.378 | 0 | %100 |
| 94 | MP4C | Z | -1.95 | -1.95 | 0 | %100 |
| 95 | MP1B | X | 3.378 | 3.378 | 0 | %100 |
| 96 | MP1B | Z | -1.95 | -1.95 | 0 | %100 |
| 97 | MP2B | X | 3.684 | 3.684 | 0 | %100 |
| 98 | MP2B | Z | -2.127 | -2.127 | 0 | %100 |
| 99 | MP3B | X | 3.378 | 3.378 | 0 | %100 |
| 100 | MP3B | Z | -1.95 | -1.95 | 0 | %100 |
| 101 | MP4B | X | 3.378 | 3.378 | 0 | %100 |
| 102 | MP4B | Z | -1.95 | -1.95 | 0 | %100 |
| 103 | OVP | X | 2.706 | 2.706 | 0 | %100 |
| 104 | OVP | Z | -1.562 | -1.562 | 0 | %100 |
| 105 | M85A | X | .957 | .957 | 0 | %100 |
| 106 | M85A | Z | -.552 | -.552 | 0 | %100 |
| 107 | M92A | X | 3.827 | 3.827 | 0 | %100 |
| 108 | M92A | Z | -2.21 | -2.21 | 0 | %100 |
| 109 | M99 | X | .957 | .957 | 0 | %100 |
| 110 | M99 | Z | -.552 | -.552 | 0 | %100 |
| 111 | M102 | X | 3.862 | 3.862 | 0 | %100 |
| 112 | M102 | Z | -2.23 | -2.23 | 0 | %100 |
| 113 | M103 | X | .966 | .966 | 0 | %100 |
| 114 | M103 | Z | -.557 | -.557 | 0 | %100 |
| 115 | M104 | X | .966 | .966 | 0 | %100 |
| 116 | M104 | Z | -.557 | -.557 | 0 | %100 |
| 117 | M105 | X | 3.542 | 3.542 | 0 | %100 |
| 118 | M105 | Z | -2.045 | -2.045 | 0 | %100 |
| 119 | M106 | X | 2.111 | 2.111 | 0 | %100 |
| 120 | M106 | Z | -1.219 | -1.219 | 0 | %100 |
| 121 | M107 | X | 3.542 | 3.542 | 0 | %100 |
| 122 | M107 | Z | -2.045 | -2.045 | 0 | %100 |

## Member Distributed Loads (BLC 56 : Structure Wi (90 Deg))

| | Member Label | Direction | Start Magnitude[lb/ft,... | End Magnitude[lb/ft,F... | Start Location[ft,%] | End Location[ft,%] |
|---|---|---|---|---|---|---|
| 1 | M1 | X | 4.6 | 4.6 | 0 | %100 |
| 2 | M1 | Z | 0 | 0 | 0 | %100 |
| 3 | M4 | X | 0 | 0 | 0 | %100 |
| 4 | M4 | Z | 0 | 0 | 0 | %100 |
| 5 | M7 | X | 0 | 0 | 0 | %100 |
| 6 | M7 | Z | 0 | 0 | 0 | %100 |
| 7 | M15 | X | 3.645 | 3.645 | 0 | %100 |
| 8 | M15 | Z | 0 | 0 | 0 | %100 |
| 9 | M17 | X | 4.222 | 4.222 | 0 | %100 |
| 10 | M17 | Z | 0 | 0 | 0 | %100 |
| 11 | M20 | X | 3.645 | 3.645 | 0 | %100 |
| 12 | M20 | Z | 0 | 0 | 0 | %100 |
| 13 | M21 | X | 4.222 | 4.222 | 0 | %100 |
| 14 | M21 | Z | 0 | 0 | 0 | %100 |
| 15 | M29 | X | 3.004 | 3.004 | 0 | %100 |
| 16 | M29 | Z | 0 | 0 | 0 | %100 |

## Member Distributed Loads (BLC 56 : Structure Wi (90 Deg)) (Continued)

| | Member Label | Direction | Start Magnitude[lb/ft,... | End Magnitude[lb/ft,F... | Start Location[ft,%] | End Location[ft,%] |
|---|---|---|---|---|---|---|
| 17 | M30 | X | 3.004 | 3.004 | 0 | %100 |
| 18 | M30 | Z | 0 | 0 | 0 | %100 |
| 19 | M108A | X | 4.222 | 4.222 | 0 | %100 |
| 20 | M108A | Z | 0 | 0 | 0 | %100 |
| 21 | M109A | X | 0 | 0 | 0 | %100 |
| 22 | M109A | Z | 0 | 0 | 0 | %100 |
| 23 | M119 | X | 4.222 | 4.222 | 0 | %100 |
| 24 | M119 | Z | 0 | 0 | 0 | %100 |
| 25 | M120 | X | 0 | 0 | 0 | %100 |
| 26 | M120 | Z | 0 | 0 | 0 | %100 |
| 27 | M122 | X | 0 | 0 | 0 | %100 |
| 28 | M122 | Z | 0 | 0 | 0 | %100 |
| 29 | M125 | X | 0 | 0 | 0 | %100 |
| 30 | M125 | Z | 0 | 0 | 0 | %100 |
| 31 | M51 | X | 1.15 | 1.15 | 0 | %100 |
| 32 | M51 | Z | 0 | 0 | 0 | %100 |
| 33 | M52 | X | 4.256 | 4.256 | 0 | %100 |
| 34 | M52 | Z | 0 | 0 | 0 | %100 |
| 35 | M54 | X | 4.222 | 4.222 | 0 | %100 |
| 36 | M54 | Z | 0 | 0 | 0 | %100 |
| 37 | M55 | X | 0 | 0 | 0 | %100 |
| 38 | M55 | Z | 0 | 0 | 0 | %100 |
| 39 | M57A | X | 3.054 | 3.054 | 0 | %100 |
| 40 | M57A | Z | 0 | 0 | 0 | %100 |
| 41 | M58A | X | .000208 | .000208 | 0 | %100 |
| 42 | M58A | Z | 0 | 0 | 0 | %100 |
| 43 | M63 | X | 4.222 | 4.222 | 0 | %100 |
| 44 | M63 | Z | 0 | 0 | 0 | %100 |
| 45 | M64A | X | 4.28 | 4.28 | 0 | %100 |
| 46 | M64A | Z | 0 | 0 | 0 | %100 |
| 47 | M67 | X | 0 | 0 | 0 | %100 |
| 48 | M67 | Z | 0 | 0 | 0 | %100 |
| 49 | M68 | X | 4.28 | 4.28 | 0 | %100 |
| 50 | M68 | Z | 0 | 0 | 0 | %100 |
| 51 | M70A | X | 3.203 | 3.203 | 0 | %100 |
| 52 | M70A | Z | 0 | 0 | 0 | %100 |
| 53 | M71 | X | 3.203 | 3.203 | 0 | %100 |
| 54 | M71 | Z | 0 | 0 | 0 | %100 |
| 55 | M72A | X | 1.15 | 1.15 | 0 | %100 |
| 56 | M72A | Z | 0 | 0 | 0 | %100 |
| 57 | M73A | X | 4.256 | 4.256 | 0 | %100 |
| 58 | M73A | Z | 0 | 0 | 0 | %100 |
| 59 | M75A | X | 0 | 0 | 0 | %100 |
| 60 | M75A | Z | 0 | 0 | 0 | %100 |
| 61 | M76 | X | 4.222 | 4.222 | 0 | %100 |
| 62 | M76 | Z | 0 | 0 | 0 | %100 |
| 63 | M78A | X | .000208 | .000208 | 0 | %100 |
| 64 | M78A | Z | 0 | 0 | 0 | %100 |
| 65 | M79 | X | 3.054 | 3.054 | 0 | %100 |
| 66 | M79 | Z | 0 | 0 | 0 | %100 |
| 67 | M84 | X | 0 | 0 | 0 | %100 |
| 68 | M84 | Z | 0 | 0 | 0 | %100 |

## Member Distributed Loads (BLC 56 : Structure Wi (90 Deg)) (Continued)

| | Member Label | Direction | Start Magnitude[lb/ft,... | End Magnitude[lb/ft,F... | Start Location[ft,%] | End Location[ft,%] |
|---|---|---|---|---|---|---|
| 69 | M85 | X | 4.28 | 4.28 | 0 | %100 |
| 70 | M85 | Z | 0 | 0 | 0 | %100 |
| 71 | M88 | X | 4.222 | 4.222 | 0 | %100 |
| 72 | M88 | Z | 0 | 0 | 0 | %100 |
| 73 | M89 | X | 4.28 | 4.28 | 0 | %100 |
| 74 | M89 | Z | 0 | 0 | 0 | %100 |
| 75 | M91 | X | 3.203 | 3.203 | 0 | %100 |
| 76 | M91 | Z | 0 | 0 | 0 | %100 |
| 77 | M92 | X | 3.203 | 3.203 | 0 | %100 |
| 78 | M92 | Z | 0 | 0 | 0 | %100 |
| 79 | MP1A | X | 3.901 | 3.901 | 0 | %100 |
| 80 | MP1A | Z | 0 | 0 | 0 | %100 |
| 81 | MP2A | X | 4.254 | 4.254 | 0 | %100 |
| 82 | MP2A | Z | 0 | 0 | 0 | %100 |
| 83 | MP3A | X | 3.901 | 3.901 | 0 | %100 |
| 84 | MP3A | Z | 0 | 0 | 0 | %100 |
| 85 | MP4A | X | 3.901 | 3.901 | 0 | %100 |
| 86 | MP4A | Z | 0 | 0 | 0 | %100 |
| 87 | MP1C | X | 3.901 | 3.901 | 0 | %100 |
| 88 | MP1C | Z | 0 | 0 | 0 | %100 |
| 89 | MP2C | X | 4.254 | 4.254 | 0 | %100 |
| 90 | MP2C | Z | 0 | 0 | 0 | %100 |
| 91 | MP3C | X | 3.901 | 3.901 | 0 | %100 |
| 92 | MP3C | Z | 0 | 0 | 0 | %100 |
| 93 | MP4C | X | 3.901 | 3.901 | 0 | %100 |
| 94 | MP4C | Z | 0 | 0 | 0 | %100 |
| 95 | MP1B | X | 3.901 | 3.901 | 0 | %100 |
| 96 | MP1B | Z | 0 | 0 | 0 | %100 |
| 97 | MP2B | X | 4.254 | 4.254 | 0 | %100 |
| 98 | MP2B | Z | 0 | 0 | 0 | %100 |
| 99 | MP3B | X | 3.901 | 3.901 | 0 | %100 |
| 100 | MP3B | Z | 0 | 0 | 0 | %100 |
| 101 | MP4B | X | 3.901 | 3.901 | 0 | %100 |
| 102 | MP4B | Z | 0 | 0 | 0 | %100 |
| 103 | OVP | X | 3.125 | 3.125 | 0 | %100 |
| 104 | OVP | Z | 0 | 0 | 0 | %100 |
| 105 | M85A | X | 0 | 0 | 0 | %100 |
| 106 | M85A | Z | 0 | 0 | 0 | %100 |
| 107 | M92A | X | 3.314 | 3.314 | 0 | %100 |
| 108 | M92A | Z | 0 | 0 | 0 | %100 |
| 109 | M99 | X | 3.314 | 3.314 | 0 | %100 |
| 110 | M99 | Z | 0 | 0 | 0 | %100 |
| 111 | M102 | X | 3.345 | 3.345 | 0 | %100 |
| 112 | M102 | Z | 0 | 0 | 0 | %100 |
| 113 | M103 | X | 3.345 | 3.345 | 0 | %100 |
| 114 | M103 | Z | 0 | 0 | 0 | %100 |
| 115 | M104 | X | 0 | 0 | 0 | %100 |
| 116 | M104 | Z | 0 | 0 | 0 | %100 |
| 117 | M105 | X | 4.641 | 4.641 | 0 | %100 |
| 118 | M105 | Z | 0 | 0 | 0 | %100 |
| 119 | M106 | X | 2.989 | 2.989 | 0 | %100 |
| 120 | M106 | Z | 0 | 0 | 0 | %100 |

## Member Distributed Loads (BLC 56 : Structure Wi (90 Deg)) (Continued)

| | Member Label | Direction | Start Magnitude[lb/ft,... | End Magnitude[lb/ft,F... | Start Location[ft,%] | End Location[ft,%] |
|---|---|---|---|---|---|---|
| 121 | M107 | X | 2.989 | 2.989 | 0 | %100 |
| 122 | M107 | Z | 0 | 0 | 0 | %100 |

## Member Distributed Loads (BLC 57 : Structure Wi (120 Deg))

| | Member Label | Direction | Start Magnitude[lb/ft,... | End Magnitude[lb/ft,F... | Start Location[ft,%] | End Location[ft,%] |
|---|---|---|---|---|---|---|
| 1 | M1 | X | 2.988 | 2.988 | 0 | %100 |
| 2 | M1 | Z | 1.725 | 1.725 | 0 | %100 |
| 3 | M4 | X | 1.229 | 1.229 | 0 | %100 |
| 4 | M4 | Z | .709 | .709 | 0 | %100 |
| 5 | M7 | X | 1.052 | 1.052 | 0 | %100 |
| 6 | M7 | Z | .608 | .608 | 0 | %100 |
| 7 | M15 | X | 1.052 | 1.052 | 0 | %100 |
| 8 | M15 | Z | .608 | .608 | 0 | %100 |
| 9 | M17 | X | 1.219 | 1.219 | 0 | %100 |
| 10 | M17 | Z | .704 | .704 | 0 | %100 |
| 11 | M20 | X | 4.209 | 4.209 | 0 | %100 |
| 12 | M20 | Z | 2.43 | 2.43 | 0 | %100 |
| 13 | M21 | X | 4.875 | 4.875 | 0 | %100 |
| 14 | M21 | Z | 2.814 | 2.814 | 0 | %100 |
| 15 | M29 | X | .853 | .853 | 0 | %100 |
| 16 | M29 | Z | .492 | .492 | 0 | %100 |
| 17 | M30 | X | 3.498 | 3.498 | 0 | %100 |
| 18 | M30 | Z | 2.019 | 2.019 | 0 | %100 |
| 19 | M108A | X | 1.219 | 1.219 | 0 | %100 |
| 20 | M108A | Z | .704 | .704 | 0 | %100 |
| 21 | M109A | X | 1.236 | 1.236 | 0 | %100 |
| 22 | M109A | Z | .713 | .713 | 0 | %100 |
| 23 | M119 | X | 4.875 | 4.875 | 0 | %100 |
| 24 | M119 | Z | 2.814 | 2.814 | 0 | %100 |
| 25 | M120 | X | 1.236 | 1.236 | 0 | %100 |
| 26 | M120 | Z | .713 | .713 | 0 | %100 |
| 27 | M122 | X | .925 | .925 | 0 | %100 |
| 28 | M122 | Z | .534 | .534 | 0 | %100 |
| 29 | M125 | X | .925 | .925 | 0 | %100 |
| 30 | M125 | Z | .534 | .534 | 0 | %100 |
| 31 | M51 | X | 2.988 | 2.988 | 0 | %100 |
| 32 | M51 | Z | 1.725 | 1.725 | 0 | %100 |
| 33 | M52 | X | 1.229 | 1.229 | 0 | %100 |
| 34 | M52 | Z | .709 | .709 | 0 | %100 |
| 35 | M54 | X | 4.875 | 4.875 | 0 | %100 |
| 36 | M54 | Z | 2.814 | 2.814 | 0 | %100 |
| 37 | M55 | X | 1.219 | 1.219 | 0 | %100 |
| 38 | M55 | Z | .704 | .704 | 0 | %100 |
| 39 | M57A | X | 3.498 | 3.498 | 0 | %100 |
| 40 | M57A | Z | 2.019 | 2.019 | 0 | %100 |
| 41 | M58A | X | .853 | .853 | 0 | %100 |
| 42 | M58A | Z | .492 | .492 | 0 | %100 |
| 43 | M63 | X | 4.875 | 4.875 | 0 | %100 |
| 44 | M63 | Z | 2.814 | 2.814 | 0 | %100 |
| 45 | M64A | X | 1.236 | 1.236 | 0 | %100 |
| 46 | M64A | Z | .713 | .713 | 0 | %100 |

## Member Distributed Loads (BLC 57 : Structure Wi (120 Deg)) (Continued)

| | Member Label | Direction | Start Magnitude[lb/ft,... | End Magnitude[lb/ft,F... | Start Location[ft,%] | End Location[ft,%] |
|---|---|---|---|---|---|---|
| 47 | M67 | X | 1.219 | 1.219 | 0 | %100 |
| 48 | M67 | Z | .704 | .704 | 0 | %100 |
| 49 | M68 | X | 1.236 | 1.236 | 0 | %100 |
| 50 | M68 | Z | .713 | .713 | 0 | %100 |
| 51 | M70A | X | .925 | .925 | 0 | %100 |
| 52 | M70A | Z | .534 | .534 | 0 | %100 |
| 53 | M71 | X | .925 | .925 | 0 | %100 |
| 54 | M71 | Z | .534 | .534 | 0 | %100 |
| 55 | M72A | X | 0 | 0 | 0 | %100 |
| 56 | M72A | Z | 0 | 0 | 0 | %100 |
| 57 | M73A | X | 4.915 | 4.915 | 0 | %100 |
| 58 | M73A | Z | 2.838 | 2.838 | 0 | %100 |
| 59 | M75A | X | 1.219 | 1.219 | 0 | %100 |
| 60 | M75A | Z | .704 | .704 | 0 | %100 |
| 61 | M76 | X | 1.219 | 1.219 | 0 | %100 |
| 62 | M76 | Z | .704 | .704 | 0 | %100 |
| 63 | M78A | X | .896 | .896 | 0 | %100 |
| 64 | M78A | Z | .517 | .517 | 0 | %100 |
| 65 | M79 | X | .896 | .896 | 0 | %100 |
| 66 | M79 | Z | .517 | .517 | 0 | %100 |
| 67 | M84 | X | 1.219 | 1.219 | 0 | %100 |
| 68 | M84 | Z | .704 | .704 | 0 | %100 |
| 69 | M85 | X | 4.943 | 4.943 | 0 | %100 |
| 70 | M85 | Z | 2.854 | 2.854 | 0 | %100 |
| 71 | M88 | X | 1.219 | 1.219 | 0 | %100 |
| 72 | M88 | Z | .704 | .704 | 0 | %100 |
| 73 | M89 | X | 4.943 | 4.943 | 0 | %100 |
| 74 | M89 | Z | 2.854 | 2.854 | 0 | %100 |
| 75 | M91 | X | 3.699 | 3.699 | 0 | %100 |
| 76 | M91 | Z | 2.135 | 2.135 | 0 | %100 |
| 77 | M92 | X | 3.699 | 3.699 | 0 | %100 |
| 78 | M92 | Z | 2.135 | 2.135 | 0 | %100 |
| 79 | MP1A | X | 3.378 | 3.378 | 0 | %100 |
| 80 | MP1A | Z | 1.95 | 1.95 | 0 | %100 |
| 81 | MP2A | X | 3.684 | 3.684 | 0 | %100 |
| 82 | MP2A | Z | 2.127 | 2.127 | 0 | %100 |
| 83 | MP3A | X | 3.378 | 3.378 | 0 | %100 |
| 84 | MP3A | Z | 1.95 | 1.95 | 0 | %100 |
| 85 | MP4A | X | 3.378 | 3.378 | 0 | %100 |
| 86 | MP4A | Z | 1.95 | 1.95 | 0 | %100 |
| 87 | MP1C | X | 3.378 | 3.378 | 0 | %100 |
| 88 | MP1C | Z | 1.95 | 1.95 | 0 | %100 |
| 89 | MP2C | X | 3.684 | 3.684 | 0 | %100 |
| 90 | MP2C | Z | 2.127 | 2.127 | 0 | %100 |
| 91 | MP3C | X | 3.378 | 3.378 | 0 | %100 |
| 92 | MP3C | Z | 1.95 | 1.95 | 0 | %100 |
| 93 | MP4C | X | 3.378 | 3.378 | 0 | %100 |
| 94 | MP4C | Z | 1.95 | 1.95 | 0 | %100 |
| 95 | MP1B | X | 3.378 | 3.378 | 0 | %100 |
| 96 | MP1B | Z | 1.95 | 1.95 | 0 | %100 |
| 97 | MP2B | X | 3.684 | 3.684 | 0 | %100 |
| 98 | MP2B | Z | 2.127 | 2.127 | 0 | %100 |

## Member Distributed Loads (BLC 57 : Structure Wi (120 Deg)) (Continued)

| | Member Label | Direction | Start Magnitude[lb/ft,... | End Magnitude[lb/ft,F... | Start Location[ft,%] | End Location[ft,%] |
|---|---|---|---|---|---|---|
| 99 | MP3B | X | 3.378 | 3.378 | 0 | %100 |
| 100 | MP3B | Z | 1.95 | 1.95 | 0 | %100 |
| 101 | MP4B | X | 3.378 | 3.378 | 0 | %100 |
| 102 | MP4B | Z | 1.95 | 1.95 | 0 | %100 |
| 103 | OVP | X | 2.706 | 2.706 | 0 | %100 |
| 104 | OVP | Z | 1.562 | 1.562 | 0 | %100 |
| 105 | M85A | X | .957 | .957 | 0 | %100 |
| 106 | M85A | Z | .552 | .552 | 0 | %100 |
| 107 | M92A | X | .957 | .957 | 0 | %100 |
| 108 | M92A | Z | .552 | .552 | 0 | %100 |
| 109 | M99 | X | 3.827 | 3.827 | 0 | %100 |
| 110 | M99 | Z | 2.21 | 2.21 | 0 | %100 |
| 111 | M102 | X | .966 | .966 | 0 | %100 |
| 112 | M102 | Z | .557 | .557 | 0 | %100 |
| 113 | M103 | X | 3.862 | 3.862 | 0 | %100 |
| 114 | M103 | Z | 2.23 | 2.23 | 0 | %100 |
| 115 | M104 | X | .966 | .966 | 0 | %100 |
| 116 | M104 | Z | .557 | .557 | 0 | %100 |
| 117 | M105 | X | 3.542 | 3.542 | 0 | %100 |
| 118 | M105 | Z | 2.045 | 2.045 | 0 | %100 |
| 119 | M106 | X | 3.542 | 3.542 | 0 | %100 |
| 120 | M106 | Z | 2.045 | 2.045 | 0 | %100 |
| 121 | M107 | X | 2.111 | 2.111 | 0 | %100 |
| 122 | M107 | Z | 1.219 | 1.219 | 0 | %100 |

## Member Distributed Loads (BLC 58 : Structure Wi (150 Deg))

| | Member Label | Direction | Start Magnitude[lb/ft,... | End Magnitude[lb/ft,F... | Start Location[ft,%] | End Location[ft,%] |
|---|---|---|---|---|---|---|
| 1 | M1 | X | .575 | .575 | 0 | %100 |
| 2 | M1 | Z | .996 | .996 | 0 | %100 |
| 3 | M4 | X | 2.128 | 2.128 | 0 | %100 |
| 4 | M4 | Z | 3.686 | 3.686 | 0 | %100 |
| 5 | M7 | X | 1.823 | 1.823 | 0 | %100 |
| 6 | M7 | Z | 3.157 | 3.157 | 0 | %100 |
| 7 | M15 | X | 0 | 0 | 0 | %100 |
| 8 | M15 | Z | 0 | 0 | 0 | %100 |
| 9 | M17 | X | 0 | 0 | 0 | %100 |
| 10 | M17 | Z | 0 | 0 | 0 | %100 |
| 11 | M20 | X | 1.823 | 1.823 | 0 | %100 |
| 12 | M20 | Z | 3.157 | 3.157 | 0 | %100 |
| 13 | M21 | X | 2.111 | 2.111 | 0 | %100 |
| 14 | M21 | Z | 3.656 | 3.656 | 0 | %100 |
| 15 | M29 | X | .000104 | .000104 | 0 | %100 |
| 16 | M29 | Z | .00018 | .00018 | 0 | %100 |
| 17 | M30 | X | 1.527 | 1.527 | 0 | %100 |
| 18 | M30 | Z | 2.645 | 2.645 | 0 | %100 |
| 19 | M108A | X | 0 | 0 | 0 | %100 |
| 20 | M108A | Z | 0 | 0 | 0 | %100 |
| 21 | M109A | X | 2.14 | 2.14 | 0 | %100 |
| 22 | M109A | Z | 3.707 | 3.707 | 0 | %100 |
| 23 | M119 | X | 2.111 | 2.111 | 0 | %100 |
| 24 | M119 | Z | 3.656 | 3.656 | 0 | %100 |

## Member Distributed Loads (BLC 58 : Structure Wi (150 Deg)) (Continued)

| | Member Label | Direction | Start Magnitude[lb/ft,... | End Magnitude[lb/ft,F... | Start Location[ft,%] | End Location[ft,%] |
|---|---|---|---|---|---|---|
| 25 | M120 | X | 2.14 | 2.14 | 0 | %100 |
| 26 | M120 | Z | 3.707 | 3.707 | 0 | %100 |
| 27 | M122 | X | 1.602 | 1.602 | 0 | %100 |
| 28 | M122 | Z | 2.774 | 2.774 | 0 | %100 |
| 29 | M125 | X | 1.602 | 1.602 | 0 | %100 |
| 30 | M125 | Z | 2.774 | 2.774 | 0 | %100 |
| 31 | M51 | X | 2.3 | 2.3 | 0 | %100 |
| 32 | M51 | Z | 3.984 | 3.984 | 0 | %100 |
| 33 | M52 | X | 0 | 0 | 0 | %100 |
| 34 | M52 | Z | 0 | 0 | 0 | %100 |
| 35 | M54 | X | 2.111 | 2.111 | 0 | %100 |
| 36 | M54 | Z | 3.656 | 3.656 | 0 | %100 |
| 37 | M55 | X | 2.111 | 2.111 | 0 | %100 |
| 38 | M55 | Z | 3.656 | 3.656 | 0 | %100 |
| 39 | M57A | X | 1.502 | 1.502 | 0 | %100 |
| 40 | M57A | Z | 2.601 | 2.601 | 0 | %100 |
| 41 | M58A | X | 1.502 | 1.502 | 0 | %100 |
| 42 | M58A | Z | 2.601 | 2.601 | 0 | %100 |
| 43 | M63 | X | 2.111 | 2.111 | 0 | %100 |
| 44 | M63 | Z | 3.656 | 3.656 | 0 | %100 |
| 45 | M64A | X | 0 | 0 | 0 | %100 |
| 46 | M64A | Z | 0 | 0 | 0 | %100 |
| 47 | M67 | X | 2.111 | 2.111 | 0 | %100 |
| 48 | M67 | Z | 3.656 | 3.656 | 0 | %100 |
| 49 | M68 | X | 0 | 0 | 0 | %100 |
| 50 | M68 | Z | 0 | 0 | 0 | %100 |
| 51 | M70A | X | 0 | 0 | 0 | %100 |
| 52 | M70A | Z | 0 | 0 | 0 | %100 |
| 53 | M71 | X | 0 | 0 | 0 | %100 |
| 54 | M71 | Z | 0 | 0 | 0 | %100 |
| 55 | M72A | X | .575 | .575 | 0 | %100 |
| 56 | M72A | Z | .996 | .996 | 0 | %100 |
| 57 | M73A | X | 2.128 | 2.128 | 0 | %100 |
| 58 | M73A | Z | 3.686 | 3.686 | 0 | %100 |
| 59 | M75A | X | 2.111 | 2.111 | 0 | %100 |
| 60 | M75A | Z | 3.656 | 3.656 | 0 | %100 |
| 61 | M76 | X | 0 | 0 | 0 | %100 |
| 62 | M76 | Z | 0 | 0 | 0 | %100 |
| 63 | M78A | X | 1.527 | 1.527 | 0 | %100 |
| 64 | M78A | Z | 2.645 | 2.645 | 0 | %100 |
| 65 | M79 | X | .000104 | .000104 | 0 | %100 |
| 66 | M79 | Z | .00018 | .00018 | 0 | %100 |
| 67 | M84 | X | 2.111 | 2.111 | 0 | %100 |
| 68 | M84 | Z | 3.656 | 3.656 | 0 | %100 |
| 69 | M85 | X | 2.14 | 2.14 | 0 | %100 |
| 70 | M85 | Z | 3.707 | 3.707 | 0 | %100 |
| 71 | M88 | X | 0 | 0 | 0 | %100 |
| 72 | M88 | Z | 0 | 0 | 0 | %100 |
| 73 | M89 | X | 2.14 | 2.14 | 0 | %100 |
| 74 | M89 | Z | 3.707 | 3.707 | 0 | %100 |
| 75 | M91 | X | 1.602 | 1.602 | 0 | %100 |
| 76 | M91 | Z | 2.774 | 2.774 | 0 | %100 |

## Member Distributed Loads (BLC 58 : Structure Wi (150 Deg)) (Continued)

| | Member Label | Direction | Start Magnitude[lb/ft,... | End Magnitude[lb/ft,F... | Start Location[ft,%] | End Location[ft,%] |
|---|---|---|---|---|---|---|
| 77 | M92 | X | 1.602 | 1.602 | 0 | %100 |
| 78 | M92 | Z | 2.774 | 2.774 | 0 | %100 |
| 79 | MP1A | X | 1.95 | 1.95 | 0 | %100 |
| 80 | MP1A | Z | 3.378 | 3.378 | 0 | %100 |
| 81 | MP2A | X | 2.127 | 2.127 | 0 | %100 |
| 82 | MP2A | Z | 3.684 | 3.684 | 0 | %100 |
| 83 | MP3A | X | 1.95 | 1.95 | 0 | %100 |
| 84 | MP3A | Z | 3.378 | 3.378 | 0 | %100 |
| 85 | MP4A | X | 1.95 | 1.95 | 0 | %100 |
| 86 | MP4A | Z | 3.378 | 3.378 | 0 | %100 |
| 87 | MP1C | X | 1.95 | 1.95 | 0 | %100 |
| 88 | MP1C | Z | 3.378 | 3.378 | 0 | %100 |
| 89 | MP2C | X | 2.127 | 2.127 | 0 | %100 |
| 90 | MP2C | Z | 3.684 | 3.684 | 0 | %100 |
| 91 | MP3C | X | 1.95 | 1.95 | 0 | %100 |
| 92 | MP3C | Z | 3.378 | 3.378 | 0 | %100 |
| 93 | MP4C | X | 1.95 | 1.95 | 0 | %100 |
| 94 | MP4C | Z | 3.378 | 3.378 | 0 | %100 |
| 95 | MP1B | X | 1.95 | 1.95 | 0 | %100 |
| 96 | MP1B | Z | 3.378 | 3.378 | 0 | %100 |
| 97 | MP2B | X | 2.127 | 2.127 | 0 | %100 |
| 98 | MP2B | Z | 3.684 | 3.684 | 0 | %100 |
| 99 | MP3B | X | 1.95 | 1.95 | 0 | %100 |
| 100 | MP3B | Z | 3.378 | 3.378 | 0 | %100 |
| 101 | MP4B | X | 1.95 | 1.95 | 0 | %100 |
| 102 | MP4B | Z | 3.378 | 3.378 | 0 | %100 |
| 103 | OVP | X | 1.562 | 1.562 | 0 | %100 |
| 104 | OVP | Z | 2.706 | 2.706 | 0 | %100 |
| 105 | M85A | X | 1.657 | 1.657 | 0 | %100 |
| 106 | M85A | Z | 2.87 | 2.87 | 0 | %100 |
| 107 | M92A | X | 0 | 0 | 0 | %100 |
| 108 | M92A | Z | 0 | 0 | 0 | %100 |
| 109 | M99 | X | 1.657 | 1.657 | 0 | %100 |
| 110 | M99 | Z | 2.87 | 2.87 | 0 | %100 |
| 111 | M102 | X | 0 | 0 | 0 | %100 |
| 112 | M102 | Z | 0 | 0 | 0 | %100 |
| 113 | M103 | X | 1.672 | 1.672 | 0 | %100 |
| 114 | M103 | Z | 2.897 | 2.897 | 0 | %100 |
| 115 | M104 | X | 1.672 | 1.672 | 0 | %100 |
| 116 | M104 | Z | 2.897 | 2.897 | 0 | %100 |
| 117 | M105 | X | 1.494 | 1.494 | 0 | %100 |
| 118 | M105 | Z | 2.588 | 2.588 | 0 | %100 |
| 119 | M106 | X | 2.32 | 2.32 | 0 | %100 |
| 120 | M106 | Z | 4.019 | 4.019 | 0 | %100 |
| 121 | M107 | X | 1.494 | 1.494 | 0 | %100 |
| 122 | M107 | Z | 2.588 | 2.588 | 0 | %100 |

## Member Distributed Loads (BLC 59 : Structure Wi (180 Deg))

| | Member Label | Direction | Start Magnitude[lb/ft,... | End Magnitude[lb/ft,F... | Start Location[ft,%] | End Location[ft,%] |
|---|---|---|---|---|---|---|
| 1 | M1 | X | 0 | 0 | 0 | %100 |
| 2 | M1 | Z | 0 | 0 | 0 | %100 |

## Member Distributed Loads (BLC 59 : Structure Wi (180 Deg)) (Continued)

| | Member Label | Direction | Start Magnitude[lb/ft,... | End Magnitude[lb/ft,F... | Start Location[ft,%] | End Location[ft,%] |
|---|---|---|---|---|---|---|
| 3 | M4 | X | 0 | 0 | 0 | %100 |
| 4 | M4 | Z | 5.675 | 5.675 | 0 | %100 |
| 5 | M7 | X | 0 | 0 | 0 | %100 |
| 6 | M7 | Z | 4.86 | 4.86 | 0 | %100 |
| 7 | M15 | X | 0 | 0 | 0 | %100 |
| 8 | M15 | Z | 1.215 | 1.215 | 0 | %100 |
| 9 | M17 | X | 0 | 0 | 0 | %100 |
| 10 | M17 | Z | 1.407 | 1.407 | 0 | %100 |
| 11 | M20 | X | 0 | 0 | 0 | %100 |
| 12 | M20 | Z | 1.215 | 1.215 | 0 | %100 |
| 13 | M21 | X | 0 | 0 | 0 | %100 |
| 14 | M21 | Z | 1.407 | 1.407 | 0 | %100 |
| 15 | M29 | X | 0 | 0 | 0 | %100 |
| 16 | M29 | Z | 1.035 | 1.035 | 0 | %100 |
| 17 | M30 | X | 0 | 0 | 0 | %100 |
| 18 | M30 | Z | 1.035 | 1.035 | 0 | %100 |
| 19 | M108A | X | 0 | 0 | 0 | %100 |
| 20 | M108A | Z | 1.407 | 1.407 | 0 | %100 |
| 21 | M109A | X | 0 | 0 | 0 | %100 |
| 22 | M109A | Z | 5.707 | 5.707 | 0 | %100 |
| 23 | M119 | X | 0 | 0 | 0 | %100 |
| 24 | M119 | Z | 1.407 | 1.407 | 0 | %100 |
| 25 | M120 | X | 0 | 0 | 0 | %100 |
| 26 | M120 | Z | 5.707 | 5.707 | 0 | %100 |
| 27 | M122 | X | 0 | 0 | 0 | %100 |
| 28 | M122 | Z | 4.271 | 4.271 | 0 | %100 |
| 29 | M125 | X | 0 | 0 | 0 | %100 |
| 30 | M125 | Z | 4.271 | 4.271 | 0 | %100 |
| 31 | M51 | X | 0 | 0 | 0 | %100 |
| 32 | M51 | Z | 3.45 | 3.45 | 0 | %100 |
| 33 | M52 | X | 0 | 0 | 0 | %100 |
| 34 | M52 | Z | 1.419 | 1.419 | 0 | %100 |
| 35 | M54 | X | 0 | 0 | 0 | %100 |
| 36 | M54 | Z | 1.407 | 1.407 | 0 | %100 |
| 37 | M55 | X | 0 | 0 | 0 | %100 |
| 38 | M55 | Z | 5.629 | 5.629 | 0 | %100 |
| 39 | M57A | X | 0 | 0 | 0 | %100 |
| 40 | M57A | Z | .985 | .985 | 0 | %100 |
| 41 | M58A | X | 0 | 0 | 0 | %100 |
| 42 | M58A | Z | 4.039 | 4.039 | 0 | %100 |
| 43 | M63 | X | 0 | 0 | 0 | %100 |
| 44 | M63 | Z | 1.407 | 1.407 | 0 | %100 |
| 45 | M64A | X | 0 | 0 | 0 | %100 |
| 46 | M64A | Z | 1.427 | 1.427 | 0 | %100 |
| 47 | M67 | X | 0 | 0 | 0 | %100 |
| 48 | M67 | Z | 5.629 | 5.629 | 0 | %100 |
| 49 | M68 | X | 0 | 0 | 0 | %100 |
| 50 | M68 | Z | 1.427 | 1.427 | 0 | %100 |
| 51 | M70A | X | 0 | 0 | 0 | %100 |
| 52 | M70A | Z | 1.068 | 1.068 | 0 | %100 |
| 53 | M71 | X | 0 | 0 | 0 | %100 |
| 54 | M71 | Z | 1.068 | 1.068 | 0 | %100 |

## Member Distributed Loads (BLC 59 : Structure Wi (180 Deg)) (Continued)

| | Member Label | Direction | Start Magnitude[lb/ft,... | End Magnitude[lb/ft,F... | Start Location[ft,%] | End Location[ft,%] |
|---|---|---|---|---|---|---|
| 55 | M72A | X | 0 | 0 | 0 | %100 |
| 56 | M72A | Z | 3.45 | 3.45 | 0 | %100 |
| 57 | M73A | X | 0 | 0 | 0 | %100 |
| 58 | M73A | Z | 1.419 | 1.419 | 0 | %100 |
| 59 | M75A | X | 0 | 0 | 0 | %100 |
| 60 | M75A | Z | 5.629 | 5.629 | 0 | %100 |
| 61 | M76 | X | 0 | 0 | 0 | %100 |
| 62 | M76 | Z | 1.407 | 1.407 | 0 | %100 |
| 63 | M78A | X | 0 | 0 | 0 | %100 |
| 64 | M78A | Z | 4.039 | 4.039 | 0 | %100 |
| 65 | M79 | X | 0 | 0 | 0 | %100 |
| 66 | M79 | Z | .985 | .985 | 0 | %100 |
| 67 | M84 | X | 0 | 0 | 0 | %100 |
| 68 | M84 | Z | 5.629 | 5.629 | 0 | %100 |
| 69 | M85 | X | 0 | 0 | 0 | %100 |
| 70 | M85 | Z | 1.427 | 1.427 | 0 | %100 |
| 71 | M88 | X | 0 | 0 | 0 | %100 |
| 72 | M88 | Z | 1.407 | 1.407 | 0 | %100 |
| 73 | M89 | X | 0 | 0 | 0 | %100 |
| 74 | M89 | Z | 1.427 | 1.427 | 0 | %100 |
| 75 | M91 | X | 0 | 0 | 0 | %100 |
| 76 | M91 | Z | 1.068 | 1.068 | 0 | %100 |
| 77 | M92 | X | 0 | 0 | 0 | %100 |
| 78 | M92 | Z | 1.068 | 1.068 | 0 | %100 |
| 79 | MP1A | X | 0 | 0 | 0 | %100 |
| 80 | MP1A | Z | 3.901 | 3.901 | 0 | %100 |
| 81 | MP2A | X | 0 | 0 | 0 | %100 |
| 82 | MP2A | Z | 4.254 | 4.254 | 0 | %100 |
| 83 | MP3A | X | 0 | 0 | 0 | %100 |
| 84 | MP3A | Z | 3.901 | 3.901 | 0 | %100 |
| 85 | MP4A | X | 0 | 0 | 0 | %100 |
| 86 | MP4A | Z | 3.901 | 3.901 | 0 | %100 |
| 87 | MP1C | X | 0 | 0 | 0 | %100 |
| 88 | MP1C | Z | 3.901 | 3.901 | 0 | %100 |
| 89 | MP2C | X | 0 | 0 | 0 | %100 |
| 90 | MP2C | Z | 4.254 | 4.254 | 0 | %100 |
| 91 | MP3C | X | 0 | 0 | 0 | %100 |
| 92 | MP3C | Z | 3.901 | 3.901 | 0 | %100 |
| 93 | MP4C | X | 0 | 0 | 0 | %100 |
| 94 | MP4C | Z | 3.901 | 3.901 | 0 | %100 |
| 95 | MP1B | X | 0 | 0 | 0 | %100 |
| 96 | MP1B | Z | 3.901 | 3.901 | 0 | %100 |
| 97 | MP2B | X | 0 | 0 | 0 | %100 |
| 98 | MP2B | Z | 4.254 | 4.254 | 0 | %100 |
| 99 | MP3B | X | 0 | 0 | 0 | %100 |
| 100 | MP3B | Z | 3.901 | 3.901 | 0 | %100 |
| 101 | MP4B | X | 0 | 0 | 0 | %100 |
| 102 | MP4B | Z | 3.901 | 3.901 | 0 | %100 |
| 103 | OVP | X | 0 | 0 | 0 | %100 |
| 104 | OVP | Z | 3.125 | 3.125 | 0 | %100 |
| 105 | M85A | X | 0 | 0 | 0 | %100 |
| 106 | M85A | Z | 4.419 | 4.419 | 0 | %100 |

## Member Distributed Loads (BLC 59 : Structure Wi (180 Deg)) (Continued)

| | Member Label | Direction | Start Magnitude[lb/ft,... | End Magnitude[lb/ft,F... | Start Location[ft,%] | End Location[ft,%] |
|---|---|---|---|---|---|---|
| 107 | M92A | X | 0 | 0 | 0 | %100 |
| 108 | M92A | Z | 1.105 | 1.105 | 0 | %100 |
| 109 | M99 | X | 0 | 0 | 0 | %100 |
| 110 | M99 | Z | 1.105 | 1.105 | 0 | %100 |
| 111 | M102 | X | 0 | 0 | 0 | %100 |
| 112 | M102 | Z | 1.115 | 1.115 | 0 | %100 |
| 113 | M103 | X | 0 | 0 | 0 | %100 |
| 114 | M103 | Z | 1.115 | 1.115 | 0 | %100 |
| 115 | M104 | X | 0 | 0 | 0 | %100 |
| 116 | M104 | Z | 4.46 | 4.46 | 0 | %100 |
| 117 | M105 | X | 0 | 0 | 0 | %100 |
| 118 | M105 | Z | 2.438 | 2.438 | 0 | %100 |
| 119 | M106 | X | 0 | 0 | 0 | %100 |
| 120 | M106 | Z | 4.09 | 4.09 | 0 | %100 |
| 121 | M107 | X | 0 | 0 | 0 | %100 |
| 122 | M107 | Z | 4.09 | 4.09 | 0 | %100 |

## Member Distributed Loads (BLC 60 : Structure Wi (210 Deg))

| | Member Label | Direction | Start Magnitude[lb/ft,... | End Magnitude[lb/ft,F... | Start Location[ft,%] | End Location[ft,%] |
|---|---|---|---|---|---|---|
| 1 | M1 | X | -.575 | -.575 | 0 | %100 |
| 2 | M1 | Z | .996 | .996 | 0 | %100 |
| 3 | M4 | X | -2.128 | -2.128 | 0 | %100 |
| 4 | M4 | Z | 3.686 | 3.686 | 0 | %100 |
| 5 | M7 | X | -1.823 | -1.823 | 0 | %100 |
| 6 | M7 | Z | 3.157 | 3.157 | 0 | %100 |
| 7 | M15 | X | -1.823 | -1.823 | 0 | %100 |
| 8 | M15 | Z | 3.157 | 3.157 | 0 | %100 |
| 9 | M17 | X | -2.111 | -2.111 | 0 | %100 |
| 10 | M17 | Z | 3.656 | 3.656 | 0 | %100 |
| 11 | M20 | X | 0 | 0 | 0 | %100 |
| 12 | M20 | Z | 0 | 0 | 0 | %100 |
| 13 | M21 | X | 0 | 0 | 0 | %100 |
| 14 | M21 | Z | 0 | 0 | 0 | %100 |
| 15 | M29 | X | -1.527 | -1.527 | 0 | %100 |
| 16 | M29 | Z | 2.645 | 2.645 | 0 | %100 |
| 17 | M30 | X | -.000104 | -.000104 | 0 | %100 |
| 18 | M30 | Z | .00018 | .00018 | 0 | %100 |
| 19 | M108A | X | -2.111 | -2.111 | 0 | %100 |
| 20 | M108A | Z | 3.656 | 3.656 | 0 | %100 |
| 21 | M109A | X | -2.14 | -2.14 | 0 | %100 |
| 22 | M109A | Z | 3.707 | 3.707 | 0 | %100 |
| 23 | M119 | X | 0 | 0 | 0 | %100 |
| 24 | M119 | Z | 0 | 0 | 0 | %100 |
| 25 | M120 | X | -2.14 | -2.14 | 0 | %100 |
| 26 | M120 | Z | 3.707 | 3.707 | 0 | %100 |
| 27 | M122 | X | -1.602 | -1.602 | 0 | %100 |
| 28 | M122 | Z | 2.774 | 2.774 | 0 | %100 |
| 29 | M125 | X | -1.602 | -1.602 | 0 | %100 |
| 30 | M125 | Z | 2.774 | 2.774 | 0 | %100 |
| 31 | M51 | X | -.575 | -.575 | 0 | %100 |
| 32 | M51 | Z | .996 | .996 | 0 | %100 |

## Member Distributed Loads (BLC 60 : Structure Wi (210 Deg)) (Continued)

| | Member Label | Direction | Start Magnitude[lb/ft,... | End Magnitude[lb/ft,F... | Start Location[ft,%] | End Location[ft,%] |
|---|---|---|---|---|---|---|
| 33 | M52 | X | -2.128 | -2.128 | 0 | %100 |
| 34 | M52 | Z | 3.686 | 3.686 | 0 | %100 |
| 35 | M54 | X | 0 | 0 | 0 | %100 |
| 36 | M54 | Z | 0 | 0 | 0 | %100 |
| 37 | M55 | X | -2.111 | -2.111 | 0 | %100 |
| 38 | M55 | Z | 3.656 | 3.656 | 0 | %100 |
| 39 | M57A | X | -.000104 | -.000104 | 0 | %100 |
| 40 | M57A | Z | .00018 | .00018 | 0 | %100 |
| 41 | M58A | X | -1.527 | -1.527 | 0 | %100 |
| 42 | M58A | Z | 2.645 | 2.645 | 0 | %100 |
| 43 | M63 | X | 0 | 0 | 0 | %100 |
| 44 | M63 | Z | 0 | 0 | 0 | %100 |
| 45 | M64A | X | -2.14 | -2.14 | 0 | %100 |
| 46 | M64A | Z | 3.707 | 3.707 | 0 | %100 |
| 47 | M67 | X | -2.111 | -2.111 | 0 | %100 |
| 48 | M67 | Z | 3.656 | 3.656 | 0 | %100 |
| 49 | M68 | X | -2.14 | -2.14 | 0 | %100 |
| 50 | M68 | Z | 3.707 | 3.707 | 0 | %100 |
| 51 | M70A | X | -1.602 | -1.602 | 0 | %100 |
| 52 | M70A | Z | 2.774 | 2.774 | 0 | %100 |
| 53 | M71 | X | -1.602 | -1.602 | 0 | %100 |
| 54 | M71 | Z | 2.774 | 2.774 | 0 | %100 |
| 55 | M72A | X | -2.3 | -2.3 | 0 | %100 |
| 56 | M72A | Z | 3.984 | 3.984 | 0 | %100 |
| 57 | M73A | X | 0 | 0 | 0 | %100 |
| 58 | M73A | Z | 0 | 0 | 0 | %100 |
| 59 | M75A | X | -2.111 | -2.111 | 0 | %100 |
| 60 | M75A | Z | 3.656 | 3.656 | 0 | %100 |
| 61 | M76 | X | -2.111 | -2.111 | 0 | %100 |
| 62 | M76 | Z | 3.656 | 3.656 | 0 | %100 |
| 63 | M78A | X | -1.502 | -1.502 | 0 | %100 |
| 64 | M78A | Z | 2.601 | 2.601 | 0 | %100 |
| 65 | M79 | X | -1.502 | -1.502 | 0 | %100 |
| 66 | M79 | Z | 2.601 | 2.601 | 0 | %100 |
| 67 | M84 | X | -2.111 | -2.111 | 0 | %100 |
| 68 | M84 | Z | 3.656 | 3.656 | 0 | %100 |
| 69 | M85 | X | 0 | 0 | 0 | %100 |
| 70 | M85 | Z | 0 | 0 | 0 | %100 |
| 71 | M88 | X | -2.111 | -2.111 | 0 | %100 |
| 72 | M88 | Z | 3.656 | 3.656 | 0 | %100 |
| 73 | M89 | X | 0 | 0 | 0 | %100 |
| 74 | M89 | Z | 0 | 0 | 0 | %100 |
| 75 | M91 | X | 0 | 0 | 0 | %100 |
| 76 | M91 | Z | 0 | 0 | 0 | %100 |
| 77 | M92 | X | 0 | 0 | 0 | %100 |
| 78 | M92 | Z | 0 | 0 | 0 | %100 |
| 79 | MP1A | X | -1.95 | -1.95 | 0 | %100 |
| 80 | MP1A | Z | 3.378 | 3.378 | 0 | %100 |
| 81 | MP2A | X | -2.127 | -2.127 | 0 | %100 |
| 82 | MP2A | Z | 3.684 | 3.684 | 0 | %100 |
| 83 | MP3A | X | -1.95 | -1.95 | 0 | %100 |
| 84 | MP3A | Z | 3.378 | 3.378 | 0 | %100 |

## Member Distributed Loads (BLC 60 : Structure Wi (210 Deg)) (Continued)

| | Member Label | Direction | Start Magnitude[lb/ft,... | End Magnitude[lb/ft,F... | Start Location[ft,%] | End Location[ft,%] |
|---|---|---|---|---|---|---|
| 85 | MP4A | X | -1.95 | -1.95 | 0 | %100 |
| 86 | MP4A | Z | 3.378 | 3.378 | 0 | %100 |
| 87 | MP1C | X | -1.95 | -1.95 | 0 | %100 |
| 88 | MP1C | Z | 3.378 | 3.378 | 0 | %100 |
| 89 | MP2C | X | -2.127 | -2.127 | 0 | %100 |
| 90 | MP2C | Z | 3.684 | 3.684 | 0 | %100 |
| 91 | MP3C | X | -1.95 | -1.95 | 0 | %100 |
| 92 | MP3C | Z | 3.378 | 3.378 | 0 | %100 |
| 93 | MP4C | X | -1.95 | -1.95 | 0 | %100 |
| 94 | MP4C | Z | 3.378 | 3.378 | 0 | %100 |
| 95 | MP1B | X | -1.95 | -1.95 | 0 | %100 |
| 96 | MP1B | Z | 3.378 | 3.378 | 0 | %100 |
| 97 | MP2B | X | -2.127 | -2.127 | 0 | %100 |
| 98 | MP2B | Z | 3.684 | 3.684 | 0 | %100 |
| 99 | MP3B | X | -1.95 | -1.95 | 0 | %100 |
| 100 | MP3B | Z | 3.378 | 3.378 | 0 | %100 |
| 101 | MP4B | X | -1.95 | -1.95 | 0 | %100 |
| 102 | MP4B | Z | 3.378 | 3.378 | 0 | %100 |
| 103 | OVP | X | -1.562 | -1.562 | 0 | %100 |
| 104 | OVP | Z | 2.706 | 2.706 | 0 | %100 |
| 105 | M85A | X | -1.657 | -1.657 | 0 | %100 |
| 106 | M85A | Z | 2.87 | 2.87 | 0 | %100 |
| 107 | M92A | X | -1.657 | -1.657 | 0 | %100 |
| 108 | M92A | Z | 2.87 | 2.87 | 0 | %100 |
| 109 | M99 | X | 0 | 0 | 0 | %100 |
| 110 | M99 | Z | 0 | 0 | 0 | %100 |
| 111 | M102 | X | -1.672 | -1.672 | 0 | %100 |
| 112 | M102 | Z | 2.897 | 2.897 | 0 | %100 |
| 113 | M103 | X | 0 | 0 | 0 | %100 |
| 114 | M103 | Z | 0 | 0 | 0 | %100 |
| 115 | M104 | X | -1.672 | -1.672 | 0 | %100 |
| 116 | M104 | Z | 2.897 | 2.897 | 0 | %100 |
| 117 | M105 | X | -1.494 | -1.494 | 0 | %100 |
| 118 | M105 | Z | 2.588 | 2.588 | 0 | %100 |
| 119 | M106 | X | -1.494 | -1.494 | 0 | %100 |
| 120 | M106 | Z | 2.588 | 2.588 | 0 | %100 |
| 121 | M107 | X | -2.32 | -2.32 | 0 | %100 |
| 122 | M107 | Z | 4.019 | 4.019 | 0 | %100 |

## Member Distributed Loads (BLC 61 : Structure Wi (240 Deg))

| | Member Label | Direction | Start Magnitude[lb/ft,... | End Magnitude[lb/ft,F... | Start Location[ft,%] | End Location[ft,%] |
|---|---|---|---|---|---|---|
| 1 | M1 | X | -2.988 | -2.988 | 0 | %100 |
| 2 | M1 | Z | 1.725 | 1.725 | 0 | %100 |
| 3 | M4 | X | -1.229 | -1.229 | 0 | %100 |
| 4 | M4 | Z | .709 | .709 | 0 | %100 |
| 5 | M7 | X | -1.052 | -1.052 | 0 | %100 |
| 6 | M7 | Z | .608 | .608 | 0 | %100 |
| 7 | M15 | X | -4.209 | -4.209 | 0 | %100 |
| 8 | M15 | Z | 2.43 | 2.43 | 0 | %100 |
| 9 | M17 | X | -4.875 | -4.875 | 0 | %100 |
| 10 | M17 | Z | 2.814 | 2.814 | 0 | %100 |

## Member Distributed Loads (BLC 61 : Structure Wi (240 Deg)) (Continued)

| | Member Label | Direction | Start Magnitude[lb/ft,... | End Magnitude[lb/ft,F... | Start Location[ft,%] | End Location[ft,%] |
|---|---|---|---|---|---|---|
| 11 | M20 | X | -1.052 | -1.052 | 0 | %100 |
| 12 | M20 | Z | .608 | .608 | 0 | %100 |
| 13 | M21 | X | -1.219 | -1.219 | 0 | %100 |
| 14 | M21 | Z | .704 | .704 | 0 | %100 |
| 15 | M29 | X | -3.498 | -3.498 | 0 | %100 |
| 16 | M29 | Z | 2.019 | 2.019 | 0 | %100 |
| 17 | M30 | X | -.853 | -.853 | 0 | %100 |
| 18 | M30 | Z | .492 | .492 | 0 | %100 |
| 19 | M108A | X | -4.875 | -4.875 | 0 | %100 |
| 20 | M108A | Z | 2.814 | 2.814 | 0 | %100 |
| 21 | M109A | X | -1.236 | -1.236 | 0 | %100 |
| 22 | M109A | Z | .713 | .713 | 0 | %100 |
| 23 | M119 | X | -1.219 | -1.219 | 0 | %100 |
| 24 | M119 | Z | .704 | .704 | 0 | %100 |
| 25 | M120 | X | -1.236 | -1.236 | 0 | %100 |
| 26 | M120 | Z | .713 | .713 | 0 | %100 |
| 27 | M122 | X | -.925 | -.925 | 0 | %100 |
| 28 | M122 | Z | .534 | .534 | 0 | %100 |
| 29 | M125 | X | -.925 | -.925 | 0 | %100 |
| 30 | M125 | Z | .534 | .534 | 0 | %100 |
| 31 | M51 | X | 0 | 0 | 0 | %100 |
| 32 | M51 | Z | 0 | 0 | 0 | %100 |
| 33 | M52 | X | -4.915 | -4.915 | 0 | %100 |
| 34 | M52 | Z | 2.838 | 2.838 | 0 | %100 |
| 35 | M54 | X | -1.219 | -1.219 | 0 | %100 |
| 36 | M54 | Z | .704 | .704 | 0 | %100 |
| 37 | M55 | X | -1.219 | -1.219 | 0 | %100 |
| 38 | M55 | Z | .704 | .704 | 0 | %100 |
| 39 | M57A | X | -.896 | -.896 | 0 | %100 |
| 40 | M57A | Z | .517 | .517 | 0 | %100 |
| 41 | M58A | X | -.896 | -.896 | 0 | %100 |
| 42 | M58A | Z | .517 | .517 | 0 | %100 |
| 43 | M63 | X | -1.219 | -1.219 | 0 | %100 |
| 44 | M63 | Z | .704 | .704 | 0 | %100 |
| 45 | M64A | X | -4.943 | -4.943 | 0 | %100 |
| 46 | M64A | Z | 2.854 | 2.854 | 0 | %100 |
| 47 | M67 | X | -1.219 | -1.219 | 0 | %100 |
| 48 | M67 | Z | .704 | .704 | 0 | %100 |
| 49 | M68 | X | -4.943 | -4.943 | 0 | %100 |
| 50 | M68 | Z | 2.854 | 2.854 | 0 | %100 |
| 51 | M70A | X | -3.699 | -3.699 | 0 | %100 |
| 52 | M70A | Z | 2.135 | 2.135 | 0 | %100 |
| 53 | M71 | X | -3.699 | -3.699 | 0 | %100 |
| 54 | M71 | Z | 2.135 | 2.135 | 0 | %100 |
| 55 | M72A | X | -2.988 | -2.988 | 0 | %100 |
| 56 | M72A | Z | 1.725 | 1.725 | 0 | %100 |
| 57 | M73A | X | -1.229 | -1.229 | 0 | %100 |
| 58 | M73A | Z | .709 | .709 | 0 | %100 |
| 59 | M75A | X | -1.219 | -1.219 | 0 | %100 |
| 60 | M75A | Z | .704 | .704 | 0 | %100 |
| 61 | M76 | X | -4.875 | -4.875 | 0 | %100 |
| 62 | M76 | Z | 2.814 | 2.814 | 0 | %100 |

## Member Distributed Loads (BLC 61 : Structure Wi (240 Deg)) (Continued)

| | Member Label | Direction | Start Magnitude[lb/ft,... | End Magnitude[lb/ft,F... | Start Location[ft,%] | End Location[ft,%] |
|---|---|---|---|---|---|---|
| 63 | M78A | X | -.853 | -.853 | 0 | %100 |
| 64 | M78A | Z | .492 | .492 | 0 | %100 |
| 65 | M79 | X | -3.498 | -3.498 | 0 | %100 |
| 66 | M79 | Z | 2.019 | 2.019 | 0 | %100 |
| 67 | M84 | X | -1.219 | -1.219 | 0 | %100 |
| 68 | M84 | Z | .704 | .704 | 0 | %100 |
| 69 | M85 | X | -1.236 | -1.236 | 0 | %100 |
| 70 | M85 | Z | .713 | .713 | 0 | %100 |
| 71 | M88 | X | -4.875 | -4.875 | 0 | %100 |
| 72 | M88 | Z | 2.814 | 2.814 | 0 | %100 |
| 73 | M89 | X | -1.236 | -1.236 | 0 | %100 |
| 74 | M89 | Z | .713 | .713 | 0 | %100 |
| 75 | M91 | X | -.925 | -.925 | 0 | %100 |
| 76 | M91 | Z | .534 | .534 | 0 | %100 |
| 77 | M92 | X | -.925 | -.925 | 0 | %100 |
| 78 | M92 | Z | .534 | .534 | 0 | %100 |
| 79 | MP1A | X | -3.378 | -3.378 | 0 | %100 |
| 80 | MP1A | Z | 1.95 | 1.95 | 0 | %100 |
| 81 | MP2A | X | -3.684 | -3.684 | 0 | %100 |
| 82 | MP2A | Z | 2.127 | 2.127 | 0 | %100 |
| 83 | MP3A | X | -3.378 | -3.378 | 0 | %100 |
| 84 | MP3A | Z | 1.95 | 1.95 | 0 | %100 |
| 85 | MP4A | X | -3.378 | -3.378 | 0 | %100 |
| 86 | MP4A | Z | 1.95 | 1.95 | 0 | %100 |
| 87 | MP1C | X | -3.378 | -3.378 | 0 | %100 |
| 88 | MP1C | Z | 1.95 | 1.95 | 0 | %100 |
| 89 | MP2C | X | -3.684 | -3.684 | 0 | %100 |
| 90 | MP2C | Z | 2.127 | 2.127 | 0 | %100 |
| 91 | MP3C | X | -3.378 | -3.378 | 0 | %100 |
| 92 | MP3C | Z | 1.95 | 1.95 | 0 | %100 |
| 93 | MP4C | X | -3.378 | -3.378 | 0 | %100 |
| 94 | MP4C | Z | 1.95 | 1.95 | 0 | %100 |
| 95 | MP1B | X | -3.378 | -3.378 | 0 | %100 |
| 96 | MP1B | Z | 1.95 | 1.95 | 0 | %100 |
| 97 | MP2B | X | -3.684 | -3.684 | 0 | %100 |
| 98 | MP2B | Z | 2.127 | 2.127 | 0 | %100 |
| 99 | MP3B | X | -3.378 | -3.378 | 0 | %100 |
| 100 | MP3B | Z | 1.95 | 1.95 | 0 | %100 |
| 101 | MP4B | X | -3.378 | -3.378 | 0 | %100 |
| 102 | MP4B | Z | 1.95 | 1.95 | 0 | %100 |
| 103 | OVP | X | -2.706 | -2.706 | 0 | %100 |
| 104 | OVP | Z | 1.562 | 1.562 | 0 | %100 |
| 105 | M85A | X | -.957 | -.957 | 0 | %100 |
| 106 | M85A | Z | .552 | .552 | 0 | %100 |
| 107 | M92A | X | -3.827 | -3.827 | 0 | %100 |
| 108 | M92A | Z | 2.21 | 2.21 | 0 | %100 |
| 109 | M99 | X | -.957 | -.957 | 0 | %100 |
| 110 | M99 | Z | .552 | .552 | 0 | %100 |
| 111 | M102 | X | -3.862 | -3.862 | 0 | %100 |
| 112 | M102 | Z | 2.23 | 2.23 | 0 | %100 |
| 113 | M103 | X | -.966 | -.966 | 0 | %100 |
| 114 | M103 | Z | .557 | .557 | 0 | %100 |

## Member Distributed Loads (BLC 61 : Structure Wi (240 Deg)) (Continued)

| | Member Label | Direction | Start Magnitude[lb/ft,... | End Magnitude[lb/ft,F... | Start Location[ft,%] | End Location[ft,%] |
|---|---|---|---|---|---|---|
| 115 | M104 | X | -.966 | -.966 | 0 | %100 |
| 116 | M104 | Z | .557 | .557 | 0 | %100 |
| 117 | M105 | X | -3.542 | -3.542 | 0 | %100 |
| 118 | M105 | Z | 2.045 | 2.045 | 0 | %100 |
| 119 | M106 | X | -2.111 | -2.111 | 0 | %100 |
| 120 | M106 | Z | 1.219 | 1.219 | 0 | %100 |
| 121 | M107 | X | -3.542 | -3.542 | 0 | %100 |
| 122 | M107 | Z | 2.045 | 2.045 | 0 | %100 |

## Member Distributed Loads (BLC 62 : Structure Wi (270 Deg))

| | Member Label | Direction | Start Magnitude[lb/ft,... | End Magnitude[lb/ft,F... | Start Location[ft,%] | End Location[ft,%] |
|---|---|---|---|---|---|---|
| 1 | M1 | X | -4.6 | -4.6 | 0 | %100 |
| 2 | M1 | Z | 0 | 0 | 0 | %100 |
| 3 | M4 | X | 0 | 0 | 0 | %100 |
| 4 | M4 | Z | 0 | 0 | 0 | %100 |
| 5 | M7 | X | 0 | 0 | 0 | %100 |
| 6 | M7 | Z | 0 | 0 | 0 | %100 |
| 7 | M15 | X | -3.645 | -3.645 | 0 | %100 |
| 8 | M15 | Z | 0 | 0 | 0 | %100 |
| 9 | M17 | X | -4.222 | -4.222 | 0 | %100 |
| 10 | M17 | Z | 0 | 0 | 0 | %100 |
| 11 | M20 | X | -3.645 | -3.645 | 0 | %100 |
| 12 | M20 | Z | 0 | 0 | 0 | %100 |
| 13 | M21 | X | -4.222 | -4.222 | 0 | %100 |
| 14 | M21 | Z | 0 | 0 | 0 | %100 |
| 15 | M29 | X | -3.004 | -3.004 | 0 | %100 |
| 16 | M29 | Z | 0 | 0 | 0 | %100 |
| 17 | M30 | X | -3.004 | -3.004 | 0 | %100 |
| 18 | M30 | Z | 0 | 0 | 0 | %100 |
| 19 | M108A | X | -4.222 | -4.222 | 0 | %100 |
| 20 | M108A | Z | 0 | 0 | 0 | %100 |
| 21 | M109A | X | 0 | 0 | 0 | %100 |
| 22 | M109A | Z | 0 | 0 | 0 | %100 |
| 23 | M119 | X | -4.222 | -4.222 | 0 | %100 |
| 24 | M119 | Z | 0 | 0 | 0 | %100 |
| 25 | M120 | X | 0 | 0 | 0 | %100 |
| 26 | M120 | Z | 0 | 0 | 0 | %100 |
| 27 | M122 | X | 0 | 0 | 0 | %100 |
| 28 | M122 | Z | 0 | 0 | 0 | %100 |
| 29 | M125 | X | 0 | 0 | 0 | %100 |
| 30 | M125 | Z | 0 | 0 | 0 | %100 |
| 31 | M51 | X | -1.15 | -1.15 | 0 | %100 |
| 32 | M51 | Z | 0 | 0 | 0 | %100 |
| 33 | M52 | X | -4.256 | -4.256 | 0 | %100 |
| 34 | M52 | Z | 0 | 0 | 0 | %100 |
| 35 | M54 | X | -4.222 | -4.222 | 0 | %100 |
| 36 | M54 | Z | 0 | 0 | 0 | %100 |
| 37 | M55 | X | 0 | 0 | 0 | %100 |
| 38 | M55 | Z | 0 | 0 | 0 | %100 |
| 39 | M57A | X | -3.054 | -3.054 | 0 | %100 |
| 40 | M57A | Z | 0 | 0 | 0 | %100 |

## Member Distributed Loads (BLC 62 : Structure Wi (270 Deg)) (Continued)

| | Member Label | Direction | Start Magnitude[lb/ft,... | End Magnitude[lb/ft,F... | Start Location[ft,%] | End Location[ft,%] |
|---|---|---|---|---|---|---|
| 41 | M58A | X | -.000208 | -.000208 | 0 | %100 |
| 42 | M58A | Z | 0 | 0 | 0 | %100 |
| 43 | M63 | X | -4.222 | -4.222 | 0 | %100 |
| 44 | M63 | Z | 0 | 0 | 0 | %100 |
| 45 | M64A | X | -4.28 | -4.28 | 0 | %100 |
| 46 | M64A | Z | 0 | 0 | 0 | %100 |
| 47 | M67 | X | 0 | 0 | 0 | %100 |
| 48 | M67 | Z | 0 | 0 | 0 | %100 |
| 49 | M68 | X | -4.28 | -4.28 | 0 | %100 |
| 50 | M68 | Z | 0 | 0 | 0 | %100 |
| 51 | M70A | X | -3.203 | -3.203 | 0 | %100 |
| 52 | M70A | Z | 0 | 0 | 0 | %100 |
| 53 | M71 | X | -3.203 | -3.203 | 0 | %100 |
| 54 | M71 | Z | 0 | 0 | 0 | %100 |
| 55 | M72A | X | -1.15 | -1.15 | 0 | %100 |
| 56 | M72A | Z | 0 | 0 | 0 | %100 |
| 57 | M73A | X | -4.256 | -4.256 | 0 | %100 |
| 58 | M73A | Z | 0 | 0 | 0 | %100 |
| 59 | M75A | X | 0 | 0 | 0 | %100 |
| 60 | M75A | Z | 0 | 0 | 0 | %100 |
| 61 | M76 | X | -4.222 | -4.222 | 0 | %100 |
| 62 | M76 | Z | 0 | 0 | 0 | %100 |
| 63 | M78A | X | -.000208 | -.000208 | 0 | %100 |
| 64 | M78A | Z | 0 | 0 | 0 | %100 |
| 65 | M79 | X | -3.054 | -3.054 | 0 | %100 |
| 66 | M79 | Z | 0 | 0 | 0 | %100 |
| 67 | M84 | X | 0 | 0 | 0 | %100 |
| 68 | M84 | Z | 0 | 0 | 0 | %100 |
| 69 | M85 | X | -4.28 | -4.28 | 0 | %100 |
| 70 | M85 | Z | 0 | 0 | 0 | %100 |
| 71 | M88 | X | -4.222 | -4.222 | 0 | %100 |
| 72 | M88 | Z | 0 | 0 | 0 | %100 |
| 73 | M89 | X | -4.28 | -4.28 | 0 | %100 |
| 74 | M89 | Z | 0 | 0 | 0 | %100 |
| 75 | M91 | X | -3.203 | -3.203 | 0 | %100 |
| 76 | M91 | Z | 0 | 0 | 0 | %100 |
| 77 | M92 | X | -3.203 | -3.203 | 0 | %100 |
| 78 | M92 | Z | 0 | 0 | 0 | %100 |
| 79 | MP1A | X | -3.901 | -3.901 | 0 | %100 |
| 80 | MP1A | Z | 0 | 0 | 0 | %100 |
| 81 | MP2A | X | -4.254 | -4.254 | 0 | %100 |
| 82 | MP2A | Z | 0 | 0 | 0 | %100 |
| 83 | MP3A | X | -3.901 | -3.901 | 0 | %100 |
| 84 | MP3A | Z | 0 | 0 | 0 | %100 |
| 85 | MP4A | X | -3.901 | -3.901 | 0 | %100 |
| 86 | MP4A | Z | 0 | 0 | 0 | %100 |
| 87 | MP1C | X | -3.901 | -3.901 | 0 | %100 |
| 88 | MP1C | Z | 0 | 0 | 0 | %100 |
| 89 | MP2C | X | -4.254 | -4.254 | 0 | %100 |
| 90 | MP2C | Z | 0 | 0 | 0 | %100 |
| 91 | MP3C | X | -3.901 | -3.901 | 0 | %100 |
| 92 | MP3C | Z | 0 | 0 | 0 | %100 |

## Member Distributed Loads (BLC 62 : Structure Wi (270 Deg)) (Continued)

| | Member Label | Direction | Start Magnitude[lb/ft,... | End Magnitude[lb/ft,F... | Start Location[ft,%] | End Location[ft,%] |
|---|---|---|---|---|---|---|
| 93 | MP4C | X | -3.901 | -3.901 | 0 | %100 |
| 94 | MP4C | Z | 0 | 0 | 0 | %100 |
| 95 | MP1B | X | -3.901 | -3.901 | 0 | %100 |
| 96 | MP1B | Z | 0 | 0 | 0 | %100 |
| 97 | MP2B | X | -4.254 | -4.254 | 0 | %100 |
| 98 | MP2B | Z | 0 | 0 | 0 | %100 |
| 99 | MP3B | X | -3.901 | -3.901 | 0 | %100 |
| 100 | MP3B | Z | 0 | 0 | 0 | %100 |
| 101 | MP4B | X | -3.901 | -3.901 | 0 | %100 |
| 102 | MP4B | Z | 0 | 0 | 0 | %100 |
| 103 | OVP | X | -3.125 | -3.125 | 0 | %100 |
| 104 | OVP | Z | 0 | 0 | 0 | %100 |
| 105 | M85A | X | 0 | 0 | 0 | %100 |
| 106 | M85A | Z | 0 | 0 | 0 | %100 |
| 107 | M92A | X | -3.314 | -3.314 | 0 | %100 |
| 108 | M92A | Z | 0 | 0 | 0 | %100 |
| 109 | M99 | X | -3.314 | -3.314 | 0 | %100 |
| 110 | M99 | Z | 0 | 0 | 0 | %100 |
| 111 | M102 | X | -3.345 | -3.345 | 0 | %100 |
| 112 | M102 | Z | 0 | 0 | 0 | %100 |
| 113 | M103 | X | -3.345 | -3.345 | 0 | %100 |
| 114 | M103 | Z | 0 | 0 | 0 | %100 |
| 115 | M104 | X | 0 | 0 | 0 | %100 |
| 116 | M104 | Z | 0 | 0 | 0 | %100 |
| 117 | M105 | X | -4.641 | -4.641 | 0 | %100 |
| 118 | M105 | Z | 0 | 0 | 0 | %100 |
| 119 | M106 | X | -2.989 | -2.989 | 0 | %100 |
| 120 | M106 | Z | 0 | 0 | 0 | %100 |
| 121 | M107 | X | -2.989 | -2.989 | 0 | %100 |
| 122 | M107 | Z | 0 | 0 | 0 | %100 |

## Member Distributed Loads (BLC 63 : Structure Wi (300 Deg))

| | Member Label | Direction | Start Magnitude[lb/ft,... | End Magnitude[lb/ft,F... | Start Location[ft,%] | End Location[ft,%] |
|---|---|---|---|---|---|---|
| 1 | M1 | X | -2.988 | -2.988 | 0 | %100 |
| 2 | M1 | Z | -1.725 | -1.725 | 0 | %100 |
| 3 | M4 | X | -1.229 | -1.229 | 0 | %100 |
| 4 | M4 | Z | -.709 | -.709 | 0 | %100 |
| 5 | M7 | X | -1.052 | -1.052 | 0 | %100 |
| 6 | M7 | Z | -.608 | -.608 | 0 | %100 |
| 7 | M15 | X | -1.052 | -1.052 | 0 | %100 |
| 8 | M15 | Z | -.608 | -.608 | 0 | %100 |
| 9 | M17 | X | -1.219 | -1.219 | 0 | %100 |
| 10 | M17 | Z | -.704 | -.704 | 0 | %100 |
| 11 | M20 | X | -4.209 | -4.209 | 0 | %100 |
| 12 | M20 | Z | -2.43 | -2.43 | 0 | %100 |
| 13 | M21 | X | -4.875 | -4.875 | 0 | %100 |
| 14 | M21 | Z | -2.814 | -2.814 | 0 | %100 |
| 15 | M29 | X | -.853 | -.853 | 0 | %100 |
| 16 | M29 | Z | -.492 | -.492 | 0 | %100 |
| 17 | M30 | X | -3.498 | -3.498 | 0 | %100 |
| 18 | M30 | Z | -2.019 | -2.019 | 0 | %100 |

## Member Distributed Loads (BLC 63 : Structure Wi (300 Deg)) (Continued)

| | Member Label | Direction | Start Magnitude[lb/ft,... | End Magnitude[lb/ft,F... | Start Location[ft,%] | End Location[ft,%] |
|---|---|---|---|---|---|---|
| 19 | M108A | X | -1.219 | -1.219 | 0 | %100 |
| 20 | M108A | Z | -.704 | -.704 | 0 | %100 |
| 21 | M109A | X | -1.236 | -1.236 | 0 | %100 |
| 22 | M109A | Z | -.713 | -.713 | 0 | %100 |
| 23 | M119 | X | -4.875 | -4.875 | 0 | %100 |
| 24 | M119 | Z | -2.814 | -2.814 | 0 | %100 |
| 25 | M120 | X | -1.236 | -1.236 | 0 | %100 |
| 26 | M120 | Z | -.713 | -.713 | 0 | %100 |
| 27 | M122 | X | -.925 | -.925 | 0 | %100 |
| 28 | M122 | Z | -.534 | -.534 | 0 | %100 |
| 29 | M125 | X | -.925 | -.925 | 0 | %100 |
| 30 | M125 | Z | -.534 | -.534 | 0 | %100 |
| 31 | M51 | X | -2.988 | -2.988 | 0 | %100 |
| 32 | M51 | Z | -1.725 | -1.725 | 0 | %100 |
| 33 | M52 | X | -1.229 | -1.229 | 0 | %100 |
| 34 | M52 | Z | -.709 | -.709 | 0 | %100 |
| 35 | M54 | X | -4.875 | -4.875 | 0 | %100 |
| 36 | M54 | Z | -2.814 | -2.814 | 0 | %100 |
| 37 | M55 | X | -1.219 | -1.219 | 0 | %100 |
| 38 | M55 | Z | -.704 | -.704 | 0 | %100 |
| 39 | M57A | X | -3.498 | -3.498 | 0 | %100 |
| 40 | M57A | Z | -2.019 | -2.019 | 0 | %100 |
| 41 | M58A | X | -.853 | -.853 | 0 | %100 |
| 42 | M58A | Z | -.492 | -.492 | 0 | %100 |
| 43 | M63 | X | -4.875 | -4.875 | 0 | %100 |
| 44 | M63 | Z | -2.814 | -2.814 | 0 | %100 |
| 45 | M64A | X | -1.236 | -1.236 | 0 | %100 |
| 46 | M64A | Z | -.713 | -.713 | 0 | %100 |
| 47 | M67 | X | -1.219 | -1.219 | 0 | %100 |
| 48 | M67 | Z | -.704 | -.704 | 0 | %100 |
| 49 | M68 | X | -1.236 | -1.236 | 0 | %100 |
| 50 | M68 | Z | -.713 | -.713 | 0 | %100 |
| 51 | M70A | X | -.925 | -.925 | 0 | %100 |
| 52 | M70A | Z | -.534 | -.534 | 0 | %100 |
| 53 | M71 | X | -.925 | -.925 | 0 | %100 |
| 54 | M71 | Z | -.534 | -.534 | 0 | %100 |
| 55 | M72A | X | 0 | 0 | 0 | %100 |
| 56 | M72A | Z | 0 | 0 | 0 | %100 |
| 57 | M73A | X | -4.915 | -4.915 | 0 | %100 |
| 58 | M73A | Z | -2.838 | -2.838 | 0 | %100 |
| 59 | M75A | X | -1.219 | -1.219 | 0 | %100 |
| 60 | M75A | Z | -.704 | -.704 | 0 | %100 |
| 61 | M76 | X | -1.219 | -1.219 | 0 | %100 |
| 62 | M76 | Z | -.704 | -.704 | 0 | %100 |
| 63 | M78A | X | -.896 | -.896 | 0 | %100 |
| 64 | M78A | Z | -.517 | -.517 | 0 | %100 |
| 65 | M79 | X | -.896 | -.896 | 0 | %100 |
| 66 | M79 | Z | -.517 | -.517 | 0 | %100 |
| 67 | M84 | X | -1.219 | -1.219 | 0 | %100 |
| 68 | M84 | Z | -.704 | -.704 | 0 | %100 |
| 69 | M85 | X | -4.943 | -4.943 | 0 | %100 |
| 70 | M85 | Z | -2.854 | -2.854 | 0 | %100 |

## Member Distributed Loads (BLC 63 : Structure Wi (300 Deg)) (Continued)

| | Member Label | Direction | Start Magnitude[lb/ft,... | End Magnitude[lb/ft,F... | Start Location[ft,%] | End Location[ft,%] |
|---|---|---|---|---|---|---|
| 71 | M88 | X | -1.219 | -1.219 | 0 | %100 |
| 72 | M88 | Z | -.704 | -.704 | 0 | %100 |
| 73 | M89 | X | -4.943 | -4.943 | 0 | %100 |
| 74 | M89 | Z | -2.854 | -2.854 | 0 | %100 |
| 75 | M91 | X | -3.699 | -3.699 | 0 | %100 |
| 76 | M91 | Z | -2.135 | -2.135 | 0 | %100 |
| 77 | M92 | X | -3.699 | -3.699 | 0 | %100 |
| 78 | M92 | Z | -2.135 | -2.135 | 0 | %100 |
| 79 | MP1A | X | -3.378 | -3.378 | 0 | %100 |
| 80 | MP1A | Z | -1.95 | -1.95 | 0 | %100 |
| 81 | MP2A | X | -3.684 | -3.684 | 0 | %100 |
| 82 | MP2A | Z | -2.127 | -2.127 | 0 | %100 |
| 83 | MP3A | X | -3.378 | -3.378 | 0 | %100 |
| 84 | MP3A | Z | -1.95 | -1.95 | 0 | %100 |
| 85 | MP4A | X | -3.378 | -3.378 | 0 | %100 |
| 86 | MP4A | Z | -1.95 | -1.95 | 0 | %100 |
| 87 | MP1C | X | -3.378 | -3.378 | 0 | %100 |
| 88 | MP1C | Z | -1.95 | -1.95 | 0 | %100 |
| 89 | MP2C | X | -3.684 | -3.684 | 0 | %100 |
| 90 | MP2C | Z | -2.127 | -2.127 | 0 | %100 |
| 91 | MP3C | X | -3.378 | -3.378 | 0 | %100 |
| 92 | MP3C | Z | -1.95 | -1.95 | 0 | %100 |
| 93 | MP4C | X | -3.378 | -3.378 | 0 | %100 |
| 94 | MP4C | Z | -1.95 | -1.95 | 0 | %100 |
| 95 | MP1B | X | -3.378 | -3.378 | 0 | %100 |
| 96 | MP1B | Z | -1.95 | -1.95 | 0 | %100 |
| 97 | MP2B | X | -3.684 | -3.684 | 0 | %100 |
| 98 | MP2B | Z | -2.127 | -2.127 | 0 | %100 |
| 99 | MP3B | X | -3.378 | -3.378 | 0 | %100 |
| 100 | MP3B | Z | -1.95 | -1.95 | 0 | %100 |
| 101 | MP4B | X | -3.378 | -3.378 | 0 | %100 |
| 102 | MP4B | Z | -1.95 | -1.95 | 0 | %100 |
| 103 | OVP | X | -2.706 | -2.706 | 0 | %100 |
| 104 | OVP | Z | -1.562 | -1.562 | 0 | %100 |
| 105 | M85A | X | -.957 | -.957 | 0 | %100 |
| 106 | M85A | Z | -.552 | -.552 | 0 | %100 |
| 107 | M92A | X | -.957 | -.957 | 0 | %100 |
| 108 | M92A | Z | -.552 | -.552 | 0 | %100 |
| 109 | M99 | X | -3.827 | -3.827 | 0 | %100 |
| 110 | M99 | Z | -2.21 | -2.21 | 0 | %100 |
| 111 | M102 | X | -.966 | -.966 | 0 | %100 |
| 112 | M102 | Z | -.557 | -.557 | 0 | %100 |
| 113 | M103 | X | -3.862 | -3.862 | 0 | %100 |
| 114 | M103 | Z | -2.23 | -2.23 | 0 | %100 |
| 115 | M104 | X | -.966 | -.966 | 0 | %100 |
| 116 | M104 | Z | -.557 | -.557 | 0 | %100 |
| 117 | M105 | X | -3.542 | -3.542 | 0 | %100 |
| 118 | M105 | Z | -2.045 | -2.045 | 0 | %100 |
| 119 | M106 | X | -3.542 | -3.542 | 0 | %100 |
| 120 | M106 | Z | -2.045 | -2.045 | 0 | %100 |
| 121 | M107 | X | -2.111 | -2.111 | 0 | %100 |
| 122 | M107 | Z | -1.219 | -1.219 | 0 | %100 |

## Member Distributed Loads (BLC 64 : Structure Wi (330 Deg))

| | Member Label | Direction | Start Magnitude[lb/ft,... | End Magnitude[lb/ft,F... | Start Location[ft,%] | End Location[ft,%] |
|---|---|---|---|---|---|---|
| 1 | M1 | X | -.575 | -.575 | 0 | %100 |
| 2 | M1 | Z | -.996 | -.996 | 0 | %100 |
| 3 | M4 | X | -2.128 | -2.128 | 0 | %100 |
| 4 | M4 | Z | -3.686 | -3.686 | 0 | %100 |
| 5 | M7 | X | -1.823 | -1.823 | 0 | %100 |
| 6 | M7 | Z | -3.157 | -3.157 | 0 | %100 |
| 7 | M15 | X | 0 | 0 | 0 | %100 |
| 8 | M15 | Z | 0 | 0 | 0 | %100 |
| 9 | M17 | X | 0 | 0 | 0 | %100 |
| 10 | M17 | Z | 0 | 0 | 0 | %100 |
| 11 | M20 | X | -1.823 | -1.823 | 0 | %100 |
| 12 | M20 | Z | -3.157 | -3.157 | 0 | %100 |
| 13 | M21 | X | -2.111 | -2.111 | 0 | %100 |
| 14 | M21 | Z | -3.656 | -3.656 | 0 | %100 |
| 15 | M29 | X | -.000104 | -.000104 | 0 | %100 |
| 16 | M29 | Z | -.00018 | -.00018 | 0 | %100 |
| 17 | M30 | X | -1.527 | -1.527 | 0 | %100 |
| 18 | M30 | Z | -2.645 | -2.645 | 0 | %100 |
| 19 | M108A | X | 0 | 0 | 0 | %100 |
| 20 | M108A | Z | 0 | 0 | 0 | %100 |
| 21 | M109A | X | -2.14 | -2.14 | 0 | %100 |
| 22 | M109A | Z | -3.707 | -3.707 | 0 | %100 |
| 23 | M119 | X | -2.111 | -2.111 | 0 | %100 |
| 24 | M119 | Z | -3.656 | -3.656 | 0 | %100 |
| 25 | M120 | X | -2.14 | -2.14 | 0 | %100 |
| 26 | M120 | Z | -3.707 | -3.707 | 0 | %100 |
| 27 | M122 | X | -1.602 | -1.602 | 0 | %100 |
| 28 | M122 | Z | -2.774 | -2.774 | 0 | %100 |
| 29 | M125 | X | -1.602 | -1.602 | 0 | %100 |
| 30 | M125 | Z | -2.774 | -2.774 | 0 | %100 |
| 31 | M51 | X | -2.3 | -2.3 | 0 | %100 |
| 32 | M51 | Z | -3.984 | -3.984 | 0 | %100 |
| 33 | M52 | X | 0 | 0 | 0 | %100 |
| 34 | M52 | Z | 0 | 0 | 0 | %100 |
| 35 | M54 | X | -2.111 | -2.111 | 0 | %100 |
| 36 | M54 | Z | -3.656 | -3.656 | 0 | %100 |
| 37 | M55 | X | -2.111 | -2.111 | 0 | %100 |
| 38 | M55 | Z | -3.656 | -3.656 | 0 | %100 |
| 39 | M57A | X | -1.502 | -1.502 | 0 | %100 |
| 40 | M57A | Z | -2.601 | -2.601 | 0 | %100 |
| 41 | M58A | X | -1.502 | -1.502 | 0 | %100 |
| 42 | M58A | Z | -2.601 | -2.601 | 0 | %100 |
| 43 | M63 | X | -2.111 | -2.111 | 0 | %100 |
| 44 | M63 | Z | -3.656 | -3.656 | 0 | %100 |
| 45 | M64A | X | 0 | 0 | 0 | %100 |
| 46 | M64A | Z | 0 | 0 | 0 | %100 |
| 47 | M67 | X | -2.111 | -2.111 | 0 | %100 |
| 48 | M67 | Z | -3.656 | -3.656 | 0 | %100 |
| 49 | M68 | X | 0 | 0 | 0 | %100 |
| 50 | M68 | Z | 0 | 0 | 0 | %100 |
| 51 | M70A | X | 0 | 0 | 0 | %100 |
| 52 | M70A | Z | 0 | 0 | 0 | %100 |

## Member Distributed Loads (BLC 64 : Structure Wi (330 Deg)) (Continued)

| | Member Label | Direction | Start Magnitude[lb/ft,... | End Magnitude[lb/ft,F... | Start Location[ft,%] | End Location[ft,%] |
|---|---|---|---|---|---|---|
| 53 | M71 | X | 0 | 0 | 0 | %100 |
| 54 | M71 | Z | 0 | 0 | 0 | %100 |
| 55 | M72A | X | -.575 | -.575 | 0 | %100 |
| 56 | M72A | Z | -.996 | -.996 | 0 | %100 |
| 57 | M73A | X | -2.128 | -2.128 | 0 | %100 |
| 58 | M73A | Z | -3.686 | -3.686 | 0 | %100 |
| 59 | M75A | X | -2.111 | -2.111 | 0 | %100 |
| 60 | M75A | Z | -3.656 | -3.656 | 0 | %100 |
| 61 | M76 | X | 0 | 0 | 0 | %100 |
| 62 | M76 | Z | 0 | 0 | 0 | %100 |
| 63 | M78A | X | -1.527 | -1.527 | 0 | %100 |
| 64 | M78A | Z | -2.645 | -2.645 | 0 | %100 |
| 65 | M79 | X | -.000104 | -.000104 | 0 | %100 |
| 66 | M79 | Z | -.00018 | -.00018 | 0 | %100 |
| 67 | M84 | X | -2.111 | -2.111 | 0 | %100 |
| 68 | M84 | Z | -3.656 | -3.656 | 0 | %100 |
| 69 | M85 | X | -2.14 | -2.14 | 0 | %100 |
| 70 | M85 | Z | -3.707 | -3.707 | 0 | %100 |
| 71 | M88 | X | 0 | 0 | 0 | %100 |
| 72 | M88 | Z | 0 | 0 | 0 | %100 |
| 73 | M89 | X | -2.14 | -2.14 | 0 | %100 |
| 74 | M89 | Z | -3.707 | -3.707 | 0 | %100 |
| 75 | M91 | X | -1.602 | -1.602 | 0 | %100 |
| 76 | M91 | Z | -2.774 | -2.774 | 0 | %100 |
| 77 | M92 | X | -1.602 | -1.602 | 0 | %100 |
| 78 | M92 | Z | -2.774 | -2.774 | 0 | %100 |
| 79 | MP1A | X | -1.95 | -1.95 | 0 | %100 |
| 80 | MP1A | Z | -3.378 | -3.378 | 0 | %100 |
| 81 | MP2A | X | -2.127 | -2.127 | 0 | %100 |
| 82 | MP2A | Z | -3.684 | -3.684 | 0 | %100 |
| 83 | MP3A | X | -1.95 | -1.95 | 0 | %100 |
| 84 | MP3A | Z | -3.378 | -3.378 | 0 | %100 |
| 85 | MP4A | X | -1.95 | -1.95 | 0 | %100 |
| 86 | MP4A | Z | -3.378 | -3.378 | 0 | %100 |
| 87 | MP1C | X | -1.95 | -1.95 | 0 | %100 |
| 88 | MP1C | Z | -3.378 | -3.378 | 0 | %100 |
| 89 | MP2C | X | -2.127 | -2.127 | 0 | %100 |
| 90 | MP2C | Z | -3.684 | -3.684 | 0 | %100 |
| 91 | MP3C | X | -1.95 | -1.95 | 0 | %100 |
| 92 | MP3C | Z | -3.378 | -3.378 | 0 | %100 |
| 93 | MP4C | X | -1.95 | -1.95 | 0 | %100 |
| 94 | MP4C | Z | -3.378 | -3.378 | 0 | %100 |
| 95 | MP1B | X | -1.95 | -1.95 | 0 | %100 |
| 96 | MP1B | Z | -3.378 | -3.378 | 0 | %100 |
| 97 | MP2B | X | -2.127 | -2.127 | 0 | %100 |
| 98 | MP2B | Z | -3.684 | -3.684 | 0 | %100 |
| 99 | MP3B | X | -1.95 | -1.95 | 0 | %100 |
| 100 | MP3B | Z | -3.378 | -3.378 | 0 | %100 |
| 101 | MP4B | X | -1.95 | -1.95 | 0 | %100 |
| 102 | MP4B | Z | -3.378 | -3.378 | 0 | %100 |
| 103 | OVP | X | -1.562 | -1.562 | 0 | %100 |
| 104 | OVP | Z | -2.706 | -2.706 | 0 | %100 |

## Member Distributed Loads (BLC 64 : Structure Wi (330 Deg)) (Continued)

| | Member Label | Direction | Start Magnitude[lb/ft,... | End Magnitude[lb/ft,F... | Start Location[ft,%] | End Location[ft,%] |
|---|---|---|---|---|---|---|
| 105 | M85A | X | -1.657 | -1.657 | 0 | %100 |
| 106 | M85A | Z | -2.87 | -2.87 | 0 | %100 |
| 107 | M92A | X | 0 | 0 | 0 | %100 |
| 108 | M92A | Z | 0 | 0 | 0 | %100 |
| 109 | M99 | X | -1.657 | -1.657 | 0 | %100 |
| 110 | M99 | Z | -2.87 | -2.87 | 0 | %100 |
| 111 | M102 | X | 0 | 0 | 0 | %100 |
| 112 | M102 | Z | 0 | 0 | 0 | %100 |
| 113 | M103 | X | -1.672 | -1.672 | 0 | %100 |
| 114 | M103 | Z | -2.897 | -2.897 | 0 | %100 |
| 115 | M104 | X | -1.672 | -1.672 | 0 | %100 |
| 116 | M104 | Z | -2.897 | -2.897 | 0 | %100 |
| 117 | M105 | X | -1.494 | -1.494 | 0 | %100 |
| 118 | M105 | Z | -2.588 | -2.588 | 0 | %100 |
| 119 | M106 | X | -2.32 | -2.32 | 0 | %100 |
| 120 | M106 | Z | -4.019 | -4.019 | 0 | %100 |
| 121 | M107 | X | -1.494 | -1.494 | 0 | %100 |
| 122 | M107 | Z | -2.588 | -2.588 | 0 | %100 |

## Member Distributed Loads (BLC 65 : Structure Wm (0 Deg))

| | Member Label | Direction | Start Magnitude[lb/ft,... | End Magnitude[lb/ft,F... | Start Location[ft,%] | End Location[ft,%] |
|---|---|---|---|---|---|---|
| 1 | M1 | X | 0 | 0 | 0 | %100 |
| 2 | M1 | Z | 0 | 0 | 0 | %100 |
| 3 | M4 | X | 0 | 0 | 0 | %100 |
| 4 | M4 | Z | -1.525 | -1.525 | 0 | %100 |
| 5 | M7 | X | 0 | 0 | 0 | %100 |
| 6 | M7 | Z | -.889 | -.889 | 0 | %100 |
| 7 | M15 | X | 0 | 0 | 0 | %100 |
| 8 | M15 | Z | -.222 | -.222 | 0 | %100 |
| 9 | M17 | X | 0 | 0 | 0 | %100 |
| 10 | M17 | Z | -.381 | -.381 | 0 | %100 |
| 11 | M20 | X | 0 | 0 | 0 | %100 |
| 12 | M20 | Z | -.222 | -.222 | 0 | %100 |
| 13 | M21 | X | 0 | 0 | 0 | %100 |
| 14 | M21 | Z | -.381 | -.381 | 0 | %100 |
| 15 | M29 | X | 0 | 0 | 0 | %100 |
| 16 | M29 | Z | -.203 | -.203 | 0 | %100 |
| 17 | M30 | X | 0 | 0 | 0 | %100 |
| 18 | M30 | Z | -.203 | -.203 | 0 | %100 |
| 19 | M108A | X | 0 | 0 | 0 | %100 |
| 20 | M108A | Z | -.381 | -.381 | 0 | %100 |
| 21 | M109A | X | 0 | 0 | 0 | %100 |
| 22 | M109A | Z | -1.553 | -1.553 | 0 | %100 |
| 23 | M119 | X | 0 | 0 | 0 | %100 |
| 24 | M119 | Z | -.381 | -.381 | 0 | %100 |
| 25 | M120 | X | 0 | 0 | 0 | %100 |
| 26 | M120 | Z | -1.553 | -1.553 | 0 | %100 |
| 27 | M122 | X | 0 | 0 | 0 | %100 |
| 28 | M122 | Z | -.942 | -.942 | 0 | %100 |
| 29 | M125 | X | 0 | 0 | 0 | %100 |
| 30 | M125 | Z | -.942 | -.942 | 0 | %100 |

## Member Distributed Loads (BLC 65 : Structure Wm (0 Deg)) (Continued)

| | Member Label | Direction | Start Magnitude[lb/ft,... | End Magnitude[lb/ft,F... | Start Location[ft,%] | End Location[ft,%] |
|---|---|---|---|---|---|---|
| 31 | M51 | X | 0 | 0 | 0 | %100 |
| 32 | M51 | Z | -.677 | -.677 | 0 | %100 |
| 33 | M52 | X | 0 | 0 | 0 | %100 |
| 34 | M52 | Z | -.381 | -.381 | 0 | %100 |
| 35 | M54 | X | 0 | 0 | 0 | %100 |
| 36 | M54 | Z | -.381 | -.381 | 0 | %100 |
| 37 | M55 | X | 0 | 0 | 0 | %100 |
| 38 | M55 | Z | -1.525 | -1.525 | 0 | %100 |
| 39 | M57A | X | 0 | 0 | 0 | %100 |
| 40 | M57A | Z | -.193 | -.193 | 0 | %100 |
| 41 | M58A | X | 0 | 0 | 0 | %100 |
| 42 | M58A | Z | -.793 | -.793 | 0 | %100 |
| 43 | M63 | X | 0 | 0 | 0 | %100 |
| 44 | M63 | Z | -.381 | -.381 | 0 | %100 |
| 45 | M64A | X | 0 | 0 | 0 | %100 |
| 46 | M64A | Z | -.388 | -.388 | 0 | %100 |
| 47 | M67 | X | 0 | 0 | 0 | %100 |
| 48 | M67 | Z | -1.525 | -1.525 | 0 | %100 |
| 49 | M68 | X | 0 | 0 | 0 | %100 |
| 50 | M68 | Z | -.388 | -.388 | 0 | %100 |
| 51 | M70A | X | 0 | 0 | 0 | %100 |
| 52 | M70A | Z | -.235 | -.235 | 0 | %100 |
| 53 | M71 | X | 0 | 0 | 0 | %100 |
| 54 | M71 | Z | -.235 | -.235 | 0 | %100 |
| 55 | M72A | X | 0 | 0 | 0 | %100 |
| 56 | M72A | Z | -.677 | -.677 | 0 | %100 |
| 57 | M73A | X | 0 | 0 | 0 | %100 |
| 58 | M73A | Z | -.381 | -.381 | 0 | %100 |
| 59 | M75A | X | 0 | 0 | 0 | %100 |
| 60 | M75A | Z | -1.525 | -1.525 | 0 | %100 |
| 61 | M76 | X | 0 | 0 | 0 | %100 |
| 62 | M76 | Z | -.381 | -.381 | 0 | %100 |
| 63 | M78A | X | 0 | 0 | 0 | %100 |
| 64 | M78A | Z | -.793 | -.793 | 0 | %100 |
| 65 | M79 | X | 0 | 0 | 0 | %100 |
| 66 | M79 | Z | -.193 | -.193 | 0 | %100 |
| 67 | M84 | X | 0 | 0 | 0 | %100 |
| 68 | M84 | Z | -1.525 | -1.525 | 0 | %100 |
| 69 | M85 | X | 0 | 0 | 0 | %100 |
| 70 | M85 | Z | -.388 | -.388 | 0 | %100 |
| 71 | M88 | X | 0 | 0 | 0 | %100 |
| 72 | M88 | Z | -.381 | -.381 | 0 | %100 |
| 73 | M89 | X | 0 | 0 | 0 | %100 |
| 74 | M89 | Z | -.388 | -.388 | 0 | %100 |
| 75 | M91 | X | 0 | 0 | 0 | %100 |
| 76 | M91 | Z | -.235 | -.235 | 0 | %100 |
| 77 | M92 | X | 0 | 0 | 0 | %100 |
| 78 | M92 | Z | -.235 | -.235 | 0 | %100 |
| 79 | MP1A | X | 0 | 0 | 0 | %100 |
| 80 | MP1A | Z | -.603 | -.603 | 0 | %100 |
| 81 | MP2A | X | 0 | 0 | 0 | %100 |
| 82 | MP2A | Z | -.73 | -.73 | 0 | %100 |

## Member Distributed Loads (BLC 65 : Structure Wm (0 Deg)) (Continued)

| | Member Label | Direction | Start Magnitude[lb/ft,... | End Magnitude[lb/ft,F... | Start Location[ft,%] | End Location[ft,%] |
|---|---|---|---|---|---|---|
| 83 | MP3A | X | 0 | 0 | 0 | %100 |
| 84 | MP3A | Z | -.603 | -.603 | 0 | %100 |
| 85 | MP4A | X | 0 | 0 | 0 | %100 |
| 86 | MP4A | Z | -.603 | -.603 | 0 | %100 |
| 87 | MP1C | X | 0 | 0 | 0 | %100 |
| 88 | MP1C | Z | -.603 | -.603 | 0 | %100 |
| 89 | MP2C | X | 0 | 0 | 0 | %100 |
| 90 | MP2C | Z | -.73 | -.73 | 0 | %100 |
| 91 | MP3C | X | 0 | 0 | 0 | %100 |
| 92 | MP3C | Z | -.603 | -.603 | 0 | %100 |
| 93 | MP4C | X | 0 | 0 | 0 | %100 |
| 94 | MP4C | Z | -.603 | -.603 | 0 | %100 |
| 95 | MP1B | X | 0 | 0 | 0 | %100 |
| 96 | MP1B | Z | -.603 | -.603 | 0 | %100 |
| 97 | MP2B | X | 0 | 0 | 0 | %100 |
| 98 | MP2B | Z | -.73 | -.73 | 0 | %100 |
| 99 | MP3B | X | 0 | 0 | 0 | %100 |
| 100 | MP3B | Z | -.603 | -.603 | 0 | %100 |
| 101 | MP4B | X | 0 | 0 | 0 | %100 |
| 102 | MP4B | Z | -.603 | -.603 | 0 | %100 |
| 103 | OVP | X | 0 | 0 | 0 | %100 |
| 104 | OVP | Z | -.493 | -.493 | 0 | %100 |
| 105 | M85A | X | 0 | 0 | 0 | %100 |
| 106 | M85A | Z | -.73 | -.73 | 0 | %100 |
| 107 | M92A | X | 0 | 0 | 0 | %100 |
| 108 | M92A | Z | -.183 | -.183 | 0 | %100 |
| 109 | M99 | X | 0 | 0 | 0 | %100 |
| 110 | M99 | Z | -.183 | -.183 | 0 | %100 |
| 111 | M102 | X | 0 | 0 | 0 | %100 |
| 112 | M102 | Z | -.246 | -.246 | 0 | %100 |
| 113 | M103 | X | 0 | 0 | 0 | %100 |
| 114 | M103 | Z | -.246 | -.246 | 0 | %100 |
| 115 | M104 | X | 0 | 0 | 0 | %100 |
| 116 | M104 | Z | -.983 | -.983 | 0 | %100 |
| 117 | M105 | X | 0 | 0 | 0 | %100 |
| 118 | M105 | Z | -.641 | -.641 | 0 | %100 |
| 119 | M106 | X | 0 | 0 | 0 | %100 |
| 120 | M106 | Z | -.926 | -.926 | 0 | %100 |
| 121 | M107 | X | 0 | 0 | 0 | %100 |
| 122 | M107 | Z | -.926 | -.926 | 0 | %100 |

## Member Distributed Loads (BLC 66 : Structure Wm (30 Deg))

| | Member Label | Direction | Start Magnitude[lb/ft,... | End Magnitude[lb/ft,F... | Start Location[ft,%] | End Location[ft,%] |
|---|---|---|---|---|---|---|
| 1 | M1 | X | .113 | .113 | 0 | %100 |
| 2 | M1 | Z | -.195 | -.195 | 0 | %100 |
| 3 | M4 | X | .572 | .572 | 0 | %100 |
| 4 | M4 | Z | -.99 | -.99 | 0 | %100 |
| 5 | M7 | X | .333 | .333 | 0 | %100 |
| 6 | M7 | Z | -.578 | -.578 | 0 | %100 |
| 7 | M15 | X | .333 | .333 | 0 | %100 |
| 8 | M15 | Z | -.578 | -.578 | 0 | %100 |

## Member Distributed Loads (BLC 66 : Structure Wm (30 Deg)) (Continued)

| | Member Label | Direction | Start Magnitude[lb/ft,... | End Magnitude[lb/ft,F... | Start Location[ft,%] | End Location[ft,%] |
|---|---|---|---|---|---|---|
| 9 | M17 | X | .572 | .572 | 0 | %100 |
| 10 | M17 | Z | -.99 | -.99 | 0 | %100 |
| 11 | M20 | X | 0 | 0 | 0 | %100 |
| 12 | M20 | Z | 0 | 0 | 0 | %100 |
| 13 | M21 | X | 0 | 0 | 0 | %100 |
| 14 | M21 | Z | 0 | 0 | 0 | %100 |
| 15 | M29 | X | .3 | .3 | 0 | %100 |
| 16 | M29 | Z | -.519 | -.519 | 0 | %100 |
| 17 | M30 | X | 2e-5 | 2e-5 | 0 | %100 |
| 18 | M30 | Z | -3.5e-5 | -3.5e-5 | 0 | %100 |
| 19 | M108A | X | .572 | .572 | 0 | %100 |
| 20 | M108A | Z | -.99 | -.99 | 0 | %100 |
| 21 | M109A | X | .582 | .582 | 0 | %100 |
| 22 | M109A | Z | -1.009 | -1.009 | 0 | %100 |
| 23 | M119 | X | 0 | 0 | 0 | %100 |
| 24 | M119 | Z | 0 | 0 | 0 | %100 |
| 25 | M120 | X | .582 | .582 | 0 | %100 |
| 26 | M120 | Z | -1.009 | -1.009 | 0 | %100 |
| 27 | M122 | X | .353 | .353 | 0 | %100 |
| 28 | M122 | Z | -.612 | -.612 | 0 | %100 |
| 29 | M125 | X | .353 | .353 | 0 | %100 |
| 30 | M125 | Z | -.612 | -.612 | 0 | %100 |
| 31 | M51 | X | .113 | .113 | 0 | %100 |
| 32 | M51 | Z | -.195 | -.195 | 0 | %100 |
| 33 | M52 | X | .572 | .572 | 0 | %100 |
| 34 | M52 | Z | -.99 | -.99 | 0 | %100 |
| 35 | M54 | X | 0 | 0 | 0 | %100 |
| 36 | M54 | Z | 0 | 0 | 0 | %100 |
| 37 | M55 | X | .572 | .572 | 0 | %100 |
| 38 | M55 | Z | -.99 | -.99 | 0 | %100 |
| 39 | M57A | X | 2e-5 | 2e-5 | 0 | %100 |
| 40 | M57A | Z | -3.5e-5 | -3.5e-5 | 0 | %100 |
| 41 | M58A | X | .3 | .3 | 0 | %100 |
| 42 | M58A | Z | -.519 | -.519 | 0 | %100 |
| 43 | M63 | X | 0 | 0 | 0 | %100 |
| 44 | M63 | Z | 0 | 0 | 0 | %100 |
| 45 | M64A | X | .582 | .582 | 0 | %100 |
| 46 | M64A | Z | -1.009 | -1.009 | 0 | %100 |
| 47 | M67 | X | .572 | .572 | 0 | %100 |
| 48 | M67 | Z | -.99 | -.99 | 0 | %100 |
| 49 | M68 | X | .582 | .582 | 0 | %100 |
| 50 | M68 | Z | -1.009 | -1.009 | 0 | %100 |
| 51 | M70A | X | .353 | .353 | 0 | %100 |
| 52 | M70A | Z | -.612 | -.612 | 0 | %100 |
| 53 | M71 | X | .353 | .353 | 0 | %100 |
| 54 | M71 | Z | -.612 | -.612 | 0 | %100 |
| 55 | M72A | X | .451 | .451 | 0 | %100 |
| 56 | M72A | Z | -.781 | -.781 | 0 | %100 |
| 57 | M73A | X | 0 | 0 | 0 | %100 |
| 58 | M73A | Z | 0 | 0 | 0 | %100 |
| 59 | M75A | X | .572 | .572 | 0 | %100 |
| 60 | M75A | Z | -.99 | -.99 | 0 | %100 |

## Member Distributed Loads (BLC 66 : Structure Wm (30 Deg)) (Continued)

| | Member Label | Direction | Start Magnitude[lb/ft,... | End Magnitude[lb/ft,F... | Start Location[ft,%] | End Location[ft,%] |
|---|---|---|---|---|---|---|
| 61 | M76 | X | .572 | .572 | 0 | %100 |
| 62 | M76 | Z | -.99 | -.99 | 0 | %100 |
| 63 | M78A | X | .295 | .295 | 0 | %100 |
| 64 | M78A | Z | -.511 | -.511 | 0 | %100 |
| 65 | M79 | X | .295 | .295 | 0 | %100 |
| 66 | M79 | Z | -.511 | -.511 | 0 | %100 |
| 67 | M84 | X | .572 | .572 | 0 | %100 |
| 68 | M84 | Z | -.99 | -.99 | 0 | %100 |
| 69 | M85 | X | 0 | 0 | 0 | %100 |
| 70 | M85 | Z | 0 | 0 | 0 | %100 |
| 71 | M88 | X | .572 | .572 | 0 | %100 |
| 72 | M88 | Z | -.99 | -.99 | 0 | %100 |
| 73 | M89 | X | 0 | 0 | 0 | %100 |
| 74 | M89 | Z | 0 | 0 | 0 | %100 |
| 75 | M91 | X | 0 | 0 | 0 | %100 |
| 76 | M91 | Z | 0 | 0 | 0 | %100 |
| 77 | M92 | X | 0 | 0 | 0 | %100 |
| 78 | M92 | Z | 0 | 0 | 0 | %100 |
| 79 | MP1A | X | .302 | .302 | 0 | %100 |
| 80 | MP1A | Z | -.523 | -.523 | 0 | %100 |
| 81 | MP2A | X | .365 | .365 | 0 | %100 |
| 82 | MP2A | Z | -.633 | -.633 | 0 | %100 |
| 83 | MP3A | X | .302 | .302 | 0 | %100 |
| 84 | MP3A | Z | -.523 | -.523 | 0 | %100 |
| 85 | MP4A | X | .302 | .302 | 0 | %100 |
| 86 | MP4A | Z | -.523 | -.523 | 0 | %100 |
| 87 | MP1C | X | .302 | .302 | 0 | %100 |
| 88 | MP1C | Z | -.523 | -.523 | 0 | %100 |
| 89 | MP2C | X | .365 | .365 | 0 | %100 |
| 90 | MP2C | Z | -.633 | -.633 | 0 | %100 |
| 91 | MP3C | X | .302 | .302 | 0 | %100 |
| 92 | MP3C | Z | -.523 | -.523 | 0 | %100 |
| 93 | MP4C | X | .302 | .302 | 0 | %100 |
| 94 | MP4C | Z | -.523 | -.523 | 0 | %100 |
| 95 | MP1B | X | .302 | .302 | 0 | %100 |
| 96 | MP1B | Z | -.523 | -.523 | 0 | %100 |
| 97 | MP2B | X | .365 | .365 | 0 | %100 |
| 98 | MP2B | Z | -.633 | -.633 | 0 | %100 |
| 99 | MP3B | X | .302 | .302 | 0 | %100 |
| 100 | MP3B | Z | -.523 | -.523 | 0 | %100 |
| 101 | MP4B | X | .302 | .302 | 0 | %100 |
| 102 | MP4B | Z | -.523 | -.523 | 0 | %100 |
| 103 | OVP | X | .247 | .247 | 0 | %100 |
| 104 | OVP | Z | -.427 | -.427 | 0 | %100 |
| 105 | M85A | X | .274 | .274 | 0 | %100 |
| 106 | M85A | Z | -.474 | -.474 | 0 | %100 |
| 107 | M92A | X | .274 | .274 | 0 | %100 |
| 108 | M92A | Z | -.474 | -.474 | 0 | %100 |
| 109 | M99 | X | 0 | 0 | 0 | %100 |
| 110 | M99 | Z | 0 | 0 | 0 | %100 |
| 111 | M102 | X | .368 | .368 | 0 | %100 |
| 112 | M102 | Z | -.638 | -.638 | 0 | %100 |

## Member Distributed Loads (BLC 66 : Structure Wm (30 Deg)) (Continued)

| | Member Label | Direction | Start Magnitude[lb/ft,... | End Magnitude[lb/ft,F... | Start Location[ft,%] | End Location[ft,%] |
|---|---|---|---|---|---|---|
| 113 | M103 | X | 0 | 0 | 0 | %100 |
| 114 | M103 | Z | 0 | 0 | 0 | %100 |
| 115 | M104 | X | .368 | .368 | 0 | %100 |
| 116 | M104 | Z | -.638 | -.638 | 0 | %100 |
| 117 | M105 | X | .368 | .368 | 0 | %100 |
| 118 | M105 | Z | -.637 | -.637 | 0 | %100 |
| 119 | M106 | X | .368 | .368 | 0 | %100 |
| 120 | M106 | Z | -.637 | -.637 | 0 | %100 |
| 121 | M107 | X | .511 | .511 | 0 | %100 |
| 122 | M107 | Z | -.885 | -.885 | 0 | %100 |

## Member Distributed Loads (BLC 67 : Structure Wm (60 Deg))

| | Member Label | Direction | Start Magnitude[lb/ft,... | End Magnitude[lb/ft,F... | Start Location[ft,%] | End Location[ft,%] |
|---|---|---|---|---|---|---|
| 1 | M1 | X | .586 | .586 | 0 | %100 |
| 2 | M1 | Z | -.338 | -.338 | 0 | %100 |
| 3 | M4 | X | .33 | .33 | 0 | %100 |
| 4 | M4 | Z | -.191 | -.191 | 0 | %100 |
| 5 | M7 | X | .193 | .193 | 0 | %100 |
| 6 | M7 | Z | -.111 | -.111 | 0 | %100 |
| 7 | M15 | X | .77 | .77 | 0 | %100 |
| 8 | M15 | Z | -.445 | -.445 | 0 | %100 |
| 9 | M17 | X | 1.32 | 1.32 | 0 | %100 |
| 10 | M17 | Z | -.762 | -.762 | 0 | %100 |
| 11 | M20 | X | .193 | .193 | 0 | %100 |
| 12 | M20 | Z | -.111 | -.111 | 0 | %100 |
| 13 | M21 | X | .33 | .33 | 0 | %100 |
| 14 | M21 | Z | -.191 | -.191 | 0 | %100 |
| 15 | M29 | X | .687 | .687 | 0 | %100 |
| 16 | M29 | Z | -.396 | -.396 | 0 | %100 |
| 17 | M30 | X | .167 | .167 | 0 | %100 |
| 18 | M30 | Z | -.097 | -.097 | 0 | %100 |
| 19 | M108A | X | 1.32 | 1.32 | 0 | %100 |
| 20 | M108A | Z | -.762 | -.762 | 0 | %100 |
| 21 | M109A | X | .336 | .336 | 0 | %100 |
| 22 | M109A | Z | -.194 | -.194 | 0 | %100 |
| 23 | M119 | X | .33 | .33 | 0 | %100 |
| 24 | M119 | Z | -.191 | -.191 | 0 | %100 |
| 25 | M120 | X | .336 | .336 | 0 | %100 |
| 26 | M120 | Z | -.194 | -.194 | 0 | %100 |
| 27 | M122 | X | .204 | .204 | 0 | %100 |
| 28 | M122 | Z | -.118 | -.118 | 0 | %100 |
| 29 | M125 | X | .204 | .204 | 0 | %100 |
| 30 | M125 | Z | -.118 | -.118 | 0 | %100 |
| 31 | M51 | X | 0 | 0 | 0 | %100 |
| 32 | M51 | Z | 0 | 0 | 0 | %100 |
| 33 | M52 | X | 1.32 | 1.32 | 0 | %100 |
| 34 | M52 | Z | -.762 | -.762 | 0 | %100 |
| 35 | M54 | X | .33 | .33 | 0 | %100 |
| 36 | M54 | Z | -.191 | -.191 | 0 | %100 |
| 37 | M55 | X | .33 | .33 | 0 | %100 |
| 38 | M55 | Z | -.191 | -.191 | 0 | %100 |

## Member Distributed Loads (BLC 67 : Structure Wm (60 Deg)) (Continued)

| | Member Label | Direction | Start Magnitude[lb/ft,... | End Magnitude[lb/ft,F... | Start Location[ft,%] | End Location[ft,%] |
|---|---|---|---|---|---|---|
| 39 | M57A | X | .176 | .176 | 0 | %100 |
| 40 | M57A | Z | -.102 | -.102 | 0 | %100 |
| 41 | M58A | X | .176 | .176 | 0 | %100 |
| 42 | M58A | Z | -.102 | -.102 | 0 | %100 |
| 43 | M63 | X | .33 | .33 | 0 | %100 |
| 44 | M63 | Z | -.191 | -.191 | 0 | %100 |
| 45 | M64A | X | 1.345 | 1.345 | 0 | %100 |
| 46 | M64A | Z | -.776 | -.776 | 0 | %100 |
| 47 | M67 | X | .33 | .33 | 0 | %100 |
| 48 | M67 | Z | -.191 | -.191 | 0 | %100 |
| 49 | M68 | X | 1.345 | 1.345 | 0 | %100 |
| 50 | M68 | Z | -.776 | -.776 | 0 | %100 |
| 51 | M70A | X | .816 | .816 | 0 | %100 |
| 52 | M70A | Z | -.471 | -.471 | 0 | %100 |
| 53 | M71 | X | .816 | .816 | 0 | %100 |
| 54 | M71 | Z | -.471 | -.471 | 0 | %100 |
| 55 | M72A | X | .586 | .586 | 0 | %100 |
| 56 | M72A | Z | -.338 | -.338 | 0 | %100 |
| 57 | M73A | X | .33 | .33 | 0 | %100 |
| 58 | M73A | Z | -.191 | -.191 | 0 | %100 |
| 59 | M75A | X | .33 | .33 | 0 | %100 |
| 60 | M75A | Z | -.191 | -.191 | 0 | %100 |
| 61 | M76 | X | 1.32 | 1.32 | 0 | %100 |
| 62 | M76 | Z | -.762 | -.762 | 0 | %100 |
| 63 | M78A | X | .167 | .167 | 0 | %100 |
| 64 | M78A | Z | -.097 | -.097 | 0 | %100 |
| 65 | M79 | X | .687 | .687 | 0 | %100 |
| 66 | M79 | Z | -.396 | -.396 | 0 | %100 |
| 67 | M84 | X | .33 | .33 | 0 | %100 |
| 68 | M84 | Z | -.191 | -.191 | 0 | %100 |
| 69 | M85 | X | .336 | .336 | 0 | %100 |
| 70 | M85 | Z | -.194 | -.194 | 0 | %100 |
| 71 | M88 | X | 1.32 | 1.32 | 0 | %100 |
| 72 | M88 | Z | -.762 | -.762 | 0 | %100 |
| 73 | M89 | X | .336 | .336 | 0 | %100 |
| 74 | M89 | Z | -.194 | -.194 | 0 | %100 |
| 75 | M91 | X | .204 | .204 | 0 | %100 |
| 76 | M91 | Z | -.118 | -.118 | 0 | %100 |
| 77 | M92 | X | .204 | .204 | 0 | %100 |
| 78 | M92 | Z | -.118 | -.118 | 0 | %100 |
| 79 | MP1A | X | .523 | .523 | 0 | %100 |
| 80 | MP1A | Z | -.302 | -.302 | 0 | %100 |
| 81 | MP2A | X | .633 | .633 | 0 | %100 |
| 82 | MP2A | Z | -.365 | -.365 | 0 | %100 |
| 83 | MP3A | X | .523 | .523 | 0 | %100 |
| 84 | MP3A | Z | -.302 | -.302 | 0 | %100 |
| 85 | MP4A | X | .523 | .523 | 0 | %100 |
| 86 | MP4A | Z | -.302 | -.302 | 0 | %100 |
| 87 | MP1C | X | .523 | .523 | 0 | %100 |
| 88 | MP1C | Z | -.302 | -.302 | 0 | %100 |
| 89 | MP2C | X | .633 | .633 | 0 | %100 |
| 90 | MP2C | Z | -.365 | -.365 | 0 | %100 |

## Member Distributed Loads (BLC 67 : Structure Wm (60 Deg)) (Continued)

| | Member Label | Direction | Start Magnitude[lb/ft,... | End Magnitude[lb/ft,F... | Start Location[ft,%] | End Location[ft,%] |
|---|---|---|---|---|---|---|
| 91 | MP3C | X | .523 | .523 | 0 | %100 |
| 92 | MP3C | Z | -.302 | -.302 | 0 | %100 |
| 93 | MP4C | X | .523 | .523 | 0 | %100 |
| 94 | MP4C | Z | -.302 | -.302 | 0 | %100 |
| 95 | MP1B | X | .523 | .523 | 0 | %100 |
| 96 | MP1B | Z | -.302 | -.302 | 0 | %100 |
| 97 | MP2B | X | .633 | .633 | 0 | %100 |
| 98 | MP2B | Z | -.365 | -.365 | 0 | %100 |
| 99 | MP3B | X | .523 | .523 | 0 | %100 |
| 100 | MP3B | Z | -.302 | -.302 | 0 | %100 |
| 101 | MP4B | X | .523 | .523 | 0 | %100 |
| 102 | MP4B | Z | -.302 | -.302 | 0 | %100 |
| 103 | OVP | X | .427 | .427 | 0 | %100 |
| 104 | OVP | Z | -.247 | -.247 | 0 | %100 |
| 105 | M85A | X | .158 | .158 | 0 | %100 |
| 106 | M85A | Z | -.091 | -.091 | 0 | %100 |
| 107 | M92A | X | .633 | .633 | 0 | %100 |
| 108 | M92A | Z | -.365 | -.365 | 0 | %100 |
| 109 | M99 | X | .158 | .158 | 0 | %100 |
| 110 | M99 | Z | -.091 | -.091 | 0 | %100 |
| 111 | M102 | X | .851 | .851 | 0 | %100 |
| 112 | M102 | Z | -.491 | -.491 | 0 | %100 |
| 113 | M103 | X | .213 | .213 | 0 | %100 |
| 114 | M103 | Z | -.123 | -.123 | 0 | %100 |
| 115 | M104 | X | .213 | .213 | 0 | %100 |
| 116 | M104 | Z | -.123 | -.123 | 0 | %100 |
| 117 | M105 | X | .802 | .802 | 0 | %100 |
| 118 | M105 | Z | -.463 | -.463 | 0 | %100 |
| 119 | M106 | X | .555 | .555 | 0 | %100 |
| 120 | M106 | Z | -.32 | -.32 | 0 | %100 |
| 121 | M107 | X | .802 | .802 | 0 | %100 |
| 122 | M107 | Z | -.463 | -.463 | 0 | %100 |

## Member Distributed Loads (BLC 68 : Structure Wm (90 Deg))

| | Member Label | Direction | Start Magnitude[lb/ft,... | End Magnitude[lb/ft,F... | Start Location[ft,%] | End Location[ft,%] |
|---|---|---|---|---|---|---|
| 1 | M1 | X | .902 | .902 | 0 | %100 |
| 2 | M1 | Z | 0 | 0 | 0 | %100 |
| 3 | M4 | X | 0 | 0 | 0 | %100 |
| 4 | M4 | Z | 0 | 0 | 0 | %100 |
| 5 | M7 | X | 0 | 0 | 0 | %100 |
| 6 | M7 | Z | 0 | 0 | 0 | %100 |
| 7 | M15 | X | .667 | .667 | 0 | %100 |
| 8 | M15 | Z | 0 | 0 | 0 | %100 |
| 9 | M17 | X | 1.143 | 1.143 | 0 | %100 |
| 10 | M17 | Z | 0 | 0 | 0 | %100 |
| 11 | M20 | X | .667 | .667 | 0 | %100 |
| 12 | M20 | Z | 0 | 0 | 0 | %100 |
| 13 | M21 | X | 1.143 | 1.143 | 0 | %100 |
| 14 | M21 | Z | 0 | 0 | 0 | %100 |
| 15 | M29 | X | .59 | .59 | 0 | %100 |
| 16 | M29 | Z | 0 | 0 | 0 | %100 |

## Member Distributed Loads (BLC 68 : Structure Wm (90 Deg)) (Continued)

| | Member Label | Direction | Start Magnitude[lb/ft,... | End Magnitude[lb/ft,F... | Start Location[ft,%] | End Location[ft,%] |
|---|---|---|---|---|---|---|
| 17 | M30 | X | .59 | .59 | 0 | %100 |
| 18 | M30 | Z | 0 | 0 | 0 | %100 |
| 19 | M108A | X | 1.143 | 1.143 | 0 | %100 |
| 20 | M108A | Z | 0 | 0 | 0 | %100 |
| 21 | M109A | X | 0 | 0 | 0 | %100 |
| 22 | M109A | Z | 0 | 0 | 0 | %100 |
| 23 | M119 | X | 1.143 | 1.143 | 0 | %100 |
| 24 | M119 | Z | 0 | 0 | 0 | %100 |
| 25 | M120 | X | 0 | 0 | 0 | %100 |
| 26 | M120 | Z | 0 | 0 | 0 | %100 |
| 27 | M122 | X | 0 | 0 | 0 | %100 |
| 28 | M122 | Z | 0 | 0 | 0 | %100 |
| 29 | M125 | X | 0 | 0 | 0 | %100 |
| 30 | M125 | Z | 0 | 0 | 0 | %100 |
| 31 | M51 | X | .226 | .226 | 0 | %100 |
| 32 | M51 | Z | 0 | 0 | 0 | %100 |
| 33 | M52 | X | 1.143 | 1.143 | 0 | %100 |
| 34 | M52 | Z | 0 | 0 | 0 | %100 |
| 35 | M54 | X | 1.143 | 1.143 | 0 | %100 |
| 36 | M54 | Z | 0 | 0 | 0 | %100 |
| 37 | M55 | X | 0 | 0 | 0 | %100 |
| 38 | M55 | Z | 0 | 0 | 0 | %100 |
| 39 | M57A | X | .599 | .599 | 0 | %100 |
| 40 | M57A | Z | 0 | 0 | 0 | %100 |
| 41 | M58A | X | 4.1e-5 | 4.1e-5 | 0 | %100 |
| 42 | M58A | Z | 0 | 0 | 0 | %100 |
| 43 | M63 | X | 1.143 | 1.143 | 0 | %100 |
| 44 | M63 | Z | 0 | 0 | 0 | %100 |
| 45 | M64A | X | 1.165 | 1.165 | 0 | %100 |
| 46 | M64A | Z | 0 | 0 | 0 | %100 |
| 47 | M67 | X | 0 | 0 | 0 | %100 |
| 48 | M67 | Z | 0 | 0 | 0 | %100 |
| 49 | M68 | X | 1.165 | 1.165 | 0 | %100 |
| 50 | M68 | Z | 0 | 0 | 0 | %100 |
| 51 | M70A | X | .706 | .706 | 0 | %100 |
| 52 | M70A | Z | 0 | 0 | 0 | %100 |
| 53 | M71 | X | .706 | .706 | 0 | %100 |
| 54 | M71 | Z | 0 | 0 | 0 | %100 |
| 55 | M72A | X | .226 | .226 | 0 | %100 |
| 56 | M72A | Z | 0 | 0 | 0 | %100 |
| 57 | M73A | X | 1.143 | 1.143 | 0 | %100 |
| 58 | M73A | Z | 0 | 0 | 0 | %100 |
| 59 | M75A | X | 0 | 0 | 0 | %100 |
| 60 | M75A | Z | 0 | 0 | 0 | %100 |
| 61 | M76 | X | 1.143 | 1.143 | 0 | %100 |
| 62 | M76 | Z | 0 | 0 | 0 | %100 |
| 63 | M78A | X | 4.1e-5 | 4.1e-5 | 0 | %100 |
| 64 | M78A | Z | 0 | 0 | 0 | %100 |
| 65 | M79 | X | .599 | .599 | 0 | %100 |
| 66 | M79 | Z | 0 | 0 | 0 | %100 |
| 67 | M84 | X | 0 | 0 | 0 | %100 |
| 68 | M84 | Z | 0 | 0 | 0 | %100 |

## Member Distributed Loads (BLC 68 : Structure Wm (90 Deg)) (Continued)

| | Member Label | Direction | Start Magnitude[lb/ft,... | End Magnitude[lb/ft,F... | Start Location[ft,%] | End Location[ft,%] |
|---|---|---|---|---|---|---|
| 69 | M85 | X | 1.165 | 1.165 | 0 | %100 |
| 70 | M85 | Z | 0 | 0 | 0 | %100 |
| 71 | M88 | X | 1.143 | 1.143 | 0 | %100 |
| 72 | M88 | Z | 0 | 0 | 0 | %100 |
| 73 | M89 | X | 1.165 | 1.165 | 0 | %100 |
| 74 | M89 | Z | 0 | 0 | 0 | %100 |
| 75 | M91 | X | .706 | .706 | 0 | %100 |
| 76 | M91 | Z | 0 | 0 | 0 | %100 |
| 77 | M92 | X | .706 | .706 | 0 | %100 |
| 78 | M92 | Z | 0 | 0 | 0 | %100 |
| 79 | MP1A | X | .603 | .603 | 0 | %100 |
| 80 | MP1A | Z | 0 | 0 | 0 | %100 |
| 81 | MP2A | X | .73 | .73 | 0 | %100 |
| 82 | MP2A | Z | 0 | 0 | 0 | %100 |
| 83 | MP3A | X | .603 | .603 | 0 | %100 |
| 84 | MP3A | Z | 0 | 0 | 0 | %100 |
| 85 | MP4A | X | .603 | .603 | 0 | %100 |
| 86 | MP4A | Z | 0 | 0 | 0 | %100 |
| 87 | MP1C | X | .603 | .603 | 0 | %100 |
| 88 | MP1C | Z | 0 | 0 | 0 | %100 |
| 89 | MP2C | X | .73 | .73 | 0 | %100 |
| 90 | MP2C | Z | 0 | 0 | 0 | %100 |
| 91 | MP3C | X | .603 | .603 | 0 | %100 |
| 92 | MP3C | Z | 0 | 0 | 0 | %100 |
| 93 | MP4C | X | .603 | .603 | 0 | %100 |
| 94 | MP4C | Z | 0 | 0 | 0 | %100 |
| 95 | MP1B | X | .603 | .603 | 0 | %100 |
| 96 | MP1B | Z | 0 | 0 | 0 | %100 |
| 97 | MP2B | X | .73 | .73 | 0 | %100 |
| 98 | MP2B | Z | 0 | 0 | 0 | %100 |
| 99 | MP3B | X | .603 | .603 | 0 | %100 |
| 100 | MP3B | Z | 0 | 0 | 0 | %100 |
| 101 | MP4B | X | .603 | .603 | 0 | %100 |
| 102 | MP4B | Z | 0 | 0 | 0 | %100 |
| 103 | OVP | X | .493 | .493 | 0 | %100 |
| 104 | OVP | Z | 0 | 0 | 0 | %100 |
| 105 | M85A | X | 0 | 0 | 0 | %100 |
| 106 | M85A | Z | 0 | 0 | 0 | %100 |
| 107 | M92A | X | .548 | .548 | 0 | %100 |
| 108 | M92A | Z | 0 | 0 | 0 | %100 |
| 109 | M99 | X | .548 | .548 | 0 | %100 |
| 110 | M99 | Z | 0 | 0 | 0 | %100 |
| 111 | M102 | X | .737 | .737 | 0 | %100 |
| 112 | M102 | Z | 0 | 0 | 0 | %100 |
| 113 | M103 | X | .737 | .737 | 0 | %100 |
| 114 | M103 | Z | 0 | 0 | 0 | %100 |
| 115 | M104 | X | 0 | 0 | 0 | %100 |
| 116 | M104 | Z | 0 | 0 | 0 | %100 |
| 117 | M105 | X | 1.022 | 1.022 | 0 | %100 |
| 118 | M105 | Z | 0 | 0 | 0 | %100 |
| 119 | M106 | X | .736 | .736 | 0 | %100 |
| 120 | M106 | Z | 0 | 0 | 0 | %100 |

## Member Distributed Loads (BLC 68 : Structure Wm (90 Deg)) (Continued)

| | Member Label | Direction | Start Magnitude[lb/ft,... | End Magnitude[lb/ft,F... | Start Location[ft,%] | End Location[ft,%] |
|---|---|---|---|---|---|---|
| 121 | M107 | X | .736 | .736 | 0 | %100 |
| 122 | M107 | Z | 0 | 0 | 0 | %100 |

## Member Distributed Loads (BLC 69 : Structure Wm (120 Deg))

| | Member Label | Direction | Start Magnitude[lb/ft,... | End Magnitude[lb/ft,F... | Start Location[ft,%] | End Location[ft,%] |
|---|---|---|---|---|---|---|
| 1 | M1 | X | .586 | .586 | 0 | %100 |
| 2 | M1 | Z | .338 | .338 | 0 | %100 |
| 3 | M4 | X | .33 | .33 | 0 | %100 |
| 4 | M4 | Z | .191 | .191 | 0 | %100 |
| 5 | M7 | X | .193 | .193 | 0 | %100 |
| 6 | M7 | Z | .111 | .111 | 0 | %100 |
| 7 | M15 | X | .193 | .193 | 0 | %100 |
| 8 | M15 | Z | .111 | .111 | 0 | %100 |
| 9 | M17 | X | .33 | .33 | 0 | %100 |
| 10 | M17 | Z | .191 | .191 | 0 | %100 |
| 11 | M20 | X | .77 | .77 | 0 | %100 |
| 12 | M20 | Z | .445 | .445 | 0 | %100 |
| 13 | M21 | X | 1.32 | 1.32 | 0 | %100 |
| 14 | M21 | Z | .762 | .762 | 0 | %100 |
| 15 | M29 | X | .167 | .167 | 0 | %100 |
| 16 | M29 | Z | .097 | .097 | 0 | %100 |
| 17 | M30 | X | .687 | .687 | 0 | %100 |
| 18 | M30 | Z | .396 | .396 | 0 | %100 |
| 19 | M108A | X | .33 | .33 | 0 | %100 |
| 20 | M108A | Z | .191 | .191 | 0 | %100 |
| 21 | M109A | X | .336 | .336 | 0 | %100 |
| 22 | M109A | Z | .194 | .194 | 0 | %100 |
| 23 | M119 | X | 1.32 | 1.32 | 0 | %100 |
| 24 | M119 | Z | .762 | .762 | 0 | %100 |
| 25 | M120 | X | .336 | .336 | 0 | %100 |
| 26 | M120 | Z | .194 | .194 | 0 | %100 |
| 27 | M122 | X | .204 | .204 | 0 | %100 |
| 28 | M122 | Z | .118 | .118 | 0 | %100 |
| 29 | M125 | X | .204 | .204 | 0 | %100 |
| 30 | M125 | Z | .118 | .118 | 0 | %100 |
| 31 | M51 | X | .586 | .586 | 0 | %100 |
| 32 | M51 | Z | .338 | .338 | 0 | %100 |
| 33 | M52 | X | .33 | .33 | 0 | %100 |
| 34 | M52 | Z | .191 | .191 | 0 | %100 |
| 35 | M54 | X | 1.32 | 1.32 | 0 | %100 |
| 36 | M54 | Z | .762 | .762 | 0 | %100 |
| 37 | M55 | X | .33 | .33 | 0 | %100 |
| 38 | M55 | Z | .191 | .191 | 0 | %100 |
| 39 | M57A | X | .687 | .687 | 0 | %100 |
| 40 | M57A | Z | .396 | .396 | 0 | %100 |
| 41 | M58A | X | .167 | .167 | 0 | %100 |
| 42 | M58A | Z | .097 | .097 | 0 | %100 |
| 43 | M63 | X | 1.32 | 1.32 | 0 | %100 |
| 44 | M63 | Z | .762 | .762 | 0 | %100 |
| 45 | M64A | X | .336 | .336 | 0 | %100 |
| 46 | M64A | Z | .194 | .194 | 0 | %100 |

## Member Distributed Loads (BLC 69 : Structure Wm (120 Deg)) (Continued)

| | Member Label | Direction | Start Magnitude[lb/ft,... | End Magnitude[lb/ft,F... | Start Location[ft,%] | End Location[ft,%] |
|---|---|---|---|---|---|---|
| 47 | M67 | X | .33 | .33 | 0 | %100 |
| 48 | M67 | Z | .191 | .191 | 0 | %100 |
| 49 | M68 | X | .336 | .336 | 0 | %100 |
| 50 | M68 | Z | .194 | .194 | 0 | %100 |
| 51 | M70A | X | .204 | .204 | 0 | %100 |
| 52 | M70A | Z | .118 | .118 | 0 | %100 |
| 53 | M71 | X | .204 | .204 | 0 | %100 |
| 54 | M71 | Z | .118 | .118 | 0 | %100 |
| 55 | M72A | X | 0 | 0 | 0 | %100 |
| 56 | M72A | Z | 0 | 0 | 0 | %100 |
| 57 | M73A | X | 1.32 | 1.32 | 0 | %100 |
| 58 | M73A | Z | .762 | .762 | 0 | %100 |
| 59 | M75A | X | .33 | .33 | 0 | %100 |
| 60 | M75A | Z | .191 | .191 | 0 | %100 |
| 61 | M76 | X | .33 | .33 | 0 | %100 |
| 62 | M76 | Z | .191 | .191 | 0 | %100 |
| 63 | M78A | X | .176 | .176 | 0 | %100 |
| 64 | M78A | Z | .102 | .102 | 0 | %100 |
| 65 | M79 | X | .176 | .176 | 0 | %100 |
| 66 | M79 | Z | .102 | .102 | 0 | %100 |
| 67 | M84 | X | .33 | .33 | 0 | %100 |
| 68 | M84 | Z | .191 | .191 | 0 | %100 |
| 69 | M85 | X | 1.345 | 1.345 | 0 | %100 |
| 70 | M85 | Z | .776 | .776 | 0 | %100 |
| 71 | M88 | X | .33 | .33 | 0 | %100 |
| 72 | M88 | Z | .191 | .191 | 0 | %100 |
| 73 | M89 | X | 1.345 | 1.345 | 0 | %100 |
| 74 | M89 | Z | .776 | .776 | 0 | %100 |
| 75 | M91 | X | .816 | .816 | 0 | %100 |
| 76 | M91 | Z | .471 | .471 | 0 | %100 |
| 77 | M92 | X | .816 | .816 | 0 | %100 |
| 78 | M92 | Z | .471 | .471 | 0 | %100 |
| 79 | MP1A | X | .523 | .523 | 0 | %100 |
| 80 | MP1A | Z | .302 | .302 | 0 | %100 |
| 81 | MP2A | X | .633 | .633 | 0 | %100 |
| 82 | MP2A | Z | .365 | .365 | 0 | %100 |
| 83 | MP3A | X | .523 | .523 | 0 | %100 |
| 84 | MP3A | Z | .302 | .302 | 0 | %100 |
| 85 | MP4A | X | .523 | .523 | 0 | %100 |
| 86 | MP4A | Z | .302 | .302 | 0 | %100 |
| 87 | MP1C | X | .523 | .523 | 0 | %100 |
| 88 | MP1C | Z | .302 | .302 | 0 | %100 |
| 89 | MP2C | X | .633 | .633 | 0 | %100 |
| 90 | MP2C | Z | .365 | .365 | 0 | %100 |
| 91 | MP3C | X | .523 | .523 | 0 | %100 |
| 92 | MP3C | Z | .302 | .302 | 0 | %100 |
| 93 | MP4C | X | .523 | .523 | 0 | %100 |
| 94 | MP4C | Z | .302 | .302 | 0 | %100 |
| 95 | MP1B | X | .523 | .523 | 0 | %100 |
| 96 | MP1B | Z | .302 | .302 | 0 | %100 |
| 97 | MP2B | X | .633 | .633 | 0 | %100 |
| 98 | MP2B | Z | .365 | .365 | 0 | %100 |

## Member Distributed Loads (BLC 69 : Structure Wm (120 Deg)) (Continued)

| | Member Label | Direction | Start Magnitude[lb/ft,... | End Magnitude[lb/ft,F... | Start Location[ft,%] | End Location[ft,%] |
|---|---|---|---|---|---|---|
| 99 | MP3B | X | .523 | .523 | 0 | %100 |
| 100 | MP3B | Z | .302 | .302 | 0 | %100 |
| 101 | MP4B | X | .523 | .523 | 0 | %100 |
| 102 | MP4B | Z | .302 | .302 | 0 | %100 |
| 103 | OVP | X | .427 | .427 | 0 | %100 |
| 104 | OVP | Z | .247 | .247 | 0 | %100 |
| 105 | M85A | X | .158 | .158 | 0 | %100 |
| 106 | M85A | Z | .091 | .091 | 0 | %100 |
| 107 | M92A | X | .158 | .158 | 0 | %100 |
| 108 | M92A | Z | .091 | .091 | 0 | %100 |
| 109 | M99 | X | .633 | .633 | 0 | %100 |
| 110 | M99 | Z | .365 | .365 | 0 | %100 |
| 111 | M102 | X | .213 | .213 | 0 | %100 |
| 112 | M102 | Z | .123 | .123 | 0 | %100 |
| 113 | M103 | X | .851 | .851 | 0 | %100 |
| 114 | M103 | Z | .491 | .491 | 0 | %100 |
| 115 | M104 | X | .213 | .213 | 0 | %100 |
| 116 | M104 | Z | .123 | .123 | 0 | %100 |
| 117 | M105 | X | .802 | .802 | 0 | %100 |
| 118 | M105 | Z | .463 | .463 | 0 | %100 |
| 119 | M106 | X | .802 | .802 | 0 | %100 |
| 120 | M106 | Z | .463 | .463 | 0 | %100 |
| 121 | M107 | X | .555 | .555 | 0 | %100 |
| 122 | M107 | Z | .32 | .32 | 0 | %100 |

## Member Distributed Loads (BLC 70 : Structure Wm (150 Deg))

| | Member Label | Direction | Start Magnitude[lb/ft,... | End Magnitude[lb/ft,F... | Start Location[ft,%] | End Location[ft,%] |
|---|---|---|---|---|---|---|
| 1 | M1 | X | .113 | .113 | 0 | %100 |
| 2 | M1 | Z | .195 | .195 | 0 | %100 |
| 3 | M4 | X | .572 | .572 | 0 | %100 |
| 4 | M4 | Z | .99 | .99 | 0 | %100 |
| 5 | M7 | X | .333 | .333 | 0 | %100 |
| 6 | M7 | Z | .578 | .578 | 0 | %100 |
| 7 | M15 | X | 0 | 0 | 0 | %100 |
| 8 | M15 | Z | 0 | 0 | 0 | %100 |
| 9 | M17 | X | 0 | 0 | 0 | %100 |
| 10 | M17 | Z | 0 | 0 | 0 | %100 |
| 11 | M20 | X | .333 | .333 | 0 | %100 |
| 12 | M20 | Z | .578 | .578 | 0 | %100 |
| 13 | M21 | X | .572 | .572 | 0 | %100 |
| 14 | M21 | Z | .99 | .99 | 0 | %100 |
| 15 | M29 | X | 2e-5 | 2e-5 | 0 | %100 |
| 16 | M29 | Z | 3.5e-5 | 3.5e-5 | 0 | %100 |
| 17 | M30 | X | .3 | .3 | 0 | %100 |
| 18 | M30 | Z | .519 | .519 | 0 | %100 |
| 19 | M108A | X | 0 | 0 | 0 | %100 |
| 20 | M108A | Z | 0 | 0 | 0 | %100 |
| 21 | M109A | X | .582 | .582 | 0 | %100 |
| 22 | M109A | Z | 1.009 | 1.009 | 0 | %100 |
| 23 | M119 | X | .572 | .572 | 0 | %100 |
| 24 | M119 | Z | .99 | .99 | 0 | %100 |

## Member Distributed Loads (BLC 70 : Structure Wm (150 Deg)) (Continued)

| | Member Label | Direction | Start Magnitude[lb/ft,... | End Magnitude[lb/ft,F... | Start Location[ft,%] | End Location[ft,%] |
|---|---|---|---|---|---|---|
| 25 | M120 | X | .582 | .582 | 0 | %100 |
| 26 | M120 | Z | 1.009 | 1.009 | 0 | %100 |
| 27 | M122 | X | .353 | .353 | 0 | %100 |
| 28 | M122 | Z | .612 | .612 | 0 | %100 |
| 29 | M125 | X | .353 | .353 | 0 | %100 |
| 30 | M125 | Z | .612 | .612 | 0 | %100 |
| 31 | M51 | X | .451 | .451 | 0 | %100 |
| 32 | M51 | Z | .781 | .781 | 0 | %100 |
| 33 | M52 | X | 0 | 0 | 0 | %100 |
| 34 | M52 | Z | 0 | 0 | 0 | %100 |
| 35 | M54 | X | .572 | .572 | 0 | %100 |
| 36 | M54 | Z | .99 | .99 | 0 | %100 |
| 37 | M55 | X | .572 | .572 | 0 | %100 |
| 38 | M55 | Z | .99 | .99 | 0 | %100 |
| 39 | M57A | X | .295 | .295 | 0 | %100 |
| 40 | M57A | Z | .511 | .511 | 0 | %100 |
| 41 | M58A | X | .295 | .295 | 0 | %100 |
| 42 | M58A | Z | .511 | .511 | 0 | %100 |
| 43 | M63 | X | .572 | .572 | 0 | %100 |
| 44 | M63 | Z | .99 | .99 | 0 | %100 |
| 45 | M64A | X | 0 | 0 | 0 | %100 |
| 46 | M64A | Z | 0 | 0 | 0 | %100 |
| 47 | M67 | X | .572 | .572 | 0 | %100 |
| 48 | M67 | Z | .99 | .99 | 0 | %100 |
| 49 | M68 | X | 0 | 0 | 0 | %100 |
| 50 | M68 | Z | 0 | 0 | 0 | %100 |
| 51 | M70A | X | 0 | 0 | 0 | %100 |
| 52 | M70A | Z | 0 | 0 | 0 | %100 |
| 53 | M71 | X | 0 | 0 | 0 | %100 |
| 54 | M71 | Z | 0 | 0 | 0 | %100 |
| 55 | M72A | X | .113 | .113 | 0 | %100 |
| 56 | M72A | Z | .195 | .195 | 0 | %100 |
| 57 | M73A | X | .572 | .572 | 0 | %100 |
| 58 | M73A | Z | .99 | .99 | 0 | %100 |
| 59 | M75A | X | .572 | .572 | 0 | %100 |
| 60 | M75A | Z | .99 | .99 | 0 | %100 |
| 61 | M76 | X | 0 | 0 | 0 | %100 |
| 62 | M76 | Z | 0 | 0 | 0 | %100 |
| 63 | M78A | X | .3 | .3 | 0 | %100 |
| 64 | M78A | Z | .519 | .519 | 0 | %100 |
| 65 | M79 | X | 2e-5 | 2e-5 | 0 | %100 |
| 66 | M79 | Z | 3.5e-5 | 3.5e-5 | 0 | %100 |
| 67 | M84 | X | .572 | .572 | 0 | %100 |
| 68 | M84 | Z | .99 | .99 | 0 | %100 |
| 69 | M85 | X | .582 | .582 | 0 | %100 |
| 70 | M85 | Z | 1.009 | 1.009 | 0 | %100 |
| 71 | M88 | X | 0 | 0 | 0 | %100 |
| 72 | M88 | Z | 0 | 0 | 0 | %100 |
| 73 | M89 | X | .582 | .582 | 0 | %100 |
| 74 | M89 | Z | 1.009 | 1.009 | 0 | %100 |
| 75 | M91 | X | .353 | .353 | 0 | %100 |
| 76 | M91 | Z | .612 | .612 | 0 | %100 |

## Member Distributed Loads (BLC 70 : Structure Wm (150 Deg)) (Continued)

| | Member Label | Direction | Start Magnitude[lb/ft,... | End Magnitude[lb/ft,F... | Start Location[ft,%] | End Location[ft,%] |
|---|---|---|---|---|---|---|
| 77 | M92 | X | .353 | .353 | 0 | %100 |
| 78 | M92 | Z | .612 | .612 | 0 | %100 |
| 79 | MP1A | X | .302 | .302 | 0 | %100 |
| 80 | MP1A | Z | .523 | .523 | 0 | %100 |
| 81 | MP2A | X | .365 | .365 | 0 | %100 |
| 82 | MP2A | Z | .633 | .633 | 0 | %100 |
| 83 | MP3A | X | .302 | .302 | 0 | %100 |
| 84 | MP3A | Z | .523 | .523 | 0 | %100 |
| 85 | MP4A | X | .302 | .302 | 0 | %100 |
| 86 | MP4A | Z | .523 | .523 | 0 | %100 |
| 87 | MP1C | X | .302 | .302 | 0 | %100 |
| 88 | MP1C | Z | .523 | .523 | 0 | %100 |
| 89 | MP2C | X | .365 | .365 | 0 | %100 |
| 90 | MP2C | Z | .633 | .633 | 0 | %100 |
| 91 | MP3C | X | .302 | .302 | 0 | %100 |
| 92 | MP3C | Z | .523 | .523 | 0 | %100 |
| 93 | MP4C | X | .302 | .302 | 0 | %100 |
| 94 | MP4C | Z | .523 | .523 | 0 | %100 |
| 95 | MP1B | X | .302 | .302 | 0 | %100 |
| 96 | MP1B | Z | .523 | .523 | 0 | %100 |
| 97 | MP2B | X | .365 | .365 | 0 | %100 |
| 98 | MP2B | Z | .633 | .633 | 0 | %100 |
| 99 | MP3B | X | .302 | .302 | 0 | %100 |
| 100 | MP3B | Z | .523 | .523 | 0 | %100 |
| 101 | MP4B | X | .302 | .302 | 0 | %100 |
| 102 | MP4B | Z | .523 | .523 | 0 | %100 |
| 103 | OVP | X | .247 | .247 | 0 | %100 |
| 104 | OVP | Z | .427 | .427 | 0 | %100 |
| 105 | M85A | X | .274 | .274 | 0 | %100 |
| 106 | M85A | Z | .474 | .474 | 0 | %100 |
| 107 | M92A | X | 0 | 0 | 0 | %100 |
| 108 | M92A | Z | 0 | 0 | 0 | %100 |
| 109 | M99 | X | .274 | .274 | 0 | %100 |
| 110 | M99 | Z | .474 | .474 | 0 | %100 |
| 111 | M102 | X | 0 | 0 | 0 | %100 |
| 112 | M102 | Z | 0 | 0 | 0 | %100 |
| 113 | M103 | X | .368 | .368 | 0 | %100 |
| 114 | M103 | Z | .638 | .638 | 0 | %100 |
| 115 | M104 | X | .368 | .368 | 0 | %100 |
| 116 | M104 | Z | .638 | .638 | 0 | %100 |
| 117 | M105 | X | .368 | .368 | 0 | %100 |
| 118 | M105 | Z | .637 | .637 | 0 | %100 |
| 119 | M106 | X | .511 | .511 | 0 | %100 |
| 120 | M106 | Z | .885 | .885 | 0 | %100 |
| 121 | M107 | X | .368 | .368 | 0 | %100 |
| 122 | M107 | Z | .637 | .637 | 0 | %100 |

## Member Distributed Loads (BLC 71 : Structure Wm (180 Deg))

| | Member Label | Direction | Start Magnitude[lb/ft,... | End Magnitude[lb/ft,F... | Start Location[ft,%] | End Location[ft,%] |
|---|---|---|---|---|---|---|
| 1 | M1 | X | 0 | 0 | 0 | %100 |
| 2 | M1 | Z | 0 | 0 | 0 | %100 |

## Member Distributed Loads (BLC 71 : Structure Wm (180 Deg)) (Continued)

| | Member Label | Direction | Start Magnitude[lb/ft,... | End Magnitude[lb/ft,F... | Start Location[ft,%] | End Location[ft,%] |
|---|---|---|---|---|---|---|
| 3 | M4 | X | 0 | 0 | 0 | %100 |
| 4 | M4 | Z | 1.525 | 1.525 | 0 | %100 |
| 5 | M7 | X | 0 | 0 | 0 | %100 |
| 6 | M7 | Z | .889 | .889 | 0 | %100 |
| 7 | M15 | X | 0 | 0 | 0 | %100 |
| 8 | M15 | Z | .222 | .222 | 0 | %100 |
| 9 | M17 | X | 0 | 0 | 0 | %100 |
| 10 | M17 | Z | .381 | .381 | 0 | %100 |
| 11 | M20 | X | 0 | 0 | 0 | %100 |
| 12 | M20 | Z | .222 | .222 | 0 | %100 |
| 13 | M21 | X | 0 | 0 | 0 | %100 |
| 14 | M21 | Z | .381 | .381 | 0 | %100 |
| 15 | M29 | X | 0 | 0 | 0 | %100 |
| 16 | M29 | Z | .203 | .203 | 0 | %100 |
| 17 | M30 | X | 0 | 0 | 0 | %100 |
| 18 | M30 | Z | .203 | .203 | 0 | %100 |
| 19 | M108A | X | 0 | 0 | 0 | %100 |
| 20 | M108A | Z | .381 | .381 | 0 | %100 |
| 21 | M109A | X | 0 | 0 | 0 | %100 |
| 22 | M109A | Z | 1.553 | 1.553 | 0 | %100 |
| 23 | M119 | X | 0 | 0 | 0 | %100 |
| 24 | M119 | Z | .381 | .381 | 0 | %100 |
| 25 | M120 | X | 0 | 0 | 0 | %100 |
| 26 | M120 | Z | 1.553 | 1.553 | 0 | %100 |
| 27 | M122 | X | 0 | 0 | 0 | %100 |
| 28 | M122 | Z | .942 | .942 | 0 | %100 |
| 29 | M125 | X | 0 | 0 | 0 | %100 |
| 30 | M125 | Z | .942 | .942 | 0 | %100 |
| 31 | M51 | X | 0 | 0 | 0 | %100 |
| 32 | M51 | Z | .677 | .677 | 0 | %100 |
| 33 | M52 | X | 0 | 0 | 0 | %100 |
| 34 | M52 | Z | .381 | .381 | 0 | %100 |
| 35 | M54 | X | 0 | 0 | 0 | %100 |
| 36 | M54 | Z | .381 | .381 | 0 | %100 |
| 37 | M55 | X | 0 | 0 | 0 | %100 |
| 38 | M55 | Z | 1.525 | 1.525 | 0 | %100 |
| 39 | M57A | X | 0 | 0 | 0 | %100 |
| 40 | M57A | Z | .193 | .193 | 0 | %100 |
| 41 | M58A | X | 0 | 0 | 0 | %100 |
| 42 | M58A | Z | .793 | .793 | 0 | %100 |
| 43 | M63 | X | 0 | 0 | 0 | %100 |
| 44 | M63 | Z | .381 | .381 | 0 | %100 |
| 45 | M64A | X | 0 | 0 | 0 | %100 |
| 46 | M64A | Z | .388 | .388 | 0 | %100 |
| 47 | M67 | X | 0 | 0 | 0 | %100 |
| 48 | M67 | Z | 1.525 | 1.525 | 0 | %100 |
| 49 | M68 | X | 0 | 0 | 0 | %100 |
| 50 | M68 | Z | .388 | .388 | 0 | %100 |
| 51 | M70A | X | 0 | 0 | 0 | %100 |
| 52 | M70A | Z | .235 | .235 | 0 | %100 |
| 53 | M71 | X | 0 | 0 | 0 | %100 |
| 54 | M71 | Z | .235 | .235 | 0 | %100 |

## Member Distributed Loads (BLC 71 : Structure Wm (180 Deg)) (Continued)

| | Member Label | Direction | Start Magnitude[lb/ft,... | End Magnitude[lb/ft,F... | Start Location[ft,%] | End Location[ft,%] |
|---|---|---|---|---|---|---|
| 55 | M72A | X | 0 | 0 | 0 | %100 |
| 56 | M72A | Z | .677 | .677 | 0 | %100 |
| 57 | M73A | X | 0 | 0 | 0 | %100 |
| 58 | M73A | Z | .381 | .381 | 0 | %100 |
| 59 | M75A | X | 0 | 0 | 0 | %100 |
| 60 | M75A | Z | 1.525 | 1.525 | 0 | %100 |
| 61 | M76 | X | 0 | 0 | 0 | %100 |
| 62 | M76 | Z | .381 | .381 | 0 | %100 |
| 63 | M78A | X | 0 | 0 | 0 | %100 |
| 64 | M78A | Z | .793 | .793 | 0 | %100 |
| 65 | M79 | X | 0 | 0 | 0 | %100 |
| 66 | M79 | Z | .193 | .193 | 0 | %100 |
| 67 | M84 | X | 0 | 0 | 0 | %100 |
| 68 | M84 | Z | 1.525 | 1.525 | 0 | %100 |
| 69 | M85 | X | 0 | 0 | 0 | %100 |
| 70 | M85 | Z | .388 | .388 | 0 | %100 |
| 71 | M88 | X | 0 | 0 | 0 | %100 |
| 72 | M88 | Z | .381 | .381 | 0 | %100 |
| 73 | M89 | X | 0 | 0 | 0 | %100 |
| 74 | M89 | Z | .388 | .388 | 0 | %100 |
| 75 | M91 | X | 0 | 0 | 0 | %100 |
| 76 | M91 | Z | .235 | .235 | 0 | %100 |
| 77 | M92 | X | 0 | 0 | 0 | %100 |
| 78 | M92 | Z | .235 | .235 | 0 | %100 |
| 79 | MP1A | X | 0 | 0 | 0 | %100 |
| 80 | MP1A | Z | .603 | .603 | 0 | %100 |
| 81 | MP2A | X | 0 | 0 | 0 | %100 |
| 82 | MP2A | Z | .73 | .73 | 0 | %100 |
| 83 | MP3A | X | 0 | 0 | 0 | %100 |
| 84 | MP3A | Z | .603 | .603 | 0 | %100 |
| 85 | MP4A | X | 0 | 0 | 0 | %100 |
| 86 | MP4A | Z | .603 | .603 | 0 | %100 |
| 87 | MP1C | X | 0 | 0 | 0 | %100 |
| 88 | MP1C | Z | .603 | .603 | 0 | %100 |
| 89 | MP2C | X | 0 | 0 | 0 | %100 |
| 90 | MP2C | Z | .73 | .73 | 0 | %100 |
| 91 | MP3C | X | 0 | 0 | 0 | %100 |
| 92 | MP3C | Z | .603 | .603 | 0 | %100 |
| 93 | MP4C | X | 0 | 0 | 0 | %100 |
| 94 | MP4C | Z | .603 | .603 | 0 | %100 |
| 95 | MP1B | X | 0 | 0 | 0 | %100 |
| 96 | MP1B | Z | .603 | .603 | 0 | %100 |
| 97 | MP2B | X | 0 | 0 | 0 | %100 |
| 98 | MP2B | Z | .73 | .73 | 0 | %100 |
| 99 | MP3B | X | 0 | 0 | 0 | %100 |
| 100 | MP3B | Z | .603 | .603 | 0 | %100 |
| 101 | MP4B | X | 0 | 0 | 0 | %100 |
| 102 | MP4B | Z | .603 | .603 | 0 | %100 |
| 103 | OVP | X | 0 | 0 | 0 | %100 |
| 104 | OVP | Z | .493 | .493 | 0 | %100 |
| 105 | M85A | X | 0 | 0 | 0 | %100 |
| 106 | M85A | Z | .73 | .73 | 0 | %100 |

## Member Distributed Loads (BLC 71 : Structure Wm (180 Deg)) (Continued)

| | Member Label | Direction | Start Magnitude[lb/ft,... | End Magnitude[lb/ft,F... | Start Location[ft,%] | End Location[ft,%] |
|---|---|---|---|---|---|---|
| 107 | M92A | X | 0 | 0 | 0 | %100 |
| 108 | M92A | Z | .183 | .183 | 0 | %100 |
| 109 | M99 | X | 0 | 0 | 0 | %100 |
| 110 | M99 | Z | .183 | .183 | 0 | %100 |
| 111 | M102 | X | 0 | 0 | 0 | %100 |
| 112 | M102 | Z | .246 | .246 | 0 | %100 |
| 113 | M103 | X | 0 | 0 | 0 | %100 |
| 114 | M103 | Z | .246 | .246 | 0 | %100 |
| 115 | M104 | X | 0 | 0 | 0 | %100 |
| 116 | M104 | Z | .983 | .983 | 0 | %100 |
| 117 | M105 | X | 0 | 0 | 0 | %100 |
| 118 | M105 | Z | .641 | .641 | 0 | %100 |
| 119 | M106 | X | 0 | 0 | 0 | %100 |
| 120 | M106 | Z | .926 | .926 | 0 | %100 |
| 121 | M107 | X | 0 | 0 | 0 | %100 |
| 122 | M107 | Z | .926 | .926 | 0 | %100 |

## Member Distributed Loads (BLC 72 : Structure Wm (210 Deg))

| | Member Label | Direction | Start Magnitude[lb/ft,... | End Magnitude[lb/ft,F... | Start Location[ft,%] | End Location[ft,%] |
|---|---|---|---|---|---|---|
| 1 | M1 | X | -.113 | -.113 | 0 | %100 |
| 2 | M1 | Z | .195 | .195 | 0 | %100 |
| 3 | M4 | X | -.572 | -.572 | 0 | %100 |
| 4 | M4 | Z | .99 | .99 | 0 | %100 |
| 5 | M7 | X | -.333 | -.333 | 0 | %100 |
| 6 | M7 | Z | .578 | .578 | 0 | %100 |
| 7 | M15 | X | -.333 | -.333 | 0 | %100 |
| 8 | M15 | Z | .578 | .578 | 0 | %100 |
| 9 | M17 | X | -.572 | -.572 | 0 | %100 |
| 10 | M17 | Z | .99 | .99 | 0 | %100 |
| 11 | M20 | X | 0 | 0 | 0 | %100 |
| 12 | M20 | Z | 0 | 0 | 0 | %100 |
| 13 | M21 | X | 0 | 0 | 0 | %100 |
| 14 | M21 | Z | 0 | 0 | 0 | %100 |
| 15 | M29 | X | -.3 | -.3 | 0 | %100 |
| 16 | M29 | Z | .519 | .519 | 0 | %100 |
| 17 | M30 | X | -2e-5 | -2e-5 | 0 | %100 |
| 18 | M30 | Z | 3.5e-5 | 3.5e-5 | 0 | %100 |
| 19 | M108A | X | -.572 | -.572 | 0 | %100 |
| 20 | M108A | Z | .99 | .99 | 0 | %100 |
| 21 | M109A | X | -.582 | -.582 | 0 | %100 |
| 22 | M109A | Z | 1.009 | 1.009 | 0 | %100 |
| 23 | M119 | X | 0 | 0 | 0 | %100 |
| 24 | M119 | Z | 0 | 0 | 0 | %100 |
| 25 | M120 | X | -.582 | -.582 | 0 | %100 |
| 26 | M120 | Z | 1.009 | 1.009 | 0 | %100 |
| 27 | M122 | X | -.353 | -.353 | 0 | %100 |
| 28 | M122 | Z | .612 | .612 | 0 | %100 |
| 29 | M125 | X | -.353 | -.353 | 0 | %100 |
| 30 | M125 | Z | .612 | .612 | 0 | %100 |
| 31 | M51 | X | -.113 | -.113 | 0 | %100 |
| 32 | M51 | Z | .195 | .195 | 0 | %100 |

## Member Distributed Loads (BLC 72 : Structure Wm (210 Deg)) (Continued)

| | Member Label | Direction | Start Magnitude[lb/ft,... | End Magnitude[lb/ft,F... | Start Location[ft,%] | End Location[ft,%] |
|---|---|---|---|---|---|---|
| 33 | M52 | X | -.572 | -.572 | 0 | %100 |
| 34 | M52 | Z | .99 | .99 | 0 | %100 |
| 35 | M54 | X | 0 | 0 | 0 | %100 |
| 36 | M54 | Z | 0 | 0 | 0 | %100 |
| 37 | M55 | X | -.572 | -.572 | 0 | %100 |
| 38 | M55 | Z | .99 | .99 | 0 | %100 |
| 39 | M57A | X | -2e-5 | -2e-5 | 0 | %100 |
| 40 | M57A | Z | 3.5e-5 | 3.5e-5 | 0 | %100 |
| 41 | M58A | X | -.3 | -.3 | 0 | %100 |
| 42 | M58A | Z | .519 | .519 | 0 | %100 |
| 43 | M63 | X | 0 | 0 | 0 | %100 |
| 44 | M63 | Z | 0 | 0 | 0 | %100 |
| 45 | M64A | X | -.582 | -.582 | 0 | %100 |
| 46 | M64A | Z | 1.009 | 1.009 | 0 | %100 |
| 47 | M67 | X | -.572 | -.572 | 0 | %100 |
| 48 | M67 | Z | .99 | .99 | 0 | %100 |
| 49 | M68 | X | -.582 | -.582 | 0 | %100 |
| 50 | M68 | Z | 1.009 | 1.009 | 0 | %100 |
| 51 | M70A | X | -.353 | -.353 | 0 | %100 |
| 52 | M70A | Z | .612 | .612 | 0 | %100 |
| 53 | M71 | X | -.353 | -.353 | 0 | %100 |
| 54 | M71 | Z | .612 | .612 | 0 | %100 |
| 55 | M72A | X | -.451 | -.451 | 0 | %100 |
| 56 | M72A | Z | .781 | .781 | 0 | %100 |
| 57 | M73A | X | 0 | 0 | 0 | %100 |
| 58 | M73A | Z | 0 | 0 | 0 | %100 |
| 59 | M75A | X | -.572 | -.572 | 0 | %100 |
| 60 | M75A | Z | .99 | .99 | 0 | %100 |
| 61 | M76 | X | -.572 | -.572 | 0 | %100 |
| 62 | M76 | Z | .99 | .99 | 0 | %100 |
| 63 | M78A | X | -.295 | -.295 | 0 | %100 |
| 64 | M78A | Z | .511 | .511 | 0 | %100 |
| 65 | M79 | X | -.295 | -.295 | 0 | %100 |
| 66 | M79 | Z | .511 | .511 | 0 | %100 |
| 67 | M84 | X | -.572 | -.572 | 0 | %100 |
| 68 | M84 | Z | .99 | .99 | 0 | %100 |
| 69 | M85 | X | 0 | 0 | 0 | %100 |
| 70 | M85 | Z | 0 | 0 | 0 | %100 |
| 71 | M88 | X | -.572 | -.572 | 0 | %100 |
| 72 | M88 | Z | .99 | .99 | 0 | %100 |
| 73 | M89 | X | 0 | 0 | 0 | %100 |
| 74 | M89 | Z | 0 | 0 | 0 | %100 |
| 75 | M91 | X | 0 | 0 | 0 | %100 |
| 76 | M91 | Z | 0 | 0 | 0 | %100 |
| 77 | M92 | X | 0 | 0 | 0 | %100 |
| 78 | M92 | Z | 0 | 0 | 0 | %100 |
| 79 | MP1A | X | -.302 | -.302 | 0 | %100 |
| 80 | MP1A | Z | .523 | .523 | 0 | %100 |
| 81 | MP2A | X | -.365 | -.365 | 0 | %100 |
| 82 | MP2A | Z | .633 | .633 | 0 | %100 |
| 83 | MP3A | X | -.302 | -.302 | 0 | %100 |
| 84 | MP3A | Z | .523 | .523 | 0 | %100 |

## Member Distributed Loads (BLC 72 : Structure Wm (210 Deg)) (Continued)

| | Member Label | Direction | Start Magnitude[lb/ft,... | End Magnitude[lb/ft,F... | Start Location[ft,%] | End Location[ft,%] |
|---|---|---|---|---|---|---|
| 85 | MP4A | X | -.302 | -.302 | 0 | %100 |
| 86 | MP4A | Z | .523 | .523 | 0 | %100 |
| 87 | MP1C | X | -.302 | -.302 | 0 | %100 |
| 88 | MP1C | Z | .523 | .523 | 0 | %100 |
| 89 | MP2C | X | -.365 | -.365 | 0 | %100 |
| 90 | MP2C | Z | .633 | .633 | 0 | %100 |
| 91 | MP3C | X | -.302 | -.302 | 0 | %100 |
| 92 | MP3C | Z | .523 | .523 | 0 | %100 |
| 93 | MP4C | X | -.302 | -.302 | 0 | %100 |
| 94 | MP4C | Z | .523 | .523 | 0 | %100 |
| 95 | MP1B | X | -.302 | -.302 | 0 | %100 |
| 96 | MP1B | Z | .523 | .523 | 0 | %100 |
| 97 | MP2B | X | -.365 | -.365 | 0 | %100 |
| 98 | MP2B | Z | .633 | .633 | 0 | %100 |
| 99 | MP3B | X | -.302 | -.302 | 0 | %100 |
| 100 | MP3B | Z | .523 | .523 | 0 | %100 |
| 101 | MP4B | X | -.302 | -.302 | 0 | %100 |
| 102 | MP4B | Z | .523 | .523 | 0 | %100 |
| 103 | OVP | X | -.247 | -.247 | 0 | %100 |
| 104 | OVP | Z | .427 | .427 | 0 | %100 |
| 105 | M85A | X | -.274 | -.274 | 0 | %100 |
| 106 | M85A | Z | .474 | .474 | 0 | %100 |
| 107 | M92A | X | -.274 | -.274 | 0 | %100 |
| 108 | M92A | Z | .474 | .474 | 0 | %100 |
| 109 | M99 | X | 0 | 0 | 0 | %100 |
| 110 | M99 | Z | 0 | 0 | 0 | %100 |
| 111 | M102 | X | -.368 | -.368 | 0 | %100 |
| 112 | M102 | Z | .638 | .638 | 0 | %100 |
| 113 | M103 | X | 0 | 0 | 0 | %100 |
| 114 | M103 | Z | 0 | 0 | 0 | %100 |
| 115 | M104 | X | -.368 | -.368 | 0 | %100 |
| 116 | M104 | Z | .638 | .638 | 0 | %100 |
| 117 | M105 | X | -.368 | -.368 | 0 | %100 |
| 118 | M105 | Z | .637 | .637 | 0 | %100 |
| 119 | M106 | X | -.368 | -.368 | 0 | %100 |
| 120 | M106 | Z | .637 | .637 | 0 | %100 |
| 121 | M107 | X | -.511 | -.511 | 0 | %100 |
| 122 | M107 | Z | .885 | .885 | 0 | %100 |

## Member Distributed Loads (BLC 73 : Structure Wm (240 Deg))

| | Member Label | Direction | Start Magnitude[lb/ft,... | End Magnitude[lb/ft,F... | Start Location[ft,%] | End Location[ft,%] |
|---|---|---|---|---|---|---|
| 1 | M1 | X | -.586 | -.586 | 0 | %100 |
| 2 | M1 | Z | .338 | .338 | 0 | %100 |
| 3 | M4 | X | -.33 | -.33 | 0 | %100 |
| 4 | M4 | Z | .191 | .191 | 0 | %100 |
| 5 | M7 | X | -.193 | -.193 | 0 | %100 |
| 6 | M7 | Z | .111 | .111 | 0 | %100 |
| 7 | M15 | X | -.77 | -.77 | 0 | %100 |
| 8 | M15 | Z | .445 | .445 | 0 | %100 |
| 9 | M17 | X | -1.32 | -1.32 | 0 | %100 |
| 10 | M17 | Z | .762 | .762 | 0 | %100 |

## Member Distributed Loads (BLC 73 : Structure Wm (240 Deg)) (Continued)

| | Member Label | Direction | Start Magnitude[lb/ft,... | End Magnitude[lb/ft,F... | Start Location[ft,%] | End Location[ft,%] |
|---|---|---|---|---|---|---|
| 11 | M20 | X | -.193 | -.193 | 0 | %100 |
| 12 | M20 | Z | .111 | .111 | 0 | %100 |
| 13 | M21 | X | -.33 | -.33 | 0 | %100 |
| 14 | M21 | Z | .191 | .191 | 0 | %100 |
| 15 | M29 | X | -.687 | -.687 | 0 | %100 |
| 16 | M29 | Z | .396 | .396 | 0 | %100 |
| 17 | M30 | X | -.167 | -.167 | 0 | %100 |
| 18 | M30 | Z | .097 | .097 | 0 | %100 |
| 19 | M108A | X | -1.32 | -1.32 | 0 | %100 |
| 20 | M108A | Z | .762 | .762 | 0 | %100 |
| 21 | M109A | X | -.336 | -.336 | 0 | %100 |
| 22 | M109A | Z | .194 | .194 | 0 | %100 |
| 23 | M119 | X | -.33 | -.33 | 0 | %100 |
| 24 | M119 | Z | .191 | .191 | 0 | %100 |
| 25 | M120 | X | -.336 | -.336 | 0 | %100 |
| 26 | M120 | Z | .194 | .194 | 0 | %100 |
| 27 | M122 | X | -.204 | -.204 | 0 | %100 |
| 28 | M122 | Z | .118 | .118 | 0 | %100 |
| 29 | M125 | X | -.204 | -.204 | 0 | %100 |
| 30 | M125 | Z | .118 | .118 | 0 | %100 |
| 31 | M51 | X | 0 | 0 | 0 | %100 |
| 32 | M51 | Z | 0 | 0 | 0 | %100 |
| 33 | M52 | X | -1.32 | -1.32 | 0 | %100 |
| 34 | M52 | Z | .762 | .762 | 0 | %100 |
| 35 | M54 | X | -.33 | -.33 | 0 | %100 |
| 36 | M54 | Z | .191 | .191 | 0 | %100 |
| 37 | M55 | X | -.33 | -.33 | 0 | %100 |
| 38 | M55 | Z | .191 | .191 | 0 | %100 |
| 39 | M57A | X | -.176 | -.176 | 0 | %100 |
| 40 | M57A | Z | .102 | .102 | 0 | %100 |
| 41 | M58A | X | -.176 | -.176 | 0 | %100 |
| 42 | M58A | Z | .102 | .102 | 0 | %100 |
| 43 | M63 | X | -.33 | -.33 | 0 | %100 |
| 44 | M63 | Z | .191 | .191 | 0 | %100 |
| 45 | M64A | X | -1.345 | -1.345 | 0 | %100 |
| 46 | M64A | Z | .776 | .776 | 0 | %100 |
| 47 | M67 | X | -.33 | -.33 | 0 | %100 |
| 48 | M67 | Z | .191 | .191 | 0 | %100 |
| 49 | M68 | X | -1.345 | -1.345 | 0 | %100 |
| 50 | M68 | Z | .776 | .776 | 0 | %100 |
| 51 | M70A | X | -.816 | -.816 | 0 | %100 |
| 52 | M70A | Z | .471 | .471 | 0 | %100 |
| 53 | M71 | X | -.816 | -.816 | 0 | %100 |
| 54 | M71 | Z | .471 | .471 | 0 | %100 |
| 55 | M72A | X | -.586 | -.586 | 0 | %100 |
| 56 | M72A | Z | .338 | .338 | 0 | %100 |
| 57 | M73A | X | -.33 | -.33 | 0 | %100 |
| 58 | M73A | Z | .191 | .191 | 0 | %100 |
| 59 | M75A | X | -.33 | -.33 | 0 | %100 |
| 60 | M75A | Z | .191 | .191 | 0 | %100 |
| 61 | M76 | X | -1.32 | -1.32 | 0 | %100 |
| 62 | M76 | Z | .762 | .762 | 0 | %100 |

## Member Distributed Loads (BLC 73 : Structure Wm (240 Deg)) (Continued)

| | Member Label | Direction | Start Magnitude[lb/ft,... | End Magnitude[lb/ft,F... | Start Location[ft,%] | End Location[ft,%] |
|---|---|---|---|---|---|---|
| 63 | M78A | X | -.167 | -.167 | 0 | %100 |
| 64 | M78A | Z | .097 | .097 | 0 | %100 |
| 65 | M79 | X | -.687 | -.687 | 0 | %100 |
| 66 | M79 | Z | .396 | .396 | 0 | %100 |
| 67 | M84 | X | -.33 | -.33 | 0 | %100 |
| 68 | M84 | Z | .191 | .191 | 0 | %100 |
| 69 | M85 | X | -.336 | -.336 | 0 | %100 |
| 70 | M85 | Z | .194 | .194 | 0 | %100 |
| 71 | M88 | X | -1.32 | -1.32 | 0 | %100 |
| 72 | M88 | Z | .762 | .762 | 0 | %100 |
| 73 | M89 | X | -.336 | -.336 | 0 | %100 |
| 74 | M89 | Z | .194 | .194 | 0 | %100 |
| 75 | M91 | X | -.204 | -.204 | 0 | %100 |
| 76 | M91 | Z | .118 | .118 | 0 | %100 |
| 77 | M92 | X | -.204 | -.204 | 0 | %100 |
| 78 | M92 | Z | .118 | .118 | 0 | %100 |
| 79 | MP1A | X | -.523 | -.523 | 0 | %100 |
| 80 | MP1A | Z | .302 | .302 | 0 | %100 |
| 81 | MP2A | X | -.633 | -.633 | 0 | %100 |
| 82 | MP2A | Z | .365 | .365 | 0 | %100 |
| 83 | MP3A | X | -.523 | -.523 | 0 | %100 |
| 84 | MP3A | Z | .302 | .302 | 0 | %100 |
| 85 | MP4A | X | -.523 | -.523 | 0 | %100 |
| 86 | MP4A | Z | .302 | .302 | 0 | %100 |
| 87 | MP1C | X | -.523 | -.523 | 0 | %100 |
| 88 | MP1C | Z | .302 | .302 | 0 | %100 |
| 89 | MP2C | X | -.633 | -.633 | 0 | %100 |
| 90 | MP2C | Z | .365 | .365 | 0 | %100 |
| 91 | MP3C | X | -.523 | -.523 | 0 | %100 |
| 92 | MP3C | Z | .302 | .302 | 0 | %100 |
| 93 | MP4C | X | -.523 | -.523 | 0 | %100 |
| 94 | MP4C | Z | .302 | .302 | 0 | %100 |
| 95 | MP1B | X | -.523 | -.523 | 0 | %100 |
| 96 | MP1B | Z | .302 | .302 | 0 | %100 |
| 97 | MP2B | X | -.633 | -.633 | 0 | %100 |
| 98 | MP2B | Z | .365 | .365 | 0 | %100 |
| 99 | MP3B | X | -.523 | -.523 | 0 | %100 |
| 100 | MP3B | Z | .302 | .302 | 0 | %100 |
| 101 | MP4B | X | -.523 | -.523 | 0 | %100 |
| 102 | MP4B | Z | .302 | .302 | 0 | %100 |
| 103 | OVP | X | -.427 | -.427 | 0 | %100 |
| 104 | OVP | Z | .247 | .247 | 0 | %100 |
| 105 | M85A | X | -.158 | -.158 | 0 | %100 |
| 106 | M85A | Z | .091 | .091 | 0 | %100 |
| 107 | M92A | X | -.633 | -.633 | 0 | %100 |
| 108 | M92A | Z | .365 | .365 | 0 | %100 |
| 109 | M99 | X | -.158 | -.158 | 0 | %100 |
| 110 | M99 | Z | .091 | .091 | 0 | %100 |
| 111 | M102 | X | -.851 | -.851 | 0 | %100 |
| 112 | M102 | Z | .491 | .491 | 0 | %100 |
| 113 | M103 | X | -.213 | -.213 | 0 | %100 |
| 114 | M103 | Z | .123 | .123 | 0 | %100 |

## Member Distributed Loads (BLC 73 : Structure Wm (240 Deg)) (Continued)

| | Member Label | Direction | Start Magnitude[lb/ft,... | End Magnitude[lb/ft,F... | Start Location[ft,%] | End Location[ft,%] |
|---|---|---|---|---|---|---|
| 115 | M104 | X | -.213 | -.213 | 0 | %100 |
| 116 | M104 | Z | .123 | .123 | 0 | %100 |
| 117 | M105 | X | -.802 | -.802 | 0 | %100 |
| 118 | M105 | Z | .463 | .463 | 0 | %100 |
| 119 | M106 | X | -.555 | -.555 | 0 | %100 |
| 120 | M106 | Z | .32 | .32 | 0 | %100 |
| 121 | M107 | X | -.802 | -.802 | 0 | %100 |
| 122 | M107 | Z | .463 | .463 | 0 | %100 |

## Member Distributed Loads (BLC 74 : Structure Wm (270 Deg))

| | Member Label | Direction | Start Magnitude[lb/ft,... | End Magnitude[lb/ft,F... | Start Location[ft,%] | End Location[ft,%] |
|---|---|---|---|---|---|---|
| 1 | M1 | X | -.902 | -.902 | 0 | %100 |
| 2 | M1 | Z | 0 | 0 | 0 | %100 |
| 3 | M4 | X | 0 | 0 | 0 | %100 |
| 4 | M4 | Z | 0 | 0 | 0 | %100 |
| 5 | M7 | X | 0 | 0 | 0 | %100 |
| 6 | M7 | Z | 0 | 0 | 0 | %100 |
| 7 | M15 | X | -.667 | -.667 | 0 | %100 |
| 8 | M15 | Z | 0 | 0 | 0 | %100 |
| 9 | M17 | X | -1.143 | -1.143 | 0 | %100 |
| 10 | M17 | Z | 0 | 0 | 0 | %100 |
| 11 | M20 | X | -.667 | -.667 | 0 | %100 |
| 12 | M20 | Z | 0 | 0 | 0 | %100 |
| 13 | M21 | X | -1.143 | -1.143 | 0 | %100 |
| 14 | M21 | Z | 0 | 0 | 0 | %100 |
| 15 | M29 | X | -.59 | -.59 | 0 | %100 |
| 16 | M29 | Z | 0 | 0 | 0 | %100 |
| 17 | M30 | X | -.59 | -.59 | 0 | %100 |
| 18 | M30 | Z | 0 | 0 | 0 | %100 |
| 19 | M108A | X | -1.143 | -1.143 | 0 | %100 |
| 20 | M108A | Z | 0 | 0 | 0 | %100 |
| 21 | M109A | X | 0 | 0 | 0 | %100 |
| 22 | M109A | Z | 0 | 0 | 0 | %100 |
| 23 | M119 | X | -1.143 | -1.143 | 0 | %100 |
| 24 | M119 | Z | 0 | 0 | 0 | %100 |
| 25 | M120 | X | 0 | 0 | 0 | %100 |
| 26 | M120 | Z | 0 | 0 | 0 | %100 |
| 27 | M122 | X | 0 | 0 | 0 | %100 |
| 28 | M122 | Z | 0 | 0 | 0 | %100 |
| 29 | M125 | X | 0 | 0 | 0 | %100 |
| 30 | M125 | Z | 0 | 0 | 0 | %100 |
| 31 | M51 | X | -.226 | -.226 | 0 | %100 |
| 32 | M51 | Z | 0 | 0 | 0 | %100 |
| 33 | M52 | X | -1.143 | -1.143 | 0 | %100 |
| 34 | M52 | Z | 0 | 0 | 0 | %100 |
| 35 | M54 | X | -1.143 | -1.143 | 0 | %100 |
| 36 | M54 | Z | 0 | 0 | 0 | %100 |
| 37 | M55 | X | 0 | 0 | 0 | %100 |
| 38 | M55 | Z | 0 | 0 | 0 | %100 |
| 39 | M57A | X | -.599 | -.599 | 0 | %100 |
| 40 | M57A | Z | 0 | 0 | 0 | %100 |

## Member Distributed Loads (BLC 74 : Structure Wm (270 Deg)) (Continued)

| | Member Label | Direction | Start Magnitude[lb/ft,... | End Magnitude[lb/ft,F... | Start Location[ft,%] | End Location[ft,%] |
|---|---|---|---|---|---|---|
| 41 | M58A | X | -4.1e-5 | -4.1e-5 | 0 | %100 |
| 42 | M58A | Z | 0 | 0 | 0 | %100 |
| 43 | M63 | X | -1.143 | -1.143 | 0 | %100 |
| 44 | M63 | Z | 0 | 0 | 0 | %100 |
| 45 | M64A | X | -1.165 | -1.165 | 0 | %100 |
| 46 | M64A | Z | 0 | 0 | 0 | %100 |
| 47 | M67 | X | 0 | 0 | 0 | %100 |
| 48 | M67 | Z | 0 | 0 | 0 | %100 |
| 49 | M68 | X | -1.165 | -1.165 | 0 | %100 |
| 50 | M68 | Z | 0 | 0 | 0 | %100 |
| 51 | M70A | X | -.706 | -.706 | 0 | %100 |
| 52 | M70A | Z | 0 | 0 | 0 | %100 |
| 53 | M71 | X | -.706 | -.706 | 0 | %100 |
| 54 | M71 | Z | 0 | 0 | 0 | %100 |
| 55 | M72A | X | -.226 | -.226 | 0 | %100 |
| 56 | M72A | Z | 0 | 0 | 0 | %100 |
| 57 | M73A | X | -1.143 | -1.143 | 0 | %100 |
| 58 | M73A | Z | 0 | 0 | 0 | %100 |
| 59 | M75A | X | 0 | 0 | 0 | %100 |
| 60 | M75A | Z | 0 | 0 | 0 | %100 |
| 61 | M76 | X | -1.143 | -1.143 | 0 | %100 |
| 62 | M76 | Z | 0 | 0 | 0 | %100 |
| 63 | M78A | X | -4.1e-5 | -4.1e-5 | 0 | %100 |
| 64 | M78A | Z | 0 | 0 | 0 | %100 |
| 65 | M79 | X | -.599 | -.599 | 0 | %100 |
| 66 | M79 | Z | 0 | 0 | 0 | %100 |
| 67 | M84 | X | 0 | 0 | 0 | %100 |
| 68 | M84 | Z | 0 | 0 | 0 | %100 |
| 69 | M85 | X | -1.165 | -1.165 | 0 | %100 |
| 70 | M85 | Z | 0 | 0 | 0 | %100 |
| 71 | M88 | X | -1.143 | -1.143 | 0 | %100 |
| 72 | M88 | Z | 0 | 0 | 0 | %100 |
| 73 | M89 | X | -1.165 | -1.165 | 0 | %100 |
| 74 | M89 | Z | 0 | 0 | 0 | %100 |
| 75 | M91 | X | -.706 | -.706 | 0 | %100 |
| 76 | M91 | Z | 0 | 0 | 0 | %100 |
| 77 | M92 | X | -.706 | -.706 | 0 | %100 |
| 78 | M92 | Z | 0 | 0 | 0 | %100 |
| 79 | MP1A | X | -.603 | -.603 | 0 | %100 |
| 80 | MP1A | Z | 0 | 0 | 0 | %100 |
| 81 | MP2A | X | -.73 | -.73 | 0 | %100 |
| 82 | MP2A | Z | 0 | 0 | 0 | %100 |
| 83 | MP3A | X | -.603 | -.603 | 0 | %100 |
| 84 | MP3A | Z | 0 | 0 | 0 | %100 |
| 85 | MP4A | X | -.603 | -.603 | 0 | %100 |
| 86 | MP4A | Z | 0 | 0 | 0 | %100 |
| 87 | MP1C | X | -.603 | -.603 | 0 | %100 |
| 88 | MP1C | Z | 0 | 0 | 0 | %100 |
| 89 | MP2C | X | -.73 | -.73 | 0 | %100 |
| 90 | MP2C | Z | 0 | 0 | 0 | %100 |
| 91 | MP3C | X | -.603 | -.603 | 0 | %100 |
| 92 | MP3C | Z | 0 | 0 | 0 | %100 |

## Member Distributed Loads (BLC 74 : Structure Wm (270 Deg)) (Continued)

| | Member Label | Direction | Start Magnitude[lb/ft,... | End Magnitude[lb/ft,F... | Start Location[ft,%] | End Location[ft,%] |
|---|---|---|---|---|---|---|
| 93 | MP4C | X | -.603 | -.603 | 0 | %100 |
| 94 | MP4C | Z | 0 | 0 | 0 | %100 |
| 95 | MP1B | X | -.603 | -.603 | 0 | %100 |
| 96 | MP1B | Z | 0 | 0 | 0 | %100 |
| 97 | MP2B | X | -.73 | -.73 | 0 | %100 |
| 98 | MP2B | Z | 0 | 0 | 0 | %100 |
| 99 | MP3B | X | -.603 | -.603 | 0 | %100 |
| 100 | MP3B | Z | 0 | 0 | 0 | %100 |
| 101 | MP4B | X | -.603 | -.603 | 0 | %100 |
| 102 | MP4B | Z | 0 | 0 | 0 | %100 |
| 103 | OVP | X | -.493 | -.493 | 0 | %100 |
| 104 | OVP | Z | 0 | 0 | 0 | %100 |
| 105 | M85A | X | 0 | 0 | 0 | %100 |
| 106 | M85A | Z | 0 | 0 | 0 | %100 |
| 107 | M92A | X | -.548 | -.548 | 0 | %100 |
| 108 | M92A | Z | 0 | 0 | 0 | %100 |
| 109 | M99 | X | -.548 | -.548 | 0 | %100 |
| 110 | M99 | Z | 0 | 0 | 0 | %100 |
| 111 | M102 | X | -.737 | -.737 | 0 | %100 |
| 112 | M102 | Z | 0 | 0 | 0 | %100 |
| 113 | M103 | X | -.737 | -.737 | 0 | %100 |
| 114 | M103 | Z | 0 | 0 | 0 | %100 |
| 115 | M104 | X | 0 | 0 | 0 | %100 |
| 116 | M104 | Z | 0 | 0 | 0 | %100 |
| 117 | M105 | X | -1.022 | -1.022 | 0 | %100 |
| 118 | M105 | Z | 0 | 0 | 0 | %100 |
| 119 | M106 | X | -.736 | -.736 | 0 | %100 |
| 120 | M106 | Z | 0 | 0 | 0 | %100 |
| 121 | M107 | X | -.736 | -.736 | 0 | %100 |
| 122 | M107 | Z | 0 | 0 | 0 | %100 |

## Member Distributed Loads (BLC 75 : Structure Wm (300 Deg))

| | Member Label | Direction | Start Magnitude[lb/ft,... | End Magnitude[lb/ft,F... | Start Location[ft,%] | End Location[ft,%] |
|---|---|---|---|---|---|---|
| 1 | M1 | X | -.586 | -.586 | 0 | %100 |
| 2 | M1 | Z | -.338 | -.338 | 0 | %100 |
| 3 | M4 | X | -.33 | -.33 | 0 | %100 |
| 4 | M4 | Z | -.191 | -.191 | 0 | %100 |
| 5 | M7 | X | -.193 | -.193 | 0 | %100 |
| 6 | M7 | Z | -.111 | -.111 | 0 | %100 |
| 7 | M15 | X | -.193 | -.193 | 0 | %100 |
| 8 | M15 | Z | -.111 | -.111 | 0 | %100 |
| 9 | M17 | X | -.33 | -.33 | 0 | %100 |
| 10 | M17 | Z | -.191 | -.191 | 0 | %100 |
| 11 | M20 | X | -.77 | -.77 | 0 | %100 |
| 12 | M20 | Z | -.445 | -.445 | 0 | %100 |
| 13 | M21 | X | -1.32 | -1.32 | 0 | %100 |
| 14 | M21 | Z | -.762 | -.762 | 0 | %100 |
| 15 | M29 | X | -.167 | -.167 | 0 | %100 |
| 16 | M29 | Z | -.097 | -.097 | 0 | %100 |
| 17 | M30 | X | -.687 | -.687 | 0 | %100 |
| 18 | M30 | Z | -.396 | -.396 | 0 | %100 |

## Member Distributed Loads (BLC 75 : Structure Wm (300 Deg)) (Continued)

| | Member Label | Direction | Start Magnitude[lb/ft,... | End Magnitude[lb/ft,F... | Start Location[ft,%] | End Location[ft,%] |
|---|---|---|---|---|---|---|
| 19 | M108A | X | -.33 | -.33 | 0 | %100 |
| 20 | M108A | Z | -.191 | -.191 | 0 | %100 |
| 21 | M109A | X | -.336 | -.336 | 0 | %100 |
| 22 | M109A | Z | -.194 | -.194 | 0 | %100 |
| 23 | M119 | X | -1.32 | -1.32 | 0 | %100 |
| 24 | M119 | Z | -.762 | -.762 | 0 | %100 |
| 25 | M120 | X | -.336 | -.336 | 0 | %100 |
| 26 | M120 | Z | -.194 | -.194 | 0 | %100 |
| 27 | M122 | X | -.204 | -.204 | 0 | %100 |
| 28 | M122 | Z | -.118 | -.118 | 0 | %100 |
| 29 | M125 | X | -.204 | -.204 | 0 | %100 |
| 30 | M125 | Z | -.118 | -.118 | 0 | %100 |
| 31 | M51 | X | -.586 | -.586 | 0 | %100 |
| 32 | M51 | Z | -.338 | -.338 | 0 | %100 |
| 33 | M52 | X | -.33 | -.33 | 0 | %100 |
| 34 | M52 | Z | -.191 | -.191 | 0 | %100 |
| 35 | M54 | X | -1.32 | -1.32 | 0 | %100 |
| 36 | M54 | Z | -.762 | -.762 | 0 | %100 |
| 37 | M55 | X | -.33 | -.33 | 0 | %100 |
| 38 | M55 | Z | -.191 | -.191 | 0 | %100 |
| 39 | M57A | X | -.687 | -.687 | 0 | %100 |
| 40 | M57A | Z | -.396 | -.396 | 0 | %100 |
| 41 | M58A | X | -.167 | -.167 | 0 | %100 |
| 42 | M58A | Z | -.097 | -.097 | 0 | %100 |
| 43 | M63 | X | -1.32 | -1.32 | 0 | %100 |
| 44 | M63 | Z | -.762 | -.762 | 0 | %100 |
| 45 | M64A | X | -.336 | -.336 | 0 | %100 |
| 46 | M64A | Z | -.194 | -.194 | 0 | %100 |
| 47 | M67 | X | -.33 | -.33 | 0 | %100 |
| 48 | M67 | Z | -.191 | -.191 | 0 | %100 |
| 49 | M68 | X | -.336 | -.336 | 0 | %100 |
| 50 | M68 | Z | -.194 | -.194 | 0 | %100 |
| 51 | M70A | X | -.204 | -.204 | 0 | %100 |
| 52 | M70A | Z | -.118 | -.118 | 0 | %100 |
| 53 | M71 | X | -.204 | -.204 | 0 | %100 |
| 54 | M71 | Z | -.118 | -.118 | 0 | %100 |
| 55 | M72A | X | 0 | 0 | 0 | %100 |
| 56 | M72A | Z | 0 | 0 | 0 | %100 |
| 57 | M73A | X | -1.32 | -1.32 | 0 | %100 |
| 58 | M73A | Z | -.762 | -.762 | 0 | %100 |
| 59 | M75A | X | -.33 | -.33 | 0 | %100 |
| 60 | M75A | Z | -.191 | -.191 | 0 | %100 |
| 61 | M76 | X | -.33 | -.33 | 0 | %100 |
| 62 | M76 | Z | -.191 | -.191 | 0 | %100 |
| 63 | M78A | X | -.176 | -.176 | 0 | %100 |
| 64 | M78A | Z | -.102 | -.102 | 0 | %100 |
| 65 | M79 | X | -.176 | -.176 | 0 | %100 |
| 66 | M79 | Z | -.102 | -.102 | 0 | %100 |
| 67 | M84 | X | -.33 | -.33 | 0 | %100 |
| 68 | M84 | Z | -.191 | -.191 | 0 | %100 |
| 69 | M85 | X | -1.345 | -1.345 | 0 | %100 |
| 70 | M85 | Z | -.776 | -.776 | 0 | %100 |

## Member Distributed Loads (BLC 75 : Structure Wm (300 Deg)) (Continued)

| | Member Label | Direction | Start Magnitude[lb/ft,... | End Magnitude[lb/ft,F... | Start Location[ft,%] | End Location[ft,%] |
|---|---|---|---|---|---|---|
| 71 | M88 | X | -.33 | -.33 | 0 | %100 |
| 72 | M88 | Z | -.191 | -.191 | 0 | %100 |
| 73 | M89 | X | -1.345 | -1.345 | 0 | %100 |
| 74 | M89 | Z | -.776 | -.776 | 0 | %100 |
| 75 | M91 | X | -.816 | -.816 | 0 | %100 |
| 76 | M91 | Z | -.471 | -.471 | 0 | %100 |
| 77 | M92 | X | -.816 | -.816 | 0 | %100 |
| 78 | M92 | Z | -.471 | -.471 | 0 | %100 |
| 79 | MP1A | X | -.523 | -.523 | 0 | %100 |
| 80 | MP1A | Z | -.302 | -.302 | 0 | %100 |
| 81 | MP2A | X | -.633 | -.633 | 0 | %100 |
| 82 | MP2A | Z | -.365 | -.365 | 0 | %100 |
| 83 | MP3A | X | -.523 | -.523 | 0 | %100 |
| 84 | MP3A | Z | -.302 | -.302 | 0 | %100 |
| 85 | MP4A | X | -.523 | -.523 | 0 | %100 |
| 86 | MP4A | Z | -.302 | -.302 | 0 | %100 |
| 87 | MP1C | X | -.523 | -.523 | 0 | %100 |
| 88 | MP1C | Z | -.302 | -.302 | 0 | %100 |
| 89 | MP2C | X | -.633 | -.633 | 0 | %100 |
| 90 | MP2C | Z | -.365 | -.365 | 0 | %100 |
| 91 | MP3C | X | -.523 | -.523 | 0 | %100 |
| 92 | MP3C | Z | -.302 | -.302 | 0 | %100 |
| 93 | MP4C | X | -.523 | -.523 | 0 | %100 |
| 94 | MP4C | Z | -.302 | -.302 | 0 | %100 |
| 95 | MP1B | X | -.523 | -.523 | 0 | %100 |
| 96 | MP1B | Z | -.302 | -.302 | 0 | %100 |
| 97 | MP2B | X | -.633 | -.633 | 0 | %100 |
| 98 | MP2B | Z | -.365 | -.365 | 0 | %100 |
| 99 | MP3B | X | -.523 | -.523 | 0 | %100 |
| 100 | MP3B | Z | -.302 | -.302 | 0 | %100 |
| 101 | MP4B | X | -.523 | -.523 | 0 | %100 |
| 102 | MP4B | Z | -.302 | -.302 | 0 | %100 |
| 103 | OVP | X | -.427 | -.427 | 0 | %100 |
| 104 | OVP | Z | -.247 | -.247 | 0 | %100 |
| 105 | M85A | X | -.158 | -.158 | 0 | %100 |
| 106 | M85A | Z | -.091 | -.091 | 0 | %100 |
| 107 | M92A | X | -.158 | -.158 | 0 | %100 |
| 108 | M92A | Z | -.091 | -.091 | 0 | %100 |
| 109 | M99 | X | -.633 | -.633 | 0 | %100 |
| 110 | M99 | Z | -.365 | -.365 | 0 | %100 |
| 111 | M102 | X | -.213 | -.213 | 0 | %100 |
| 112 | M102 | Z | -.123 | -.123 | 0 | %100 |
| 113 | M103 | X | -.851 | -.851 | 0 | %100 |
| 114 | M103 | Z | -.491 | -.491 | 0 | %100 |
| 115 | M104 | X | -.213 | -.213 | 0 | %100 |
| 116 | M104 | Z | -.123 | -.123 | 0 | %100 |
| 117 | M105 | X | -.802 | -.802 | 0 | %100 |
| 118 | M105 | Z | -.463 | -.463 | 0 | %100 |
| 119 | M106 | X | -.802 | -.802 | 0 | %100 |
| 120 | M106 | Z | -.463 | -.463 | 0 | %100 |
| 121 | M107 | X | -.555 | -.555 | 0 | %100 |
| 122 | M107 | Z | -.32 | -.32 | 0 | %100 |

## Member Distributed Loads (BLC 76 : Structure Wm (330 Deg))

| | Member Label | Direction | Start Magnitude[lb/ft,... | End Magnitude[lb/ft,F... | Start Location[ft,%] | End Location[ft,%] |
|---|---|---|---|---|---|---|
| 1 | M1 | X | -.113 | -.113 | 0 | %100 |
| 2 | M1 | Z | -.195 | -.195 | 0 | %100 |
| 3 | M4 | X | -.572 | -.572 | 0 | %100 |
| 4 | M4 | Z | -.99 | -.99 | 0 | %100 |
| 5 | M7 | X | -.333 | -.333 | 0 | %100 |
| 6 | M7 | Z | -.578 | -.578 | 0 | %100 |
| 7 | M15 | X | 0 | 0 | 0 | %100 |
| 8 | M15 | Z | 0 | 0 | 0 | %100 |
| 9 | M17 | X | 0 | 0 | 0 | %100 |
| 10 | M17 | Z | 0 | 0 | 0 | %100 |
| 11 | M20 | X | -.333 | -.333 | 0 | %100 |
| 12 | M20 | Z | -.578 | -.578 | 0 | %100 |
| 13 | M21 | X | -.572 | -.572 | 0 | %100 |
| 14 | M21 | Z | -.99 | -.99 | 0 | %100 |
| 15 | M29 | X | -2e-5 | -2e-5 | 0 | %100 |
| 16 | M29 | Z | -3.5e-5 | -3.5e-5 | 0 | %100 |
| 17 | M30 | X | -.3 | -.3 | 0 | %100 |
| 18 | M30 | Z | -.519 | -.519 | 0 | %100 |
| 19 | M108A | X | 0 | 0 | 0 | %100 |
| 20 | M108A | Z | 0 | 0 | 0 | %100 |
| 21 | M109A | X | -.582 | -.582 | 0 | %100 |
| 22 | M109A | Z | -1.009 | -1.009 | 0 | %100 |
| 23 | M119 | X | -.572 | -.572 | 0 | %100 |
| 24 | M119 | Z | -.99 | -.99 | 0 | %100 |
| 25 | M120 | X | -.582 | -.582 | 0 | %100 |
| 26 | M120 | Z | -1.009 | -1.009 | 0 | %100 |
| 27 | M122 | X | -.353 | -.353 | 0 | %100 |
| 28 | M122 | Z | -.612 | -.612 | 0 | %100 |
| 29 | M125 | X | -.353 | -.353 | 0 | %100 |
| 30 | M125 | Z | -.612 | -.612 | 0 | %100 |
| 31 | M51 | X | -.451 | -.451 | 0 | %100 |
| 32 | M51 | Z | -.781 | -.781 | 0 | %100 |
| 33 | M52 | X | 0 | 0 | 0 | %100 |
| 34 | M52 | Z | 0 | 0 | 0 | %100 |
| 35 | M54 | X | -.572 | -.572 | 0 | %100 |
| 36 | M54 | Z | -.99 | -.99 | 0 | %100 |
| 37 | M55 | X | -.572 | -.572 | 0 | %100 |
| 38 | M55 | Z | -.99 | -.99 | 0 | %100 |
| 39 | M57A | X | -.295 | -.295 | 0 | %100 |
| 40 | M57A | Z | -.511 | -.511 | 0 | %100 |
| 41 | M58A | X | -.295 | -.295 | 0 | %100 |
| 42 | M58A | Z | -.511 | -.511 | 0 | %100 |
| 43 | M63 | X | -.572 | -.572 | 0 | %100 |
| 44 | M63 | Z | -.99 | -.99 | 0 | %100 |
| 45 | M64A | X | 0 | 0 | 0 | %100 |
| 46 | M64A | Z | 0 | 0 | 0 | %100 |
| 47 | M67 | X | -.572 | -.572 | 0 | %100 |
| 48 | M67 | Z | -.99 | -.99 | 0 | %100 |
| 49 | M68 | X | 0 | 0 | 0 | %100 |
| 50 | M68 | Z | 0 | 0 | 0 | %100 |
| 51 | M70A | X | 0 | 0 | 0 | %100 |
| 52 | M70A | Z | 0 | 0 | 0 | %100 |

## Member Distributed Loads (BLC 76 : Structure Wm (330 Deg)) (Continued)

| | Member Label | Direction | Start Magnitude[lb/ft,... | End Magnitude[lb/ft,F... | Start Location[ft,%] | End Location[ft,%] |
|---|---|---|---|---|---|---|
| 53 | M71 | X | 0 | 0 | 0 | %100 |
| 54 | M71 | Z | 0 | 0 | 0 | %100 |
| 55 | M72A | X | -.113 | -.113 | 0 | %100 |
| 56 | M72A | Z | -.195 | -.195 | 0 | %100 |
| 57 | M73A | X | -.572 | -.572 | 0 | %100 |
| 58 | M73A | Z | -.99 | -.99 | 0 | %100 |
| 59 | M75A | X | -.572 | -.572 | 0 | %100 |
| 60 | M75A | Z | -.99 | -.99 | 0 | %100 |
| 61 | M76 | X | 0 | 0 | 0 | %100 |
| 62 | M76 | Z | 0 | 0 | 0 | %100 |
| 63 | M78A | X | -.3 | -.3 | 0 | %100 |
| 64 | M78A | Z | -.519 | -.519 | 0 | %100 |
| 65 | M79 | X | -2e-5 | -2e-5 | 0 | %100 |
| 66 | M79 | Z | -3.5e-5 | -3.5e-5 | 0 | %100 |
| 67 | M84 | X | -.572 | -.572 | 0 | %100 |
| 68 | M84 | Z | -.99 | -.99 | 0 | %100 |
| 69 | M85 | X | -.582 | -.582 | 0 | %100 |
| 70 | M85 | Z | -1.009 | -1.009 | 0 | %100 |
| 71 | M88 | X | 0 | 0 | 0 | %100 |
| 72 | M88 | Z | 0 | 0 | 0 | %100 |
| 73 | M89 | X | -.582 | -.582 | 0 | %100 |
| 74 | M89 | Z | -1.009 | -1.009 | 0 | %100 |
| 75 | M91 | X | -.353 | -.353 | 0 | %100 |
| 76 | M91 | Z | -.612 | -.612 | 0 | %100 |
| 77 | M92 | X | -.353 | -.353 | 0 | %100 |
| 78 | M92 | Z | -.612 | -.612 | 0 | %100 |
| 79 | MP1A | X | -.302 | -.302 | 0 | %100 |
| 80 | MP1A | Z | -.523 | -.523 | 0 | %100 |
| 81 | MP2A | X | -.365 | -.365 | 0 | %100 |
| 82 | MP2A | Z | -.633 | -.633 | 0 | %100 |
| 83 | MP3A | X | -.302 | -.302 | 0 | %100 |
| 84 | MP3A | Z | -.523 | -.523 | 0 | %100 |
| 85 | MP4A | X | -.302 | -.302 | 0 | %100 |
| 86 | MP4A | Z | -.523 | -.523 | 0 | %100 |
| 87 | MP1C | X | -.302 | -.302 | 0 | %100 |
| 88 | MP1C | Z | -.523 | -.523 | 0 | %100 |
| 89 | MP2C | X | -.365 | -.365 | 0 | %100 |
| 90 | MP2C | Z | -.633 | -.633 | 0 | %100 |
| 91 | MP3C | X | -.302 | -.302 | 0 | %100 |
| 92 | MP3C | Z | -.523 | -.523 | 0 | %100 |
| 93 | MP4C | X | -.302 | -.302 | 0 | %100 |
| 94 | MP4C | Z | -.523 | -.523 | 0 | %100 |
| 95 | MP1B | X | -.302 | -.302 | 0 | %100 |
| 96 | MP1B | Z | -.523 | -.523 | 0 | %100 |
| 97 | MP2B | X | -.365 | -.365 | 0 | %100 |
| 98 | MP2B | Z | -.633 | -.633 | 0 | %100 |
| 99 | MP3B | X | -.302 | -.302 | 0 | %100 |
| 100 | MP3B | Z | -.523 | -.523 | 0 | %100 |
| 101 | MP4B | X | -.302 | -.302 | 0 | %100 |
| 102 | MP4B | Z | -.523 | -.523 | 0 | %100 |
| 103 | OVP | X | -.247 | -.247 | 0 | %100 |
| 104 | OVP | Z | -.427 | -.427 | 0 | %100 |

## Member Distributed Loads (BLC 76 : Structure Wm (330 Deg)) (Continued)

| | Member Label | Direction | Start Magnitude[lb/ft,... | End Magnitude[lb/ft,F... | Start Location[ft,%] | End Location[ft,%] |
|---|---|---|---|---|---|---|
| 105 | M85A | X | -.274 | -.274 | 0 | %100 |
| 106 | M85A | Z | -.474 | -.474 | 0 | %100 |
| 107 | M92A | X | 0 | 0 | 0 | %100 |
| 108 | M92A | Z | 0 | 0 | 0 | %100 |
| 109 | M99 | X | -.274 | -.274 | 0 | %100 |
| 110 | M99 | Z | -.474 | -.474 | 0 | %100 |
| 111 | M102 | X | 0 | 0 | 0 | %100 |
| 112 | M102 | Z | 0 | 0 | 0 | %100 |
| 113 | M103 | X | -.368 | -.368 | 0 | %100 |
| 114 | M103 | Z | -.638 | -.638 | 0 | %100 |
| 115 | M104 | X | -.368 | -.368 | 0 | %100 |
| 116 | M104 | Z | -.638 | -.638 | 0 | %100 |
| 117 | M105 | X | -.368 | -.368 | 0 | %100 |
| 118 | M105 | Z | -.637 | -.637 | 0 | %100 |
| 119 | M106 | X | -.511 | -.511 | 0 | %100 |
| 120 | M106 | Z | -.885 | -.885 | 0 | %100 |
| 121 | M107 | X | -.368 | -.368 | 0 | %100 |
| 122 | M107 | Z | -.637 | -.637 | 0 | %100 |

## Member Distributed Loads (BLC 87 : BLC 39 Transient Area Loads)

| | Member Label | Direction | Start Magnitude[lb/ft,... | End Magnitude[lb/ft,F... | Start Location[ft,%] | End Location[ft,%] |
|---|---|---|---|---|---|---|
| 1 | M51 | Y | -7.26 | -5.233 | 1.55 | 2.756 |
| 2 | M51 | Y | -5.233 | -2.654 | 2.756 | 3.961 |
| 3 | M51 | Y | -2.654 | -.011 | 3.961 | 5.167 |
| 4 | M56 | Y | -.916 | -1.045 | 0 | .167 |
| 5 | M56 | Y | -1.045 | -1.109 | .167 | .333 |
| 6 | M56 | Y | -1.109 | -1.045 | .333 | .5 |
| 7 | M56 | Y | -1.045 | -.916 | .5 | .667 |
| 8 | M57A | Y | -1.114 | -2.321 | .353 | 1.146 |
| 9 | M57A | Y | -2.321 | -2.64 | 1.146 | 1.94 |
| 10 | M57A | Y | -2.64 | -1.933 | 1.94 | 2.733 |
| 11 | M57A | Y | -1.933 | -1.09 | 2.733 | 3.527 |
| 12 | M58A | Y | -1.09 | -1.933 | 0 | .794 |
| 13 | M58A | Y | -1.933 | -2.64 | .794 | 1.587 |
| 14 | M58A | Y | -2.64 | -2.322 | 1.587 | 2.381 |
| 15 | M58A | Y | -2.322 | -1.118 | 2.381 | 3.174 |
| 16 | M70A | Y | -2.94 | -2.94 | .025 | 1.983 |
| 17 | M71 | Y | -2.94 | -2.94 | .025 | 1.983 |
| 18 | M1 | Y | -7.256 | -5.231 | 1.55 | 2.756 |
| 19 | M1 | Y | -5.231 | -2.654 | 2.756 | 3.961 |
| 20 | M1 | Y | -2.654 | -.011 | 3.961 | 5.167 |
| 21 | M25 | Y | -.916 | -1.045 | 0 | .167 |
| 22 | M25 | Y | -1.045 | -1.109 | .167 | .333 |
| 23 | M25 | Y | -1.109 | -1.045 | .333 | .5 |
| 24 | M25 | Y | -1.045 | -.916 | .5 | .667 |
| 25 | M29 | Y | -1.116 | -2.324 | .353 | 1.146 |
| 26 | M29 | Y | -2.324 | -2.641 | 1.146 | 1.94 |
| 27 | M29 | Y | -2.641 | -1.933 | 1.94 | 2.733 |
| 28 | M29 | Y | -1.933 | -1.09 | 2.733 | 3.527 |
| 29 | M30 | Y | -1.09 | -1.933 | 0 | .794 |
| 30 | M30 | Y | -1.933 | -2.64 | .794 | 1.587 |

## Member Distributed Loads (BLC 87 : BLC 39 Transient Area Loads) (Continued)

| | Member Label | Direction | Start Magnitude[lb/ft,... | End Magnitude[lb/ft,F... | Start Location[ft,%] | End Location[ft,%] |
|---|---|---|---|---|---|---|
| 31 | M30 | Y | -2.64 | -2.322 | 1.587 | 2.381 |
| 32 | M30 | Y | -2.322 | -1.118 | 2.381 | 3.174 |
| 33 | M122 | Y | -2.94 | -2.94 | .025 | 1.983 |
| 34 | M125 | Y | -2.94 | -2.94 | .025 | 1.983 |
| 35 | M72A | Y | -7.256 | -5.231 | 1.55 | 2.756 |
| 36 | M72A | Y | -5.231 | -2.654 | 2.756 | 3.961 |
| 37 | M72A | Y | -2.654 | -.011 | 3.961 | 5.167 |
| 38 | M77 | Y | -.916 | -1.045 | 0 | .167 |
| 39 | M77 | Y | -1.045 | -1.109 | .167 | .333 |
| 40 | M77 | Y | -1.109 | -1.045 | .333 | .5 |
| 41 | M77 | Y | -1.045 | -.916 | .5 | .667 |
| 42 | M78A | Y | -1.116 | -2.324 | .353 | 1.146 |
| 43 | M78A | Y | -2.324 | -2.641 | 1.146 | 1.94 |
| 44 | M78A | Y | -2.641 | -1.933 | 1.94 | 2.733 |
| 45 | M78A | Y | -1.933 | -1.09 | 2.733 | 3.527 |
| 46 | M79 | Y | -1.09 | -1.933 | 0 | .794 |
| 47 | M79 | Y | -1.933 | -2.64 | .794 | 1.587 |
| 48 | M79 | Y | -2.64 | -2.322 | 1.587 | 2.381 |
| 49 | M79 | Y | -2.322 | -1.118 | 2.381 | 3.174 |
| 50 | M91 | Y | -2.94 | -2.94 | .025 | 1.983 |
| 51 | M92 | Y | -2.94 | -2.94 | .025 | 1.983 |

## Member Distributed Loads (BLC 88 : BLC 40 Transient Area Loads)

| | Member Label | Direction | Start Magnitude[lb/ft,... | End Magnitude[lb/ft,F... | Start Location[ft,%] | End Location[ft,%] |
|---|---|---|---|---|---|---|
| 1 | M72A | Y | -17.537 | -12.644 | 1.55 | 2.756 |
| 2 | M72A | Y | -12.644 | -6.416 | 2.756 | 3.961 |
| 3 | M72A | Y | -6.416 | -.027 | 3.961 | 5.167 |
| 4 | M77 | Y | -2.213 | -2.525 | 0 | .167 |
| 5 | M77 | Y | -2.525 | -2.68 | .167 | .333 |
| 6 | M77 | Y | -2.68 | -2.525 | .333 | .5 |
| 7 | M77 | Y | -2.525 | -2.213 | .5 | .667 |
| 8 | M78A | Y | -2.696 | -5.616 | .353 | 1.146 |
| 9 | M78A | Y | -5.616 | -6.384 | 1.146 | 1.94 |
| 10 | M78A | Y | -6.384 | -4.672 | 1.94 | 2.733 |
| 11 | M78A | Y | -4.672 | -2.634 | 2.733 | 3.527 |
| 12 | M79 | Y | -2.633 | -4.671 | 0 | .794 |
| 13 | M79 | Y | -4.671 | -6.38 | .794 | 1.587 |
| 14 | M79 | Y | -6.38 | -5.613 | 1.587 | 2.381 |
| 15 | M79 | Y | -5.613 | -2.702 | 2.381 | 3.174 |
| 16 | M91 | Y | -7.105 | -7.105 | .025 | 1.983 |
| 17 | M92 | Y | -7.106 | -7.106 | .025 | 1.983 |
| 18 | M51 | Y | -17.546 | -12.647 | 1.55 | 2.756 |
| 19 | M51 | Y | -12.647 | -6.416 | 2.756 | 3.961 |
| 20 | M51 | Y | -6.416 | -.026 | 3.961 | 5.167 |
| 21 | M56 | Y | -2.213 | -2.525 | 0 | .167 |
| 22 | M56 | Y | -2.525 | -2.68 | .167 | .333 |
| 23 | M56 | Y | -2.68 | -2.525 | .333 | .5 |
| 24 | M56 | Y | -2.525 | -2.213 | .5 | .667 |
| 25 | M57A | Y | -2.692 | -5.61 | .353 | 1.146 |
| 26 | M57A | Y | -5.61 | -6.38 | 1.146 | 1.94 |
| 27 | M57A | Y | -6.38 | -4.672 | 1.94 | 2.733 |

## Member Distributed Loads (BLC 88 : BLC 40 Transient Area Loads) (Continued)

| | Member Label | Direction | Start Magnitude[lb/ft,... | End Magnitude[lb/ft,F... | Start Location[ft,%] | End Location[ft,%] |
|---|---|---|---|---|---|---|
| 28 | M57A | Y | -4.672 | -2.634 | 2.733 | 3.527 |
| 29 | M58A | Y | -2.633 | -4.671 | 0 | .794 |
| 30 | M58A | Y | -4.671 | -6.38 | .794 | 1.587 |
| 31 | M58A | Y | -6.38 | -5.613 | 1.587 | 2.381 |
| 32 | M58A | Y | -5.613 | -2.702 | 2.381 | 3.174 |
| 33 | M70A | Y | -7.106 | -7.106 | .025 | 1.983 |
| 34 | M71 | Y | -7.106 | -7.106 | .025 | 1.983 |
| 35 | M1 | Y | -17.537 | -12.644 | 1.55 | 2.756 |
| 36 | M1 | Y | -12.644 | -6.416 | 2.756 | 3.961 |
| 37 | M1 | Y | -6.416 | -.027 | 3.961 | 5.167 |
| 38 | M25 | Y | -2.213 | -2.525 | 0 | .167 |
| 39 | M25 | Y | -2.525 | -2.68 | .167 | .333 |
| 40 | M25 | Y | -2.68 | -2.525 | .333 | .5 |
| 41 | M25 | Y | -2.525 | -2.213 | .5 | .667 |
| 42 | M29 | Y | -2.696 | -5.616 | .353 | 1.146 |
| 43 | M29 | Y | -5.616 | -6.384 | 1.146 | 1.94 |
| 44 | M29 | Y | -6.384 | -4.672 | 1.94 | 2.733 |
| 45 | M29 | Y | -4.672 | -2.634 | 2.733 | 3.527 |
| 46 | M30 | Y | -2.633 | -4.671 | 0 | .794 |
| 47 | M30 | Y | -4.671 | -6.38 | .794 | 1.587 |
| 48 | M30 | Y | -6.38 | -5.613 | 1.587 | 2.381 |
| 49 | M30 | Y | -5.613 | -2.702 | 2.381 | 3.174 |
| 50 | M122 | Y | -7.105 | -7.105 | .025 | 1.983 |
| 51 | M125 | Y | -7.106 | -7.106 | .025 | 1.983 |

## Member Distributed Loads (BLC 89 : BLC 84 Transient Area Loads)

| | Member Label | Direction | Start Magnitude[lb/ft,... | End Magnitude[lb/ft,F... | Start Location[ft,%] | End Location[ft,%] |
|---|---|---|---|---|---|---|
| 1 | M51 | Y | -.285 | -.205 | 1.55 | 2.756 |
| 2 | M51 | Y | -.205 | -.104 | 2.756 | 3.961 |
| 3 | M51 | Y | -.104 | -.000427 | 3.961 | 5.167 |
| 4 | M56 | Y | -.04 | -.04 | 0 | .667 |
| 5 | M57A | Y | -.044 | -.091 | .353 | 1.146 |
| 6 | M57A | Y | -.091 | -.104 | 1.146 | 1.94 |
| 7 | M57A | Y | -.104 | -.076 | 1.94 | 2.733 |
| 8 | M57A | Y | -.076 | -.043 | 2.733 | 3.527 |
| 9 | M58A | Y | -.043 | -.076 | 0 | .794 |
| 10 | M58A | Y | -.076 | -.104 | .794 | 1.587 |
| 11 | M58A | Y | -.104 | -.091 | 1.587 | 2.381 |
| 12 | M58A | Y | -.091 | -.044 | 2.381 | 3.174 |
| 13 | M70A | Y | -.115 | -.115 | .025 | 1.983 |
| 14 | M71 | Y | -.115 | -.115 | .025 | 1.983 |
| 15 | M1 | Y | -.285 | -.205 | 1.55 | 2.756 |
| 16 | M1 | Y | -.205 | -.104 | 2.756 | 3.961 |
| 17 | M1 | Y | -.104 | -.0004351 | 3.961 | 5.167 |
| 18 | M25 | Y | -.04 | -.04 | 0 | .667 |
| 19 | M29 | Y | -.044 | -.091 | .353 | 1.146 |
| 20 | M29 | Y | -.091 | -.104 | 1.146 | 1.94 |
| 21 | M29 | Y | -.104 | -.076 | 1.94 | 2.733 |
| 22 | M29 | Y | -.076 | -.043 | 2.733 | 3.527 |
| 23 | M30 | Y | -.043 | -.076 | 0 | .794 |
| 24 | M30 | Y | -.076 | -.104 | .794 | 1.587 |

## Member Distributed Loads (BLC 89 : BLC 84 Transient Area Loads) (Continued)

| | Member Label | Direction | Start Magnitude[lb/ft,... | End Magnitude[lb/ft,F... | Start Location[ft,%] | End Location[ft,%] |
|---|---|---|---|---|---|---|
| 25 | M30 | Y | -.104 | -.091 | 1.587 | 2.381 |
| 26 | M30 | Y | -.091 | -.044 | 2.381 | 3.174 |
| 27 | M122 | Y | -.115 | -.115 | .025 | 1.983 |
| 28 | M125 | Y | -.115 | -.115 | .025 | 1.983 |
| 29 | M72A | Y | -.285 | -.205 | 1.55 | 2.756 |
| 30 | M72A | Y | -.205 | -.104 | 2.756 | 3.961 |
| 31 | M72A | Y | -.104 | -.0004351 | 3.961 | 5.167 |
| 32 | M77 | Y | -.04 | -.04 | 0 | .667 |
| 33 | M78A | Y | -.044 | -.091 | .353 | 1.146 |
| 34 | M78A | Y | -.091 | -.104 | 1.146 | 1.94 |
| 35 | M78A | Y | -.104 | -.076 | 1.94 | 2.733 |
| 36 | M78A | Y | -.076 | -.043 | 2.733 | 3.527 |
| 37 | M79 | Y | -.043 | -.076 | 0 | .794 |
| 38 | M79 | Y | -.076 | -.104 | .794 | 1.587 |
| 39 | M79 | Y | -.104 | -.091 | 1.587 | 2.381 |
| 40 | M79 | Y | -.091 | -.044 | 2.381 | 3.174 |
| 41 | M91 | Y | -.115 | -.115 | .025 | 1.983 |
| 42 | M92 | Y | -.115 | -.115 | .025 | 1.983 |

## Member Distributed Loads (BLC 90 : BLC 85 Transient Area Loads)

| | Member Label | Direction | Start Magnitude[lb/ft,... | End Magnitude[lb/ft,F... | Start Location[ft,%] | End Location[ft,%] |
|---|---|---|---|---|---|---|
| 1 | M51 | Z | -.712 | -.513 | 1.55 | 2.756 |
| 2 | M51 | Z | -.513 | -.26 | 2.756 | 3.961 |
| 3 | M51 | Z | -.26 | -.001 | 3.961 | 5.167 |
| 4 | M56 | Z | -.09 | -.102 | 0 | .167 |
| 5 | M56 | Z | -.102 | -.109 | .167 | .333 |
| 6 | M56 | Z | -.109 | -.102 | .333 | .5 |
| 7 | M56 | Z | -.102 | -.09 | .5 | .667 |
| 8 | M57A | Z | -.109 | -.228 | .353 | 1.146 |
| 9 | M57A | Z | -.228 | -.259 | 1.146 | 1.94 |
| 10 | M57A | Z | -.259 | -.19 | 1.94 | 2.733 |
| 11 | M57A | Z | -.19 | -.107 | 2.733 | 3.527 |
| 12 | M58A | Z | -.107 | -.19 | 0 | .794 |
| 13 | M58A | Z | -.19 | -.259 | .794 | 1.587 |
| 14 | M58A | Z | -.259 | -.228 | 1.587 | 2.381 |
| 15 | M58A | Z | -.228 | -.11 | 2.381 | 3.174 |
| 16 | M70A | Z | -.288 | -.288 | .025 | 1.983 |
| 17 | M71 | Z | -.288 | -.288 | .025 | 1.983 |
| 18 | M1 | Z | -.712 | -.513 | 1.55 | 2.756 |
| 19 | M1 | Z | -.513 | -.26 | 2.756 | 3.961 |
| 20 | M1 | Z | -.26 | -.001 | 3.961 | 5.167 |
| 21 | M25 | Z | -.09 | -.102 | 0 | .167 |
| 22 | M25 | Z | -.102 | -.109 | .167 | .333 |
| 23 | M25 | Z | -.109 | -.102 | .333 | .5 |
| 24 | M25 | Z | -.102 | -.09 | .5 | .667 |
| 25 | M29 | Z | -.109 | -.228 | .353 | 1.146 |
| 26 | M29 | Z | -.228 | -.259 | 1.146 | 1.94 |
| 27 | M29 | Z | -.259 | -.19 | 1.94 | 2.733 |
| 28 | M29 | Z | -.19 | -.107 | 2.733 | 3.527 |
| 29 | M30 | Z | -.107 | -.19 | 0 | .794 |
| 30 | M30 | Z | -.19 | -.259 | .794 | 1.587 |

## Member Distributed Loads (BLC 90 : BLC 85 Transient Area Loads) (Continued)

| | Member Label | Direction | Start Magnitude[lb/ft,... | End Magnitude[lb/ft,F... | Start Location[ft,%] | End Location[ft,%] |
|---|---|---|---|---|---|---|
| 31 | M30 | Z | -.259 | -.228 | 1.587 | 2.381 |
| 32 | M30 | Z | -.228 | -.11 | 2.381 | 3.174 |
| 33 | M122 | Z | -.288 | -.288 | .025 | 1.983 |
| 34 | M125 | Z | -.288 | -.288 | .025 | 1.983 |
| 35 | M72A | Z | -.712 | -.513 | 1.55 | 2.756 |
| 36 | M72A | Z | -.513 | -.26 | 2.756 | 3.961 |
| 37 | M72A | Z | -.26 | -.001 | 3.961 | 5.167 |
| 38 | M77 | Z | -.09 | -.102 | 0 | .167 |
| 39 | M77 | Z | -.102 | -.109 | .167 | .333 |
| 40 | M77 | Z | -.109 | -.102 | .333 | .5 |
| 41 | M77 | Z | -.102 | -.09 | .5 | .667 |
| 42 | M78A | Z | -.109 | -.228 | .353 | 1.146 |
| 43 | M78A | Z | -.228 | -.259 | 1.146 | 1.94 |
| 44 | M78A | Z | -.259 | -.19 | 1.94 | 2.733 |
| 45 | M78A | Z | -.19 | -.107 | 2.733 | 3.527 |
| 46 | M79 | Z | -.107 | -.19 | 0 | .794 |
| 47 | M79 | Z | -.19 | -.259 | .794 | 1.587 |
| 48 | M79 | Z | -.259 | -.228 | 1.587 | 2.381 |
| 49 | M79 | Z | -.228 | -.11 | 2.381 | 3.174 |
| 50 | M91 | Z | -.288 | -.288 | .025 | 1.983 |
| 51 | M92 | Z | -.288 | -.288 | .025 | 1.983 |

## Member Distributed Loads (BLC 91 : BLC 86 Transient Area Loads)

| | Member Label | Direction | Start Magnitude[lb/ft,... | End Magnitude[lb/ft,F... | Start Location[ft,%] | End Location[ft,%] |
|---|---|---|---|---|---|---|
| 1 | M51 | X | .712 | .513 | 1.55 | 2.756 |
| 2 | M51 | X | .513 | .26 | 2.756 | 3.961 |
| 3 | M51 | X | .26 | .001 | 3.961 | 5.167 |
| 4 | M56 | X | .09 | .102 | 0 | .167 |
| 5 | M56 | X | .102 | .109 | .167 | .333 |
| 6 | M56 | X | .109 | .102 | .333 | .5 |
| 7 | M56 | X | .102 | .09 | .5 | .667 |
| 8 | M57A | X | .109 | .228 | .353 | 1.146 |
| 9 | M57A | X | .228 | .259 | 1.146 | 1.94 |
| 10 | M57A | X | .259 | .19 | 1.94 | 2.733 |
| 11 | M57A | X | .19 | .107 | 2.733 | 3.527 |
| 12 | M58A | X | .107 | .19 | 0 | .794 |
| 13 | M58A | X | .19 | .259 | .794 | 1.587 |
| 14 | M58A | X | .259 | .228 | 1.587 | 2.381 |
| 15 | M58A | X | .228 | .11 | 2.381 | 3.174 |
| 16 | M70A | X | .288 | .288 | .025 | 1.983 |
| 17 | M71 | X | .288 | .288 | .025 | 1.983 |
| 18 | M1 | X | .712 | .513 | 1.55 | 2.756 |
| 19 | M1 | X | .513 | .26 | 2.756 | 3.961 |
| 20 | M1 | X | .26 | .001 | 3.961 | 5.167 |
| 21 | M25 | X | .09 | .102 | 0 | .167 |
| 22 | M25 | X | .102 | .109 | .167 | .333 |
| 23 | M25 | X | .109 | .102 | .333 | .5 |
| 24 | M25 | X | .102 | .09 | .5 | .667 |
| 25 | M29 | X | .109 | .228 | .353 | 1.146 |
| 26 | M29 | X | .228 | .259 | 1.146 | 1.94 |
| 27 | M29 | X | .259 | .19 | 1.94 | 2.733 |

## Member Distributed Loads (BLC 91 : BLC 86 Transient Area Loads) (Continued)

| | Member Label | Direction | Start Magnitude[lb/ft,... | End Magnitude[lb/ft,F... | Start Location[ft,%] | End Location[ft,%] |
|---|---|---|---|---|---|---|
| 28 | M29 | X | .19 | .107 | 2.733 | 3.527 |
| 29 | M30 | X | .107 | .19 | 0 | .794 |
| 30 | M30 | X | .19 | .259 | .794 | 1.587 |
| 31 | M30 | X | .259 | .228 | 1.587 | 2.381 |
| 32 | M30 | X | .228 | .11 | 2.381 | 3.174 |
| 33 | M122 | X | .288 | .288 | .025 | 1.983 |
| 34 | M125 | X | .288 | .288 | .025 | 1.983 |
| 35 | M72A | X | .712 | .513 | 1.55 | 2.756 |
| 36 | M72A | X | .513 | .26 | 2.756 | 3.961 |
| 37 | M72A | X | .26 | .001 | 3.961 | 5.167 |
| 38 | M77 | X | .09 | .102 | 0 | .167 |
| 39 | M77 | X | .102 | .109 | .167 | .333 |
| 40 | M77 | X | .109 | .102 | .333 | .5 |
| 41 | M77 | X | .102 | .09 | .5 | .667 |
| 42 | M78A | X | .109 | .228 | .353 | 1.146 |
| 43 | M78A | X | .228 | .259 | 1.146 | 1.94 |
| 44 | M78A | X | .259 | .19 | 1.94 | 2.733 |
| 45 | M78A | X | .19 | .107 | 2.733 | 3.527 |
| 46 | M79 | X | .107 | .19 | 0 | .794 |
| 47 | M79 | X | .19 | .259 | .794 | 1.587 |
| 48 | M79 | X | .259 | .228 | 1.587 | 2.381 |
| 49 | M79 | X | .228 | .11 | 2.381 | 3.174 |
| 50 | M91 | X | .288 | .288 | .025 | 1.983 |
| 51 | M92 | X | .288 | .288 | .025 | 1.983 |

## Member Area Loads (BLC 39 : Structure D)

| | Joint A | Joint B | Joint C | Joint D | Direction | Distribution | Magnitude[ksf] |
|---|---|---|---|---|---|---|---|
| 1 | N107A | N108A | N104A | N105A | Y | Two Way | -.005 |
| 2 | N56A | N57A | N45A | N46A | Y | Two Way | -.005 |
| 3 | N142 | N143 | N139 | N140 | Y | Two Way | -.005 |

## Member Area Loads (BLC 40 : Structure Di)

| | Joint A | Joint B | Joint C | Joint D | Direction | Distribution | Magnitude[ksf] |
|---|---|---|---|---|---|---|---|
| 1 | N142 | N143 | N139 | N140 | Y | Two Way | -.013 |
| 2 | N107A | N108A | N104A | N105A | Y | Two Way | -.013 |
| 3 | N56A | N57A | N45A | N46A | Y | Two Way | -.013 |

## Member Area Loads (BLC 84 : Structure Ev)

| | Joint A | Joint B | Joint C | Joint D | Direction | Distribution | Magnitude[ksf] |
|---|---|---|---|---|---|---|---|
| 1 | N107A | N108A | N104A | N105A | Y | Two Way | -.000204 |
| 2 | N56A | N57A | N45A | N46A | Y | Two Way | -.000204 |
| 3 | N142 | N143 | N139 | N140 | Y | Two Way | -.000204 |

## Member Area Loads (BLC 85 : Structure Eh (0 Deg))

| | Joint A | Joint B | Joint C | Joint D | Direction | Distribution | Magnitude[ksf] |
|---|---|---|---|---|---|---|---|
| 1 | N107A | N108A | N104A | N105A | Z | Two Way | -.00051 |
| 2 | N56A | N57A | N45A | N46A | Z | Two Way | -.00051 |
| 3 | N142 | N143 | N139 | N140 | Z | Two Way | -.00051 |

## Member Area Loads (BLC 86 : Structure Eh (90 Deg))

| | Joint A | Joint B | Joint C | Joint D | Direction | Distribution | Magnitude[ksf] |
|---|---|---|---|---|---|---|---|
| 1 | N107A | N108A | N104A | N105A | X | Two Way | .00051 |
| 2 | N56A | N57A | N45A | N46A | X | Two Way | .00051 |
| 3 | N142 | N143 | N139 | N140 | X | Two Way | .00051 |

## Envelope AISC 15th(360-16): LRFD Steel Code Checks

| | Mem... | Shape | Code Check | Loc[ft] | LC | Shear Check | Loc[ft] | Dir | LC | phi*... | phi*... | phi*... | phi*... | Cb | Eqn |
|---|---|---|---|---|---|---|---|---|---|---|---|---|---|---|---|
| 1 | M1 | HSS4... | .193 | 2.637 | 13 | .058 | 2.637 | y | 15 | 151... | 169... | 19.... | 19.... | 1... | H1... |
| 2 | M4 | PL3/8... | .227 | .5 | 1 | .263 | .5 | y | 13 | 378... | 729... | .57 | 9.113 | 1... | H1... |
| 3 | M7 | PIPE... | .152 | 6.25 | 28 | .059 | 3.125 | | 1 | 282... | 652... | 5.749 | 5.749 | 1... | H1... |
| 4 | M15 | PIPE... | .138 | 6.25 | 23 | .059 | 3.125 | | 9 | 282... | 652... | 5.749 | 5.749 | 1... | H1... |
| 5 | M17 | PL3/8... | .074 | .163 | 1 | .298 | 0 | y | 23 | 677... | 729... | .57 | 9.113 | 2... | H1... |
| 6 | M20 | PIPE... | .138 | 6.25 | 19 | .059 | 3.125 | | 5 | 282... | 652... | 5.749 | 5.749 | 1... | H1... |
| 7 | M21 | PL3/8... | .071 | .163 | 1 | .394 | 0 | y | 14 | 677... | 729... | .57 | 9.113 | 2... | H1... |
| 8 | M29 | L2x2x4 | .313 | 3.527 | 16 | .031 | 3.527 | z | 20 | 162... | 305... | .691 | 1.577 | 1... | H2... |
| 9 | M30 | L2x2x4 | .295 | 0 | 19 | .030 | 0 | z | 19 | 162... | 305... | .691 | 1.577 | 1... | H2... |
| 10 | M108A | PL3/8... | .273 | .156 | 1 | .243 | .25 | y | 13 | 699... | 729... | .57 | 9.113 | 4... | H1... |
| 11 | M109A | PL3/8... | .419 | .167 | 1 | .040 | .167 | y | 13 | 715... | 729... | .57 | 9.113 | 1... | H1... |
| 12 | M119 | PL3/8... | .277 | .156 | 1 | .238 | .25 | y | 24 | 699... | 729... | .57 | 9.113 | 3... | H1... |
| 13 | M120 | PL3/8... | .455 | .167 | 12 | .050 | .167 | y | 13 | 715... | 729... | .57 | 9.113 | 1... | H1... |
| 14 | M122 | L3X3... | .623 | 0 | 24 | .080 | 2.122 | y | 1 | 412... | 466... | 1.688 | 3.756 | 1... | H2... |
| 15 | M125 | L3X3... | .611 | 0 | 13 | .097 | 2.122 | z | 12 | 412... | 466... | 1.688 | 3.756 | 1... | H2... |
| 16 | M51 | HSS4... | .193 | 2.637 | 21 | .057 | 2.637 | y | 23 | 151... | 169... | 19.... | 19.... | 1... | H1... |
| 17 | M52 | PL3/8... | .227 | .5 | 9 | .263 | .5 | y | 21 | 378... | 729... | .57 | 9.113 | 1... | H1... |
| 18 | M54 | PL3/8... | .074 | .163 | 9 | .298 | 0 | y | 19 | 677... | 729... | .57 | 9.113 | 2... | H1... |
| 19 | M55 | PL3/8... | .072 | .163 | 9 | .393 | 0 | y | 22 | 677... | 729... | .57 | 9.113 | 2... | H1... |
| 20 | M57A | L2x2x4 | .313 | 3.527 | 24 | .031 | 3.527 | z | 16 | 162... | 305... | .691 | 1.577 | 1... | H2... |
| 21 | M58A | L2x2x4 | .296 | 0 | 15 | .030 | 0 | z | 15 | 162... | 305... | .691 | 1.577 | 1... | H2... |
| 22 | M63 | PL3/8... | .273 | .156 | 9 | .243 | .25 | y | 21 | 699... | 729... | .57 | 9.113 | 4... | H1... |
| 23 | M64A | PL3/8... | .419 | .167 | 9 | .040 | .167 | y | 21 | 715... | 729... | .57 | 9.113 | 1... | H1... |
| 24 | M67 | PL3/8... | .277 | .156 | 9 | .239 | .25 | y | 20 | 699... | 729... | .57 | 9.113 | 3... | H1... |
| 25 | M68 | PL3/8... | .455 | .167 | 8 | .050 | .167 | y | 21 | 715... | 729... | .57 | 9.113 | 1... | H1... |
| 26 | M70A | L3X3... | .623 | 0 | 21 | .080 | 2.122 | y | 9 | 412... | 466... | 1.688 | 3.756 | 1... | H2... |
| 27 | M71 | L3X3... | .613 | 0 | 21 | .097 | 2.122 | z | 8 | 412... | 466... | 1.688 | 3.756 | 1... | H2... |
| 28 | M72A | HSS4... | .193 | 2.637 | 17 | .060 | 2.637 | y | 39 | 151... | 169... | 19.... | 19.... | 1... | H1... |
| 29 | M73A | PL3/8... | .227 | .5 | 5 | .263 | .5 | y | 17 | 378... | 729... | .57 | 9.113 | 1... | H1... |
| 30 | M75A | PL3/8... | .074 | .163 | 5 | .430 | 0 | y | 39 | 677... | 729... | .57 | 9.113 | 2... | H1... |
| 31 | M76 | PL3/8... | .072 | .163 | 5 | .393 | 0 | y | 18 | 677... | 729... | .57 | 9.113 | 2... | H1... |
| 32 | M78A | L2x2x4 | .313 | 3.527 | 20 | .031 | 3.527 | z | 24 | 162... | 305... | .691 | 1.577 | 1... | H2... |
| 33 | M79 | L2x2x4 | .295 | 0 | 23 | .030 | 0 | z | 23 | 162... | 305... | .691 | 1.577 | 1... | H2... |
| 34 | M84 | PL3/8... | .273 | .156 | 5 | .243 | .25 | y | 17 | 699... | 729... | .57 | 9.113 | 4... | H1... |
| 35 | M85 | PL3/8... | .418 | .167 | 5 | .040 | .167 | y | 17 | 715... | 729... | .57 | 9.113 | 1... | H1... |
| 36 | M88 | PL3/8... | .277 | .156 | 5 | .239 | .25 | y | 16 | 699... | 729... | .57 | 9.113 | 3... | H1... |
| 37 | M89 | PL3/8... | .456 | .167 | 4 | .050 | .167 | y | 17 | 715... | 729... | .57 | 9.113 | 1... | H1... |
| 38 | M91 | L3X3... | .622 | 0 | 17 | .080 | 2.122 | y | 5 | 412... | 466... | 1.688 | 3.756 | 1... | H2... |
| 39 | M92 | L3X3... | .612 | 0 | 17 | .097 | 2.122 | z | 4 | 412... | 466... | 1.688 | 3.756 | 1... | H2... |
| 40 | MP1A | PIPE... | .261 | 3.125 | 16 | .099 | 1.188 | | 2 | 208... | 321... | 1.872 | 1.872 | 1... | H1... |
| 41 | MP2A | PIPE... | .192 | 3.125 | 2 | .087 | 1.438 | | 4 | 377... | 507... | 3.596 | 3.596 | 1... | H1... |
| 42 | MP3A | PIPE... | .208 | 3.125 | 11 | .072 | 1.438 | | 8 | 208... | 321... | 1.872 | 1.872 | 1... | H1... |
| 43 | MP4A | PIPE... | .236 | 3.125 | 22 | .068 | 3.125 | | 12 | 208... | 321... | 1.872 | 1.872 | 1... | H1... |
| 44 | MP1C | PIPE... | .261 | 3.125 | 24 | .099 | 1.188 | | 10 | 208... | 321... | 1.872 | 1.872 | 1... | H1... |

## Envelope AISC 15th(360-16): LRFD Steel Code Checks (Continued)

| | Mem... | Shape | Code Check | Loc[ft] | LC | Shear Check | Loc[ft] | Dir | LC | phi*... | phi*... | phi*... | phi*... | Cb | Eqn |
|---|---|---|---|---|---|---|---|---|---|---|---|---|---|---|---|
| 45 | MP2C | PIPE... | .193 | 3.125 | 10 | .087 | 1.438 | | 12 | 377... | 507... | 3.596 | 3.596 | 1... | H1... |
| 46 | MP3C | PIPE... | .208 | 3.125 | 7 | .072 | 1.438 | | 4 | 208... | 321... | 1.872 | 1.872 | 1... | H1... |
| 47 | MP4C | PIPE... | .236 | 3.125 | 18 | .068 | 3.125 | | 8 | 208... | 321... | 1.872 | 1.872 | 1... | H1... |
| 48 | MP1B | PIPE... | .261 | 3.125 | 20 | .099 | 1.188 | | 6 | 208... | 321... | 1.872 | 1.872 | 2... | H1... |
| 49 | MP2B | PIPE... | .192 | 3.125 | 6 | .087 | 1.438 | | 8 | 377... | 507... | 3.596 | 3.596 | 1... | H1... |
| 50 | MP3B | PIPE... | .208 | 3.125 | 3 | .072 | 1.438 | | 12 | 208... | 321... | 1.872 | 1.872 | 1... | H1... |
| 51 | MP4B | PIPE... | .236 | 3.125 | 14 | .068 | 3.125 | | 4 | 208... | 321... | 1.872 | 1.872 | 1... | H1... |
| 52 | OVP | PIPE... | .131 | 2.75 | 7 | .015 | 2.75 | | 7 | 288... | 321... | 1.872 | 1.872 | 1 | H1... |
| 53 | M85A | PIPE... | .130 | 6.25 | 28 | .076 | 10.547 | | 6 | 145... | 507... | 3.596 | 3.596 | 1... | H1... |
| 54 | M92A | PIPE... | .127 | 10.417 | 12 | .076 | 10.547 | | 2 | 145... | 507... | 3.596 | 3.596 | 1... | H1... |
| 55 | M99 | PIPE... | .127 | 10.417 | 8 | .076 | 10.547 | | 10 | 145... | 507... | 3.596 | 3.596 | 1... | H1... |
| 56 | M102 | L3X3... | .249 | 2.851 | 1 | .020 | 2.851 | y | 1 | 389... | 466... | 1.688 | 3.756 | 2... | H2... |
| 57 | M103 | L3X3... | .249 | 0 | 9 | .020 | 0 | z | 9 | 389... | 466... | 1.688 | 3.756 | 2... | H2... |
| 58 | M104 | L3X3... | .250 | 0 | 5 | .020 | 0 | z | 5 | 389... | 466... | 1.688 | 3.756 | 2... | H2... |
| 59 | M105 | LL3x... | .129 | 3.312 | 13 | .003 | 0 | z | 4 | 508... | 706... | 4.823 | 3.751 | 1 | H1... |
| 60 | M106 | LL3x... | .128 | 3.312 | 21 | .004 | 0 | z | 12 | 508... | 706... | 4.823 | 3.751 | 1 | H1... |
| 61 | M107 | LL3x... | .128 | 3.312 | 17 | .004 | 3.312 | z | 8 | 508... | 706... | 4.823 | 3.751 | 1 | H1... |

## Envelope Joint Reactions

| | Joint | | X [lb] | LC | Y [lb] | LC | Z [lb] | LC | MX [k-ft] | LC | MY [k-ft] | LC | MZ [k-ft] | LC |
|---|---|---|---|---|---|---|---|---|---|---|---|---|---|---|
| 1 | N2 | max | 1849.546 | 10 | 37.36 | 7 | 5864.489 | 13 | -.11 | 9 | 2.643 | 4 | .074 | 2 |
| 2 | | min | -1846.642 | 4 | -890.183 | 13 | -753.054 | 7 | -.447 | 15 | -2.639 | 10 | -.207 | 20 |
| 3 | N130A | max | 545.554 | 10 | -56.953 | 11 | 700.845 | 1 | .404 | 20 | 2.585 | 8 | .019 | 11 |
| 4 | | min | -5038.413 | 16 | -1075.66 | 17 | -3031.824 | 19 | -.314 | 26 | -2.581 | 2 | -.735 | 41 |
| 5 | N95A | max | 4997.574 | 21 | -57.003 | 3 | 891.35 | 1 | .216 | 7 | 2.589 | 12 | .541 | 23 |
| 6 | | min | -426.881 | 3 | -1075.585 | 21 | -3080.875 | 19 | -.36 | 25 | -2.584 | 6 | .038 | 5 |
| 7 | N180 | max | 23.767 | 10 | 3998.149 | 13 | -880.115 | 7 | 0 | 75 | 0 | 4 | 0 | 10 |
| 8 | | min | -23.636 | 4 | 669.346 | 7 | -5221.157 | 13 | 0 | 1 | 0 | 10 | 0 | 4 |
| 9 | N181 | max | -809.983 | 3 | 3973.975 | 21 | 2594.646 | 21 | 0 | 6 | 0 | 12 | 0 | 12 |
| 10 | | min | -4493.973 | 21 | 711.133 | 3 | 467.614 | 3 | 0 | 12 | 0 | 6 | 0 | 6 |
| 11 | N182 | max | 4493.146 | 17 | 3973.216 | 17 | 2594.072 | 17 | 0 | 8 | 0 | 8 | 0 | 8 |
| 12 | | min | 809.681 | 11 | 710.89 | 11 | 467.497 | 11 | 0 | 2 | 0 | 2 | 0 | 2 |
| 13 | Totals: | max | 4724.947 | 10 | 8578.074 | 23 | 4754.159 | 1 | | | | | | |
| 14 | | min | -4724.948 | 4 | 2286.398 | 68 | -4754.159 | 7 | | | | | | |

| VzW SMART Tool© Vendor | | | |
|---|---|---|---|
| Client: | Verizon Wireless | Date: | 4/19/2022 |
| Site Name: | SOUTH WINDSOR 2 CT | | |
| PSLC #: | 467434 | | |
| Fuze ID #: | 16092601 | Page: | 1 |

Version 1.0

## I. Mount-to-Tower Connection Check

| | |
|---|---|
| *Custom Orientation Required* | No |
| *Tower Connection Bolt Checks* | Yes |
| *Bolt Orientation* | Parallel |
| Bolt Quantity per Reaction: | 4 |
| $d_x$ (in) *(Delta X of typ. bolt config. sketch)*: | 7 |
| $d_y$ (in) *(Delta Y of typ. bolt config. sketch)*: | 7 |
| Bolt Type: | A325N |
| Bolt Diameter (in): | 0.625 |
| Required Tensile Strength / bolt (kips): | 2.9 |
| Required Shear Strength / bolt (kips): | 0.5 |
| Tensile Capacity / bolt (kips): | 20.7 |
| Shear Capacity / bolt (kips): | 12.4 |
| Bolt Overall Utilization: | **14.0%** |

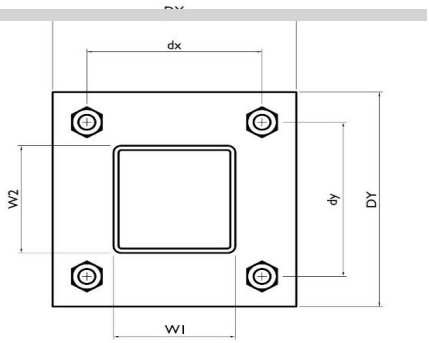


| | |
|---|---|
| *Tower Connection Baseplate Checks* | Yes |
| Connecting Standoff Member Shape: | Rect Tube |
| Weld Stiffener Configuration: | No Stiffeners |
| Plate Width, $D_x$ (in): | 10 |
| Plate Height, $D_y$ (in): | 10 |
| W1(in): | 4 |
| W2 (in): | 4 |
| Member Thickness (in): | 0.3125 |
| Stiffener location $a_1$ (in): | |
| Stiffener location $b_1$ (in): | |
| Stiffener location $a_2$ (in): | |
| Stiffener location $b_2$ (in): | |
| $F_y$ (ksi, plate): | 36 |
| Plate Thickness (in): | 0.5 |
| Length of Yield Line, $L_y$ (in): | 7.80 |
| Bolt Eccentricity, e (in): | 2.41 |
| $M_u$ (kip-in): | 7.00 |
| Phi*$M_n$ (kip-in): | 15.79 |
| Plate Bending Utilization: | **44.3%** |

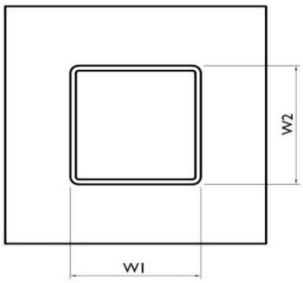

| | | | |
|---|---|---|---|
| Client: | Verizon Wireless | Date: | 4/19/2022 |
| Site Name: | SOUTH WINDSOR 2 CT | | |
| PSLC #: | 467434 | | |
| Fuze ID #: | 16092601 | Page: | 2 |

Version 1.0

| *Tower Connection Weld Checks* | Yes |
|---|---|
| Weld Shape: | Rectangle |
| Weld Stiffener Configuration: | None |
| Stiffner Notch Length, n (in): | N/A |
| Weld Size (1/16 in): | 4 |
| W1 (in): | 4 |
| W2 (in): | 4 |
| Weld Total Length (in): | 16.00 |
| $Z_x$ ($in^3$/in): | 21.33 |
| $Z_y$ ($in^3$/in): | 21.33 |
| $J_p$ ($in^4$/in): | 85.33 |
| $c_x$ (in) | 2.3125 |
| $c_y$ (in) | 2.3125 |
| Required combined strength (kip/in): | 1.18 |
| Weld Capacity (kip/in): | 5.57 |
| Weld Utilization: | **21.1%** |

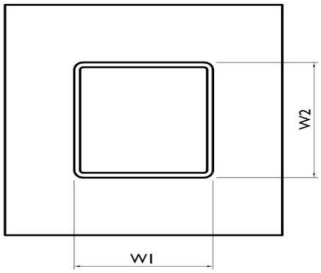

# Exhibit F

## Power Density/RF Emissions Report

**Site Name:** ***South Windsor 2 CT***
**Cumulative Power Density**

| Operator | Operating Frequency | Number of Trans. | ERP Per Trans. | Total ERP | Distance to Target | Calculated Power Density | Maximum Permissible Exposure* | Fraction of MPE |
|---|---|---|---|---|---|---|---|---|
| | (MHz) | | (watts) | (watts) | (feet) | (mW/cm^2) | (mW/cm^2) | (%) |
| VZW 700 | 751 | 4 | 710 | 2840 | 112 | 0.0081 | 0.5007 | 1.63% |
| VZW Cellular | 869 | 4 | 679 | 2716 | 112 | 0.0078 | 0.5793 | 1.34% |
| VZW PCS | 1980 | 4 | 1422 | 5688 | 112 | 0.0163 | 1.0000 | 1.63% |
| VZW AWS | 2125 | 4 | 1496 | 5984 | 112 | 0.0172 | 1.0000 | 1.72% |
| VZW CBAND | 3730 | 4 | 6531 | 26124 | 112 | 0.0749 | 1.0000 | 7.49% |
| VZW CBRS | 3625 | 4 | 12 | 48 | 112 | 0.0001 | 1.0000 | 0.01% |
| | | | | | | | | |
| | | | | | | | | |
| | | | | | | | | |
| **Total Percentage of Maximum Permissible Exposure** | | | | | | | | 13.82% |

*Guidelines adopted by the FCC on August 1, 1996, 47 CFR Part 1 based on NCRP Report 86, 1986 and generally on ANSI/IEEE C95.1-1992
**Calculation includes a -10 dB Off Beam Antenna Pattern Adjustment pursuant to Attachments B and C of the Siting Council's November 10, 2015 Memorandum for Exempt Modification filings

MHz = Megahertz
mW/cm^2 = milliwatts per square centimeter
ERP = Effective Radiated Power

Absolute worst case maximum values used.

# Exhibit G

## Mount Modification Drawings

# MOUNT MODIFICATION DRAWINGS
# EXISTING 12'-6" PLATFORM

TOWER OWNER: CROWN CASTLE
TOWER OWNER SITE NUMBER: 828054

CARRIER SITE NAME: SOUTH WINDSOR 2 CT
CARRIER SITE NUMBER: 467434
FUZE ID: 16092601

300 GOVERNORS HIGHWAY
SOUTH WINDSOR, CT 06074
HARTFORD COUNTY

LATITUDE: 41.833496° N
LONGITUDE: 72.603026° W

## DESIGN CRITERIA

WIND LOADS

BASIC WIND SPEED (3 SECOND GUST), V = 117 MPH
EXPOSURE CATEGORY C
TOPOGRAPHIC CATEGORY 1
MEAN BASE ELEVATION (AMSL) = 70.43'

ICE LOADS

ICE WIND SPEED (3 SECOND GUST), V = 50 MPH
ICE THICKNESS = 1.50 IN

SEISMIC LOADS

SEISMIC DESIGN CATEGORY B
SHORT TERM MCER GROUND MOTION, $S_S$ = .184
LONG TERM MCER GROUND MOTION, $S_1$ = .055

## PROJECT INFORMATION

APPLICANT/LESSEE

COMPANY: VERIZON WIRELESS

CLIENT REPRESENTATIVE

COMPANY: VERIZON WIRELESS

PROJECT MANAGER

COMPANY: COLLIERS ENGINEERING & DESIGN
CONTACT: PETER ALBANO
PHONE: 856.797.0412
E-MAIL: PETER.ALBANO@COLLIERSENGINEERING.COM

## CONTRACTOR PMI REQUIREMENTS

PMI LOCATION: HTTPS://PMI.VZWSMART.COM
SMART TOOL PROJECT #: 10141850
VZW LOCATION CODE (PSLC): 467434
ANALYSIS DATE: 4/25/2022

PMI REQUIREMENTS EMBEDDED WITHIN MOUNT MODIFICATION REPORT

## SHEET INDEX


| SHEET | DESCRIPTION |
|---|---|
| ST-1 | TITLE SHEET |
| SBOM-1 | BILL OF MATERIALS |
| SGN-1 | GENERAL NOTES |
| SCF-1 | CLIMBING FACILITY DETAIL |
| SS-1 | MODIFICATION DETAILS |
| SS-2 | MOUNT PHOTOS |
| | SPECIFICATION SHEETS |



COPYRIGHT ©2022
COLLIERS ENGINEERING & DESIGN
ALL RIGHTS RESERVED
THIS DRAWING AND ALL THE INFORMATION CONTAINED HEREIN IS AUTHORIZED FOR USE ONLY BY THE PARTY FOR WHOM THE WORK WAS CONTRACTED OR TO WHOM IT IS CERTIFIED. THIS DRAWING MAY NOT BE COPIED, REUSED, DISCLOSED, DISTRIBUTED OR RELIED UPON FOR ANY OTHER PURPOSE WITHOUT THE EXPRESS WRITTEN CONSENT OF COLLIERS ENGINEERING & DESIGN.



Colliers Engineering & Design
www.colliersengineering.com
Copyright © 2022. Colliers Engineering & Design All Rights Reserved. This drawing and all the information contained herein is authorized for use only by the party for whom the services were contracted or to whom it is certified. This drawing may not be copied, reused, disclosed, distributed or relied upon for any other purpose without the express written consent of Colliers Engineering & Design.
Doing Business as MASER CONSULTING


PROTECT YOURSELF
ALL STATES REQUIRE NOTIFICATION OF EXCAVATORS, DESIGNERS, OR ANY PERSON PREPARING TO DISTURB THE EARTH'S SURFACE ANYWHERE IN ANY STATE
Know what's below. Call before you dig.
FOR STATE SPECIFIC DIRECT PHONE NUMBERS VISIT: WWW.CALL811.COM

SCALE: AS SHOWN
JOB NUMBER: 22777026A

| REV | DATE | DESCRIPTION | DRAWN BY | CHECKED BY |
|---|---|---|---|---|
| 0 | 4/25/22 | ISSUED FOR CONSTRUCTION | DA | DX |

STATE OF CONNECTICUT
DEJIAN XU
No. 33733
LICENSED PROFESSIONAL ENGINEER
04/25/2022
COLLIERS ENGINEERING & DESIGN CT, P.C.
C.T. C.O.A. #PC.0000131

IT IS A VIOLATION OF LAW FOR ANY PERSON, UNLESS THEY ARE ACTING UNDER THE DIRECTION OF THE RESPONSIBLE LICENSED PROFESSIONAL ENGINEER, TO ALTER THIS DOCUMENT.

SITE NAME:
SOUTH WINDSOR 2 CT
467434
300 GOVERNORS HIGHWAY
SOUTH WINDSOR, CT 06074
HARTFORD COUNTY


Colliers Engineering & Design
STAMFORD
1055 Washington Boulevard
Stamford, CT 06901
Phone: 203.324.0800
COLLIERS ENGINEERING & DESIGN, INC.
DOING BUSINESS AS MASER CONSULTING


SHEET TITLE: TITLE SHEET
SHEET NUMBER: ST-1

NOTE: DO NOT SCALE DRAWINGS FOR CONSTRUCTION.


NAD\ulbln_SOS\21\Template\Mount MOD revisions.dwg\ST-1 By: DAVID.ANIELKA

# BILL OF MATERIALS

## SECTION 1 - VZWSMART KITS

| QUANTITY | MANUFACTURER | PART NUMBER | DESCRIPTION | NOTES | UNIT WEIGHT (LBS.) | WEIGHT (LBS.) |
|---|---|---|---|---|---|---|
| 1 | VZWSMART | VZWSMART-PLK1 | SUPPORT RAIL KIT | CONTRACTOR TO VERIFY THE LENGTH REQUIRED AND TRIM AS NECESSARY IN ACCORDANCE WITH THE 'STRUCTURAL STEEL' NOTES ON SHEET SGN-1. | 504 | 504 |
| 1 | | VZWSMART-PLK5 | KICKER KIT | CONTRACTOR TO VERIFY THE LENGTH REQUIRED AND TRIM AS NECESSARY IN ACCORDANCE WITH THE 'STRUCTURAL STEEL' NOTES ON SHEET SGN-1. | 291 | 291 |
| 1 | | VZWSMART-PLK7 | MONOPOLE COLLAR MOUNT ASSEMBLY | | 150 | 150 |
| 3 | | VZWSMART-P40-278X072 | 72" LONG, PIPE 2 1/2 STD (2.875"OD X 0.203" THK) | | 35 | 105 |
| | | | | | | |
| | | | | | | |
| | | | | | | |
| | | | | | | |
| | | | | | | |

## SECTION 2 - OTHER REQUIRED PARTS

| QUANTITY | MANUFACTURER | PART NUMBER | DESCRIPTION | NOTES | UNIT WEIGHT (LBS.) | WEIGHT (LBS.) |
|---|---|---|---|---|---|---|
| 3 | SITE PRO 1 | SP219-H | CROSSOVER PLATE | | 13 | 39 |
| | | | | | | |
| | | | | | | |
| | | | | | | |
| | | | | | | |
| | | | | | | |
| | | | | | | |
| | | | | | | |
| | | | | | | |
| | | | | | | |
| | | | | | | |
| | | | | | TOTAL: | 1089 |

NOTES:

1. THE MANUFACTURERS LISTED ARE THE APPROVED VENDORS FOR THE VZW MOUNT KITS. EACH MANUFACTURER WILL BE AWARE OF WHICH KITS HAVE BEEN THROUGH THE VZW APPROVAL PROCESS AND THEY ARE IN TURN APPROVED TO SELL. PLEASE NOTE THAT THE MATERIAL UTILIZED ON THE MOUNT MODIFICATIONS WILL BE REVIEWED AS A PART OF THE DESKTOP PMI COMPLETED BY THE SMART TOOL VENDOR. IT WILL BE REQUIRED THAT THE VZW KITS SPECIFIED ARE UTILIZED IN THE MODIFICATIONS.

2. ALL MATERIALS REQUIRED FOR THE DESIGNED MODIFICATIONS BUT NOT LISTED IN THIS SHEET ARE ASSUMED TO BE PROVIDED BY THE CONTRACTOR.

## VZWSMART KITS - APPROVED VENDORS

| | |
|---|---|
| **COMMSCOPE** | |
| CONTACT | SALVADOR ANGUIANO |
| PHONE | (817) 304-7492 |
| EMAIL | SALVADOR.ANGUIANO@COMMSCOPE.COM |
| WEBSITE | WWW.COMMSCOPE.COM |
| **METROSITE FABRICATORS, LLC** | |
| CONTACT | KENT RAMEY |
| PHONE | (706) 335-7045 (O), (706) 982-9788 (M) |
| EMAIL | KENT@METROSITELLC.COM |
| WEBSITE | METROSITEFABRICATORS.COM |
| **PERFECTVISION** | |
| CONTACT | WIRELESS SALES |
| PHONE | (844) 887-6723 |
| EMAIL | WWW.PERFECT-VISION.COM |
| WEBSITE | WIRELESSSALES@PERFECT-VISION.COM |
| **SABRE INDUSTRIES, INC.** | |
| CONTACT | ANGIE WELCH |
| PHONE | (866) 428-6937 |
| EMAIL | AKWELCH@SABREINDUSTRIES.COM |
| WEBSITE | WWW.SABRESITESOLUTIONS.COM |
| **SITE PRO 1** | |
| CONTACT | PAULA BOSWELL |
| PHONE | (972) 236-9843 |
| EMAIL | PAULA.BOSWELL@VALMONT.COM |
| WEBSITE | WWW.SITEPRO1.COM |

## VZWSMART KITS - APPROVED VENDORS

| | |
|---|---|
| **NEWAVE** | |
| CONTACT | NEWAVE SALES TEAM |
| PHONE | (971) 239-4762 |
| EMAIL | SALES@NEWAVETC.COM |
| WEBSITE | WWW.NEWAVETC.COM |
| **BETTER METAL, LLC** | |
| CONTACT | DAVID STANSBERRY |
| PHONE | (615) 535-0990 (O), (615) 631-2520 (M) |
| EMAIL | DLS@BETTERMETAL.COM |
| WEBSITE | WWW.BETTERMETAL.COM |

Colliers Engineering & Design

www.colliersengineering.com

Copyright © 2022. Colliers Engineering & Design All Rights Reserved. This drawing and all the information contained herein is authorized for use only by the party for whom the services were contracted or to whom it is certified. This drawing may not be copied, reused, disclosed, distributed or relied upon for any other purpose without the express written consent of Colliers Engineering & Design.

Doing Business as MASER CONSULTING

verizon

PROTECT YOURSELF

ALL STATES REQUIRE NOTIFICATION OF EXCAVATORS, DESIGNERS, OR ANY PERSON PREPARING TO DISTURB THE EARTH'S SURFACE ANYWHERE IN ANY STATE

811 Know what's below. Call before you dig.

FOR STATE SPECIFIC DIRECT PHONE NUMBERS VISIT: WWW.CALL811.COM

SCALE: AS SHOWN

JOB NUMBER: 22777026A

| REV | DATE | DESCRIPTION | DRAWN BY | CHECKED BY |
|---|---|---|---|---|
| 0 | 4/25/22 | ISSUED FOR CONSTRUCTION | DA | DX |

STATE OF CONNECTICUT
DEJIAN XU
No. 33733
LICENSED PROFESSIONAL ENGINEER
04/25/2022

COLLIERS ENGINEERING & DESIGN CT, P.C.
C.T. C.O.A. #PC.0000131

IT IS A VIOLATION OF LAW FOR ANY PERSON, UNLESS THEY ARE ACTING UNDER THE DIRECTION OF THE RESPONSIBLE LICENSED PROFESSIONAL ENGINEER, TO ALTER THIS DOCUMENT.

SITE NAME:

SOUTH WINDSOR 2 CT
467434

300 GOVERNORS HIGHWAY
SOUTH WINDSOR, CT 06074
HARTFORD COUNTY

Colliers Engineering & Design

STAMFORD
1055 Washington Boulevard

Stamford, CT 06901
Phone: 203.324.0800
COLLIERS ENGINEERING & DESIGN, INC.
DOING BUSINESS AS MASER CONSULTING

SHEET TITLE: BILL OF MATERIALS

SHEET NUMBER: SBOM-1

# PROJECT NOTES

1. SEE MODIFICATION NOTES
2. THE CONTRACTOR SHALL COMPLY WITH ALL APPLICABLE CODES, ORDINANCES, LAWS AND REGULATIONS OF ALL MUNICIPALITIES, UTILITY COMPANIES OR OTHER PUBLIC/GOVERNING AUTHORITIES.
3. THE CONTRACTOR SHALL BE RESPONSIBLE FOR OBTAINING ALL PERMITS AND INSPECTIONS THAT MAY BE REQUIRED BY ANY FEDERAL, STATE, COUNTY OR MUNICIPAL AUTHORITIES.
4. THE CONTRACTOR SHALL NOTIFY THE CONSTRUCTION MANAGER, IN WRITING, OF ANY CONFLICTS, ERRORS OR OMISSIONS PRIOR TO THE SUBMISSION OF BIDS OR PERFORMANCE OF WORK.
5. THE CONTRACTOR SHALL BE RESPONSIBLE FOR PROTECTING ALL EXISTING SITE IMPROVEMENTS PRIOR TO COMMENCING CONSTRUCTION. THE CONTRACTOR SHALL REPAIR ANY DAMAGE AS A RESULT OF CONSTRUCTION OF THIS FACILITY AT THE CONTRACTOR'S EXPENSE TO THE SATISFACTION OF THE OWNER.
6. THE SCOPE OF WORK FOR THIS PROJECT SHALL INCLUDE PROVIDING ALL MATERIALS, EQUIPMENT AND LABOR REQUIRED TO COMPLETE THIS PROJECT. ALL EQUIPMENT SHALL BE INSTALLED IN ACCORDANCE WITH MANUFACTURER'S RECOMMENDATIONS.
7. THE CONTRACTOR SHALL VISIT THE PROJECT SITE PRIOR TO SUBMITTING THE BID TO VERIFY THAT THE PROJECT CAN BE CONSTRUCTED IN ACCORDANCE WITH THE CONTRACT DOCUMENTS AND CONSTRUCTION DRAWINGS.
8. THE CONTRACTOR SHALL VERIFY ALL EXISTING DIMENSIONS AND CONDITIONS PRIOR TO COMMENCING ANY WORK. ALL DIMENSIONS OF EXISTING CONSTRUCTION SHOWN ON THESE DRAWINGS MUST BE VERIFIED. THE CONTRACTOR SHALL NOTIFY THE CONSTRUCTION MANAGER OF ANY DISCREPANCIES PRIOR TO ORDERING MATERIAL OR PROCEEDING WITH CONSTRUCTION.
9. SINCE THE CELL SITE MAY BE ACTIVE, ALL SAFETY PRECAUTIONS MUST BE TAKEN WHEN WORKING AROUND HIGH LEVELS OF ELECTROMAGNETIC RADIATION. EQUIPMENT SHOULD BE SHUTDOWN PRIOR TO PERFORMING ANY WORK THAT COULD EXPOSE THE WORKERS TO DANGER. PERSONAL RF EXPOSURE MONITORS ARE REQUIRED TO BE WORN TO ALERT OF ANY POTENTIALLY DANGEROUS EXPOSURE LEVELS.
10. NO NOISE, SMOKE, DUST OR ODOR WILL RESULT FROM THIS FACILITY AS TO CAUSE A NUISANCE.
11. THE FACILITY IS UNMANNED AND NOT FOR HUMAN HABITATION (NO HANDICAP ACCESS IS REQUIRED).

# GENERAL NOTES

1. THESE MODIFICATIONS HAVE BEEN DESIGNED IN ACCORDANCE WITH THE GOVERNING PROVISIONS OF THE TELECOMMUNICATIONS INDUSTRY STANDARD TIA-222-H. MATERIALS AND SERVICES PROVIDED BY THE CONTRACTOR SHALL CONFORM TO THE ABOVE MENTIONED CODES.
2. CONTRACTOR SHALL TAKE ALL PRECAUTIONS NECESSARY TO PREVENT DAMAGE TO EXISTING STRUCTURES. ANY DAMAGE TO EXISTING STRUCTURES AS A RESULT OF THE CONTRACTOR'S WORK OR FROM DAMAGE DUE TO OTHER CAUSES SHALL BE REPAIRED AT THE CONTRACTOR'S EXPENSE TO THE SATISFACTION OF THE OWNER.
3. CONTRACTOR SHALL VERIFY ALL DIMENSIONS AND EXISTING CONDITIONS BEFORE BEGINNING WORK, ORDERING MATERIAL, AND PREPARING OF SHOP DRAWINGS. ANY DISCREPANCIES BETWEEN FIELD CONDITIONS AND THE CONTRACT DOCUMENTS SHALL BE BROUGHT TO THE IMMEDIATE ATTENTION OF THE ENGINEER. IF THE CONTRACTOR DISCOVERS ANY EXISTING CONDITIONS THAT ARE NOT REPRESENTED ON THESE DRAWINGS, OR ANY CONDITIONS THAT WOULD INTERFERE WITH THE INSTALLATION OF THE MODIFICATIONS, NOTIFY THE ENGINEER IMMEDIATELY.
4. IT IS ASSUMED THAT ANY STRUCTURAL MODIFICATION WORK SPECIFIED ON THESE PLANS WILL BE ACCOMPLISHED BY KNOWLEDGEABLE WORKMEN WITH TOWER CONSTRUCTION EXPERIENCE.
5. THE CONTRACTOR SHALL SUPERVISE AND DIRECT THE WORK AND SHALL BE SOLELY RESPONSIBLE FOR ALL CONSTRUCTION METHODS, MEANS, TECHNIQUES, SEQUENCES, AND PROCEDURES.
6. ALL CONSTRUCTION MEANS AND METHODS; INCLUDING BUT NOT LIMITED TO, ERECTION PLANS, RIGGING PLANS, CLIMBING PLANS, AND RESCUE PLANS SHALL BE THE RESPONSIBILITY OF THE GENERAL CONTRACTOR RESPONSIBLE FOR THE EXECUTION OF THE WORK CONTAINED HEREIN AND SHALL MEET ANSI/TIA-322 (LATEST EDITION), OSHA, AND GENERAL INDUSTRY STANDARDS. ALL RIGGING PLANS SHALL ADHERE TO ANSI/TIA-322 (LATEST EDITION) INCLUDING THE REQUIRED INVOLVEMENT OF A QUALIFIED ENGINEER FOR CLASS IV CONSTRUCTION.
7. THE CONTRACTOR IS SOLELY RESPONSIBLE FOR INITIATING, MAINTAINING, AND SUPERVISING ALL SAFETY PROGRAMS IN ACCORDANCE WITH APPLICABLE SAFETY CODES.
8. WORK SHALL ONLY BE PERFORMED DURING CALM DRY DAYS (WINDS LESS THAN 30-MPH). THE STRUCTURE SHOWN ON THE DRAWINGS IS STRUCTURALLY SOUND ONLY IN THE COMPLETED FORM. THE CONTRACTOR SHALL BE RESPONSIBLE FOR THE STRENGTH AND STABILITY OF THE STRUCTURE DURING ERECTION. CONTRACTOR SHALL PROVIDE TEMPORARY SUPPORT, SHORING, BRACING AND ANY OTHER STRUCTURAL SYSTEMS AS REQUIRED TO RESIST ALL FORCES THAT MAY OCCUR DURING HANDLING AND ERECTION UNTIL THE STRUCTURE IS FULLY COMPLETED. TEMPORARY SUPPORTS, BRACING AND OTHER STRUCTURAL SYSTEMS REQUIRED DURING CONSTRUCTION SHALL REMAIN THE CONTRACTOR'S PROPERTY AFTER THEIR USE.
9. ALL INSTALLATIONS PERFORMED ON THIS STRUCTURE SHALL BE COMPLETED IN ACCORDANCE WITH THE GOVERNING PROVISIONS OF THE STANDARD FOR INSTALLATION, ALTERATION AND MAINTENANCE OF ANTENNA SUPPORTING STRUCTURES AND ANTENNAS, ANSI/TIA-322.
10. CONTRACTOR SHALL SECURE SITE BACK TO EXISTING CONDITION UNDER SUPERVISION OF OWNER. ALL FENCE, STONE, GEOFABRIC, GROUNDING, AND SURROUNDING GRADE SHALL BE REPLACED AND REPAIRED AS REQUIRED TO ACHIEVE OWNER APPROVAL. POSITIVE DRAINAGE AWAY FROM TOWER SITE SHALL BE MAINTAINED.
11. CONNECTIONS BETWEEN ITEMS SUPPORTED BY THE STRUCTURE AND THE STRUCTURE NOT SPECIFICALLY DETAILED IN THE CONTRACT DOCUMENTS ARE THE RESPONSIBILITY OF THE CONTRACTOR. SUCH CONNECTIONS SHALL BE DESIGNED, COORDINATED AND INSPECTED BY A PROFESSIONAL STRUCTURAL ENGINEER LICENSED IN THE STATE OF THE PROJECT. SUBMIT SIGNED AND SEALED CALCULATIONS DURING SHOP DRAWING REVIEW.
12. DO NOT SCALE DRAWINGS.
13. DO NOT USE THESE DRAWINGS FOR ANY OTHER SITE.
14. ALL MATERIAL UTILIZED FOR THIS PROJECT MUST BE NEW AND FREE OF ANY DEFECTS. ANY MATERIAL SUBSTITUTIONS, INCLUDING BUT NOT LIMITED TO ALTERED SIZE AND/OR STRENGTHS, MUST BE APPROVED BY THE OWNER AND ENGINEER IN WRITING.
15. THE MOUNT UNDER NO CIRCUMSTANCES SHOULD BE USED AS A TIE OFF POINT.

# STRUCTURAL STEEL

1. DESIGN, DETAILING, FABRICATION AND ERECTION OF STRUCTURAL STEEL SHALL CONFORM TO THE FOLLOWING PUBLICATIONS EXCEPT AS SPECIFICALLY INDICATED IN THE CONTRACT DOCUMENTS.
   a. AMERICAN INSTITUTE OF STEEL CONSTRUCTION (AISC) MANUAL OF STEEL CONSTRUCTION (15TH EDITION)
   b. SPECIFICATION FOR STRUCTURAL JOINTS USING ASTM A325 OR A490 BOLTS
   c. AISC CODE OF STANDARD PRACTICE
2. STRUCTURAL STEEL SHALL CONFORM TO THE FOLLOWING UNLESS OTHERWISE SHOWN:

| | |
|---|---|
| CHANNELS, ANGLES, PLATES, ETC. | ASTM A36 (GR 36) |
| STEEL PIPE | ASTM A53 (GR 35) |
| BOLTS | ASTM A325 |
| NUTS | ASTM A563 |
| LOCK WASHERS | LOCKING STRUCTURAL GRADE |

3. ALL SUBSTITUTIONS PROPOSED BY THE CONTRACTOR SHALL BE APPROVED IN WRITING BY THE ENGINEER. CONTRACTOR SHALL PROVIDE DOCUMENTATION TO ENGINEER FOR VERIFYING THE SUBSTITUTE IS SUITABLE FOR USE AND MEETS ORIGINAL DESIGN CRITERIA. DIFFERENCES FROM THE ORIGINAL DESIGN, INCLUDING MAINTENANCE, REPAIR AND REPLACEMENT, SHALL BE NOTED. ESTIMATES OF COSTS/CREDITS ASSOCIATED WITH THE SUBSTITUTION (INCLUDING RE-DESIGN COSTS AND COSTS TO SUB-CONTRACTORS) SHALL BE PROVIDED TO THE ENGINEER. CONTRACTOR SHALL PROVIDE ADDITIONAL DOCUMENTATION AND/OR SPECIFICATIONS TO THE ENGINEER AS REQUESTED.
4. PROVIDE STRUCTURAL STEEL SHOP DRAWINGS TO ENGINEER FOR APPROVAL PRIOR TO FABRICATION.
   a. SUBMIT SHOP DRAWINGS TO

      PETER.ALBANO@COLLIERSENGINEERING.COM

   b. PROVIDE MASER CONSULTING PROJECT # AND MASER CONSULTING PROJECT ENGINEER CONTACT IN THE BODY OF THE EMAIL.
5. DRILL NO HOLES IN ANY NEW OR EXISTING STRUCTURAL STEEL MEMBERS OTHER THAN THOSE SHOWN ON STRUCTURAL DRAWINGS WITHOUT THE APPROVAL OF THE ENGINEER OF RECORD.
6. GALVANIZED ASTM A325 BOLTS SHALL NOT BE REUSED.
7. ALL NEW STEEL SHALL BE HOT BE DIPPED GALVANIZED FOR FULL WEATHER PROTECTION. IN ADDITION ALL NEW STEEL SHALL BE PAINTED TO MATCH EXISTING STEEL. CONTRACTOR SHALL OBTAIN WRITTEN PERMISSION TO PROTECT STEEL BY ANY OTHER MEANS.
8. CONTRACTOR SHALL PROTECT CUT ENDS OF ALL FIELD-CUT STEEL WITH TWO (2) COATS OF COLD GALVANIZATION (ZINGA OR ZINC COTE).
9. ALL BOLT ASSEMBLIES FOR STRUCTURAL MEMBERS REPRESENTED IN THIS DRAWING REQUIRE LOCKING DEVICES TO BE INSTALLED IN ACCORDANCE WITH TIA-222-H SECTION 4.9.2 REQUIREMENTS.
10. WHERE CONNECTIONS ARE NOT FULLY DETAILED ON THESE DRAWINGS, FABRICATOR SHALL DESIGN CONNECTIONS TO RESIST LOADS AND FORCES WHERE SHOWN ON DRAWINGS AND AS OUTLINED IN SPECIFICATIONS.
11. FOR MEMBERS BEING REPLACED, PROVIDE NEW BOLTS AND MATCH EXISTING SIZE AND GRADE. MAINTAIN AISC REQUIREMENTS FOR MINIMUM BOLT DISTANCE AND SPACING.
12. ALL PROPOSED AND/OR REPLACED BOLTS SHALL BE OF SUFFICIENT LENGTH SUCH THAT THE END OF THE BOLT IS AT LEAST FLUSH WITH THE FACE OF THE NUT. IT IS NOT PERMITTED FOR THE BOLT END TO BE BELOW THE FACE OF THE NUT AFTER TIGHTENING IS COMPLETED.
13. GALVANIZED ASTM A325 BOLTS SHALL NOT BE REUSED.
14. ALL EXISTING PAINTED/GALVANIZED SURFACES DAMAGED DURING REHAB INCLUDING AREAS UNDER STIFFENER PLATES SHALL BE WIRE BRUSHED CLEAN, REPAIRED BY COLD GALVANIZING (ZINGA OR ZINC COTE), AND REPAINTED TO MATCH THE EXISTING FINISH (IF APPLICABLE).
15. ALL HOLES IN STEEL MEMBERS SHALL BE SIZED 1/16" LARGER THAN THE BOLT DIAMETER. STANDARD HOLES SHALL BE USED UNLESS NOTED OTHERWISE.

# WELDING NOTES

1. ALL WELDING SHALL BE DONE IN ACCORDANCE WITH AWS D1.0 (LATEST EDITION). THIS SHALL INCLUDE A CERTIFIED WELD INSPECTION (CWI) FOR ACCEPTANCE OR REJECTION OF ALL WELDING OPERATIONS, PRE, DURING, AND POST INSTALLATION, USING THE ACCEPTANCE CRITERIA OF AWS D1.1.
2. CONTRACTOR IS RESPONSIBLE FOR COMMISSIONING A THIRD PARTY CERTIFIED WELD INSPECTOR (CWI) THROUGHOUT THE ENTIRETY OF THE PROJECT. A PASSING CWI REPORT SHALL BE PROVIDED TO THE ENGINEER UPON COMPLETION OF THE PROJECT.
3. THE CERTIFIED WELD INSPECTOR SHALL INDICATE, IN A WRITTEN CWI REPORT, THAT ALL WELDING OPERATIONS PRE, DURING, AND POST INSTALLATION WERE CONDUCTED IN ACCORDANCE WITH AWS D1.1 WITH PHOTOGRAPHS AND DOCUMENTATION SUPPORTING THE ACCEPTANCE OR REJECTION OF ALL WELDING. ALL CWI WELD INSPECTION DOCUMENTATION AND PHOTOS SHALL BE SUBMITTED DURING THE PMI.
4. IN CASES WHERE A WELD IS SPECIFIED BETWEEN TWO MEMBERS IN WHICH THERE IS A GAP IN BETWEEN, THE WELD IS TO BE BUILT-UP SUCH THAT THE SIZE OF WELD ON THE MEMBER IS EQUAL TO THAT SHOWN IN THE DRAWINGS.
5. OXY FUEL GAS WELDING OR BRAZING IS STRICTLY PROHIBITED. SPECIFICALLY, NO TORCH CUTTING IS PERMITTED ON SITE. ALL HOLES SHALL BE CUT WITH A GRINDER.
6. CONTRACTOR SHALL EXERCISE CAUTION WHEN WELDING A GALVANIZED SURFACE.
7. CONTRACTOR SHALL HAVE A FIRE PROTECTION PLAN IN PLACE THAT CONFORMS WITH ALL OSHA, ANSI/ASSP A10.48, ANSI Z49.1, AND LOCAL JURISDICTIONAL REQUIREMENTS.

## BOLT SCHEDULE (IN.)

| BOLT DIAMETER | STANDARD HOLE | SHORT SLOT | MIN. EDGE DISTANCE | SPACING |
|---|---|---|---|---|
| 1/2 | 9/16 | 9/16 x 11/16 | 7/8 | 1 1/2 |
| 5/8 | 11/16 | 11/16 x 7/8 | 1 1/8 | 1 7/8 |
| 3/4 | 13/16 | 13/16 x 1 | 1 1/4 | 2 1/4 |
| 7/8 | 15/16 | 15/16 x 1 1/8 | 1 1/2 | 2 5/8 |
| 1 | 1 1/16 | 1 1/16 x 1 5/16 | 1 3/4 | 3 |

## WORKABLE GAGES (IN.)

| LEG | GAGE |
|---|---|
| 4 | 2 1/2 |
| 3 1/2 | 2 |
| 3 | 1 3/4 |
| 2 1/2 | 1 3/8 |
| 2 | 1 1/8 |

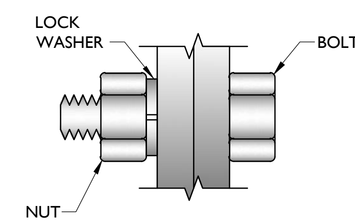


TYP. BOLT ASSEMBLY

NOTES:

1. ALL DIMENSIONS REPRESENTED IN THE ABOVE TABLES ARE AISC MINIMUM REQUIREMENTS. CONTRACTOR SHALL VERIFY EXISTING CONDITIONS IN FIELD AND NOTIFY ENGINEER IF DISTANCES ARE LESS THAN THOSE PROVIDED.
2. THE DIMENSIONS PROVIDED ARE MINIMUM REQUIREMENTS. ACTUAL DIMENSIONS OF PROPOSED MEMBERS WITHIN THESE DRAWINGS MAY VARY FROM THE AISC MINIMUM REQUIREMENTS.
3. SHORT SLOT HOLES SHALL ONLY BE USED WHEN DEPICTED IN THE DRAWINGS
4. MATCH EXISTING GAGES WHEN APPLICABLE, UNLESS MINIMUM EDGE DISTANCES ARE COMPROMISED.

ALLOWABLE COPING

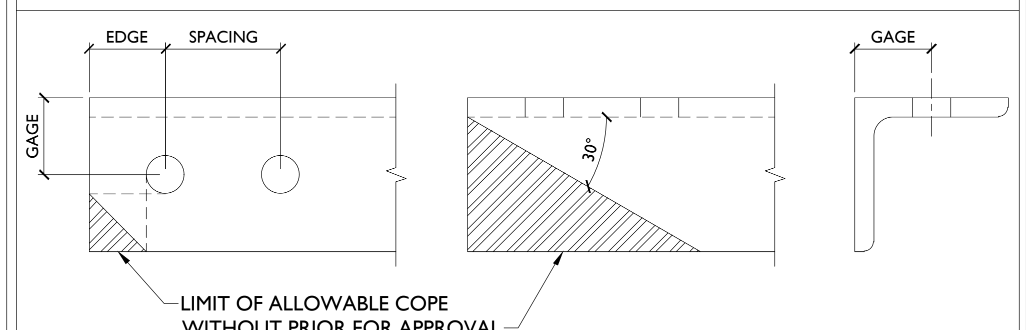


Colliers Engineering & Design

www.colliersengineering.com

Copyright © 2022. Colliers Engineering & Design All Rights Reserved. This drawing and all the information contained herein is authorized for use only by the party for whom the services were contracted or to whom it is certified. This drawing may not be copied, reused, disclosed, distributed or relied upon for any other purpose without the express written consent of Colliers Engineering & Design.

Doing Business as MASER CONSULTING

verizon

811 Know what's below. Call before you dig.

PROTECT YOURSELF
ALL STATES REQUIRE NOTIFICATION OF EXCAVATORS, DESIGNERS, OR ANY PERSON PREPARING TO DISTURB THE EARTH'S SURFACE ANYWHERE IN ANY STATE

FOR STATE SPECIFIC DIRECT PHONE NUMBERS VISIT: WWW.CALL811.COM

| SCALE : | JOB NUMBER : |
|---|---|
| AS SHOWN | 22777026A |

| REV | DATE | DESCRIPTION | DRAWN BY | CHECKED BY |
|---|---|---|---|---|
| . | . | . | . | . |
| . | . | . | . | . |
| . | . | . | . | . |
| 0 | 4/25/22 | ISSUED FOR CONSTRUCTION | DA | DX |

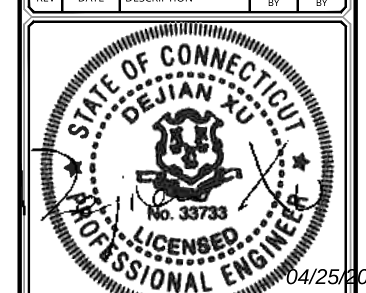


COLLIERS ENGINEERING & DESIGN CT, P.C.
C.T. C.O.A. #JPC.0000131

IT IS A VIOLATION OF LAW FOR ANY PERSON, UNLESS THEY ARE ACTING UNDER THE DIRECTION OF THE RESPONSIBLE LICENSED PROFESSIONAL ENGINEER, TO ALTER THIS DOCUMENT.

SITE NAME:

SOUTH WINDSOR 2 CT
467434

300 GOVERNORS HIGHWAY
SOUTH WINDSOR, CT 06074
HARTFORD COUNTY

Colliers Engineering & Design

STAMFORD
1055 Washington Boulevard
Stamford, CT 06901
Phone: 203.324.0800
COLLIERS ENGINEERING & DESIGN, INC.
DOING BUSINESS AS MASER CONSULTING

SHEET TITLE :
GENERAL NOTES

SHEET NUMBER :
SGN-1

NOTE: DO NOT SCALE DRAWINGS FOR CONSTRUCTION.

\AcPublish_50652\Template.Mount MOD_recover.dwg\SGN-1 By: DAVID.ANUKA

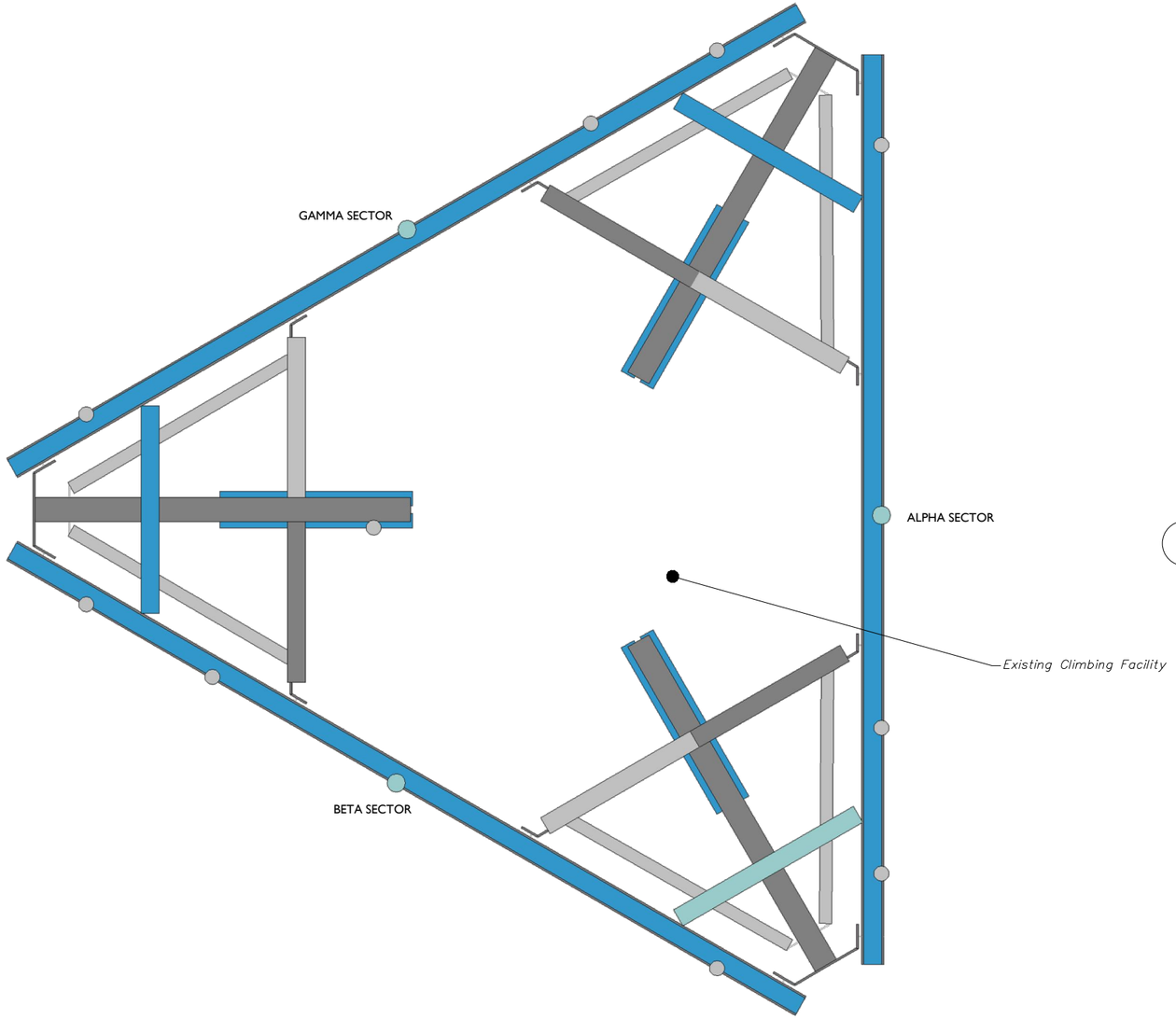


1 CLIMBING FACILITY LOCATION

SCALE : N.T.S.

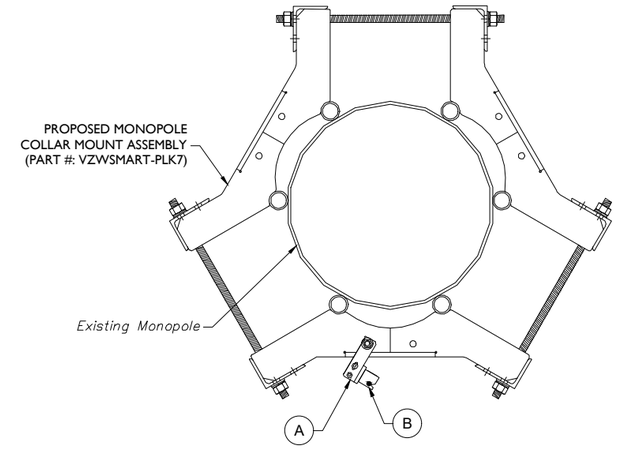


| ITEM # | QTY | PART NUMBER | DESCRIPTIONS |
|---|---|---|---|
| A | 1 | H42-0501-06 | WIRE ROPE GUIDE (PERFECT VISION OR EQUIV) |
| B | 1 | PV-CMX-CG-BO | WIRE ROPE GUIDE (PERFECT VISION OR EQUIV) |

2 PROPOSED WIRE ROPE GUIDE ATTACHMENT - PLAN VIEW

SCALE : N.T.S.

NOTE: CONTRACTOR SHALL ENSURE THAT WIRE ROPE GUIDE DOES NOT PUSH THE WIRE ROPE OUTSIDE OF THE VERTICAL PLANE OF THE SAFETY CLIMB. CONTRACT EOR WITH PHOTOS OF SAFETY CLIMB AND COLLAR FOR FURTHER DIRECTION IF NEEDED.

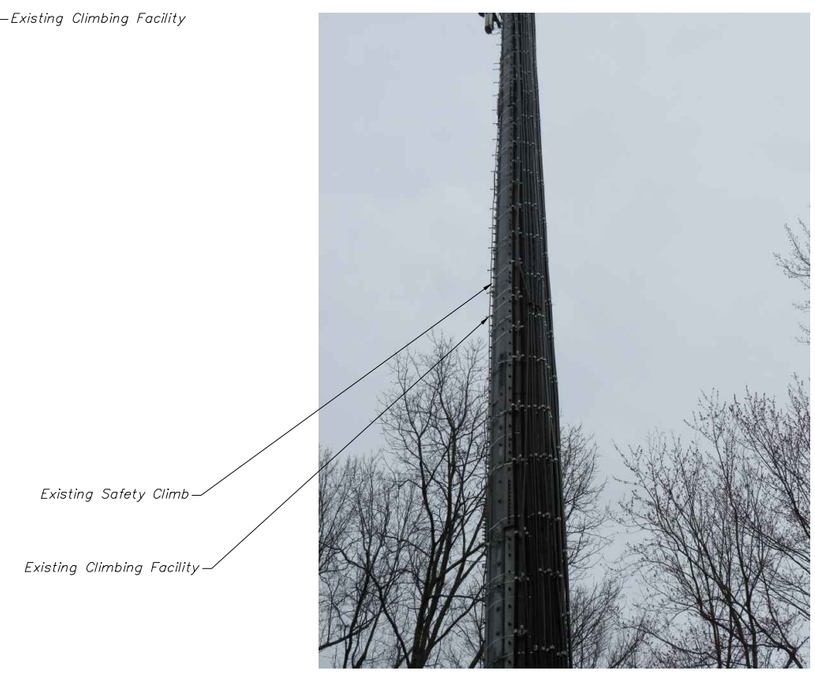


CLIMBING FACILITY PHOTO

STRUCTURAL NOTES:

1. PER THE MOUNT MAPPING COMPLETED BY ONSIGHT SERVICES LLC ON 4/7/2022, THE SAFETY CLIMB AND CLIMBING FACILITIES UP TO THE VERIZON MOUNT ELEVATION (110'-9") ARE IN GOOD CONDITION. COLLIERS ENGINEERING & DESIGN DOES NOT WARRANT THIS INFORMATION.

2. INSTALL SHALL NOT CAUSE HARM TO THE STRUCTURE, CLIMBING FACILITY, SAFETY CLIMB, OR ANY SYSTEM INSTALLED ON THE STRUCTURE. TIMELY NOTICE AND DOCUMENTATION SHALL BE PROVIDED BY CONTRACTORS TO THE EOR (OF STRUCTURAL DESIGN) IF AN OBSTRUCTION WAS REQUIRED TO MEET THE RF SYSTEM DESIGN REQUIREMENTS AND PERFORMANCES.

Colliers Engineering & Design

www.colliersengineering.com

Copyright © 2022. Colliers Engineering & Design All Rights Reserved. This drawing and all the information contained herein is authorized for use only by the party for whom the services were contracted or to whom it is certified. This drawing may not be copied, reused, disclosed, distributed or relied upon for any other purpose without the express written consent of Colliers Engineering & Design.

Doing Business as MASER CONSULTING

verizon

811 Know what's below. Call before you dig.

PROTECT YOURSELF

ALL STATES REQUIRE NOTIFICATION OF EXCAVATORS, DESIGNERS, OR ANY PERSON PREPARING TO DISTURB THE EARTH'S SURFACE ANYWHERE IN ANY STATE

FOR STATE SPECIFIC DIRECT PHONE NUMBERS VISIT: WWW.CALL811.COM

SCALE : AS SHOWN

JOB NUMBER : 22777026A

| REV | DATE | DESCRIPTION | DRAWN BY | CHECKED BY |
|---|---|---|---|---|
| 0 | 4/25/22 | ISSUED FOR CONSTRUCTION | DA | DX |

STATE OF CONNECTICUT
DEJIAN XU
No. 33733
LICENSED PROFESSIONAL ENGINEER
04/25/2022

COLLIERS ENGINEERING & DESIGN CT, P.C.
C.T. C.O.A. #PC.0000131

IT IS A VIOLATION OF LAW FOR ANY PERSON, UNLESS THEY ARE ACTING UNDER THE DIRECTION OF THE RESPONSIBLE LICENSED PROFESSIONAL ENGINEER, TO ALTER THIS DOCUMENT.

SITE NAME:

SOUTH WINDSOR 2 CT
467434

300 GOVERNORS HIGHWAY
SOUTH WINDSOR, CT 06074
HARTFORD COUNTY

Colliers Engineering & Design

STAMFORD
1055 Washington Boulevard

Stamford, CT 06901
Phone: 203.324.0800
COLLIERS ENGINEERING & DESIGN, INC.
DOING BUSINESS AS MASER CONSULTING

SHEET TITLE : CLIMBING FACILITY DETAIL

SHEET NUMBER : SCF-1

LEGEND:

- PROPOSED
- RELOCATED
- EXISTING

## MOUNT MODIFICATION SCHEDULE

| NO. | ELEVATION | QUANTITY | DESCRIPTION | NOTES |
|---|---|---|---|---|
| 1 | 110'-9" | 1 | PROPOSED SUPPORT RAIL KIT (PART #: VZWSMART-PLK1) | CONTRACTOR TO VERIFY THE LENGTH REQUIRED AND TRIM AS NECESSARY IN ACCORDANCE WITH THE 'STRUCTURAL STEEL' NOTES ON SHEET SGN-1. RADIO AND/OR TME POSITIONS SHALL BE ADJUSTED VERTICALLY AS NEEDED IN ORDER TO ACHIEVE INSTALLATION OF HORIZONTAL AS SHOWN. |
| 2 | | 1 | PROPOSED KICKER KIT (PART #: VZWSMART-PLK5)) | CONTRACTOR TO VERIFY THE LENGTH REQUIRED AND TRIM AS NECESSARY IN ACCORDANCE WITH THE 'STRUCTURAL STEEL' NOTES ON SHEET SGN-1. CONNECT OTHER END OF KICKER KIT TO MONOPOLE COLLAR MOUNT ASSEMBLY (PART #: VZWSMART-PLK7). |
| 3 | | 3 | PROPOSED 72" LONG, P2 1/2 STD (PART #: VZWSMART-P40-278X072) | CONNECT NEW MOUNT PIPE TO EXISTING HORIZONTAL WITH CROSSOVER PLATES (PART #: SP1 SP219-H). REPLACE EXISTING POSITION 2 PIPE IN ALL SECTORS. |

NOTES.

MOUNT MEMBERS NOT SHOWN FOR CLARITY U.N.O.
THREADED ROD FROM PROPOSED KITS SHALL BE TRIMMED TO EXTEND NO MORE THAN 3" BEYOND THE LOCK NUT. TREAT ALL CUT ENDS WITH (2) COATS OF COLD GALVANIZATION (ZINGA OR ZINC KOTE).

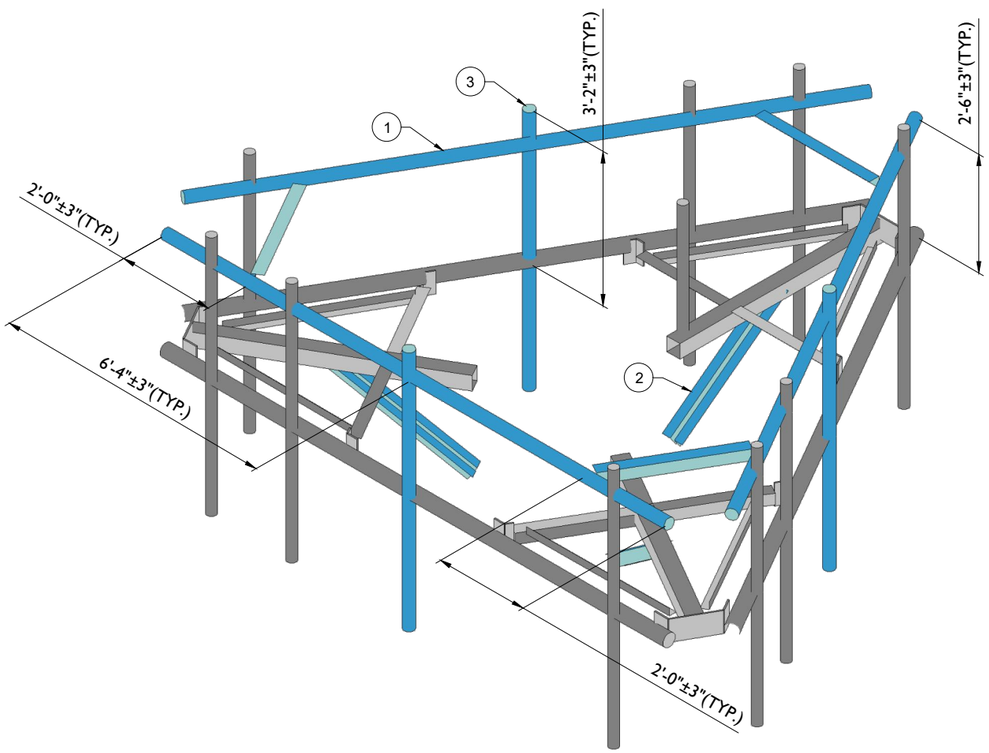


1 PROPOSED ISOMETRIC VIEW (TYP. ALL SECTORS)

SCALE : N.T.S.

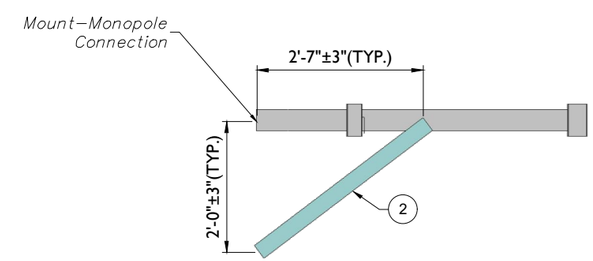


2 PROPOSED SIDE ELEVATION VIEW (TYP. ALL SECTORS)

SCALE : N.T.S.

Colliers Engineering & Design

www.colliersengineering.com

Copyright © 2022. Colliers Engineering & Design All Rights Reserved. This drawing and all the information contained herein is authorized for use only by the party for whom the services were contracted or to whom it is certified. This drawing may not be copied, reused, disclosed, distributed or relied upon for any other purpose without the express written consent of Colliers Engineering & Design.

Doing Business as MASER CONSULTING

verizon

PROTECT YOURSELF

ALL STATES REQUIRE NOTIFICATION OF EXCAVATORS, DESIGNERS, OR ANY PERSON PREPARING TO DISTURB THE EARTH'S SURFACE ANYWHERE IN ANY STATE

811 Know what's below. Call before you dig.

FOR STATE SPECIFIC DIRECT PHONE NUMBERS VISIT: WWW.CALL811.COM

| SCALE : | JOB NUMBER : |
|---|---|
| AS SHOWN | 22777026A |

| REV | DATE | DESCRIPTION | DRAWN BY | CHECKED BY |
|---|---|---|---|---|
| . | . | . | . | . |
| . | . | . | . | . |
| . | . | . | . | . |
| 0 | 4/25/22 | ISSUED FOR CONSTRUCTION | DA | DX |

STATE OF CONNECTICUT · DEJIAN XU · No. 33733 · LICENSED PROFESSIONAL ENGINEER

04/25/2022

COLLIERS ENGINEERING & DESIGN CT, P.C.
C.T. C.O.A. #PC.0000131

IT IS A VIOLATION OF LAW FOR ANY PERSON, UNLESS THEY ARE ACTING UNDER THE DIRECTION OF THE RESPONSIBLE LICENSED PROFESSIONAL ENGINEER, TO ALTER THIS DOCUMENT.

SITE NAME:

SOUTH WINDSOR 2 CT
467434

300 GOVERNORS HIGHWAY
SOUTH WINDSOR, CT 06074
HARTFORD COUNTY

Colliers Engineering & Design

STAMFORD
1055 Washington Boulevard

Stamford, CT 06901
Phone: 203.324.0800
COLLIERS ENGINEERING & DESIGN, INC.
DOING BUSINESS AS MASER CONSULTING

SHEET TITLE :

MODIFICATION DETAILS

SHEET NUMBER :

SS-1

MOUNT PHOTO 1

MOUNT PHOTO 2

MOUNT PHOTO 3

MOUNT PHOTO 4

Colliers Engineering & Design

www.colliersengineering.com

Copyright © 2022. Colliers Engineering & Design All Rights Reserved. This drawing and all the information contained herein is authorized for use only by the party for whom the services were contracted or to whom it is certified. This drawing may not be copied, reused, disclosed, distributed or relied upon for any other purpose without the express written consent of Colliers Engineering & Design.

Doing Business as MASER CONSULTING

verizon

811 Know what's below. Call before you dig.

PROTECT YOURSELF

ALL STATES REQUIRE NOTIFICATION OF EXCAVATORS, DESIGNERS, OR ANY PERSON PREPARING TO DISTURB THE EARTH'S SURFACE ANYWHERE IN ANY STATE

FOR STATE SPECIFIC DIRECT PHONE NUMBERS VISIT: WWW.CALL811.COM

| SCALE : | JOB NUMBER : |
|---|---|
| AS SHOWN | 22777026A |

| REV | DATE | DESCRIPTION | DRAWN BY | CHECKED BY |
|---|---|---|---|---|
| . | . | . | . | . |
| . | . | . | . | . |
| . | . | . | . | . |
| 0 | 4/25/22 | ISSUED FOR CONSTRUCTION | DA | DX |

STATE OF CONNECTICUT
DEJIAN XU
No. 33733
LICENSED PROFESSIONAL ENGINEER
04/25/2022

COLLIERS ENGINEERING & DESIGN CT, P.C.
C.T. C.O.A. #PC.0000131

IT IS A VIOLATION OF LAW FOR ANY PERSON, UNLESS THEY ARE ACTING UNDER THE DIRECTION OF THE RESPONSIBLE LICENSED PROFESSIONAL ENGINEER, TO ALTER THIS DOCUMENT.

SITE NAME:

SOUTH WINDSOR 2 CT
467434

300 GOVERNORS HIGHWAY
SOUTH WINDSOR, CT 06074
HARTFORD COUNTY

Colliers Engineering & Design

STAMFORD
1055 Washington Boulevard

Stamford, CT 06901
Phone: 203.324.0800
COLLIERS ENGINEERING & DESIGN, INC.
DOING BUSINESS AS MASER CONSULTING

SHEET TITLE :

MOUNT PHOTOS

SHEET NUMBER :

SS-2

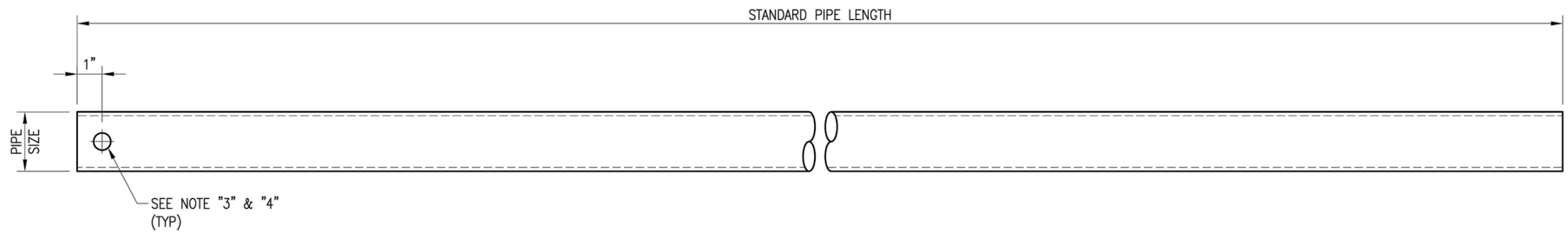


| VZWSMART Standard Pipe | | |
|---|---|---|
| VZWSMART Number | Size | Length |
| P40-238X048 | PIPE 2 SCH40 (2.375" OD x 0.154" THK) | 48" |
| P40-238X072 | PIPE 2 SCH40 (2.375" OD x 0.154" THK) | 72" |
| P40-238X096 | PIPE 2 SCH40 (2.375" OD x 0.154" THK) | 96" |
| P40-238X120 | PIPE 2 SCH40 (2.375" OD x 0.154" THK) | 120" |
| P40-238X126 | PIPE 2 SCH40 (2.375" OD x 0.154" THK) | 126" |
| P40-238X150 | PIPE 2 SCH40 (2.375" OD x 0.154" THK) | 150" |
| P40-238X174 | PIPE 2 SCH40 (2.375" OD x 0.154" THK) | 174" |
| P40-278X048 | PIPE 2.5 SCH40 (2.875" OD x 0.203" THK) | 48" |
| P40-278X072 | PIPE 2.5 SCH40 (2.875" OD x 0.203" THK) | 72" |
| P40-278X096 | PIPE 2.5 SCH40 (2.875" OD x 0.203" THK) | 96" |
| P40-278X120 | PIPE 2.5 SCH40 (2.875" OD x 0.203" THK) | 120" |
| P40-278X126 | PIPE 2.5 SCH40 (2.875" OD x 0.203" THK) | 126" |
| P40-278X150 | PIPE 2.5 SCH40 (2.875" OD x 0.203" THK) | 150" |
| P40-278X174 | PIPE 2.5 SCH40 (2.875" OD x 0.203" THK) | 174" |
| P40-312X048 | PIPE 3 SCH40 (3.5" OD x 0.216" THK) | 48" |
| P40-312X072 | PIPE 3 SCH40 (3.5" OD x 0.216" THK) | 72" |
| P40-312X126 | PIPE 3 SCH40 (3.5" OD x 0.216" THK) | 126" |
| P40-312X150 | PIPE 3 SCH40 (3.5" OD x 0.216" THK) | 150" |
| P40-312X174 | PIPE 3 SCH40 (3.5" OD x 0.216" THK) | 174" |

**NOTE:**
**APPROVED SMART KIT VENDORS ARE ALLOWED TO SUBSTITUTE AT THEIR DISCRETION PIPES LISTED ON THIS PAGE FOR CUSTOM LENGTH COMPONENTS OF MATCHING SIZE. SUBSTITUTIONS SHALL MEET THE ORIGINAL STRUCTURAL INTENT.**

NOTES:
1. ALL PIPE GRADE A53-B OR BETTER.
2. HOT-DIPPED GALVANIZED PER ASTM A123.
3. ALL HOLES ARE 11/16" DIA. U.N.O
4. HOLES MAY OR MAY NOT BE PRESENT, DEPEND UPON MANUFACTURE DISCRETION.
5. ALL FIELD CUT AND DRILLED SURFACES SHALL BE REPAIRED WITH A MINIMUM OF TWO COATS OF ZINGA OR ZINC COTE PER ASTM A780 AND MANUFACTURER'S RECOMMENDATIONS.

**VzW SMART Tool© Vendor**

verizon

DRAWN BY: BT | CHECKED BY: HMA/KW

| REV. | DESCRIPTION | BY | DATE |
|---|---|---|---|
| 0 | FIRST ISSUE | BT | 08/04/21 |

SHEET TITLE:
VZWSMART STANDARD PIPE

SHEET NUMBER: VZWSMART-PIPE

REV #: 0

| PARTS LIST | | | | | | |
|---|---|---|---|---|---|---|
| ITEM | QTY | PART NO. | PART DESCRIPTION | LENGTH | UNIT WT. | NET WT. |
| 1 | 1 | X-SP219 | SMALL SUPPORT CROSS PLATE | 8 1/4 in | 8.61 | 8.61 |
| 2 | 2 | X-UB1306 | 1/2" X 3-5/8" X 6" X 3" U-BOLT (HDG.) | | 0.66 | 1.31 |
| 3 | 2 | X-UB1300 | 1/2" X 3" X 5" X 2" U-BOLT (HDG.) | | 0.66 | 1.31 |
| 4 | 8 | G12FW | 1/2" HDG USS FLATWASHER | | 0.03 | 0.27 |
| 5 | 8 | G12LW | 1/2" HDG LOCKWASHER | | 0.01 | 0.11 |
| 6 | 8 | G12NUT | 1/2" HDG HEAVY 2H HEX NUT | | 0.07 | 0.57 |
| | | | | | TOTAL WT. # | 12.61 |

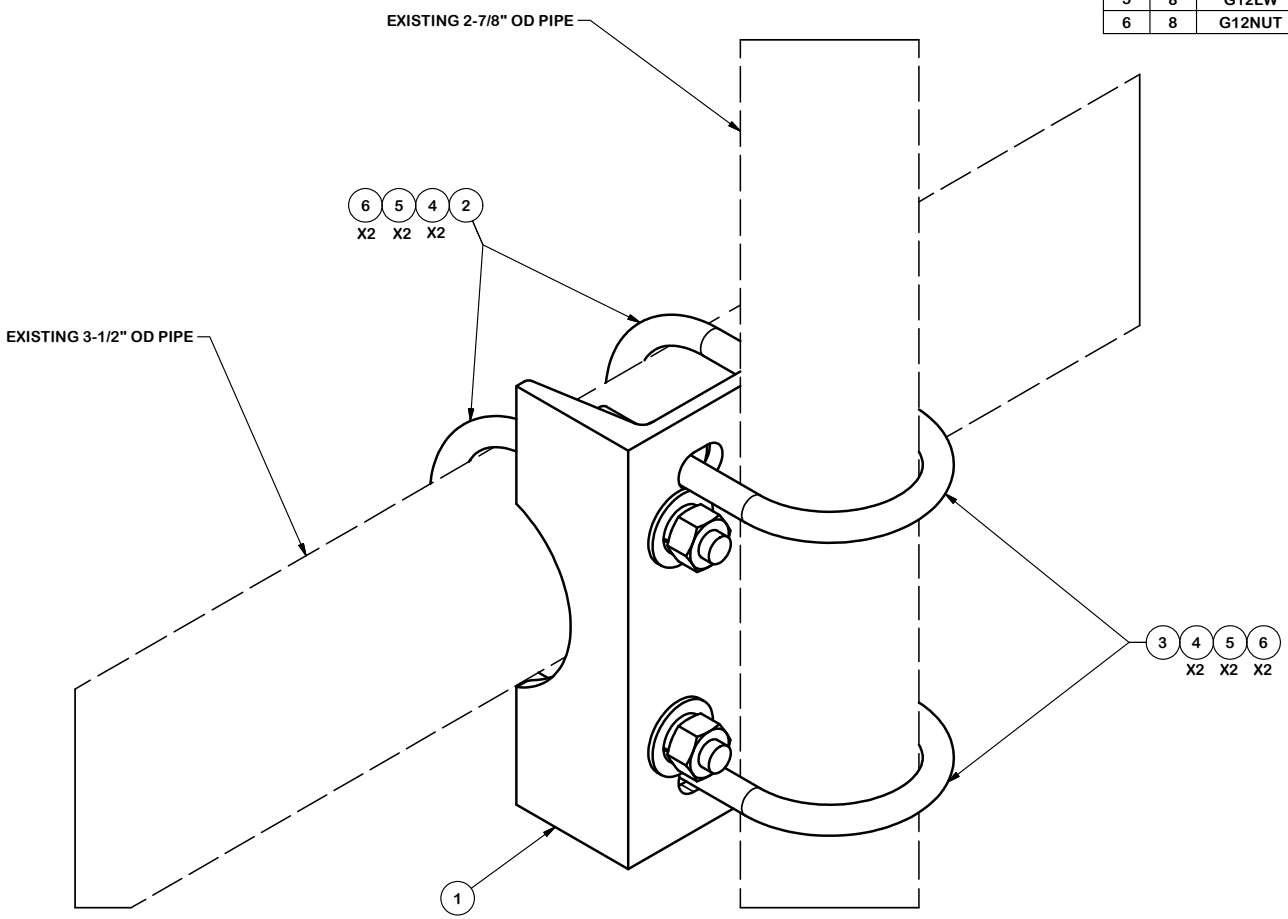


## TOLERANCE NOTES

**TOLERANCES ON DIMENSIONS, UNLESS OTHERWISE NOTED ARE:**
**SAWED, SHEARED AND GAS CUT EDGES *(± 0.030")***
**DRILLED AND GAS CUT HOLES *(± 0.030")* - NO CONING OF HOLES**
**LASER CUT EDGES AND HOLES *(± 0.010")* - NO CONING OF HOLES**
**BENDS ARE ± 1/2 DEGREE**
**ALL OTHER MACHINING *(± 0.030")***
**ALL OTHER ASSEMBLY *(± 0.060")***


PROPRIETARY NOTE:
THE DATA AND TECHNIQUES CONTAINED IN THIS DRAWING ARE PROPRIETARY INFORMATION OF VALMONT INDUSTRIES AND CONSIDERED A TRADE SECRET. ANY USE OR DISCLOSURE WITHOUT THE CONSENT OF VALMONT INDUSTRIES IS STRICTLY PROHIBITED.


| REV | DESCRIPTION OF REVISIONS | CPD | BY | DATE |
|---|---|---|---|---|
| A | REDRAWN IN INV, UPDATED VIEWS & TABLE | | KC8 | 8-21-2012 |

REVISION HISTORY

DESCRIPTION
2-7/8" TO 3-1/2"
PIPE MOUNT ASSEMBLY

| CPD NO. | DRAWN BY | ENG. APPROVAL | PART NO. |
|---|---|---|---|
| 4518 | BMC 6/3/2009 | | SP219-H |

| CLASS | SUB | DRAWING USAGE | CHECKED BY | DWG. NO. |
|---|---|---|---|---|
| 81 | 01 | CUSTOMER | CEK 2/18/2013 | SP219-H |


SITE PRO 1
A valmont COMPANY
Engineering Support Team:
1-888-753-7446
Locations:
New York, NY
Atlanta, GA
Los Angeles, CA
Plymouth, IN
Salem, OR
Dallas, TX

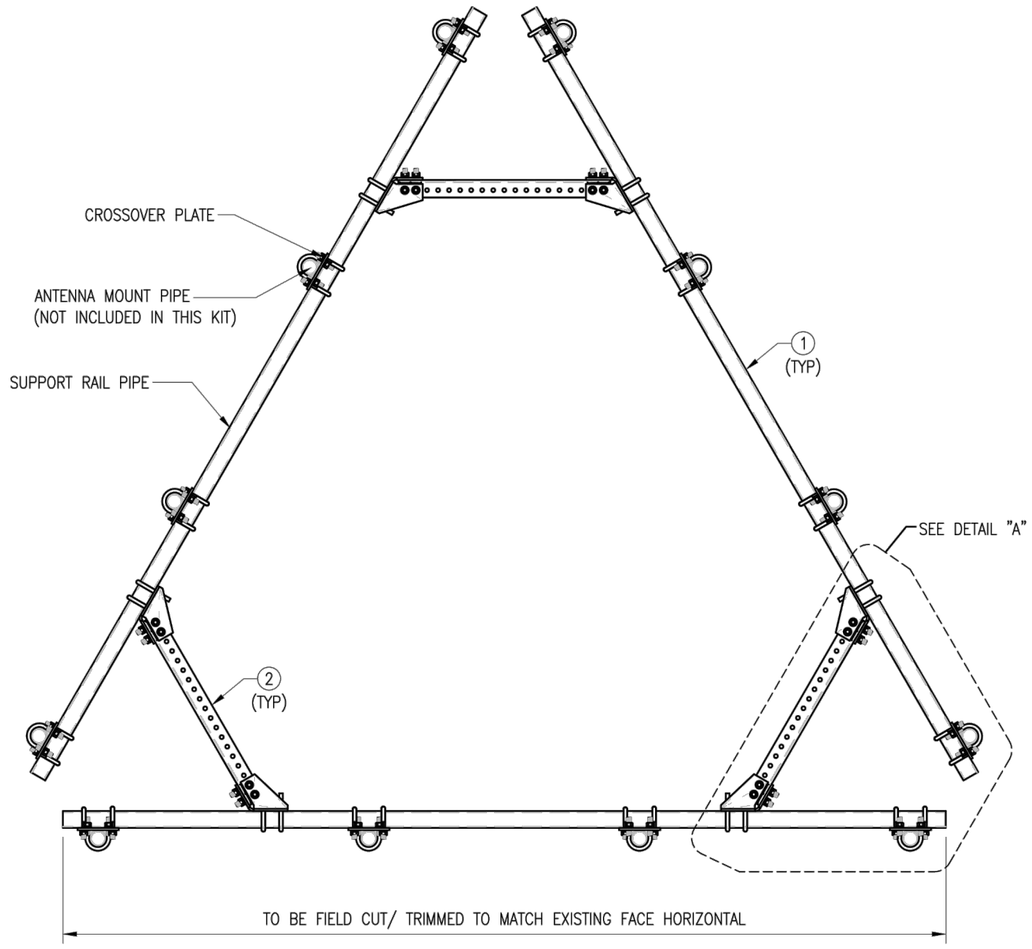


PLAN VIEW

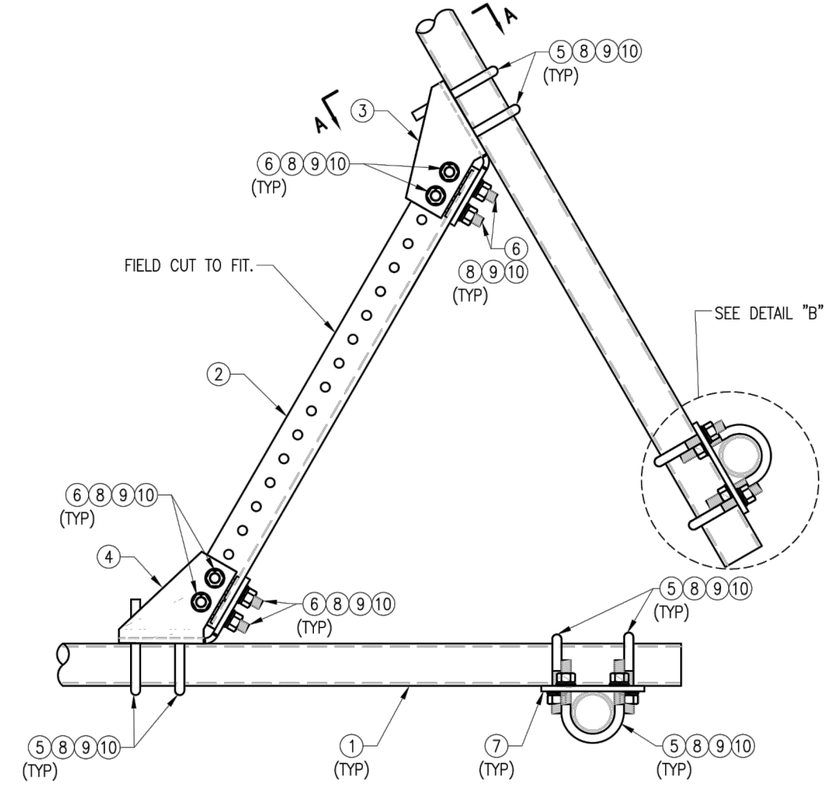


DETAIL "A"

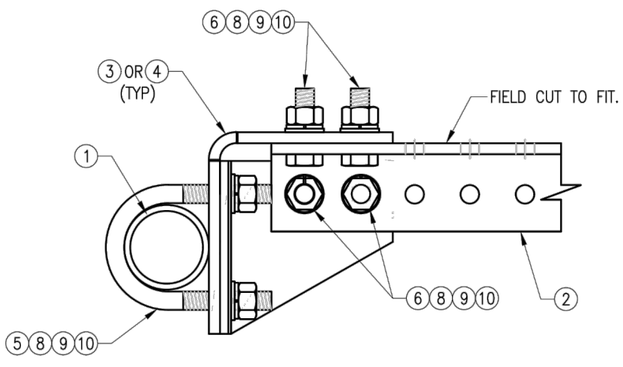


SECTION "A–A"

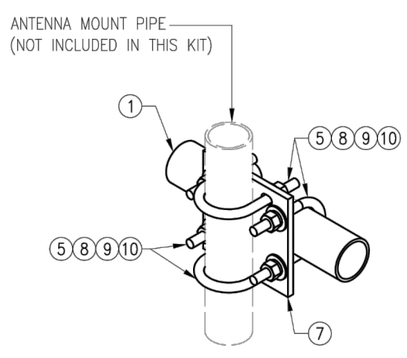


DETAIL "B"

NOTES:
1. HOT–DIPPED GALVANIZED PER ASTM A123.

VZW SMART–PLK1 (SUPPORT RAIL KIT)

| ITEM NO. | QTY. | PART NO. | DESCRIPTION | SHEET # | WT |
|---|---|---|---|---|---|
| 1 | 3 | PST2875–12.5 | 2.5" PST (2.875" O.D. X 0.203" THK.) X 12'–6" A53 GR–B | PLK1–F1 | 292 |
| 2 | 3 | L33375–3 | L 3" X 3" X 3/8" X 3'–0" A36 | PLK1–F1 | 66 |
| 3 | 3 | CBP–L | CORNER BENT PLATE BRACKET | PLK1–F2 | 28 |
| 4 | 3 | CBP–R | CORNER BENT PLATE BRACKET | PLK1–F2 | 28 |
| 5 | 60 | MS02–625–300–500 | RU–BOLT 5/8" X 3" I.W. X 5" I.L. A36 (OR EQUIV.) | RBC–1 | 82 |
| 6 | 24 | --- | BOLT 5/8" X 2" A325 | --- | 9 |
| 7 | 12 | PL375–857 | PL 3/8" X 8 1/2" X 7'–0" A36 | PLK1–F3 | 77 |
| 8 | 144 | FW–625 | 5/8" HDG USS FLAT WASHER | --- | 12 |
| 9 | 144 | LW–625 | 5/8" HDG LOCK WASHER | --- | 3 |
| 10 | 144 | NUT–625 | 5/8" HDG HEX NUT | --- | 17 |
| | | | | GALVANIZED WT | 504 |

VzW
SMART Tool©
Vendor

verizon

DRAWN BY: H.R | CHECKED BY: HMA

| REV. | DESCRIPTION | BY | DATE |
|---|---|---|---|
| 0 | FIRST ISSUE | H.R | 05/08/20 |

SHEET TITLE:

VZWSMART–PLK1
SUPPORT RAIL KIT

SHEET NUMBER: VZWSMART–PLK1

REV #: 0

NOTE:
THE LOCATION OF KICKER AND EXISTING ANTENNA MOUNT SHOWN ON THE DRAWING IS FOR REPRESENTATION PURPOSE ONLY. SEE INSTALLATION DRAWINGS FOR ACTUAL INSTALLATION OF DETAILS.

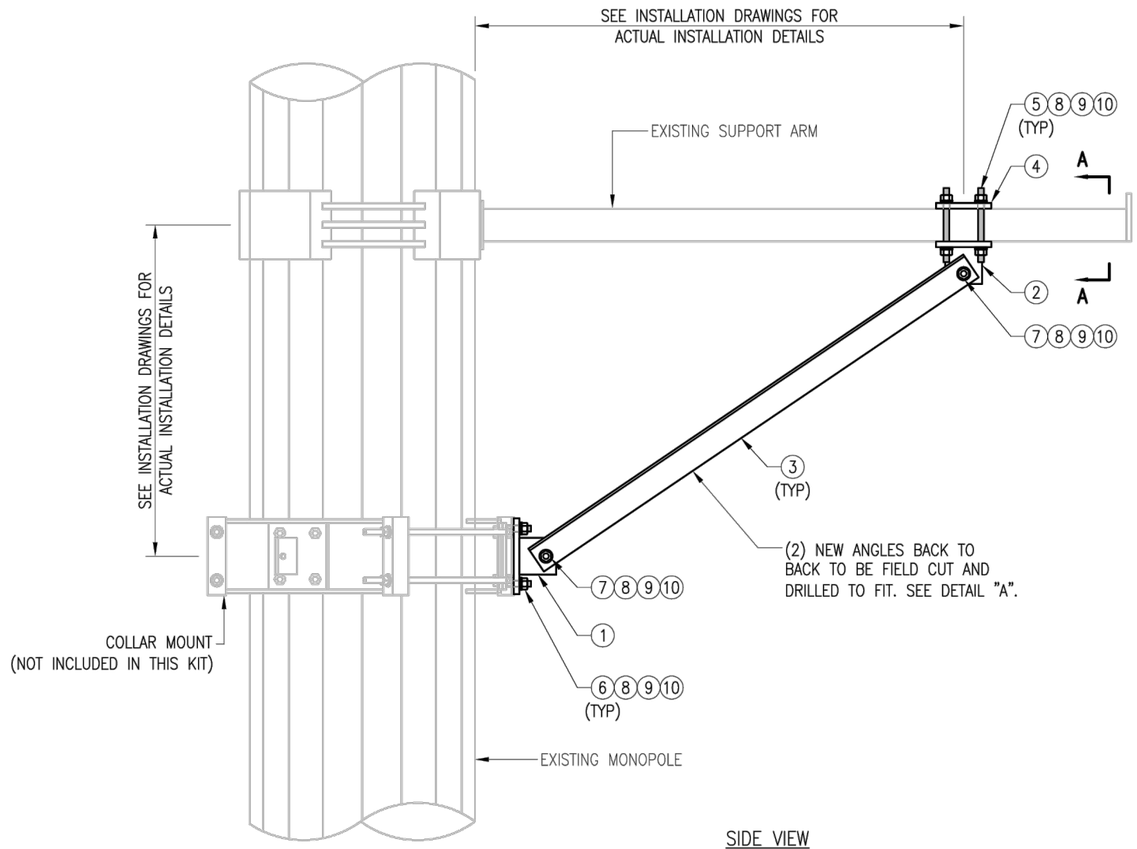


SIDE VIEW
KICKER KIT

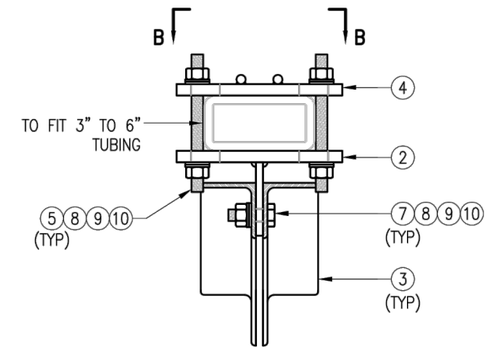


SECTION "A–A"
RECT. HSS MOUNTING

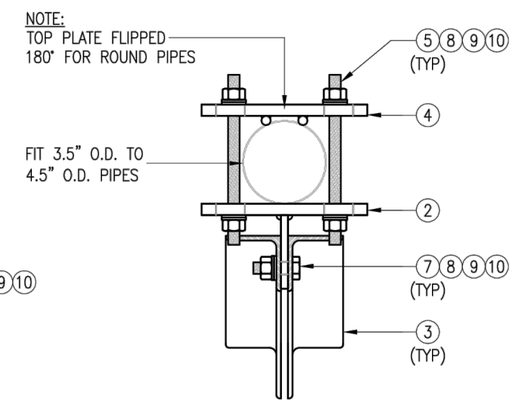


SECTION "A–A"
ROUND PIPE MOUNTING

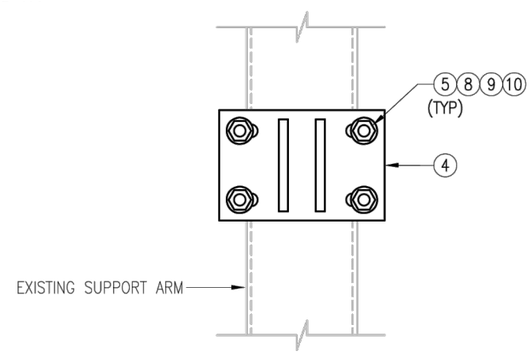


SECTION "B–B"

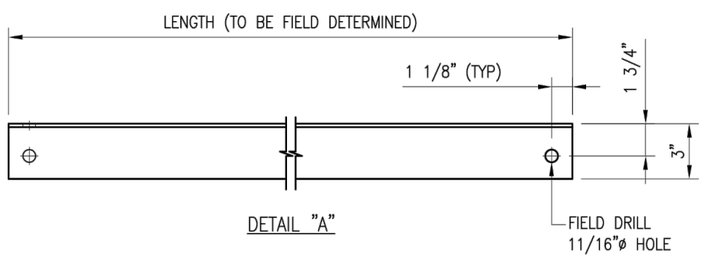


DETAIL "A"

NOTES:
1. ALL HOLES ARE 11/16" DIA. U.N.O
2. HOT–DIPPED GALVANIZED PER ASTM A123.
3. FIT UP TO 6" SQ. TUBING OR 4 1/2" O.D. PIPE

VZWSMART–PLK5 (KICKER KIT)

| ITEM NO. | QTY. | PART NO. | DESCRIPTION | SHEET # | WT |
|---|---|---|---|---|---|
| 1 | 3 | BRKW–XXX | BRACKET WELDMENT A36 | PLK5–F3 | 43.8 |
| 2 | 3 | BRKW–XXXX | BRACKET WELDMENT A36 | PLK5–F2 | 35.7 |
| 3 | 6 | L331875–8 | L 3" X 3" X 3/16" X 8'–0" A36 | PLK5–F4 | 182.9 |
| 4 | 3 | PL–KI | PL 5/8" X 6" X 9" A36 | PLK5–F1 | 29.0 |
| 5 | 12 | --- | THREADED ROD 5/8" DIA. X 1'–0" F1554–36 HDG | --- | -- |
| 6 | 6 | --- | BOLT 5/8" X 2" A325 | --- | -- |
| 7 | 12 | --- | BOLT 5/8" X 2 1/2" A325 | --- | -- |
| 8 | 42 | FW–625 | 5/8" HDG USS FLAT WASHER | --- | 3 |
| 9 | 42 | LW–625 | 5/8" HDG LOCK WASHER | --- | 1 |
| 10 | 42 | NUT–625 | 5/8" HDG HEX NUT | --- | 5 |
| | | | | GALVANIZED WT | 291 |

VzW
SMART Tool©
Vendor

verizon

DRAWN BY: MN | CHECKED BY: HMA/KW

| REV. | DESCRIPTION | BY | DATE |
|---|---|---|---|
| 0 | FIRST ISSUE | MN | 05/08/20 |

SHEET TITLE:
VZWSMART–PLK5
KICKER KIT

SHEET NUMBER: VZWSMART–PLK5
REV #: 0

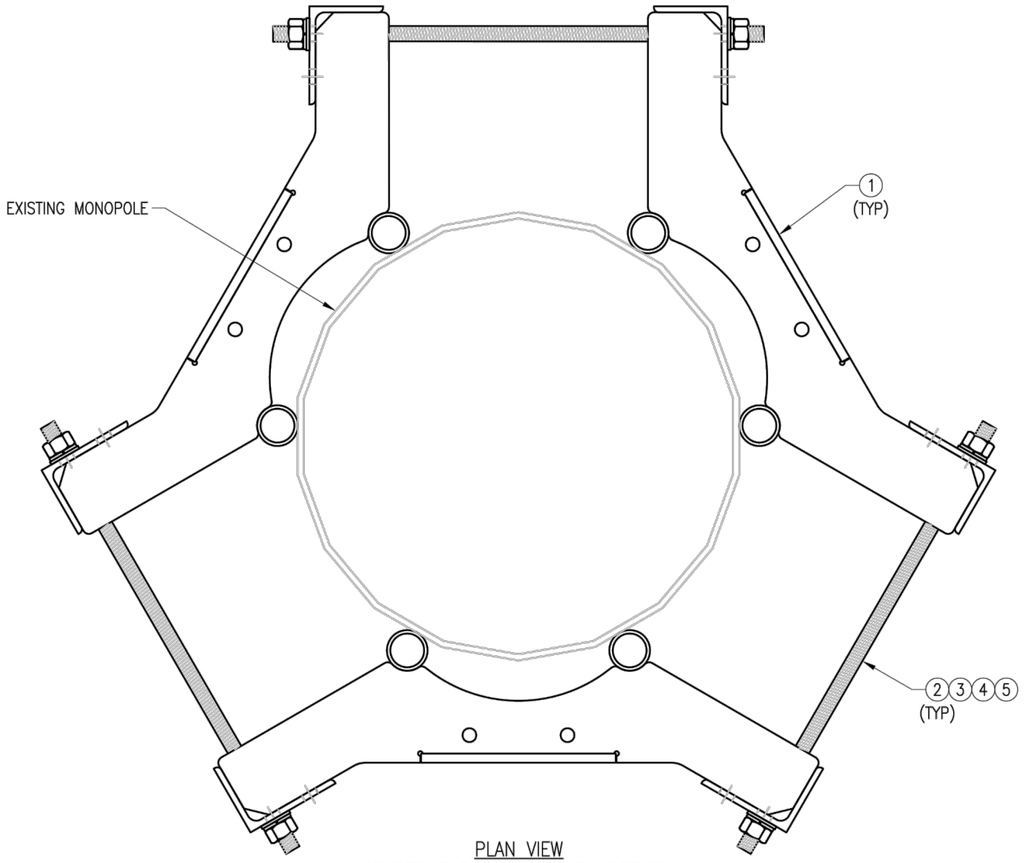


PLAN VIEW
MONOPOLE COLLAR MOUNT ASSEMBLY

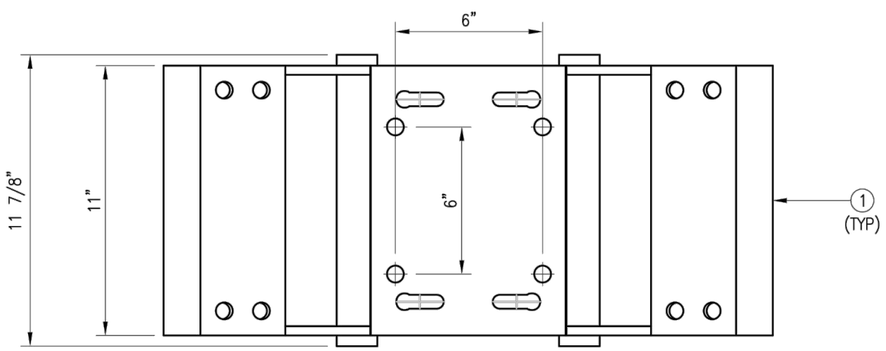


FRONT VIEW

NOTES:
1. FIT 12" TO 45" DIA MONOPOLE.
2. HOT-DIPPED GALVANIZED PER ASTM A123.

VZWSMART-PLK7 (MONOPOLE COLLAR MOUNT ASSEMBLY)

| ITEM NO. | QTY. | PART NO. | DESCRIPTION | SHEET # | WT |
|---|---|---|---|---|---|
| 1 | 3 | CM-1245 | COLLAR MOUNT ASSEMBLY | PLK7-F1 | 147 |
| 2 | 6 | --- | THREADED ROD 5/8" X 4'-0" A193-B7 | --- | |
| 3 | 12 | FW-625 | 5/8" HDG USS FLAT WASHER | --- | 1 |
| 4 | 12 | LW-625 | 5/8" HDG LOCK WASHER | --- | 0 |
| 5 | 12 | NUT-625 | 5/8" HDG HEX NUT | --- | 1 |
| | | | | GALVANIZED WT | 150 |

VzW
SMART Tool©
Vendor

verizon

DRAWN BY: BT | CHECKED BY: HMA/KW

| REV. | DESCRIPTION | BY | DATE |
|---|---|---|---|
| 0 | FIRST ISSUE | BT | 05/11/20 |

SHEET TITLE:
VZWSMART-PLK7
MONOPOLE COLLAR
MOUNT ASSEMBLY

SHEET NUMBER: VZWSMART-PLK7

REV #: 0