NORTHEAST SITE SOLUTIONS
Turnkey Wireless Development

Northeast Site Solutions
Denise Sabo
4 Angela's Way, Burlington CT 06013
203-435-3640
denise@northeastsitesolutions.com

March 18, 2022

Members of the Siting Council
Connecticut Siting Council
Ten Franklin Square
New Britain, CT 06051

RE: Exempt Modification Application
1394 Meriden Waterbury Turnpike, Southington, CT 06489
Latitude: 41.564444
Longitude: -72.892500
Site #: 876313_Crown_VZW

Dear Ms. Bachman:

Verizon Wireless is requesting to file an exempt modification for an existing tower located at 1394 Meriden Waterbury Turnpike, Southington, CT 06489. Verizon Wireless currently maintains twelve (12) antennas at the 138-foot level of the existing 160-foot tower. Both the property and the tower are owned by Crown Castle. Verizon now intends to replace six (6) antennas. The new antennas would be installed at the 138-foot level of the tower. This modification includes B2, B5 hardware that is both 4G (LTE), and 5G capable.

Verizon Planned Modifications:

Remove: None

Remove and Replace:
(3) AMPHENOL Antennas (REMOVE) – (3) Samsung MT6407-77A Antennas
(3) AMPHENOL Antennas (REMOVE) – (3) Samsung XXDWMM-12.5-65-8TCBRS Antennas

Install New: None

Existing to Remain:
(6) COMMSCOPE NNHH-65B-R4 Antennas
(3) Samsung B2/B66A BRO49 RRH
(3) Samsung B5/B13 BRO4C RRH
(1) Lucent GPS Antenna
(1) Raycap OVP
(6) Coax 1-5/8"
(1) Coax 1/2"
(1) Hybrid Line

The facility was originally approved by the Town of Southington, but at this time no documentation has been made available.

NORTHEAST SITE SOLUTIONS

Turnkey Wireless Development

Please accept this letter as notification pursuant to Regulations of Connecticut State Agencies§ 16- SOj-73, for construction that constitutes an exempt modification pursuant to R.C.S.A. § 16-50j-72(b)(2). In accordance with R.C.SA. § 16-SOj-73, a copy of this letter is being sent to Victoria Triano, Town Council Chair, Mark Sciota, Town Manager and Maryellen Edwards, Director of Planning & Community Development for the Town of Southington. A copy is also being sent to the tower owner and property owner.

The planned modifications to the facility fall squarely within those activities explicitly provided for in R.C.S.A. § 16-50j-72(b)(2).

1. The proposed modifications will not result in an increase in the height of the existing structure.

2. The proposed modifications will not require the extension of the site boundary.

3. The proposed modifications will not increase noise levels at the facility by six decibels or more, or to levels that exceed state and local criteria.

4. The operation of the replacement antennas will not increase radio frequency emissions at the facility to a level at or above the Federal Communications Commission safety standard.

5. The proposed modifications will not cause a change or alteration in the physical or environmental characteristics of the site.

6. The existing structure and its foundation can support the proposed loading.

For the foregoing reasons, Verizon Wireless respectfully submits that the proposed modifications to the above referenced telecommunications facility constitute an exempt modification under R.C.S.A. § 16-50j-72(b)(2).

Sincerely,

Denise Sabo
Mobile: 203-435-3640
Fax: 413-521-0558
Office: 4 Angela's Way, Burlington CT 06013
E-mail: denise@northeastsitesolutions.com

NORTHEAST SITE SOLUTIONS
Turnkey Wireless Development

Attachments

Cc: Victoria Triano, Town Council Chair
Southington Town Hall
75 Main Street
Southington, CT 06489

Mark Sciota, Town Manager
Southington Town Hall
75 Main Street
Southington, CT 06489

Maryellen Edwards, Director of Planning & Community Development
Southington Municipal Center
196 North Main Street
Southington, CT 06489

Crown Castle – Tower & Property Owner

Exhibit A

1394 MERIDEN WATERBURY TPKE

Location	1394 MERIDEN WATERBURY TPKE	**Mblu**	032/ / 103/ 0004/
		Acct#	18522
Owner	SOUTHINGTON TOWER DEVELOPMENT LLC	**Assessment**	$207,490
		Appraisal	$296,420
PID	1752	**Building Count**	1

Current Value

Appraisal			
Valuation Year	**Improvements**	**Land**	**Total**
2020	$0	$296,420	$296,420
Assessment			
Valuation Year	**Improvements**	**Land**	**Total**
2020	$0	$207,490	$207,490

Owner of Record

Owner	SOUTHINGTON TOWER DEVELOPMENT LLC	**Sale Price**	$90,000
Co-Owner		**Certificate**	
Address	754 PEACHTREE ST, NE 16TH FLOOR ATLANTA, GA 30308	**Book & Page**	0997/1112
		Sale Date	01/18/2005
		Instrument	03

Ownership History

Ownership History					
Owner	**Sale Price**	**Certificate**	**Book & Page**	**Instrument**	**Sale Date**
SOUTHINGTON TOWER DEVELOPMENT LLC	$90,000		0997/1112	03	01/18/2005

Building Information

Building 1 : Section 1

Year Built:
Living Area: 0
Building Percent Good:

Building Attributes

Field	Description
Style	Vacant
Model	
Grade:	
Stories	
Occupancy	
Exterior Wall 1	
Exterior Wall 2	
Roof Structure	
Roof Cover	
Interior Wall 1	
Interior Wall 2	
Interior Flr 1	
Interior Flr 2	
Heat Fuel	
Heat Type:	
AC Type:	
Total Bedrooms:	
Full Bthrms:	
Half Baths:	
Extra Fixtures	
Total Rooms:	
Bath Style:	
Kitchen Style:	
Total Kitchens	
Fireplaces	
Whirlpool Tubs	
Fin Bsmt Area	
Fin Bsmt Quality	
Bsmt Garages	
.	
Bsmt Type	
Attic Type	
Cath Ceiling	
Fndtn Cndtn	
Basement	

Building Photo

(http://images.vgsi.com/photos2/SouthingtonCTPhotos//\0057\IMG_2279_5

Building Layout

(ParcelSketch.ashx?pid=1752&bid=1752)

Building Sub-Areas (sq ft)	Legend
No Data for Building Sub-Areas	

Extra Features

Extra Features	Legend

No Data for Extra Features

Land

Land Use

Use Code	391
Description	Vac Com Lnd wAcc
Zone	B
Alt Land Appr	No
Category	

Land Line Valuation

Size (Acres)	0.83
Depth	

Outbuildings

Outbuildings	Legend
No Data for Outbuildings	

Valuation History

Appraisal			
Valuation Year	**Improvements**	**Land**	**Total**
2021	$0	$296,420	$296,420
2020	$0	$296,420	$296,420
2019	$0	$204,320	$204,320
2018	$0	$204,320	$204,320
2017	$0	$204,320	$204,320

Assessment			
Valuation Year	**Improvements**	**Land**	**Total**
2021	$0	$207,490	$207,490
2020	$0	$207,490	$207,490
2019	$0	$143,020	$143,020
2018	$0	$143,020	$143,020
2017	$0	$143,020	$143,020

(c) 2022 Vision Government Solutions, Inc. All rights reserved.

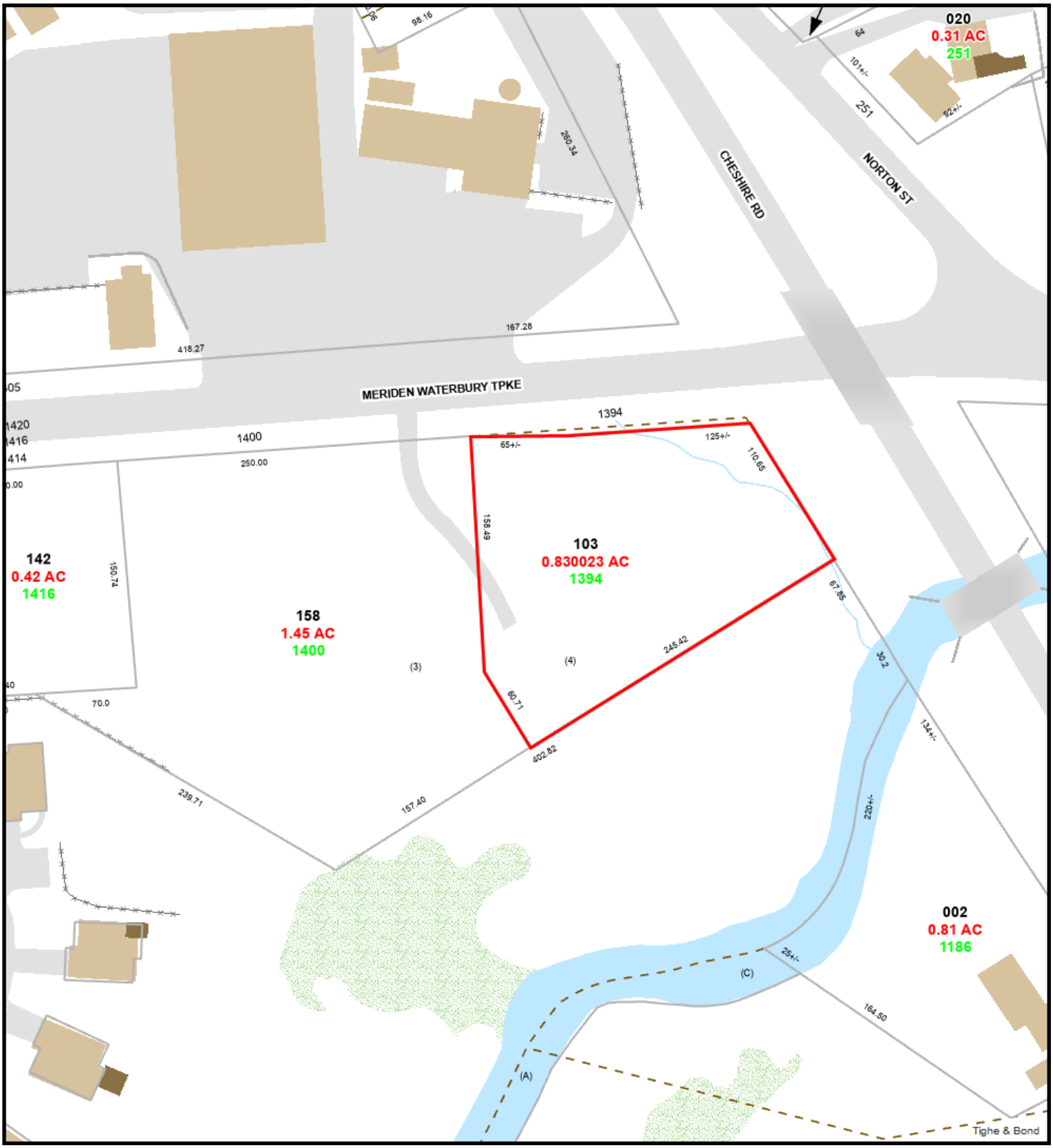

1394 MERIDEN

3/18/2022 10:15:10 AM

Scale: 1"=94'

Scale is approximate

The information depicted on this map is for planning purposes only. It is not adequate for legal boundary definition, regulatory interpretation, or parcel-level analyses.

Exhibit B

verizon

VERIZON SITE NUMBER: 467473
VERIZON SITE NAME: MILLDALE CT
SITE TYPE: MONOPOLE
TOWER HEIGHT: 160'-0"

BUSINESS UNIT #: 876313
SITE ADDRESS: 1394 MERIDEN WATERBURY TPK SOUTHINGTON, CT 06489
COUNTY: HARTFORD
JURISDICTION: CONNECTICUT SITTING COUNCIL

VERIZON 5G L-SUB6 - CARRIER ADD 16242092

SITE INFORMATION

CROWN CASTLE USA INC. SITE NAME:	WEST JOHNSON AVE. BURNT HOUSE
SITE ADDRESS:	1394 MERIDEN WATERBURY TPK SOUTHINGTON, CT 06489
COUNTY:	HARTFORD
MAP/PARCEL #:	0321030004
AREA OF CONSTRUCTION:	EXISTING
LATITUDE:	41° 33' 51.39"
LONGITUDE:	-72° 53' 30.70"
LAT/LONG TYPE:	NAD83
GROUND ELEVATION:	135'
CURRENT ZONING:	B
JURISDICTION:	CONNECTICUT SITTING COUNCIL
OCCUPANCY CLASSIFICATION:	U
TYPE OF CONSTRUCTION:	IIB
A.D.A. COMPLIANCE:	FACILITY IS UNMANNED AND NOT FOR HUMAN HABITATION
PROPERTY OWNER:	SOUTHINGTON TOWER DEVELOPMENT LLC 754 PEACHREE ST, NE ATLANTA, GA 30308
TOWER OWNER:	CROWN CASTLE 2000 CORPORATE DRIVE CANONSBURG, PA 15317
CARRIER/APPLICANT:	VERIZON WIRELESS 180 WASHINGTON VALLEY ROAD BEDMINSTER, NJ 07921
ELECTRIC PROVIDER:	EVERSOURCE (800) 286-2000
TELCO PROVIDER:	NOT PROVIDED

PROJECT TEAM

A&E FIRM:	B+T GROUP 1717 S. BOULDER AVE. TULSA, OK 74119 MARVIN PHILLIPS marvin.phillips@btgrp.com
CROWN CASTLE USA INC. DISTRICT CONTACTS:	1505 WESTLAKE AVENUE NORTH, SUITE 800 SEATTLE, WA 98109 WILLIAM GATES - PROJECT MANAGER WILLIAM.GATES@CROWNCASTLE.COM JASON D'AMICO - CONSTRUCTION MANAGER JASON.DAMICO@CROWNCASTLE.COM
VERIZON CONTACT:	TIMOTHY PARKS TIMOTHY.PARKS@VERIZONWIRELESS.COM

DRAWING INDEX

SHEET #	SHEET DESCRIPTION
T-1	TITLE SHEET
T-2	GENERAL NOTES
C-1	SITE PLAN
C-2	TOWER ELEVATION & ANTENNA PLANS
C-3	EQUIPMENT SCHEDULES
C-4	EQUIPMENT DETAILS
C-5	EQUIPMENT DETAILS
C-6	PLUMBING DIAGRAM
G-1	GROUNDING DETAILS
G-2	GROUNDING DETAILS

ALL DRAWINGS CONTAINED HEREIN ARE FORMATTED FOR FULL SIZE. CONTRACTOR SHALL VERIFY ALL PLANS AND EXISTING DIMENSIONS AND CONDITIONS ON THE JOB SITE AND SHALL IMMEDIATELY NOTIFY THE ENGINEER IN WRITING OF ANY DISCREPANCIES BEFORE PROCEEDING WITH THE WORK OR BE RESPONSIBLE FOR SAME.

APPROVALS

SIGNATURE	DATE

CONTRACTOR PMI REQUIREMENTS

PMI ACCESSED AT	https://pmi.vxwsmart.com
SMART TOOL VENDOR PROJECT NUMBER	10039594
VzW LOCATION CODE (PSLC)	467473

*** PMI AND REQUIREMENTS ALSO EMBEDDED IN MOUNT ANALYSIS REPORT

MOUNT MODIFICATION REQUIRED	N

VzW APPROVED SMART KIT VENDORS

REFER TO MOUNT MODIFICATION DRAWINGS PAGE FOR VzW SMART KIT APPROVED VENDORS

LOCATION MAP

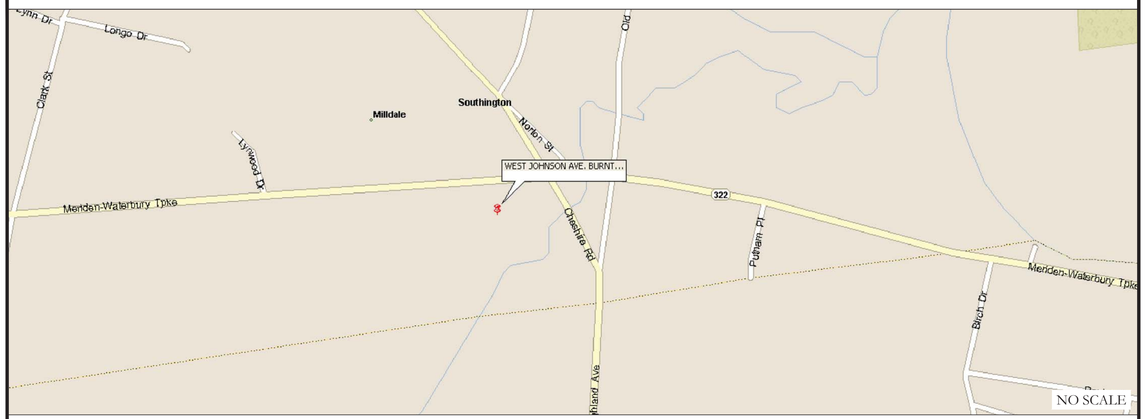

DRIVING DIRECTIONS FROM VERIZON LOCAL OFFICE (795 BROOK ST, ROCKY HILL, CT 06067)
GET ON I-91 S FROM CT-3, HEAD SOUTH TOWARD BROOK ST, TURN RIGHT ONTO BROOK ST, TURN RIGHT ONTO CT-3, TURN RIGHT ONTO STATE HWY 411, USE THE RIGHT LANE TO MERGE WITH I-91 S VIA THE RAMP TO NEW HVN, FOLLOW I-91 S AND I-691 W TO CT-10 N IN CHESHIRE. TAKE EXIT 3 FROM I-691 W, MERGE WITH I-91 S, TAKE EXIT 18 FOR I-691 W TOWARD MERIDEN/WATERBURY, CONTINUE ONTO I-691 W, TAKE EXIT 3 FOR CT-10 TOWARD MILLDALE/CHESHIRE, CONTINUE ON CT-10 N. DRIVE TO CT-322 W IN SOUTHINGTON, TURN RIGHT ONTO CT-10 N, CONTINUE STRAIGHT ONTO OLD TURNPIKE RD, TURN LEFT ONTO CT-322 W, DESTINATION WILL BE ON THE LEFT.

APPLICABLE CODES/REFERENCE DOCUMENTS

ALL WORK SHALL BE PERFORMED AND MATERIALS INSTALLED IN ACCORDANCE WITH THE CURRENT EDITIONS OF THE FOLLOWING CODES AS ADOPTED BY THE LOCAL GOVERNING AUTHORITIES. NOTHING IN THESE PLANS IS TO BE CONSTRUED TO PERMIT WORK NOT CONFORMING TO THESE CODES:

CODE TYPE	CODE
BUILDING	2015 IBC
MECHANICAL	2015 IMC
ELECTRICAL	2017 NEC

REFERENCE DOCUMENTS:

STRUCTURAL ANALYSIS:	B+T GRP
DATED:	1/21/22
MOUNT ANALYSIS:	GPD
DATED:	6/29/21
RFDS REVISION:	N/A
DATED:	5/28/21
ORDER ID:	586465
REVISION:	1

CALL CONNECTICUT ONE CALL
(800) 922-4455 CBYD.COM
CALL 2 WORKING DAYS BEFORE YOU DIG!

PROJECT DESCRIPTION

THE PURPOSE OF THIS PROJECT IS TO ENHANCE BROADBAND CONNECTIVITY AND CAPACITY TO THE EXISTING ELIGIBLE WIRELESS FACILITY.

TOWER SCOPE OF WORK:
- REMOVE (6) ANTENNAS
- INSTALL (6) ANTENNAS W/ INTEGRATED RADIOs

GROUND SCOPE OF WORK:
- NONE

NOTE:
PRIOR TO ACCESSING/ENTERING THE SITE YOU MUST CONTACT THE CROWN NOC AT (800) 788-7011 & CROWN CONSTRUCTION MANAGER

verizon
180 WASHINGTON VALLEY ROAD
BEDMINSTER, NJ 07921

CROWN CASTLE
1505 WESTLAKE AVENUE NORTH, SUITE 800
SEATTLE, WA 98109

B+T GRP
1717 S. BOULDER
SUITE 300
TULSA, OK 74119
PH: (918) 587-4630
www.btgrp.com

VERIZON SITE NUMBER:
467473

BU #: **876313**
WEST JOHNSON AVE. BURNT HOUSE

1394 MERIDEN WATERBURY TPK
SOUTHINGTON, CT 06489

EXISTING 160'-0" MONOPOLE

ISSUED FOR:

REV	DATE	DRWN	DESCRIPTION	DES./QA
0	2/8/22	JJR	CONSTRUCTION	MTJ

B&T ENGINEERING, INC.
PEC.0001564
Expires 2/10/23

IT IS A VIOLATION OF LAW FOR ANY PERSON, UNLESS THEY ARE ACTING UNDER THE DIRECTION OF A LICENSED PROFESSIONAL ENGINEER, TO ALTER THIS DOCUMENT.

SHEET NUMBER: T-1
REVISION: 0

CROWN CASTLE USA INC. SITE ACTIVITY REQUIREMENTS:

1. NOTICE TO PROCEED– NO WORK SHALL COMMENCE PRIOR TO CROWN CASTLE USA INC. WRITTEN NOTICE TO PROCEED (NTP) AND THE ISSUANCE OF A PURCHASE ORDER. PRIOR TO ACCESSING/ENTERING THE SITE YOU MUST CONTACT THE CROWN CASTLE USA INC. NOC AT 800–788–7011 & THE CROWN CASTLE USA INC. CONSTRUCTION MANAGER.
2. "LOOK UP" – CROWN CASTLE USA INC. SAFETY CLIMB REQUIREMENT:
   THE INTEGRITY OF THE SAFETY CLIMB AND ALL COMPONENTS OF THE CLIMBING FACILITY SHALL BE CONSIDERED DURING ALL STAGES OF DESIGN, INSTALLATION, AND INSPECTION. TOWER MODIFICATION, MOUNT REINFORCEMENTS, AND/OR EQUIPMENT INSTALLATIONS SHALL NOT COMPROMISE THE INTEGRITY OR FUNCTIONAL USE OF THE SAFETY CLIMB OR ANY COMPONENTS OF THE CLIMBING FACILITY ON THE STRUCTURE. THIS SHALL INCLUDE, BUT NOT BE LIMITED TO: PINCHING OF THE WIRE ROPE, BENDING OF THE WIRE ROPE FROM ITS SUPPORTS, DIRECT CONTACT OR CLOSE PROXIMITY TO THE WIRE ROPE WHICH MAY CAUSE FRICTIONAL WEAR, IMPACT TO THE ANCHORAGE POINTS IN ANY WAY, OR TO IMPEDE/BLOCK ITS INTENDED USE. ANY COMPROMISED SAFETY CLIMB, INCLUDING EXISTING CONDITIONS MUST BE TAGGED OUT AND REPORTED TO YOUR CROWN CASTLE USA INC. POC OR CALL THE NOC TO GENERATE A SAFETY CLIMB MAINTENANCE AND CONTRACTOR NOTICE TICKET.
3. PRIOR TO THE START OF CONSTRUCTION, ALL REQUIRED JURISDICTIONAL PERMITS SHALL BE OBTAINED. THIS INCLUDES, BUT IS NOT LIMITED TO, BUILDING, ELECTRICAL, MECHANICAL, FIRE, FLOOD ZONE, ENVIRONMENTAL, AND ZONING. AFTER ONSITE ACTIVITIES AND CONSTRUCTION ARE COMPLETED, ALL REQUIRED PERMITS SHALL BE SATISFIED AND CLOSED OUT ACCORDING TO LOCAL JURISDICTIONAL REQUIREMENTS.
4. ALL CONSTRUCTION MEANS AND METHODS; INCLUDING BUT NOT LIMITED TO, ERECTION PLANS, RIGGING PLANS, CLIMBING PLANS, AND RESCUE PLANS SHALL BE THE RESPONSIBILITY OF THE GENERAL CONTRACTOR RESPONSIBLE FOR THE EXECUTION OF THE WORK CONTAINED HEREIN, AND SHALL MEET ANSI/ASSE A10.48 (LATEST EDITION); FEDERAL, STATE, AND LOCAL REGULATIONS; AND ANY APPLICABLE INDUSTRY CONSENSUS STANDARDS RELATED TO THE CONSTRUCTION ACTIVITIES BEING PERFORMED. ALL RIGGING PLANS SHALL ADHERE TO ANSI/ASSE A10.48 (LATEST EDITION) AND CROWN CASTLE USA INC. STANDARD CED–STD–10253, INCLUDING THE REQUIRED INVOLVEMENT OF A QUALIFIED ENGINEER FOR CLASS IV CONSTRUCTION, TO CERTIFY THE SUPPORTING STRUCTURE(S) IN ACCORDANCE WITH ANSI/TIA–322 (LATEST EDITION).
5. ALL SITE WORK TO COMPLY WITH QAS–STD–10068 "INSTALLATION STANDARDS FOR CONSTRUCTION ACTIVITIES ON CROWN CASTLE USA INC. TOWER SITE," CED–STD–10294 "STANDARD FOR INSTALLATION OF MOUNTS AND APPURTENANCES," AND LATEST VERSION OF ANSI/TIA–1019–A–2012 "STANDARD FOR INSTALLATION, ALTERATION, AND MAINTENANCE OF ANTENNA SUPPORTING STRUCTURES AND ANTENNAS."
6. IF THE SPECIFIED EQUIPMENT CAN NOT BE INSTALLED AS SHOWN ON THESE DRAWINGS, THE CONTRACTOR SHALL PROPOSE AN ALTERNATIVE INSTALLATION FOR APPROVAL BY CROWN CASTLE USA INC. PRIOR TO PROCEEDING WITH ANY SUCH CHANGE OF INSTALLATION.
7. ALL MATERIALS FURNISHED AND INSTALLED SHALL BE IN STRICT ACCORDANCE WITH ALL APPLICABLE CODES, REGULATIONS AND ORDINANCES. CONTRACTOR SHALL ISSUE ALL APPROPRIATE NOTICES AND COMPLY WITH ALL LAWS, ORDINANCES, RULES, REGULATIONS AND LAWFUL ORDERS OF ANY PUBLIC AUTHORITY REGARDING THE PERFORMANCE OF THE WORK. ALL WORK CARRIED OUT SHALL COMPLY WITH ALL APPLICABLE MUNICIPAL AND UTILITY COMPANY SPECIFICATIONS AND LOCAL JURISDICTIONAL CODES, ORDINANCES AND APPLICABLE REGULATIONS.
8. THE CONTRACTOR SHALL INSTALL ALL EQUIPMENT AND MATERIALS IN ACCORDANCE WITH MANUFACTURER'S RECOMMENDATIONS UNLESS SPECIFICALLY STATED OTHERWISE.
9. THE CONTRACTOR SHALL CONTACT UTILITY LOCATING SERVICES PRIOR TO THE START OF CONSTRUCTION.
10. ALL EXISTING ACTIVE SEWER, WATER, GAS, ELECTRIC AND OTHER UTILITIES WHERE ENCOUNTERED IN THE WORK, SHALL BE PROTECTED AT ALL TIMES AND WHERE REQUIRED FOR THE PROPER EXECUTION OF THE WORK, SHALL BE RELOCATED AS DIRECTED BY CONTRACTOR. EXTREME CAUTION SHOULD BE USED BY THE CONTRACTOR WHEN EXCAVATING OR DRILLING PIERS AROUND OR NEAR UTILITIES. CONTRACTOR SHALL PROVIDE SAFETY TRAINING FOR THE WORKING CREW. THIS WILL INCLUDE BUT NOT BE LIMITED TO A) FALL PROTECTION B) CONFINED SPACE C) ELECTRICAL SAFETY D) TRENCHING AND EXCAVATION E) CONSTRUCTION SAFETY PROCEDURES.
11. ALL SITE WORK SHALL BE AS INDICATED ON THE STAMPED CONSTRUCTION DRAWINGS AND PROJECT SPECIFICATIONS, LATEST APPROVED REVISION.
12. CONTRACTOR SHALL KEEP THE SITE FREE FROM ACCUMULATING WASTE MATERIAL, DEBRIS, AND TRASH AT THE COMPLETION OF THE WORK. IF NECESSARY, RUBBISH, STUMPS, DEBRIS, STICKS, STONES AND OTHER REFUSE SHALL BE REMOVED FROM THE SITE AND DISPOSED OF LEGALLY.
13. ALL EXISTING INACTIVE SEWER, WATER, GAS, ELECTRIC AND OTHER UTILITIES, WHICH INTERFERE WITH THE EXECUTION OF THE WORK, SHALL BE REMOVED AND/OR CAPPED, PLUGGED OR OTHERWISE DISCONTINUED AT POINTS WHICH WILL NOT INTERFERE WITH THE EXECUTION OF THE WORK, SUBJECT TO THE APPROVAL OF CONTRACTOR, TOWER OWNER, CROWN CASTLE USA INC., AND/OR LOCAL UTILITIES.
14. THE CONTRACTOR SHALL PROVIDE SITE SIGNAGE IN ACCORDANCE WITH THE TECHNICAL SPECIFICATION FOR SITE SIGNAGE REQUIRED BY LOCAL JURISDICTION AND SIGNAGE REQUIRED ON INDIVIDUAL PIECES OF EQUIPMENT, ROOMS, AND SHELTERS.
15. THE SITE SHALL BE GRADED TO CAUSE SURFACE WATER TO FLOW AWAY FROM THE CARRIER'S EQUIPMENT AND TOWER AREAS.
16. THE SUB GRADE SHALL BE COMPACTED AND BROUGHT TO A SMOOTH UNIFORM GRADE PRIOR TO FINISHED SURFACE APPLICATION.
17. THE AREAS OF THE OWNERS PROPERTY DISTURBED BY THE WORK AND NOT COVERED BY THE TOWER, EQUIPMENT OR DRIVEWAY, SHALL BE GRADED TO A UNIFORM SLOPE, AND STABILIZED TO PREVENT EROSION AS SPECIFIED ON THE CONSTRUCTION DRAWINGS AND/OR PROJECT SPECIFICATIONS.
18. CONTRACTOR SHALL MINIMIZE DISTURBANCE TO EXISTING SITE DURING CONSTRUCTION. EROSION CONTROL MEASURES, IF REQUIRED DURING CONSTRUCTION, SHALL BE IN CONFORMANCE WITH THE LOCAL GUIDELINES FOR EROSION AND SEDIMENT CONTROL.
19. THE CONTRACTOR SHALL PROTECT EXISTING IMPROVEMENTS, PAVEMENTS, CURBS, LANDSCAPING AND STRUCTURES. ANY DAMAGED PART SHALL BE REPAIRED AT CONTRACTOR'S EXPENSE TO THE SATISFACTION OF OWNER.
20. CONTRACTOR SHALL LEGALLY AND PROPERLY DISPOSE OF ALL SCRAP MATERIALS SUCH AS COAXIAL CABLES AND OTHER ITEMS REMOVED FROM THE EXISTING FACILITY. ANTENNAS REMOVED SHALL BE RETURNED TO THE OWNER'S DESIGNATED LOCATION.
21. CONTRACTOR SHALL LEAVE PREMISES IN CLEAN CONDITION. TRASH AND DEBRIS SHOULD BE REMOVED FROM SITE ON A DAILY BASIS.
22. NO FILL OR EMBANKMENT MATERIAL SHALL BE PLACED ON FROZEN GROUND. FROZEN MATERIALS, SNOW OR ICE SHALL NOT BE PLACED IN ANY FILL OR EMBANKMENT.

GENERAL NOTES:

1. FOR THE PURPOSE OF CONSTRUCTION DRAWING, THE FOLLOWING DEFINITIONS SHALL APPLY:
   CONTRACTOR: GENERAL CONTRACTOR RESPONSIBLE FOR CONSTRUCTION
   CARRIER: VERIZON
   TOWER OWNER: CROWN CASTLE USA INC.
2. THESE DRAWINGS HAVE BEEN PREPARED USING STANDARDS OF PROFESSIONAL CARE AND COMPLETENESS NORMALLY EXERCISED UNDER SIMILAR CIRCUMSTANCES BY REPUTABLE ENGINEERS IN THIS OR SIMILAR LOCALITIES. IT IS ASSUMED THAT THE WORK DEPICTED WILL BE PERFORMED BY AN EXPERIENCED CONTRACTOR AND/OR WORKPEOPLE WHO HAVE A WORKING KNOWLEDGE OF THE APPLICABLE CODE STANDARDS AND REQUIREMENTS AND OF INDUSTRY ACCEPTED STANDARD GOOD PRACTICE. AS NOT EVERY CONDITION OR ELEMENT IS (OR CAN BE) EXPLICITLY SHOWN ON THESE DRAWINGS, THE CONTRACTOR SHALL USE INDUSTRY ACCEPTED STANDARD GOOD PRACTICE FOR MISCELLANEOUS WORK NOT EXPLICITLY SHOWN.
3. THESE DRAWINGS REPRESENT THE FINISHED STRUCTURE. THEY DO NOT INDICATE THE MEANS OR METHODS OF CONSTRUCTION. THE CONTRACTOR SHALL BE SOLELY RESPONSIBLE FOR THE CONSTRUCTION MEANS, METHODS, TECHNIQUES, SEQUENCES, AND PROCEDURES. THE CONTRACTOR SHALL PROVIDE ALL MEASURES NECESSARY FOR PROTECTION OF LIFE AND PROPERTY DURING CONSTRUCTION. SUCH MEASURES SHALL INCLUDE, BUT NOT BE LIMITED TO, BRACING, FORMWORK, SHORING, ETC. SITE VISITS BY THE ENGINEER OR HIS REPRESENTATIVE WILL NOT INCLUDE INSPECTION OF THESE ITEMS AND IS FOR STRUCTURAL OBSERVATION OF THE FINISHED STRUCTURE ONLY.
4. NOTES AND DETAILS IN THE CONSTRUCTION DRAWINGS SHALL TAKE PRECEDENCE OVER GENERAL NOTES AND TYPICAL DETAILS. WHERE NO DETAILS ARE SHOWN, CONSTRUCTION SHALL CONFORM TO SIMILAR WORK ON THE PROJECT, AND/OR AS PROVIDED FOR IN THE CONTRACT DOCUMENTS. WHERE DISCREPANCIES OCCUR BETWEEN PLANS, DETAILS, GENERAL NOTES, AND SPECIFICATIONS, THE GREATER, MORE STRICT REQUIREMENTS, SHALL GOVERN. IF FURTHER CLARIFICATION IS REQUIRED CONTACT THE ENGINEER OF RECORD.
5. SUBSTANTIAL EFFORT HAS BEEN MADE TO PROVIDE ACCURATE DIMENSIONS AND MEASUREMENTS ON THE DRAWINGS TO ASSIST IN THE FABRICATION AND/OR PLACEMENT OF CONSTRUCTION ELEMENTS BUT IT IS THE SOLE RESPONSIBILITY OF THE CONTRACTOR TO FIELD VERIFY THE DIMENSIONS, MEASUREMENTS, AND/OR CLEARANCES SHOWN IN THE CONSTRUCTION DRAWINGS PRIOR TO FABRICATION OR CUTTING OF ANY NEW OR EXISTING CONSTRUCTION ELEMENTS. IF IT IS DETERMINED THAT THERE ARE DISCREPANCIES AND/OR CONFLICTS WITH THE CONSTRUCTION DRAWINGS THE ENGINEER OF RECORD IS TO BE NOTIFIED AS SOON AS POSSIBLE.
6. PRIOR TO THE SUBMISSION OF BIDS, THE BIDDING CONTRACTOR SHALL VISIT THE CELL SITE TO FAMILIARIZE WITH THE EXISTING CONDITIONS AND TO CONFIRM THAT THE WORK CAN BE ACCOMPLISHED AS SHOWN ON THE CONSTRUCTION DRAWINGS. ANY DISCREPANCY FOUND SHALL BE BROUGHT TO THE ATTENTION OF CROWN CASTLE.
7. ALL MATERIALS FURNISHED AND INSTALLED SHALL BE IN STRICT ACCORDANCE WITH ALL APPLICABLE CODES, REGULATIONS AND ORDINANCES. CONTRACTOR SHALL ISSUE ALL APPROPRIATE NOTICES AND COMPLY WITH ALL LAWS, ORDINANCES, RULES, REGULATIONS AND LAWFUL ORDERS OF ANY PUBLIC AUTHORITY REGARDING THE PERFORMANCE OF THE WORK. ALL WORK CARRIED OUT SHALL COMPLY WITH ALL APPLICABLE MUNICIPAL AND UTILITY COMPANY SPECIFICATIONS AND LOCAL JURISDICTIONAL CODES, ORDINANCES AND APPLICABLE REGULATIONS.
8. UNLESS NOTED OTHERWISE, THE WORK SHALL INCLUDE FURNISHING MATERIALS, EQUIPMENT, APPURTENANCES AND LABOR NECESSARY TO COMPLETE ALL INSTALLATIONS AS INDICATED ON THE DRAWINGS.
9. THE CONTRACTOR SHALL INSTALL ALL EQUIPMENT AND MATERIALS IN ACCORDANCE WITH MANUFACTURER'S RECOMMENDATIONS UNLESS SPECIFICALLY STATED OTHERWISE.
10. IF THE SPECIFIED EQUIPMENT CAN NOT BE INSTALLED AS SHOWN ON THESE DRAWINGS, THE CONTRACTOR SHALL PROPOSE AN ALTERNATIVE INSTALLATION FOR APPROVAL BY THE CARRIER AND CROWN CASTLE PRIOR TO PROCEEDING WITH ANY SUCH CHANGE OF INSTALLATION.
11. CONTRACTOR IS TO PERFORM A SITE INVESTIGATION AND IS TO DETERMINE THE BEST ROUTING OF ALL CONDUITS FOR POWER, AND TELCO AND FOR GROUNDING CABLES AS SHOWN IN THE POWER, TELCO, AND GROUNDING PLAN DRAWINGS.
12. THE CONTRACTOR SHALL PROTECT EXISTING IMPROVEMENTS, PAVEMENTS, CURBS, LANDSCAPING AND STRUCTURES. ANY DAMAGED PART SHALL BE REPAIRED AT CONTRACTOR'S EXPENSE TO THE SATISFACTION OF CROWN CASTLE USA INC.
13. CONTRACTOR SHALL LEGALLY AND PROPERLY DISPOSE OF ALL SCRAP MATERIALS SUCH AS COAXIAL CABLES AND OTHER ITEMS REMOVED FROM THE EXISTING FACILITY. ANTENNAS REMOVED SHALL BE RETURNED TO THE OWNER'S DESIGNATED LOCATION.
14. CONTRACTOR SHALL LEAVE PREMISES IN CLEAN CONDITION. TRASH AND DEBRIS SHOULD BE REMOVED FROM SITE ON A DAILY BASIS.

CONCRETE, FOUNDATIONS, AND REINFORCING STEEL:

1. ALL CONCRETE WORK SHALL BE IN ACCORDANCE WITH THE ACI 301, ACI 318, ACI 336, ASTM A184, ASTM A185 AND THE DESIGN AND CONSTRUCTION SPECIFICATION FOR CAST–IN–PLACE CONCRETE.
2. UNLESS NOTED OTHERWISE, SOIL BEARING PRESSURE USED FOR DESIGN OF SLABS AND FOUNDATIONS IS ASSUMED TO BE 1000 psf.
3. ALL CONCRETE SHALL HAVE A MINIMUM COMPRESSIVE STRENGTH (f'c) OF 3000 psi AT 28 DAYS, UNLESS NOTED OTHERWISE. NO MORE THAN 90 MINUTES SHALL ELAPSE FROM BATCH TIME TO TIME OF PLACEMENT UNLESS APPROVED BY THE ENGINEER OF RECORD. TEMPERATURE OF CONCRETE SHALL NOT EXCEED 90°f AT TIME OF PLACEMENT.
4. CONCRETE EXPOSED TO FREEZE–THAW CYCLES SHALL CONTAIN AIR ENTRAINING ADMIXTURES. AMOUNT OF AIR ENTRAINMENT TO BE BASED ON SIZE OF AGGREGATE AND F3 CLASS EXPOSURE (VERY SEVERE). CEMENT USED TO BE TYPE II PORTLAND CEMENT WITH A MAXIMUM WATER–TO–CEMENT RATIO (W/C) OF 0.45.
5. ALL STEEL REINFORCING SHALL CONFORM TO ASTM A615. ALL WELDED WIRE FABRIC (WWF) SHALL CONFORM TO ASTM A185. ALL SPLICES SHALL BE CLASS "B" TENSION SPLICES, UNLESS NOTED OTHERWISE. ALL HOOKS SHALL BE STANDARD 90 DEGREE HOOKS, UNLESS NOTED OTHERWISE. YIELD STRENGTH (Fy) OF STANDARD DEFORMED BARS ARE AS FOLLOWS:
   #4 BARS AND SMALLER.....40 ksi
   #5 BARS AND LARGER.....60 ksi
6. THE FOLLOWING MINIMUM CONCRETE COVER SHALL BE PROVIDED FOR REINFORCING STEEL UNLESS SHOWN OTHERWISE ON DRAWINGS:
   CONCRETE CAST AGAINST AND PERMANENTLY EXPOSED TO EARTH.....3"
   CONCRETE EXPOSED TO EARTH OR WEATHER;
   #6 BARS AND LARGER.....2"
   #5 BARS AND SMALLER.....1–1/2"
   CONCRETE NOT EXPOSED TO EARTH OR WEATHER:
   SLAB AND WALLS.....3/4"
   BEAMS AND COLUMNS.....1–1/2"
7. A TOOLED EDGE OR A 3/4" CHAMFER SHALL BE PROVIDED AT ALL EXPOSED EDGES OF CONCRETE, UNLESS NOTED OTHERWISE, IN ACCORDANCE WITH ACI 301 SECTION 4.2.4.

GREENFIELD GROUNDING NOTES:

1. ALL GROUND ELECTRODE SYSTEMS (INCLUDING TELECOMMUNICATION, RADIO, LIGHTNING PROTECTION AND AC POWER GES'S) SHALL BE BONDED TOGETHER AT OR BELOW GRADE, BY TWO OR MORE COPPER BONDING CONDUCTORS IN ACCORDANCE WITH THE NEC.
2. THE CONTRACTOR SHALL PERFORM IEEE FALL–OF–POTENTAL RESISTANCE TO EARTH TESTING (PER IEEE 1100 AND 81) FOR GROUND ELECTRODE SYSTEMS, THE CONTRACTOR SHALL FURNISH AND INSTALL SUPPLEMENTAL GROUND ELECTRODES AS NEEDED TO ACHIEVE A TEST RESULT OF 5 OHMS OR LESS.
3. THE CONTRACTOR IS RESPONSIBLE FOR PROPERLY SEQUENCING GROUNDING AND UNDERGROUND CONDUIT INSTALLATION AS TO PREVENT ANY LOSS OF CONTINUITY IN THE GROUNDING SYSTEM OR DAMAGE TO THE CONDUIT AND PROVIDE TESTING RESULTS.
4. METAL CONDUIT AND TRAY SHALL BE GROUNDED AND MADE ELECTRICALLY CONTINUOUS WITH LISTED BONDING FITTINGS OR BY BONDING ACROSS THE DISCONTINUITY WITH #6 COPPER WIRE UL APPROVED GROUNDING TYPE CONDUIT CLAMPS.
5. METAL RACEWAY SHALL NOT BE USED AS THE NEC REQUIRED EQUIPMENT GROUND CONDUCTOR. STRANDED COPPER CONDUCTORS WITH GREEN INSULATION, SIZED IN ACCORDANCE WITH THE NEC, SHALL BE FURNISHED AND INSTALLED WITH THE POWER CIRCUITS TO BTS EQUIPMENT.
6. EACH CABINET FRAME SHALL BE DIRECTLY CONNECTED TO THE MASTER GROUND BAR WITH GREEN INSULATED SUPPLEMENTAL EQUIPMENT GROUND WIRES, #6 STRANDED COPPER OR LARGER FOR INDOOR BTS; #2 BARE SOLID TINNED COPPER FOR OUTDOOR BTS.
7. CONNECTIONS TO THE GROUND BUS SHALL NOT BE DOUBLED UP OR STACKED BACK TO BACK CONNECTIONS ON OPPOSITE SIDE OF THE GROUND BUS ARE PERMITTED.
8. ALL EXTERIOR GROUND CONDUCTORS BETWEEN EQUIPMENT/GROUND BARS AND THE GROUND RING SHALL BE #2 SOLID TINNED COPPER UNLESS OTHERWISE INDICATED.
9. ALUMINUM CONDUCTOR OR COPPER CLAD STEEL CONDUCTOR SHALL NOT BE USED FOR GROUNDING CONNECTIONS.
10. USE OF 90° BENDS IN THE PROTECTION GROUNDING CONDUCTORS SHALL BE AVOIDED WHEN 45° BENDS CAN BE ADEQUATELY SUPPORTED.
11. EXOTHERMIC WELDS SHALL BE USED FOR ALL GROUNDING CONNECTIONS BELOW GRADE.
12. ALL GROUND CONNECTIONS ABOVE GRADE (INTERIOR AND EXTERIOR) SHALL BE FORMED USING HIGH PRESS CRIMPS.
13. COMPRESSION GROUND CONNECTIONS MAY BE REPLACED BY EXOTHERMIC WELD CONNECTIONS.
14. ICE BRIDGE BONDING CONDUCTORS SHALL BE EXOTHERMICALLY BONDED OR BOLTED TO THE BRIDGE AND THE TOWER GROUND BAR.
15. APPROVED ANTIOXIDANT COATINGS (i.e. CONDUCTIVE GEL OR PASTE) SHALL BE USED ON ALL COMPRESSION AND BOLTED GROUND CONNECTIONS.
16. ALL EXTERIOR GROUND CONNECTIONS SHALL BE COATED WITH A CORROSION RESISTANT MATERIAL.
17. MISCELLANEOUS ELECTRICAL AND NON–ELECTRICAL METAL BOXES, FRAMES AND SUPPORTS SHALL BE BONDED TO THE GROUND RING, IN ACCORDANCE WITH THE NEC.
18. BOND ALL METALLIC OBJECTS WITHIN 6 ft OF MAIN GROUND RING WITH (1) #2 BARE SOLID TINNED COPPER GROUND CONDUCTOR.
19. GROUND CONDUCTORS USED FOR THE FACILITY GROUNDING AND LIGHTNING PROTECTION SYSTEMS SHALL NOT BE ROUTED THROUGH METALLIC OBJECTS THAT FORM A RING AROUND THE CONDUCTOR, SUCH AS METALLIC CONDUITS, METAL SUPPORT CLIPS OR SLEEVES THROUGH WALLS OR FLOORS. WHEN IT IS REQUIRED TO BE HOUSED IN CONDUIT TO MEET CODE REQUIREMENTS OR LOCAL CONDITIONS, NON–METALLIC MATERIAL SUCH AS PVC CONDUIT SHALL BE USED. WHERE USE OF METAL CONDUIT IS UNAVOIDABLE (i.e., NONMETALLIC CONDUIT PROHIBITED BY LOCAL CODE) THE GROUND CONDUCTOR SHALL BE BONDED TO EACH END OF THE METAL CONDUIT.
20. ALL GROUNDS THAT TRANSITION FROM BELOW GRADE TO ABOVE GRADE MUST BE #2 BARE SOLID TINNED COPPER IN 3/4" NON–METALLIC, FLEXIBLE CONDUIT FROM 24" BELOW GRADE TO WITHIN 3" TO 6" OF CAD–WELD TERMINATION POINT. THE EXPOSED END OF THE CONDUIT MUST BE SEALED WITH SILICONE CAULK. (ADD TRANSITIONING GROUND STANDARD DETAIL AS WELL).
21. BUILDINGS WHERE THE MAIN GROUNDING CONDUCTORS ARE REQUIRED TO BE ROUTED TO GRADE, THE CONTRACTOR SHALL ROUTE TWO GROUNDING CONDUCTORS FROM THE ROOFTOP, TOWERS, AND WATER TOWERS GROUNDING RING, TO THE EXISTING GROUNDING SYSTEM, THE GROUNDING CONDUCTORS SHALL NOT BE SMALLER THAN 2/0 COPPER. ROOFTOP GROUNDING RING SHALL BE BONDED TO THE EXISTING GROUNDING SYSTEM, THE BUILDING STEEL COLUMNS, LIGHTNING PROTECTION SYSTEM, AND BUILDING MAIN WATER LINE (FERROUS OR NONFERROUS METAL PIPING ONLY).

ELECTRICAL INSTALLATION NOTES:

1. ALL ELECTRICAL WORK SHALL BE PERFORMED IN ACCORDANCE WITH THE PROJECT SPECIFICATIONS, NEC AND ALL APPLICABLE FEDERAL, STATE, AND LOCAL CODES/ORDINANCES.
2. CONDUIT ROUTINGS ARE SCHEMATIC. CONTRACTOR SHALL INSTALL CONDUITS SO THAT ACCESS TO EQUIPMENT IS NOT BLOCKED AND TRIP HAZARDS ARE ELIMINATED.
3. WIRING, RACEWAY AND SUPPORT METHODS AND MATERIALS SHALL COMPLY WITH THE REQUIREMENTS OF THE NEC.
4. ALL CIRCUITS SHALL BE SEGREGATED AND MAINTAIN MINIMUM CABLE SEPARATION AS REQUIRED BY THE NEC.
   4.1. ALL EQUIPMENT SHALL BEAR THE UNDERWRITERS LABORATORIES LABEL OF APPROVAL, AND SHALL CONFORM TO REQUIREMENT OF THE NATIONAL ELECTRICAL CODE.
   4.2. ALL OVERCURRENT DEVICES SHALL HAVE AN INTERRUPTING CURRENT RATING THAT SHALL BE GREATER THAN THE SHORT CIRCUIT CURRENT TO WHICH THEY ARE SUBJECTED, 22,000 AIC MINIMUM. VERYIFY AVAILABLE SHORT CIRCUIT CURRENT DOES NOT EXCEED THE RATING OF ELECTRICAL EQUIPMENT IN ACCORDANCE WITH ARTICLE 110.24 NEC OR THE MOST CURRENT ADOPTED CODE PRE THE GOVERNING JURISDICTION.
5. EACH END OF EVERY POWER PHASE CONDUCTOR, GROUNDING CONDUCTOR, AND TELCO CONDUCTOR OR CABLE SHALL BE LABELED WITH COLOR–CODED INSULATION OR ELECTRICAL TAPE (3M BRAND, 1/2" PLASTIC ELECTRICAL TAPE WITH UV PROTECTION, OR EQUAL). THE IDENTIFICATION METHOD SHALL CONFORM WITH NEC AND OSHA.
6. ALL ELECTRICAL COMPONENTS SHALL BE CLEARLY LABELED WITH LAMICOID TAGS SHOWING THEIR RATED VOLTAGE, PHASE CONFIGURATION, WIRE CONFIGURATION, POWER OR AMPACITY RATING AND BRANCH CIRCUIT ID NUMBERS (i.e. PANEL BOARD AND CIRCUIT ID'S).
7. PANEL BOARDS (ID NUMBERS) SHALL BE CLEARLY LABELED WITH PLASTIC LABELS.
8. ALL TIE WRAPS SHALL BE CUT FLUSH WITH APPROVED CUTTING TOOL TO REMOVE SHARP EDGES.
9. ALL POWER AND EQUIPMENT GROUND WIRING IN TUBING OR CONDUIT SHALL BE SINGLE COPPER CONDUCTOR (#14 OR LARGER) WITH TYPE THHW, THWN, THWN–2, XHHW, XHHW–2, THW, THW–2, RHW, OR RHW–2 INSULATION UNLESS OTHERWISE SPECIFIED.
10. SUPPLEMENTAL EQUIPMENT GROUND WIRING LOCATED INDOORS SHALL BE SINGLE COPPER CONDUCTOR (#6 OR LARGER) WITH TYPE THHW, THWN, THWN–2, XHHW, XHHW–2, THW, THW–2, RHW, OR RHW–2 INSULATION UNLESS OTHERWISE SPECIFIED.
11. POWER AND CONTROL WIRING IN FLEXIBLE CORD SHALL BE MULTI–CONDUCTOR, TYPE SOOW CORD (#14 OR LARGER) UNLESS OTHERWISE SPECIFIED.
12. POWER AND CONTROL WIRING FOR USE IN CABLE TRAY SHALL BE MULTI–CONDUCTOR, TYPE TC CABLE (#14 OR LARGER), WITH TYPE THHW, THWN, THWN–2, XHHW, XHHW–2, THW, THW–2, RHW, OR RHW–2 INSULATION UNLESS OTHERWISE SPECIFIED.
13. ALL POWER AND GROUNDING CONNECTIONS SHALL BE CRIMP–STYLE, COMPRESSION WIRE LUGS AND WIRE NUTS BY THOMAS AND BETTS (OR EQUAL). LUGS AND WIRE NUTS SHALL BE RATED FOR OPERATION NOT LESS THAN 75° C (90° C IF AVAILABLE).
14. RACEWAY AND CABLE TRAY SHALL BE LISTED OR LABELED FOR ELECTRICAL USE IN ACCORDANCE WITH NEMA, UL, ANSI/IEEE AND NEC.
15. ELECTRICAL METALLIC TUBING (EMT), INTERMEDIATE METAL CONDUIT (IMC), OR RIGID METAL CONDUIT (RMC) SHALL BE USED FOR EXPOSED INDOOR LOCATIONS.
16. ELECTRICAL METALLIC TUBING (EMT) OR METAL–CLAD CABLE (MC) SHALL BE USED FOR CONCEALED INDOOR LOCATIONS.
17. SCHEDULE 40 PVC UNDERGROUND ON STRAIGHTS AND SCHEDULE 80 PVC FOR ALL ELBOWS/90s AND ALL APPROVED ABOVE GRADE PVC CONDUIT.
18. LIQUID–TIGHT FLEXIBLE METALLIC CONDUIT (LIQUID–TITE FLEX) SHALL BE USED INDOORS AND OUTDOORS, WHERE VIBRATION OCCURS OR FLEXIBILITY IS NEEDED.
19. CONDUIT AND TUBING FITTINGS SHALL BE THREADED OR COMPRESSION–TYPE AND APPROVED FOR THE LOCATION USED. SET SCREW FITTINGS ARE NOT ACCEPTABLE.
20. CABINETS, BOXES AND WIRE WAYS SHALL BE LABELED FOR ELECTRICAL USE IN ACCORDANCE WITH NEMA, UL, ANSI/IEEE AND THE NEC.
21. WIREWAYS SHALL BE METAL WITH AN ENAMEL FINISH AND INCLUDE A HINGED COVER, DESIGNED TO SWING OPEN DOWNWARDS (WIREMOLD SPECMATE WIREWAY).
22. SLOTTED WIRING DUCT SHALL BE PVC AND INCLUDE COVER (PANDUIT TYPE E OR EQUAL).
23. CONDUITS SHALL BE FASTENED SECURELY IN PLACE WITH APPROVED NON–PERFORATED STRAPS AND HANGERS. EXPLOSIVE DEVICES (i.e. POWDER–ACTUATED) FOR ATTACHING HANGERS TO STRUCTURE WILL NOT BE PERMITTED. CLOSELY FOLLOW THE LINES OF THE STRUCTURE, MAINTAIN CLOSE PROXIMITY TO THE STRUCTURE AND KEEP CONDUITS IN TIGHT ENVELOPES. CHANGES IN DIRECTION TO ROUTE AROUND OBSTACLES SHALL BE MADE WITH CONDUIT OUTLET BODIES. CONDUIT SHALL BE INSTALLED IN A NEAT AND WORKMANLIKE MANNER. PARALLEL AND PERPENDICULAR TO STRUCTURE WALL AND CEILING LINES. ALL CONDUIT SHALL BE FISHED TO CLEAR OBSTRUCTIONS. ENDS OF CONDUITS SHALL BE TEMPORARILY CAPPED FLUSH TO FINISH GRADE TO PREVENT CONCRETE, PLASTER OR DIRT FROM ENTERING. CONDUITS SHALL BE RIGIDLY CLAMPED TO BOXES BY GALVANIZED MALLEABLE IRON BUSHING ON INSIDE AND GALVANIZED MALLEABLE IRON LOCKNUT ON OUTSIDE AND INSIDE.
24. EQUIPMENT CABINETS, TERMINAL BOXES, JUNCTION BOXES AND PULL BOXES SHALL BE GALVANIZED OR EPOXY–COATED SHEET STEEL. SHALL MEET OR EXCEED UL 50 AND BE RATED NEMA 1 (OR BETTER) FOR INTERIOR LOCATIONS AND NEMA 3R (OR BETTER) FOR EXTERIOR LOCATIONS.
25. METAL RECEPTACLE, SWITCH AND DEVICE BOXES SHALL BE GALVANIZED, EPOXY–COATED OR NON–CORRODING; SHALL MEET OR EXCEED UL 514A AND NEMA OS 1 AND BE RATED NEMA 1 (OR BETTER) FOR INTERIOR LOCATIONS AND WEATHER PROTECTED (WP OR BETTER) FOR EXTERIOR LOCATIONS.
26. NONMETALLIC RECEPTACLE, SWITCH AND DEVICE BOXES SHALL MEET OR EXCEED NEMA OS 2 (NEWEST REVISION) AND BE RATED NEMA 1 (OR BETTER) FOR INTERIOR LOCATIONS AND WEATHER PROTECTED (WP OR BETTER) FOR EXTERIOR LOCATIONS.
27. THE CONTRACTOR SHALL NOTIFY AND OBTAIN NECESSARY AUTHORIZATION FROM THE CARRIER AND/OR CROWN CASTLE USA INC. BEFORE COMMENCING WORK ON THE AC POWER DISTRIBUTION PANELS.
28. THE CONTRACTOR SHALL PROVIDE NECESSARY TAGGING ON THE BREAKERS, CABLES AND DISTRIBUTION PANELS IN ACCORDANCE WITH THE APPLICABLE CODES AND STANDARDS TO SAFEGUARD LIFE AND PROPERTY.
29. INSTALL LAMICOID LABEL ON THE METER CENTER TO SHOW "VERIZON".
30. ALL EMPTY/SPARE CONDUITS THAT ARE INSTALLED ARE TO HAVE A METERED MULE TAPE PULL CORD INSTALLED.

CONDUCTOR COLOR CODE		
SYSTEM	CONDUCTOR	COLOR
120/240V, 1Ø	A PHASE	BLACK
	B PHASE	RED
	NEUTRAL	WHITE
	GROUND	GREEN
120/208V, 3Ø	A PHASE	BLACK
	B PHASE	RED
	C PHASE	BLUE
	NEUTRAL	WHITE
	GROUND	GREEN
277/480V, 3Ø	A PHASE	BROWN
	B PHASE	ORANGE OR PURPLE
	C PHASE	YELLOW
	NEUTRAL	GREY
	GROUND	GREEN
DC VOLTAGE	POS (+)	RED**
	NEG (–)	BLACK**

* SEE NEC 210.5(C)(1) AND (2)
** POLARITY MARKED AT TERMINATION

APWA UNIFORM COLOR CODE:

WHITE	PROPOSED EXCAVATION
PINK	TEMPORARY SURVEY MARKINGS
RED	ELECTRIC POWER LINES, CABLES, CONDUIT, AND LIGHTING CABLES
YELLOW	GAS, OIL, STEAM, PETRO

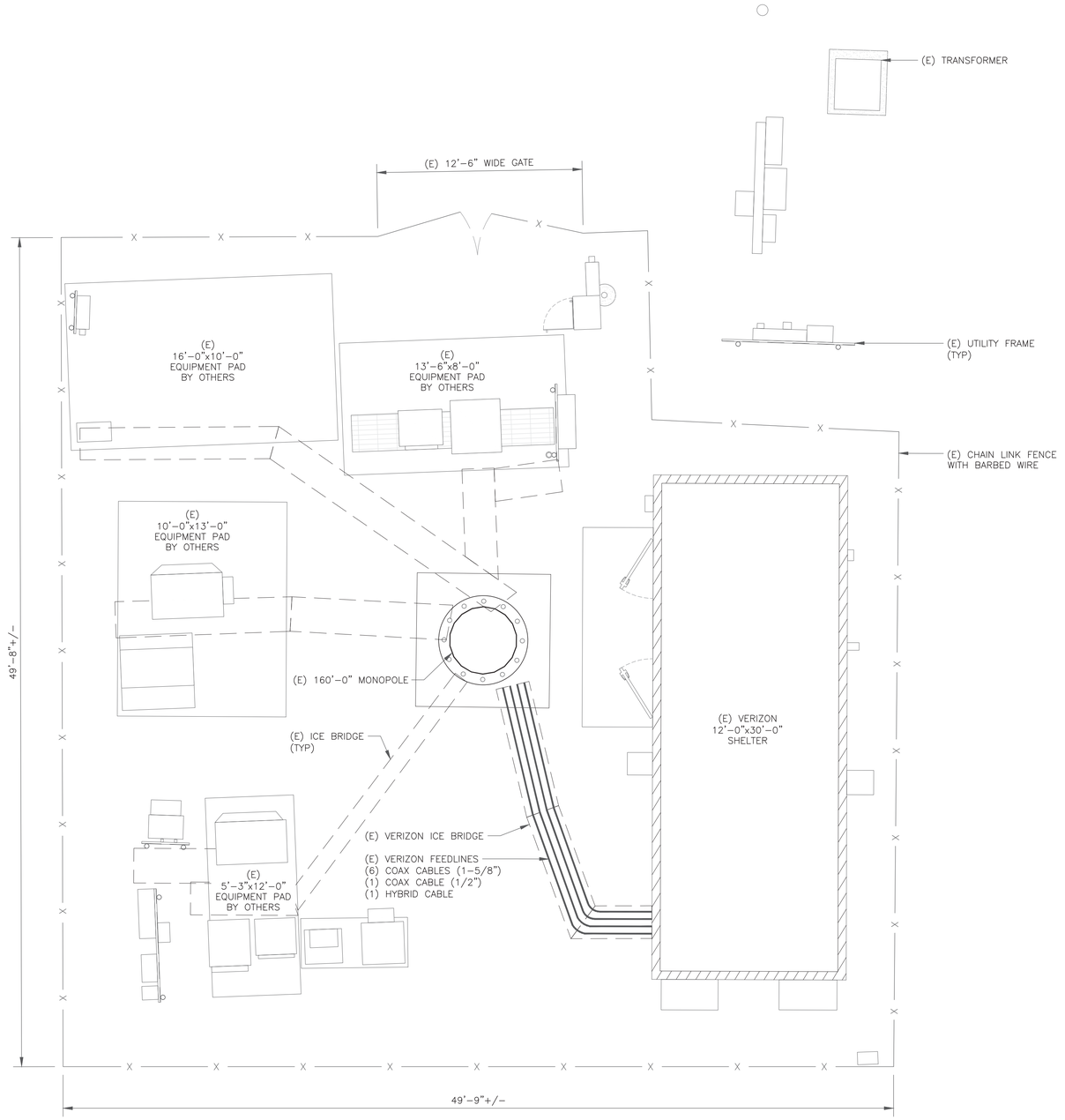

1 SITE PLAN
SCALE: 4' 3' 2' 1' 0 4'
1/4"=1'-0" (FULL SIZE)
1/8"=1'-0" (11x17)

verizon
180 WASHINGTON VALLEY ROAD
BEDMINSTER, NJ 07921

CROWN CASTLE
1505 WESTLAKE AVENUE NORTH, SUITE 800
SEATTLE, WA 98109

B+T GRP
1717 S. BOULDER
SUITE 300
TULSA, OK 74119
PH: (918) 587-4630
www.btgrp.com

VERIZON SITE NUMBER:
467473

BU #: **876313**
WEST JOHNSON AVE.
BURNT HOUSE

1394 MERIDEN WATERBURY TPK
SOUTHINGTON, CT 06489

EXISTING 160'-0" MONOPOLE

ISSUED FOR:

REV	DATE	DRWN	DESCRIPTION	DES./QA
0	2/8/22	JJR	CONSTRUCTION	MTJ

STATE OF CONNECTICUT
CHAD CASTLE
No. 23924
LICENSED
PROFESSIONAL ENGINEER
2/8/22

B&T ENGINEERING, INC.
PEC.0001564
Expires 2/10/23

IT IS A VIOLATION OF LAW FOR ANY PERSON, UNLESS THEY ARE ACTING UNDER THE DIRECTION OF A LICENSED PROFESSIONAL ENGINEER, TO ALTER THIS DOCUMENT.

SHEET NUMBER: C-1
REVISION: 0

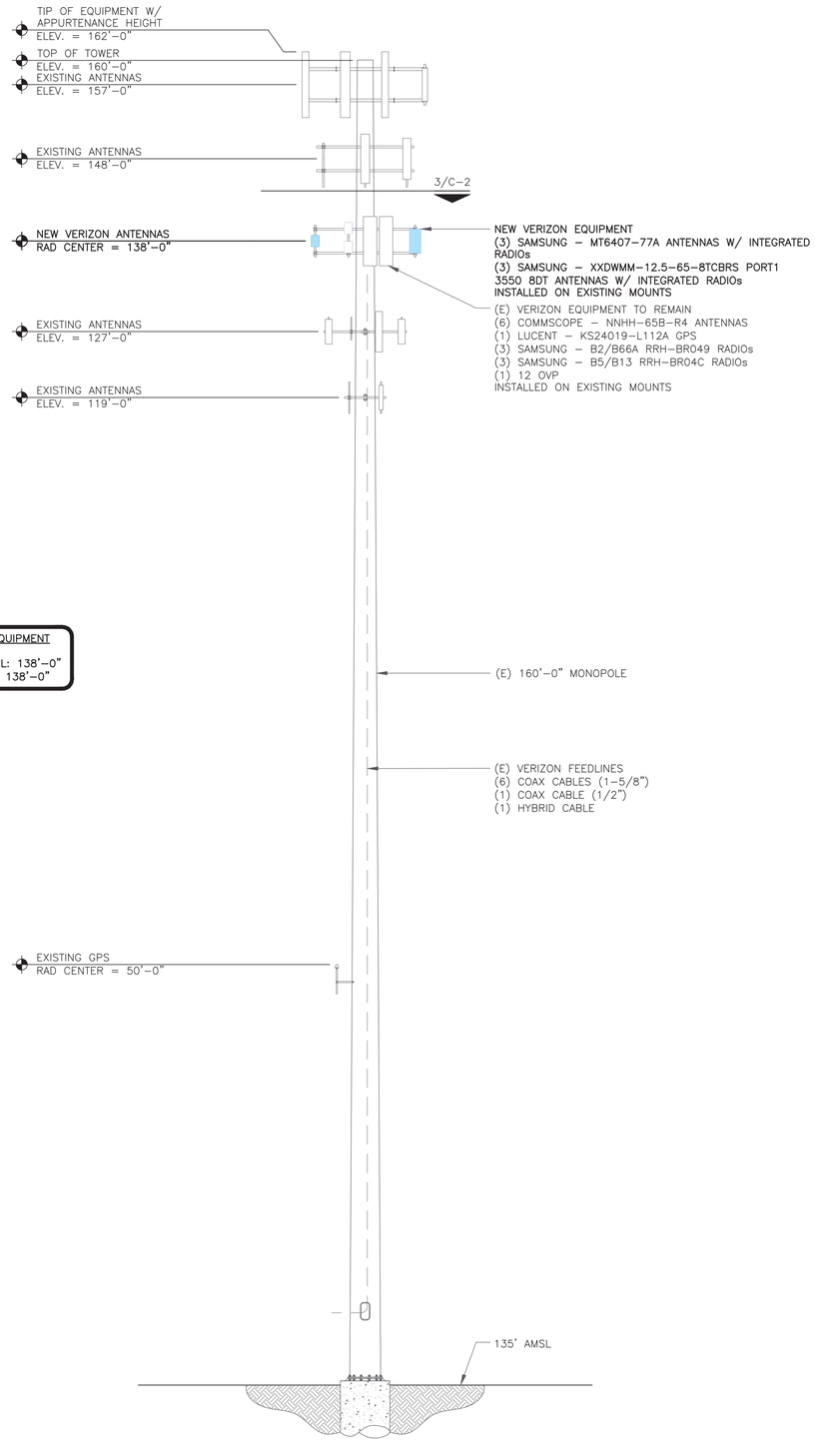

1 TOWER ELEVATION
SCALE: NOT TO SCALE

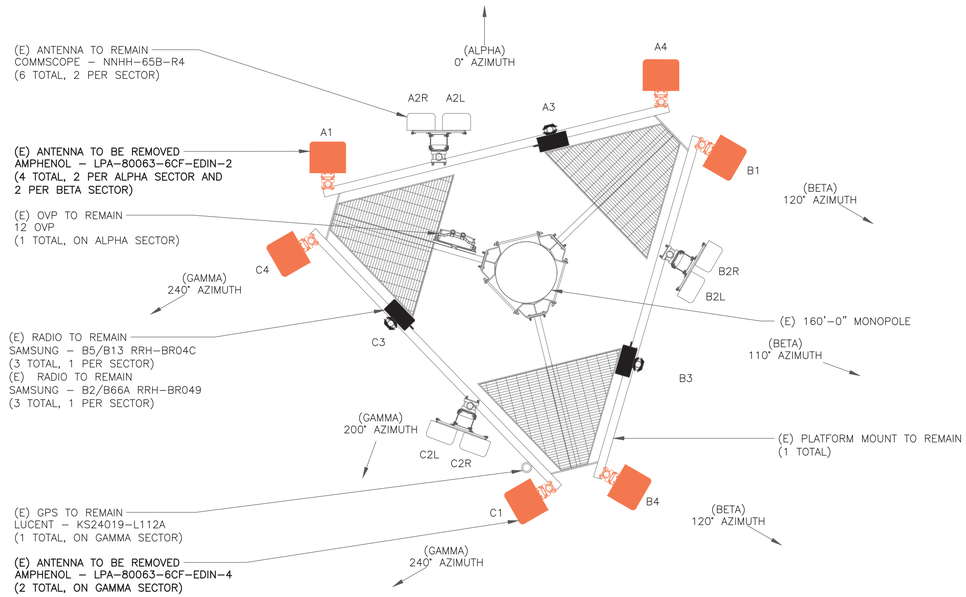

2 EXISTING ANTENNA PLAN
SCALE: NOT TO SCALE

N

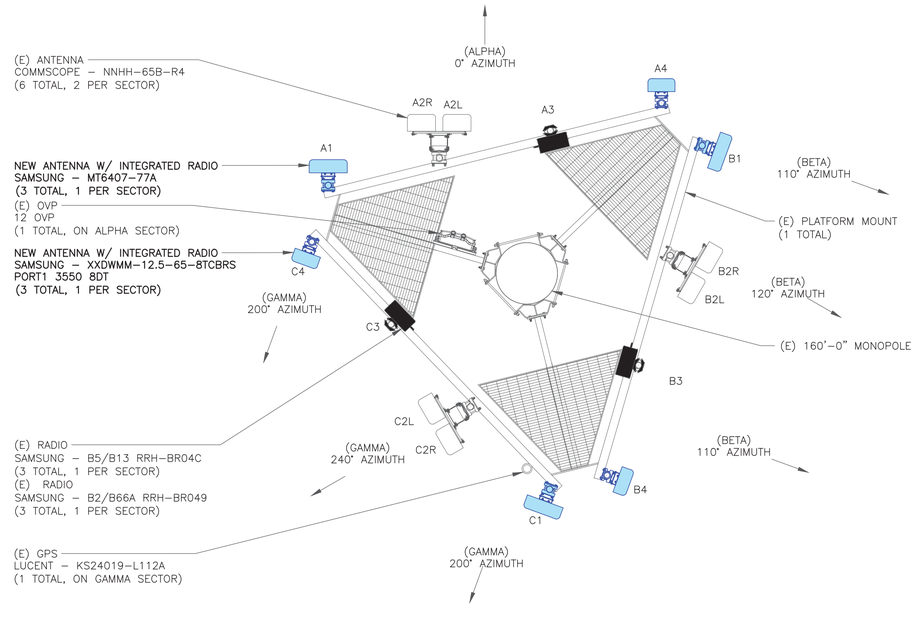

3 NEW ANTENNA PLAN
SCALE: NOT TO SCALE

N

verizon
180 WASHINGTON VALLEY ROAD
BEDMINSTER, NJ 07921

CROWN CASTLE
1505 WESTLAKE AVENUE NORTH, SUITE 800
SEATTLE, WA 98109

B+T GRP
1717 S. BOULDER
SUITE 300
TULSA, OK 74119
PH: (918) 587-4630
www.btgrp.com

VERIZON SITE NUMBER:
467473

BU #: **876313**
WEST JOHNSON AVE.
BURNT HOUSE

1394 MERIDEN WATERBURY TPK
SOUTHINGTON, CT 06489

EXISTING 160'-0" MONOPOLE

ISSUED FOR:

REV	DATE	DRWN	DESCRIPTION	DES./QA
0	2/8/22	JJR	CONSTRUCTION	MTJ

B&T ENGINEERING, INC.
PEC.0001564
Expires 2/10/23

IT IS A VIOLATION OF LAW FOR ANY PERSON, UNLESS THEY ARE ACTING UNDER THE DIRECTION OF A LICENSED PROFESSIONAL ENGINEER, TO ALTER THIS DOCUMENT.

SHEET NUMBER: C-2

REVISION: 0

ANTENNA/RRH SCHEDULE

SECTOR	STATUS	ANTENNA MANUFACTURER	ANTENNA MODEL	ANTENNA CENTERLINE	AZIMUTH	MECHANICAL DOWNTILTS	ELECTRICAL DOWNTILTS	TOWER EQUIPMENT MANUFACTURER	TOWER EQUIPMENT QTY/MODEL
A1	NEW	SAMSUNG	MT6407-77A	138'-0"	0°	0°	6°	–	INTEGRATED WITHIN
A2L	EXISTING	COMMSCOPE	NNHH-65B-R4	138'-0"	0°	0°	5°/5°/2°/3°/3°	–	
A2R	EXISTING	COMMSCOPE	NNHH-65B-R4	138'-0"	0°	0°	5°/5°/2°/3°/3°	–	
A3	EXISTING	–	–	138'-0"	0°	0°	–	SAMSUNG RAYCAP	(1) B2/B66A RRH-BR049 (1) B5/B13 RRH-BR04C (1) 12 OVP (RVZDC-6627-PF-48)
A4	NEW	SAMSUNG	XXDWMM-12.5-65-8TCBRS PORT1 3550 8DT	138'-0"	0°	0°	8°	–	(1) INTEGRATED WITHIN
B1	NEW	SAMSUNG	MT6407-77A	138'-0"	110°	0°	6°	–	INTEGRATED WITHIN
B2L	EXISTING	COMMSCOPE	NNHH-65B-R4	138'-0"	120°	0°	4°/4°/2°/2°/2°	SAMSUNG	
B2R	EXISTING	COMMSCOPE	NNHH-65B-R4	138'-0"	120°	0°	4°/4°/2°/2°/2°	SAMSUNG	
B3	EXISTING	–	–	138'-0"	110°	0°	–	SAMSUNG	(1) B2/B66A RRH-BR049 (1) B5/B13 RRH-BR04C
B4	NEW	SAMSUNG	XXDWMM-12.5-65-8TCBRS PORT1 3550 8DT	138'-0"	110°	0°	8°	–	(1) INTEGRATED WITHIN
C1	NEW	SAMSUNG	MT6407-77A	138'-0"	200°	0°	6°	–	INTEGRATED WITHIN
–	EXISTING	LUCENT	KS24019-L112A	142'-0"	240°	–	–	–	–
C2L	EXISTING	COMMSCOPE	NNHH-65B-R4	138'-0"	240°	0°	5°/5°/4°/3°/3°	SAMSUNG	
C2R	EXISTING	COMMSCOPE	NNHH-65B-R4	138'-0"	240°	0°	5°/5°/4°/3°/3°	SAMSUNG	
C3	EXISTING	–	–	138'-0"	200°	0°	–	SAMSUNG	(1) B2/B66A RRH-BR049 (1) B5/B13 RRH-BR04C
C4	NEW	SAMSUNG	XXDWMM-12.5-65-8TCBRS PORT1 3550 8DT	138'-0"	200°	0°	8°	–	(1) INTEGRATED WITHIN

1 VERIZON TOWER EQUIPMENT SCHEDULE
SCALE: NOT TO SCALE

CABLE SCHEDULE

STATUS	CABLE TYPE	SIZE	LENGTH	QTY
EXISTING	COAX	1-5/8"	188'-0"±	6
EXISTING	COAX	1/2"	192'-0"±	1
EXISTING	HYBRID	12x24	188'-0"±	1
TOTAL CABLE QTY:				8

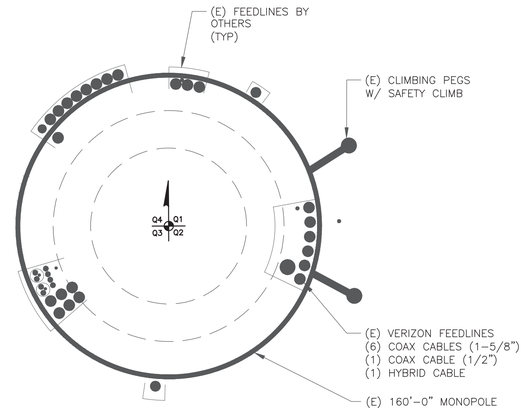

2 BASE LEVEL DETAIL
SCALE: NOT TO SCALE

N

verizon
180 WASHINGTON VALLEY ROAD
BEDMINSTER, NJ 07921

CROWN CASTLE
1505 WESTLAKE AVENUE NORTH, SUITE 800
SEATTLE, WA 98109

B+T GRP
1717 S. BOULDER
SUITE 300
TULSA, OK 74119
PH: (918) 587-4630
www.btgrp.com

VERIZON SITE NUMBER:
467473

BU #: **876313**
WEST JOHNSON AVE.
BURNT HOUSE

1394 MERIDEN WATERBURY TPK
SOUTHINGTON, CT 06489

EXISTING 160'-0" MONOPOLE

ISSUED FOR:

REV	DATE	DRWN	DESCRIPTION	DES./QA
0	2/8/22	JJR	CONSTRUCTION	MTJ

2/8/22

B&T ENGINEERING, INC.
PEC.0001564
Expires 2/10/23

IT IS A VIOLATION OF LAW FOR ANY PERSON, UNLESS THEY ARE ACTING UNDER THE DIRECTION OF A LICENSED PROFESSIONAL ENGINEER, TO ALTER THIS DOCUMENT.

SHEET NUMBER: C-3

REVISION: 0

1 NOT USED
SCALE: NOT TO SCALE

2 NOT USED
SCALE: NOT TO SCALE

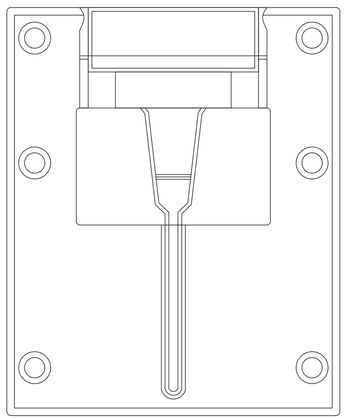

3 SAMSUNG – EP97-01585A BRACKET DETAIL
SCALE: NOT TO SCALE

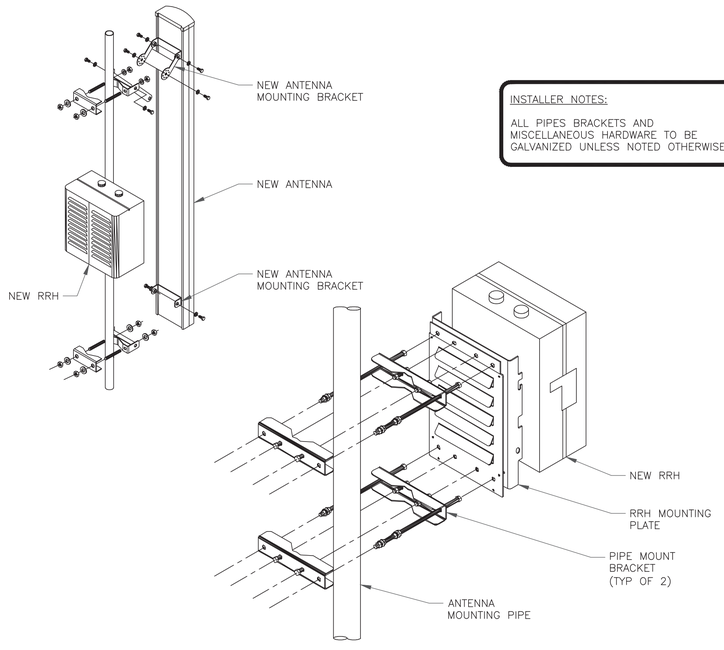

INSTALLER NOTES:

ALL PIPES BRACKETS AND MISCELLANEOUS HARDWARE TO BE GALVANIZED UNLESS NOTED OTHERWISE.

4 ANTENNA & RRH MOUNTING DETAIL
SCALE: NOT TO SCALE

verizon
180 WASHINGTON VALLEY ROAD
BEDMINSTER, NJ 07921

CROWN CASTLE
1505 WESTLAKE AVENUE NORTH, SUITE 800
SEATTLE, WA 98109

B+T GRP
1717 S. BOULDER
SUITE 300
TULSA, OK 74119
PH: (918) 587-4630
www.btgrp.com

VERIZON SITE NUMBER:
467473

BU #: **876313**
WEST JOHNSON AVE.
BURNT HOUSE

1394 MERIDEN WATERBURY TPK
SOUTHINGTON, CT 06489

EXISTING 160'-0" MONOPOLE

ISSUED FOR:

REV	DATE	DRWN	DESCRIPTION	DES./QA
0	2/8/22	JJR	CONSTRUCTION	MTJ

B&T ENGINEERING, INC.
PEC.0001564
Expires 2/10/23

IT IS A VIOLATION OF LAW FOR ANY PERSON, UNLESS THEY ARE ACTING UNDER THE DIRECTION OF A LICENSED PROFESSIONAL ENGINEER, TO ALTER THIS DOCUMENT.

SHEET NUMBER:	REVISION:
C-4	0

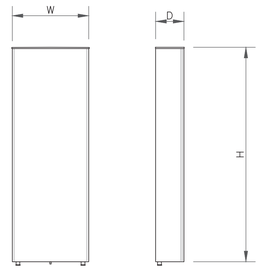

ANTENNA SPECS	
MANUFACTURER	SAMSUNG
MODEL #	MT6407-77A
WIDTH	16.06"
DEPTH	5.51"
HEIGHT	35.06"
WEIGHT	81.57 LBS

1 ANTENNA SPECS
SCALE: NOT TO SCALE

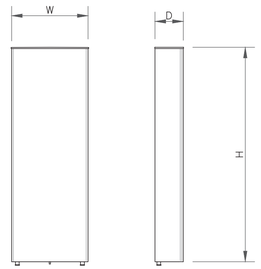

ANTENNA SPECS	
MANUFACTURER	SAMSUNG
MODEL #	XXDWMM-12.5-65-8TCBR S Port1 3550 8DT
WIDTH	11.39"
DEPTH	5.45"
HEIGHT	16.16"
WEIGHT	23.14 LBS

2 ANTENNA SPECS
SCALE: NOT TO SCALE

3 NOT USED
SCALE: NOT TO SCALE

4 NOT USED
SCALE: NOT TO SCALE

5 NOT USED
SCALE: NOT TO SCALE

6 NOT USED
SCALE: NOT TO SCALE

verizon
180 WASHINGTON VALLEY ROAD
BEDMINSTER, NJ 07921

CROWN CASTLE
1505 WESTLAKE AVENUE NORTH, SUITE 800
SEATTLE, WA 98109

B+T GRP
1717 S. BOULDER
SUITE 300
TULSA, OK 74119
PH: (918) 587-4630
www.btgrp.com

VERIZON SITE NUMBER:
467473

BU #: **876313**
WEST JOHNSON AVE.
BURNT HOUSE

1394 MERIDEN WATERBURY TPK
SOUTHINGTON, CT 06489

EXISTING 160'-0" MONOPOLE

ISSUED FOR:

REV	DATE	DRWN	DESCRIPTION	DES./QA
0	2/8/22	JJR	CONSTRUCTION	MTJ

B&T ENGINEERING, INC.
PEC.0001564
Expires 2/10/23

IT IS A VIOLATION OF LAW FOR ANY PERSON, UNLESS THEY ARE ACTING UNDER THE DIRECTION OF A LICENSED PROFESSIONAL ENGINEER, TO ALTER THIS DOCUMENT.

SHEET NUMBER: C-5

REVISION: 0

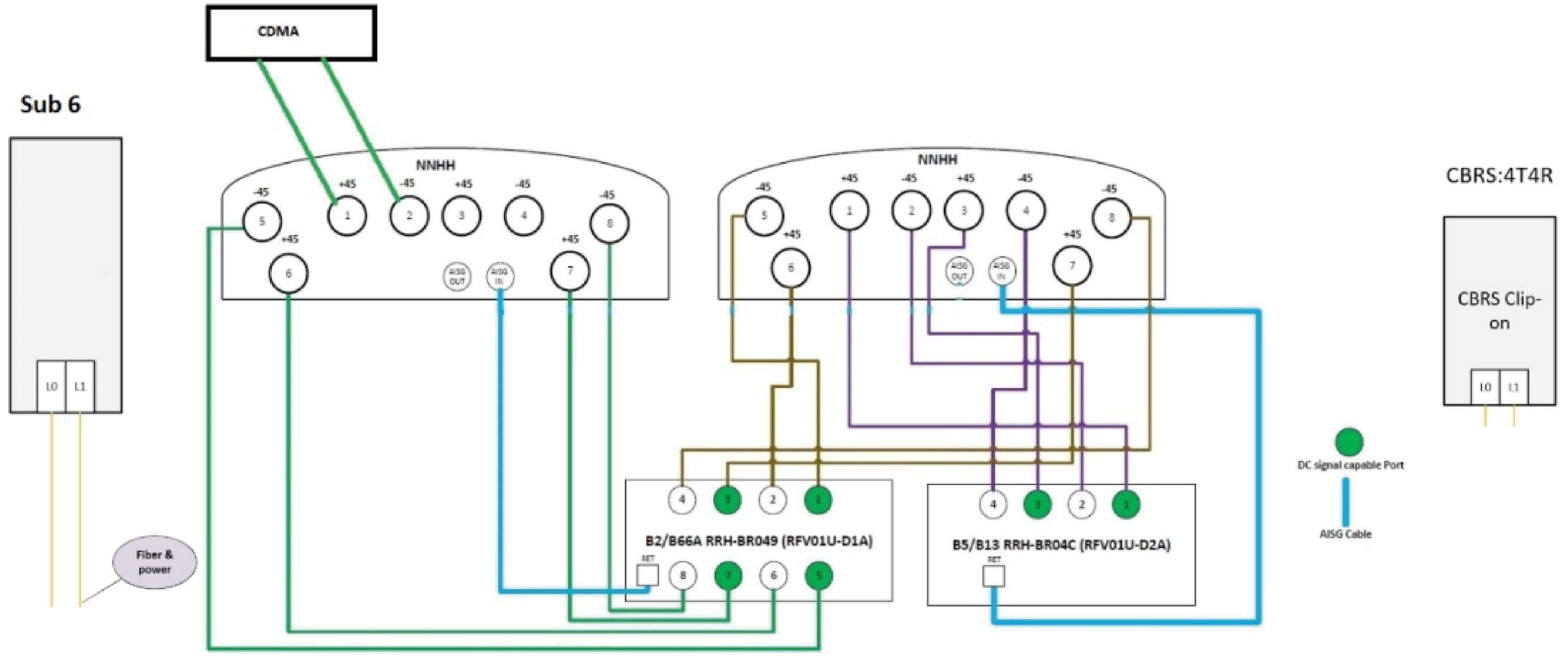

1 PLUMBING DIAGRAM
SCALE: NOT TO SCALE

verizon
180 WASHINGTON VALLEY ROAD
BEDMINSTER, NJ 07921

CROWN CASTLE
1505 WESTLAKE AVENUE NORTH, SUITE 800
SEATTLE, WA 98109

B+T GRP
1717 S. BOULDER
SUITE 300
TULSA, OK 74119
PH: (918) 587-4630
www.btgrp.com

VERIZON SITE NUMBER:
467473

BU #: **876313**
WEST JOHNSON AVE.
BURNT HOUSE

1394 MERIDEN WATERBURY TPK
SOUTHINGTON, CT 06489

EXISTING 160'-0" MONOPOLE

ISSUED FOR:

REV	DATE	DRWN	DESCRIPTION	DES./QA
0	2/8/22	JJR	CONSTRUCTION	MTJ

B&T ENGINEERING, INC.
PEC.0001564
Expires 2/10/23

IT IS A VIOLATION OF LAW FOR ANY PERSON, UNLESS THEY ARE ACTING UNDER THE DIRECTION OF A LICENSED PROFESSIONAL ENGINEER, TO ALTER THIS DOCUMENT.

SHEET NUMBER: C-6

REVISION: 0

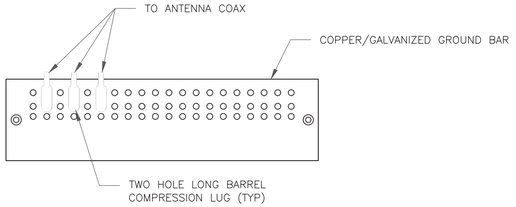

NOTES:

1. DOUBLING UP "OR STACKING" OF CONNECTIONS IS NOT PERMITTED.
2. EXTERIOR ANTIOXIDANT JOINT COMPOUND TO BE USED ON ALL EXTERIOR CONNECTIONS.
3. GROUND BAR SHALL NOT BE ISOLATED FROM TOWER. MOUNT DIRECTLY TO ANTENNA MOUNT STEEL.

1 ANTENNA SECTOR GROUND BAR DETAIL
SCALE: NOT TO SCALE

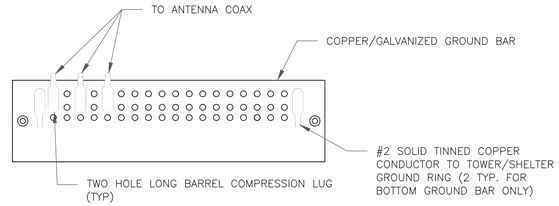

NOTES:

1. EXTERIOR ANTIOXIDANT JOINT COMPOUND TO BE USED ON ALL EXTERIOR CONNECTIONS.
2. GROUND BAR SHALL NOT BE ISOLATED FROM TOWER. MOUNT DIRECTLY TO TOWER STEEL (TOWER ONLY).
3. GROUND BAR SHALL BE ISOLATED FROM BUILDING OR SHELTER.

2 TOWER/SHELTER GROUND BAR DETAIL
SCALE: NOT TO SCALE

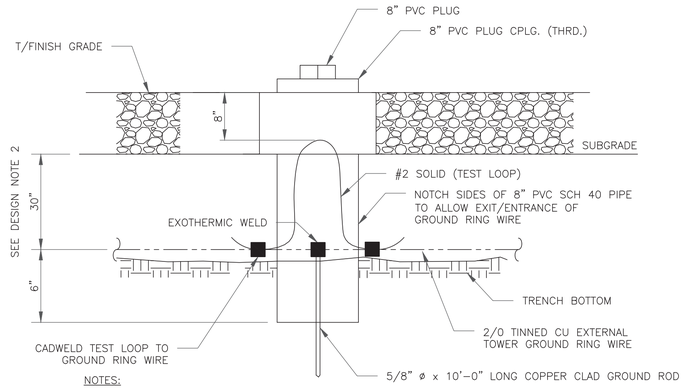

NOTES:

1. GROUND ROD SHALL BE DRIVEN VERTICALLY, NOT TO EXCEED 45 DEGREES FROM THE VERTICAL
2. GROUND WIRE SHALL BE MIN. 30" BELOW GRADE OR 6" BELOW FROST LINE. (WHICH EVER IS GREATER) AS PER N.E.C. ARTICLE 250-50(D)

3 INSPECTION WELL DETAIL
SCALE: NOT TO SCALE

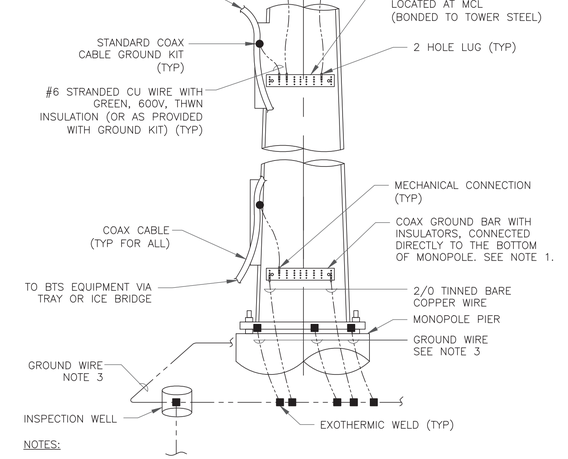

NOTES:

1. NUMBER OF GROUNDING BARS MAY VARY DEPENDING ON THE TYPE OF TOWER, ANTENNA LOCATIONS AND CONNECTION ORIENTATION. COAXIAL CABLES EXCEEDING 200 FEET ON THE TOWER SHALL HAVE GROUND KITS AT THE MIDPOINT. PROVIDE AS REQUIRED.
2. ONLY MECHANICAL CONNECTIONS ARE ALLOWED TO BE MADE TO CROWN CASTLE USA INC. TOWERS. ALL MECHANICAL CONNECTIONS SHALL BE TREATED WITH AN ANTI-OXIDANT COATING.
3. ALL TOWER GROUNDING SYSTEMS SHALL COMPLY WITH THE REQUIREMENTS OF THE RECOGNIZED EDITION OF ANSI/TIA 222 AND NFPA 780.

4 TYPICAL ANTENNA CABLE GROUNDING
SCALE: NOT TO SCALE

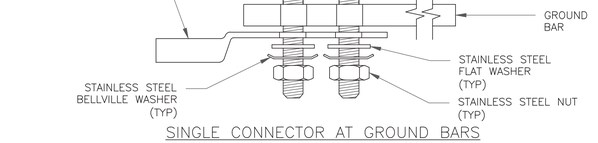

SINGLE CONNECTOR AT GROUND BARS

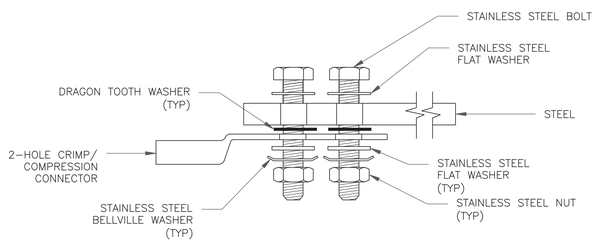

SINGLE CONNECTOR AT STEEL OBJECTS

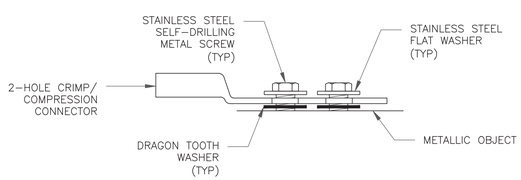

SINGLE CONNECTOR AT METALLIC/STEEL OBJECTS

5 HARDWARE DETAIL FOR EXTERIOR CONNECTIONS
SCALE: NOT TO SCALE

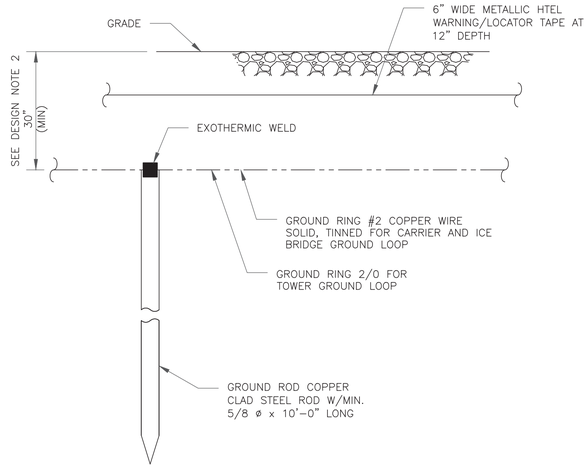

NOTES:

1. GROUND ROD SHALL BE DRIVEN VERTICALLY, NOT TO EXCEED 45 DEGREES FROM THE VERTICAL
2. GROUND WIRE SHALL BE MIN. 30" BELOW GRADE OR 6" BELOW FROST LINE. (WHICH EVER IS GREATER) AS PER N.E.C. ARTICLE 250-50(D)

6 GROUND ROD DETAIL
SCALE: NOT TO SCALE

verizon
180 WASHINGTON VALLEY ROAD
BEDMINSTER, NJ 07921

CROWN CASTLE
1505 WESTLAKE AVENUE NORTH, SUITE 800
SEATTLE, WA 98109

B+T GRP
1717 S. BOULDER
SUITE 300
TULSA, OK 74119
PH: (918) 587-4630
www.btgrp.com

VERIZON SITE NUMBER:
467473

BU #: **876313**
WEST JOHNSON AVE.
BURNT HOUSE

1394 MERIDEN WATERBURY TPK
SOUTHINGTON, CT 06489

EXISTING 160'-0" MONOPOLE

ISSUED FOR:

REV	DATE	DRWN	DESCRIPTION	DES./QA
0	2/8/22	JJR	CONSTRUCTION	MTJ

2/8/22

B&T ENGINEERING, INC.
PEC.0001564
Expires 2/10/23

IT IS A VIOLATION OF LAW FOR ANY PERSON, UNLESS THEY ARE ACTING UNDER THE DIRECTION OF A LICENSED PROFESSIONAL ENGINEER, TO ALTER THIS DOCUMENT.

SHEET NUMBER: G-1

REVISION: 0

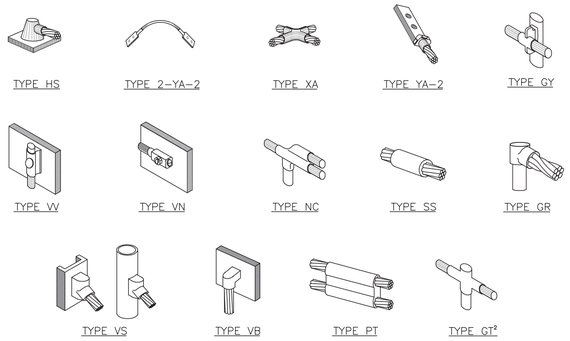

NOTE:

1. ERICO EXOTHERMIC "MOLD TYPES" SHOWN HERE ARE EXAMPLES. CONSULT WITH CONSTRUCTION MANAGER FOR SPECIFIC MOLDS TO BE USED FOR THIS PROJECT.
2. MOLD TYPE ONLY TO BE USED BELOW GRADE WHEN CONNECTING GROUND RING TO GROUND ROD.

1 CADWELD GROUNDING CONNECTIONS
SCALE: NOT TO SCALE

WIRE SIZE	BURNDY LUG	BOLT SIZE
#6 AWG GREEN INSULATED	YA6C-2TC38	3/8" - 16 NC S 2 BOLT
#2 AWG SOLID TINNED	YA3C-2TC38	3/8" - 16 NC S 2 BOLT
#2 AWG STRANDED	YA2C-2TC38	3/8" - 16 NC S 2 BOLT
#2/0 AWG STRANDED	YA26-2TC38	3/8" - 16 NC S 2 BOLT
#4/0 AWG STRANDED	YA28-2N	1/2" - 16 NC S 2 BOLT

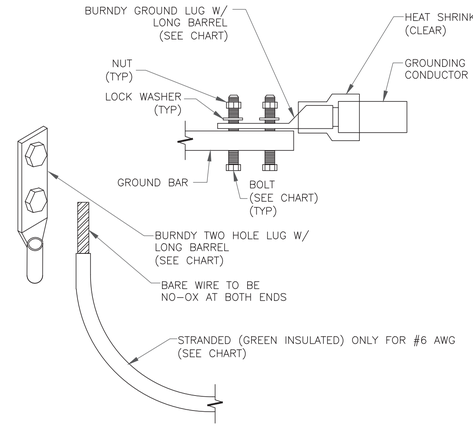

NOTES:

1. ALL GROUNDING LUGS ARE TO BE INSTALLED PER MANUFACTURER'S SPECIFICATIONS. ALL HARDWARE BOLTS, NUTS, LOCK WASHERS SHALL BE STAINLESS STEEL. ALL HARDWARE ARE TO BE AS FOLLOWS: BOLT, FLAT WASHER,GROUND BAR, GROUND LUG, FLAT WASHER AND NUT.

2 MECHANICAL LUG CONNECTION
SCALE: NOT TO SCALE

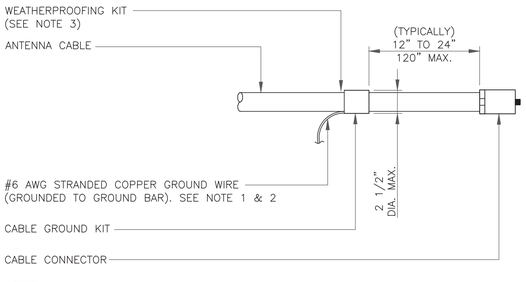

NOTES:

1. DO NOT INSTALL CABLE GROUND KIT AT A BEND AND ALWAYS DIRECT GROUND WIRE DOWN TO GROUND BAR.
2. GROUNDING KIT SHALL BE TYPE AND PART NUMBER AS SUPPLIED OR RECOMMENDED BY CABLE MANUFACTURER.
3. WEATHER PROOFING SHALL BE TWO-PART TAPE KIT, COLD SHRINK SHALL NOT BE USED.

3 CABLE GROUND KIT CONNECTION
SCALE: NOT TO SCALE

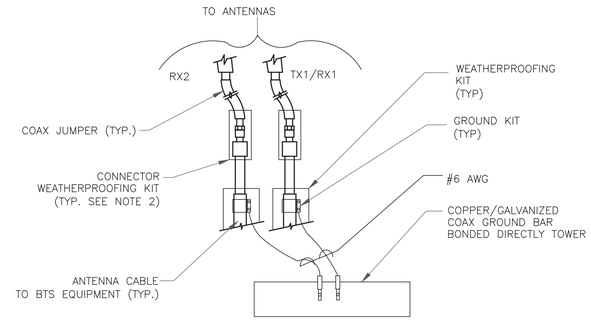

NOTES:

1. DO NOT INSTALL CABLE GROUND KIT AT A BEND AND ALWAYS DIRECT GROUND WIRE DOWN TO ANTENNA GROUND BAR.
2. WEATHER PROOFING SHALL BE TWO-PART TAPE KIT. COLD SHRINK SHALL NOT BE USED.

4 GROUND CABLE CONNECTION
SCALE: NOT TO SCALE

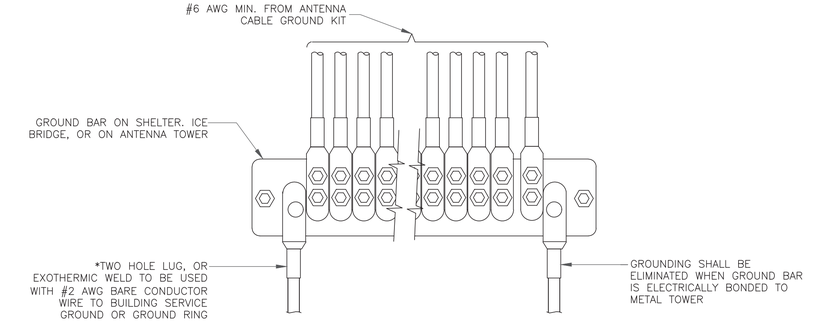

5 GROUNDWIRE INSTALLATION
SCALE: NOT TO SCALE

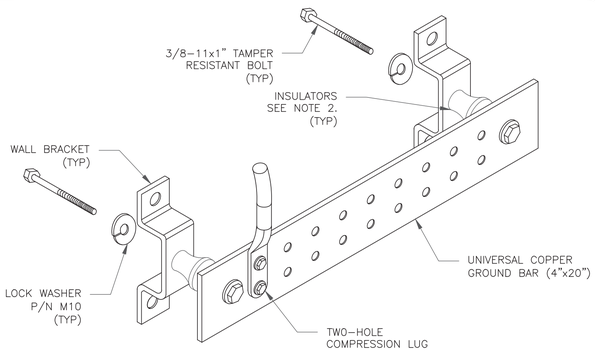

NOTES:

1. DOWN LEAD (HOME RUN) CONDUCTORS ARE NOT TO BE INSTALLED ON CROWN CASTLE USA INC. TOWER, PER THE GROUNDING DOWN CONDUCTOR POLICY QAS-STD-10091. NO MODIFICATION OR DRILLING TO TOWER STEEL IS ALLOWED IN ANY FORM OR FASHION, CAD-WELDING ON THE TOWER AND/OR IN THE AIR ARE NOT PERMITTED.
2. OMIT INSULATOR WHEN MOUNTING TO TOWER STEEL OR PLATFORM STEEL USE INSULATORS WHEN ATTACHING TO BUILDING OR SHELTERS.

6 GROUND BAR DETAIL
SCALE: NOT TO SCALE

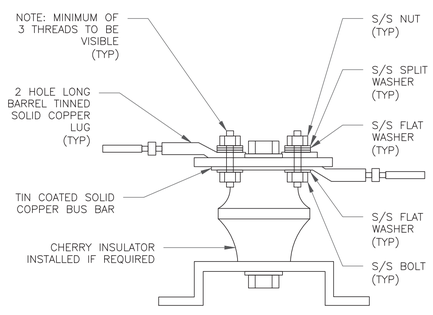

7 LUG DETAIL
SCALE: NOT TO SCALE

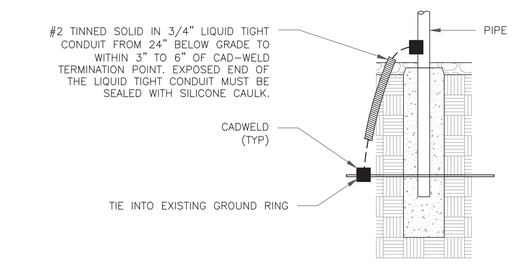

8 TRANSITIONING GROUND DETAIL
SCALE: NOT TO SCALE

verizon
180 WASHINGTON VALLEY ROAD
BEDMINSTER, NJ 07921

CROWN CASTLE
1505 WESTLAKE AVENUE NORTH, SUITE 800
SEATTLE, WA 98109

B+T GRP
1717 S. BOULDER
SUITE 300
TULSA, OK 74119
PH: (918) 587-4630
www.btgrp.com

VERIZON SITE NUMBER:
467473

BU #: **876313**
WEST JOHNSON AVE.
BURNT HOUSE

1394 MERIDEN WATERBURY TPK
SOUTHINGTON, CT 06489

EXISTING 160'-0" MONOPOLE

ISSUED FOR:

REV	DATE	DRWN	DESCRIPTION	DES./QA
0	2/8/22	JJR	CONSTRUCTION	MTJ

B&T ENGINEERING, INC.
PEC.0001564
Expires 2/10/23

IT IS A VIOLATION OF LAW FOR ANY PERSON, UNLESS THEY ARE ACTING UNDER THE DIRECTION OF A LICENSED PROFESSIONAL ENGINEER, TO ALTER THIS DOCUMENT.

SHEET NUMBER: G-2

REVISION: 0

Exhibit C

Date: **January 21st, 2022**

B+T Group
1717 S. Boulder, Suite 300
Tulsa, OK 74119
(918) 587-4630

Subject:	**Structural Modification Report**	
Carrier Designation:	***Verizon Wireless* Co-Locate**	
	Site Number:	467473
	Site Name:	Milldale CT
Crown Castle Designation:	**BU Number:**	876313
	Site Name:	West Johnson Ave. Burnt House
	JDE Job Number:	686593
	Work Order Number:	2065105
	Order Number:	586465 Rev. 1
Engineering Firm Designation:	**B+T Group Project Number:**	137177.009.01
Site Data:	**1394 Meriden Waterbury Tpk, Southington, CT, Hartford County**	
	Latitude *41° 33' 51.39"*, Longitude *-72° 53' 30.7"*	
	160 Foot - Monopole	

B+T Group is pleased to submit this **"Structural Modification Report"** to determine the structural integrity of the above-mentioned tower.

The purpose of the analysis is to determine acceptability of the tower stress level including the proposed modifications as outlined in the attached drawings, "Appendix D". Based on our analysis we have determined the tower stress level for the structure and foundation, under the following load case, to be:

LC4.7: Modified Structure w/ Proposed Equipment Configuration **Sufficient Capacity – 98.2%**

This analysis utilizes an ultimate 3-second gust wind speed of 118 mph as required by the 2018 Connecticut State Building Code. Applicable Standard references and design criteria are listed in Section 2 - Analysis Criteria

Structural modification prepared by: Tharun Cheriyan, E.I.T.

Respectfully submitted by: B+T Engineering, Inc.
COA: PEC 0001564 Expires: 02/10/2022

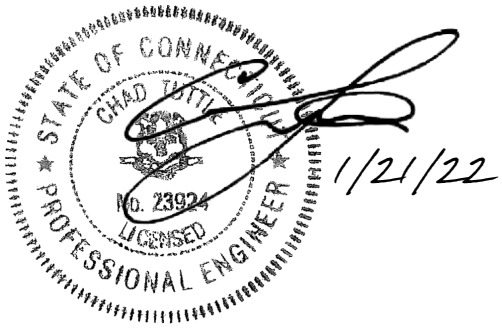

Chad E. Tuttle, P.E.

tnxTower Report - version 8.1.1.0

TABLE OF CONTENTS

1) INTRODUCTION

2) ANALYSIS CRITERIA
Table 1 - Proposed Equipment Configuration
Table 2 - Other Considered Equipment

3) ANALYSIS PROCEDURE
Table 3 - Documents Provided
3.1) Analysis Method
3.2) Assumptions

4) ANALYSIS RESULTS
Table 4 - Section Capacity (Summary)
Table 5 - Tower Component Stresses vs. Capacity (Monopole) - LC4.7
4.1) Recommendations

5) APPENDIX A
tnxTower Output

6) APPENDIX B
Base Level Drawing

7) APPENDIX C
Additional Calculations

8) APPENDIX D
Modification Drawings

1) INTRODUCTION

This tower is a 160 ft. monopole designed by Summit.

The tower has been modified multiple times in the past to accommodate additional loading.

2) ANALYSIS CRITERIA

TIA-222 Revision:	TIA-222-H
Risk Category:	II
Wind Speed:	118 mph
Exposure Category:	B
Topographic Factor:	1
Ice Thickness:	1 in
Wind Speed with Ice:	50 mph
Service Wind Speed:	60 mph

Table 1 - Proposed Equipment Configuration

Mounting Level (ft)	Center Line Elevation (ft)	Number of Antennas	Antenna Manufacturer	Antenna Model	Number of Feed Lines	Feed Line Size (in)
138.0	142.0	1	Lucent	KS24019-L112A	1 6 1	2-1/4 1-5/8 1/2
	138.0	6	Commscope	NNHH-65B-R4		
		1	Raycap	RVZDC-6627-PF-48		
		3	Samsung Telecomm.	CBRS		
		3	Samsung Telecomm.	MT6407-77A		
		3	Samsung Telecomm.	RFV01U-D1A		
		3	Samsung Telecomm.	RFV01U-D2A		
		1	--	Platform Mount [LP 303-1_KCKR-HR-1]		

Table 2 - Other Considered Equipment

Mounting Level (ft)	Center Line Elevation (ft)	Number of Antennas	Antenna Manufacturer	Antenna Model	Number of Feed Lines	Feed Line Size (in)
157.0	158.0	3	CCI Antennas	HPA-85R-BUU-H8	6 8 3	1-5/8 3/4 3/8
		3	CCI Antennas	TPA-65R-LCUUUU-H8-K		
		3	Ericsson	RRUS 32		
		3	Ericsson	RRUS 4449 B5/B12		
		3	Ericsson	RRUS 4478 B14		
		3	Ericsson	RRUS 8843 B2/B66A		
		3	Ericsson	RRUS-11		
		3	Kathrein	800 10121		
		3	Kathrein	80010966		
		6	Powerwave Tech.	LGP21401		
		4	Raycap	DC6-48-60-18-8F		
	157.0	1	--	Sector Mount [SM 503-3]		
148.0	148.0	3	Ericsson	AIR6449 B41_T-MOBILE	3	1-5/8
		3	Ericsson	RADIO 4460 B2/B25 B66_TMO		

Mounting Level (ft)	Center Line Elevation (ft)	Number of Antennas	Antenna Manufacturer	Antenna Model	Number of Feed Lines	Feed Line Size (in)
		3	Ericsson	RADIO 4480 B71_TMO		
		3	RFS Celwave	APX16DWV-16DWV-S-E-A20		
		3	RFS Celwave	APXVAALL24_43-U-NA20_TMO		
		1	--	Platform Mount [LP 1201-1_HR-1]		
147.0	147.0	3	--	12.5' x 2.0 STD Rail		
145.0	145.0	1	--	Miscellaneous [NA 507-1]		
127.0	129.0	3	Ericsson	AIR -32 B2A/B66AA	9 1	1-5/8 1-1/4
		3	Ericsson	ERICSSON AIR 21 B2A B4P		
		3	Ericsson	KRY 112 144/1		
		3	Ericsson	RADIO 4449 B12/B71		
		3	RFS Celwave	APXVAARR24_43-U-NA20		
	127.0	1	--	Platform Mount [LP 1201-1]		
119.0	119.0	3	Commscope	MC-K6MHDX-9-96	1	1-1/2
		3	Fujitsu	TA08025-B604		
		3	Fujitsu	TA08025-B605		
		3	JMA Wireless	MX08FRO665-21		
		1	Raycap	RDIDC-9181-PF-48		
48.0	50.0	1	Lucent	KS24019-L112A	1	1/2
	48.0	1	--	Side Arm Mount [SO 701-1]		

3) ANALYSIS PROCEDURE

Table 3 - Documents Provided

Document	Reference	Source
Tower Manufacturer Drawing	2134246	CCIsites
Tower Modification Drawing	3348783	CCIsites
Post Modification Inspection	3846956	CCIsites
Tower Modification Drawing	4077469	CCIsites
Post Modification Inspection	4077468	CCIsites
Tower Modification Drawing	4094328	CCIsites
Post Modification Inspection	4600286	CCIsites
Tower Modification Drawing	5105790	CCIsites
Post Modification Inspection	5380973	CCIsites
Tower Modification Drawing	5266558	CCIsites
Post Modification Inspection	5617077	CCIsites
Foundation Drawing	1633746	CCIsites
Geotech Report	5939573	CCIsites
Crown CAD Package	Date: 12/03/2021	CCIsites

3.1) Analysis Method

tnxTower (version 8.1.1.0), a commercially available analysis software package, was used to create a three-dimensional model of the tower and calculate member stresses for various loading cases. Selected output from the analysis is included in Appendix A. When applicable, Crown Castle has calculated and provided the effective area for panel antennas using approved methods following the intent of the TIA-222 standard.

tnxTower was used to determine the loads on the modified structure. Additional calculations were performed to determine the stresses in the pole and in the reinforcing elements. These calculations are presented in Appendix C.

3.2) Assumptions

1) The tower and structures were maintained in accordance with the - TIA-222 standard.
2) The configuration of antennas, transmission cables, mounts and other appurtenances are as specified in Tables 1 and 2 and the referenced drawings.

This analysis may be affected if any assumptions are not valid or have been made in error. B+T Group should be notified to determine the effect on the structural integrity of the tower.

4) ANALYSIS RESULTS

Table 4 - Section Capacity (Summary)

Section No.	Elevation (ft)	Component Type	Size	Critical Element	P (K)	SF*P_allow (K)	% Capacity	Pass / Fail
L1	160 - 155	Pole	TP10.75x10.75x0.349	1	-4.531	--	22.3	Pass[1]
L2	155 - 150	Pole	TP10.75x10.75x0.349	2	-5.447	--	60.9	Pass[1]
L3	150 - 148.5	Pole	TP10.75x10.75x0.349	3	-5.729	--	73.0	Pass[1]
L4	148.5 - 148	Pole	TP23x23x0.349	4	-5.854	--	17.1	Pass[1]
L5	148 - 143	Pole	TP23.81x23x0.25	5	-11.987	--	23.4	Pass[1]
L6	143 - 138	Pole	TP24.62x23.81x0.25	6	-12.829	--	32.3	Pass[1]
L7	138 - 133	Pole	TP25.43x24.62x0.25	7	-17.035	--	44.2	Pass[1]
L8	133 - 128	Pole	TP26.24x25.43x0.25	8	-17.665	--	54.6	Pass[1]
L9	128 - 123	Pole	TP27.05x26.24x0.25	9	-22.569	--	66.4	Pass[1]
L10	123 - 118	Pole	TP27.86x27.05x0.25	10	-25.615	--	77.1	Pass[1]
L11	118 - 114.75	Pole	TP28.994x27.86x0.25	11	-26.154	--	84.0	Pass[1]
L12	114.75 - 109.75	Pole	TP28.696x27.887x0.313	12	-27.364	--	75.1	Pass[1]
L13	109.75 - 105.33	Pole	TP29.412x28.696x0.313	13	-28.218	--	80.8	Pass[1]
L14	105.33 - 105.08	Pole + Reinf.	TP29.452x29.412x0.469	14	-28.295	--	76.8	Pass[1]
L15	105.08 - 100.08	Pole + Reinf.	TP30.262x29.452x0.463	15	-29.460	--	83.1	Pass[1]
L16	100.08 - 95.08	Pole + Reinf.	TP31.072x30.262x0.463	16	-30.661	--	88.9	Pass[1]
L17	95.08 - 92.5	Pole + Reinf.	TP31.491x31.072x0.456	17	-31.288	--	91.7	Pass[1]
L18	92.5 - 92.25	Pole + Reinf.	TP31.531x31.491x0.638	18	-31.381	--	81.4	Pass[1]
L19	92.25 - 87.25	Pole + Reinf.	TP32.341x31.531x0.625	19	-32.869	--	86.3	Pass[1]
L20	87.25 - 82.25	Pole + Reinf.	TP33.151x32.341x0.613	20	-34.391	--	90.9	Pass[1]
L21	82.25 - 81	Pole + Reinf.	TP34.042x33.151x0.613	21	-34.773	--	92.0	Pass[1]
L22	81 - 75.75	Pole	TP33.579x32.729x0.375	22	-36.970	--	86.7	Pass[1]
L23	75.75 - 70.75	Pole	TP34.389x33.579x0.375	23	-38.209	--	89.1	Pass[1]
L24	70.75 - 70.58	Pole	TP34.416x34.389x0.375	24	-38.270	--	89.2	Pass[1]
L25	70.58 - 70.33	Pole + Reinf.	TP34.456x34.416x0.675	25	-38.364	--	78.0	Pass[1]

Section No.	Elevation (ft)	Component Type	Size	Critical Element	P (K)	SF*P_allow (K)	% Capacity	Pass / Fail
L26	70.33 - 70	Pole + Reinf.	TP34.51x34.456x0.675	26	-38.487	--	78.2	Pass[1]
L27	70 - 69.75	Pole	TP34.551x34.51x0.375	27	-38.549	--	89.5	Pass[1]
L28	69.75 - 64.75	Pole	TP35.361x34.551x0.375	28	-39.800	--	91.6	Pass[1]
L29	64.75 - 59.75	Pole	TP36.171x35.361x0.375	29	-41.092	--	93.6	Pass[1]
L30	59.75 - 54.75	Pole	TP36.981x36.171x0.375	30	-42.406	--	95.7	Pass[1]
L31	54.75 - 49.75	Pole	TP37.791x36.981x0.375	31	-43.743	--	97.6	Pass[1]
L32	49.75 - 48	Pole	TP38.884x37.791x0.375	32	-44.199	--	98.2	Pass[1]
L33	48 - 42	Pole	TP38.296x37.324x0.438	33	-46.909	--	88.0	Pass[1]
L34	42 - 37	Pole	TP39.106x38.296x0.438	34	-48.417	--	88.8	Pass[1]
L35	37 - 32	Pole	TP39.916x39.106x0.438	35	-49.948	--	89.4	Pass[1]
L36	32 - 27.91	Pole	TP40.578x39.916x0.438	36	-51.216	--	89.9	Pass[1]
L37	27.91 - 27.66	Pole + Reinf.	TP40.619x40.578x0.675	37	-51.342	--	87.7	Pass[1]
L38	27.66 - 27.25	Pole + Reinf.	TP40.686x40.619x0.675	38	-51.518	--	87.8	Pass[1]
L39	27.25 - 26.98	Pole + Reinf.	TP40.729x40.686x0.675	39	-51.628	--	85.9	Pass[1]
L40	26.98 - 26.83	Pole + Reinf.	TP40.753x40.729x0.663	40	-51.690	--	85.9	Pass[1]
L41	26.83 - 21.83	Pole + Reinf.	TP41.563x40.753x0.663	41	-53.703	--	86.9	Pass[1]
L42	21.83 - 16.83	Pole + Reinf.	TP42.373x41.563x0.663	42	-55.750	--	87.8	Pass[1]
L43	16.83 - 16	Pole + Reinf.	TP42.508x42.373x0.663	43	-56.096	--	87.9	Pass[1]
L44	16 - 15.75	Pole + Reinf.	TP42.549x42.508x0.813	44	-56.225	--	78.8	Pass[1]
L45	15.75 - 14.75	Pole + Reinf.	TP42.711x42.549x0.813	45	-56.701	--	79.0	Pass[1]
L46	14.75 - 14.5	Pole + Reinf.	TP42.752x42.711x0.488	46	-56.805	--	89.7	Pass[1]
L47	14.5 - 12.08	Pole + Reinf.	TP43.143x42.752x0.488	47	-57.730	--	90.0	Pass[1]
L48	12.08 - 11.83	Pole + Reinf.	TP43.183x43.143x0.738	48	-57.860	--	80.6	Pass[1]
L49	11.83 - 10	Pole + Reinf.	TP43.48x43.183x0.738	49	-58.666	--	80.9	Pass[1]
L50	10 - 9.75	Pole + Reinf.	TP43.521x43.48x0.738	50	-58.797	--	80.9	Pass[1]
L51	9.75 - 4.75	Pole + Reinf.	TP44.331x43.521x0.725	51	-61.051	--	81.6	Pass[1]
L52	4.75 - 0	Pole + Reinf.	TP45.1x44.331x0.713	52	-63.223	--	82.2	Pass[1]
							Summary	
						Pole (L32)	98.2	Pass[1]
						Rating =	98.2	Pass[1]

Table 5 - Tower Component Stresses vs. Capacity (Monopole) - LC4.7

Notes	Component		Elevation	% Capacity	Pass / Fail
1,2	Flange Connection		148’	29.9	Pass
1,2	Anchor Rods		Base	82.0	Pass
1,2	Base Plate		Base	61.7	Pass
1,2	Base Foundation	Structure	Base	80.2	Pass
		Soil	Base	75.5	Pass

Structure Rating (max from all components) =	98.2%

Notes:
1) See additional documentation in “Appendix C – Additional Calculations” for calculations supporting the % capacity consumed.
2) Rating per TIA-222-H Section 15.5.

4.1) Recommendations

1) Perform the modifications detailed in "Appendix D" to remedy the deficiencies identified in Crown Castle Work Order No. 2020554.

APPENDIX A

tnxTOWER OUTPUT

Section	1	2	3	4	5	6	7	8	9	10	11	12	13	14	15	16	17	18	19	20	21	22	23	24	25	26	27	28	29	30	31	32	33	34	35	36	37	38	39	40	41	42	43	44	45	46	47	48	49	50	51	52
Length (ft)	5.000	5.000	5.000	5.000	5.000	5.000	5.000	5.000	5.000	5.000	5.000	5.000	5.000	5.000	5.000	5.000	5.000	5.000	5.000	5.000	5.000	5.000	5.000	5.000	5.000	5.000	5.000	5.000	5.000	5.000	5.000	5.000	5.000	5.000	5.000	5.000	5.000	5.000	5.000	5.000	5.000	5.000	5.000	5.000	5.000	5.000	5.000	5.000	5.000	4.750
Number of Sides	0	0	0	0	18	18	18	18	18	18	18	18	18	18	18	18	18	18	18	18	18	18	18	18	18	18	18	18	18	18	18	18	18	18	18	18	18	18	18	18	18	18	18	18	18	18	18	18	18	18	18	18
Thickness (in)	0.349	0.349	0.349	0.349	0.250	0.250	0.250	0.250	0.250	0.250	0.250	0.313	0.313	0.469	0.468	0.463	0.456	0.456	0.628	0.613	0.613	0.375	0.375	0.375	0.375	0.375	0.375	0.375	0.375	0.375	0.375	0.375	0.438	0.438	0.438	0.438	0.438	0.438	0.438	0.660	0.660	0.662	0.662	0.662	0.662	0.662	0.662	0.662	0.662	0.713
Socket Length (ft)											3.750										4.250										5.000																								
Top Dia (in)	10.750	10.750	10.750	10.750	23.000	23.810	24.620	25.430	26.240	27.050	27.860	27.887	28.696	29.452	30.229	31.072	31.907	31.907	32.341	32.341	33.151	33.151	33.572	33.572	34.382	34.382	34.582	35.392	35.361	36.171	36.981	37.791	38.601	38.296	39.106	39.916	39.916	40.726	40.726	41.536	41.536	42.373	42.373	42.373	43.183	43.183	43.183	43.993	43.993	44.331
Bot Dia (in)	10.750	10.750	10.750	10.750	23.810	24.620	25.430	26.240	27.050	27.860	28.994	28.696	29.452	30.229	31.072	31.907	32.341	32.341	33.151	33.151	34.042	33.572	34.382	34.382	35.392	35.392	35.361	36.171	36.981	37.791	38.601	38.884	39.106	39.916	39.916	40.726	40.726	41.536	41.536	42.373	42.373	43.183	43.183	43.183	43.993	43.993	43.993	44.331	44.331	45.100
Grade	A53-B-35										A607-60																								A607-65																				
Weight (K)	0.2	0.2	0.1	0.3	0.3	0.3	0.3	0.4	0.4	0.5	0.5	0.4	0.0	0.7	0.7	0.4	0.0	1.0	1.0	1.1	0.7	0.7	0.0	0.7	0.7	0.7	0.7	0.7	0.9	1.1	1.0	0.9	0.9	0.8	1.4	1.4	0.0	1.2	0.0	0.6	1.6	1.5	26.5								

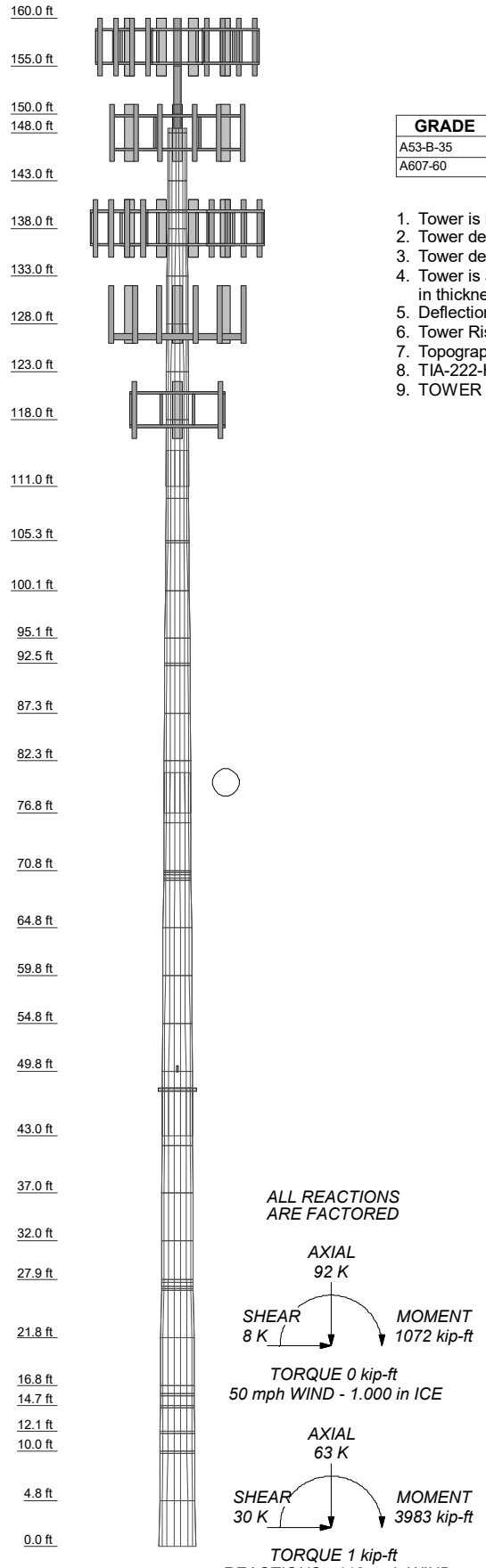

ALL REACTIONS ARE FACTORED

AXIAL 92 K

SHEAR 8 K *MOMENT 1072 kip-ft*

TORQUE 0 kip-ft
50 mph WIND - 1.000 in ICE

AXIAL 63 K

SHEAR 30 K *MOMENT 3983 kip-ft*

TORQUE 1 kip-ft
REACTIONS - 118 mph WIND

MATERIAL STRENGTH

GRADE	Fy	Fu	GRADE	Fy	Fu
A53-B-35	35 ksi	63 ksi	A607-65	65 ksi	80 ksi
A607-60	60 ksi	75 ksi			

TOWER DESIGN NOTES

1. Tower is located in Hartford County, Connecticut.
2. Tower designed for Exposure B to the TIA-222-H Standard.
3. Tower designed for a 118 mph basic wind in accordance with the TIA-222-H Standard.
4. Tower is also designed for a 50 mph basic wind with 1.00 in ice. Ice is considered to increase in thickness with height.
5. Deflections are based upon a 60 mph wind.
6. Tower Risk Category II.
7. Topographic Category 1 with Crest Height of 0.000 ft
8. TIA-222-H Annex S
9. TOWER RATING: 98.2%

B+T GRP

B+T Group
1717 S. Boulder, Suite 300
Tulsa, OK 74119
Phone: (918) 587-4630
FAX: (918) 295-0265

Job:	***137177.009.01 - WEST JOHNSON AVE. BURNT HOUSE, CT (BU# 876313***		
Project:			
Client: Crown Castle		Drawn by: VP	App'd:
Code: TIA-222-H		Date: 01/15/22	Scale: NTS
Path:			Dwg No. E-1

TIA-222-H - 118 mph/50 mph 1.000 in Ice Exposure B

Vx Vz

Maximum Values

Mx Mz

Global Mast Shear (K)

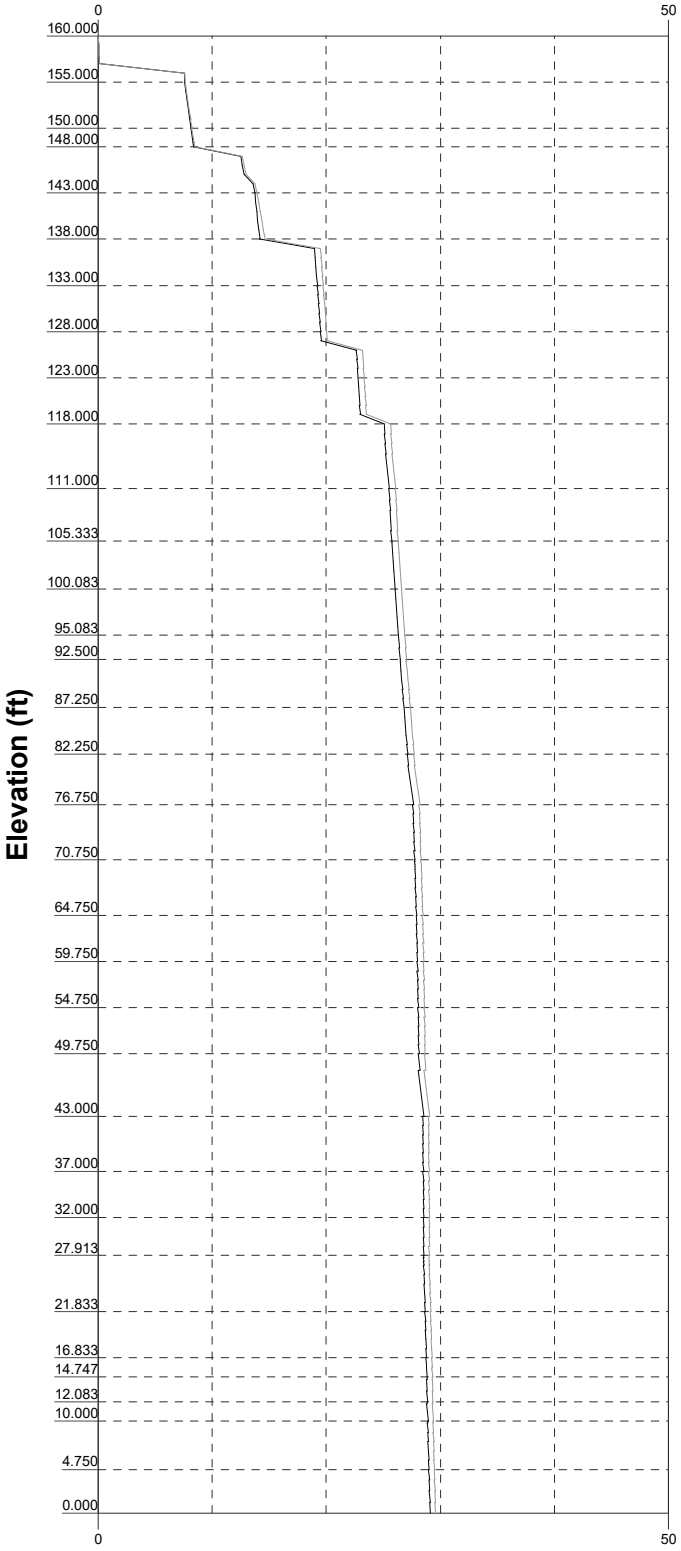

Global Mast Moment (kip-ft)

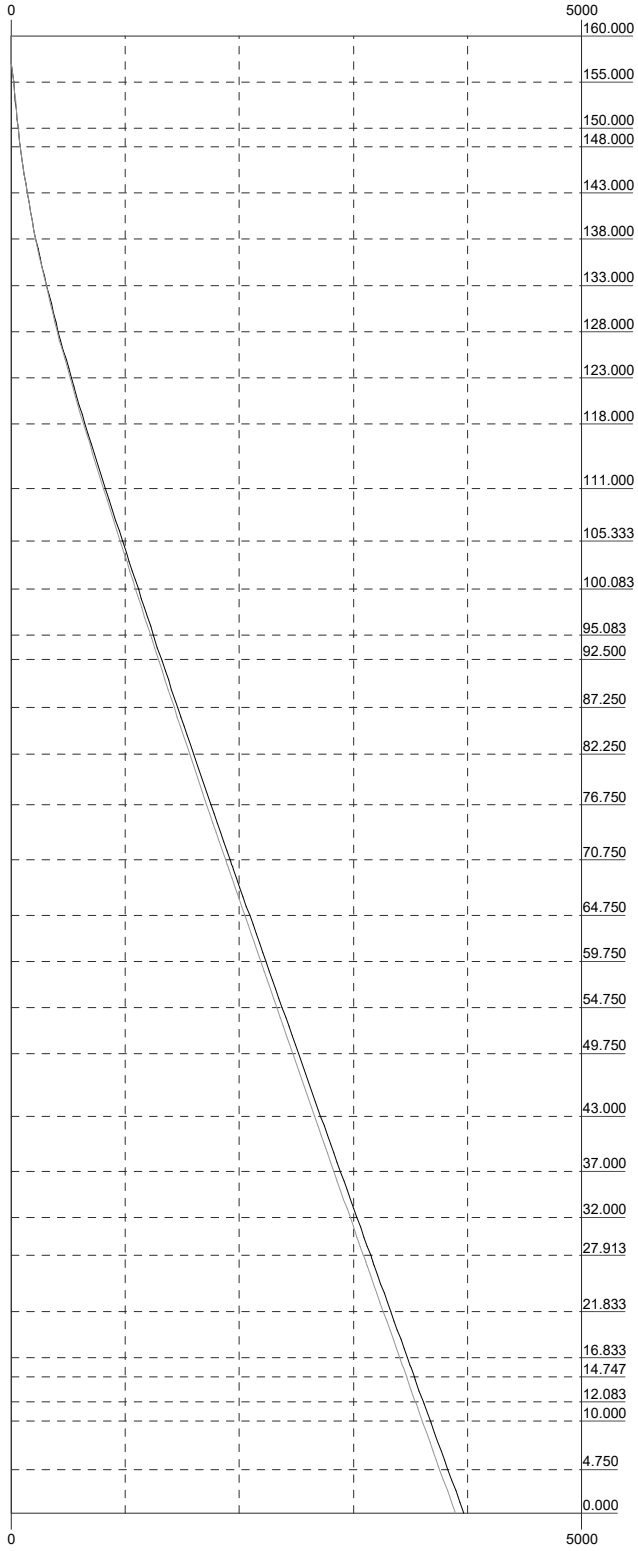

B+T Group
1717 S. Boulder, Suite 300
Tulsa, OK 74119
Phone: (918) 587-4630
FAX: (918) 295-0265

Job: *137177.009.01 - WEST JOHNSON AVE. BURNT HOUSE, CT (BU# 876313*		
Project:		
Client: Crown Castle	Drawn by: VP	App'd:
Code: TIA-222-H	Date: 01/15/22	Scale: NTS
Path:		Dwg No. E-4

TIA-222-H - Service - 60 mph

Maximum Values

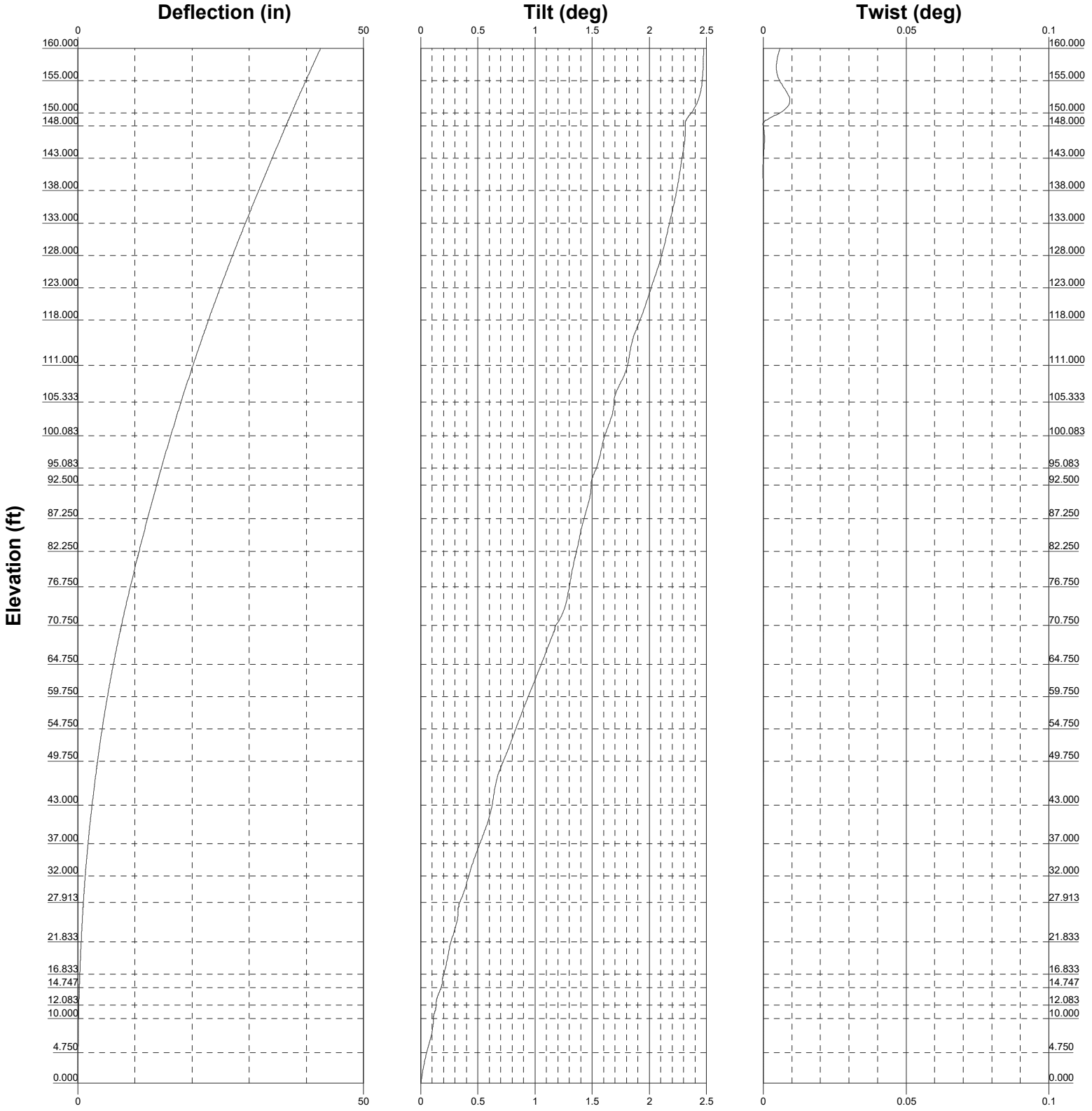

B+T Group
1717 S. Boulder, Suite 300
Tulsa, OK 74119
Phone: (918) 587-4630
FAX: (918) 295-0265

Job: *137177.009.01 - WEST JOHNSON AVE. BURNT HOUSE, CT (BU# 876313*		
Project:		
Client: Crown Castle	Drawn by: VP	App'd:
Code: TIA-222-H	Date: 01/15/22	Scale: NTS
Path:		Dwg No. E-5

Feed Line Distribution Chart
0' - 160'

Round | Flat | App In Face | App Out Face | Truss Leg

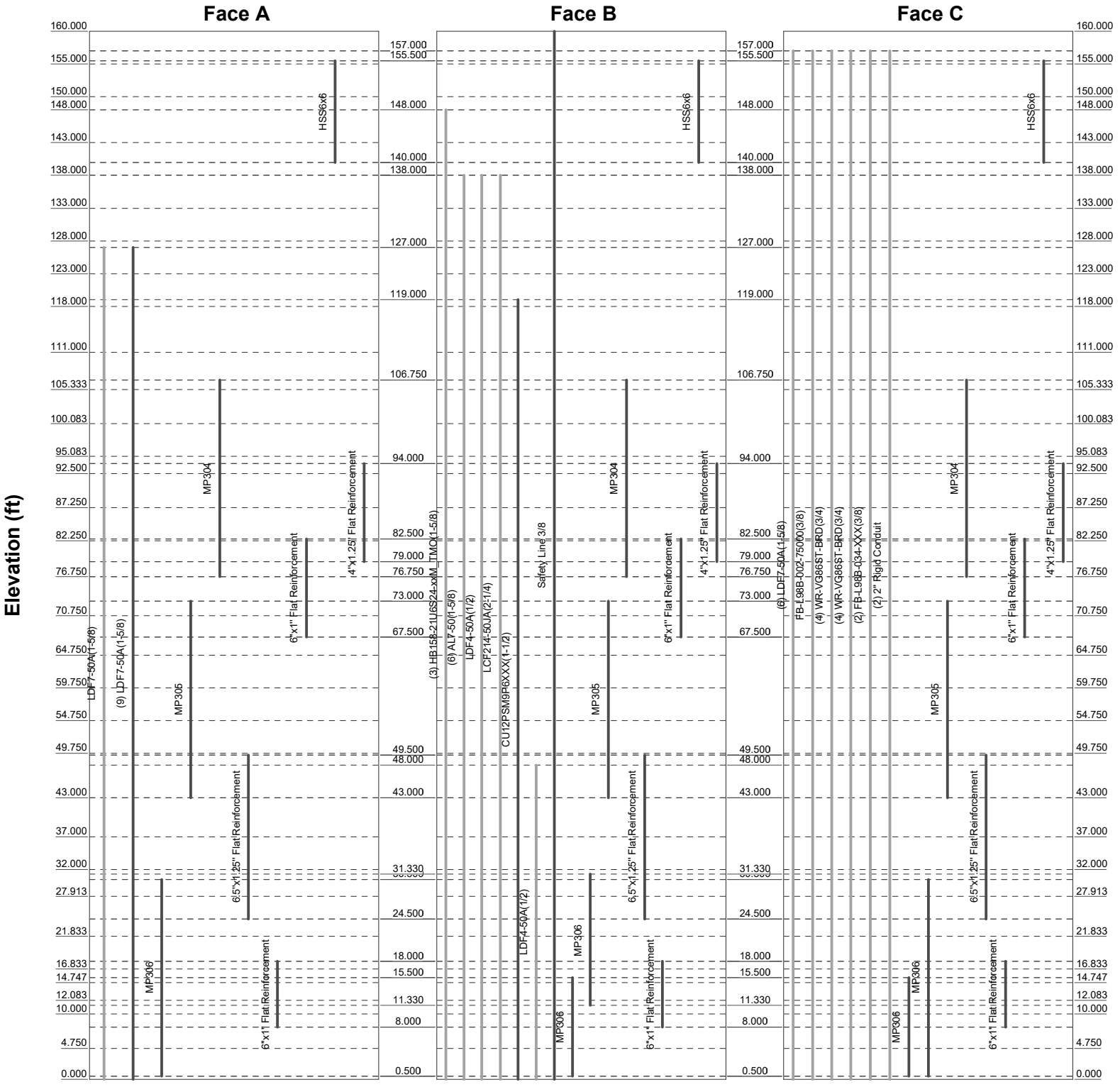

B+T Group
1717 S. Boulder, Suite 300
Tulsa, OK 74119
Phone: (918) 587-4630
FAX: (918) 295-0265

Job: 137177.009.01 - WEST JOHNSON AVE. BURNT HOUSE, CT (BU# 876313			
Project:			
Client: Crown Castle	Drawn by: VP	App'd:	
Code: TIA-222-H	Date: 01/15/22	Scale: NTS	
Path:		Dwg No. E-7	

Tower Input Data

The tower is a monopole.
This tower is designed using the TIA-222-H standard.
The following design criteria apply:

1) Tower is located in Hartford County, Connecticut.
2) Tower base elevation above sea level: 133.000 ft.
3) Basic wind speed of 118 mph.
4) Risk Category II.
5) Exposure Category B.
6) Simplified Topographic Factor Procedure for wind speed-up calculations is used.
7) Topographic Category: 1.
8) Crest Height: 0.000 ft.
9) Nominal ice thickness of 1.000 in.
10) Ice thickness is considered to increase with height.
11) Ice density of 56.000 pcf.
12) A wind speed of 50 mph is used in combination with ice.
13) Temperature drop of 50.000 °F.
14) Deflections calculated using a wind speed of 60 mph.
15) TIA-222-H Annex S.
16) A non-linear (P-delta) analysis was used.
17) Pressures are calculated at each section.
18) Stress ratio used in pole design is 1.
19) Tower analysis based on target reliabilities in accordance with Annex S.
20) Load Modification Factors used: $K_{es}(F_w) = 0.95$, $K_{es}(t_i) = 0.85$.
21) Maximum demand-capacity ratio is: 1.05.
22) Local bending stresses due to climbing loads, feed line supports, and appurtenance mounts are not considered.

Options

	Consider Moments - Legs		Distribute Leg Loads As Uniform		Use ASCE 10 X-Brace Ly Rules
	Consider Moments - Horizontals		Assume Legs Pinned		Calculate Redundant Bracing Forces
	Consider Moments - Diagonals	√	Assume Rigid Index Plate		Ignore Redundant Members in FEA
	Use Moment Magnification	√	Use Clear Spans For Wind Area		SR Leg Bolts Resist Compression
√	Use Code Stress Ratios		Use Clear Spans For KL/r		All Leg Panels Have Same Allowable
√	Use Code Safety Factors - Guys		Retension Guys To Initial Tension		Offset Girt At Foundation
	Escalate Ice	√	Bypass Mast Stability Checks	√	Consider Feed Line Torque
	Always Use Max Kz	√	Use Azimuth Dish Coefficients		Include Angle Block Shear Check
	Use Special Wind Profile	√	Project Wind Area of Appurt.		Use TIA-222-H Bracing Resist. Exemption
	Include Bolts In Member Capacity		Autocalc Torque Arm Areas		Use TIA-222-H Tension Splice Exemption
	Leg Bolts Are At Top Of Section		Add IBC .6D+W Combination		Poles
	Secondary Horizontal Braces Leg		Sort Capacity Reports By Component	√	Include Shear-Torsion Interaction
	Use Diamond Inner Bracing (4 Sided)		Triangulate Diamond Inner Bracing		Always Use Sub-Critical Flow
	SR Members Have Cut Ends		Treat Feed Line Bundles As Cylinder		Use Top Mounted Sockets
	SR Members Are Concentric		Ignore KL/ry For 60 Deg. Angle Legs		Pole Without Linear Attachments
					Pole With Shroud Or No Appurtenances
					Outside and Inside Corner Radii Are Known

Tapered Pole Section Geometry

Section	Elevation ft	Section Length ft	Splice Length ft	Number of Sides	Top Diameter in	Bottom Diameter in	Wall Thickness in	Bend Radius in	Pole Grade
L1	160.000-155.000	5.000	0.000	Round	10.750	10.750	0.349		A53-B-35 (35 ksi)
L2	155.000-150.000	5.000	0.000	Round	10.750	10.750	0.349		A53-B-35 (35 ksi)
L3	150.000-148.500	1.500	0.000	Round	10.750	10.750	0.349		A53-B-35 (35 ksi)
L4	148.500-148.000	0.500	0.000	Round	23.000	23.000	0.349		A53-B-35 (35 ksi)
L5	148.000-143.000	5.000	0.000	18	23.000	23.810	0.250	1.000	A607-60 (60 ksi)
L6	143.000-138.000	5.000	0.000	18	23.810	24.620	0.250	1.000	A607-60 (60 ksi)
L7	138.000-133.000	5.000	0.000	18	24.620	25.430	0.250	1.000	A607-60 (60 ksi)
L8	133.000-128.000	5.000	0.000	18	25.430	26.240	0.250	1.000	A607-60 (60 ksi)
L9	128.000-123.000	5.000	0.000	18	26.240	27.050	0.250	1.000	A607-60 (60 ksi)
L10	123.000-118.000	5.000	0.000	18	27.050	27.860	0.250	1.000	A607-60 (60 ksi)
L11	118.000-111.000	7.000	3.750	18	27.860	28.994	0.250	1.000	A607-60 (60 ksi)
L12	111.000-109.750	5.000	0.000	18	27.887	28.696	0.313	1.250	A607-60 (60 ksi)
L13	109.750-105.333	4.417	0.000	18	28.696	29.412	0.313	1.250	A607-60 (60 ksi)
L14	105.333-105.083	0.250	0.000	18	29.412	29.452	0.469	1.875	A607-60 (60 ksi)
L15	105.083-100.083	5.000	0.000	18	29.452	30.262	0.463	1.850	A607-60 (60 ksi)
L16	100.083-95.083	5.000	0.000	18	30.262	31.072	0.463	1.850	A607-60 (60 ksi)
L17	95.083-92.500	2.583	0.000	18	31.072	31.491	0.456	1.825	A607-60 (60 ksi)
L18	92.500-92.250	0.250	0.000	18	31.491	31.531	0.637	2.550	A607-60 (60 ksi)
L19	92.250-87.250	5.000	0.000	18	31.531	32.341	0.625	2.500	A607-60 (60 ksi)
L20	87.250-82.250	5.000	0.000	18	32.341	33.151	0.613	2.450	A607-60 (60 ksi)
L21	82.250-76.750	5.500	4.250	18	33.151	34.042	0.613	2.450	A607-60 (60 ksi)
L22	76.750-75.750	5.250	0.000	18	32.729	33.579	0.375	1.500	A607-65 (65 ksi)
L23	75.750-70.750	5.000	0.000	18	33.579	34.389	0.375	1.500	A607-65 (65 ksi)
L24	70.750-70.583	0.167	0.000	18	34.389	34.416	0.375	1.500	A607-65 (65 ksi)
L25	70.583-70.333	0.250	0.000	18	34.416	34.456	0.675	2.700	A607-65 (65 ksi)
L26	70.333-70.000	0.333	0.000	18	34.456	34.510	0.675	2.700	A607-65 (65 ksi)
L27	70.000-69.750	0.250	0.000	18	34.510	34.551	0.375	1.500	A607-65 (65 ksi)
L28	69.750-64.750	5.000	0.000	18	34.551	35.361	0.375	1.500	A607-65 (65 ksi)
L29	64.750-59.750	5.000	0.000	18	35.361	36.171	0.375	1.500	A607-65 (65 ksi)

Section	Elevation ft	Section Length ft	Splice Length ft	Number of Sides	Top Diameter in	Bottom Diameter in	Wall Thickness in	Bend Radius in	Pole Grade
L30	59.750-54.750	5.000	0.000	18	36.171	36.981	0.375	1.500	A607-65 (65 ksi)
L31	54.750-49.750	5.000	0.000	18	36.981	37.791	0.375	1.500	A607-65 (65 ksi)
L32	49.750-43.000	6.750	5.000	18	37.791	38.884	0.375	1.500	A607-65 (65 ksi)
L33	43.000-42.000	6.000	0.000	18	37.324	38.296	0.438	1.750	A607-65 (65 ksi)
L34	42.000-37.000	5.000	0.000	18	38.296	39.106	0.438	1.750	A607-65 (65 ksi)
L35	37.000-32.000	5.000	0.000	18	39.106	39.916	0.438	1.750	A607-65 (65 ksi)
L36	32.000-27.913	4.087	0.000	18	39.916	40.578	0.438	1.750	A607-65 (65 ksi)
L37	27.913-27.663	0.250	0.000	18	40.578	40.619	0.675	2.700	A607-65 (65 ksi)
L38	27.663-27.250	0.413	0.000	18	40.619	40.686	0.675	2.700	A607-65 (65 ksi)
L39	27.250-26.983	0.267	0.000	18	40.686	40.729	0.675	2.700	A607-65 (65 ksi)
L40	26.983-26.833	0.150	0.000	18	40.729	40.753	0.662	2.650	A607-65 (65 ksi)
L41	26.833-21.833	5.000	0.000	18	40.753	41.563	0.662	2.650	A607-65 (65 ksi)
L42	21.833-16.833	5.000	0.000	18	41.563	42.373	0.662	2.650	A607-65 (65 ksi)
L43	16.833-16.000	0.833	0.000	18	42.373	42.508	0.662	2.650	A607-65 (65 ksi)
L44	16.000-15.750	0.250	0.000	18	42.508	42.549	0.813	3.250	A607-65 (65 ksi)
L45	15.750-14.747	1.003	0.000	18	42.549	42.711	0.813	3.250	A607-65 (65 ksi)
L46	14.747-14.497	0.250	0.000	18	42.711	42.752	0.487	1.950	A607-65 (65 ksi)
L47	14.497-12.083	2.414	0.000	18	42.752	43.143	0.487	1.950	A607-65 (65 ksi)
L48	12.083-11.833	0.250	0.000	18	43.143	43.183	0.738	2.950	A607-65 (65 ksi)
L49	11.833-10.000	1.833	0.000	18	43.183	43.480	0.738	2.950	A607-65 (65 ksi)
L50	10.000-9.750	0.250	0.000	18	43.480	43.521	0.738	2.950	A607-65 (65 ksi)
L51	9.750-4.750	5.000	0.000	18	43.521	44.331	0.725	2.900	A607-65 (65 ksi)
L52	4.750-0.000	4.750		18	44.331	45.100	0.713	2.850	A607-65 (65 ksi)

Tapered Pole Properties

Section	Tip Dia. in	Area in^2	I in^4	r in	C in	I/C in^3	J in^4	It/Q in^2	w in	w/t
L1	10.750	11.404	154.383	3.679	5.375	28.722	308.766	5.699	0.000	0
	10.750	11.404	154.383	3.679	5.375	28.722	308.766	5.699	0.000	0
L2	10.750	11.404	154.383	3.679	5.375	28.722	308.766	5.699	0.000	0
	10.750	11.404	154.383	3.679	5.375	28.722	308.766	5.699	0.000	0
L3	10.750	11.404	154.383	3.679	5.375	28.722	308.766	5.699	0.000	0

Section	Tip Dia. in	Area in^2	I in^4	r in	C in	I/C in^3	J in^4	It/Q in^2	w in	w/t
	10.750	11.404	154.383	3.679	5.375	28.722	308.766	5.699	0.000	0
L4	23.000	24.835	1593.128	8.009	11.500	138.533	3186.255	12.410	0.000	0
	23.000	24.835	1593.128	8.009	11.500	138.533	3186.255	12.410	0.000	0
L5	23.316	18.052	1180.398	8.076	11.684	101.027	2362.350	9.028	3.608	14.432
	24.139	18.695	1311.023	8.364	12.095	108.389	2623.771	9.349	3.751	15.002
L6	24.139	18.695	1311.023	8.364	12.095	108.389	2623.771	9.349	3.751	15.002
	24.961	19.338	1450.945	8.651	12.507	116.011	2903.799	9.671	3.893	15.572
L7	24.961	19.338	1450.945	8.651	12.507	116.011	2903.799	9.671	3.893	15.572
	25.784	19.980	1600.485	8.939	12.918	123.891	3203.076	9.992	4.036	16.143
L8	25.784	19.980	1600.485	8.939	12.918	123.891	3203.076	9.992	4.036	16.143
	26.606	20.623	1759.962	9.226	13.330	132.031	3522.239	10.313	4.178	16.713
L9	26.606	20.623	1759.962	9.226	13.330	132.031	3522.239	10.313	4.178	16.713
	27.429	21.266	1929.695	9.514	13.741	140.429	3861.930	10.635	4.321	17.283
L10	27.429	21.266	1929.695	9.514	13.741	140.429	3861.930	10.635	4.321	17.283
	28.251	21.909	2110.006	9.802	14.153	149.087	4222.788	10.956	4.463	17.853
L11	28.251	21.909	2110.006	9.802	14.153	149.087	4222.788	10.956	4.463	17.853
	29.403	22.808	2380.817	10.204	14.729	161.642	4764.767	11.406	4.663	18.652
L12	28.885	27.350	2627.203	9.789	14.166	185.454	5257.864	13.678	4.358	13.946
	29.091	28.153	2865.578	10.076	14.578	196.571	5734.926	14.079	4.501	14.402
L13	29.091	28.153	2865.578	10.076	14.578	196.571	5734.926	14.079	4.501	14.402
	29.817	28.863	3087.791	10.330	14.941	206.662	6179.644	14.434	4.626	14.805
L14	29.793	43.062	4557.476	10.275	14.941	305.026	9120.949	21.535	4.351	9.283
	29.834	43.122	4576.633	10.289	14.962	305.887	9159.288	21.565	4.359	9.298
L15	29.835	42.556	4518.533	10.291	14.962	302.004	9043.012	21.282	4.370	9.448
	30.658	43.745	4907.935	10.579	15.373	319.251	9822.328	21.877	4.512	9.756
L16	30.658	43.745	4907.935	10.579	15.373	319.251	9822.328	21.877	4.512	9.756
	31.480	44.934	5319.090	10.866	15.785	336.977	10645.180	22.471	4.655	10.064
L17	31.481	44.336	5250.426	10.869	15.785	332.627	10507.760	22.172	4.666	10.226
	31.906	44.942	5468.645	11.017	15.997	341.848	10944.485	22.475	4.739	10.388
L18	31.878	62.429	7508.021	10.953	15.997	469.331	15025.922	31.221	4.420	6.934
	31.919	62.511	7537.625	10.967	16.018	470.577	15085.167	31.261	4.427	6.945
L19	31.921	61.310	7398.802	10.972	16.018	461.910	14807.339	30.661	4.449	7.119
	32.744	62.917	7995.862	11.259	16.429	486.683	16002.245	31.464	4.592	7.347
L20	32.746	61.683	7845.213	11.264	16.429	477.514	15700.749	30.847	4.614	7.533
	33.568	63.257	8461.472	11.551	16.841	502.441	16934.078	31.635	4.757	7.766
L21	33.568	63.257	8461.472	11.551	16.841	502.441	16934.078	31.635	4.757	7.766
	34.473	64.989	9175.719	11.867	17.293	530.593	18363.512	32.501	4.913	8.022
L22	33.875	38.509	5092.625	11.486	16.626	306.303	10191.951	19.258	5.100	13.601
	34.039	39.521	5504.857	11.787	17.058	322.712	11016.957	19.764	5.250	14
L23	34.039	39.521	5504.857	11.787	17.058	322.712	11016.957	19.764	5.250	14
	34.862	40.485	5917.594	12.075	17.470	338.737	11842.974	20.246	5.392	14.38
L24	34.862	40.485	5917.594	12.075	17.470	338.737	11842.974	20.246	5.392	14.38
	34.889	40.517	5931.724	12.085	17.483	339.279	11871.253	20.262	5.397	14.393
L25	34.843	72.288	10397.294	11.978	17.483	594.698	20808.270	36.151	4.869	7.214
	34.884	72.375	10434.777	11.992	17.504	596.141	20883.284	36.194	4.876	7.224
L26	34.884	72.375	10434.777	11.992	17.504	596.141	20883.284	36.194	4.876	7.224
	34.939	72.491	10484.842	12.012	17.531	598.065	20983.481	36.252	4.886	7.238
L27	34.985	40.630	5981.229	12.118	17.531	341.175	11970.328	20.319	5.414	14.437
	35.026	40.678	6002.542	12.132	17.552	341.989	12012.981	20.343	5.421	14.456
L28	35.026	40.678	6002.542	12.132	17.552	341.989	12012.981	20.343	5.421	14.456
	35.848	41.642	6439.494	12.420	17.963	358.481	12887.461	20.825	5.564	14.836
L29	35.848	41.642	6439.494	12.420	17.963	358.481	12887.461	20.825	5.564	14.836
	36.671	42.606	6897.153	12.707	18.375	375.361	13803.381	21.307	5.706	15.216
L30	36.671	42.606	6897.153	12.707	18.375	375.361	13803.381	21.307	5.706	15.216
	37.493	43.570	7375.998	12.995	18.786	392.629	14761.702	21.789	5.849	15.596
L31	37.493	43.570	7375.998	12.995	18.786	392.629	14761.702	21.789	5.849	15.596
	38.316	44.534	7876.509	13.283	19.198	410.286	15763.381	22.271	5.991	15.976
L32	38.316	44.534	7876.509	13.283	19.198	410.286	15763.381	22.271	5.991	15.976
	39.426	45.835	8587.413	13.671	19.753	434.738	17186.126	22.922	6.184	16.49
L33	38.655	51.222	8804.959	13.095	18.961	464.381	17621.504	25.616	5.799	13.255
	38.819	52.571	9519.515	13.440	19.454	489.325	19051.557	26.291	5.970	13.646
L34	38.819	52.571	9519.515	13.440	19.454	489.325	19051.557	26.291	5.970	13.646

Section	Tip Dia. in	Area in^2	I in^4	r in	C in	I/C in^3	J in^4	It/Q in^2	w in	w/t
	39.642	53.696	10143.698	13.727	19.866	510.609	20300.743	26.853	6.113	13.972
L35	39.642	53.696	10143.698	13.727	19.866	510.609	20300.743	26.853	6.113	13.972
	40.464	54.821	10794.586	14.015	20.277	532.347	21603.375	27.416	6.255	14.298
L36	40.464	54.821	10794.586	14.015	20.277	532.347	21603.375	27.416	6.255	14.298
	41.137	55.740	11346.846	14.250	20.614	550.452	22708.623	27.875	6.372	14.564
L37	41.100	85.490	17197.655	14.166	20.614	834.283	34417.939	42.753	5.954	8.82
	41.141	85.577	17250.073	14.180	20.634	835.992	34522.844	42.797	5.961	8.831
L38	41.141	85.577	17250.073	14.180	20.634	835.992	34522.844	42.797	5.961	8.831
	41.209	85.721	17336.899	14.204	20.668	838.818	34696.610	42.868	5.973	8.848
L39	41.209	85.721	17336.899	14.204	20.668	838.818	34696.610	42.868	5.973	8.848
	41.253	85.813	17393.187	14.219	20.690	840.647	34809.260	42.915	5.980	8.86
L40	41.255	84.250	17087.078	14.224	20.690	825.853	34196.640	42.133	6.002	9.06
	41.280	84.302	17118.187	14.232	20.703	826.863	34258.898	42.159	6.007	9.066
L41	41.280	84.302	17118.187	14.232	20.703	826.863	34258.898	42.159	6.007	9.066
	42.102	86.005	18176.861	14.520	21.114	860.889	36377.639	43.011	6.149	9.282
L42	42.102	86.005	18176.861	14.520	21.114	860.889	36377.639	43.011	6.149	9.282
	42.925	87.708	19278.309	14.807	21.526	895.602	38581.985	43.862	6.292	9.497
L43	42.925	87.708	19278.309	14.807	21.526	895.602	38581.985	43.862	6.292	9.497
	43.062	87.992	19466.025	14.855	21.594	901.452	38957.665	44.004	6.315	9.533
L44	43.038	107.528	23617.616	14.802	21.594	1093.708	47266.308	53.774	6.051	7.448
	43.080	107.632	23686.504	14.816	21.615	1095.854	47404.175	53.826	6.059	7.457
L45	43.080	107.632	23686.504	14.816	21.615	1095.854	47404.175	53.826	6.059	7.457
	43.245	108.051	23964.227	14.874	21.697	1104.485	47959.986	54.036	6.087	7.492
L46	43.295	65.333	14715.734	14.989	21.697	678.232	29450.831	32.673	6.659	13.66
	43.336	65.396	14758.120	15.004	21.718	679.541	29535.659	32.704	6.666	13.674
L47	43.336	65.396	14758.120	15.004	21.718	679.541	29535.659	32.704	6.666	13.674
	43.733	66.001	15171.588	15.143	21.916	692.247	30363.138	33.007	6.735	13.816
L48	43.694	99.263	22550.689	15.054	21.916	1028.940	45131.050	49.641	6.295	8.536
	43.735	99.358	22615.363	15.068	21.937	1030.923	45260.484	49.688	6.302	8.545
L49	43.735	99.358	22615.363	15.068	21.937	1030.923	45260.484	49.688	6.302	8.545
	44.037	100.053	23093.333	15.174	22.088	1045.522	46217.053	50.036	6.354	8.616
L50	44.037	100.053	23093.333	15.174	22.088	1045.522	46217.053	50.036	6.354	8.616
	44.078	100.148	23159.040	15.188	22.108	1047.521	46348.554	50.083	6.362	8.626
L51	44.080	98.479	22786.475	15.192	22.108	1030.669	45602.933	49.249	6.384	8.805
	44.903	100.343	24104.959	15.480	22.520	1070.385	48241.636	50.181	6.526	9.002
L52	44.904	98.641	23709.735	15.484	22.520	1052.835	47450.667	49.330	6.548	9.19
	45.686	100.381	24986.838	15.758	22.911	1090.614	50006.554	50.200	6.684	9.38

Tower Elevation ft	Gusset Area (per face) ft^2	Gusset Thickness in	Gusset Grade	Adjust. Factor A_f	Adjust. Factor A_r	Weight Mult.	Double Angle Stitch Bolt Spacing Diagonals in	Double Angle Stitch Bolt Spacing Horizontals in	Double Angle Stitch Bolt Spacing Redundants in
L1 160.000-155.000				1	1	1			
L2 155.000-150.000				1	1	1			
L3 150.000-148.500				1	1	1			
L4 148.500-148.000				1	1	1			
L5 148.000-143.000				1	1	1			
L6 143.000-138.000				1	1	1			

Tower Elevation ft	Gusset Area (per face) ft^2	Gusset Thickness in	Gusset Grade	Adjust. Factor A_f	Adjust. Factor A_r	Weight Mult.	Double Angle Stitch Bolt Spacing Diagonals in	Double Angle Stitch Bolt Spacing Horizontals in	Double Angle Stitch Bolt Spacing Redundants in
L7 138.000-133.000				1	1	1			
L8 133.000-128.000				1	1	1			
L9 128.000-123.000				1	1	1			
L10 123.000-118.000				1	1	1			
L11 118.000-111.000				1	1	1			
L12 111.000-109.750				1	1	1			
L13 109.750-105.333				1	1	1			
L14 105.333-105.083				1	1	0.957593			
L15 105.083-100.083				1	1	0.962316			
L16 100.083-95.083				1	1	0.954732			
L17 95.083-92.500				1	1	0.963802			
L18 92.500-92.250				1	1	0.933531			
L19 92.250-87.250				1	1	0.940278			
L20 87.250-82.250				1	1	0.947916			
L21 82.250-76.750				1	1	0.945209			
L22 76.750-75.750				1	1	1			
L23 75.750-70.750				1	1	1			
L24 70.750-70.583				1	1	1			
L25 70.583-70.333				1	1	1.04341			
L26 70.333-70.000				1	1	1.04263			
L27 70.000-69.750				1	1	1			
L28 69.750-64.750				1	1	1			
L29 64.750-59.750				1	1	1			
L30 59.750-54.750				1	1	1			
L31				1	1	1			

Tower Elevation ft	Gusset Area (per face) ft^2	Gusset Thickness in	Gusset Grade	Adjust. Factor A_f	Adjust. Factor A_r	Weight Mult.	Double Angle Stitch Bolt Spacing Diagonals in	Double Angle Stitch Bolt Spacing Horizontals in	Double Angle Stitch Bolt Spacing Redundants in
54.750-49.750									
L32				1	1	1			
49.750-43.000									
L33				1	1	1			
43.000-42.000									
L34				1	1	1			
42.000-37.000									
L35				1	1	1			
37.000-32.000									
L36				1	1	1			
32.000-27.913									
L37				1	1	1.03582			
27.913-27.663									
L38				1	1	1.03517			
27.663-27.250									
L39				1	1	0.94811			
27.250-26.983									
L40				1	1	0.965513			
26.983-26.833									
L41				1	1	0.95947			
26.833-21.833									
L42				1	1	0.953662			
21.833-16.833									
L43				1	1	0.952716			
16.833-16.000									
L44				1	1	0.946633			
16.000-15.750									
L45				1	1	0.94505			
15.750-14.747									
L46				1	1	1.15754			
14.747-14.497									
L47				1	1	1.15516			
14.497-12.083									
L48				1	1	0.938416			
12.083-11.833									
L49				1	1	0.936018			
11.833-10.000									
L50				1	1	0.935693			
10.000-9.750									
L51				1	1	0.945082			
9.750-4.750									
L52				1	1	0.955365			
4.750-0.000									

Feed Line/Linear Appurtenances - Entered As Round Or Flat

Description	Sector	Exclude From Torque Calculation	Component Type	Placement ft	Total Number	Number Per Row	Start/End Position	Width or Diameter in	Perimeter in	Weight klf
LDF7-50A(1-5/8)	A	No	Surface Ar (CaAa)	127.000 - 0.000	9	9	0.000 0.350	1.980		0.001
*										
CU12PSM9P6XXX(1-1/2)	B	No	Surface Ar (CaAa)	119.000 - 0.000	1	1	-0.240 -0.200	1.600		0.002

Description	Sector	Exclude From Torque Calculation	Component Type	Placement ft	Total Number	Number Per Row	Start/End Position	Width or Diameter in	Perimeter in	Weight klf
*										
Safety Line 3/8	B	No	Surface Ar (CaAa)	160.000 - 0.000	1	1	0.340 0.350	0.375		0.000
*										
MP306	B	No	Surface Af (CaAa)	15.500 - 0.500	1	1	0.000 0.050	6.890	19.000	0.000
MP306	C	No	Surface Af (CaAa)	15.500 - 0.500	1	1	-0.350 -0.300	6.890	19.000	0.000
*										
MP306	A	No	Surface Af (CaAa)	30.500 - 0.500	1	1	0.350 0.400	6.890	19.000	0.000
MP306	C	No	Surface Af (CaAa)	30.500 - 0.500	1	1	0.350 0.400	6.890	19.000	0.000
*										
MP306	B	No	Surface Af (CaAa)	31.330 - 11.330	1	1	0.350 0.400	6.890	19.000	0.000
*										
MP305	A	No	Surface Af (CaAa)	73.000 - 43.000	1	1	0.350 0.400	5.330	14.840	0.000
MP305	B	No	Surface Af (CaAa)	73.000 - 43.000	1	1	0.350 0.400	5.330	14.840	0.000
MP305	C	No	Surface Af (CaAa)	73.000 - 43.000	1	1	0.350 0.400	5.330	14.840	0.000
*										
MP304	A	No	Surface Af (CaAa)	106.750 - 76.750	1	1	0.350 0.400	4.780	12.780	0.000
MP304	B	No	Surface Af (CaAa)	106.750 - 76.750	1	1	0.350 0.400	4.780	12.780	0.000
MP304	C	No	Surface Af (CaAa)	106.750 - 76.750	1	1	0.350 0.400	4.780	12.780	0.000
*										
6.5"x1.25" Flat Reinforcement	A	No	Surface Af (CaAa)	49.500 - 24.500	1	1	-0.200 -0.150	6.500	15.500	0.000
6.5"x1.25" Flat Reinforcement	B	No	Surface Af (CaAa)	49.500 - 24.500	1	1	-0.200 -0.150	6.500	15.500	0.000
6.5"x1.25" Flat Reinforcement	C	No	Surface Af (CaAa)	49.500 - 24.500	1	1	-0.200 -0.150	6.500	15.500	0.000
*										
6"x1" Flat Reinforcement	A	No	Surface Af (CaAa)	18.000 - 8.000	1	1	-0.200 -0.150	6.000	14.000	0.000
6"x1" Flat Reinforcement	B	No	Surface Af (CaAa)	18.000 - 8.000	1	1	-0.200 -0.150	6.000	14.000	0.000
6"x1" Flat Reinforcement	C	No	Surface Af (CaAa)	18.000 - 8.000	1	1	-0.200 -0.150	6.000	14.000	0.000
*										
6"x1" Flat Reinforcement	A	No	Surface Af (CaAa)	82.500 - 67.500	1	1	-0.350 -0.300	6.000	14.000	0.000
6"x1" Flat Reinforcement	B	No	Surface Af (CaAa)	82.500 - 67.500	1	1	0.000 0.050	6.000	14.000	0.000
6"x1" Flat Reinforcement	C	No	Surface Af (CaAa)	82.500 - 67.500	1	1	-0.350 -0.300	6.000	14.000	0.000
*										
HSS6x6	A	No	Surface Af (CaAa)	155.500 - 140.000	1	1	-0.100 0.000	6.000	24.000	0.035
HSS6x6	B	No	Surface Af (CaAa)	155.500 - 140.000	1	1	-0.100 0.000	6.000	24.000	0.035
HSS6x6	C	No	Surface Af (CaAa)	155.500 - 140.000	1	1	-0.100 0.000	6.000	24.000	0.035
*										
4"x1.25" Flat	A	No	Surface Af	94.000 -	1	1	-0.200	4.000	10.500	0.000

Description	Sector	Exclude From Torque Calculation	Component Type	Placement ft	Total Number	Number Per Row	Start/End Position	Width or Diameter in	Perimeter in	Weight klf
Reinforcement			(CaAa)	79.000			-0.150			
4"x1.25" Flat	B	No	Surface Af	94.000 -	1	1	-0.200	4.000	10.500	0.000
Reinforcement			(CaAa)	79.000			-0.150			
4"x1.25" Flat	C	No	Surface Af	94.000 -	1	1	-0.200	4.000	10.500	0.000
Reinforcement			(CaAa)	79.000			-0.150			
*										

Feed Line/Linear Appurtenances - Entered As Area

Description	Face or Leg	Allow Shield	Exclude From Torque Calculation	Component Type	Placement ft	Total Number		C_AA_A ft^2/ft	Weight klf
LDF7-50A(1-5/8)	C	No	No	Inside Pole	157.000 - 0.000	6	No Ice	0.000	0.001
							1/2" Ice	0.000	0.001
							1" Ice	0.000	0.001
FB-L98B-002-75000 (3/8)	C	No	No	Inside Pole	157.000 - 0.000	1	No Ice	0.000	0.000
							1/2" Ice	0.000	0.000
							1" Ice	0.000	0.000
WR-VG86ST-BRD(3/4)	C	No	No	Inside Pole	157.000 - 0.000	4	No Ice	0.000	0.001
							1/2" Ice	0.000	0.001
							1" Ice	0.000	0.001
WR-VG86ST-BRD(3/4)	C	No	No	Inside Pole	157.000 - 0.000	4	No Ice	0.000	0.001
							1/2" Ice	0.000	0.001
							1" Ice	0.000	0.001
FB-L98B-034-XXX(3/8)	C	No	No	Inside Pole	157.000 - 0.000	2	No Ice	0.000	0.000
							1/2" Ice	0.000	0.000
							1" Ice	0.000	0.000
2" Rigid Conduit	C	No	No	Inside Pole	157.000 - 0.000	2	No Ice	0.000	0.003
							1/2" Ice	0.000	0.003
							1" Ice	0.000	0.003
*									
HB158-21U6S24-xx M_TMO(1-5/8)	B	No	No	Inside Pole	148.000 - 0.000	3	No Ice	0.000	0.003
							1/2" Ice	0.000	0.003
							1" Ice	0.000	0.003
*									
AL7-50(1-5/8)	B	No	No	Inside Pole	138.000 - 0.000	6	No Ice	0.000	0.001
							1/2" Ice	0.000	0.001
							1" Ice	0.000	0.001
LDF4-50A(1/2)	B	No	No	Inside Pole	138.000 - 0.000	1	No Ice	0.000	0.000
							1/2" Ice	0.000	0.000
							1" Ice	0.000	0.000
LCF214-50JA(2-1/4)	B	No	No	Inside Pole	138.000 - 0.000	1	No Ice	0.000	0.001
							1/2" Ice	0.000	0.001
							1" Ice	0.000	0.001
*									
LDF7-50A(1-5/8)	A	No	No	Inside Pole	127.000 - 0.000	1	No Ice	0.000	0.001
							1/2" Ice	0.000	0.001
							1" Ice	0.000	0.001
*									
LDF4-50A(1/2)	B	No	No	Inside Pole	48.000 - 0.000	1	No Ice	0.000	0.000
							1/2" Ice	0.000	0.000
							1" Ice	0.000	0.000
*									

Feed Line/Linear Appurtenances Section Areas

Tower Section	Tower Elevation ft	Face	A_R ft^2	A_F ft^2	C_AA_A In Face ft^2	C_AA_A Out Face ft^2	Weight K
L1	160.000-155.000	A	0.000	0.000	0.474	0.000	0.018
		B	0.000	0.000	0.662	0.000	0.019
		C	0.000	0.000	0.474	0.000	0.048
L2	155.000-150.000	A	0.000	0.000	4.743	0.000	0.176
		B	0.000	0.000	4.931	0.000	0.178
		C	0.000	0.000	4.743	0.000	0.253
L3	150.000-148.500	A	0.000	0.000	1.423	0.000	0.053
		B	0.000	0.000	1.479	0.000	0.053
		C	0.000	0.000	1.423	0.000	0.076
L4	148.500-148.000	A	0.000	0.000	0.474	0.000	0.018
		B	0.000	0.000	0.493	0.000	0.018
		C	0.000	0.000	0.474	0.000	0.025
L5	148.000-143.000	A	0.000	0.000	4.743	0.000	0.176
		B	0.000	0.000	4.931	0.000	0.215
		C	0.000	0.000	4.743	0.000	0.253
L6	143.000-138.000	A	0.000	0.000	2.846	0.000	0.106
		B	0.000	0.000	3.034	0.000	0.144
		C	0.000	0.000	2.846	0.000	0.183
L7	138.000-133.000	A	0.000	0.000	0.000	0.000	0.000
		B	0.000	0.000	0.188	0.000	0.061
		C	0.000	0.000	0.000	0.000	0.077
L8	133.000-128.000	A	0.000	0.000	0.000	0.000	0.000
		B	0.000	0.000	0.188	0.000	0.061
		C	0.000	0.000	0.000	0.000	0.077
L9	128.000-123.000	A	0.000	0.000	7.128	0.000	0.033
		B	0.000	0.000	0.188	0.000	0.061
		C	0.000	0.000	0.000	0.000	0.077
L10	123.000-118.000	A	0.000	0.000	8.910	0.000	0.041
		B	0.000	0.000	0.347	0.000	0.063
		C	0.000	0.000	0.000	0.000	0.077
L11	118.000-111.000	A	0.000	0.000	12.474	0.000	0.057
		B	0.000	0.000	1.383	0.000	0.101
		C	0.000	0.000	0.000	0.000	0.108
L12	111.000-109.750	A	0.000	0.000	2.228	0.000	0.010
		B	0.000	0.000	0.247	0.000	0.018
		C	0.000	0.000	0.000	0.000	0.019
L13	109.750-105.333	A	0.000	0.000	9.000	0.000	0.036
		B	0.000	0.000	2.001	0.000	0.064
		C	0.000	0.000	1.129	0.000	0.068
L14	105.333-105.083	A	0.000	0.000	0.645	0.000	0.002
		B	0.000	0.000	0.249	0.000	0.004
		C	0.000	0.000	0.199	0.000	0.004
L15	105.083-100.083	A	0.000	0.000	12.893	0.000	0.041
		B	0.000	0.000	4.971	0.000	0.072
		C	0.000	0.000	3.983	0.000	0.077
L16	100.083-95.083	A	0.000	0.000	12.893	0.000	0.041
		B	0.000	0.000	4.971	0.000	0.072
		C	0.000	0.000	3.983	0.000	0.077
L17	95.083-92.500	A	0.000	0.000	7.661	0.000	0.021
		B	0.000	0.000	3.568	0.000	0.037
		C	0.000	0.000	3.058	0.000	0.040
L18	92.500-92.250	A	0.000	0.000	0.811	0.000	0.002
		B	0.000	0.000	0.415	0.000	0.004
		C	0.000	0.000	0.366	0.000	0.004
L19	92.250-87.250	A	0.000	0.000	16.227	0.000	0.041

Tower Section	Tower Elevation ft	Face	A_R ft^2	A_F ft^2	C_AA_A In Face ft^2	C_AA_A Out Face ft^2	Weight K
		B	0.000	0.000	8.304	0.000	0.072
		C	0.000	0.000	7.317	0.000	0.077
L20	87.250-82.250	A	0.000	0.000	16.477	0.000	0.041
		B	0.000	0.000	8.554	0.000	0.072
		C	0.000	0.000	7.567	0.000	0.077
L21	82.250-76.750	A	0.000	0.000	21.849	0.000	0.045
		B	0.000	0.000	13.135	0.000	0.080
		C	0.000	0.000	12.048	0.000	0.085
L22	76.750-75.750	A	0.000	0.000	2.782	0.000	0.008
		B	0.000	0.000	1.198	0.000	0.014
		C	0.000	0.000	1.000	0.000	0.015
L23	75.750-70.750	A	0.000	0.000	15.909	0.000	0.041
		B	0.000	0.000	7.986	0.000	0.072
		C	0.000	0.000	6.999	0.000	0.077
L24	70.750-70.583	A	0.000	0.000	0.613	0.000	0.001
		B	0.000	0.000	0.348	0.000	0.002
		C	0.000	0.000	0.315	0.000	0.003
L25	70.583-70.333	A	0.000	0.000	0.918	0.000	0.002
		B	0.000	0.000	0.521	0.000	0.004
		C	0.000	0.000	0.472	0.000	0.004
L26	70.333-70.000	A	0.000	0.000	1.222	0.000	0.003
		B	0.000	0.000	0.695	0.000	0.005
		C	0.000	0.000	0.629	0.000	0.005
L27	70.000-69.750	A	0.000	0.000	0.918	0.000	0.002
		B	0.000	0.000	0.521	0.000	0.004
		C	0.000	0.000	0.472	0.000	0.004
L28	69.750-64.750	A	0.000	0.000	15.602	0.000	0.041
		B	0.000	0.000	7.679	0.000	0.072
		C	0.000	0.000	6.692	0.000	0.077
L29	64.750-59.750	A	0.000	0.000	13.352	0.000	0.041
		B	0.000	0.000	5.429	0.000	0.072
		C	0.000	0.000	4.442	0.000	0.077
L30	59.750-54.750	A	0.000	0.000	13.352	0.000	0.041
		B	0.000	0.000	5.429	0.000	0.072
		C	0.000	0.000	4.442	0.000	0.077
L31	54.750-49.750	A	0.000	0.000	13.352	0.000	0.041
		B	0.000	0.000	5.429	0.000	0.072
		C	0.000	0.000	4.442	0.000	0.077
L32	49.750-43.000	A	0.000	0.000	25.066	0.000	0.055
		B	0.000	0.000	14.371	0.000	0.098
		C	0.000	0.000	13.038	0.000	0.104
L33	43.000-42.000	A	0.000	0.000	2.865	0.000	0.008
		B	0.000	0.000	1.281	0.000	0.015
		C	0.000	0.000	1.083	0.000	0.015
L34	42.000-37.000	A	0.000	0.000	14.327	0.000	0.041
		B	0.000	0.000	6.404	0.000	0.073
		C	0.000	0.000	5.417	0.000	0.077
L35	37.000-32.000	A	0.000	0.000	14.327	0.000	0.041
		B	0.000	0.000	6.404	0.000	0.073
		C	0.000	0.000	5.417	0.000	0.077
L36	32.000-27.913	A	0.000	0.000	14.681	0.000	0.034
		B	0.000	0.000	9.159	0.000	0.060
		C	0.000	0.000	7.398	0.000	0.063
L37	27.913-27.663	A	0.000	0.000	1.003	0.000	0.002
		B	0.000	0.000	0.607	0.000	0.004
		C	0.000	0.000	0.558	0.000	0.004
L38	27.663-27.250	A	0.000	0.000	1.658	0.000	0.003
		B	0.000	0.000	1.003	0.000	0.006
		C	0.000	0.000	0.922	0.000	0.006
L39	27.250-26.983	A	0.000	0.000	1.072	0.000	0.002
		B	0.000	0.000	0.649	0.000	0.004

Tower Section	Tower Elevation ft	Face	A_R ft^2	A_F ft^2	C_AA_A In Face ft^2	C_AA_A Out Face ft^2	Weight K
		C	0.000	0.000	0.596	0.000	0.004
L40	26.983-26.833	A	0.000	0.000	0.602	0.000	0.001
		B	0.000	0.000	0.364	0.000	0.002
		C	0.000	0.000	0.335	0.000	0.002
L41	26.833-21.833	A	0.000	0.000	17.179	0.000	0.041
		B	0.000	0.000	9.257	0.000	0.073
		C	0.000	0.000	8.269	0.000	0.077
L42	21.833-16.833	A	0.000	0.000	15.716	0.000	0.041
		B	0.000	0.000	7.794	0.000	0.073
		C	0.000	0.000	6.806	0.000	0.077
L43	16.833-16.000	A	0.000	0.000	3.201	0.000	0.007
		B	0.000	0.000	1.881	0.000	0.012
		C	0.000	0.000	1.716	0.000	0.013
L44	16.000-15.750	A	0.000	0.000	0.961	0.000	0.002
		B	0.000	0.000	0.564	0.000	0.004
		C	0.000	0.000	0.515	0.000	0.004
L45	15.750-14.747	A	0.000	0.000	3.854	0.000	0.008
		B	0.000	0.000	3.121	0.000	0.015
		C	0.000	0.000	2.923	0.000	0.015
L46	14.747-14.497	A	0.000	0.000	0.961	0.000	0.002
		B	0.000	0.000	0.849	0.000	0.004
		C	0.000	0.000	0.799	0.000	0.004
L47	14.497-12.083	A	0.000	0.000	9.276	0.000	0.020
		B	0.000	0.000	8.197	0.000	0.035
		C	0.000	0.000	7.720	0.000	0.037
L48	12.083-11.833	A	0.000	0.000	0.961	0.000	0.002
		B	0.000	0.000	0.849	0.000	0.004
		C	0.000	0.000	0.799	0.000	0.004
L49	11.833-10.000	A	0.000	0.000	7.043	0.000	0.015
		B	0.000	0.000	4.696	0.000	0.027
		C	0.000	0.000	5.862	0.000	0.028
L50	10.000-9.750	A	0.000	0.000	0.961	0.000	0.002
		B	0.000	0.000	0.562	0.000	0.004
		C	0.000	0.000	0.799	0.000	0.004
L51	9.750-4.750	A	0.000	0.000	16.248	0.000	0.041
		B	0.000	0.000	8.271	0.000	0.073
		C	0.000	0.000	13.025	0.000	0.077
L52	4.750-0.000	A	0.000	0.000	13.345	0.000	0.039
		B	0.000	0.000	5.772	0.000	0.069
		C	0.000	0.000	9.715	0.000	0.073

Feed Line/Linear Appurtenances Section Areas - With Ice

Tower Section	Tower Elevation ft	Face or Leg	Ice Thickness in	A_R ft^2	A_F ft^2	C_AA_A In Face ft^2	C_AA_A Out Face ft^2	Weight K
L1	160.000-155.000	A	0.994	0.000	0.000	0.537	0.000	0.023
		B		0.000	0.000	1.718	0.000	0.032
		C		0.000	0.000	0.537	0.000	0.054
L2	155.000-150.000	A	0.991	0.000	0.000	5.370	0.000	0.230
		B		0.000	0.000	6.548	0.000	0.239
		C		0.000	0.000	5.370	0.000	0.307
L3	150.000-148.500	A	0.988	0.000	0.000	1.611	0.000	0.069
		B		0.000	0.000	1.963	0.000	0.072
		C		0.000	0.000	1.611	0.000	0.092
L4	148.500-148.000	A	0.988	0.000	0.000	0.537	0.000	0.023
		B		0.000	0.000	0.654	0.000	0.024
		C		0.000	0.000	0.537	0.000	0.031

Tower Section	Tower Elevation ft	Face or Leg	Ice Thickness in	A_R ft^2	A_F ft^2	C_AA_A In Face ft^2	C_AA_A Out Face ft^2	Weight K
L5	148.000-143.000	A	0.986	0.000	0.000	5.367	0.000	0.230
		B		0.000	0.000	6.541	0.000	0.276
		C		0.000	0.000	5.367	0.000	0.306
L6	143.000-138.000	A	0.982	0.000	0.000	3.219	0.000	0.138
		B		0.000	0.000	4.389	0.000	0.184
		C		0.000	0.000	3.219	0.000	0.214
L7	138.000-133.000	A	0.979	0.000	0.000	0.000	0.000	0.000
		B		0.000	0.000	1.166	0.000	0.069
		C		0.000	0.000	0.000	0.000	0.077
L8	133.000-128.000	A	0.975	0.000	0.000	0.000	0.000	0.000
		B		0.000	0.000	1.163	0.000	0.069
		C		0.000	0.000	0.000	0.000	0.077
L9	128.000-123.000	A	0.971	0.000	0.000	9.881	0.000	0.105
		B		0.000	0.000	1.159	0.000	0.069
		C		0.000	0.000	0.000	0.000	0.077
L10	123.000-118.000	A	0.968	0.000	0.000	12.347	0.000	0.131
		B		0.000	0.000	1.509	0.000	0.074
		C		0.000	0.000	0.000	0.000	0.077
L11	118.000-111.000	A	0.963	0.000	0.000	17.277	0.000	0.183
		B		0.000	0.000	4.078	0.000	0.133
		C		0.000	0.000	0.000	0.000	0.108
L12	111.000-109.750	A	0.959	0.000	0.000	3.085	0.000	0.033
		B		0.000	0.000	0.728	0.000	0.024
		C		0.000	0.000	0.000	0.000	0.019
L13	109.750-105.333	A	0.957	0.000	0.000	12.295	0.000	0.124
		B		0.000	0.000	3.962	0.000	0.093
		C		0.000	0.000	1.400	0.000	0.077
L14	105.333-105.083	A	0.954	0.000	0.000	0.863	0.000	0.008
		B		0.000	0.000	0.392	0.000	0.006
		C		0.000	0.000	0.247	0.000	0.005
L15	105.083-100.083	A	0.952	0.000	0.000	17.263	0.000	0.160
		B		0.000	0.000	7.827	0.000	0.125
		C		0.000	0.000	4.935	0.000	0.107
L16	100.083-95.083	A	0.947	0.000	0.000	17.252	0.000	0.160
		B		0.000	0.000	7.813	0.000	0.125
		C		0.000	0.000	4.931	0.000	0.107
L17	95.083-92.500	A	0.944	0.000	0.000	10.191	0.000	0.090
		B		0.000	0.000	5.313	0.000	0.072
		C		0.000	0.000	3.828	0.000	0.063
L18	92.500-92.250	A	0.942	0.000	0.000	1.076	0.000	0.009
		B		0.000	0.000	0.604	0.000	0.008
		C		0.000	0.000	0.460	0.000	0.007
L19	92.250-87.250	A	0.939	0.000	0.000	21.507	0.000	0.184
		B		0.000	0.000	12.062	0.000	0.150
		C		0.000	0.000	9.196	0.000	0.132
L20	87.250-82.250	A	0.934	0.000	0.000	21.784	0.000	0.185
		B		0.000	0.000	12.334	0.000	0.151
		C		0.000	0.000	9.479	0.000	0.134
L21	82.250-76.750	A	0.928	0.000	0.000	28.159	0.000	0.224
		B		0.000	0.000	17.760	0.000	0.187
		C		0.000	0.000	14.632	0.000	0.168
L22	76.750-75.750	A	0.924	0.000	0.000	3.634	0.000	0.032
		B		0.000	0.000	1.743	0.000	0.025
		C		0.000	0.000	1.175	0.000	0.022
L23	75.750-70.750	A	0.921	0.000	0.000	20.569	0.000	0.173
		B		0.000	0.000	11.110	0.000	0.140
		C		0.000	0.000	8.281	0.000	0.123
L24	70.750-70.583	A	0.917	0.000	0.000	0.785	0.000	0.006
		B		0.000	0.000	0.469	0.000	0.005
		C		0.000	0.000	0.375	0.000	0.005
L25	70.583-70.333	A	0.917	0.000	0.000	1.175	0.000	0.010

Tower Section	Tower Elevation ft	Face or Leg	Ice Thickness in	A_R ft^2	A_F ft^2	C_AA_A In Face ft^2	C_AA_A Out Face ft^2	Weight K
		B		0.000	0.000	0.702	0.000	0.008
		C		0.000	0.000	0.561	0.000	0.007
L26	70.333-70.000	A	0.917	0.000	0.000	1.566	0.000	0.013
		B		0.000	0.000	0.935	0.000	0.010
		C		0.000	0.000	0.748	0.000	0.009
L27	70.000-69.750	A	0.916	0.000	0.000	1.175	0.000	0.010
		B		0.000	0.000	0.702	0.000	0.008
		C		0.000	0.000	0.561	0.000	0.007
L28	69.750-64.750	A	0.913	0.000	0.000	20.272	0.000	0.173
		B		0.000	0.000	10.806	0.000	0.140
		C		0.000	0.000	7.993	0.000	0.123
L29	64.750-59.750	A	0.906	0.000	0.000	17.617	0.000	0.158
		B		0.000	0.000	8.146	0.000	0.126
		C		0.000	0.000	5.347	0.000	0.109
L30	59.750-54.750	A	0.898	0.000	0.000	17.600	0.000	0.157
		B		0.000	0.000	8.124	0.000	0.125
		C		0.000	0.000	5.340	0.000	0.109
L31	54.750-49.750	A	0.890	0.000	0.000	17.582	0.000	0.156
		B		0.000	0.000	8.099	0.000	0.124
		C		0.000	0.000	5.332	0.000	0.108
L32	49.750-43.000	A	0.879	0.000	0.000	31.888	0.000	0.251
		B		0.000	0.000	19.076	0.000	0.209
		C		0.000	0.000	15.368	0.000	0.188
L33	43.000-42.000	A	0.872	0.000	0.000	3.707	0.000	0.031
		B		0.000	0.000	1.808	0.000	0.025
		C		0.000	0.000	1.259	0.000	0.022
L34	42.000-37.000	A	0.865	0.000	0.000	18.501	0.000	0.154
		B		0.000	0.000	9.000	0.000	0.124
		C		0.000	0.000	6.282	0.000	0.108
L35	37.000-32.000	A	0.854	0.000	0.000	18.475	0.000	0.153
		B		0.000	0.000	8.965	0.000	0.123
		C		0.000	0.000	6.270	0.000	0.108
L36	32.000-27.913	A	0.842	0.000	0.000	18.486	0.000	0.142
		B		0.000	0.000	11.798	0.000	0.125
		C		0.000	0.000	8.522	0.000	0.107
L37	27.913-27.663	A	0.836	0.000	0.000	1.251	0.000	0.009
		B		0.000	0.000	0.774	0.000	0.008
		C		0.000	0.000	0.641	0.000	0.007
L38	27.663-27.250	A	0.835	0.000	0.000	2.066	0.000	0.015
		B		0.000	0.000	1.279	0.000	0.013
		C		0.000	0.000	1.060	0.000	0.012
L39	27.250-26.983	A	0.833	0.000	0.000	1.335	0.000	0.010
		B		0.000	0.000	0.827	0.000	0.008
		C		0.000	0.000	0.685	0.000	0.008
L40	26.983-26.833	A	0.833	0.000	0.000	0.750	0.000	0.006
		B		0.000	0.000	0.464	0.000	0.005
		C		0.000	0.000	0.385	0.000	0.004
L41	26.833-21.833	A	0.824	0.000	0.000	21.646	0.000	0.168
		B		0.000	0.000	12.115	0.000	0.141
		C		0.000	0.000	9.478	0.000	0.126
L42	21.833-16.833	A	0.806	0.000	0.000	19.858	0.000	0.158
		B		0.000	0.000	10.312	0.000	0.132
		C		0.000	0.000	7.713	0.000	0.118
L43	16.833-16.000	A	0.793	0.000	0.000	3.940	0.000	0.029
		B		0.000	0.000	2.348	0.000	0.025
		C		0.000	0.000	1.920	0.000	0.023
L44	16.000-15.750	A	0.790	0.000	0.000	1.182	0.000	0.009
		B		0.000	0.000	0.704	0.000	0.008
		C		0.000	0.000	0.576	0.000	0.007
L45	15.750-14.747	A	0.787	0.000	0.000	4.741	0.000	0.035
		B		0.000	0.000	3.746	0.000	0.035

Tower Section	Tower Elevation ft	Face or Leg	Ice Thickness in	A_R ft^2	A_F ft^2	C_AA_A In Face ft^2	C_AA_A Out Face ft^2	Weight K
		C		0.000	0.000	3.232	0.000	0.032
L46	14.747-14.497	A	0.784	0.000	0.000	1.181	0.000	0.009
		B		0.000	0.000	1.009	0.000	0.009
		C		0.000	0.000	0.882	0.000	0.008
L47	14.497-12.083	A	0.776	0.000	0.000	11.396	0.000	0.084
		B		0.000	0.000	9.732	0.000	0.088
		C		0.000	0.000	8.506	0.000	0.081
L48	12.083-11.833	A	0.768	0.000	0.000	1.179	0.000	0.009
		B		0.000	0.000	1.006	0.000	0.009
		C		0.000	0.000	0.880	0.000	0.008
L49	11.833-10.000	A	0.761	0.000	0.000	8.638	0.000	0.063
		B		0.000	0.000	5.637	0.000	0.057
		C		0.000	0.000	6.447	0.000	0.061
L50	10.000-9.750	A	0.753	0.000	0.000	1.177	0.000	0.008
		B		0.000	0.000	0.678	0.000	0.007
		C		0.000	0.000	0.879	0.000	0.008
L51	9.750-4.750	A	0.730	0.000	0.000	20.257	0.000	0.150
		B		0.000	0.000	10.278	0.000	0.128
		C		0.000	0.000	14.302	0.000	0.147
L52	4.750-0.000	A	0.653	0.000	0.000	16.792	0.000	0.123
		B		0.000	0.000	7.325	0.000	0.105
		C		0.000	0.000	10.581	0.000	0.119

Feed Line Center of Pressure

Section	Elevation ft	CP_X in	CP_Z in	CP_X Ice in	CP_Z Ice in
L1	160.000-155.000	0.238	0.048	0.703	0.142
L2	155.000-150.000	0.050	0.010	0.264	0.053
L3	150.000-148.500	0.050	0.010	0.263	0.053
L4	148.500-148.000	0.082	0.017	0.449	0.090
L5	148.000-143.000	0.083	0.017	0.454	0.092
L6	143.000-138.000	0.108	0.022	0.585	0.118
L7	138.000-133.000	0.295	0.060	0.979	0.197
L8	133.000-128.000	0.295	0.060	0.980	0.198
L9	128.000-123.000	-3.985	-5.086	-2.689	-3.898
L10	123.000-118.000	-4.438	-5.831	-3.069	-4.565
L11	118.000-111.000	-4.069	-6.147	-2.637	-4.977
L12	111.000-109.750	-4.081	-6.165	-2.645	-4.993
L13	109.750-105.333	-3.416	-5.161	-2.337	-4.404
L14	105.333-105.083	-2.538	-3.834	-1.865	-3.514
L15	105.083-100.083	-2.561	-3.870	-1.883	-3.545
L16	100.083-95.083	-2.605	-3.937	-1.916	-3.606
L17	95.083-92.500	-2.227	-3.366	-1.686	-3.170
L18	92.500-92.250	-2.013	-3.042	-1.549	-2.910
L19	92.250-87.250	-2.032	-3.071	-1.564	-2.937
L20	87.250-82.250	-1.917	-2.996	-1.481	-2.888
L21	82.250-76.750	0.190	-1.308	0.185	-1.532
L22	76.750-75.750	0.286	-1.967	0.262	-2.170
L23	75.750-70.750	0.248	-1.697	0.231	-1.927
L24	70.750-70.583	0.214	-1.454	0.203	-1.695
L25	70.583-70.333	0.214	-1.455	0.204	-1.696
L26	70.333-70.000	0.215	-1.457	0.204	-1.698
L27	70.000-69.750	0.215	-1.458	0.204	-1.699
L28	69.750-64.750	-1.134	-2.682	-0.872	-2.715
L29	64.750-59.750	-2.751	-4.159	-2.070	-3.858

Section	Elevation	CP_X	CP_Z	CP_X Ice	CP_Z Ice
	ft	in	in	in	in
L30	59.750-54.750	-2.790	-4.218	-2.102	-3.910
L31	54.750-49.750	-2.828	-4.275	-2.135	-3.962
L32	49.750-43.000	-1.985	-3.002	-1.622	-3.003
L33	43.000-42.000	-2.645	-4.000	-2.057	-3.807
L34	42.000-37.000	-2.667	-4.032	-2.080	-3.836
L35	37.000-32.000	-2.702	-4.086	-2.112	-3.884
L36	32.000-27.913	-1.696	-2.687	-1.410	-2.784
L37	27.913-27.663	-1.902	-2.876	-1.605	-2.937
L38	27.663-27.250	-1.904	-2.879	-1.607	-2.939
L39	27.250-26.983	-1.905	-2.882	-1.608	-2.942
L40	26.983-26.833	-1.907	-2.883	-1.610	-2.944
L41	26.833-21.833	-2.272	-3.436	-1.866	-3.405
L42	21.833-16.833	-2.536	-3.836	-2.058	-3.736
L43	16.833-16.000	-2.057	-3.112	-1.756	-3.177
L44	16.000-15.750	-2.061	-3.117	-1.760	-3.182
L45	15.750-14.747	1.339	-2.727	0.962	-2.859
L46	14.747-14.497	2.273	-2.623	1.738	-2.769
L47	14.497-12.083	2.282	-2.633	1.742	-2.779
L48	12.083-11.833	2.291	-2.643	1.747	-2.789
L49	11.833-10.000	1.232	-4.302	0.808	-4.213
L50	10.000-9.750	0.794	-4.999	0.424	-4.804
L51	9.750-4.750	0.940	-5.912	0.480	-5.501
L52	4.750-0.000	0.710	-6.649	0.230	-6.004

Note: For pole sections, center of pressure calculations do not consider feed line shielding.

Shielding Factor Ka

Tower Section	Feed Line Record No.	Description	Feed Line Segment Elev.	K_a No Ice	K_a Ice
L1	26	Safety Line 3/8	155.00 - 160.00	1.0000	1.0000
L1	56	HSS6x6	155.00 - 155.50	1.0000	1.0000
L1	57	HSS6x6	155.00 - 155.50	1.0000	1.0000
L1	58	HSS6x6	155.00 - 155.50	1.0000	1.0000
L2	26	Safety Line 3/8	150.00 - 155.00	1.0000	1.0000
L2	56	HSS6x6	150.00 - 155.00	1.0000	1.0000
L2	57	HSS6x6	150.00 - 155.00	1.0000	1.0000
L2	58	HSS6x6	150.00 - 155.00	1.0000	1.0000
L3	26	Safety Line 3/8	148.50 - 150.00	1.0000	1.0000
L3	56	HSS6x6	148.50 - 150.00	1.0000	1.0000
L3	57	HSS6x6	148.50 - 150.00	1.0000	1.0000
L3	58	HSS6x6	148.50 - 150.00	1.0000	1.0000

Tower Section	Feed Line Record No.	Description	Feed Line Segment Elev.	K_a No Ice	K_a Ice
L4	26	Safety Line 3/8	148.00 - 148.50	1.0000	1.0000
L4	56	HSS6x6	148.00 - 148.50	1.0000	1.0000
L4	57	HSS6x6	148.00 - 148.50	1.0000	1.0000
L4	58	HSS6x6	148.00 - 148.50	1.0000	1.0000
L5	26	Safety Line 3/8	143.00 - 148.00	1.0000	1.0000
L5	56	HSS6x6	143.00 - 148.00	1.0000	1.0000
L5	57	HSS6x6	143.00 - 148.00	1.0000	1.0000
L5	58	HSS6x6	143.00 - 148.00	1.0000	1.0000
L6	26	Safety Line 3/8	138.00 - 143.00	1.0000	1.0000
L6	56	HSS6x6	140.00 - 143.00	1.0000	1.0000
L6	57	HSS6x6	140.00 - 143.00	1.0000	1.0000
L6	58	HSS6x6	140.00 - 143.00	1.0000	1.0000
L7	26	Safety Line 3/8	133.00 - 138.00	1.0000	1.0000
L8	26	Safety Line 3/8	128.00 - 133.00	1.0000	1.0000
L9	16	LDF7-50A(1-5/8)	123.00 - 127.00	1.0000	1.0000
L9	26	Safety Line 3/8	123.00 - 128.00	1.0000	1.0000
L10	16	LDF7-50A(1-5/8)	118.00 - 123.00	1.0000	1.0000
L10	22	CU12PSM9P6XXX(1-1/2)	118.00 - 119.00	1.0000	1.0000
L10	26	Safety Line 3/8	118.00 - 123.00	1.0000	1.0000
L11	16	LDF7-50A(1-5/8)	111.00 - 118.00	1.0000	1.0000
L11	22	CU12PSM9P6XXX(1-1/2)	111.00 - 118.00	1.0000	1.0000
L11	26	Safety Line 3/8	111.00 - 118.00	1.0000	1.0000
L12	16	LDF7-50A(1-5/8)	109.75 - 111.00	1.0000	1.0000
L12	22	CU12PSM9P6XXX(1-1/2)	109.75 - 111.00	1.0000	1.0000
L12	26	Safety Line 3/8	109.75 - 111.00	1.0000	1.0000
L13	16	LDF7-50A(1-5/8)	105.33 - 109.75	1.0000	1.0000
L13	22	CU12PSM9P6XXX(1-1/2)	105.33 - 109.75	1.0000	1.0000
L13	26	Safety Line 3/8	105.33 - 109.75	1.0000	1.0000
L13	40	MP304	105.33 - 106.75	1.0000	1.0000
L13	41	MP304	105.33 - 106.75	1.0000	1.0000
L13	42	MP304	105.33 - 106.75	1.0000	1.0000

Tower Section	Feed Line Record No.	Description	Feed Line Segment Elev.	K_a No Ice	K_a Ice
L14	16	LDF7-50A(1-5/8)	105.08 - 105.33	1.0000	1.0000
L14	22	CU12PSM9P6XXX(1-1/2)	105.08 - 105.33	1.0000	1.0000
L14	26	Safety Line 3/8	105.08 - 105.33	1.0000	1.0000
L14	40	MP304	105.08 - 105.33	1.0000	1.0000
L14	41	MP304	105.08 - 105.33	1.0000	1.0000
L14	42	MP304	105.08 - 105.33	1.0000	1.0000
L15	16	LDF7-50A(1-5/8)	100.08 - 105.08	1.0000	1.0000
L15	22	CU12PSM9P6XXX(1-1/2)	100.08 - 105.08	1.0000	1.0000
L15	26	Safety Line 3/8	100.08 - 105.08	1.0000	1.0000
L15	40	MP304	100.08 - 105.08	1.0000	1.0000
L15	41	MP304	100.08 - 105.08	1.0000	1.0000
L15	42	MP304	100.08 - 105.08	1.0000	1.0000
L16	16	LDF7-50A(1-5/8)	95.08 - 100.08	1.0000	1.0000
L16	22	CU12PSM9P6XXX(1-1/2)	95.08 - 100.08	1.0000	1.0000
L16	26	Safety Line 3/8	95.08 - 100.08	1.0000	1.0000
L16	40	MP304	95.08 - 100.08	1.0000	1.0000
L16	41	MP304	95.08 - 100.08	1.0000	1.0000
L16	42	MP304	95.08 - 100.08	1.0000	1.0000
L17	16	LDF7-50A(1-5/8)	92.50 - 95.08	1.0000	1.0000
L17	22	CU12PSM9P6XXX(1-1/2)	92.50 - 95.08	1.0000	1.0000
L17	26	Safety Line 3/8	92.50 - 95.08	1.0000	1.0000
L17	40	MP304	92.50 - 95.08	1.0000	1.0000
L17	41	MP304	92.50 - 95.08	1.0000	1.0000
L17	42	MP304	92.50 - 95.08	1.0000	1.0000
L17	60	4"x1.25" Flat Reinforcement	92.50 - 94.00	1.0000	1.0000
L17	61	4"x1.25" Flat Reinforcement	92.50 - 94.00	1.0000	1.0000
L17	62	4"x1.25" Flat Reinforcement	92.50 - 94.00	1.0000	1.0000
L18	16	LDF7-50A(1-5/8)	92.25 - 92.50	1.0000	1.0000
L18	22	CU12PSM9P6XXX(1-1/2)	92.25 - 92.50	1.0000	1.0000
L18	26	Safety Line 3/8	92.25 - 92.50	1.0000	1.0000
L18	40	MP304	92.25 - 92.50	1.0000	1.0000
L18	41	MP304	92.25 - 92.50	1.0000	1.0000
L18	42	MP304	92.25 - 92.50	1.0000	1.0000
L18	60	4"x1.25" Flat Reinforcement	92.25 - 92.50	1.0000	1.0000
L18	61	4"x1.25" Flat Reinforcement	92.25 - 92.50	1.0000	1.0000
L18	62	4"x1.25" Flat Reinforcement	92.25 - 92.50	1.0000	1.0000
L19	16	LDF7-50A(1-5/8)	87.25 - 92.25	1.0000	1.0000
L19	22	CU12PSM9P6XXX(1-1/2)	87.25 - 92.25	1.0000	1.0000
L19	26	Safety Line 3/8	87.25 - 92.25	1.0000	1.0000
L19	40	MP304	87.25 - 92.25	1.0000	1.0000
L19	41	MP304	87.25 - 92.25	1.0000	1.0000
L19	42	MP304	87.25 - 92.25	1.0000	1.0000
L19	60	4"x1.25" Flat Reinforcement	87.25 - 92.25	1.0000	1.0000
L19	61	4"x1.25" Flat Reinforcement	87.25 - 92.25	1.0000	1.0000
L19	62	4"x1.25" Flat Reinforcement	87.25 - 92.25	1.0000	1.0000
L20	16	LDF7-50A(1-5/8)	82.25 - 87.25	1.0000	1.0000
L20	22	CU12PSM9P6XXX(1-1/2)	82.25 - 87.25	1.0000	1.0000
L20	26	Safety Line 3/8	82.25 - 87.25	1.0000	1.0000
L20	40	MP304	82.25 - 87.25	1.0000	1.0000
L20	41	MP304	82.25 - 87.25	1.0000	1.0000

Tower Section	Feed Line Record No.	Description	Feed Line Segment Elev.	K_a No Ice	K_a Ice
L20	42	MP304	82.25 - 87.25	1.0000	1.0000
L20	52	6"x1" Flat Reinforcement	82.25 - 82.50	1.0000	1.0000
L20	53	6"x1" Flat Reinforcement	82.25 - 82.50	1.0000	1.0000
L20	54	6"x1" Flat Reinforcement	82.25 - 82.50	1.0000	1.0000
L20	60	4"x1.25" Flat Reinforcement	82.25 - 87.25	1.0000	1.0000
L20	61	4"x1.25" Flat Reinforcement	82.25 - 87.25	1.0000	1.0000
L20	62	4"x1.25" Flat Reinforcement	82.25 - 87.25	1.0000	1.0000
L21	16	LDF7-50A(1-5/8)	76.75 - 82.25	1.0000	1.0000
L21	22	CU12PSM9P6XXX(1-1/2)	76.75 - 82.25	1.0000	1.0000
L21	26	Safety Line 3/8	76.75 - 82.25	1.0000	1.0000
L21	40	MP304	76.75 - 82.25	1.0000	1.0000
L21	41	MP304	76.75 - 82.25	1.0000	1.0000
L21	42	MP304	76.75 - 82.25	1.0000	1.0000
L21	52	6"x1" Flat Reinforcement	76.75 - 82.25	1.0000	1.0000
L21	53	6"x1" Flat Reinforcement	76.75 - 82.25	1.0000	1.0000
L21	54	6"x1" Flat Reinforcement	76.75 - 82.25	1.0000	1.0000
L21	60	4"x1.25" Flat Reinforcement	79.00 - 82.25	1.0000	1.0000
L21	61	4"x1.25" Flat Reinforcement	79.00 - 82.25	1.0000	1.0000
L21	62	4"x1.25" Flat Reinforcement	79.00 - 82.25	1.0000	1.0000
L22	16	LDF7-50A(1-5/8)	75.75 - 76.75	1.0000	1.0000
L22	22	CU12PSM9P6XXX(1-1/2)	75.75 - 76.75	1.0000	1.0000
L22	26	Safety Line 3/8	75.75 - 76.75	1.0000	1.0000
L22	52	6"x1" Flat Reinforcement	75.75 - 76.75	1.0000	1.0000
L22	53	6"x1" Flat Reinforcement	75.75 - 76.75	1.0000	1.0000
L22	54	6"x1" Flat Reinforcement	75.75 - 76.75	1.0000	1.0000
L23	16	LDF7-50A(1-5/8)	70.75 - 75.75	1.0000	1.0000
L23	22	CU12PSM9P6XXX(1-1/2)	70.75 - 75.75	1.0000	1.0000
L23	26	Safety Line 3/8	70.75 - 75.75	1.0000	1.0000
L23	36	MP305	70.75 - 73.00	1.0000	1.0000
L23	37	MP305	70.75 - 73.00	1.0000	1.0000
L23	38	MP305	70.75 - 73.00	1.0000	1.0000
L23	52	6"x1" Flat Reinforcement	70.75 - 75.75	1.0000	1.0000
L23	53	6"x1" Flat Reinforcement	70.75 - 75.75	1.0000	1.0000
L23	54	6"x1" Flat Reinforcement	70.75 - 75.75	1.0000	1.0000
L24	16	LDF7-50A(1-5/8)	70.58 - 70.75	1.0000	1.0000
L24	22	CU12PSM9P6XXX(1-1/2)	70.58 - 70.75	1.0000	1.0000
L24	26	Safety Line 3/8	70.58 - 70.75	1.0000	1.0000
L24	36	MP305	70.58 - 70.75	1.0000	1.0000
L24	37	MP305	70.58 - 70.75	1.0000	1.0000
L24	38	MP305	70.58 - 70.75	1.0000	1.0000
L24	52	6"x1" Flat Reinforcement	70.58 - 70.75	1.0000	1.0000
L24	53	6"x1" Flat Reinforcement	70.58 - 70.75	1.0000	1.0000
L24	54	6"x1" Flat Reinforcement	70.58 - 70.75	1.0000	1.0000
L25	16	LDF7-50A(1-5/8)	70.33 - 70.58	1.0000	1.0000
L25	22	CU12PSM9P6XXX(1-1/2)	70.33 - 70.58	1.0000	1.0000
L25	26	Safety Line 3/8	70.33 - 70.58	1.0000	1.0000
L25	36	MP305	70.33 - 70.58	1.0000	1.0000
L25	37	MP305	70.33 - 70.58	1.0000	1.0000
L25	38	MP305	70.33 - 70.58	1.0000	1.0000
L25	52	6"x1" Flat Reinforcement	70.33 - 70.58	1.0000	1.0000
L25	53	6"x1" Flat Reinforcement	70.33 - 70.58	1.0000	1.0000
L25	54	6"x1" Flat Reinforcement	70.33 - 70.58	1.0000	1.0000
L26	16	LDF7-50A(1-5/8)	70.00 - 70.33	1.0000	1.0000
L26	22	CU12PSM9P6XXX(1-1/2)	70.00 - 70.33	1.0000	1.0000
L26	26	Safety Line 3/8	70.00 - 70.33	1.0000	1.0000
L26	36	MP305	70.00 - 70.33	1.0000	1.0000
L26	37	MP305	70.00 - 70.33	1.0000	1.0000
L26	38	MP305	70.00 - 70.33	1.0000	1.0000
L26	52	6"x1" Flat Reinforcement	70.00 - 70.33	1.0000	1.0000
L26	53	6"x1" Flat Reinforcement	70.00 - 70.33	1.0000	1.0000
L26	54	6"x1" Flat Reinforcement	70.00 - 70.33	1.0000	1.0000
L27	16	LDF7-50A(1-5/8)	69.75 - 70.00	1.0000	1.0000

Tower Section	Feed Line Record No.	Description	Feed Line Segment Elev.	K_a No Ice	K_a Ice
L27	22	CU12PSM9P6XXX(1-1/2)	69.75 - 70.00	1.0000	1.0000
L27	26	Safety Line 3/8	69.75 - 70.00	1.0000	1.0000
L27	36	MP305	69.75 - 70.00	1.0000	1.0000
L27	37	MP305	69.75 - 70.00	1.0000	1.0000
L27	38	MP305	69.75 - 70.00	1.0000	1.0000
L27	52	6"x1" Flat Reinforcement	69.75 - 70.00	1.0000	1.0000
L27	53	6"x1" Flat Reinforcement	69.75 - 70.00	1.0000	1.0000
L27	54	6"x1" Flat Reinforcement	69.75 - 70.00	1.0000	1.0000
L28	16	LDF7-50A(1-5/8)	64.75 - 69.75	1.0000	1.0000
L28	22	CU12PSM9P6XXX(1-1/2)	64.75 - 69.75	1.0000	1.0000
L28	26	Safety Line 3/8	64.75 - 69.75	1.0000	1.0000
L28	36	MP305	64.75 - 69.75	1.0000	1.0000
L28	37	MP305	64.75 - 69.75	1.0000	1.0000
L28	38	MP305	64.75 - 69.75	1.0000	1.0000
L28	52	6"x1" Flat Reinforcement	67.50 - 69.75	1.0000	1.0000
L28	53	6"x1" Flat Reinforcement	67.50 - 69.75	1.0000	1.0000
L28	54	6"x1" Flat Reinforcement	67.50 - 69.75	1.0000	1.0000
L29	16	LDF7-50A(1-5/8)	59.75 - 64.75	1.0000	1.0000
L29	22	CU12PSM9P6XXX(1-1/2)	59.75 - 64.75	1.0000	1.0000
L29	26	Safety Line 3/8	59.75 - 64.75	1.0000	1.0000
L29	36	MP305	59.75 - 64.75	1.0000	1.0000
L29	37	MP305	59.75 - 64.75	1.0000	1.0000
L29	38	MP305	59.75 - 64.75	1.0000	1.0000
L30	16	LDF7-50A(1-5/8)	54.75 - 59.75	1.0000	1.0000
L30	22	CU12PSM9P6XXX(1-1/2)	54.75 - 59.75	1.0000	1.0000
L30	26	Safety Line 3/8	54.75 - 59.75	1.0000	1.0000
L30	36	MP305	54.75 - 59.75	1.0000	1.0000
L30	37	MP305	54.75 - 59.75	1.0000	1.0000
L30	38	MP305	54.75 - 59.75	1.0000	1.0000
L31	16	LDF7-50A(1-5/8)	49.75 - 54.75	1.0000	1.0000
L31	22	CU12PSM9P6XXX(1-1/2)	49.75 - 54.75	1.0000	1.0000
L31	26	Safety Line 3/8	49.75 - 54.75	1.0000	1.0000
L31	36	MP305	49.75 - 54.75	1.0000	1.0000
L31	37	MP305	49.75 - 54.75	1.0000	1.0000
L31	38	MP305	49.75 - 54.75	1.0000	1.0000
L32	16	LDF7-50A(1-5/8)	43.00 - 49.75	1.0000	1.0000
L32	22	CU12PSM9P6XXX(1-1/2)	43.00 - 49.75	1.0000	1.0000
L32	26	Safety Line 3/8	43.00 - 49.75	1.0000	1.0000
L32	36	MP305	43.00 - 49.75	1.0000	1.0000
L32	37	MP305	43.00 - 49.75	1.0000	1.0000
L32	38	MP305	43.00 - 49.75	1.0000	1.0000
L32	44	6.5"x1.25" Flat Reinforcement	43.00 - 49.50	1.0000	1.0000
L32	45	6.5"x1.25" Flat Reinforcement	43.00 - 49.50	1.0000	1.0000
L32	46	6.5"x1.25" Flat Reinforcement	43.00 - 49.50	1.0000	1.0000
L33	16	LDF7-50A(1-5/8)	42.00 - 43.00	1.0000	1.0000
L33	22	CU12PSM9P6XXX(1-1/2)	42.00 - 43.00	1.0000	1.0000
L33	26	Safety Line 3/8	42.00 - 43.00	1.0000	1.0000
L33	44	6.5"x1.25" Flat Reinforcement	42.00 - 43.00	1.0000	1.0000
L33	45	6.5"x1.25" Flat Reinforcement	42.00 - 43.00	1.0000	1.0000
L33	46	6.5"x1.25" Flat Reinforcement	42.00 - 43.00	1.0000	1.0000
L34	16	LDF7-50A(1-5/8)	37.00 - 42.00	1.0000	1.0000
L34	22	CU12PSM9P6XXX(1-1/2)	37.00 - 42.00	1.0000	1.0000
L34	26	Safety Line 3/8	37.00 - 42.00	1.0000	1.0000
L34	44	6.5"x1.25" Flat Reinforcement	37.00 - 42.00	1.0000	1.0000
L34	45	6.5"x1.25" Flat	37.00 - 42.00	1.0000	1.0000

Tower Section	Feed Line Record No.	Description	Feed Line Segment Elev.	K_a No Ice	K_a Ice
		Reinforcement			
L34	46	6.5"x1.25" Flat Reinforcement	37.00 - 42.00	1.0000	1.0000
L35	16	LDF7-50A(1-5/8)	32.00 - 37.00	1.0000	1.0000
L35	22	CU12PSM9P6XXX(1-1/2)	32.00 - 37.00	1.0000	1.0000
L35	26	Safety Line 3/8	32.00 - 37.00	1.0000	1.0000
L35	44	6.5"x1.25" Flat Reinforcement	32.00 - 37.00	1.0000	1.0000
L35	45	6.5"x1.25" Flat Reinforcement	32.00 - 37.00	1.0000	1.0000
L35	46	6.5"x1.25" Flat Reinforcement	32.00 - 37.00	1.0000	1.0000
L36	16	LDF7-50A(1-5/8)	27.91 - 32.00	1.0000	1.0000
L36	22	CU12PSM9P6XXX(1-1/2)	27.91 - 32.00	1.0000	1.0000
L36	26	Safety Line 3/8	27.91 - 32.00	1.0000	1.0000
L36	31	MP306	27.91 - 30.50	1.0000	1.0000
L36	32	MP306	27.91 - 30.50	1.0000	1.0000
L36	34	MP306	27.91 - 31.33	1.0000	1.0000
L36	44	6.5"x1.25" Flat Reinforcement	27.91 - 32.00	1.0000	1.0000
L36	45	6.5"x1.25" Flat Reinforcement	27.91 - 32.00	1.0000	1.0000
L36	46	6.5"x1.25" Flat Reinforcement	27.91 - 32.00	1.0000	1.0000
L37	16	LDF7-50A(1-5/8)	27.66 - 27.91	1.0000	1.0000
L37	22	CU12PSM9P6XXX(1-1/2)	27.66 - 27.91	1.0000	1.0000
L37	26	Safety Line 3/8	27.66 - 27.91	1.0000	1.0000
L37	31	MP306	27.66 - 27.91	1.0000	1.0000
L37	32	MP306	27.66 - 27.91	1.0000	1.0000
L37	34	MP306	27.66 - 27.91	1.0000	1.0000
L37	44	6.5"x1.25" Flat Reinforcement	27.66 - 27.91	1.0000	1.0000
L37	45	6.5"x1.25" Flat Reinforcement	27.66 - 27.91	1.0000	1.0000
L37	46	6.5"x1.25" Flat Reinforcement	27.66 - 27.91	1.0000	1.0000
L38	16	LDF7-50A(1-5/8)	27.25 - 27.66	1.0000	1.0000
L38	22	CU12PSM9P6XXX(1-1/2)	27.25 - 27.66	1.0000	1.0000
L38	26	Safety Line 3/8	27.25 - 27.66	1.0000	1.0000
L38	31	MP306	27.25 - 27.66	1.0000	1.0000
L38	32	MP306	27.25 - 27.66	1.0000	1.0000
L38	34	MP306	27.25 - 27.66	1.0000	1.0000
L38	44	6.5"x1.25" Flat Reinforcement	27.25 - 27.66	1.0000	1.0000
L38	45	6.5"x1.25" Flat Reinforcement	27.25 - 27.66	1.0000	1.0000
L38	46	6.5"x1.25" Flat Reinforcement	27.25 - 27.66	1.0000	1.0000
L39	16	LDF7-50A(1-5/8)	26.98 - 27.25	1.0000	1.0000
L39	22	CU12PSM9P6XXX(1-1/2)	26.98 - 27.25	1.0000	1.0000
L39	26	Safety Line 3/8	26.98 - 27.25	1.0000	1.0000
L39	31	MP306	26.98 - 27.25	1.0000	1.0000
L39	32	MP306	26.98 - 27.25	1.0000	1.0000
L39	34	MP306	26.98 - 27.25	1.0000	1.0000
L39	44	6.5"x1.25" Flat Reinforcement	26.98 - 27.25	1.0000	1.0000
L39	45	6.5"x1.25" Flat Reinforcement	26.98 - 27.25	1.0000	1.0000
L39	46	6.5"x1.25" Flat Reinforcement	26.98 - 27.25	1.0000	1.0000
L40	16	LDF7-50A(1-5/8)	26.83 - 26.98	1.0000	1.0000
L40	22	CU12PSM9P6XXX(1-1/2)	26.83 - 26.98	1.0000	1.0000

Tower Section	Feed Line Record No.	Description	Feed Line Segment Elev.	K_a No Ice	K_a Ice
L40	26	Safety Line 3/8	26.83 - 26.98	1.0000	1.0000
L40	31	MP306	26.83 - 26.98	1.0000	1.0000
L40	32	MP306	26.83 - 26.98	1.0000	1.0000
L40	34	MP306	26.83 - 26.98	1.0000	1.0000
L40	44	6.5"x1.25" Flat Reinforcement	26.83 - 26.98	1.0000	1.0000
L40	45	6.5"x1.25" Flat Reinforcement	26.83 - 26.98	1.0000	1.0000
L40	46	6.5"x1.25" Flat Reinforcement	26.83 - 26.98	1.0000	1.0000
L41	16	LDF7-50A(1-5/8)	21.83 - 26.83	1.0000	1.0000
L41	22	CU12PSM9P6XXX(1-1/2)	21.83 - 26.83	1.0000	1.0000
L41	26	Safety Line 3/8	21.83 - 26.83	1.0000	1.0000
L41	31	MP306	21.83 - 26.83	1.0000	1.0000
L41	32	MP306	21.83 - 26.83	1.0000	1.0000
L41	34	MP306	21.83 - 26.83	1.0000	1.0000
L41	44	6.5"x1.25" Flat Reinforcement	24.50 - 26.83	1.0000	1.0000
L41	45	6.5"x1.25" Flat Reinforcement	24.50 - 26.83	1.0000	1.0000
L41	46	6.5"x1.25" Flat Reinforcement	24.50 - 26.83	1.0000	1.0000
L42	16	LDF7-50A(1-5/8)	16.83 - 21.83	1.0000	1.0000
L42	22	CU12PSM9P6XXX(1-1/2)	16.83 - 21.83	1.0000	1.0000
L42	26	Safety Line 3/8	16.83 - 21.83	1.0000	1.0000
L42	31	MP306	16.83 - 21.83	1.0000	1.0000
L42	32	MP306	16.83 - 21.83	1.0000	1.0000
L42	34	MP306	16.83 - 21.83	1.0000	1.0000
L42	48	6"x1" Flat Reinforcement	16.83 - 18.00	1.0000	1.0000
L42	49	6"x1" Flat Reinforcement	16.83 - 18.00	1.0000	1.0000
L42	50	6"x1" Flat Reinforcement	16.83 - 18.00	1.0000	1.0000
L43	16	LDF7-50A(1-5/8)	16.00 - 16.83	1.0000	1.0000
L43	22	CU12PSM9P6XXX(1-1/2)	16.00 - 16.83	1.0000	1.0000
L43	26	Safety Line 3/8	16.00 - 16.83	1.0000	1.0000
L43	31	MP306	16.00 - 16.83	1.0000	1.0000
L43	32	MP306	16.00 - 16.83	1.0000	1.0000
L43	34	MP306	16.00 - 16.83	1.0000	1.0000
L43	48	6"x1" Flat Reinforcement	16.00 - 16.83	1.0000	1.0000
L43	49	6"x1" Flat Reinforcement	16.00 - 16.83	1.0000	1.0000
L43	50	6"x1" Flat Reinforcement	16.00 - 16.83	1.0000	1.0000
L44	16	LDF7-50A(1-5/8)	15.75 - 16.00	1.0000	1.0000
L44	22	CU12PSM9P6XXX(1-1/2)	15.75 - 16.00	1.0000	1.0000
L44	26	Safety Line 3/8	15.75 - 16.00	1.0000	1.0000
L44	31	MP306	15.75 - 16.00	1.0000	1.0000
L44	32	MP306	15.75 - 16.00	1.0000	1.0000
L44	34	MP306	15.75 - 16.00	1.0000	1.0000
L44	48	6"x1" Flat Reinforcement	15.75 - 16.00	1.0000	1.0000
L44	49	6"x1" Flat Reinforcement	15.75 - 16.00	1.0000	1.0000
L44	50	6"x1" Flat Reinforcement	15.75 - 16.00	1.0000	1.0000
L45	16	LDF7-50A(1-5/8)	14.75 - 15.75	1.0000	1.0000
L45	22	CU12PSM9P6XXX(1-1/2)	14.75 - 15.75	1.0000	1.0000
L45	26	Safety Line 3/8	14.75 - 15.75	1.0000	1.0000
L45	28	MP306	14.75 - 15.50	1.0000	1.0000
L45	29	MP306	14.75 - 15.50	1.0000	1.0000
L45	31	MP306	14.75 - 15.75	1.0000	1.0000
L45	32	MP306	14.75 - 15.75	1.0000	1.0000
L45	34	MP306	14.75 - 15.75	1.0000	1.0000
L45	48	6"x1" Flat Reinforcement	14.75 - 15.75	1.0000	1.0000
L45	49	6"x1" Flat Reinforcement	14.75 - 15.75	1.0000	1.0000
L45	50	6"x1" Flat Reinforcement	14.75 - 15.75	1.0000	1.0000
L46	16	LDF7-50A(1-5/8)	14.50 - 14.75	1.0000	1.0000
L46	22	CU12PSM9P6XXX(1-1/2)	14.50 - 14.75	1.0000	1.0000

Tower Section	Feed Line Record No.	Description	Feed Line Segment Elev.	K_a No Ice	K_a Ice
L46	26	Safety Line 3/8	14.50 - 14.75	1.0000	1.0000
L46	28	MP306	14.50 - 14.75	1.0000	1.0000
L46	29	MP306	14.50 - 14.75	1.0000	1.0000
L46	31	MP306	14.50 - 14.75	1.0000	1.0000
L46	32	MP306	14.50 - 14.75	1.0000	1.0000
L46	34	MP306	14.50 - 14.75	1.0000	1.0000
L46	48	6"x1" Flat Reinforcement	14.50 - 14.75	1.0000	1.0000
L46	49	6"x1" Flat Reinforcement	14.50 - 14.75	1.0000	1.0000
L46	50	6"x1" Flat Reinforcement	14.50 - 14.75	1.0000	1.0000
L47	16	LDF7-50A(1-5/8)	12.08 - 14.50	1.0000	1.0000
L47	22	CU12PSM9P6XXX(1-1/2)	12.08 - 14.50	1.0000	1.0000
L47	26	Safety Line 3/8	12.08 - 14.50	1.0000	1.0000
L47	28	MP306	12.08 - 14.50	1.0000	1.0000
L47	29	MP306	12.08 - 14.50	1.0000	1.0000
L47	31	MP306	12.08 - 14.50	1.0000	1.0000
L47	32	MP306	12.08 - 14.50	1.0000	1.0000
L47	34	MP306	12.08 - 14.50	1.0000	1.0000
L47	48	6"x1" Flat Reinforcement	12.08 - 14.50	1.0000	1.0000
L47	49	6"x1" Flat Reinforcement	12.08 - 14.50	1.0000	1.0000
L47	50	6"x1" Flat Reinforcement	12.08 - 14.50	1.0000	1.0000
L48	16	LDF7-50A(1-5/8)	11.83 - 12.08	1.0000	1.0000
L48	22	CU12PSM9P6XXX(1-1/2)	11.83 - 12.08	1.0000	1.0000
L48	26	Safety Line 3/8	11.83 - 12.08	1.0000	1.0000
L48	28	MP306	11.83 - 12.08	1.0000	1.0000
L48	29	MP306	11.83 - 12.08	1.0000	1.0000
L48	31	MP306	11.83 - 12.08	1.0000	1.0000
L48	32	MP306	11.83 - 12.08	1.0000	1.0000
L48	34	MP306	11.83 - 12.08	1.0000	1.0000
L48	48	6"x1" Flat Reinforcement	11.83 - 12.08	1.0000	1.0000
L48	49	6"x1" Flat Reinforcement	11.83 - 12.08	1.0000	1.0000
L48	50	6"x1" Flat Reinforcement	11.83 - 12.08	1.0000	1.0000
L49	16	LDF7-50A(1-5/8)	10.00 - 11.83	1.0000	1.0000
L49	22	CU12PSM9P6XXX(1-1/2)	10.00 - 11.83	1.0000	1.0000
L49	26	Safety Line 3/8	10.00 - 11.83	1.0000	1.0000
L49	28	MP306	10.00 - 11.83	1.0000	1.0000
L49	29	MP306	10.00 - 11.83	1.0000	1.0000
L49	31	MP306	10.00 - 11.83	1.0000	1.0000
L49	32	MP306	10.00 - 11.83	1.0000	1.0000
L49	34	MP306	11.33 - 11.83	1.0000	1.0000
L49	48	6"x1" Flat Reinforcement	10.00 - 11.83	1.0000	1.0000
L49	49	6"x1" Flat Reinforcement	10.00 - 11.83	1.0000	1.0000
L49	50	6"x1" Flat Reinforcement	10.00 - 11.83	1.0000	1.0000
L50	16	LDF7-50A(1-5/8)	9.75 - 10.00	1.0000	1.0000
L50	22	CU12PSM9P6XXX(1-1/2)	9.75 - 10.00	1.0000	1.0000
L50	26	Safety Line 3/8	9.75 - 10.00	1.0000	1.0000
L50	28	MP306	9.75 - 10.00	1.0000	1.0000
L50	29	MP306	9.75 - 10.00	1.0000	1.0000
L50	31	MP306	9.75 - 10.00	1.0000	1.0000
L50	32	MP306	9.75 - 10.00	1.0000	1.0000
L50	48	6"x1" Flat Reinforcement	9.75 - 10.00	1.0000	1.0000
L50	49	6"x1" Flat Reinforcement	9.75 - 10.00	1.0000	1.0000
L50	50	6"x1" Flat Reinforcement	9.75 - 10.00	1.0000	1.0000
L51	16	LDF7-50A(1-5/8)	4.75 - 9.75	1.0000	1.0000
L51	22	CU12PSM9P6XXX(1-1/2)	4.75 - 9.75	1.0000	1.0000
L51	26	Safety Line 3/8	4.75 - 9.75	1.0000	1.0000
L51	28	MP306	4.75 - 9.75	1.0000	1.0000
L51	29	MP306	4.75 - 9.75	1.0000	1.0000
L51	31	MP306	4.75 - 9.75	1.0000	1.0000
L51	32	MP306	4.75 - 9.75	1.0000	1.0000
L51	48	6"x1" Flat Reinforcement	8.00 - 9.75	1.0000	1.0000
L51	49	6"x1" Flat Reinforcement	8.00 - 9.75	1.0000	1.0000
L51	50	6"x1" Flat Reinforcement	8.00 - 9.75	1.0000	1.0000

Tower Section	Feed Line Record No.	Description	Feed Line Segment Elev.	K_a No Ice	K_a Ice
L52	16	LDF7-50A(1-5/8)	0.00 - 4.75	1.0000	1.0000
L52	22	CU12PSM9P6XXX(1-1/2)	0.00 - 4.75	1.0000	1.0000
L52	26	Safety Line 3/8	0.00 - 4.75	1.0000	1.0000
L52	28	MP306	0.50 - 4.75	1.0000	1.0000
L52	29	MP306	0.50 - 4.75	1.0000	1.0000
L52	31	MP306	0.50 - 4.75	1.0000	1.0000
L52	32	MP306	0.50 - 4.75	1.0000	1.0000

Effective Width of Flat Linear Attachments / Feed Lines

Tower Section	Attachment Record No.	Description	Attachment Segment Elev.	Ratio Calculation Method	Effective Width Ratio
L1	56	HSS6x6	155.00 - 155.50	Auto	1.0000
L1	57	HSS6x6	155.00 - 155.50	Auto	1.0000
L1	58	HSS6x6	155.00 - 155.50	Auto	1.0000
L2	56	HSS6x6	150.00 - 155.00	Auto	1.0000
L2	57	HSS6x6	150.00 - 155.00	Auto	1.0000
L2	58	HSS6x6	150.00 - 155.00	Auto	1.0000
L3	56	HSS6x6	148.50 - 150.00	Auto	1.0000
L3	57	HSS6x6	148.50 - 150.00	Auto	1.0000
L3	58	HSS6x6	148.50 - 150.00	Auto	1.0000
L4	56	HSS6x6	148.00 - 148.50	Auto	1.0000
L4	57	HSS6x6	148.00 - 148.50	Auto	1.0000
L4	58	HSS6x6	148.00 - 148.50	Auto	1.0000
L5	56	HSS6x6	143.00 - 148.00	Auto	0.3868
L5	57	HSS6x6	143.00 - 148.00	Auto	0.3868
L5	58	HSS6x6	143.00 - 148.00	Auto	0.3868
L6	56	HSS6x6	140.00 - 143.00	Auto	0.3678
L6	57	HSS6x6	140.00 - 143.00	Auto	0.3678
L6	58	HSS6x6	140.00 - 143.00	Auto	0.3678
L13	40	MP304	105.33 - 106.75	Auto	0.0363
L13	41	MP304	105.33 - 106.75	Auto	0.0363
L13	42	MP304	105.33 - 106.75	Auto	0.0363
L14	40	MP304	105.08 - 105.33	Auto	0.0889
L14	41	MP304	105.08 - 105.33	Auto	0.0889

Tower Section	Attachment Record No.	Description	Attachment Segment Elev.	Ratio Calculation Method	Effective Width Ratio
L14	42	MP304	105.08 - 105.33	Auto	0.0889
L15	40	MP304	100.08 - 105.08	Auto	0.0709
L15	41	MP304	100.08 - 105.08	Auto	0.0709
L15	42	MP304	100.08 - 105.08	Auto	0.0709
L16	40	MP304	95.08 - 100.08	Auto	0.0411
L16	41	MP304	95.08 - 100.08	Auto	0.0411
L16	42	MP304	95.08 - 100.08	Auto	0.0411
L17	40	MP304	92.50 - 95.08	Auto	0.0162
L17	41	MP304	92.50 - 95.08	Auto	0.0162
L17	42	MP304	92.50 - 95.08	Auto	0.0162
L17	60	4"x1.25" Flat Reinforcement	92.50 - 94.00	Auto	0.0000
L17	61	4"x1.25" Flat Reinforcement	92.50 - 94.00	Auto	0.0000
L17	62	4"x1.25" Flat Reinforcement	92.50 - 94.00	Auto	0.0000
L18	40	MP304	92.25 - 92.50	Auto	0.0745
L18	41	MP304	92.25 - 92.50	Auto	0.0745
L18	42	MP304	92.25 - 92.50	Auto	0.0745
L18	60	4"x1.25" Flat Reinforcement	92.25 - 92.50	Auto	0.0000
L18	61	4"x1.25" Flat Reinforcement	92.25 - 92.50	Auto	0.0000
L18	62	4"x1.25" Flat Reinforcement	92.25 - 92.50	Auto	0.0000
L19	40	MP304	87.25 - 92.25	Auto	0.0542
L19	41	MP304	87.25 - 92.25	Auto	0.0542
L19	42	MP304	87.25 - 92.25	Auto	0.0542
L19	60	4"x1.25" Flat Reinforcement	87.25 - 92.25	Auto	0.0000
L19	61	4"x1.25" Flat Reinforcement	87.25 - 92.25	Auto	0.0000
L19	62	4"x1.25" Flat Reinforcement	87.25 - 92.25	Auto	0.0000
L20	40	MP304	82.25 - 87.25	Auto	0.0198
L20	41	MP304	82.25 - 87.25	Auto	0.0198
L20	42	MP304	82.25 - 87.25	Auto	0.0198
L20	52	6"x1" Flat Reinforcement	82.25 - 82.50	Auto	0.2078
L20	53	6"x1" Flat Reinforcement	82.25 - 82.50	Auto	0.2078
L20	54	6"x1" Flat Reinforcement	82.25 - 82.50	Auto	0.2078
L20	60	4"x1.25" Flat Reinforcement	82.25 - 87.25	Auto	0.0000
L20	61	4"x1.25" Flat Reinforcement	82.25 - 87.25	Auto	0.0000
L20	62	4"x1.25" Flat Reinforcement	82.25 - 87.25	Auto	0.0000
L21	40	MP304	76.75 - 82.25	Auto	0.0004
L21	41	MP304	76.75 - 82.25	Auto	0.0004
L21	42	MP304	76.75 - 82.25	Auto	0.0004
L21	52	6"x1" Flat Reinforcement	76.75 - 82.25	Auto	0.1942
L21	53	6"x1" Flat Reinforcement	76.75 - 82.25	Auto	0.1942
L21	54	6"x1" Flat Reinforcement	76.75 - 82.25	Auto	0.1942
L21	60	4"x1.25" Flat Reinforcement	79.00 - 82.25	Auto	0.0000
L21	61	4"x1.25" Flat Reinforcement	79.00 - 82.25	Auto	0.0000
L21	62	4"x1.25" Flat Reinforcement	79.00 - 82.25	Auto	0.0000
L22	52	6"x1" Flat Reinforcement	75.75 - 76.75	Auto	0.1274
L22	53	6"x1" Flat Reinforcement	75.75 - 76.75	Auto	0.1274
L22	54	6"x1" Flat Reinforcement	75.75 - 76.75	Auto	0.1274
L23	36	MP305	70.75 - 73.00	Auto	0.0000
L23	37	MP305	70.75 - 73.00	Auto	0.0000
L23	38	MP305	70.75 - 73.00	Auto	0.0000
L23	52	6"x1" Flat Reinforcement	70.75 - 75.75	Auto	0.1131
L23	53	6"x1" Flat Reinforcement	70.75 - 75.75	Auto	0.1131
L23	54	6"x1" Flat Reinforcement	70.75 - 75.75	Auto	0.1131
L24	36	MP305	70.58 - 70.75	Auto	0.0000
L24	37	MP305	70.58 - 70.75	Auto	0.0000
L24	38	MP305	70.58 - 70.75	Auto	0.0000
L24	52	6"x1" Flat Reinforcement	70.58 - 70.75	Auto	0.1009
L24	53	6"x1" Flat Reinforcement	70.58 - 70.75	Auto	0.1009

Tower Section	Attachment Record No.	Description	Attachment Segment Elev.	Ratio Calculation Method	Effective Width Ratio
L24	54	6"x1" Flat Reinforcement	70.58 - 70.75	Auto	0.1009
L25	36	MP305	70.33 - 70.58	Auto	0.0858
L25	37	MP305	70.33 - 70.58	Auto	0.0858
L25	38	MP305	70.33 - 70.58	Auto	0.0858
L25	52	6"x1" Flat Reinforcement	70.33 - 70.58	Auto	0.1879
L25	53	6"x1" Flat Reinforcement	70.33 - 70.58	Auto	0.1879
L25	54	6"x1" Flat Reinforcement	70.33 - 70.58	Auto	0.1879
L26	36	MP305	70.00 - 70.33	Auto	0.0842
L26	37	MP305	70.00 - 70.33	Auto	0.0842
L26	38	MP305	70.00 - 70.33	Auto	0.0842
L26	52	6"x1" Flat Reinforcement	70.00 - 70.33	Auto	0.1865
L26	53	6"x1" Flat Reinforcement	70.00 - 70.33	Auto	0.1865
L26	54	6"x1" Flat Reinforcement	70.00 - 70.33	Auto	0.1865
L27	36	MP305	69.75 - 70.00	Auto	0.0000
L27	37	MP305	69.75 - 70.00	Auto	0.0000
L27	38	MP305	69.75 - 70.00	Auto	0.0000
L27	52	6"x1" Flat Reinforcement	69.75 - 70.00	Auto	0.0971
L27	53	6"x1" Flat Reinforcement	69.75 - 70.00	Auto	0.0971
L27	54	6"x1" Flat Reinforcement	69.75 - 70.00	Auto	0.0971
L28	36	MP305	64.75 - 69.75	Auto	0.0000
L28	37	MP305	64.75 - 69.75	Auto	0.0000
L28	38	MP305	64.75 - 69.75	Auto	0.0000
L28	52	6"x1" Flat Reinforcement	67.50 - 69.75	Auto	0.0912
L28	53	6"x1" Flat Reinforcement	67.50 - 69.75	Auto	0.0912
L28	54	6"x1" Flat Reinforcement	67.50 - 69.75	Auto	0.0912
L29	36	MP305	59.75 - 64.75	Auto	0.0000
L29	37	MP305	59.75 - 64.75	Auto	0.0000
L29	38	MP305	59.75 - 64.75	Auto	0.0000
L30	36	MP305	54.75 - 59.75	Auto	0.0000
L30	37	MP305	54.75 - 59.75	Auto	0.0000
L30	38	MP305	54.75 - 59.75	Auto	0.0000
L31	36	MP305	49.75 - 54.75	Auto	0.0000
L31	37	MP305	49.75 - 54.75	Auto	0.0000
L31	38	MP305	49.75 - 54.75	Auto	0.0000
L32	36	MP305	43.00 - 49.75	Auto	0.0000
L32	37	MP305	43.00 - 49.75	Auto	0.0000
L32	38	MP305	43.00 - 49.75	Auto	0.0000
L32	44	6.5"x1.25" Flat Reinforcement	43.00 - 49.50	Auto	0.0629
L32	45	6.5"x1.25" Flat Reinforcement	43.00 - 49.50	Auto	0.0629
L32	46	6.5"x1.25" Flat Reinforcement	43.00 - 49.50	Auto	0.0629
L33	44	6.5"x1.25" Flat Reinforcement	42.00 - 43.00	Auto	0.0837
L33	45	6.5"x1.25" Flat Reinforcement	42.00 - 43.00	Auto	0.0837
L33	46	6.5"x1.25" Flat Reinforcement	42.00 - 43.00	Auto	0.0837
L34	44	6.5"x1.25" Flat Reinforcement	37.00 - 42.00	Auto	0.0706
L34	45	6.5"x1.25" Flat Reinforcement	37.00 - 42.00	Auto	0.0706
L34	46	6.5"x1.25" Flat Reinforcement	37.00 - 42.00	Auto	0.0706
L35	44	6.5"x1.25" Flat Reinforcement	32.00 - 37.00	Auto	0.0486
L35	45	6.5"x1.25" Flat Reinforcement	32.00 - 37.00	Auto	0.0486
L35	46	6.5"x1.25" Flat Reinforcement	32.00 - 37.00	Auto	0.0486

Tower Section	Attachment Record No.	Description	Attachment Segment Elev.	Ratio Calculation Method	Effective Width Ratio
L36	31	MP306	27.91 - 30.50	Auto	0.0806
L36	32	MP306	27.91 - 30.50	Auto	0.0806
L36	34	MP306	27.91 - 31.33	Auto	0.0823
L36	44	6.5"x1.25" Flat Reinforcement	27.91 - 32.00	Auto	0.0287
L36	45	6.5"x1.25" Flat Reinforcement	27.91 - 32.00	Auto	0.0287
L36	46	6.5"x1.25" Flat Reinforcement	27.91 - 32.00	Auto	0.0287
L37	31	MP306	27.66 - 27.91	Auto	0.1354
L37	32	MP306	27.66 - 27.91	Auto	0.1354
L37	34	MP306	27.66 - 27.91	Auto	0.1354
L37	44	6.5"x1.25" Flat Reinforcement	27.66 - 27.91	Auto	0.0835
L37	45	6.5"x1.25" Flat Reinforcement	27.66 - 27.91	Auto	0.0835
L37	46	6.5"x1.25" Flat Reinforcement	27.66 - 27.91	Auto	0.0835
L38	31	MP306	27.25 - 27.66	Auto	0.1340
L38	32	MP306	27.25 - 27.66	Auto	0.1340
L38	34	MP306	27.25 - 27.66	Auto	0.1340
L38	44	6.5"x1.25" Flat Reinforcement	27.25 - 27.66	Auto	0.0820
L38	45	6.5"x1.25" Flat Reinforcement	27.25 - 27.66	Auto	0.0820
L38	46	6.5"x1.25" Flat Reinforcement	27.25 - 27.66	Auto	0.0820
L39	31	MP306	26.98 - 27.25	Auto	0.1326
L39	32	MP306	26.98 - 27.25	Auto	0.1326
L39	34	MP306	26.98 - 27.25	Auto	0.1326
L39	44	6.5"x1.25" Flat Reinforcement	26.98 - 27.25	Auto	0.0805
L39	45	6.5"x1.25" Flat Reinforcement	26.98 - 27.25	Auto	0.0805
L39	46	6.5"x1.25" Flat Reinforcement	26.98 - 27.25	Auto	0.0805
L40	31	MP306	26.83 - 26.98	Auto	0.1285
L40	32	MP306	26.83 - 26.98	Auto	0.1285
L40	34	MP306	26.83 - 26.98	Auto	0.1285
L40	44	6.5"x1.25" Flat Reinforcement	26.83 - 26.98	Auto	0.0762
L40	45	6.5"x1.25" Flat Reinforcement	26.83 - 26.98	Auto	0.0762
L40	46	6.5"x1.25" Flat Reinforcement	26.83 - 26.98	Auto	0.0762
L41	31	MP306	21.83 - 26.83	Auto	0.1179
L41	32	MP306	21.83 - 26.83	Auto	0.1179
L41	34	MP306	21.83 - 26.83	Auto	0.1179
L41	44	6.5"x1.25" Flat Reinforcement	24.50 - 26.83	Auto	0.0708
L41	45	6.5"x1.25" Flat Reinforcement	24.50 - 26.83	Auto	0.0708
L41	46	6.5"x1.25" Flat Reinforcement	24.50 - 26.83	Auto	0.0708
L42	31	MP306	16.83 - 21.83	Auto	0.0972
L42	32	MP306	16.83 - 21.83	Auto	0.0972
L42	34	MP306	16.83 - 21.83	Auto	0.0972
L42	48	6"x1" Flat Reinforcement	16.83 - 18.00	Auto	0.0000
L42	49	6"x1" Flat Reinforcement	16.83 - 18.00	Auto	0.0000
L42	50	6"x1" Flat Reinforcement	16.83 - 18.00	Auto	0.0000
L43	31	MP306	16.00 - 16.83	Auto	0.0851

Tower Section	Attachment Record No.	Description	Attachment Segment Elev.	Ratio Calculation Method	Effective Width Ratio
L43	32	MP306	16.00 - 16.83	Auto	0.0851
L43	34	MP306	16.00 - 16.83	Auto	0.0851
L43	48	6"x1" Flat Reinforcement	16.00 - 16.83	Auto	0.0000
L43	49	6"x1" Flat Reinforcement	16.00 - 16.83	Auto	0.0000
L43	50	6"x1" Flat Reinforcement	16.00 - 16.83	Auto	0.0000
L44	31	MP306	15.75 - 16.00	Auto	0.1212
L44	32	MP306	15.75 - 16.00	Auto	0.1212
L44	34	MP306	15.75 - 16.00	Auto	0.1212
L44	48	6"x1" Flat Reinforcement	15.75 - 16.00	Auto	0.0000
L44	49	6"x1" Flat Reinforcement	15.75 - 16.00	Auto	0.0000
L44	50	6"x1" Flat Reinforcement	15.75 - 16.00	Auto	0.0000
L45	28	MP306	14.75 - 15.50	Auto	0.1181
L45	29	MP306	14.75 - 15.50	Auto	0.1181
L45	31	MP306	14.75 - 15.75	Auto	0.1186
L45	32	MP306	14.75 - 15.75	Auto	0.1186
L45	34	MP306	14.75 - 15.75	Auto	0.1186
L45	48	6"x1" Flat Reinforcement	14.75 - 15.75	Auto	0.0000
L45	49	6"x1" Flat Reinforcement	14.75 - 15.75	Auto	0.0000
L45	50	6"x1" Flat Reinforcement	14.75 - 15.75	Auto	0.0000
L46	28	MP306	14.50 - 14.75	Auto	0.0330
L46	29	MP306	14.50 - 14.75	Auto	0.0330
L46	31	MP306	14.50 - 14.75	Auto	0.0330
L46	32	MP306	14.50 - 14.75	Auto	0.0330
L46	34	MP306	14.50 - 14.75	Auto	0.0330
L46	48	6"x1" Flat Reinforcement	14.50 - 14.75	Auto	0.0000
L46	49	6"x1" Flat Reinforcement	14.50 - 14.75	Auto	0.0000
L46	50	6"x1" Flat Reinforcement	14.50 - 14.75	Auto	0.0000
L47	28	MP306	12.08 - 14.50	Auto	0.0275
L47	29	MP306	12.08 - 14.50	Auto	0.0275
L47	31	MP306	12.08 - 14.50	Auto	0.0275
L47	32	MP306	12.08 - 14.50	Auto	0.0275
L47	34	MP306	12.08 - 14.50	Auto	0.0275
L47	48	6"x1" Flat Reinforcement	12.08 - 14.50	Auto	0.0000
L47	49	6"x1" Flat Reinforcement	12.08 - 14.50	Auto	0.0000
L47	50	6"x1" Flat Reinforcement	12.08 - 14.50	Auto	0.0000
L48	28	MP306	11.83 - 12.08	Auto	0.0858
L48	29	MP306	11.83 - 12.08	Auto	0.0858
L48	31	MP306	11.83 - 12.08	Auto	0.0858
L48	32	MP306	11.83 - 12.08	Auto	0.0858
L48	34	MP306	11.83 - 12.08	Auto	0.0858
L48	48	6"x1" Flat Reinforcement	11.83 - 12.08	Auto	0.0000
L48	49	6"x1" Flat Reinforcement	11.83 - 12.08	Auto	0.0000
L48	50	6"x1" Flat Reinforcement	11.83 - 12.08	Auto	0.0000
L49	28	MP306	10.00 - 11.83	Auto	0.0815
L49	29	MP306	10.00 - 11.83	Auto	0.0815
L49	31	MP306	10.00 - 11.83	Auto	0.0815
L49	32	MP306	10.00 - 11.83	Auto	0.0815
L49	34	MP306	11.33 - 11.83	Auto	0.0843
L49	48	6"x1" Flat Reinforcement	10.00 - 11.83	Auto	0.0000
L49	49	6"x1" Flat Reinforcement	10.00 - 11.83	Auto	0.0000
L49	50	6"x1" Flat Reinforcement	10.00 - 11.83	Auto	0.0000
L50	28	MP306	9.75 - 10.00	Auto	0.0772
L50	29	MP306	9.75 - 10.00	Auto	0.0772
L50	31	MP306	9.75 - 10.00	Auto	0.0772
L50	32	MP306	9.75 - 10.00	Auto	0.0772
L50	48	6"x1" Flat Reinforcement	9.75 - 10.00	Auto	0.0000
L50	49	6"x1" Flat Reinforcement	9.75 - 10.00	Auto	0.0000
L50	50	6"x1" Flat Reinforcement	9.75 - 10.00	Auto	0.0000
L51	28	MP306	4.75 - 9.75	Auto	0.0632
L51	29	MP306	4.75 - 9.75	Auto	0.0632
L51	31	MP306	4.75 - 9.75	Auto	0.0632

Tower Section	Attachment Record No.	Description	Attachment Segment Elev.	Ratio Calculation Method	Effective Width Ratio
L51	32	MP306	4.75 - 9.75	Auto	0.0632
L51	48	6"x1" Flat Reinforcement	8.00 - 9.75	Auto	0.0000
L51	49	6"x1" Flat Reinforcement	8.00 - 9.75	Auto	0.0000
L51	50	6"x1" Flat Reinforcement	8.00 - 9.75	Auto	0.0000
L52	28	MP306	0.50 - 4.75	Auto	0.0408
L52	29	MP306	0.50 - 4.75	Auto	0.0408
L52	31	MP306	0.50 - 4.75	Auto	0.0408
L52	32	MP306	0.50 - 4.75	Auto	0.0408

Discrete Tower Loads

Description	Face or Leg	Offset Type	Offsets: Horz Lateral Vert ft ft ft	Azimuth Adjustment °	Placement ft		C_AA_A Front ft^2	C_AA_A Side ft^2	Weight K
800 10121 w/ Mount Pipe	A	From Leg	4.000 0.000 1.000	0.000	157.000	No Ice 1/2" Ice 1" Ice	3.600 4.000 4.420	2.950 3.340 3.740	0.072 0.115 0.166
800 10121 w/ Mount Pipe	B	From Leg	4.000 0.000 1.000	0.000	157.000	No Ice 1/2" Ice 1" Ice	3.600 4.000 4.420	2.950 3.340 3.740	0.072 0.115 0.166
800 10121 w/ Mount Pipe	C	From Leg	4.000 0.000 1.000	0.000	157.000	No Ice 1/2" Ice 1" Ice	3.600 4.000 4.420	2.950 3.340 3.740	0.072 0.115 0.166
HPA-85R-BUU-H8 w/ Mount Pipe	A	From Leg	4.000 0.000 1.000	0.000	157.000	No Ice 1/2" Ice 1" Ice	12.040 12.990 13.970	8.130 9.040 9.970	0.100 0.188 0.289
HPA-85R-BUU-H8 w/ Mount Pipe	B	From Leg	4.000 0.000 1.000	0.000	157.000	No Ice 1/2" Ice 1" Ice	12.040 12.990 13.970	8.130 9.040 9.970	0.100 0.188 0.289
HPA-85R-BUU-H8 w/ Mount Pipe	C	From Leg	4.000 0.000 1.000	0.000	157.000	No Ice 1/2" Ice 1" Ice	12.040 12.990 13.970	8.130 9.040 9.970	0.100 0.188 0.289
TPA-65R-LCUUUU-H8-K w/ Mount Pipe	A	From Leg	4.000 0.000 1.000	0.000	157.000	No Ice 1/2" Ice 1" Ice	11.850 12.770 13.710	8.990 9.880 10.790	0.127 0.223 0.332
TPA-65R-LCUUUU-H8-K w/ Mount Pipe	B	From Leg	4.000 0.000 1.000	0.000	157.000	No Ice 1/2" Ice 1" Ice	11.850 12.770 13.710	8.990 9.880 10.790	0.127 0.223 0.332
TPA-65R-LCUUUU-H8-K w/ Mount Pipe	C	From Leg	4.000 0.000 1.000	0.000	157.000	No Ice 1/2" Ice 1" Ice	11.850 12.770 13.710	8.990 9.880 10.790	0.127 0.223 0.332
80010966 w/ Mount Pipe	A	From Leg	4.000 0.000 1.000	0.000	157.000	No Ice 1/2" Ice 1" Ice	14.610 15.470 16.350	6.840 7.630 8.420	0.159 0.267 0.389
80010966 w/ Mount Pipe	B	From Leg	4.000 0.000 1.000	0.000	157.000	No Ice 1/2" Ice 1" Ice	14.610 15.470 16.350	6.840 7.630 8.420	0.159 0.267 0.389
80010966 w/ Mount Pipe	C	From Leg	4.000 0.000 1.000	0.000	157.000	No Ice 1/2" Ice 1" Ice	14.610 15.470 16.350	6.840 7.630 8.420	0.159 0.267 0.389
(2) LGP21401	A	From Leg	4.000 0.000 1.000	0.000	157.000	No Ice 1/2" Ice 1" Ice	1.104 1.239 1.381	0.207 0.274 0.348	0.014 0.021 0.030

Description	Face or Leg	Offset Type	Offsets: Horz Lateral ft / Vert ft / ft	Azimuth Adjustment °	Placement ft		C_AA_A Front ft^2	C_AA_A Side ft^2	Weight K
(4) LGP21401	B	From Leg	4.000	0.000	157.000	No Ice	1.104	0.207	0.014
			0.000			1/2" Ice	1.239	0.274	0.021
			1.000			1" Ice	1.381	0.348	0.030
RRUS 32	A	From Leg	4.000	0.000	157.000	No Ice	2.857	1.777	0.055
			0.000			1/2" Ice	3.083	1.968	0.077
			1.000			1" Ice	3.316	2.166	0.103
RRUS 32	B	From Leg	4.000	0.000	157.000	No Ice	2.857	1.777	0.055
			0.000			1/2" Ice	3.083	1.968	0.077
			1.000			1" Ice	3.316	2.166	0.103
RRUS 32	C	From Leg	4.000	0.000	157.000	No Ice	2.857	1.777	0.055
			0.000			1/2" Ice	3.083	1.968	0.077
			1.000			1" Ice	3.316	2.166	0.103
(2) DC6-48-60-18-8F	A	From Leg	2.000	0.000	157.000	No Ice	0.859	0.859	0.019
			0.000			1/2" Ice	1.371	1.371	0.036
			1.000			1" Ice	1.548	1.548	0.055
(2) DC6-48-60-18-8F	C	From Leg	2.000	0.000	157.000	No Ice	0.859	0.859	0.019
			0.000			1/2" Ice	1.371	1.371	0.036
			1.000			1" Ice	1.548	1.548	0.055
RRUS-11	A	From Leg	4.000	0.000	157.000	No Ice	2.784	1.187	0.048
			0.000			1/2" Ice	2.992	1.334	0.068
			1.000			1" Ice	3.207	1.490	0.092
RRUS-11	B	From Leg	4.000	0.000	157.000	No Ice	2.784	1.187	0.048
			0.000			1/2" Ice	2.992	1.334	0.068
			1.000			1" Ice	3.207	1.490	0.092
RRUS-11	C	From Leg	4.000	0.000	157.000	No Ice	2.784	1.187	0.048
			0.000			1/2" Ice	2.992	1.334	0.068
			1.000			1" Ice	3.207	1.490	0.092
(3) RRUS 4449 B5/B12	A	From Leg	4.000	0.000	157.000	No Ice	1.968	1.408	0.071
			0.000			1/2" Ice	2.144	1.564	0.090
			1.000			1" Ice	2.328	1.727	0.111
(3) RRUS 4478 B14	B	From Leg	4.000	0.000	157.000	No Ice	1.843	1.059	0.060
			0.000			1/2" Ice	2.012	1.197	0.076
			1.000			1" Ice	2.190	1.342	0.094
(2) RRUS 8843 B2/B66A	B	From Leg	4.000	0.000	157.000	No Ice	1.639	1.353	0.072
			0.000			1/2" Ice	1.799	1.500	0.090
			1.000			1" Ice	1.966	1.655	0.110
RRUS 8843 B2/B66A	C	From Leg	4.000	0.000	157.000	No Ice	1.639	1.353	0.072
			0.000			1/2" Ice	1.799	1.500	0.090
			1.000			1" Ice	1.966	1.655	0.110
5' x 2" Pipe Mount	A	From Leg	4.000	0.000	157.000	No Ice	1.188	1.188	0.018
			0.000			1/2" Ice	1.496	1.496	0.027
			0.000			1" Ice	1.807	1.807	0.040
5' x 2" Pipe Mount	B	From Leg	4.000	0.000	157.000	No Ice	1.188	1.188	0.018
			0.000			1/2" Ice	1.496	1.496	0.027
			0.000			1" Ice	1.807	1.807	0.040
5' x 2" Pipe Mount	C	From Leg	4.000	0.000	157.000	No Ice	1.188	1.188	0.018
			0.000			1/2" Ice	1.496	1.496	0.027
			0.000			1" Ice	1.807	1.807	0.040
5' x 2" Pipe Mount	A	From Leg	2.000	0.000	157.000	No Ice	1.188	1.188	0.018
			0.000			1/2" Ice	1.496	1.496	0.027
			0.000			1" Ice	1.807	1.807	0.040
5' x 2" Pipe Mount	B	From Leg	2.000	0.000	157.000	No Ice	1.188	1.188	0.018
			0.000			1/2" Ice	1.496	1.496	0.027
			0.000			1" Ice	1.807	1.807	0.040
Sector Mount [SM 503-3]	C	None		0.000	157.000	No Ice	30.430	30.430	1.690
						1/2" Ice	43.020	43.020	2.296
						1" Ice	55.430	55.430	3.097

Description	Face or Leg	Offset Type	Offsets: Horz Lateral ft / Vert ft	Azimuth Adjustment °	Placement ft		C_AA_A Front ft^2	C_AA_A Side ft^2	Weight K
Pipe Mount [PM 601-3]	C	None		0.000	157.000	No Ice	3.170	3.170	0.195
						1/2" Ice	3.790	3.790	0.232
						1" Ice	4.420	4.420	0.279
(2) Side Arm Mount [SO 102-3]	C	None		0.000	157.000	No Ice	3.600	3.600	0.075
						1/2" Ice	4.180	4.180	0.105
						1" Ice	4.750	4.750	0.135
*									
*									
AIR6449 B41_T-MOBILE w/ Mount Pipe	A	From Leg	4.000 0.000 0.000	0.000	148.000	No Ice 1/2" Ice 1" Ice	5.190 5.590 6.020	2.710 3.040 3.380	0.128 0.174 0.227
AIR6449 B41_T-MOBILE w/ Mount Pipe	B	From Leg	4.000 0.000 0.000	0.000	148.000	No Ice 1/2" Ice 1" Ice	5.190 5.590 6.020	2.710 3.040 3.380	0.128 0.174 0.227
AIR6449 B41_T-MOBILE w/ Mount Pipe	C	From Leg	4.000 0.000 0.000	0.000	148.000	No Ice 1/2" Ice 1" Ice	5.190 5.590 6.020	2.710 3.040 3.380	0.128 0.174 0.227
APXVAALL24_43-U-NA20 _TMO w/ Mount Pipe	A	From Leg	4.000 0.000 0.000	0.000	148.000	No Ice 1/2" Ice 1" Ice	14.690 15.460 16.230	6.870 7.550 8.250	0.183 0.311 0.453
APXVAALL24_43-U-NA20 _TMO w/ Mount Pipe	B	From Leg	4.000 0.000 0.000	0.000	148.000	No Ice 1/2" Ice 1" Ice	14.690 15.460 16.230	6.870 7.550 8.250	0.183 0.311 0.453
APXVAALL24_43-U-NA20 _TMO w/ Mount Pipe	C	From Leg	4.000 0.000 0.000	0.000	148.000	No Ice 1/2" Ice 1" Ice	14.690 15.460 16.230	6.870 7.550 8.250	0.183 0.311 0.453
APX16DWV-16DWV-S-E-A 20 w/ Mount Pipe	A	From Leg	4.000 0.000 0.000	0.000	148.000	No Ice 1/2" Ice 1" Ice	6.290 6.860 7.450	2.760 3.270 3.790	0.061 0.105 0.157
APX16DWV-16DWV-S-E-A 20 w/ Mount Pipe	B	From Leg	4.000 0.000 0.000	0.000	148.000	No Ice 1/2" Ice 1" Ice	6.290 6.860 7.450	2.760 3.270 3.790	0.061 0.105 0.157
APX16DWV-16DWV-S-E-A 20 w/ Mount Pipe	C	From Leg	4.000 0.000 0.000	0.000	148.000	No Ice 1/2" Ice 1" Ice	6.290 6.860 7.450	2.760 3.270 3.790	0.061 0.105 0.157
RADIO 4480 B71_TMO	A	From Leg	4.000 0.000 0.000	0.000	148.000	No Ice 1/2" Ice 1" Ice	2.852 3.064 3.284	1.383 1.543 1.710	0.093 0.114 0.139
RADIO 4480 B71_TMO	B	From Leg	4.000 0.000 0.000	0.000	148.000	No Ice 1/2" Ice 1" Ice	2.852 3.064 3.284	1.383 1.543 1.710	0.093 0.114 0.139
RADIO 4480 B71_TMO	C	From Leg	4.000 0.000 0.000	0.000	148.000	No Ice 1/2" Ice 1" Ice	2.852 3.064 3.284	1.383 1.543 1.710	0.093 0.114 0.139
RADIO 4460 B2/B25 B66_TMO	A	From Leg	4.000 0.000 0.000	0.000	148.000	No Ice 1/2" Ice 1" Ice	2.139 2.321 2.511	1.686 1.850 2.022	0.109 0.131 0.156
RADIO 4460 B2/B25 B66_TMO	B	From Leg	4.000 0.000 0.000	0.000	148.000	No Ice 1/2" Ice 1" Ice	2.139 2.321 2.511	1.686 1.850 2.022	0.109 0.131 0.156
RADIO 4460 B2/B25 B66_TMO	C	From Leg	4.000 0.000 0.000	0.000	148.000	No Ice 1/2" Ice 1" Ice	2.139 2.321 2.511	1.686 1.850 2.022	0.109 0.131 0.156
Platform Mount [LP 1201-1_HR-1]	C	None		0.000	148.000	No Ice 1/2" Ice 1" Ice	26.390 31.400 36.200	26.390 31.400 36.200	2.356 3.061 3.864
(2) L3x3x1/4x6'	A	From Leg	2.000	0.000	145.000	No Ice	1.800	0.008	0.070

Description	Face or Leg	Offset Type	Offsets: Horz Lateral ft	Offsets: Horz Lateral ft	Offsets: Vert ft	Azimuth Adjustment °	Placement ft		C_AA_A Front ft^2	C_AA_A Side ft^2	Weight K
			0.000					1/2" Ice	2.220	0.030	0.080
			0.000					1" Ice	2.648	0.058	0.095
(2) L3x3x1/4x6'	B	From Leg	2.000		0.000	0.000	145.000	No Ice	1.800	0.008	0.070
			0.000					1/2" Ice	2.220	0.030	0.080
			0.000					1" Ice	2.648	0.058	0.095
(2) L3x3x1/4x6'	C	From Leg	2.000		0.000	0.000	145.000	No Ice	1.800	0.008	0.070
			0.000					1/2" Ice	2.220	0.030	0.080
			0.000					1" Ice	2.648	0.058	0.095
Side Arm Mount [SO 102-3]	C	None				0.000	145.000	No Ice	3.600	3.600	0.075
								1/2" Ice	4.180	4.180	0.105
								1" Ice	4.750	4.750	0.135
Miscellaneous [NA 507-1]	C	None				0.000	145.000	No Ice	4.560	4.560	0.245
								1/2" Ice	6.390	6.390	0.311
								1" Ice	8.180	8.180	0.402
*											
(2) NNHH-65B-R4 w/ Mount Pipe	A	From Leg	4.000		0.000	0.000	138.000	No Ice	7.550	4.230	0.110
			0.000					1/2" Ice	8.040	4.670	0.197
			0.000					1" Ice	8.530	5.120	0.296
(2) NNHH-65B-R4 w/ Mount Pipe	B	From Leg	4.000		0.000	0.000	138.000	No Ice	7.550	4.230	0.110
			0.000					1/2" Ice	8.040	4.670	0.197
			0.000					1" Ice	8.530	5.120	0.296
(2) NNHH-65B-R4 w/ Mount Pipe	C	From Leg	4.000		0.000	0.000	138.000	No Ice	7.550	4.230	0.110
			0.000					1/2" Ice	8.040	4.670	0.197
			0.000					1" Ice	8.530	5.120	0.296
KS24019-L112A w/Mount Pipe	C	From Leg	4.000		0.000	0.000	138.000	No Ice	1.407	1.566	0.027
			0.000					1/2" Ice	1.909	2.123	0.044
			4.000					1" Ice	2.301	2.556	0.065
RFV01U-D1A	A	From Leg	4.000		0.000	0.000	138.000	No Ice	1.875	1.250	0.084
			0.000					1/2" Ice	2.045	1.393	0.103
			0.000					1" Ice	2.223	1.543	0.124
RFV01U-D1A	B	From Leg	4.000		0.000	0.000	138.000	No Ice	1.875	1.250	0.084
			0.000					1/2" Ice	2.045	1.393	0.103
			0.000					1" Ice	2.223	1.543	0.124
RFV01U-D1A	C	From Leg	4.000		0.000	0.000	138.000	No Ice	1.875	1.250	0.084
			0.000					1/2" Ice	2.045	1.393	0.103
			0.000					1" Ice	2.223	1.543	0.124
RVZDC-6627-PF-48	A	From Leg	4.000		0.000	0.000	138.000	No Ice	3.792	2.514	0.032
			0.000					1/2" Ice	4.044	2.727	0.063
			0.000					1" Ice	4.303	2.947	0.099
RFV01U-D2A	A	From Leg	4.000		0.000	0.000	138.000	No Ice	1.875	1.013	0.070
			0.000					1/2" Ice	2.045	1.145	0.087
			0.000					1" Ice	2.223	1.284	0.106
RFV01U-D2A	B	From Leg	4.000		0.000	0.000	138.000	No Ice	1.875	1.013	0.070
			0.000					1/2" Ice	2.045	1.145	0.087
			0.000					1" Ice	2.223	1.284	0.106
RFV01U-D2A	C	From Leg	4.000		0.000	0.000	138.000	No Ice	1.875	1.013	0.070
			0.000					1/2" Ice	2.045	1.145	0.087
			0.000					1" Ice	2.223	1.284	0.106
CBRS w/ Mount Pipe	A	From Leg	4.000		0.000	0.000	138.000	No Ice	1.450	0.990	0.032
			0.000					1/2" Ice	1.670	1.180	0.048
			0.000					1" Ice	1.900	1.390	0.068
CBRS w/ Mount Pipe	B	From Leg	4.000		0.000	0.000	138.000	No Ice	1.450	0.990	0.032
			0.000					1/2" Ice	1.670	1.180	0.048
			0.000					1" Ice	1.900	1.390	0.068
CBRS w/ Mount Pipe	C	From Leg	4.000		0.000	0.000	138.000	No Ice	1.450	0.990	0.032
			0.000					1/2" Ice	1.670	1.180	0.048
			0.000					1" Ice	1.900	1.390	0.068

Description	Face or Leg	Offset Type	Offsets: Horz Lateral ft / Vert ft	Azimuth Adjustment °	Placement ft		C_AA_A Front ft^2	C_AA_A Side ft^2	Weight K
MT6407-77A w/ Mount Pipe	A	From Leg	4.000	0.000	138.000	No Ice	4.907	2.682	0.096
			0.000			1/2" Ice	5.256	3.145	0.136
			0.000			1" Ice	5.615	3.624	0.180
MT6407-77A w/ Mount Pipe	B	From Leg	4.000	0.000	138.000	No Ice	4.907	2.682	0.096
			0.000			1/2" Ice	5.256	3.145	0.136
			0.000			1" Ice	5.615	3.624	0.180
MT6407-77A w/ Mount Pipe	C	From Leg	4.000	0.000	138.000	No Ice	4.907	2.682	0.096
			0.000			1/2" Ice	5.256	3.145	0.136
			0.000			1" Ice	5.615	3.624	0.180
Platform Mount [LP 303-1_KCKR-HR-1]	C	None		0.000	138.000	No Ice	28.310	28.310	1.770
						1/2" Ice	35.690	35.690	2.297
						1" Ice	43.110	43.110	2.943
Mount Reinforcement Specifications	C	None		0.000	138.000	No Ice	28.630	28.630	0.280
						1/2" Ice	37.310	37.310	0.670
						1" Ice	45.800	45.800	0.940
*									
ERICSSON AIR 21 B2A B4P w/ Mount Pipe	A	From Leg	4.000	0.000	127.000	No Ice	3.140	2.590	0.112
			0.000			1/2" Ice	3.450	2.880	0.164
			2.000			1" Ice	3.770	3.190	0.225
ERICSSON AIR 21 B2A B4P w/ Mount Pipe	B	From Leg	4.000	0.000	127.000	No Ice	3.140	2.590	0.112
			0.000			1/2" Ice	3.450	2.880	0.164
			2.000			1" Ice	3.770	3.190	0.225
ERICSSON AIR 21 B2A B4P w/ Mount Pipe	C	From Leg	4.000	0.000	127.000	No Ice	3.140	2.590	0.112
			0.000			1/2" Ice	3.450	2.880	0.164
			2.000			1" Ice	3.770	3.190	0.225
KRY 112 144/1	A	From Leg	4.000	0.000	127.000	No Ice	0.350	0.175	0.011
			0.000			1/2" Ice	0.426	0.234	0.014
			2.000			1" Ice	0.509	0.301	0.019
KRY 112 144/1	B	From Leg	4.000	0.000	127.000	No Ice	0.350	0.175	0.011
			0.000			1/2" Ice	0.426	0.234	0.014
			2.000			1" Ice	0.509	0.301	0.019
KRY 112 144/1	C	From Leg	4.000	0.000	127.000	No Ice	0.350	0.175	0.011
			0.000			1/2" Ice	0.426	0.234	0.014
			2.000			1" Ice	0.509	0.301	0.019
APXVAARR24_43-U-NA20 w/ Mount Pipe	A	From Leg	4.000	0.000	127.000	No Ice	14.690	6.870	0.186
			0.000			1/2" Ice	15.460	7.550	0.315
			2.000			1" Ice	16.230	8.250	0.458
APXVAARR24_43-U-NA20 w/ Mount Pipe	B	From Leg	4.000	0.000	127.000	No Ice	14.690	6.870	0.186
			0.000			1/2" Ice	15.460	7.550	0.315
			2.000			1" Ice	16.230	8.250	0.458
APXVAARR24_43-U-NA20 w/ Mount Pipe	C	From Leg	4.000	0.000	127.000	No Ice	14.690	6.870	0.186
			0.000			1/2" Ice	15.460	7.550	0.315
			2.000			1" Ice	16.230	8.250	0.458
AIR -32 B2A/B66AA w/ Mount Pipe	A	From Leg	4.000	0.000	127.000	No Ice	3.760	3.150	0.194
			0.000			1/2" Ice	4.120	3.490	0.252
			2.000			1" Ice	4.480	3.840	0.320
AIR -32 B2A/B66AA w/ Mount Pipe	B	From Leg	4.000	0.000	127.000	No Ice	3.760	3.150	0.194
			0.000			1/2" Ice	4.120	3.490	0.252
			2.000			1" Ice	4.480	3.840	0.320
AIR -32 B2A/B66AA w/ Mount Pipe	C	From Leg	4.000	0.000	127.000	No Ice	3.760	3.150	0.194
			0.000			1/2" Ice	4.120	3.490	0.252
			2.000			1" Ice	4.480	3.840	0.320
RADIO 4449 B12/B71	A	From Leg	4.000	0.000	127.000	No Ice	1.650	1.163	0.074
			0.000			1/2" Ice	1.810	1.301	0.090
			2.000			1" Ice	1.978	1.447	0.109
RADIO 4449 B12/B71	B	From Leg	4.000	0.000	127.000	No Ice	1.650	1.163	0.074
			0.000			1/2" Ice	1.810	1.301	0.090

Description	Face or Leg	Offset Type	Offsets: Horz Lateral ft / Vert ft / ft	Azimuth Adjustment °	Placement ft		C_AA_A Front ft^2	C_AA_A Side ft^2	Weight K
			2.000			1" Ice	1.978	1.447	0.109
RADIO 4449 B12/B71	C	From Leg	4.000	0.000	127.000	No Ice	1.650	1.163	0.074
			0.000			1/2" Ice	1.810	1.301	0.090
			2.000			1" Ice	1.978	1.447	0.109
Platform Mount [LP 1201-1]	C	None		0.000	127.000	No Ice	18.380	18.380	2.100
						1/2" Ice	22.110	22.110	2.652
						1" Ice	25.870	25.870	3.263
*									
*									
MX08FRO665-21 w/ Mount Pipe	A	From Leg	4.000	0.000	119.000	No Ice	8.010	4.230	0.108
			0.000			1/2" Ice	8.520	4.690	0.194
			0.000			1" Ice	9.040	5.160	0.292
MX08FRO665-21 w/ Mount Pipe	B	From Leg	4.000	0.000	119.000	No Ice	8.010	4.230	0.108
			0.000			1/2" Ice	8.520	4.690	0.194
			0.000			1" Ice	9.040	5.160	0.292
MX08FRO665-21 w/ Mount Pipe	C	From Leg	4.000	0.000	119.000	No Ice	8.010	4.230	0.108
			0.000			1/2" Ice	8.520	4.690	0.194
			0.000			1" Ice	9.040	5.160	0.292
TA08025-B605	A	From Leg	4.000	0.000	119.000	No Ice	1.964	1.129	0.075
			0.000			1/2" Ice	2.138	1.267	0.093
			0.000			1" Ice	2.320	1.411	0.114
TA08025-B605	B	From Leg	4.000	0.000	119.000	No Ice	1.964	1.129	0.075
			0.000			1/2" Ice	2.138	1.267	0.093
			0.000			1" Ice	2.320	1.411	0.114
TA08025-B605	C	From Leg	4.000	0.000	119.000	No Ice	1.964	1.129	0.075
			0.000			1/2" Ice	2.138	1.267	0.093
			0.000			1" Ice	2.320	1.411	0.114
TA08025-B604	A	From Leg	4.000	0.000	119.000	No Ice	1.964	0.981	0.064
			0.000			1/2" Ice	2.138	1.112	0.081
			0.000			1" Ice	2.320	1.250	0.100
TA08025-B604	B	From Leg	4.000	0.000	119.000	No Ice	1.964	0.981	0.064
			0.000			1/2" Ice	2.138	1.112	0.081
			0.000			1" Ice	2.320	1.250	0.100
TA08025-B604	C	From Leg	4.000	0.000	119.000	No Ice	1.964	0.981	0.064
			0.000			1/2" Ice	2.138	1.112	0.081
			0.000			1" Ice	2.320	1.250	0.100
RDIDC-9181-PF-48	A	From Leg	4.000	0.000	119.000	No Ice	1.867	1.067	0.022
			0.000			1/2" Ice	2.037	1.204	0.038
			0.000			1" Ice	2.215	1.348	0.057
(2) 8' x 2" Mount Pipe	A	From Leg	4.000	0.000	119.000	No Ice	1.900	1.900	0.029
			0.000			1/2" Ice	2.728	2.728	0.044
			0.000			1" Ice	3.401	3.401	0.063
(2) 8' x 2" Mount Pipe	B	From Leg	4.000	0.000	119.000	No Ice	1.900	1.900	0.029
			0.000			1/2" Ice	2.728	2.728	0.044
			0.000			1" Ice	3.401	3.401	0.063
(2) 8' x 2" Mount Pipe	C	From Leg	4.000	0.000	119.000	No Ice	1.900	1.900	0.029
			0.000			1/2" Ice	2.728	2.728	0.044
			0.000			1" Ice	3.401	3.401	0.063
Commscope MC-K6MHDX-9-96 (3)	C	None		0.000	119.000	No Ice	15.300	15.300	1.192
						1/2" Ice	20.480	20.480	1.705
						1" Ice	25.660	25.660	2.219
*									
KS24019-L112A	A	From Leg	3.000	0.000	48.000	No Ice	0.141	0.141	0.005
			0.000			1/2" Ice	0.198	0.198	0.007
			2.000			1" Ice	0.262	0.262	0.009
2' x 2" Pipe Mount	A	From Leg	3.000	0.000	48.000	No Ice	0.023	0.023	0.007
			0.000			1/2" Ice	0.049	0.049	0.008

Description	Face or Leg	Offset Type	Offsets: Horz Lateral ft / Vert ft / ft	Azimuth Adjustment °	Placement ft		C_AA_A Front ft^2	C_AA_A Side ft^2	Weight K
Side Arm Mount [SO 701-1] *	A	From Leg	0.000 1.500 0.000 0.000	0.000	48.000	1" Ice No Ice 1/2" Ice 1" Ice	0.085 0.850 1.140 1.430	0.085 1.670 2.340 3.010	0.009 0.065 0.079 0.093

Load Combinations

Comb. No.	Description
1	Dead Only
2	1.2 Dead+1.0 Wind 0 deg - No Ice
3	0.9 Dead+1.0 Wind 0 deg - No Ice
4	1.2 Dead+1.0 Wind 30 deg - No Ice
5	0.9 Dead+1.0 Wind 30 deg - No Ice
6	1.2 Dead+1.0 Wind 60 deg - No Ice
7	0.9 Dead+1.0 Wind 60 deg - No Ice
8	1.2 Dead+1.0 Wind 90 deg - No Ice
9	0.9 Dead+1.0 Wind 90 deg - No Ice
10	1.2 Dead+1.0 Wind 120 deg - No Ice
11	0.9 Dead+1.0 Wind 120 deg - No Ice
12	1.2 Dead+1.0 Wind 150 deg - No Ice
13	0.9 Dead+1.0 Wind 150 deg - No Ice
14	1.2 Dead+1.0 Wind 180 deg - No Ice
15	0.9 Dead+1.0 Wind 180 deg - No Ice
16	1.2 Dead+1.0 Wind 210 deg - No Ice
17	0.9 Dead+1.0 Wind 210 deg - No Ice
18	1.2 Dead+1.0 Wind 240 deg - No Ice
19	0.9 Dead+1.0 Wind 240 deg - No Ice
20	1.2 Dead+1.0 Wind 270 deg - No Ice
21	0.9 Dead+1.0 Wind 270 deg - No Ice
22	1.2 Dead+1.0 Wind 300 deg - No Ice
23	0.9 Dead+1.0 Wind 300 deg - No Ice
24	1.2 Dead+1.0 Wind 330 deg - No Ice
25	0.9 Dead+1.0 Wind 330 deg - No Ice
26	1.2 Dead+1.0 Ice+1.0 Temp
27	1.2 Dead+1.0 Wind 0 deg+1.0 Ice+1.0 Temp
28	1.2 Dead+1.0 Wind 30 deg+1.0 Ice+1.0 Temp
29	1.2 Dead+1.0 Wind 60 deg+1.0 Ice+1.0 Temp
30	1.2 Dead+1.0 Wind 90 deg+1.0 Ice+1.0 Temp
31	1.2 Dead+1.0 Wind 120 deg+1.0 Ice+1.0 Temp
32	1.2 Dead+1.0 Wind 150 deg+1.0 Ice+1.0 Temp
33	1.2 Dead+1.0 Wind 180 deg+1.0 Ice+1.0 Temp
34	1.2 Dead+1.0 Wind 210 deg+1.0 Ice+1.0 Temp
35	1.2 Dead+1.0 Wind 240 deg+1.0 Ice+1.0 Temp
36	1.2 Dead+1.0 Wind 270 deg+1.0 Ice+1.0 Temp
37	1.2 Dead+1.0 Wind 300 deg+1.0 Ice+1.0 Temp
38	1.2 Dead+1.0 Wind 330 deg+1.0 Ice+1.0 Temp
39	Dead+Wind 0 deg - Service
40	Dead+Wind 30 deg - Service
41	Dead+Wind 60 deg - Service

Comb. No.	Description
42	Dead+Wind 90 deg - Service
43	Dead+Wind 120 deg - Service
44	Dead+Wind 150 deg - Service
45	Dead+Wind 180 deg - Service
46	Dead+Wind 210 deg - Service
47	Dead+Wind 240 deg - Service
48	Dead+Wind 270 deg - Service
49	Dead+Wind 300 deg - Service
50	Dead+Wind 330 deg - Service

Maximum Member Forces

Section No.	Elevation ft	Component Type	Condition	Gov. Load Comb.	Axial K	Major Axis Moment kip-ft	Minor Axis Moment kip-ft
L1	160 - 155	Pole	Max Tension	8	0.000	0.000	-0.000
			Max. Compression	26	-10.619	-2.076	0.336
			Max. Mx	8	-4.572	-21.433	-0.135
			Max. My	2	-4.550	-0.989	20.255
			Max. Vy	8	7.599	-21.433	-0.135
			Max. Vx	14	7.615	-1.520	-19.933
			Max. Torque	14			0.861
L2	155 - 150	Pole	Max Tension	1	0.000	0.000	0.000
			Max. Compression	26	-11.820	-2.110	0.357
			Max. Mx	8	-5.498	-60.753	-0.580
			Max. My	2	-5.464	-0.554	59.788
			Max. Vy	20	-8.142	58.024	0.858
			Max. Vx	14	8.228	-1.992	-59.542
			Max. Torque	14			0.862
L3	150 - 148.5	Pole	Max Tension	1	0.000	0.000	0.000
			Max. Compression	26	-12.180	-2.116	0.363
			Max. Mx	8	-5.783	-73.048	-0.714
			Max. My	2	-5.746	-0.421	72.201
			Max. Vy	20	-8.298	70.344	0.997
			Max. Vx	14	8.405	-2.132	-72.006
			Max. Torque	14			0.862
L4	148.5 - 148	Pole	Max Tension	1	0.000	0.000	0.000
			Max. Compression	26	-12.335	-2.119	0.366
			Max. Mx	8	-5.909	-77.204	-0.759
			Max. My	2	-5.871	-0.377	76.401
			Max. Vy	20	-8.375	74.509	1.044
			Max. Vx	14	8.488	-2.179	-76.227
			Max. Torque	14			0.862
L5	148 - 143	Pole	Max Tension	1	0.000	0.000	0.000
			Max. Compression	26	-23.085	-2.152	0.401
			Max. Mx	8	-12.070	-141.919	-1.224
			Max. My	14	-11.993	-2.674	-141.892
			Max. Vy	20	-13.732	139.354	1.534
			Max. Vx	14	13.932	-2.674	-141.892
			Max. Torque	14			0.865
L6	143 - 138	Pole	Max Tension	1	0.000	0.000	0.000
			Max. Compression	26	-24.249	-2.184	0.438
			Max. Mx	8	-12.956	-211.494	-1.694
			Max. My	14	-12.834	-3.174	-213.284
			Max. Vy	20	-14.166	209.080	2.030
			Max. Vx	14	14.634	-3.174	-213.284
			Max. Torque	14			0.867
L7	138 - 133	Pole	Max Tension	1	0.000	0.000	0.000
			Max. Compression	26	-32.890	-1.917	0.834

Section No.	Elevation ft	Component Type	Condition	Gov. Load Comb.	Axial K	Major Axis Moment kip-ft	Minor Axis Moment kip-ft
			Max. Mx	8	-17.178	-306.673	-2.127
			Max. My	14	-17.036	-3.607	-311.261
			Max. Vy	20	-19.220	304.693	2.633
			Max. Vx	14	19.741	-3.607	-311.261
			Max. Torque	14			0.867
L8	133 - 128	Pole	Max Tension	1	0.000	0.000	0.000
			Max. Compression	26	-33.639	-1.948	0.881
			Max. Mx	8	-17.805	-403.312	-2.620
			Max. My	14	-17.666	-4.134	-410.663
			Max. Vy	20	-19.514	401.486	3.157
			Max. Vx	14	20.036	-4.134	-410.663
			Max. Torque	12			0.792
L9	128 - 123	Pole	Max Tension	1	0.000	0.000	0.000
			Max. Compression	26	-41.856	-1.866	0.998
			Max. Mx	8	-22.714	-516.783	-3.101
			Max. My	14	-22.570	-4.636	-526.969
			Max. Vy	20	-22.806	515.188	3.715
			Max. Vx	14	23.341	-4.636	-526.969
			Max. Torque	12			0.792
L10	123 - 118	Pole	Max Tension	1	0.000	0.000	0.000
			Max. Compression	26	-47.312	-1.756	1.449
			Max. Mx	8	-25.776	-633.194	-3.464
			Max. My	14	-25.629	-5.131	-646.121
			Max. Vy	20	-25.106	631.846	4.395
			Max. Vx	14	25.670	-5.131	-646.121
			Max. Torque	22			-0.903
L11	118 - 111	Pole	Max Tension	1	0.000	0.000	0.000
			Max. Compression	26	-47.940	-1.696	1.553
			Max. Mx	8	-26.309	-714.813	-3.770
			Max. My	14	-26.167	-5.461	-729.673
			Max. Vy	20	-25.240	713.613	4.771
			Max. Vx	14	25.803	-5.461	-729.673
			Max. Torque	22			-0.903
L12	111 - 109.75	Pole	Max Tension	1	0.000	0.000	0.000
			Max. Compression	26	-49.499	-1.603	1.711
			Max. Mx	8	-27.515	-841.628	-4.240
			Max. My	14	-27.376	-5.966	-859.465
			Max. Vy	20	-25.581	840.658	5.349
			Max. Vx	14	26.145	-5.966	-859.465
			Max. Torque	22			-0.902
L13	109.75 - 105.333	Pole	Max Tension	1	0.000	0.000	0.000
			Max. Compression	26	-50.496	-1.517	1.851
			Max. Mx	8	-28.362	-954.741	-4.654
			Max. My	14	-28.230	-6.409	-975.206
			Max. Vy	20	-25.763	953.976	5.856
			Max. Vx	14	26.325	-6.409	-975.206
			Max. Torque	22			-0.902
L14	105.333 - 105.083	Pole	Max Tension	1	0.000	0.000	0.000
			Max. Compression	26	-50.569	-1.512	1.862
			Max. Mx	8	-28.438	-961.169	-4.678
			Max. My	14	-28.307	-6.435	-981.781
			Max. Vy	20	-25.759	960.415	5.886
			Max. Vx	14	26.321	-6.435	-981.781
			Max. Torque	22			-0.901
L15	105.083 - 100.083	Pole	Max Tension	1	0.000	0.000	0.000
			Max. Compression	26	-52.028	-1.409	2.018
			Max. Mx	8	-29.598	-1090.462	-5.143
			Max. My	14	-29.472	-6.931	-1114.046

Section No.	Elevation ft	Component Type	Condition	Gov. Load Comb.	Axial K	Major Axis Moment kip-ft	Minor Axis Moment kip-ft
			Max. Vy	20	-26.060	1089.944	6.458
			Max. Vx	14	26.621	-6.931	-1114.046
			Max. Torque	22			-0.900
L16	100.083 - 95.083	Pole	Max Tension	1	0.000	0.000	0.000
			Max. Compression	26	-53.507	-1.303	2.178
			Max. Mx	8	-30.793	-1221.171	-5.606
			Max. My	14	-30.673	-7.425	-1247.724
			Max. Vy	20	-26.338	1220.891	7.030
			Max. Vx	14	26.899	-7.425	-1247.724
			Max. Torque	22			-0.900
L17	95.083 - 92.5	Pole	Max Tension	1	0.000	0.000	0.000
			Max. Compression	26	-54.302	-1.246	2.261
			Max. Mx	8	-31.417	-1289.228	-5.845
			Max. My	14	-31.300	-7.678	-1317.314
			Max. Vy	20	-26.481	1289.072	7.324
			Max. Vx	14	27.042	-7.678	-1317.314
			Max. Torque	22			-0.899
L18	92.5 - 92.25	Pole	Max Tension	1	0.000	0.000	0.000
			Max. Compression	26	-54.396	-1.241	2.274
			Max. Mx	8	-31.509	-1295.836	-5.868
			Max. My	14	-31.392	-7.704	-1324.069
			Max. Vy	20	-26.480	1295.690	7.354
			Max. Vx	14	27.040	-7.704	-1324.069
			Max. Torque	22			-0.898
L19	92.25 - 87.25	Pole	Max Tension	1	0.000	0.000	0.000
			Max. Compression	26	-56.284	-1.128	2.432
			Max. Mx	20	-32.990	1428.940	7.924
			Max. My	14	-32.883	-8.192	-1460.044
			Max. Vy	20	-26.825	1428.940	7.924
			Max. Vx	14	27.386	-8.192	-1460.044
			Max. Torque	22			-0.898
L20	87.25 - 82.25	Pole	Max Tension	1	0.000	0.000	0.000
			Max. Compression	26	-58.195	-1.013	2.594
			Max. Mx	20	-34.510	1563.832	8.494
			Max. My	14	-34.406	-8.679	-1597.661
			Max. Vy	20	-27.148	1563.832	8.494
			Max. Vx	14	27.709	-8.679	-1597.661
			Max. Torque	22			-0.897
L21	82.25 - 76.75	Pole	Max Tension	1	0.000	0.000	0.000
			Max. Compression	26	-58.692	-0.987	2.629
			Max. Mx	20	-34.891	1597.805	8.637
			Max. My	14	-34.789	-8.800	-1632.314
			Max. Vy	20	-27.230	1597.805	8.637
			Max. Vx	14	27.791	-8.800	-1632.314
			Max. Torque	22			-0.897
L22	76.75 - 75.75	Pole	Max Tension	1	0.000	0.000	0.000
			Max. Compression	26	-61.524	-0.878	2.775
			Max. Mx	20	-37.084	1741.899	9.238
			Max. My	14	-36.985	-9.311	-1779.272
			Max. Vy	20	-27.646	1741.899	9.238
			Max. Vx	14	28.208	-9.311	-1779.272
			Max. Torque	22			-0.896
L23	75.75 - 70.75	Pole	Max Tension	1	0.000	0.000	0.000
			Max. Compression	26	-63.013	-0.773	2.913
			Max. Mx	20	-38.314	1880.340	9.807
			Max. My	14	-38.223	-9.793	-1920.431
			Max. Vy	20	-27.774	1880.340	9.807
			Max. Vx	14	28.332	-9.793	-1920.431
			Max. Torque	22			-0.896
L24	70.75 - 70.583	Pole	Max Tension	1	0.000	0.000	0.000

Section No.	Elevation ft	Component Type	Condition	Gov. Load Comb.	Axial K	Major Axis Moment kip-ft	Minor Axis Moment kip-ft
			Max. Compression	26	-63.065	-0.770	2.922
			Max. Mx	20	-38.374	1884.975	9.826
			Max. My	14	-38.284	-9.809	-1925.157
			Max. Vy	20	-27.756	1884.975	9.826
			Max. Vx	14	28.314	-9.809	-1925.157
			Max. Torque	22			-0.894
L25	70.583 - 70.333	Pole	Max Tension	1	0.000	0.000	0.000
			Max. Compression	26	-63.178	-0.765	2.930
			Max. Mx	20	-38.467	1891.915	9.854
			Max. My	14	-38.378	-9.833	-1932.233
			Max. Vy	20	-27.769	1891.915	9.854
			Max. Vx	14	28.327	-9.833	-1932.233
			Max. Torque	22			-0.894
L26	70.333 - 70	Pole	Max Tension	1	0.000	0.000	0.000
			Max. Compression	26	-63.329	-0.758	2.937
			Max. Mx	20	-38.590	1901.166	9.892
			Max. My	14	-38.501	-9.865	-1941.664
			Max. Vy	20	-27.790	1901.166	9.892
			Max. Vx	14	28.348	-9.865	-1941.664
			Max. Torque	22			-0.894
L27	70 - 69.75	Pole	Max Tension	1	0.000	0.000	0.000
			Max. Compression	26	-63.407	-0.752	2.943
			Max. Mx	20	-38.651	1908.115	9.920
			Max. My	14	-38.562	-9.889	-1948.747
			Max. Vy	20	-27.798	1908.115	9.920
			Max. Vx	14	28.356	-9.889	-1948.747
			Max. Torque	22			-0.894
L28	69.75 - 64.75	Pole	Max Tension	1	0.000	0.000	0.000
			Max. Compression	26	-64.923	-0.634	3.092
			Max. Mx	20	-39.893	2047.371	10.483
			Max. My	14	-39.812	-10.362	-2090.698
			Max. Vy	20	-27.928	2047.371	10.483
			Max. Vx	14	28.482	-10.362	-2090.698
			Max. Torque	22			-0.894
L29	64.75 - 59.75	Pole	Max Tension	1	0.000	0.000	0.000
			Max. Compression	26	-66.419	-0.506	3.249
			Max. Mx	20	-41.176	2187.127	11.041
			Max. My	14	-41.103	-10.829	-2233.124
			Max. Vy	20	-28.021	2187.127	11.041
			Max. Vx	14	28.570	-10.829	-2233.124
			Max. Torque	22			-0.893
L30	59.75 - 54.75	Pole	Max Tension	1	0.000	0.000	0.000
			Max. Compression	26	-67.935	-0.377	3.381
			Max. Mx	20	-42.480	2327.300	11.593
			Max. My	14	-42.417	-11.288	-2375.942
			Max. Vy	20	-28.097	2327.300	11.593
			Max. Vx	14	28.641	-11.288	-2375.942
			Max. Torque	22			-0.892
L31	54.75 - 49.75	Pole	Max Tension	1	0.000	0.000	0.000
			Max. Compression	26	-69.471	-0.245	3.514
			Max. Mx	20	-43.808	2467.807	12.138
			Max. My	14	-43.752	-11.739	-2519.065
			Max. Vy	20	-28.155	2467.807	12.138
			Max. Vx	14	28.695	-11.739	-2519.065
			Max. Torque	22			-0.891
L32	49.75 - 43	Pole	Max Tension	1	0.000	0.000	0.000
			Max. Compression	26	-70.047	-0.199	3.561
			Max. Mx	20	-44.261	2517.047	12.328
			Max. My	14	-44.208	-11.895	-2569.213
			Max. Vy	20	-28.196	2517.047	12.328

Section No.	Elevation ft	Component Type	Condition	Gov. Load Comb.	Axial K	Major Axis Moment kip-ft	Minor Axis Moment kip-ft
			Max. Vx	14	28.734	-11.895	-2569.213
			Max. Torque	22			-0.890
L33	43 - 42	Pole	Max Tension	1	0.000	0.000	0.000
			Max. Compression	26	-73.435	-0.038	4.132
			Max. Mx	20	-46.965	2687.205	13.275
			Max. My	14	-46.919	-12.427	-2742.031
			Max. Vy	20	-28.501	2687.205	13.275
			Max. Vx	14	29.013	-12.427	-2742.031
			Max. Torque	22			-1.047
L34	42 - 37	Pole	Max Tension	1	0.000	0.000	0.000
			Max. Compression	26	-75.156	0.096	4.268
			Max. Mx	20	-48.464	2829.687	13.809
			Max. My	14	-48.425	-12.865	-2886.964
			Max. Vy	20	-28.540	2829.687	13.809
			Max. Vx	14	29.047	-12.865	-2886.964
			Max. Torque	22			-1.046
L35	37 - 32	Pole	Max Tension	1	0.000	0.000	0.000
			Max. Compression	26	-76.899	0.232	4.405
			Max. Mx	20	-49.986	2972.310	14.337
			Max. My	14	-49.954	-13.295	-3032.007
			Max. Vy	20	-28.558	2972.310	14.337
			Max. Vx	14	29.059	-13.295	-3032.007
			Max. Torque	22			-1.046
L36	32 - 27.913	Pole	Max Tension	1	0.000	0.000	0.000
			Max. Compression	26	-78.401	0.331	4.517
			Max. Mx	20	-51.247	3088.923	14.763
			Max. My	14	-51.221	-13.640	-3150.576
			Max. Vy	20	-28.559	3001.464	14.444
			Max. Vx	14	29.059	-13.382	-3061.652
			Max. Torque	22			-1.045
L37	27.913 - 27.663	Pole	Max Tension	1	0.000	0.000	0.000
			Max. Compression	26	-78.528	0.337	4.526
			Max. Mx	20	-51.372	3096.057	14.789
			Max. My	14	-51.347	-13.661	-3157.829
			Max. Vy	20	-28.536	3096.057	14.789
			Max. Vx	14	29.031	-13.661	-3157.829
			Max. Torque	22			-1.045
L38	27.663 - 27.25	Pole	Max Tension	1	0.000	0.000	0.000
			Max. Compression	26	-78.739	0.349	4.536
			Max. Mx	20	-51.548	3107.846	14.832
			Max. My	14	-51.523	-13.696	-3169.813
			Max. Vy	20	-28.549	3107.846	14.832
			Max. Vx	14	29.044	-13.696	-3169.813
			Max. Torque	22			-1.045
L39	27.25 - 26.983	Pole	Max Tension	1	0.000	0.000	0.000
			Max. Compression	26	-78.867	0.356	4.545
			Max. Mx	20	-51.657	3115.469	14.860
			Max. My	14	-51.633	-13.718	-3177.564
			Max. Vy	20	-28.553	3115.469	14.860
			Max. Vx	14	29.048	-13.718	-3177.564
			Max. Torque	22			-1.045
L40	26.983 - 26.833	Pole	Max Tension	1	0.000	0.000	0.000
			Max. Compression	26	-78.939	0.360	4.551
			Max. Mx	20	-51.719	3119.752	14.875
			Max. My	14	-51.695	-13.731	-3181.919
			Max. Vy	20	-28.556	3119.752	14.875
			Max. Vx	14	29.050	-13.731	-3181.919
			Max. Torque	22			-1.045
L41	26.833 -	Pole	Max Tension	1	0.000	0.000	0.000

Section No.	Elevation ft	Component Type	Condition	Gov. Load Comb.	Axial K	Major Axis Moment kip-ft	Minor Axis Moment kip-ft
	21.833						
			Max. Compression	26	-81.294	0.499	4.686
			Max. Mx	20	-53.727	3262.838	15.392
			Max. My	14	-53.707	-14.147	-3327.368
			Max. Vy	20	-28.689	3262.838	15.392
			Max. Vx	14	29.180	-14.147	-3327.368
			Max. Torque	22			-1.045
L42	21.833 - 16.833	Pole	Max Tension	1	0.000	0.000	0.000
			Max. Compression	26	-83.644	0.639	4.827
			Max. Mx	20	-55.769	3406.482	15.905
			Max. My	14	-55.753	-14.558	-3473.355
			Max. Vy	20	-28.798	3406.482	15.905
			Max. Vx	14	29.285	-14.558	-3473.355
			Max. Torque	22			-1.045
L43	16.833 - 16	Pole	Max Tension	1	0.000	0.000	0.000
			Max. Compression	26	-84.047	0.662	4.850
			Max. Mx	20	-56.114	3430.465	15.990
			Max. My	14	-56.099	-14.625	-3497.726
			Max. Vy	20	-28.811	3430.465	15.990
			Max. Vx	14	29.297	-14.625	-3497.726
			Max. Torque	22			-1.044
L44	16 - 15.75	Pole	Max Tension	1	0.000	0.000	0.000
			Max. Compression	26	-84.187	0.669	4.859
			Max. Mx	20	-56.242	3437.666	16.016
			Max. My	14	-56.228	-14.646	-3505.043
			Max. Vy	20	-28.804	3437.666	16.016
			Max. Vx	14	29.289	-14.646	-3505.043
			Max. Torque	22			-1.044
L45	15.75 - 14.747	Pole	Max Tension	1	0.000	0.000	0.000
			Max. Compression	26	-84.757	0.683	4.880
			Max. Mx	20	-56.717	3466.575	16.118
			Max. My	14	-56.704	-14.727	-3534.419
			Max. Vy	20	-28.849	3466.575	16.118
			Max. Vx	14	29.334	-14.727	-3534.419
			Max. Torque	22			-1.044
L46	14.747 - 14.497	Pole	Max Tension	1	0.000	0.000	0.000
			Max. Compression	26	-84.873	0.685	4.886
			Max. Mx	20	-56.821	3473.784	16.144
			Max. My	14	-56.808	-14.747	-3541.744
			Max. Vy	20	-28.838	3473.784	16.144
			Max. Vx	14	29.323	-14.747	-3541.744
			Max. Torque	22			-1.044
L47	14.497 - 12.083	Pole	Max Tension	1	0.000	0.000	0.000
			Max. Compression	26	-85.994	0.708	4.937
			Max. Mx	20	-57.742	3543.408	16.389
			Max. My	14	-57.732	-14.942	-3612.486
			Max. Vy	20	-28.876	3543.408	16.389
			Max. Vx	14	29.358	-14.942	-3612.486
			Max. Torque	22			-1.044
L48	12.083 - 11.833	Pole	Max Tension	1	0.000	0.000	0.000
			Max. Compression	26	-86.127	0.710	4.943
			Max. Mx	20	-57.872	3550.620	16.414
			Max. My	14	-57.862	-14.962	-3619.813
			Max. Vy	20	-28.847	3550.620	16.414
			Max. Vx	14	29.329	-14.962	-3619.813
			Max. Torque	22			-1.044
L49	11.833 - 10	Pole	Max Tension	1	0.000	0.000	0.000

Section No.	Elevation ft	Component Type	Condition	Gov. Load Comb.	Axial K	Major Axis Moment kip-ft	Minor Axis Moment kip-ft
			Max. Compression	26	-87.096	0.747	4.983
			Max. Mx	20	-58.677	3603.545	16.599
			Max. My	14	-58.668	-15.109	-3673.581
			Max. Vy	20	-28.928	3603.545	16.599
			Max. Vx	14	29.409	-15.109	-3673.581
			Max. Torque	22			-1.044
L50	10 - 9.75	Pole	Max Tension	1	0.000	0.000	0.000
			Max. Compression	26	-87.228	0.753	4.989
			Max. Mx	20	-58.807	3610.770	16.624
			Max. My	14	-58.799	-15.129	-3680.921
			Max. Vy	20	-28.898	3610.770	16.624
			Max. Vx	14	29.378	-15.129	-3680.921
			Max. Torque	22			-1.044
L51	9.75 - 4.75	Pole	Max Tension	1	0.000	0.000	0.000
			Max. Compression	26	-89.811	0.876	5.101
			Max. Mx	20	-61.057	3755.562	17.126
			Max. My	14	-61.052	-15.526	-3827.997
			Max. Vy	20	-29.028	3755.562	17.126
			Max. Vx	14	29.504	-15.526	-3827.997
			Max. Torque	22			-1.044
L52	4.75 - 0	Pole	Max Tension	1	0.000	0.000	0.000
			Max. Compression	26	-92.212	0.991	5.207
			Max. Mx	20	-63.223	3893.609	17.599
			Max. My	14	-63.223	-15.897	-3968.192
			Max. Vy	20	-29.129	3893.609	17.599
			Max. Vx	14	29.601	-15.897	-3968.192
			Max. Torque	22			-1.044

Maximum Reactions

Location	Condition	Gov. Load Comb.	Vertical K	Horizontal, X K	Horizontal, Z K
Pole	Max. Vert	27	92.212	0.018	7.653
	Max. H_x	21	47.427	29.100	0.088
	Max. H_z	2	63.237	0.088	29.518
	Max. M_x	2	3963.425	0.088	29.518
	Max. M_z	8	3889.101	-29.068	-0.088
	Max. Torsion	10	1.034	-25.633	-14.872
	Min. Vert	23	47.427	25.679	14.899
	Min. H_x	8	63.237	-29.068	-0.088
	Min. H_z	15	47.427	-0.088	-29.572
	Min. M_x	14	-3968.192	-0.088	-29.572
	Min. M_z	20	-3893.609	29.100	0.088
	Min. Torsion	22	-1.044	25.679	14.899

Tower Mast Reaction Summary

Load Combination	Vertical K	$Shear_x$ K	$Shear_z$ K	Overturning Moment, M_x kip-ft	Overturning Moment, M_z kip-ft	Torque kip-ft
Dead Only	52.697	0.000	-0.000	-1.607	-0.233	0.000
1.2 Dead+1.0 Wind 0 deg - No	63.237	-0.088	-29.518	-3963.425	15.132	0.603

Load Combination	Vertical K	$Shear_x$ K	$Shear_z$ K	Overturning Moment, M_x kip-ft	Overturning Moment, M_z kip-ft	Torque kip-ft
Ice						
0.9 Dead+1.0 Wind 0 deg - No Ice	47.427	-0.088	-29.518	-3853.320	14.778	0.545
1.2 Dead+1.0 Wind 30 deg - No Ice	63.237	14.507	-25.253	-3378.183	-1936.275	0.098
0.9 Dead+1.0 Wind 30 deg - No Ice	47.427	14.507	-25.253	-3284.332	-1882.692	0.059
1.2 Dead+1.0 Wind 60 deg - No Ice	63.237	25.853	-14.898	-1982.336	-3438.282	-0.420
0.9 Dead+1.0 Wind 60 deg - No Ice	47.427	25.853	-14.898	-1927.157	-3343.287	-0.431
1.2 Dead+1.0 Wind 90 deg - No Ice	63.237	29.068	0.088	13.437	-3889.101	-0.836
0.9 Dead+1.0 Wind 90 deg - No Ice	47.427	29.068	0.088	13.514	-3781.480	-0.816
1.2 Dead+1.0 Wind 120 deg - No Ice	63.237	25.633	14.872	1994.453	-3435.444	-1.034
0.9 Dead+1.0 Wind 120 deg - No Ice	47.427	25.633	14.872	1939.793	-3340.371	-0.988
1.2 Dead+1.0 Wind 150 deg - No Ice	63.237	14.633	25.295	3385.424	-1960.776	-0.954
0.9 Dead+1.0 Wind 150 deg - No Ice	47.427	14.633	25.295	3292.320	-1906.410	-0.894
1.2 Dead+1.0 Wind 180 deg - No Ice	63.237	0.088	29.572	3968.192	-15.897	-0.625
0.9 Dead+1.0 Wind 180 deg - No Ice	47.427	0.088	29.572	3858.953	-15.275	-0.566
1.2 Dead+1.0 Wind 210 deg - No Ice	63.237	-14.491	25.225	3369.432	1932.858	-0.107
0.9 Dead+1.0 Wind 210 deg - No Ice	47.427	-14.491	25.225	3276.851	1879.626	-0.067
1.2 Dead+1.0 Wind 240 deg - No Ice	63.237	-25.807	14.871	1973.695	3429.755	0.431
0.9 Dead+1.0 Wind 240 deg - No Ice	47.427	-25.807	14.871	1919.778	3335.261	0.443
1.2 Dead+1.0 Wind 270 deg - No Ice	63.237	-29.100	-0.088	-17.599	3893.609	0.856
0.9 Dead+1.0 Wind 270 deg - No Ice	47.427	-29.100	-0.088	-16.546	3786.097	0.836
1.2 Dead+1.0 Wind 300 deg - No Ice	63.237	-25.679	-14.899	-2003.085	3442.427	1.044
0.9 Dead+1.0 Wind 300 deg - No Ice	47.427	-25.679	-14.899	-1947.166	3347.395	0.997
1.2 Dead+1.0 Wind 330 deg - No Ice	63.237	-14.617	-25.267	-3385.033	1957.382	0.943
0.9 Dead+1.0 Wind 330 deg - No Ice	47.427	-14.617	-25.267	-3290.930	1903.359	0.883
1.2 Dead+1.0 Ice+1.0 Temp	92.212	0.000	-0.000	-5.207	0.991	0.000
1.2 Dead+1.0 Wind 0 deg+1.0 Ice+1.0 Temp	92.212	-0.018	-7.653	-1071.812	4.460	0.172
1.2 Dead+1.0 Wind 30 deg+1.0 Ice+1.0 Temp	92.212	3.780	-6.570	-918.794	-523.499	0.029
1.2 Dead+1.0 Wind 60 deg+1.0 Ice+1.0 Temp	92.212	6.610	-3.809	-535.284	-918.743	-0.114
1.2 Dead+1.0 Wind 90 deg+1.0 Ice+1.0 Temp	92.212	7.580	0.018	-1.969	-1051.875	-0.231
1.2 Dead+1.0 Wind 120 deg+1.0 Ice+1.0 Temp	92.212	6.618	3.834	529.399	-920.419	-0.286
1.2 Dead+1.0 Wind 150 deg+1.0 Ice+1.0 Temp	92.212	3.809	6.584	910.618	-529.015	-0.260
1.2 Dead+1.0 Wind 180	92.212	0.018	7.664	1063.020	-2.436	-0.173

Load Combination	Vertical K	$Shear_x$ K	$Shear_z$ K	Overturning Moment, M_x kip-ft	Overturning Moment, M_z kip-ft	Torque kip-ft
deg+1.0 Ice+1.0 Temp						
1.2 Dead+1.0 Wind 210 deg+1.0 Ice+1.0 Temp	92.212	-3.777	6.564	906.923	524.924	-0.028
1.2 Dead+1.0 Wind 240 deg+1.0 Ice+1.0 Temp	92.212	-6.600	3.803	523.428	918.997	0.115
1.2 Dead+1.0 Wind 270 deg+1.0 Ice+1.0 Temp	92.212	-7.586	-0.018	-8.865	1055.092	0.233
1.2 Dead+1.0 Wind 300 deg+1.0 Ice+1.0 Temp	92.212	-6.628	-3.840	-541.252	924.207	0.287
1.2 Dead+1.0 Wind 330 deg+1.0 Ice+1.0 Temp	92.212	-3.805	-6.578	-920.414	530.439	0.260
Dead+Wind 0 deg - Service	52.697	-0.021	-7.201	-954.757	3.409	0.140
Dead+Wind 30 deg - Service	52.697	3.539	-6.161	-813.862	-466.007	0.015
Dead+Wind 60 deg - Service	52.697	6.307	-3.635	-478.152	-827.414	-0.112
Dead+Wind 90 deg - Service	52.697	7.092	0.021	1.989	-935.760	-0.210
Dead+Wind 120 deg - Service	52.697	6.254	3.628	478.604	-826.748	-0.252
Dead+Wind 150 deg - Service	52.697	3.570	6.171	813.189	-471.907	-0.226
Dead+Wind 180 deg - Service	52.697	0.021	7.215	953.465	-4.026	-0.141
Dead+Wind 210 deg - Service	52.697	-3.536	6.154	809.299	464.751	-0.015
Dead+Wind 240 deg - Service	52.697	-6.296	3.628	473.613	824.921	0.112
Dead+Wind 270 deg - Service	52.697	-7.100	-0.021	-5.445	936.419	0.211
Dead+Wind 300 deg - Service	52.697	-6.265	-3.635	-483.143	828.007	0.253
Dead+Wind 330 deg - Service	52.697	-3.566	-6.165	-815.540	470.652	0.225

Solution Summary

	Sum of Applied Forces			Sum of Reactions			
Load Comb.	PX K	PY K	PZ K	PX K	PY K	PZ K	% Error
1	0.000	-52.697	0.000	-0.000	52.697	0.000	0.000%
2	-0.088	-63.237	-29.518	0.088	63.237	29.518	0.000%
3	-0.088	-47.427	-29.518	0.088	47.427	29.518	0.000%
4	14.507	-63.237	-25.253	-14.507	63.237	25.253	0.000%
5	14.507	-47.427	-25.253	-14.507	47.427	25.253	0.000%
6	25.853	-63.237	-14.898	-25.853	63.237	14.898	0.000%
7	25.853	-47.427	-14.898	-25.853	47.427	14.898	0.000%
8	29.068	-63.237	0.088	-29.068	63.237	-0.088	0.000%
9	29.068	-47.427	0.088	-29.068	47.427	-0.088	0.000%
10	25.633	-63.237	14.872	-25.633	63.237	-14.872	0.000%
11	25.633	-47.427	14.872	-25.633	47.427	-14.872	0.000%
12	14.633	-63.237	25.295	-14.633	63.237	-25.295	0.000%
13	14.633	-47.427	25.295	-14.633	47.427	-25.295	0.000%
14	0.088	-63.237	29.572	-0.088	63.237	-29.572	0.000%
15	0.088	-47.427	29.572	-0.088	47.427	-29.572	0.000%
16	-14.491	-63.237	25.225	14.491	63.237	-25.225	0.000%
17	-14.491	-47.427	25.225	14.491	47.427	-25.225	0.000%
18	-25.807	-63.237	14.871	25.807	63.237	-14.871	0.000%
19	-25.807	-47.427	14.871	25.807	47.427	-14.871	0.000%
20	-29.100	-63.237	-0.088	29.100	63.237	0.088	0.000%
21	-29.100	-47.427	-0.088	29.100	47.427	0.088	0.000%
22	-25.679	-63.237	-14.899	25.679	63.237	14.899	0.000%
23	-25.679	-47.427	-14.899	25.679	47.427	14.899	0.000%
24	-14.617	-63.237	-25.267	14.617	63.237	25.267	0.000%
25	-14.617	-47.427	-25.267	14.617	47.427	25.267	0.000%
26	0.000	-92.212	0.000	-0.000	92.212	0.000	0.000%
27	-0.018	-92.212	-7.653	0.018	92.212	7.653	0.000%
28	3.780	-92.212	-6.570	-3.780	92.212	6.570	0.000%
29	6.610	-92.212	-3.809	-6.610	92.212	3.809	0.000%

	Sum of Applied Forces			Sum of Reactions			
Load Comb.	PX K	PY K	PZ K	PX K	PY K	PZ K	% Error
30	7.580	-92.212	0.018	-7.580	92.212	-0.018	0.000%
31	6.618	-92.212	3.834	-6.618	92.212	-3.834	0.000%
32	3.809	-92.212	6.584	-3.809	92.212	-6.584	0.000%
33	0.018	-92.212	7.664	-0.018	92.212	-7.664	0.000%
34	-3.777	-92.212	6.564	3.777	92.212	-6.564	0.000%
35	-6.600	-92.212	3.803	6.600	92.212	-3.803	0.000%
36	-7.586	-92.212	-0.018	7.586	92.212	0.018	0.000%
37	-6.628	-92.212	-3.840	6.628	92.212	3.840	0.000%
38	-3.805	-92.212	-6.578	3.805	92.212	6.578	0.000%
39	-0.021	-52.697	-7.201	0.021	52.697	7.201	0.000%
40	3.539	-52.697	-6.161	-3.539	52.697	6.161	0.000%
41	6.307	-52.697	-3.635	-6.307	52.697	3.635	0.000%
42	7.092	-52.697	0.021	-7.092	52.697	-0.021	0.000%
43	6.254	-52.697	3.628	-6.254	52.697	-3.628	0.000%
44	3.570	-52.697	6.171	-3.570	52.697	-6.171	0.000%
45	0.021	-52.697	7.215	-0.021	52.697	-7.215	0.000%
46	-3.536	-52.697	6.154	3.536	52.697	-6.154	0.000%
47	-6.296	-52.697	3.628	6.296	52.697	-3.628	0.000%
48	-7.100	-52.697	-0.021	7.100	52.697	0.021	0.000%
49	-6.265	-52.697	-3.635	6.265	52.697	3.635	0.000%
50	-3.566	-52.697	-6.165	3.566	52.697	6.165	0.000%

Non-Linear Convergence Results

Load Combination	Converged?	Number of Cycles	Displacement Tolerance	Force Tolerance
1	Yes	4	0.00000001	0.00001124
2	Yes	6	0.00000001	0.00065817
3	Yes	6	0.00000001	0.00018426
4	Yes	9	0.00000001	0.00012447
5	Yes	8	0.00000001	0.00018222
6	Yes	9	0.00000001	0.00012716
7	Yes	8	0.00000001	0.00018533
8	Yes	6	0.00000001	0.00064621
9	Yes	6	0.00000001	0.00017858
10	Yes	9	0.00000001	0.00012585
11	Yes	8	0.00000001	0.00018303
12	Yes	9	0.00000001	0.00012620
13	Yes	8	0.00000001	0.00018457
14	Yes	7	0.00000001	0.00021088
15	Yes	6	0.00000001	0.00056690
16	Yes	9	0.00000001	0.00012364
17	Yes	8	0.00000001	0.00018127
18	Yes	9	0.00000001	0.00012571
19	Yes	8	0.00000001	0.00018327
20	Yes	7	0.00000001	0.00023041
21	Yes	6	0.00000001	0.00063920
22	Yes	9	0.00000001	0.00012853
23	Yes	8	0.00000001	0.00018708
24	Yes	9	0.00000001	0.00012382
25	Yes	8	0.00000001	0.00018094
26	Yes	5	0.00000001	0.00042999
27	Yes	8	0.00000001	0.00066574
28	Yes	9	0.00000001	0.00022320
29	Yes	9	0.00000001	0.00022717
30	Yes	8	0.00000001	0.00065482

31	Yes	9	0.00000001	0.00022444
32	Yes	9	0.00000001	0.00022361
33	Yes	8	0.00000001	0.00065983
34	Yes	9	0.00000001	0.00021865
35	Yes	9	0.00000001	0.00022117
36	Yes	8	0.00000001	0.00065326
37	Yes	9	0.00000001	0.00023010
38	Yes	9	0.00000001	0.00022360
39	Yes	6	0.00000001	0.00012482
40	Yes	7	0.00000001	0.00013028
41	Yes	7	0.00000001	0.00013833
42	Yes	6	0.00000001	0.00012594
43	Yes	7	0.00000001	0.00013514
44	Yes	7	0.00000001	0.00013490
45	Yes	6	0.00000001	0.00013134
46	Yes	7	0.00000001	0.00012727
47	Yes	7	0.00000001	0.00013304
48	Yes	6	0.00000001	0.00013394
49	Yes	7	0.00000001	0.00014229
50	Yes	7	0.00000001	0.00012910

Maximum Tower Deflections - Service Wind

Section No.	Elevation ft	Horz. Deflection in	Gov. Load Comb.	Tilt °	Twist °
L1	160 - 155	42.476	43	2.478	0.006
L2	155 - 150	39.909	49	2.463	0.005
L3	150 - 148.5	37.395	49	2.365	0.003
L4	148.5 - 148	36.662	49	2.317	0.002
L5	148 - 143	36.420	49	2.316	0.002
L6	143 - 138	34.016	49	2.285	0.002
L7	138 - 133	31.651	49	2.239	0.002
L8	133 - 128	29.338	49	2.180	0.002
L9	128 - 123	27.094	49	2.106	0.002
L10	123 - 118	24.933	49	2.019	0.001
L11	118 - 111	22.870	49	1.920	0.001
L12	114.75 - 109.75	21.587	49	1.850	0.001
L13	109.75 - 105.333	19.679	49	1.785	0.001
L14	105.333 - 105.083	18.071	49	1.692	0.001
L15	105.083 - 100.083	17.982	49	1.689	0.001
L16	100.083 - 95.083	16.254	49	1.613	0.001
L17	95.083 - 92.5	14.607	49	1.534	0.001
L18	92.5 - 92.25	13.789	49	1.492	0.001
L19	92.25 - 87.25	13.711	49	1.489	0.001
L20	87.25 - 82.25	12.184	49	1.427	0.001
L21	82.25 - 76.75	10.724	49	1.363	0.001
L22	81 - 75.75	10.369	49	1.347	0.001
L23	75.75 - 70.75	8.913	49	1.290	0.001
L24	70.75 - 70.583	7.621	49	1.179	0.001
L25	70.583 - 70.333	7.580	49	1.176	0.001
L26	70.333 - 70	7.518	49	1.172	0.001
L27	70 - 69.75	7.436	49	1.168	0.001
L28	69.75 - 64.75	7.375	49	1.163	0.001
L29	64.75 - 59.75	6.216	49	1.052	0.000
L30	59.75 - 54.75	5.173	49	0.941	0.000
L31	54.75 - 49.75	4.245	49	0.831	0.000
L32	49.75 - 43	3.433	49	0.721	0.000
L33	48 - 42	3.175	49	0.683	0.000
L34	42 - 37	2.357	49	0.611	0.000

Section No.	Elevation ft	Horz. Deflection in	Gov. Load Comb.	Tilt °	Twist °
L35	37 - 32	1.768	49	0.513	0.000
L36	32 - 27.913	1.282	49	0.416	0.000
L37	27.913 - 27.663	0.959	49	0.338	0.000
L38	27.663 - 27.25	0.941	49	0.335	0.000
L39	27.25 - 26.983	0.913	49	0.330	0.000
L40	26.983 - 26.833	0.894	49	0.327	0.000
L41	26.833 - 21.833	0.884	49	0.325	0.000
L42	21.833 - 16.833	0.577	49	0.261	0.000
L43	16.833 - 16	0.336	49	0.199	0.000
L44	16 - 15.75	0.302	49	0.189	0.000
L45	15.75 - 14.747	0.292	49	0.186	0.000
L46	14.747 - 14.497	0.254	49	0.176	0.000
L47	14.497 - 12.083	0.245	49	0.172	0.000
L48	12.083 - 11.833	0.168	49	0.133	0.000
L49	11.833 - 10	0.161	49	0.130	0.000
L50	10 - 9.75	0.115	49	0.110	0.000
L51	9.75 - 4.75	0.109	49	0.107	0.000
L52	4.75 - 0	0.026	49	0.052	0.000

Critical Deflections and Radius of Curvature - Service Wind

Elevation ft	Appurtenance	Gov. Load Comb.	Deflection in	Tilt °	Twist °	Radius of Curvature ft
157.000	800 10121 w/ Mount Pipe	49	40.929	2.473	0.005	5223
148.000	AIR6449 B41_T-MOBILE w/ Mount Pipe	49	36.420	2.316	0.002	3876
145.000	(2) L3x3x1/4x6'	49	34.975	2.302	0.002	7543
138.000	(2) NNHH-65B-R4 w/ Mount Pipe	49	31.651	2.239	0.002	5507
127.000	ERICSSON AIR 21 B2A B4P w/ Mount Pipe	49	26.655	2.090	0.002	3454
119.000	MX08FRO665-21 w/ Mount Pipe	49	23.274	1.942	0.001	2817
48.000	KS24019-L112A	49	3.175	0.683	0.000	3631

Maximum Tower Deflections - Design Wind

Section No.	Elevation ft	Horz. Deflection in	Gov. Load Comb.	Tilt °	Twist °
L1	160 - 155	176.343	22	10.259	0.025
L2	155 - 150	165.731	22	10.208	0.021
L3	150 - 148.5	155.307	22	9.834	0.013
L4	148.5 - 148	152.270	22	9.653	0.010
L5	148 - 143	151.268	22	9.646	0.010
L6	143 - 138	141.308	22	9.523	0.009
L7	138 - 133	131.504	22	9.340	0.008
L8	133 - 128	121.918	22	9.095	0.007
L9	128 - 123	112.615	22	8.789	0.007
L10	123 - 118	103.655	22	8.427	0.006
L11	118 - 111	95.094	22	8.014	0.005
L12	114.75 - 109.75	89.768	22	7.720	0.005
L13	109.75 - 105.333	81.846	22	7.448	0.004

Section No.	Elevation ft	Horz. Deflection in	Gov. Load Comb.	Tilt °	Twist °
L14	105.333 - 105.083	75.165	22	7.060	0.004
L15	105.083 - 100.083	74.798	22	7.044	0.004
L16	100.083 - 95.083	67.616	22	6.727	0.004
L17	95.083 - 92.5	60.769	22	6.398	0.003
L18	92.5 - 92.25	57.367	22	6.222	0.003
L19	92.25 - 87.25	57.043	22	6.209	0.003
L20	87.25 - 82.25	50.696	22	5.951	0.003
L21	82.25 - 76.75	44.622	22	5.684	0.003
L22	81 - 75.75	43.147	22	5.616	0.003
L23	75.75 - 70.75	37.092	22	5.379	0.003
L24	70.75 - 70.583	31.713	22	4.917	0.002
L25	70.583 - 70.333	31.542	22	4.902	0.002
L26	70.333 - 70	31.286	22	4.889	0.002
L27	70 - 69.75	30.947	22	4.871	0.002
L28	69.75 - 64.75	30.693	22	4.848	0.002
L29	64.75 - 59.75	25.868	22	4.385	0.002
L30	59.75 - 54.75	21.525	22	3.922	0.002
L31	54.75 - 49.75	17.664	22	3.461	0.001
L32	49.75 - 43	14.282	22	3.003	0.001
L33	48 - 42	13.211	22	2.844	0.001
L34	42 - 37	9.806	22	2.545	0.001
L35	37 - 32	7.356	22	2.137	0.001
L36	32 - 27.913	5.331	22	1.733	0.001
L37	27.913 - 27.663	3.988	22	1.407	0.001
L38	27.663 - 27.25	3.914	22	1.394	0.001
L39	27.25 - 26.983	3.795	22	1.373	0.001
L40	26.983 - 26.833	3.718	22	1.359	0.001
L41	26.833 - 21.833	3.676	22	1.351	0.001
L42	21.833 - 16.833	2.399	22	1.088	0.000
L43	16.833 - 16	1.397	22	0.828	0.000
L44	16 - 15.75	1.256	22	0.786	0.000
L45	15.75 - 14.747	1.215	22	0.775	0.000
L46	14.747 - 14.497	1.057	22	0.733	0.000
L47	14.497 - 12.083	1.019	22	0.716	0.000
L48	12.083 - 11.833	0.698	22	0.551	0.000
L49	11.833 - 10	0.670	22	0.540	0.000
L50	10 - 9.75	0.478	22	0.457	0.000
L51	9.75 - 4.75	0.455	22	0.446	0.000
L52	4.75 - 0	0.108	22	0.217	0.000

Critical Deflections and Radius of Curvature - Design Wind

Elevation ft	Appurtenance	Gov. Load Comb.	Deflection in	Tilt °	Twist °	Radius of Curvature ft
157.000	800 10121 w/ Mount Pipe	22	169.967	10.244	0.023	1512
148.000	AIR6449 B41_T-MOBILE w/ Mount Pipe	22	151.268	9.646	0.010	1040
145.000	(2) L3x3x1/4x6'	22	145.277	9.591	0.010	1990
138.000	(2) NNHH-65B-R4 w/ Mount Pipe	22	131.504	9.340	0.008	1422
127.000	ERICSSON AIR 21 B2A B4P w/ Mount Pipe	22	110.794	8.720	0.007	874
119.000	MX08FRO665-21 w/ Mount Pipe	22	96.770	8.105	0.006	706
48.000	KS24019-L112A	22	13.211	2.844	0.001	875

Compression Checks

Pole Design Data

Section No.	Elevation ft	Size	L ft	L_u ft	Kl/r	A in^2	P_u K	ϕP_n K	Ratio $\frac{P_u}{\phi P_n}$
L1	160 - 159	TP10.75x10.75x0.349	5.000	0.000	0.0	11.404	-0.062	359.220	0.000
	159 - 158					11.404	-0.124	359.220	0.000
	158 - 157					11.404	-0.186	359.220	0.001
	157 - 156					11.404	-4.506	359.220	0.013
	156 - 155					11.404	-4.531	359.220	0.013
L2	155 - 154	TP10.75x10.75x0.349	5.000	0.000	0.0	11.404	-4.709	359.220	0.013
	154 - 153					11.404	-4.890	359.220	0.014
	153 - 152					11.404	-5.073	359.220	0.014
	152 - 151					11.404	-5.259	359.220	0.015
	151 - 150					11.404	-5.447	359.220	0.015
L3	150 - 148.5 (3)	TP10.75x10.75x0.349	1.500	0.000	0.0	11.404	-5.729	359.220	0.016
L4	148.5 - 148 (4)	TP23x23x0.349	0.500	0.000	0.0	24.835	-5.854	782.300	0.007
L5	148 - 147	TP23.81x23x0.25	5.000	0.000	0.0	18.181	-10.351	981.756	0.011
	147 - 146					18.309	-10.559	988.698	0.011
	146 - 145					18.438	-10.769	995.639	0.011
	145 - 144					18.566	-11.775	1002.580	0.012
	144 - 143					18.695	-11.987	1009.520	0.012
L6	143 - 142	TP24.62x23.81x0.25	5.000	0.000	0.0	18.823	-12.153	1016.460	0.012
	142 - 141					18.952	-12.320	1023.410	0.012
	141 - 140					19.080	-12.489	1030.350	0.012
	140 - 139					19.209	-12.658	1037.290	0.012
	139 - 138					19.338	-12.829	1044.230	0.012
L7	138 - 137	TP25.43x24.62x0.25	5.000	0.000	0.0	19.466	-16.557	1051.170	0.016
	137 - 136					19.595	-16.674	1058.110	0.016
	136 - 135					19.723	-16.793	1065.050	0.016
	135 - 134					19.852	-16.913	1072.000	0.016
	134 - 133					19.980	-17.035	1078.940	0.016
L8	133 - 132	TP26.24x25.43x0.25	5.000	0.000	0.0	20.109	-17.158	1085.880	0.016
	132 - 131					20.237	-17.283	1092.820	0.016
	131 - 130					20.366	-17.409	1099.760	0.016
	130 - 129					20.494	-17.536	1106.700	0.016
	129 - 128					20.623	-17.665	1113.650	0.016
L9	128 - 127	TP27.05x26.24x0.25	5.000	0.000	0.0	20.752	-17.803	1120.590	0.016
	127 - 126					20.880	-22.130	1127.530	0.020
	126 - 125					21.009	-22.275	1134.470	0.020
	125 - 124					21.137	-22.421	1141.410	0.020
	124 - 123					21.266	-22.569	1148.350	0.020
L10	123 - 122	TP27.86x27.05x0.25	5.000	0.000	0.0	21.394	-22.721	1155.290	0.020
	122 - 121					21.523	-22.874	1162.240	0.020
	121 - 120					21.651	-23.014	1169.180	0.020
	120 - 119					21.780	-23.171	1176.120	0.020
	119 - 118					21.909	-25.615	1183.060	0.022
L11	118 - 116.917	TP28.994x27.86x0.25	7.000	0.000	0.0	22.048	-25.792	1190.580	0.022
	116.917 - 115.833					22.187	-25.972	1198.100	0.022
	115.833 - 114.75					22.326	-26.154	1205.620	0.022
	114.75 - 111					22.808	-12.223	1231.650	0.010
L12	114.75 - 111	TP28.696x27.887x0.313	5.000	0.000	0.0	27.952	-14.890	1509.430	0.010
	111 - 109.75					28.153	-27.364	1520.280	0.018
L13	109.75 - 108.646	TP29.412x28.696x0.313	4.417	0.000	0.0	28.331	-27.577	1529.860	0.018

Section No.	Elevation ft	Size	L ft	L_u ft	Kl/r	A in^2	P_u K	ϕP_n K	Ratio $\frac{P_u}{\phi P_n}$
	108.646 - 107.542					28.508	-27.789	1539.440	0.018
	107.542 - 106.437					28.686	-28.003	1549.020	0.018
	106.437 - 105.333					28.863	-28.218	1558.600	0.018
L14	105.333 - 105.083 (14)	TP29.452x29.412x0.469	0.250	0.000	0.0	43.122	-28.295	2328.600	0.012
L15	105.083 - 104.083	TP30.262x29.452x0.463	5.000	0.000	0.0	42.794	-28.517	2310.890	0.012
	104.083 - 103.083					43.032	-28.751	2323.730	0.012
	103.083 - 102.083					43.270	-28.986	2336.570	0.012
	102.083 - 101.083					43.508	-29.222	2349.410	0.012
	101.083 - 100.083					43.745	-29.460	2362.250	0.012
L16	100.083 - 99.083	TP31.072x30.262x0.463	5.000	0.000	0.0	43.983	-29.698	2375.100	0.013
	99.083 - 98.083					44.221	-29.937	2387.940	0.013
	98.083 - 97.083					44.459	-30.177	2400.780	0.013
	97.083 - 96.083					44.697	-30.419	2413.620	0.013
	96.083 - 95.083					44.934	-30.661	2426.460	0.013
L17	95.083 - 93.7915	TP31.491x31.072x0.456	2.583	0.000	0.0	44.639	-30.971	2410.520	0.013
	93.7915 - 92.5					44.942	-31.288	2426.880	0.013
L18	92.5 - 92.25 (18)	TP31.531x31.491x0.638	0.250	0.000	0.0	62.511	-31.381	3375.600	0.009
L19	92.25 - 91.25	TP32.341x31.531x0.625	5.000	0.000	0.0	61.632	-31.668	3328.100	0.010
	91.25 - 90.25					61.953	-31.966	3345.450	0.010
	90.25 - 89.25					62.274	-32.266	3362.810	0.010
	89.25 - 88.25					62.596	-32.566	3380.160	0.010
	88.25 - 87.25					62.917	-32.869	3397.510	0.010
L20	87.25 - 86.25	TP33.151x32.341x0.613	5.000	0.000	0.0	61.998	-33.170	3347.880	0.010
	86.25 - 85.25					62.313	-33.473	3364.880	0.010
	85.25 - 84.25					62.628	-33.778	3381.890	0.010
	84.25 - 83.25					62.943	-34.084	3398.900	0.010
	83.25 - 82.25					63.257	-34.391	3415.900	0.010
L21	82.25 - 81	TP34.042x33.151x0.613	5.500	0.000	0.0	63.651	-34.773	3437.160	0.010
	81 - 76.75					64.990	-22.892	3509.430	0.007
L22	81 - 76.75	TP33.579x32.729x0.375	5.250	0.000	0.0	39.328	-13.820	2300.700	0.006
	76.75 - 75.75					39.521	-36.970	2311.980	0.016
L23	75.75 - 74.75	TP34.389x33.579x0.375	5.000	0.000	0.0	39.714	-37.216	2323.260	0.016
	74.75 - 73.75					39.907	-37.463	2334.540	0.016
	73.75 - 72.75					40.099	-37.711	2345.820	0.016
	72.75 - 71.75					40.292	-37.960	2357.100	0.016
	71.75 - 70.75					40.485	-38.209	2368.380	0.016
L24	70.75 - 70.583 (24)	TP34.416x34.389x0.375	0.167	0.000	0.0	40.517	-38.270	2370.260	0.016
L25	70.583 - 70.333 (25)	TP34.456x34.416x0.675	0.250	0.000	0.0	72.375	-38.364	4233.940	0.009
L26	70.333 - 70 (26)	TP34.51x34.456x0.675	0.333	0.000	0.0	72.491	-38.487	4240.700	0.009
L27	70 - 69.75 (27)	TP34.551x34.51x0.375	0.250	0.000	0.0	40.678	-38.549	2379.650	0.016
L28	69.75 - 68.75	TP35.361x34.551x0.375	5.000	0.000	0.0	40.871	-38.783	2390.930	0.016

Section No.	Elevation ft	Size	L ft	L_u ft	Kl/r	A in^2	P_u K	ϕP_n K	Ratio $\frac{P_u}{\phi P_n}$
	68.75 - 67.75					41.063	-39.036	2402.210	0.016
	67.75 - 66.75					41.256	-39.290	2413.490	0.016
	66.75 - 65.75					41.449	-39.544	2424.770	0.016
	65.75 - 64.75					41.642	-39.800	2436.050	0.016
L29	64.75 - 63.75	TP36.171x35.361x0.375	5.000	0.000	0.0	41.835	-40.056	2447.330	0.016
	63.75 - 62.75					42.028	-40.314	2458.610	0.016
	62.75 - 61.75					42.220	-40.572	2469.890	0.016
	61.75 - 60.75					42.413	-40.831	2481.170	0.016
	60.75 - 59.75					42.606	-41.092	2492.440	0.016
L30	59.75 - 58.75	TP36.981x36.171x0.375	5.000	0.000	0.0	42.799	-41.353	2503.720	0.017
	58.75 - 57.75					42.992	-41.615	2515.000	0.017
	57.75 - 56.75					43.184	-41.878	2526.280	0.017
	56.75 - 55.75					43.377	-42.142	2537.560	0.017
	55.75 - 54.75					43.570	-42.406	2548.840	0.017
L31	54.75 - 53.75	TP37.791x36.981x0.375	5.000	0.000	0.0	43.763	-42.672	2560.120	0.017
	53.75 - 52.75					43.956	-42.938	2571.400	0.017
	52.75 - 51.75					44.148	-43.206	2582.680	0.017
	51.75 - 50.75					44.341	-43.474	2593.960	0.017
	50.75 - 49.75					44.534	-43.743	2605.230	0.017
L32	49.75 - 48	TP38.884x37.791x0.375	6.750	0.000	0.0	44.871	-44.199	2624.970	0.017
	48 - 43					45.835	-21.803	2681.370	0.008
L33	48 - 43	TP38.296x37.324x0.438	6.000	0.000	0.0	52.346	-24.773	3062.260	0.008
	43 - 42					52.571	-46.909	3075.420	0.015
L34	42 - 41	TP39.106x38.296x0.438	5.000	0.000	0.0	52.796	-47.209	3088.580	0.015
	41 - 40					53.021	-47.510	3101.740	0.015
	40 - 39					53.246	-47.811	3114.900	0.015
	39 - 38					53.471	-48.114	3128.060	0.015
	38 - 37					53.696	-48.417	3141.220	0.015
L35	37 - 36	TP39.916x39.106x0.438	5.000	0.000	0.0	53.921	-48.721	3154.380	0.015
	36 - 35					54.146	-49.027	3167.540	0.015
	35 - 34					54.371	-49.333	3180.700	0.016
	34 - 33					54.596	-49.640	3193.860	0.016
	33 - 32					54.821	-49.948	3207.020	0.016
L36	32 - 30.9782	TP40.578x39.916x0.438	4.087	0.000	0.0	55.051	-50.263	3220.470	0.016
	30.9782 - 29.9565					55.281	-50.580	3233.910	0.016
	29.9565 - 28.9348					55.510	-50.898	3247.360	0.016
	28.9348 - 27.913					55.740	-51.216	3260.810	0.016
L37	27.913 - 27.663 (37)	TP40.619x40.578x0.675	0.250	0.000	0.0	85.577	-51.342	5006.270	0.010
L38	27.663 - 27.25 (38)	TP40.686x40.619x0.675	0.413	0.000	0.0	85.721	-51.518	5014.650	0.010
L39	27.25 - 26.983 (39)	TP40.729x40.686x0.675	0.267	0.000	0.0	85.813	-51.628	5020.080	0.010
L40	26.983 - 26.833 (40)	TP40.753x40.729x0.663	0.150	0.000	0.0	84.301	-51.690	4931.640	0.010
L41	26.833 - 25.833	TP41.563x40.753x0.663	5.000	0.000	0.0	84.642	-52.080	4951.570	0.011
	25.833 - 24.833					84.983	-52.484	4971.490	0.011
	24.833 - 23.833					85.323	-52.889	4991.420	0.011
	23.833 - 22.833					85.664	-53.295	5011.350	0.011
	22.833 - 21.833					86.005	-53.703	5031.280	0.011
L42	21.833 - 20.833	TP42.373x41.563x0.663	5.000	0.000	0.0	86.345	-54.110	5051.200	0.011

Section No.	Elevation ft	Size	L ft	L_u ft	Kl/r	A in^2	P_u K	ϕP_n K	Ratio $\frac{P_u}{\phi P_n}$
	20.833 - 19.833					86.686	-54.518	5071.130	0.011
	19.833 - 18.833					87.027	-54.927	5091.060	0.011
	18.833 - 17.833					87.367	-55.338	5110.990	0.011
	17.833 - 16.833					87.708	-55.750	5130.920	0.011
L43	16.833 - 16 (43)	TP42.508x42.373x0.663	0.833	0.000	0.0	87.992	-56.096	5147.520	0.011
L44	16 - 15.75 (44)	TP42.549x42.508x0.813	0.250	0.000	0.0	107.632	-56.225	6296.470	0.009
L45	15.75 - 14.747 (45)	TP42.711x42.549x0.813	1.003	0.000	0.0	108.051	-56.701	6320.980	0.009
L46	14.747 - 14.497 (46)	TP42.752x42.711x0.488	0.250	0.000	0.0	65.396	-56.805	3825.680	0.015
L47	14.497 - 13.29	TP43.143x42.752x0.488	2.414	0.000	0.0	65.699	-57.258	3843.370	0.015
	13.29 - 12.083					66.001	-57.730	3861.070	0.015
L48	12.083 - 11.833 (48)	TP43.183x43.143x0.738	0.250	0.000	0.0	99.358	-57.860	5812.420	0.010
L49	11.833 - 10 (49)	TP43.48x43.183x0.738	1.833	0.000	0.0	100.053	-58.666	5853.090	0.010
L50	10 - 9.75 (50)	TP43.521x43.48x0.738	0.250	0.000	0.0	100.148	-58.797	5858.630	0.010
L51	9.75 - 8.75	TP44.331x43.521x0.725	5.000	0.000	0.0	98.852	-59.238	5782.820	0.010
	8.75 - 7.75					99.225	-59.689	5804.630	0.010
	7.75 - 6.75					99.597	-60.142	5826.440	0.010
	6.75 - 5.75					99.970	-60.596	5848.250	0.010
	5.75 - 4.75					100.343	-61.051	5870.050	0.010
L52	4.75 - 3.5625	TP45.1x44.331x0.713	4.750	0.000	0.0	99.076	-61.589	5795.950	0.011
	3.5625 - 2.375					99.511	-62.132	5821.400	0.011
	2.375 - 1.1875					99.946	-62.676	5846.850	0.011
	1.1875 - 0					100.381	-63.223	5872.300	0.011

Pole Bending Design Data

Section No.	Elevation ft	Size	M_{ux} kip-ft	ϕM_{nx} kip-ft	Ratio $\frac{M_{ux}}{\phi M_{nx}}$	M_{uy} kip-ft	ϕM_{ny} kip-ft	Ratio $\frac{M_{uy}}{\phi M_{ny}}$
L1	160 - 159	TP10.75x10.75x0.349	0.017	99.144	0.000	0.000	99.144	0.000
	159 - 158		0.066	99.144	0.001	0.000	99.144	0.000
	158 - 157		0.148	99.144	0.001	0.000	99.144	0.000
	157 - 156		13.851	99.144	0.140	0.000	99.144	0.000
	156 - 155		21.432	99.144	0.216	0.000	99.144	0.000
L2	155 - 154	TP10.75x10.75x0.349	29.176	99.144	0.294	0.000	99.144	0.000
	154 - 153		37.040	99.144	0.374	0.000	99.144	0.000
	153 - 152		45.022	99.144	0.454	0.000	99.144	0.000
	152 - 151		53.118	99.144	0.536	0.000	99.144	0.000
	151 - 150		61.328	99.144	0.619	0.000	99.144	0.000
L3	150 - 148.5 (3)	TP10.75x10.75x0.349	73.849	99.144	0.745	0.000	99.144	0.000
L4	148.5 - 148 (4)	TP23x23x0.349	78.085	458.290	0.170	0.000	458.290	0.000
L5	148 - 147	TP23.81x23x0.25	90.659	585.666	0.155	0.000	585.666	0.000
	147 - 146		103.399	594.022	0.174	0.000	594.022	0.000
	146 - 145		116.305	602.438	0.193	0.000	602.438	0.000
	145 - 144		130.002	610.912	0.213	0.000	610.912	0.000
	144 - 143		143.865	619.446	0.232	0.000	619.446	0.000
L6	143 - 142	TP24.62x23.81x0.25	157.882	628.039	0.251	0.000	628.039	0.000
	142 - 141		172.037	636.691	0.270	0.000	636.691	0.000

Section No.	Elevation ft	Size	M_{ux} kip-ft	ϕM_{nx} kip-ft	Ratio $\frac{M_{ux}}{\phi M_{nx}}$	M_{uy} kip-ft	ϕM_{ny} kip-ft	Ratio $\frac{M_{uy}}{\phi M_{ny}}$
	141 - 140		186.332	645.403	0.289	0.000	645.403	0.000
	140 - 139		200.766	654.173	0.307	0.000	654.173	0.000
	139 - 138		215.341	663.003	0.325	0.000	663.003	0.000
L7	138 - 137	TP25.43x24.62x0.25	234.794	671.892	0.349	0.000	671.892	0.000
	137 - 136		254.301	680.840	0.374	0.000	680.840	0.000
	136 - 135		273.868	688.778	0.398	0.000	688.778	0.000
	135 - 134		293.498	696.739	0.421	0.000	696.739	0.000
	134 - 133		313.188	704.731	0.444	0.000	704.731	0.000
L8	133 - 132	TP26.24x25.43x0.25	332.938	712.753	0.467	0.000	712.753	0.000
	132 - 131		352.748	720.806	0.489	0.000	720.806	0.000
	131 - 130		372.615	728.888	0.511	0.000	728.888	0.000
	130 - 129		392.542	737.000	0.533	0.000	737.000	0.000
	129 - 128		412.526	745.141	0.554	0.000	745.141	0.000
L9	128 - 127	TP27.05x26.24x0.25	432.559	753.311	0.574	0.000	753.311	0.000
	127 - 126		459.058	761.509	0.603	0.000	761.509	0.000
	126 - 125		482.238	769.736	0.626	0.000	769.736	0.000
	125 - 124		505.467	777.991	0.650	0.000	777.991	0.000
	124 - 123		528.747	786.274	0.672	0.000	786.274	0.000
L10	123 - 122	TP27.86x27.05x0.25	552.074	794.584	0.695	0.000	794.584	0.000
	122 - 121		575.449	802.922	0.717	0.000	802.922	0.000
	121 - 120		598.883	811.287	0.738	0.000	811.287	0.000
	120 - 119		622.433	819.678	0.759	0.000	819.678	0.000
	119 - 118		648.170	828.096	0.783	0.000	828.096	0.000
L11	118 - 116.917	TP28.994x27.86x0.25	676.025	837.242	0.807	0.000	837.242	0.000
	116.917 - 115.833		703.927	846.425	0.832	0.000	846.425	0.000
	115.833 - 114.75		731.874	855.633	0.855	0.000	855.633	0.000
	114.75 - 111		380.895	887.742	0.429	0.000	887.742	0.000
L12	114.75 - 111	TP28.696x27.887x0.313	448.340	1107.350	0.405	0.000	1107.350	0.000
	111 - 109.75		861.900	1123.408	0.767	0.000	1123.408	0.000
L13	109.75 - 108.646	TP29.412x28.696x0.313	890.808	1137.692	0.783	0.000	1137.692	0.000
	108.646 - 107.542		919.775	1152.058	0.798	0.000	1152.058	0.000
	107.542 - 106.437		948.783	1166.525	0.813	0.000	1166.525	0.000
	106.437 - 105.333		977.850	1181.075	0.828	0.000	1181.075	0.000
L14	105.333 - 105.083 (14)	TP29.452x29.412x0.469	984.433	1748.142	0.563	0.000	1748.142	0.000
L15	105.083 - 104.083	TP30.262x29.452x0.463	1010.817	1745.450	0.579	0.000	1745.450	0.000
	104.083 - 103.083		1037.267	1765.050	0.588	0.000	1765.050	0.000
	103.083 - 102.083		1063.767	1784.767	0.596	0.000	1784.767	0.000
	102.083 - 101.083		1090.325	1804.583	0.604	0.000	1804.583	0.000
	101.083 - 100.083		1116.942	1824.517	0.612	0.000	1824.517	0.000
L16	100.083 - 99.083	TP31.072x30.262x0.463	1143.608	1844.558	0.620	0.000	1844.558	0.000
	99.083 - 98.083		1170.342	1864.717	0.628	0.000	1864.717	0.000
	98.083 - 97.083		1197.125	1884.975	0.635	0.000	1884.975	0.000
	97.083 - 96.083		1223.958	1905.342	0.642	0.000	1905.342	0.000
	96.083 -		1250.858	1925.825	0.650	0.000	1925.825	0.000

Section No.	Elevation ft	Size	M_{ux} kip-ft	ϕM_{nx} kip-ft	Ratio $\frac{M_{ux}}{\phi M_{nx}}$	M_{uy} kip-ft	ϕM_{ny} kip-ft	Ratio $\frac{M_{uy}}{\phi M_{ny}}$
	95.083							
L17	95.083 - 93.7915	TP31.491x31.072x0.456	1285.667	1927.225	0.667	0.000	1927.225	0.000
	93.7915 - 92.5		1320.575	1953.667	0.676	0.000	1953.667	0.000
L18	92.5 - 92.25 (18)	TP31.531x31.491x0.638	1327.342	2689.342	0.494	0.000	2689.342	0.000
L19	92.25 - 91.25	TP32.341x31.531x0.625	1354.467	2667.833	0.508	0.000	2667.833	0.000
	91.25 - 90.25		1381.650	2696.000	0.512	0.000	2696.000	0.000
	90.25 - 89.25		1408.917	2724.317	0.517	0.000	2724.317	0.000
	89.25 - 88.25		1436.250	2752.783	0.522	0.000	2752.783	0.000
	88.25 - 87.25		1463.650	2781.392	0.526	0.000	2781.392	0.000
L20	87.25 - 86.25	TP33.151x32.341x0.613	1491.125	2757.192	0.541	0.000	2757.192	0.000
	86.25 - 85.25		1518.675	2785.542	0.545	0.000	2785.542	0.000
	85.25 - 84.25		1546.283	2814.033	0.549	0.000	2814.033	0.000
	84.25 - 83.25		1573.967	2842.667	0.554	0.000	2842.667	0.000
	83.25 - 82.25		1601.708	2871.450	0.558	0.000	2871.450	0.000
L21	82.25 - 81	TP34.042x33.151x0.613	1636.492	2907.625	0.563	0.000	2907.625	0.000
	81 - 76.75		1103.583	3032.342	0.364	0.000	3032.342	0.000
L22	81 - 76.75	TP33.579x32.729x0.375	652.142	1978.433	0.330	0.000	1978.433	0.000
	76.75 - 75.75		1783.983	1997.992	0.893	0.000	1997.992	0.000
L23	75.75 - 74.75	TP34.389x33.579x0.375	1812.267	2017.642	0.898	0.000	2017.642	0.000
	74.75 - 73.75		1840.575	2037.392	0.903	0.000	2037.392	0.000
	73.75 - 72.75		1868.908	2057.233	0.908	0.000	2057.233	0.000
	72.75 - 71.75		1897.275	2077.175	0.913	0.000	2077.175	0.000
	71.75 - 70.75		1925.658	2097.208	0.918	0.000	2097.208	0.000
L24	70.75 - 70.583 (24)	TP34.416x34.389x0.375	1930.400	2100.567	0.919	0.000	2100.567	0.000
L25	70.583 - 70.333 (25)	TP34.456x34.416x0.675	1937.500	3690.858	0.525	0.000	3690.858	0.000
L26	70.333 - 70 (26)	TP34.51x34.456x0.675	1946.967	3702.767	0.526	0.000	3702.767	0.000
L27	70 - 69.75 (27)	TP34.551x34.51x0.375	1954.075	2117.342	0.923	0.000	2117.342	0.000
L28	69.75 - 68.75	TP35.361x34.551x0.375	1982.525	2137.567	0.927	0.000	2137.567	0.000
	68.75 - 67.75		2011.000	2157.892	0.932	0.000	2157.892	0.000
	67.75 - 66.75		2039.492	2178.317	0.936	0.000	2178.317	0.000
	66.75 - 65.75		2068.008	2198.833	0.941	0.000	2198.833	0.000
	65.75 - 64.75		2096.542	2219.442	0.945	0.000	2219.442	0.000
L29	64.75 - 63.75	TP36.171x35.361x0.375	2125.092	2240.150	0.949	0.000	2240.150	0.000
	63.75 - 62.75		2153.667	2260.958	0.953	0.000	2260.958	0.000
	62.75 - 61.75		2182.250	2281.858	0.956	0.000	2281.858	0.000
	61.75 - 60.75		2210.858	2302.858	0.960	0.000	2302.858	0.000
	60.75 - 59.75		2239.475	2321.658	0.965	0.000	2321.658	0.000
L30	59.75 - 58.75	TP36.981x36.171x0.375	2268.117	2340.292	0.969	0.000	2340.292	0.000
	58.75 - 57.75		2296.767	2358.967	0.974	0.000	2358.967	0.000
	57.75 - 56.75		2325.433	2377.692	0.978	0.000	2377.692	0.000
	56.75 - 55.75		2354.117	2396.475	0.982	0.000	2396.475	0.000
	55.75 - 54.75		2382.808	2415.300	0.987	0.000	2415.300	0.000
L31	54.75 - 53.75	TP37.791x36.981x0.375	2411.517	2434.175	0.991	0.000	2434.175	0.000
	53.75 - 52.75		2440.233	2453.100	0.995	0.000	2453.100	0.000
	52.75 - 51.75		2468.958	2472.075	0.999	0.000	2472.075	0.000
	51.75 - 50.75		2497.700	2491.092	1.003	0.000	2491.092	0.000
	50.75 - 49.75		2526.442	2510.158	1.006	0.000	2510.158	0.000
L32	49.75 - 48	TP38.884x37.791x0.375	2576.775	2543.642	1.013	0.000	2543.642	0.000
	48 - 43		1300.083	2640.083	0.492	0.000	2640.083	0.000
L33	48 - 43	TP38.296x37.324x0.438	1421.658	3003.508	0.473	0.000	3003.508	0.000
	43 - 42		2750.833	3029.533	0.908	0.000	3029.533	0.000
L34	42 - 41	TP39.106x38.296x0.438	2779.942	3055.658	0.910	0.000	3055.658	0.000
	41 - 40		2809.058	3081.908	0.911	0.000	3081.908	0.000
	40 - 39		2838.183	3108.258	0.913	0.000	3108.258	0.000
	39 - 38		2867.308	3134.725	0.915	0.000	3134.725	0.000

Section No.	Elevation ft	Size	M_{ux} kip-ft	ϕM_{nx} kip-ft	Ratio $\frac{M_{ux}}{\phi M_{nx}}$	M_{uy} kip-ft	ϕM_{ny} kip-ft	Ratio $\frac{M_{uy}}{\phi M_{ny}}$
	38 - 37		2896.442	3161.308	0.916	0.000	3161.308	0.000
L35	37 - 36	TP39.916x39.106x0.438	2925.583	3188.000	0.918	0.000	3188.000	0.000
	36 - 35		2954.717	3214.808	0.919	0.000	3214.808	0.000
	35 - 34		2983.867	3241.725	0.920	0.000	3241.725	0.000
	34 - 33		3013.008	3268.750	0.922	0.000	3268.750	0.000
	33 - 32		3042.158	3295.892	0.923	0.000	3295.892	0.000
L36	32 - 30.9782	TP40.578x39.916x0.438	3071.933	3323.742	0.924	0.000	3323.742	0.000
	30.9782 - 29.9565		3101.717	3351.708	0.925	0.000	3351.708	0.000
	29.9565 - 28.9348		3131.492	3379.783	0.927	0.000	3379.783	0.000
	28.9348 - 27.913		3161.267	3407.983	0.928	0.000	3407.983	0.000
L37	27.913 - 27.663 (37)	TP40.619x40.578x0.675	3168.558	5175.833	0.612	0.000	5175.833	0.000
L38	27.663 - 27.25 (38)	TP40.686x40.619x0.675	3180.600	5193.333	0.612	0.000	5193.333	0.000
L39	27.25 - 26.983 (39)	TP40.729x40.686x0.675	3188.383	5204.658	0.613	0.000	5204.658	0.000
L40	26.983 - 26.833 (40)	TP40.753x40.729x0.663	3192.758	5119.317	0.624	0.000	5119.317	0.000
L41	26.833 - 25.833	TP41.563x40.753x0.663	3221.942	5161.108	0.624	0.000	5161.108	0.000
	25.833 - 24.833		3251.142	5203.075	0.625	0.000	5203.075	0.000
	24.833 - 23.833		3280.375	5245.208	0.625	0.000	5245.208	0.000
	23.833 - 22.833		3309.625	5287.508	0.626	0.000	5287.508	0.000
	22.833 - 21.833		3338.892	5329.983	0.626	0.000	5329.983	0.000
L42	21.833 - 20.833	TP42.373x41.563x0.663	3368.183	5372.625	0.627	0.000	5372.625	0.000
	20.833 - 19.833		3397.500	5415.442	0.627	0.000	5415.442	0.000
	19.833 - 18.833		3426.833	5458.425	0.628	0.000	5458.425	0.000
	18.833 - 17.833		3456.192	5501.575	0.628	0.000	5501.575	0.000
	17.833 - 16.833		3485.567	5544.900	0.629	0.000	5544.900	0.000
L43	16.833 - 16 (43)	TP42.508x42.373x0.663	3510.050	5581.117	0.629	0.000	5581.117	0.000
L44	16 - 15.75 (44)	TP42.549x42.508x0.813	3517.408	6784.708	0.518	0.000	6784.708	0.000
L45	15.75 - 14.747 (45)	TP42.711x42.549x0.813	3546.917	6838.141	0.519	0.000	6838.141	0.000
L46	14.747 - 14.497 (46)	TP42.752x42.711x0.488	3554.283	4207.208	0.845	0.000	4207.208	0.000
L47	14.497 - 13.29	TP43.143x42.752x0.488	3589.817	4246.450	0.845	0.000	4246.450	0.000
	13.29 - 12.083		3625.358	4285.875	0.846	0.000	4285.875	0.000
L48	12.083 - 11.833 (48)	TP43.183x43.143x0.738	3632.725	6382.700	0.569	0.000	6382.700	0.000
L49	11.833 - 10 (49)	TP43.48x43.183x0.738	3686.750	6473.091	0.570	0.000	6473.091	0.000
L50	10 - 9.75 (50)	TP43.521x43.48x0.738	3694.133	6485.467	0.570	0.000	6485.467	0.000
L51	9.75 - 8.75	TP44.331x43.521x0.725	3723.642	6429.941	0.579	0.000	6429.941	0.000
	8.75 - 7.75		3753.183	6478.933	0.579	0.000	6478.933	0.000
	7.75 - 6.75		3782.742	6528.108	0.579	0.000	6528.108	0.000
	6.75 - 5.75		3812.317	6577.475	0.580	0.000	6577.475	0.000
	5.75 - 4.75		3841.925	6627.017	0.580	0.000	6627.017	0.000

Section No.	Elevation ft	Size	M_{ux} kip-ft	ϕM_{nx} kip-ft	Ratio $\frac{M_{ux}}{\phi M_{nx}}$	M_{uy} kip-ft	ϕM_{ny} kip-ft	Ratio $\frac{M_{uy}}{\phi M_{ny}}$
L52	4.75 - 3.5625	TP45.1x44.331x0.713	3877.100	6576.450	0.590	0.000	6576.450	0.000
	3.5625 - 2.375		3912.300	6634.800	0.590	0.000	6634.800	0.000
	2.375 - 1.1875		3947.533	6693.400	0.590	0.000	6693.400	0.000
	1.1875 - 0		3982.792	6752.267	0.590	0.000	6752.267	0.000

Pole Shear Design Data

Section No.	Elevation ft	Size	Actual V_u K	ϕV_n K	Ratio $\frac{V_u}{\phi V_n}$	Actual T_u kip-ft	ϕT_n kip-ft	Ratio $\frac{T_u}{\phi T_n}$
L1	160 - 159	TP10.75x10.75x0.349	0.033	107.766	0.000	0.000	98.546	0.000
	159 - 158		0.066	107.766	0.001	0.000	98.546	0.000
	158 - 157		0.099	107.766	0.001	0.000	98.546	0.000
	157 - 156		7.569	107.766	0.070	0.214	98.546	0.002
	156 - 155		7.689	107.766	0.071	0.615	98.546	0.006
L2	155 - 154	TP10.75x10.75x0.349	7.809	107.766	0.072	0.615	98.546	0.006
	154 - 153		7.927	107.766	0.074	0.615	98.546	0.006
	153 - 152		8.044	107.766	0.075	0.615	98.546	0.006
	152 - 151		8.158	107.766	0.076	0.615	98.546	0.006
	151 - 150		8.271	107.766	0.077	0.615	98.546	0.006
L3	150 - 148.5 (3)	TP10.75x10.75x0.349	8.438	107.766	0.078	0.615	98.546	0.006
L4	148.5 - 148 (4)	TP23x23x0.349	8.516	234.690	0.036	0.615	467.371	0.001
L5	148 - 147	TP23.81x23x0.25	12.659	294.527	0.043	0.615	590.973	0.001
	147 - 146		12.825	296.609	0.043	0.615	599.360	0.001
	146 - 145		12.992	298.692	0.043	0.615	607.806	0.001
	145 - 144		13.783	300.774	0.046	0.615	616.310	0.001
	144 - 143		13.950	302.857	0.046	0.615	624.874	0.001
L6	143 - 142	TP24.62x23.81x0.25	14.089	304.939	0.046	0.616	633.497	0.001
	142 - 141		14.229	307.022	0.046	0.616	642.179	0.001
	141 - 140		14.369	309.104	0.046	0.616	650.920	0.001
	140 - 139		14.509	311.187	0.047	0.616	659.720	0.001
	139 - 138		14.649	313.269	0.047	0.616	668.579	0.001
L7	138 - 137	TP25.43x24.62x0.25	19.482	315.352	0.062	0.741	677.497	0.001
	137 - 136		19.544	317.434	0.062	0.741	686.475	0.001
	136 - 135		19.606	319.516	0.061	0.741	695.512	0.001
	135 - 134		19.668	321.599	0.061	0.741	704.607	0.001
	134 - 133		19.729	323.681	0.061	0.741	713.762	0.001
L8	133 - 132	TP26.24x25.43x0.25	19.788	325.764	0.061	0.741	722.976	0.001
	132 - 131		19.848	327.846	0.061	0.741	732.248	0.001
	131 - 130		19.907	329.929	0.060	0.741	741.581	0.001
	130 - 129		19.965	332.011	0.060	0.740	750.972	0.001
	129 - 128		20.023	334.094	0.060	0.740	760.422	0.001
L9	128 - 127	TP27.05x26.24x0.25	20.081	336.176	0.060	0.740	769.931	0.001
	127 - 126		23.176	338.259	0.069	0.741	779.499	0.001
	126 - 125		23.227	340.341	0.068	0.741	789.127	0.001
	125 - 124		23.278	342.424	0.068	0.741	798.813	0.001
	124 - 123		23.328	344.506	0.068	0.741	808.558	0.001
L10	123 - 122	TP27.86x27.05x0.25	23.377	346.588	0.067	0.741	818.363	0.001
	122 - 121		23.425	348.671	0.067	0.740	828.227	0.001
	121 - 120		23.533	350.753	0.067	0.749	838.150	0.001
	120 - 119		23.580	352.836	0.067	0.749	848.133	0.001
	119 - 118		25.700	354.918	0.072	0.903	858.175	0.001
L11	118 - 116.917	TP28.994x27.86x0.25	25.746	357.174	0.072	0.903	869.117	0.001
	116.917 - 115.833		25.790	359.430	0.072	0.903	880.133	0.001
	115.833 -		25.833	361.686	0.071	0.903	891.217	0.001

Section No.	Elevation ft	Size	Actual V_u K	ϕV_n K	Ratio $\frac{V_u}{\phi V_n}$	Actual T_u kip-ft	ϕT_n kip-ft	Ratio $\frac{T_u}{\phi T_n}$
	114.75							
	114.75 - 111		12.069	369.496	0.033	0.414	930.117	0.000
L12	114.75 - 111	TP28.696x27.887x0.313	14.067	452.830	0.031	0.488	1117.583	0.000
	111 - 109.75		26.175	456.084	0.057	0.902	1133.700	0.001
L13	109.75 - 108.646	TP29.412x28.696x0.313	26.219	458.958	0.057	0.902	1148.033	0.001
	108.646 - 107.542		26.265	461.832	0.057	0.901	1162.458	0.001
	107.542 - 106.437		26.311	464.706	0.057	0.901	1176.967	0.001
	106.437 - 105.333		26.355	467.581	0.056	0.901	1191.575	0.001
L14	105.333 - 105.083 (14)	TP29.452x29.412x0.469	26.353	698.581	0.038	0.901	1773.167	0.001
L15	105.083 - 104.083	TP30.262x29.452x0.463	26.420	693.267	0.038	0.900	1769.900	0.001
	104.083 - 103.083		26.478	697.120	0.038	0.900	1789.617	0.001
	103.083 - 102.083		26.536	700.972	0.038	0.900	1809.450	0.000
	102.083 - 101.083		26.594	704.824	0.038	0.900	1829.400	0.000
	101.083 - 100.083		26.652	708.676	0.038	0.900	1849.450	0.000
L16	100.083 - 99.083	TP31.072x30.262x0.463	26.708	712.529	0.037	0.900	1869.608	0.000
	99.083 - 98.083		26.764	716.381	0.037	0.899	1889.883	0.000
	98.083 - 97.083		26.819	720.233	0.037	0.899	1910.258	0.000
	97.083 - 96.083		26.874	724.085	0.037	0.899	1930.750	0.000
	96.083 - 95.083		26.929	727.938	0.037	0.899	1951.350	0.000
L17	95.083 - 93.7915	TP31.491x31.072x0.456	27.006	723.155	0.037	0.899	1952.175	0.000
	93.7915 - 92.5		27.077	728.063	0.037	0.898	1978.758	0.000
L18	92.5 - 92.25 (18)	TP31.531x31.491x0.638	27.079	1012.680	0.027	0.898	2739.817	0.000
L19	92.25 - 91.25	TP32.341x31.531x0.625	27.158	998.431	0.027	0.898	2716.525	0.000
	91.25 - 90.25		27.230	1003.640	0.027	0.898	2744.925	0.000
	90.25 - 89.25		27.302	1008.840	0.027	0.898	2773.475	0.000
	89.25 - 88.25		27.374	1014.050	0.027	0.898	2802.175	0.000
	88.25 - 87.25		27.445	1019.250	0.027	0.898	2831.017	0.000
L20	87.25 - 86.25	TP33.151x32.341x0.613	27.514	1004.360	0.027	0.897	2805.008	0.000
	86.25 - 85.25		27.583	1009.470	0.027	0.897	2833.575	0.000
	85.25 - 84.25		27.652	1014.570	0.027	0.897	2862.292	0.000
	84.25 - 83.25		27.720	1019.670	0.027	0.897	2891.150	0.000
	83.25 - 82.25		27.788	1024.770	0.027	0.897	2920.150	0.000
L21	82.25 - 81	TP34.042x33.151x0.613	27.871	1031.150	0.027	0.897	2956.608	0.000
	81 - 76.75		17.828	1052.830	0.017	0.563	3082.250	0.000
L22	81 - 76.75	TP33.579x32.729x0.375	10.454	690.211	0.015	0.333	1997.225	0.000
	76.75 - 75.75		28.291	693.594	0.041	0.896	2016.858	0.000
L23	75.75 - 74.75	TP34.389x33.579x0.375	28.317	696.978	0.041	0.896	2036.583	0.000
	74.75 - 73.75		28.342	700.362	0.040	0.895	2056.408	0.000
	73.75 - 72.75		28.367	703.745	0.040	0.895	2076.325	0.000
	72.75 - 71.75		28.391	707.129	0.040	0.895	2096.342	0.000
	71.75 - 70.75		28.415	710.513	0.040	0.895	2116.450	0.000
L24	70.75 - 70.583 (24)	TP34.416x34.389x0.375	28.397	711.078	0.040	0.894	2119.817	0.000

Section No.	Elevation ft	Size	Actual V_u K	ϕV_n K	Ratio $\frac{V_u}{\phi V_n}$	Actual T_u kip-ft	ϕT_n kip-ft	Ratio $\frac{T_u}{\phi T_n}$
L25	70.583 - 70.333 (25)	TP34.456x34.416x0.675	28.410	1270.180	0.022	0.894	3757.717	0.000
L26	70.333 - 70 (26)	TP34.51x34.456x0.675	28.431	1272.210	0.022	0.894	3769.733	0.000
L27	70 - 69.75 (27)	TP34.551x34.51x0.375	28.439	713.896	0.040	0.894	2136.658	0.000
L28	69.75 - 68.75	TP35.361x34.551x0.375	28.482	717.280	0.040	0.894	2156.958	0.000
	68.75 - 67.75		28.503	720.664	0.040	0.894	2177.358	0.000
	67.75 - 66.75		28.524	724.047	0.039	0.894	2197.850	0.000
	66.75 - 65.75		28.545	727.431	0.039	0.893	2218.442	0.000
	65.75 - 64.75		28.565	730.815	0.039	0.893	2239.133	0.000
L29	64.75 - 63.75	TP36.171x35.361x0.375	28.583	734.199	0.039	0.893	2259.917	0.000
	63.75 - 62.75		28.601	737.582	0.039	0.893	2280.792	0.000
	62.75 - 61.75		28.618	740.966	0.039	0.892	2301.767	0.000
	61.75 - 60.75		28.635	744.350	0.038	0.892	2322.833	0.000
	60.75 - 59.75		28.652	747.733	0.038	0.892	2344.000	0.000
L30	59.75 - 58.75	TP36.981x36.171x0.375	28.667	751.117	0.038	0.892	2365.267	0.000
	58.75 - 57.75		28.681	754.501	0.038	0.892	2386.625	0.000
	57.75 - 56.75		28.695	757.884	0.038	0.891	2408.075	0.000
	56.75 - 55.75		28.709	761.268	0.038	0.891	2429.625	0.000
	55.75 - 54.75		28.722	764.652	0.038	0.891	2451.275	0.000
L31	54.75 - 53.75	TP37.791x36.981x0.375	28.734	768.035	0.037	0.891	2473.017	0.000
	53.75 - 52.75		28.744	771.419	0.037	0.891	2494.858	0.000
	52.75 - 51.75		28.755	774.803	0.037	0.890	2516.792	0.000
	51.75 - 50.75		28.765	778.187	0.037	0.890	2538.825	0.000
	50.75 - 49.75		28.775	781.570	0.037	0.890	2560.950	0.000
L32	49.75 - 48	TP38.884x37.791x0.375	28.818	787.492	0.037	0.890	2599.900	0.000
	48 - 43		14.020	804.410	0.017	0.500	2712.817	0.000
L33	48 - 43	TP38.296x37.324x0.438	15.153	918.679	0.016	0.547	3032.817	0.000
	43 - 42		29.126	922.627	0.032	1.047	3058.933	0.000
L34	42 - 41	TP39.106x38.296x0.438	29.133	926.575	0.031	1.046	3085.167	0.000
	41 - 40		29.140	930.523	0.031	1.046	3111.517	0.000
	40 - 39		29.146	934.471	0.031	1.046	3137.975	0.000
	39 - 38		29.152	938.419	0.031	1.046	3164.550	0.000
	38 - 37		29.158	942.367	0.031	1.046	3191.233	0.000
L35	37 - 36	TP39.916x39.106x0.438	29.161	946.315	0.031	1.046	3218.025	0.000
	36 - 35		29.164	950.263	0.031	1.046	3244.933	0.000
	35 - 34		29.166	954.211	0.031	1.045	3271.950	0.000
	34 - 33		29.168	958.159	0.030	1.045	3299.083	0.000
	33 - 32		29.170	962.107	0.030	1.045	3326.325	0.000
L36	32 - 30.9782	TP40.578x39.916x0.438	29.170	966.141	0.030	1.045	3354.275	0.000
	30.9782 - 29.9565		29.168	970.174	0.030	1.045	3382.342	0.000
	29.9565 - 28.9348		29.166	974.208	0.030	1.045	3410.525	0.000
	28.9348 - 27.913		29.164	978.242	0.030	1.045	3438.833	0.000
L37	27.913 - 27.663 (37)	TP40.619x40.578x0.675	29.141	1501.880	0.019	1.045	5253.675	0.000
L38	27.663 - 27.25 (38)	TP40.686x40.619x0.675	29.156	1504.400	0.019	1.045	5271.283	0.000
L39	27.25 - 26.983 (39)	TP40.729x40.686x0.675	29.160	1506.020	0.019	1.045	5282.692	0.000
L40	26.983 - 26.833 (40)	TP40.753x40.729x0.663	29.161	1479.490	0.020	1.045	5194.392	0.000
L41	26.833 - 25.833	TP41.563x40.753x0.663	29.204	1485.470	0.020	1.045	5236.458	0.000
	25.833 - 24.833		29.227	1491.450	0.020	1.045	5278.692	0.000
	24.833 - 23.833		29.250	1497.430	0.020	1.045	5321.092	0.000

Section No.	Elevation ft	Size	Actual V_u K	ϕV_n K	Ratio $\frac{V_u}{\phi V_n}$	Actual T_u kip-ft	ϕT_n kip-ft	Ratio $\frac{T_u}{\phi T_n}$
	23.833 - 22.833		29.272	1503.400	0.019	1.045	5363.667	0.000
	22.833 - 21.833		29.294	1509.380	0.019	1.045	5406.408	0.000
L42	21.833 - 20.833	TP42.373x41.563x0.663	29.315	1515.360	0.019	1.045	5449.325	0.000
	20.833 - 19.833		29.336	1521.340	0.019	1.044	5492.408	0.000
	19.833 - 18.833		29.357	1527.320	0.019	1.044	5535.658	0.000
	18.833 - 17.833		29.377	1533.300	0.019	1.044	5579.075	0.000
	17.833 - 16.833		29.397	1539.270	0.019	1.044	5622.667	0.000
L43	16.833 - 16 (43)	TP42.508x42.373x0.663	29.411	1544.250	0.019	1.044	5659.108	0.000
L44	16 - 15.75 (44)	TP42.549x42.508x0.813	29.403	1888.940	0.016	1.044	6904.141	0.000
L45	15.75 - 14.747 (45)	TP42.711x42.549x0.813	29.449	1896.300	0.016	1.044	6958.000	0.000
L46	14.747 - 14.497 (46)	TP42.752x42.711x0.488	29.437	1147.700	0.026	1.044	4247.958	0.000
L47	14.497 - 13.29	TP43.143x42.752x0.488	29.473	1153.010	0.026	1.044	4287.350	0.000
	13.29 - 12.083		29.475	1158.320	0.025	1.044	4326.933	0.000
L48	12.083 - 11.833 (48)	TP43.183x43.143x0.738	29.445	1743.730	0.017	1.044	6481.725	0.000
L49	11.833 - 10 (49)	TP43.48x43.183x0.738	29.527	1755.930	0.017	1.044	6572.733	0.000
L50	10 - 9.75 (50)	TP43.521x43.48x0.738	29.496	1757.590	0.017	1.044	6585.200	0.000
L51	9.75 - 8.75	TP44.331x43.521x0.725	29.536	1734.850	0.017	1.044	6526.500	0.000
	8.75 - 7.75		29.558	1741.390	0.017	1.044	6575.817	0.000
	7.75 - 6.75		29.579	1747.930	0.017	1.044	6625.317	0.000
	6.75 - 5.75		29.601	1754.470	0.017	1.044	6675.008	0.000
	5.75 - 4.75		29.621	1761.020	0.017	1.044	6724.883	0.000
L52	4.75 - 3.5625	TP45.1x44.331x0.713	29.650	1738.790	0.017	1.044	6671.183	0.000
	3.5625 - 2.375		29.673	1746.420	0.017	1.044	6729.900	0.000
	2.375 - 1.1875		29.696	1754.060	0.017	1.044	6788.875	0.000
	1.1875 - 0		29.718	1761.690	0.017	1.044	6848.100	0.000

Pole Interaction Design Data

Section No.	Elevation ft	Ratio $\frac{P_u}{\phi P_n}$	Ratio $\frac{M_{ux}}{\phi M_{nx}}$	Ratio $\frac{M_{uy}}{\phi M_{ny}}$	Ratio $\frac{V_u}{\phi V_n}$	Ratio $\frac{T_u}{\phi T_n}$	Comb. Stress Ratio	Allow. Stress Ratio	Criteria
L1	160 - 159	0.000	0.000	0.000	0.000	0.000	0.000 ✔	1.050	4.8.2 ✔
	159 - 158	0.000	0.001	0.000	0.001	0.000	0.001 ✔	1.050	4.8.2 ✔
	158 - 157	0.001	0.001	0.000	0.001	0.000	0.002 ✔	1.050	4.8.2 ✔
	157 - 156	0.013	0.140	0.000	0.070	0.002	0.157 ✔	1.050	4.8.2 ✔
	156 - 155	0.013	0.216	0.000	0.071	0.006	0.235 ✔	1.050	4.8.2 ✔

Section No.	Elevation ft	Ratio $P_u/\phi P_n$	Ratio $M_{ux}/\phi M_{nx}$	Ratio $M_{uy}/\phi M_{ny}$	Ratio $V_u/\phi V_n$	Ratio $T_u/\phi T_n$	Comb. Stress Ratio	Allow. Stress Ratio	Criteria
L2	155 - 154	0.013	0.294	0.000	0.072	0.006	0.314 ✔	1.050	4.8.2 ✔
	154 - 153	0.014	0.374	0.000	0.074	0.006	0.394 ✔	1.050	4.8.2 ✔
	153 - 152	0.014	0.454	0.000	0.075	0.006	0.475 ✔	1.050	4.8.2 ✔
	152 - 151	0.015	0.536	0.000	0.076	0.006	0.557 ✔	1.050	4.8.2 ✔
	151 - 150	0.015	0.619	0.000	0.077	0.006	0.641 ✔	1.050	4.8.2 ✔
L3	150 - 148.5 (3)	0.016	0.745	0.000	0.078	0.006	0.768 ✔	1.050	4.8.2 ✔
L4	148.5 - 148 (4)	0.007	0.170	0.000	0.036	0.001	0.179 ✔	1.050	4.8.2 ✔
L5	148 - 147	0.011	0.155	0.000	0.043	0.001	0.167 ✔	1.050	4.8.2 ✔
	147 - 146	0.011	0.174	0.000	0.043	0.001	0.187 ✔	1.050	4.8.2 ✔
	146 - 145	0.011	0.193	0.000	0.043	0.001	0.206 ✔	1.050	4.8.2 ✔
	145 - 144	0.012	0.213	0.000	0.046	0.001	0.227 ✔	1.050	4.8.2 ✔
	144 - 143	0.012	0.232	0.000	0.046	0.001	0.246 ✔	1.050	4.8.2 ✔
L6	143 - 142	0.012	0.251	0.000	0.046	0.001	0.266 ✔	1.050	4.8.2 ✔
	142 - 141	0.012	0.270	0.000	0.046	0.001	0.284 ✔	1.050	4.8.2 ✔
	141 - 140	0.012	0.289	0.000	0.046	0.001	0.303 ✔	1.050	4.8.2 ✔
	140 - 139	0.012	0.307	0.000	0.047	0.001	0.321 ✔	1.050	4.8.2 ✔
	139 - 138	0.012	0.325	0.000	0.047	0.001	0.339 ✔	1.050	4.8.2 ✔
L7	138 - 137	0.016	0.349	0.000	0.062	0.001	0.369 ✔	1.050	4.8.2 ✔
	137 - 136	0.016	0.374	0.000	0.062	0.001	0.393 ✔	1.050	4.8.2 ✔
	136 - 135	0.016	0.398	0.000	0.061	0.001	0.417 ✔	1.050	4.8.2 ✔
	135 - 134	0.016	0.421	0.000	0.061	0.001	0.441 ✔	1.050	4.8.2 ✔
	134 - 133	0.016	0.444	0.000	0.061	0.001	0.464 ✔	1.050	4.8.2 ✔
L8	133 - 132	0.016	0.467	0.000	0.061	0.001	0.487 ✔	1.050	4.8.2 ✔
	132 - 131	0.016	0.489	0.000	0.061	0.001	0.509 ✔	1.050	4.8.2 ✔
	131 - 130	0.016	0.511	0.000	0.060	0.001	0.531 ✔	1.050	4.8.2 ✔
	130 - 129	0.016	0.533	0.000	0.060	0.001	0.552 ✔	1.050	4.8.2 ✔

Section No.	Elevation ft	Ratio $P_u/\phi P_n$	Ratio $M_{ux}/\phi M_{nx}$	Ratio $M_{uy}/\phi M_{ny}$	Ratio $V_u/\phi V_n$	Ratio $T_u/\phi T_n$	Comb. Stress Ratio	Allow. Stress Ratio	Criteria
	129 - 128	0.016	0.554	0.000	0.060	0.001	0.573 ✔	1.050	4.8.2 ✔
L9	128 - 127	0.016	0.574	0.000	0.060	0.001	0.594 ✔	1.050	4.8.2 ✔
	127 - 126	0.020	0.603	0.000	0.069	0.001	0.627 ✔	1.050	4.8.2 ✔
	126 - 125	0.020	0.626	0.000	0.068	0.001	0.651 ✔	1.050	4.8.2 ✔
	125 - 124	0.020	0.650	0.000	0.068	0.001	0.674 ✔	1.050	4.8.2 ✔
	124 - 123	0.020	0.672	0.000	0.068	0.001	0.697 ✔	1.050	4.8.2 ✔
L10	123 - 122	0.020	0.695	0.000	0.067	0.001	0.719 ✔	1.050	4.8.2 ✔
	122 - 121	0.020	0.717	0.000	0.067	0.001	0.741 ✔	1.050	4.8.2 ✔
	121 - 120	0.020	0.738	0.000	0.067	0.001	0.762 ✔	1.050	4.8.2 ✔
	120 - 119	0.020	0.759	0.000	0.067	0.001	0.784 ✔	1.050	4.8.2 ✔
	119 - 118	0.022	0.783	0.000	0.072	0.001	0.810 ✔	1.050	4.8.2 ✔
L11	118 - 116.917	0.022	0.807	0.000	0.072	0.001	0.834 ✔	1.050	4.8.2 ✔
	116.917 - 115.833	0.022	0.832	0.000	0.072	0.001	0.859 ✔	1.050	4.8.2 ✔
	115.833 - 114.75	0.022	0.855	0.000	0.071	0.001	0.882 ✔	1.050	4.8.2 ✔
	114.75 - 111	0.010	0.429	0.000	0.033	0.000	0.440 ✔	1.050	4.8.2 ✔
L12	114.75 - 111	0.010	0.405	0.000	0.031	0.000	0.416 ✔	1.050	4.8.2 ✔
	111 - 109.75	0.018	0.767	0.000	0.057	0.001	0.789 ✔	1.050	4.8.2 ✔
L13	109.75 - 108.646	0.018	0.783	0.000	0.057	0.001	0.804 ✔	1.050	4.8.2 ✔
	108.646 - 107.542	0.018	0.798	0.000	0.057	0.001	0.820 ✔	1.050	4.8.2 ✔
	107.542 - 106.437	0.018	0.813	0.000	0.057	0.001	0.835 ✔	1.050	4.8.2 ✔
	106.437 - 105.333	0.018	0.828	0.000	0.056	0.001	0.849 ✔	1.050	4.8.2 ✔
L14	105.333 - 105.083 (14)	0.012	0.563	0.000	0.038	0.001	0.577 ✔	1.050	4.8.2 ✔
L15	105.083 - 104.083	0.012	0.579	0.000	0.038	0.001	0.593 ✔	1.050	4.8.2 ✔
	104.083 - 103.083	0.012	0.588	0.000	0.038	0.001	0.602 ✔	1.050	4.8.2 ✔
	103.083 - 102.083	0.012	0.596	0.000	0.038	0.000	0.610 ✔	1.050	4.8.2 ✔
	102.083 - 101.083	0.012	0.604	0.000	0.038	0.000	0.618 ✔	1.050	4.8.2 ✔

Section No.	Elevation ft	Ratio $P_u/\phi P_n$	Ratio $M_{ux}/\phi M_{nx}$	Ratio $M_{uy}/\phi M_{ny}$	Ratio $V_u/\phi V_n$	Ratio $T_u/\phi T_n$	Comb. Stress Ratio	Allow. Stress Ratio	Criteria
	101.083 - 100.083	0.012	0.612	0.000	0.038	0.000	0.626 ✔	1.050	4.8.2 ✔
L16	100.083 - 99.083	0.013	0.620	0.000	0.037	0.000	0.634 ✔	1.050	4.8.2 ✔
	99.083 - 98.083	0.013	0.628	0.000	0.037	0.000	0.642 ✔	1.050	4.8.2 ✔
	98.083 - 97.083	0.013	0.635	0.000	0.037	0.000	0.649 ✔	1.050	4.8.2 ✔
	97.083 - 96.083	0.013	0.642	0.000	0.037	0.000	0.656 ✔	1.050	4.8.2 ✔
	96.083 - 95.083	0.013	0.650	0.000	0.037	0.000	0.664 ✔	1.050	4.8.2 ✔
L17	95.083 - 93.7915	0.013	0.667	0.000	0.037	0.000	0.681 ✔	1.050	4.8.2 ✔
	93.7915 - 92.5	0.013	0.676	0.000	0.037	0.000	0.690 ✔	1.050	4.8.2 ✔
L18	92.5 - 92.25 (18)	0.009	0.494	0.000	0.027	0.000	0.504 ✔	1.050	4.8.2 ✔
L19	92.25 - 91.25	0.010	0.508	0.000	0.027	0.000	0.518 ✔	1.050	4.8.2 ✔
	91.25 - 90.25	0.010	0.512	0.000	0.027	0.000	0.523 ✔	1.050	4.8.2 ✔
	90.25 - 89.25	0.010	0.517	0.000	0.027	0.000	0.528 ✔	1.050	4.8.2 ✔
	89.25 - 88.25	0.010	0.522	0.000	0.027	0.000	0.532 ✔	1.050	4.8.2 ✔
	88.25 - 87.25	0.010	0.526	0.000	0.027	0.000	0.537 ✔	1.050	4.8.2 ✔
L20	87.25 - 86.25	0.010	0.541	0.000	0.027	0.000	0.551 ✔	1.050	4.8.2 ✔
	86.25 - 85.25	0.010	0.545	0.000	0.027	0.000	0.556 ✔	1.050	4.8.2 ✔
	85.25 - 84.25	0.010	0.549	0.000	0.027	0.000	0.560 ✔	1.050	4.8.2 ✔
	84.25 - 83.25	0.010	0.554	0.000	0.027	0.000	0.564 ✔	1.050	4.8.2 ✔
	83.25 - 82.25	0.010	0.558	0.000	0.027	0.000	0.569 ✔	1.050	4.8.2 ✔
L21	82.25 - 81	0.010	0.563	0.000	0.027	0.000	0.574 ✔	1.050	4.8.2 ✔
	81 - 76.75	0.007	0.364	0.000	0.017	0.000	0.371 ✔	1.050	4.8.2 ✔
L22	81 - 76.75	0.006	0.330	0.000	0.015	0.000	0.336 ✔	1.050	4.8.2 ✔
	76.75 - 75.75	0.016	0.893	0.000	0.041	0.000	0.911 ✔	1.050	4.8.2 ✔
L23	75.75 - 74.75	0.016	0.898	0.000	0.041	0.000	0.916 ✔	1.050	4.8.2 ✔
	74.75 - 73.75	0.016	0.903	0.000	0.040	0.000	0.921 ✔	1.050	4.8.2 ✔
	73.75 - 72.75	0.016	0.908	0.000	0.040	0.000	0.926 ✔	1.050	4.8.2 ✔

Section No.	Elevation ft	Ratio $P_u/\phi P_n$	Ratio $M_{ux}/\phi M_{nx}$	Ratio $M_{uy}/\phi M_{ny}$	Ratio $V_u/\phi V_n$	Ratio $T_u/\phi T_n$	Comb. Stress Ratio	Allow. Stress Ratio	Criteria
	72.75 - 71.75	0.016	0.913	0.000	0.040	0.000	0.931 ✔	1.050	4.8.2 ✔
	71.75 - 70.75	0.016	0.918	0.000	0.040	0.000	0.936 ✔	1.050	4.8.2 ✔
L24	70.75 - 70.583 (24)	0.016	0.919	0.000	0.040	0.000	0.937 ✔	1.050	4.8.2 ✔
L25	70.583 - 70.333 (25)	0.009	0.525	0.000	0.022	0.000	0.535 ✔	1.050	4.8.2 ✔
L26	70.333 - 70 (26)	0.009	0.526	0.000	0.022	0.000	0.535 ✔	1.050	4.8.2 ✔
L27	70 - 69.75 (27)	0.016	0.923	0.000	0.040	0.000	0.941 ✔	1.050	4.8.2 ✔
L28	69.75 - 68.75	0.016	0.927	0.000	0.040	0.000	0.945 ✔	1.050	4.8.2 ✔
	68.75 - 67.75	0.016	0.932	0.000	0.040	0.000	0.950 ✔	1.050	4.8.2 ✔
	67.75 - 66.75	0.016	0.936	0.000	0.039	0.000	0.954 ✔	1.050	4.8.2 ✔
	66.75 - 65.75	0.016	0.941	0.000	0.039	0.000	0.958 ✔	1.050	4.8.2 ✔
	65.75 - 64.75	0.016	0.945	0.000	0.039	0.000	0.963 ✔	1.050	4.8.2 ✔
L29	64.75 - 63.75	0.016	0.949	0.000	0.039	0.000	0.967 ✔	1.050	4.8.2 ✔
	63.75 - 62.75	0.016	0.953	0.000	0.039	0.000	0.970 ✔	1.050	4.8.2 ✔
	62.75 - 61.75	0.016	0.956	0.000	0.039	0.000	0.974 ✔	1.050	4.8.2 ✔
	61.75 - 60.75	0.016	0.960	0.000	0.038	0.000	0.978 ✔	1.050	4.8.2 ✔
	60.75 - 59.75	0.016	0.965	0.000	0.038	0.000	0.983 ✔	1.050	4.8.2 ✔
L30	59.75 - 58.75	0.017	0.969	0.000	0.038	0.000	0.987 ✔	1.050	4.8.2 ✔
	58.75 - 57.75	0.017	0.974	0.000	0.038	0.000	0.992 ✔	1.050	4.8.2 ✔
	57.75 - 56.75	0.017	0.978	0.000	0.038	0.000	0.996 ✔	1.050	4.8.2 ✔
	56.75 - 55.75	0.017	0.982	0.000	0.038	0.000	1.000 ✔	1.050	4.8.2 ✔
	55.75 - 54.75	0.017	0.987	0.000	0.038	0.000	1.005 ✔	1.050	4.8.2 ✔
L31	54.75 - 53.75	0.017	0.991	0.000	0.037	0.000	1.009 ✔	1.050	4.8.2 ✔
	53.75 - 52.75	0.017	0.995	0.000	0.037	0.000	1.013 ✔	1.050	4.8.2 ✔
	52.75 - 51.75	0.017	0.999	0.000	0.037	0.000	1.017 ✔	1.050	4.8.2 ✔
	51.75 - 50.75	0.017	1.003	0.000	0.037	0.000	1.021 ✔	1.050	4.8.2 ✔
	50.75 - 49.75	0.017	1.006	0.000	0.037	0.000	1.025 ✔	1.050	4.8.2 ✔

Section No.	Elevation ft	Ratio $P_u/\phi P_n$	Ratio $M_{ux}/\phi M_{nx}$	Ratio $M_{uy}/\phi M_{ny}$	Ratio $V_u/\phi V_n$	Ratio $T_u/\phi T_n$	Comb. Stress Ratio	Allow. Stress Ratio	Criteria
L32	49.75 - 48	0.017	1.013	0.000	0.037	0.000	1.031 ✔	1.050	4.8.2 ✔
	48 - 43	0.008	0.492	0.000	0.017	0.000	0.501 ✔	1.050	4.8.2 ✔
L33	48 - 43	0.008	0.473	0.000	0.016	0.000	0.482 ✔	1.050	4.8.2 ✔
	43 - 42	0.015	0.908	0.000	0.032	0.000	0.924 ✔	1.050	4.8.2 ✔
L34	42 - 41	0.015	0.910	0.000	0.031	0.000	0.926 ✔	1.050	4.8.2 ✔
	41 - 40	0.015	0.911	0.000	0.031	0.000	0.928 ✔	1.050	4.8.2 ✔
	40 - 39	0.015	0.913	0.000	0.031	0.000	0.929 ✔	1.050	4.8.2 ✔
	39 - 38	0.015	0.915	0.000	0.031	0.000	0.931 ✔	1.050	4.8.2 ✔
	38 - 37	0.015	0.916	0.000	0.031	0.000	0.933 ✔	1.050	4.8.2 ✔
L35	37 - 36	0.015	0.918	0.000	0.031	0.000	0.934 ✔	1.050	4.8.2 ✔
	36 - 35	0.015	0.919	0.000	0.031	0.000	0.936 ✔	1.050	4.8.2 ✔
	35 - 34	0.016	0.920	0.000	0.031	0.000	0.937 ✔	1.050	4.8.2 ✔
	34 - 33	0.016	0.922	0.000	0.030	0.000	0.938 ✔	1.050	4.8.2 ✔
	33 - 32	0.016	0.923	0.000	0.030	0.000	0.940 ✔	1.050	4.8.2 ✔
L36	32 - 30.9782	0.016	0.924	0.000	0.030	0.000	0.941 ✔	1.050	4.8.2 ✔
	30.9782 - 29.9565	0.016	0.925	0.000	0.030	0.000	0.942 ✔	1.050	4.8.2 ✔
	29.9565 - 28.9348	0.016	0.927	0.000	0.030	0.000	0.943 ✔	1.050	4.8.2 ✔
	28.9348 - 27.913	0.016	0.928	0.000	0.030	0.000	0.944 ✔	1.050	4.8.2 ✔
L37	27.913 - 27.663 (37)	0.010	0.612	0.000	0.019	0.000	0.623 ✔	1.050	4.8.2 ✔
L38	27.663 - 27.25 (38)	0.010	0.612	0.000	0.019	0.000	0.623 ✔	1.050	4.8.2 ✔
L39	27.25 - 26.983 (39)	0.010	0.613	0.000	0.019	0.000	0.623 ✔	1.050	4.8.2 ✔
L40	26.983 - 26.833 (40)	0.010	0.624	0.000	0.020	0.000	0.635 ✔	1.050	4.8.2 ✔
L41	26.833 - 25.833	0.011	0.624	0.000	0.020	0.000	0.635 ✔	1.050	4.8.2 ✔
	25.833 - 24.833	0.011	0.625	0.000	0.020	0.000	0.636 ✔	1.050	4.8.2 ✔
	24.833 - 23.833	0.011	0.625	0.000	0.020	0.000	0.636 ✔	1.050	4.8.2 ✔
	23.833 - 22.833	0.011	0.626	0.000	0.019	0.000	0.637 ✔	1.050	4.8.2 ✔

Section No.	Elevation ft	Ratio $P_u/\phi P_n$	Ratio $M_{ux}/\phi M_{nx}$	Ratio $M_{uy}/\phi M_{ny}$	Ratio $V_u/\phi V_n$	Ratio $T_u/\phi T_n$	Comb. Stress Ratio	Allow. Stress Ratio	Criteria
	22.833 - 21.833	0.011	0.626	0.000	0.019	0.000	0.637 ✔	1.050	4.8.2 ✔
L42	21.833 - 20.833	0.011	0.627	0.000	0.019	0.000	0.638 ✔	1.050	4.8.2 ✔
	20.833 - 19.833	0.011	0.627	0.000	0.019	0.000	0.639 ✔	1.050	4.8.2 ✔
	19.833 - 18.833	0.011	0.628	0.000	0.019	0.000	0.639 ✔	1.050	4.8.2 ✔
	18.833 - 17.833	0.011	0.628	0.000	0.019	0.000	0.639 ✔	1.050	4.8.2 ✔
	17.833 - 16.833	0.011	0.629	0.000	0.019	0.000	0.640 ✔	1.050	4.8.2 ✔
L43	16.833 - 16 (43)	0.011	0.629	0.000	0.019	0.000	0.640 ✔	1.050	4.8.2 ✔
L44	16 - 15.75 (44)	0.009	0.518	0.000	0.016	0.000	0.528 ✔	1.050	4.8.2 ✔
L45	15.75 - 14.747 (45)	0.009	0.519	0.000	0.016	0.000	0.528 ✔	1.050	4.8.2 ✔
L46	14.747 - 14.497 (46)	0.015	0.845	0.000	0.026	0.000	0.860 ✔	1.050	4.8.2 ✔
L47	14.497 - 13.29	0.015	0.845	0.000	0.026	0.000	0.861 ✔	1.050	4.8.2 ✔
	13.29 - 12.083	0.015	0.846	0.000	0.025	0.000	0.861 ✔	1.050	4.8.2 ✔
L48	12.083 - 11.833 (48)	0.010	0.569	0.000	0.017	0.000	0.579 ✔	1.050	4.8.2 ✔
L49	11.833 - 10 (49)	0.010	0.570	0.000	0.017	0.000	0.580 ✔	1.050	4.8.2 ✔
L50	10 - 9.75 (50)	0.010	0.570	0.000	0.017	0.000	0.580 ✔	1.050	4.8.2 ✔
L51	9.75 - 8.75	0.010	0.579	0.000	0.017	0.000	0.590 ✔	1.050	4.8.2 ✔
	8.75 - 7.75	0.010	0.579	0.000	0.017	0.000	0.590 ✔	1.050	4.8.2 ✔
	7.75 - 6.75	0.010	0.579	0.000	0.017	0.000	0.590 ✔	1.050	4.8.2 ✔
	6.75 - 5.75	0.010	0.580	0.000	0.017	0.000	0.590 ✔	1.050	4.8.2 ✔
	5.75 - 4.75	0.010	0.580	0.000	0.017	0.000	0.590 ✔	1.050	4.8.2 ✔
L52	4.75 - 3.5625	0.011	0.590	0.000	0.017	0.000	0.600 ✔	1.050	4.8.2 ✔
	3.5625 - 2.375	0.011	0.590	0.000	0.017	0.000	0.601 ✔	1.050	4.8.2 ✔
	2.375 - 1.1875	0.011	0.590	0.000	0.017	0.000	0.601 ✔	1.050	4.8.2 ✔
	1.1875 - 0	0.011	0.590	0.000	0.017	0.000	0.601 ✔	1.050	4.8.2 ✔

Section Capacity Table

Section No.	Elevation ft	Component Type	Size	Critical Element	P K	ϕP_{allow} K	% Capacity	Pass Fail
L1	160 - 155	Pole	TP10.75x10.75x0.349	1	-4.531	--	22.3	Pass[1]
L2	155 - 150	Pole	TP10.75x10.75x0.349	2	-5.447	--	60.9	Pass[1]
L3	150 - 148.5	Pole	TP10.75x10.75x0.349	3	-5.729	--	73.0	Pass[1]
L4	148.5 - 148	Pole	TP23x23x0.349	4	-5.854	--	17.1	Pass[1]
L5	148 - 143	Pole	TP23.81x23x0.25	5	-11.987	--	23.4	Pass[1]
L6	143 - 138	Pole	TP24.62x23.81x0.25	6	-12.829	--	32.3	Pass[1]
L7	138 - 133	Pole	TP25.43x24.62x0.25	7	-17.035	--	44.2	Pass[1]
L8	133 - 128	Pole	TP26.24x25.43x0.25	8	-17.665	--	54.6	Pass[1]
L9	128 - 123	Pole	TP27.05x26.24x0.25	9	-22.569	--	66.4	Pass[1]
L10	123 - 118	Pole	TP27.86x27.05x0.25	10	-25.615	--	77.1	Pass[1]
L11	118 - 114.75	Pole	TP28.994x27.86x0.25	11	-26.154	--	84.0	Pass[1]
L12	114.75 - 109.75	Pole	TP28.696x27.887x0.313	12	-27.364	--	75.1	Pass[1]
L13	109.75 - 105.33	Pole	TP29.412x28.696x0.313	13	-28.218	--	80.8	Pass[1]
L14	105.33 - 105.08	Pole + Reinf.	TP29.452x29.412x0.469	14	-28.295	--	76.8	Pass[1]
L15	105.08 - 100.08	Pole + Reinf.	TP30.262x29.452x0.463	15	-29.460	--	83.1	Pass[1]
L16	100.08 - 95.08	Pole + Reinf.	TP31.072x30.262x0.463	16	-30.661	--	88.9	Pass[1]
L17	95.08 - 92.5	Pole + Reinf.	TP31.491x31.072x0.456	17	-31.288	--	91.7	Pass[1]
L18	92.5 - 92.25	Pole + Reinf.	TP31.531x31.491x0.638	18	-31.381	--	81.4	Pass[1]
L19	92.25 - 87.25	Pole + Reinf.	TP32.341x31.531x0.625	19	-32.869	--	86.3	Pass[1]
L20	87.25 - 82.25	Pole + Reinf.	TP33.151x32.341x0.613	20	-34.391	--	90.9	Pass[1]
L21	82.25 - 81	Pole + Reinf.	TP34.042x33.151x0.613	21	-34.773	--	92.0	Pass[1]
L22	81 - 75.75	Pole	TP33.579x32.729x0.375	22	-36.970	--	86.7	Pass[1]
L23	75.75 - 70.75	Pole	TP34.389x33.579x0.375	23	-38.209	--	89.1	Pass[1]
L24	70.75 - 70.58	Pole	TP34.416x34.389x0.375	24	-38.270	--	89.2	Pass[1]
L25	70.58 - 70.33	Pole + Reinf.	TP34.456x34.416x0.675	25	-38.364	--	78.0	Pass[1]
L26	70.33 - 70	Pole + Reinf.	TP34.51x34.456x0.675	26	-38.487	--	78.2	Pass[1]
L27	70 - 69.75	Pole	TP34.551x34.51x0.375	27	-38.549	--	89.5	Pass[1]
L28	69.75 - 64.75	Pole	TP35.361x34.551x0.375	28	-39.800	--	91.6	Pass[1]
L29	64.75 - 59.75	Pole	TP36.171x35.361x0.375	29	-41.092	--	93.6	Pass[1]
L30	59.75 - 54.75	Pole	TP36.981x36.171x0.375	30	-42.406	--	95.7	Pass[1]
L31	54.75 - 49.75	Pole	TP37.791x36.981x0.375	31	-43.743	--	97.6	Pass[1]
L32	49.75 - 48	Pole	TP38.884x37.791x0.375	32	-44.199	--	98.2	Pass[1]
L33	48 - 42	Pole	TP38.296x37.324x0.438	33	-46.909	--	88.0	Pass[1]
L34	42 - 37	Pole	TP39.106x38.296x0.438	34	-48.417	--	88.8	Pass[1]
L35	37 - 32	Pole	TP39.916x39.106x0.438	35	-49.948	--	89.4	Pass[1]
L36	32 - 27.91	Pole	TP40.578x39.916x0.438	36	-51.216	--	89.9	Pass[1]
L37	27.91 - 27.66	Pole + Reinf.	TP40.619x40.578x0.675	37	-51.342	--	87.7	Pass[1]
L38	27.66 - 27.25	Pole + Reinf.	TP40.686x40.619x0.675	38	-51.518	--	87.8	Pass[1]
L39	27.25 - 26.98	Pole + Reinf.	TP40.729x40.686x0.675	39	-51.628	--	85.9	Pass[1]
L40	26.98 - 26.83	Pole + Reinf.	TP40.753x40.729x0.663	40	-51.690	--	85.9	Pass[1]
L41	26.83 - 21.83	Pole + Reinf.	TP41.563x40.753x0.663	41	-53.703	--	86.9	Pass[1]
L42	21.83 - 16.83	Pole + Reinf.	TP42.373x41.563x0.663	42	-55.750	--	87.8	Pass[1]
L43	16.83 - 16	Pole + Reinf.	TP42.508x42.373x0.663	43	-56.096	--	87.9	Pass[1]
L44	16 - 15.75	Pole + Reinf.	TP42.549x42.508x0.813	44	-56.225	--	78.8	Pass[1]
L45	15.75 - 14.75	Pole + Reinf.	TP42.711x42.549x0.813	45	-56.701	--	79.0	Pass[1]
L46	14.75 - 14.5	Pole + Reinf.	TP42.752x42.711x0.488	46	-56.805	--	89.7	Pass[1]
L47	14.5 - 12.08	Pole + Reinf.	TP43.143x42.752x0.488	47	-57.730	--	90.0	Pass[1]
L48	12.08 - 11.83	Pole + Reinf.	TP43.183x43.143x0.738	48	-57.860	--	80.6	Pass[1]
L49	11.83 - 10	Pole + Reinf.	TP43.48x43.183x0.738	49	-58.666	--	80.9	Pass[1]
L50	10 - 9.75	Pole + Reinf.	TP43.521x43.48x0.738	50	-58.797	--	80.9	Pass[1]
L51	9.75 - 4.75	Pole + Reinf.	TP44.331x43.521x0.725	51	-61.051	--	81.6	Pass[1]
L52	4.75 - 0	Pole + Reinf.	TP45.1x44.331x0.713	52	-63.223	--	82.2	Pass[1]
							Summary	
						Pole (L32)	98.2	Pass[1]
						Rating =	98.2	Pass[1]

Notes:

1) See additional documentation in "Appendix C – Additional Calculations" for calculations supporting the % capacity consumed.

APPENDIX B

BASE LEVEL DRAWING

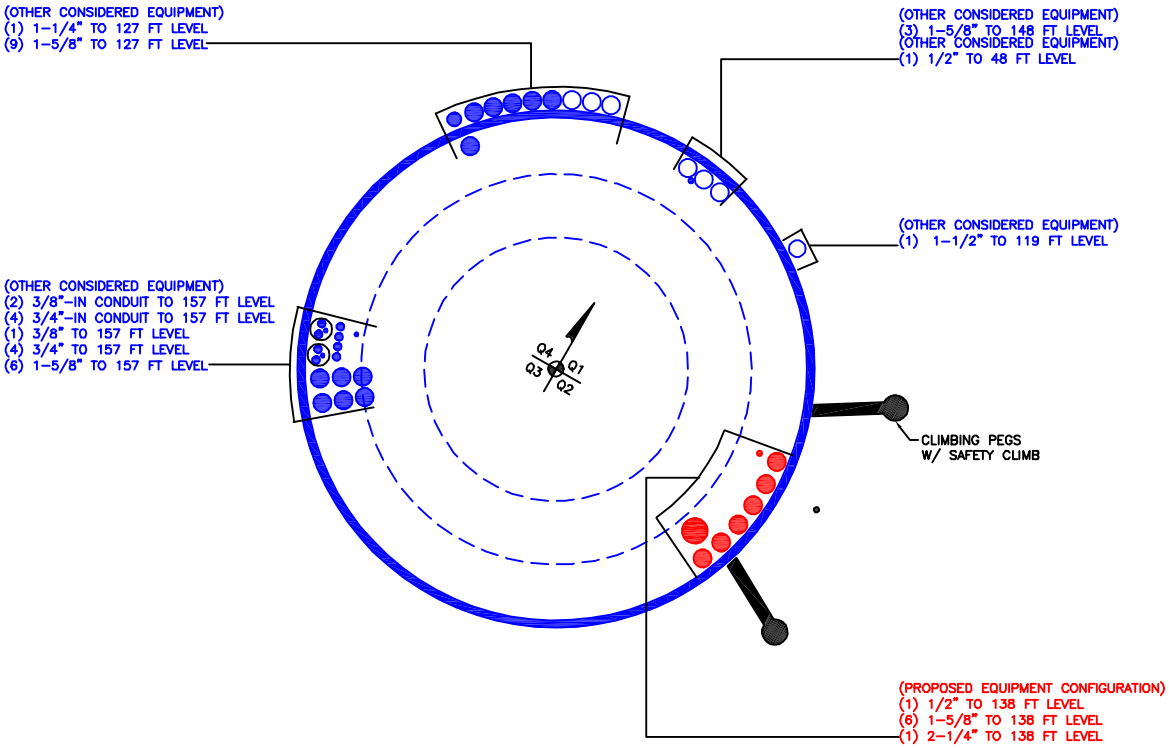

BUSINESS UNIT: 876313

APPENDIX C

ADDITIONAL CALCULATIONS

CCIpole

per TIA-222- H

Site BU: 876313

Work Order: 2065105

CROWN CASTLE

Copyright © 2019 Crown Castle

Pole Geometry

	Pole Height Above Base (ft)	Section Length (ft)	Lap Splice Length (ft)	Number of Sides	Top Diameter (in)	Bottom Diameter (in)	Wall Thickness (in)	Bend Radius (in)	Pole Material
1	160	11.5	0	0	10.75	10.75	0.349		A53-B-35
2	148.5	0.5	0	0	23.00	23	0.349		A53-B-35
3	148	37	3.75	18	23.00	28.994	0.25	Auto	A607-60
4	114.75	38	4.25	18	27.89	34.042	0.3125	Auto	A607-60
5	81	38	5	18	32.73	38.884	0.375	Auto	A607-65
6	48	48	0	18	37.32	45.1	0.4375	Auto	A607-65

Reinforcement Configuration

	Bottom Effective Elevation (ft)	Top Effective Elevation (ft)	Type	Model	Pole Flat Width (in)	1	2	3	4	5	6	7	8	9	10	11	12	13	14	15	16	17	18
1	0	27.083	channel	MP3-06 (1.1875in)	7.18			E1						E1									
2	0	12.083	channel	MP3-06 (1.1875in)	7.61													E1				E1	
3	14.747	27.913	channel	MP3-06 (1.1875in)	7.16															E1			
4	45.417	70.583	channel	MP3-05 (1.1875in)	6.07			E1						E1						E1			
5	78.167	105.333	channel	MP3-04 (1.1875in)	5.19			E1						E1						E1			
6	27.25	46.75	plate	CCI-SFP-065125	6.75						E3						E3						E3
7	10	16	plate	CCI-SFP-060100	7.5						E4						E4						E4
8	70	80	plate	CCI-AFP-060100	5.91	E5						E5				E5							
9	80.5	92.5	plate	CCI-SFP-040125	5.55				P						P						P		
10																							

Reinforcement Details

	B (in)	H (in)	Gross Area (in^2)	Pole Face to Centroid (in)	Bottom Termination Type	Bottom Termination Length (in)	Top Termination Type	Top Termination Length (in)	Lu (in)	Net Area (in2)	Bolt Hole Size (in)	Reinforcement Material
1	6.89	2.61	8.47	0.93	PC 8.8 - M20 (100)	41	PC 8.8 - M20 (100)	41.000	24.000	7.670	1.1875	A572-65
2	6.89	2.61	8.47	0.93	PC 8.8 - M20 (100)	41	PC 8.8 - M20 (100)	41.000	24.000	7.670	1.1875	A572-65
3	6.89	2.61	8.47	0.93	PC 8.8 - M20 (100)	41	PC 8.8 - M20 (100)	41.000	24.000	7.670	1.1875	A572-65
4	5.33	2.09	5.65	0.79	PC 8.8 - M20 (100)	29	PC 8.8 - M20 (100)	29.000	18.000	5.025	1.1875	A572-65
5	4.78	1.61	4.13	0.61	PC 8.8 - M20 (100)	17	PC 8.8 - M20 (100)	17.000	18.000	3.593	1.1875	A572-65
6	6.5	1.25	8.125	0.625	PC 8.8 - M20 (100)	33	PC 8.8 - M20 (100)	33.000	19.000	6.563	1.1875	A572-65
7	6	1	6	0.5	PC 8.8 - M20 (100)	24	PC 8.8 - M20 (100)	24.000	16.000	4.750	1.1875	A572-65
8	6	1	6	0.5	PC 8.8 - M20 (100)	30	PC 8.8 - M20 (100)	30.000	16.000	4.750	1.1875	A572-65
9	4	1.25	5	0.625	PC 8.8 - M20 (100)	18	PC 8.8 - M20 (100)	18.000	27.000	3.438	1.1875	A572-65

TNX Geometry Input

Increment (ft): 5 Export to TNX

	Section Height (ft)	Section Length (ft)	Lap Splice Length (ft)	Number of Sides	Top Diameter (in)	Bottom Diameter (in)	Wall Thickness (in)	Tapered Pole Grade	Weight Multiplier
1	160 - 155	5		0	10.750	10.750	0.349	A53-B-35	1.000
2	155 - 150	5		0	10.750	10.750	0.349	A53-B-35	1.000
3	150 - 148.5	1.5	0	0	10.750	10.750	0.349	A53-B-35	1.000
4	148.5 - 148	0.5	0	0	23.000	23.000	0.349	A53-B-35	1.000
5	148 - 143	5		18	23.000	23.810	0.25	A607-60	1.000
6	143 - 138	5		18	23.810	24.620	0.25	A607-60	1.000
7	138 - 133	5		18	24.620	25.430	0.25	A607-60	1.000
8	133 - 128	5		18	25.430	26.240	0.25	A607-60	1.000
9	128 - 123	5		18	26.240	27.050	0.25	A607-60	1.000
10	123 - 118	5		18	27.050	27.860	0.25	A607-60	1.000
11	118 - 114.75	7	3.75	18	27.860	28.994	0.25	A607-60	1.000
12	114.75 - 109.75	5		18	27.887	28.696	0.3125	A607-60	1.000
13	109.75 - 105.333	4.417		18	28.696	29.412	0.3125	A607-60	1.000
14	105.333 - 105.083	0.25		18	29.412	29.452	0.46875	A607-60	0.958
15	105.083 - 100.083	5		18	29.452	30.262	0.4625	A607-60	0.962
16	100.083 - 95.083	5		18	30.262	31.072	0.4625	A607-60	0.955
17	95.083 - 92.5	2.583		18	31.072	31.491	0.45625	A607-60	0.964
18	92.5 - 92.25	0.25		18	31.491	31.531	0.6375	A607-60	0.934
19	92.25 - 87.25	5		18	31.531	32.341	0.625	A607-60	0.940
20	87.25 - 82.25	5		18	32.341	33.151	0.6125	A607-60	0.948
21	82.25 - 81	5.5	4.25	18	33.151	34.042	0.6125	A607-60	0.945
22	81 - 75.75	5.25		18	32.729	33.579	0.375	A607-65	1.000
23	75.75 - 70.75	5		18	33.579	34.389	0.375	A607-65	1.000
24	70.75 - 70.583	0.167		18	34.389	34.416	0.375	A607-65	1.000
25	70.583 - 70.333	0.25		18	34.416	34.456	0.675	A607-65	1.043
26	70.333 - 70	0.333		18	34.456	34.510	0.675	A607-65	1.043
27	70 - 69.75	0.25		18	34.510	34.551	0.375	A607-65	1.000
28	69.75 - 64.75	5		18	34.551	35.361	0.375	A607-65	1.000
29	64.75 - 59.75	5		18	35.361	36.171	0.375	A607-65	1.000
30	59.75 - 54.75	5		18	36.171	36.981	0.375	A607-65	1.000
31	54.75 - 49.75	5		18	36.981	37.791	0.375	A607-65	1.000
32	49.75 - 48	6.75	5	18	37.791	38.884	0.375	A607-65	1.000
33	48 - 42	6		18	37.324	38.296	0.4375	A607-65	1.000
34	42 - 37	5		18	38.296	39.106	0.4375	A607-65	1.000
35	37 - 32	5		18	39.106	39.916	0.4375	A607-65	1.000
36	32 - 27.913	4.087		18	39.916	40.578	0.4375	A607-65	1.000
37	27.913 - 27.663	0.25		18	40.578	40.619	0.675	A607-65	1.036
38	27.663 - 27.25	0.413		18	40.619	40.686	0.675	A607-65	1.035
39	27.25 - 26.983	0.267		18	40.686	40.729	0.675	A607-65	0.948
40	26.983 - 26.833	0.15		18	40.729	40.753	0.6625	A607-65	0.966
41	26.833 - 21.833	5		18	40.753	41.563	0.6625	A607-65	0.959
42	21.833 - 16.833	5		18	41.563	42.373	0.6625	A607-65	0.954
43	16.833 - 16	0.833		18	42.373	42.508	0.6625	A607-65	0.953
44	16 - 15.75	0.25		18	42.508	42.549	0.8125	A607-65	0.947
45	15.75 - 14.747	1.003		18	42.549	42.711	0.8125	A607-65	0.945
46	14.747 - 14.497	0.25		18	42.711	42.752	0.4875	A607-65	1.158
47	14.497 - 12.083	2.414		18	42.752	43.143	0.4875	A607-65	1.155
48	12.083 - 11.833	0.25		18	43.143	43.183	0.7375	A607-65	0.938
49	11.833 - 10	1.833		18	43.183	43.480	0.7375	A607-65	0.936
50	10 - 9.75	0.25		18	43.480	43.521	0.7375	A607-65	0.936
51	9.75 - 4.75	5		18	43.521	44.331	0.725	A607-65	0.945
52	4.75 - 0	4.75		18	44.331	45.100	0.7125	A607-65	0.955

TNX Section Forces

Increment (ft):	5	TNX Output		
	Section Height (ft)	P_u (K)	M_{ux} (kip-ft)	V_u (K)
1	160 - 155	4.57	21.43	7.60
2	155 - 150	5.45	61.33	8.27
3	150 - 148.5	5.73	73.85	8.44
4	148.5 - 148	5.85	78.08	8.52
5	148 - 143	11.99	143.87	13.95
6	143 - 138	12.83	215.34	14.65
7	138 - 133	17.03	313.19	19.73
8	133 - 128	17.67	412.53	20.02
9	128 - 123	22.57	528.75	23.33
10	123 - 118	25.62	648.17	25.70
11	118 - 114.75	26.15	731.87	25.83
12	114.75 - 109.75	27.36	861.90	26.18
13	109.75 - 105.333	28.22	977.85	26.36
14	105.333 - 105.083	28.30	984.44	26.35
15	105.083 - 100.083	29.46	1116.94	26.65
16	100.083 - 95.083	30.66	1250.86	26.93
17	95.083 - 92.5	31.29	1320.58	27.08
18	92.5 - 92.25	31.38	1327.35	27.08
19	92.25 - 87.25	32.87	1463.65	27.45
20	87.25 - 82.25	34.39	1601.71	27.79
21	82.25 - 81	34.77	1636.49	27.87
22	81 - 75.75	36.97	1783.98	28.29
23	75.75 - 70.75	38.21	1925.65	28.42
24	70.75 - 70.583	38.27	1930.40	28.40
25	70.583 - 70.333	38.36	1937.50	28.41
26	70.333 - 70	38.49	1946.96	28.43
27	70 - 69.75	38.55	1954.07	28.44
28	69.75 - 64.75	39.80	2096.54	28.56
29	64.75 - 59.75	41.09	2239.48	28.65
30	59.75 - 54.75	42.41	2382.81	28.72
31	54.75 - 49.75	43.74	2526.44	28.78
32	49.75 - 48	44.20	2576.78	28.82
33	48 - 42	46.91	2750.84	29.13
34	42 - 37	48.42	2896.44	29.16
35	37 - 32	49.95	3042.16	29.17
36	32 - 27.913	51.22	3161.27	29.16
37	27.913 - 27.663	51.34	3168.56	29.14
38	27.663 - 27.25	51.52	3180.60	29.16
39	27.25 - 26.983	51.63	3188.38	29.16
40	26.983 - 26.833	51.69	3192.76	29.16
41	26.833 - 21.833	53.70	3338.89	29.29
42	21.833 - 16.833	55.75	3485.57	29.40
43	16.833 - 16	56.10	3510.05	29.41
44	16 - 15.75	56.23	3517.41	29.40
45	15.75 - 14.747	56.70	3546.92	29.45
46	14.747 - 14.497	56.80	3554.28	29.44
47	14.497 - 12.083	57.73	3625.36	29.47
48	12.083 - 11.833	57.86	3632.72	29.45
49	11.833 - 10	58.67	3686.75	29.53
50	10 - 9.75	58.80	3694.13	29.50
51	9.75 - 4.75	61.05	3841.92	29.62
52	4.75 - 0	63.22	3982.79	29.72

Analysis Results

Elevation (ft)	Component Type	Size	Critical Element	% Capacity	Pass / Fail
160 - 155	Pole	TP10.75x10.75x0.349	Pole	22.3%	Pass
155 - 150	Pole	TP10.75x10.75x0.349	Pole	60.9%	Pass
150 - 148.5	Pole	TP10.75x10.75x0.349	Pole	73.0%	Pass
148.5 - 148	Pole	TP23x23x0.349	Pole	17.1%	Pass
148 - 143	Pole	TP23.81x23x0.25	Pole	23.4%	Pass
143 - 138	Pole	TP24.62x23.81x0.25	Pole	32.3%	Pass
138 - 133	Pole	TP25.43x24.62x0.25	Pole	44.2%	Pass
133 - 128	Pole	TP26.24x25.43x0.25	Pole	54.6%	Pass
128 - 123	Pole	TP27.05x26.24x0.25	Pole	66.4%	Pass
123 - 118	Pole	TP27.86x27.05x0.25	Pole	77.1%	Pass
118 - 114.75	Pole	TP28.994x27.86x0.25	Pole	84.0%	Pass
114.75 - 109.75	Pole	TP28.696x27.887x0.3125	Pole	75.1%	Pass
109.75 - 105.33	Pole	TP29.412x28.696x0.3125	Pole	80.8%	Pass
105.33 - 105.08	Pole + Reinf.	TP29.452x29.412x0.4688	Reinf. 5 Tension Rupture	76.8%	Pass
105.08 - 100.08	Pole + Reinf.	TP30.262x29.452x0.4625	Reinf. 5 Tension Rupture	83.1%	Pass
100.08 - 95.08	Pole + Reinf.	TP31.072x30.262x0.4625	Reinf. 5 Tension Rupture	88.9%	Pass
95.08 - 92.5	Pole + Reinf.	TP31.491x31.072x0.4563	Reinf. 5 Tension Rupture	91.7%	Pass
92.5 - 92.25	Pole + Reinf.	TP31.531x31.491x0.6375	Reinf. 9 Tension Rupture	81.4%	Pass
92.25 - 87.25	Pole + Reinf.	TP32.341x31.531x0.625	Reinf. 9 Tension Rupture	86.3%	Pass
87.25 - 82.25	Pole + Reinf.	TP33.151x32.341x0.6125	Reinf. 9 Tension Rupture	90.9%	Pass
82.25 - 81	Pole + Reinf.	TP34.042x33.151x0.6125	Reinf. 9 Tension Rupture	92.0%	Pass
81 - 75.75	Pole	TP33.579x32.729x0.375	Pole	86.7%	Pass
75.75 - 70.75	Pole	TP34.389x33.579x0.375	Pole	89.1%	Pass
70.75 - 70.58	Pole	TP34.416x34.389x0.375	Pole	89.2%	Pass
70.58 - 70.33	Pole + Reinf.	TP34.456x34.416x0.675	Reinf. 4 Tension Rupture	78.0%	Pass
70.33 - 70	Pole + Reinf.	TP34.51x34.456x0.675	Reinf. 4 Tension Rupture	78.2%	Pass
70 - 69.75	Pole	TP34.551x34.51x0.375	Pole	89.5%	Pass
69.75 - 64.75	Pole	TP35.361x34.551x0.375	Pole	91.6%	Pass
64.75 - 59.75	Pole	TP36.171x35.361x0.375	Pole	93.6%	Pass
59.75 - 54.75	Pole	TP36.981x36.171x0.375	Pole	95.7%	Pass
54.75 - 49.75	Pole	TP37.791x36.981x0.375	Pole	97.6%	Pass
49.75 - 48	Pole	TP38.884x37.791x0.375	Pole	98.2%	Pass
48 - 42	Pole	TP38.296x37.324x0.4375	Pole	88.0%	Pass
42 - 37	Pole	TP39.106x38.296x0.4375	Pole	88.8%	Pass
37 - 32	Pole	TP39.916x39.106x0.4375	Pole	89.4%	Pass
32 - 27.91	Pole	TP40.578x39.916x0.4375	Pole	89.9%	Pass
27.91 - 27.66	Pole + Reinf.	TP40.619x40.578x0.675	Reinf. 6 Tension Rupture	87.7%	Pass
27.66 - 27.25	Pole + Reinf.	TP40.686x40.619x0.675	Reinf. 6 Tension Rupture	87.8%	Pass
27.25 - 26.98	Pole + Reinf.	TP40.729x40.686x0.675	Reinf. 1 Tension Rupture	85.9%	Pass
26.98 - 26.83	Pole + Reinf.	TP40.753x40.729x0.6625	Reinf. 1 Tension Rupture	85.9%	Pass
26.83 - 21.83	Pole + Reinf.	TP41.563x40.753x0.6625	Reinf. 1 Tension Rupture	86.9%	Pass
21.83 - 16.83	Pole + Reinf.	TP42.373x41.563x0.6625	Reinf. 1 Tension Rupture	87.8%	Pass
16.83 - 16	Pole + Reinf.	TP42.508x42.373x0.6625	Reinf. 1 Tension Rupture	87.9%	Pass
16 - 15.75	Pole + Reinf.	TP42.549x42.508x0.8125	Reinf. 7 Tension Rupture	78.8%	Pass
15.75 - 14.75	Pole + Reinf.	TP42.711x42.549x0.8125	Reinf. 7 Tension Rupture	79.0%	Pass
14.75 - 14.5	Pole + Reinf.	TP42.752x42.711x0.4875	Pole	89.7%	Pass
14.5 - 12.08	Pole + Reinf.	TP43.143x42.752x0.4875	Pole	90.0%	Pass
12.08 - 11.83	Pole + Reinf.	TP43.183x43.143x0.7375	Reinf. 1 Tension Rupture	80.6%	Pass
11.83 - 10	Pole + Reinf.	TP43.48x43.183x0.7375	Reinf. 1 Tension Rupture	80.9%	Pass
10 - 9.75	Pole + Reinf.	TP43.521x43.48x0.7375	Reinf. 1 Tension Rupture	80.9%	Pass
9.75 - 4.75	Pole + Reinf.	TP44.331x43.521x0.725	Reinf. 1 Tension Rupture	81.6%	Pass
4.75 - 0	Pole + Reinf.	TP45.1x44.331x0.7125	Reinf. 1 Tension Rupture	82.2%	Pass
				Summary	
			Pole	98.2%	Pass
			Reinforcement	92.0%	Pass
			Overall	98.2%	Pass

Additional Calculations

Section Elevation (ft)	Moment of Inertia (in^4)			Area (in^2)			% Capacity*									
	Pole	Reinf.	Total	Pole	Reinf.	Total	Pole	R1	R2	R3	R4	R5	R6	R7	R8	R9
160 - 155	154	n/a	154	11.40	n/a	11.40	22.3%									
155 - 150	154	n/a	154	11.40	n/a	11.40	60.9%									
150 - 148.5	154	n/a	154	11.40	n/a	11.40	73.0%									
148.5 - 148	1593	n/a	1593	24.83	n/a	24.83	17.1%									
148 - 143	1311	n/a	1311	18.69	n/a	18.69	23.4%									
143 - 138	1450	n/a	1450	19.34	n/a	19.34	32.3%									
138 - 133	1600	n/a	1600	19.98	n/a	19.98	44.2%									
133 - 128	1759	n/a	1759	20.62	n/a	20.62	54.6%									
128 - 123	1929	n/a	1929	21.27	n/a	21.27	66.4%									
123 - 118	2109	n/a	2109	21.91	n/a	21.91	77.1%									
118 - 114.75	2232	n/a	2232	22.33	n/a	22.33	84.0%									
114.75 - 109.75	2865	n/a	2865	28.15	n/a	28.15	75.1%									
109.75 - 105.33	3087	n/a	3087	28.86	n/a	28.86	80.8%									
105.33 - 105.08	3100	1464	4563	28.90	12.39	41.29	54.3%					76.8%				
105.08 - 100.08	3365	1542	4907	29.71	12.39	42.10	58.7%					83.1%				
100.08 - 95.08	3646	1622	5268	30.51	12.39	42.90	62.8%					88.9%				
95.08 - 92.5	3797	1664	5460	30.92	12.39	43.31	65.0%					91.7%				
92.5 - 92.25	3811	3694	7505	30.96	27.39	58.35	47.7%					67.2%				81.4%
92.25 - 87.25	4116	3878	7994	31.77	27.39	59.16	50.9%					71.2%				86.3%
87.25 - 82.25	4436	4066	8502	32.57	27.39	59.96	54.0%					75.0%				90.9%
82.25 - 81	4519	4114	8633	32.77	27.39	60.16	54.7%					75.9%				92.0%
81 - 75.75	5503	n/a	5503	39.52	n/a	39.52	86.7%									
75.75 - 70.75	5916	n/a	5916	40.48	n/a	40.48	89.1%									
70.75 - 70.58	5930	n/a	5930	40.52	n/a	40.52	89.2%									
70.58 - 70.33	5976	4418	10394	40.56	34.95	75.51	53.1%				78.0%				72.8%	
70.33 - 70	6005	4431	10436	40.63	34.95	75.58	53.3%				78.2%				73.0%	
70 - 69.75	6000	n/a	6000	40.68	n/a	40.68	89.5%									
69.75 - 64.75	6437	n/a	6437	41.64	n/a	41.64	91.6%									
64.75 - 59.75	6895	n/a	6895	42.60	n/a	42.60	93.6%									
59.75 - 54.75	7373	n/a	7373	43.57	n/a	43.57	95.7%									
54.75 - 49.75	7874	n/a	7874	44.53	n/a	44.53	97.6%									
49.75 - 48	8054	n/a	8054	44.87	n/a	44.87	98.2%									
48 - 42	9516	n/a	9516	52.57	n/a	52.57	88.0%									
42 - 37	10140	n/a	10140	53.69	n/a	53.69	88.8%									
37 - 32	10791	n/a	10791	54.82	n/a	54.82	89.4%									
32 - 27.91	11343	n/a	11343	55.74	n/a	55.74	89.9%									
27.91 - 27.66	11404	5776	17180	55.79	32.85	88.64	61.5%			65.9%			87.7%			
27.66 - 27.25	11461	5795	17256	55.89	32.85	88.73	61.5%			66.0%			87.8%			
27.25 - 26.98	11471	5787	17258	55.95	25.41	81.36	59.0%	85.9%		85.9%						
26.98 - 26.83	11492	5793	17285	55.98	25.41	81.39	59.0%	85.9%		85.9%						
26.83 - 21.83	12199	6015	18213	57.11	25.41	82.52	59.7%	86.9%		86.9%						
21.83 - 16.83	12934	6240	19174	58.23	25.41	83.64	60.5%	87.8%		87.8%						
16.83 - 16	13059	6278	19337	58.42	25.41	83.83	60.7%	87.9%		87.9%						
16 - 15.75	13097	10584	23681	58.47	43.41	101.88	49.7%	72.0%		72.0%				78.8%		
15.75 - 14.75	13249	10662	23911	58.70	43.41	102.11	49.9%	72.2%		72.2%				79.0%		
14.75 - 14.5	13650	1331	14981	58.76	16.94	75.70	89.7%	89.4%								
14.5 - 12.08	14026	1359	15386	59.30	16.94	76.24	90.0%	89.8%								
12.08 - 11.83	13727	8795	22521	59.36	33.88	93.24	57.6%	80.6%	78.5%							
11.83 - 10	14014	8911	22925	59.77	33.88	93.65	57.9%	80.9%	78.8%							
10 - 9.75	14054	8927	22981	59.82	33.88	93.70	57.9%	80.9%	78.8%							
9.75 - 4.75	14861	9248	24108	60.95	33.88	94.83	58.8%	81.6%	79.6%							
4.75 - 0	15655	9558	25213	62.02	33.88	95.90	59.5%	82.2%	80.2%							

Note: Section capacity checked using 5 degree increments.
Rating per TIA-222-H Section 15.5.

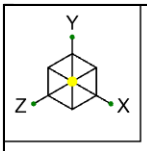

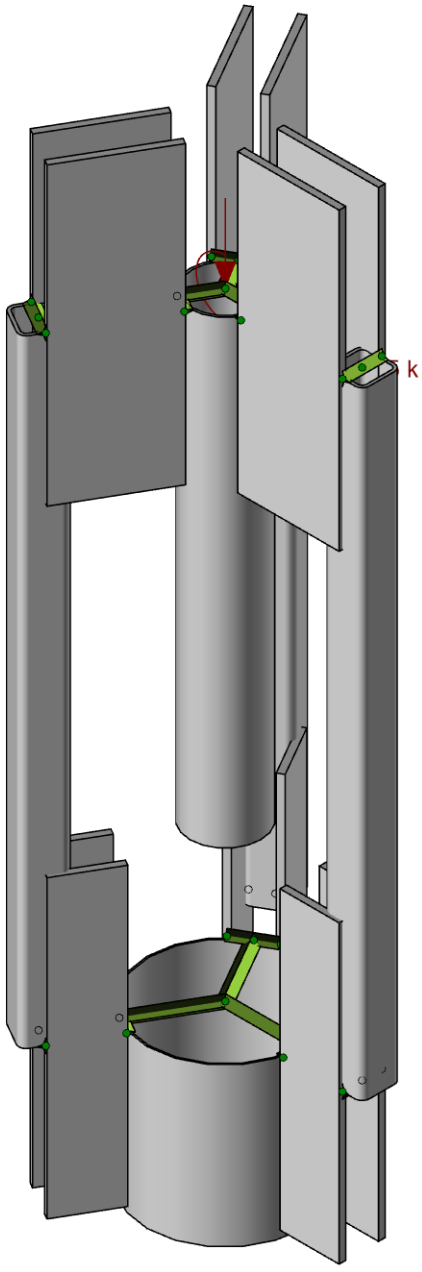

Loads: BLC 1, 1
Envelope Only Solution

B+T Group	876313 - WEST JOHNSON AVE. BURNT HOUSE	SK-3
VP		Jan 18, 2022
137177.009.01		137177_009_01_WEST_JOHNSO…

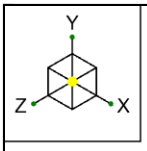

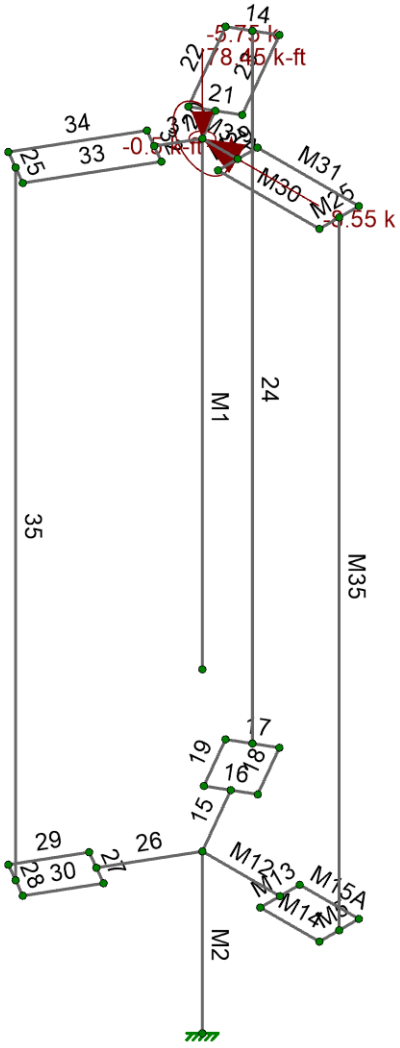

Loads: BLC 1, 1
Envelope Only Solution

B+T Group	876313 - WEST JOHNSON AVE. BURNT HOUSE	SK-2
VP		Jan 18, 2022
137177.009.01		137177_009_01_WEST_JOHNSO…

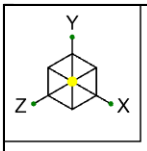

Code Check (Env)
No Calc
> 1.0
.90-1.0
.75-.90
.50-.75
0.-.50

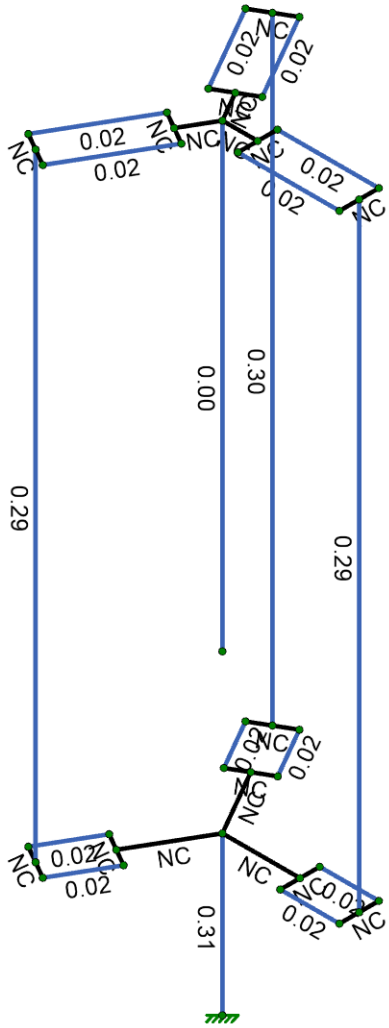

Member Code Checks Displayed (Enveloped)
Envelope Only Solution

B+T Group	876313 - WEST JOHNSON AVE. BURNT HOUSE	SK-4
VP		Jan 18, 2022
137177.009.01		137177_009_01_WEST_JOHNSO…

Node Coordinates

	Label	X [ft]	Y [ft]	Z [ft]	Detach From Diaphragm
1	BASE	0	0	0	
2	T_T	0	2	0	
3	E_T	0	9.833	0	
4	E_B	0	4	0	
5	N24	0.984375	2	0	
6	N24A	0.984375	2	0.25	
7	N25	0.984375	2	-0.25	
8	N36A	0.447917	9.833	0	
9	N37A	0.447917	9.833	0.25	
10	N38	0.447917	9.833	-0.25	
11	17	1.734375	9.833	0.25	
12	18	1.734375	9.833	0	
13	19	1.734375	9.833	-0.25	
14	20	1.734375	2	0.25	
15	21	1.734375	2	0	
16	22	1.734375	2	-0.25	
17	23	-0.223959	9.833	-0.387908	
18	24	-1.083694	2	-1.377013	
19	25	-0.650681	2	-1.627013	
20	26	-0.275681	2	-0.977494	
21	27	-0.492188	2	-0.852494	
22	28	-0.708694	2	-0.727494	
23	29	-0.867188	2	-1.502013	
24	30	-0.007452	9.833	-0.512907	
25	31	-0.440465	9.833	-0.262908	
26	32	-0.650681	9.833	-1.627013	
27	33	-0.867188	9.833	-1.502013	
28	34	-1.083694	9.833	-1.377013	
29	35	-0.223959	9.833	0.387908	
30	36	-0.650681	2	1.627013	
31	37	-1.083694	2	1.377013	
32	38	-0.708694	2	0.727494	
33	39	-0.492188	2	0.852494	
34	40	-0.275681	2	0.977494	
35	41	-0.867188	2	1.502013	
36	42	-0.440465	9.833	0.262907	
37	43	-0.007452	9.833	0.512908	
38	44	-1.083694	9.833	1.377013	
39	45	-0.867188	9.833	1.502013	
40	46	-0.650681	9.833	1.627013	

Node Boundary Conditions

	Node Label	X [k/in]	Y [k/in]	Z [k/in]	X Rot [k-ft/rad]	Y Rot [k-ft/rad]	Z Rot [k-ft/rad]
1	BASE	Reaction	Reaction	Reaction	Reaction	Reaction	Reaction

Hot Rolled Steel Properties

	Label	E [ksi]	G [ksi]	Nu	Therm. Coeff. [1e⁵°F⁻¹]	Density [k/ft³]	Yield [ksi]	Ry	Fu [ksi]	Rt
1	A992	29000	11154	0.3	0.65	0.49	50	1.1	65	1.1
2	A36 Gr.36	29000	11154	0.3	0.65	0.49	36	1.5	58	1.2
3	A572 Gr.50	29000	11154	0.3	0.65	0.49	50	1.1	65	1.1
4	A500 Gr.B RND	29000	11154	0.3	0.65	0.527	42	1.4	58	1.3
5	A500 Gr.B Rect	29000	11154	0.3	0.65	0.527	46	1.4	58	1.3

Hot Rolled Steel Properties (Continued)

	Label	E [ksi]	G [ksi]	Nu	Therm. Coeff. [1e⁵°F⁻¹]	Density [k/ft³]	Yield [ksi]	Ry	Fu [ksi]	Rt
6	A53 Gr.B	29000	11154	0.3	0.65	0.49	35	1.6	60	1.2
7	A1085	29000	11154	0.3	0.65	0.49	50	1.4	65	1.3
8	A572 Gr. 65	29000	11154	0.3	0.65	0.49	65	1.5	80	1.2
9	A607-60	29000	11154	0.3	0.65	0.49	60	1.5	75	1.2

Hot Rolled Steel Section Sets

	Label	Shape	Type	Design List	Material	Design Rule	Area [in²]	Iyy [in⁴]	Izz [in⁴]	J [in⁴]
1	Existing pole	Pole 23.8128x0.25	Column	Pipe	A607-60	Typical	18.506	1284.519	1284.519	2569.038
2	Extension pole	Pipe 10.75x0.349	Column	Pipe	A53 Gr.B	Typical	11.404	154.383	154.383	308.766
3	HSS	HSS6X6X8	Column	Tube	A500 Gr.B Rect	Typical	9.74	48.3	48.3	81.1
4	Plate Top	BP 1"x45"	Beam	RECT	A572 Gr. 65	Typical	45	3.75	7593.75	14.79
5	Plate Bottom	BP 1"x45"	Beam	RECT	A572 Gr. 65	Typical	45	3.75	7593.75	14.79

Member Primary Data

	Label	I Node	J Node	Rotate(deg)	Section/Shape	Type	Design List	Material	Design Rule
1	M1	E_T	E_B		Extension pole	Column	Pipe	A53 Gr.B	Typical
2	M2	T_T	BASE		Existing pole	Column	Pipe	A607-60	Typical
3	M5	20	22		RIGID	None	None	RIGID	Typical
4	M35	18	21		HSS	Column	Tube	A500 Gr.B Rect	Typical
5	M12	T_T	N24		RIGID	None	None	RIGID	Typical
6	M13	N24A	N25		RIGID	None	None	RIGID	Typical
7	M14	N24A	20		Plate Bottom	Beam	RECT	A572 Gr. 65	Typical
8	M15A	N25	22		Plate Bottom	Beam	RECT	A572 Gr. 65	Typical
9	M25	17	19		RIGID	None	None	RIGID	Typical
10	M29	N37A	N38		RIGID	None	None	RIGID	Typical
11	M30	N37A	17		Plate Top	Beam	RECT	A572 Gr. 65	Typical
12	M31	N38	19		Plate Top	Beam	RECT	A572 Gr. 65	Typical
13	M37A	E_T	N36A		RIGID	None	None	RIGID	Typical
14	14	32	34		RIGID	None	None	RIGID	Typical
15	15	T_T	27		RIGID	None	None	RIGID	Typical
16	16	26	28		RIGID	None	None	RIGID	Typical
17	17	25	24		RIGID	None	None	RIGID	Typical
18	18	26	25		Plate Bottom	Beam	RECT	A572 Gr. 65	Typical
19	19	28	24		Plate Bottom	Beam	RECT	A572 Gr. 65	Typical
20	20	E_T	23		RIGID	None	None	RIGID	Typical
21	21	30	31		RIGID	None	None	RIGID	Typical
22	22	31	34		Plate Top	Beam	RECT	A572 Gr. 65	Typical
23	23	30	32		Plate Top	Beam	RECT	A572 Gr. 65	Typical
24	24	33	29	330	HSS	Column	Tube	A500 Gr.B Rect	Typical
25	25	44	46		RIGID	None	None	RIGID	Typical
26	26	T_T	39		RIGID	None	None	RIGID	Typical
27	27	38	40		RIGID	None	None	RIGID	Typical
28	28	37	36		RIGID	None	None	RIGID	Typical
29	29	38	37		Plate Bottom	Beam	RECT	A572 Gr. 65	Typical
30	30	40	36		Plate Bottom	Beam	RECT	A572 Gr. 65	Typical
31	31	E_T	35		RIGID	None	None	RIGID	Typical
32	32	42	43		RIGID	None	None	RIGID	Typical
33	33	43	46		Plate Top	Beam	RECT	A572 Gr. 65	Typical
34	34	42	44		Plate Top	Beam	RECT	A572 Gr. 65	Typical
35	35	45	41	30	HSS	Column	Tube	A500 Gr.B Rect	Typical

Member Advanced Data

	Label	Physical	Deflection Ratio Options	Seismic DR
1	M1	Yes	** NA **	None
2	M2	Yes	** NA **	None
3	M5	Yes	** NA **	None
4	M35	Yes	** NA **	None
5	M12	Yes	** NA **	None
6	M13	Yes	** NA **	None
7	M14	Yes	Default	None
8	M15A	Yes	Default	None
9	M25	Yes	** NA **	None
10	M29	Yes	** NA **	None
11	M30	Yes	Default	None
12	M31	Yes	Default	None
13	M37A	Yes	** NA **	None
14	14	Yes	** NA **	None
15	15	Yes	** NA **	None
16	16	Yes	** NA **	None
17	17	Yes	** NA **	None
18	18	Yes	Default	None
19	19	Yes	Default	None
20	20	Yes	** NA **	None
21	21	Yes	** NA **	None
22	22	Yes	Default	None
23	23	Yes	Default	None
24	24	Yes	** NA **	None
25	25	Yes	** NA **	None
26	26	Yes	** NA **	None
27	27	Yes	** NA **	None
28	28	Yes	** NA **	None
29	29	Yes	Default	None
30	30	Yes	Default	None
31	31	Yes	** NA **	None
32	32	Yes	** NA **	None
33	33	Yes	Default	None
34	34	Yes	Default	None
35	35	Yes	** NA **	None

Hot Rolled Steel Design Parameters

	Label	Shape	Length [ft]	Lb y-y [ft]	Lb z-z [ft]	Lcomp top [ft]	Function
1	M1	Extension pole	5.833				Lateral
2	M2	Existing pole	2				Lateral
3	M35	HSS	7.833	4.5	4.5		Lateral
4	M14	Plate Bottom	0.75			Lbyy	Lateral
5	M15A	Plate Bottom	0.75			Lbyy	Lateral
6	M30	Plate Top	1.286			Lbyy	Lateral
7	M31	Plate Top	1.286			Lbyy	Lateral
8	18	Plate Bottom	0.75			Lbyy	Lateral
9	19	Plate Bottom	0.75			Lbyy	Lateral
10	22	Plate Top	1.286			Lbyy	Lateral
11	23	Plate Top	1.286			Lbyy	Lateral
12	24	HSS	7.833	4.5	4.5		Lateral
13	29	Plate Bottom	0.75			Lbyy	Lateral
14	30	Plate Bottom	0.75			Lbyy	Lateral
15	33	Plate Top	1.286			Lbyy	Lateral
16	34	Plate Top	1.286			Lbyy	Lateral

Hot Rolled Steel Design Parameters (Continued)

	Label	Shape	Length [ft]	Lb y-y [ft]	Lb z-z [ft]	Lcomp top [ft]	Function
17	35	HSS	7.833	4.5	4.5		Lateral

Member Point Loads

No Data to Print...

Member Distributed Loads

No Data to Print...

Member Area Loads

No Data to Print...

Node Loads and Enforced Displacements (BLC 1 : 1)

	Node Label	L, D, M	Direction	Magnitude [(k, k-ft), (in, rad), (k*s²/ft, k*s²*ft)]
1	E_T	L	Y	-5.75
2	E_T	L	X	-8.55
3	E_T	L	MZ	78.45
4	E_T	L	MY	-0.5

Node Loads and Enforced Displacements (BLC 2 : 2)

	Node Label	L, D, M	Direction	Magnitude [(k, k-ft), (in, rad), (k*s²/ft, k*s²*ft)]
1	E_T	L	Y	-5.75
2	E_T	L	X	-7.405
3	E_T	L	Z	-4.275
4	E_T	L	MZ	67.94
5	E_T	L	MX	-39.225
6	E_T	L	MY	-0.5

Node Loads and Enforced Displacements (BLC 3 : 3)

	Node Label	L, D, M	Direction	Magnitude [(k, k-ft), (in, rad), (k*s²/ft, k*s²*ft)]
1	E_T	L	Y	-5.75
2	E_T	L	X	-6.046
3	E_T	L	Z	-6.046
4	E_T	L	MZ	55.473
5	E_T	L	MX	-55.473
6	E_T	L	MY	-0.5

Node Loads and Enforced Displacements (BLC 4 : 4)

	Node Label	L, D, M	Direction	Magnitude [(k, k-ft), (in, rad), (k*s²/ft, k*s²*ft)]
1	E_T	L	Y	-5.75
2	E_T	L	X	-4.275
3	E_T	L	Z	-7.405
4	E_T	L	MZ	39.225
5	E_T	L	MX	-67.94
6	E_T	L	MY	-0.5

Node Loads and Enforced Displacements (BLC 5 : 5)

	Node Label	L, D, M	Direction	Magnitude [(k, k-ft), (in, rad), (k*s²/ft, k*s²*ft)]
1	E_T	L	Y	-5.75
2	E_T	L	Z	-8.55
3	E_T	L	MX	-78.45
4	E_T	L	MY	-0.5

Node Loads and Enforced Displacements (BLC 6 : 6)

	Node Label	L, D, M	Direction	Magnitude [(k, k-ft), (in, rad), (k*s²/ft, k*s²*ft)]
1	E_T	L	Y	-5.75
2	E_T	L	X	4.275
3	E_T	L	Z	-7.405
4	E_T	L	MZ	-39.225
5	E_T	L	MX	-67.94
6	E_T	L	MY	-0.5

Node Loads and Enforced Displacements (BLC 7 : 7)

	Node Label	L, D, M	Direction	Magnitude [(k, k-ft), (in, rad), (k*s²/ft, k*s²*ft)]
1	E_T	L	Y	-5.75
2	E_T	L	X	6.046
3	E_T	L	Z	-6.046
4	E_T	L	MZ	-55.473
5	E_T	L	MX	-55.473
6	E_T	L	MY	-0.5

Node Loads and Enforced Displacements (BLC 8 : 8)

	Node Label	L, D, M	Direction	Magnitude [(k, k-ft), (in, rad), (k*s²/ft, k*s²*ft)]
1	E_T	L	Y	-5.75
2	E_T	L	X	7.405
3	E_T	L	Z	-4.275
4	E_T	L	MZ	-67.94
5	E_T	L	MX	-39.225
6	E_T	L	MY	-0.5

Node Loads and Enforced Displacements (BLC 9 : 9)

	Node Label	L, D, M	Direction	Magnitude [(k, k-ft), (in, rad), (k*s²/ft, k*s²*ft)]
1	E_T	L	Y	-5.75
2	E_T	L	X	8.55
3	E_T	L	MZ	-78.45
4	E_T	L	MY	-0.5

Basic Load Cases

	BLC Description	Category	Y Gravity	Nodal
1	1	None	-1	4
2	2	None	-1	6
3	3	None	-1	6
4	4	None	-1	6
5	5	None	-1	4
6	6	None	-1	6
7	7	None	-1	6

Basic Load Cases (Continued)

	BLC Description	Category	Y Gravity	Nodal
8	8	None	-1	6
9	9	None	-1	4

Load Combinations

	Description	Solve	P-Delta	BLC	Factor
1	1	Yes	Y	1	1
2	2	Yes	Y	2	1
3	3	Yes	Y	3	1
4	4	Yes	Y	4	1
5	5	Yes	Y	5	1
6	6	Yes	Y	6	1
7	7	Yes	Y	7	1
8	8	Yes	Y	8	1
9	9	Yes	Y	9	1

Envelope Member Section Forces

	Member	Sec		Axial[k]	LC	y Shear[k]	LC	z Shear[k]	LC	Torque[k-ft]	LC	y-y Moment[k-ft]	LC	z-z Moment[k-ft]	LC
1	M1	1	max	-0.226	9	0	9	0	9	0	9	0.002	5	0.002	9
2			min	-0.226	1	0	1	0	5	0	1	0	9	-0.002	1
3		2	max	-0.17	9	0	9	0	9	0	9	0.001	5	0.001	9
4			min	-0.17	1	0	1	0	5	0	1	0	9	-0.001	1
5		3	max	-0.113	9	0	9	0	9	0	9	0.001	5	0.001	9
6			min	-0.113	1	0	1	0	5	0	1	0	9	-0.001	1
7		4	max	-0.057	9	0	9	0	9	0	9	0	5	0	9
8			min	-0.057	1	0	1	0	5	0	1	0	9	0	1
9		5	max	0	9	0	9	0	9	0	9	0	9	0	9
10			min	0	1	0	1	0	5	0	1	0	1	0	1
11	M2	1	max	8.685	9	8.558	1	8.557	5	0.5	5	145.658	5	145.677	9
12			min	8.685	2	-8.558	9	0	1	0.5	2	-0.014	9	-145.639	1
13		2	max	8.716	9	8.558	1	8.557	5	0.5	5	149.936	5	149.956	9
14			min	8.716	2	-8.558	9	0	1	0.5	2	-0.014	9	-149.918	1
15		3	max	8.748	9	8.558	1	8.557	5	0.5	5	154.215	5	154.234	9
16			min	8.748	2	-8.558	9	0	1	0.5	2	-0.014	9	-154.197	1
17		4	max	8.779	9	8.558	1	8.557	5	0.5	5	158.494	5	158.513	9
18			min	8.779	2	-8.558	9	0	1	0.5	2	-0.014	9	-158.476	1
19		5	max	8.811	9	8.558	1	8.557	5	0.5	5	162.772	5	162.792	9
20			min	8.811	2	-8.558	9	0	1	0.5	2	-0.014	9	-162.754	1
21	M5	1	max	0.019	1	22.622	9	1.833	1	6.51	1	0.488	5	0.236	5
22			min	-1.313	5	-28.729	3	-2.139	6	-10.24	7	-0.007	1	-0.003	9
23		2	max	0.019	1	22.622	9	1.833	1	6.51	1	0.348	3	3.757	3
24			min	-1.313	5	-28.729	3	-2.139	6	-10.24	7	-0.157	9	-2.831	9
25		3	max	-0.018	9	22.622	9	0.586	2	6.522	9	0.452	1	7.348	3
26			min	-1.313	5	-31.398	7	-1.712	5	-10.24	7	-0.41	9	-8.016	7
27		4	max	1.312	5	19.942	1	1.667	9	6.522	9	0.178	1	2.496	1
28			min	-0.019	1	-31.398	7	-2.319	3	-10.236	3	-0.326	6	-4.091	7
29		5	max	1.312	5	19.942	1	1.667	9	6.522	9	0.007	1	0.003	9
30			min	-0.019	1	-31.398	7	-2.319	3	-10.236	3	-0.488	5	-0.236	5
31	M35	1	max	44.396	9	3.046	1	2.635	5	0.12	5	0.146	9	11.048	1
32			min	-39.611	1	-3.051	9	-0.038	9	0.103	1	-9.349	5	-11.069	9
33		2	max	44.465	9	3.046	1	2.635	5	0.12	5	0.072	9	5.083	1
34			min	-39.541	1	-3.051	9	-0.038	9	0.103	1	-4.189	5	-5.094	9
35		3	max	44.535	9	3.046	1	2.635	5	0.12	5	0.97	5	0.881	9
36			min	-39.471	1	-3.051	9	-0.038	9	0.103	1	-0.002	9	-0.882	1

Envelope Member Section Forces (Continued)

	Member	Sec		Axial[k]	LC	y Shear[k]	LC	z Shear[k]	LC	Torque[k-ft]	LC	y-y Moment[k-ft]	LC	z-z Moment[k-ft]	LC
37		4	max	44.605	9	3.046	1	2.635	5	0.12	5	6.129	5	6.855	9
38			min	-39.401	1	-3.051	9	-0.038	9	0.103	1	-0.075	9	-6.848	1
39		5	max	44.675	9	3.046	1	2.635	5	0.12	5	11.288	5	12.83	9
40			min	-39.331	1	-3.051	9	-0.038	9	0.103	1	-0.149	9	-12.813	1
41	M12	1	max	3.204	1	44.9	9	2.625	5	11.288	5	0.168	1	90.617	9
42			min	-2.873	9	-39.106	1	-0.038	1	-0.149	9	-4.432	5	-80.724	1
43		2	max	3.204	1	44.9	9	2.625	5	11.288	5	0.158	1	79.568	9
44			min	-2.873	9	-39.106	1	-0.038	1	-0.149	9	-3.786	5	-71.101	1
45		3	max	3.204	1	44.9	9	2.625	5	11.288	5	0.149	1	68.518	9
46			min	-2.873	9	-39.106	1	-0.038	1	-0.149	9	-3.14	5	-61.477	1
47		4	max	3.204	1	44.9	9	2.625	5	11.288	5	0.14	1	57.468	9
48			min	-2.873	9	-39.106	1	-0.038	1	-0.149	9	-2.494	5	-51.853	1
49		5	max	3.204	1	44.9	9	2.625	5	11.288	5	0.131	1	46.419	9
50			min	-2.873	9	-39.106	1	-0.038	1	-0.149	9	-1.848	5	-42.229	1
51	M13	1	max	1.313	5	28.614	3	2.139	6	23.316	9	0.496	5	0.003	9
52			min	-0.019	1	-22.737	9	-1.833	1	-22.15	2	-0.008	1	-0.236	5
53		2	max	1.313	5	28.614	3	2.139	6	23.316	9	0.71	5	2.845	9
54			min	-0.019	1	-22.737	9	-1.833	1	-22.15	2	-0.237	1	-3.743	3
55		3	max	1.313	5	31.513	7	1.712	5	23.316	9	0.95	6	8.044	7
56			min	0.018	9	-22.737	9	-0.586	2	-24.242	8	-1.013	4	-7.32	3
57		4	max	0.019	1	31.513	7	2.319	3	21.218	1	0.216	9	4.105	7
58			min	-1.312	5	-19.827	1	-1.667	9	-24.242	8	-0.727	4	-2.481	1
59		5	max	0.019	1	31.513	7	2.319	3	21.218	1	0.008	1	0.236	5
60			min	-1.312	5	-19.827	1	-1.667	9	-24.242	8	-0.496	5	-0.003	9
61	M14	1	max	1.833	1	22.735	9	1.312	5	0.236	5	0.008	1	23.316	9
62			min	-2.139	6	-28.613	3	-0.019	1	-0.003	9	-0.496	5	-22.15	2
63		2	max	1.833	1	22.707	9	1.312	5	0.236	5	0.004	1	19.056	9
64			min	-2.139	6	-28.642	3	-0.019	1	-0.003	9	-0.25	5	-17.394	1
65		3	max	1.833	1	22.678	9	1.312	5	0.236	5	0.001	1	14.801	9
66			min	-2.139	6	-28.671	3	-0.019	1	-0.003	9	-0.004	5	-13.771	1
67		4	max	1.833	1	22.649	9	1.312	5	0.236	5	0.242	5	11.219	8
68			min	-2.139	6	-28.699	3	-0.019	1	-0.003	9	-0.003	1	-10.143	1
69		5	max	1.833	1	22.621	9	1.312	5	0.236	5	0.488	5	10.24	7
70			min	-2.139	6	-28.728	3	-0.019	1	-0.003	9	-0.007	1	-6.51	1
71	M15A	1	max	2.319	3	31.514	7	1.312	5	0.236	5	0.008	1	24.242	8
72			min	-1.667	9	-19.829	1	-0.019	1	-0.003	9	-0.496	5	-21.218	1
73		2	max	2.319	3	31.485	7	1.312	5	0.236	5	0.004	1	18.949	9
74			min	-1.667	9	-19.858	1	-0.019	1	-0.003	9	-0.25	5	-17.497	1
75		3	max	2.319	3	31.457	7	1.312	5	0.236	5	0.001	1	14.801	9
76			min	-1.667	9	-19.887	1	-0.019	1	-0.003	9	-0.004	5	-13.771	1
77		4	max	2.319	3	31.428	7	1.312	5	0.236	5	0.242	5	10.659	9
78			min	-1.667	9	-19.915	1	-0.019	1	-0.003	9	-0.003	1	-10.708	2
79		5	max	2.319	3	31.399	7	1.312	5	0.236	5	0.488	5	6.522	9
80			min	-1.667	9	-19.944	1	-0.019	1	-0.003	9	-0.007	1	-10.236	3
81	M25	1	max	1.311	5	20.076	1	3.308	6	5.698	1	0.012	1	0.201	5
82			min	-0.019	1	-28.616	7	-1.854	1	-12.707	6	-0.837	5	-0.003	9
83		2	max	1.311	5	20.076	1	3.308	6	5.698	1	0.159	9	3.719	7
84			min	-0.019	1	-28.616	7	-1.854	1	-12.707	6	-0.5	4	-2.513	1
85		3	max	0.019	1	22.477	9	3.526	4	5.713	9	0.41	9	7.296	7
86			min	-1.314	5	-28.616	7	-1.854	1	-12.707	6	-0.452	1	-6.698	3
87		4	max	0.019	1	22.477	9	3.526	4	5.713	9	0.472	6	2.813	9
88			min	-1.314	5	-26.226	3	-1.685	9	-12.707	4	-0.18	1	-3.42	3
89		5	max	0.019	1	22.477	9	3.526	4	5.713	9	0.837	5	0.003	9
90			min	-1.314	5	-26.226	3	-1.685	9	-12.707	4	-0.012	1	-0.201	5
91	M29	1	max	0.019	1	28.419	7	1.854	1	20.261	1	0.013	1	0.003	9

Envelope Member Section Forces (Continued)

	Member	Sec		Axial[k]	LC	y Shear[k]	LC	z Shear[k]	LC	Torque[k-ft]	LC	y-y Moment[k-ft]	LC	z-z Moment[k-ft]	LC
92			min	-1.311	5	-20.273	1	-3.308	6	-25.679	8	-0.851	5	-0.201	5
93		2	max	0.019	1	28.419	7	1.854	1	20.261	1	0.245	1	2.537	1
94			min	-1.311	5	-20.273	1	-3.308	6	-25.679	8	-1.24	5	-3.694	7
95		3	max	1.314	5	28.419	7	1.854	1	23.07	9	1.64	4	6.747	3
96			min	-0.019	1	-22.28	9	-3.526	4	-25.679	8	-1.54	6	-7.246	7
97		4	max	1.314	5	26.423	3	1.685	9	23.07	9	1.24	5	3.444	3
98			min	-0.019	1	-22.28	9	-3.526	4	-22.873	2	-0.223	9	-2.788	9
99		5	max	1.314	5	26.423	3	1.685	9	23.07	9	0.851	5	0.201	5
100			min	-0.019	1	-22.28	9	-3.526	4	-22.873	2	-0.013	1	-0.003	9
101	M30	1	max	3.308	6	20.277	1	0.019	1	0.201	5	0.851	5	20.261	1
102			min	-1.854	1	-28.416	7	-1.312	5	-0.003	9	-0.013	1	-25.679	8
103		2	max	3.308	6	20.228	1	0.019	1	0.201	5	0.429	5	13.747	1
104			min	-1.854	1	-28.465	7	-1.312	5	-0.003	9	-0.007	1	-16.668	8
105		3	max	3.308	6	20.179	1	0.019	1	0.201	5	0.007	5	7.249	1
106			min	-1.854	1	-28.514	7	-1.312	5	-0.003	9	-0.001	1	-8.71	9
107		4	max	3.308	6	20.129	1	0.019	1	0.201	5	0.006	1	5.377	5
108			min	-1.854	1	-28.563	7	-1.312	5	-0.003	9	-0.415	5	-1.685	9
109		5	max	3.308	6	20.08	1	0.019	1	0.201	5	0.012	1	12.707	6
110			min	-1.854	1	-28.613	7	-1.312	5	-0.003	9	-0.837	5	-5.698	1
111	M31	1	max	1.685	9	26.426	3	0.019	1	0.201	5	0.851	5	22.873	2
112			min	-3.526	4	-22.276	9	-1.312	5	-0.003	9	-0.013	1	-23.07	9
113		2	max	1.685	9	26.377	3	0.019	1	0.201	5	0.429	5	14.518	2
114			min	-3.526	4	-22.325	9	-1.312	5	-0.003	9	-0.007	1	-15.898	9
115		3	max	1.685	9	26.328	3	0.019	1	0.201	5	0.007	5	7.249	1
116			min	-3.526	4	-22.374	9	-1.312	5	-0.003	9	-0.001	1	-8.71	9
117		4	max	1.685	9	26.279	3	0.019	1	0.201	5	0.006	1	0.942	1
118			min	-3.526	4	-22.423	9	-1.312	5	-0.003	9	-0.415	5	-6.131	5
119		5	max	1.685	9	26.229	3	0.019	1	0.201	5	0.012	1	5.713	9
120			min	-3.526	4	-22.473	9	-1.312	5	-0.003	9	-0.837	5	-12.707	4
121	M37A	1	max	2.873	9	40.012	1	0.038	1	9.349	5	4.432	5	58.094	1
122			min	-3.204	1	-43.995	9	-2.625	5	-0.146	9	-0.168	1	-65.488	9
123		2	max	2.873	9	40.012	1	0.038	1	9.349	5	4.138	5	53.614	1
124			min	-3.204	1	-43.995	9	-2.625	5	-0.146	9	-0.164	1	-60.562	9
125		3	max	2.873	9	40.012	1	0.038	1	9.349	5	3.844	5	49.133	1
126			min	-3.204	1	-43.995	9	-2.625	5	-0.146	9	-0.16	1	-55.635	9
127		4	max	2.873	9	40.012	1	0.038	1	9.349	5	3.55	5	44.653	1
128			min	-3.204	1	-43.995	9	-2.625	5	-0.146	9	-0.156	1	-50.709	9
129		5	max	2.873	9	40.012	1	0.038	1	9.349	5	3.256	5	40.172	1
130			min	-3.204	1	-43.995	9	-2.625	5	-0.146	9	-0.151	1	-45.782	9
131	14	1	max	1.098	1	25.313	9	3.307	1	13.06	9	0.86	8	0.174	1
132			min	-1.35	8	-28.193	2	-4.029	9	-12.708	1	-0.701	1	-0.208	8
133		2	max	1.098	1	25.313	9	3.307	1	13.06	9	0.436	7	3.623	2
134			min	-1.35	8	-28.193	2	-4.029	9	-12.708	1	-0.288	1	-3.344	9
135		3	max	0.018	4	28.748	5	3.307	1	13.061	6	0.41	4	7.292	5
136			min	-1.35	8	-28.193	2	-4.029	9	-12.708	1	-0.239	9	-6.509	9
137		4	max	1.349	8	28.748	5	1.83	1	13.061	6	0.472	1	3.699	5
138			min	-1.1	1	-3.77	1	-3.829	7	-7.178	1	-0.46	9	-0.645	1
139		5	max	1.349	8	28.748	5	1.83	1	13.061	6	0.701	1	0.208	8
140			min	-1.1	1	-3.77	1	-3.829	7	-7.178	1	-0.86	8	-0.174	1
141	15	1	max	1.563	9	44.9	4	2.197	1	9.757	1	4.765	8	90.617	4
142			min	-2.873	4	-18.113	9	-2.699	8	-11.581	8	-3.694	1	-37.918	9
143		2	max	1.563	9	44.9	4	2.197	1	9.757	1	4.101	8	79.567	4
144			min	-2.873	4	-18.113	9	-2.699	8	-11.581	8	-3.153	1	-33.46	9
145		3	max	1.563	9	44.9	4	2.197	1	9.757	1	3.437	8	68.517	4
146			min	-2.873	4	-18.113	9	-2.699	8	-11.581	8	-2.612	1	-29.003	9

Envelope Member Section Forces (Continued)

	Member	Sec		Axial[k]	LC	y Shear[k]	LC	z Shear[k]	LC	Torque[k-ft]	LC	y-y Moment[k-ft]	LC	z-z Moment[k-ft]	LC
147		4	max	1.563	9	44.9	4	2.197	1	9.757	1	2.773	8	57.468	4
148			min	-2.873	4	-18.113	9	-2.699	8	-11.581	8	-2.071	1	-24.545	9
149		5	max	1.563	9	44.9	4	2.197	1	9.757	1	2.109	8	46.418	4
150			min	-2.873	4	-18.113	9	-2.699	8	-11.581	8	-1.53	1	-20.087	9
151	16	1	max	1.099	1	6.752	1	2.139	1	24.454	5	0.415	1	0.242	8
152			min	-1.349	8	-31.207	6	-2.747	9	-2.825	9	-0.511	8	-0.204	1
153		2	max	1.099	1	6.752	1	2.139	1	24.454	5	0.683	1	4.111	6
154			min	-1.349	8	-31.207	6	-2.747	9	-2.825	9	-0.8	9	-1.048	1
155		3	max	1.35	8	30.644	1	1.206	4	24.454	5	1.102	7	8.012	6
156			min	0.018	4	-31.207	6	-2.175	8	-24.475	3	-1.144	9	-7.287	9
157		4	max	1.35	8	30.644	1	0.661	1	17.262	9	0.794	7	4.035	1
158			min	-1.099	1	-28.308	9	-2.599	6	-24.475	3	-0.498	1	-3.749	9
159		5	max	1.35	8	30.644	1	0.661	1	17.262	9	0.511	8	0.204	1
160			min	-1.099	1	-28.308	9	-2.599	6	-24.475	3	-0.415	1	-0.242	8
161	17	1	max	1.349	8	31.092	6	2.747	9	10.427	9	0.409	1	0.204	1
162			min	-1.099	1	-6.867	1	-2.139	1	-10.217	1	-0.501	8	-0.242	8
163		2	max	1.349	8	31.092	6	2.747	9	10.427	9	0.141	1	1.063	1
164			min	-1.099	1	-6.867	1	-2.139	1	-10.217	1	-0.281	6	-4.097	6
165		3	max	-0.018	4	31.092	6	2.175	8	10.427	6	0.239	9	7.316	9
166			min	-1.35	8	-30.529	1	-1.206	4	-10.217	1	-0.41	4	-7.983	6
167		4	max	1.099	1	28.423	9	2.599	6	10.427	6	0.3	9	3.763	9
168			min	-1.35	8	-30.529	1	-0.661	1	-3.808	1	-0.326	1	-4.02	1
169		5	max	1.099	1	28.423	9	2.599	6	10.427	6	0.501	8	0.242	8
170			min	-1.35	8	-30.529	1	-0.661	1	-3.808	1	-0.409	1	-0.204	1
171	18	1	max	2.747	9	31.21	6	1.099	1	0.204	1	0.511	8	24.454	5
172			min	-2.139	1	-6.752	1	-1.349	8	-0.242	8	-0.415	1	-2.825	9
173		2	max	2.747	9	31.181	6	1.099	1	0.204	1	0.258	8	19.056	4
174			min	-2.139	1	-6.78	1	-1.349	8	-0.242	8	-0.209	1	-4.734	9
175		3	max	2.747	9	31.152	6	1.099	1	0.204	1	0.005	8	14.801	4
176			min	-2.139	1	-6.809	1	-1.349	8	-0.242	8	-0.003	1	-6.637	9
177		4	max	2.747	9	31.124	6	1.099	1	0.204	1	0.203	1	11.263	3
178			min	-2.139	1	-6.838	1	-1.349	8	-0.242	8	-0.248	8	-8.534	9
179		5	max	2.747	9	31.095	6	1.099	1	0.204	1	0.409	1	10.217	1
180			min	-2.139	1	-6.867	1	-1.349	8	-0.242	8	-0.501	8	-10.427	9
181	19	1	max	0.661	1	30.646	1	1.099	1	0.204	1	0.511	8	24.475	3
182			min	-2.599	6	-28.305	9	-1.349	8	-0.242	8	-0.415	1	-17.262	9
183		2	max	0.661	1	30.618	1	1.099	1	0.204	1	0.258	8	19.392	3
184			min	-2.599	6	-28.334	9	-1.349	8	-0.242	8	-0.209	1	-11.952	9
185		3	max	0.661	1	30.589	1	1.099	1	0.204	1	0.005	8	14.801	4
186			min	-2.599	6	-28.363	9	-1.349	8	-0.242	8	-0.003	1	-6.637	9
187		4	max	0.661	1	30.56	1	1.099	1	0.204	1	0.203	1	11.325	5
188			min	-2.599	6	-28.391	9	-1.349	8	-0.242	8	-0.248	8	-1.316	9
189		5	max	0.661	1	30.531	1	1.099	1	0.204	1	0.409	1	10.427	6
190			min	-2.599	6	-28.42	9	-1.349	8	-0.242	8	-0.501	8	-3.808	1
191	20	1	max	2.873	4	19.017	9	2.699	8	8.079	1	3.694	1	27.196	9
192			min	-1.562	9	-43.994	4	-2.197	1	-9.636	8	-4.765	8	-65.488	4
193		2	max	2.873	4	19.017	9	2.699	8	8.079	1	3.448	1	25.066	9
194			min	-1.562	9	-43.994	4	-2.197	1	-9.636	8	-4.463	8	-60.562	4
195		3	max	2.873	4	19.017	9	2.699	8	8.079	1	3.202	1	22.937	9
196			min	-1.562	9	-43.994	4	-2.197	1	-9.636	8	-4.161	8	-55.635	4
197		4	max	2.873	4	19.017	9	2.699	8	8.079	1	2.956	1	20.807	9
198			min	-1.562	9	-43.994	4	-2.197	1	-9.636	8	-3.859	8	-50.709	4
199		5	max	2.873	4	19.017	9	2.699	8	8.079	1	2.71	1	18.678	9
200			min	-1.562	9	-43.994	4	-2.197	1	-9.636	8	-3.556	8	-45.782	4
201	21	1	max	1.35	8	27.996	2	4.029	9	19.633	9	0.876	8	0.208	8

Envelope Member Section Forces (Continued)

	Member	Sec		Axial[k]	LC	y Shear[k]	LC	z Shear[k]	LC	Torque[k-ft]	LC	y-y Moment[k-ft]	LC	z-z Moment[k-ft]	LC
202			min	-1.098	1	-25.51	9	-3.307	1	-25.679	2	-0.713	1	-0.174	1
203		2	max	1.35	8	27.996	2	4.029	9	19.633	9	1.327	8	3.369	9
204			min	-1.098	1	-25.51	9	-3.307	1	-25.679	2	-1.126	1	-3.599	2
205		3	max	1.35	8	27.996	2	4.029	9	26.036	5	1.791	9	6.558	9
206			min	-0.018	4	-28.551	5	-3.307	1	-25.679	2	-1.791	7	-7.243	5
207		4	max	1.1	1	3.967	1	3.829	7	26.036	5	0.942	1	0.67	1
208			min	-1.349	8	-28.551	5	-1.83	1	0.955	9	-1.327	8	-3.674	5
209		5	max	1.1	1	3.967	1	3.829	7	26.036	5	0.713	1	0.174	1
210			min	-1.349	8	-28.551	5	-1.83	1	0.955	9	-0.876	8	-0.208	8
211	22	1	max	3.828	7	3.962	1	1.349	8	0.174	1	0.713	1	-0.955	9
212			min	-1.83	1	-28.545	5	-1.099	1	-0.208	8	-0.876	8	-26.036	5
213		2	max	3.828	7	3.913	1	1.349	8	0.174	1	0.359	1	1.142	9
214			min	-1.83	1	-28.595	5	-1.099	1	-0.208	8	-0.442	8	-16.847	5
215		3	max	3.828	7	3.864	1	1.349	8	0.174	1	0.006	1	3.255	9
216			min	-1.83	1	-28.644	5	-1.099	1	-0.208	8	-0.008	8	-8.71	4
217		4	max	3.828	7	3.815	1	1.349	8	0.174	1	0.426	8	5.553	8
218			min	-1.83	1	-28.693	5	-1.099	1	-0.208	8	-0.347	1	-5.959	1
219		5	max	3.828	7	3.765	1	1.349	8	0.174	1	0.86	8	13.061	6
220			min	-1.83	1	-28.742	5	-1.099	1	-0.208	8	-0.701	1	-7.178	1
221	23	1	max	3.307	1	25.512	9	1.349	8	0.174	1	0.713	1	19.633	9
222			min	-4.029	9	-27.991	2	-1.099	1	-0.208	8	-0.876	8	-25.679	2
223		2	max	3.307	1	25.463	9	1.349	8	0.174	1	0.359	1	11.436	9
224			min	-4.029	9	-28.04	2	-1.099	1	-0.208	8	-0.442	8	-16.73	3
225		3	max	3.307	1	25.413	9	1.349	8	0.174	1	0.006	1	3.255	9
226			min	-4.029	9	-28.09	2	-1.099	1	-0.208	8	-0.008	8	-8.71	4
227		4	max	3.307	1	25.364	9	1.349	8	0.174	1	0.426	8	3.984	1
228			min	-4.029	9	-28.139	2	-1.099	1	-0.208	8	-0.347	1	-6.427	7
229		5	max	3.307	1	25.315	9	1.349	8	0.174	1	0.86	8	12.708	1
230			min	-4.029	9	-28.188	2	-1.099	1	-0.208	8	-0.701	1	-13.06	9
231	24	1	max	44.396	4	2.277	1	3.051	4	0.117	1	5.533	9	8.079	1
232			min	-18.621	9	-2.709	8	-1.525	9	0.085	8	-11.068	4	-9.636	8
233		2	max	44.465	4	2.277	1	3.051	4	0.117	1	2.545	9	3.62	1
234			min	-18.551	9	-2.709	8	-1.525	9	0.085	8	-5.094	4	-4.332	8
235		3	max	44.535	4	2.277	1	3.051	4	0.117	1	0.881	4	0.973	8
236			min	-18.481	9	-2.709	8	-1.525	9	0.085	8	-0.442	9	-0.839	1
237		4	max	44.605	4	2.277	1	3.051	4	0.117	1	6.855	4	6.277	8
238			min	-18.412	9	-2.709	8	-1.525	9	0.085	8	-3.429	9	-5.298	1
239		5	max	44.675	4	2.277	1	3.051	4	0.117	1	12.829	4	11.581	8
240			min	-18.342	9	-2.709	8	-1.525	9	0.085	8	-6.417	9	-9.757	1
241	25	1	max	1.168	9	26.344	5	1.965	9	13.06	4	0.86	2	0.174	9
242			min	-1.35	2	-6.144	9	-4.028	4	-7.179	9	-0.746	9	-0.208	2
243		2	max	1.168	9	26.344	5	1.965	9	13.06	4	0.432	1	0.942	9
244			min	-1.35	2	-6.144	9	-4.028	4	-7.179	9	-0.5	9	-3.398	5
245		3	max	0.019	6	27.703	1	3.527	9	13.062	1	0.228	1	7.106	1
246			min	-1.35	2	-25.8	8	-4.028	4	-12.707	9	-0.452	6	-6.691	5
247		4	max	1.349	2	27.703	1	3.527	9	13.062	1	0.305	9	3.643	1
248			min	-1.171	9	-25.8	8	-3.806	1	-12.707	9	-0.46	4	-3.324	8
249		5	max	1.349	2	27.703	1	3.527	9	13.062	1	0.746	9	0.208	2
250			min	-1.171	9	-25.8	8	-3.806	1	-12.707	9	-0.86	2	-0.174	9
251	26	1	max	3.204	6	23.89	1	2.339	9	9.755	9	4.765	2	47.753	1
252			min	-1.476	1	-39.106	6	-2.699	2	-11.581	2	-3.938	9	-80.724	6
253		2	max	3.204	6	23.89	1	2.339	9	9.755	9	4.101	2	41.874	1
254			min	-1.476	1	-39.106	6	-2.699	2	-11.581	2	-3.363	9	-71.1	6
255		3	max	3.204	6	23.89	1	2.339	9	9.755	9	3.437	2	35.995	1
256			min	-1.476	1	-39.106	6	-2.699	2	-11.581	2	-2.787	9	-61.476	6

Envelope Member Section Forces (Continued)

	Member	Sec		Axial[k]	LC	y Shear[k]	LC	z Shear[k]	LC	Torque[k-ft]	LC	y-y Moment[k-ft]	LC	z-z Moment[k-ft]	LC
257		4	max	3.204	6	23.89	1	2.339	9	9.755	9	2.773	2	30.115	1
258			min	-1.476	1	-39.106	6	-2.699	2	-11.581	2	-2.211	9	-51.852	6
259		5	max	3.204	6	23.89	1	2.339	9	9.755	9	2.109	2	24.236	1
260			min	-1.476	1	-39.106	6	-2.699	2	-11.581	2	-1.636	9	-42.229	6
261	27	1	max	1.17	9	27.749	9	0.723	9	19.343	1	0.442	9	0.242	2
262			min	-1.349	2	-31.208	1	-2.746	4	-22.381	7	-0.511	2	-0.204	9
263		2	max	1.17	9	27.749	9	0.723	9	19.343	1	0.532	9	4.111	1
264			min	-1.349	2	-31.208	1	-2.746	4	-22.381	7	-0.819	3	-3.673	9
265		3	max	1.35	2	27.749	9	1.371	6	22.359	5	1.08	1	8.012	1
266			min	0.019	6	-31.208	1	-2.175	2	-22.381	7	-1.144	4	-7.287	4
267		4	max	1.35	2	9.638	9	2.284	9	22.359	5	0.783	2	1.409	9
268			min	-1.169	9	-28.307	4	-2.599	1	-4.894	1	-0.728	9	-3.749	4
269		5	max	1.35	2	9.638	9	2.284	9	22.359	5	0.511	2	0.204	9
270			min	-1.169	9	-28.307	4	-2.599	1	-4.894	1	-0.442	9	-0.242	2
271	28	1	max	1.349	2	31.093	1	2.746	4	10.426	4	0.435	9	0.204	9
272			min	-1.17	9	-27.864	9	-0.723	9	-3.803	9	-0.501	2	-0.242	2
273		2	max	1.349	2	31.093	1	2.746	4	10.426	4	0.345	9	3.687	9
274			min	-1.17	9	-27.864	9	-0.723	9	-3.803	9	-0.281	1	-4.097	1
275		3	max	-0.019	6	31.093	1	2.175	2	10.427	1	0.452	6	7.316	4
276			min	-1.35	2	-27.864	9	-1.371	6	-10.216	9	-0.228	1	-7.984	1
277		4	max	1.169	9	28.422	4	2.599	1	10.427	1	0.3	4	3.763	4
278			min	-1.35	2	-9.523	9	-2.284	9	-10.216	9	-0.15	9	-1.395	9
279		5	max	1.169	9	28.422	4	2.599	1	10.427	1	0.501	2	0.242	2
280			min	-1.35	2	-9.523	9	-2.284	9	-10.216	9	-0.435	9	-0.204	9
281	29	1	max	2.746	4	31.21	1	1.17	9	0.204	9	0.511	2	19.343	1
282			min	-0.723	9	-27.747	9	-1.349	2	-0.242	2	-0.442	9	-22.381	7
283		2	max	2.746	4	31.181	1	1.17	9	0.204	9	0.258	2	13.493	1
284			min	-0.723	9	-27.775	9	-1.349	2	-0.242	2	-0.223	9	-17.836	7
285		3	max	2.746	4	31.153	1	1.17	9	0.204	9	0.005	2	7.65	1
286			min	-0.723	9	-27.804	9	-1.349	2	-0.242	2	-0.003	9	-13.771	6
287		4	max	2.746	4	31.124	1	1.17	9	0.204	9	0.216	9	1.811	1
288			min	-0.723	9	-27.833	9	-1.349	2	-0.242	2	-0.248	2	-10.813	5
289		5	max	2.746	4	31.095	1	1.17	9	0.204	9	0.435	9	3.803	9
290			min	-0.723	9	-27.861	9	-1.349	2	-0.242	2	-0.501	2	-10.426	4
291	30	1	max	2.284	9	9.638	9	1.17	9	0.204	9	0.511	2	4.894	1
292			min	-2.599	1	-28.305	4	-1.349	2	-0.242	2	-0.442	9	-22.359	5
293		2	max	2.284	9	9.609	9	1.17	9	0.204	9	0.258	2	6.269	1
294			min	-2.599	1	-28.334	4	-1.349	2	-0.242	2	-0.223	9	-17.497	6
295		3	max	2.284	9	9.58	9	1.17	9	0.204	9	0.005	2	7.65	1
296			min	-2.599	1	-28.362	4	-1.349	2	-0.242	2	-0.003	9	-13.771	6
297		4	max	2.284	9	9.552	9	1.17	9	0.204	9	0.216	9	9.035	1
298			min	-2.599	1	-28.391	4	-1.349	2	-0.242	2	-0.248	2	-10.75	7
299		5	max	2.284	9	9.523	9	1.17	9	0.204	9	0.435	9	10.427	1
300			min	-2.599	1	-28.42	4	-1.349	2	-0.242	2	-0.501	2	-10.216	9
301	31	1	max	1.476	1	40.012	6	2.699	2	8.075	9	3.937	9	58.094	6
302			min	-3.204	6	-22.986	1	-2.339	9	-9.636	2	-4.765	2	-34.595	1
303		2	max	1.476	1	40.012	6	2.699	2	8.075	9	3.675	9	53.614	6
304			min	-3.204	6	-22.986	1	-2.339	9	-9.636	2	-4.463	2	-32.021	1
305		3	max	1.476	1	40.012	6	2.699	2	8.075	9	3.413	9	49.133	6
306			min	-3.204	6	-22.986	1	-2.339	9	-9.636	2	-4.161	2	-29.447	1
307		4	max	1.476	1	40.012	6	2.699	2	8.075	9	3.151	9	44.653	6
308			min	-3.204	6	-22.986	1	-2.339	9	-9.636	2	-3.859	2	-26.873	1
309		5	max	1.476	1	40.012	6	2.699	2	8.075	9	2.89	9	40.172	6
310			min	-3.204	6	-22.986	1	-2.339	9	-9.636	2	-3.556	2	-24.299	1
311	32	1	max	1.35	2	5.947	9	4.028	4	23.222	5	0.876	2	0.208	2

Envelope Member Section Forces (Continued)

	Member	Sec		Axial[k]	LC	y Shear[k]	LC	z Shear[k]	LC	Torque[k-ft]	LC	y-y Moment[k-ft]	LC	z-z Moment[k-ft]	LC
312			min	-1.168	9	-26.541	5	-1.965	9	-1.851	1	-0.758	9	-0.174	9
313		2	max	1.35	2	5.947	9	4.028	4	23.222	5	1.353	3	3.423	5
314			min	-1.168	9	-26.541	5	-1.965	9	-1.851	1	-1.004	9	-0.917	9
315		3	max	1.35	2	25.997	8	4.028	4	23.222	5	1.846	3	6.74	5
316			min	-0.019	6	-27.506	1	-3.527	9	-22.873	8	-1.689	1	-7.057	1
317		4	max	1.171	9	25.997	8	3.806	1	22.448	1	1.199	9	3.349	8
318			min	-1.349	2	-27.506	1	-3.527	9	-22.873	8	-1.327	2	-3.619	1
319		5	max	1.171	9	25.997	8	3.806	1	22.448	1	0.758	9	0.174	9
320			min	-1.349	2	-27.506	1	-3.527	9	-22.873	8	-0.876	2	-0.208	2
321	33	1	max	3.806	1	26.002	8	1.349	2	0.174	9	0.758	9	22.873	8
322			min	-3.526	9	-27.504	1	-1.169	9	-0.208	2	-0.876	2	-22.448	1
323		2	max	3.806	1	25.953	8	1.349	2	0.174	9	0.382	9	14.582	7
324			min	-3.526	9	-27.553	1	-1.169	9	-0.208	2	-0.442	2	-13.595	1
325		3	max	3.806	1	25.904	8	1.349	2	0.174	9	0.006	9	7.249	6
326			min	-3.526	9	-27.603	1	-1.169	9	-0.208	2	-0.008	2	-4.725	1
327		4	max	3.806	1	25.855	8	1.349	2	0.174	9	0.426	2	5.671	3
328			min	-3.526	9	-27.652	1	-1.169	9	-0.208	2	-0.37	9	-4.734	9
329		5	max	3.806	1	25.805	8	1.349	2	0.174	9	0.86	2	13.062	1
330			min	-3.526	9	-27.701	1	-1.169	9	-0.208	2	-0.746	9	-12.707	9
331	34	1	max	1.965	9	26.547	5	1.349	2	0.174	9	0.758	9	23.222	5
332			min	-4.029	4	-5.952	9	-1.169	9	-0.208	2	-0.876	2	-1.851	1
333		2	max	1.965	9	26.497	5	1.349	2	0.174	9	0.382	9	14.693	5
334			min	-4.029	4	-6.001	9	-1.169	9	-0.208	2	-0.442	2	-3.296	1
335		3	max	1.965	9	26.448	5	1.349	2	0.174	9	0.006	9	7.249	6
336			min	-4.029	4	-6.05	9	-1.169	9	-0.208	2	-0.008	2	-4.725	1
337		4	max	1.965	9	26.399	5	1.349	2	0.174	9	0.426	2	5.209	9
338			min	-4.029	4	-6.1	9	-1.169	9	-0.208	2	-0.37	9	-6.309	2
339		5	max	1.965	9	26.35	5	1.349	2	0.174	9	0.86	2	7.179	9
340			min	-4.029	4	-6.149	9	-1.169	9	-0.208	2	-0.746	9	-13.06	4
341	35	1	max	23.382	1	2.709	2	3.046	6	0.118	9	5.526	1	9.636	2
342			min	-39.611	6	-2.276	9	-1.523	1	0.085	2	-11.048	6	-8.075	9
343		2	max	23.452	1	2.709	2	3.046	6	0.118	9	2.543	1	4.332	2
344			min	-39.541	6	-2.276	9	-1.523	1	0.085	2	-5.083	6	-3.618	9
345		3	max	23.522	1	2.709	2	3.046	6	0.118	9	0.882	6	0.84	9
346			min	-39.471	6	-2.276	9	-1.523	1	0.085	2	-0.44	1	-0.973	2
347		4	max	23.592	1	2.709	2	3.046	6	0.118	9	6.848	6	5.297	9
348			min	-39.401	6	-2.276	9	-1.523	1	0.085	2	-3.422	1	-6.277	2
349		5	max	23.661	1	2.709	2	3.046	6	0.118	9	12.813	6	9.755	9
350			min	-39.331	6	-2.276	9	-1.523	1	0.085	2	-6.405	1	-11.581	2

Envelope Node Reactions

	Node Label		X [k]	LC	Y [k]	LC	Z [k]	LC	MX [k-ft]	LC	MY [k-ft]	LC	MZ [k-ft]	LC
1	BASE	max	8.55	1	8.811	9	8.55	5	162.772	5	0.5	5	162.792	9
2		min	-8.55	9	8.811	2	0	1	-0.014	9	0.5	2	-162.754	1
3	Totals:	max	8.55	1	8.811	9	8.55	5						
4		min	-8.55	9	8.811	2	0	1						

Envelope AISC 15TH (360-16): LRFD Member Steel Code Checks

	Member	Shape	Code Check	Loc[ft]	LC	Shear Check	Loc[ft]	Dir	LC	phi*Pnc [k]	phi*Pnt [k]	phi*Mn y-y [k-ft]	phi*Mn z-z [k-ft]	Cb	Eqn
1	M1	Pipe 10.75x0.349	0.001	0	9	0	5.833		9	352.628	359.22	99.144	99.144	1.667	H1-1b*
2	M2	Pole 23.8128x0.25	0.308	2	9	0.029	2		5	858.298	999.342	537.209	537.209	1.044	H1-1b
3	M35	HSS6X6X8	0.295	7.833	8	0.03	7.833	y	9	387.597	403.236	68.31	68.31	2.245	H1-1b
4	M14	BP 1"x45"	0.015	0	4	0.031	0.75	y	4	2400.178	2632.5	54.844	2467.969	1.956	H1-1b

Envelope AISC 15TH (360-16): LRFD Member Steel Code Checks (Continued)

	Member	Shape	Code Check	Loc[ft]	LC	Shear Check	Loc[ft]	Dir	LC	phi*Pnc [k]	phi*Pnt [k]	phi*Mn y-y [k-ft]	phi*Mn z-z [k-ft]	Cb	Eqn
5	M15A	BP 1"x45"	0.015	0	6	0.034	0	y	6	2400.178	2632.5	54.844	2467.969	1.923	H1-1b
6	M30	BP 1"x45"	0.023	0	6	0.03	1.286	y	7	2005.921	2632.5	54.844	2467.969	2.186	H1-1b
7	M31	BP 1"x45"	0.022	0	4	0.028	0	y	3	2005.921	2632.5	54.844	2467.969	2.207	H1-1b
8	18	BP 1"x45"	0.016	0	6	0.035	0	y	6	2400.178	2632.5	54.844	2467.969	1.936	H1-1b
9	19	BP 1"x45"	0.016	0	9	0.034	0	y	1	2400.178	2632.5	54.844	2467.969	1.97	H1-1b
10	22	BP 1"x45"	0.024	0	7	0.03	1.286	y	6	2005.921	2632.5	54.844	2467.969	2.21	H1-1b
11	23	BP 1"x45"	0.023	0	9	0.03	1.286	y	1	2005.921	2632.5	54.844	2467.969	2.208	H1-1b
12	24	HSS6X6X8	0.299	7.833	5	0.03	7.833	z	4	387.597	403.236	68.31	68.31	2.239	H1-1b
13	29	BP 1"x45"	0.016	0	1	0.035	0	y	1	2400.178	2632.5	54.844	2467.969	1.936	H1-1b
14	30	BP 1"x45"	0.016	0	4	0.032	0.75	y	4	2400.178	2632.5	54.844	2467.969	1.97	H1-1b
15	33	BP 1"x45"	0.023	0	1	0.03	1.286	y	1	2005.921	2632.5	54.844	2467.969	2.187	H1-1b
16	34	BP 1"x45"	0.023	0	4	0.028	0	y	4	2005.921	2632.5	54.844	2467.969	2.208	H1-1b
17	35	HSS6X6X8	0.29	7.833	5	0.03	7.833	z	6	387.597	403.236	68.31	68.31	2.239	H1-1b

Monopole Base Plate Connection

Site Info	
BU #	876313
Site Name	HNSON AVE. BURNT H
Order #	586465 Rev. 1

Analysis Considerations	
TIA-222 Revision	H
Grout Considered:	See Custom Sheet
l_{ar} (in)	See Custom Sheet

Applied Loads	
Moment (kip-ft)	3982.79
Axial Force (kips)	63.22
Shear Force (kips)	29.72

**TIA-222-H Section 15.5 Applied*

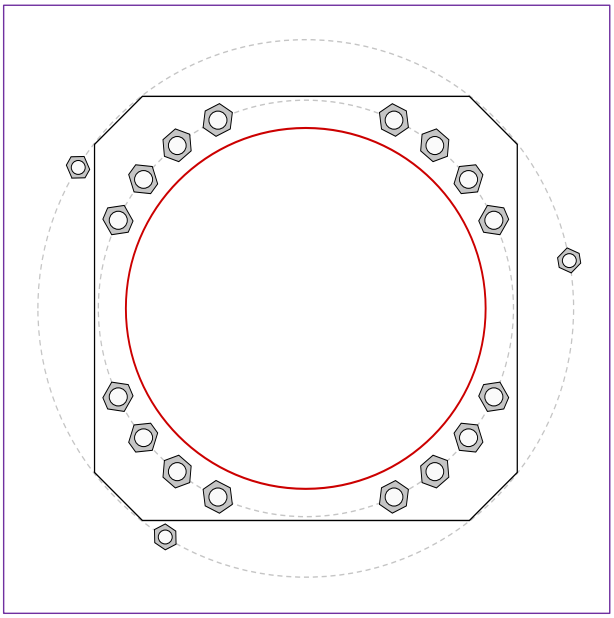

Connection Properties

Anchor Rod Data

GROUP 1: (16) 2-1/4" ø bolts (A615-75 N; Fy=75 ksi, Fu=100 ksi) on 52" BC
Anchor Spacing: 6 in
GROUP 2: (3) 1-3/4" ø bolts (Williams R71 N N; Fy=120 ksi, Fu=125 ksi) on 67.1" BC
pos. (deg): 10.3, 148.3, 238.3

Base Plate Data

53" W x 3" Plate (A572-50; Fy=50 ksi, Fu=65 ksi); Clip: 6 in

Stiffener Data

N/A

Pole Data

45.1" x 0.4375" 18-sided pole (A607-65; Fy=65 ksi, Fu=80 ksi)

Analysis Results

Anchor Rod Summary *(units of kips, kip-in)*

GROUP 1:		
Pu_t = 191.45	ϕPn_t = 243.75	**Stress Rating**
Vu = 1.86	ϕVn = 149.1	**74.8%**
Mu = n/a	ϕMn = n/a	**Pass**
GROUP 2:		
Pu_c = 190.21	ϕPn_c = 221.02	**Stress Rating**
Vu = 0	ϕVn = 126.36	**82.0%**
Mu = 0	ϕMn = 108.42	**Pass**

Base Plate Summary

Max Stress (ksi):	29.14	(Flexural)
Allowable Stress (ksi):	45	
Stress Rating:	**61.7%**	**Pass**

CCIplate

Elevation (ft)	0	*(Base)*

note: Bending interaction not considered when Grout Considered = "Yes"

Bolt Group	Resist Axial	Resist Shear	Induce Plate Bending	Grout Considered	Apply at BARB Elevation	BARB CL Elevation (ft)
1	Yes	Yes	Yes	No	No	
2	No	No	No	No	No	

Custom Bolt Connection

Bolt	Bolt Group ID	Location (deg.)	Diameter (in)	Material	Bolt Circle (in)	Eta Factor, n:	l_{ar} (in):	Thread Type	Area Override, in^2	Tension Only
1	1	25.122571	2.25	A615-75	52	0.5	2.25	N-Included		No
2	1	38.37419	2.25	A615-75	52	0.5	2.25	N-Included		No
3	1	51.62581	2.25	A615-75	52	0.5	2.25	N-Included		No
4	1	64.877429	2.25	A615-75	52	0.5	2.25	N-Included		No
5	1	115.12257	2.25	A615-75	52	0.5	2.25	N-Included		No
6	1	128.37419	2.25	A615-75	52	0.5	2.25	N-Included		No
7	1	141.62581	2.25	A615-75	52	0.5	2.25	N-Included		No
8	1	154.87743	2.25	A615-75	52	0.5	2.25	N-Included		No
9	1	205.12257	2.25	A615-75	52	0.5	2.25	N-Included		No
10	1	218.37419	2.25	A615-75	52	0.5	2.25	N-Included		No
11	1	231.62581	2.25	A615-75	52	0.5	2.25	N-Included		No
12	1	244.87743	2.25	A615-75	52	0.5	2.25	N-Included		No
13	1	295.12257	2.25	A615-75	52	0.5	2.25	N-Included		No
14	1	308.37419	2.25	A615-75	52	0.5	2.25	N-Included		No
15	1	321.62581	2.25	A615-75	52	0.5	2.25	N-Included		No
16	1	334.87743	2.25	A615-75	52	0.5	2.25	N-Included		No
17	2	10.3	1.75	Williams R71 N	67.1	0.5	14	N-Included	2.6	No
18	2	148.3	1.75	Williams R71 N	67.1	0.5	14	N-Included	2.6	No
19	2	238.3	1.75	Williams R71 N	67.1	0.5	14	N-Included	2.6	No

Plot Graphic

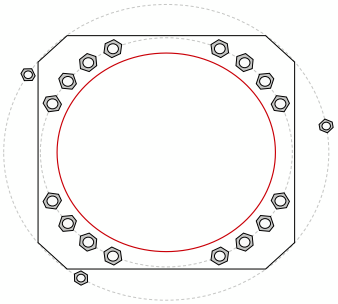

PROJECT	**137177.009.01 - WEST JOHNSON AVE. BURNT HOUSE, CT**
SUBJECT	**Anchor Rod Bracket Analysis**
DATE	**01-15-22**
v4.6.1	

TIA-222 Rev.	H
Apply TIA-222-H Section 15.5?	Yes

B+T GRP
1717 S. Boulder, Suite 300
Tulsa, OK 74119
(918) 587-4630

Analysis Criteria		
Design/Analysis	Analysis	
Load Type	Current Load	
Current load	190.21	kips
AR Capacity	259.8	kips

Tower Type	Monopole

Manufacturers Tower Prop.		
Pole Thickness	0.4375	in
Pole Grade	Custom	
Fy	65	ksi
Fu	80	ksi
Base Plate Gr.	A572-50	
Fy	50	ksi
Fu	65	ksi

Post-Installed Adhesive AR Mod.		
ARB Type	Welded	
Size	1.75	in
Grade	Custom	
Fy	120	ksi
Fu	125	ksi

Anchor Rod Bracket Analysis Checks		
Tube Bearing	37.0%	-
Tube Compression	55.5%	-
Gusset Shear	16.8%	-
Gusset Flexure	N/A	-
Welds: Gusset to Tower and BP	29.2%	-
Welds: Gusset to Tube	33.9%	-
Welds: Geometry	N/A	
Tower Punching	17.5%	-
Tube Punching	18.1%	-
Utilization	**55.5%**	

Bracket Properties

Gusset		
Thickness	1.25	in
Width at Tube	7.75	in
Height at Pole	45	in
Height at Tube	24	in
Grade	A572-65	
Fy	65	ksi
Fu	80	ksi

Pipe/Tube		
Size	HSS5x5x1/2	
Total Length	24	in
Length above Gusset	0	in
Length below Gusset	9	in
Grade	A500 Grade B (Square)	
Fy	46	ksi
Fu	58	ksi

Weld - Gusset to Pipe/Tube		
FEXX	70	ksi
Weld Type	Double Fillet	
Fillet Size	1/2	in

Weld - Gusset to Tower		
FEXX	80	ksi
Weld Type	Double Fillet	
Fillet Size	3/8	in

Weld - Gusset to Base Plate		
FEXX	80	ksi
Weld Type	CJP - Double Bevel	
Fillet Size	5/8	in
Bevel Depth	5/8	in
Gap	0	in
Notch (horiz)	0.75	in
Notch (vert)	0.75	in
Pipe/Tube Welded to Base/Footpad?	No	

Drilled Pier Foundation

BU # :	876313
Site Name:	WEST JOHNSON AVE. BU
Order Number:	586465 Rev. 1
TIA-222 Revison:	H
Tower Type:	Monopole

Check Limitation	
Apply TIA-222-H Section 15.5:	☑
N/A	☐
Additional Longitudinal Rebar	
Input Effective Depths (else Actual):	☐
Shear Design Options	
Check Shear along Depth of Pier:	☑
Utilize Shear-Friction Methodology:	☐
Override Critical Depth:	☐

Go to Soil Calculations

Applied Loads	Comp.	Uplift
Moment (kip-ft)	3982.79	
Axial Force (kips)	63.22	
Shear Force (kips)	29.72	

Material Properties		
Concrete Strength, f'c:	3	ksi
Rebar Strength, Fy:	60	ksi
Tie Yield Strength, Fyt:	40	ksi

Pier Design Data		
Depth	25.5	ft
Ext. Above Grade	0.5	ft
Pier Section 1		
From 0.5' above grade to 6.5' below grade		
Pier Diameter	11	ft
Rebar Quantity	20	
Rebar Size	11	
Clear Cover to Ties	28	in
Tie Size	5	
Tie Spacing	18	in

Rebar & Pier Options
Embedded Pole Inputs
Belled Pier Inputs

Pier Section 2		
From 6.5' below grade to 25.5' below grade		
Pier Diameter	7	ft
Rebar Quantity	20	
Rebar Size	11	
Clear Cover to Ties	4	in
Tie Size	5	
Tie Spacing	18	in

Analysis Results		
Soil Lateral Check	*Compression*	*Uplift*
$D_{v=0}$ (ft from TOC)	6.07	-
Soil Safety Factor	1.68	-
Max Moment (kip-ft)	4213.52	-
Rating*	*75.5%*	-
Soil Vertical Check	*Compression*	*Uplift*
Skin Friction (kips)	236.44	-
End Bearing (kips)	123.82	-
Weight of Concrete (kips)	206.61	-
Total Capacity (kips)	360.27	-
Axial (kips)	269.83	-
Rating*	*71.3%*	-
Reinforced Concrete Flexure	*Compression*	*Uplift*
Critical Depth (ft from TOC)	7.01	-
Critical Moment (kip-ft)	4190.95	-
Critical Moment Capacity	5125.73	-
Rating*	*77.9%*	-
Reinforced Concrete Shear	*Compression*	*Uplift*
Critical Depth (ft from TOC)	13.20	-
Critical Shear (kip)	423.10	-
Critical Shear Capacity	502.51	-
Rating*	*80.2%*	-

Structural Foundation Rating*	**80.2%**
Soil Interaction Rating*	**75.5%**

*Rating per TIA-222-H Section 15.5

Soil Profile

Groundwater Depth	10

# of Layers	10

Layer	Top (ft)	Bottom (ft)	Thickness (ft)	γ_{soil} (pcf)	$\gamma_{concrete}$ (pcf)	Cohesion (ksf)	Angle of Friction (degrees)	Calculated Ultimate Skin Friction Comp (ksf)	Calculated Ultimate Skin Friction Uplift (ksf)	Ultimate Skin Friction Comp Override (ksf)	Ultimate Skin Friction Uplift Override (ksf)	Ult. Gross Bearing Capacity (ksf)	SPT Blow Count	Soil Type
1	0	2	2	105	150	0	0	0.000	0.000	0.00	0.00			Cohesionless
2	2	3.5	1.5	110	150	0	0	0.000	0.000	0.00	0.00			Cohesionless
3	3.5	4	0.5	110	150	0	0	0.000	0.000	0.00	0.00			Cohesionless
4	4	4.7	0.7	110	150	0	0	0.000	0.000	0.00	0.00			Cohesionless
5	4.7	6	1.3	110	150	0	31	0.000	0.000	0.10	0.08			Cohesionless
6	6	8	2	120	150	2.5	0	1.375	1.375	1.48	1.48			Cohesive
7	8	10	2	115	150	2.25	0	1.24	1.24	1.23	1.23			Cohesive
8	10	15	5	48	87.6	1	0	0.55	0.55	0.55	0.55			Cohesive
9	15	20	5	48	87.6	1.25	0	0.69	0.69	0.66	0.66			Cohesive
10	20	25.5	5.5	43	87.6	0.75	0	0.41	0.41	0.41	0.41	4.29		Cohesive

ASCE 7 Hazards Report

Address:
No Address at This Location

Standard: ASCE/SEI 7-16
Risk Category: II
Soil Class: D - Stiff Soil

Elevation: 133.13 ft (NAVD 88)
Latitude: 41.564275
Longitude: -72.891861

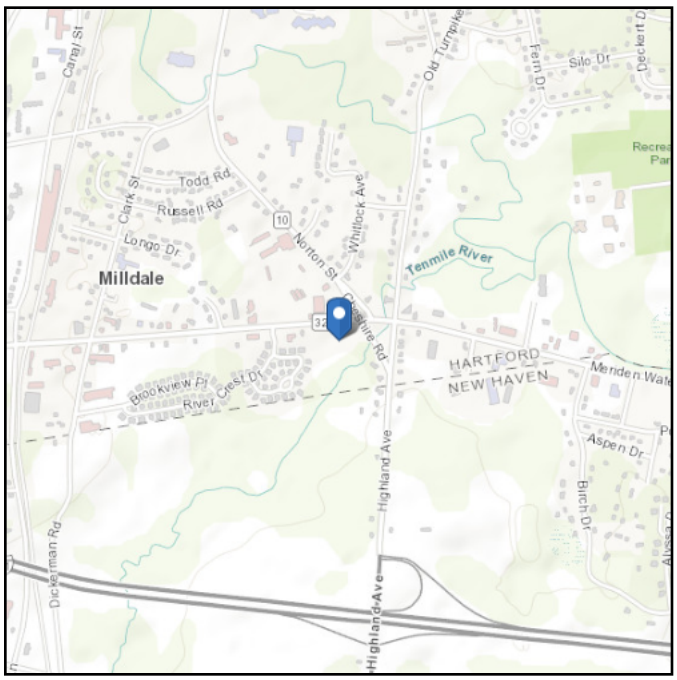

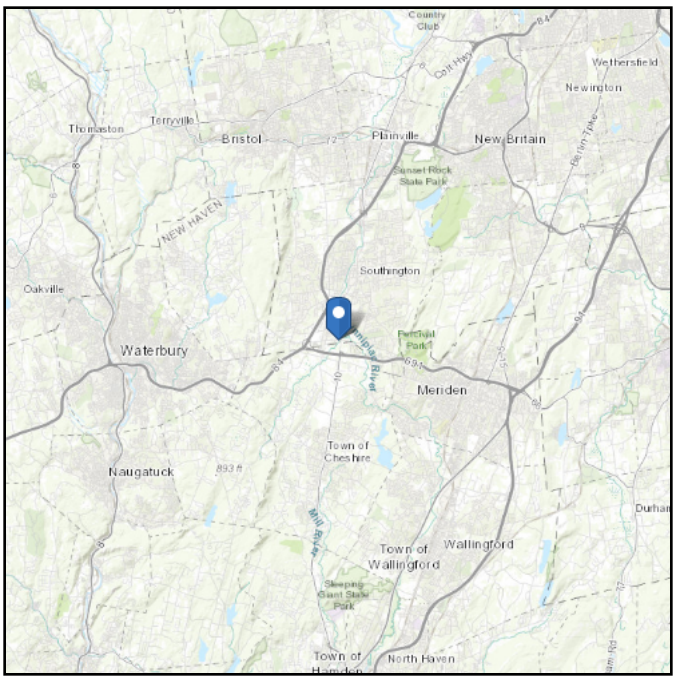

Wind

Results:

Wind Speed	118 Vmph
10-year MRI	75 Vmph
25-year MRI	84 Vmph
50-year MRI	90 Vmph
100-year MRI	97 Vmph

Data Source: ASCE/SEI 7-16, Fig. 26.5-1B and Figs. CC.2-1–CC.2-4, and Section 26.5.2
Date Accessed: Sat Jan 08 2022

Value provided is 3-second gust wind speeds at 33 ft above ground for Exposure C Category, based on linear interpolation between contours. Wind speeds are interpolated in accordance with the 7-16 Standard. Wind speeds correspond to approximately a 7% probability of exceedance in 50 years (annual exceedance probability = 0.00143, MRI = 700 years).

Site is in a hurricane-prone region as defined in ASCE/SEI 7-16 Section 26.2. Glazed openings need not be protected against wind-borne debris.

Seismic

Site Soil Class: D - Stiff Soil

Results:

S_S :	0.197	S_{D1} :	0.087
S_1 :	0.055	T_L :	6
F_a :	1.6	PGA :	0.109
F_v :	2.4	PGA_M :	0.172
S_{MS} :	0.316	F_{PGA} :	1.583
S_{M1} :	0.131	I_e :	1
S_{DS} :	0.21	C_v :	0.7

Seismic Design Category B

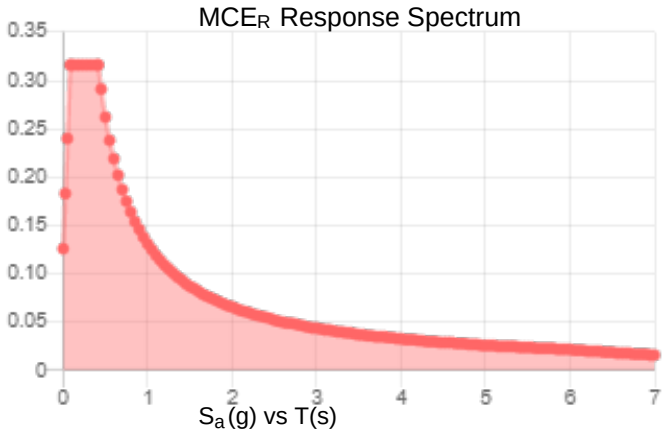

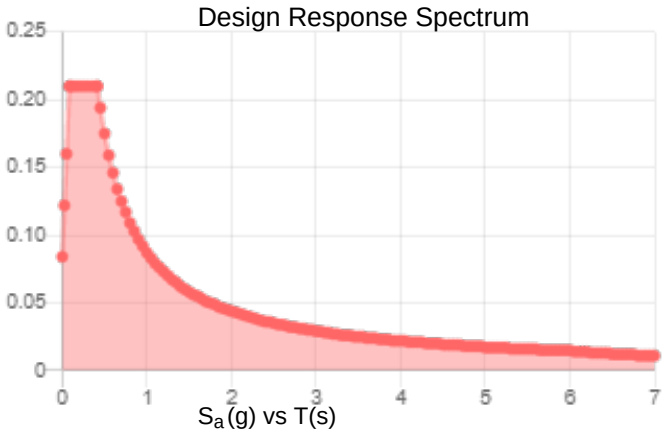

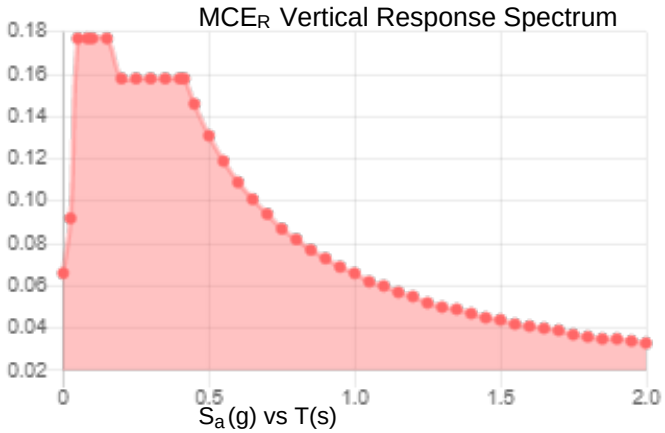

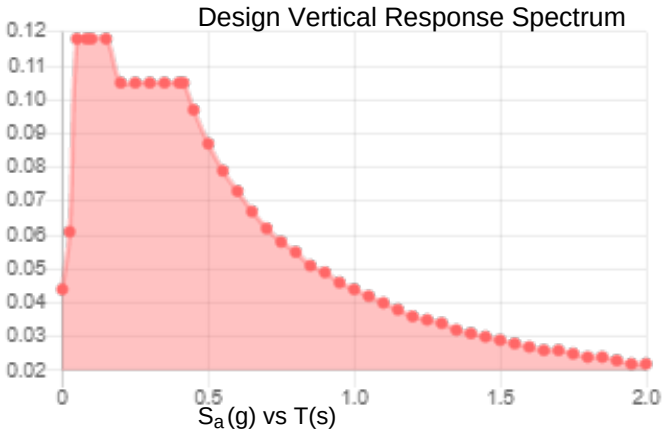

Data Accessed: **Sat Jan 08 2022**

Date Source:

USGS Seismic Design Maps based on ASCE/SEI 7-16 and ASCE/SEI 7-16 Table 1.5-2. Additional data for site-specific ground motion procedures in accordance with ASCE/SEI 7-16 Ch. 21 are available from USGS.

Ice

Results:

Ice Thickness:	1.00 in.
Concurrent Temperature:	15 F
Gust Speed	50 mph
Data Source:	Standard ASCE/SEI 7-16, Figs. 10-2 through 10-8
Date Accessed:	Sat Jan 08 2022

Ice thicknesses on structures in exposed locations at elevations higher than the surrounding terrain and in valleys and gorges may exceed the mapped values.

Values provided are equivalent radial ice thicknesses due to freezing rain with concurrent 3-second gust speeds, for a 500-year mean recurrence interval, and temperatures concurrent with ice thicknesses due to freezing rain. Thicknesses for ice accretions caused by other sources shall be obtained from local meteorological studies. Ice thicknesses in exposed locations at elevations higher than the surrounding terrain and in valleys and gorges may exceed the mapped values.

The ASCE 7 Hazard Tool is provided for your convenience, for informational purposes only, and is provided “as is” and without warranties of any kind. The location data included herein has been obtained from information developed, produced, and maintained by third party providers; or has been extrapolated from maps incorporated in the ASCE 7 standard. While ASCE has made every effort to use data obtained from reliable sources or methodologies, ASCE does not make any representations or warranties as to the accuracy, completeness, reliability, currency, or quality of any data provided herein. Any third-party links provided by this Tool should not be construed as an endorsement, affiliation, relationship, or sponsorship of such third-party content by or from ASCE.

ASCE does not intend, nor should anyone interpret, the results provided by this Tool to replace the sound judgment of a competent professional, having knowledge and experience in the appropriate field(s) of practice, nor to substitute for the standard of care required of such professionals in interpreting and applying the contents of this Tool or the ASCE 7 standard.

In using this Tool, you expressly assume all risks associated with your use. Under no circumstances shall ASCE or its officers, directors, employees, members, affiliates, or agents be liable to you or any other person for any direct, indirect, special, incidental, or consequential damages arising from or related to your use of, or reliance on, the Tool or any information obtained therein. To the fullest extent permitted by law, you agree to release and hold harmless ASCE from any and all liability of any nature arising out of or resulting from any use of data provided by the ASCE 7 Hazard Tool.

APPENDIX D

MODIFICATION DRAWINGS

TOWER MODIFICATION DRAWINGS PREPARED FOR: CROWN CASTLE

SAFETY CLIMB: 'LOOK UP'
THE INTEGRITY OF THE WIRE ROPE SAFETY CLIMB SYSTEM SHALL BE CONSIDERED DURING ALL STAGES OF DESIGN, INSTALLATION AND INSPECTION. TOWER REINFORCEMENTS AND EQUIPMENT INSTALLATIONS SHALL NOT COMPROMISE THE INTEGRITY OR FUNCTIONAL USE OF ANY WIRE ROPE SAFETY CLIMB ON THE STRUCTURE. THIS SHALL INCLUDE, BUT NOT BE LIMITED TO: PINCHING OF THE WIRE ROPE, BENDING OF THE WIRE ROPE FROM ITS SUPPORTS, DIRECT CONTACT OR CLOSE PROXIMITY TO THE WIRE ROPE WHICH MAY CAUSE FRICTIONAL WEAR, OR IMPACT TO THE ANCHORAGE POINTS IN ANY WAY. ANY COMPROMISED SAFETY CLIMB MUST BE REPORTED TO YOUR CROWN POC FOR RESOLUTION, INCLUDING EXISTING CONDITIONS.

SITE NAME:
WEST JOHNSON AVE. BURNT HOUSE
BU NUMBER:
876313

SITE ADDRESS:
1394 MERIDEN WATERBURY TPK
SOUTHINGTON, CT 06489
HARTFORD COUNTY, USA

PROJECT CONTACTS:

CROWN PROJECT MANAGER
JOHN MCGEE
(704) 877-8397
JOHN.MCGEE@CROWNCASTLE.COM

ENGINEERING RFI CONTACT
THARUN CHERIYAN, E.I.T
(918) 587-4630
TCHERIYAN@BTGRP.COM
MODDWGS@BTGRP.COM
1717 S BOULDER AVENUE, SUITE 300
TULSA, OK 74119

ATTENTION ALL CONTRACTORS, ANYTIME YOU ACCESS A CROWN SITE FOR ANY REASON YOU ARE TO CALL THE CROWN NOC UPON ARRIVAL AND DEPARTURE, DAILY AT 800-788-7011.

HOT WORK INCLUDED	
N/A	BASE GRINDING ONLY
N/A	BASE WELDING (AND GRINDING)
N/A	AERIAL GRINDING ONLY
N/A	AERIAL WELDING (AND GRINDING)

TOWER INFORMATION

TOWER MANUFACTURER / JOB #:	SUMMIT MANUFACTURING, INC. / 3899
TOWER HEIGHT / TYPE:	160' MONOPOLE
TOWER LOCATION:	LAT. 41° 33' 51.39"
	LONG. -72° 53' 30.70"
STRUCTURAL DESIGN DRAWING REPORT:	B+T GROUP / WO. # 2065105
ORDER ID / REVISION #:	586465 / 1

CODE COMPLIANCE

THIS REINFORCEMENT DESIGN HAS BEEN PERFORMED IN ACCORDANCE WITH THE TIA-222-H STANDARD. THIS REINFORCEMENT DESIGN UTILIZES AN ULTIMATE 3-SECOND GUST WIND SPEED OF 118 MPH AS REQUIRED BY THE 2018 CONNECTICUT STATE BUILDING CODE. EXPOSURE CATEGORY B AND RISK CATEGORY II WERE USED IN THIS REINFORCEMENT DESIGN.

DRAWINGS INCLUDED

SHEET	DESCRIPTION
TS	TITLE SHEET
MI	MODIFICATION INSPECTION NOTES AND CHECKLIST
GN	GENERAL NOTES
S1	TOWER ELEVATION, SCHEDULES AND TX LINE DISTRIBUTION DIAGRAM
S2	TOWER SECTION (79'-94')

B+T GRP
1717 S. BOULDER AVE.
SUITE 300
TULSA, OK 74119
PH: (918) 587-4630
www.btgrp.com

CROWN CASTLE

ISSUED FOR:

REV	DATE	DESCRIPTION
0	01/21/22	ISSUED FOR CONSTRUCTION

PROJECT NO:	137177.009.01
PROJECT ENG:	THARUN CHERIYAN
DRAWN BY:	RA
CHECKED BY:	VKP / PPK

B+T ENGINEERING, INC.
PEC.0001564
Expires 02/10/22

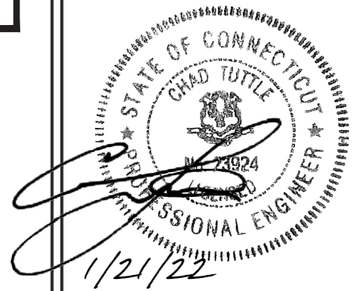

IT IS A VIOLATION OF LAW FOR ANY PERSON, UNLESS THEY ARE ACTING UNDER THE DIRECTION OF A LICENSED PROFESSIONAL ENGINEER, TO ALTER THIS DOCUMENT.

WEST JOHNSON AVE.
BURNT HOUSE
876313
1394 MERIDEN WATERBURY TPK
SOUTHINGTON, CT
EXISTING 160' MONOPOLE

SHEET TITLE
TITLE SHEET

SHEET NUMBER: TS
REVISION: 0

\\tower-two\BT Telecom Services\Projects\Crown Castle\137000\137177_876313_West Johnson Ave. Burnt House\TOW MOD\137177.009.01_West Johnson Ave.Burnt House-876313-Tow Mod.dwg - Sheet:TS - User: Tcheriyan - January 21, 2022 - 3:34 PM

\\tower-two\BT Telecom Services\Projects\Crown Castle\137000\137177_876313_West Johnson Ave. Burnt House\TOW MOD\137177.009.01_West Johnson Ave.Burnt House-876313-Tow Mod.dwg — Sheet:MI — User: Tcheriyan — January 21, 2022 — 3:34 PM

CED-FRM-10354 MI CHECKLIST

REQUIRED	REPORT ITEM	APPLICABLE CROWN DOC #	BRIEF DESCRIPTION
PRE-CONSTRUCTION			
X	MI CHECKLIST DRAWING	CED-SOW-10007	THIS CHECKLIST SERVES AS A GUIDELINE FOR THE REQUIRED CONSTRUCTION DOCUMENTS AND INSPECTIONS FOR THIS MODIFICATION
X	EOR APPROVED SHOP DRAWINGS	CED-SOW-10007	ONCE THE PRE-MODIFICATION MAPPING IS COMPLETE AND PRIOR TO FABRICATION, THE CONTRACTOR SHALL PROVIDE DETAILED ASSEMBLY DRAWINGS AND/OR SHOP DRAWINGS. THESE ARE TO INCLUDE, BUT ARE NOT LIMITED TO, A VISUAL LAYOUT OF NEW REINFORCEMENT, EXISTING REINFORCEMENT CONFIGURATION, PORTHOLES, MOUNTS, STEP PEGS, SAFETY CLIMBS AND ANY OTHER MISCELLANEOUS ITEMS WHICH MAY AFFECT SUCCESSFUL INSTALLATION OF MODIFICATIONS ON THE TOWER. THESE DRAWINGS SHALL BE SUBMITTED TO THE EOR FOR APPROVAL. SHOP DRAWING SUBMISSION SHALL INCLUDE THE EOR RFI FORM DETAILING ANY CHANGES FROM THE ORIGINAL DESIGN
X	FABRICATION INSPECTION	CED-SOW-10007	A LETTER FROM THE FABRICATOR, STATING THAT THE WORK WAS PERFORMED IN ACCORDANCE WITH INDUSTRY STANDARDS AND THE CONTRACT DOCUMENTS, SHALL BE PROVIDED TO THE MI INSPECTOR FOR INCLUSION IN THE MI REPORT.
N/A	FABRICATOR CERTIFIED WELD INSPECTION	CED-SOW-10007 CED-STD-10069	A CWI SHALL INSPECT ALL WELDING PERFORMED ON STRUCTURAL MEMBERS DURING FABRICATION. A WRITTEN REPORT SHALL BE PROVIDED TO THE MI INSPECTOR FOR INCLUSION IN THE MI REPORT.
X	MATERIAL TEST REPORTS (MTR)	CED-SOW-10007	MATERIAL TEST REPORTS SHALL BE PROVIDED FOR MATERIAL USED AS REQUIRED PER SECTION 9.2.5 OF CED-SOW-10007. MTRS SHALL BE PROVIDED TO THE MI INSPECTOR FOR INCLUSION IN THE MI REPORT.
N/A	FABRICATOR NDE INSPECTION REPORT	CED-SOW-10066 CED-STD-10069	CRITICAL SHOP WELDS THAT REQUIRE TESTING ARE NOTED ON THESE CONTRACT DRAWINGS. A CERTIFIED NDT INSPECTOR SHALL PERFORM NON-DESTRUCTIVE EXAMINATION AND A REPORT SHALL BE PROVIDED TO THE MI INSPECTOR FOR INCLUSION IN THE MI REPORT.
N/A	NDE OF MONOPOLE BASE PLATE	ENG-SOW-10033	A NDE OF THE POLE TO BASE PLATE CONNECTION IS REQUIRED AND A WRITTEN REPORT SHALL BE PROVIDED TO THE MI INSPECTOR FOR INCLUSION IN THE MI REPORT.
X	PACKING SLIPS	CED-SOW-10007	PACKING/SHIPPING LIST FOR ALL MATERIAL USED DURING CONSTRUCTION OF THE MODIFICATION
ADDITIONAL TESTING AND INSPECTIONS:			
N/A			
CONSTRUCTION			
N/A	FOUNDATION INSPECTIONS	CED-SOW-10144	A VISUAL OBSERVATION OF THE EXCAVATION AND REBAR SHALL BE PERFORMED BEFORE PLACING THE CONCRETE. A VISUAL OBSERVATION OF THE REBAR SHALL BE PERFORMED BEFORE PLACING THE EPOXY. A SEALED WRITTEN REPORT SHALL BE PROVIDED TO THE MI INSPECTOR FOR INCLUSION IN THE MI REPORT.
N/A	CONCRETE COMP. STRENGTH AND SLUMP TEST	CED-SOW-10144	THE CONCRETE MIX DESIGN, SLUMP TEST, AND COMPRESSIVE STRENGTH TESTS SHALL BE PROVIDED AS PART OF THE FOUNDATION REPORT.
N/A	EARTHWORK	CED-SOW-10144	FOUNDATION SUB-GRADES SHALL BE INSPECTED AND APPROVED BY AN APPROVED FOUNDATION INSPECTOR AND RESULTS INCLUDED AS PART OF THE FOUNDATION REPORT.
N/A	MICROPILE/ROCK ANCHOR	CED-SOW-10144	MICROPILES/ROCK ANCHORS SHALL BE INSPECTED BY THE FOUNDATION INSPECTION VENDOR AND SHALL BE INCLUDED AS PART OF THE FOUNDATION INSPECTION REPORT, ADDITIONAL TESTING AND/OR INSPECTION REQUIREMENTS ARE NOTED IN THESE CONTRACT DOCUMENTS.
N/A	POST-INSTALLED ANCHOR ROD VERIFICATION	CED-SOW-10007 CED-FRM-10358	POST INSTALLED ANCHOR ROD VERIFICATION SHALL BE PERFORMED IN ACCORDANCE WITH CROWN REQUIREMENTS AND A REPORT SHALL BE PROVIDED TO THE MI INSPECTOR FOR INCLUSION IN THE MI REPORT.
N/A	BASE PLATE GROUT VERIFICATION	ENG-STD-10323	THE GENERAL CONTRACTOR SHALL PROVIDE DOCUMENTATION TO THE MI INSPECTOR THAT CERTIFIES THAT THE GROUT WAS REMOVED AND/OR INSTALLED IN ACCORDANCE WITH CROWN REQUIREMENTS FOR INCLUSION IN THE MI REPORT.
N/A	FIELD CERTIFIED WELD INSPECTION	CED-SOW-10066 CED-STD-10069	A CROWN APPROVED CERTIFIED WELD INSPECTOR SHALL INSPECT AND TEST FIELD WELDS, FOLLOWING ALL PROCEDURES SPECIFIED IN CROWN STANDARD DOCUMENTS APPLICABLE TO WELD INSPECTIONS. A REPORT SHALL BE PROVIDED. NDE OF FIELD WELDS SHALL BE PERFORMED AS REQUIRED BY CROWN STANDARDS AND CONTRACT DOCUMENTS. THE NDE REPORT SHALL BE INCLUDED IN THE CWI REPORT.
X	ON-SITE COLD GALVANIZING VERIFICATION	ENG-STD-10149 CED-FRM-10358	THE GENERAL CONTRACTOR SHALL PROVIDE WRITTEN AND PHOTOGRAPHIC DOCUMENTATION TO THE MI INSPECTOR VERIFYING THAT ANY ON-SITE COLD GALVANIZING WAS APPLIED PER MANUFACTURER SPECIFICATIONS AND APPLICABLE STANDARDS.
N/A	TENSION TWIST AND PLUMB	CED-PRC-10182 CED-STD-10261	THE GENERAL CONTRACTOR SHALL PROVIDE A REPORT IN ACCORDANCE WITH APPLICABLE STANDARDS DOCUMENTING TENSION TWIST AND PLUMB.
X	GC AS-BUILT DRAWINGS	CED-SOW-10007	THE GENERAL CONTRACTOR SHALL SUBMIT A LEGIBLE COPY OF THE ORIGINAL DESIGN DRAWINGS EITHER STATING "INSTALLED AS DESIGNED" OR NOTING ANY CHANGES THAT WERE REQUIRED AND APPROVED BY THE ENGINEER OF RECORD. EOR/RFI FORMS APPROVING ALL CHANGES SHALL BE SUBMITTED
ADDITIONAL TESTING AND INSPECTIONS:			
N/A	NDE OF EXTENSION FLANGE	ENG-SOW-10033	A CROWN APPROVED CERTIFIED WELD INSPECTOR SHALL INSPECT AND TEST SHOP WELDS, FOLLOWING ALL PROCEDURES SPECIFIED IN CROWN STANDARD DOCUMENT APPLICABLE TO WELD INSPECTIONS. THE REFERENCE STANDARD DOCUMENT IS FOR BASE PLATE, BUT CERTIFIED WELD INSPECTOR TO FOLLOW THE GENERAL REQUIREMENT AS APPLICABLE TO THE FLANGE PLATE.
POST-CONSTRUCTION			
X	CONSTRUCTION COMPLIANCE LETTER	CED-SOW-10007 CED-FRM-10358	A LETTER FROM THE GENERAL CONTRACTOR STATING THAT THE WORKMANSHIP WAS PERFORMED IN ACCORDANCE WITH INDUSTRY STANDARDS AND THESE CONTRACT DRAWINGS, INCLUDING LISTING ADDITIONAL PARTIES TO THE MODIFICATION PROCESS.
N/A	POST-INSTALLED ANCHOR ROD PULL TESTS	CED-PRC-10119	POST-INSTALLED ANCHOR RODS SHALL BE TESTED BY A CROWN APPROVED PULL TEST INSPECTOR AND A REPORT SHALL BE PROVIDED INDICATING TESTING RESULTS.
X	PHOTOGRAPHS	CED-SOW-10007	PHOTOGRAPHS SHALL BE SUBMITTED TO THE MI. PHOTOS SHALL DOCUMENT ALL PHASES OF THE CONSTRUCTION. THE PHOTOS SHALL BE ORGANIZED IN A MANNER THAT EASILY IDENTIFIES THE EXACT LOCATION OF THE PHOTO.
N/A	BOLT HOLE INSTALLATION VERIFICATION REPORT	CED-SOW-10007	THE MI INSPECTOR SHALL VERIFY THE INSTALLATION AND TIGHTNESS 10% OF ALL NON PRE-TENSIONED BOLTS INSTALLED AS PART OF THE MODIFICATION. THE MI INSPECTOR SHALL LOOSEN THE NUT AND VERIFY THE BOLT HOLE SIZE AND CONDITION. THE MI REPORT SHALL CONTAIN THE COMPLETED BOLT INSTALLATION VERIFICATION REPORT, INCLUDING THE SUPPORTING PHOTOGRAPHS.
X	PUNCH LIST DEVELOPMENT AND CORRECTION DOCUMENTATION	CED-PRC-10283 CED-FRM-10285	FINAL PUNCH LIST INDICATING ALL NONCONFORMANCE(S) IDENTIFIED AND THE FINAL RESOLUTION/APPROVAL.
X	MI INSPECTOR REDLINE OR RECORD DRAWING(S)	CED-SOW-10007	THE MI INSPECTOR SHALL OBSERVE AND REPORT ANY DISCREPANCIES BETWEEN THE CONTRACTOR'S REDLINE DRAWING AND THE ACTUAL COMPLETED INSTALLATION.
ADDITIONAL TESTING AND INSPECTIONS:			
"N/A"			

THE MI CHECKLIST SHALL BE REVIEWED PRIOR TO THE START OF CONSTRUCTION. ALL PARTIES TO THE MODIFICATION SHALL UNDERSTAND CROWN REQUIREMENTS AND INSPECTION/DOCUMENTATION THAT IS APPLICABLE TO THE SCOPE OF WORK THEY ARE PERFORMING. ERRORS ON THE MI CHECKLIST SHALL BE BROUGHT TO THE ATTENTION OF THE CROWN POC AND EOR AS SOON AS POSSIBLE.

MODIFICATION INSPECTION NOTES

GENERAL

THE MI IS AN ON-SITE VISUAL AND HANDS-ON INSPECTION OF TOWER MODIFICATIONS INCLUDING A REVIEW OF CONSTRUCTION REPORTS AND ADDITIONAL PERTINENT DOCUMENTATION PROVIDED BY THE GENERAL CONTRACTOR (GC), AS WELL AS ANY INSPECTION DOCUMENTS PROVIDED BY 3RD PARTY INSPECTORS. THE MI IS TO ENSURE THE INSTALLATION WAS CONSTRUCTED IN ACCORDANCE WITH THE CONTRACT DOCUMENTS, NAMELY THE MODIFICATION DRAWINGS; IN ACCORDANCE WITH APPLICABLE CROWN STANDARDS; AND AS DESIGNED BY THE ENGINEER OF RECORD (EOR).

NO DOCUMENT, CODE OR POLICY CAN ANTICIPATE EVERY SITUATION THAT MAY ARISE. ACCORDINGLY, THIS CHECKLIST IS INTENDED TO SERVE AS A SOURCE OF GUIDING PRINCIPLES IN ESTABLISHING GUIDELINES FOR MODIFICATION INSPECTION.

THE MI IS TO CONFIRM INSTALLATION CONFIGURATION AND WORKMANSHIP ONLY AND IS NOT A REVIEW OF THE MODIFICATION DESIGN ITSELF, AND THE MI INSPECTOR DOES NOT TAKE OWNERSHIP OF THE MODIFICATION DESIGN. OWNERSHIP OF THE STRUCTURAL MODIFICATION DESIGN EFFECTIVENESS AND INTEGRITY RESIDES WITH THE EOR AT ALL TIMES. THE MI INSPECTOR SHALL INSPECT AND NOTE CONFORMANCE/NONCONFORMANCE AND PROVIDE TO THE CROWN POINT OF CONTACT (CROWN POC) FOR EVALUATION.

ALL MI'S SHALL BE CONDUCTED BY A CROWN APPROVED MI INSPECTOR, WORKING FOR A CROWN APPROVED MI VENDOR. SEE CROWN CED-LST-10173, "APPROVED MI VENDORS".

TO ENSURE THAT THE REQUIREMENTS OF THE MI ARE MET, IT IS VITAL THAT THE GENERAL CONTRACTOR (GC) AND THE MI INSPECTOR BEGIN COMMUNICATING AND COORDINATING AS SOON AS A PURCHASE ORDER (PO) IS RECEIVED. IT IS EXPECTED THAT EACH PARTY WILL BE PROACTIVE IN REACHING OUT TO THE OTHER PARTY. IF CONTACT INFORMATION IS NOT KNOWN THE GC AND/OR INSPECTOR SHALL CONTACT THE CROWN POINT OF CONTACT (CROWN POC).

REFER TO CROWN CED-SOW-10007, "MODIFICATION INSPECTION SOW", FOR FURTHER DETAILS AND REQUIREMENTS.

SERVICE LEVEL COMMITMENT

THE FOLLOWING RECOMMENDATIONS AND SUGGESTIONS ARE OFFERED TO ENHANCE THE EFFICIENCY AND EFFECTIVENESS OF DELIVERING AN MI REPORT:

- THE GC SHALL PROVIDE A MINIMUM OF 5 BUSINESS DAYS NOTICE, PREFERABLY 10, TO THE MI INSPECTOR AS TO WHEN THE SITE WILL BE READY FOR THE MI TO BE CONDUCTED.
- THE GC AND MI INSPECTOR COORDINATE CLOSELY THROUGHOUT THE ENTIRE PROJECT.
- WHEN POSSIBLE, IT IS PREFERRED TO HAVE THE GC AND MI INSPECTOR ON-SITE SIMULTANEOUSLY FOR ANY GUY WIRE TENSIONING OR RE-TENSIONING OPERATIONS.
- WHEN POSSIBLE, IT IS PREFERRED TO HAVE THE GC AND MI INSPECTOR ON-SITE DURING THE MI TO HAVE ANY MINOR DEFICIENCIES CORRECTED DURING THE INITIAL MI. THEREFORE, THE GC MAY CHOOSE TO COORDINATE THE MI CAREFULLY TO ENSURE ALL CONSTRUCTION FACILITIES ARE AT THEIR DISPOSAL WHEN THE MI INSPECTOR IS ON SITE.

REQUIRED PHOTOS

BETWEEN THE GC AND THE MI INSPECTOR THE FOLLOWING PHOTOGRAPHS, AT A MINIMUM, ARE TO BE TAKEN AND INCLUDED IN THE MI REPORT:

- PRE-CONSTRUCTION GENERAL SITE CONDITION
- PHOTOGRAPHS DURING THE REINFORCEMENT MODIFICATION CONSTRUCTION/ERECTION AND INSPECTION
  - RAW MATERIALS
  - PHOTOS OF ALL CRITICAL DETAILS
  - FOUNDATION MODIFICATIONS
  - WELD PREPARATION
  - BOLT INSTALLATION
  - FINAL INSTALLED CONDITION
  - SURFACE COATING REPAIR
- POST CONSTRUCTION PHOTOGRAPHS
  - FINAL INFIELD CONDITION

PHOTOS OF ELEVATED MODIFICATIONS TAKEN ONLY FROM THE GROUND SHALL BE CONSIDERED INADEQUATE.

THIS IS NOT A COMPLETE LIST OF REQUIRED PHOTOS, FOR A COMPLETE LIST OF PHOTOS SEE CROWN DOCUMENT # CED-SOW-10007.

B+T GRP
1717 S. BOULDER AVE.
SUITE 300
TULSA, OK 74119
PH: (918) 587-4630
www.btgrp.com

CROWN CASTLE

ISSUED FOR:

REV	DATE	DESCRIPTION
0	01/21/22	ISSUED FOR CONSTRUCTION

PROJECT NO:	137177.009.01
PROJECT ENG:	THARUN CHERIYAN
DRAWN BY:	RA
CHECKED BY:	VKP / PPK

B+T ENGINEERING, INC.
PEC.0001564
Expires 02/10/22

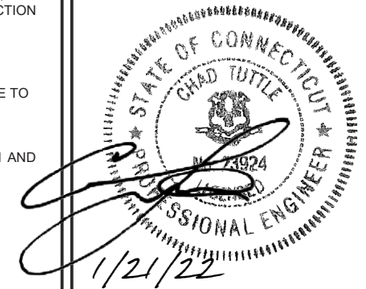

IT IS A VIOLATION OF LAW FOR ANY PERSON, UNLESS THEY ARE ACTING UNDER THE DIRECTION OF A LICENSED PROFESSIONAL ENGINEER, TO ALTER THIS DOCUMENT.

WEST JOHNSON AVE.
BURNT HOUSE
876313
1394 MERIDEN WATERBURY TPK
SOUTHINGTON, CT

EXISTING 160' MONOPOLE

SHEET TITLE
MODIFICATION INSPECTION NOTES AND CHECKLIST

SHEET NUMBER:	REVISION:
MI	0

\\tower-two\BT Telecom Services\Projects\Crown Castle\137000\137177_876313_West Johnson Ave. Burnt House\TOW MOD\137177.009.01_West Johnson Ave.Burnt House-876313-Tow Mod.dwg — Sheet:GN — User: Tcheriyan — January 21, 2022 — 3:34 PM

GENERAL NOTES

1. The General Contractor (GC) shall reference CED–STD–10159, "Tower Modification Construction Specifications", as a continuation of the following General Notes. The GC shall keep a copy of this document with the Structural Design Drawings (SDD) at all times, and shall ensure that all Contractor Personnel are aware of the information enclosed within the General Notes and CED–STD–10159.
2. The Contract Documents are the property of Crown Castle (Crown). They are provided to the GC and its Lower Tier Contractors and material suppliers for the limited purpose of use in completing the Work for this Site, and shall be kept in strict confidence and not disclosed to any third parties. The Contract Documents shall not be used for any other purpose whatsoever without the prior written consent of Crown.
3. Detail drawings, including notes and tables, shall govern over general notes and typical details. Contact the Crown Point of Contact (POC) and Engineer of Record (EOR) for clarification as needed.
4. Do not scale drawings.
5. Any Work performed without a prefabrication mapping is done at the risk of the GC and/or fabricator. All dimensions of existing structural elements are assumed based on the available documentation and are preliminary until field–verified by the GC, unless noted otherwise (UNO). Where discrepancies are found, GC shall contact the Crown POC and EOR through RFI.
6. For this analysis and modification, the tower has been assumed to be in good condition without any structural defects, UNO. If the GC discovers any indication of an existing structural defect, contact the Crown POC and EOR immediately.
7. All construction means and methods, including but not limited to erection plans, rigging plans, climbing plans, and rescue plans, shall be the responsibility of the GC responsible for the execution of the Work contained herein, and shall meet ANSI/ASSE A10.48 (latest edition); federal, state, and local regulations; and any applicable industry consensus standards related to the construction activities being performed. All rigging plans shall adhere to ANSI/ASSE A10.48 (latest edition) and Crown standard CED–STD–10253, "Rigging Program", including the required involvement of a qualified engineer for class IV construction to certify the supporting structure(s) in accordance with the ANSI/TIA–322 (latest edition).
8. The structural integrity of the modification design extends to the complete condition only. The GC must be cognizant that the removal of any structural component of an existing tower has the potential to cause the partial or complete collapse of the structure. All necessary precautions must be taken to ensure structural integrity, including, but not limited to, engineering assessment of construction stresses with installation maximum wind speed and/or temporary bracing and shoring.
9. Aerial and underground utilities and facilities may or may not be shown on the drawings. The GC shall take every precaution to preserve and protect these items, which may include aerial or underground power lines, telephone lines, water lines, sewer lines, cable television facilities, pipelines, structures and other public and private improvements within or adjacent to the Work area. The responsibility for determining the actual on–site location of these items shall rest exclusively with the GC.
10. All manufacturer's hardware assembly instructions shall be followed, UNO. Conflicting notes shall be brought to the attention of the EOR and the Crown POC.
11. The GC shall fabricate all required items per the materials specified below, UNO on the detail drawing sheets. If the GC finds for any component that the materials have not been clearly specified, the GC shall submit an RFI to the EOR to confirm the required material.

    All structural elements shall be new and shall conform to the following requirements, UNO:

    Monopoles:
    - Structural shapes and plates: ASTM A572 Grade 65 (FY = 65 KSI)
    - Welding electrodes, SMAW: E80XX
    - Welding electrodes, FCAW: E8XT–XX
    - Welding elcctrodes, GMAW: ER80S–X

    Self–Support and Guyed Towers:
    - Structural shapes and plates: ASTM A572 Grade 50 (FY = 50 KSI)
    - Welding electrodes, SMAW: E70XX
    - Welding electrodes, FCAW: E7XT–XX
    - Welding elcctrodes, GMAW: ER70S–X

    All tower types:
    - Steel angle: ASTM A572 Grade 50 (FY = 50 KSI)
    - Solid rod: ASTM A36 (FY = 36 KSI)
    - Pipe/tube (round): ASTM A500 Grade C (FY = 46 KSI)
    - Pipe/tube (square): ASTM A500 Grade C (FY = 50 KSI)
    - Bolts: ASTM F3125 Grade A325 Type 1
    - U–bolts: Grade 2 ASTM A307 Grade A, or SAE J429
    - Nuts: ASTM A563 Grade DH
    - Washers: F436 Type 1
    - Guy Wires: ASTM A475 Grade EHS
    - Bridge Strand: ASTM A586 Grade 1
12. After fabrication, hot–dip galvanize all steel items, UNO. Galvanize per ASTM A123, ASTM A153/A153M, or ASTM A653 G90, as applicable. ASTM A490 bolts shall not be hot–dip galvanized, but shall instead be coated with Magni 565 or EOR approved equivalent, per ASTM F2833.
13. Contractor Personnel shall not drill holes in any new or existing structural members, other than those drilled holes shown on structural drawings, without the approval of the EOR.
14. For a list of Crown–approved cold galvanizing compounds, refer to ENG–STD–10149, "Tower Protective Coatings Guidelines".
15. All exposed structural steel as the result of this scope of Work including welds (after final inspection of the weld by the CWI), field drilled holes, and shaft interiors (where accessible), shall be cleaned and two (2) coats cold galvanizing shall be applied by brush in accordance with ENG–STD–10149, "Tower Protective Coatings Guidelines". Photo documentation is required to be submitted to the MI Inspector.
16. If removal of existing modifications is required per the modification scope, the GC shall clean and cold galvanize any existing empty bolt holes, UNO. If additional unexpected, oversized, or slotted holes are found, the GC shall contact the EOR and Crown POC for guidance prior to proceeding with the modifications.
17. All Work involving base plate grout scope items or resulting in disturbance of base plate grout shall reference ENG–STD–10323, "Base Plate Grout", and shall follow any Base Plate Grout Removal Notes contained herein.
18. All tower grounding affected by the Work shall be repaired or replaced in accordance with OPS–STD–10090, "Tower Grounding", and OPS–BUL–10133, "Grounding Repair Recommendation".
19. If scope of modification requires removal or covering of tower ID tag, the tag must be replaced.
20. Any hardware removed from the existing tower shall be replaced with new hardware of equal size and quality, UNO. No existing fasteners shall be reused.
21. All joints using ASTM A325 or A490 bolts, U–bolts, V–bolts, and threaded rods shall be snug tightened, UNO.
22. A nut locking device shall be installed on all proposed and/or replaced snug tightened ASTM A325 or A490 bolts, U–bolts, V–bolts, and threaded rods.
23. All joints are bearing type connections UNO. If no bolt length is given in the Bill of Materials, the connection may include threads in the shear planes, and the GC is responsible for sizing the length of the bolt.
24. Blind bolts shall be installed per the installation specifications on the corresponding Approved Fastener sheets contained in CED–CAT–10300, "Monopole Standard Drawings and Approved Reinforcement Components".
25. If ASTM A325 or A490 bolts, and/or threaded rods are specified to be pre–tensioned, these shall be installed and tightened to the pretensioned condition according to the requirements of the RCSC Specification for Structural Joints Using ASTM High Strength Bolts.
26. All proposed and/or replaced bolts shall be of sufficient length such that the end of the bolt be at least flush with the face of the nut. It is not permitted for the bolt end to be below the face of the nut after tightening is completed.

B+T GRP
1717 S. BOULDER AVE.
SUITE 300
TULSA, OK 74119
PH: (918) 587-4630
www.btgrp.com

CROWN CASTLE

ISSUED FOR:

REV	DATE	DESCRIPTION
0	01/21/22	ISSUED FOR CONSTRUCTION

PROJECT NO:	137177.009.01
PROJECT ENG:	THARUN CHERIYAN
DRAWN BY:	RA
CHECKED BY:	VKP / PPK

B+T ENGINEERING, INC.
PEC.0001564
Expires 02/10/22

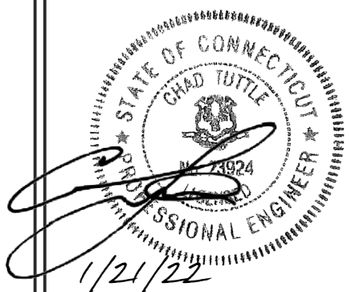

IT IS A VIOLATION OF LAW FOR ANY PERSON, UNLESS THEY ARE ACTING UNDER THE DIRECTION OF A LICENSED PROFESSIONAL ENGINEER, TO ALTER THIS DOCUMENT.

WEST JOHNSON AVE.
BURNT HOUSE
876313
1394 MERIDEN WATERBURY TPK
SOUTHINGTON, CT

EXISTING 160' MONOPOLE

SHEET TITLE

GENERAL NOTES

SHEET NUMBER: GN

REVISION: 0

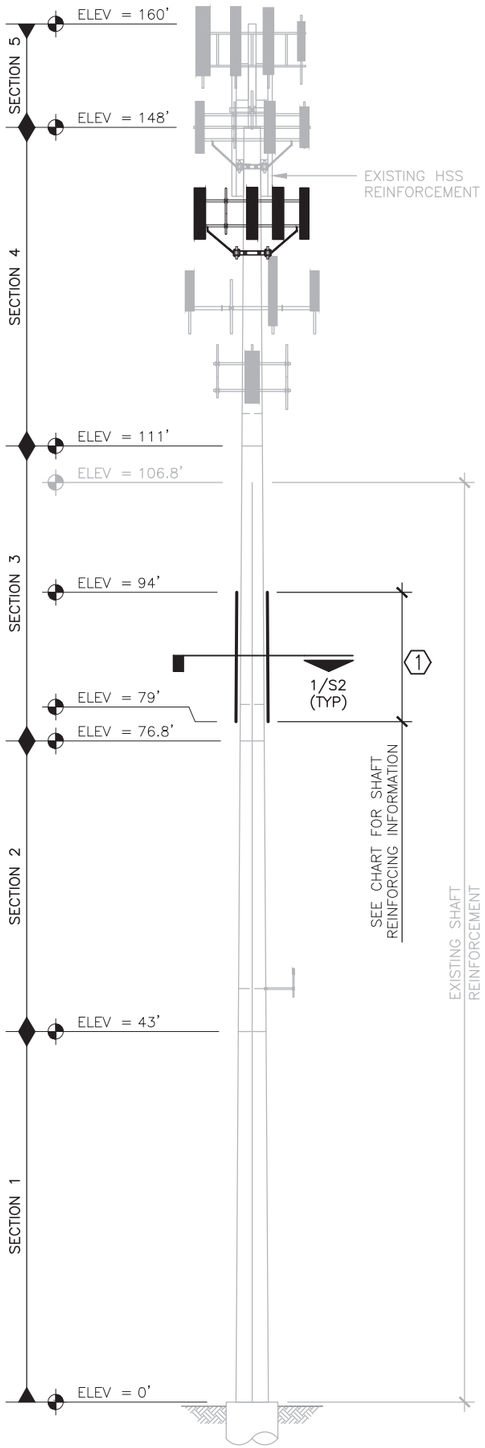

1 TOWER ELEVATION
SCALE: N.T.S.

CCI FLAT PLATE (65 KSI) REINFORCING SCHEDULE

BOTTOM ELEVATION	TOP ELEVATION	PART NUMBER	FLAT / DEGREES (°)	TERMINATION BOLTS (BOTTOM)	TERMINATION BOLTS (TOP)	MAX INTERMEDIATE BOLT SPACING	BOLT QUANTITY PER PLATE	STEEL WEIGHT PER PLATE (BLACK)	TOTAL BOLT QUANTITY	TOTAL STEEL WEIGHT (BLACK)
79'-0" *	94'-0"	CCI-SFP-04012515	4, 10 & 16	6	6	2'-3"	17	255.6	51	766.8
								TOTAL	51	766.8

* STARTING ELEVATION DEPENDENT ON EXISTING LAP SPLICE ELEVATION. FIELD VERIFY ELEVATION PRIOR TO INSTALLATION AND COORDINATE WITH E.O.R. ALL BOLTS SHALL BE PRE-APPROVED BLIND M20 BOLTS WITH HIGH STRENGTH SHEAR SLEEVES (ASTM A519 WITH MIN. FU=120 KSI). CONTACT SUPPLIER FOR MATERIAL (PLATE AND BOLTS) AND INSTALLATION PROCEDURES.

SITE360

THIS TOWER WAS SCANNED IN APRIL 2021 FOR SITE 360. CONTACT B+T GROUP OR CROWN CASTLE FOR ACCESS.

MANUFACTURER POLE SPECIFICATIONS

TOWER TAPER:	0.161993 IN/FT
BASE PLATE STEEL:	ASTM A572 GRADE 50 (50 KSI)
ANCHOR RODS:	2 1/4"ø #18J ASTM A615 GRADE 75

MANUFACTURER SHAFT SECTION DATA

SHAFT SECTION	SECTION SHAPE	SECTION LENGTH (FT)	PLATE THICKNESS (IN)	SECTION GRADE (KSI)	FLANGE PLATE GRADE (KSI)	LAP SPLICE (IN)	DIAMETER ACROSS FLATS OR OF ROUND SECTION (IN) @ TOP	@ BOTTOM
1	18-SIDED	48.00	0.4375	65	---	60	37.324	45.100
2	18-SIDED	38.00	0.3750	65	---	51	32.729	38.884
3	18-SIDED	38.00	0.3125	60	---	45	27.886	34.042
4	18-SIDED	37.00	0.2500	60	---	---	23.000	28.994
5	ROUND	12.00	0.3490	35	---	---	10.750	10.750

NOTE: DIMENSIONS SHOWN DO NOT INCLUDE GALVANIZING TOLERANCES.

MODIFICATION SCHEDULE

ITEM	ELEVATION (FT)	MODIFICATION	REFERENCE SHEET
1	79'-94'	INSTALL NEW FLAT PLATE REINFORCING ELEMENTS	S2

PRIOR TO FABRICATION AND INSTALLATION, CONTRACTOR SHALL FIELD VERIFY ALL LENGTHS AND QUANTITIES GIVEN. LENGTH AND QUANTITIES PROVIDED ARE FOR QUOTING PURPOSES ONLY, AND SHALL NOT BE USED FOR FABRICATION.

FOR PARTS NOT DETAILED WITHIN THE DRAWING AND STARTING WITH "CCI-", SEE THE FOLLOWING CATALOG FOR DETAILS: CED-CAT-10300, MONOPOLE STANDARD DRAWINGS AND APPROVED REINFORCEMENT COMPONENTS.

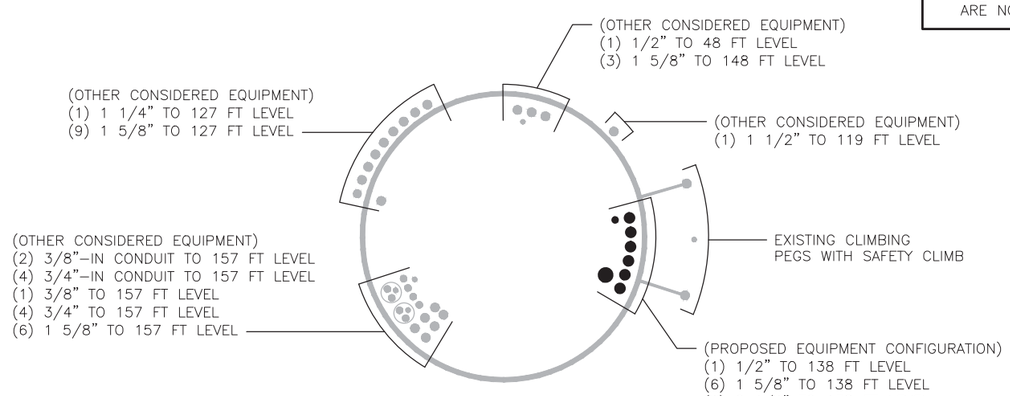

2 TX LINE DISTRIBUTION DIAGRAM
SCALE: N.T.S.

NOTES FOR CROWN (65 KSI) FLAT PLATES INCLUDING BOLTED BRIDGE STIFFENERS:

1. APPROVED FASTENERS MAY BE USED ON THIS PROJECT AS INDICATED IN THE FOLLOWING TABLE:

NEXGEN2	APPROVED
SPECIALTY FASTNERS	NA / REQUIRED AS NOTED

ORDERING INFORMATION AND INSTALLATION DETAILS FOR NEXGEN2 FASTENERS CAN BE FOUND IN CED-CAT-10300.

2. ALL FLAT PLATE REINFORCEMENT IS TO BE INSTALLED CENTERED ON ITS DESIGNATED FLAT OR AZIMUTH, UNO, WITH A TOLERANCE FROM CENTER OF THE FLAT OR AZIMUTH AS FOLLOWS:

ALLOWABLE FLAT PLATE CENTERING TOLERANCE	3/8"

GC SHALL REDLINE ALL DEVIATIONS FROM CENTER, INCLUDING THOSE WITHIN TOLERANCE.
3. GC SHALL REPLACE ANY STEP BOLTS AND STEP BOLT CLIPS THAT INTERFERE WITH THE INSTALLATION OF FLAT PLATE. REFERENCE CED-CAT-10300 FOR APPROVED OPTIONS. CCI-SB-0100 IS THE DEFAULT OPTION; OTHER OPTIONS MAY BE REQUIRED FOR FIT-UP.
4. FOR PLATES STARTING AT 6", THE BOTTOM OF THE FLAT PLATE SHALL BEGIN AT 6" +/- 1". FOR SINGLE PLATES OR MULTIPLE PLATES SPLICED TOGETHER, THE BOTTOM OF THE FLAT PLATE RUN SHALL BEGIN AT THE PROPOSED ELEVATION +/- 3". FOR MULTIPLE PLATES SPLICED TOGETHER, THE TOP OF THE FLAT PLATE IS TO BE PLACED SUCH THAT THERE IS NO MORE THAN 3" DIFFERENCE BETWEEN THE ACTUAL OVERALL LENGTH OF THE SPAN AND THE PROPOSED OVERALL LENGTH OF THE SPAN, FROM THE BOTTOM OF THE BOTTOM PLATE TO THE TOP OF THE TOP PLATE.
5. SHIMS FOR MONOPOLE REINFORCEMENT MEMBER SHALL BE REQUIRED WHERE GAPS BETWEEN THE POLE SHAFT AND REINFORCING MEMBER EXIST AT FASTENER LOCATIONS. FOR INTERMEDIATE CONNECTIONS, THE MINIMUM SHIM LENGTH AND WIDTH SHALL BE THE WIDTH OF THE REINFORCING MEMBER. FOR TERMINATION CONNECTIONS, A CONTINUOUS SHIM PLATE (PREFERRED) OR EQUIVALENT INDIVIDUAL SHIM PLATES THE WIDTH OF THE REINFORCING MEMBER MAY BE USED. SHIM THICKNESSES SHALL BE NO LESS THAN 1/16". STACKING OF SHIMS IS PERMITTED. FINGER SHIMS AND HORSESHOE SHIMS ARE PERMITTED. SINGLE AND STACKED SHIMS IN BOLT TERMINATION REGIONS SHALL BE NO GREATER THAN A TOTAL OF ¼" WITHOUT EOR APPROVAL. SINGLE AND STACKED SHIMS AT INTERMEDIATE CONNECTIONS SHALL BE NO GREATER THAN A TOTAL OF 5/8" WITHOUT EOR APPROVAL.
6. SHIM MATERIAL SHALL BE STEEL GRADE A36 OR GREATER IF WELDED, UNO, AND SHALL REQUIRE MTR; IF SHIMS ARE NOT WELDED, THERE IS NO MINIMUM REQUIRED STEEL GRADE.
7. IF UNEXPECTED HOLES ARE FOUND IN A LOCATION WHERE FLAT PLATE IS PROPOSED TO BE INSTALLED, THE GC SHALL NOT PLACE NEW BOLT HOLES WITHIN A CENTER-TO-CENTER DISTANCE OF 3 TIMES THE DIAMETER OF THE LARGER OF THE TWO HOLES, WITHOUT EOR APPROVAL. EXISTING HOLES MAY INCLUDE BUT ARE NOT LIMITED TO EMPTY BOLT HOLES AND JACKING NUTS WITH CENTER HOLES.

EXISTING TOWER HAS BEEN PREVIOUSLY MODIFIED

REFERENCE DRAWINGS BY:	DATE
GPD GROUP	08/01/12
AERO SOLUTIONS LLC	07/23/13
PAUL J. FORD AND COMPANY	09/13/13
FDH ENGINEERING INNOVATION	06/05/14
PAUL J. FORD AND COMPANY	08/22/14

BOLT COUNT BY LENGTH

LENGTH	QUANTITY
SHORT	51
MEDIUM	0
LONG	0
TOTAL	51

B+T GRP
1717 S. BOULDER AVE.
SUITE 300
TULSA, OK 74119
PH: (918) 587-4630
www.btgrp.com

CROWN CASTLE

ISSUED FOR:

REV	DATE	DESCRIPTION
0	01/21/22	ISSUED FOR CONSTRUCTION

PROJECT NO:	137177.009.01
PROJECT ENG:	THARUN CHERIYAN
DRAWN BY:	RA
CHECKED BY:	VKP / PPK

B+T ENGINEERING, INC.
PEC.0001564
Expires 02/10/22

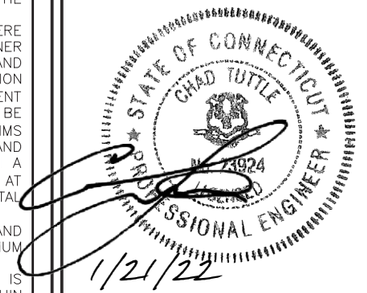

IT IS A VIOLATION OF LAW FOR ANY PERSON, UNLESS THEY ARE ACTING UNDER THE DIRECTION OF A LICENSED PROFESSIONAL ENGINEER, TO ALTER THIS DOCUMENT.

WEST JOHNSON AVE.
BURNT HOUSE
876313
1394 MERIDEN WATERBURY TPK
SOUTHINGTON, CT

EXISTING 160' MONOPOLE

SHEET TITLE
TOWER ELEVATION, SCHEDULES AND TX LINE DISTRIBUTION DIAGRAM

SHEET NUMBER: S1

REVISION: 0

\\tower-two\BT Telecom Services\Projects\Crown Castle\137000\137177_876313_West Johnson Ave. Burnt House\TOW MOD\137177.009.01_West Johnson Ave.Burnt House-876313-Tow Mod.dwg - Sheet:S1 - User: Tcheriyan - January 21, 2022 - 3:34 PM

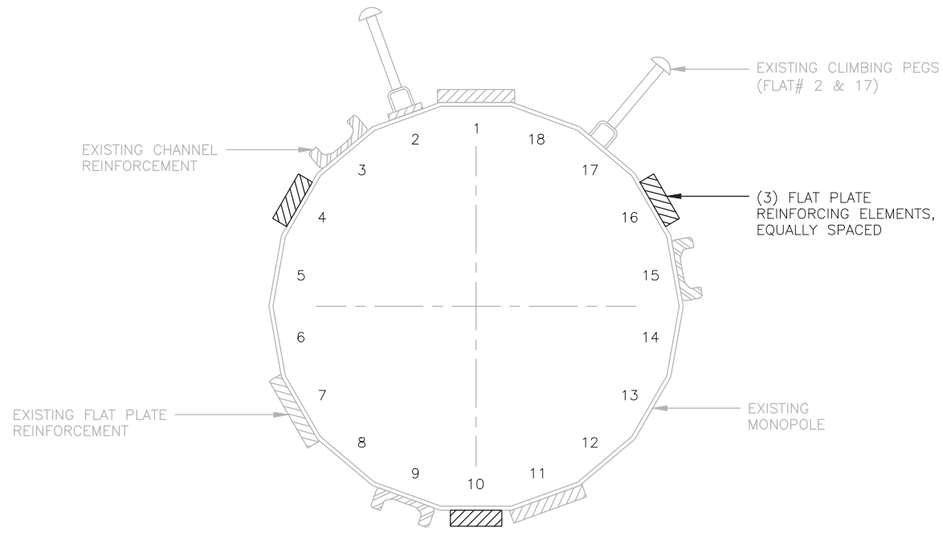

1 TOWER SECTION (79'-94')
SCALE: N.T.S.

B+T GRP
1717 S. BOULDER AVE.
SUITE 300
TULSA, OK 74119
PH: (918) 587-4630
www.btgrp.com

CROWN CASTLE

ISSUED FOR:

REV	DATE	DESCRIPTION
0	01/21/22	ISSUED FOR CONSTRUCTION

PROJECT NO:	137177.009.01
PROJECT ENG:	THARUN CHERIYAN
DRAWN BY:	RA
CHECKED BY:	VKP / PPK

B+T ENGINEERING, INC.
PEC.0001564
Expires 02/10/22

STATE OF CONNECTICUT
CHAD TUTTLE
No. 23924
REGISTERED
PROFESSIONAL ENGINEER
1/21/22

IT IS A VIOLATION OF LAW FOR ANY PERSON, UNLESS THEY ARE ACTING UNDER THE DIRECTION OF A LICENSED PROFESSIONAL ENGINEER, TO ALTER THIS DOCUMENT.

WEST JOHNSON AVE.
BURNT HOUSE
876313
1394 MERIDEN WATERBURY TPK
SOUTHINGTON, CT

EXISTING 160' MONOPOLE

SHEET TITLE
TOWER SECTION
79'-94'

SHEET NUMBER: S2

REVISION: 0

\\tower-two\BT Telecom Services\Projects\Crown Castle\137000\137177_876313_West Johnson Ave. Burnt House\TOW MOD\137177.009.01_West Johnson Ave.Burnt House-876313-Tow Mod.dwg - Sheet:S2 - User: Tcheriyan - January 21, 2022 - 3:34 PM

Exhibit D

GPD Engineering And Architecture
Professional Corporation
520 South Main Street, Suite 2531
Akron, OH 44311

Maser Consulting Contact:
Peter.albano@colliersengineering.com
(856) 371-9457

Antenna Mount Analysis Report and PMI Requirements

Mount Analysis

SMART Tool Project #: 10039594
GPD Project #: 2021740.467473.01
Maser Consulting Project #: 21777123

June 29, 2021

Site Information	*Site ID:*	*467473-VZW / MILLDALE CT*
	Site Name:	*MILLDALE CT*
	Carrier Name:	*Verizon Wireless*
	Address:	*1394 MERIDEN WATERBURY RD SOUTHINGTON, Connecticut 6479, Hartford County*
	Latitude:	*41.564275°*
	Longitude:	*-72.891861°*
Structure Information	*Tower Type:*	*161-Ft Monopole*
	Mount Type:	*12.50-Ft Platform Mount*

FUZE ID # 16242092

Analysis Results

Platform Mount: **36.7% Pass**

******Contractor PMI Requirements***:
Included at the end of this MA report
Available & Submitted via portal at https://pmi.vzwsmart.com
Contractor - Please Review Specific Site PMI Requirements Upon Award
Requirements also Noted on Mount Modification Drawings
Requirements may also be Noted on A & E drawings

Report Prepared By: Ujwala Karumanchi

Respectfully Submitted:

Christopher J. Scheks, P.E.
Connecticut #: 30026

Executive Summary:

The objective of this report is to determine the capacity of the antenna support mount at the subject facility for the final wireless telecommunications configuration, per the applicable codes and standards. Any modification listed under Sources of Information was assumed completed and was included in this analysis.

This analysis is inclusive of the mount structure only and does not address the structural capacity of the supporting structure. This mounting frame was not analyzed as an anchor attachment point for fall protection. All climbing activities are required to have a fall protection plan completed by a competent person.

Sources of Information:

Document Type	Remarks
Radio Frequency Data Sheet (RFDS)	Verizon RFDS Site ID: 324376, dated May 28, 2011
Antenna Mount Mapping Form	Hudson Design Group, LLC Site ID: 467473, dated 03/24/2021

Analysis Criteria:

Codes and Standards:	ANSI/TIA-222-H	
Wind Parameters:	Basic Wind Speed (Ultimate 3-sec. Gust), V_{ULT}:	118 mph
	Ice Wind Speed (3-sec. Gust):	50 mph
	Design Ice Thickness:	1.00 in
	Risk Category:	II
	Exposure Category:	B
	Topographic Category:	1
	Topographic Feature Considered:	N/A
	Topographic Method:	N/A
	Ground Elevation Factor, K_e:	0.995
Seismic Parameters:	S_S:	0.197
	S_1:	0.055
Maintenance Parameters:	Wind Speed (3-sec. Gust):	30 mph
	Maintenance Live Load, Lv:	250 lbs.
	Maintenance Live Load, Lm:	500 lbs.
Analysis Software:	RISA-3D (V17.0.2)	

Final Loading Configuration:

The following equipment has been considered for the analysis of the mount:

Mount Elevation (ft)	Equipment Elevation (ft)	Quantity	Manufacturer	Model	Status
136.25	138.00	6	Andrew	NNHH-65B-R4	Retained
		3	Samsung	B2/B66A RRH-BR049	
		3	Samsung	B5/B13 RRH-BR04C	
		1	Raycap	RHSDC-6627-PF-48	
		3	Samsung	XXDWMM-12.5-65-8T-CBRS	Added
		3	Samsung	MT6407-77A	

Any proposed antennas not currently installed should be mounted such that the centerline of the antennas does not exceed 6 inches vertically from the center of the antenna mount.

The recent mount mapping reported existing OVP units. It is acceptable to install up to any three (3) of the OVP model numbers listed below as required at any location other than the mount face without affecting the structural capacity of the mount. If OVP units are installed on the mount face, a mount re-analysis may be required unless replacing an existing OVP.

Model Number	Ports	AKA
DB-B1-6C-12AB-0Z	6	OVP-6
RVZDC-6627-PF-48	12	OVP-12

Standard Conditions:

1. All engineering services are performed on the basis that the information provided to GPD and used in this analysis is current and correct. The existing equipment loading has been applied at locations determined from the supplied documentation and field observations. Any deviation from the loading locations specified in this report shall be communicated to GPD to verify deviation will not adversely impact the analysis.

2. Mounts are assumed to have been properly fabricated, installed and maintained in good condition, twist free and plumb in accordance with its original design and manufacturer's specifications.

   Obvious safety and structural issues/deficiencies noticed at the time of the mount mapping and reported in the Mount Mapping Report are assumed to be corrected and documented as part of the PMI process and are not considered in the mount analysis.

   The mount analysis and the mount mapping are not a condition assessment of the mount. Proper maintenance and condition assessments are still required post analysis.

3. For mount analyses completed from other data sources (including new replacement mounts) and not specifically mapped by GPD, the mounts are assumed to have been properly fabricated, installed and maintained in good condition, twist free and plumb in accordance with its original design and manufacturer's specifications.

4. All member connections are assumed to have been designed to meet or exceed the load carrying capacity of the connected member unless otherwise specified in this report.

5. The mount was checked up to, and including, the bolts that fasten it to the mount collar/attachment and threaded rod connections in collar members if applicable. Local deformation and interaction between the mount collar/attachment and the supporting tower structure are outside the scope of this analysis.

6. All services are performed, results obtained, and recommendations made in accordance with generally accepted engineering principles and practices. GPD is not responsible for the conclusion, opinions, and recommendations made by others based on the information supplied.

7. Structural Steel Grades have been assumed as follows, if applicable, unless otherwise noted in this analysis:
   - Channel, Solid Round, Angle, Plate — ASTM A36 (Gr. 36)
   - HSS (Rectangular) — ASTM 500 (Gr. B-46)
   - Pipe — ASTM A53 (Gr. B-35)
   - Threaded Rod — F1554 (Gr. 36)
   - Bolts — ASTM A325

Discrepancies between in-field conditions and the assumptions listed above may render this analysis invalid unless explicitly approved by GPD.

Analysis Results:

Component	Utilization %	Pass/Fail
Mount Pipe	36.7 %	Pass
Cross Arm	8.5 %	Pass
Standoff	13.6 %	Pass
Grating Angle	16.2 %	Pass
Standoff Plate	22.1 %	Pass
Cross Arm Plate	24.3 %	Pass
Platform Kickers	8.5 %	Pass
Toe Rail	16.8 %	Pass
Support Rail Corner	31.5 %	Pass
Proposed Mount Pipe	34.8 %	Pass
Mount Connection	32.9 %	Pass

Structure Rating – *(Controlling Utilization of all Components)*	**36.7%**

Recommendation:

The existing mount is **SUFFICIENT** for the final loading configuration and do not require modifications.

ANSI/ASSP rigging plan review services compliant with the requirements of ANSI/TIA 322 are available for a Construction Class IV site or other, if required. Separate review fees will apply.

Attachments:

1. Mount Photos
2. Mount Mapping Report (for reference only)
3. Analysis Calculations
4. **Contractor Required Post Installation Inspection (PMI) Report Deliverables**
5. Antenna Placement Diagrams
6. TIA Adoption Wind Speed Letter

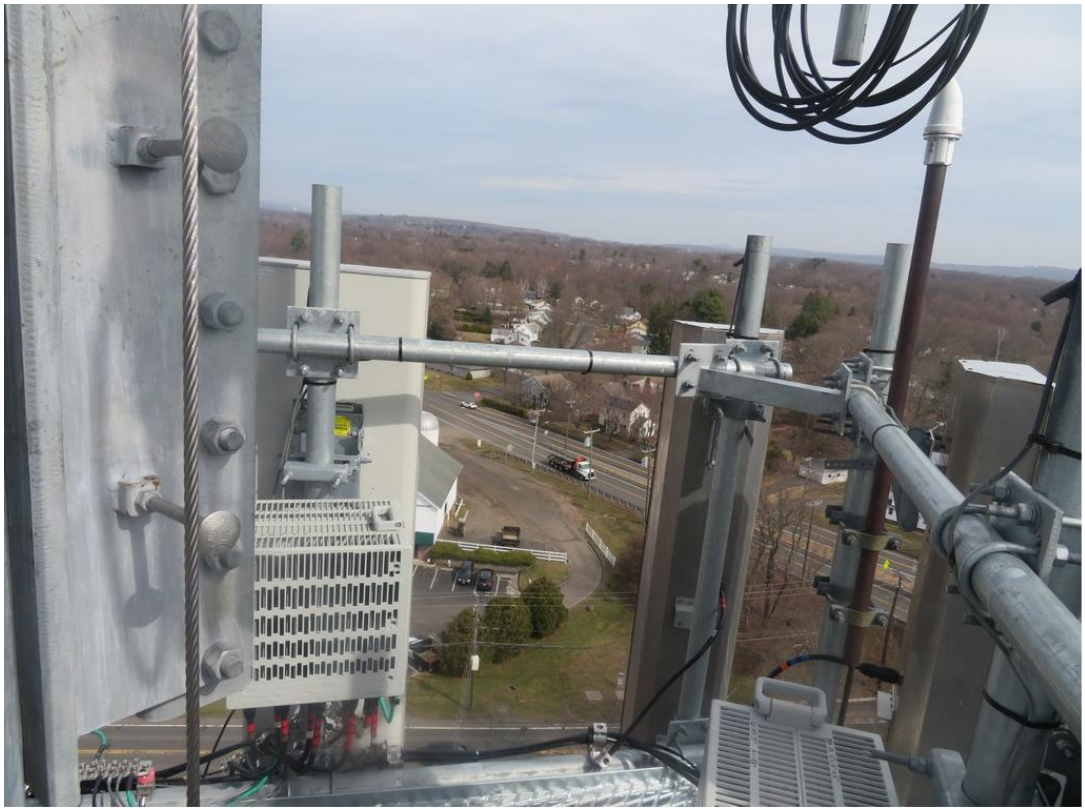

V3.0 Updated on 8-31-2020

Antenna Mount Mapping Form (PATENT PENDING)

Tower Owner:	CROWN CASTLE	**Mapping Date:**	3/24/2021
Site Name:	MILLDALE CT	**Tower Type:**	Monopole
Site Number or ID:	467473	**Tower Height (Ft.):**	
Mapping Contractor:	HUDSON DESIGN GROUP, LLC.	**Mount Elevation (Ft.):**	137

FCC #

This antenna mapping form is the property of TES and under **PATENT PENDING**. The formation contained herein is considered confidential in nature and is to be used only for the specific customer it was intended for. Reproduction, transmission, publication, modification or disclosure by any method is prohibited except by express written permission of TES. All means and methods are the responsibility of the contractor and the work shall be compliant with ANSI/ASSE A 10.48, OSHA, FCC, FAA and other safety requirements that may apply. TES is not warrantying the usability of the safety climb as it must be assessed prior to each use in compliance with OSHA requirements.

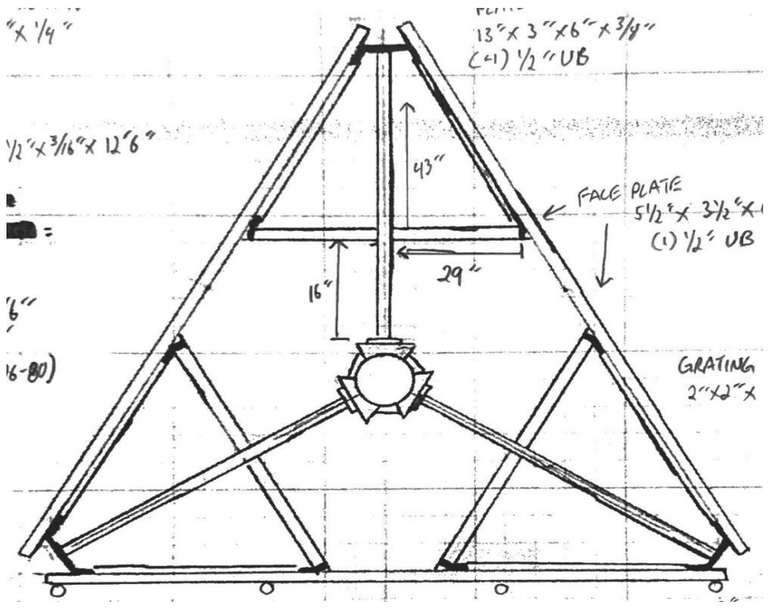

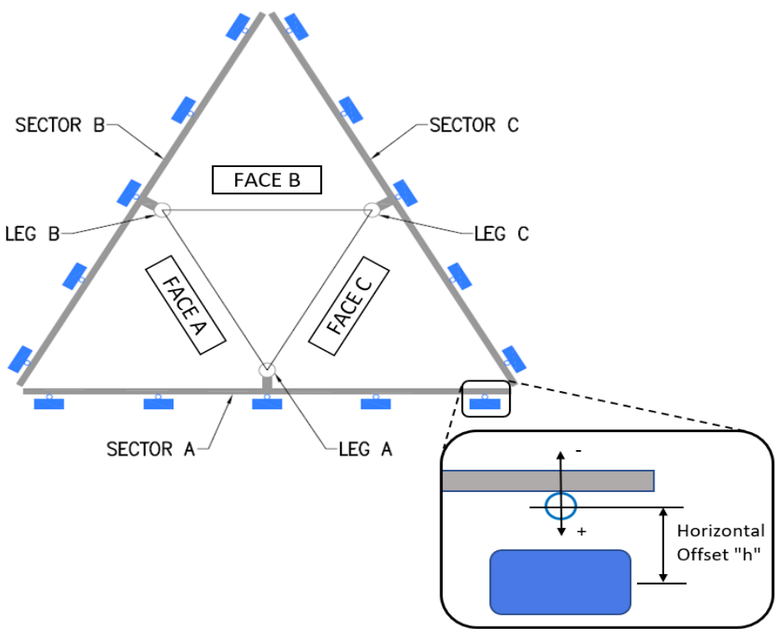

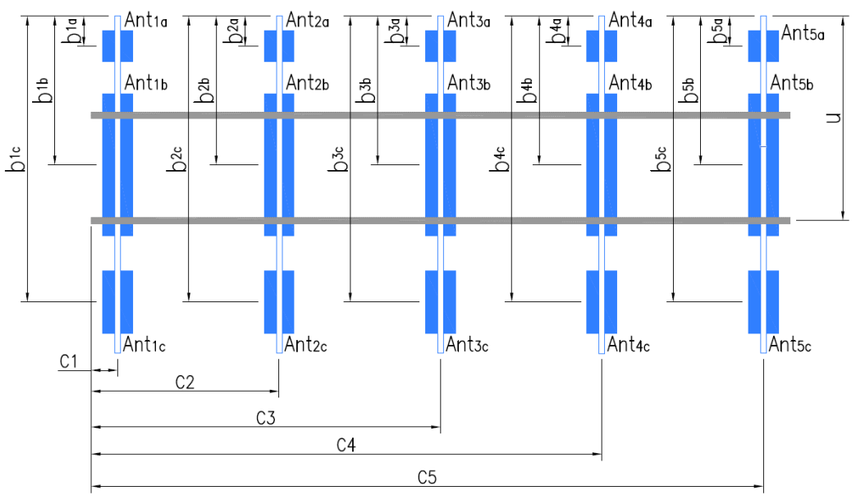

Antenna Layout (Looking Out From Tower)

Mount Pipe Configuration and Geometries [Unit = Inches]

Sector / Position	Mount Pipe Size & Length	Vertical Offset Dimension "u"	Horizontal Offset "C1, C2, C3, etc."	Sector / Position	Mount Pipe Size & Length	Vertical Offset Dimension "u"	Horizontal Offset "C1, C2, C3, etc."
A1	2-1/2"Ø x 3/16" X 96" LONG	65.00	3.00	C1	2-1/2"Ø x 3/16" X 96" LONG	65.00	3.00
A2	2-1/2"Ø x 3/16" X 96" LONG	65.00	51.00	C2	2-1/2"Ø x 3/16" X 96" LONG	65.00	51.00
A3	2-1/2"Ø x 3/16" X 96" LONG	65.00	99.00	C3	2-1/2"Ø x 3/16" X 96" LONG	65.00	99.00
A4	2-1/2"Ø x 3/16" X 96" LONG	65.00	147.00	C4	2-1/2"Ø x 3/16" X 96" LONG	65.00	147.00
A5				C5			
A6				C6			
B1	2-1/2"Ø x 3/16" X 96" LONG	65.00	3.00	D1			
B2	2-1/2"Ø x 3/16" X 96" LONG	65.00	51.00	D2			
B3	2-1/2"Ø x 3/16" X 96" LONG	65.00	99.00	D3			
B4	2-1/2"Ø x 3/16" X 96" LONG	65.00	147.00	D4			
B5				D5			
B6				D6			

Distance between bottom rail and mount CL elevation (dim d). Unit is inches. See 'Mount Elev Ref' tab for details. :	
Distance from top of bottom support rail to lowest tip of ant./eqpt. of Carrier above. (N/A if > 10 ft.) :	5.5
Distance from top of bottom support rail to highest tip of ant./eqpt. of Carrier below. (N/A if > 10 ft.) :	4.41

Please enter additional infomation or comments below.

MONOPOLE WALL THICKNESS: 0.210"

Tower Face Width at Mount Elev. (ft.):		Tower Leg Size or Pole Shaft Diameter at Mount Elev. (in.):	25

Ants. Items	Enter antenna model. If not labeled, enter "Unknown". Antenna Models if Known	Width (in.)	Depth (in.)	Height (in.)	Coax Size and Qty	Antenna Center-line (Ft.)	Mounting Locations [Units are inches and degrees] Vertical Distances"b_{1a}, b_{2a}, b_{3a}, b_{1b}...." (Inches)	Horiz. Offset "h" (Use "-" if Ant. is behind)	Antenna Azimuth (Degrees)	Photos of antennas Photo Numbers
Sector A										
Ant_{1a}										
Ant_{1b}	LPA-80063-6CF	15.00	14.00	71.00		138.5	47.00	14.00	15.00	113,89
Ant_{1c}										
Ant_{2a}	RFV01U-D2A	16.00	10.00	16.00		139.167	39.00	-8.50		113,94
Ant_{2b}	NNHH-65B-R4-V1	20.00	8.00	72.00		138.75	44.00	10.00	15.00	113,91
Ant_{2c}										
Ant_{3a}	RFV01U-D1A	16.00	12.00	16.00		139.167	39.00	-10.00		114,96
Ant_{3b}	NNHH-65B-R4-V1	20.00	8.00	72.00		138.75	44.00	10.00	15.00	114,91
Ant_{3c}										
Ant_{4a}										
Ant_{4b}	LPA-80063-6CF	15.00	14.00	71.00		138.5	47.00	14.00	15.00	114,89
Ant_{4c}										
Ant_{5a}										
Ant_{5b}										
Ant_{5c}										
Ant on Standoff										
Ant on Standoff										
Ant on Tower										
Ant on Tower										

Mount Azimuth (Degree) for Each Sector				Tower Leg Azimuth (Degree) for Each Sector	
Sector A:	10.00	Deg	Leg A:		Deg
Sector B:	130.00	Deg	Leg B:		Deg
Sector C:	250.00	Deg	Leg C:		Deg
Sector D:		Deg	Leg D:		Deg

Climbing Facility Information		
Location:	130.00 Deg	N/A
Climbing Facility	Corrosion Type:	Good condition.
	Access:	Climbing path was unobstructed.
	Condition:	Good condition.

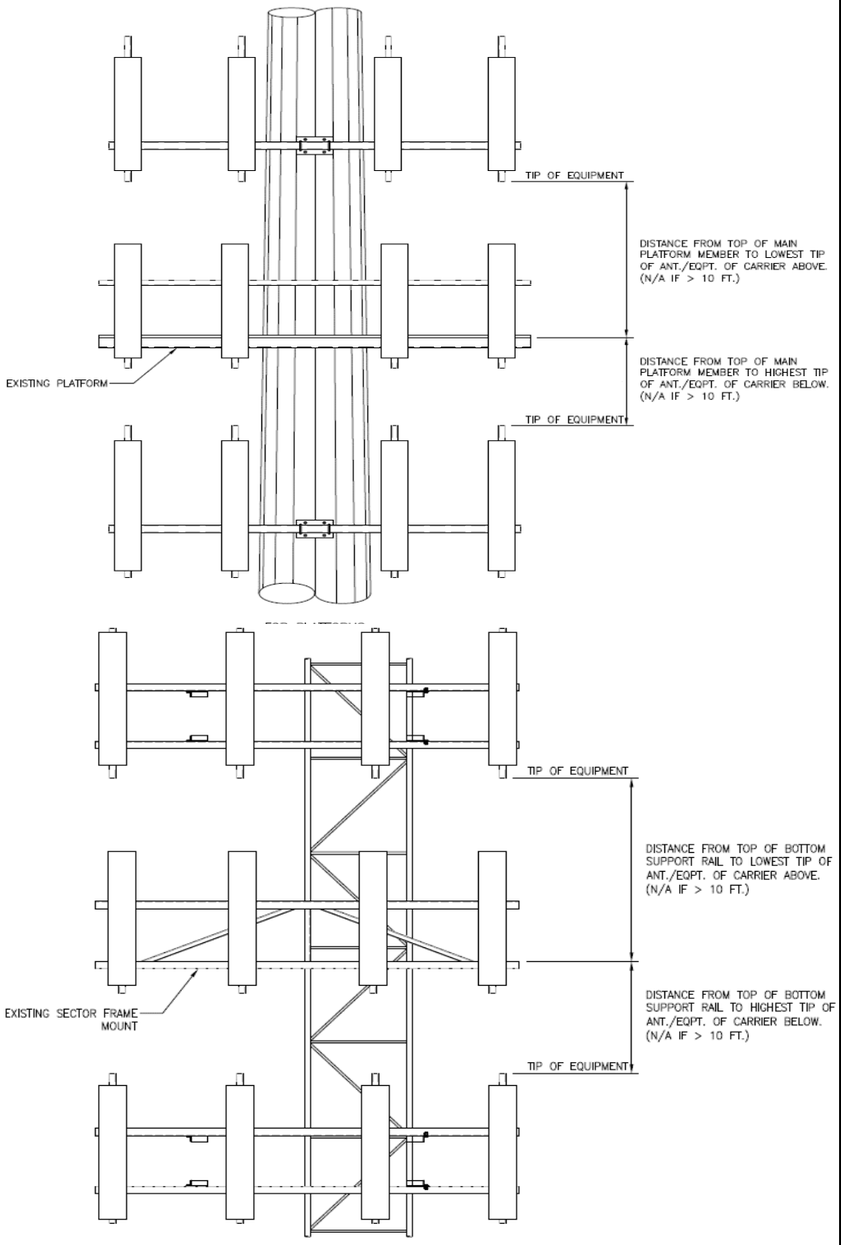

Sector B										
Ant_{1a}	GPS					141.25	14.00			97-100
Ant_{1b}	LPA-80063-6CF	15.00	14.00	71.00		138.5	47.00	14.00	135.00	115,89
Ant_{1c}										
Ant_{2a}	RFV01U-D2A	16.00	10.00	16.00		139.167	39.00	-8.50		115,94
Ant_{2b}	NNHH-65B-R4-V1	20.00	8.00	72.00		138.75	44.00	10.00	135.00	115,91
Ant_{2c}										
Ant_{3a}	RFV01U-D1A	16.00	12.00	16.00		139.167	39.00	-10.00		96
Ant_{3b}	NNHH-65B-R4-V1	20.00	8.00	72.00		138.75	44.00	10.00	135.00	7,91
Ant_{3c}										
Ant_{4a}										
Ant_{4b}	LPA-80063-6CF	15.00	14.00	71.00		138.5	47.00	14.00	135.00	116,89
Ant_{4c}										
Ant_{5a}										
Ant_{5b}										
Ant_{5c}										
Ant on Standoff	RHSDC-6627-PF-48	15.00	10.00	28.00						106-111
Ant on Standoff										
Ant on Tower										
Ant on Tower										
Sector C										
Ant_{1a}										
Ant_{1b}	LPA-80063-6CF	15.00	14.00	71.00		138.5	47.00	14.00	255.00	8,89
Ant_{1c}										
Ant_{2a}	RFV01U-D2A	16.00	10.00	16.00		139.167	39.00	-8.50		94
Ant_{2b}	NNHH-65B-R4-V1	20.00	8.00	72.00		138.75	44.00	10.00	205.00	9,91
Ant_{2c}										
Ant_{3a}	RFV01U-D1A	16.00	12.00	16.00		139.167	39.00	-10.00		112,96
Ant_{3b}	NNHH-65B-R4-V1	20.00	8.00	72.00		138.75	44.00	10.00	205.00	112,91
Ant_{3c}										
Ant_{4a}										
Ant_{4b}	LPA-80063-6CF	15.00	14.00	71.00		138.5	47.00	14.00	255.00	113,89
Ant_{4c}										
Ant_{5a}										
Ant_{5b}										
Ant_{5c}										
Ant on Standoff										
Ant on Standoff										
Ant on Tower										
Ant on Tower										
Sector D										
Ant_{1a}										
Ant_{1b}										
Ant_{1c}										
Ant_{2a}										
Ant_{2b}										
Ant_{2c}										
Ant_{3a}										
Ant_{3b}										
Ant_{3c}										
Ant_{4a}										
Ant_{4b}										
Ant_{4c}										
Ant_{5a}										
Ant_{5b}										
Ant_{5c}										
Ant on Standoff										
Ant on Standoff										
Ant on Tower										
Ant on Tower										

Observed Safety and Structural Issues During the Mount Mapping		
Issue #	Description of Issue	Photo #

1		
2	(6) 1-5/8"Ø COAX, (1) 1-1/2" HYBRID, (1) 1/2"Ø COAX	168-173
3		
4		
5		
6		
7		
8		

Mapping Notes
1. Please report any visible structural or safety issues observed on the antenna mounts (Damaged members, loose connections, tilting mounts, safety climb issues, etc.)
2. If the thickness of the existing pipes or tubing can't be obtained from a general tool (such as Caliper), please use an ultrasonic measurement tool (thickness gauge) to measure the thickness.
3. Please create all required detail sketches of the mounts and insert them into the "Sketches" tab.
4. Please measure and enter the bolt sizes and types under the Members Box in the spreadsheet of the mount type.
5. Take and label the photos of the tower, mounts, connections, antennas and all measurements. Minimum 50 photos are required.
6. Please measure and report the size and length of all existing antenna mounting pipes.
7. Please measure and report the antenna information for all sectors.
8. Don't delete or rearrange any sheet or contents of any sheet from this mapping form.

Standard Conditions
1. Obvious safety and structural issues/deficiencies noticed at the time of the mount mapping are to be reported in this mapping. However, this mount mapping is not a condition assessment of the mount.

V3.0 Updated on 8-31-2020

Antenna Mount Mapping Form (PATENT PENDING)

FCC #

Tower Owner:	CROWN CASTLE	**Mapping Date:**	3/24/2021
Site Name:	MILLDALE CT	**Tower Type:**	Monopole
Site Number or ID:	467473	**Tower Height (Ft.):**	
Mapping Contractor:	HUDSON DESIGN GROUP, LLC.	**Mount Elevation (Ft.):**	137

This antenna mapping form is the property of TES and under **PATENT PENDING**. The formation contained herein is considered confidential in nature and is to be used only for the specific customer it was intended for. Reproduction, transmission, publication, modification or disclosure by any method is prohibited except by express written permission of TES. All means and methods are the responsibility of the contractor and the work shall be compliant with ANSI/ASSE A 10.48, OSHA, FCC, FAA and other safety requirements that may apply. TES is not warrantying the usability of the safety climb as it must be assessed prior to each use in compliance with OSHA requirements.

Please Insert Sketches of the Antenna Mount

MILLDALE CT

TOT =
MOUNT CL = FACE PIPE = 137'
TOWER D = 25"
↳ WALL = .210"
COLLAR = 9½" x 5/8" PICS (22-35)
- T ROD = (3) 5/8"
- PLATE = 8"x8"x 7/8" PICS (36-40)
HSS = 4"x4"x ¼"
↳ WALL =
T-F = 36"
T-A = 68"
FACE PIPE = 3½"x 3/16"x 12'6"
↳ WALL =
[redacted]
[redacted] =

HANDRAIL
2"x 3/16" x 12'6"
V-SEP = 51"
PICS (72-73, 76-80)

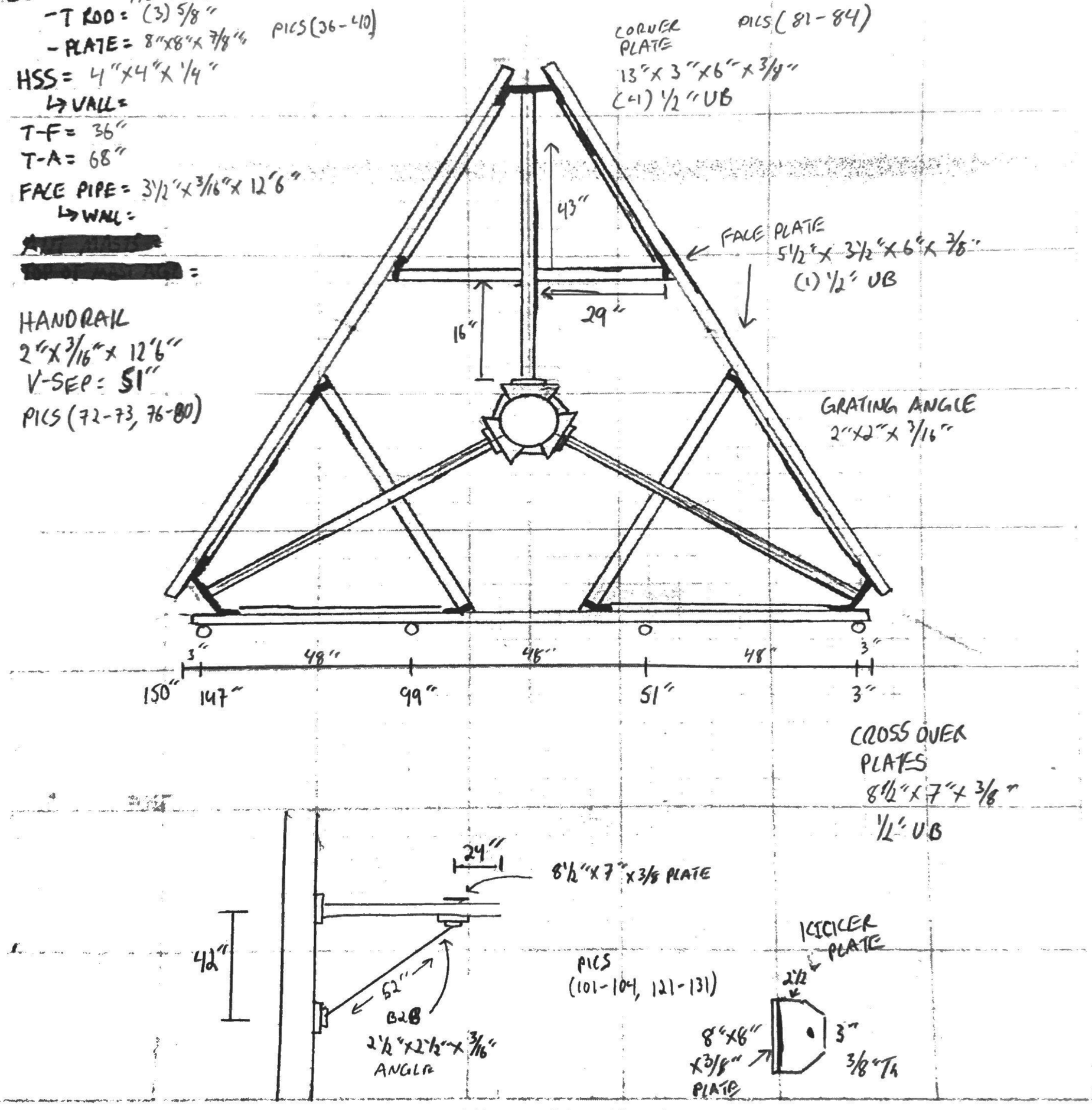

Please Insert Sketches of the Antenna Mount, cont'd

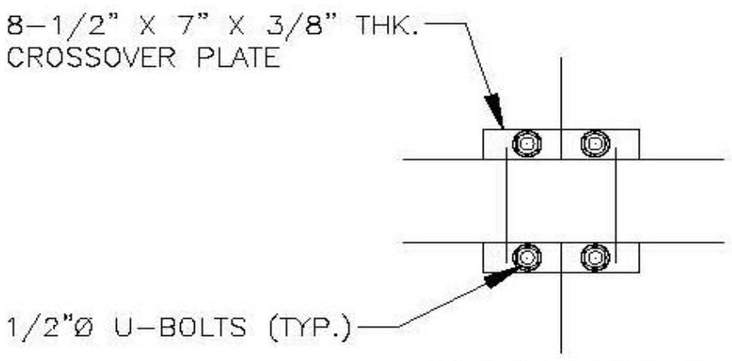

CROSSOVER PLATE DETAIL

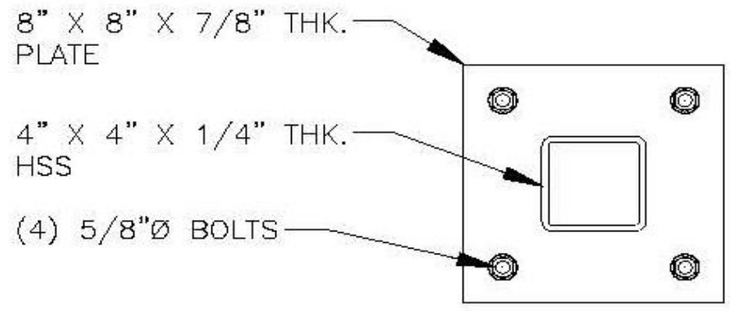

DETAIL M

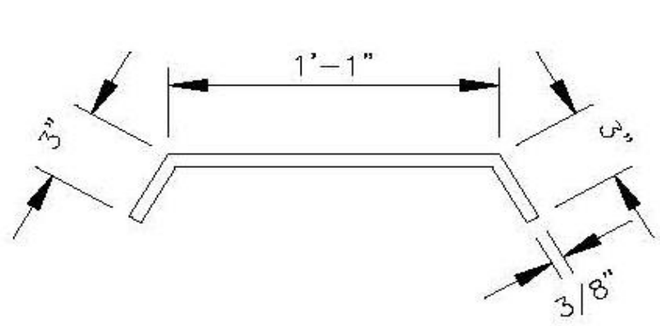

DETAIL J

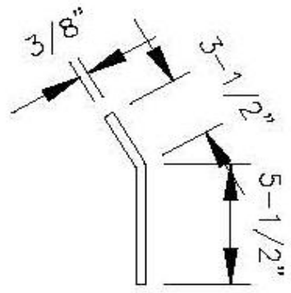

DETAIL K

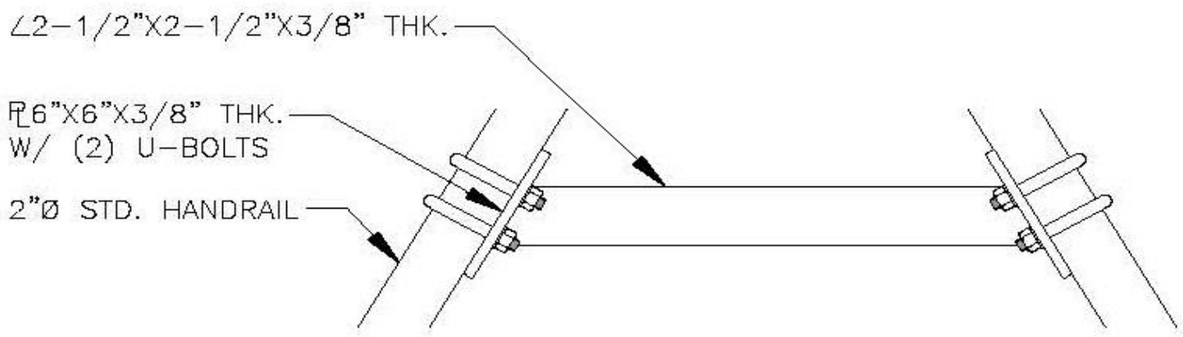

HANDRAIL APEX CONNECTION DETAIL

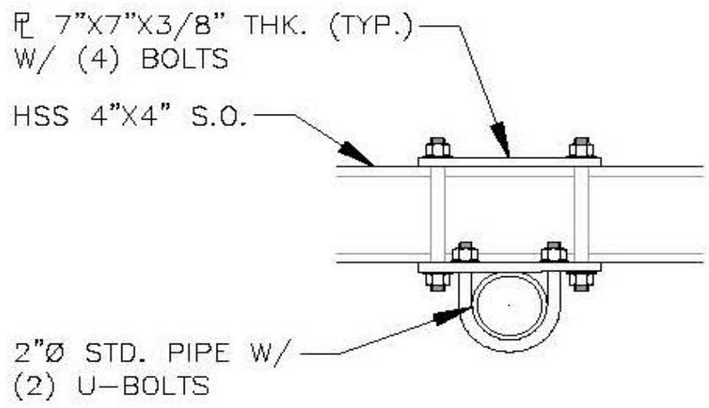

OVP MOUNT DETAIL

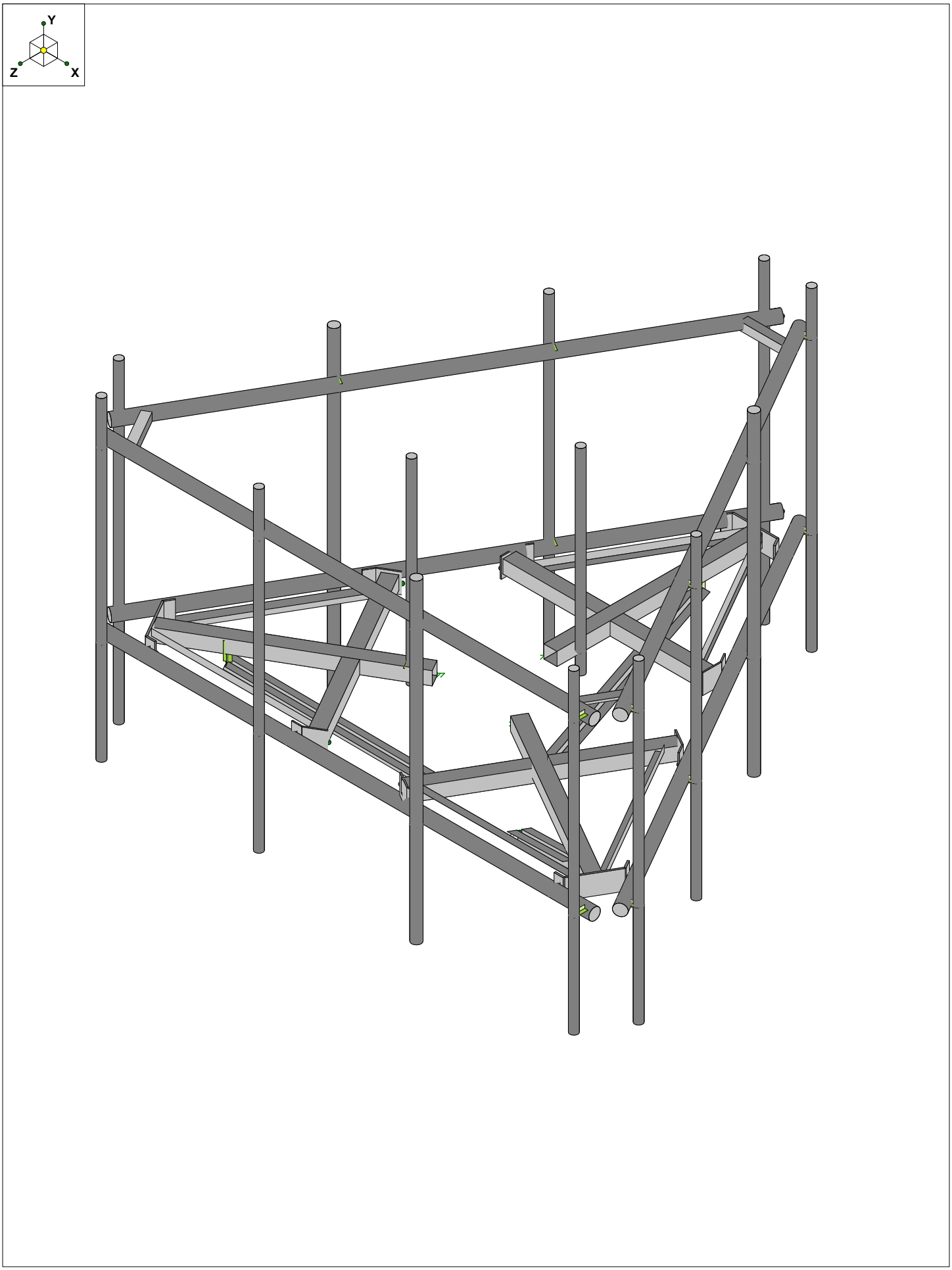
Y
Z
X

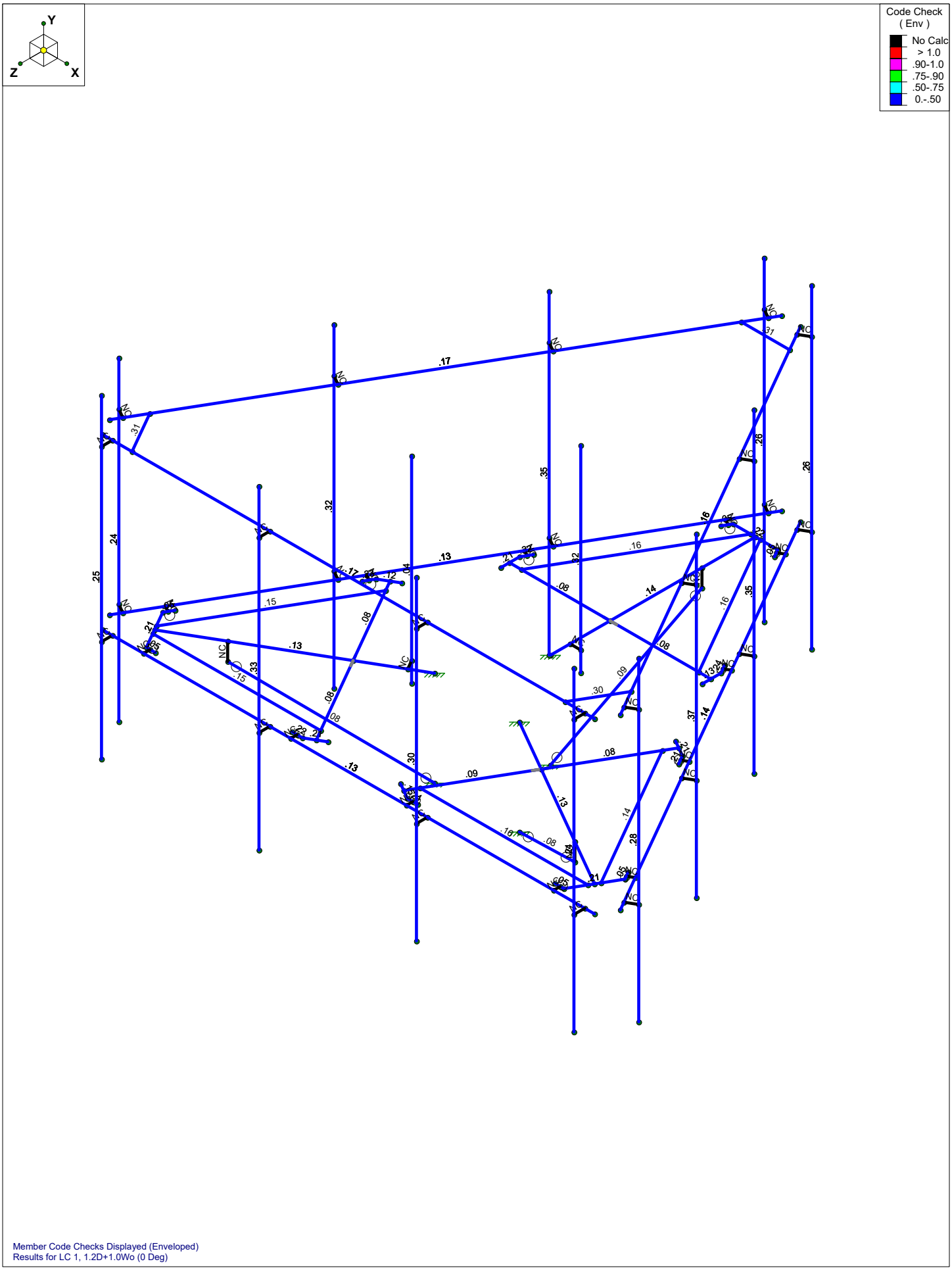

Member Code Checks Displayed (Enveloped)
Results for LC 1, 1.2D+1.0Wo (0 Deg)

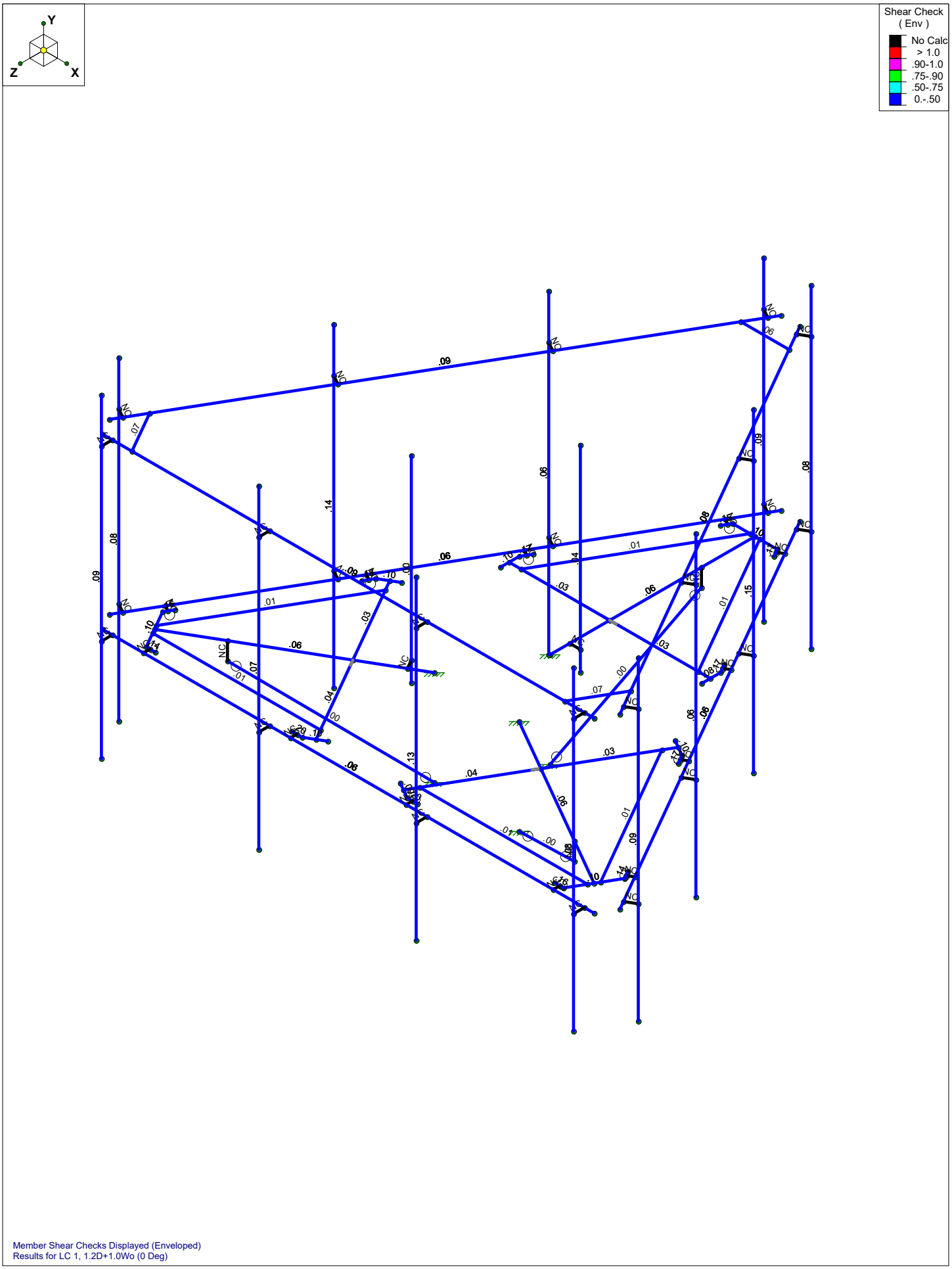

Member Shear Checks Displayed (Enveloped)
Results for LC 1, 1.2D+1.0Wo (0 Deg)

Basic Load Cases

	BLC Description	Category	X Gravi..	Y Gravi..	Z Gravity	Joint	Point	Distrib...	Area(M...	Surface...
1	Antenna D	None					114			
2	Antenna Di	None					114			
3	Antenna Wo (0 Deg)	None					114			
4	Antenna Wo (30 Deg)	None					114			
5	Antenna Wo (60 Deg)	None					114			
6	Antenna Wo (90 Deg)	None					114			
7	Antenna Wo (120 Deg)	None					114			
8	Antenna Wo (150 Deg)	None					114			
9	Antenna Wo (180 Deg)	None					114			
10	Antenna Wo (210 Deg)	None					114			
11	Antenna Wo (240 Deg)	None					114			
12	Antenna Wo (270 Deg)	None					114			
13	Antenna Wo (300 Deg)	None					114			
14	Antenna Wo (330 Deg)	None					114			
15	Antenna Wi (0 Deg)	None					114			
16	Antenna Wi (30 Deg)	None					114			
17	Antenna Wi (60 Deg)	None					114			
18	Antenna Wi (90 Deg)	None					114			
19	Antenna Wi (120 Deg)	None					114			
20	Antenna Wi (150 Deg)	None					114			
21	Antenna Wi (180 Deg)	None					114			
22	Antenna Wi (210 Deg)	None					114			
23	Antenna Wi (240 Deg)	None					114			
24	Antenna Wi (270 Deg)	None					114			
25	Antenna Wi (300 Deg)	None					114			
26	Antenna Wi (330 Deg)	None					114			
27	Antenna Wm (0 Deg)	None					114			
28	Antenna Wm (30 Deg)	None					114			
29	Antenna Wm (60 Deg)	None					114			
30	Antenna Wm (90 Deg)	None					114			
31	Antenna Wm (120 Deg)	None					114			
32	Antenna Wm (150 Deg)	None					114			
33	Antenna Wm (180 Deg)	None					114			
34	Antenna Wm (210 Deg)	None					114			
35	Antenna Wm (240 Deg)	None					114			
36	Antenna Wm (270 Deg)	None					114			
37	Antenna Wm (300 Deg)	None					114			
38	Antenna Wm (330 Deg)	None					114			
39	Structure D	None		-1					3	
40	Structure Di	None						62	3	
41	Structure Wo (0 Deg)	None						124		
42	Structure Wo (30 Deg)	None						124		
43	Structure Wo (60 Deg)	None						124		
44	Structure Wo (90 Deg)	None						124		
45	Structure Wo (120 Deg)	None						124		
46	Structure Wo (150 Deg)	None						124		
47	Structure Wo (180 Deg)	None						124		
48	Structure Wo (210 Deg)	None						124		
49	Structure Wo (240 Deg)	None						124		
50	Structure Wo (270 Deg)	None						124		
51	Structure Wo (300 Deg)	None						124		
52	Structure Wo (330 Deg)	None						124		
53	Structure Wi (0 Deg)	None						124		
54	Structure Wi (30 Deg)	None						124		
55	Structure Wi (60 Deg)	None						124		
56	Structure Wi (90 Deg)	None						124		

Basic Load Cases (Continued)

	BLC Description	Category	X Gravi..	Y Gravi..	Z Gravity	Joint	Point	Distrib...	Area(M...	Surface...
57	Structure Wi (120 Deg)	None						124		
58	Structure Wi (150 Deg)	None						124		
59	Structure Wi (180 Deg)	None						124		
60	Structure Wi (210 Deg)	None						124		
61	Structure Wi (240 Deg)	None						124		
62	Structure Wi (270 Deg)	None						124		
63	Structure Wi (300 Deg)	None						124		
64	Structure Wi (330 Deg)	None						124		
65	Structure Wm (0 Deg)	None						124		
66	Structure Wm (30 Deg)	None						124		
67	Structure Wm (60 Deg)	None						124		
68	Structure Wm (90 Deg)	None						124		
69	Structure Wm (120 Deg)	None						124		
70	Structure Wm (150 Deg)	None						124		
71	Structure Wm (180 Deg)	None						124		
72	Structure Wm (210 Deg)	None						124		
73	Structure Wm (240 Deg)	None						124		
74	Structure Wm (270 Deg)	None						124		
75	Structure Wm (300 Deg)	None						124		
76	Structure Wm (330 Deg)	None						124		
77	Lm1	None					1			
78	Lm2	None					1			
79	Lv1	None					1			
80	Lv2	None					1			
81	BLC 39 Transient Area Loads	None						54		
82	BLC 40 Transient Area Loads	None						54		

Load Combinations

	Description	S...	PDelta	S...	B...	Fa...	B...	Fa...	B...	Fa...	B...	Fa...	B...	Fa...	B...	Fa...	B...	Fa...	B...	Fa...	B...	Fa...	B...	Fa...	B...	Fa...
1	1.2D+1.0Wo (0 Deg)	Yes	Y		1	1.2	39	1.2	3	1	41	1														
2	1.2D+1.0Wo (30 Deg)	Yes	Y		1	1.2	39	1.2	4	1	42	1														
3	1.2D+1.0Wo (60 Deg)	Yes	Y		1	1.2	39	1.2	5	1	43	1														
4	1.2D+1.0Wo (90 Deg)	Yes	Y		1	1.2	39	1.2	6	1	44	1														
5	1.2D+1.0Wo (120 Deg)	Yes	Y		1	1.2	39	1.2	7	1	45	1														
6	1.2D+1.0Wo (150 Deg)	Yes	Y		1	1.2	39	1.2	8	1	46	1														
7	1.2D+1.0Wo (180 Deg)	Yes	Y		1	1.2	39	1.2	9	1	47	1														
8	1.2D+1.0Wo (210 Deg)	Yes	Y		1	1.2	39	1.2	10	1	48	1														
9	1.2D+1.0Wo (240 Deg)	Yes	Y		1	1.2	39	1.2	11	1	49	1														
10	1.2D+1.0Wo (270 Deg)	Yes	Y		1	1.2	39	1.2	12	1	50	1														
11	1.2D+1.0Wo (300 Deg)	Yes	Y		1	1.2	39	1.2	13	1	51	1														
12	1.2D+1.0Wo (330 Deg)	Yes	Y		1	1.2	39	1.2	14	1	52	1														
13	1.2D + 1.0Di + 1.0Wi (0 Deg)	Yes	Y		1	1.2	39	1.2	2	1	40	1	15	1	53	1										
14	1.2D + 1.0Di + 1.0Wi (30 D...	Yes	Y		1	1.2	39	1.2	2	1	40	1	16	1	54	1										
15	1.2D + 1.0Di + 1.0Wi (60 D...	Yes	Y		1	1.2	39	1.2	2	1	40	1	17	1	55	1										
16	1.2D + 1.0Di + 1.0Wi (90 D...	Yes	Y		1	1.2	39	1.2	2	1	40	1	18	1	56	1										
17	1.2D + 1.0Di + 1.0Wi (120 ...	Yes	Y		1	1.2	39	1.2	2	1	40	1	19	1	57	1										
18	1.2D + 1.0Di + 1.0Wi (150 ...	Yes	Y		1	1.2	39	1.2	2	1	40	1	20	1	58	1										
19	1.2D + 1.0Di + 1.0Wi (180 ...	Yes	Y		1	1.2	39	1.2	2	1	40	1	21	1	59	1										
20	1.2D + 1.0Di + 1.0Wi (210 ...	Yes	Y		1	1.2	39	1.2	2	1	40	1	22	1	60	1										
21	1.2D + 1.0Di + 1.0Wi (240 ...	Yes	Y		1	1.2	39	1.2	2	1	40	1	23	1	61	1										
22	1.2D + 1.0Di + 1.0Wi (270 ...	Yes	Y		1	1.2	39	1.2	2	1	40	1	24	1	62	1										
23	1.2D + 1.0Di + 1.0Wi (300 ...	Yes	Y		1	1.2	39	1.2	2	1	40	1	25	1	63	1										
24	1.2D + 1.0Di + 1.0Wi (330 ...	Yes	Y		1	1.2	39	1.2	2	1	40	1	26	1	64	1										
25	1.2D + 1.5Lm1 + 1.0Wm (0...	Yes	Y		1	1.2	39	1.2	77	1.5	27	1	65	1												
26	1.2D + 1.5Lm1 + 1.0Wm (3...	Yes	Y		1	1.2	39	1.2	77	1.5	28	1	66	1												

Load Combinations (Continued)

	Description	S...	PDelta	S...	B...	Fa...	B...	Fa...	B...	Fa...	B...	Fa...	B...	Fa...	B...	Fa...	B...	Fa...	B...	Fa...	B...	Fa...	B...	Fa...
27	1.2D + 1.5Lm1 + 1.0Wm (6...	Yes	Y		1	1.2	39	1.2	77	1.5	29	1	67	1										
28	1.2D + 1.5Lm1 + 1.0Wm (9...	Yes	Y		1	1.2	39	1.2	77	1.5	30	1	68	1										
29	1.2D + 1.5Lm1 + 1.0Wm (1...	Yes	Y		1	1.2	39	1.2	77	1.5	31	1	69	1										
30	1.2D + 1.5Lm1 + 1.0Wm (1...	Yes	Y		1	1.2	39	1.2	77	1.5	32	1	70	1										
31	1.2D + 1.5Lm1 + 1.0Wm (1...	Yes	Y		1	1.2	39	1.2	77	1.5	33	1	71	1										
32	1.2D + 1.5Lm1 + 1.0Wm (2...	Yes	Y		1	1.2	39	1.2	77	1.5	34	1	72	1										
33	1.2D + 1.5Lm1 + 1.0Wm (2...	Yes	Y		1	1.2	39	1.2	77	1.5	35	1	73	1										
34	1.2D + 1.5Lm1 + 1.0Wm (2...	Yes	Y		1	1.2	39	1.2	77	1.5	36	1	74	1										
35	1.2D + 1.5Lm1 + 1.0Wm (3...	Yes	Y		1	1.2	39	1.2	77	1.5	37	1	75	1										
36	1.2D + 1.5Lm1 + 1.0Wm (3...	Yes	Y		1	1.2	39	1.2	77	1.5	38	1	76	1										
37	1.2D + 1.5Lm2 + 1.0Wm (0...	Yes	Y		1	1.2	39	1.2	78	1.5	27	1	65	1										
38	1.2D + 1.5Lm2 + 1.0Wm (3...	Yes	Y		1	1.2	39	1.2	78	1.5	28	1	66	1										
39	1.2D + 1.5Lm2 + 1.0Wm (6...	Yes	Y		1	1.2	39	1.2	78	1.5	29	1	67	1										
40	1.2D + 1.5Lm2 + 1.0Wm (9...	Yes	Y		1	1.2	39	1.2	78	1.5	30	1	68	1										
41	1.2D + 1.5Lm2 + 1.0Wm (1...	Yes	Y		1	1.2	39	1.2	78	1.5	31	1	69	1										
42	1.2D + 1.5Lm2 + 1.0Wm (1...	Yes	Y		1	1.2	39	1.2	78	1.5	32	1	70	1										
43	1.2D + 1.5Lm2 + 1.0Wm (1...	Yes	Y		1	1.2	39	1.2	78	1.5	33	1	71	1										
44	1.2D + 1.5Lm2 + 1.0Wm (2...	Yes	Y		1	1.2	39	1.2	78	1.5	34	1	72	1										
45	1.2D + 1.5Lm2 + 1.0Wm (2...	Yes	Y		1	1.2	39	1.2	78	1.5	35	1	73	1										
46	1.2D + 1.5Lm2 + 1.0Wm (2...	Yes	Y		1	1.2	39	1.2	78	1.5	36	1	74	1										
47	1.2D + 1.5Lm2 + 1.0Wm (3...	Yes	Y		1	1.2	39	1.2	78	1.5	37	1	75	1										
48	1.2D + 1.5Lm2 + 1.0Wm (3...	Yes	Y		1	1.2	39	1.2	78	1.5	38	1	76	1										
49	1.2D + 1.5Lv1	Yes	Y		1	1.2	39	1.2	79	1.5														
50	1.2D + 1.5Lv2	Yes	Y		1	1.2	39	1.2	80	1.5														
51	1.4D	Yes	Y		1	1.4	39	1.4																
52	Seismic Mass		Y		1	1	39	1																
53	1.2D + 1.0Ev + 1.0Eh (0 De...		Y		1	1.2	39	1.2	SX		SY	1	SZ	-1										
54	1.2D + 1.0Ev + 1.0Eh (30 D...		Y		1	1.2	39	1.2	SX	.5	SY	1	SZ	-.8...										
55	1.2D + 1.0Ev + 1.0Eh (60 D...		Y		1	1.2	39	1.2	SX	.866	SY	1	SZ	-.5										
56	1.2D + 1.0Ev + 1.0Eh (90 D...		Y		1	1.2	39	1.2	SX	1	SY	1	SZ											
57	1.2D + 1.0Ev + 1.0Eh (120 ...		Y		1	1.2	39	1.2	SX	.866	SY	1	SZ	.5										
58	1.2D + 1.0Ev + 1.0Eh (150 ...		Y		1	1.2	39	1.2	SX	.5	SY	1	SZ	.866										
59	1.2D + 1.0Ev + 1.0Eh (180 ...		Y		1	1.2	39	1.2	SX		SY	1	SZ	1										
60	1.2D + 1.0Ev + 1.0Eh (210 ...		Y		1	1.2	39	1.2	SX	-.5	SY	1	SZ	.866										
61	1.2D + 1.0Ev + 1.0Eh (240 ...		Y		1	1.2	39	1.2	SX	-.8...	SY	1	SZ	.5										
62	1.2D + 1.0Ev + 1.0Eh (270 ...		Y		1	1.2	39	1.2	SX	-1	SY	1	SZ											
63	1.2D + 1.0Ev + 1.0Eh (300 ...		Y		1	1.2	39	1.2	SX	-.8...	SY	1	SZ	-.5										
64	1.2D + 1.0Ev + 1.0Eh (330 ...		Y		1	1.2	39	1.2	SX	-.5	SY	1	SZ	-.8...										

Joint Coordinates and Temperatures

	Label	X [ft]	Y [ft]	Z [ft]	Temp [F]	Detach From Diap...
1	SC	-0.	0	-1.243044	0	
2	N183	-0.	0	-6.451377	0	
3	N184	-2.557292	0	-2.758669	0	
4	N185	2.557292	0	-2.758669	0	
5	N186	-0.	0	-2.758669	0	
6	N187	-2.2541	0	-2.758669	0	
7	N188	-0.122114	0	-6.451377	0	
8	N189	2.2541	0	-2.758669	0	
9	N190	0.122114	0	-6.451377	0	
10	N191	-0.682668	0	-6.251839	0	
11	N192	-0.567464	0	-6.451377	0	
12	N193	0.567464	0	-6.451377	0	
13	N194	0.682668	0	-6.251839	0	
14	N195	-2.557292	0	-2.539898	0	

Joint Coordinates and Temperatures (Continued)

	Label	X [ft]	Y [ft]	Z [ft]	Temp [F]	Detach From Diap...
15	N196	-2.557292	0	-3.017583	0	
16	N197	-2.427076	0	-3.243124	0	
17	N198	2.557292	0	-2.539898	0	
18	N199	2.557292	0	-3.017583	0	
19	N200	2.427076	0	-3.243124	0	
20	N201	-2.489576	0	-3.13487	0	
21	N202	-2.628441	0	-3.215044	0	
22	N203	-0.614959	0	-6.369113	0	
23	N204	-0.759294	0	-6.452444	0	
24	N205	0.614959	0	-6.369113	0	
25	N206	0.759363	0	-6.452485	0	
26	N207	2.489576	0	-3.13487	0	
27	N208	2.628461	0	-3.215056	0	
28	N92	-0.	0	-1.743044	0	
29	N93	0.270833	0	-1.743044	0	
30	N30	1.076508	0	0.621522	0	
31	N31	5.587057	0	3.225689	0	
32	N32	3.667723	0	-0.835345	0	
33	N33	1.110432	0	3.594014	0	
34	N34	2.389078	0	1.379335	0	
35	N35	3.516128	0	-0.572773	0	
36	N36	5.648114	0	3.119935	0	
37	N37	1.262028	0	3.331442	0	
38	N38	5.526	0	3.331442	0	
39	N39	5.755585	0	2.534712	0	
40	N40	5.870789	0	2.734251	0	
41	N41	5.303325	0	3.717127	0	
42	N42	5.072917	0	3.717127	0	
43	N43	3.478262	0	-0.94473	0	
44	N44	3.891949	0	-0.705888	0	
45	N45	4.022165	0	-0.480347	0	
46	N46	0.920971	0	3.484629	0	
47	N47	1.334657	0	3.723471	0	
48	N48	1.59509	0	3.723471	0	
49	N49	3.959665	0	-0.5886	0	
50	N50	4.098531	0	-0.668774	0	
51	N51	5.823293	0	2.651986	0	
52	N52	5.967628	0	2.568654	0	
53	N53	5.208334	0	3.717127	0	
54	N54	5.208334	0	3.883782	0	
55	N55	1.47009	0	3.723471	0	
56	N56	1.47009	0	3.883782	0	
57	N59	-1.076508	0	0.621522	0	
58	N60	-5.587057	0	3.225689	0	
59	N61	-1.110432	0	3.594014	0	
60	N62	-3.667723	0	-0.835345	0	
61	N63	-2.389078	0	1.379335	0	
62	N64	-1.262028	0	3.331442	0	
63	N65	-5.526	0	3.331442	0	
64	N66	-3.516128	0	-0.572773	0	
65	N67	-5.648114	0	3.119935	0	
66	N68	-5.072917	0	3.717127	0	
67	N69	-5.303325	0	3.717127	0	
68	N70	-5.870789	0	2.734251	0	
69	N71	-5.755585	0	2.534712	0	
70	N72	-0.920971	0	3.484629	0	
71	N73	-1.334657	0	3.723471	0	

Joint Coordinates and Temperatures (Continued)

	Label	X [ft]	Y [ft]	Z [ft]	Temp [F]	Detach From Diap...
72	N74	-1.59509	0	3.723471	0	
73	N75	-3.478262	0	-0.94473	0	
74	N76	-3.891949	0	-0.705888	0	
75	N77	-4.022165	0	-0.480347	0	
76	N78	-1.47009	0	3.723471	0	
77	N79	-1.47009	0	3.883782	0	
78	N80	-5.208334	0	3.717127	0	
79	N81	-5.208334	0	3.883782	0	
80	N82	-5.823293	0	2.651986	0	
81	N83	-5.967697	0	2.568614	0	
82	N84	-3.959665	0	-0.5886	0	
83	N85	-4.09855	0	-0.668786	0	
84	N86	-1.509521	0	0.871522	0	
85	N87	-1.644937	0	0.636974	0	
86	N86A	-0.	0	-5.092002	0	
87	N87A	-0.	-2.416667	-1.243044	0	
88	N88	-0.	-0.447917	-5.092002	0	
89	N89	4.409803	0	2.546001	0	
90	N90	1.076508	-2.416667	0.621522	0	
91	N91	4.409803	-0.447917	2.546001	0	
92	N92A	-4.409803	0	2.546001	0	
93	N93A	-1.076508	-2.416667	0.621522	0	
94	N94	-4.409803	-0.447917	2.546001	0	
95	N95	-6.25	0	3.883782	0	
96	N96	6.25	0	3.883878	0	
97	N97	-0.238454	0	-7.35455	0	
98	N98	-6.488537	0	3.47072	0	
99	N99	6.488454	0	3.470768	0	
100	N100	0.238537	0	-7.354598	0	
101	N101	6.	0	3.883782	0	
102	N102	6.	0	4.15992	0	
103	N109	-6.25	4.291667	3.883782	0	
104	N110	6.25	4.291667	3.883878	0	
105	N111	6.	4.291667	3.883782	0	
106	N112	6.	4.291667	4.15992	0	
107	N139	-0.238454	4.291667	-7.35455	0	
108	N140	-6.488537	4.291667	3.47072	0	
109	N169	6.488454	4.291667	3.470768	0	
110	N170	0.238537	4.291667	-7.354598	0	
111	N203A	0.270833	-.5	-1.743044	0	
112	N204A	-1.644937	-.5	0.636974	0	
113	N205A	0.270833	4.5	-1.743044	0	
114	N206A	-1.644937	4.5	0.636974	0	
115	N115	5.5	4.291667	3.883878	0	
116	N116	-5.5	4.291667	3.883782	0	
117	N117	-6.113537	4.291667	2.821201	0	
118	N118	-0.613454	4.291667	-6.705031	0	
119	N119	0.613537	4.291667	-6.705079	0	
120	N120	6.113454	4.291667	2.821249	0	
121	N121	2.	0	3.883782	0	
122	N122	2.	0	4.15992	0	
123	N123	2.	4.291667	3.883782	0	
124	N124	2.	4.291667	4.15992	0	
125	N125	-2.	0	3.883782	0	
126	N126	-2.	0	4.15992	0	
127	N127	-2.	4.291667	3.883782	0	
128	N128	-2.	4.291667	4.15992	0	

Joint Coordinates and Temperatures (Continued)

	Label	X [ft]	Y [ft]	Z [ft]	Temp [F]	Detach From Diap...
129	N129	-6.	0	3.883782	0	
130	N130	-6.	0	4.15992	0	
131	N131	-6.	4.291667	3.883782	0	
132	N132	-6.	4.291667	4.15992	0	
133	N133	6.	5.416667	4.15992	0	
134	N134	2.	5.416667	4.15992	0	
135	N135	-2.	5.416667	4.15992	0	
136	N136	-6.	5.416667	4.15992	0	
137	N137	6.	-2.583333	4.15992	0	
138	N138	2.	-2.583333	4.15992	0	
139	N139A	-2.	-2.583333	4.15992	0	
140	N140A	-6.	-2.583333	4.15992	0	
141	N141	-6.363454	0	3.254261	0	
142	N142	-6.602596	0	3.116192	0	
143	N143	-6.363454	4.291667	3.254261	0	
144	N144	-6.602596	4.291667	3.116192	0	
145	N145	-4.363454	0	-0.20984	0	
146	N146	-4.602596	0	-0.347909	0	
147	N147	-4.363454	4.291667	-0.20984	0	
148	N148	-4.602596	4.291667	-0.347909	0	
149	N149	-2.363454	0	-3.673942	0	
150	N150	-2.602596	0	-3.812011	0	
151	N151	-2.363454	4.291667	-3.673942	0	
152	N152	-2.602596	4.291667	-3.812011	0	
153	N153	-0.363454	0	-7.138043	0	
154	N154	-0.602596	0	-7.276112	0	
155	N155	-0.363454	4.291667	-7.138043	0	
156	N156	-0.602596	4.291667	-7.276112	0	
157	N157	-6.602596	5.416667	3.116192	0	
158	N158	-4.602596	5.416667	-0.347909	0	
159	N159	-2.602596	5.416667	-3.812011	0	
160	N160	-0.602596	5.416667	-7.276112	0	
161	N161	-6.602596	-2.583333	3.116192	0	
162	N162	-4.602596	-2.583333	-0.347909	0	
163	N163	-2.602596	-2.583333	-3.812011	0	
164	N164	-0.602596	-2.583333	-7.276112	0	
165	N165	0.363454	0	-7.138043	0	
166	N166	0.602596	0	-7.276112	0	
167	N167	0.363454	4.291667	-7.138043	0	
168	N168	0.602596	4.291667	-7.276112	0	
169	N169A	2.363454	0	-3.673942	0	
170	N170A	2.602596	0	-3.812011	0	
171	N171	2.363454	4.291667	-3.673942	0	
172	N172	2.602596	4.291667	-3.812011	0	
173	N173	4.363454	0	-0.20984	0	
174	N174	4.602596	0	-0.347909	0	
175	N175	4.363454	4.291667	-0.20984	0	
176	N176	4.602596	4.291667	-0.347909	0	
177	N177	6.363454	0	3.254261	0	
178	N178	6.602596	0	3.116192	0	
179	N179	6.363454	4.291667	3.254261	0	
180	N180	6.602596	4.291667	3.116192	0	
181	N181	0.602596	5.416667	-7.276112	0	
182	N182	2.602596	5.416667	-3.812011	0	
183	N183A	4.602596	5.416667	-0.347909	0	
184	N184A	6.602596	5.416667	3.116192	0	
185	N185A	0.602596	-2.583333	-7.276112	0	

Joint Coordinates and Temperatures (Continued)

	Label	X [ft]	Y [ft]	Z [ft]	Temp [F]	Detach From Diap...
186	N186A	2.602596	-2.583333	-3.812011	0	
187	N187A	4.602596	-2.583333	-0.347909	0	
188	N188A	6.602596	-2.583333	3.116192	0	

Hot Rolled Steel Section Sets

	Label	Shape	Type	Design ...	Material	Design ...	A [in2]	Iyy [in4]	Izz [in4]	J [in4]
1	Standoff	HSS4X4X4	None	None	A500 Gr.B Rect	Typical	3.37	7.8	7.8	12.8
2	Cross Arm	HSS4X4X4	None	None	A500 Gr.B Rect	Typical	3.37	7.8	7.8	12.8
3	Grating Angle	L2x2x3	None	None	A36 Gr.36	Typical	.722	.271	.271	.009
4	Toe Rail	PIPE_3.0	None	None	A53 Gr.B	Typical	2.07	2.85	2.85	5.69
5	Standoff Plate	PL1/2x6	None	None	A36 Gr.36	Typical	3	.063	9	.237
6	Cross Arm Plate	PL3/8x6	None	None	A36 Gr.36	Typical	2.25	.026	6.75	.101
7	Mount Pipe	PIPE_2.0	None	None	A53 Gr.B	Typical	1.02	.627	.627	1.25
8	Support Rail	PIPE_3.0	None	None	A53 Gr.B	Typical	2.07	2.85	2.85	5.69
9	Support Rail Corner	L2.5x2.5x4	None	None	A36 Gr.36	Typical	1.19	.692	.692	.026
10	Platform Kickers	LL2.5x2.5x3x3	None	None	A36 Gr.36	Typical	1.8	2.46	1.07	.023
11	Proposed Mount Pipe	PIPE_2.5	None	None	A53 Gr.B	Typical	1.61	1.45	1.45	2.89

Hot Rolled Steel Properties

	Label	E [ksi]	G [ksi]	Nu	Therm (\1E...	Density[k/ft...	Yield[ksi]	Ry	Fu[ksi]	Rt
1	A992	29000	11154	.3	.65	.49	50	1.1	65	1.1
2	A36 Gr.36	29000	11154	.3	.65	.49	36	1.5	58	1.2
3	A572 Gr.50	29000	11154	.3	.65	.49	50	1.1	65	1.1
4	A500 Gr.B RND	29000	11154	.3	.65	.527	42	1.4	58	1.3
5	A500 Gr.B Rect	29000	11154	.3	.65	.527	46	1.4	58	1.3
6	A53 Gr.B	29000	11154	.3	.65	.49	35	1.6	60	1.2
7	A1085	29000	11154	.3	.65	.49	50	1.4	65	1.3

Member Primary Data

	Label	I Joint	J Joint	K Joint	Rotate(d...	Section/Shape	Type	Design List	Material	Design Ru...
1	A5	N206A	N204A			Mount Pipe	None	None	A53 Gr.B	Typical
2	B5	N205A	N203A			Mount Pipe	None	None	A53 Gr.B	Typical
3	M18	N32	N34			Cross Arm	None	None	A500 Gr.B Rect	Typical
4	M19	N33	N34			Cross Arm	None	None	A500 Gr.B Rect	Typical
5	M20	N30	N31			Standoff	None	None	A500 Gr.B Rect	Typical
6	M21	N35	N36			Grating Angle	None	None	A36 Gr.36	Typical
7	M22	N37	N38		270	Grating Angle	None	None	A36 Gr.36	Typical
8	M23	N39	N40			Standoff Plate	None	None	A36 Gr.36	Typical
9	M24	N40	N41			Standoff Plate	None	None	A36 Gr.36	Typical
10	M25	N41	N42			Standoff Plate	None	None	A36 Gr.36	Typical
11	M26	N43	N44			Cross Arm Plate	None	None	A36 Gr.36	Typical
12	M27	N44	N45			Cross Arm Plate	None	None	A36 Gr.36	Typical
13	M28	N46	N47			Cross Arm Plate	None	None	A36 Gr.36	Typical
14	M29	N47	N48			Cross Arm Plate	None	None	A36 Gr.36	Typical
15	M30	N49	N50			RIGID	None	None	RIGID	Typical
16	M31	N51	N52			RIGID	None	None	RIGID	Typical
17	M32	N53	N54			RIGID	None	None	RIGID	Typical
18	M33	N55	N56			RIGID	None	None	RIGID	Typical
19	M35	N61	N63			Cross Arm	None	None	A500 Gr.B Rect	Typical
20	M36	N62	N63			Cross Arm	None	None	A500 Gr.B Rect	Typical
21	M37	N59	N60			Standoff	None	None	A500 Gr.B Rect	Typical
22	M38	N64	N65			Grating Angle	None	None	A36 Gr.36	Typical

Member Primary Data (Continued)

	Label	I Joint	J Joint	K Joint	Rotate(d...	Section/Shape	Type	Design List	Material	Design Ru...
23	M39	N66	N67		270	Grating Angle	None	None	A36 Gr.36	Typical
24	M40	N68	N69			Standoff Plate	None	None	A36 Gr.36	Typical
25	M41	N69	N70			Standoff Plate	None	None	A36 Gr.36	Typical
26	M42	N70	N71			Standoff Plate	None	None	A36 Gr.36	Typical
27	M43	N72	N73			Cross Arm Plate	None	None	A36 Gr.36	Typical
28	M44	N73	N74			Cross Arm Plate	None	None	A36 Gr.36	Typical
29	M45	N75	N76			Cross Arm Plate	None	None	A36 Gr.36	Typical
30	M46	N76	N77			Cross Arm Plate	None	None	A36 Gr.36	Typical
31	M47	N78	N79			RIGID	None	None	RIGID	Typical
32	M48	N80	N81			RIGID	None	None	RIGID	Typical
33	M49	N82	N83			RIGID	None	None	RIGID	Typical
34	M50	N84	N85			RIGID	None	None	RIGID	Typical
35	M51	N87	N86			RIGID	None	None	RIGID	Typical
36	M51A	N86A	N88			RIGID	None	None	RIGID	Typical
37	M52	N88	N87A			Platform Kickers	None	None	A36 Gr.36	Typical
38	M52A	N184	N186			Cross Arm	None	None	A500 Gr.B Rect	Typical
39	M53	N89	N91		120	RIGID	None	None	RIGID	Typical
40	M53A	N185	N186			Cross Arm	None	None	A500 Gr.B Rect	Typical
41	M54	N93	N92			RIGID	None	None	RIGID	Typical
42	M54A	N91	N90			Platform Kickers	None	None	A36 Gr.36	Typical
43	M55	N92A	N94		240	RIGID	None	None	RIGID	Typical
44	M56	N94	N93A			Platform Kickers	None	None	A36 Gr.36	Typical
45	M57	N95	N96			Toe Rail	None	None	A53 Gr.B	Typical
46	M58	N97	N98			Toe Rail	None	None	A53 Gr.B	Typical
47	M59	N99	N100			Toe Rail	None	None	A53 Gr.B	Typical
48	M60	N101	N102			RIGID	None	None	RIGID	Typical
49	M64	N109	N110			Toe Rail	None	None	A53 Gr.B	Typical
50	M65	N111	N112			RIGID	None	None	RIGID	Typical
51	M77	N139	N140			Toe Rail	None	None	A53 Gr.B	Typical
52	M90	N169	N170			Toe Rail	None	None	A53 Gr.B	Typical
53	M91	SC	N183			Standoff	None	None	A500 Gr.B Rect	Typical
54	M93	N187	N188			Grating Angle	None	None	A36 Gr.36	Typical
55	M94	N189	N190		270	Grating Angle	None	None	A36 Gr.36	Typical
56	M95	N191	N192			Standoff Plate	None	None	A36 Gr.36	Typical
57	M96	N192	N193			Standoff Plate	None	None	A36 Gr.36	Typical
58	M97	N193	N194			Standoff Plate	None	None	A36 Gr.36	Typical
59	M98	N195	N196			Cross Arm Plate	None	None	A36 Gr.36	Typical
60	M99	N196	N197			Cross Arm Plate	None	None	A36 Gr.36	Typical
61	M100	N198	N199			Cross Arm Plate	None	None	A36 Gr.36	Typical
62	M101	N199	N200			Cross Arm Plate	None	None	A36 Gr.36	Typical
63	M102	N201	N202			RIGID	None	None	RIGID	Typical
64	M103	N203	N204			RIGID	None	None	RIGID	Typical
65	M104	N205	N206			RIGID	None	None	RIGID	Typical
66	M105	N207	N208			RIGID	None	None	RIGID	Typical
67	M67	N120	N115		180	Support Rail Corner	None	None	A36 Gr.36	Typical
68	M68	N117	N116		90	Support Rail Corner	None	None	A36 Gr.36	Typical
69	M69	N118	N119		180	Support Rail Corner	None	None	A36 Gr.36	Typical
70	M70	N121	N122			RIGID	None	None	RIGID	Typical
71	M71	N123	N124			RIGID	None	None	RIGID	Typical
72	M72	N125	N126			RIGID	None	None	RIGID	Typical
73	M73	N127	N128			RIGID	None	None	RIGID	Typical
74	M74	N129	N130			RIGID	None	None	RIGID	Typical
75	M75	N131	N132			RIGID	None	None	RIGID	Typical
76	MP1A	N133	N137			Mount Pipe	None	None	A53 Gr.B	Typical
77	MP2A	N134	N138			Proposed Mount Pipe	None	None	A53 Gr.B	Typical
78	MP3A	N135	N139A			Mount Pipe	None	None	A53 Gr.B	Typical
79	MP4A	N136	N140A			Mount Pipe	None	None	A53 Gr.B	Typical

Member Primary Data (Continued)

	Label	I Joint	J Joint	K Joint	Rotate(d...	Section/Shape	Type	Design List	Material	Design Ru...
80	M80	N141	N142			RIGID	None	None	RIGID	Typical
81	M81	N143	N144			RIGID	None	None	RIGID	Typical
82	M82	N145	N146			RIGID	None	None	RIGID	Typical
83	M83	N147	N148			RIGID	None	None	RIGID	Typical
84	M84	N149	N150			RIGID	None	None	RIGID	Typical
85	M85	N151	N152			RIGID	None	None	RIGID	Typical
86	M86	N153	N154			RIGID	None	None	RIGID	Typical
87	M87	N155	N156			RIGID	None	None	RIGID	Typical
88	MP1B	N157	N161			Mount Pipe	None	None	A53 Gr.B	Typical
89	MP2B	N158	N162			Proposed Mount Pipe	None	None	A53 Gr.B	Typical
90	MP3B	N159	N163			Mount Pipe	None	None	A53 Gr.B	Typical
91	MP4B	N160	N164			Mount Pipe	None	None	A53 Gr.B	Typical
92	M92	N165	N166			RIGID	None	None	RIGID	Typical
93	M93A	N167	N168			RIGID	None	None	RIGID	Typical
94	M94A	N169A	N170A			RIGID	None	None	RIGID	Typical
95	M95A	N171	N172			RIGID	None	None	RIGID	Typical
96	M96A	N173	N174			RIGID	None	None	RIGID	Typical
97	M97A	N175	N176			RIGID	None	None	RIGID	Typical
98	M98A	N177	N178			RIGID	None	None	RIGID	Typical
99	M99A	N179	N180			RIGID	None	None	RIGID	Typical
100	MP1C	N181	N185A			Mount Pipe	None	None	A53 Gr.B	Typical
101	MP2C	N182	N186A			Proposed Mount Pipe	None	None	A53 Gr.B	Typical
102	MP3C	N183A	N187A			Mount Pipe	None	None	A53 Gr.B	Typical
103	MP4C	N184A	N188A			Mount Pipe	None	None	A53 Gr.B	Typical

Member Advanced Data

	Label	I Release	J Release	I Offset[in]	J Offset[in]	T/C Only	Physical	Defl Ratio Options	Analysis...	Inactive	Seismi...
1	A5						Yes	** NA **			None
2	B5						Yes	** NA **			None
3	M18				2		Yes	** NA **			None
4	M19				2		Yes	** NA **			None
5	M20						Yes	** NA **			None
6	M21						Yes	** NA **			None
7	M22						Yes	** NA **			None
8	M23						Yes	** NA **			None
9	M24						Yes	** NA **			None
10	M25						Yes	** NA **			None
11	M26						Yes	** NA **			None
12	M27						Yes	** NA **			None
13	M28						Yes	** NA **			None
14	M29						Yes	** NA **			None
15	M30		BenPIN				Yes	** NA **			None
16	M31		BenPIN				Yes	** NA **			None
17	M32		BenPIN				Yes	** NA **			None
18	M33		BenPIN				Yes	** NA **			None
19	M35				2		Yes	** NA **			None
20	M36				2		Yes	** NA **			None
21	M37						Yes	** NA **			None
22	M38						Yes	** NA **			None
23	M39						Yes	** NA **			None
24	M40						Yes	** NA **			None
25	M41						Yes	** NA **			None
26	M42						Yes	** NA **			None
27	M43						Yes	** NA **			None
28	M44						Yes	** NA **			None

Member Advanced Data (Continued)

	Label	I Release	J Release	I Offset[in]	J Offset[in]	T/C Only	Physical	Defl Ratio Options	Analysis...	Inactive	Seismi...
29	M45						Yes	** NA **			None
30	M46						Yes	** NA **			None
31	M47		BenPIN				Yes	** NA **			None
32	M48		BenPIN				Yes	** NA **			None
33	M49		BenPIN				Yes	** NA **			None
34	M50		BenPIN				Yes	** NA **			None
35	M51						Yes	** NA **			None
36	M51A						Yes	** NA **			None
37	M52	BenPIN	BenPIN				Yes	** NA **			None
38	M52A				2		Yes	** NA **			None
39	M53						Yes	** NA **			None
40	M53A				2		Yes	** NA **			None
41	M54						Yes	** NA **			None
42	M54A	BenPIN	BenPIN				Yes	** NA **			None
43	M55						Yes	** NA **			None
44	M56	BenPIN	BenPIN				Yes	** NA **			None
45	M57						Yes	** NA **			None
46	M58						Yes	** NA **			None
47	M59						Yes	** NA **			None
48	M60						Yes	** NA **			None
49	M64						Yes	** NA **			None
50	M65						Yes	** NA **			None
51	M77						Yes	** NA **			None
52	M90						Yes	** NA **			None
53	M91						Yes	** NA **			None
54	M93						Yes	** NA **			None
55	M94						Yes	** NA **			None
56	M95						Yes	** NA **			None
57	M96						Yes	** NA **			None
58	M97						Yes	** NA **			None
59	M98						Yes	** NA **			None
60	M99						Yes	** NA **			None
61	M100						Yes	** NA **			None
62	M101						Yes	** NA **			None
63	M102		BenPIN				Yes	** NA **			None
64	M103		BenPIN				Yes	** NA **			None
65	M104		BenPIN				Yes	** NA **			None
66	M105		BenPIN				Yes	** NA **			None
67	M67						Yes	** NA **			None
68	M68						Yes	** NA **			None
69	M69						Yes	** NA **			None
70	M70						Yes	** NA **			None
71	M71						Yes	** NA **			None
72	M72						Yes	** NA **			None
73	M73						Yes	** NA **			None
74	M74						Yes	** NA **			None
75	M75						Yes	** NA **			None
76	MP1A						Yes	** NA **			None
77	MP2A						Yes	** NA **			None
78	MP3A						Yes	** NA **			None
79	MP4A						Yes	** NA **			None
80	M80						Yes	** NA **			None
81	M81						Yes	** NA **			None
82	M82						Yes	** NA **			None
83	M83						Yes	** NA **			None
84	M84						Yes	** NA **			None
85	M85						Yes	** NA **			None

Member Advanced Data (Continued)

	Label	I Release	J Release	I Offset[in]	J Offset[in]	T/C Only	Physical	Defl Ratio Options	Analysis...	Inactive	Seismi...
86	M86						Yes	** NA **			None
87	M87						Yes	** NA **			None
88	MP1B						Yes	** NA **			None
89	MP2B						Yes	** NA **			None
90	MP3B						Yes	** NA **			None
91	MP4B						Yes	** NA **			None
92	M92						Yes	** NA **			None
93	M93A						Yes	** NA **			None
94	M94A						Yes	** NA **			None
95	M95A						Yes	** NA **			None
96	M96A						Yes	** NA **			None
97	M97A						Yes	** NA **			None
98	M98A						Yes	** NA **			None
99	M99A						Yes	** NA **			None
100	MP1C						Yes	** NA **			None
101	MP2C						Yes	** NA **			None
102	MP3C						Yes	** NA **			None
103	MP4C						Yes	** NA **			None

Member Point Loads (BLC 1 : Antenna D)

	Member Label	Direction	Magnitude[lb,k-ft]	Location[ft,%]
1	MP2A	Y	-39.15	1
2	MP2A	My	-.038	1
3	MP2A	Mz	-.03	1
4	MP2A	Y	-39.15	5
5	MP2A	My	-.038	5
6	MP2A	Mz	-.03	5
7	MP2B	Y	-39.15	1
8	MP2B	My	.041	1
9	MP2B	Mz	-.026	1
10	MP2B	Y	-39.15	5
11	MP2B	My	.041	5
12	MP2B	Mz	-.026	5
13	MP2C	Y	-39.15	1
14	MP2C	My	.026	1
15	MP2C	Mz	.041	1
16	MP2C	Y	-39.15	5
17	MP2C	My	.026	5
18	MP2C	Mz	.041	5
19	MP2A	Y	-39.15	1
20	MP2A	My	-.026	1
21	MP2A	Mz	.041	1
22	MP2A	Y	-39.15	5
23	MP2A	My	-.026	5
24	MP2A	Mz	.041	5
25	MP2B	Y	-39.15	1
26	MP2B	My	-.023	1
27	MP2B	Mz	-.043	1
28	MP2B	Y	-39.15	5
29	MP2B	My	-.023	5
30	MP2B	Mz	-.043	5
31	MP2C	Y	-39.15	1
32	MP2C	My	.048	1
33	MP2C	Mz	.002	1
34	MP2C	Y	-39.15	5

Member Point Loads (BLC 1 : Antenna D) (Continued)

	Member Label	Direction	Magnitude[lb,k-ft]	Location[ft,%]
35	MP2C	My	.048	5
36	MP2C	Mz	.002	5
37	MP3A	Y	-42.2	1
38	MP3A	My	.035	1
39	MP3A	Mz	-.006	1
40	MP3A	Y	-42.2	1
41	MP3A	My	.035	1
42	MP3A	Mz	-.006	1
43	MP3B	Y	-42.2	1
44	MP3B	My	-.006	1
45	MP3B	Mz	.035	1
46	MP3B	Y	-42.2	1
47	MP3B	My	-.006	1
48	MP3B	Mz	.035	1
49	MP3C	Y	-42.2	1
50	MP3C	My	-.035	1
51	MP3C	Mz	-.006	1
52	MP3C	Y	-42.2	1
53	MP3C	My	-.035	1
54	MP3C	Mz	-.006	1
55	MP3A	Y	-35.15	4
56	MP3A	My	.029	4
57	MP3A	Mz	-.005	4
58	MP3A	Y	-35.15	4
59	MP3A	My	.029	4
60	MP3A	Mz	-.005	4
61	MP3B	Y	-35.15	4
62	MP3B	My	-.005	4
63	MP3B	Mz	.029	4
64	MP3B	Y	-35.15	4
65	MP3B	My	-.005	4
66	MP3B	Mz	.029	4
67	MP3C	Y	-35.15	4
68	MP3C	My	-.029	4
69	MP3C	Mz	-.005	4
70	MP3C	Y	-35.15	4
71	MP3C	My	-.029	4
72	MP3C	Mz	-.005	4
73	MP1A	Y	-2.2	3.5
74	MP1A	My	-.002	3.5
75	MP1A	Mz	.000318	3.5
76	MP1A	Y	-2.2	3.5
77	MP1A	My	-.002	3.5
78	MP1A	Mz	.000318	3.5
79	MP1B	Y	-2.2	3.5
80	MP1B	My	-.002	3.5
81	MP1B	Mz	.000318	3.5
82	MP1B	Y	-2.2	3.5
83	MP1B	My	-.002	3.5
84	MP1B	Mz	.000318	3.5
85	MP1C	Y	-2.2	3.5
86	MP1C	My	-.002	3.5
87	MP1C	Mz	.000318	3.5
88	MP1C	Y	-2.2	3.5
89	MP1C	My	-.002	3.5
90	MP1C	Mz	.000318	3.5
91	MP4A	Y	-43.55	2.5

Member Point Loads (BLC 1 : Antenna D) (Continued)

	Member Label	Direction	Magnitude[lb,k-ft]	Location[ft,%]
92	MP4A	My	-.036	2.5
93	MP4A	Mz	.006	2.5
94	MP4A	Y	-43.55	4
95	MP4A	My	-.036	4
96	MP4A	Mz	.006	4
97	MP4B	Y	-43.55	2.5
98	MP4B	My	.006	2.5
99	MP4B	Mz	-.036	2.5
100	MP4B	Y	-43.55	4
101	MP4B	My	.006	4
102	MP4B	Mz	-.036	4
103	MP4C	Y	-43.55	2.5
104	MP4C	My	.036	2.5
105	MP4C	Mz	.006	2.5
106	MP4C	Y	-43.55	4
107	MP4C	My	.036	4
108	MP4C	Mz	.006	4
109	B5	Y	-16	.75
110	B5	My	-.008	.75
111	B5	Mz	.001	.75
112	B5	Y	-16	.75
113	B5	My	-.008	.75
114	B5	Mz	.001	.75

Member Point Loads (BLC 2 : Antenna Di)

	Member Label	Direction	Magnitude[lb,k-ft]	Location[ft,%]
1	MP2A	Y	-86.324	1
2	MP2A	My	-.085	1
3	MP2A	Mz	-.065	1
4	MP2A	Y	-86.324	5
5	MP2A	My	-.085	5
6	MP2A	Mz	-.065	5
7	MP2B	Y	-86.324	1
8	MP2B	My	.09	1
9	MP2B	Mz	-.057	1
10	MP2B	Y	-86.324	5
11	MP2B	My	.09	5
12	MP2B	Mz	-.057	5
13	MP2C	Y	-86.324	1
14	MP2C	My	.057	1
15	MP2C	Mz	.09	1
16	MP2C	Y	-86.324	5
17	MP2C	My	.057	5
18	MP2C	Mz	.09	5
19	MP2A	Y	-86.324	1
20	MP2A	My	-.057	1
21	MP2A	Mz	.09	1
22	MP2A	Y	-86.324	5
23	MP2A	My	-.057	5
24	MP2A	Mz	.09	5
25	MP2B	Y	-86.324	1
26	MP2B	My	-.05	1
27	MP2B	Mz	-.095	1
28	MP2B	Y	-86.324	5
29	MP2B	My	-.05	5
30	MP2B	Mz	-.095	5

Member Point Loads (BLC 2 : Antenna Di) (Continued)

	Member Label	Direction	Magnitude[lb,k-ft]	Location[ft,%]
31	MP2C	Y	-86.324	1
32	MP2C	My	.107	1
33	MP2C	Mz	.004	1
34	MP2C	Y	-86.324	5
35	MP2C	My	.107	5
36	MP2C	Mz	.004	5
37	MP3A	Y	-22.446	1
38	MP3A	My	.018	1
39	MP3A	Mz	-.003	1
40	MP3A	Y	-22.446	1
41	MP3A	My	.018	1
42	MP3A	Mz	-.003	1
43	MP3B	Y	-22.446	1
44	MP3B	My	-.003	1
45	MP3B	Mz	.018	1
46	MP3B	Y	-22.446	1
47	MP3B	My	-.003	1
48	MP3B	Mz	.018	1
49	MP3C	Y	-22.446	1
50	MP3C	My	-.018	1
51	MP3C	Mz	-.003	1
52	MP3C	Y	-22.446	1
53	MP3C	My	-.018	1
54	MP3C	Mz	-.003	1
55	MP3A	Y	-20.186	4
56	MP3A	My	.017	4
57	MP3A	Mz	-.003	4
58	MP3A	Y	-20.186	4
59	MP3A	My	.017	4
60	MP3A	Mz	-.003	4
61	MP3B	Y	-20.186	4
62	MP3B	My	-.003	4
63	MP3B	Mz	.017	4
64	MP3B	Y	-20.186	4
65	MP3B	My	-.003	4
66	MP3B	Mz	.017	4
67	MP3C	Y	-20.186	4
68	MP3C	My	-.017	4
69	MP3C	Mz	-.003	4
70	MP3C	Y	-20.186	4
71	MP3C	My	-.017	4
72	MP3C	Mz	-.003	4
73	MP1A	Y	-6.723	3.5
74	MP1A	My	-.006	3.5
75	MP1A	Mz	.000973	3.5
76	MP1A	Y	-6.723	3.5
77	MP1A	My	-.006	3.5
78	MP1A	Mz	.000973	3.5
79	MP1B	Y	-6.723	3.5
80	MP1B	My	-.006	3.5
81	MP1B	Mz	.000973	3.5
82	MP1B	Y	-6.723	3.5
83	MP1B	My	-.006	3.5
84	MP1B	Mz	.000973	3.5
85	MP1C	Y	-6.723	3.5
86	MP1C	My	-.006	3.5
87	MP1C	Mz	.000973	3.5

Member Point Loads (BLC 2 : Antenna Di) (Continued)

	Member Label	Direction	Magnitude[lb,k-ft]	Location[ft,%]
88	MP1C	Y	-6.723	3.5
89	MP1C	My	-.006	3.5
90	MP1C	Mz	.000973	3.5
91	MP4A	Y	-35.607	2.5
92	MP4A	My	-.029	2.5
93	MP4A	Mz	.005	2.5
94	MP4A	Y	-35.607	4
95	MP4A	My	-.029	4
96	MP4A	Mz	.005	4
97	MP4B	Y	-35.607	2.5
98	MP4B	My	.005	2.5
99	MP4B	Mz	-.029	2.5
100	MP4B	Y	-35.607	4
101	MP4B	My	.005	4
102	MP4B	Mz	-.029	4
103	MP4C	Y	-35.607	2.5
104	MP4C	My	.029	2.5
105	MP4C	Mz	.005	2.5
106	MP4C	Y	-35.607	4
107	MP4C	My	.029	4
108	MP4C	Mz	.005	4
109	B5	Y	-43.949	.75
110	B5	My	-.022	.75
111	B5	Mz	.004	.75
112	B5	Y	-43.949	.75
113	B5	My	-.022	.75
114	B5	Mz	.004	.75

Member Point Loads (BLC 3 : Antenna Wo (0 Deg))

	Member Label	Direction	Magnitude[lb,k-ft]	Location[ft,%]
1	MP2A	X	0	1
2	MP2A	Z	-198.382	1
3	MP2A	Mx	.15	1
4	MP2A	X	0	5
5	MP2A	Z	-198.382	5
6	MP2A	Mx	.15	5
7	MP2B	X	0	1
8	MP2B	Z	-97.711	1
9	MP2B	Mx	.065	1
10	MP2B	X	0	5
11	MP2B	Z	-97.711	5
12	MP2B	Mx	.065	5
13	MP2C	X	0	1
14	MP2C	Z	-198.382	1
15	MP2C	Mx	-.208	1
16	MP2C	X	0	5
17	MP2C	Z	-198.382	5
18	MP2C	Mx	-.208	5
19	MP2A	X	0	1
20	MP2A	Z	-198.382	1
21	MP2A	Mx	-.208	1
22	MP2A	X	0	5
23	MP2A	Z	-198.382	5
24	MP2A	Mx	-.208	5
25	MP2B	X	0	1
26	MP2B	Z	-107.012	1

Member Point Loads (BLC 3 : Antenna Wo (0 Deg)) (Continued)

	Member Label	Direction	Magnitude[lb,k-ft]	Location[ft,%]
27	MP2B	Mx	.117	1
28	MP2B	X	0	5
29	MP2B	Z	-107.012	5
30	MP2B	Mx	.117	5
31	MP2C	X	0	1
32	MP2C	Z	-138.745	1
33	MP2C	Mx	-.007	1
34	MP2C	X	0	5
35	MP2C	Z	-138.745	5
36	MP2C	Mx	-.007	5
37	MP3A	X	0	1
38	MP3A	Z	-30.419	1
39	MP3A	Mx	.004	1
40	MP3A	X	0	1
41	MP3A	Z	-30.419	1
42	MP3A	Mx	.004	1
43	MP3B	X	0	1
44	MP3B	Z	-20.846	1
45	MP3B	Mx	-.017	1
46	MP3B	X	0	1
47	MP3B	Z	-20.846	1
48	MP3B	Mx	-.017	1
49	MP3C	X	0	1
50	MP3C	Z	-30.419	1
51	MP3C	Mx	.004	1
52	MP3C	X	0	1
53	MP3C	Z	-30.419	1
54	MP3C	Mx	.004	1
55	MP3A	X	0	4
56	MP3A	Z	-30.302	4
57	MP3A	Mx	.004	4
58	MP3A	X	0	4
59	MP3A	Z	-30.302	4
60	MP3A	Mx	.004	4
61	MP3B	X	0	4
62	MP3B	Z	-17.062	4
63	MP3B	Mx	-.014	4
64	MP3B	X	0	4
65	MP3B	Z	-17.062	4
66	MP3B	Mx	-.014	4
67	MP3C	X	0	4
68	MP3C	Z	-30.302	4
69	MP3C	Mx	.004	4
70	MP3C	X	0	4
71	MP3C	Z	-30.302	4
72	MP3C	Mx	.004	4
73	MP1A	X	0	3.5
74	MP1A	Z	-14.269	3.5
75	MP1A	Mx	-.002	3.5
76	MP1A	X	0	3.5
77	MP1A	Z	-14.269	3.5
78	MP1A	Mx	-.002	3.5
79	MP1B	X	0	3.5
80	MP1B	Z	-14.269	3.5
81	MP1B	Mx	-.002	3.5
82	MP1B	X	0	3.5
83	MP1B	Z	-14.269	3.5

Member Point Loads (BLC 3 : Antenna Wo (0 Deg)) (Continued)

	Member Label	Direction	Magnitude[lb,k-ft]	Location[ft,%]
84	MP1B	Mx	-.002	3.5
85	MP1C	X	0	3.5
86	MP1C	Z	-14.269	3.5
87	MP1C	Mx	-.002	3.5
88	MP1C	X	0	3.5
89	MP1C	Z	-14.269	3.5
90	MP1C	Mx	-.002	3.5
91	MP4A	X	0	2.5
92	MP4A	Z	-75.81	2.5
93	MP4A	Mx	-.011	2.5
94	MP4A	X	0	4
95	MP4A	Z	-75.81	4
96	MP4A	Mx	-.011	4
97	MP4B	X	0	2.5
98	MP4B	Z	-31.651	2.5
99	MP4B	Mx	.026	2.5
100	MP4B	X	0	4
101	MP4B	Z	-31.651	4
102	MP4B	Mx	.026	4
103	MP4C	X	0	2.5
104	MP4C	Z	-75.81	2.5
105	MP4C	Mx	-.011	2.5
106	MP4C	X	0	4
107	MP4C	Z	-75.81	4
108	MP4C	Mx	-.011	4
109	B5	X	0	.75
110	B5	Z	-66.234	.75
111	B5	Mx	-.006	.75
112	B5	X	0	.75
113	B5	Z	-66.234	.75
114	B5	Mx	-.006	.75

Member Point Loads (BLC 4 : Antenna Wo (30 Deg))

	Member Label	Direction	Magnitude[lb,k-ft]	Location[ft,%]
1	MP2A	X	78.674	1
2	MP2A	Z	-136.267	1
3	MP2A	Mx	.026	1
4	MP2A	X	78.674	5
5	MP2A	Z	-136.267	5
6	MP2A	Mx	.026	5
7	MP2B	X	53.506	1
8	MP2B	Z	-92.675	1
9	MP2B	Mx	.117	1
10	MP2B	X	53.506	5
11	MP2B	Z	-92.675	5
12	MP2B	Mx	.117	5
13	MP2C	X	94.54	1
14	MP2C	Z	-163.749	1
15	MP2C	Mx	-.109	1
16	MP2C	X	94.54	5
17	MP2C	Z	-163.749	5
18	MP2C	Mx	-.109	5
19	MP2A	X	78.674	1
20	MP2A	Z	-136.267	1
21	MP2A	Mx	-.195	1
22	MP2A	X	78.674	5

Member Point Loads (BLC 4 : Antenna Wo (30 Deg)) (Continued)

	Member Label	Direction	Magnitude[lb,k-ft]	Location[ft,%]
23	MP2A	Z	-136.267	5
24	MP2A	Mx	-.195	5
25	MP2B	X	48.855	1
26	MP2B	Z	-84.62	1
27	MP2B	Mx	.065	1
28	MP2B	X	48.855	5
29	MP2B	Z	-84.62	5
30	MP2B	Mx	.065	5
31	MP2C	X	94.54	1
32	MP2C	Z	-163.749	1
33	MP2C	Mx	.109	1
34	MP2C	X	94.54	5
35	MP2C	Z	-163.749	5
36	MP2C	Mx	.109	5
37	MP3A	X	13.259	1
38	MP3A	Z	-22.965	1
39	MP3A	Mx	.014	1
40	MP3A	X	13.259	1
41	MP3A	Z	-22.965	1
42	MP3A	Mx	.014	1
43	MP3B	X	10.865	1
44	MP3B	Z	-18.819	1
45	MP3B	Mx	-.017	1
46	MP3B	X	10.865	1
47	MP3B	Z	-18.819	1
48	MP3B	Mx	-.017	1
49	MP3C	X	14.767	1
50	MP3C	Z	-25.578	1
51	MP3C	Mx	-.008	1
52	MP3C	X	14.767	1
53	MP3C	Z	-25.578	1
54	MP3C	Mx	-.008	1
55	MP3A	X	12.453	4
56	MP3A	Z	-21.568	4
57	MP3A	Mx	.013	4
58	MP3A	X	12.453	4
59	MP3A	Z	-21.568	4
60	MP3A	Mx	.013	4
61	MP3B	X	9.142	4
62	MP3B	Z	-15.835	4
63	MP3B	Mx	-.014	4
64	MP3B	X	9.142	4
65	MP3B	Z	-15.835	4
66	MP3B	Mx	-.014	4
67	MP3C	X	14.539	4
68	MP3C	Z	-25.183	4
69	MP3C	Mx	-.008	4
70	MP3C	X	14.539	4
71	MP3C	Z	-25.183	4
72	MP3C	Mx	-.008	4
73	MP1A	X	4.883	3.5
74	MP1A	Z	-8.458	3.5
75	MP1A	Mx	-.005	3.5
76	MP1A	X	4.883	3.5
77	MP1A	Z	-8.458	3.5
78	MP1A	Mx	-.005	3.5
79	MP1B	X	4.883	3.5

Member Point Loads (BLC 4 : Antenna Wo (30 Deg)) (Continued)

	Member Label	Direction	Magnitude[lb,k-ft]	Location[ft,%]
80	MP1B	Z	-8.458	3.5
81	MP1B	Mx	-.005	3.5
82	MP1B	X	4.883	3.5
83	MP1B	Z	-8.458	3.5
84	MP1B	Mx	-.005	3.5
85	MP1C	X	4.883	3.5
86	MP1C	Z	-8.458	3.5
87	MP1C	Mx	-.005	3.5
88	MP1C	X	4.883	3.5
89	MP1C	Z	-8.458	3.5
90	MP1C	Mx	-.005	3.5
91	MP4A	X	28.905	2.5
92	MP4A	Z	-50.066	2.5
93	MP4A	Mx	-.031	2.5
94	MP4A	X	28.905	4
95	MP4A	Z	-50.066	4
96	MP4A	Mx	-.031	4
97	MP4B	X	17.866	2.5
98	MP4B	Z	-30.944	2.5
99	MP4B	Mx	.028	2.5
100	MP4B	X	17.866	4
101	MP4B	Z	-30.944	4
102	MP4B	Mx	.028	4
103	MP4C	X	35.865	2.5
104	MP4C	Z	-62.12	2.5
105	MP4C	Mx	.02	2.5
106	MP4C	X	35.865	4
107	MP4C	Z	-62.12	4
108	MP4C	Mx	.02	4
109	B5	X	30.088	.75
110	B5	Z	-52.115	.75
111	B5	Mx	-.019	.75
112	B5	X	30.088	.75
113	B5	Z	-52.115	.75
114	B5	Mx	-.019	.75

Member Point Loads (BLC 5 : Antenna Wo (60 Deg))

	Member Label	Direction	Magnitude[lb,k-ft]	Location[ft,%]
1	MP2A	X	92.675	1
2	MP2A	Z	-53.506	1
3	MP2A	Mx	-.05	1
4	MP2A	X	92.675	5
5	MP2A	Z	-53.506	5
6	MP2A	Mx	-.05	5
7	MP2B	X	136.267	1
8	MP2B	Z	-78.674	1
9	MP2B	Mx	.195	1
10	MP2B	X	136.267	5
11	MP2B	Z	-78.674	5
12	MP2B	Mx	.195	5
13	MP2C	X	120.156	1
14	MP2C	Z	-69.372	1
15	MP2C	Mx	.007	1
16	MP2C	X	120.156	5
17	MP2C	Z	-69.372	5
18	MP2C	Mx	.007	5

Member Point Loads (BLC 5 : Antenna Wo (60 Deg)) (Continued)

	Member Label	Direction	Magnitude[lb,k-ft]	Location[ft,%]
19	MP2A	X	92.675	1
20	MP2A	Z	-53.506	1
21	MP2A	Mx	-.117	1
22	MP2A	X	92.675	5
23	MP2A	Z	-53.506	5
24	MP2A	Mx	-.117	5
25	MP2B	X	120.156	1
26	MP2B	Z	-69.372	1
27	MP2B	Mx	.007	1
28	MP2B	X	120.156	5
29	MP2B	Z	-69.372	5
30	MP2B	Mx	.007	5
31	MP2C	X	171.804	1
32	MP2C	Z	-99.191	1
33	MP2C	Mx	.208	1
34	MP2C	X	171.804	5
35	MP2C	Z	-99.191	5
36	MP2C	Mx	.208	5
37	MP3A	X	18.819	1
38	MP3A	Z	-10.865	1
39	MP3A	Mx	.017	1
40	MP3A	X	18.819	1
41	MP3A	Z	-10.865	1
42	MP3A	Mx	.017	1
43	MP3B	X	22.965	1
44	MP3B	Z	-13.259	1
45	MP3B	Mx	-.014	1
46	MP3B	X	22.965	1
47	MP3B	Z	-13.259	1
48	MP3B	Mx	-.014	1
49	MP3C	X	21.433	1
50	MP3C	Z	-12.374	1
51	MP3C	Mx	-.016	1
52	MP3C	X	21.433	1
53	MP3C	Z	-12.374	1
54	MP3C	Mx	-.016	1
55	MP3A	X	15.835	4
56	MP3A	Z	-9.142	4
57	MP3A	Mx	.014	4
58	MP3A	X	15.835	4
59	MP3A	Z	-9.142	4
60	MP3A	Mx	.014	4
61	MP3B	X	21.568	4
62	MP3B	Z	-12.453	4
63	MP3B	Mx	-.013	4
64	MP3B	X	21.568	4
65	MP3B	Z	-12.453	4
66	MP3B	Mx	-.013	4
67	MP3C	X	19.449	4
68	MP3C	Z	-11.229	4
69	MP3C	Mx	-.014	4
70	MP3C	X	19.449	4
71	MP3C	Z	-11.229	4
72	MP3C	Mx	-.014	4
73	MP1A	X	3.675	3.5
74	MP1A	Z	-2.122	3.5
75	MP1A	Mx	-.003	3.5

Member Point Loads (BLC 5 : Antenna Wo (60 Deg)) (Continued)

	Member Label	Direction	Magnitude[lb,k-ft]	Location[ft,%]
76	MP1A	X	3.675	3.5
77	MP1A	Z	-2.122	3.5
78	MP1A	Mx	-.003	3.5
79	MP1B	X	3.675	3.5
80	MP1B	Z	-2.122	3.5
81	MP1B	Mx	-.003	3.5
82	MP1B	X	3.675	3.5
83	MP1B	Z	-2.122	3.5
84	MP1B	Mx	-.003	3.5
85	MP1C	X	3.675	3.5
86	MP1C	Z	-2.122	3.5
87	MP1C	Mx	-.003	3.5
88	MP1C	X	3.675	3.5
89	MP1C	Z	-2.122	3.5
90	MP1C	Mx	-.003	3.5
91	MP4A	X	30.944	2.5
92	MP4A	Z	-17.866	2.5
93	MP4A	Mx	-.028	2.5
94	MP4A	X	30.944	4
95	MP4A	Z	-17.866	4
96	MP4A	Mx	-.028	4
97	MP4B	X	50.066	2.5
98	MP4B	Z	-28.905	2.5
99	MP4B	Mx	.031	2.5
100	MP4B	X	50.066	4
101	MP4B	Z	-28.905	4
102	MP4B	Mx	.031	4
103	MP4C	X	42.999	2.5
104	MP4C	Z	-24.825	2.5
105	MP4C	Mx	.032	2.5
106	MP4C	X	42.999	4
107	MP4C	Z	-24.825	4
108	MP4C	Mx	.032	4
109	B5	X	45.679	.75
110	B5	Z	-26.373	.75
111	B5	Mx	-.025	.75
112	B5	X	45.679	.75
113	B5	Z	-26.373	.75
114	B5	Mx	-.025	.75

Member Point Loads (BLC 6 : Antenna Wo (90 Deg))

	Member Label	Direction	Magnitude[lb,k-ft]	Location[ft,%]
1	MP2A	X	97.711	1
2	MP2A	Z	0	1
3	MP2A	Mx	-.096	1
4	MP2A	X	97.711	5
5	MP2A	Z	0	5
6	MP2A	Mx	-.096	5
7	MP2B	X	198.382	1
8	MP2B	Z	0	1
9	MP2B	Mx	.208	1
10	MP2B	X	198.382	5
11	MP2B	Z	0	5
12	MP2B	Mx	.208	5
13	MP2C	X	97.711	1
14	MP2C	Z	0	1

Member Point Loads (BLC 6 : Antenna Wo (90 Deg)) (Continued)

	Member Label	Direction	Magnitude[lb,k-ft]	Location[ft,%]
15	MP2C	Mx	.065	1
16	MP2C	X	97.711	5
17	MP2C	Z	0	5
18	MP2C	Mx	.065	5
19	MP2A	X	97.711	1
20	MP2A	Z	0	1
21	MP2A	Mx	-.065	1
22	MP2A	X	97.711	5
23	MP2A	Z	0	5
24	MP2A	Mx	-.065	5
25	MP2B	X	189.081	1
26	MP2B	Z	0	1
27	MP2B	Mx	-.109	1
28	MP2B	X	189.081	5
29	MP2B	Z	0	5
30	MP2B	Mx	-.109	5
31	MP2C	X	157.348	1
32	MP2C	Z	0	1
33	MP2C	Mx	.195	1
34	MP2C	X	157.348	5
35	MP2C	Z	0	5
36	MP2C	Mx	.195	5
37	MP3A	X	20.846	1
38	MP3A	Z	0	1
39	MP3A	Mx	.017	1
40	MP3A	X	20.846	1
41	MP3A	Z	0	1
42	MP3A	Mx	.017	1
43	MP3B	X	30.419	1
44	MP3B	Z	0	1
45	MP3B	Mx	-.004	1
46	MP3B	X	30.419	1
47	MP3B	Z	0	1
48	MP3B	Mx	-.004	1
49	MP3C	X	20.846	1
50	MP3C	Z	0	1
51	MP3C	Mx	-.017	1
52	MP3C	X	20.846	1
53	MP3C	Z	0	1
54	MP3C	Mx	-.017	1
55	MP3A	X	17.062	4
56	MP3A	Z	0	4
57	MP3A	Mx	.014	4
58	MP3A	X	17.062	4
59	MP3A	Z	0	4
60	MP3A	Mx	.014	4
61	MP3B	X	30.302	4
62	MP3B	Z	0	4
63	MP3B	Mx	-.004	4
64	MP3B	X	30.302	4
65	MP3B	Z	0	4
66	MP3B	Mx	-.004	4
67	MP3C	X	17.062	4
68	MP3C	Z	0	4
69	MP3C	Mx	-.014	4
70	MP3C	X	17.062	4
71	MP3C	Z	0	4

Member Point Loads (BLC 6 : Antenna Wo (90 Deg)) (Continued)

	Member Label	Direction	Magnitude[lb,k-ft]	Location[ft,%]
72	MP3C	Mx	-.014	4
73	MP1A	X	3.222	3.5
74	MP1A	Z	0	3.5
75	MP1A	Mx	-.003	3.5
76	MP1A	X	3.222	3.5
77	MP1A	Z	0	3.5
78	MP1A	Mx	-.003	3.5
79	MP1B	X	3.222	3.5
80	MP1B	Z	0	3.5
81	MP1B	Mx	-.003	3.5
82	MP1B	X	3.222	3.5
83	MP1B	Z	0	3.5
84	MP1B	Mx	-.003	3.5
85	MP1C	X	3.222	3.5
86	MP1C	Z	0	3.5
87	MP1C	Mx	-.003	3.5
88	MP1C	X	3.222	3.5
89	MP1C	Z	0	3.5
90	MP1C	Mx	-.003	3.5
91	MP4A	X	31.651	2.5
92	MP4A	Z	0	2.5
93	MP4A	Mx	-.026	2.5
94	MP4A	X	31.651	4
95	MP4A	Z	0	4
96	MP4A	Mx	-.026	4
97	MP4B	X	75.81	2.5
98	MP4B	Z	0	2.5
99	MP4B	Mx	.011	2.5
100	MP4B	X	75.81	4
101	MP4B	Z	0	4
102	MP4B	Mx	.011	4
103	MP4C	X	31.651	2.5
104	MP4C	Z	0	2.5
105	MP4C	Mx	.026	2.5
106	MP4C	X	31.651	4
107	MP4C	Z	0	4
108	MP4C	Mx	.026	4
109	B5	X	51.373	.75
110	B5	Z	0	.75
111	B5	Mx	-.025	.75
112	B5	X	51.373	.75
113	B5	Z	0	.75
114	B5	Mx	-.025	.75

Member Point Loads (BLC 7 : Antenna Wo (120 Deg))

	Member Label	Direction	Magnitude[lb,k-ft]	Location[ft,%]
1	MP2A	X	120.156	1
2	MP2A	Z	69.372	1
3	MP2A	Mx	-.17	1
4	MP2A	X	120.156	5
5	MP2A	Z	69.372	5
6	MP2A	Mx	-.17	5
7	MP2B	X	163.749	1
8	MP2B	Z	94.54	1
9	MP2B	Mx	.109	1
10	MP2B	X	163.749	5

Member Point Loads (BLC 7 : Antenna Wo (120 Deg)) (Continued)

	Member Label	Direction	Magnitude[lb,k-ft]	Location[ft,%]
11	MP2B	Z	94.54	5
12	MP2B	Mx	.109	5
13	MP2C	X	92.675	1
14	MP2C	Z	53.506	1
15	MP2C	Mx	.117	1
16	MP2C	X	92.675	5
17	MP2C	Z	53.506	5
18	MP2C	Mx	.117	5
19	MP2A	X	120.156	1
20	MP2A	Z	69.372	1
21	MP2A	Mx	-.007	1
22	MP2A	X	120.156	5
23	MP2A	Z	69.372	5
24	MP2A	Mx	-.007	5
25	MP2B	X	171.804	1
26	MP2B	Z	99.191	1
27	MP2B	Mx	-.208	1
28	MP2B	X	171.804	5
29	MP2B	Z	99.191	5
30	MP2B	Mx	-.208	5
31	MP2C	X	92.675	1
32	MP2C	Z	53.506	1
33	MP2C	Mx	.117	1
34	MP2C	X	92.675	5
35	MP2C	Z	53.506	5
36	MP2C	Mx	.117	5
37	MP3A	X	21.433	1
38	MP3A	Z	12.374	1
39	MP3A	Mx	.016	1
40	MP3A	X	21.433	1
41	MP3A	Z	12.374	1
42	MP3A	Mx	.016	1
43	MP3B	X	25.578	1
44	MP3B	Z	14.767	1
45	MP3B	Mx	.008	1
46	MP3B	X	25.578	1
47	MP3B	Z	14.767	1
48	MP3B	Mx	.008	1
49	MP3C	X	18.819	1
50	MP3C	Z	10.865	1
51	MP3C	Mx	-.017	1
52	MP3C	X	18.819	1
53	MP3C	Z	10.865	1
54	MP3C	Mx	-.017	1
55	MP3A	X	19.449	4
56	MP3A	Z	11.229	4
57	MP3A	Mx	.014	4
58	MP3A	X	19.449	4
59	MP3A	Z	11.229	4
60	MP3A	Mx	.014	4
61	MP3B	X	25.183	4
62	MP3B	Z	14.539	4
63	MP3B	Mx	.008	4
64	MP3B	X	25.183	4
65	MP3B	Z	14.539	4
66	MP3B	Mx	.008	4
67	MP3C	X	15.835	4

Member Point Loads (BLC 7 : Antenna Wo (120 Deg)) (Continued)

	Member Label	Direction	Magnitude[lb,k-ft]	Location[ft,%]
68	MP3C	Z	9.142	4
69	MP3C	Mx	-.014	4
70	MP3C	X	15.835	4
71	MP3C	Z	9.142	4
72	MP3C	Mx	-.014	4
73	MP1A	X	6.69	3.5
74	MP1A	Z	3.863	3.5
75	MP1A	Mx	-.005	3.5
76	MP1A	X	6.69	3.5
77	MP1A	Z	3.863	3.5
78	MP1A	Mx	-.005	3.5
79	MP1B	X	6.69	3.5
80	MP1B	Z	3.863	3.5
81	MP1B	Mx	-.005	3.5
82	MP1B	X	6.69	3.5
83	MP1B	Z	3.863	3.5
84	MP1B	Mx	-.005	3.5
85	MP1C	X	6.69	3.5
86	MP1C	Z	3.863	3.5
87	MP1C	Mx	-.005	3.5
88	MP1C	X	6.69	3.5
89	MP1C	Z	3.863	3.5
90	MP1C	Mx	-.005	3.5
91	MP4A	X	42.999	2.5
92	MP4A	Z	24.825	2.5
93	MP4A	Mx	-.032	2.5
94	MP4A	X	42.999	4
95	MP4A	Z	24.825	4
96	MP4A	Mx	-.032	4
97	MP4B	X	62.12	2.5
98	MP4B	Z	35.865	2.5
99	MP4B	Mx	-.02	2.5
100	MP4B	X	62.12	4
101	MP4B	Z	35.865	4
102	MP4B	Mx	-.02	4
103	MP4C	X	30.944	2.5
104	MP4C	Z	17.866	2.5
105	MP4C	Mx	.028	2.5
106	MP4C	X	30.944	4
107	MP4C	Z	17.866	4
108	MP4C	Mx	.028	4
109	B5	X	49.736	.75
110	B5	Z	28.715	.75
111	B5	Mx	-.022	.75
112	B5	X	49.736	.75
113	B5	Z	28.715	.75
114	B5	Mx	-.022	.75

Member Point Loads (BLC 8 : Antenna Wo (150 Deg))

	Member Label	Direction	Magnitude[lb,k-ft]	Location[ft,%]
1	MP2A	X	94.54	1
2	MP2A	Z	163.749	1
3	MP2A	Mx	-.217	1
4	MP2A	X	94.54	5
5	MP2A	Z	163.749	5
6	MP2A	Mx	-.217	5

Member Point Loads (BLC 8 : Antenna Wo (150 Deg)) (Continued)

	Member Label	Direction	Magnitude[lb,k-ft]	Location[ft,%]
7	MP2B	X	69.372	1
8	MP2B	Z	120.156	1
9	MP2B	Mx	-.007	1
10	MP2B	X	69.372	5
11	MP2B	Z	120.156	5
12	MP2B	Mx	-.007	5
13	MP2C	X	78.674	1
14	MP2C	Z	136.267	1
15	MP2C	Mx	.195	1
16	MP2C	X	78.674	5
17	MP2C	Z	136.267	5
18	MP2C	Mx	.195	5
19	MP2A	X	94.54	1
20	MP2A	Z	163.749	1
21	MP2A	Mx	.109	1
22	MP2A	X	94.54	5
23	MP2A	Z	163.749	5
24	MP2A	Mx	.109	5
25	MP2B	X	78.674	1
26	MP2B	Z	136.267	1
27	MP2B	Mx	-.195	1
28	MP2B	X	78.674	5
29	MP2B	Z	136.267	5
30	MP2B	Mx	-.195	5
31	MP2C	X	48.855	1
32	MP2C	Z	84.62	1
33	MP2C	Mx	.065	1
34	MP2C	X	48.855	5
35	MP2C	Z	84.62	5
36	MP2C	Mx	.065	5
37	MP3A	X	14.767	1
38	MP3A	Z	25.578	1
39	MP3A	Mx	.008	1
40	MP3A	X	14.767	1
41	MP3A	Z	25.578	1
42	MP3A	Mx	.008	1
43	MP3B	X	12.374	1
44	MP3B	Z	21.433	1
45	MP3B	Mx	.016	1
46	MP3B	X	12.374	1
47	MP3B	Z	21.433	1
48	MP3B	Mx	.016	1
49	MP3C	X	13.259	1
50	MP3C	Z	22.965	1
51	MP3C	Mx	-.014	1
52	MP3C	X	13.259	1
53	MP3C	Z	22.965	1
54	MP3C	Mx	-.014	1
55	MP3A	X	14.539	4
56	MP3A	Z	25.183	4
57	MP3A	Mx	.008	4
58	MP3A	X	14.539	4
59	MP3A	Z	25.183	4
60	MP3A	Mx	.008	4
61	MP3B	X	11.229	4
62	MP3B	Z	19.449	4
63	MP3B	Mx	.014	4

Member Point Loads (BLC 8 : Antenna Wo (150 Deg)) (Continued)

	Member Label	Direction	Magnitude[lb,k-ft]	Location[ft,%]
64	MP3B	X	11.229	4
65	MP3B	Z	19.449	4
66	MP3B	Mx	.014	4
67	MP3C	X	12.453	4
68	MP3C	Z	21.568	4
69	MP3C	Mx	-.013	4
70	MP3C	X	12.453	4
71	MP3C	Z	21.568	4
72	MP3C	Mx	-.013	4
73	MP1A	X	6.624	3.5
74	MP1A	Z	11.474	3.5
75	MP1A	Mx	-.004	3.5
76	MP1A	X	6.624	3.5
77	MP1A	Z	11.474	3.5
78	MP1A	Mx	-.004	3.5
79	MP1B	X	6.624	3.5
80	MP1B	Z	11.474	3.5
81	MP1B	Mx	-.004	3.5
82	MP1B	X	6.624	3.5
83	MP1B	Z	11.474	3.5
84	MP1B	Mx	-.004	3.5
85	MP1C	X	6.624	3.5
86	MP1C	Z	11.474	3.5
87	MP1C	Mx	-.004	3.5
88	MP1C	X	6.624	3.5
89	MP1C	Z	11.474	3.5
90	MP1C	Mx	-.004	3.5
91	MP4A	X	35.865	2.5
92	MP4A	Z	62.12	2.5
93	MP4A	Mx	-.02	2.5
94	MP4A	X	35.865	4
95	MP4A	Z	62.12	4
96	MP4A	Mx	-.02	4
97	MP4B	X	24.825	2.5
98	MP4B	Z	42.999	2.5
99	MP4B	Mx	-.032	2.5
100	MP4B	X	24.825	4
101	MP4B	Z	42.999	4
102	MP4B	Mx	-.032	4
103	MP4C	X	28.905	2.5
104	MP4C	Z	50.066	2.5
105	MP4C	Mx	.031	2.5
106	MP4C	X	28.905	4
107	MP4C	Z	50.066	4
108	MP4C	Mx	.031	4
109	B5	X	32.431	.75
110	B5	Z	56.171	.75
111	B5	Mx	-.011	.75
112	B5	X	32.431	.75
113	B5	Z	56.171	.75
114	B5	Mx	-.011	.75

Member Point Loads (BLC 9 : Antenna Wo (180 Deg))

	Member Label	Direction	Magnitude[lb,k-ft]	Location[ft,%]
1	MP2A	X	0	1
2	MP2A	Z	198.382	1

Member Point Loads (BLC 9 : Antenna Wo (180 Deg)) (Continued)

	Member Label	Direction	Magnitude[lb,k-ft]	Location[ft,%]
3	MP2A	Mx	-.15	1
4	MP2A	X	0	5
5	MP2A	Z	198.382	5
6	MP2A	Mx	-.15	5
7	MP2B	X	0	1
8	MP2B	Z	97.711	1
9	MP2B	Mx	-.065	1
10	MP2B	X	0	5
11	MP2B	Z	97.711	5
12	MP2B	Mx	-.065	5
13	MP2C	X	0	1
14	MP2C	Z	198.382	1
15	MP2C	Mx	.208	1
16	MP2C	X	0	5
17	MP2C	Z	198.382	5
18	MP2C	Mx	.208	5
19	MP2A	X	0	1
20	MP2A	Z	198.382	1
21	MP2A	Mx	.208	1
22	MP2A	X	0	5
23	MP2A	Z	198.382	5
24	MP2A	Mx	.208	5
25	MP2B	X	0	1
26	MP2B	Z	107.012	1
27	MP2B	Mx	-.117	1
28	MP2B	X	0	5
29	MP2B	Z	107.012	5
30	MP2B	Mx	-.117	5
31	MP2C	X	0	1
32	MP2C	Z	138.745	1
33	MP2C	Mx	.007	1
34	MP2C	X	0	5
35	MP2C	Z	138.745	5
36	MP2C	Mx	.007	5
37	MP3A	X	0	1
38	MP3A	Z	30.419	1
39	MP3A	Mx	-.004	1
40	MP3A	X	0	1
41	MP3A	Z	30.419	1
42	MP3A	Mx	-.004	1
43	MP3B	X	0	1
44	MP3B	Z	20.846	1
45	MP3B	Mx	.017	1
46	MP3B	X	0	1
47	MP3B	Z	20.846	1
48	MP3B	Mx	.017	1
49	MP3C	X	0	1
50	MP3C	Z	30.419	1
51	MP3C	Mx	-.004	1
52	MP3C	X	0	1
53	MP3C	Z	30.419	1
54	MP3C	Mx	-.004	1
55	MP3A	X	0	4
56	MP3A	Z	30.302	4
57	MP3A	Mx	-.004	4
58	MP3A	X	0	4
59	MP3A	Z	30.302	4

Member Point Loads (BLC 9 : Antenna Wo (180 Deg)) (Continued)

	Member Label	Direction	Magnitude[lb,k-ft]	Location[ft,%]
60	MP3A	Mx	-.004	4
61	MP3B	X	0	4
62	MP3B	Z	17.062	4
63	MP3B	Mx	.014	4
64	MP3B	X	0	4
65	MP3B	Z	17.062	4
66	MP3B	Mx	.014	4
67	MP3C	X	0	4
68	MP3C	Z	30.302	4
69	MP3C	Mx	-.004	4
70	MP3C	X	0	4
71	MP3C	Z	30.302	4
72	MP3C	Mx	-.004	4
73	MP1A	X	0	3.5
74	MP1A	Z	14.269	3.5
75	MP1A	Mx	.002	3.5
76	MP1A	X	0	3.5
77	MP1A	Z	14.269	3.5
78	MP1A	Mx	.002	3.5
79	MP1B	X	0	3.5
80	MP1B	Z	14.269	3.5
81	MP1B	Mx	.002	3.5
82	MP1B	X	0	3.5
83	MP1B	Z	14.269	3.5
84	MP1B	Mx	.002	3.5
85	MP1C	X	0	3.5
86	MP1C	Z	14.269	3.5
87	MP1C	Mx	.002	3.5
88	MP1C	X	0	3.5
89	MP1C	Z	14.269	3.5
90	MP1C	Mx	.002	3.5
91	MP4A	X	0	2.5
92	MP4A	Z	75.81	2.5
93	MP4A	Mx	.011	2.5
94	MP4A	X	0	4
95	MP4A	Z	75.81	4
96	MP4A	Mx	.011	4
97	MP4B	X	0	2.5
98	MP4B	Z	31.651	2.5
99	MP4B	Mx	-.026	2.5
100	MP4B	X	0	4
101	MP4B	Z	31.651	4
102	MP4B	Mx	-.026	4
103	MP4C	X	0	2.5
104	MP4C	Z	75.81	2.5
105	MP4C	Mx	.011	2.5
106	MP4C	X	0	4
107	MP4C	Z	75.81	4
108	MP4C	Mx	.011	4
109	B5	X	0	.75
110	B5	Z	66.234	.75
111	B5	Mx	.006	.75
112	B5	X	0	.75
113	B5	Z	66.234	.75
114	B5	Mx	.006	.75

Member Point Loads (BLC 10 : Antenna Wo (210 Deg))

	Member Label	Direction	Magnitude[lb,k-ft]	Location[ft,%]
1	MP2A	X	-78.674	1
2	MP2A	Z	136.267	1
3	MP2A	Mx	-.026	1
4	MP2A	X	-78.674	5
5	MP2A	Z	136.267	5
6	MP2A	Mx	-.026	5
7	MP2B	X	-53.506	1
8	MP2B	Z	92.675	1
9	MP2B	Mx	-.117	1
10	MP2B	X	-53.506	5
11	MP2B	Z	92.675	5
12	MP2B	Mx	-.117	5
13	MP2C	X	-94.54	1
14	MP2C	Z	163.749	1
15	MP2C	Mx	.109	1
16	MP2C	X	-94.54	5
17	MP2C	Z	163.749	5
18	MP2C	Mx	.109	5
19	MP2A	X	-78.674	1
20	MP2A	Z	136.267	1
21	MP2A	Mx	.195	1
22	MP2A	X	-78.674	5
23	MP2A	Z	136.267	5
24	MP2A	Mx	.195	5
25	MP2B	X	-48.855	1
26	MP2B	Z	84.62	1
27	MP2B	Mx	-.065	1
28	MP2B	X	-48.855	5
29	MP2B	Z	84.62	5
30	MP2B	Mx	-.065	5
31	MP2C	X	-94.54	1
32	MP2C	Z	163.749	1
33	MP2C	Mx	-.109	1
34	MP2C	X	-94.54	5
35	MP2C	Z	163.749	5
36	MP2C	Mx	-.109	5
37	MP3A	X	-13.259	1
38	MP3A	Z	22.965	1
39	MP3A	Mx	-.014	1
40	MP3A	X	-13.259	1
41	MP3A	Z	22.965	1
42	MP3A	Mx	-.014	1
43	MP3B	X	-10.865	1
44	MP3B	Z	18.819	1
45	MP3B	Mx	.017	1
46	MP3B	X	-10.865	1
47	MP3B	Z	18.819	1
48	MP3B	Mx	.017	1
49	MP3C	X	-14.767	1
50	MP3C	Z	25.578	1
51	MP3C	Mx	.008	1
52	MP3C	X	-14.767	1
53	MP3C	Z	25.578	1
54	MP3C	Mx	.008	1
55	MP3A	X	-12.453	4
56	MP3A	Z	21.568	4
57	MP3A	Mx	-.013	4

Member Point Loads (BLC 10 : Antenna Wo (210 Deg)) (Continued)

	Member Label	Direction	Magnitude[lb,k-ft]	Location[ft,%]
58	MP3A	X	-12.453	4
59	MP3A	Z	21.568	4
60	MP3A	Mx	-.013	4
61	MP3B	X	-9.142	4
62	MP3B	Z	15.835	4
63	MP3B	Mx	.014	4
64	MP3B	X	-9.142	4
65	MP3B	Z	15.835	4
66	MP3B	Mx	.014	4
67	MP3C	X	-14.539	4
68	MP3C	Z	25.183	4
69	MP3C	Mx	.008	4
70	MP3C	X	-14.539	4
71	MP3C	Z	25.183	4
72	MP3C	Mx	.008	4
73	MP1A	X	-4.883	3.5
74	MP1A	Z	8.458	3.5
75	MP1A	Mx	.005	3.5
76	MP1A	X	-4.883	3.5
77	MP1A	Z	8.458	3.5
78	MP1A	Mx	.005	3.5
79	MP1B	X	-4.883	3.5
80	MP1B	Z	8.458	3.5
81	MP1B	Mx	.005	3.5
82	MP1B	X	-4.883	3.5
83	MP1B	Z	8.458	3.5
84	MP1B	Mx	.005	3.5
85	MP1C	X	-4.883	3.5
86	MP1C	Z	8.458	3.5
87	MP1C	Mx	.005	3.5
88	MP1C	X	-4.883	3.5
89	MP1C	Z	8.458	3.5
90	MP1C	Mx	.005	3.5
91	MP4A	X	-28.905	2.5
92	MP4A	Z	50.066	2.5
93	MP4A	Mx	.031	2.5
94	MP4A	X	-28.905	4
95	MP4A	Z	50.066	4
96	MP4A	Mx	.031	4
97	MP4B	X	-17.866	2.5
98	MP4B	Z	30.944	2.5
99	MP4B	Mx	-.028	2.5
100	MP4B	X	-17.866	4
101	MP4B	Z	30.944	4
102	MP4B	Mx	-.028	4
103	MP4C	X	-35.865	2.5
104	MP4C	Z	62.12	2.5
105	MP4C	Mx	-.02	2.5
106	MP4C	X	-35.865	4
107	MP4C	Z	62.12	4
108	MP4C	Mx	-.02	4
109	B5	X	-30.088	.75
110	B5	Z	52.115	.75
111	B5	Mx	.019	.75
112	B5	X	-30.088	.75
113	B5	Z	52.115	.75
114	B5	Mx	.019	.75

Member Point Loads (BLC 11 : Antenna Wo (240 Deg))

	Member Label	Direction	Magnitude[lb,k-ft]	Location[ft,%]
1	MP2A	X	-92.675	1
2	MP2A	Z	53.506	1
3	MP2A	Mx	.05	1
4	MP2A	X	-92.675	5
5	MP2A	Z	53.506	5
6	MP2A	Mx	.05	5
7	MP2B	X	-136.267	1
8	MP2B	Z	78.674	1
9	MP2B	Mx	-.195	1
10	MP2B	X	-136.267	5
11	MP2B	Z	78.674	5
12	MP2B	Mx	-.195	5
13	MP2C	X	-120.156	1
14	MP2C	Z	69.372	1
15	MP2C	Mx	-.007	1
16	MP2C	X	-120.156	5
17	MP2C	Z	69.372	5
18	MP2C	Mx	-.007	5
19	MP2A	X	-92.675	1
20	MP2A	Z	53.506	1
21	MP2A	Mx	.117	1
22	MP2A	X	-92.675	5
23	MP2A	Z	53.506	5
24	MP2A	Mx	.117	5
25	MP2B	X	-120.156	1
26	MP2B	Z	69.372	1
27	MP2B	Mx	-.007	1
28	MP2B	X	-120.156	5
29	MP2B	Z	69.372	5
30	MP2B	Mx	-.007	5
31	MP2C	X	-171.804	1
32	MP2C	Z	99.191	1
33	MP2C	Mx	-.208	1
34	MP2C	X	-171.804	5
35	MP2C	Z	99.191	5
36	MP2C	Mx	-.208	5
37	MP3A	X	-18.819	1
38	MP3A	Z	10.865	1
39	MP3A	Mx	-.017	1
40	MP3A	X	-18.819	1
41	MP3A	Z	10.865	1
42	MP3A	Mx	-.017	1
43	MP3B	X	-22.965	1
44	MP3B	Z	13.259	1
45	MP3B	Mx	.014	1
46	MP3B	X	-22.965	1
47	MP3B	Z	13.259	1
48	MP3B	Mx	.014	1
49	MP3C	X	-21.433	1
50	MP3C	Z	12.374	1
51	MP3C	Mx	.016	1
52	MP3C	X	-21.433	1
53	MP3C	Z	12.374	1
54	MP3C	Mx	.016	1
55	MP3A	X	-15.835	4
56	MP3A	Z	9.142	4
57	MP3A	Mx	-.014	4

Member Point Loads (BLC 11 : Antenna Wo (240 Deg)) (Continued)

	Member Label	Direction	Magnitude[lb,k-ft]	Location[ft,%]
58	MP3A	X	-15.835	4
59	MP3A	Z	9.142	4
60	MP3A	Mx	-.014	4
61	MP3B	X	-21.568	4
62	MP3B	Z	12.453	4
63	MP3B	Mx	.013	4
64	MP3B	X	-21.568	4
65	MP3B	Z	12.453	4
66	MP3B	Mx	.013	4
67	MP3C	X	-19.449	4
68	MP3C	Z	11.229	4
69	MP3C	Mx	.014	4
70	MP3C	X	-19.449	4
71	MP3C	Z	11.229	4
72	MP3C	Mx	.014	4
73	MP1A	X	-3.675	3.5
74	MP1A	Z	2.122	3.5
75	MP1A	Mx	.003	3.5
76	MP1A	X	-3.675	3.5
77	MP1A	Z	2.122	3.5
78	MP1A	Mx	.003	3.5
79	MP1B	X	-3.675	3.5
80	MP1B	Z	2.122	3.5
81	MP1B	Mx	.003	3.5
82	MP1B	X	-3.675	3.5
83	MP1B	Z	2.122	3.5
84	MP1B	Mx	.003	3.5
85	MP1C	X	-3.675	3.5
86	MP1C	Z	2.122	3.5
87	MP1C	Mx	.003	3.5
88	MP1C	X	-3.675	3.5
89	MP1C	Z	2.122	3.5
90	MP1C	Mx	.003	3.5
91	MP4A	X	-30.944	2.5
92	MP4A	Z	17.866	2.5
93	MP4A	Mx	.028	2.5
94	MP4A	X	-30.944	4
95	MP4A	Z	17.866	4
96	MP4A	Mx	.028	4
97	MP4B	X	-50.066	2.5
98	MP4B	Z	28.905	2.5
99	MP4B	Mx	-.031	2.5
100	MP4B	X	-50.066	4
101	MP4B	Z	28.905	4
102	MP4B	Mx	-.031	4
103	MP4C	X	-42.999	2.5
104	MP4C	Z	24.825	2.5
105	MP4C	Mx	-.032	2.5
106	MP4C	X	-42.999	4
107	MP4C	Z	24.825	4
108	MP4C	Mx	-.032	4
109	B5	X	-45.679	.75
110	B5	Z	26.373	.75
111	B5	Mx	.025	.75
112	B5	X	-45.679	.75
113	B5	Z	26.373	.75
114	B5	Mx	.025	.75

Member Point Loads (BLC 12 : Antenna Wo (270 Deg))

	Member Label	Direction	Magnitude[lb,k-ft]	Location[ft,%]
1	MP2A	X	-97.711	1
2	MP2A	Z	0	1
3	MP2A	Mx	.096	1
4	MP2A	X	-97.711	5
5	MP2A	Z	0	5
6	MP2A	Mx	.096	5
7	MP2B	X	-198.382	1
8	MP2B	Z	0	1
9	MP2B	Mx	-.208	1
10	MP2B	X	-198.382	5
11	MP2B	Z	0	5
12	MP2B	Mx	-.208	5
13	MP2C	X	-97.711	1
14	MP2C	Z	0	1
15	MP2C	Mx	-.065	1
16	MP2C	X	-97.711	5
17	MP2C	Z	0	5
18	MP2C	Mx	-.065	5
19	MP2A	X	-97.711	1
20	MP2A	Z	0	1
21	MP2A	Mx	.065	1
22	MP2A	X	-97.711	5
23	MP2A	Z	0	5
24	MP2A	Mx	.065	5
25	MP2B	X	-189.081	1
26	MP2B	Z	0	1
27	MP2B	Mx	.109	1
28	MP2B	X	-189.081	5
29	MP2B	Z	0	5
30	MP2B	Mx	.109	5
31	MP2C	X	-157.348	1
32	MP2C	Z	0	1
33	MP2C	Mx	-.195	1
34	MP2C	X	-157.348	5
35	MP2C	Z	0	5
36	MP2C	Mx	-.195	5
37	MP3A	X	-20.846	1
38	MP3A	Z	0	1
39	MP3A	Mx	-.017	1
40	MP3A	X	-20.846	1
41	MP3A	Z	0	1
42	MP3A	Mx	-.017	1
43	MP3B	X	-30.419	1
44	MP3B	Z	0	1
45	MP3B	Mx	.004	1
46	MP3B	X	-30.419	1
47	MP3B	Z	0	1
48	MP3B	Mx	.004	1
49	MP3C	X	-20.846	1
50	MP3C	Z	0	1
51	MP3C	Mx	.017	1
52	MP3C	X	-20.846	1
53	MP3C	Z	0	1
54	MP3C	Mx	.017	1
55	MP3A	X	-17.062	4
56	MP3A	Z	0	4
57	MP3A	Mx	-.014	4

Member Point Loads (BLC 12 : Antenna Wo (270 Deg)) (Continued)

	Member Label	Direction	Magnitude[lb,k-ft]	Location[ft,%]
58	MP3A	X	-17.062	4
59	MP3A	Z	0	4
60	MP3A	Mx	-.014	4
61	MP3B	X	-30.302	4
62	MP3B	Z	0	4
63	MP3B	Mx	.004	4
64	MP3B	X	-30.302	4
65	MP3B	Z	0	4
66	MP3B	Mx	.004	4
67	MP3C	X	-17.062	4
68	MP3C	Z	0	4
69	MP3C	Mx	.014	4
70	MP3C	X	-17.062	4
71	MP3C	Z	0	4
72	MP3C	Mx	.014	4
73	MP1A	X	-3.222	3.5
74	MP1A	Z	0	3.5
75	MP1A	Mx	.003	3.5
76	MP1A	X	-3.222	3.5
77	MP1A	Z	0	3.5
78	MP1A	Mx	.003	3.5
79	MP1B	X	-3.222	3.5
80	MP1B	Z	0	3.5
81	MP1B	Mx	.003	3.5
82	MP1B	X	-3.222	3.5
83	MP1B	Z	0	3.5
84	MP1B	Mx	.003	3.5
85	MP1C	X	-3.222	3.5
86	MP1C	Z	0	3.5
87	MP1C	Mx	.003	3.5
88	MP1C	X	-3.222	3.5
89	MP1C	Z	0	3.5
90	MP1C	Mx	.003	3.5
91	MP4A	X	-31.651	2.5
92	MP4A	Z	0	2.5
93	MP4A	Mx	.026	2.5
94	MP4A	X	-31.651	4
95	MP4A	Z	0	4
96	MP4A	Mx	.026	4
97	MP4B	X	-75.81	2.5
98	MP4B	Z	0	2.5
99	MP4B	Mx	-.011	2.5
100	MP4B	X	-75.81	4
101	MP4B	Z	0	4
102	MP4B	Mx	-.011	4
103	MP4C	X	-31.651	2.5
104	MP4C	Z	0	2.5
105	MP4C	Mx	-.026	2.5
106	MP4C	X	-31.651	4
107	MP4C	Z	0	4
108	MP4C	Mx	-.026	4
109	B5	X	-51.373	.75
110	B5	Z	0	.75
111	B5	Mx	.025	.75
112	B5	X	-51.373	.75
113	B5	Z	0	.75
114	B5	Mx	.025	.75

Member Point Loads (BLC 13 : Antenna Wo (300 Deg))

	Member Label	Direction	Magnitude[lb,k-ft]	Location[ft,%]
1	MP2A	X	-120.156	1
2	MP2A	Z	-69.372	1
3	MP2A	Mx	.17	1
4	MP2A	X	-120.156	5
5	MP2A	Z	-69.372	5
6	MP2A	Mx	.17	5
7	MP2B	X	-163.749	1
8	MP2B	Z	-94.54	1
9	MP2B	Mx	-.109	1
10	MP2B	X	-163.749	5
11	MP2B	Z	-94.54	5
12	MP2B	Mx	-.109	5
13	MP2C	X	-92.675	1
14	MP2C	Z	-53.506	1
15	MP2C	Mx	-.117	1
16	MP2C	X	-92.675	5
17	MP2C	Z	-53.506	5
18	MP2C	Mx	-.117	5
19	MP2A	X	-120.156	1
20	MP2A	Z	-69.372	1
21	MP2A	Mx	.007	1
22	MP2A	X	-120.156	5
23	MP2A	Z	-69.372	5
24	MP2A	Mx	.007	5
25	MP2B	X	-171.804	1
26	MP2B	Z	-99.191	1
27	MP2B	Mx	.208	1
28	MP2B	X	-171.804	5
29	MP2B	Z	-99.191	5
30	MP2B	Mx	.208	5
31	MP2C	X	-92.675	1
32	MP2C	Z	-53.506	1
33	MP2C	Mx	-.117	1
34	MP2C	X	-92.675	5
35	MP2C	Z	-53.506	5
36	MP2C	Mx	-.117	5
37	MP3A	X	-21.433	1
38	MP3A	Z	-12.374	1
39	MP3A	Mx	-.016	1
40	MP3A	X	-21.433	1
41	MP3A	Z	-12.374	1
42	MP3A	Mx	-.016	1
43	MP3B	X	-25.578	1
44	MP3B	Z	-14.767	1
45	MP3B	Mx	-.008	1
46	MP3B	X	-25.578	1
47	MP3B	Z	-14.767	1
48	MP3B	Mx	-.008	1
49	MP3C	X	-18.819	1
50	MP3C	Z	-10.865	1
51	MP3C	Mx	.017	1
52	MP3C	X	-18.819	1
53	MP3C	Z	-10.865	1
54	MP3C	Mx	.017	1
55	MP3A	X	-19.449	4
56	MP3A	Z	-11.229	4
57	MP3A	Mx	-.014	4

Member Point Loads (BLC 13 : Antenna Wo (300 Deg)) (Continued)

	Member Label	Direction	Magnitude[lb,k-ft]	Location[ft,%]
58	MP3A	X	-19.449	4
59	MP3A	Z	-11.229	4
60	MP3A	Mx	-.014	4
61	MP3B	X	-25.183	4
62	MP3B	Z	-14.539	4
63	MP3B	Mx	-.008	4
64	MP3B	X	-25.183	4
65	MP3B	Z	-14.539	4
66	MP3B	Mx	-.008	4
67	MP3C	X	-15.835	4
68	MP3C	Z	-9.142	4
69	MP3C	Mx	.014	4
70	MP3C	X	-15.835	4
71	MP3C	Z	-9.142	4
72	MP3C	Mx	.014	4
73	MP1A	X	-6.69	3.5
74	MP1A	Z	-3.863	3.5
75	MP1A	Mx	.005	3.5
76	MP1A	X	-6.69	3.5
77	MP1A	Z	-3.863	3.5
78	MP1A	Mx	.005	3.5
79	MP1B	X	-6.69	3.5
80	MP1B	Z	-3.863	3.5
81	MP1B	Mx	.005	3.5
82	MP1B	X	-6.69	3.5
83	MP1B	Z	-3.863	3.5
84	MP1B	Mx	.005	3.5
85	MP1C	X	-6.69	3.5
86	MP1C	Z	-3.863	3.5
87	MP1C	Mx	.005	3.5
88	MP1C	X	-6.69	3.5
89	MP1C	Z	-3.863	3.5
90	MP1C	Mx	.005	3.5
91	MP4A	X	-42.999	2.5
92	MP4A	Z	-24.825	2.5
93	MP4A	Mx	.032	2.5
94	MP4A	X	-42.999	4
95	MP4A	Z	-24.825	4
96	MP4A	Mx	.032	4
97	MP4B	X	-62.12	2.5
98	MP4B	Z	-35.865	2.5
99	MP4B	Mx	.02	2.5
100	MP4B	X	-62.12	4
101	MP4B	Z	-35.865	4
102	MP4B	Mx	.02	4
103	MP4C	X	-30.944	2.5
104	MP4C	Z	-17.866	2.5
105	MP4C	Mx	-.028	2.5
106	MP4C	X	-30.944	4
107	MP4C	Z	-17.866	4
108	MP4C	Mx	-.028	4
109	B5	X	-49.736	.75
110	B5	Z	-28.715	.75
111	B5	Mx	.022	.75
112	B5	X	-49.736	.75
113	B5	Z	-28.715	.75
114	B5	Mx	.022	.75

Member Point Loads (BLC 14 : Antenna Wo (330 Deg))

	Member Label	Direction	Magnitude[lb,k-ft]	Location[ft,%]
1	MP2A	X	-94.54	1
2	MP2A	Z	-163.749	1
3	MP2A	Mx	.217	1
4	MP2A	X	-94.54	5
5	MP2A	Z	-163.749	5
6	MP2A	Mx	.217	5
7	MP2B	X	-69.372	1
8	MP2B	Z	-120.156	1
9	MP2B	Mx	.007	1
10	MP2B	X	-69.372	5
11	MP2B	Z	-120.156	5
12	MP2B	Mx	.007	5
13	MP2C	X	-78.674	1
14	MP2C	Z	-136.267	1
15	MP2C	Mx	-.195	1
16	MP2C	X	-78.674	5
17	MP2C	Z	-136.267	5
18	MP2C	Mx	-.195	5
19	MP2A	X	-94.54	1
20	MP2A	Z	-163.749	1
21	MP2A	Mx	-.109	1
22	MP2A	X	-94.54	5
23	MP2A	Z	-163.749	5
24	MP2A	Mx	-.109	5
25	MP2B	X	-78.674	1
26	MP2B	Z	-136.267	1
27	MP2B	Mx	.195	1
28	MP2B	X	-78.674	5
29	MP2B	Z	-136.267	5
30	MP2B	Mx	.195	5
31	MP2C	X	-48.855	1
32	MP2C	Z	-84.62	1
33	MP2C	Mx	-.065	1
34	MP2C	X	-48.855	5
35	MP2C	Z	-84.62	5
36	MP2C	Mx	-.065	5
37	MP3A	X	-14.767	1
38	MP3A	Z	-25.578	1
39	MP3A	Mx	-.008	1
40	MP3A	X	-14.767	1
41	MP3A	Z	-25.578	1
42	MP3A	Mx	-.008	1
43	MP3B	X	-12.374	1
44	MP3B	Z	-21.433	1
45	MP3B	Mx	-.016	1
46	MP3B	X	-12.374	1
47	MP3B	Z	-21.433	1
48	MP3B	Mx	-.016	1
49	MP3C	X	-13.259	1
50	MP3C	Z	-22.965	1
51	MP3C	Mx	.014	1
52	MP3C	X	-13.259	1
53	MP3C	Z	-22.965	1
54	MP3C	Mx	.014	1
55	MP3A	X	-14.539	4
56	MP3A	Z	-25.183	4
57	MP3A	Mx	-.008	4

Member Point Loads (BLC 14 : Antenna Wo (330 Deg)) (Continued)

	Member Label	Direction	Magnitude[lb,k-ft]	Location[ft,%]
58	MP3A	X	-14.539	4
59	MP3A	Z	-25.183	4
60	MP3A	Mx	-.008	4
61	MP3B	X	-11.229	4
62	MP3B	Z	-19.449	4
63	MP3B	Mx	-.014	4
64	MP3B	X	-11.229	4
65	MP3B	Z	-19.449	4
66	MP3B	Mx	-.014	4
67	MP3C	X	-12.453	4
68	MP3C	Z	-21.568	4
69	MP3C	Mx	.013	4
70	MP3C	X	-12.453	4
71	MP3C	Z	-21.568	4
72	MP3C	Mx	.013	4
73	MP1A	X	-6.624	3.5
74	MP1A	Z	-11.474	3.5
75	MP1A	Mx	.004	3.5
76	MP1A	X	-6.624	3.5
77	MP1A	Z	-11.474	3.5
78	MP1A	Mx	.004	3.5
79	MP1B	X	-6.624	3.5
80	MP1B	Z	-11.474	3.5
81	MP1B	Mx	.004	3.5
82	MP1B	X	-6.624	3.5
83	MP1B	Z	-11.474	3.5
84	MP1B	Mx	.004	3.5
85	MP1C	X	-6.624	3.5
86	MP1C	Z	-11.474	3.5
87	MP1C	Mx	.004	3.5
88	MP1C	X	-6.624	3.5
89	MP1C	Z	-11.474	3.5
90	MP1C	Mx	.004	3.5
91	MP4A	X	-35.865	2.5
92	MP4A	Z	-62.12	2.5
93	MP4A	Mx	.02	2.5
94	MP4A	X	-35.865	4
95	MP4A	Z	-62.12	4
96	MP4A	Mx	.02	4
97	MP4B	X	-24.825	2.5
98	MP4B	Z	-42.999	2.5
99	MP4B	Mx	.032	2.5
100	MP4B	X	-24.825	4
101	MP4B	Z	-42.999	4
102	MP4B	Mx	.032	4
103	MP4C	X	-28.905	2.5
104	MP4C	Z	-50.066	2.5
105	MP4C	Mx	-.031	2.5
106	MP4C	X	-28.905	4
107	MP4C	Z	-50.066	4
108	MP4C	Mx	-.031	4
109	B5	X	-32.431	.75
110	B5	Z	-56.171	.75
111	B5	Mx	.011	.75
112	B5	X	-32.431	.75
113	B5	Z	-56.171	.75
114	B5	Mx	.011	.75

Member Point Loads (BLC 15 : Antenna Wi (0 Deg))

	Member Label	Direction	Magnitude[lb,k-ft]	Location[ft,%]
1	MP2A	X	0	1
2	MP2A	Z	-38.443	1
3	MP2A	Mx	.029	1
4	MP2A	X	0	5
5	MP2A	Z	-38.443	5
6	MP2A	Mx	.029	5
7	MP2B	X	0	1
8	MP2B	Z	-19.971	1
9	MP2B	Mx	.013	1
10	MP2B	X	0	5
11	MP2B	Z	-19.971	5
12	MP2B	Mx	.013	5
13	MP2C	X	0	1
14	MP2C	Z	-38.443	1
15	MP2C	Mx	-.04	1
16	MP2C	X	0	5
17	MP2C	Z	-38.443	5
18	MP2C	Mx	-.04	5
19	MP2A	X	0	1
20	MP2A	Z	-38.443	1
21	MP2A	Mx	-.04	1
22	MP2A	X	0	5
23	MP2A	Z	-38.443	5
24	MP2A	Mx	-.04	5
25	MP2B	X	0	1
26	MP2B	Z	-21.678	1
27	MP2B	Mx	.024	1
28	MP2B	X	0	5
29	MP2B	Z	-21.678	5
30	MP2B	Mx	.024	5
31	MP2C	X	0	1
32	MP2C	Z	-27.501	1
33	MP2C	Mx	-.001	1
34	MP2C	X	0	5
35	MP2C	Z	-27.501	5
36	MP2C	Mx	-.001	5
37	MP3A	X	0	1
38	MP3A	Z	-6.54	1
39	MP3A	Mx	.000946	1
40	MP3A	X	0	1
41	MP3A	Z	-6.54	1
42	MP3A	Mx	.000946	1
43	MP3B	X	0	1
44	MP3B	Z	-4.652	1
45	MP3B	Mx	-.004	1
46	MP3B	X	0	1
47	MP3B	Z	-4.652	1
48	MP3B	Mx	-.004	1
49	MP3C	X	0	1
50	MP3C	Z	-6.54	1
51	MP3C	Mx	.000946	1
52	MP3C	X	0	1
53	MP3C	Z	-6.54	1
54	MP3C	Mx	.000946	1
55	MP3A	X	0	4
56	MP3A	Z	-6.517	4
57	MP3A	Mx	.000943	4

Member Point Loads (BLC 15 : Antenna Wi (0 Deg)) (Continued)

	Member Label	Direction	Magnitude[lb,k-ft]	Location[ft,%]
58	MP3A	X	0	4
59	MP3A	Z	-6.517	4
60	MP3A	Mx	.000943	4
61	MP3B	X	0	4
62	MP3B	Z	-3.912	4
63	MP3B	Mx	-.003	4
64	MP3B	X	0	4
65	MP3B	Z	-3.912	4
66	MP3B	Mx	-.003	4
67	MP3C	X	0	4
68	MP3C	Z	-6.517	4
69	MP3C	Mx	.000943	4
70	MP3C	X	0	4
71	MP3C	Z	-6.517	4
72	MP3C	Mx	.000943	4
73	MP1A	X	0	3.5
74	MP1A	Z	-3.33	3.5
75	MP1A	Mx	-.000482	3.5
76	MP1A	X	0	3.5
77	MP1A	Z	-3.33	3.5
78	MP1A	Mx	-.000482	3.5
79	MP1B	X	0	3.5
80	MP1B	Z	-3.33	3.5
81	MP1B	Mx	-.000482	3.5
82	MP1B	X	0	3.5
83	MP1B	Z	-3.33	3.5
84	MP1B	Mx	-.000482	3.5
85	MP1C	X	0	3.5
86	MP1C	Z	-3.33	3.5
87	MP1C	Mx	-.000482	3.5
88	MP1C	X	0	3.5
89	MP1C	Z	-3.33	3.5
90	MP1C	Mx	-.000482	3.5
91	MP4A	X	0	2.5
92	MP4A	Z	-15.393	2.5
93	MP4A	Mx	-.002	2.5
94	MP4A	X	0	4
95	MP4A	Z	-15.393	4
96	MP4A	Mx	-.002	4
97	MP4B	X	0	2.5
98	MP4B	Z	-6.943	2.5
99	MP4B	Mx	.006	2.5
100	MP4B	X	0	4
101	MP4B	Z	-6.943	4
102	MP4B	Mx	.006	4
103	MP4C	X	0	2.5
104	MP4C	Z	-15.393	2.5
105	MP4C	Mx	-.002	2.5
106	MP4C	X	0	4
107	MP4C	Z	-15.393	4
108	MP4C	Mx	-.002	4
109	B5	X	0	.75
110	B5	Z	-13.476	.75
111	B5	Mx	-.001	.75
112	B5	X	0	.75
113	B5	Z	-13.476	.75
114	B5	Mx	-.001	.75

Member Point Loads (BLC 16 : Antenna Wi (30 Deg))

	Member Label	Direction	Magnitude[lb,k-ft]	Location[ft,%]
1	MP2A	X	15.457	1
2	MP2A	Z	-26.772	1
3	MP2A	Mx	.005	1
4	MP2A	X	15.457	5
5	MP2A	Z	-26.772	5
6	MP2A	Mx	.005	5
7	MP2B	X	10.839	1
8	MP2B	Z	-18.774	1
9	MP2B	Mx	.024	1
10	MP2B	X	10.839	5
11	MP2B	Z	-18.774	5
12	MP2B	Mx	.024	5
13	MP2C	X	18.368	1
14	MP2C	Z	-31.815	1
15	MP2C	Mx	-.021	1
16	MP2C	X	18.368	5
17	MP2C	Z	-31.815	5
18	MP2C	Mx	-.021	5
19	MP2A	X	15.457	1
20	MP2A	Z	-26.772	1
21	MP2A	Mx	-.038	1
22	MP2A	X	15.457	5
23	MP2A	Z	-26.772	5
24	MP2A	Mx	-.038	5
25	MP2B	X	9.986	1
26	MP2B	Z	-17.296	1
27	MP2B	Mx	.013	1
28	MP2B	X	9.986	5
29	MP2B	Z	-17.296	5
30	MP2B	Mx	.013	5
31	MP2C	X	18.368	1
32	MP2C	Z	-31.815	1
33	MP2C	Mx	.021	1
34	MP2C	X	18.368	5
35	MP2C	Z	-31.815	5
36	MP2C	Mx	.021	5
37	MP3A	X	2.885	1
38	MP3A	Z	-4.997	1
39	MP3A	Mx	.003	1
40	MP3A	X	2.885	1
41	MP3A	Z	-4.997	1
42	MP3A	Mx	.003	1
43	MP3B	X	2.413	1
44	MP3B	Z	-4.18	1
45	MP3B	Mx	-.004	1
46	MP3B	X	2.413	1
47	MP3B	Z	-4.18	1
48	MP3B	Mx	-.004	1
49	MP3C	X	3.183	1
50	MP3C	Z	-5.513	1
51	MP3C	Mx	-.002	1
52	MP3C	X	3.183	1
53	MP3C	Z	-5.513	1
54	MP3C	Mx	-.002	1
55	MP3A	X	2.728	4
56	MP3A	Z	-4.724	4
57	MP3A	Mx	.003	4

Member Point Loads (BLC 16 : Antenna Wi (30 Deg)) (Continued)

	Member Label	Direction	Magnitude[lb,k-ft]	Location[ft,%]
58	MP3A	X	2.728	4
59	MP3A	Z	-4.724	4
60	MP3A	Mx	.003	4
61	MP3B	X	2.076	4
62	MP3B	Z	-3.596	4
63	MP3B	Mx	-.003	4
64	MP3B	X	2.076	4
65	MP3B	Z	-3.596	4
66	MP3B	Mx	-.003	4
67	MP3C	X	3.138	4
68	MP3C	Z	-5.436	4
69	MP3C	Mx	-.002	4
70	MP3C	X	3.138	4
71	MP3C	Z	-5.436	4
72	MP3C	Mx	-.002	4
73	MP1A	X	1.205	3.5
74	MP1A	Z	-2.087	3.5
75	MP1A	Mx	-.001	3.5
76	MP1A	X	1.205	3.5
77	MP1A	Z	-2.087	3.5
78	MP1A	Mx	-.001	3.5
79	MP1B	X	1.205	3.5
80	MP1B	Z	-2.087	3.5
81	MP1B	Mx	-.001	3.5
82	MP1B	X	1.205	3.5
83	MP1B	Z	-2.087	3.5
84	MP1B	Mx	-.001	3.5
85	MP1C	X	1.205	3.5
86	MP1C	Z	-2.087	3.5
87	MP1C	Mx	-.001	3.5
88	MP1C	X	1.205	3.5
89	MP1C	Z	-2.087	3.5
90	MP1C	Mx	-.001	3.5
91	MP4A	X	5.974	2.5
92	MP4A	Z	-10.348	2.5
93	MP4A	Mx	-.006	2.5
94	MP4A	X	5.974	4
95	MP4A	Z	-10.348	4
96	MP4A	Mx	-.006	4
97	MP4B	X	3.862	2.5
98	MP4B	Z	-6.689	2.5
99	MP4B	Mx	.006	2.5
100	MP4B	X	3.862	4
101	MP4B	Z	-6.689	4
102	MP4B	Mx	.006	4
103	MP4C	X	7.306	2.5
104	MP4C	Z	-12.654	2.5
105	MP4C	Mx	.004	2.5
106	MP4C	X	7.306	4
107	MP4C	Z	-12.654	4
108	MP4C	Mx	.004	4
109	B5	X	6.172	.75
110	B5	Z	-10.69	.75
111	B5	Mx	-.004	.75
112	B5	X	6.172	.75
113	B5	Z	-10.69	.75
114	B5	Mx	-.004	.75

Member Point Loads (BLC 17 : Antenna Wi (60 Deg))

	Member Label	Direction	Magnitude[lb,k-ft]	Location[ft,%]
1	MP2A	X	18.774	1
2	MP2A	Z	-10.839	1
3	MP2A	Mx	-.01	1
4	MP2A	X	18.774	5
5	MP2A	Z	-10.839	5
6	MP2A	Mx	-.01	5
7	MP2B	X	26.772	1
8	MP2B	Z	-15.457	1
9	MP2B	Mx	.038	1
10	MP2B	X	26.772	5
11	MP2B	Z	-15.457	5
12	MP2B	Mx	.038	5
13	MP2C	X	23.816	1
14	MP2C	Z	-13.75	1
15	MP2C	Mx	.001	1
16	MP2C	X	23.816	5
17	MP2C	Z	-13.75	5
18	MP2C	Mx	.001	5
19	MP2A	X	18.774	1
20	MP2A	Z	-10.839	1
21	MP2A	Mx	-.024	1
22	MP2A	X	18.774	5
23	MP2A	Z	-10.839	5
24	MP2A	Mx	-.024	5
25	MP2B	X	23.816	1
26	MP2B	Z	-13.75	1
27	MP2B	Mx	.001	1
28	MP2B	X	23.816	5
29	MP2B	Z	-13.75	5
30	MP2B	Mx	.001	5
31	MP2C	X	33.293	1
32	MP2C	Z	-19.222	1
33	MP2C	Mx	.04	1
34	MP2C	X	33.293	5
35	MP2C	Z	-19.222	5
36	MP2C	Mx	.04	5
37	MP3A	X	4.18	1
38	MP3A	Z	-2.413	1
39	MP3A	Mx	.004	1
40	MP3A	X	4.18	1
41	MP3A	Z	-2.413	1
42	MP3A	Mx	.004	1
43	MP3B	X	4.997	1
44	MP3B	Z	-2.885	1
45	MP3B	Mx	-.003	1
46	MP3B	X	4.997	1
47	MP3B	Z	-2.885	1
48	MP3B	Mx	-.003	1
49	MP3C	X	4.695	1
50	MP3C	Z	-2.711	1
51	MP3C	Mx	-.003	1
52	MP3C	X	4.695	1
53	MP3C	Z	-2.711	1
54	MP3C	Mx	-.003	1
55	MP3A	X	3.596	4
56	MP3A	Z	-2.076	4
57	MP3A	Mx	.003	4

Member Point Loads (BLC 17 : Antenna Wi (60 Deg)) (Continued)

	Member Label	Direction	Magnitude[lb,k-ft]	Location[ft,%]
58	MP3A	X	3.596	4
59	MP3A	Z	-2.076	4
60	MP3A	Mx	.003	4
61	MP3B	X	4.724	4
62	MP3B	Z	-2.728	4
63	MP3B	Mx	-.003	4
64	MP3B	X	4.724	4
65	MP3B	Z	-2.728	4
66	MP3B	Mx	-.003	4
67	MP3C	X	4.307	4
68	MP3C	Z	-2.487	4
69	MP3C	Mx	-.003	4
70	MP3C	X	4.307	4
71	MP3C	Z	-2.487	4
72	MP3C	Mx	-.003	4
73	MP1A	X	1.109	3.5
74	MP1A	Z	-.64	3.5
75	MP1A	Mx	-.001	3.5
76	MP1A	X	1.109	3.5
77	MP1A	Z	-.64	3.5
78	MP1A	Mx	-.001	3.5
79	MP1B	X	1.109	3.5
80	MP1B	Z	-.64	3.5
81	MP1B	Mx	-.001	3.5
82	MP1B	X	1.109	3.5
83	MP1B	Z	-.64	3.5
84	MP1B	Mx	-.001	3.5
85	MP1C	X	1.109	3.5
86	MP1C	Z	-.64	3.5
87	MP1C	Mx	-.001	3.5
88	MP1C	X	1.109	3.5
89	MP1C	Z	-.64	3.5
90	MP1C	Mx	-.001	3.5
91	MP4A	X	6.689	2.5
92	MP4A	Z	-3.862	2.5
93	MP4A	Mx	-.006	2.5
94	MP4A	X	6.689	4
95	MP4A	Z	-3.862	4
96	MP4A	Mx	-.006	4
97	MP4B	X	10.348	2.5
98	MP4B	Z	-5.974	2.5
99	MP4B	Mx	.006	2.5
100	MP4B	X	10.348	4
101	MP4B	Z	-5.974	4
102	MP4B	Mx	.006	4
103	MP4C	X	8.996	2.5
104	MP4C	Z	-5.194	2.5
105	MP4C	Mx	.007	2.5
106	MP4C	X	8.996	4
107	MP4C	Z	-5.194	4
108	MP4C	Mx	.007	4
109	B5	X	9.486	.75
110	B5	Z	-5.477	.75
111	B5	Mx	-.005	.75
112	B5	X	9.486	.75
113	B5	Z	-5.477	.75
114	B5	Mx	-.005	.75

Member Point Loads (BLC 18 : Antenna Wi (90 Deg))

	Member Label	Direction	Magnitude[lb,k-ft]	Location[ft,%]
1	MP2A	X	19.971	1
2	MP2A	Z	0	1
3	MP2A	Mx	-.02	1
4	MP2A	X	19.971	5
5	MP2A	Z	0	5
6	MP2A	Mx	-.02	5
7	MP2B	X	38.443	1
8	MP2B	Z	0	1
9	MP2B	Mx	.04	1
10	MP2B	X	38.443	5
11	MP2B	Z	0	5
12	MP2B	Mx	.04	5
13	MP2C	X	19.971	1
14	MP2C	Z	0	1
15	MP2C	Mx	.013	1
16	MP2C	X	19.971	5
17	MP2C	Z	0	5
18	MP2C	Mx	.013	5
19	MP2A	X	19.971	1
20	MP2A	Z	0	1
21	MP2A	Mx	-.013	1
22	MP2A	X	19.971	5
23	MP2A	Z	0	5
24	MP2A	Mx	-.013	5
25	MP2B	X	36.736	1
26	MP2B	Z	0	1
27	MP2B	Mx	-.021	1
28	MP2B	X	36.736	5
29	MP2B	Z	0	5
30	MP2B	Mx	-.021	5
31	MP2C	X	30.914	1
32	MP2C	Z	0	1
33	MP2C	Mx	.038	1
34	MP2C	X	30.914	5
35	MP2C	Z	0	5
36	MP2C	Mx	.038	5
37	MP3A	X	4.652	1
38	MP3A	Z	0	1
39	MP3A	Mx	.004	1
40	MP3A	X	4.652	1
41	MP3A	Z	0	1
42	MP3A	Mx	.004	1
43	MP3B	X	6.54	1
44	MP3B	Z	0	1
45	MP3B	Mx	-.000946	1
46	MP3B	X	6.54	1
47	MP3B	Z	0	1
48	MP3B	Mx	-.000946	1
49	MP3C	X	4.652	1
50	MP3C	Z	0	1
51	MP3C	Mx	-.004	1
52	MP3C	X	4.652	1
53	MP3C	Z	0	1
54	MP3C	Mx	-.004	1
55	MP3A	X	3.912	4
56	MP3A	Z	0	4
57	MP3A	Mx	.003	4

Member Point Loads (BLC 18 : Antenna Wi (90 Deg)) (Continued)

	Member Label	Direction	Magnitude[lb,k-ft]	Location[ft,%]
58	MP3A	X	3.912	4
59	MP3A	Z	0	4
60	MP3A	Mx	.003	4
61	MP3B	X	6.517	4
62	MP3B	Z	0	4
63	MP3B	Mx	-.000943	4
64	MP3B	X	6.517	4
65	MP3B	Z	0	4
66	MP3B	Mx	-.000943	4
67	MP3C	X	3.912	4
68	MP3C	Z	0	4
69	MP3C	Mx	-.003	4
70	MP3C	X	3.912	4
71	MP3C	Z	0	4
72	MP3C	Mx	-.003	4
73	MP1A	X	1.072	3.5
74	MP1A	Z	0	3.5
75	MP1A	Mx	-.00088	3.5
76	MP1A	X	1.072	3.5
77	MP1A	Z	0	3.5
78	MP1A	Mx	-.00088	3.5
79	MP1B	X	1.072	3.5
80	MP1B	Z	0	3.5
81	MP1B	Mx	-.00088	3.5
82	MP1B	X	1.072	3.5
83	MP1B	Z	0	3.5
84	MP1B	Mx	-.00088	3.5
85	MP1C	X	1.072	3.5
86	MP1C	Z	0	3.5
87	MP1C	Mx	-.00088	3.5
88	MP1C	X	1.072	3.5
89	MP1C	Z	0	3.5
90	MP1C	Mx	-.00088	3.5
91	MP4A	X	6.943	2.5
92	MP4A	Z	0	2.5
93	MP4A	Mx	-.006	2.5
94	MP4A	X	6.943	4
95	MP4A	Z	0	4
96	MP4A	Mx	-.006	4
97	MP4B	X	15.393	2.5
98	MP4B	Z	0	2.5
99	MP4B	Mx	.002	2.5
100	MP4B	X	15.393	4
101	MP4B	Z	0	4
102	MP4B	Mx	.002	4
103	MP4C	X	6.943	2.5
104	MP4C	Z	0	2.5
105	MP4C	Mx	.006	2.5
106	MP4C	X	6.943	4
107	MP4C	Z	0	4
108	MP4C	Mx	.006	4
109	B5	X	10.697	.75
110	B5	Z	0	.75
111	B5	Mx	-.005	.75
112	B5	X	10.697	.75
113	B5	Z	0	.75
114	B5	Mx	-.005	.75

Member Point Loads (BLC 19 : Antenna Wi (120 Deg))

	Member Label	Direction	Magnitude[lb,k-ft]	Location[ft,%]
1	MP2A	X	23.816	1
2	MP2A	Z	13.75	1
3	MP2A	Mx	-.034	1
4	MP2A	X	23.816	5
5	MP2A	Z	13.75	5
6	MP2A	Mx	-.034	5
7	MP2B	X	31.815	1
8	MP2B	Z	18.368	1
9	MP2B	Mx	.021	1
10	MP2B	X	31.815	5
11	MP2B	Z	18.368	5
12	MP2B	Mx	.021	5
13	MP2C	X	18.774	1
14	MP2C	Z	10.839	1
15	MP2C	Mx	.024	1
16	MP2C	X	18.774	5
17	MP2C	Z	10.839	5
18	MP2C	Mx	.024	5
19	MP2A	X	23.816	1
20	MP2A	Z	13.75	1
21	MP2A	Mx	-.001	1
22	MP2A	X	23.816	5
23	MP2A	Z	13.75	5
24	MP2A	Mx	-.001	5
25	MP2B	X	33.293	1
26	MP2B	Z	19.222	1
27	MP2B	Mx	-.04	1
28	MP2B	X	33.293	5
29	MP2B	Z	19.222	5
30	MP2B	Mx	-.04	5
31	MP2C	X	18.774	1
32	MP2C	Z	10.839	1
33	MP2C	Mx	.024	1
34	MP2C	X	18.774	5
35	MP2C	Z	10.839	5
36	MP2C	Mx	.024	5
37	MP3A	X	4.695	1
38	MP3A	Z	2.711	1
39	MP3A	Mx	.003	1
40	MP3A	X	4.695	1
41	MP3A	Z	2.711	1
42	MP3A	Mx	.003	1
43	MP3B	X	5.513	1
44	MP3B	Z	3.183	1
45	MP3B	Mx	.002	1
46	MP3B	X	5.513	1
47	MP3B	Z	3.183	1
48	MP3B	Mx	.002	1
49	MP3C	X	4.18	1
50	MP3C	Z	2.413	1
51	MP3C	Mx	-.004	1
52	MP3C	X	4.18	1
53	MP3C	Z	2.413	1
54	MP3C	Mx	-.004	1
55	MP3A	X	4.307	4
56	MP3A	Z	2.487	4
57	MP3A	Mx	.003	4

Member Point Loads (BLC 19 : Antenna Wi (120 Deg)) (Continued)

	Member Label	Direction	Magnitude[lb,k-ft]	Location[ft,%]
58	MP3A	X	4.307	4
59	MP3A	Z	2.487	4
60	MP3A	Mx	.003	4
61	MP3B	X	5.436	4
62	MP3B	Z	3.138	4
63	MP3B	Mx	.002	4
64	MP3B	X	5.436	4
65	MP3B	Z	3.138	4
66	MP3B	Mx	.002	4
67	MP3C	X	3.596	4
68	MP3C	Z	2.076	4
69	MP3C	Mx	-.003	4
70	MP3C	X	3.596	4
71	MP3C	Z	2.076	4
72	MP3C	Mx	-.003	4
73	MP1A	X	1.726	3.5
74	MP1A	Z	.996	3.5
75	MP1A	Mx	-.001	3.5
76	MP1A	X	1.726	3.5
77	MP1A	Z	.996	3.5
78	MP1A	Mx	-.001	3.5
79	MP1B	X	1.726	3.5
80	MP1B	Z	.996	3.5
81	MP1B	Mx	-.001	3.5
82	MP1B	X	1.726	3.5
83	MP1B	Z	.996	3.5
84	MP1B	Mx	-.001	3.5
85	MP1C	X	1.726	3.5
86	MP1C	Z	.996	3.5
87	MP1C	Mx	-.001	3.5
88	MP1C	X	1.726	3.5
89	MP1C	Z	.996	3.5
90	MP1C	Mx	-.001	3.5
91	MP4A	X	8.996	2.5
92	MP4A	Z	5.194	2.5
93	MP4A	Mx	-.007	2.5
94	MP4A	X	8.996	4
95	MP4A	Z	5.194	4
96	MP4A	Mx	-.007	4
97	MP4B	X	12.654	2.5
98	MP4B	Z	7.306	2.5
99	MP4B	Mx	-.004	2.5
100	MP4B	X	12.654	4
101	MP4B	Z	7.306	4
102	MP4B	Mx	-.004	4
103	MP4C	X	6.689	2.5
104	MP4C	Z	3.862	2.5
105	MP4C	Mx	.006	2.5
106	MP4C	X	6.689	4
107	MP4C	Z	3.862	4
108	MP4C	Mx	.006	4
109	B5	X	10.245	.75
110	B5	Z	5.915	.75
111	B5	Mx	-.005	.75
112	B5	X	10.245	.75
113	B5	Z	5.915	.75
114	B5	Mx	-.005	.75

Member Point Loads (BLC 20 : Antenna Wi (150 Deg))

	Member Label	Direction	Magnitude[lb,k-ft]	Location[ft,%]
1	MP2A	X	18.368	1
2	MP2A	Z	31.815	1
3	MP2A	Mx	-.042	1
4	MP2A	X	18.368	5
5	MP2A	Z	31.815	5
6	MP2A	Mx	-.042	5
7	MP2B	X	13.75	1
8	MP2B	Z	23.816	1
9	MP2B	Mx	-.001	1
10	MP2B	X	13.75	5
11	MP2B	Z	23.816	5
12	MP2B	Mx	-.001	5
13	MP2C	X	15.457	1
14	MP2C	Z	26.772	1
15	MP2C	Mx	.038	1
16	MP2C	X	15.457	5
17	MP2C	Z	26.772	5
18	MP2C	Mx	.038	5
19	MP2A	X	18.368	1
20	MP2A	Z	31.815	1
21	MP2A	Mx	.021	1
22	MP2A	X	18.368	5
23	MP2A	Z	31.815	5
24	MP2A	Mx	.021	5
25	MP2B	X	15.457	1
26	MP2B	Z	26.772	1
27	MP2B	Mx	-.038	1
28	MP2B	X	15.457	5
29	MP2B	Z	26.772	5
30	MP2B	Mx	-.038	5
31	MP2C	X	9.986	1
32	MP2C	Z	17.296	1
33	MP2C	Mx	.013	1
34	MP2C	X	9.986	5
35	MP2C	Z	17.296	5
36	MP2C	Mx	.013	5
37	MP3A	X	3.183	1
38	MP3A	Z	5.513	1
39	MP3A	Mx	.002	1
40	MP3A	X	3.183	1
41	MP3A	Z	5.513	1
42	MP3A	Mx	.002	1
43	MP3B	X	2.711	1
44	MP3B	Z	4.695	1
45	MP3B	Mx	.003	1
46	MP3B	X	2.711	1
47	MP3B	Z	4.695	1
48	MP3B	Mx	.003	1
49	MP3C	X	2.885	1
50	MP3C	Z	4.997	1
51	MP3C	Mx	-.003	1
52	MP3C	X	2.885	1
53	MP3C	Z	4.997	1
54	MP3C	Mx	-.003	1
55	MP3A	X	3.138	4
56	MP3A	Z	5.436	4
57	MP3A	Mx	.002	4

Member Point Loads (BLC 20 : Antenna Wi (150 Deg)) (Continued)

	Member Label	Direction	Magnitude[lb,k-ft]	Location[ft,%]
58	MP3A	X	3.138	4
59	MP3A	Z	5.436	4
60	MP3A	Mx	.002	4
61	MP3B	X	2.487	4
62	MP3B	Z	4.307	4
63	MP3B	Mx	.003	4
64	MP3B	X	2.487	4
65	MP3B	Z	4.307	4
66	MP3B	Mx	.003	4
67	MP3C	X	2.728	4
68	MP3C	Z	4.724	4
69	MP3C	Mx	-.003	4
70	MP3C	X	2.728	4
71	MP3C	Z	4.724	4
72	MP3C	Mx	-.003	4
73	MP1A	X	1.561	3.5
74	MP1A	Z	2.703	3.5
75	MP1A	Mx	-.00089	3.5
76	MP1A	X	1.561	3.5
77	MP1A	Z	2.703	3.5
78	MP1A	Mx	-.00089	3.5
79	MP1B	X	1.561	3.5
80	MP1B	Z	2.703	3.5
81	MP1B	Mx	-.00089	3.5
82	MP1B	X	1.561	3.5
83	MP1B	Z	2.703	3.5
84	MP1B	Mx	-.00089	3.5
85	MP1C	X	1.561	3.5
86	MP1C	Z	2.703	3.5
87	MP1C	Mx	-.00089	3.5
88	MP1C	X	1.561	3.5
89	MP1C	Z	2.703	3.5
90	MP1C	Mx	-.00089	3.5
91	MP4A	X	7.306	2.5
92	MP4A	Z	12.654	2.5
93	MP4A	Mx	-.004	2.5
94	MP4A	X	7.306	4
95	MP4A	Z	12.654	4
96	MP4A	Mx	-.004	4
97	MP4B	X	5.194	2.5
98	MP4B	Z	8.996	2.5
99	MP4B	Mx	-.007	2.5
100	MP4B	X	5.194	4
101	MP4B	Z	8.996	4
102	MP4B	Mx	-.007	4
103	MP4C	X	5.974	2.5
104	MP4C	Z	10.348	2.5
105	MP4C	Mx	.006	2.5
106	MP4C	X	5.974	4
107	MP4C	Z	10.348	4
108	MP4C	Mx	.006	4
109	B5	X	6.61	.75
110	B5	Z	11.448	.75
111	B5	Mx	-.002	.75
112	B5	X	6.61	.75
113	B5	Z	11.448	.75
114	B5	Mx	-.002	.75

Member Point Loads (BLC 21 : Antenna Wi (180 Deg))

	Member Label	Direction	Magnitude[lb,k-ft]	Location[ft,%]
1	MP2A	X	0	1
2	MP2A	Z	38.443	1
3	MP2A	Mx	-.029	1
4	MP2A	X	0	5
5	MP2A	Z	38.443	5
6	MP2A	Mx	-.029	5
7	MP2B	X	0	1
8	MP2B	Z	19.971	1
9	MP2B	Mx	-.013	1
10	MP2B	X	0	5
11	MP2B	Z	19.971	5
12	MP2B	Mx	-.013	5
13	MP2C	X	0	1
14	MP2C	Z	38.443	1
15	MP2C	Mx	.04	1
16	MP2C	X	0	5
17	MP2C	Z	38.443	5
18	MP2C	Mx	.04	5
19	MP2A	X	0	1
20	MP2A	Z	38.443	1
21	MP2A	Mx	.04	1
22	MP2A	X	0	5
23	MP2A	Z	38.443	5
24	MP2A	Mx	.04	5
25	MP2B	X	0	1
26	MP2B	Z	21.678	1
27	MP2B	Mx	-.024	1
28	MP2B	X	0	5
29	MP2B	Z	21.678	5
30	MP2B	Mx	-.024	5
31	MP2C	X	0	1
32	MP2C	Z	27.501	1
33	MP2C	Mx	.001	1
34	MP2C	X	0	5
35	MP2C	Z	27.501	5
36	MP2C	Mx	.001	5
37	MP3A	X	0	1
38	MP3A	Z	6.54	1
39	MP3A	Mx	-.000946	1
40	MP3A	X	0	1
41	MP3A	Z	6.54	1
42	MP3A	Mx	-.000946	1
43	MP3B	X	0	1
44	MP3B	Z	4.652	1
45	MP3B	Mx	.004	1
46	MP3B	X	0	1
47	MP3B	Z	4.652	1
48	MP3B	Mx	.004	1
49	MP3C	X	0	1
50	MP3C	Z	6.54	1
51	MP3C	Mx	-.000946	1
52	MP3C	X	0	1
53	MP3C	Z	6.54	1
54	MP3C	Mx	-.000946	1
55	MP3A	X	0	4
56	MP3A	Z	6.517	4
57	MP3A	Mx	-.000943	4

Member Point Loads (BLC 21 : Antenna Wi (180 Deg)) (Continued)

	Member Label	Direction	Magnitude[lb,k-ft]	Location[ft,%]
58	MP3A	X	0	4
59	MP3A	Z	6.517	4
60	MP3A	Mx	-.000943	4
61	MP3B	X	0	4
62	MP3B	Z	3.912	4
63	MP3B	Mx	.003	4
64	MP3B	X	0	4
65	MP3B	Z	3.912	4
66	MP3B	Mx	.003	4
67	MP3C	X	0	4
68	MP3C	Z	6.517	4
69	MP3C	Mx	-.000943	4
70	MP3C	X	0	4
71	MP3C	Z	6.517	4
72	MP3C	Mx	-.000943	4
73	MP1A	X	0	3.5
74	MP1A	Z	3.33	3.5
75	MP1A	Mx	.000482	3.5
76	MP1A	X	0	3.5
77	MP1A	Z	3.33	3.5
78	MP1A	Mx	.000482	3.5
79	MP1B	X	0	3.5
80	MP1B	Z	3.33	3.5
81	MP1B	Mx	.000482	3.5
82	MP1B	X	0	3.5
83	MP1B	Z	3.33	3.5
84	MP1B	Mx	.000482	3.5
85	MP1C	X	0	3.5
86	MP1C	Z	3.33	3.5
87	MP1C	Mx	.000482	3.5
88	MP1C	X	0	3.5
89	MP1C	Z	3.33	3.5
90	MP1C	Mx	.000482	3.5
91	MP4A	X	0	2.5
92	MP4A	Z	15.393	2.5
93	MP4A	Mx	.002	2.5
94	MP4A	X	0	4
95	MP4A	Z	15.393	4
96	MP4A	Mx	.002	4
97	MP4B	X	0	2.5
98	MP4B	Z	6.943	2.5
99	MP4B	Mx	-.006	2.5
100	MP4B	X	0	4
101	MP4B	Z	6.943	4
102	MP4B	Mx	-.006	4
103	MP4C	X	0	2.5
104	MP4C	Z	15.393	2.5
105	MP4C	Mx	.002	2.5
106	MP4C	X	0	4
107	MP4C	Z	15.393	4
108	MP4C	Mx	.002	4
109	B5	X	0	.75
110	B5	Z	13.476	.75
111	B5	Mx	.001	.75
112	B5	X	0	.75
113	B5	Z	13.476	.75
114	B5	Mx	.001	.75

Member Point Loads (BLC 22 : Antenna Wi (210 Deg))

	Member Label	Direction	Magnitude[lb,k-ft]	Location[ft,%]
1	MP2A	X	-15.457	1
2	MP2A	Z	26.772	1
3	MP2A	Mx	-.005	1
4	MP2A	X	-15.457	5
5	MP2A	Z	26.772	5
6	MP2A	Mx	-.005	5
7	MP2B	X	-10.839	1
8	MP2B	Z	18.774	1
9	MP2B	Mx	-.024	1
10	MP2B	X	-10.839	5
11	MP2B	Z	18.774	5
12	MP2B	Mx	-.024	5
13	MP2C	X	-18.368	1
14	MP2C	Z	31.815	1
15	MP2C	Mx	.021	1
16	MP2C	X	-18.368	5
17	MP2C	Z	31.815	5
18	MP2C	Mx	.021	5
19	MP2A	X	-15.457	1
20	MP2A	Z	26.772	1
21	MP2A	Mx	.038	1
22	MP2A	X	-15.457	5
23	MP2A	Z	26.772	5
24	MP2A	Mx	.038	5
25	MP2B	X	-9.986	1
26	MP2B	Z	17.296	1
27	MP2B	Mx	-.013	1
28	MP2B	X	-9.986	5
29	MP2B	Z	17.296	5
30	MP2B	Mx	-.013	5
31	MP2C	X	-18.368	1
32	MP2C	Z	31.815	1
33	MP2C	Mx	-.021	1
34	MP2C	X	-18.368	5
35	MP2C	Z	31.815	5
36	MP2C	Mx	-.021	5
37	MP3A	X	-2.885	1
38	MP3A	Z	4.997	1
39	MP3A	Mx	-.003	1
40	MP3A	X	-2.885	1
41	MP3A	Z	4.997	1
42	MP3A	Mx	-.003	1
43	MP3B	X	-2.413	1
44	MP3B	Z	4.18	1
45	MP3B	Mx	.004	1
46	MP3B	X	-2.413	1
47	MP3B	Z	4.18	1
48	MP3B	Mx	.004	1
49	MP3C	X	-3.183	1
50	MP3C	Z	5.513	1
51	MP3C	Mx	.002	1
52	MP3C	X	-3.183	1
53	MP3C	Z	5.513	1
54	MP3C	Mx	.002	1
55	MP3A	X	-2.728	4
56	MP3A	Z	4.724	4
57	MP3A	Mx	-.003	4

Member Point Loads (BLC 22 : Antenna Wi (210 Deg)) (Continued)

	Member Label	Direction	Magnitude[lb,k-ft]	Location[ft,%]
58	MP3A	X	-2.728	4
59	MP3A	Z	4.724	4
60	MP3A	Mx	-.003	4
61	MP3B	X	-2.076	4
62	MP3B	Z	3.596	4
63	MP3B	Mx	.003	4
64	MP3B	X	-2.076	4
65	MP3B	Z	3.596	4
66	MP3B	Mx	.003	4
67	MP3C	X	-3.138	4
68	MP3C	Z	5.436	4
69	MP3C	Mx	.002	4
70	MP3C	X	-3.138	4
71	MP3C	Z	5.436	4
72	MP3C	Mx	.002	4
73	MP1A	X	-1.205	3.5
74	MP1A	Z	2.087	3.5
75	MP1A	Mx	.001	3.5
76	MP1A	X	-1.205	3.5
77	MP1A	Z	2.087	3.5
78	MP1A	Mx	.001	3.5
79	MP1B	X	-1.205	3.5
80	MP1B	Z	2.087	3.5
81	MP1B	Mx	.001	3.5
82	MP1B	X	-1.205	3.5
83	MP1B	Z	2.087	3.5
84	MP1B	Mx	.001	3.5
85	MP1C	X	-1.205	3.5
86	MP1C	Z	2.087	3.5
87	MP1C	Mx	.001	3.5
88	MP1C	X	-1.205	3.5
89	MP1C	Z	2.087	3.5
90	MP1C	Mx	.001	3.5
91	MP4A	X	-5.974	2.5
92	MP4A	Z	10.348	2.5
93	MP4A	Mx	.006	2.5
94	MP4A	X	-5.974	4
95	MP4A	Z	10.348	4
96	MP4A	Mx	.006	4
97	MP4B	X	-3.862	2.5
98	MP4B	Z	6.689	2.5
99	MP4B	Mx	-.006	2.5
100	MP4B	X	-3.862	4
101	MP4B	Z	6.689	4
102	MP4B	Mx	-.006	4
103	MP4C	X	-7.306	2.5
104	MP4C	Z	12.654	2.5
105	MP4C	Mx	-.004	2.5
106	MP4C	X	-7.306	4
107	MP4C	Z	12.654	4
108	MP4C	Mx	-.004	4
109	B5	X	-6.172	.75
110	B5	Z	10.69	.75
111	B5	Mx	.004	.75
112	B5	X	-6.172	.75
113	B5	Z	10.69	.75
114	B5	Mx	.004	.75

Member Point Loads (BLC 23 : Antenna Wi (240 Deg))

	Member Label	Direction	Magnitude[lb,k-ft]	Location[ft,%]
1	MP2A	X	-18.774	1
2	MP2A	Z	10.839	1
3	MP2A	Mx	.01	1
4	MP2A	X	-18.774	5
5	MP2A	Z	10.839	5
6	MP2A	Mx	.01	5
7	MP2B	X	-26.772	1
8	MP2B	Z	15.457	1
9	MP2B	Mx	-.038	1
10	MP2B	X	-26.772	5
11	MP2B	Z	15.457	5
12	MP2B	Mx	-.038	5
13	MP2C	X	-23.816	1
14	MP2C	Z	13.75	1
15	MP2C	Mx	-.001	1
16	MP2C	X	-23.816	5
17	MP2C	Z	13.75	5
18	MP2C	Mx	-.001	5
19	MP2A	X	-18.774	1
20	MP2A	Z	10.839	1
21	MP2A	Mx	.024	1
22	MP2A	X	-18.774	5
23	MP2A	Z	10.839	5
24	MP2A	Mx	.024	5
25	MP2B	X	-23.816	1
26	MP2B	Z	13.75	1
27	MP2B	Mx	-.001	1
28	MP2B	X	-23.816	5
29	MP2B	Z	13.75	5
30	MP2B	Mx	-.001	5
31	MP2C	X	-33.293	1
32	MP2C	Z	19.222	1
33	MP2C	Mx	-.04	1
34	MP2C	X	-33.293	5
35	MP2C	Z	19.222	5
36	MP2C	Mx	-.04	5
37	MP3A	X	-4.18	1
38	MP3A	Z	2.413	1
39	MP3A	Mx	-.004	1
40	MP3A	X	-4.18	1
41	MP3A	Z	2.413	1
42	MP3A	Mx	-.004	1
43	MP3B	X	-4.997	1
44	MP3B	Z	2.885	1
45	MP3B	Mx	.003	1
46	MP3B	X	-4.997	1
47	MP3B	Z	2.885	1
48	MP3B	Mx	.003	1
49	MP3C	X	-4.695	1
50	MP3C	Z	2.711	1
51	MP3C	Mx	.003	1
52	MP3C	X	-4.695	1
53	MP3C	Z	2.711	1
54	MP3C	Mx	.003	1
55	MP3A	X	-3.596	4
56	MP3A	Z	2.076	4
57	MP3A	Mx	-.003	4

Member Point Loads (BLC 23 : Antenna Wi (240 Deg)) (Continued)

	Member Label	Direction	Magnitude[lb,k-ft]	Location[ft,%]
58	MP3A	X	-3.596	4
59	MP3A	Z	2.076	4
60	MP3A	Mx	-.003	4
61	MP3B	X	-4.724	4
62	MP3B	Z	2.728	4
63	MP3B	Mx	.003	4
64	MP3B	X	-4.724	4
65	MP3B	Z	2.728	4
66	MP3B	Mx	.003	4
67	MP3C	X	-4.307	4
68	MP3C	Z	2.487	4
69	MP3C	Mx	.003	4
70	MP3C	X	-4.307	4
71	MP3C	Z	2.487	4
72	MP3C	Mx	.003	4
73	MP1A	X	-1.109	3.5
74	MP1A	Z	.64	3.5
75	MP1A	Mx	.001	3.5
76	MP1A	X	-1.109	3.5
77	MP1A	Z	.64	3.5
78	MP1A	Mx	.001	3.5
79	MP1B	X	-1.109	3.5
80	MP1B	Z	.64	3.5
81	MP1B	Mx	.001	3.5
82	MP1B	X	-1.109	3.5
83	MP1B	Z	.64	3.5
84	MP1B	Mx	.001	3.5
85	MP1C	X	-1.109	3.5
86	MP1C	Z	.64	3.5
87	MP1C	Mx	.001	3.5
88	MP1C	X	-1.109	3.5
89	MP1C	Z	.64	3.5
90	MP1C	Mx	.001	3.5
91	MP4A	X	-6.689	2.5
92	MP4A	Z	3.862	2.5
93	MP4A	Mx	.006	2.5
94	MP4A	X	-6.689	4
95	MP4A	Z	3.862	4
96	MP4A	Mx	.006	4
97	MP4B	X	-10.348	2.5
98	MP4B	Z	5.974	2.5
99	MP4B	Mx	-.006	2.5
100	MP4B	X	-10.348	4
101	MP4B	Z	5.974	4
102	MP4B	Mx	-.006	4
103	MP4C	X	-8.996	2.5
104	MP4C	Z	5.194	2.5
105	MP4C	Mx	-.007	2.5
106	MP4C	X	-8.996	4
107	MP4C	Z	5.194	4
108	MP4C	Mx	-.007	4
109	B5	X	-9.486	.75
110	B5	Z	5.477	.75
111	B5	Mx	.005	.75
112	B5	X	-9.486	.75
113	B5	Z	5.477	.75
114	B5	Mx	.005	.75

Member Point Loads (BLC 24 : Antenna Wi (270 Deg))

	Member Label	Direction	Magnitude[lb,k-ft]	Location[ft,%]
1	MP2A	X	-19.971	1
2	MP2A	Z	0	1
3	MP2A	Mx	.02	1
4	MP2A	X	-19.971	5
5	MP2A	Z	0	5
6	MP2A	Mx	.02	5
7	MP2B	X	-38.443	1
8	MP2B	Z	0	1
9	MP2B	Mx	-.04	1
10	MP2B	X	-38.443	5
11	MP2B	Z	0	5
12	MP2B	Mx	-.04	5
13	MP2C	X	-19.971	1
14	MP2C	Z	0	1
15	MP2C	Mx	-.013	1
16	MP2C	X	-19.971	5
17	MP2C	Z	0	5
18	MP2C	Mx	-.013	5
19	MP2A	X	-19.971	1
20	MP2A	Z	0	1
21	MP2A	Mx	.013	1
22	MP2A	X	-19.971	5
23	MP2A	Z	0	5
24	MP2A	Mx	.013	5
25	MP2B	X	-36.736	1
26	MP2B	Z	0	1
27	MP2B	Mx	.021	1
28	MP2B	X	-36.736	5
29	MP2B	Z	0	5
30	MP2B	Mx	.021	5
31	MP2C	X	-30.914	1
32	MP2C	Z	0	1
33	MP2C	Mx	-.038	1
34	MP2C	X	-30.914	5
35	MP2C	Z	0	5
36	MP2C	Mx	-.038	5
37	MP3A	X	-4.652	1
38	MP3A	Z	0	1
39	MP3A	Mx	-.004	1
40	MP3A	X	-4.652	1
41	MP3A	Z	0	1
42	MP3A	Mx	-.004	1
43	MP3B	X	-6.54	1
44	MP3B	Z	0	1
45	MP3B	Mx	.000946	1
46	MP3B	X	-6.54	1
47	MP3B	Z	0	1
48	MP3B	Mx	.000946	1
49	MP3C	X	-4.652	1
50	MP3C	Z	0	1
51	MP3C	Mx	.004	1
52	MP3C	X	-4.652	1
53	MP3C	Z	0	1
54	MP3C	Mx	.004	1
55	MP3A	X	-3.912	4
56	MP3A	Z	0	4
57	MP3A	Mx	-.003	4

Member Point Loads (BLC 24 : Antenna Wi (270 Deg)) (Continued)

	Member Label	Direction	Magnitude[lb,k-ft]	Location[ft,%]
58	MP3A	X	-3.912	4
59	MP3A	Z	0	4
60	MP3A	Mx	-.003	4
61	MP3B	X	-6.517	4
62	MP3B	Z	0	4
63	MP3B	Mx	.000943	4
64	MP3B	X	-6.517	4
65	MP3B	Z	0	4
66	MP3B	Mx	.000943	4
67	MP3C	X	-3.912	4
68	MP3C	Z	0	4
69	MP3C	Mx	.003	4
70	MP3C	X	-3.912	4
71	MP3C	Z	0	4
72	MP3C	Mx	.003	4
73	MP1A	X	-1.072	3.5
74	MP1A	Z	0	3.5
75	MP1A	Mx	.00088	3.5
76	MP1A	X	-1.072	3.5
77	MP1A	Z	0	3.5
78	MP1A	Mx	.00088	3.5
79	MP1B	X	-1.072	3.5
80	MP1B	Z	0	3.5
81	MP1B	Mx	.00088	3.5
82	MP1B	X	-1.072	3.5
83	MP1B	Z	0	3.5
84	MP1B	Mx	.00088	3.5
85	MP1C	X	-1.072	3.5
86	MP1C	Z	0	3.5
87	MP1C	Mx	.00088	3.5
88	MP1C	X	-1.072	3.5
89	MP1C	Z	0	3.5
90	MP1C	Mx	.00088	3.5
91	MP4A	X	-6.943	2.5
92	MP4A	Z	0	2.5
93	MP4A	Mx	.006	2.5
94	MP4A	X	-6.943	4
95	MP4A	Z	0	4
96	MP4A	Mx	.006	4
97	MP4B	X	-15.393	2.5
98	MP4B	Z	0	2.5
99	MP4B	Mx	-.002	2.5
100	MP4B	X	-15.393	4
101	MP4B	Z	0	4
102	MP4B	Mx	-.002	4
103	MP4C	X	-6.943	2.5
104	MP4C	Z	0	2.5
105	MP4C	Mx	-.006	2.5
106	MP4C	X	-6.943	4
107	MP4C	Z	0	4
108	MP4C	Mx	-.006	4
109	B5	X	-10.697	.75
110	B5	Z	0	.75
111	B5	Mx	.005	.75
112	B5	X	-10.697	.75
113	B5	Z	0	.75
114	B5	Mx	.005	.75

Member Point Loads (BLC 25 : Antenna Wi (300 Deg))

	Member Label	Direction	Magnitude[lb,k-ft]	Location[ft,%]
1	MP2A	X	-23.816	1
2	MP2A	Z	-13.75	1
3	MP2A	Mx	.034	1
4	MP2A	X	-23.816	5
5	MP2A	Z	-13.75	5
6	MP2A	Mx	.034	5
7	MP2B	X	-31.815	1
8	MP2B	Z	-18.368	1
9	MP2B	Mx	-.021	1
10	MP2B	X	-31.815	5
11	MP2B	Z	-18.368	5
12	MP2B	Mx	-.021	5
13	MP2C	X	-18.774	1
14	MP2C	Z	-10.839	1
15	MP2C	Mx	-.024	1
16	MP2C	X	-18.774	5
17	MP2C	Z	-10.839	5
18	MP2C	Mx	-.024	5
19	MP2A	X	-23.816	1
20	MP2A	Z	-13.75	1
21	MP2A	Mx	.001	1
22	MP2A	X	-23.816	5
23	MP2A	Z	-13.75	5
24	MP2A	Mx	.001	5
25	MP2B	X	-33.293	1
26	MP2B	Z	-19.222	1
27	MP2B	Mx	.04	1
28	MP2B	X	-33.293	5
29	MP2B	Z	-19.222	5
30	MP2B	Mx	.04	5
31	MP2C	X	-18.774	1
32	MP2C	Z	-10.839	1
33	MP2C	Mx	-.024	1
34	MP2C	X	-18.774	5
35	MP2C	Z	-10.839	5
36	MP2C	Mx	-.024	5
37	MP3A	X	-4.695	1
38	MP3A	Z	-2.711	1
39	MP3A	Mx	-.003	1
40	MP3A	X	-4.695	1
41	MP3A	Z	-2.711	1
42	MP3A	Mx	-.003	1
43	MP3B	X	-5.513	1
44	MP3B	Z	-3.183	1
45	MP3B	Mx	-.002	1
46	MP3B	X	-5.513	1
47	MP3B	Z	-3.183	1
48	MP3B	Mx	-.002	1
49	MP3C	X	-4.18	1
50	MP3C	Z	-2.413	1
51	MP3C	Mx	.004	1
52	MP3C	X	-4.18	1
53	MP3C	Z	-2.413	1
54	MP3C	Mx	.004	1
55	MP3A	X	-4.307	4
56	MP3A	Z	-2.487	4
57	MP3A	Mx	-.003	4

Member Point Loads (BLC 25 : Antenna Wi (300 Deg)) (Continued)

	Member Label	Direction	Magnitude[lb,k-ft]	Location[ft,%]
58	MP3A	X	-4.307	4
59	MP3A	Z	-2.487	4
60	MP3A	Mx	-.003	4
61	MP3B	X	-5.436	4
62	MP3B	Z	-3.138	4
63	MP3B	Mx	-.002	4
64	MP3B	X	-5.436	4
65	MP3B	Z	-3.138	4
66	MP3B	Mx	-.002	4
67	MP3C	X	-3.596	4
68	MP3C	Z	-2.076	4
69	MP3C	Mx	.003	4
70	MP3C	X	-3.596	4
71	MP3C	Z	-2.076	4
72	MP3C	Mx	.003	4
73	MP1A	X	-1.726	3.5
74	MP1A	Z	-.996	3.5
75	MP1A	Mx	.001	3.5
76	MP1A	X	-1.726	3.5
77	MP1A	Z	-.996	3.5
78	MP1A	Mx	.001	3.5
79	MP1B	X	-1.726	3.5
80	MP1B	Z	-.996	3.5
81	MP1B	Mx	.001	3.5
82	MP1B	X	-1.726	3.5
83	MP1B	Z	-.996	3.5
84	MP1B	Mx	.001	3.5
85	MP1C	X	-1.726	3.5
86	MP1C	Z	-.996	3.5
87	MP1C	Mx	.001	3.5
88	MP1C	X	-1.726	3.5
89	MP1C	Z	-.996	3.5
90	MP1C	Mx	.001	3.5
91	MP4A	X	-8.996	2.5
92	MP4A	Z	-5.194	2.5
93	MP4A	Mx	.007	2.5
94	MP4A	X	-8.996	4
95	MP4A	Z	-5.194	4
96	MP4A	Mx	.007	4
97	MP4B	X	-12.654	2.5
98	MP4B	Z	-7.306	2.5
99	MP4B	Mx	.004	2.5
100	MP4B	X	-12.654	4
101	MP4B	Z	-7.306	4
102	MP4B	Mx	.004	4
103	MP4C	X	-6.689	2.5
104	MP4C	Z	-3.862	2.5
105	MP4C	Mx	-.006	2.5
106	MP4C	X	-6.689	4
107	MP4C	Z	-3.862	4
108	MP4C	Mx	-.006	4
109	B5	X	-10.245	.75
110	B5	Z	-5.915	.75
111	B5	Mx	.005	.75
112	B5	X	-10.245	.75
113	B5	Z	-5.915	.75
114	B5	Mx	.005	.75

Member Point Loads (BLC 26 : Antenna Wi (330 Deg))

	Member Label	Direction	Magnitude[lb,k-ft]	Location[ft,%]
1	MP2A	X	-18.368	1
2	MP2A	Z	-31.815	1
3	MP2A	Mx	.042	1
4	MP2A	X	-18.368	5
5	MP2A	Z	-31.815	5
6	MP2A	Mx	.042	5
7	MP2B	X	-13.75	1
8	MP2B	Z	-23.816	1
9	MP2B	Mx	.001	1
10	MP2B	X	-13.75	5
11	MP2B	Z	-23.816	5
12	MP2B	Mx	.001	5
13	MP2C	X	-15.457	1
14	MP2C	Z	-26.772	1
15	MP2C	Mx	-.038	1
16	MP2C	X	-15.457	5
17	MP2C	Z	-26.772	5
18	MP2C	Mx	-.038	5
19	MP2A	X	-18.368	1
20	MP2A	Z	-31.815	1
21	MP2A	Mx	-.021	1
22	MP2A	X	-18.368	5
23	MP2A	Z	-31.815	5
24	MP2A	Mx	-.021	5
25	MP2B	X	-15.457	1
26	MP2B	Z	-26.772	1
27	MP2B	Mx	.038	1
28	MP2B	X	-15.457	5
29	MP2B	Z	-26.772	5
30	MP2B	Mx	.038	5
31	MP2C	X	-9.986	1
32	MP2C	Z	-17.296	1
33	MP2C	Mx	-.013	1
34	MP2C	X	-9.986	5
35	MP2C	Z	-17.296	5
36	MP2C	Mx	-.013	5
37	MP3A	X	-3.183	1
38	MP3A	Z	-5.513	1
39	MP3A	Mx	-.002	1
40	MP3A	X	-3.183	1
41	MP3A	Z	-5.513	1
42	MP3A	Mx	-.002	1
43	MP3B	X	-2.711	1
44	MP3B	Z	-4.695	1
45	MP3B	Mx	-.003	1
46	MP3B	X	-2.711	1
47	MP3B	Z	-4.695	1
48	MP3B	Mx	-.003	1
49	MP3C	X	-2.885	1
50	MP3C	Z	-4.997	1
51	MP3C	Mx	.003	1
52	MP3C	X	-2.885	1
53	MP3C	Z	-4.997	1
54	MP3C	Mx	.003	1
55	MP3A	X	-3.138	4
56	MP3A	Z	-5.436	4
57	MP3A	Mx	-.002	4

Member Point Loads (BLC 26 : Antenna Wi (330 Deg)) (Continued)

	Member Label	Direction	Magnitude[lb,k-ft]	Location[ft,%]
58	MP3A	X	-3.138	4
59	MP3A	Z	-5.436	4
60	MP3A	Mx	-.002	4
61	MP3B	X	-2.487	4
62	MP3B	Z	-4.307	4
63	MP3B	Mx	-.003	4
64	MP3B	X	-2.487	4
65	MP3B	Z	-4.307	4
66	MP3B	Mx	-.003	4
67	MP3C	X	-2.728	4
68	MP3C	Z	-4.724	4
69	MP3C	Mx	.003	4
70	MP3C	X	-2.728	4
71	MP3C	Z	-4.724	4
72	MP3C	Mx	.003	4
73	MP1A	X	-1.561	3.5
74	MP1A	Z	-2.703	3.5
75	MP1A	Mx	.00089	3.5
76	MP1A	X	-1.561	3.5
77	MP1A	Z	-2.703	3.5
78	MP1A	Mx	.00089	3.5
79	MP1B	X	-1.561	3.5
80	MP1B	Z	-2.703	3.5
81	MP1B	Mx	.00089	3.5
82	MP1B	X	-1.561	3.5
83	MP1B	Z	-2.703	3.5
84	MP1B	Mx	.00089	3.5
85	MP1C	X	-1.561	3.5
86	MP1C	Z	-2.703	3.5
87	MP1C	Mx	.00089	3.5
88	MP1C	X	-1.561	3.5
89	MP1C	Z	-2.703	3.5
90	MP1C	Mx	.00089	3.5
91	MP4A	X	-7.306	2.5
92	MP4A	Z	-12.654	2.5
93	MP4A	Mx	.004	2.5
94	MP4A	X	-7.306	4
95	MP4A	Z	-12.654	4
96	MP4A	Mx	.004	4
97	MP4B	X	-5.194	2.5
98	MP4B	Z	-8.996	2.5
99	MP4B	Mx	.007	2.5
100	MP4B	X	-5.194	4
101	MP4B	Z	-8.996	4
102	MP4B	Mx	.007	4
103	MP4C	X	-5.974	2.5
104	MP4C	Z	-10.348	2.5
105	MP4C	Mx	-.006	2.5
106	MP4C	X	-5.974	4
107	MP4C	Z	-10.348	4
108	MP4C	Mx	-.006	4
109	B5	X	-6.61	.75
110	B5	Z	-11.448	.75
111	B5	Mx	.002	.75
112	B5	X	-6.61	.75
113	B5	Z	-11.448	.75
114	B5	Mx	.002	.75

Member Point Loads (BLC 27 : Antenna Wm (0 Deg))

	Member Label	Direction	Magnitude[lb,k-ft]	Location[ft,%]
1	MP2A	X	0	1
2	MP2A	Z	-12.823	1
3	MP2A	Mx	.01	1
4	MP2A	X	0	5
5	MP2A	Z	-12.823	5
6	MP2A	Mx	.01	5
7	MP2B	X	0	1
8	MP2B	Z	-6.316	1
9	MP2B	Mx	.004	1
10	MP2B	X	0	5
11	MP2B	Z	-6.316	5
12	MP2B	Mx	.004	5
13	MP2C	X	0	1
14	MP2C	Z	-12.823	1
15	MP2C	Mx	-.013	1
16	MP2C	X	0	5
17	MP2C	Z	-12.823	5
18	MP2C	Mx	-.013	5
19	MP2A	X	0	1
20	MP2A	Z	-12.823	1
21	MP2A	Mx	-.013	1
22	MP2A	X	0	5
23	MP2A	Z	-12.823	5
24	MP2A	Mx	-.013	5
25	MP2B	X	0	1
26	MP2B	Z	-6.917	1
27	MP2B	Mx	.008	1
28	MP2B	X	0	5
29	MP2B	Z	-6.917	5
30	MP2B	Mx	.008	5
31	MP2C	X	0	1
32	MP2C	Z	-8.968	1
33	MP2C	Mx	-.000441	1
34	MP2C	X	0	5
35	MP2C	Z	-8.968	5
36	MP2C	Mx	-.000441	5
37	MP3A	X	0	1
38	MP3A	Z	-1.966	1
39	MP3A	Mx	.000284	1
40	MP3A	X	0	1
41	MP3A	Z	-1.966	1
42	MP3A	Mx	.000284	1
43	MP3B	X	0	1
44	MP3B	Z	-1.347	1
45	MP3B	Mx	-.001	1
46	MP3B	X	0	1
47	MP3B	Z	-1.347	1
48	MP3B	Mx	-.001	1
49	MP3C	X	0	1
50	MP3C	Z	-1.966	1
51	MP3C	Mx	.000284	1
52	MP3C	X	0	1
53	MP3C	Z	-1.966	1
54	MP3C	Mx	.000284	1
55	MP3A	X	0	4
56	MP3A	Z	-1.959	4
57	MP3A	Mx	.000283	4

Member Point Loads (BLC 27 : Antenna Wm (0 Deg)) (Continued)

	Member Label	Direction	Magnitude[lb,k-ft]	Location[ft,%]
58	MP3A	X	0	4
59	MP3A	Z	-1.959	4
60	MP3A	Mx	.000283	4
61	MP3B	X	0	4
62	MP3B	Z	-1.103	4
63	MP3B	Mx	-.000905	4
64	MP3B	X	0	4
65	MP3B	Z	-1.103	4
66	MP3B	Mx	-.000905	4
67	MP3C	X	0	4
68	MP3C	Z	-1.959	4
69	MP3C	Mx	.000283	4
70	MP3C	X	0	4
71	MP3C	Z	-1.959	4
72	MP3C	Mx	.000283	4
73	MP1A	X	0	3.5
74	MP1A	Z	-.922	3.5
75	MP1A	Mx	-.000133	3.5
76	MP1A	X	0	3.5
77	MP1A	Z	-.922	3.5
78	MP1A	Mx	-.000133	3.5
79	MP1B	X	0	3.5
80	MP1B	Z	-.922	3.5
81	MP1B	Mx	-.000133	3.5
82	MP1B	X	0	3.5
83	MP1B	Z	-.922	3.5
84	MP1B	Mx	-.000133	3.5
85	MP1C	X	0	3.5
86	MP1C	Z	-.922	3.5
87	MP1C	Mx	-.000133	3.5
88	MP1C	X	0	3.5
89	MP1C	Z	-.922	3.5
90	MP1C	Mx	-.000133	3.5
91	MP4A	X	0	2.5
92	MP4A	Z	-4.9	2.5
93	MP4A	Mx	-.000709	2.5
94	MP4A	X	0	4
95	MP4A	Z	-4.9	4
96	MP4A	Mx	-.000709	4
97	MP4B	X	0	2.5
98	MP4B	Z	-2.046	2.5
99	MP4B	Mx	.002	2.5
100	MP4B	X	0	4
101	MP4B	Z	-2.046	4
102	MP4B	Mx	.002	4
103	MP4C	X	0	2.5
104	MP4C	Z	-4.9	2.5
105	MP4C	Mx	-.000709	2.5
106	MP4C	X	0	4
107	MP4C	Z	-4.9	4
108	MP4C	Mx	-.000709	4
109	B5	X	0	.75
110	B5	Z	-4.281	.75
111	B5	Mx	-.000372	.75
112	B5	X	0	.75
113	B5	Z	-4.281	.75
114	B5	Mx	-.000372	.75

Member Point Loads (BLC 28 : Antenna Wm (30 Deg))

	Member Label	Direction	Magnitude[lb,k-ft]	Location[ft,%]
1	MP2A	X	5.085	1
2	MP2A	Z	-8.808	1
3	MP2A	Mx	.002	1
4	MP2A	X	5.085	5
5	MP2A	Z	-8.808	5
6	MP2A	Mx	.002	5
7	MP2B	X	3.458	1
8	MP2B	Z	-5.99	1
9	MP2B	Mx	.008	1
10	MP2B	X	3.458	5
11	MP2B	Z	-5.99	5
12	MP2B	Mx	.008	5
13	MP2C	X	6.111	1
14	MP2C	Z	-10.584	1
15	MP2C	Mx	-.007	1
16	MP2C	X	6.111	5
17	MP2C	Z	-10.584	5
18	MP2C	Mx	-.007	5
19	MP2A	X	5.085	1
20	MP2A	Z	-8.808	1
21	MP2A	Mx	-.013	1
22	MP2A	X	5.085	5
23	MP2A	Z	-8.808	5
24	MP2A	Mx	-.013	5
25	MP2B	X	3.158	1
26	MP2B	Z	-5.47	1
27	MP2B	Mx	.004	1
28	MP2B	X	3.158	5
29	MP2B	Z	-5.47	5
30	MP2B	Mx	.004	5
31	MP2C	X	6.111	1
32	MP2C	Z	-10.584	1
33	MP2C	Mx	.007	1
34	MP2C	X	6.111	5
35	MP2C	Z	-10.584	5
36	MP2C	Mx	.007	5
37	MP3A	X	.857	1
38	MP3A	Z	-1.484	1
39	MP3A	Mx	.000918	1
40	MP3A	X	.857	1
41	MP3A	Z	-1.484	1
42	MP3A	Mx	.000918	1
43	MP3B	X	.702	1
44	MP3B	Z	-1.216	1
45	MP3B	Mx	-.001	1
46	MP3B	X	.702	1
47	MP3B	Z	-1.216	1
48	MP3B	Mx	-.001	1
49	MP3C	X	.955	1
50	MP3C	Z	-1.653	1
51	MP3C	Mx	-.000545	1
52	MP3C	X	.955	1
53	MP3C	Z	-1.653	1
54	MP3C	Mx	-.000545	1
55	MP3A	X	.805	4
56	MP3A	Z	-1.394	4
57	MP3A	Mx	.000862	4

Member Point Loads (BLC 28 : Antenna Wm (30 Deg)) (Continued)

	Member Label	Direction	Magnitude[lb,k-ft]	Location[ft,%]
58	MP3A	X	.805	4
59	MP3A	Z	-1.394	4
60	MP3A	Mx	.000862	4
61	MP3B	X	.591	4
62	MP3B	Z	-1.024	4
63	MP3B	Mx	-.000926	4
64	MP3B	X	.591	4
65	MP3B	Z	-1.024	4
66	MP3B	Mx	-.000926	4
67	MP3C	X	.94	4
68	MP3C	Z	-1.628	4
69	MP3C	Mx	-.000536	4
70	MP3C	X	.94	4
71	MP3C	Z	-1.628	4
72	MP3C	Mx	-.000536	4
73	MP1A	X	.316	3.5
74	MP1A	Z	-.547	3.5
75	MP1A	Mx	-.000338	3.5
76	MP1A	X	.316	3.5
77	MP1A	Z	-.547	3.5
78	MP1A	Mx	-.000338	3.5
79	MP1B	X	.316	3.5
80	MP1B	Z	-.547	3.5
81	MP1B	Mx	-.000338	3.5
82	MP1B	X	.316	3.5
83	MP1B	Z	-.547	3.5
84	MP1B	Mx	-.000338	3.5
85	MP1C	X	.316	3.5
86	MP1C	Z	-.547	3.5
87	MP1C	Mx	-.000338	3.5
88	MP1C	X	.316	3.5
89	MP1C	Z	-.547	3.5
90	MP1C	Mx	-.000338	3.5
91	MP4A	X	1.868	2.5
92	MP4A	Z	-3.236	2.5
93	MP4A	Mx	-.002	2.5
94	MP4A	X	1.868	4
95	MP4A	Z	-3.236	4
96	MP4A	Mx	-.002	4
97	MP4B	X	1.155	2.5
98	MP4B	Z	-2	2.5
99	MP4B	Mx	.002	2.5
100	MP4B	X	1.155	4
101	MP4B	Z	-2	4
102	MP4B	Mx	.002	4
103	MP4C	X	2.318	2.5
104	MP4C	Z	-4.015	2.5
105	MP4C	Mx	.001	2.5
106	MP4C	X	2.318	4
107	MP4C	Z	-4.015	4
108	MP4C	Mx	.001	4
109	B5	X	1.945	.75
110	B5	Z	-3.369	.75
111	B5	Mx	-.001	.75
112	B5	X	1.945	.75
113	B5	Z	-3.369	.75
114	B5	Mx	-.001	.75

Member Point Loads (BLC 29 : Antenna Wm (60 Deg))

	Member Label	Direction	Magnitude[lb,k-ft]	Location[ft,%]
1	MP2A	X	5.99	1
2	MP2A	Z	-3.458	1
3	MP2A	Mx	-.003	1
4	MP2A	X	5.99	5
5	MP2A	Z	-3.458	5
6	MP2A	Mx	-.003	5
7	MP2B	X	8.808	1
8	MP2B	Z	-5.085	1
9	MP2B	Mx	.013	1
10	MP2B	X	8.808	5
11	MP2B	Z	-5.085	5
12	MP2B	Mx	.013	5
13	MP2C	X	7.767	1
14	MP2C	Z	-4.484	1
15	MP2C	Mx	.000441	1
16	MP2C	X	7.767	5
17	MP2C	Z	-4.484	5
18	MP2C	Mx	.000441	5
19	MP2A	X	5.99	1
20	MP2A	Z	-3.458	1
21	MP2A	Mx	-.008	1
22	MP2A	X	5.99	5
23	MP2A	Z	-3.458	5
24	MP2A	Mx	-.008	5
25	MP2B	X	7.767	1
26	MP2B	Z	-4.484	1
27	MP2B	Mx	.00044	1
28	MP2B	X	7.767	5
29	MP2B	Z	-4.484	5
30	MP2B	Mx	.00044	5
31	MP2C	X	11.105	1
32	MP2C	Z	-6.411	1
33	MP2C	Mx	.013	1
34	MP2C	X	11.105	5
35	MP2C	Z	-6.411	5
36	MP2C	Mx	.013	5
37	MP3A	X	1.216	1
38	MP3A	Z	-.702	1
39	MP3A	Mx	.001	1
40	MP3A	X	1.216	1
41	MP3A	Z	-.702	1
42	MP3A	Mx	.001	1
43	MP3B	X	1.484	1
44	MP3B	Z	-.857	1
45	MP3B	Mx	-.000918	1
46	MP3B	X	1.484	1
47	MP3B	Z	-.857	1
48	MP3B	Mx	-.000918	1
49	MP3C	X	1.385	1
50	MP3C	Z	-.8	1
51	MP3C	Mx	-.001	1
52	MP3C	X	1.385	1
53	MP3C	Z	-.8	1
54	MP3C	Mx	-.001	1
55	MP3A	X	1.024	4
56	MP3A	Z	-.591	4
57	MP3A	Mx	.000926	4

Member Point Loads (BLC 29 : Antenna Wm (60 Deg)) (Continued)

	Member Label	Direction	Magnitude[lb,k-ft]	Location[ft,%]
58	MP3A	X	1.024	4
59	MP3A	Z	-.591	4
60	MP3A	Mx	.000926	4
61	MP3B	X	1.394	4
62	MP3B	Z	-.805	4
63	MP3B	Mx	-.000862	4
64	MP3B	X	1.394	4
65	MP3B	Z	-.805	4
66	MP3B	Mx	-.000862	4
67	MP3C	X	1.257	4
68	MP3C	Z	-.726	4
69	MP3C	Mx	-.000927	4
70	MP3C	X	1.257	4
71	MP3C	Z	-.726	4
72	MP3C	Mx	-.000927	4
73	MP1A	X	.238	3.5
74	MP1A	Z	-.137	3.5
75	MP1A	Mx	-.000215	3.5
76	MP1A	X	.238	3.5
77	MP1A	Z	-.137	3.5
78	MP1A	Mx	-.000215	3.5
79	MP1B	X	.238	3.5
80	MP1B	Z	-.137	3.5
81	MP1B	Mx	-.000215	3.5
82	MP1B	X	.238	3.5
83	MP1B	Z	-.137	3.5
84	MP1B	Mx	-.000215	3.5
85	MP1C	X	.238	3.5
86	MP1C	Z	-.137	3.5
87	MP1C	Mx	-.000215	3.5
88	MP1C	X	.238	3.5
89	MP1C	Z	-.137	3.5
90	MP1C	Mx	-.000215	3.5
91	MP4A	X	2	2.5
92	MP4A	Z	-1.155	2.5
93	MP4A	Mx	-.002	2.5
94	MP4A	X	2	4
95	MP4A	Z	-1.155	4
96	MP4A	Mx	-.002	4
97	MP4B	X	3.236	2.5
98	MP4B	Z	-1.868	2.5
99	MP4B	Mx	.002	2.5
100	MP4B	X	3.236	4
101	MP4B	Z	-1.868	4
102	MP4B	Mx	.002	4
103	MP4C	X	2.779	2.5
104	MP4C	Z	-1.605	2.5
105	MP4C	Mx	.002	2.5
106	MP4C	X	2.779	4
107	MP4C	Z	-1.605	4
108	MP4C	Mx	.002	4
109	B5	X	2.953	.75
110	B5	Z	-1.705	.75
111	B5	Mx	-.002	.75
112	B5	X	2.953	.75
113	B5	Z	-1.705	.75
114	B5	Mx	-.002	.75

Member Point Loads (BLC 30 : Antenna Wm (90 Deg))

	Member Label	Direction	Magnitude[lb,k-ft]	Location[ft,%]
1	MP2A	X	6.316	1
2	MP2A	Z	0	1
3	MP2A	Mx	-.006	1
4	MP2A	X	6.316	5
5	MP2A	Z	0	5
6	MP2A	Mx	-.006	5
7	MP2B	X	12.823	1
8	MP2B	Z	0	1
9	MP2B	Mx	.013	1
10	MP2B	X	12.823	5
11	MP2B	Z	0	5
12	MP2B	Mx	.013	5
13	MP2C	X	6.316	1
14	MP2C	Z	0	1
15	MP2C	Mx	.004	1
16	MP2C	X	6.316	5
17	MP2C	Z	0	5
18	MP2C	Mx	.004	5
19	MP2A	X	6.316	1
20	MP2A	Z	0	1
21	MP2A	Mx	-.004	1
22	MP2A	X	6.316	5
23	MP2A	Z	0	5
24	MP2A	Mx	-.004	5
25	MP2B	X	12.222	1
26	MP2B	Z	0	1
27	MP2B	Mx	-.007	1
28	MP2B	X	12.222	5
29	MP2B	Z	0	5
30	MP2B	Mx	-.007	5
31	MP2C	X	10.17	1
32	MP2C	Z	0	1
33	MP2C	Mx	.013	1
34	MP2C	X	10.17	5
35	MP2C	Z	0	5
36	MP2C	Mx	.013	5
37	MP3A	X	1.347	1
38	MP3A	Z	0	1
39	MP3A	Mx	.001	1
40	MP3A	X	1.347	1
41	MP3A	Z	0	1
42	MP3A	Mx	.001	1
43	MP3B	X	1.966	1
44	MP3B	Z	0	1
45	MP3B	Mx	-.000284	1
46	MP3B	X	1.966	1
47	MP3B	Z	0	1
48	MP3B	Mx	-.000284	1
49	MP3C	X	1.347	1
50	MP3C	Z	0	1
51	MP3C	Mx	-.001	1
52	MP3C	X	1.347	1
53	MP3C	Z	0	1
54	MP3C	Mx	-.001	1
55	MP3A	X	1.103	4
56	MP3A	Z	0	4
57	MP3A	Mx	.000905	4

Member Point Loads (BLC 30 : Antenna Wm (90 Deg)) (Continued)

	Member Label	Direction	Magnitude[lb,k-ft]	Location[ft,%]
58	MP3A	X	1.103	4
59	MP3A	Z	0	4
60	MP3A	Mx	.000905	4
61	MP3B	X	1.959	4
62	MP3B	Z	0	4
63	MP3B	Mx	-.000283	4
64	MP3B	X	1.959	4
65	MP3B	Z	0	4
66	MP3B	Mx	-.000283	4
67	MP3C	X	1.103	4
68	MP3C	Z	0	4
69	MP3C	Mx	-.000905	4
70	MP3C	X	1.103	4
71	MP3C	Z	0	4
72	MP3C	Mx	-.000905	4
73	MP1A	X	.208	3.5
74	MP1A	Z	0	3.5
75	MP1A	Mx	-.000171	3.5
76	MP1A	X	.208	3.5
77	MP1A	Z	0	3.5
78	MP1A	Mx	-.000171	3.5
79	MP1B	X	.208	3.5
80	MP1B	Z	0	3.5
81	MP1B	Mx	-.000171	3.5
82	MP1B	X	.208	3.5
83	MP1B	Z	0	3.5
84	MP1B	Mx	-.000171	3.5
85	MP1C	X	.208	3.5
86	MP1C	Z	0	3.5
87	MP1C	Mx	-.000171	3.5
88	MP1C	X	.208	3.5
89	MP1C	Z	0	3.5
90	MP1C	Mx	-.000171	3.5
91	MP4A	X	2.046	2.5
92	MP4A	Z	0	2.5
93	MP4A	Mx	-.002	2.5
94	MP4A	X	2.046	4
95	MP4A	Z	0	4
96	MP4A	Mx	-.002	4
97	MP4B	X	4.9	2.5
98	MP4B	Z	0	2.5
99	MP4B	Mx	.000709	2.5
100	MP4B	X	4.9	4
101	MP4B	Z	0	4
102	MP4B	Mx	.000709	4
103	MP4C	X	2.046	2.5
104	MP4C	Z	0	2.5
105	MP4C	Mx	.002	2.5
106	MP4C	X	2.046	4
107	MP4C	Z	0	4
108	MP4C	Mx	.002	4
109	B5	X	3.321	.75
110	B5	Z	0	.75
111	B5	Mx	-.002	.75
112	B5	X	3.321	.75
113	B5	Z	0	.75
114	B5	Mx	-.002	.75

Member Point Loads (BLC 31 : Antenna Wm (120 Deg))

	Member Label	Direction	Magnitude[lb,k-ft]	Location[ft,%]
1	MP2A	X	7.767	1
2	MP2A	Z	4.484	1
3	MP2A	Mx	-.011	1
4	MP2A	X	7.767	5
5	MP2A	Z	4.484	5
6	MP2A	Mx	-.011	5
7	MP2B	X	10.584	1
8	MP2B	Z	6.111	1
9	MP2B	Mx	.007	1
10	MP2B	X	10.584	5
11	MP2B	Z	6.111	5
12	MP2B	Mx	.007	5
13	MP2C	X	5.99	1
14	MP2C	Z	3.458	1
15	MP2C	Mx	.008	1
16	MP2C	X	5.99	5
17	MP2C	Z	3.458	5
18	MP2C	Mx	.008	5
19	MP2A	X	7.767	1
20	MP2A	Z	4.484	1
21	MP2A	Mx	-.000441	1
22	MP2A	X	7.767	5
23	MP2A	Z	4.484	5
24	MP2A	Mx	-.000441	5
25	MP2B	X	11.105	1
26	MP2B	Z	6.411	1
27	MP2B	Mx	-.013	1
28	MP2B	X	11.105	5
29	MP2B	Z	6.411	5
30	MP2B	Mx	-.013	5
31	MP2C	X	5.99	1
32	MP2C	Z	3.458	1
33	MP2C	Mx	.008	1
34	MP2C	X	5.99	5
35	MP2C	Z	3.458	5
36	MP2C	Mx	.008	5
37	MP3A	X	1.385	1
38	MP3A	Z	.8	1
39	MP3A	Mx	.001	1
40	MP3A	X	1.385	1
41	MP3A	Z	.8	1
42	MP3A	Mx	.001	1
43	MP3B	X	1.653	1
44	MP3B	Z	.955	1
45	MP3B	Mx	.000545	1
46	MP3B	X	1.653	1
47	MP3B	Z	.955	1
48	MP3B	Mx	.000545	1
49	MP3C	X	1.216	1
50	MP3C	Z	.702	1
51	MP3C	Mx	-.001	1
52	MP3C	X	1.216	1
53	MP3C	Z	.702	1
54	MP3C	Mx	-.001	1
55	MP3A	X	1.257	4
56	MP3A	Z	.726	4
57	MP3A	Mx	.000927	4

Member Point Loads (BLC 31 : Antenna Wm (120 Deg)) (Continued)

	Member Label	Direction	Magnitude[lb,k-ft]	Location[ft,%]
58	MP3A	X	1.257	4
59	MP3A	Z	.726	4
60	MP3A	Mx	.000927	4
61	MP3B	X	1.628	4
62	MP3B	Z	.94	4
63	MP3B	Mx	.000536	4
64	MP3B	X	1.628	4
65	MP3B	Z	.94	4
66	MP3B	Mx	.000536	4
67	MP3C	X	1.024	4
68	MP3C	Z	.591	4
69	MP3C	Mx	-.000926	4
70	MP3C	X	1.024	4
71	MP3C	Z	.591	4
72	MP3C	Mx	-.000926	4
73	MP1A	X	.432	3.5
74	MP1A	Z	.25	3.5
75	MP1A	Mx	-.000318	3.5
76	MP1A	X	.432	3.5
77	MP1A	Z	.25	3.5
78	MP1A	Mx	-.000318	3.5
79	MP1B	X	.432	3.5
80	MP1B	Z	.25	3.5
81	MP1B	Mx	-.000318	3.5
82	MP1B	X	.432	3.5
83	MP1B	Z	.25	3.5
84	MP1B	Mx	-.000318	3.5
85	MP1C	X	.432	3.5
86	MP1C	Z	.25	3.5
87	MP1C	Mx	-.000318	3.5
88	MP1C	X	.432	3.5
89	MP1C	Z	.25	3.5
90	MP1C	Mx	-.000318	3.5
91	MP4A	X	2.779	2.5
92	MP4A	Z	1.605	2.5
93	MP4A	Mx	-.002	2.5
94	MP4A	X	2.779	4
95	MP4A	Z	1.605	4
96	MP4A	Mx	-.002	4
97	MP4B	X	4.015	2.5
98	MP4B	Z	2.318	2.5
99	MP4B	Mx	-.001	2.5
100	MP4B	X	4.015	4
101	MP4B	Z	2.318	4
102	MP4B	Mx	-.001	4
103	MP4C	X	2	2.5
104	MP4C	Z	1.155	2.5
105	MP4C	Mx	.002	2.5
106	MP4C	X	2	4
107	MP4C	Z	1.155	4
108	MP4C	Mx	.002	4
109	B5	X	3.215	.75
110	B5	Z	1.856	.75
111	B5	Mx	-.001	.75
112	B5	X	3.215	.75
113	B5	Z	1.856	.75
114	B5	Mx	-.001	.75

Member Point Loads (BLC 32 : Antenna Wm (150 Deg))

	Member Label	Direction	Magnitude[lb,k-ft]	Location[ft,%]
1	MP2A	X	6.111	1
2	MP2A	Z	10.584	1
3	MP2A	Mx	-.014	1
4	MP2A	X	6.111	5
5	MP2A	Z	10.584	5
6	MP2A	Mx	-.014	5
7	MP2B	X	4.484	1
8	MP2B	Z	7.767	1
9	MP2B	Mx	-.000441	1
10	MP2B	X	4.484	5
11	MP2B	Z	7.767	5
12	MP2B	Mx	-.000441	5
13	MP2C	X	5.085	1
14	MP2C	Z	8.808	1
15	MP2C	Mx	.013	1
16	MP2C	X	5.085	5
17	MP2C	Z	8.808	5
18	MP2C	Mx	.013	5
19	MP2A	X	6.111	1
20	MP2A	Z	10.584	1
21	MP2A	Mx	.007	1
22	MP2A	X	6.111	5
23	MP2A	Z	10.584	5
24	MP2A	Mx	.007	5
25	MP2B	X	5.085	1
26	MP2B	Z	8.808	1
27	MP2B	Mx	-.013	1
28	MP2B	X	5.085	5
29	MP2B	Z	8.808	5
30	MP2B	Mx	-.013	5
31	MP2C	X	3.158	1
32	MP2C	Z	5.47	1
33	MP2C	Mx	.004	1
34	MP2C	X	3.158	5
35	MP2C	Z	5.47	5
36	MP2C	Mx	.004	5
37	MP3A	X	.955	1
38	MP3A	Z	1.653	1
39	MP3A	Mx	.000545	1
40	MP3A	X	.955	1
41	MP3A	Z	1.653	1
42	MP3A	Mx	.000545	1
43	MP3B	X	.8	1
44	MP3B	Z	1.385	1
45	MP3B	Mx	.001	1
46	MP3B	X	.8	1
47	MP3B	Z	1.385	1
48	MP3B	Mx	.001	1
49	MP3C	X	.857	1
50	MP3C	Z	1.484	1
51	MP3C	Mx	-.000918	1
52	MP3C	X	.857	1
53	MP3C	Z	1.484	1
54	MP3C	Mx	-.000918	1
55	MP3A	X	.94	4
56	MP3A	Z	1.628	4
57	MP3A	Mx	.000536	4

Member Point Loads (BLC 32 : Antenna Wm (150 Deg)) (Continued)

	Member Label	Direction	Magnitude[lb,k-ft]	Location[ft,%]
58	MP3A	X	.94	4
59	MP3A	Z	1.628	4
60	MP3A	Mx	.000536	4
61	MP3B	X	.726	4
62	MP3B	Z	1.257	4
63	MP3B	Mx	.000927	4
64	MP3B	X	.726	4
65	MP3B	Z	1.257	4
66	MP3B	Mx	.000927	4
67	MP3C	X	.805	4
68	MP3C	Z	1.394	4
69	MP3C	Mx	-.000862	4
70	MP3C	X	.805	4
71	MP3C	Z	1.394	4
72	MP3C	Mx	-.000862	4
73	MP1A	X	.428	3.5
74	MP1A	Z	.742	3.5
75	MP1A	Mx	-.000244	3.5
76	MP1A	X	.428	3.5
77	MP1A	Z	.742	3.5
78	MP1A	Mx	-.000244	3.5
79	MP1B	X	.428	3.5
80	MP1B	Z	.742	3.5
81	MP1B	Mx	-.000244	3.5
82	MP1B	X	.428	3.5
83	MP1B	Z	.742	3.5
84	MP1B	Mx	-.000244	3.5
85	MP1C	X	.428	3.5
86	MP1C	Z	.742	3.5
87	MP1C	Mx	-.000244	3.5
88	MP1C	X	.428	3.5
89	MP1C	Z	.742	3.5
90	MP1C	Mx	-.000244	3.5
91	MP4A	X	2.318	2.5
92	MP4A	Z	4.015	2.5
93	MP4A	Mx	-.001	2.5
94	MP4A	X	2.318	4
95	MP4A	Z	4.015	4
96	MP4A	Mx	-.001	4
97	MP4B	X	1.605	2.5
98	MP4B	Z	2.779	2.5
99	MP4B	Mx	-.002	2.5
100	MP4B	X	1.605	4
101	MP4B	Z	2.779	4
102	MP4B	Mx	-.002	4
103	MP4C	X	1.868	2.5
104	MP4C	Z	3.236	2.5
105	MP4C	Mx	.002	2.5
106	MP4C	X	1.868	4
107	MP4C	Z	3.236	4
108	MP4C	Mx	.002	4
109	B5	X	2.096	.75
110	B5	Z	3.631	.75
111	B5	Mx	-.000717	.75
112	B5	X	2.096	.75
113	B5	Z	3.631	.75
114	B5	Mx	-.000717	.75

Member Point Loads (BLC 33 : Antenna Wm (180 Deg))

	Member Label	Direction	Magnitude[lb,k-ft]	Location[ft,%]
1	MP2A	X	0	1
2	MP2A	Z	12.823	1
3	MP2A	Mx	-.01	1
4	MP2A	X	0	5
5	MP2A	Z	12.823	5
6	MP2A	Mx	-.01	5
7	MP2B	X	0	1
8	MP2B	Z	6.316	1
9	MP2B	Mx	-.004	1
10	MP2B	X	0	5
11	MP2B	Z	6.316	5
12	MP2B	Mx	-.004	5
13	MP2C	X	0	1
14	MP2C	Z	12.823	1
15	MP2C	Mx	.013	1
16	MP2C	X	0	5
17	MP2C	Z	12.823	5
18	MP2C	Mx	.013	5
19	MP2A	X	0	1
20	MP2A	Z	12.823	1
21	MP2A	Mx	.013	1
22	MP2A	X	0	5
23	MP2A	Z	12.823	5
24	MP2A	Mx	.013	5
25	MP2B	X	0	1
26	MP2B	Z	6.917	1
27	MP2B	Mx	-.008	1
28	MP2B	X	0	5
29	MP2B	Z	6.917	5
30	MP2B	Mx	-.008	5
31	MP2C	X	0	1
32	MP2C	Z	8.968	1
33	MP2C	Mx	.000441	1
34	MP2C	X	0	5
35	MP2C	Z	8.968	5
36	MP2C	Mx	.000441	5
37	MP3A	X	0	1
38	MP3A	Z	1.966	1
39	MP3A	Mx	-.000284	1
40	MP3A	X	0	1
41	MP3A	Z	1.966	1
42	MP3A	Mx	-.000284	1
43	MP3B	X	0	1
44	MP3B	Z	1.347	1
45	MP3B	Mx	.001	1
46	MP3B	X	0	1
47	MP3B	Z	1.347	1
48	MP3B	Mx	.001	1
49	MP3C	X	0	1
50	MP3C	Z	1.966	1
51	MP3C	Mx	-.000284	1
52	MP3C	X	0	1
53	MP3C	Z	1.966	1
54	MP3C	Mx	-.000284	1
55	MP3A	X	0	4
56	MP3A	Z	1.959	4
57	MP3A	Mx	-.000283	4

Member Point Loads (BLC 33 : Antenna Wm (180 Deg)) (Continued)

	Member Label	Direction	Magnitude[lb,k-ft]	Location[ft,%]
58	MP3A	X	0	4
59	MP3A	Z	1.959	4
60	MP3A	Mx	-.000283	4
61	MP3B	X	0	4
62	MP3B	Z	1.103	4
63	MP3B	Mx	.000905	4
64	MP3B	X	0	4
65	MP3B	Z	1.103	4
66	MP3B	Mx	.000905	4
67	MP3C	X	0	4
68	MP3C	Z	1.959	4
69	MP3C	Mx	-.000283	4
70	MP3C	X	0	4
71	MP3C	Z	1.959	4
72	MP3C	Mx	-.000283	4
73	MP1A	X	0	3.5
74	MP1A	Z	.922	3.5
75	MP1A	Mx	.000133	3.5
76	MP1A	X	0	3.5
77	MP1A	Z	.922	3.5
78	MP1A	Mx	.000133	3.5
79	MP1B	X	0	3.5
80	MP1B	Z	.922	3.5
81	MP1B	Mx	.000133	3.5
82	MP1B	X	0	3.5
83	MP1B	Z	.922	3.5
84	MP1B	Mx	.000133	3.5
85	MP1C	X	0	3.5
86	MP1C	Z	.922	3.5
87	MP1C	Mx	.000133	3.5
88	MP1C	X	0	3.5
89	MP1C	Z	.922	3.5
90	MP1C	Mx	.000133	3.5
91	MP4A	X	0	2.5
92	MP4A	Z	4.9	2.5
93	MP4A	Mx	.000709	2.5
94	MP4A	X	0	4
95	MP4A	Z	4.9	4
96	MP4A	Mx	.000709	4
97	MP4B	X	0	2.5
98	MP4B	Z	2.046	2.5
99	MP4B	Mx	-.002	2.5
100	MP4B	X	0	4
101	MP4B	Z	2.046	4
102	MP4B	Mx	-.002	4
103	MP4C	X	0	2.5
104	MP4C	Z	4.9	2.5
105	MP4C	Mx	.000709	2.5
106	MP4C	X	0	4
107	MP4C	Z	4.9	4
108	MP4C	Mx	.000709	4
109	B5	X	0	.75
110	B5	Z	4.281	.75
111	B5	Mx	.000372	.75
112	B5	X	0	.75
113	B5	Z	4.281	.75
114	B5	Mx	.000372	.75

Member Point Loads (BLC 34 : Antenna Wm (210 Deg))

	Member Label	Direction	Magnitude[lb,k-ft]	Location[ft,%]
1	MP2A	X	-5.085	1
2	MP2A	Z	8.808	1
3	MP2A	Mx	-.002	1
4	MP2A	X	-5.085	5
5	MP2A	Z	8.808	5
6	MP2A	Mx	-.002	5
7	MP2B	X	-3.458	1
8	MP2B	Z	5.99	1
9	MP2B	Mx	-.008	1
10	MP2B	X	-3.458	5
11	MP2B	Z	5.99	5
12	MP2B	Mx	-.008	5
13	MP2C	X	-6.111	1
14	MP2C	Z	10.584	1
15	MP2C	Mx	.007	1
16	MP2C	X	-6.111	5
17	MP2C	Z	10.584	5
18	MP2C	Mx	.007	5
19	MP2A	X	-5.085	1
20	MP2A	Z	8.808	1
21	MP2A	Mx	.013	1
22	MP2A	X	-5.085	5
23	MP2A	Z	8.808	5
24	MP2A	Mx	.013	5
25	MP2B	X	-3.158	1
26	MP2B	Z	5.47	1
27	MP2B	Mx	-.004	1
28	MP2B	X	-3.158	5
29	MP2B	Z	5.47	5
30	MP2B	Mx	-.004	5
31	MP2C	X	-6.111	1
32	MP2C	Z	10.584	1
33	MP2C	Mx	-.007	1
34	MP2C	X	-6.111	5
35	MP2C	Z	10.584	5
36	MP2C	Mx	-.007	5
37	MP3A	X	-.857	1
38	MP3A	Z	1.484	1
39	MP3A	Mx	-.000918	1
40	MP3A	X	-.857	1
41	MP3A	Z	1.484	1
42	MP3A	Mx	-.000918	1
43	MP3B	X	-.702	1
44	MP3B	Z	1.216	1
45	MP3B	Mx	.001	1
46	MP3B	X	-.702	1
47	MP3B	Z	1.216	1
48	MP3B	Mx	.001	1
49	MP3C	X	-.955	1
50	MP3C	Z	1.653	1
51	MP3C	Mx	.000545	1
52	MP3C	X	-.955	1
53	MP3C	Z	1.653	1
54	MP3C	Mx	.000545	1
55	MP3A	X	-.805	4
56	MP3A	Z	1.394	4
57	MP3A	Mx	-.000862	4

Member Point Loads (BLC 34 : Antenna Wm (210 Deg)) (Continued)

	Member Label	Direction	Magnitude[lb,k-ft]	Location[ft,%]
58	MP3A	X	-.805	4
59	MP3A	Z	1.394	4
60	MP3A	Mx	-.000862	4
61	MP3B	X	-.591	4
62	MP3B	Z	1.024	4
63	MP3B	Mx	.000926	4
64	MP3B	X	-.591	4
65	MP3B	Z	1.024	4
66	MP3B	Mx	.000926	4
67	MP3C	X	-.94	4
68	MP3C	Z	1.628	4
69	MP3C	Mx	.000536	4
70	MP3C	X	-.94	4
71	MP3C	Z	1.628	4
72	MP3C	Mx	.000536	4
73	MP1A	X	-.316	3.5
74	MP1A	Z	.547	3.5
75	MP1A	Mx	.000338	3.5
76	MP1A	X	-.316	3.5
77	MP1A	Z	.547	3.5
78	MP1A	Mx	.000338	3.5
79	MP1B	X	-.316	3.5
80	MP1B	Z	.547	3.5
81	MP1B	Mx	.000338	3.5
82	MP1B	X	-.316	3.5
83	MP1B	Z	.547	3.5
84	MP1B	Mx	.000338	3.5
85	MP1C	X	-.316	3.5
86	MP1C	Z	.547	3.5
87	MP1C	Mx	.000338	3.5
88	MP1C	X	-.316	3.5
89	MP1C	Z	.547	3.5
90	MP1C	Mx	.000338	3.5
91	MP4A	X	-1.868	2.5
92	MP4A	Z	3.236	2.5
93	MP4A	Mx	.002	2.5
94	MP4A	X	-1.868	4
95	MP4A	Z	3.236	4
96	MP4A	Mx	.002	4
97	MP4B	X	-1.155	2.5
98	MP4B	Z	2	2.5
99	MP4B	Mx	-.002	2.5
100	MP4B	X	-1.155	4
101	MP4B	Z	2	4
102	MP4B	Mx	-.002	4
103	MP4C	X	-2.318	2.5
104	MP4C	Z	4.015	2.5
105	MP4C	Mx	-.001	2.5
106	MP4C	X	-2.318	4
107	MP4C	Z	4.015	4
108	MP4C	Mx	-.001	4
109	B5	X	-1.945	.75
110	B5	Z	3.369	.75
111	B5	Mx	.001	.75
112	B5	X	-1.945	.75
113	B5	Z	3.369	.75
114	B5	Mx	.001	.75

Member Point Loads (BLC 35 : Antenna Wm (240 Deg))

	Member Label	Direction	Magnitude[lb,k-ft]	Location[ft,%]
1	MP2A	X	-5.99	1
2	MP2A	Z	3.458	1
3	MP2A	Mx	.003	1
4	MP2A	X	-5.99	5
5	MP2A	Z	3.458	5
6	MP2A	Mx	.003	5
7	MP2B	X	-8.808	1
8	MP2B	Z	5.085	1
9	MP2B	Mx	-.013	1
10	MP2B	X	-8.808	5
11	MP2B	Z	5.085	5
12	MP2B	Mx	-.013	5
13	MP2C	X	-7.767	1
14	MP2C	Z	4.484	1
15	MP2C	Mx	-.000441	1
16	MP2C	X	-7.767	5
17	MP2C	Z	4.484	5
18	MP2C	Mx	-.000441	5
19	MP2A	X	-5.99	1
20	MP2A	Z	3.458	1
21	MP2A	Mx	.008	1
22	MP2A	X	-5.99	5
23	MP2A	Z	3.458	5
24	MP2A	Mx	.008	5
25	MP2B	X	-7.767	1
26	MP2B	Z	4.484	1
27	MP2B	Mx	-.00044	1
28	MP2B	X	-7.767	5
29	MP2B	Z	4.484	5
30	MP2B	Mx	-.00044	5
31	MP2C	X	-11.105	1
32	MP2C	Z	6.411	1
33	MP2C	Mx	-.013	1
34	MP2C	X	-11.105	5
35	MP2C	Z	6.411	5
36	MP2C	Mx	-.013	5
37	MP3A	X	-1.216	1
38	MP3A	Z	.702	1
39	MP3A	Mx	-.001	1
40	MP3A	X	-1.216	1
41	MP3A	Z	.702	1
42	MP3A	Mx	-.001	1
43	MP3B	X	-1.484	1
44	MP3B	Z	.857	1
45	MP3B	Mx	.000918	1
46	MP3B	X	-1.484	1
47	MP3B	Z	.857	1
48	MP3B	Mx	.000918	1
49	MP3C	X	-1.385	1
50	MP3C	Z	.8	1
51	MP3C	Mx	.001	1
52	MP3C	X	-1.385	1
53	MP3C	Z	.8	1
54	MP3C	Mx	.001	1
55	MP3A	X	-1.024	4
56	MP3A	Z	.591	4
57	MP3A	Mx	-.000926	4

Member Point Loads (BLC 35 : Antenna Wm (240 Deg)) (Continued)

	Member Label	Direction	Magnitude[lb,k-ft]	Location[ft,%]
58	MP3A	X	-1.024	4
59	MP3A	Z	.591	4
60	MP3A	Mx	-.000926	4
61	MP3B	X	-1.394	4
62	MP3B	Z	.805	4
63	MP3B	Mx	.000862	4
64	MP3B	X	-1.394	4
65	MP3B	Z	.805	4
66	MP3B	Mx	.000862	4
67	MP3C	X	-1.257	4
68	MP3C	Z	.726	4
69	MP3C	Mx	.000927	4
70	MP3C	X	-1.257	4
71	MP3C	Z	.726	4
72	MP3C	Mx	.000927	4
73	MP1A	X	-.238	3.5
74	MP1A	Z	.137	3.5
75	MP1A	Mx	.000215	3.5
76	MP1A	X	-.238	3.5
77	MP1A	Z	.137	3.5
78	MP1A	Mx	.000215	3.5
79	MP1B	X	-.238	3.5
80	MP1B	Z	.137	3.5
81	MP1B	Mx	.000215	3.5
82	MP1B	X	-.238	3.5
83	MP1B	Z	.137	3.5
84	MP1B	Mx	.000215	3.5
85	MP1C	X	-.238	3.5
86	MP1C	Z	.137	3.5
87	MP1C	Mx	.000215	3.5
88	MP1C	X	-.238	3.5
89	MP1C	Z	.137	3.5
90	MP1C	Mx	.000215	3.5
91	MP4A	X	-2	2.5
92	MP4A	Z	1.155	2.5
93	MP4A	Mx	.002	2.5
94	MP4A	X	-2	4
95	MP4A	Z	1.155	4
96	MP4A	Mx	.002	4
97	MP4B	X	-3.236	2.5
98	MP4B	Z	1.868	2.5
99	MP4B	Mx	-.002	2.5
100	MP4B	X	-3.236	4
101	MP4B	Z	1.868	4
102	MP4B	Mx	-.002	4
103	MP4C	X	-2.779	2.5
104	MP4C	Z	1.605	2.5
105	MP4C	Mx	-.002	2.5
106	MP4C	X	-2.779	4
107	MP4C	Z	1.605	4
108	MP4C	Mx	-.002	4
109	B5	X	-2.953	.75
110	B5	Z	1.705	.75
111	B5	Mx	.002	.75
112	B5	X	-2.953	.75
113	B5	Z	1.705	.75
114	B5	Mx	.002	.75

Member Point Loads (BLC 36 : Antenna Wm (270 Deg))

	Member Label	Direction	Magnitude[lb,k-ft]	Location[ft,%]
1	MP2A	X	-6.316	1
2	MP2A	Z	0	1
3	MP2A	Mx	.006	1
4	MP2A	X	-6.316	5
5	MP2A	Z	0	5
6	MP2A	Mx	.006	5
7	MP2B	X	-12.823	1
8	MP2B	Z	0	1
9	MP2B	Mx	-.013	1
10	MP2B	X	-12.823	5
11	MP2B	Z	0	5
12	MP2B	Mx	-.013	5
13	MP2C	X	-6.316	1
14	MP2C	Z	0	1
15	MP2C	Mx	-.004	1
16	MP2C	X	-6.316	5
17	MP2C	Z	0	5
18	MP2C	Mx	-.004	5
19	MP2A	X	-6.316	1
20	MP2A	Z	0	1
21	MP2A	Mx	.004	1
22	MP2A	X	-6.316	5
23	MP2A	Z	0	5
24	MP2A	Mx	.004	5
25	MP2B	X	-12.222	1
26	MP2B	Z	0	1
27	MP2B	Mx	.007	1
28	MP2B	X	-12.222	5
29	MP2B	Z	0	5
30	MP2B	Mx	.007	5
31	MP2C	X	-10.17	1
32	MP2C	Z	0	1
33	MP2C	Mx	-.013	1
34	MP2C	X	-10.17	5
35	MP2C	Z	0	5
36	MP2C	Mx	-.013	5
37	MP3A	X	-1.347	1
38	MP3A	Z	0	1
39	MP3A	Mx	-.001	1
40	MP3A	X	-1.347	1
41	MP3A	Z	0	1
42	MP3A	Mx	-.001	1
43	MP3B	X	-1.966	1
44	MP3B	Z	0	1
45	MP3B	Mx	.000284	1
46	MP3B	X	-1.966	1
47	MP3B	Z	0	1
48	MP3B	Mx	.000284	1
49	MP3C	X	-1.347	1
50	MP3C	Z	0	1
51	MP3C	Mx	.001	1
52	MP3C	X	-1.347	1
53	MP3C	Z	0	1
54	MP3C	Mx	.001	1
55	MP3A	X	-1.103	4
56	MP3A	Z	0	4
57	MP3A	Mx	-.000905	4

Member Point Loads (BLC 36 : Antenna Wm (270 Deg)) (Continued)

	Member Label	Direction	Magnitude[lb,k-ft]	Location[ft,%]
58	MP3A	X	-1.103	4
59	MP3A	Z	0	4
60	MP3A	Mx	-.000905	4
61	MP3B	X	-1.959	4
62	MP3B	Z	0	4
63	MP3B	Mx	.000283	4
64	MP3B	X	-1.959	4
65	MP3B	Z	0	4
66	MP3B	Mx	.000283	4
67	MP3C	X	-1.103	4
68	MP3C	Z	0	4
69	MP3C	Mx	.000905	4
70	MP3C	X	-1.103	4
71	MP3C	Z	0	4
72	MP3C	Mx	.000905	4
73	MP1A	X	-.208	3.5
74	MP1A	Z	0	3.5
75	MP1A	Mx	.000171	3.5
76	MP1A	X	-.208	3.5
77	MP1A	Z	0	3.5
78	MP1A	Mx	.000171	3.5
79	MP1B	X	-.208	3.5
80	MP1B	Z	0	3.5
81	MP1B	Mx	.000171	3.5
82	MP1B	X	-.208	3.5
83	MP1B	Z	0	3.5
84	MP1B	Mx	.000171	3.5
85	MP1C	X	-.208	3.5
86	MP1C	Z	0	3.5
87	MP1C	Mx	.000171	3.5
88	MP1C	X	-.208	3.5
89	MP1C	Z	0	3.5
90	MP1C	Mx	.000171	3.5
91	MP4A	X	-2.046	2.5
92	MP4A	Z	0	2.5
93	MP4A	Mx	.002	2.5
94	MP4A	X	-2.046	4
95	MP4A	Z	0	4
96	MP4A	Mx	.002	4
97	MP4B	X	-4.9	2.5
98	MP4B	Z	0	2.5
99	MP4B	Mx	-.000709	2.5
100	MP4B	X	-4.9	4
101	MP4B	Z	0	4
102	MP4B	Mx	-.000709	4
103	MP4C	X	-2.046	2.5
104	MP4C	Z	0	2.5
105	MP4C	Mx	-.002	2.5
106	MP4C	X	-2.046	4
107	MP4C	Z	0	4
108	MP4C	Mx	-.002	4
109	B5	X	-3.321	.75
110	B5	Z	0	.75
111	B5	Mx	.002	.75
112	B5	X	-3.321	.75
113	B5	Z	0	.75
114	B5	Mx	.002	.75

Member Point Loads (BLC 37 : Antenna Wm (300 Deg))

	Member Label	Direction	Magnitude[lb,k-ft]	Location[ft,%]
1	MP2A	X	-7.767	1
2	MP2A	Z	-4.484	1
3	MP2A	Mx	.011	1
4	MP2A	X	-7.767	5
5	MP2A	Z	-4.484	5
6	MP2A	Mx	.011	5
7	MP2B	X	-10.584	1
8	MP2B	Z	-6.111	1
9	MP2B	Mx	-.007	1
10	MP2B	X	-10.584	5
11	MP2B	Z	-6.111	5
12	MP2B	Mx	-.007	5
13	MP2C	X	-5.99	1
14	MP2C	Z	-3.458	1
15	MP2C	Mx	-.008	1
16	MP2C	X	-5.99	5
17	MP2C	Z	-3.458	5
18	MP2C	Mx	-.008	5
19	MP2A	X	-7.767	1
20	MP2A	Z	-4.484	1
21	MP2A	Mx	.000441	1
22	MP2A	X	-7.767	5
23	MP2A	Z	-4.484	5
24	MP2A	Mx	.000441	5
25	MP2B	X	-11.105	1
26	MP2B	Z	-6.411	1
27	MP2B	Mx	.013	1
28	MP2B	X	-11.105	5
29	MP2B	Z	-6.411	5
30	MP2B	Mx	.013	5
31	MP2C	X	-5.99	1
32	MP2C	Z	-3.458	1
33	MP2C	Mx	-.008	1
34	MP2C	X	-5.99	5
35	MP2C	Z	-3.458	5
36	MP2C	Mx	-.008	5
37	MP3A	X	-1.385	1
38	MP3A	Z	-.8	1
39	MP3A	Mx	-.001	1
40	MP3A	X	-1.385	1
41	MP3A	Z	-.8	1
42	MP3A	Mx	-.001	1
43	MP3B	X	-1.653	1
44	MP3B	Z	-.955	1
45	MP3B	Mx	-.000545	1
46	MP3B	X	-1.653	1
47	MP3B	Z	-.955	1
48	MP3B	Mx	-.000545	1
49	MP3C	X	-1.216	1
50	MP3C	Z	-.702	1
51	MP3C	Mx	.001	1
52	MP3C	X	-1.216	1
53	MP3C	Z	-.702	1
54	MP3C	Mx	.001	1
55	MP3A	X	-1.257	4
56	MP3A	Z	-.726	4
57	MP3A	Mx	-.000927	4

Member Point Loads (BLC 37 : Antenna Wm (300 Deg)) (Continued)

	Member Label	Direction	Magnitude[lb,k-ft]	Location[ft,%]
58	MP3A	X	-1.257	4
59	MP3A	Z	-.726	4
60	MP3A	Mx	-.000927	4
61	MP3B	X	-1.628	4
62	MP3B	Z	-.94	4
63	MP3B	Mx	-.000536	4
64	MP3B	X	-1.628	4
65	MP3B	Z	-.94	4
66	MP3B	Mx	-.000536	4
67	MP3C	X	-1.024	4
68	MP3C	Z	-.591	4
69	MP3C	Mx	.000926	4
70	MP3C	X	-1.024	4
71	MP3C	Z	-.591	4
72	MP3C	Mx	.000926	4
73	MP1A	X	-.432	3.5
74	MP1A	Z	-.25	3.5
75	MP1A	Mx	.000318	3.5
76	MP1A	X	-.432	3.5
77	MP1A	Z	-.25	3.5
78	MP1A	Mx	.000318	3.5
79	MP1B	X	-.432	3.5
80	MP1B	Z	-.25	3.5
81	MP1B	Mx	.000318	3.5
82	MP1B	X	-.432	3.5
83	MP1B	Z	-.25	3.5
84	MP1B	Mx	.000318	3.5
85	MP1C	X	-.432	3.5
86	MP1C	Z	-.25	3.5
87	MP1C	Mx	.000318	3.5
88	MP1C	X	-.432	3.5
89	MP1C	Z	-.25	3.5
90	MP1C	Mx	.000318	3.5
91	MP4A	X	-2.779	2.5
92	MP4A	Z	-1.605	2.5
93	MP4A	Mx	.002	2.5
94	MP4A	X	-2.779	4
95	MP4A	Z	-1.605	4
96	MP4A	Mx	.002	4
97	MP4B	X	-4.015	2.5
98	MP4B	Z	-2.318	2.5
99	MP4B	Mx	.001	2.5
100	MP4B	X	-4.015	4
101	MP4B	Z	-2.318	4
102	MP4B	Mx	.001	4
103	MP4C	X	-2	2.5
104	MP4C	Z	-1.155	2.5
105	MP4C	Mx	-.002	2.5
106	MP4C	X	-2	4
107	MP4C	Z	-1.155	4
108	MP4C	Mx	-.002	4
109	B5	X	-3.215	.75
110	B5	Z	-1.856	.75
111	B5	Mx	.001	.75
112	B5	X	-3.215	.75
113	B5	Z	-1.856	.75
114	B5	Mx	.001	.75

Member Point Loads (BLC 38 : Antenna Wm (330 Deg))

	Member Label	Direction	Magnitude[lb,k-ft]	Location[ft,%]
1	MP2A	X	-6.111	1
2	MP2A	Z	-10.584	1
3	MP2A	Mx	.014	1
4	MP2A	X	-6.111	5
5	MP2A	Z	-10.584	5
6	MP2A	Mx	.014	5
7	MP2B	X	-4.484	1
8	MP2B	Z	-7.767	1
9	MP2B	Mx	.000441	1
10	MP2B	X	-4.484	5
11	MP2B	Z	-7.767	5
12	MP2B	Mx	.000441	5
13	MP2C	X	-5.085	1
14	MP2C	Z	-8.808	1
15	MP2C	Mx	-.013	1
16	MP2C	X	-5.085	5
17	MP2C	Z	-8.808	5
18	MP2C	Mx	-.013	5
19	MP2A	X	-6.111	1
20	MP2A	Z	-10.584	1
21	MP2A	Mx	-.007	1
22	MP2A	X	-6.111	5
23	MP2A	Z	-10.584	5
24	MP2A	Mx	-.007	5
25	MP2B	X	-5.085	1
26	MP2B	Z	-8.808	1
27	MP2B	Mx	.013	1
28	MP2B	X	-5.085	5
29	MP2B	Z	-8.808	5
30	MP2B	Mx	.013	5
31	MP2C	X	-3.158	1
32	MP2C	Z	-5.47	1
33	MP2C	Mx	-.004	1
34	MP2C	X	-3.158	5
35	MP2C	Z	-5.47	5
36	MP2C	Mx	-.004	5
37	MP3A	X	-.955	1
38	MP3A	Z	-1.653	1
39	MP3A	Mx	-.000545	1
40	MP3A	X	-.955	1
41	MP3A	Z	-1.653	1
42	MP3A	Mx	-.000545	1
43	MP3B	X	-.8	1
44	MP3B	Z	-1.385	1
45	MP3B	Mx	-.001	1
46	MP3B	X	-.8	1
47	MP3B	Z	-1.385	1
48	MP3B	Mx	-.001	1
49	MP3C	X	-.857	1
50	MP3C	Z	-1.484	1
51	MP3C	Mx	.000918	1
52	MP3C	X	-.857	1
53	MP3C	Z	-1.484	1
54	MP3C	Mx	.000918	1
55	MP3A	X	-.94	4
56	MP3A	Z	-1.628	4
57	MP3A	Mx	-.000536	4

Member Point Loads (BLC 38 : Antenna Wm (330 Deg)) (Continued)

	Member Label	Direction	Magnitude[lb,k-ft]	Location[ft,%]
58	MP3A	X	-.94	4
59	MP3A	Z	-1.628	4
60	MP3A	Mx	-.000536	4
61	MP3B	X	-.726	4
62	MP3B	Z	-1.257	4
63	MP3B	Mx	-.000927	4
64	MP3B	X	-.726	4
65	MP3B	Z	-1.257	4
66	MP3B	Mx	-.000927	4
67	MP3C	X	-.805	4
68	MP3C	Z	-1.394	4
69	MP3C	Mx	.000862	4
70	MP3C	X	-.805	4
71	MP3C	Z	-1.394	4
72	MP3C	Mx	.000862	4
73	MP1A	X	-.428	3.5
74	MP1A	Z	-.742	3.5
75	MP1A	Mx	.000244	3.5
76	MP1A	X	-.428	3.5
77	MP1A	Z	-.742	3.5
78	MP1A	Mx	.000244	3.5
79	MP1B	X	-.428	3.5
80	MP1B	Z	-.742	3.5
81	MP1B	Mx	.000244	3.5
82	MP1B	X	-.428	3.5
83	MP1B	Z	-.742	3.5
84	MP1B	Mx	.000244	3.5
85	MP1C	X	-.428	3.5
86	MP1C	Z	-.742	3.5
87	MP1C	Mx	.000244	3.5
88	MP1C	X	-.428	3.5
89	MP1C	Z	-.742	3.5
90	MP1C	Mx	.000244	3.5
91	MP4A	X	-2.318	2.5
92	MP4A	Z	-4.015	2.5
93	MP4A	Mx	.001	2.5
94	MP4A	X	-2.318	4
95	MP4A	Z	-4.015	4
96	MP4A	Mx	.001	4
97	MP4B	X	-1.605	2.5
98	MP4B	Z	-2.779	2.5
99	MP4B	Mx	.002	2.5
100	MP4B	X	-1.605	4
101	MP4B	Z	-2.779	4
102	MP4B	Mx	.002	4
103	MP4C	X	-1.868	2.5
104	MP4C	Z	-3.236	2.5
105	MP4C	Mx	-.002	2.5
106	MP4C	X	-1.868	4
107	MP4C	Z	-3.236	4
108	MP4C	Mx	-.002	4
109	B5	X	-2.096	.75
110	B5	Z	-3.631	.75
111	B5	Mx	.000717	.75
112	B5	X	-2.096	.75
113	B5	Z	-3.631	.75
114	B5	Mx	.000717	.75

Member Point Loads (BLC 77 : Lm1)

	Member Label	Direction	Magnitude[lb,k-ft]	Location[ft,%]
1	M57	Y	-500	%34

Member Point Loads (BLC 78 : Lm2)

	Member Label	Direction	Magnitude[lb,k-ft]	Location[ft,%]
1	M57	Y	-500	%66

Member Point Loads (BLC 79 : Lv1)

	Member Label	Direction	Magnitude[lb,k-ft]	Location[ft,%]
1	M57	Y	-250	0

Member Point Loads (BLC 80 : Lv2)

	Member Label	Direction	Magnitude[lb,k-ft]	Location[ft,%]
1	M57	Y	-250	%100

Member Distributed Loads (BLC 40 : Structure Di)

	Member Label	Direction	Start Magnitude[lb/ft,...	End Magnitude[lb/ft,...	Start Location[ft,%]	End Location[ft,%]
1	A5	Y	-4.966	-4.966	0	%100
2	B5	Y	-4.966	-4.966	0	%100
3	M18	Y	-9.586	-9.586	0	%100
4	M19	Y	-9.586	-9.586	0	%100
5	M20	Y	-9.586	-9.586	0	%100
6	M21	Y	-5.604	-5.604	0	%100
7	M22	Y	-5.604	-5.604	0	%100
8	M23	Y	-10.099	-10.099	0	%100
9	M24	Y	-10.099	-10.099	0	%100
10	M25	Y	-10.099	-10.099	0	%100
11	M26	Y	-10.086	-10.086	0	%100
12	M27	Y	-10.086	-10.086	0	%100
13	M28	Y	-10.086	-10.086	0	%100
14	M29	Y	-10.086	-10.086	0	%100
15	M35	Y	-9.586	-9.586	0	%100
16	M36	Y	-9.586	-9.586	0	%100
17	M37	Y	-9.586	-9.586	0	%100
18	M38	Y	-5.604	-5.604	0	%100
19	M39	Y	-5.604	-5.604	0	%100
20	M40	Y	-10.099	-10.099	0	%100
21	M41	Y	-10.099	-10.099	0	%100
22	M42	Y	-10.099	-10.099	0	%100
23	M43	Y	-10.086	-10.086	0	%100
24	M44	Y	-10.086	-10.086	0	%100
25	M45	Y	-10.086	-10.086	0	%100
26	M46	Y	-10.086	-10.086	0	%100
27	M52	Y	-9.19	-9.19	0	%100
28	M52A	Y	-9.586	-9.586	0	%100
29	M53A	Y	-9.586	-9.586	0	%100
30	M54A	Y	-9.19	-9.19	0	%100
31	M56	Y	-9.19	-9.19	0	%100
32	M57	Y	-6.55	-6.55	0	%100
33	M58	Y	-6.55	-6.55	0	%100
34	M59	Y	-6.55	-6.55	0	%100
35	M64	Y	-6.55	-6.55	0	%100
36	M77	Y	-6.55	-6.55	0	%100
37	M90	Y	-6.55	-6.55	0	%100
38	M91	Y	-9.586	-9.586	0	%100

Member Distributed Loads (BLC 40 : Structure Di) (Continued)

	Member Label	Direction	Start Magnitude[lb/ft,...	End Magnitude[lb/ft,...	Start Location[ft,%]	End Location[ft,%]
39	M93	Y	-5.604	-5.604	0	%100
40	M94	Y	-5.604	-5.604	0	%100
41	M95	Y	-10.099	-10.099	0	%100
42	M96	Y	-10.099	-10.099	0	%100
43	M97	Y	-10.099	-10.099	0	%100
44	M98	Y	-10.086	-10.086	0	%100
45	M99	Y	-10.086	-10.086	0	%100
46	M100	Y	-10.086	-10.086	0	%100
47	M101	Y	-10.086	-10.086	0	%100
48	M67	Y	-6.6	-6.6	0	%100
49	M68	Y	-6.6	-6.6	0	%100
50	M69	Y	-6.6	-6.6	0	%100
51	MP1A	Y	-4.966	-4.966	0	%100
52	MP2A	Y	-5.67	-5.67	0	%100
53	MP3A	Y	-4.966	-4.966	0	%100
54	MP4A	Y	-4.966	-4.966	0	%100
55	MP1B	Y	-4.966	-4.966	0	%100
56	MP2B	Y	-5.67	-5.67	0	%100
57	MP3B	Y	-4.966	-4.966	0	%100
58	MP4B	Y	-4.966	-4.966	0	%100
59	MP1C	Y	-4.966	-4.966	0	%100
60	MP2C	Y	-5.67	-5.67	0	%100
61	MP3C	Y	-4.966	-4.966	0	%100
62	MP4C	Y	-4.966	-4.966	0	%100

Member Distributed Loads (BLC 41 : Structure Wo (0 Deg))

	Member Label	Direction	Start Magnitude[lb/ft,...	End Magnitude[lb/ft,...	Start Location[ft,%]	End Location[ft,%]
1	A5	X	0	0	0	%100
2	A5	Z	-7.776	-7.776	0	%100
3	B5	X	0	0	0	%100
4	B5	Z	-7.776	-7.776	0	%100
5	M18	X	0	0	0	%100
6	M18	Z	-2.491	-2.491	0	%100
7	M19	X	0	0	0	%100
8	M19	Z	-2.491	-2.491	0	%100
9	M20	X	0	0	0	%100
10	M20	Z	-8.74	-8.74	0	%100
11	M21	X	0	0	0	%100
12	M21	Z	-2.729	-2.729	0	%100
13	M22	X	0	0	0	%100
14	M22	Z	-10.914	-10.914	0	%100
15	M23	X	0	0	0	%100
16	M23	Z	-4.911	-4.911	0	%100
17	M24	X	0	0	0	%100
18	M24	Z	-4.911	-4.911	0	%100
19	M25	X	0	0	0	%100
20	M25	Z	-19.646	-19.646	0	%100
21	M26	X	0	0	0	%100
22	M26	Z	-14.734	-14.734	0	%100
23	M27	X	0	0	0	%100
24	M27	Z	-4.911	-4.911	0	%100
25	M28	X	0	0	0	%100
26	M28	Z	-14.734	-14.734	0	%100
27	M29	X	0	0	0	%100
28	M29	Z	-19.646	-19.646	0	%100
29	M35	X	0	0	0	%100

Member Distributed Loads (BLC 41 : Structure Wo (0 Deg)) (Continued)

	Member Label	Direction	Start Magnitude[lb/ft,...	End Magnitude[lb/ft,...	Start Location[ft,%]	End Location[ft,%]
30	M35	Z	-2.491	-2.491	0	%100
31	M36	X	0	0	0	%100
32	M36	Z	-2.491	-2.491	0	%100
33	M37	X	0	0	0	%100
34	M37	Z	-8.74	-8.74	0	%100
35	M38	X	0	0	0	%100
36	M38	Z	-10.914	-10.914	0	%100
37	M39	X	0	0	0	%100
38	M39	Z	-2.729	-2.729	0	%100
39	M40	X	0	0	0	%100
40	M40	Z	-19.646	-19.646	0	%100
41	M41	X	0	0	0	%100
42	M41	Z	-4.911	-4.911	0	%100
43	M42	X	0	0	0	%100
44	M42	Z	-4.911	-4.911	0	%100
45	M43	X	0	0	0	%100
46	M43	Z	-14.734	-14.734	0	%100
47	M44	X	0	0	0	%100
48	M44	Z	-19.646	-19.646	0	%100
49	M45	X	0	0	0	%100
50	M45	Z	-14.734	-14.734	0	%100
51	M46	X	0	0	0	%100
52	M46	Z	-4.911	-4.911	0	%100
53	M52	X	0	0	0	%100
54	M52	Z	-4.527	-4.527	0	%100
55	M52A	X	0	0	0	%100
56	M52A	Z	-9.966	-9.966	0	%100
57	M53A	X	0	0	0	%100
58	M53A	Z	-9.966	-9.966	0	%100
59	M54A	X	0	0	0	%100
60	M54A	Z	-10.639	-10.639	0	%100
61	M56	X	0	0	0	%100
62	M56	Z	-10.639	-10.639	0	%100
63	M57	X	0	0	0	%100
64	M57	Z	-11.46	-11.46	0	%100
65	M58	X	0	0	0	%100
66	M58	Z	-2.865	-2.865	0	%100
67	M59	X	0	0	0	%100
68	M59	Z	-2.865	-2.865	0	%100
69	M64	X	0	0	0	%100
70	M64	Z	-11.46	-11.46	0	%100
71	M77	X	0	0	0	%100
72	M77	Z	-2.865	-2.865	0	%100
73	M90	X	0	0	0	%100
74	M90	Z	-2.865	-2.865	0	%100
75	M91	X	0	0	0	%100
76	M91	Z	0	0	0	%100
77	M93	X	0	0	0	%100
78	M93	Z	-2.729	-2.729	0	%100
79	M94	X	0	0	0	%100
80	M94	Z	-2.729	-2.729	0	%100
81	M95	X	0	0	0	%100
82	M95	Z	-4.911	-4.911	0	%100
83	M96	X	0	0	0	%100
84	M96	Z	-19.646	-19.646	0	%100
85	M97	X	0	0	0	%100
86	M97	Z	-4.911	-4.911	0	%100

Member Distributed Loads (BLC 41 : Structure Wo (0 Deg)) (Continued)

	Member Label	Direction	Start Magnitude[lb/ft,...	End Magnitude[lb/ft,...	Start Location[ft,%]	End Location[ft,%]
87	M98	X	0	0	0	%100
88	M98	Z	0	0	0	%100
89	M99	X	0	0	0	%100
90	M99	Z	-4.911	-4.911	0	%100
91	M100	X	0	0	0	%100
92	M100	Z	0	0	0	%100
93	M101	X	0	0	0	%100
94	M101	Z	-4.911	-4.911	0	%100
95	M67	X	0	0	0	%100
96	M67	Z	-2.303	-2.303	0	%100
97	M68	X	0	0	0	%100
98	M68	Z	-2.304	-2.304	0	%100
99	M69	X	0	0	0	%100
100	M69	Z	-9.213	-9.213	0	%100
101	MP1A	X	0	0	0	%100
102	MP1A	Z	-7.776	-7.776	0	%100
103	MP2A	X	0	0	0	%100
104	MP2A	Z	-9.414	-9.414	0	%100
105	MP3A	X	0	0	0	%100
106	MP3A	Z	-7.776	-7.776	0	%100
107	MP4A	X	0	0	0	%100
108	MP4A	Z	-7.776	-7.776	0	%100
109	MP1B	X	0	0	0	%100
110	MP1B	Z	-7.776	-7.776	0	%100
111	MP2B	X	0	0	0	%100
112	MP2B	Z	-9.414	-9.414	0	%100
113	MP3B	X	0	0	0	%100
114	MP3B	Z	-7.776	-7.776	0	%100
115	MP4B	X	0	0	0	%100
116	MP4B	Z	-7.776	-7.776	0	%100
117	MP1C	X	0	0	0	%100
118	MP1C	Z	-7.776	-7.776	0	%100
119	MP2C	X	0	0	0	%100
120	MP2C	Z	-9.414	-9.414	0	%100
121	MP3C	X	0	0	0	%100
122	MP3C	Z	-7.776	-7.776	0	%100
123	MP4C	X	0	0	0	%100
124	MP4C	Z	-7.776	-7.776	0	%100

Member Distributed Loads (BLC 42 : Structure Wo (30 Deg))

	Member Label	Direction	Start Magnitude[lb/ft,...	End Magnitude[lb/ft,...	Start Location[ft,%]	End Location[ft,%]
1	A5	X	3.888	3.888	0	%100
2	A5	Z	-6.735	-6.735	0	%100
3	B5	X	3.888	3.888	0	%100
4	B5	Z	-6.735	-6.735	0	%100
5	M18	X	0	0	0	%100
6	M18	Z	0	0	0	%100
7	M19	X	0	0	0	%100
8	M19	Z	0	0	0	%100
9	M20	X	5.827	5.827	0	%100
10	M20	Z	-10.092	-10.092	0	%100
11	M21	X	4.093	4.093	0	%100
12	M21	Z	-7.089	-7.089	0	%100
13	M22	X	4.093	4.093	0	%100
14	M22	Z	-7.089	-7.089	0	%100
15	M23	X	7.367	7.367	0	%100

Member Distributed Loads (BLC 42 : Structure Wo (30 Deg)) (Continued)

	Member Label	Direction	Start Magnitude[lb/ft,...	End Magnitude[lb/ft,...	Start Location[ft,%]	End Location[ft,%]
16	M23	Z	-12.76	-12.76	0	%100
17	M24	X	0	0	0	%100
18	M24	Z	0	0	0	%100
19	M25	X	7.367	7.367	0	%100
20	M25	Z	-12.76	-12.76	0	%100
21	M26	X	9.823	9.823	0	%100
22	M26	Z	-17.014	-17.014	0	%100
23	M27	X	7.367	7.367	0	%100
24	M27	Z	-12.76	-12.76	0	%100
25	M28	X	9.823	9.823	0	%100
26	M28	Z	-17.014	-17.014	0	%100
27	M29	X	7.367	7.367	0	%100
28	M29	Z	-12.76	-12.76	0	%100
29	M35	X	3.737	3.737	0	%100
30	M35	Z	-6.473	-6.473	0	%100
31	M36	X	3.737	3.737	0	%100
32	M36	Z	-6.473	-6.473	0	%100
33	M37	X	1.457	1.457	0	%100
34	M37	Z	-2.523	-2.523	0	%100
35	M38	X	4.093	4.093	0	%100
36	M38	Z	-7.089	-7.089	0	%100
37	M39	X	0	0	0	%100
38	M39	Z	0	0	0	%100
39	M40	X	7.367	7.367	0	%100
40	M40	Z	-12.76	-12.76	0	%100
41	M41	X	7.367	7.367	0	%100
42	M41	Z	-12.76	-12.76	0	%100
43	M42	X	0	0	0	%100
44	M42	Z	0	0	0	%100
45	M43	X	2.456	2.456	0	%100
46	M43	Z	-4.253	-4.253	0	%100
47	M44	X	7.367	7.367	0	%100
48	M44	Z	-12.76	-12.76	0	%100
49	M45	X	2.456	2.456	0	%100
50	M45	Z	-4.253	-4.253	0	%100
51	M46	X	0	0	0	%100
52	M46	Z	0	0	0	%100
53	M52	X	3.282	3.282	0	%100
54	M52	Z	-5.685	-5.685	0	%100
55	M52A	X	3.737	3.737	0	%100
56	M52A	Z	-6.473	-6.473	0	%100
57	M53A	X	3.737	3.737	0	%100
58	M53A	Z	-6.473	-6.473	0	%100
59	M54A	X	6.338	6.338	0	%100
60	M54A	Z	-10.979	-10.979	0	%100
61	M56	X	3.282	3.282	0	%100
62	M56	Z	-5.685	-5.685	0	%100
63	M57	X	4.298	4.298	0	%100
64	M57	Z	-7.444	-7.444	0	%100
65	M58	X	0	0	0	%100
66	M58	Z	0	0	0	%100
67	M59	X	4.297	4.297	0	%100
68	M59	Z	-7.443	-7.443	0	%100
69	M64	X	4.298	4.298	0	%100
70	M64	Z	-7.444	-7.444	0	%100
71	M77	X	0	0	0	%100
72	M77	Z	0	0	0	%100

Member Distributed Loads (BLC 42 : Structure Wo (30 Deg)) (Continued)

	Member Label	Direction	Start Magnitude[lb/ft,...	End Magnitude[lb/ft,...	Start Location[ft,%]	End Location[ft,%]
73	M90	X	4.297	4.297	0	%100
74	M90	Z	-7.443	-7.443	0	%100
75	M91	X	1.457	1.457	0	%100
76	M91	Z	-2.523	-2.523	0	%100
77	M93	X	0	0	0	%100
78	M93	Z	0	0	0	%100
79	M94	X	4.093	4.093	0	%100
80	M94	Z	-7.089	-7.089	0	%100
81	M95	X	0	0	0	%100
82	M95	Z	0	0	0	%100
83	M96	X	7.367	7.367	0	%100
84	M96	Z	-12.76	-12.76	0	%100
85	M97	X	7.367	7.367	0	%100
86	M97	Z	-12.76	-12.76	0	%100
87	M98	X	2.456	2.456	0	%100
88	M98	Z	-4.253	-4.253	0	%100
89	M99	X	0	0	0	%100
90	M99	Z	0	0	0	%100
91	M100	X	2.456	2.456	0	%100
92	M100	Z	-4.253	-4.253	0	%100
93	M101	X	7.367	7.367	0	%100
94	M101	Z	-12.76	-12.76	0	%100
95	M67	X	0	0	0	%100
96	M67	Z	0	0	0	%100
97	M68	X	3.455	3.455	0	%100
98	M68	Z	-5.985	-5.985	0	%100
99	M69	X	3.455	3.455	0	%100
100	M69	Z	-5.984	-5.984	0	%100
101	MP1A	X	3.888	3.888	0	%100
102	MP1A	Z	-6.735	-6.735	0	%100
103	MP2A	X	4.707	4.707	0	%100
104	MP2A	Z	-8.152	-8.152	0	%100
105	MP3A	X	3.888	3.888	0	%100
106	MP3A	Z	-6.735	-6.735	0	%100
107	MP4A	X	3.888	3.888	0	%100
108	MP4A	Z	-6.735	-6.735	0	%100
109	MP1B	X	3.888	3.888	0	%100
110	MP1B	Z	-6.735	-6.735	0	%100
111	MP2B	X	4.707	4.707	0	%100
112	MP2B	Z	-8.152	-8.152	0	%100
113	MP3B	X	3.888	3.888	0	%100
114	MP3B	Z	-6.735	-6.735	0	%100
115	MP4B	X	3.888	3.888	0	%100
116	MP4B	Z	-6.735	-6.735	0	%100
117	MP1C	X	3.888	3.888	0	%100
118	MP1C	Z	-6.735	-6.735	0	%100
119	MP2C	X	4.707	4.707	0	%100
120	MP2C	Z	-8.152	-8.152	0	%100
121	MP3C	X	3.888	3.888	0	%100
122	MP3C	Z	-6.735	-6.735	0	%100
123	MP4C	X	3.888	3.888	0	%100
124	MP4C	Z	-6.735	-6.735	0	%100

Member Distributed Loads (BLC 43 : Structure Wo (60 Deg))

	Member Label	Direction	Start Magnitude[lb/ft,...	End Magnitude[lb/ft,...	Start Location[ft,%]	End Location[ft,%]
1	A5	X	6.735	6.735	0	%100

Member Distributed Loads (BLC 43 : Structure Wo (60 Deg)) (Continued)

	Member Label	Direction	Start Magnitude[lb/ft,...	End Magnitude[lb/ft,...	Start Location[ft,%]	End Location[ft,%]
2	A5	Z	-3.888	-3.888	0	%100
3	B5	X	6.735	6.735	0	%100
4	B5	Z	-3.888	-3.888	0	%100
5	M18	X	2.158	2.158	0	%100
6	M18	Z	-1.246	-1.246	0	%100
7	M19	X	2.158	2.158	0	%100
8	M19	Z	-1.246	-1.246	0	%100
9	M20	X	7.569	7.569	0	%100
10	M20	Z	-4.37	-4.37	0	%100
11	M21	X	9.452	9.452	0	%100
12	M21	Z	-5.457	-5.457	0	%100
13	M22	X	2.363	2.363	0	%100
14	M22	Z	-1.364	-1.364	0	%100
15	M23	X	17.014	17.014	0	%100
16	M23	Z	-9.823	-9.823	0	%100
17	M24	X	4.253	4.253	0	%100
18	M24	Z	-2.456	-2.456	0	%100
19	M25	X	4.253	4.253	0	%100
20	M25	Z	-2.456	-2.456	0	%100
21	M26	X	12.76	12.76	0	%100
22	M26	Z	-7.367	-7.367	0	%100
23	M27	X	17.014	17.014	0	%100
24	M27	Z	-9.823	-9.823	0	%100
25	M28	X	12.76	12.76	0	%100
26	M28	Z	-7.367	-7.367	0	%100
27	M29	X	4.253	4.253	0	%100
28	M29	Z	-2.456	-2.456	0	%100
29	M35	X	8.63	8.63	0	%100
30	M35	Z	-4.983	-4.983	0	%100
31	M36	X	8.63	8.63	0	%100
32	M36	Z	-4.983	-4.983	0	%100
33	M37	X	0	0	0	%100
34	M37	Z	0	0	0	%100
35	M38	X	2.363	2.363	0	%100
36	M38	Z	-1.364	-1.364	0	%100
37	M39	X	2.363	2.363	0	%100
38	M39	Z	-1.364	-1.364	0	%100
39	M40	X	4.253	4.253	0	%100
40	M40	Z	-2.456	-2.456	0	%100
41	M41	X	17.014	17.014	0	%100
42	M41	Z	-9.823	-9.823	0	%100
43	M42	X	4.253	4.253	0	%100
44	M42	Z	-2.456	-2.456	0	%100
45	M43	X	0	0	0	%100
46	M43	Z	0	0	0	%100
47	M44	X	4.253	4.253	0	%100
48	M44	Z	-2.456	-2.456	0	%100
49	M45	X	0	0	0	%100
50	M45	Z	0	0	0	%100
51	M46	X	4.253	4.253	0	%100
52	M46	Z	-2.456	-2.456	0	%100
53	M52	X	9.214	9.214	0	%100
54	M52	Z	-5.32	-5.32	0	%100
55	M52A	X	2.158	2.158	0	%100
56	M52A	Z	-1.246	-1.246	0	%100
57	M53A	X	2.158	2.158	0	%100
58	M53A	Z	-1.246	-1.246	0	%100

Member Distributed Loads (BLC 43 : Structure Wo (60 Deg)) (Continued)

	Member Label	Direction	Start Magnitude[lb/ft,...	End Magnitude[lb/ft,...	Start Location[ft,%]	End Location[ft,%]
59	M54A	X	9.214	9.214	0	%100
60	M54A	Z	-5.32	-5.32	0	%100
61	M56	X	3.92	3.92	0	%100
62	M56	Z	-2.263	-2.263	0	%100
63	M57	X	2.481	2.481	0	%100
64	M57	Z	-1.433	-1.433	0	%100
65	M58	X	2.481	2.481	0	%100
66	M58	Z	-1.432	-1.432	0	%100
67	M59	X	9.925	9.925	0	%100
68	M59	Z	-5.73	-5.73	0	%100
69	M64	X	2.481	2.481	0	%100
70	M64	Z	-1.433	-1.433	0	%100
71	M77	X	2.481	2.481	0	%100
72	M77	Z	-1.432	-1.432	0	%100
73	M90	X	9.925	9.925	0	%100
74	M90	Z	-5.73	-5.73	0	%100
75	M91	X	7.569	7.569	0	%100
76	M91	Z	-4.37	-4.37	0	%100
77	M93	X	2.363	2.363	0	%100
78	M93	Z	-1.364	-1.364	0	%100
79	M94	X	9.452	9.452	0	%100
80	M94	Z	-5.457	-5.457	0	%100
81	M95	X	4.253	4.253	0	%100
82	M95	Z	-2.456	-2.456	0	%100
83	M96	X	4.253	4.253	0	%100
84	M96	Z	-2.456	-2.456	0	%100
85	M97	X	17.014	17.014	0	%100
86	M97	Z	-9.823	-9.823	0	%100
87	M98	X	12.76	12.76	0	%100
88	M98	Z	-7.367	-7.367	0	%100
89	M99	X	4.253	4.253	0	%100
90	M99	Z	-2.456	-2.456	0	%100
91	M100	X	12.76	12.76	0	%100
92	M100	Z	-7.367	-7.367	0	%100
93	M101	X	17.014	17.014	0	%100
94	M101	Z	-9.823	-9.823	0	%100
95	M67	X	1.995	1.995	0	%100
96	M67	Z	-1.152	-1.152	0	%100
97	M68	X	7.979	7.979	0	%100
98	M68	Z	-4.607	-4.607	0	%100
99	M69	X	1.994	1.994	0	%100
100	M69	Z	-1.152	-1.152	0	%100
101	MP1A	X	6.735	6.735	0	%100
102	MP1A	Z	-3.888	-3.888	0	%100
103	MP2A	X	8.152	8.152	0	%100
104	MP2A	Z	-4.707	-4.707	0	%100
105	MP3A	X	6.735	6.735	0	%100
106	MP3A	Z	-3.888	-3.888	0	%100
107	MP4A	X	6.735	6.735	0	%100
108	MP4A	Z	-3.888	-3.888	0	%100
109	MP1B	X	6.735	6.735	0	%100
110	MP1B	Z	-3.888	-3.888	0	%100
111	MP2B	X	8.152	8.152	0	%100
112	MP2B	Z	-4.707	-4.707	0	%100
113	MP3B	X	6.735	6.735	0	%100
114	MP3B	Z	-3.888	-3.888	0	%100
115	MP4B	X	6.735	6.735	0	%100

Member Distributed Loads (BLC 43 : Structure Wo (60 Deg)) (Continued)

	Member Label	Direction	Start Magnitude[lb/ft,...	End Magnitude[lb/ft,...	Start Location[ft,%]	End Location[ft,%]
116	MP4B	Z	-3.888	-3.888	0	%100
117	MP1C	X	6.735	6.735	0	%100
118	MP1C	Z	-3.888	-3.888	0	%100
119	MP2C	X	8.152	8.152	0	%100
120	MP2C	Z	-4.707	-4.707	0	%100
121	MP3C	X	6.735	6.735	0	%100
122	MP3C	Z	-3.888	-3.888	0	%100
123	MP4C	X	6.735	6.735	0	%100
124	MP4C	Z	-3.888	-3.888	0	%100

Member Distributed Loads (BLC 44 : Structure Wo (90 Deg))

	Member Label	Direction	Start Magnitude[lb/ft,...	End Magnitude[lb/ft,...	Start Location[ft,%]	End Location[ft,%]
1	A5	X	7.776	7.776	0	%100
2	A5	Z	0	0	0	%100
3	B5	X	7.776	7.776	0	%100
4	B5	Z	0	0	0	%100
5	M18	X	7.474	7.474	0	%100
6	M18	Z	0	0	0	%100
7	M19	X	7.474	7.474	0	%100
8	M19	Z	0	0	0	%100
9	M20	X	2.913	2.913	0	%100
10	M20	Z	0	0	0	%100
11	M21	X	8.186	8.186	0	%100
12	M21	Z	0	0	0	%100
13	M22	X	0	0	0	%100
14	M22	Z	0	0	0	%100
15	M23	X	14.734	14.734	0	%100
16	M23	Z	0	0	0	%100
17	M24	X	14.734	14.734	0	%100
18	M24	Z	0	0	0	%100
19	M25	X	0	0	0	%100
20	M25	Z	0	0	0	%100
21	M26	X	4.911	4.911	0	%100
22	M26	Z	0	0	0	%100
23	M27	X	14.734	14.734	0	%100
24	M27	Z	0	0	0	%100
25	M28	X	4.911	4.911	0	%100
26	M28	Z	0	0	0	%100
27	M29	X	0	0	0	%100
28	M29	Z	0	0	0	%100
29	M35	X	7.474	7.474	0	%100
30	M35	Z	0	0	0	%100
31	M36	X	7.474	7.474	0	%100
32	M36	Z	0	0	0	%100
33	M37	X	2.913	2.913	0	%100
34	M37	Z	0	0	0	%100
35	M38	X	0	0	0	%100
36	M38	Z	0	0	0	%100
37	M39	X	8.186	8.186	0	%100
38	M39	Z	0	0	0	%100
39	M40	X	0	0	0	%100
40	M40	Z	0	0	0	%100
41	M41	X	14.734	14.734	0	%100
42	M41	Z	0	0	0	%100
43	M42	X	14.734	14.734	0	%100
44	M42	Z	0	0	0	%100

Member Distributed Loads (BLC 44 : Structure Wo (90 Deg)) (Continued)

	Member Label	Direction	Start Magnitude[lb/ft,...	End Magnitude[lb/ft,...	Start Location[ft,%]	End Location[ft,%]
45	M43	X	4.911	4.911	0	%100
46	M43	Z	0	0	0	%100
47	M44	X	0	0	0	%100
48	M44	Z	0	0	0	%100
49	M45	X	4.911	4.911	0	%100
50	M45	Z	0	0	0	%100
51	M46	X	14.734	14.734	0	%100
52	M46	Z	0	0	0	%100
53	M52	X	12.677	12.677	0	%100
54	M52	Z	0	0	0	%100
55	M52A	X	0	0	0	%100
56	M52A	Z	0	0	0	%100
57	M53A	X	0	0	0	%100
58	M53A	Z	0	0	0	%100
59	M54A	X	6.564	6.564	0	%100
60	M54A	Z	0	0	0	%100
61	M56	X	6.564	6.564	0	%100
62	M56	Z	0	0	0	%100
63	M57	X	0	0	0	%100
64	M57	Z	0	0	0	%100
65	M58	X	8.595	8.595	0	%100
66	M58	Z	0	0	0	%100
67	M59	X	8.595	8.595	0	%100
68	M59	Z	0	0	0	%100
69	M64	X	0	0	0	%100
70	M64	Z	0	0	0	%100
71	M77	X	8.595	8.595	0	%100
72	M77	Z	0	0	0	%100
73	M90	X	8.595	8.595	0	%100
74	M90	Z	0	0	0	%100
75	M91	X	11.653	11.653	0	%100
76	M91	Z	0	0	0	%100
77	M93	X	8.186	8.186	0	%100
78	M93	Z	0	0	0	%100
79	M94	X	8.186	8.186	0	%100
80	M94	Z	0	0	0	%100
81	M95	X	14.734	14.734	0	%100
82	M95	Z	0	0	0	%100
83	M96	X	0	0	0	%100
84	M96	Z	0	0	0	%100
85	M97	X	14.734	14.734	0	%100
86	M97	Z	0	0	0	%100
87	M98	X	19.646	19.646	0	%100
88	M98	Z	0	0	0	%100
89	M99	X	14.734	14.734	0	%100
90	M99	Z	0	0	0	%100
91	M100	X	19.646	19.646	0	%100
92	M100	Z	0	0	0	%100
93	M101	X	14.734	14.734	0	%100
94	M101	Z	0	0	0	%100
95	M67	X	6.91	6.91	0	%100
96	M67	Z	0	0	0	%100
97	M68	X	6.91	6.91	0	%100
98	M68	Z	0	0	0	%100
99	M69	X	0	0	0	%100
100	M69	Z	0	0	0	%100
101	MP1A	X	7.776	7.776	0	%100

Member Distributed Loads (BLC 44 : Structure Wo (90 Deg)) (Continued)

	Member Label	Direction	Start Magnitude[lb/ft,...	End Magnitude[lb/ft,...	Start Location[ft,%]	End Location[ft,%]
102	MP1A	Z	0	0	0	%100
103	MP2A	X	9.414	9.414	0	%100
104	MP2A	Z	0	0	0	%100
105	MP3A	X	7.776	7.776	0	%100
106	MP3A	Z	0	0	0	%100
107	MP4A	X	7.776	7.776	0	%100
108	MP4A	Z	0	0	0	%100
109	MP1B	X	7.776	7.776	0	%100
110	MP1B	Z	0	0	0	%100
111	MP2B	X	9.414	9.414	0	%100
112	MP2B	Z	0	0	0	%100
113	MP3B	X	7.776	7.776	0	%100
114	MP3B	Z	0	0	0	%100
115	MP4B	X	7.776	7.776	0	%100
116	MP4B	Z	0	0	0	%100
117	MP1C	X	7.776	7.776	0	%100
118	MP1C	Z	0	0	0	%100
119	MP2C	X	9.414	9.414	0	%100
120	MP2C	Z	0	0	0	%100
121	MP3C	X	7.776	7.776	0	%100
122	MP3C	Z	0	0	0	%100
123	MP4C	X	7.776	7.776	0	%100
124	MP4C	Z	0	0	0	%100

Member Distributed Loads (BLC 45 : Structure Wo (120 Deg))

	Member Label	Direction	Start Magnitude[lb/ft,...	End Magnitude[lb/ft,...	Start Location[ft,%]	End Location[ft,%]
1	A5	X	6.735	6.735	0	%100
2	A5	Z	3.888	3.888	0	%100
3	B5	X	6.735	6.735	0	%100
4	B5	Z	3.888	3.888	0	%100
5	M18	X	8.63	8.63	0	%100
6	M18	Z	4.983	4.983	0	%100
7	M19	X	8.63	8.63	0	%100
8	M19	Z	4.983	4.983	0	%100
9	M20	X	0	0	0	%100
10	M20	Z	0	0	0	%100
11	M21	X	2.363	2.363	0	%100
12	M21	Z	1.364	1.364	0	%100
13	M22	X	2.363	2.363	0	%100
14	M22	Z	1.364	1.364	0	%100
15	M23	X	4.253	4.253	0	%100
16	M23	Z	2.456	2.456	0	%100
17	M24	X	17.014	17.014	0	%100
18	M24	Z	9.823	9.823	0	%100
19	M25	X	4.253	4.253	0	%100
20	M25	Z	2.456	2.456	0	%100
21	M26	X	0	0	0	%100
22	M26	Z	0	0	0	%100
23	M27	X	4.253	4.253	0	%100
24	M27	Z	2.456	2.456	0	%100
25	M28	X	0	0	0	%100
26	M28	Z	0	0	0	%100
27	M29	X	4.253	4.253	0	%100
28	M29	Z	2.456	2.456	0	%100
29	M35	X	2.158	2.158	0	%100
30	M35	Z	1.246	1.246	0	%100

Member Distributed Loads (BLC 45 : Structure Wo (120 Deg)) (Continued)

	Member Label	Direction	Start Magnitude[lb/ft,...	End Magnitude[lb/ft,...	Start Location[ft,%]	End Location[ft,%]
31	M36	X	2.158	2.158	0	%100
32	M36	Z	1.246	1.246	0	%100
33	M37	X	7.569	7.569	0	%100
34	M37	Z	4.37	4.37	0	%100
35	M38	X	2.363	2.363	0	%100
36	M38	Z	1.364	1.364	0	%100
37	M39	X	9.452	9.452	0	%100
38	M39	Z	5.457	5.457	0	%100
39	M40	X	4.253	4.253	0	%100
40	M40	Z	2.456	2.456	0	%100
41	M41	X	4.253	4.253	0	%100
42	M41	Z	2.456	2.456	0	%100
43	M42	X	17.014	17.014	0	%100
44	M42	Z	9.823	9.823	0	%100
45	M43	X	12.76	12.76	0	%100
46	M43	Z	7.367	7.367	0	%100
47	M44	X	4.253	4.253	0	%100
48	M44	Z	2.456	2.456	0	%100
49	M45	X	12.76	12.76	0	%100
50	M45	Z	7.367	7.367	0	%100
51	M46	X	17.014	17.014	0	%100
52	M46	Z	9.823	9.823	0	%100
53	M52	X	9.214	9.214	0	%100
54	M52	Z	5.32	5.32	0	%100
55	M52A	X	2.158	2.158	0	%100
56	M52A	Z	1.246	1.246	0	%100
57	M53A	X	2.158	2.158	0	%100
58	M53A	Z	1.246	1.246	0	%100
59	M54A	X	3.92	3.92	0	%100
60	M54A	Z	2.263	2.263	0	%100
61	M56	X	9.214	9.214	0	%100
62	M56	Z	5.32	5.32	0	%100
63	M57	X	2.481	2.481	0	%100
64	M57	Z	1.432	1.432	0	%100
65	M58	X	9.925	9.925	0	%100
66	M58	Z	5.73	5.73	0	%100
67	M59	X	2.481	2.481	0	%100
68	M59	Z	1.433	1.433	0	%100
69	M64	X	2.481	2.481	0	%100
70	M64	Z	1.432	1.432	0	%100
71	M77	X	9.925	9.925	0	%100
72	M77	Z	5.73	5.73	0	%100
73	M90	X	2.481	2.481	0	%100
74	M90	Z	1.433	1.433	0	%100
75	M91	X	7.569	7.569	0	%100
76	M91	Z	4.37	4.37	0	%100
77	M93	X	9.452	9.452	0	%100
78	M93	Z	5.457	5.457	0	%100
79	M94	X	2.363	2.363	0	%100
80	M94	Z	1.364	1.364	0	%100
81	M95	X	17.014	17.014	0	%100
82	M95	Z	9.823	9.823	0	%100
83	M96	X	4.253	4.253	0	%100
84	M96	Z	2.456	2.456	0	%100
85	M97	X	4.253	4.253	0	%100
86	M97	Z	2.456	2.456	0	%100
87	M98	X	12.76	12.76	0	%100

Member Distributed Loads (BLC 45 : Structure Wo (120 Deg)) (Continued)

	Member Label	Direction	Start Magnitude[lb/ft,...	End Magnitude[lb/ft,...	Start Location[ft,%]	End Location[ft,%]
88	M98	Z	7.367	7.367	0	%100
89	M99	X	17.014	17.014	0	%100
90	M99	Z	9.823	9.823	0	%100
91	M100	X	12.76	12.76	0	%100
92	M100	Z	7.367	7.367	0	%100
93	M101	X	4.253	4.253	0	%100
94	M101	Z	2.456	2.456	0	%100
95	M67	X	7.979	7.979	0	%100
96	M67	Z	4.607	4.607	0	%100
97	M68	X	1.994	1.994	0	%100
98	M68	Z	1.152	1.152	0	%100
99	M69	X	1.995	1.995	0	%100
100	M69	Z	1.152	1.152	0	%100
101	MP1A	X	6.735	6.735	0	%100
102	MP1A	Z	3.888	3.888	0	%100
103	MP2A	X	8.152	8.152	0	%100
104	MP2A	Z	4.707	4.707	0	%100
105	MP3A	X	6.735	6.735	0	%100
106	MP3A	Z	3.888	3.888	0	%100
107	MP4A	X	6.735	6.735	0	%100
108	MP4A	Z	3.888	3.888	0	%100
109	MP1B	X	6.735	6.735	0	%100
110	MP1B	Z	3.888	3.888	0	%100
111	MP2B	X	8.152	8.152	0	%100
112	MP2B	Z	4.707	4.707	0	%100
113	MP3B	X	6.735	6.735	0	%100
114	MP3B	Z	3.888	3.888	0	%100
115	MP4B	X	6.735	6.735	0	%100
116	MP4B	Z	3.888	3.888	0	%100
117	MP1C	X	6.735	6.735	0	%100
118	MP1C	Z	3.888	3.888	0	%100
119	MP2C	X	8.152	8.152	0	%100
120	MP2C	Z	4.707	4.707	0	%100
121	MP3C	X	6.735	6.735	0	%100
122	MP3C	Z	3.888	3.888	0	%100
123	MP4C	X	6.735	6.735	0	%100
124	MP4C	Z	3.888	3.888	0	%100

Member Distributed Loads (BLC 46 : Structure Wo (150 Deg))

	Member Label	Direction	Start Magnitude[lb/ft,...	End Magnitude[lb/ft,...	Start Location[ft,%]	End Location[ft,%]
1	A5	X	3.888	3.888	0	%100
2	A5	Z	6.735	6.735	0	%100
3	B5	X	3.888	3.888	0	%100
4	B5	Z	6.735	6.735	0	%100
5	M18	X	3.737	3.737	0	%100
6	M18	Z	6.473	6.473	0	%100
7	M19	X	3.737	3.737	0	%100
8	M19	Z	6.473	6.473	0	%100
9	M20	X	1.457	1.457	0	%100
10	M20	Z	2.523	2.523	0	%100
11	M21	X	0	0	0	%100
12	M21	Z	0	0	0	%100
13	M22	X	4.093	4.093	0	%100
14	M22	Z	7.089	7.089	0	%100
15	M23	X	0	0	0	%100
16	M23	Z	0	0	0	%100

Member Distributed Loads (BLC 46 : Structure Wo (150 Deg)) (Continued)

	Member Label	Direction	Start Magnitude[lb/ft,...	End Magnitude[lb/ft,...	Start Location[ft,%]	End Location[ft,%]
17	M24	X	7.367	7.367	0	%100
18	M24	Z	12.76	12.76	0	%100
19	M25	X	7.367	7.367	0	%100
20	M25	Z	12.76	12.76	0	%100
21	M26	X	2.456	2.456	0	%100
22	M26	Z	4.253	4.253	0	%100
23	M27	X	0	0	0	%100
24	M27	Z	0	0	0	%100
25	M28	X	2.456	2.456	0	%100
26	M28	Z	4.253	4.253	0	%100
27	M29	X	7.367	7.367	0	%100
28	M29	Z	12.76	12.76	0	%100
29	M35	X	0	0	0	%100
30	M35	Z	0	0	0	%100
31	M36	X	0	0	0	%100
32	M36	Z	0	0	0	%100
33	M37	X	5.827	5.827	0	%100
34	M37	Z	10.092	10.092	0	%100
35	M38	X	4.093	4.093	0	%100
36	M38	Z	7.089	7.089	0	%100
37	M39	X	4.093	4.093	0	%100
38	M39	Z	7.089	7.089	0	%100
39	M40	X	7.367	7.367	0	%100
40	M40	Z	12.76	12.76	0	%100
41	M41	X	0	0	0	%100
42	M41	Z	0	0	0	%100
43	M42	X	7.367	7.367	0	%100
44	M42	Z	12.76	12.76	0	%100
45	M43	X	9.823	9.823	0	%100
46	M43	Z	17.014	17.014	0	%100
47	M44	X	7.367	7.367	0	%100
48	M44	Z	12.76	12.76	0	%100
49	M45	X	9.823	9.823	0	%100
50	M45	Z	17.014	17.014	0	%100
51	M46	X	7.367	7.367	0	%100
52	M46	Z	12.76	12.76	0	%100
53	M52	X	3.282	3.282	0	%100
54	M52	Z	5.685	5.685	0	%100
55	M52A	X	3.737	3.737	0	%100
56	M52A	Z	6.473	6.473	0	%100
57	M53A	X	3.737	3.737	0	%100
58	M53A	Z	6.473	6.473	0	%100
59	M54A	X	3.282	3.282	0	%100
60	M54A	Z	5.685	5.685	0	%100
61	M56	X	6.338	6.338	0	%100
62	M56	Z	10.979	10.979	0	%100
63	M57	X	4.297	4.297	0	%100
64	M57	Z	7.443	7.443	0	%100
65	M58	X	4.298	4.298	0	%100
66	M58	Z	7.444	7.444	0	%100
67	M59	X	0	0	0	%100
68	M59	Z	0	0	0	%100
69	M64	X	4.297	4.297	0	%100
70	M64	Z	7.443	7.443	0	%100
71	M77	X	4.298	4.298	0	%100
72	M77	Z	7.444	7.444	0	%100
73	M90	X	0	0	0	%100

Member Distributed Loads (BLC 46 : Structure Wo (150 Deg)) (Continued)

	Member Label	Direction	Start Magnitude[lb/ft,...	End Magnitude[lb/ft,...	Start Location[ft,%]	End Location[ft,%]
74	M90	Z	0	0	0	%100
75	M91	X	1.457	1.457	0	%100
76	M91	Z	2.523	2.523	0	%100
77	M93	X	4.093	4.093	0	%100
78	M93	Z	7.089	7.089	0	%100
79	M94	X	0	0	0	%100
80	M94	Z	0	0	0	%100
81	M95	X	7.367	7.367	0	%100
82	M95	Z	12.76	12.76	0	%100
83	M96	X	7.367	7.367	0	%100
84	M96	Z	12.76	12.76	0	%100
85	M97	X	0	0	0	%100
86	M97	Z	0	0	0	%100
87	M98	X	2.456	2.456	0	%100
88	M98	Z	4.253	4.253	0	%100
89	M99	X	7.367	7.367	0	%100
90	M99	Z	12.76	12.76	0	%100
91	M100	X	2.456	2.456	0	%100
92	M100	Z	4.253	4.253	0	%100
93	M101	X	0	0	0	%100
94	M101	Z	0	0	0	%100
95	M67	X	3.455	3.455	0	%100
96	M67	Z	5.984	5.984	0	%100
97	M68	X	0	0	0	%100
98	M68	Z	0	0	0	%100
99	M69	X	3.455	3.455	0	%100
100	M69	Z	5.985	5.985	0	%100
101	MP1A	X	3.888	3.888	0	%100
102	MP1A	Z	6.735	6.735	0	%100
103	MP2A	X	4.707	4.707	0	%100
104	MP2A	Z	8.152	8.152	0	%100
105	MP3A	X	3.888	3.888	0	%100
106	MP3A	Z	6.735	6.735	0	%100
107	MP4A	X	3.888	3.888	0	%100
108	MP4A	Z	6.735	6.735	0	%100
109	MP1B	X	3.888	3.888	0	%100
110	MP1B	Z	6.735	6.735	0	%100
111	MP2B	X	4.707	4.707	0	%100
112	MP2B	Z	8.152	8.152	0	%100
113	MP3B	X	3.888	3.888	0	%100
114	MP3B	Z	6.735	6.735	0	%100
115	MP4B	X	3.888	3.888	0	%100
116	MP4B	Z	6.735	6.735	0	%100
117	MP1C	X	3.888	3.888	0	%100
118	MP1C	Z	6.735	6.735	0	%100
119	MP2C	X	4.707	4.707	0	%100
120	MP2C	Z	8.152	8.152	0	%100
121	MP3C	X	3.888	3.888	0	%100
122	MP3C	Z	6.735	6.735	0	%100
123	MP4C	X	3.888	3.888	0	%100
124	MP4C	Z	6.735	6.735	0	%100

Member Distributed Loads (BLC 47 : Structure Wo (180 Deg))

	Member Label	Direction	Start Magnitude[lb/ft,...	End Magnitude[lb/ft,...	Start Location[ft,%]	End Location[ft,%]
1	A5	X	0	0	0	%100
2	A5	Z	7.776	7.776	0	%100

Member Distributed Loads (BLC 47 : Structure Wo (180 Deg)) (Continued)

	Member Label	Direction	Start Magnitude[lb/ft,...	End Magnitude[lb/ft,...	Start Location[ft,%]	End Location[ft,%]
3	B5	X	0	0	0	%100
4	B5	Z	7.776	7.776	0	%100
5	M18	X	0	0	0	%100
6	M18	Z	2.491	2.491	0	%100
7	M19	X	0	0	0	%100
8	M19	Z	2.491	2.491	0	%100
9	M20	X	0	0	0	%100
10	M20	Z	8.74	8.74	0	%100
11	M21	X	0	0	0	%100
12	M21	Z	2.729	2.729	0	%100
13	M22	X	0	0	0	%100
14	M22	Z	10.914	10.914	0	%100
15	M23	X	0	0	0	%100
16	M23	Z	4.911	4.911	0	%100
17	M24	X	0	0	0	%100
18	M24	Z	4.911	4.911	0	%100
19	M25	X	0	0	0	%100
20	M25	Z	19.646	19.646	0	%100
21	M26	X	0	0	0	%100
22	M26	Z	14.734	14.734	0	%100
23	M27	X	0	0	0	%100
24	M27	Z	4.911	4.911	0	%100
25	M28	X	0	0	0	%100
26	M28	Z	14.734	14.734	0	%100
27	M29	X	0	0	0	%100
28	M29	Z	19.646	19.646	0	%100
29	M35	X	0	0	0	%100
30	M35	Z	2.491	2.491	0	%100
31	M36	X	0	0	0	%100
32	M36	Z	2.491	2.491	0	%100
33	M37	X	0	0	0	%100
34	M37	Z	8.74	8.74	0	%100
35	M38	X	0	0	0	%100
36	M38	Z	10.914	10.914	0	%100
37	M39	X	0	0	0	%100
38	M39	Z	2.729	2.729	0	%100
39	M40	X	0	0	0	%100
40	M40	Z	19.646	19.646	0	%100
41	M41	X	0	0	0	%100
42	M41	Z	4.911	4.911	0	%100
43	M42	X	0	0	0	%100
44	M42	Z	4.911	4.911	0	%100
45	M43	X	0	0	0	%100
46	M43	Z	14.734	14.734	0	%100
47	M44	X	0	0	0	%100
48	M44	Z	19.646	19.646	0	%100
49	M45	X	0	0	0	%100
50	M45	Z	14.734	14.734	0	%100
51	M46	X	0	0	0	%100
52	M46	Z	4.911	4.911	0	%100
53	M52	X	0	0	0	%100
54	M52	Z	4.527	4.527	0	%100
55	M52A	X	0	0	0	%100
56	M52A	Z	9.966	9.966	0	%100
57	M53A	X	0	0	0	%100
58	M53A	Z	9.966	9.966	0	%100
59	M54A	X	0	0	0	%100

Member Distributed Loads (BLC 47 : Structure Wo (180 Deg)) (Continued)

	Member Label	Direction	Start Magnitude[lb/ft,...	End Magnitude[lb/ft,...	Start Location[ft,%]	End Location[ft,%]
60	M54A	Z	10.639	10.639	0	%100
61	M56	X	0	0	0	%100
62	M56	Z	10.639	10.639	0	%100
63	M57	X	0	0	0	%100
64	M57	Z	11.46	11.46	0	%100
65	M58	X	0	0	0	%100
66	M58	Z	2.865	2.865	0	%100
67	M59	X	0	0	0	%100
68	M59	Z	2.865	2.865	0	%100
69	M64	X	0	0	0	%100
70	M64	Z	11.46	11.46	0	%100
71	M77	X	0	0	0	%100
72	M77	Z	2.865	2.865	0	%100
73	M90	X	0	0	0	%100
74	M90	Z	2.865	2.865	0	%100
75	M91	X	0	0	0	%100
76	M91	Z	0	0	0	%100
77	M93	X	0	0	0	%100
78	M93	Z	2.729	2.729	0	%100
79	M94	X	0	0	0	%100
80	M94	Z	2.729	2.729	0	%100
81	M95	X	0	0	0	%100
82	M95	Z	4.911	4.911	0	%100
83	M96	X	0	0	0	%100
84	M96	Z	19.646	19.646	0	%100
85	M97	X	0	0	0	%100
86	M97	Z	4.911	4.911	0	%100
87	M98	X	0	0	0	%100
88	M98	Z	0	0	0	%100
89	M99	X	0	0	0	%100
90	M99	Z	4.911	4.911	0	%100
91	M100	X	0	0	0	%100
92	M100	Z	0	0	0	%100
93	M101	X	0	0	0	%100
94	M101	Z	4.911	4.911	0	%100
95	M67	X	0	0	0	%100
96	M67	Z	2.303	2.303	0	%100
97	M68	X	0	0	0	%100
98	M68	Z	2.304	2.304	0	%100
99	M69	X	0	0	0	%100
100	M69	Z	9.213	9.213	0	%100
101	MP1A	X	0	0	0	%100
102	MP1A	Z	7.776	7.776	0	%100
103	MP2A	X	0	0	0	%100
104	MP2A	Z	9.414	9.414	0	%100
105	MP3A	X	0	0	0	%100
106	MP3A	Z	7.776	7.776	0	%100
107	MP4A	X	0	0	0	%100
108	MP4A	Z	7.776	7.776	0	%100
109	MP1B	X	0	0	0	%100
110	MP1B	Z	7.776	7.776	0	%100
111	MP2B	X	0	0	0	%100
112	MP2B	Z	9.414	9.414	0	%100
113	MP3B	X	0	0	0	%100
114	MP3B	Z	7.776	7.776	0	%100
115	MP4B	X	0	0	0	%100
116	MP4B	Z	7.776	7.776	0	%100

Member Distributed Loads (BLC 47 : Structure Wo (180 Deg)) (Continued)

	Member Label	Direction	Start Magnitude[lb/ft,...	End Magnitude[lb/ft,...	Start Location[ft,%]	End Location[ft,%]
117	MP1C	X	0	0	0	%100
118	MP1C	Z	7.776	7.776	0	%100
119	MP2C	X	0	0	0	%100
120	MP2C	Z	9.414	9.414	0	%100
121	MP3C	X	0	0	0	%100
122	MP3C	Z	7.776	7.776	0	%100
123	MP4C	X	0	0	0	%100
124	MP4C	Z	7.776	7.776	0	%100

Member Distributed Loads (BLC 48 : Structure Wo (210 Deg))

	Member Label	Direction	Start Magnitude[lb/ft,...	End Magnitude[lb/ft,...	Start Location[ft,%]	End Location[ft,%]
1	A5	X	-3.888	-3.888	0	%100
2	A5	Z	6.735	6.735	0	%100
3	B5	X	-3.888	-3.888	0	%100
4	B5	Z	6.735	6.735	0	%100
5	M18	X	0	0	0	%100
6	M18	Z	0	0	0	%100
7	M19	X	0	0	0	%100
8	M19	Z	0	0	0	%100
9	M20	X	-5.827	-5.827	0	%100
10	M20	Z	10.092	10.092	0	%100
11	M21	X	-4.093	-4.093	0	%100
12	M21	Z	7.089	7.089	0	%100
13	M22	X	-4.093	-4.093	0	%100
14	M22	Z	7.089	7.089	0	%100
15	M23	X	-7.367	-7.367	0	%100
16	M23	Z	12.76	12.76	0	%100
17	M24	X	0	0	0	%100
18	M24	Z	0	0	0	%100
19	M25	X	-7.367	-7.367	0	%100
20	M25	Z	12.76	12.76	0	%100
21	M26	X	-9.823	-9.823	0	%100
22	M26	Z	17.014	17.014	0	%100
23	M27	X	-7.367	-7.367	0	%100
24	M27	Z	12.76	12.76	0	%100
25	M28	X	-9.823	-9.823	0	%100
26	M28	Z	17.014	17.014	0	%100
27	M29	X	-7.367	-7.367	0	%100
28	M29	Z	12.76	12.76	0	%100
29	M35	X	-3.737	-3.737	0	%100
30	M35	Z	6.473	6.473	0	%100
31	M36	X	-3.737	-3.737	0	%100
32	M36	Z	6.473	6.473	0	%100
33	M37	X	-1.457	-1.457	0	%100
34	M37	Z	2.523	2.523	0	%100
35	M38	X	-4.093	-4.093	0	%100
36	M38	Z	7.089	7.089	0	%100
37	M39	X	0	0	0	%100
38	M39	Z	0	0	0	%100
39	M40	X	-7.367	-7.367	0	%100
40	M40	Z	12.76	12.76	0	%100
41	M41	X	-7.367	-7.367	0	%100
42	M41	Z	12.76	12.76	0	%100
43	M42	X	0	0	0	%100
44	M42	Z	0	0	0	%100
45	M43	X	-2.456	-2.456	0	%100

Member Distributed Loads (BLC 48 : Structure Wo (210 Deg)) (Continued)

	Member Label	Direction	Start Magnitude[lb/ft,...	End Magnitude[lb/ft,...	Start Location[ft,%]	End Location[ft,%]
46	M43	Z	4.253	4.253	0	%100
47	M44	X	-7.367	-7.367	0	%100
48	M44	Z	12.76	12.76	0	%100
49	M45	X	-2.456	-2.456	0	%100
50	M45	Z	4.253	4.253	0	%100
51	M46	X	0	0	0	%100
52	M46	Z	0	0	0	%100
53	M52	X	-3.282	-3.282	0	%100
54	M52	Z	5.685	5.685	0	%100
55	M52A	X	-3.737	-3.737	0	%100
56	M52A	Z	6.473	6.473	0	%100
57	M53A	X	-3.737	-3.737	0	%100
58	M53A	Z	6.473	6.473	0	%100
59	M54A	X	-6.338	-6.338	0	%100
60	M54A	Z	10.979	10.979	0	%100
61	M56	X	-3.282	-3.282	0	%100
62	M56	Z	5.685	5.685	0	%100
63	M57	X	-4.298	-4.298	0	%100
64	M57	Z	7.444	7.444	0	%100
65	M58	X	0	0	0	%100
66	M58	Z	0	0	0	%100
67	M59	X	-4.297	-4.297	0	%100
68	M59	Z	7.443	7.443	0	%100
69	M64	X	-4.298	-4.298	0	%100
70	M64	Z	7.444	7.444	0	%100
71	M77	X	0	0	0	%100
72	M77	Z	0	0	0	%100
73	M90	X	-4.297	-4.297	0	%100
74	M90	Z	7.443	7.443	0	%100
75	M91	X	-1.457	-1.457	0	%100
76	M91	Z	2.523	2.523	0	%100
77	M93	X	0	0	0	%100
78	M93	Z	0	0	0	%100
79	M94	X	-4.093	-4.093	0	%100
80	M94	Z	7.089	7.089	0	%100
81	M95	X	0	0	0	%100
82	M95	Z	0	0	0	%100
83	M96	X	-7.367	-7.367	0	%100
84	M96	Z	12.76	12.76	0	%100
85	M97	X	-7.367	-7.367	0	%100
86	M97	Z	12.76	12.76	0	%100
87	M98	X	-2.456	-2.456	0	%100
88	M98	Z	4.253	4.253	0	%100
89	M99	X	0	0	0	%100
90	M99	Z	0	0	0	%100
91	M100	X	-2.456	-2.456	0	%100
92	M100	Z	4.253	4.253	0	%100
93	M101	X	-7.367	-7.367	0	%100
94	M101	Z	12.76	12.76	0	%100
95	M67	X	0	0	0	%100
96	M67	Z	0	0	0	%100
97	M68	X	-3.455	-3.455	0	%100
98	M68	Z	5.985	5.985	0	%100
99	M69	X	-3.455	-3.455	0	%100
100	M69	Z	5.984	5.984	0	%100
101	MP1A	X	-3.888	-3.888	0	%100
102	MP1A	Z	6.735	6.735	0	%100

Member Distributed Loads (BLC 48 : Structure Wo (210 Deg)) (Continued)

	Member Label	Direction	Start Magnitude[lb/ft,...	End Magnitude[lb/ft,...	Start Location[ft,%]	End Location[ft,%]
103	MP2A	X	-4.707	-4.707	0	%100
104	MP2A	Z	8.152	8.152	0	%100
105	MP3A	X	-3.888	-3.888	0	%100
106	MP3A	Z	6.735	6.735	0	%100
107	MP4A	X	-3.888	-3.888	0	%100
108	MP4A	Z	6.735	6.735	0	%100
109	MP1B	X	-3.888	-3.888	0	%100
110	MP1B	Z	6.735	6.735	0	%100
111	MP2B	X	-4.707	-4.707	0	%100
112	MP2B	Z	8.152	8.152	0	%100
113	MP3B	X	-3.888	-3.888	0	%100
114	MP3B	Z	6.735	6.735	0	%100
115	MP4B	X	-3.888	-3.888	0	%100
116	MP4B	Z	6.735	6.735	0	%100
117	MP1C	X	-3.888	-3.888	0	%100
118	MP1C	Z	6.735	6.735	0	%100
119	MP2C	X	-4.707	-4.707	0	%100
120	MP2C	Z	8.152	8.152	0	%100
121	MP3C	X	-3.888	-3.888	0	%100
122	MP3C	Z	6.735	6.735	0	%100
123	MP4C	X	-3.888	-3.888	0	%100
124	MP4C	Z	6.735	6.735	0	%100

Member Distributed Loads (BLC 49 : Structure Wo (240 Deg))

	Member Label	Direction	Start Magnitude[lb/ft,...	End Magnitude[lb/ft,...	Start Location[ft,%]	End Location[ft,%]
1	A5	X	-6.735	-6.735	0	%100
2	A5	Z	3.888	3.888	0	%100
3	B5	X	-6.735	-6.735	0	%100
4	B5	Z	3.888	3.888	0	%100
5	M18	X	-2.158	-2.158	0	%100
6	M18	Z	1.246	1.246	0	%100
7	M19	X	-2.158	-2.158	0	%100
8	M19	Z	1.246	1.246	0	%100
9	M20	X	-7.569	-7.569	0	%100
10	M20	Z	4.37	4.37	0	%100
11	M21	X	-9.452	-9.452	0	%100
12	M21	Z	5.457	5.457	0	%100
13	M22	X	-2.363	-2.363	0	%100
14	M22	Z	1.364	1.364	0	%100
15	M23	X	-17.014	-17.014	0	%100
16	M23	Z	9.823	9.823	0	%100
17	M24	X	-4.253	-4.253	0	%100
18	M24	Z	2.456	2.456	0	%100
19	M25	X	-4.253	-4.253	0	%100
20	M25	Z	2.456	2.456	0	%100
21	M26	X	-12.76	-12.76	0	%100
22	M26	Z	7.367	7.367	0	%100
23	M27	X	-17.014	-17.014	0	%100
24	M27	Z	9.823	9.823	0	%100
25	M28	X	-12.76	-12.76	0	%100
26	M28	Z	7.367	7.367	0	%100
27	M29	X	-4.253	-4.253	0	%100
28	M29	Z	2.456	2.456	0	%100
29	M35	X	-8.63	-8.63	0	%100
30	M35	Z	4.983	4.983	0	%100
31	M36	X	-8.63	-8.63	0	%100

Member Distributed Loads (BLC 49 : Structure Wo (240 Deg)) (Continued)

	Member Label	Direction	Start Magnitude[lb/ft,...	End Magnitude[lb/ft,...	Start Location[ft,%]	End Location[ft,%]
32	M36	Z	4.983	4.983	0	%100
33	M37	X	0	0	0	%100
34	M37	Z	0	0	0	%100
35	M38	X	-2.363	-2.363	0	%100
36	M38	Z	1.364	1.364	0	%100
37	M39	X	-2.363	-2.363	0	%100
38	M39	Z	1.364	1.364	0	%100
39	M40	X	-4.253	-4.253	0	%100
40	M40	Z	2.456	2.456	0	%100
41	M41	X	-17.014	-17.014	0	%100
42	M41	Z	9.823	9.823	0	%100
43	M42	X	-4.253	-4.253	0	%100
44	M42	Z	2.456	2.456	0	%100
45	M43	X	0	0	0	%100
46	M43	Z	0	0	0	%100
47	M44	X	-4.253	-4.253	0	%100
48	M44	Z	2.456	2.456	0	%100
49	M45	X	0	0	0	%100
50	M45	Z	0	0	0	%100
51	M46	X	-4.253	-4.253	0	%100
52	M46	Z	2.456	2.456	0	%100
53	M52	X	-9.214	-9.214	0	%100
54	M52	Z	5.32	5.32	0	%100
55	M52A	X	-2.158	-2.158	0	%100
56	M52A	Z	1.246	1.246	0	%100
57	M53A	X	-2.158	-2.158	0	%100
58	M53A	Z	1.246	1.246	0	%100
59	M54A	X	-9.214	-9.214	0	%100
60	M54A	Z	5.32	5.32	0	%100
61	M56	X	-3.92	-3.92	0	%100
62	M56	Z	2.263	2.263	0	%100
63	M57	X	-2.481	-2.481	0	%100
64	M57	Z	1.433	1.433	0	%100
65	M58	X	-2.481	-2.481	0	%100
66	M58	Z	1.432	1.432	0	%100
67	M59	X	-9.925	-9.925	0	%100
68	M59	Z	5.73	5.73	0	%100
69	M64	X	-2.481	-2.481	0	%100
70	M64	Z	1.433	1.433	0	%100
71	M77	X	-2.481	-2.481	0	%100
72	M77	Z	1.432	1.432	0	%100
73	M90	X	-9.925	-9.925	0	%100
74	M90	Z	5.73	5.73	0	%100
75	M91	X	-7.569	-7.569	0	%100
76	M91	Z	4.37	4.37	0	%100
77	M93	X	-2.363	-2.363	0	%100
78	M93	Z	1.364	1.364	0	%100
79	M94	X	-9.452	-9.452	0	%100
80	M94	Z	5.457	5.457	0	%100
81	M95	X	-4.253	-4.253	0	%100
82	M95	Z	2.456	2.456	0	%100
83	M96	X	-4.253	-4.253	0	%100
84	M96	Z	2.456	2.456	0	%100
85	M97	X	-17.014	-17.014	0	%100
86	M97	Z	9.823	9.823	0	%100
87	M98	X	-12.76	-12.76	0	%100
88	M98	Z	7.367	7.367	0	%100

Member Distributed Loads (BLC 49 : Structure Wo (240 Deg)) (Continued)

	Member Label	Direction	Start Magnitude[lb/ft,...	End Magnitude[lb/ft,...	Start Location[ft,%]	End Location[ft,%]
89	M99	X	-4.253	-4.253	0	%100
90	M99	Z	2.456	2.456	0	%100
91	M100	X	-12.76	-12.76	0	%100
92	M100	Z	7.367	7.367	0	%100
93	M101	X	-17.014	-17.014	0	%100
94	M101	Z	9.823	9.823	0	%100
95	M67	X	-1.995	-1.995	0	%100
96	M67	Z	1.152	1.152	0	%100
97	M68	X	-7.979	-7.979	0	%100
98	M68	Z	4.607	4.607	0	%100
99	M69	X	-1.994	-1.994	0	%100
100	M69	Z	1.152	1.152	0	%100
101	MP1A	X	-6.735	-6.735	0	%100
102	MP1A	Z	3.888	3.888	0	%100
103	MP2A	X	-8.152	-8.152	0	%100
104	MP2A	Z	4.707	4.707	0	%100
105	MP3A	X	-6.735	-6.735	0	%100
106	MP3A	Z	3.888	3.888	0	%100
107	MP4A	X	-6.735	-6.735	0	%100
108	MP4A	Z	3.888	3.888	0	%100
109	MP1B	X	-6.735	-6.735	0	%100
110	MP1B	Z	3.888	3.888	0	%100
111	MP2B	X	-8.152	-8.152	0	%100
112	MP2B	Z	4.707	4.707	0	%100
113	MP3B	X	-6.735	-6.735	0	%100
114	MP3B	Z	3.888	3.888	0	%100
115	MP4B	X	-6.735	-6.735	0	%100
116	MP4B	Z	3.888	3.888	0	%100
117	MP1C	X	-6.735	-6.735	0	%100
118	MP1C	Z	3.888	3.888	0	%100
119	MP2C	X	-8.152	-8.152	0	%100
120	MP2C	Z	4.707	4.707	0	%100
121	MP3C	X	-6.735	-6.735	0	%100
122	MP3C	Z	3.888	3.888	0	%100
123	MP4C	X	-6.735	-6.735	0	%100
124	MP4C	Z	3.888	3.888	0	%100

Member Distributed Loads (BLC 50 : Structure Wo (270 Deg))

	Member Label	Direction	Start Magnitude[lb/ft,...	End Magnitude[lb/ft,...	Start Location[ft,%]	End Location[ft,%]
1	A5	X	-7.776	-7.776	0	%100
2	A5	Z	0	0	0	%100
3	B5	X	-7.776	-7.776	0	%100
4	B5	Z	0	0	0	%100
5	M18	X	-7.474	-7.474	0	%100
6	M18	Z	0	0	0	%100
7	M19	X	-7.474	-7.474	0	%100
8	M19	Z	0	0	0	%100
9	M20	X	-2.913	-2.913	0	%100
10	M20	Z	0	0	0	%100
11	M21	X	-8.186	-8.186	0	%100
12	M21	Z	0	0	0	%100
13	M22	X	0	0	0	%100
14	M22	Z	0	0	0	%100
15	M23	X	-14.734	-14.734	0	%100
16	M23	Z	0	0	0	%100
17	M24	X	-14.734	-14.734	0	%100

Member Distributed Loads (BLC 50 : Structure Wo (270 Deg)) (Continued)

	Member Label	Direction	Start Magnitude[lb/ft,...	End Magnitude[lb/ft,...	Start Location[ft,%]	End Location[ft,%]
18	M24	Z	0	0	0	%100
19	M25	X	0	0	0	%100
20	M25	Z	0	0	0	%100
21	M26	X	-4.911	-4.911	0	%100
22	M26	Z	0	0	0	%100
23	M27	X	-14.734	-14.734	0	%100
24	M27	Z	0	0	0	%100
25	M28	X	-4.911	-4.911	0	%100
26	M28	Z	0	0	0	%100
27	M29	X	0	0	0	%100
28	M29	Z	0	0	0	%100
29	M35	X	-7.474	-7.474	0	%100
30	M35	Z	0	0	0	%100
31	M36	X	-7.474	-7.474	0	%100
32	M36	Z	0	0	0	%100
33	M37	X	-2.913	-2.913	0	%100
34	M37	Z	0	0	0	%100
35	M38	X	0	0	0	%100
36	M38	Z	0	0	0	%100
37	M39	X	-8.186	-8.186	0	%100
38	M39	Z	0	0	0	%100
39	M40	X	0	0	0	%100
40	M40	Z	0	0	0	%100
41	M41	X	-14.734	-14.734	0	%100
42	M41	Z	0	0	0	%100
43	M42	X	-14.734	-14.734	0	%100
44	M42	Z	0	0	0	%100
45	M43	X	-4.911	-4.911	0	%100
46	M43	Z	0	0	0	%100
47	M44	X	0	0	0	%100
48	M44	Z	0	0	0	%100
49	M45	X	-4.911	-4.911	0	%100
50	M45	Z	0	0	0	%100
51	M46	X	-14.734	-14.734	0	%100
52	M46	Z	0	0	0	%100
53	M52	X	-12.677	-12.677	0	%100
54	M52	Z	0	0	0	%100
55	M52A	X	0	0	0	%100
56	M52A	Z	0	0	0	%100
57	M53A	X	0	0	0	%100
58	M53A	Z	0	0	0	%100
59	M54A	X	-6.564	-6.564	0	%100
60	M54A	Z	0	0	0	%100
61	M56	X	-6.564	-6.564	0	%100
62	M56	Z	0	0	0	%100
63	M57	X	0	0	0	%100
64	M57	Z	0	0	0	%100
65	M58	X	-8.595	-8.595	0	%100
66	M58	Z	0	0	0	%100
67	M59	X	-8.595	-8.595	0	%100
68	M59	Z	0	0	0	%100
69	M64	X	0	0	0	%100
70	M64	Z	0	0	0	%100
71	M77	X	-8.595	-8.595	0	%100
72	M77	Z	0	0	0	%100
73	M90	X	-8.595	-8.595	0	%100
74	M90	Z	0	0	0	%100

Member Distributed Loads (BLC 50 : Structure Wo (270 Deg)) (Continued)

	Member Label	Direction	Start Magnitude[lb/ft,...	End Magnitude[lb/ft,...	Start Location[ft,%]	End Location[ft,%]
75	M91	X	-11.653	-11.653	0	%100
76	M91	Z	0	0	0	%100
77	M93	X	-8.186	-8.186	0	%100
78	M93	Z	0	0	0	%100
79	M94	X	-8.186	-8.186	0	%100
80	M94	Z	0	0	0	%100
81	M95	X	-14.734	-14.734	0	%100
82	M95	Z	0	0	0	%100
83	M96	X	0	0	0	%100
84	M96	Z	0	0	0	%100
85	M97	X	-14.734	-14.734	0	%100
86	M97	Z	0	0	0	%100
87	M98	X	-19.646	-19.646	0	%100
88	M98	Z	0	0	0	%100
89	M99	X	-14.734	-14.734	0	%100
90	M99	Z	0	0	0	%100
91	M100	X	-19.646	-19.646	0	%100
92	M100	Z	0	0	0	%100
93	M101	X	-14.734	-14.734	0	%100
94	M101	Z	0	0	0	%100
95	M67	X	-6.91	-6.91	0	%100
96	M67	Z	0	0	0	%100
97	M68	X	-6.91	-6.91	0	%100
98	M68	Z	0	0	0	%100
99	M69	X	0	0	0	%100
100	M69	Z	0	0	0	%100
101	MP1A	X	-7.776	-7.776	0	%100
102	MP1A	Z	0	0	0	%100
103	MP2A	X	-9.414	-9.414	0	%100
104	MP2A	Z	0	0	0	%100
105	MP3A	X	-7.776	-7.776	0	%100
106	MP3A	Z	0	0	0	%100
107	MP4A	X	-7.776	-7.776	0	%100
108	MP4A	Z	0	0	0	%100
109	MP1B	X	-7.776	-7.776	0	%100
110	MP1B	Z	0	0	0	%100
111	MP2B	X	-9.414	-9.414	0	%100
112	MP2B	Z	0	0	0	%100
113	MP3B	X	-7.776	-7.776	0	%100
114	MP3B	Z	0	0	0	%100
115	MP4B	X	-7.776	-7.776	0	%100
116	MP4B	Z	0	0	0	%100
117	MP1C	X	-7.776	-7.776	0	%100
118	MP1C	Z	0	0	0	%100
119	MP2C	X	-9.414	-9.414	0	%100
120	MP2C	Z	0	0	0	%100
121	MP3C	X	-7.776	-7.776	0	%100
122	MP3C	Z	0	0	0	%100
123	MP4C	X	-7.776	-7.776	0	%100
124	MP4C	Z	0	0	0	%100

Member Distributed Loads (BLC 51 : Structure Wo (300 Deg))

	Member Label	Direction	Start Magnitude[lb/ft,...	End Magnitude[lb/ft,...	Start Location[ft,%]	End Location[ft,%]
1	A5	X	-6.735	-6.735	0	%100
2	A5	Z	-3.888	-3.888	0	%100
3	B5	X	-6.735	-6.735	0	%100

Member Distributed Loads (BLC 51 : Structure Wo (300 Deg)) (Continued)

	Member Label	Direction	Start Magnitude[lb/ft,...	End Magnitude[lb/ft,...	Start Location[ft,%]	End Location[ft,%]
4	B5	Z	-3.888	-3.888	0	%100
5	M18	X	-8.63	-8.63	0	%100
6	M18	Z	-4.983	-4.983	0	%100
7	M19	X	-8.63	-8.63	0	%100
8	M19	Z	-4.983	-4.983	0	%100
9	M20	X	0	0	0	%100
10	M20	Z	0	0	0	%100
11	M21	X	-2.363	-2.363	0	%100
12	M21	Z	-1.364	-1.364	0	%100
13	M22	X	-2.363	-2.363	0	%100
14	M22	Z	-1.364	-1.364	0	%100
15	M23	X	-4.253	-4.253	0	%100
16	M23	Z	-2.456	-2.456	0	%100
17	M24	X	-17.014	-17.014	0	%100
18	M24	Z	-9.823	-9.823	0	%100
19	M25	X	-4.253	-4.253	0	%100
20	M25	Z	-2.456	-2.456	0	%100
21	M26	X	0	0	0	%100
22	M26	Z	0	0	0	%100
23	M27	X	-4.253	-4.253	0	%100
24	M27	Z	-2.456	-2.456	0	%100
25	M28	X	0	0	0	%100
26	M28	Z	0	0	0	%100
27	M29	X	-4.253	-4.253	0	%100
28	M29	Z	-2.456	-2.456	0	%100
29	M35	X	-2.158	-2.158	0	%100
30	M35	Z	-1.246	-1.246	0	%100
31	M36	X	-2.158	-2.158	0	%100
32	M36	Z	-1.246	-1.246	0	%100
33	M37	X	-7.569	-7.569	0	%100
34	M37	Z	-4.37	-4.37	0	%100
35	M38	X	-2.363	-2.363	0	%100
36	M38	Z	-1.364	-1.364	0	%100
37	M39	X	-9.452	-9.452	0	%100
38	M39	Z	-5.457	-5.457	0	%100
39	M40	X	-4.253	-4.253	0	%100
40	M40	Z	-2.456	-2.456	0	%100
41	M41	X	-4.253	-4.253	0	%100
42	M41	Z	-2.456	-2.456	0	%100
43	M42	X	-17.014	-17.014	0	%100
44	M42	Z	-9.823	-9.823	0	%100
45	M43	X	-12.76	-12.76	0	%100
46	M43	Z	-7.367	-7.367	0	%100
47	M44	X	-4.253	-4.253	0	%100
48	M44	Z	-2.456	-2.456	0	%100
49	M45	X	-12.76	-12.76	0	%100
50	M45	Z	-7.367	-7.367	0	%100
51	M46	X	-17.014	-17.014	0	%100
52	M46	Z	-9.823	-9.823	0	%100
53	M52	X	-9.214	-9.214	0	%100
54	M52	Z	-5.32	-5.32	0	%100
55	M52A	X	-2.158	-2.158	0	%100
56	M52A	Z	-1.246	-1.246	0	%100
57	M53A	X	-2.158	-2.158	0	%100
58	M53A	Z	-1.246	-1.246	0	%100
59	M54A	X	-3.92	-3.92	0	%100
60	M54A	Z	-2.263	-2.263	0	%100

Member Distributed Loads (BLC 51 : Structure Wo (300 Deg)) (Continued)

	Member Label	Direction	Start Magnitude[lb/ft,...	End Magnitude[lb/ft,...	Start Location[ft,%]	End Location[ft,%]
61	M56	X	-9.214	-9.214	0	%100
62	M56	Z	-5.32	-5.32	0	%100
63	M57	X	-2.481	-2.481	0	%100
64	M57	Z	-1.432	-1.432	0	%100
65	M58	X	-9.925	-9.925	0	%100
66	M58	Z	-5.73	-5.73	0	%100
67	M59	X	-2.481	-2.481	0	%100
68	M59	Z	-1.433	-1.433	0	%100
69	M64	X	-2.481	-2.481	0	%100
70	M64	Z	-1.432	-1.432	0	%100
71	M77	X	-9.925	-9.925	0	%100
72	M77	Z	-5.73	-5.73	0	%100
73	M90	X	-2.481	-2.481	0	%100
74	M90	Z	-1.433	-1.433	0	%100
75	M91	X	-7.569	-7.569	0	%100
76	M91	Z	-4.37	-4.37	0	%100
77	M93	X	-9.452	-9.452	0	%100
78	M93	Z	-5.457	-5.457	0	%100
79	M94	X	-2.363	-2.363	0	%100
80	M94	Z	-1.364	-1.364	0	%100
81	M95	X	-17.014	-17.014	0	%100
82	M95	Z	-9.823	-9.823	0	%100
83	M96	X	-4.253	-4.253	0	%100
84	M96	Z	-2.456	-2.456	0	%100
85	M97	X	-4.253	-4.253	0	%100
86	M97	Z	-2.456	-2.456	0	%100
87	M98	X	-12.76	-12.76	0	%100
88	M98	Z	-7.367	-7.367	0	%100
89	M99	X	-17.014	-17.014	0	%100
90	M99	Z	-9.823	-9.823	0	%100
91	M100	X	-12.76	-12.76	0	%100
92	M100	Z	-7.367	-7.367	0	%100
93	M101	X	-4.253	-4.253	0	%100
94	M101	Z	-2.456	-2.456	0	%100
95	M67	X	-7.979	-7.979	0	%100
96	M67	Z	-4.607	-4.607	0	%100
97	M68	X	-1.994	-1.994	0	%100
98	M68	Z	-1.152	-1.152	0	%100
99	M69	X	-1.995	-1.995	0	%100
100	M69	Z	-1.152	-1.152	0	%100
101	MP1A	X	-6.735	-6.735	0	%100
102	MP1A	Z	-3.888	-3.888	0	%100
103	MP2A	X	-8.152	-8.152	0	%100
104	MP2A	Z	-4.707	-4.707	0	%100
105	MP3A	X	-6.735	-6.735	0	%100
106	MP3A	Z	-3.888	-3.888	0	%100
107	MP4A	X	-6.735	-6.735	0	%100
108	MP4A	Z	-3.888	-3.888	0	%100
109	MP1B	X	-6.735	-6.735	0	%100
110	MP1B	Z	-3.888	-3.888	0	%100
111	MP2B	X	-8.152	-8.152	0	%100
112	MP2B	Z	-4.707	-4.707	0	%100
113	MP3B	X	-6.735	-6.735	0	%100
114	MP3B	Z	-3.888	-3.888	0	%100
115	MP4B	X	-6.735	-6.735	0	%100
116	MP4B	Z	-3.888	-3.888	0	%100
117	MP1C	X	-6.735	-6.735	0	%100

Member Distributed Loads (BLC 51 : Structure Wo (300 Deg)) (Continued)

	Member Label	Direction	Start Magnitude[lb/ft,...	End Magnitude[lb/ft,...	Start Location[ft,%]	End Location[ft,%]
118	MP1C	Z	-3.888	-3.888	0	%100
119	MP2C	X	-8.152	-8.152	0	%100
120	MP2C	Z	-4.707	-4.707	0	%100
121	MP3C	X	-6.735	-6.735	0	%100
122	MP3C	Z	-3.888	-3.888	0	%100
123	MP4C	X	-6.735	-6.735	0	%100
124	MP4C	Z	-3.888	-3.888	0	%100

Member Distributed Loads (BLC 52 : Structure Wo (330 Deg))

	Member Label	Direction	Start Magnitude[lb/ft,...	End Magnitude[lb/ft,...	Start Location[ft,%]	End Location[ft,%]
1	A5	X	-3.888	-3.888	0	%100
2	A5	Z	-6.735	-6.735	0	%100
3	B5	X	-3.888	-3.888	0	%100
4	B5	Z	-6.735	-6.735	0	%100
5	M18	X	-3.737	-3.737	0	%100
6	M18	Z	-6.473	-6.473	0	%100
7	M19	X	-3.737	-3.737	0	%100
8	M19	Z	-6.473	-6.473	0	%100
9	M20	X	-1.457	-1.457	0	%100
10	M20	Z	-2.523	-2.523	0	%100
11	M21	X	0	0	0	%100
12	M21	Z	0	0	0	%100
13	M22	X	-4.093	-4.093	0	%100
14	M22	Z	-7.089	-7.089	0	%100
15	M23	X	0	0	0	%100
16	M23	Z	0	0	0	%100
17	M24	X	-7.367	-7.367	0	%100
18	M24	Z	-12.76	-12.76	0	%100
19	M25	X	-7.367	-7.367	0	%100
20	M25	Z	-12.76	-12.76	0	%100
21	M26	X	-2.456	-2.456	0	%100
22	M26	Z	-4.253	-4.253	0	%100
23	M27	X	0	0	0	%100
24	M27	Z	0	0	0	%100
25	M28	X	-2.456	-2.456	0	%100
26	M28	Z	-4.253	-4.253	0	%100
27	M29	X	-7.367	-7.367	0	%100
28	M29	Z	-12.76	-12.76	0	%100
29	M35	X	0	0	0	%100
30	M35	Z	0	0	0	%100
31	M36	X	0	0	0	%100
32	M36	Z	0	0	0	%100
33	M37	X	-5.827	-5.827	0	%100
34	M37	Z	-10.092	-10.092	0	%100
35	M38	X	-4.093	-4.093	0	%100
36	M38	Z	-7.089	-7.089	0	%100
37	M39	X	-4.093	-4.093	0	%100
38	M39	Z	-7.089	-7.089	0	%100
39	M40	X	-7.367	-7.367	0	%100
40	M40	Z	-12.76	-12.76	0	%100
41	M41	X	0	0	0	%100
42	M41	Z	0	0	0	%100
43	M42	X	-7.367	-7.367	0	%100
44	M42	Z	-12.76	-12.76	0	%100
45	M43	X	-9.823	-9.823	0	%100
46	M43	Z	-17.014	-17.014	0	%100

Member Distributed Loads (BLC 52 : Structure Wo (330 Deg)) (Continued)

	Member Label	Direction	Start Magnitude[lb/ft,...	End Magnitude[lb/ft,...	Start Location[ft,%]	End Location[ft,%]
47	M44	X	-7.367	-7.367	0	%100
48	M44	Z	-12.76	-12.76	0	%100
49	M45	X	-9.823	-9.823	0	%100
50	M45	Z	-17.014	-17.014	0	%100
51	M46	X	-7.367	-7.367	0	%100
52	M46	Z	-12.76	-12.76	0	%100
53	M52	X	-3.282	-3.282	0	%100
54	M52	Z	-5.685	-5.685	0	%100
55	M52A	X	-3.737	-3.737	0	%100
56	M52A	Z	-6.473	-6.473	0	%100
57	M53A	X	-3.737	-3.737	0	%100
58	M53A	Z	-6.473	-6.473	0	%100
59	M54A	X	-3.282	-3.282	0	%100
60	M54A	Z	-5.685	-5.685	0	%100
61	M56	X	-6.338	-6.338	0	%100
62	M56	Z	-10.979	-10.979	0	%100
63	M57	X	-4.297	-4.297	0	%100
64	M57	Z	-7.443	-7.443	0	%100
65	M58	X	-4.298	-4.298	0	%100
66	M58	Z	-7.444	-7.444	0	%100
67	M59	X	0	0	0	%100
68	M59	Z	0	0	0	%100
69	M64	X	-4.297	-4.297	0	%100
70	M64	Z	-7.443	-7.443	0	%100
71	M77	X	-4.298	-4.298	0	%100
72	M77	Z	-7.444	-7.444	0	%100
73	M90	X	0	0	0	%100
74	M90	Z	0	0	0	%100
75	M91	X	-1.457	-1.457	0	%100
76	M91	Z	-2.523	-2.523	0	%100
77	M93	X	-4.093	-4.093	0	%100
78	M93	Z	-7.089	-7.089	0	%100
79	M94	X	0	0	0	%100
80	M94	Z	0	0	0	%100
81	M95	X	-7.367	-7.367	0	%100
82	M95	Z	-12.76	-12.76	0	%100
83	M96	X	-7.367	-7.367	0	%100
84	M96	Z	-12.76	-12.76	0	%100
85	M97	X	0	0	0	%100
86	M97	Z	0	0	0	%100
87	M98	X	-2.456	-2.456	0	%100
88	M98	Z	-4.253	-4.253	0	%100
89	M99	X	-7.367	-7.367	0	%100
90	M99	Z	-12.76	-12.76	0	%100
91	M100	X	-2.456	-2.456	0	%100
92	M100	Z	-4.253	-4.253	0	%100
93	M101	X	0	0	0	%100
94	M101	Z	0	0	0	%100
95	M67	X	-3.455	-3.455	0	%100
96	M67	Z	-5.984	-5.984	0	%100
97	M68	X	0	0	0	%100
98	M68	Z	0	0	0	%100
99	M69	X	-3.455	-3.455	0	%100
100	M69	Z	-5.985	-5.985	0	%100
101	MP1A	X	-3.888	-3.888	0	%100
102	MP1A	Z	-6.735	-6.735	0	%100
103	MP2A	X	-4.707	-4.707	0	%100

Member Distributed Loads (BLC 52 : Structure Wo (330 Deg)) (Continued)

	Member Label	Direction	Start Magnitude[lb/ft,...	End Magnitude[lb/ft,...	Start Location[ft,%]	End Location[ft,%]
104	MP2A	Z	-8.152	-8.152	0	%100
105	MP3A	X	-3.888	-3.888	0	%100
106	MP3A	Z	-6.735	-6.735	0	%100
107	MP4A	X	-3.888	-3.888	0	%100
108	MP4A	Z	-6.735	-6.735	0	%100
109	MP1B	X	-3.888	-3.888	0	%100
110	MP1B	Z	-6.735	-6.735	0	%100
111	MP2B	X	-4.707	-4.707	0	%100
112	MP2B	Z	-8.152	-8.152	0	%100
113	MP3B	X	-3.888	-3.888	0	%100
114	MP3B	Z	-6.735	-6.735	0	%100
115	MP4B	X	-3.888	-3.888	0	%100
116	MP4B	Z	-6.735	-6.735	0	%100
117	MP1C	X	-3.888	-3.888	0	%100
118	MP1C	Z	-6.735	-6.735	0	%100
119	MP2C	X	-4.707	-4.707	0	%100
120	MP2C	Z	-8.152	-8.152	0	%100
121	MP3C	X	-3.888	-3.888	0	%100
122	MP3C	Z	-6.735	-6.735	0	%100
123	MP4C	X	-3.888	-3.888	0	%100
124	MP4C	Z	-6.735	-6.735	0	%100

Member Distributed Loads (BLC 53 : Structure Wi (0 Deg))

	Member Label	Direction	Start Magnitude[lb/ft,...	End Magnitude[lb/ft,...	Start Location[ft,%]	End Location[ft,%]
1	A5	X	0	0	0	%100
2	A5	Z	-2.761	-2.761	0	%100
3	B5	X	0	0	0	%100
4	B5	Z	-2.761	-2.761	0	%100
5	M18	X	0	0	0	%100
6	M18	Z	-.715	-.715	0	%100
7	M19	X	0	0	0	%100
8	M19	Z	-.715	-.715	0	%100
9	M20	X	0	0	0	%100
10	M20	Z	-2.595	-2.595	0	%100
11	M21	X	0	0	0	%100
12	M21	Z	-.814	-.814	0	%100
13	M22	X	0	0	0	%100
14	M22	Z	-3.256	-3.256	0	%100
15	M23	X	0	0	0	%100
16	M23	Z	-1.083	-1.083	0	%100
17	M24	X	0	0	0	%100
18	M24	Z	-1.105	-1.105	0	%100
19	M25	X	0	0	0	%100
20	M25	Z	-4.333	-4.333	0	%100
21	M26	X	0	0	0	%100
22	M26	Z	-3.25	-3.25	0	%100
23	M27	X	0	0	0	%100
24	M27	Z	-1.083	-1.083	0	%100
25	M28	X	0	0	0	%100
26	M28	Z	-3.25	-3.25	0	%100
27	M29	X	0	0	0	%100
28	M29	Z	-4.333	-4.333	0	%100
29	M35	X	0	0	0	%100
30	M35	Z	-.715	-.715	0	%100
31	M36	X	0	0	0	%100
32	M36	Z	-.715	-.715	0	%100

Member Distributed Loads (BLC 53 : Structure Wi (0 Deg)) (Continued)

	Member Label	Direction	Start Magnitude[lb/ft,...	End Magnitude[lb/ft,...	Start Location[ft,%]	End Location[ft,%]
33	M37	X	0	0	0	%100
34	M37	Z	-2.595	-2.595	0	%100
35	M38	X	0	0	0	%100
36	M38	Z	-3.256	-3.256	0	%100
37	M39	X	0	0	0	%100
38	M39	Z	-.814	-.814	0	%100
39	M40	X	0	0	0	%100
40	M40	Z	-4.333	-4.333	0	%100
41	M41	X	0	0	0	%100
42	M41	Z	-1.105	-1.105	0	%100
43	M42	X	0	0	0	%100
44	M42	Z	-1.083	-1.083	0	%100
45	M43	X	0	0	0	%100
46	M43	Z	-3.25	-3.25	0	%100
47	M44	X	0	0	0	%100
48	M44	Z	-4.333	-4.333	0	%100
49	M45	X	0	0	0	%100
50	M45	Z	-3.25	-3.25	0	%100
51	M46	X	0	0	0	%100
52	M46	Z	-1.083	-1.083	0	%100
53	M52	X	0	0	0	%100
54	M52	Z	-1.085	-1.085	0	%100
55	M52A	X	0	0	0	%100
56	M52A	Z	-2.861	-2.861	0	%100
57	M53A	X	0	0	0	%100
58	M53A	Z	-2.861	-2.861	0	%100
59	M54A	X	0	0	0	%100
60	M54A	Z	-2.957	-2.957	0	%100
61	M56	X	0	0	0	%100
62	M56	Z	-2.957	-2.957	0	%100
63	M57	X	0	0	0	%100
64	M57	Z	-3.425	-3.425	0	%100
65	M58	X	0	0	0	%100
66	M58	Z	-.856	-.856	0	%100
67	M59	X	0	0	0	%100
68	M59	Z	-.856	-.856	0	%100
69	M64	X	0	0	0	%100
70	M64	Z	-3.425	-3.425	0	%100
71	M77	X	0	0	0	%100
72	M77	Z	-.856	-.856	0	%100
73	M90	X	0	0	0	%100
74	M90	Z	-.856	-.856	0	%100
75	M91	X	0	0	0	%100
76	M91	Z	0	0	0	%100
77	M93	X	0	0	0	%100
78	M93	Z	-.814	-.814	0	%100
79	M94	X	0	0	0	%100
80	M94	Z	-.814	-.814	0	%100
81	M95	X	0	0	0	%100
82	M95	Z	-1.083	-1.083	0	%100
83	M96	X	0	0	0	%100
84	M96	Z	-4.419	-4.419	0	%100
85	M97	X	0	0	0	%100
86	M97	Z	-1.083	-1.083	0	%100
87	M98	X	0	0	0	%100
88	M98	Z	0	0	0	%100
89	M99	X	0	0	0	%100

Member Distributed Loads (BLC 53 : Structure Wi (0 Deg)) (Continued)

	Member Label	Direction	Start Magnitude[lb/ft,...	End Magnitude[lb/ft,...	Start Location[ft,%]	End Location[ft,%]
90	M99	Z	-1.083	-1.083	0	%100
91	M100	X	0	0	0	%100
92	M100	Z	0	0	0	%100
93	M101	X	0	0	0	%100
94	M101	Z	-1.083	-1.083	0	%100
95	M67	X	0	0	0	%100
96	M67	Z	-.638	-.638	0	%100
97	M68	X	0	0	0	%100
98	M68	Z	-.638	-.638	0	%100
99	M69	X	0	0	0	%100
100	M69	Z	-2.551	-2.551	0	%100
101	MP1A	X	0	0	0	%100
102	MP1A	Z	-2.761	-2.761	0	%100
103	MP2A	X	0	0	0	%100
104	MP2A	Z	-3.056	-3.056	0	%100
105	MP3A	X	0	0	0	%100
106	MP3A	Z	-2.761	-2.761	0	%100
107	MP4A	X	0	0	0	%100
108	MP4A	Z	-2.761	-2.761	0	%100
109	MP1B	X	0	0	0	%100
110	MP1B	Z	-2.761	-2.761	0	%100
111	MP2B	X	0	0	0	%100
112	MP2B	Z	-3.056	-3.056	0	%100
113	MP3B	X	0	0	0	%100
114	MP3B	Z	-2.761	-2.761	0	%100
115	MP4B	X	0	0	0	%100
116	MP4B	Z	-2.761	-2.761	0	%100
117	MP1C	X	0	0	0	%100
118	MP1C	Z	-2.761	-2.761	0	%100
119	MP2C	X	0	0	0	%100
120	MP2C	Z	-3.056	-3.056	0	%100
121	MP3C	X	0	0	0	%100
122	MP3C	Z	-2.761	-2.761	0	%100
123	MP4C	X	0	0	0	%100
124	MP4C	Z	-2.761	-2.761	0	%100

Member Distributed Loads (BLC 54 : Structure Wi (30 Deg))

	Member Label	Direction	Start Magnitude[lb/ft,...	End Magnitude[lb/ft,...	Start Location[ft,%]	End Location[ft,%]
1	A5	X	1.381	1.381	0	%100
2	A5	Z	-2.391	-2.391	0	%100
3	B5	X	1.381	1.381	0	%100
4	B5	Z	-2.391	-2.391	0	%100
5	M18	X	0	0	0	%100
6	M18	Z	0	0	0	%100
7	M19	X	0	0	0	%100
8	M19	Z	0	0	0	%100
9	M20	X	1.73	1.73	0	%100
10	M20	Z	-2.996	-2.996	0	%100
11	M21	X	1.221	1.221	0	%100
12	M21	Z	-2.115	-2.115	0	%100
13	M22	X	1.221	1.221	0	%100
14	M22	Z	-2.115	-2.115	0	%100
15	M23	X	1.625	1.625	0	%100
16	M23	Z	-2.815	-2.815	0	%100
17	M24	X	0	0	0	%100
18	M24	Z	0	0	0	%100

Member Distributed Loads (BLC 54 : Structure Wi (30 Deg)) (Continued)

	Member Label	Direction	Start Magnitude[lb/ft,...	End Magnitude[lb/ft,...	Start Location[ft,%]	End Location[ft,%]
19	M25	X	1.625	1.625	0	%100
20	M25	Z	-2.815	-2.815	0	%100
21	M26	X	2.167	2.167	0	%100
22	M26	Z	-3.753	-3.753	0	%100
23	M27	X	1.625	1.625	0	%100
24	M27	Z	-2.815	-2.815	0	%100
25	M28	X	2.167	2.167	0	%100
26	M28	Z	-3.753	-3.753	0	%100
27	M29	X	1.625	1.625	0	%100
28	M29	Z	-2.815	-2.815	0	%100
29	M35	X	1.073	1.073	0	%100
30	M35	Z	-1.859	-1.859	0	%100
31	M36	X	1.073	1.073	0	%100
32	M36	Z	-1.859	-1.859	0	%100
33	M37	X	.432	.432	0	%100
34	M37	Z	-.749	-.749	0	%100
35	M38	X	1.221	1.221	0	%100
36	M38	Z	-2.115	-2.115	0	%100
37	M39	X	0	0	0	%100
38	M39	Z	0	0	0	%100
39	M40	X	1.625	1.625	0	%100
40	M40	Z	-2.815	-2.815	0	%100
41	M41	X	1.657	1.657	0	%100
42	M41	Z	-2.87	-2.87	0	%100
43	M42	X	0	0	0	%100
44	M42	Z	0	0	0	%100
45	M43	X	.542	.542	0	%100
46	M43	Z	-.938	-.938	0	%100
47	M44	X	1.625	1.625	0	%100
48	M44	Z	-2.815	-2.815	0	%100
49	M45	X	.542	.542	0	%100
50	M45	Z	-.938	-.938	0	%100
51	M46	X	0	0	0	%100
52	M46	Z	0	0	0	%100
53	M52	X	.854	.854	0	%100
54	M52	Z	-1.48	-1.48	0	%100
55	M52A	X	1.073	1.073	0	%100
56	M52A	Z	-1.859	-1.859	0	%100
57	M53A	X	1.073	1.073	0	%100
58	M53A	Z	-1.859	-1.859	0	%100
59	M54A	X	1.791	1.791	0	%100
60	M54A	Z	-3.102	-3.102	0	%100
61	M56	X	.854	.854	0	%100
62	M56	Z	-1.48	-1.48	0	%100
63	M57	X	1.284	1.284	0	%100
64	M57	Z	-2.225	-2.225	0	%100
65	M58	X	0	0	0	%100
66	M58	Z	0	0	0	%100
67	M59	X	1.284	1.284	0	%100
68	M59	Z	-2.225	-2.225	0	%100
69	M64	X	1.284	1.284	0	%100
70	M64	Z	-2.225	-2.225	0	%100
71	M77	X	0	0	0	%100
72	M77	Z	0	0	0	%100
73	M90	X	1.284	1.284	0	%100
74	M90	Z	-2.225	-2.225	0	%100
75	M91	X	.432	.432	0	%100

Member Distributed Loads (BLC 54 : Structure Wi (30 Deg)) (Continued)

	Member Label	Direction	Start Magnitude[lb/ft,...	End Magnitude[lb/ft,...	Start Location[ft,%]	End Location[ft,%]
76	M91	Z	-.749	-.749	0	%100
77	M93	X	0	0	0	%100
78	M93	Z	0	0	0	%100
79	M94	X	1.221	1.221	0	%100
80	M94	Z	-2.115	-2.115	0	%100
81	M95	X	0	0	0	%100
82	M95	Z	0	0	0	%100
83	M96	X	1.657	1.657	0	%100
84	M96	Z	-2.87	-2.87	0	%100
85	M97	X	1.625	1.625	0	%100
86	M97	Z	-2.815	-2.815	0	%100
87	M98	X	.542	.542	0	%100
88	M98	Z	-.938	-.938	0	%100
89	M99	X	0	0	0	%100
90	M99	Z	0	0	0	%100
91	M100	X	.542	.542	0	%100
92	M100	Z	-.938	-.938	0	%100
93	M101	X	1.625	1.625	0	%100
94	M101	Z	-2.815	-2.815	0	%100
95	M67	X	0	0	0	%100
96	M67	Z	0	0	0	%100
97	M68	X	.957	.957	0	%100
98	M68	Z	-1.657	-1.657	0	%100
99	M69	X	.957	.957	0	%100
100	M69	Z	-1.657	-1.657	0	%100
101	MP1A	X	1.381	1.381	0	%100
102	MP1A	Z	-2.391	-2.391	0	%100
103	MP2A	X	1.528	1.528	0	%100
104	MP2A	Z	-2.647	-2.647	0	%100
105	MP3A	X	1.381	1.381	0	%100
106	MP3A	Z	-2.391	-2.391	0	%100
107	MP4A	X	1.381	1.381	0	%100
108	MP4A	Z	-2.391	-2.391	0	%100
109	MP1B	X	1.381	1.381	0	%100
110	MP1B	Z	-2.391	-2.391	0	%100
111	MP2B	X	1.528	1.528	0	%100
112	MP2B	Z	-2.647	-2.647	0	%100
113	MP3B	X	1.381	1.381	0	%100
114	MP3B	Z	-2.391	-2.391	0	%100
115	MP4B	X	1.381	1.381	0	%100
116	MP4B	Z	-2.391	-2.391	0	%100
117	MP1C	X	1.381	1.381	0	%100
118	MP1C	Z	-2.391	-2.391	0	%100
119	MP2C	X	1.528	1.528	0	%100
120	MP2C	Z	-2.647	-2.647	0	%100
121	MP3C	X	1.381	1.381	0	%100
122	MP3C	Z	-2.391	-2.391	0	%100
123	MP4C	X	1.381	1.381	0	%100
124	MP4C	Z	-2.391	-2.391	0	%100

Member Distributed Loads (BLC 55 : Structure Wi (60 Deg))

	Member Label	Direction	Start Magnitude[lb/ft,...	End Magnitude[lb/ft,...	Start Location[ft,%]	End Location[ft,%]
1	A5	X	2.391	2.391	0	%100
2	A5	Z	-1.381	-1.381	0	%100
3	B5	X	2.391	2.391	0	%100
4	B5	Z	-1.381	-1.381	0	%100

Member Distributed Loads (BLC 55 : Structure Wi (60 Deg)) (Continued)

	Member Label	Direction	Start Magnitude[lb/ft,...	End Magnitude[lb/ft,...	Start Location[ft,%]	End Location[ft,%]
5	M18	X	.62	.62	0	%100
6	M18	Z	-.358	-.358	0	%100
7	M19	X	.62	.62	0	%100
8	M19	Z	-.358	-.358	0	%100
9	M20	X	2.247	2.247	0	%100
10	M20	Z	-1.297	-1.297	0	%100
11	M21	X	2.82	2.82	0	%100
12	M21	Z	-1.628	-1.628	0	%100
13	M22	X	.705	.705	0	%100
14	M22	Z	-.407	-.407	0	%100
15	M23	X	3.753	3.753	0	%100
16	M23	Z	-2.167	-2.167	0	%100
17	M24	X	.957	.957	0	%100
18	M24	Z	-.552	-.552	0	%100
19	M25	X	.938	.938	0	%100
20	M25	Z	-.542	-.542	0	%100
21	M26	X	2.815	2.815	0	%100
22	M26	Z	-1.625	-1.625	0	%100
23	M27	X	3.753	3.753	0	%100
24	M27	Z	-2.167	-2.167	0	%100
25	M28	X	2.815	2.815	0	%100
26	M28	Z	-1.625	-1.625	0	%100
27	M29	X	.938	.938	0	%100
28	M29	Z	-.542	-.542	0	%100
29	M35	X	2.478	2.478	0	%100
30	M35	Z	-1.431	-1.431	0	%100
31	M36	X	2.478	2.478	0	%100
32	M36	Z	-1.431	-1.431	0	%100
33	M37	X	0	0	0	%100
34	M37	Z	0	0	0	%100
35	M38	X	.705	.705	0	%100
36	M38	Z	-.407	-.407	0	%100
37	M39	X	.705	.705	0	%100
38	M39	Z	-.407	-.407	0	%100
39	M40	X	.938	.938	0	%100
40	M40	Z	-.542	-.542	0	%100
41	M41	X	3.827	3.827	0	%100
42	M41	Z	-2.21	-2.21	0	%100
43	M42	X	.938	.938	0	%100
44	M42	Z	-.542	-.542	0	%100
45	M43	X	0	0	0	%100
46	M43	Z	0	0	0	%100
47	M44	X	.938	.938	0	%100
48	M44	Z	-.542	-.542	0	%100
49	M45	X	0	0	0	%100
50	M45	Z	0	0	0	%100
51	M46	X	.938	.938	0	%100
52	M46	Z	-.542	-.542	0	%100
53	M52	X	2.561	2.561	0	%100
54	M52	Z	-1.479	-1.479	0	%100
55	M52A	X	.62	.62	0	%100
56	M52A	Z	-.358	-.358	0	%100
57	M53A	X	.62	.62	0	%100
58	M53A	Z	-.358	-.358	0	%100
59	M54A	X	2.561	2.561	0	%100
60	M54A	Z	-1.479	-1.479	0	%100
61	M56	X	.939	.939	0	%100

Member Distributed Loads (BLC 55 : Structure Wi (60 Deg)) (Continued)

	Member Label	Direction	Start Magnitude[lb/ft,...	End Magnitude[lb/ft,...	Start Location[ft,%]	End Location[ft,%]
62	M56	Z	-.542	-.542	0	%100
63	M57	X	.742	.742	0	%100
64	M57	Z	-.428	-.428	0	%100
65	M58	X	.742	.742	0	%100
66	M58	Z	-.428	-.428	0	%100
67	M59	X	2.966	2.966	0	%100
68	M59	Z	-1.712	-1.712	0	%100
69	M64	X	.742	.742	0	%100
70	M64	Z	-.428	-.428	0	%100
71	M77	X	.742	.742	0	%100
72	M77	Z	-.428	-.428	0	%100
73	M90	X	2.966	2.966	0	%100
74	M90	Z	-1.712	-1.712	0	%100
75	M91	X	2.247	2.247	0	%100
76	M91	Z	-1.297	-1.297	0	%100
77	M93	X	.705	.705	0	%100
78	M93	Z	-.407	-.407	0	%100
79	M94	X	2.82	2.82	0	%100
80	M94	Z	-1.628	-1.628	0	%100
81	M95	X	.938	.938	0	%100
82	M95	Z	-.542	-.542	0	%100
83	M96	X	.957	.957	0	%100
84	M96	Z	-.552	-.552	0	%100
85	M97	X	3.753	3.753	0	%100
86	M97	Z	-2.167	-2.167	0	%100
87	M98	X	2.815	2.815	0	%100
88	M98	Z	-1.625	-1.625	0	%100
89	M99	X	.938	.938	0	%100
90	M99	Z	-.542	-.542	0	%100
91	M100	X	2.815	2.815	0	%100
92	M100	Z	-1.625	-1.625	0	%100
93	M101	X	3.753	3.753	0	%100
94	M101	Z	-2.167	-2.167	0	%100
95	M67	X	.552	.552	0	%100
96	M67	Z	-.319	-.319	0	%100
97	M68	X	2.21	2.21	0	%100
98	M68	Z	-1.276	-1.276	0	%100
99	M69	X	.552	.552	0	%100
100	M69	Z	-.319	-.319	0	%100
101	MP1A	X	2.391	2.391	0	%100
102	MP1A	Z	-1.381	-1.381	0	%100
103	MP2A	X	2.647	2.647	0	%100
104	MP2A	Z	-1.528	-1.528	0	%100
105	MP3A	X	2.391	2.391	0	%100
106	MP3A	Z	-1.381	-1.381	0	%100
107	MP4A	X	2.391	2.391	0	%100
108	MP4A	Z	-1.381	-1.381	0	%100
109	MP1B	X	2.391	2.391	0	%100
110	MP1B	Z	-1.381	-1.381	0	%100
111	MP2B	X	2.647	2.647	0	%100
112	MP2B	Z	-1.528	-1.528	0	%100
113	MP3B	X	2.391	2.391	0	%100
114	MP3B	Z	-1.381	-1.381	0	%100
115	MP4B	X	2.391	2.391	0	%100
116	MP4B	Z	-1.381	-1.381	0	%100
117	MP1C	X	2.391	2.391	0	%100
118	MP1C	Z	-1.381	-1.381	0	%100

Member Distributed Loads (BLC 55 : Structure Wi (60 Deg)) (Continued)

	Member Label	Direction	Start Magnitude[lb/ft,...	End Magnitude[lb/ft,...	Start Location[ft,%]	End Location[ft,%]
119	MP2C	X	2.647	2.647	0	%100
120	MP2C	Z	-1.528	-1.528	0	%100
121	MP3C	X	2.391	2.391	0	%100
122	MP3C	Z	-1.381	-1.381	0	%100
123	MP4C	X	2.391	2.391	0	%100
124	MP4C	Z	-1.381	-1.381	0	%100

Member Distributed Loads (BLC 56 : Structure Wi (90 Deg))

	Member Label	Direction	Start Magnitude[lb/ft,...	End Magnitude[lb/ft,...	Start Location[ft,%]	End Location[ft,%]
1	A5	X	2.761	2.761	0	%100
2	A5	Z	0	0	0	%100
3	B5	X	2.761	2.761	0	%100
4	B5	Z	0	0	0	%100
5	M18	X	2.146	2.146	0	%100
6	M18	Z	0	0	0	%100
7	M19	X	2.146	2.146	0	%100
8	M19	Z	0	0	0	%100
9	M20	X	.865	.865	0	%100
10	M20	Z	0	0	0	%100
11	M21	X	2.442	2.442	0	%100
12	M21	Z	0	0	0	%100
13	M22	X	0	0	0	%100
14	M22	Z	0	0	0	%100
15	M23	X	3.25	3.25	0	%100
16	M23	Z	0	0	0	%100
17	M24	X	3.314	3.314	0	%100
18	M24	Z	0	0	0	%100
19	M25	X	0	0	0	%100
20	M25	Z	0	0	0	%100
21	M26	X	1.083	1.083	0	%100
22	M26	Z	0	0	0	%100
23	M27	X	3.25	3.25	0	%100
24	M27	Z	0	0	0	%100
25	M28	X	1.083	1.083	0	%100
26	M28	Z	0	0	0	%100
27	M29	X	0	0	0	%100
28	M29	Z	0	0	0	%100
29	M35	X	2.146	2.146	0	%100
30	M35	Z	0	0	0	%100
31	M36	X	2.146	2.146	0	%100
32	M36	Z	0	0	0	%100
33	M37	X	.865	.865	0	%100
34	M37	Z	0	0	0	%100
35	M38	X	0	0	0	%100
36	M38	Z	0	0	0	%100
37	M39	X	2.442	2.442	0	%100
38	M39	Z	0	0	0	%100
39	M40	X	0	0	0	%100
40	M40	Z	0	0	0	%100
41	M41	X	3.314	3.314	0	%100
42	M41	Z	0	0	0	%100
43	M42	X	3.25	3.25	0	%100
44	M42	Z	0	0	0	%100
45	M43	X	1.083	1.083	0	%100
46	M43	Z	0	0	0	%100
47	M44	X	0	0	0	%100

Member Distributed Loads (BLC 56 : Structure Wi (90 Deg)) (Continued)

	Member Label	Direction	Start Magnitude[lb/ft,...	End Magnitude[lb/ft,...	Start Location[ft,%]	End Location[ft,%]
48	M44	Z	0	0	0	%100
49	M45	X	1.083	1.083	0	%100
50	M45	Z	0	0	0	%100
51	M46	X	3.25	3.25	0	%100
52	M46	Z	0	0	0	%100
53	M52	X	3.582	3.582	0	%100
54	M52	Z	0	0	0	%100
55	M52A	X	0	0	0	%100
56	M52A	Z	0	0	0	%100
57	M53A	X	0	0	0	%100
58	M53A	Z	0	0	0	%100
59	M54A	X	1.709	1.709	0	%100
60	M54A	Z	0	0	0	%100
61	M56	X	1.709	1.709	0	%100
62	M56	Z	0	0	0	%100
63	M57	X	0	0	0	%100
64	M57	Z	0	0	0	%100
65	M58	X	2.569	2.569	0	%100
66	M58	Z	0	0	0	%100
67	M59	X	2.569	2.569	0	%100
68	M59	Z	0	0	0	%100
69	M64	X	0	0	0	%100
70	M64	Z	0	0	0	%100
71	M77	X	2.569	2.569	0	%100
72	M77	Z	0	0	0	%100
73	M90	X	2.569	2.569	0	%100
74	M90	Z	0	0	0	%100
75	M91	X	3.46	3.46	0	%100
76	M91	Z	0	0	0	%100
77	M93	X	2.442	2.442	0	%100
78	M93	Z	0	0	0	%100
79	M94	X	2.442	2.442	0	%100
80	M94	Z	0	0	0	%100
81	M95	X	3.25	3.25	0	%100
82	M95	Z	0	0	0	%100
83	M96	X	0	0	0	%100
84	M96	Z	0	0	0	%100
85	M97	X	3.25	3.25	0	%100
86	M97	Z	0	0	0	%100
87	M98	X	4.333	4.333	0	%100
88	M98	Z	0	0	0	%100
89	M99	X	3.25	3.25	0	%100
90	M99	Z	0	0	0	%100
91	M100	X	4.333	4.333	0	%100
92	M100	Z	0	0	0	%100
93	M101	X	3.25	3.25	0	%100
94	M101	Z	0	0	0	%100
95	M67	X	1.914	1.914	0	%100
96	M67	Z	0	0	0	%100
97	M68	X	1.913	1.913	0	%100
98	M68	Z	0	0	0	%100
99	M69	X	0	0	0	%100
100	M69	Z	0	0	0	%100
101	MP1A	X	2.761	2.761	0	%100
102	MP1A	Z	0	0	0	%100
103	MP2A	X	3.056	3.056	0	%100
104	MP2A	Z	0	0	0	%100

Member Distributed Loads (BLC 56 : Structure Wi (90 Deg)) (Continued)

	Member Label	Direction	Start Magnitude[lb/ft,...	End Magnitude[lb/ft,...	Start Location[ft,%]	End Location[ft,%]
105	MP3A	X	2.761	2.761	0	%100
106	MP3A	Z	0	0	0	%100
107	MP4A	X	2.761	2.761	0	%100
108	MP4A	Z	0	0	0	%100
109	MP1B	X	2.761	2.761	0	%100
110	MP1B	Z	0	0	0	%100
111	MP2B	X	3.056	3.056	0	%100
112	MP2B	Z	0	0	0	%100
113	MP3B	X	2.761	2.761	0	%100
114	MP3B	Z	0	0	0	%100
115	MP4B	X	2.761	2.761	0	%100
116	MP4B	Z	0	0	0	%100
117	MP1C	X	2.761	2.761	0	%100
118	MP1C	Z	0	0	0	%100
119	MP2C	X	3.056	3.056	0	%100
120	MP2C	Z	0	0	0	%100
121	MP3C	X	2.761	2.761	0	%100
122	MP3C	Z	0	0	0	%100
123	MP4C	X	2.761	2.761	0	%100
124	MP4C	Z	0	0	0	%100

Member Distributed Loads (BLC 57 : Structure Wi (120 Deg))

	Member Label	Direction	Start Magnitude[lb/ft,...	End Magnitude[lb/ft,...	Start Location[ft,%]	End Location[ft,%]
1	A5	X	2.391	2.391	0	%100
2	A5	Z	1.381	1.381	0	%100
3	B5	X	2.391	2.391	0	%100
4	B5	Z	1.381	1.381	0	%100
5	M18	X	2.478	2.478	0	%100
6	M18	Z	1.431	1.431	0	%100
7	M19	X	2.478	2.478	0	%100
8	M19	Z	1.431	1.431	0	%100
9	M20	X	0	0	0	%100
10	M20	Z	0	0	0	%100
11	M21	X	.705	.705	0	%100
12	M21	Z	.407	.407	0	%100
13	M22	X	.705	.705	0	%100
14	M22	Z	.407	.407	0	%100
15	M23	X	.938	.938	0	%100
16	M23	Z	.542	.542	0	%100
17	M24	X	3.827	3.827	0	%100
18	M24	Z	2.21	2.21	0	%100
19	M25	X	.938	.938	0	%100
20	M25	Z	.542	.542	0	%100
21	M26	X	0	0	0	%100
22	M26	Z	0	0	0	%100
23	M27	X	.938	.938	0	%100
24	M27	Z	.542	.542	0	%100
25	M28	X	0	0	0	%100
26	M28	Z	0	0	0	%100
27	M29	X	.938	.938	0	%100
28	M29	Z	.542	.542	0	%100
29	M35	X	.62	.62	0	%100
30	M35	Z	.358	.358	0	%100
31	M36	X	.62	.62	0	%100
32	M36	Z	.358	.358	0	%100
33	M37	X	2.247	2.247	0	%100

Member Distributed Loads (BLC 57 : Structure Wi (120 Deg)) (Continued)

	Member Label	Direction	Start Magnitude[lb/ft,...	End Magnitude[lb/ft,...	Start Location[ft,%]	End Location[ft,%]
34	M37	Z	1.297	1.297	0	%100
35	M38	X	.705	.705	0	%100
36	M38	Z	.407	.407	0	%100
37	M39	X	2.82	2.82	0	%100
38	M39	Z	1.628	1.628	0	%100
39	M40	X	.938	.938	0	%100
40	M40	Z	.542	.542	0	%100
41	M41	X	.957	.957	0	%100
42	M41	Z	.552	.552	0	%100
43	M42	X	3.753	3.753	0	%100
44	M42	Z	2.167	2.167	0	%100
45	M43	X	2.815	2.815	0	%100
46	M43	Z	1.625	1.625	0	%100
47	M44	X	.938	.938	0	%100
48	M44	Z	.542	.542	0	%100
49	M45	X	2.815	2.815	0	%100
50	M45	Z	1.625	1.625	0	%100
51	M46	X	3.753	3.753	0	%100
52	M46	Z	2.167	2.167	0	%100
53	M52	X	2.561	2.561	0	%100
54	M52	Z	1.479	1.479	0	%100
55	M52A	X	.62	.62	0	%100
56	M52A	Z	.358	.358	0	%100
57	M53A	X	.62	.62	0	%100
58	M53A	Z	.358	.358	0	%100
59	M54A	X	.939	.939	0	%100
60	M54A	Z	.542	.542	0	%100
61	M56	X	2.561	2.561	0	%100
62	M56	Z	1.479	1.479	0	%100
63	M57	X	.742	.742	0	%100
64	M57	Z	.428	.428	0	%100
65	M58	X	2.966	2.966	0	%100
66	M58	Z	1.712	1.712	0	%100
67	M59	X	.742	.742	0	%100
68	M59	Z	.428	.428	0	%100
69	M64	X	.742	.742	0	%100
70	M64	Z	.428	.428	0	%100
71	M77	X	2.966	2.966	0	%100
72	M77	Z	1.712	1.712	0	%100
73	M90	X	.742	.742	0	%100
74	M90	Z	.428	.428	0	%100
75	M91	X	2.247	2.247	0	%100
76	M91	Z	1.297	1.297	0	%100
77	M93	X	2.82	2.82	0	%100
78	M93	Z	1.628	1.628	0	%100
79	M94	X	.705	.705	0	%100
80	M94	Z	.407	.407	0	%100
81	M95	X	3.753	3.753	0	%100
82	M95	Z	2.167	2.167	0	%100
83	M96	X	.957	.957	0	%100
84	M96	Z	.552	.552	0	%100
85	M97	X	.938	.938	0	%100
86	M97	Z	.542	.542	0	%100
87	M98	X	2.815	2.815	0	%100
88	M98	Z	1.625	1.625	0	%100
89	M99	X	3.753	3.753	0	%100
90	M99	Z	2.167	2.167	0	%100

Member Distributed Loads (BLC 57 : Structure Wi (120 Deg)) (Continued)

	Member Label	Direction	Start Magnitude[lb/ft,...	End Magnitude[lb/ft,...	Start Location[ft,%]	End Location[ft,%]
91	M100	X	2.815	2.815	0	%100
92	M100	Z	1.625	1.625	0	%100
93	M101	X	.938	.938	0	%100
94	M101	Z	.542	.542	0	%100
95	M67	X	2.21	2.21	0	%100
96	M67	Z	1.276	1.276	0	%100
97	M68	X	.552	.552	0	%100
98	M68	Z	.319	.319	0	%100
99	M69	X	.552	.552	0	%100
100	M69	Z	.319	.319	0	%100
101	MP1A	X	2.391	2.391	0	%100
102	MP1A	Z	1.381	1.381	0	%100
103	MP2A	X	2.647	2.647	0	%100
104	MP2A	Z	1.528	1.528	0	%100
105	MP3A	X	2.391	2.391	0	%100
106	MP3A	Z	1.381	1.381	0	%100
107	MP4A	X	2.391	2.391	0	%100
108	MP4A	Z	1.381	1.381	0	%100
109	MP1B	X	2.391	2.391	0	%100
110	MP1B	Z	1.381	1.381	0	%100
111	MP2B	X	2.647	2.647	0	%100
112	MP2B	Z	1.528	1.528	0	%100
113	MP3B	X	2.391	2.391	0	%100
114	MP3B	Z	1.381	1.381	0	%100
115	MP4B	X	2.391	2.391	0	%100
116	MP4B	Z	1.381	1.381	0	%100
117	MP1C	X	2.391	2.391	0	%100
118	MP1C	Z	1.381	1.381	0	%100
119	MP2C	X	2.647	2.647	0	%100
120	MP2C	Z	1.528	1.528	0	%100
121	MP3C	X	2.391	2.391	0	%100
122	MP3C	Z	1.381	1.381	0	%100
123	MP4C	X	2.391	2.391	0	%100
124	MP4C	Z	1.381	1.381	0	%100

Member Distributed Loads (BLC 58 : Structure Wi (150 Deg))

	Member Label	Direction	Start Magnitude[lb/ft,...	End Magnitude[lb/ft,...	Start Location[ft,%]	End Location[ft,%]
1	A5	X	1.381	1.381	0	%100
2	A5	Z	2.391	2.391	0	%100
3	B5	X	1.381	1.381	0	%100
4	B5	Z	2.391	2.391	0	%100
5	M18	X	1.073	1.073	0	%100
6	M18	Z	1.859	1.859	0	%100
7	M19	X	1.073	1.073	0	%100
8	M19	Z	1.859	1.859	0	%100
9	M20	X	.432	.432	0	%100
10	M20	Z	.749	.749	0	%100
11	M21	X	0	0	0	%100
12	M21	Z	0	0	0	%100
13	M22	X	1.221	1.221	0	%100
14	M22	Z	2.115	2.115	0	%100
15	M23	X	0	0	0	%100
16	M23	Z	0	0	0	%100
17	M24	X	1.657	1.657	0	%100
18	M24	Z	2.87	2.87	0	%100
19	M25	X	1.625	1.625	0	%100

Member Distributed Loads (BLC 58 : Structure Wi (150 Deg)) (Continued)

	Member Label	Direction	Start Magnitude[lb/ft,...	End Magnitude[lb/ft,...	Start Location[ft,%]	End Location[ft,%]
20	M25	Z	2.815	2.815	0	%100
21	M26	X	.542	.542	0	%100
22	M26	Z	.938	.938	0	%100
23	M27	X	0	0	0	%100
24	M27	Z	0	0	0	%100
25	M28	X	.542	.542	0	%100
26	M28	Z	.938	.938	0	%100
27	M29	X	1.625	1.625	0	%100
28	M29	Z	2.815	2.815	0	%100
29	M35	X	0	0	0	%100
30	M35	Z	0	0	0	%100
31	M36	X	0	0	0	%100
32	M36	Z	0	0	0	%100
33	M37	X	1.73	1.73	0	%100
34	M37	Z	2.996	2.996	0	%100
35	M38	X	1.221	1.221	0	%100
36	M38	Z	2.115	2.115	0	%100
37	M39	X	1.221	1.221	0	%100
38	M39	Z	2.115	2.115	0	%100
39	M40	X	1.625	1.625	0	%100
40	M40	Z	2.815	2.815	0	%100
41	M41	X	0	0	0	%100
42	M41	Z	0	0	0	%100
43	M42	X	1.625	1.625	0	%100
44	M42	Z	2.815	2.815	0	%100
45	M43	X	2.167	2.167	0	%100
46	M43	Z	3.753	3.753	0	%100
47	M44	X	1.625	1.625	0	%100
48	M44	Z	2.815	2.815	0	%100
49	M45	X	2.167	2.167	0	%100
50	M45	Z	3.753	3.753	0	%100
51	M46	X	1.625	1.625	0	%100
52	M46	Z	2.815	2.815	0	%100
53	M52	X	.854	.854	0	%100
54	M52	Z	1.48	1.48	0	%100
55	M52A	X	1.073	1.073	0	%100
56	M52A	Z	1.859	1.859	0	%100
57	M53A	X	1.073	1.073	0	%100
58	M53A	Z	1.859	1.859	0	%100
59	M54A	X	.854	.854	0	%100
60	M54A	Z	1.48	1.48	0	%100
61	M56	X	1.791	1.791	0	%100
62	M56	Z	3.102	3.102	0	%100
63	M57	X	1.284	1.284	0	%100
64	M57	Z	2.225	2.225	0	%100
65	M58	X	1.284	1.284	0	%100
66	M58	Z	2.225	2.225	0	%100
67	M59	X	0	0	0	%100
68	M59	Z	0	0	0	%100
69	M64	X	1.284	1.284	0	%100
70	M64	Z	2.225	2.225	0	%100
71	M77	X	1.284	1.284	0	%100
72	M77	Z	2.225	2.225	0	%100
73	M90	X	0	0	0	%100
74	M90	Z	0	0	0	%100
75	M91	X	.432	.432	0	%100
76	M91	Z	.749	.749	0	%100

Member Distributed Loads (BLC 58 : Structure Wi (150 Deg)) (Continued)

	Member Label	Direction	Start Magnitude[lb/ft,...	End Magnitude[lb/ft,...	Start Location[ft,%]	End Location[ft,%]
77	M93	X	1.221	1.221	0	%100
78	M93	Z	2.115	2.115	0	%100
79	M94	X	0	0	0	%100
80	M94	Z	0	0	0	%100
81	M95	X	1.625	1.625	0	%100
82	M95	Z	2.815	2.815	0	%100
83	M96	X	1.657	1.657	0	%100
84	M96	Z	2.87	2.87	0	%100
85	M97	X	0	0	0	%100
86	M97	Z	0	0	0	%100
87	M98	X	.542	.542	0	%100
88	M98	Z	.938	.938	0	%100
89	M99	X	1.625	1.625	0	%100
90	M99	Z	2.815	2.815	0	%100
91	M100	X	.542	.542	0	%100
92	M100	Z	.938	.938	0	%100
93	M101	X	0	0	0	%100
94	M101	Z	0	0	0	%100
95	M67	X	.957	.957	0	%100
96	M67	Z	1.657	1.657	0	%100
97	M68	X	0	0	0	%100
98	M68	Z	0	0	0	%100
99	M69	X	.957	.957	0	%100
100	M69	Z	1.657	1.657	0	%100
101	MP1A	X	1.381	1.381	0	%100
102	MP1A	Z	2.391	2.391	0	%100
103	MP2A	X	1.528	1.528	0	%100
104	MP2A	Z	2.647	2.647	0	%100
105	MP3A	X	1.381	1.381	0	%100
106	MP3A	Z	2.391	2.391	0	%100
107	MP4A	X	1.381	1.381	0	%100
108	MP4A	Z	2.391	2.391	0	%100
109	MP1B	X	1.381	1.381	0	%100
110	MP1B	Z	2.391	2.391	0	%100
111	MP2B	X	1.528	1.528	0	%100
112	MP2B	Z	2.647	2.647	0	%100
113	MP3B	X	1.381	1.381	0	%100
114	MP3B	Z	2.391	2.391	0	%100
115	MP4B	X	1.381	1.381	0	%100
116	MP4B	Z	2.391	2.391	0	%100
117	MP1C	X	1.381	1.381	0	%100
118	MP1C	Z	2.391	2.391	0	%100
119	MP2C	X	1.528	1.528	0	%100
120	MP2C	Z	2.647	2.647	0	%100
121	MP3C	X	1.381	1.381	0	%100
122	MP3C	Z	2.391	2.391	0	%100
123	MP4C	X	1.381	1.381	0	%100
124	MP4C	Z	2.391	2.391	0	%100

Member Distributed Loads (BLC 59 : Structure Wi (180 Deg))

	Member Label	Direction	Start Magnitude[lb/ft,...	End Magnitude[lb/ft,...	Start Location[ft,%]	End Location[ft,%]
1	A5	X	0	0	0	%100
2	A5	Z	2.761	2.761	0	%100
3	B5	X	0	0	0	%100
4	B5	Z	2.761	2.761	0	%100
5	M18	X	0	0	0	%100

Member Distributed Loads (BLC 59 : Structure Wi (180 Deg)) (Continued)

	Member Label	Direction	Start Magnitude[lb/ft,...	End Magnitude[lb/ft,...	Start Location[ft,%]	End Location[ft,%]
6	M18	Z	.715	.715	0	%100
7	M19	X	0	0	0	%100
8	M19	Z	.715	.715	0	%100
9	M20	X	0	0	0	%100
10	M20	Z	2.595	2.595	0	%100
11	M21	X	0	0	0	%100
12	M21	Z	.814	.814	0	%100
13	M22	X	0	0	0	%100
14	M22	Z	3.256	3.256	0	%100
15	M23	X	0	0	0	%100
16	M23	Z	1.083	1.083	0	%100
17	M24	X	0	0	0	%100
18	M24	Z	1.105	1.105	0	%100
19	M25	X	0	0	0	%100
20	M25	Z	4.333	4.333	0	%100
21	M26	X	0	0	0	%100
22	M26	Z	3.25	3.25	0	%100
23	M27	X	0	0	0	%100
24	M27	Z	1.083	1.083	0	%100
25	M28	X	0	0	0	%100
26	M28	Z	3.25	3.25	0	%100
27	M29	X	0	0	0	%100
28	M29	Z	4.333	4.333	0	%100
29	M35	X	0	0	0	%100
30	M35	Z	.715	.715	0	%100
31	M36	X	0	0	0	%100
32	M36	Z	.715	.715	0	%100
33	M37	X	0	0	0	%100
34	M37	Z	2.595	2.595	0	%100
35	M38	X	0	0	0	%100
36	M38	Z	3.256	3.256	0	%100
37	M39	X	0	0	0	%100
38	M39	Z	.814	.814	0	%100
39	M40	X	0	0	0	%100
40	M40	Z	4.333	4.333	0	%100
41	M41	X	0	0	0	%100
42	M41	Z	1.105	1.105	0	%100
43	M42	X	0	0	0	%100
44	M42	Z	1.083	1.083	0	%100
45	M43	X	0	0	0	%100
46	M43	Z	3.25	3.25	0	%100
47	M44	X	0	0	0	%100
48	M44	Z	4.333	4.333	0	%100
49	M45	X	0	0	0	%100
50	M45	Z	3.25	3.25	0	%100
51	M46	X	0	0	0	%100
52	M46	Z	1.083	1.083	0	%100
53	M52	X	0	0	0	%100
54	M52	Z	1.085	1.085	0	%100
55	M52A	X	0	0	0	%100
56	M52A	Z	2.861	2.861	0	%100
57	M53A	X	0	0	0	%100
58	M53A	Z	2.861	2.861	0	%100
59	M54A	X	0	0	0	%100
60	M54A	Z	2.957	2.957	0	%100
61	M56	X	0	0	0	%100
62	M56	Z	2.957	2.957	0	%100

Member Distributed Loads (BLC 59 : Structure Wi (180 Deg)) (Continued)

	Member Label	Direction	Start Magnitude[lb/ft,...	End Magnitude[lb/ft,...	Start Location[ft,%]	End Location[ft,%]
63	M57	X	0	0	0	%100
64	M57	Z	3.425	3.425	0	%100
65	M58	X	0	0	0	%100
66	M58	Z	.856	.856	0	%100
67	M59	X	0	0	0	%100
68	M59	Z	.856	.856	0	%100
69	M64	X	0	0	0	%100
70	M64	Z	3.425	3.425	0	%100
71	M77	X	0	0	0	%100
72	M77	Z	.856	.856	0	%100
73	M90	X	0	0	0	%100
74	M90	Z	.856	.856	0	%100
75	M91	X	0	0	0	%100
76	M91	Z	0	0	0	%100
77	M93	X	0	0	0	%100
78	M93	Z	.814	.814	0	%100
79	M94	X	0	0	0	%100
80	M94	Z	.814	.814	0	%100
81	M95	X	0	0	0	%100
82	M95	Z	1.083	1.083	0	%100
83	M96	X	0	0	0	%100
84	M96	Z	4.419	4.419	0	%100
85	M97	X	0	0	0	%100
86	M97	Z	1.083	1.083	0	%100
87	M98	X	0	0	0	%100
88	M98	Z	0	0	0	%100
89	M99	X	0	0	0	%100
90	M99	Z	1.083	1.083	0	%100
91	M100	X	0	0	0	%100
92	M100	Z	0	0	0	%100
93	M101	X	0	0	0	%100
94	M101	Z	1.083	1.083	0	%100
95	M67	X	0	0	0	%100
96	M67	Z	.638	.638	0	%100
97	M68	X	0	0	0	%100
98	M68	Z	.638	.638	0	%100
99	M69	X	0	0	0	%100
100	M69	Z	2.551	2.551	0	%100
101	MP1A	X	0	0	0	%100
102	MP1A	Z	2.761	2.761	0	%100
103	MP2A	X	0	0	0	%100
104	MP2A	Z	3.056	3.056	0	%100
105	MP3A	X	0	0	0	%100
106	MP3A	Z	2.761	2.761	0	%100
107	MP4A	X	0	0	0	%100
108	MP4A	Z	2.761	2.761	0	%100
109	MP1B	X	0	0	0	%100
110	MP1B	Z	2.761	2.761	0	%100
111	MP2B	X	0	0	0	%100
112	MP2B	Z	3.056	3.056	0	%100
113	MP3B	X	0	0	0	%100
114	MP3B	Z	2.761	2.761	0	%100
115	MP4B	X	0	0	0	%100
116	MP4B	Z	2.761	2.761	0	%100
117	MP1C	X	0	0	0	%100
118	MP1C	Z	2.761	2.761	0	%100
119	MP2C	X	0	0	0	%100

Member Distributed Loads (BLC 59 : Structure Wi (180 Deg)) (Continued)

	Member Label	Direction	Start Magnitude[lb/ft,...	End Magnitude[lb/ft,...	Start Location[ft,%]	End Location[ft,%]
120	MP2C	Z	3.056	3.056	0	%100
121	MP3C	X	0	0	0	%100
122	MP3C	Z	2.761	2.761	0	%100
123	MP4C	X	0	0	0	%100
124	MP4C	Z	2.761	2.761	0	%100

Member Distributed Loads (BLC 60 : Structure Wi (210 Deg))

	Member Label	Direction	Start Magnitude[lb/ft,...	End Magnitude[lb/ft,...	Start Location[ft,%]	End Location[ft,%]
1	A5	X	-1.381	-1.381	0	%100
2	A5	Z	2.391	2.391	0	%100
3	B5	X	-1.381	-1.381	0	%100
4	B5	Z	2.391	2.391	0	%100
5	M18	X	0	0	0	%100
6	M18	Z	0	0	0	%100
7	M19	X	0	0	0	%100
8	M19	Z	0	0	0	%100
9	M20	X	-1.73	-1.73	0	%100
10	M20	Z	2.996	2.996	0	%100
11	M21	X	-1.221	-1.221	0	%100
12	M21	Z	2.115	2.115	0	%100
13	M22	X	-1.221	-1.221	0	%100
14	M22	Z	2.115	2.115	0	%100
15	M23	X	-1.625	-1.625	0	%100
16	M23	Z	2.815	2.815	0	%100
17	M24	X	0	0	0	%100
18	M24	Z	0	0	0	%100
19	M25	X	-1.625	-1.625	0	%100
20	M25	Z	2.815	2.815	0	%100
21	M26	X	-2.167	-2.167	0	%100
22	M26	Z	3.753	3.753	0	%100
23	M27	X	-1.625	-1.625	0	%100
24	M27	Z	2.815	2.815	0	%100
25	M28	X	-2.167	-2.167	0	%100
26	M28	Z	3.753	3.753	0	%100
27	M29	X	-1.625	-1.625	0	%100
28	M29	Z	2.815	2.815	0	%100
29	M35	X	-1.073	-1.073	0	%100
30	M35	Z	1.859	1.859	0	%100
31	M36	X	-1.073	-1.073	0	%100
32	M36	Z	1.859	1.859	0	%100
33	M37	X	-.432	-.432	0	%100
34	M37	Z	.749	.749	0	%100
35	M38	X	-1.221	-1.221	0	%100
36	M38	Z	2.115	2.115	0	%100
37	M39	X	0	0	0	%100
38	M39	Z	0	0	0	%100
39	M40	X	-1.625	-1.625	0	%100
40	M40	Z	2.815	2.815	0	%100
41	M41	X	-1.657	-1.657	0	%100
42	M41	Z	2.87	2.87	0	%100
43	M42	X	0	0	0	%100
44	M42	Z	0	0	0	%100
45	M43	X	-.542	-.542	0	%100
46	M43	Z	.938	.938	0	%100
47	M44	X	-1.625	-1.625	0	%100
48	M44	Z	2.815	2.815	0	%100

Member Distributed Loads (BLC 60 : Structure Wi (210 Deg)) (Continued)

	Member Label	Direction	Start Magnitude[lb/ft,...	End Magnitude[lb/ft,...	Start Location[ft,%]	End Location[ft,%]
49	M45	X	-.542	-.542	0	%100
50	M45	Z	.938	.938	0	%100
51	M46	X	0	0	0	%100
52	M46	Z	0	0	0	%100
53	M52	X	-.854	-.854	0	%100
54	M52	Z	1.48	1.48	0	%100
55	M52A	X	-1.073	-1.073	0	%100
56	M52A	Z	1.859	1.859	0	%100
57	M53A	X	-1.073	-1.073	0	%100
58	M53A	Z	1.859	1.859	0	%100
59	M54A	X	-1.791	-1.791	0	%100
60	M54A	Z	3.102	3.102	0	%100
61	M56	X	-.854	-.854	0	%100
62	M56	Z	1.48	1.48	0	%100
63	M57	X	-1.284	-1.284	0	%100
64	M57	Z	2.225	2.225	0	%100
65	M58	X	0	0	0	%100
66	M58	Z	0	0	0	%100
67	M59	X	-1.284	-1.284	0	%100
68	M59	Z	2.225	2.225	0	%100
69	M64	X	-1.284	-1.284	0	%100
70	M64	Z	2.225	2.225	0	%100
71	M77	X	0	0	0	%100
72	M77	Z	0	0	0	%100
73	M90	X	-1.284	-1.284	0	%100
74	M90	Z	2.225	2.225	0	%100
75	M91	X	-.432	-.432	0	%100
76	M91	Z	.749	.749	0	%100
77	M93	X	0	0	0	%100
78	M93	Z	0	0	0	%100
79	M94	X	-1.221	-1.221	0	%100
80	M94	Z	2.115	2.115	0	%100
81	M95	X	0	0	0	%100
82	M95	Z	0	0	0	%100
83	M96	X	-1.657	-1.657	0	%100
84	M96	Z	2.87	2.87	0	%100
85	M97	X	-1.625	-1.625	0	%100
86	M97	Z	2.815	2.815	0	%100
87	M98	X	-.542	-.542	0	%100
88	M98	Z	.938	.938	0	%100
89	M99	X	0	0	0	%100
90	M99	Z	0	0	0	%100
91	M100	X	-.542	-.542	0	%100
92	M100	Z	.938	.938	0	%100
93	M101	X	-1.625	-1.625	0	%100
94	M101	Z	2.815	2.815	0	%100
95	M67	X	0	0	0	%100
96	M67	Z	0	0	0	%100
97	M68	X	-.957	-.957	0	%100
98	M68	Z	1.657	1.657	0	%100
99	M69	X	-.957	-.957	0	%100
100	M69	Z	1.657	1.657	0	%100
101	MP1A	X	-1.381	-1.381	0	%100
102	MP1A	Z	2.391	2.391	0	%100
103	MP2A	X	-1.528	-1.528	0	%100
104	MP2A	Z	2.647	2.647	0	%100
105	MP3A	X	-1.381	-1.381	0	%100

Member Distributed Loads (BLC 60 : Structure Wi (210 Deg)) (Continued)

	Member Label	Direction	Start Magnitude[lb/ft,...	End Magnitude[lb/ft,...	Start Location[ft,%]	End Location[ft,%]
106	MP3A	Z	2.391	2.391	0	%100
107	MP4A	X	-1.381	-1.381	0	%100
108	MP4A	Z	2.391	2.391	0	%100
109	MP1B	X	-1.381	-1.381	0	%100
110	MP1B	Z	2.391	2.391	0	%100
111	MP2B	X	-1.528	-1.528	0	%100
112	MP2B	Z	2.647	2.647	0	%100
113	MP3B	X	-1.381	-1.381	0	%100
114	MP3B	Z	2.391	2.391	0	%100
115	MP4B	X	-1.381	-1.381	0	%100
116	MP4B	Z	2.391	2.391	0	%100
117	MP1C	X	-1.381	-1.381	0	%100
118	MP1C	Z	2.391	2.391	0	%100
119	MP2C	X	-1.528	-1.528	0	%100
120	MP2C	Z	2.647	2.647	0	%100
121	MP3C	X	-1.381	-1.381	0	%100
122	MP3C	Z	2.391	2.391	0	%100
123	MP4C	X	-1.381	-1.381	0	%100
124	MP4C	Z	2.391	2.391	0	%100

Member Distributed Loads (BLC 61 : Structure Wi (240 Deg))

	Member Label	Direction	Start Magnitude[lb/ft,...	End Magnitude[lb/ft,...	Start Location[ft,%]	End Location[ft,%]
1	A5	X	-2.391	-2.391	0	%100
2	A5	Z	1.381	1.381	0	%100
3	B5	X	-2.391	-2.391	0	%100
4	B5	Z	1.381	1.381	0	%100
5	M18	X	-.62	-.62	0	%100
6	M18	Z	.358	.358	0	%100
7	M19	X	-.62	-.62	0	%100
8	M19	Z	.358	.358	0	%100
9	M20	X	-2.247	-2.247	0	%100
10	M20	Z	1.297	1.297	0	%100
11	M21	X	-2.82	-2.82	0	%100
12	M21	Z	1.628	1.628	0	%100
13	M22	X	-.705	-.705	0	%100
14	M22	Z	.407	.407	0	%100
15	M23	X	-3.753	-3.753	0	%100
16	M23	Z	2.167	2.167	0	%100
17	M24	X	-.957	-.957	0	%100
18	M24	Z	.552	.552	0	%100
19	M25	X	-.938	-.938	0	%100
20	M25	Z	.542	.542	0	%100
21	M26	X	-2.815	-2.815	0	%100
22	M26	Z	1.625	1.625	0	%100
23	M27	X	-3.753	-3.753	0	%100
24	M27	Z	2.167	2.167	0	%100
25	M28	X	-2.815	-2.815	0	%100
26	M28	Z	1.625	1.625	0	%100
27	M29	X	-.938	-.938	0	%100
28	M29	Z	.542	.542	0	%100
29	M35	X	-2.478	-2.478	0	%100
30	M35	Z	1.431	1.431	0	%100
31	M36	X	-2.478	-2.478	0	%100
32	M36	Z	1.431	1.431	0	%100
33	M37	X	0	0	0	%100
34	M37	Z	0	0	0	%100

Member Distributed Loads (BLC 61 : Structure Wi (240 Deg)) (Continued)

	Member Label	Direction	Start Magnitude[lb/ft,...	End Magnitude[lb/ft,...	Start Location[ft,%]	End Location[ft,%]
35	M38	X	-.705	-.705	0	%100
36	M38	Z	.407	.407	0	%100
37	M39	X	-.705	-.705	0	%100
38	M39	Z	.407	.407	0	%100
39	M40	X	-.938	-.938	0	%100
40	M40	Z	.542	.542	0	%100
41	M41	X	-3.827	-3.827	0	%100
42	M41	Z	2.21	2.21	0	%100
43	M42	X	-.938	-.938	0	%100
44	M42	Z	.542	.542	0	%100
45	M43	X	0	0	0	%100
46	M43	Z	0	0	0	%100
47	M44	X	-.938	-.938	0	%100
48	M44	Z	.542	.542	0	%100
49	M45	X	0	0	0	%100
50	M45	Z	0	0	0	%100
51	M46	X	-.938	-.938	0	%100
52	M46	Z	.542	.542	0	%100
53	M52	X	-2.561	-2.561	0	%100
54	M52	Z	1.479	1.479	0	%100
55	M52A	X	-.62	-.62	0	%100
56	M52A	Z	.358	.358	0	%100
57	M53A	X	-.62	-.62	0	%100
58	M53A	Z	.358	.358	0	%100
59	M54A	X	-2.561	-2.561	0	%100
60	M54A	Z	1.479	1.479	0	%100
61	M56	X	-.939	-.939	0	%100
62	M56	Z	.542	.542	0	%100
63	M57	X	-.742	-.742	0	%100
64	M57	Z	.428	.428	0	%100
65	M58	X	-.742	-.742	0	%100
66	M58	Z	.428	.428	0	%100
67	M59	X	-2.966	-2.966	0	%100
68	M59	Z	1.712	1.712	0	%100
69	M64	X	-.742	-.742	0	%100
70	M64	Z	.428	.428	0	%100
71	M77	X	-.742	-.742	0	%100
72	M77	Z	.428	.428	0	%100
73	M90	X	-2.966	-2.966	0	%100
74	M90	Z	1.712	1.712	0	%100
75	M91	X	-2.247	-2.247	0	%100
76	M91	Z	1.297	1.297	0	%100
77	M93	X	-.705	-.705	0	%100
78	M93	Z	.407	.407	0	%100
79	M94	X	-2.82	-2.82	0	%100
80	M94	Z	1.628	1.628	0	%100
81	M95	X	-.938	-.938	0	%100
82	M95	Z	.542	.542	0	%100
83	M96	X	-.957	-.957	0	%100
84	M96	Z	.552	.552	0	%100
85	M97	X	-3.753	-3.753	0	%100
86	M97	Z	2.167	2.167	0	%100
87	M98	X	-2.815	-2.815	0	%100
88	M98	Z	1.625	1.625	0	%100
89	M99	X	-.938	-.938	0	%100
90	M99	Z	.542	.542	0	%100
91	M100	X	-2.815	-2.815	0	%100

Member Distributed Loads (BLC 61 : Structure Wi (240 Deg)) (Continued)

	Member Label	Direction	Start Magnitude[lb/ft,...	End Magnitude[lb/ft,...	Start Location[ft,%]	End Location[ft,%]
92	M100	Z	1.625	1.625	0	%100
93	M101	X	-3.753	-3.753	0	%100
94	M101	Z	2.167	2.167	0	%100
95	M67	X	-.552	-.552	0	%100
96	M67	Z	.319	.319	0	%100
97	M68	X	-2.21	-2.21	0	%100
98	M68	Z	1.276	1.276	0	%100
99	M69	X	-.552	-.552	0	%100
100	M69	Z	.319	.319	0	%100
101	MP1A	X	-2.391	-2.391	0	%100
102	MP1A	Z	1.381	1.381	0	%100
103	MP2A	X	-2.647	-2.647	0	%100
104	MP2A	Z	1.528	1.528	0	%100
105	MP3A	X	-2.391	-2.391	0	%100
106	MP3A	Z	1.381	1.381	0	%100
107	MP4A	X	-2.391	-2.391	0	%100
108	MP4A	Z	1.381	1.381	0	%100
109	MP1B	X	-2.391	-2.391	0	%100
110	MP1B	Z	1.381	1.381	0	%100
111	MP2B	X	-2.647	-2.647	0	%100
112	MP2B	Z	1.528	1.528	0	%100
113	MP3B	X	-2.391	-2.391	0	%100
114	MP3B	Z	1.381	1.381	0	%100
115	MP4B	X	-2.391	-2.391	0	%100
116	MP4B	Z	1.381	1.381	0	%100
117	MP1C	X	-2.391	-2.391	0	%100
118	MP1C	Z	1.381	1.381	0	%100
119	MP2C	X	-2.647	-2.647	0	%100
120	MP2C	Z	1.528	1.528	0	%100
121	MP3C	X	-2.391	-2.391	0	%100
122	MP3C	Z	1.381	1.381	0	%100
123	MP4C	X	-2.391	-2.391	0	%100
124	MP4C	Z	1.381	1.381	0	%100

Member Distributed Loads (BLC 62 : Structure Wi (270 Deg))

	Member Label	Direction	Start Magnitude[lb/ft,...	End Magnitude[lb/ft,...	Start Location[ft,%]	End Location[ft,%]
1	A5	X	-2.761	-2.761	0	%100
2	A5	Z	0	0	0	%100
3	B5	X	-2.761	-2.761	0	%100
4	B5	Z	0	0	0	%100
5	M18	X	-2.146	-2.146	0	%100
6	M18	Z	0	0	0	%100
7	M19	X	-2.146	-2.146	0	%100
8	M19	Z	0	0	0	%100
9	M20	X	-.865	-.865	0	%100
10	M20	Z	0	0	0	%100
11	M21	X	-2.442	-2.442	0	%100
12	M21	Z	0	0	0	%100
13	M22	X	0	0	0	%100
14	M22	Z	0	0	0	%100
15	M23	X	-3.25	-3.25	0	%100
16	M23	Z	0	0	0	%100
17	M24	X	-3.314	-3.314	0	%100
18	M24	Z	0	0	0	%100
19	M25	X	0	0	0	%100
20	M25	Z	0	0	0	%100

Member Distributed Loads (BLC 62 : Structure Wi (270 Deg)) (Continued)

	Member Label	Direction	Start Magnitude[lb/ft,...	End Magnitude[lb/ft,...	Start Location[ft,%]	End Location[ft,%]
21	M26	X	-1.083	-1.083	0	%100
22	M26	Z	0	0	0	%100
23	M27	X	-3.25	-3.25	0	%100
24	M27	Z	0	0	0	%100
25	M28	X	-1.083	-1.083	0	%100
26	M28	Z	0	0	0	%100
27	M29	X	0	0	0	%100
28	M29	Z	0	0	0	%100
29	M35	X	-2.146	-2.146	0	%100
30	M35	Z	0	0	0	%100
31	M36	X	-2.146	-2.146	0	%100
32	M36	Z	0	0	0	%100
33	M37	X	-.865	-.865	0	%100
34	M37	Z	0	0	0	%100
35	M38	X	0	0	0	%100
36	M38	Z	0	0	0	%100
37	M39	X	-2.442	-2.442	0	%100
38	M39	Z	0	0	0	%100
39	M40	X	0	0	0	%100
40	M40	Z	0	0	0	%100
41	M41	X	-3.314	-3.314	0	%100
42	M41	Z	0	0	0	%100
43	M42	X	-3.25	-3.25	0	%100
44	M42	Z	0	0	0	%100
45	M43	X	-1.083	-1.083	0	%100
46	M43	Z	0	0	0	%100
47	M44	X	0	0	0	%100
48	M44	Z	0	0	0	%100
49	M45	X	-1.083	-1.083	0	%100
50	M45	Z	0	0	0	%100
51	M46	X	-3.25	-3.25	0	%100
52	M46	Z	0	0	0	%100
53	M52	X	-3.582	-3.582	0	%100
54	M52	Z	0	0	0	%100
55	M52A	X	0	0	0	%100
56	M52A	Z	0	0	0	%100
57	M53A	X	0	0	0	%100
58	M53A	Z	0	0	0	%100
59	M54A	X	-1.709	-1.709	0	%100
60	M54A	Z	0	0	0	%100
61	M56	X	-1.709	-1.709	0	%100
62	M56	Z	0	0	0	%100
63	M57	X	0	0	0	%100
64	M57	Z	0	0	0	%100
65	M58	X	-2.569	-2.569	0	%100
66	M58	Z	0	0	0	%100
67	M59	X	-2.569	-2.569	0	%100
68	M59	Z	0	0	0	%100
69	M64	X	0	0	0	%100
70	M64	Z	0	0	0	%100
71	M77	X	-2.569	-2.569	0	%100
72	M77	Z	0	0	0	%100
73	M90	X	-2.569	-2.569	0	%100
74	M90	Z	0	0	0	%100
75	M91	X	-3.46	-3.46	0	%100
76	M91	Z	0	0	0	%100
77	M93	X	-2.442	-2.442	0	%100

Member Distributed Loads (BLC 62 : Structure Wi (270 Deg)) (Continued)

	Member Label	Direction	Start Magnitude[lb/ft,...	End Magnitude[lb/ft,...	Start Location[ft,%]	End Location[ft,%]
78	M93	Z	0	0	0	%100
79	M94	X	-2.442	-2.442	0	%100
80	M94	Z	0	0	0	%100
81	M95	X	-3.25	-3.25	0	%100
82	M95	Z	0	0	0	%100
83	M96	X	0	0	0	%100
84	M96	Z	0	0	0	%100
85	M97	X	-3.25	-3.25	0	%100
86	M97	Z	0	0	0	%100
87	M98	X	-4.333	-4.333	0	%100
88	M98	Z	0	0	0	%100
89	M99	X	-3.25	-3.25	0	%100
90	M99	Z	0	0	0	%100
91	M100	X	-4.333	-4.333	0	%100
92	M100	Z	0	0	0	%100
93	M101	X	-3.25	-3.25	0	%100
94	M101	Z	0	0	0	%100
95	M67	X	-1.914	-1.914	0	%100
96	M67	Z	0	0	0	%100
97	M68	X	-1.913	-1.913	0	%100
98	M68	Z	0	0	0	%100
99	M69	X	0	0	0	%100
100	M69	Z	0	0	0	%100
101	MP1A	X	-2.761	-2.761	0	%100
102	MP1A	Z	0	0	0	%100
103	MP2A	X	-3.056	-3.056	0	%100
104	MP2A	Z	0	0	0	%100
105	MP3A	X	-2.761	-2.761	0	%100
106	MP3A	Z	0	0	0	%100
107	MP4A	X	-2.761	-2.761	0	%100
108	MP4A	Z	0	0	0	%100
109	MP1B	X	-2.761	-2.761	0	%100
110	MP1B	Z	0	0	0	%100
111	MP2B	X	-3.056	-3.056	0	%100
112	MP2B	Z	0	0	0	%100
113	MP3B	X	-2.761	-2.761	0	%100
114	MP3B	Z	0	0	0	%100
115	MP4B	X	-2.761	-2.761	0	%100
116	MP4B	Z	0	0	0	%100
117	MP1C	X	-2.761	-2.761	0	%100
118	MP1C	Z	0	0	0	%100
119	MP2C	X	-3.056	-3.056	0	%100
120	MP2C	Z	0	0	0	%100
121	MP3C	X	-2.761	-2.761	0	%100
122	MP3C	Z	0	0	0	%100
123	MP4C	X	-2.761	-2.761	0	%100
124	MP4C	Z	0	0	0	%100

Member Distributed Loads (BLC 63 : Structure Wi (300 Deg))

	Member Label	Direction	Start Magnitude[lb/ft,...	End Magnitude[lb/ft,...	Start Location[ft,%]	End Location[ft,%]
1	A5	X	-2.391	-2.391	0	%100
2	A5	Z	-1.381	-1.381	0	%100
3	B5	X	-2.391	-2.391	0	%100
4	B5	Z	-1.381	-1.381	0	%100
5	M18	X	-2.478	-2.478	0	%100
6	M18	Z	-1.431	-1.431	0	%100

Member Distributed Loads (BLC 63 : Structure Wi (300 Deg)) (Continued)

	Member Label	Direction	Start Magnitude[lb/ft,...	End Magnitude[lb/ft,...	Start Location[ft,%]	End Location[ft,%]
7	M19	X	-2.478	-2.478	0	%100
8	M19	Z	-1.431	-1.431	0	%100
9	M20	X	0	0	0	%100
10	M20	Z	0	0	0	%100
11	M21	X	-.705	-.705	0	%100
12	M21	Z	-.407	-.407	0	%100
13	M22	X	-.705	-.705	0	%100
14	M22	Z	-.407	-.407	0	%100
15	M23	X	-.938	-.938	0	%100
16	M23	Z	-.542	-.542	0	%100
17	M24	X	-3.827	-3.827	0	%100
18	M24	Z	-2.21	-2.21	0	%100
19	M25	X	-.938	-.938	0	%100
20	M25	Z	-.542	-.542	0	%100
21	M26	X	0	0	0	%100
22	M26	Z	0	0	0	%100
23	M27	X	-.938	-.938	0	%100
24	M27	Z	-.542	-.542	0	%100
25	M28	X	0	0	0	%100
26	M28	Z	0	0	0	%100
27	M29	X	-.938	-.938	0	%100
28	M29	Z	-.542	-.542	0	%100
29	M35	X	-.62	-.62	0	%100
30	M35	Z	-.358	-.358	0	%100
31	M36	X	-.62	-.62	0	%100
32	M36	Z	-.358	-.358	0	%100
33	M37	X	-2.247	-2.247	0	%100
34	M37	Z	-1.297	-1.297	0	%100
35	M38	X	-.705	-.705	0	%100
36	M38	Z	-.407	-.407	0	%100
37	M39	X	-2.82	-2.82	0	%100
38	M39	Z	-1.628	-1.628	0	%100
39	M40	X	-.938	-.938	0	%100
40	M40	Z	-.542	-.542	0	%100
41	M41	X	-.957	-.957	0	%100
42	M41	Z	-.552	-.552	0	%100
43	M42	X	-3.753	-3.753	0	%100
44	M42	Z	-2.167	-2.167	0	%100
45	M43	X	-2.815	-2.815	0	%100
46	M43	Z	-1.625	-1.625	0	%100
47	M44	X	-.938	-.938	0	%100
48	M44	Z	-.542	-.542	0	%100
49	M45	X	-2.815	-2.815	0	%100
50	M45	Z	-1.625	-1.625	0	%100
51	M46	X	-3.753	-3.753	0	%100
52	M46	Z	-2.167	-2.167	0	%100
53	M52	X	-2.561	-2.561	0	%100
54	M52	Z	-1.479	-1.479	0	%100
55	M52A	X	-.62	-.62	0	%100
56	M52A	Z	-.358	-.358	0	%100
57	M53A	X	-.62	-.62	0	%100
58	M53A	Z	-.358	-.358	0	%100
59	M54A	X	-.939	-.939	0	%100
60	M54A	Z	-.542	-.542	0	%100
61	M56	X	-2.561	-2.561	0	%100
62	M56	Z	-1.479	-1.479	0	%100
63	M57	X	-.742	-.742	0	%100

Member Distributed Loads (BLC 63 : Structure Wi (300 Deg)) (Continued)

	Member Label	Direction	Start Magnitude[lb/ft,...	End Magnitude[lb/ft,...	Start Location[ft,%]	End Location[ft,%]
64	M57	Z	-.428	-.428	0	%100
65	M58	X	-2.966	-2.966	0	%100
66	M58	Z	-1.712	-1.712	0	%100
67	M59	X	-.742	-.742	0	%100
68	M59	Z	-.428	-.428	0	%100
69	M64	X	-.742	-.742	0	%100
70	M64	Z	-.428	-.428	0	%100
71	M77	X	-2.966	-2.966	0	%100
72	M77	Z	-1.712	-1.712	0	%100
73	M90	X	-.742	-.742	0	%100
74	M90	Z	-.428	-.428	0	%100
75	M91	X	-2.247	-2.247	0	%100
76	M91	Z	-1.297	-1.297	0	%100
77	M93	X	-2.82	-2.82	0	%100
78	M93	Z	-1.628	-1.628	0	%100
79	M94	X	-.705	-.705	0	%100
80	M94	Z	-.407	-.407	0	%100
81	M95	X	-3.753	-3.753	0	%100
82	M95	Z	-2.167	-2.167	0	%100
83	M96	X	-.957	-.957	0	%100
84	M96	Z	-.552	-.552	0	%100
85	M97	X	-.938	-.938	0	%100
86	M97	Z	-.542	-.542	0	%100
87	M98	X	-2.815	-2.815	0	%100
88	M98	Z	-1.625	-1.625	0	%100
89	M99	X	-3.753	-3.753	0	%100
90	M99	Z	-2.167	-2.167	0	%100
91	M100	X	-2.815	-2.815	0	%100
92	M100	Z	-1.625	-1.625	0	%100
93	M101	X	-.938	-.938	0	%100
94	M101	Z	-.542	-.542	0	%100
95	M67	X	-2.21	-2.21	0	%100
96	M67	Z	-1.276	-1.276	0	%100
97	M68	X	-.552	-.552	0	%100
98	M68	Z	-.319	-.319	0	%100
99	M69	X	-.552	-.552	0	%100
100	M69	Z	-.319	-.319	0	%100
101	MP1A	X	-2.391	-2.391	0	%100
102	MP1A	Z	-1.381	-1.381	0	%100
103	MP2A	X	-2.647	-2.647	0	%100
104	MP2A	Z	-1.528	-1.528	0	%100
105	MP3A	X	-2.391	-2.391	0	%100
106	MP3A	Z	-1.381	-1.381	0	%100
107	MP4A	X	-2.391	-2.391	0	%100
108	MP4A	Z	-1.381	-1.381	0	%100
109	MP1B	X	-2.391	-2.391	0	%100
110	MP1B	Z	-1.381	-1.381	0	%100
111	MP2B	X	-2.647	-2.647	0	%100
112	MP2B	Z	-1.528	-1.528	0	%100
113	MP3B	X	-2.391	-2.391	0	%100
114	MP3B	Z	-1.381	-1.381	0	%100
115	MP4B	X	-2.391	-2.391	0	%100
116	MP4B	Z	-1.381	-1.381	0	%100
117	MP1C	X	-2.391	-2.391	0	%100
118	MP1C	Z	-1.381	-1.381	0	%100
119	MP2C	X	-2.647	-2.647	0	%100
120	MP2C	Z	-1.528	-1.528	0	%100

Member Distributed Loads (BLC 63 : Structure Wi (300 Deg)) (Continued)

	Member Label	Direction	Start Magnitude[lb/ft,...	End Magnitude[lb/ft,...	Start Location[ft,%]	End Location[ft,%]
121	MP3C	X	-2.391	-2.391	0	%100
122	MP3C	Z	-1.381	-1.381	0	%100
123	MP4C	X	-2.391	-2.391	0	%100
124	MP4C	Z	-1.381	-1.381	0	%100

Member Distributed Loads (BLC 64 : Structure Wi (330 Deg))

	Member Label	Direction	Start Magnitude[lb/ft,...	End Magnitude[lb/ft,...	Start Location[ft,%]	End Location[ft,%]
1	A5	X	-1.381	-1.381	0	%100
2	A5	Z	-2.391	-2.391	0	%100
3	B5	X	-1.381	-1.381	0	%100
4	B5	Z	-2.391	-2.391	0	%100
5	M18	X	-1.073	-1.073	0	%100
6	M18	Z	-1.859	-1.859	0	%100
7	M19	X	-1.073	-1.073	0	%100
8	M19	Z	-1.859	-1.859	0	%100
9	M20	X	-.432	-.432	0	%100
10	M20	Z	-.749	-.749	0	%100
11	M21	X	0	0	0	%100
12	M21	Z	0	0	0	%100
13	M22	X	-1.221	-1.221	0	%100
14	M22	Z	-2.115	-2.115	0	%100
15	M23	X	0	0	0	%100
16	M23	Z	0	0	0	%100
17	M24	X	-1.657	-1.657	0	%100
18	M24	Z	-2.87	-2.87	0	%100
19	M25	X	-1.625	-1.625	0	%100
20	M25	Z	-2.815	-2.815	0	%100
21	M26	X	-.542	-.542	0	%100
22	M26	Z	-.938	-.938	0	%100
23	M27	X	0	0	0	%100
24	M27	Z	0	0	0	%100
25	M28	X	-.542	-.542	0	%100
26	M28	Z	-.938	-.938	0	%100
27	M29	X	-1.625	-1.625	0	%100
28	M29	Z	-2.815	-2.815	0	%100
29	M35	X	0	0	0	%100
30	M35	Z	0	0	0	%100
31	M36	X	0	0	0	%100
32	M36	Z	0	0	0	%100
33	M37	X	-1.73	-1.73	0	%100
34	M37	Z	-2.996	-2.996	0	%100
35	M38	X	-1.221	-1.221	0	%100
36	M38	Z	-2.115	-2.115	0	%100
37	M39	X	-1.221	-1.221	0	%100
38	M39	Z	-2.115	-2.115	0	%100
39	M40	X	-1.625	-1.625	0	%100
40	M40	Z	-2.815	-2.815	0	%100
41	M41	X	0	0	0	%100
42	M41	Z	0	0	0	%100
43	M42	X	-1.625	-1.625	0	%100
44	M42	Z	-2.815	-2.815	0	%100
45	M43	X	-2.167	-2.167	0	%100
46	M43	Z	-3.753	-3.753	0	%100
47	M44	X	-1.625	-1.625	0	%100
48	M44	Z	-2.815	-2.815	0	%100
49	M45	X	-2.167	-2.167	0	%100

Member Distributed Loads (BLC 64 : Structure Wi (330 Deg)) (Continued)

	Member Label	Direction	Start Magnitude[lb/ft,...	End Magnitude[lb/ft,...	Start Location[ft,%]	End Location[ft,%]
50	M45	Z	-3.753	-3.753	0	%100
51	M46	X	-1.625	-1.625	0	%100
52	M46	Z	-2.815	-2.815	0	%100
53	M52	X	-.854	-.854	0	%100
54	M52	Z	-1.48	-1.48	0	%100
55	M52A	X	-1.073	-1.073	0	%100
56	M52A	Z	-1.859	-1.859	0	%100
57	M53A	X	-1.073	-1.073	0	%100
58	M53A	Z	-1.859	-1.859	0	%100
59	M54A	X	-.854	-.854	0	%100
60	M54A	Z	-1.48	-1.48	0	%100
61	M56	X	-1.791	-1.791	0	%100
62	M56	Z	-3.102	-3.102	0	%100
63	M57	X	-1.284	-1.284	0	%100
64	M57	Z	-2.225	-2.225	0	%100
65	M58	X	-1.284	-1.284	0	%100
66	M58	Z	-2.225	-2.225	0	%100
67	M59	X	0	0	0	%100
68	M59	Z	0	0	0	%100
69	M64	X	-1.284	-1.284	0	%100
70	M64	Z	-2.225	-2.225	0	%100
71	M77	X	-1.284	-1.284	0	%100
72	M77	Z	-2.225	-2.225	0	%100
73	M90	X	0	0	0	%100
74	M90	Z	0	0	0	%100
75	M91	X	-.432	-.432	0	%100
76	M91	Z	-.749	-.749	0	%100
77	M93	X	-1.221	-1.221	0	%100
78	M93	Z	-2.115	-2.115	0	%100
79	M94	X	0	0	0	%100
80	M94	Z	0	0	0	%100
81	M95	X	-1.625	-1.625	0	%100
82	M95	Z	-2.815	-2.815	0	%100
83	M96	X	-1.657	-1.657	0	%100
84	M96	Z	-2.87	-2.87	0	%100
85	M97	X	0	0	0	%100
86	M97	Z	0	0	0	%100
87	M98	X	-.542	-.542	0	%100
88	M98	Z	-.938	-.938	0	%100
89	M99	X	-1.625	-1.625	0	%100
90	M99	Z	-2.815	-2.815	0	%100
91	M100	X	-.542	-.542	0	%100
92	M100	Z	-.938	-.938	0	%100
93	M101	X	0	0	0	%100
94	M101	Z	0	0	0	%100
95	M67	X	-.957	-.957	0	%100
96	M67	Z	-1.657	-1.657	0	%100
97	M68	X	0	0	0	%100
98	M68	Z	0	0	0	%100
99	M69	X	-.957	-.957	0	%100
100	M69	Z	-1.657	-1.657	0	%100
101	MP1A	X	-1.381	-1.381	0	%100
102	MP1A	Z	-2.391	-2.391	0	%100
103	MP2A	X	-1.528	-1.528	0	%100
104	MP2A	Z	-2.647	-2.647	0	%100
105	MP3A	X	-1.381	-1.381	0	%100
106	MP3A	Z	-2.391	-2.391	0	%100

Member Distributed Loads (BLC 64 : Structure Wi (330 Deg)) (Continued)

	Member Label	Direction	Start Magnitude[lb/ft,...	End Magnitude[lb/ft,...	Start Location[ft,%]	End Location[ft,%]
107	MP4A	X	-1.381	-1.381	0	%100
108	MP4A	Z	-2.391	-2.391	0	%100
109	MP1B	X	-1.381	-1.381	0	%100
110	MP1B	Z	-2.391	-2.391	0	%100
111	MP2B	X	-1.528	-1.528	0	%100
112	MP2B	Z	-2.647	-2.647	0	%100
113	MP3B	X	-1.381	-1.381	0	%100
114	MP3B	Z	-2.391	-2.391	0	%100
115	MP4B	X	-1.381	-1.381	0	%100
116	MP4B	Z	-2.391	-2.391	0	%100
117	MP1C	X	-1.381	-1.381	0	%100
118	MP1C	Z	-2.391	-2.391	0	%100
119	MP2C	X	-1.528	-1.528	0	%100
120	MP2C	Z	-2.647	-2.647	0	%100
121	MP3C	X	-1.381	-1.381	0	%100
122	MP3C	Z	-2.391	-2.391	0	%100
123	MP4C	X	-1.381	-1.381	0	%100
124	MP4C	Z	-2.391	-2.391	0	%100

Member Distributed Loads (BLC 65 : Structure Wm (0 Deg))

	Member Label	Direction	Start Magnitude[lb/ft,...	End Magnitude[lb/ft,...	Start Location[ft,%]	End Location[ft,%]
1	A5	X	0	0	0	%100
2	A5	Z	-.504	-.504	0	%100
3	B5	X	0	0	0	%100
4	B5	Z	-.504	-.504	0	%100
5	M18	X	0	0	0	%100
6	M18	Z	-.162	-.162	0	%100
7	M19	X	0	0	0	%100
8	M19	Z	-.162	-.162	0	%100
9	M20	X	0	0	0	%100
10	M20	Z	-.567	-.567	0	%100
11	M21	X	0	0	0	%100
12	M21	Z	-.177	-.177	0	%100
13	M22	X	0	0	0	%100
14	M22	Z	-.708	-.708	0	%100
15	M23	X	0	0	0	%100
16	M23	Z	-.319	-.319	0	%100
17	M24	X	0	0	0	%100
18	M24	Z	-.319	-.319	0	%100
19	M25	X	0	0	0	%100
20	M25	Z	-1.274	-1.274	0	%100
21	M26	X	0	0	0	%100
22	M26	Z	-.956	-.956	0	%100
23	M27	X	0	0	0	%100
24	M27	Z	-.319	-.319	0	%100
25	M28	X	0	0	0	%100
26	M28	Z	-.956	-.956	0	%100
27	M29	X	0	0	0	%100
28	M29	Z	-1.274	-1.274	0	%100
29	M35	X	0	0	0	%100
30	M35	Z	-.162	-.162	0	%100
31	M36	X	0	0	0	%100
32	M36	Z	-.162	-.162	0	%100
33	M37	X	0	0	0	%100
34	M37	Z	-.567	-.567	0	%100
35	M38	X	0	0	0	%100

Member Distributed Loads (BLC 65 : Structure Wm (0 Deg)) (Continued)

	Member Label	Direction	Start Magnitude[lb/ft,...	End Magnitude[lb/ft,...	Start Location[ft,%]	End Location[ft,%]
36	M38	Z	-.708	-.708	0	%100
37	M39	X	0	0	0	%100
38	M39	Z	-.177	-.177	0	%100
39	M40	X	0	0	0	%100
40	M40	Z	-1.274	-1.274	0	%100
41	M41	X	0	0	0	%100
42	M41	Z	-.319	-.319	0	%100
43	M42	X	0	0	0	%100
44	M42	Z	-.319	-.319	0	%100
45	M43	X	0	0	0	%100
46	M43	Z	-.956	-.956	0	%100
47	M44	X	0	0	0	%100
48	M44	Z	-1.274	-1.274	0	%100
49	M45	X	0	0	0	%100
50	M45	Z	-.956	-.956	0	%100
51	M46	X	0	0	0	%100
52	M46	Z	-.319	-.319	0	%100
53	M52	X	0	0	0	%100
54	M52	Z	-.294	-.294	0	%100
55	M52A	X	0	0	0	%100
56	M52A	Z	-.646	-.646	0	%100
57	M53A	X	0	0	0	%100
58	M53A	Z	-.646	-.646	0	%100
59	M54A	X	0	0	0	%100
60	M54A	Z	-.69	-.69	0	%100
61	M56	X	0	0	0	%100
62	M56	Z	-.69	-.69	0	%100
63	M57	X	0	0	0	%100
64	M57	Z	-.743	-.743	0	%100
65	M58	X	0	0	0	%100
66	M58	Z	-.186	-.186	0	%100
67	M59	X	0	0	0	%100
68	M59	Z	-.186	-.186	0	%100
69	M64	X	0	0	0	%100
70	M64	Z	-.743	-.743	0	%100
71	M77	X	0	0	0	%100
72	M77	Z	-.186	-.186	0	%100
73	M90	X	0	0	0	%100
74	M90	Z	-.186	-.186	0	%100
75	M91	X	0	0	0	%100
76	M91	Z	0	0	0	%100
77	M93	X	0	0	0	%100
78	M93	Z	-.177	-.177	0	%100
79	M94	X	0	0	0	%100
80	M94	Z	-.177	-.177	0	%100
81	M95	X	0	0	0	%100
82	M95	Z	-.319	-.319	0	%100
83	M96	X	0	0	0	%100
84	M96	Z	-1.274	-1.274	0	%100
85	M97	X	0	0	0	%100
86	M97	Z	-.319	-.319	0	%100
87	M98	X	0	0	0	%100
88	M98	Z	0	0	0	%100
89	M99	X	0	0	0	%100
90	M99	Z	-.319	-.319	0	%100
91	M100	X	0	0	0	%100
92	M100	Z	0	0	0	%100

Member Distributed Loads (BLC 65 : Structure Wm (0 Deg)) (Continued)

	Member Label	Direction	Start Magnitude[lb/ft,...	End Magnitude[lb/ft,...	Start Location[ft,%]	End Location[ft,%]
93	M101	X	0	0	0	%100
94	M101	Z	-.319	-.319	0	%100
95	M67	X	0	0	0	%100
96	M67	Z	-.149	-.149	0	%100
97	M68	X	0	0	0	%100
98	M68	Z	-.149	-.149	0	%100
99	M69	X	0	0	0	%100
100	M69	Z	-.598	-.598	0	%100
101	MP1A	X	0	0	0	%100
102	MP1A	Z	-.504	-.504	0	%100
103	MP2A	X	0	0	0	%100
104	MP2A	Z	-.611	-.611	0	%100
105	MP3A	X	0	0	0	%100
106	MP3A	Z	-.504	-.504	0	%100
107	MP4A	X	0	0	0	%100
108	MP4A	Z	-.504	-.504	0	%100
109	MP1B	X	0	0	0	%100
110	MP1B	Z	-.504	-.504	0	%100
111	MP2B	X	0	0	0	%100
112	MP2B	Z	-.611	-.611	0	%100
113	MP3B	X	0	0	0	%100
114	MP3B	Z	-.504	-.504	0	%100
115	MP4B	X	0	0	0	%100
116	MP4B	Z	-.504	-.504	0	%100
117	MP1C	X	0	0	0	%100
118	MP1C	Z	-.504	-.504	0	%100
119	MP2C	X	0	0	0	%100
120	MP2C	Z	-.611	-.611	0	%100
121	MP3C	X	0	0	0	%100
122	MP3C	Z	-.504	-.504	0	%100
123	MP4C	X	0	0	0	%100
124	MP4C	Z	-.504	-.504	0	%100

Member Distributed Loads (BLC 66 : Structure Wm (30 Deg))

	Member Label	Direction	Start Magnitude[lb/ft,...	End Magnitude[lb/ft,...	Start Location[ft,%]	End Location[ft,%]
1	A5	X	.252	.252	0	%100
2	A5	Z	-.437	-.437	0	%100
3	B5	X	.252	.252	0	%100
4	B5	Z	-.437	-.437	0	%100
5	M18	X	0	0	0	%100
6	M18	Z	0	0	0	%100
7	M19	X	0	0	0	%100
8	M19	Z	0	0	0	%100
9	M20	X	.378	.378	0	%100
10	M20	Z	-.655	-.655	0	%100
11	M21	X	.266	.266	0	%100
12	M21	Z	-.46	-.46	0	%100
13	M22	X	.266	.266	0	%100
14	M22	Z	-.46	-.46	0	%100
15	M23	X	.478	.478	0	%100
16	M23	Z	-.828	-.828	0	%100
17	M24	X	0	0	0	%100
18	M24	Z	0	0	0	%100
19	M25	X	.478	.478	0	%100
20	M25	Z	-.828	-.828	0	%100
21	M26	X	.637	.637	0	%100

Member Distributed Loads (BLC 66 : Structure Wm (30 Deg)) (Continued)

	Member Label	Direction	Start Magnitude[lb/ft,...	End Magnitude[lb/ft,...	Start Location[ft,%]	End Location[ft,%]
22	M26	Z	-1.104	-1.104	0	%100
23	M27	X	.478	.478	0	%100
24	M27	Z	-.828	-.828	0	%100
25	M28	X	.637	.637	0	%100
26	M28	Z	-1.104	-1.104	0	%100
27	M29	X	.478	.478	0	%100
28	M29	Z	-.828	-.828	0	%100
29	M35	X	.242	.242	0	%100
30	M35	Z	-.42	-.42	0	%100
31	M36	X	.242	.242	0	%100
32	M36	Z	-.42	-.42	0	%100
33	M37	X	.094	.094	0	%100
34	M37	Z	-.164	-.164	0	%100
35	M38	X	.266	.266	0	%100
36	M38	Z	-.46	-.46	0	%100
37	M39	X	0	0	0	%100
38	M39	Z	0	0	0	%100
39	M40	X	.478	.478	0	%100
40	M40	Z	-.828	-.828	0	%100
41	M41	X	.478	.478	0	%100
42	M41	Z	-.828	-.828	0	%100
43	M42	X	0	0	0	%100
44	M42	Z	0	0	0	%100
45	M43	X	.159	.159	0	%100
46	M43	Z	-.276	-.276	0	%100
47	M44	X	.478	.478	0	%100
48	M44	Z	-.828	-.828	0	%100
49	M45	X	.159	.159	0	%100
50	M45	Z	-.276	-.276	0	%100
51	M46	X	0	0	0	%100
52	M46	Z	0	0	0	%100
53	M52	X	.213	.213	0	%100
54	M52	Z	-.369	-.369	0	%100
55	M52A	X	.242	.242	0	%100
56	M52A	Z	-.42	-.42	0	%100
57	M53A	X	.242	.242	0	%100
58	M53A	Z	-.42	-.42	0	%100
59	M54A	X	.411	.411	0	%100
60	M54A	Z	-.712	-.712	0	%100
61	M56	X	.213	.213	0	%100
62	M56	Z	-.369	-.369	0	%100
63	M57	X	.279	.279	0	%100
64	M57	Z	-.483	-.483	0	%100
65	M58	X	0	0	0	%100
66	M58	Z	0	0	0	%100
67	M59	X	.279	.279	0	%100
68	M59	Z	-.483	-.483	0	%100
69	M64	X	.279	.279	0	%100
70	M64	Z	-.483	-.483	0	%100
71	M77	X	0	0	0	%100
72	M77	Z	0	0	0	%100
73	M90	X	.279	.279	0	%100
74	M90	Z	-.483	-.483	0	%100
75	M91	X	.094	.094	0	%100
76	M91	Z	-.164	-.164	0	%100
77	M93	X	0	0	0	%100
78	M93	Z	0	0	0	%100

Member Distributed Loads (BLC 66 : Structure Wm (30 Deg)) (Continued)

	Member Label	Direction	Start Magnitude[lb/ft,...	End Magnitude[lb/ft,...	Start Location[ft,%]	End Location[ft,%]
79	M94	X	.266	.266	0	%100
80	M94	Z	-.46	-.46	0	%100
81	M95	X	0	0	0	%100
82	M95	Z	0	0	0	%100
83	M96	X	.478	.478	0	%100
84	M96	Z	-.828	-.828	0	%100
85	M97	X	.478	.478	0	%100
86	M97	Z	-.828	-.828	0	%100
87	M98	X	.159	.159	0	%100
88	M98	Z	-.276	-.276	0	%100
89	M99	X	0	0	0	%100
90	M99	Z	0	0	0	%100
91	M100	X	.159	.159	0	%100
92	M100	Z	-.276	-.276	0	%100
93	M101	X	.478	.478	0	%100
94	M101	Z	-.828	-.828	0	%100
95	M67	X	0	0	0	%100
96	M67	Z	0	0	0	%100
97	M68	X	.224	.224	0	%100
98	M68	Z	-.388	-.388	0	%100
99	M69	X	.224	.224	0	%100
100	M69	Z	-.388	-.388	0	%100
101	MP1A	X	.252	.252	0	%100
102	MP1A	Z	-.437	-.437	0	%100
103	MP2A	X	.305	.305	0	%100
104	MP2A	Z	-.529	-.529	0	%100
105	MP3A	X	.252	.252	0	%100
106	MP3A	Z	-.437	-.437	0	%100
107	MP4A	X	.252	.252	0	%100
108	MP4A	Z	-.437	-.437	0	%100
109	MP1B	X	.252	.252	0	%100
110	MP1B	Z	-.437	-.437	0	%100
111	MP2B	X	.305	.305	0	%100
112	MP2B	Z	-.529	-.529	0	%100
113	MP3B	X	.252	.252	0	%100
114	MP3B	Z	-.437	-.437	0	%100
115	MP4B	X	.252	.252	0	%100
116	MP4B	Z	-.437	-.437	0	%100
117	MP1C	X	.252	.252	0	%100
118	MP1C	Z	-.437	-.437	0	%100
119	MP2C	X	.305	.305	0	%100
120	MP2C	Z	-.529	-.529	0	%100
121	MP3C	X	.252	.252	0	%100
122	MP3C	Z	-.437	-.437	0	%100
123	MP4C	X	.252	.252	0	%100
124	MP4C	Z	-.437	-.437	0	%100

Member Distributed Loads (BLC 67 : Structure Wm (60 Deg))

	Member Label	Direction	Start Magnitude[lb/ft,...	End Magnitude[lb/ft,...	Start Location[ft,%]	End Location[ft,%]
1	A5	X	.437	.437	0	%100
2	A5	Z	-.252	-.252	0	%100
3	B5	X	.437	.437	0	%100
4	B5	Z	-.252	-.252	0	%100
5	M18	X	.14	.14	0	%100
6	M18	Z	-.081	-.081	0	%100
7	M19	X	.14	.14	0	%100

Member Distributed Loads (BLC 67 : Structure Wm (60 Deg)) (Continued)

	Member Label	Direction	Start Magnitude[lb/ft,...	End Magnitude[lb/ft,...	Start Location[ft,%]	End Location[ft,%]
8	M19	Z	-.081	-.081	0	%100
9	M20	X	.491	.491	0	%100
10	M20	Z	-.283	-.283	0	%100
11	M21	X	.613	.613	0	%100
12	M21	Z	-.354	-.354	0	%100
13	M22	X	.153	.153	0	%100
14	M22	Z	-.089	-.089	0	%100
15	M23	X	1.104	1.104	0	%100
16	M23	Z	-.637	-.637	0	%100
17	M24	X	.276	.276	0	%100
18	M24	Z	-.159	-.159	0	%100
19	M25	X	.276	.276	0	%100
20	M25	Z	-.159	-.159	0	%100
21	M26	X	.828	.828	0	%100
22	M26	Z	-.478	-.478	0	%100
23	M27	X	1.104	1.104	0	%100
24	M27	Z	-.637	-.637	0	%100
25	M28	X	.828	.828	0	%100
26	M28	Z	-.478	-.478	0	%100
27	M29	X	.276	.276	0	%100
28	M29	Z	-.159	-.159	0	%100
29	M35	X	.56	.56	0	%100
30	M35	Z	-.323	-.323	0	%100
31	M36	X	.56	.56	0	%100
32	M36	Z	-.323	-.323	0	%100
33	M37	X	0	0	0	%100
34	M37	Z	0	0	0	%100
35	M38	X	.153	.153	0	%100
36	M38	Z	-.089	-.089	0	%100
37	M39	X	.153	.153	0	%100
38	M39	Z	-.089	-.089	0	%100
39	M40	X	.276	.276	0	%100
40	M40	Z	-.159	-.159	0	%100
41	M41	X	1.104	1.104	0	%100
42	M41	Z	-.637	-.637	0	%100
43	M42	X	.276	.276	0	%100
44	M42	Z	-.159	-.159	0	%100
45	M43	X	0	0	0	%100
46	M43	Z	0	0	0	%100
47	M44	X	.276	.276	0	%100
48	M44	Z	-.159	-.159	0	%100
49	M45	X	0	0	0	%100
50	M45	Z	0	0	0	%100
51	M46	X	.276	.276	0	%100
52	M46	Z	-.159	-.159	0	%100
53	M52	X	.598	.598	0	%100
54	M52	Z	-.345	-.345	0	%100
55	M52A	X	.14	.14	0	%100
56	M52A	Z	-.081	-.081	0	%100
57	M53A	X	.14	.14	0	%100
58	M53A	Z	-.081	-.081	0	%100
59	M54A	X	.598	.598	0	%100
60	M54A	Z	-.345	-.345	0	%100
61	M56	X	.254	.254	0	%100
62	M56	Z	-.147	-.147	0	%100
63	M57	X	.161	.161	0	%100
64	M57	Z	-.093	-.093	0	%100

Member Distributed Loads (BLC 67 : Structure Wm (60 Deg)) (Continued)

	Member Label	Direction	Start Magnitude[lb/ft,...	End Magnitude[lb/ft,...	Start Location[ft,%]	End Location[ft,%]
65	M58	X	.161	.161	0	%100
66	M58	Z	-.093	-.093	0	%100
67	M59	X	.644	.644	0	%100
68	M59	Z	-.372	-.372	0	%100
69	M64	X	.161	.161	0	%100
70	M64	Z	-.093	-.093	0	%100
71	M77	X	.161	.161	0	%100
72	M77	Z	-.093	-.093	0	%100
73	M90	X	.644	.644	0	%100
74	M90	Z	-.372	-.372	0	%100
75	M91	X	.491	.491	0	%100
76	M91	Z	-.283	-.283	0	%100
77	M93	X	.153	.153	0	%100
78	M93	Z	-.089	-.089	0	%100
79	M94	X	.613	.613	0	%100
80	M94	Z	-.354	-.354	0	%100
81	M95	X	.276	.276	0	%100
82	M95	Z	-.159	-.159	0	%100
83	M96	X	.276	.276	0	%100
84	M96	Z	-.159	-.159	0	%100
85	M97	X	1.104	1.104	0	%100
86	M97	Z	-.637	-.637	0	%100
87	M98	X	.828	.828	0	%100
88	M98	Z	-.478	-.478	0	%100
89	M99	X	.276	.276	0	%100
90	M99	Z	-.159	-.159	0	%100
91	M100	X	.828	.828	0	%100
92	M100	Z	-.478	-.478	0	%100
93	M101	X	1.104	1.104	0	%100
94	M101	Z	-.637	-.637	0	%100
95	M67	X	.129	.129	0	%100
96	M67	Z	-.075	-.075	0	%100
97	M68	X	.518	.518	0	%100
98	M68	Z	-.299	-.299	0	%100
99	M69	X	.129	.129	0	%100
100	M69	Z	-.075	-.075	0	%100
101	MP1A	X	.437	.437	0	%100
102	MP1A	Z	-.252	-.252	0	%100
103	MP2A	X	.529	.529	0	%100
104	MP2A	Z	-.305	-.305	0	%100
105	MP3A	X	.437	.437	0	%100
106	MP3A	Z	-.252	-.252	0	%100
107	MP4A	X	.437	.437	0	%100
108	MP4A	Z	-.252	-.252	0	%100
109	MP1B	X	.437	.437	0	%100
110	MP1B	Z	-.252	-.252	0	%100
111	MP2B	X	.529	.529	0	%100
112	MP2B	Z	-.305	-.305	0	%100
113	MP3B	X	.437	.437	0	%100
114	MP3B	Z	-.252	-.252	0	%100
115	MP4B	X	.437	.437	0	%100
116	MP4B	Z	-.252	-.252	0	%100
117	MP1C	X	.437	.437	0	%100
118	MP1C	Z	-.252	-.252	0	%100
119	MP2C	X	.529	.529	0	%100
120	MP2C	Z	-.305	-.305	0	%100
121	MP3C	X	.437	.437	0	%100

Member Distributed Loads (BLC 67 : Structure Wm (60 Deg)) (Continued)

	Member Label	Direction	Start Magnitude[lb/ft,...	End Magnitude[lb/ft,...	Start Location[ft,%]	End Location[ft,%]
122	MP3C	Z	-.252	-.252	0	%100
123	MP4C	X	.437	.437	0	%100
124	MP4C	Z	-.252	-.252	0	%100

Member Distributed Loads (BLC 68 : Structure Wm (90 Deg))

	Member Label	Direction	Start Magnitude[lb/ft,...	End Magnitude[lb/ft,...	Start Location[ft,%]	End Location[ft,%]
1	A5	X	.504	.504	0	%100
2	A5	Z	0	0	0	%100
3	B5	X	.504	.504	0	%100
4	B5	Z	0	0	0	%100
5	M18	X	.485	.485	0	%100
6	M18	Z	0	0	0	%100
7	M19	X	.485	.485	0	%100
8	M19	Z	0	0	0	%100
9	M20	X	.189	.189	0	%100
10	M20	Z	0	0	0	%100
11	M21	X	.531	.531	0	%100
12	M21	Z	0	0	0	%100
13	M22	X	0	0	0	%100
14	M22	Z	0	0	0	%100
15	M23	X	.956	.956	0	%100
16	M23	Z	0	0	0	%100
17	M24	X	.956	.956	0	%100
18	M24	Z	0	0	0	%100
19	M25	X	0	0	0	%100
20	M25	Z	0	0	0	%100
21	M26	X	.319	.319	0	%100
22	M26	Z	0	0	0	%100
23	M27	X	.956	.956	0	%100
24	M27	Z	0	0	0	%100
25	M28	X	.319	.319	0	%100
26	M28	Z	0	0	0	%100
27	M29	X	0	0	0	%100
28	M29	Z	0	0	0	%100
29	M35	X	.485	.485	0	%100
30	M35	Z	0	0	0	%100
31	M36	X	.485	.485	0	%100
32	M36	Z	0	0	0	%100
33	M37	X	.189	.189	0	%100
34	M37	Z	0	0	0	%100
35	M38	X	0	0	0	%100
36	M38	Z	0	0	0	%100
37	M39	X	.531	.531	0	%100
38	M39	Z	0	0	0	%100
39	M40	X	0	0	0	%100
40	M40	Z	0	0	0	%100
41	M41	X	.956	.956	0	%100
42	M41	Z	0	0	0	%100
43	M42	X	.956	.956	0	%100
44	M42	Z	0	0	0	%100
45	M43	X	.319	.319	0	%100
46	M43	Z	0	0	0	%100
47	M44	X	0	0	0	%100
48	M44	Z	0	0	0	%100
49	M45	X	.319	.319	0	%100
50	M45	Z	0	0	0	%100

Member Distributed Loads (BLC 68 : Structure Wm (90 Deg)) (Continued)

	Member Label	Direction	Start Magnitude[lb/ft,...	End Magnitude[lb/ft,...	Start Location[ft,%]	End Location[ft,%]
51	M46	X	.956	.956	0	%100
52	M46	Z	0	0	0	%100
53	M52	X	.822	.822	0	%100
54	M52	Z	0	0	0	%100
55	M52A	X	0	0	0	%100
56	M52A	Z	0	0	0	%100
57	M53A	X	0	0	0	%100
58	M53A	Z	0	0	0	%100
59	M54A	X	.426	.426	0	%100
60	M54A	Z	0	0	0	%100
61	M56	X	.426	.426	0	%100
62	M56	Z	0	0	0	%100
63	M57	X	0	0	0	%100
64	M57	Z	0	0	0	%100
65	M58	X	.558	.558	0	%100
66	M58	Z	0	0	0	%100
67	M59	X	.558	.558	0	%100
68	M59	Z	0	0	0	%100
69	M64	X	0	0	0	%100
70	M64	Z	0	0	0	%100
71	M77	X	.558	.558	0	%100
72	M77	Z	0	0	0	%100
73	M90	X	.558	.558	0	%100
74	M90	Z	0	0	0	%100
75	M91	X	.756	.756	0	%100
76	M91	Z	0	0	0	%100
77	M93	X	.531	.531	0	%100
78	M93	Z	0	0	0	%100
79	M94	X	.531	.531	0	%100
80	M94	Z	0	0	0	%100
81	M95	X	.956	.956	0	%100
82	M95	Z	0	0	0	%100
83	M96	X	0	0	0	%100
84	M96	Z	0	0	0	%100
85	M97	X	.956	.956	0	%100
86	M97	Z	0	0	0	%100
87	M98	X	1.274	1.274	0	%100
88	M98	Z	0	0	0	%100
89	M99	X	.956	.956	0	%100
90	M99	Z	0	0	0	%100
91	M100	X	1.274	1.274	0	%100
92	M100	Z	0	0	0	%100
93	M101	X	.956	.956	0	%100
94	M101	Z	0	0	0	%100
95	M67	X	.448	.448	0	%100
96	M67	Z	0	0	0	%100
97	M68	X	.448	.448	0	%100
98	M68	Z	0	0	0	%100
99	M69	X	0	0	0	%100
100	M69	Z	0	0	0	%100
101	MP1A	X	.504	.504	0	%100
102	MP1A	Z	0	0	0	%100
103	MP2A	X	.611	.611	0	%100
104	MP2A	Z	0	0	0	%100
105	MP3A	X	.504	.504	0	%100
106	MP3A	Z	0	0	0	%100
107	MP4A	X	.504	.504	0	%100

Member Distributed Loads (BLC 68 : Structure Wm (90 Deg)) (Continued)

	Member Label	Direction	Start Magnitude[lb/ft,...	End Magnitude[lb/ft,...	Start Location[ft,%]	End Location[ft,%]
108	MP4A	Z	0	0	0	%100
109	MP1B	X	.504	.504	0	%100
110	MP1B	Z	0	0	0	%100
111	MP2B	X	.611	.611	0	%100
112	MP2B	Z	0	0	0	%100
113	MP3B	X	.504	.504	0	%100
114	MP3B	Z	0	0	0	%100
115	MP4B	X	.504	.504	0	%100
116	MP4B	Z	0	0	0	%100
117	MP1C	X	.504	.504	0	%100
118	MP1C	Z	0	0	0	%100
119	MP2C	X	.611	.611	0	%100
120	MP2C	Z	0	0	0	%100
121	MP3C	X	.504	.504	0	%100
122	MP3C	Z	0	0	0	%100
123	MP4C	X	.504	.504	0	%100
124	MP4C	Z	0	0	0	%100

Member Distributed Loads (BLC 69 : Structure Wm (120 Deg))

	Member Label	Direction	Start Magnitude[lb/ft,...	End Magnitude[lb/ft,...	Start Location[ft,%]	End Location[ft,%]
1	A5	X	.437	.437	0	%100
2	A5	Z	.252	.252	0	%100
3	B5	X	.437	.437	0	%100
4	B5	Z	.252	.252	0	%100
5	M18	X	.56	.56	0	%100
6	M18	Z	.323	.323	0	%100
7	M19	X	.56	.56	0	%100
8	M19	Z	.323	.323	0	%100
9	M20	X	0	0	0	%100
10	M20	Z	0	0	0	%100
11	M21	X	.153	.153	0	%100
12	M21	Z	.089	.089	0	%100
13	M22	X	.153	.153	0	%100
14	M22	Z	.089	.089	0	%100
15	M23	X	.276	.276	0	%100
16	M23	Z	.159	.159	0	%100
17	M24	X	1.104	1.104	0	%100
18	M24	Z	.637	.637	0	%100
19	M25	X	.276	.276	0	%100
20	M25	Z	.159	.159	0	%100
21	M26	X	0	0	0	%100
22	M26	Z	0	0	0	%100
23	M27	X	.276	.276	0	%100
24	M27	Z	.159	.159	0	%100
25	M28	X	0	0	0	%100
26	M28	Z	0	0	0	%100
27	M29	X	.276	.276	0	%100
28	M29	Z	.159	.159	0	%100
29	M35	X	.14	.14	0	%100
30	M35	Z	.081	.081	0	%100
31	M36	X	.14	.14	0	%100
32	M36	Z	.081	.081	0	%100
33	M37	X	.491	.491	0	%100
34	M37	Z	.283	.283	0	%100
35	M38	X	.153	.153	0	%100
36	M38	Z	.089	.089	0	%100

Member Distributed Loads (BLC 69 : Structure Wm (120 Deg)) (Continued)

	Member Label	Direction	Start Magnitude[lb/ft,...	End Magnitude[lb/ft,...	Start Location[ft,%]	End Location[ft,%]
37	M39	X	.613	.613	0	%100
38	M39	Z	.354	.354	0	%100
39	M40	X	.276	.276	0	%100
40	M40	Z	.159	.159	0	%100
41	M41	X	.276	.276	0	%100
42	M41	Z	.159	.159	0	%100
43	M42	X	1.104	1.104	0	%100
44	M42	Z	.637	.637	0	%100
45	M43	X	.828	.828	0	%100
46	M43	Z	.478	.478	0	%100
47	M44	X	.276	.276	0	%100
48	M44	Z	.159	.159	0	%100
49	M45	X	.828	.828	0	%100
50	M45	Z	.478	.478	0	%100
51	M46	X	1.104	1.104	0	%100
52	M46	Z	.637	.637	0	%100
53	M52	X	.598	.598	0	%100
54	M52	Z	.345	.345	0	%100
55	M52A	X	.14	.14	0	%100
56	M52A	Z	.081	.081	0	%100
57	M53A	X	.14	.14	0	%100
58	M53A	Z	.081	.081	0	%100
59	M54A	X	.254	.254	0	%100
60	M54A	Z	.147	.147	0	%100
61	M56	X	.598	.598	0	%100
62	M56	Z	.345	.345	0	%100
63	M57	X	.161	.161	0	%100
64	M57	Z	.093	.093	0	%100
65	M58	X	.644	.644	0	%100
66	M58	Z	.372	.372	0	%100
67	M59	X	.161	.161	0	%100
68	M59	Z	.093	.093	0	%100
69	M64	X	.161	.161	0	%100
70	M64	Z	.093	.093	0	%100
71	M77	X	.644	.644	0	%100
72	M77	Z	.372	.372	0	%100
73	M90	X	.161	.161	0	%100
74	M90	Z	.093	.093	0	%100
75	M91	X	.491	.491	0	%100
76	M91	Z	.283	.283	0	%100
77	M93	X	.613	.613	0	%100
78	M93	Z	.354	.354	0	%100
79	M94	X	.153	.153	0	%100
80	M94	Z	.089	.089	0	%100
81	M95	X	1.104	1.104	0	%100
82	M95	Z	.637	.637	0	%100
83	M96	X	.276	.276	0	%100
84	M96	Z	.159	.159	0	%100
85	M97	X	.276	.276	0	%100
86	M97	Z	.159	.159	0	%100
87	M98	X	.828	.828	0	%100
88	M98	Z	.478	.478	0	%100
89	M99	X	1.104	1.104	0	%100
90	M99	Z	.637	.637	0	%100
91	M100	X	.828	.828	0	%100
92	M100	Z	.478	.478	0	%100
93	M101	X	.276	.276	0	%100

Member Distributed Loads (BLC 69 : Structure Wm (120 Deg)) (Continued)

	Member Label	Direction	Start Magnitude[lb/ft,...	End Magnitude[lb/ft,...	Start Location[ft,%]	End Location[ft,%]
94	M101	Z	.159	.159	0	%100
95	M67	X	.518	.518	0	%100
96	M67	Z	.299	.299	0	%100
97	M68	X	.129	.129	0	%100
98	M68	Z	.075	.075	0	%100
99	M69	X	.129	.129	0	%100
100	M69	Z	.075	.075	0	%100
101	MP1A	X	.437	.437	0	%100
102	MP1A	Z	.252	.252	0	%100
103	MP2A	X	.529	.529	0	%100
104	MP2A	Z	.305	.305	0	%100
105	MP3A	X	.437	.437	0	%100
106	MP3A	Z	.252	.252	0	%100
107	MP4A	X	.437	.437	0	%100
108	MP4A	Z	.252	.252	0	%100
109	MP1B	X	.437	.437	0	%100
110	MP1B	Z	.252	.252	0	%100
111	MP2B	X	.529	.529	0	%100
112	MP2B	Z	.305	.305	0	%100
113	MP3B	X	.437	.437	0	%100
114	MP3B	Z	.252	.252	0	%100
115	MP4B	X	.437	.437	0	%100
116	MP4B	Z	.252	.252	0	%100
117	MP1C	X	.437	.437	0	%100
118	MP1C	Z	.252	.252	0	%100
119	MP2C	X	.529	.529	0	%100
120	MP2C	Z	.305	.305	0	%100
121	MP3C	X	.437	.437	0	%100
122	MP3C	Z	.252	.252	0	%100
123	MP4C	X	.437	.437	0	%100
124	MP4C	Z	.252	.252	0	%100

Member Distributed Loads (BLC 70 : Structure Wm (150 Deg))

	Member Label	Direction	Start Magnitude[lb/ft,...	End Magnitude[lb/ft,...	Start Location[ft,%]	End Location[ft,%]
1	A5	X	.252	.252	0	%100
2	A5	Z	.437	.437	0	%100
3	B5	X	.252	.252	0	%100
4	B5	Z	.437	.437	0	%100
5	M18	X	.242	.242	0	%100
6	M18	Z	.42	.42	0	%100
7	M19	X	.242	.242	0	%100
8	M19	Z	.42	.42	0	%100
9	M20	X	.094	.094	0	%100
10	M20	Z	.164	.164	0	%100
11	M21	X	0	0	0	%100
12	M21	Z	0	0	0	%100
13	M22	X	.266	.266	0	%100
14	M22	Z	.46	.46	0	%100
15	M23	X	0	0	0	%100
16	M23	Z	0	0	0	%100
17	M24	X	.478	.478	0	%100
18	M24	Z	.828	.828	0	%100
19	M25	X	.478	.478	0	%100
20	M25	Z	.828	.828	0	%100
21	M26	X	.159	.159	0	%100
22	M26	Z	.276	.276	0	%100

Member Distributed Loads (BLC 70 : Structure Wm (150 Deg)) (Continued)

	Member Label	Direction	Start Magnitude[lb/ft,...	End Magnitude[lb/ft,...	Start Location[ft,%]	End Location[ft,%]
23	M27	X	0	0	0	%100
24	M27	Z	0	0	0	%100
25	M28	X	.159	.159	0	%100
26	M28	Z	.276	.276	0	%100
27	M29	X	.478	.478	0	%100
28	M29	Z	.828	.828	0	%100
29	M35	X	0	0	0	%100
30	M35	Z	0	0	0	%100
31	M36	X	0	0	0	%100
32	M36	Z	0	0	0	%100
33	M37	X	.378	.378	0	%100
34	M37	Z	.655	.655	0	%100
35	M38	X	.266	.266	0	%100
36	M38	Z	.46	.46	0	%100
37	M39	X	.266	.266	0	%100
38	M39	Z	.46	.46	0	%100
39	M40	X	.478	.478	0	%100
40	M40	Z	.828	.828	0	%100
41	M41	X	0	0	0	%100
42	M41	Z	0	0	0	%100
43	M42	X	.478	.478	0	%100
44	M42	Z	.828	.828	0	%100
45	M43	X	.637	.637	0	%100
46	M43	Z	1.104	1.104	0	%100
47	M44	X	.478	.478	0	%100
48	M44	Z	.828	.828	0	%100
49	M45	X	.637	.637	0	%100
50	M45	Z	1.104	1.104	0	%100
51	M46	X	.478	.478	0	%100
52	M46	Z	.828	.828	0	%100
53	M52	X	.213	.213	0	%100
54	M52	Z	.369	.369	0	%100
55	M52A	X	.242	.242	0	%100
56	M52A	Z	.42	.42	0	%100
57	M53A	X	.242	.242	0	%100
58	M53A	Z	.42	.42	0	%100
59	M54A	X	.213	.213	0	%100
60	M54A	Z	.369	.369	0	%100
61	M56	X	.411	.411	0	%100
62	M56	Z	.712	.712	0	%100
63	M57	X	.279	.279	0	%100
64	M57	Z	.483	.483	0	%100
65	M58	X	.279	.279	0	%100
66	M58	Z	.483	.483	0	%100
67	M59	X	0	0	0	%100
68	M59	Z	0	0	0	%100
69	M64	X	.279	.279	0	%100
70	M64	Z	.483	.483	0	%100
71	M77	X	.279	.279	0	%100
72	M77	Z	.483	.483	0	%100
73	M90	X	0	0	0	%100
74	M90	Z	0	0	0	%100
75	M91	X	.094	.094	0	%100
76	M91	Z	.164	.164	0	%100
77	M93	X	.266	.266	0	%100
78	M93	Z	.46	.46	0	%100
79	M94	X	0	0	0	%100

Member Distributed Loads (BLC 70 : Structure Wm (150 Deg)) (Continued)

	Member Label	Direction	Start Magnitude[lb/ft,...	End Magnitude[lb/ft,...	Start Location[ft,%]	End Location[ft,%]
80	M94	Z	0	0	0	%100
81	M95	X	.478	.478	0	%100
82	M95	Z	.828	.828	0	%100
83	M96	X	.478	.478	0	%100
84	M96	Z	.828	.828	0	%100
85	M97	X	0	0	0	%100
86	M97	Z	0	0	0	%100
87	M98	X	.159	.159	0	%100
88	M98	Z	.276	.276	0	%100
89	M99	X	.478	.478	0	%100
90	M99	Z	.828	.828	0	%100
91	M100	X	.159	.159	0	%100
92	M100	Z	.276	.276	0	%100
93	M101	X	0	0	0	%100
94	M101	Z	0	0	0	%100
95	M67	X	.224	.224	0	%100
96	M67	Z	.388	.388	0	%100
97	M68	X	0	0	0	%100
98	M68	Z	0	0	0	%100
99	M69	X	.224	.224	0	%100
100	M69	Z	.388	.388	0	%100
101	MP1A	X	.252	.252	0	%100
102	MP1A	Z	.437	.437	0	%100
103	MP2A	X	.305	.305	0	%100
104	MP2A	Z	.529	.529	0	%100
105	MP3A	X	.252	.252	0	%100
106	MP3A	Z	.437	.437	0	%100
107	MP4A	X	.252	.252	0	%100
108	MP4A	Z	.437	.437	0	%100
109	MP1B	X	.252	.252	0	%100
110	MP1B	Z	.437	.437	0	%100
111	MP2B	X	.305	.305	0	%100
112	MP2B	Z	.529	.529	0	%100
113	MP3B	X	.252	.252	0	%100
114	MP3B	Z	.437	.437	0	%100
115	MP4B	X	.252	.252	0	%100
116	MP4B	Z	.437	.437	0	%100
117	MP1C	X	.252	.252	0	%100
118	MP1C	Z	.437	.437	0	%100
119	MP2C	X	.305	.305	0	%100
120	MP2C	Z	.529	.529	0	%100
121	MP3C	X	.252	.252	0	%100
122	MP3C	Z	.437	.437	0	%100
123	MP4C	X	.252	.252	0	%100
124	MP4C	Z	.437	.437	0	%100

Member Distributed Loads (BLC 71 : Structure Wm (180 Deg))

	Member Label	Direction	Start Magnitude[lb/ft,...	End Magnitude[lb/ft,...	Start Location[ft,%]	End Location[ft,%]
1	A5	X	0	0	0	%100
2	A5	Z	.504	.504	0	%100
3	B5	X	0	0	0	%100
4	B5	Z	.504	.504	0	%100
5	M18	X	0	0	0	%100
6	M18	Z	.162	.162	0	%100
7	M19	X	0	0	0	%100
8	M19	Z	.162	.162	0	%100

Member Distributed Loads (BLC 71 : Structure Wm (180 Deg)) (Continued)

	Member Label	Direction	Start Magnitude[lb/ft,...	End Magnitude[lb/ft,...	Start Location[ft,%]	End Location[ft,%]
9	M20	X	0	0	0	%100
10	M20	Z	.567	.567	0	%100
11	M21	X	0	0	0	%100
12	M21	Z	.177	.177	0	%100
13	M22	X	0	0	0	%100
14	M22	Z	.708	.708	0	%100
15	M23	X	0	0	0	%100
16	M23	Z	.319	.319	0	%100
17	M24	X	0	0	0	%100
18	M24	Z	.319	.319	0	%100
19	M25	X	0	0	0	%100
20	M25	Z	1.274	1.274	0	%100
21	M26	X	0	0	0	%100
22	M26	Z	.956	.956	0	%100
23	M27	X	0	0	0	%100
24	M27	Z	.319	.319	0	%100
25	M28	X	0	0	0	%100
26	M28	Z	.956	.956	0	%100
27	M29	X	0	0	0	%100
28	M29	Z	1.274	1.274	0	%100
29	M35	X	0	0	0	%100
30	M35	Z	.162	.162	0	%100
31	M36	X	0	0	0	%100
32	M36	Z	.162	.162	0	%100
33	M37	X	0	0	0	%100
34	M37	Z	.567	.567	0	%100
35	M38	X	0	0	0	%100
36	M38	Z	.708	.708	0	%100
37	M39	X	0	0	0	%100
38	M39	Z	.177	.177	0	%100
39	M40	X	0	0	0	%100
40	M40	Z	1.274	1.274	0	%100
41	M41	X	0	0	0	%100
42	M41	Z	.319	.319	0	%100
43	M42	X	0	0	0	%100
44	M42	Z	.319	.319	0	%100
45	M43	X	0	0	0	%100
46	M43	Z	.956	.956	0	%100
47	M44	X	0	0	0	%100
48	M44	Z	1.274	1.274	0	%100
49	M45	X	0	0	0	%100
50	M45	Z	.956	.956	0	%100
51	M46	X	0	0	0	%100
52	M46	Z	.319	.319	0	%100
53	M52	X	0	0	0	%100
54	M52	Z	.294	.294	0	%100
55	M52A	X	0	0	0	%100
56	M52A	Z	.646	.646	0	%100
57	M53A	X	0	0	0	%100
58	M53A	Z	.646	.646	0	%100
59	M54A	X	0	0	0	%100
60	M54A	Z	.69	.69	0	%100
61	M56	X	0	0	0	%100
62	M56	Z	.69	.69	0	%100
63	M57	X	0	0	0	%100
64	M57	Z	.743	.743	0	%100
65	M58	X	0	0	0	%100

Member Distributed Loads (BLC 71 : Structure Wm (180 Deg)) (Continued)

	Member Label	Direction	Start Magnitude[lb/ft,...	End Magnitude[lb/ft,...	Start Location[ft,%]	End Location[ft,%]
66	M58	Z	.186	.186	0	%100
67	M59	X	0	0	0	%100
68	M59	Z	.186	.186	0	%100
69	M64	X	0	0	0	%100
70	M64	Z	.743	.743	0	%100
71	M77	X	0	0	0	%100
72	M77	Z	.186	.186	0	%100
73	M90	X	0	0	0	%100
74	M90	Z	.186	.186	0	%100
75	M91	X	0	0	0	%100
76	M91	Z	0	0	0	%100
77	M93	X	0	0	0	%100
78	M93	Z	.177	.177	0	%100
79	M94	X	0	0	0	%100
80	M94	Z	.177	.177	0	%100
81	M95	X	0	0	0	%100
82	M95	Z	.319	.319	0	%100
83	M96	X	0	0	0	%100
84	M96	Z	1.274	1.274	0	%100
85	M97	X	0	0	0	%100
86	M97	Z	.319	.319	0	%100
87	M98	X	0	0	0	%100
88	M98	Z	0	0	0	%100
89	M99	X	0	0	0	%100
90	M99	Z	.319	.319	0	%100
91	M100	X	0	0	0	%100
92	M100	Z	0	0	0	%100
93	M101	X	0	0	0	%100
94	M101	Z	.319	.319	0	%100
95	M67	X	0	0	0	%100
96	M67	Z	.149	.149	0	%100
97	M68	X	0	0	0	%100
98	M68	Z	.149	.149	0	%100
99	M69	X	0	0	0	%100
100	M69	Z	.598	.598	0	%100
101	MP1A	X	0	0	0	%100
102	MP1A	Z	.504	.504	0	%100
103	MP2A	X	0	0	0	%100
104	MP2A	Z	.611	.611	0	%100
105	MP3A	X	0	0	0	%100
106	MP3A	Z	.504	.504	0	%100
107	MP4A	X	0	0	0	%100
108	MP4A	Z	.504	.504	0	%100
109	MP1B	X	0	0	0	%100
110	MP1B	Z	.504	.504	0	%100
111	MP2B	X	0	0	0	%100
112	MP2B	Z	.611	.611	0	%100
113	MP3B	X	0	0	0	%100
114	MP3B	Z	.504	.504	0	%100
115	MP4B	X	0	0	0	%100
116	MP4B	Z	.504	.504	0	%100
117	MP1C	X	0	0	0	%100
118	MP1C	Z	.504	.504	0	%100
119	MP2C	X	0	0	0	%100
120	MP2C	Z	.611	.611	0	%100
121	MP3C	X	0	0	0	%100
122	MP3C	Z	.504	.504	0	%100

Member Distributed Loads (BLC 71 : Structure Wm (180 Deg)) (Continued)

	Member Label	Direction	Start Magnitude[lb/ft,...	End Magnitude[lb/ft,...	Start Location[ft,%]	End Location[ft,%]
123	MP4C	X	0	0	0	%100
124	MP4C	Z	.504	.504	0	%100

Member Distributed Loads (BLC 72 : Structure Wm (210 Deg))

	Member Label	Direction	Start Magnitude[lb/ft,...	End Magnitude[lb/ft,...	Start Location[ft,%]	End Location[ft,%]
1	A5	X	-.252	-.252	0	%100
2	A5	Z	.437	.437	0	%100
3	B5	X	-.252	-.252	0	%100
4	B5	Z	.437	.437	0	%100
5	M18	X	0	0	0	%100
6	M18	Z	0	0	0	%100
7	M19	X	0	0	0	%100
8	M19	Z	0	0	0	%100
9	M20	X	-.378	-.378	0	%100
10	M20	Z	.655	.655	0	%100
11	M21	X	-.266	-.266	0	%100
12	M21	Z	.46	.46	0	%100
13	M22	X	-.266	-.266	0	%100
14	M22	Z	.46	.46	0	%100
15	M23	X	-.478	-.478	0	%100
16	M23	Z	.828	.828	0	%100
17	M24	X	0	0	0	%100
18	M24	Z	0	0	0	%100
19	M25	X	-.478	-.478	0	%100
20	M25	Z	.828	.828	0	%100
21	M26	X	-.637	-.637	0	%100
22	M26	Z	1.104	1.104	0	%100
23	M27	X	-.478	-.478	0	%100
24	M27	Z	.828	.828	0	%100
25	M28	X	-.637	-.637	0	%100
26	M28	Z	1.104	1.104	0	%100
27	M29	X	-.478	-.478	0	%100
28	M29	Z	.828	.828	0	%100
29	M35	X	-.242	-.242	0	%100
30	M35	Z	.42	.42	0	%100
31	M36	X	-.242	-.242	0	%100
32	M36	Z	.42	.42	0	%100
33	M37	X	-.094	-.094	0	%100
34	M37	Z	.164	.164	0	%100
35	M38	X	-.266	-.266	0	%100
36	M38	Z	.46	.46	0	%100
37	M39	X	0	0	0	%100
38	M39	Z	0	0	0	%100
39	M40	X	-.478	-.478	0	%100
40	M40	Z	.828	.828	0	%100
41	M41	X	-.478	-.478	0	%100
42	M41	Z	.828	.828	0	%100
43	M42	X	0	0	0	%100
44	M42	Z	0	0	0	%100
45	M43	X	-.159	-.159	0	%100
46	M43	Z	.276	.276	0	%100
47	M44	X	-.478	-.478	0	%100
48	M44	Z	.828	.828	0	%100
49	M45	X	-.159	-.159	0	%100
50	M45	Z	.276	.276	0	%100
51	M46	X	0	0	0	%100

Member Distributed Loads (BLC 72 : Structure Wm (210 Deg)) (Continued)

	Member Label	Direction	Start Magnitude[lb/ft,...	End Magnitude[lb/ft,...	Start Location[ft,%]	End Location[ft,%]
52	M46	Z	0	0	0	%100
53	M52	X	-.213	-.213	0	%100
54	M52	Z	.369	.369	0	%100
55	M52A	X	-.242	-.242	0	%100
56	M52A	Z	.42	.42	0	%100
57	M53A	X	-.242	-.242	0	%100
58	M53A	Z	.42	.42	0	%100
59	M54A	X	-.411	-.411	0	%100
60	M54A	Z	.712	.712	0	%100
61	M56	X	-.213	-.213	0	%100
62	M56	Z	.369	.369	0	%100
63	M57	X	-.279	-.279	0	%100
64	M57	Z	.483	.483	0	%100
65	M58	X	0	0	0	%100
66	M58	Z	0	0	0	%100
67	M59	X	-.279	-.279	0	%100
68	M59	Z	.483	.483	0	%100
69	M64	X	-.279	-.279	0	%100
70	M64	Z	.483	.483	0	%100
71	M77	X	0	0	0	%100
72	M77	Z	0	0	0	%100
73	M90	X	-.279	-.279	0	%100
74	M90	Z	.483	.483	0	%100
75	M91	X	-.094	-.094	0	%100
76	M91	Z	.164	.164	0	%100
77	M93	X	0	0	0	%100
78	M93	Z	0	0	0	%100
79	M94	X	-.266	-.266	0	%100
80	M94	Z	.46	.46	0	%100
81	M95	X	0	0	0	%100
82	M95	Z	0	0	0	%100
83	M96	X	-.478	-.478	0	%100
84	M96	Z	.828	.828	0	%100
85	M97	X	-.478	-.478	0	%100
86	M97	Z	.828	.828	0	%100
87	M98	X	-.159	-.159	0	%100
88	M98	Z	.276	.276	0	%100
89	M99	X	0	0	0	%100
90	M99	Z	0	0	0	%100
91	M100	X	-.159	-.159	0	%100
92	M100	Z	.276	.276	0	%100
93	M101	X	-.478	-.478	0	%100
94	M101	Z	.828	.828	0	%100
95	M67	X	0	0	0	%100
96	M67	Z	0	0	0	%100
97	M68	X	-.224	-.224	0	%100
98	M68	Z	.388	.388	0	%100
99	M69	X	-.224	-.224	0	%100
100	M69	Z	.388	.388	0	%100
101	MP1A	X	-.252	-.252	0	%100
102	MP1A	Z	.437	.437	0	%100
103	MP2A	X	-.305	-.305	0	%100
104	MP2A	Z	.529	.529	0	%100
105	MP3A	X	-.252	-.252	0	%100
106	MP3A	Z	.437	.437	0	%100
107	MP4A	X	-.252	-.252	0	%100
108	MP4A	Z	.437	.437	0	%100

Member Distributed Loads (BLC 72 : Structure Wm (210 Deg)) (Continued)

	Member Label	Direction	Start Magnitude[lb/ft,...	End Magnitude[lb/ft,...	Start Location[ft,%]	End Location[ft,%]
109	MP1B	X	-.252	-.252	0	%100
110	MP1B	Z	.437	.437	0	%100
111	MP2B	X	-.305	-.305	0	%100
112	MP2B	Z	.529	.529	0	%100
113	MP3B	X	-.252	-.252	0	%100
114	MP3B	Z	.437	.437	0	%100
115	MP4B	X	-.252	-.252	0	%100
116	MP4B	Z	.437	.437	0	%100
117	MP1C	X	-.252	-.252	0	%100
118	MP1C	Z	.437	.437	0	%100
119	MP2C	X	-.305	-.305	0	%100
120	MP2C	Z	.529	.529	0	%100
121	MP3C	X	-.252	-.252	0	%100
122	MP3C	Z	.437	.437	0	%100
123	MP4C	X	-.252	-.252	0	%100
124	MP4C	Z	.437	.437	0	%100

Member Distributed Loads (BLC 73 : Structure Wm (240 Deg))

	Member Label	Direction	Start Magnitude[lb/ft,...	End Magnitude[lb/ft,...	Start Location[ft,%]	End Location[ft,%]
1	A5	X	-.437	-.437	0	%100
2	A5	Z	.252	.252	0	%100
3	B5	X	-.437	-.437	0	%100
4	B5	Z	.252	.252	0	%100
5	M18	X	-.14	-.14	0	%100
6	M18	Z	.081	.081	0	%100
7	M19	X	-.14	-.14	0	%100
8	M19	Z	.081	.081	0	%100
9	M20	X	-.491	-.491	0	%100
10	M20	Z	.283	.283	0	%100
11	M21	X	-.613	-.613	0	%100
12	M21	Z	.354	.354	0	%100
13	M22	X	-.153	-.153	0	%100
14	M22	Z	.089	.089	0	%100
15	M23	X	-1.104	-1.104	0	%100
16	M23	Z	.637	.637	0	%100
17	M24	X	-.276	-.276	0	%100
18	M24	Z	.159	.159	0	%100
19	M25	X	-.276	-.276	0	%100
20	M25	Z	.159	.159	0	%100
21	M26	X	-.828	-.828	0	%100
22	M26	Z	.478	.478	0	%100
23	M27	X	-1.104	-1.104	0	%100
24	M27	Z	.637	.637	0	%100
25	M28	X	-.828	-.828	0	%100
26	M28	Z	.478	.478	0	%100
27	M29	X	-.276	-.276	0	%100
28	M29	Z	.159	.159	0	%100
29	M35	X	-.56	-.56	0	%100
30	M35	Z	.323	.323	0	%100
31	M36	X	-.56	-.56	0	%100
32	M36	Z	.323	.323	0	%100
33	M37	X	0	0	0	%100
34	M37	Z	0	0	0	%100
35	M38	X	-.153	-.153	0	%100
36	M38	Z	.089	.089	0	%100
37	M39	X	-.153	-.153	0	%100

Member Distributed Loads (BLC 73 : Structure Wm (240 Deg)) (Continued)

	Member Label	Direction	Start Magnitude[lb/ft,...	End Magnitude[lb/ft,...	Start Location[ft,%]	End Location[ft,%]
38	M39	Z	.089	.089	0	%100
39	M40	X	-.276	-.276	0	%100
40	M40	Z	.159	.159	0	%100
41	M41	X	-1.104	-1.104	0	%100
42	M41	Z	.637	.637	0	%100
43	M42	X	-.276	-.276	0	%100
44	M42	Z	.159	.159	0	%100
45	M43	X	0	0	0	%100
46	M43	Z	0	0	0	%100
47	M44	X	-.276	-.276	0	%100
48	M44	Z	.159	.159	0	%100
49	M45	X	0	0	0	%100
50	M45	Z	0	0	0	%100
51	M46	X	-.276	-.276	0	%100
52	M46	Z	.159	.159	0	%100
53	M52	X	-.598	-.598	0	%100
54	M52	Z	.345	.345	0	%100
55	M52A	X	-.14	-.14	0	%100
56	M52A	Z	.081	.081	0	%100
57	M53A	X	-.14	-.14	0	%100
58	M53A	Z	.081	.081	0	%100
59	M54A	X	-.598	-.598	0	%100
60	M54A	Z	.345	.345	0	%100
61	M56	X	-.254	-.254	0	%100
62	M56	Z	.147	.147	0	%100
63	M57	X	-.161	-.161	0	%100
64	M57	Z	.093	.093	0	%100
65	M58	X	-.161	-.161	0	%100
66	M58	Z	.093	.093	0	%100
67	M59	X	-.644	-.644	0	%100
68	M59	Z	.372	.372	0	%100
69	M64	X	-.161	-.161	0	%100
70	M64	Z	.093	.093	0	%100
71	M77	X	-.161	-.161	0	%100
72	M77	Z	.093	.093	0	%100
73	M90	X	-.644	-.644	0	%100
74	M90	Z	.372	.372	0	%100
75	M91	X	-.491	-.491	0	%100
76	M91	Z	.283	.283	0	%100
77	M93	X	-.153	-.153	0	%100
78	M93	Z	.089	.089	0	%100
79	M94	X	-.613	-.613	0	%100
80	M94	Z	.354	.354	0	%100
81	M95	X	-.276	-.276	0	%100
82	M95	Z	.159	.159	0	%100
83	M96	X	-.276	-.276	0	%100
84	M96	Z	.159	.159	0	%100
85	M97	X	-1.104	-1.104	0	%100
86	M97	Z	.637	.637	0	%100
87	M98	X	-.828	-.828	0	%100
88	M98	Z	.478	.478	0	%100
89	M99	X	-.276	-.276	0	%100
90	M99	Z	.159	.159	0	%100
91	M100	X	-.828	-.828	0	%100
92	M100	Z	.478	.478	0	%100
93	M101	X	-1.104	-1.104	0	%100
94	M101	Z	.637	.637	0	%100

Member Distributed Loads (BLC 73 : Structure Wm (240 Deg)) (Continued)

	Member Label	Direction	Start Magnitude[lb/ft,...	End Magnitude[lb/ft,...	Start Location[ft,%]	End Location[ft,%]
95	M67	X	-.129	-.129	0	%100
96	M67	Z	.075	.075	0	%100
97	M68	X	-.518	-.518	0	%100
98	M68	Z	.299	.299	0	%100
99	M69	X	-.129	-.129	0	%100
100	M69	Z	.075	.075	0	%100
101	MP1A	X	-.437	-.437	0	%100
102	MP1A	Z	.252	.252	0	%100
103	MP2A	X	-.529	-.529	0	%100
104	MP2A	Z	.305	.305	0	%100
105	MP3A	X	-.437	-.437	0	%100
106	MP3A	Z	.252	.252	0	%100
107	MP4A	X	-.437	-.437	0	%100
108	MP4A	Z	.252	.252	0	%100
109	MP1B	X	-.437	-.437	0	%100
110	MP1B	Z	.252	.252	0	%100
111	MP2B	X	-.529	-.529	0	%100
112	MP2B	Z	.305	.305	0	%100
113	MP3B	X	-.437	-.437	0	%100
114	MP3B	Z	.252	.252	0	%100
115	MP4B	X	-.437	-.437	0	%100
116	MP4B	Z	.252	.252	0	%100
117	MP1C	X	-.437	-.437	0	%100
118	MP1C	Z	.252	.252	0	%100
119	MP2C	X	-.529	-.529	0	%100
120	MP2C	Z	.305	.305	0	%100
121	MP3C	X	-.437	-.437	0	%100
122	MP3C	Z	.252	.252	0	%100
123	MP4C	X	-.437	-.437	0	%100
124	MP4C	Z	.252	.252	0	%100

Member Distributed Loads (BLC 74 : Structure Wm (270 Deg))

	Member Label	Direction	Start Magnitude[lb/ft,...	End Magnitude[lb/ft,...	Start Location[ft,%]	End Location[ft,%]
1	A5	X	-.504	-.504	0	%100
2	A5	Z	0	0	0	%100
3	B5	X	-.504	-.504	0	%100
4	B5	Z	0	0	0	%100
5	M18	X	-.485	-.485	0	%100
6	M18	Z	0	0	0	%100
7	M19	X	-.485	-.485	0	%100
8	M19	Z	0	0	0	%100
9	M20	X	-.189	-.189	0	%100
10	M20	Z	0	0	0	%100
11	M21	X	-.531	-.531	0	%100
12	M21	Z	0	0	0	%100
13	M22	X	0	0	0	%100
14	M22	Z	0	0	0	%100
15	M23	X	-.956	-.956	0	%100
16	M23	Z	0	0	0	%100
17	M24	X	-.956	-.956	0	%100
18	M24	Z	0	0	0	%100
19	M25	X	0	0	0	%100
20	M25	Z	0	0	0	%100
21	M26	X	-.319	-.319	0	%100
22	M26	Z	0	0	0	%100
23	M27	X	-.956	-.956	0	%100

Member Distributed Loads (BLC 74 : Structure Wm (270 Deg)) (Continued)

	Member Label	Direction	Start Magnitude[lb/ft,...	End Magnitude[lb/ft,...	Start Location[ft,%]	End Location[ft,%]
24	M27	Z	0	0	0	%100
25	M28	X	-.319	-.319	0	%100
26	M28	Z	0	0	0	%100
27	M29	X	0	0	0	%100
28	M29	Z	0	0	0	%100
29	M35	X	-.485	-.485	0	%100
30	M35	Z	0	0	0	%100
31	M36	X	-.485	-.485	0	%100
32	M36	Z	0	0	0	%100
33	M37	X	-.189	-.189	0	%100
34	M37	Z	0	0	0	%100
35	M38	X	0	0	0	%100
36	M38	Z	0	0	0	%100
37	M39	X	-.531	-.531	0	%100
38	M39	Z	0	0	0	%100
39	M40	X	0	0	0	%100
40	M40	Z	0	0	0	%100
41	M41	X	-.956	-.956	0	%100
42	M41	Z	0	0	0	%100
43	M42	X	-.956	-.956	0	%100
44	M42	Z	0	0	0	%100
45	M43	X	-.319	-.319	0	%100
46	M43	Z	0	0	0	%100
47	M44	X	0	0	0	%100
48	M44	Z	0	0	0	%100
49	M45	X	-.319	-.319	0	%100
50	M45	Z	0	0	0	%100
51	M46	X	-.956	-.956	0	%100
52	M46	Z	0	0	0	%100
53	M52	X	-.822	-.822	0	%100
54	M52	Z	0	0	0	%100
55	M52A	X	0	0	0	%100
56	M52A	Z	0	0	0	%100
57	M53A	X	0	0	0	%100
58	M53A	Z	0	0	0	%100
59	M54A	X	-.426	-.426	0	%100
60	M54A	Z	0	0	0	%100
61	M56	X	-.426	-.426	0	%100
62	M56	Z	0	0	0	%100
63	M57	X	0	0	0	%100
64	M57	Z	0	0	0	%100
65	M58	X	-.558	-.558	0	%100
66	M58	Z	0	0	0	%100
67	M59	X	-.558	-.558	0	%100
68	M59	Z	0	0	0	%100
69	M64	X	0	0	0	%100
70	M64	Z	0	0	0	%100
71	M77	X	-.558	-.558	0	%100
72	M77	Z	0	0	0	%100
73	M90	X	-.558	-.558	0	%100
74	M90	Z	0	0	0	%100
75	M91	X	-.756	-.756	0	%100
76	M91	Z	0	0	0	%100
77	M93	X	-.531	-.531	0	%100
78	M93	Z	0	0	0	%100
79	M94	X	-.531	-.531	0	%100
80	M94	Z	0	0	0	%100

Member Distributed Loads (BLC 74 : Structure Wm (270 Deg)) (Continued)

	Member Label	Direction	Start Magnitude[lb/ft,...	End Magnitude[lb/ft,...	Start Location[ft,%]	End Location[ft,%]
81	M95	X	-.956	-.956	0	%100
82	M95	Z	0	0	0	%100
83	M96	X	0	0	0	%100
84	M96	Z	0	0	0	%100
85	M97	X	-.956	-.956	0	%100
86	M97	Z	0	0	0	%100
87	M98	X	-1.274	-1.274	0	%100
88	M98	Z	0	0	0	%100
89	M99	X	-.956	-.956	0	%100
90	M99	Z	0	0	0	%100
91	M100	X	-1.274	-1.274	0	%100
92	M100	Z	0	0	0	%100
93	M101	X	-.956	-.956	0	%100
94	M101	Z	0	0	0	%100
95	M67	X	-.448	-.448	0	%100
96	M67	Z	0	0	0	%100
97	M68	X	-.448	-.448	0	%100
98	M68	Z	0	0	0	%100
99	M69	X	0	0	0	%100
100	M69	Z	0	0	0	%100
101	MP1A	X	-.504	-.504	0	%100
102	MP1A	Z	0	0	0	%100
103	MP2A	X	-.611	-.611	0	%100
104	MP2A	Z	0	0	0	%100
105	MP3A	X	-.504	-.504	0	%100
106	MP3A	Z	0	0	0	%100
107	MP4A	X	-.504	-.504	0	%100
108	MP4A	Z	0	0	0	%100
109	MP1B	X	-.504	-.504	0	%100
110	MP1B	Z	0	0	0	%100
111	MP2B	X	-.611	-.611	0	%100
112	MP2B	Z	0	0	0	%100
113	MP3B	X	-.504	-.504	0	%100
114	MP3B	Z	0	0	0	%100
115	MP4B	X	-.504	-.504	0	%100
116	MP4B	Z	0	0	0	%100
117	MP1C	X	-.504	-.504	0	%100
118	MP1C	Z	0	0	0	%100
119	MP2C	X	-.611	-.611	0	%100
120	MP2C	Z	0	0	0	%100
121	MP3C	X	-.504	-.504	0	%100
122	MP3C	Z	0	0	0	%100
123	MP4C	X	-.504	-.504	0	%100
124	MP4C	Z	0	0	0	%100

Member Distributed Loads (BLC 75 : Structure Wm (300 Deg))

	Member Label	Direction	Start Magnitude[lb/ft,...	End Magnitude[lb/ft,...	Start Location[ft,%]	End Location[ft,%]
1	A5	X	-.437	-.437	0	%100
2	A5	Z	-.252	-.252	0	%100
3	B5	X	-.437	-.437	0	%100
4	B5	Z	-.252	-.252	0	%100
5	M18	X	-.56	-.56	0	%100
6	M18	Z	-.323	-.323	0	%100
7	M19	X	-.56	-.56	0	%100
8	M19	Z	-.323	-.323	0	%100
9	M20	X	0	0	0	%100

Member Distributed Loads (BLC 75 : Structure Wm (300 Deg)) (Continued)

	Member Label	Direction	Start Magnitude[lb/ft,...	End Magnitude[lb/ft,...	Start Location[ft,%]	End Location[ft,%]
10	M20	Z	0	0	0	%100
11	M21	X	-.153	-.153	0	%100
12	M21	Z	-.089	-.089	0	%100
13	M22	X	-.153	-.153	0	%100
14	M22	Z	-.089	-.089	0	%100
15	M23	X	-.276	-.276	0	%100
16	M23	Z	-.159	-.159	0	%100
17	M24	X	-1.104	-1.104	0	%100
18	M24	Z	-.637	-.637	0	%100
19	M25	X	-.276	-.276	0	%100
20	M25	Z	-.159	-.159	0	%100
21	M26	X	0	0	0	%100
22	M26	Z	0	0	0	%100
23	M27	X	-.276	-.276	0	%100
24	M27	Z	-.159	-.159	0	%100
25	M28	X	0	0	0	%100
26	M28	Z	0	0	0	%100
27	M29	X	-.276	-.276	0	%100
28	M29	Z	-.159	-.159	0	%100
29	M35	X	-.14	-.14	0	%100
30	M35	Z	-.081	-.081	0	%100
31	M36	X	-.14	-.14	0	%100
32	M36	Z	-.081	-.081	0	%100
33	M37	X	-.491	-.491	0	%100
34	M37	Z	-.283	-.283	0	%100
35	M38	X	-.153	-.153	0	%100
36	M38	Z	-.089	-.089	0	%100
37	M39	X	-.613	-.613	0	%100
38	M39	Z	-.354	-.354	0	%100
39	M40	X	-.276	-.276	0	%100
40	M40	Z	-.159	-.159	0	%100
41	M41	X	-.276	-.276	0	%100
42	M41	Z	-.159	-.159	0	%100
43	M42	X	-1.104	-1.104	0	%100
44	M42	Z	-.637	-.637	0	%100
45	M43	X	-.828	-.828	0	%100
46	M43	Z	-.478	-.478	0	%100
47	M44	X	-.276	-.276	0	%100
48	M44	Z	-.159	-.159	0	%100
49	M45	X	-.828	-.828	0	%100
50	M45	Z	-.478	-.478	0	%100
51	M46	X	-1.104	-1.104	0	%100
52	M46	Z	-.637	-.637	0	%100
53	M52	X	-.598	-.598	0	%100
54	M52	Z	-.345	-.345	0	%100
55	M52A	X	-.14	-.14	0	%100
56	M52A	Z	-.081	-.081	0	%100
57	M53A	X	-.14	-.14	0	%100
58	M53A	Z	-.081	-.081	0	%100
59	M54A	X	-.254	-.254	0	%100
60	M54A	Z	-.147	-.147	0	%100
61	M56	X	-.598	-.598	0	%100
62	M56	Z	-.345	-.345	0	%100
63	M57	X	-.161	-.161	0	%100
64	M57	Z	-.093	-.093	0	%100
65	M58	X	-.644	-.644	0	%100
66	M58	Z	-.372	-.372	0	%100

Member Distributed Loads (BLC 75 : Structure Wm (300 Deg)) (Continued)

	Member Label	Direction	Start Magnitude[lb/ft,...	End Magnitude[lb/ft,...	Start Location[ft,%]	End Location[ft,%]
67	M59	X	-.161	-.161	0	%100
68	M59	Z	-.093	-.093	0	%100
69	M64	X	-.161	-.161	0	%100
70	M64	Z	-.093	-.093	0	%100
71	M77	X	-.644	-.644	0	%100
72	M77	Z	-.372	-.372	0	%100
73	M90	X	-.161	-.161	0	%100
74	M90	Z	-.093	-.093	0	%100
75	M91	X	-.491	-.491	0	%100
76	M91	Z	-.283	-.283	0	%100
77	M93	X	-.613	-.613	0	%100
78	M93	Z	-.354	-.354	0	%100
79	M94	X	-.153	-.153	0	%100
80	M94	Z	-.089	-.089	0	%100
81	M95	X	-1.104	-1.104	0	%100
82	M95	Z	-.637	-.637	0	%100
83	M96	X	-.276	-.276	0	%100
84	M96	Z	-.159	-.159	0	%100
85	M97	X	-.276	-.276	0	%100
86	M97	Z	-.159	-.159	0	%100
87	M98	X	-.828	-.828	0	%100
88	M98	Z	-.478	-.478	0	%100
89	M99	X	-1.104	-1.104	0	%100
90	M99	Z	-.637	-.637	0	%100
91	M100	X	-.828	-.828	0	%100
92	M100	Z	-.478	-.478	0	%100
93	M101	X	-.276	-.276	0	%100
94	M101	Z	-.159	-.159	0	%100
95	M67	X	-.518	-.518	0	%100
96	M67	Z	-.299	-.299	0	%100
97	M68	X	-.129	-.129	0	%100
98	M68	Z	-.075	-.075	0	%100
99	M69	X	-.129	-.129	0	%100
100	M69	Z	-.075	-.075	0	%100
101	MP1A	X	-.437	-.437	0	%100
102	MP1A	Z	-.252	-.252	0	%100
103	MP2A	X	-.529	-.529	0	%100
104	MP2A	Z	-.305	-.305	0	%100
105	MP3A	X	-.437	-.437	0	%100
106	MP3A	Z	-.252	-.252	0	%100
107	MP4A	X	-.437	-.437	0	%100
108	MP4A	Z	-.252	-.252	0	%100
109	MP1B	X	-.437	-.437	0	%100
110	MP1B	Z	-.252	-.252	0	%100
111	MP2B	X	-.529	-.529	0	%100
112	MP2B	Z	-.305	-.305	0	%100
113	MP3B	X	-.437	-.437	0	%100
114	MP3B	Z	-.252	-.252	0	%100
115	MP4B	X	-.437	-.437	0	%100
116	MP4B	Z	-.252	-.252	0	%100
117	MP1C	X	-.437	-.437	0	%100
118	MP1C	Z	-.252	-.252	0	%100
119	MP2C	X	-.529	-.529	0	%100
120	MP2C	Z	-.305	-.305	0	%100
121	MP3C	X	-.437	-.437	0	%100
122	MP3C	Z	-.252	-.252	0	%100
123	MP4C	X	-.437	-.437	0	%100

Member Distributed Loads (BLC 75 : Structure Wm (300 Deg)) (Continued)

	Member Label	Direction	Start Magnitude[lb/ft,...	End Magnitude[lb/ft,...	Start Location[ft,%]	End Location[ft,%]
124	MP4C	Z	-.252	-.252	0	%100

Member Distributed Loads (BLC 76 : Structure Wm (330 Deg))

	Member Label	Direction	Start Magnitude[lb/ft,...	End Magnitude[lb/ft,...	Start Location[ft,%]	End Location[ft,%]
1	A5	X	-.252	-.252	0	%100
2	A5	Z	-.437	-.437	0	%100
3	B5	X	-.252	-.252	0	%100
4	B5	Z	-.437	-.437	0	%100
5	M18	X	-.242	-.242	0	%100
6	M18	Z	-.42	-.42	0	%100
7	M19	X	-.242	-.242	0	%100
8	M19	Z	-.42	-.42	0	%100
9	M20	X	-.094	-.094	0	%100
10	M20	Z	-.164	-.164	0	%100
11	M21	X	0	0	0	%100
12	M21	Z	0	0	0	%100
13	M22	X	-.266	-.266	0	%100
14	M22	Z	-.46	-.46	0	%100
15	M23	X	0	0	0	%100
16	M23	Z	0	0	0	%100
17	M24	X	-.478	-.478	0	%100
18	M24	Z	-.828	-.828	0	%100
19	M25	X	-.478	-.478	0	%100
20	M25	Z	-.828	-.828	0	%100
21	M26	X	-.159	-.159	0	%100
22	M26	Z	-.276	-.276	0	%100
23	M27	X	0	0	0	%100
24	M27	Z	0	0	0	%100
25	M28	X	-.159	-.159	0	%100
26	M28	Z	-.276	-.276	0	%100
27	M29	X	-.478	-.478	0	%100
28	M29	Z	-.828	-.828	0	%100
29	M35	X	0	0	0	%100
30	M35	Z	0	0	0	%100
31	M36	X	0	0	0	%100
32	M36	Z	0	0	0	%100
33	M37	X	-.378	-.378	0	%100
34	M37	Z	-.655	-.655	0	%100
35	M38	X	-.266	-.266	0	%100
36	M38	Z	-.46	-.46	0	%100
37	M39	X	-.266	-.266	0	%100
38	M39	Z	-.46	-.46	0	%100
39	M40	X	-.478	-.478	0	%100
40	M40	Z	-.828	-.828	0	%100
41	M41	X	0	0	0	%100
42	M41	Z	0	0	0	%100
43	M42	X	-.478	-.478	0	%100
44	M42	Z	-.828	-.828	0	%100
45	M43	X	-.637	-.637	0	%100
46	M43	Z	-1.104	-1.104	0	%100
47	M44	X	-.478	-.478	0	%100
48	M44	Z	-.828	-.828	0	%100
49	M45	X	-.637	-.637	0	%100
50	M45	Z	-1.104	-1.104	0	%100
51	M46	X	-.478	-.478	0	%100
52	M46	Z	-.828	-.828	0	%100

Member Distributed Loads (BLC 76 : Structure Wm (330 Deg)) (Continued)

	Member Label	Direction	Start Magnitude[lb/ft,...	End Magnitude[lb/ft,...	Start Location[ft,%]	End Location[ft,%]
53	M52	X	-.213	-.213	0	%100
54	M52	Z	-.369	-.369	0	%100
55	M52A	X	-.242	-.242	0	%100
56	M52A	Z	-.42	-.42	0	%100
57	M53A	X	-.242	-.242	0	%100
58	M53A	Z	-.42	-.42	0	%100
59	M54A	X	-.213	-.213	0	%100
60	M54A	Z	-.369	-.369	0	%100
61	M56	X	-.411	-.411	0	%100
62	M56	Z	-.712	-.712	0	%100
63	M57	X	-.279	-.279	0	%100
64	M57	Z	-.483	-.483	0	%100
65	M58	X	-.279	-.279	0	%100
66	M58	Z	-.483	-.483	0	%100
67	M59	X	0	0	0	%100
68	M59	Z	0	0	0	%100
69	M64	X	-.279	-.279	0	%100
70	M64	Z	-.483	-.483	0	%100
71	M77	X	-.279	-.279	0	%100
72	M77	Z	-.483	-.483	0	%100
73	M90	X	0	0	0	%100
74	M90	Z	0	0	0	%100
75	M91	X	-.094	-.094	0	%100
76	M91	Z	-.164	-.164	0	%100
77	M93	X	-.266	-.266	0	%100
78	M93	Z	-.46	-.46	0	%100
79	M94	X	0	0	0	%100
80	M94	Z	0	0	0	%100
81	M95	X	-.478	-.478	0	%100
82	M95	Z	-.828	-.828	0	%100
83	M96	X	-.478	-.478	0	%100
84	M96	Z	-.828	-.828	0	%100
85	M97	X	0	0	0	%100
86	M97	Z	0	0	0	%100
87	M98	X	-.159	-.159	0	%100
88	M98	Z	-.276	-.276	0	%100
89	M99	X	-.478	-.478	0	%100
90	M99	Z	-.828	-.828	0	%100
91	M100	X	-.159	-.159	0	%100
92	M100	Z	-.276	-.276	0	%100
93	M101	X	0	0	0	%100
94	M101	Z	0	0	0	%100
95	M67	X	-.224	-.224	0	%100
96	M67	Z	-.388	-.388	0	%100
97	M68	X	0	0	0	%100
98	M68	Z	0	0	0	%100
99	M69	X	-.224	-.224	0	%100
100	M69	Z	-.388	-.388	0	%100
101	MP1A	X	-.252	-.252	0	%100
102	MP1A	Z	-.437	-.437	0	%100
103	MP2A	X	-.305	-.305	0	%100
104	MP2A	Z	-.529	-.529	0	%100
105	MP3A	X	-.252	-.252	0	%100
106	MP3A	Z	-.437	-.437	0	%100
107	MP4A	X	-.252	-.252	0	%100
108	MP4A	Z	-.437	-.437	0	%100
109	MP1B	X	-.252	-.252	0	%100

Member Distributed Loads (BLC 76 : Structure Wm (330 Deg)) (Continued)

	Member Label	Direction	Start Magnitude[lb/ft,...	End Magnitude[lb/ft,...	Start Location[ft,%]	End Location[ft,%]
110	MP1B	Z	-.437	-.437	0	%100
111	MP2B	X	-.305	-.305	0	%100
112	MP2B	Z	-.529	-.529	0	%100
113	MP3B	X	-.252	-.252	0	%100
114	MP3B	Z	-.437	-.437	0	%100
115	MP4B	X	-.252	-.252	0	%100
116	MP4B	Z	-.437	-.437	0	%100
117	MP1C	X	-.252	-.252	0	%100
118	MP1C	Z	-.437	-.437	0	%100
119	MP2C	X	-.305	-.305	0	%100
120	MP2C	Z	-.529	-.529	0	%100
121	MP3C	X	-.252	-.252	0	%100
122	MP3C	Z	-.437	-.437	0	%100
123	MP4C	X	-.252	-.252	0	%100
124	MP4C	Z	-.437	-.437	0	%100

Member Distributed Loads (BLC 81 : BLC 39 Transient Area Loads)

	Member Label	Direction	Start Magnitude[lb/ft,...	End Magnitude[lb/ft,...	Start Location[ft,%]	End Location[ft,%]
1	M52A	Y	-7.389	-7.389	.494	2.391
2	M53A	Y	-7.387	-7.387	.494	2.391
3	M91	Y	-.244	-8.481	1.562	2.292
4	M91	Y	-8.481	-12.395	2.292	3.021
5	M91	Y	-12.395	-8.332	3.021	3.75
6	M91	Y	-8.332	-6.149	3.75	4.479
7	M91	Y	-6.149	-1.264	4.479	5.208
8	M93	Y	-.107	-5.522	.426	1.194
9	M93	Y	-5.522	-8.293	1.194	1.961
10	M93	Y	-8.293	-4.727	1.961	2.729
11	M93	Y	-4.727	-2.734	2.729	3.496
12	M93	Y	-2.734	-.59	3.496	4.264
13	M94	Y	-.107	-5.527	.426	1.194
14	M94	Y	-5.527	-8.3	1.194	1.961
15	M94	Y	-8.3	-4.73	1.961	2.729
16	M94	Y	-4.73	-2.734	2.729	3.496
17	M94	Y	-2.734	-.59	3.496	4.264
18	M96	Y	-.651	-.651	.429	.706
19	M18	Y	-7.389	-7.389	.494	2.391
20	M19	Y	-7.387	-7.387	.494	2.391
21	M20	Y	-.244	-8.481	1.562	2.292
22	M20	Y	-8.481	-12.395	2.292	3.021
23	M20	Y	-12.395	-8.332	3.021	3.75
24	M20	Y	-8.332	-6.149	3.75	4.479
25	M20	Y	-6.149	-1.264	4.479	5.208
26	M21	Y	-.107	-5.522	.426	1.194
27	M21	Y	-5.522	-8.293	1.194	1.961
28	M21	Y	-8.293	-4.727	1.961	2.729
29	M21	Y	-4.727	-2.734	2.729	3.496
30	M21	Y	-2.734	-.59	3.496	4.264
31	M22	Y	-.107	-5.527	.426	1.194
32	M22	Y	-5.527	-8.3	1.194	1.961
33	M22	Y	-8.3	-4.73	1.961	2.729
34	M22	Y	-4.73	-2.734	2.729	3.496
35	M22	Y	-2.734	-.59	3.496	4.264
36	M24	Y	-.651	-.651	.429	.706
37	M35	Y	-7.389	-7.389	.494	2.391
38	M36	Y	-7.387	-7.387	.494	2.391

Member Distributed Loads (BLC 81 : BLC 39 Transient Area Loads) (Continued)

	Member Label	Direction	Start Magnitude[lb/ft,...	End Magnitude[lb/ft,...	Start Location[ft,%]	End Location[ft,%]
39	M37	Y	-.244	-8.481	1.562	2.292
40	M37	Y	-8.481	-12.395	2.292	3.021
41	M37	Y	-12.395	-8.332	3.021	3.75
42	M37	Y	-8.332	-6.149	3.75	4.479
43	M37	Y	-6.149	-1.264	4.479	5.208
44	M38	Y	-.107	-5.522	.426	1.194
45	M38	Y	-5.522	-8.293	1.194	1.961
46	M38	Y	-8.293	-4.727	1.961	2.729
47	M38	Y	-4.727	-2.734	2.729	3.496
48	M38	Y	-2.734	-.59	3.496	4.264
49	M39	Y	-.107	-5.527	.426	1.194
50	M39	Y	-5.527	-8.3	1.194	1.961
51	M39	Y	-8.3	-4.73	1.961	2.729
52	M39	Y	-4.73	-2.734	2.729	3.496
53	M39	Y	-2.734	-.59	3.496	4.264
54	M41	Y	-.651	-.651	.429	.706

Member Distributed Loads (BLC 82 : BLC 40 Transient Area Loads)

	Member Label	Direction	Start Magnitude[lb/ft,...	End Magnitude[lb/ft,...	Start Location[ft,%]	End Location[ft,%]
1	M52A	Y	-7.952	-7.952	.494	2.391
2	M53A	Y	-7.949	-7.949	.494	2.391
3	M91	Y	-.263	-9.127	1.562	2.292
4	M91	Y	-9.127	-13.338	2.292	3.021
5	M91	Y	-13.338	-8.966	3.021	3.75
6	M91	Y	-8.966	-6.617	3.75	4.479
7	M91	Y	-6.617	-1.36	4.479	5.208
8	M93	Y	-.115	-5.943	.426	1.194
9	M93	Y	-5.943	-8.924	1.194	1.961
10	M93	Y	-8.924	-5.087	1.961	2.729
11	M93	Y	-5.087	-2.942	2.729	3.496
12	M93	Y	-2.942	-.635	3.496	4.264
13	M94	Y	-.115	-5.948	.426	1.194
14	M94	Y	-5.948	-8.932	1.194	1.961
15	M94	Y	-8.932	-5.09	1.961	2.729
16	M94	Y	-5.09	-2.942	2.729	3.496
17	M94	Y	-2.942	-.634	3.496	4.264
18	M96	Y	-.7	-.7	.429	.706
19	M18	Y	-7.952	-7.952	.494	2.391
20	M19	Y	-7.949	-7.949	.494	2.391
21	M20	Y	-.263	-9.127	1.562	2.292
22	M20	Y	-9.127	-13.338	2.292	3.021
23	M20	Y	-13.338	-8.966	3.021	3.75
24	M20	Y	-8.966	-6.617	3.75	4.479
25	M20	Y	-6.617	-1.36	4.479	5.208
26	M21	Y	-.115	-5.943	.426	1.194
27	M21	Y	-5.943	-8.924	1.194	1.961
28	M21	Y	-8.924	-5.087	1.961	2.729
29	M21	Y	-5.087	-2.942	2.729	3.496
30	M21	Y	-2.942	-.635	3.496	4.264
31	M22	Y	-.115	-5.948	.426	1.194
32	M22	Y	-5.948	-8.932	1.194	1.961
33	M22	Y	-8.932	-5.09	1.961	2.729
34	M22	Y	-5.09	-2.942	2.729	3.496
35	M22	Y	-2.942	-.634	3.496	4.264
36	M24	Y	-.7	-.7	.429	.706
37	M35	Y	-7.952	-7.952	.494	2.391

Member Distributed Loads (BLC 82 : BLC 40 Transient Area Loads) (Continued)

	Member Label	Direction	Start Magnitude[lb/ft,...	End Magnitude[lb/ft,...	Start Location[ft,%]	End Location[ft,%]
38	M36	Y	-7.949	-7.949	.494	2.391
39	M37	Y	-.263	-9.127	1.562	2.292
40	M37	Y	-9.127	-13.338	2.292	3.021
41	M37	Y	-13.338	-8.966	3.021	3.75
42	M37	Y	-8.966	-6.617	3.75	4.479
43	M37	Y	-6.617	-1.36	4.479	5.208
44	M38	Y	-.115	-5.943	.426	1.194
45	M38	Y	-5.943	-8.924	1.194	1.961
46	M38	Y	-8.924	-5.087	1.961	2.729
47	M38	Y	-5.087	-2.942	2.729	3.496
48	M38	Y	-2.942	-.635	3.496	4.264
49	M39	Y	-.115	-5.948	.426	1.194
50	M39	Y	-5.948	-8.932	1.194	1.961
51	M39	Y	-8.932	-5.09	1.961	2.729
52	M39	Y	-5.09	-2.942	2.729	3.496
53	M39	Y	-2.942	-.634	3.496	4.264
54	M41	Y	-.7	-.7	.429	.706

Member Area Loads (BLC 39 : Structure D)

	Joint A	Joint B	Joint C	Joint D	Direction	Distribution	Magnitude[ksf]
1	N187	N188	N190	N189	Y	Two Way	-.01
2	N37	N35	N36	N38	Y	Two Way	-.01
3	N65	N67	N66	N64	Y	Two Way	-.01

Member Area Loads (BLC 40 : Structure Di)

	Joint A	Joint B	Joint C	Joint D	Direction	Distribution	Magnitude[ksf]
1	N187	N188	N190	N189	Y	Two Way	-.011
2	N37	N35	N36	N38	Y	Two Way	-.011
3	N65	N67	N66	N64	Y	Two Way	-.011

Envelope Joint Reactions

	Joint		X [lb]	LC	Y [lb]	LC	Z [lb]	LC	MX [k-ft]	LC	MY [k-ft]	LC	MZ [k-ft]	LC
1	SC	max	939.739	10	1097.915	18	5727.283	1	1.226	13	1.454	4	.53	5
2		min	-915.21	4	358.753	12	-2944.828	7	.203	7	-1.429	10	-.498	11
3	N30	max	2068.256	11	917.218	21	1365.637	12	-.112	3	1.408	8	.941	18
4		min	-4460.782	5	359.733	3	-2728.207	6	-.938	45	-1.384	2	.411	12
5	N59	max	4450.479	9	978.788	13	1204.15	3	-.11	2	1.284	12	-.303	6
6		min	-2101.891	3	356.276	7	-2585.378	9	-.917	32	-1.255	6	-1.086	24
7	N87A	max	26.143	10	1750.747	1	525.314	7	0	51	0	8	0	2
8		min	-26.274	4	-257.824	7	-3383.895	1	0	1	0	2	0	8
9	N90	max	2753.429	17	1662.23	17	1589.679	17	0	12	0	12	0	12
10		min	-284.771	11	-157.33	11	-164.507	11	0	42	0	42	0	42
11	N93A	max	250.356	3	1658.349	21	1585.95	21	0	10	0	28	0	28
12		min	-2746.836	21	-136.948	3	-144.415	3	0	28	0	10	0	10
13	Totals:	max	4163.767	10	7287.636	17	4595.1	1						
14		min	-4163.766	4	3669.116	11	-4595.1	7						

Envelope AISC 15th(360-16): LRFD Steel Code Checks

	Member	Shape	Code Check	Loc[ft]	LC	Shear Check	Loc[ft]	...	LC	phi*P...	phi*P...	phi*...	phi*...	...	Eqn
1	MP3C	PIPE_2.0	.367	5.417	6	.060	3.917		4	1491...	32130	1.872	1.872	...	H1-...
2	MP3B	PIPE_2.0	.351	5.417	2	.064	3.917		12	1491...	32130	1.872	1.872	...	H1-...
3	MP2C	PIPE_2.5	.348	5.417	12	.150	5.417		1	3003...	50715	3.596	3.596	...	H1-...

Envelope AISC 15th(360-16): LRFD Steel Code Checks (Continued)

	Member	Shape	Code Check	Loc[ft]	LC	Shear Check	Loc[ft]	...	LC	phi*P...	phi*P...	phi*...	phi*...	...	Eqn
4	MP3A	PIPE_2.0	.325	5.417	10	.065	3.917		8	1491...	32130	1.872	1.872	...	H1-...
5	MP2B	PIPE_2.5	.324	5.417	8	.137	5.417		3	3003...	50715	3.596	3.596	...	H1-...
6	B5	PIPE_2.0	.319	4.479	7	.045	4.479		4	8922...	32130	1.872	1.872	...	H1-...
7	M69	L2.5x2.5x4	.315	0	2	.064	0	z	10	3670...	38556	1.114	2.537	...	H2-1
8	M68	L2.5x2.5x4	.310	0	7	.069	0	y	6	3670...	38556	1.114	2.537	...	H2-1
9	MP2A	PIPE_2.5	.302	5.417	4	.128	5.417		5	3003...	50715	3.596	3.596	...	H1-...
10	M67	L2.5x2.5x4	.301	0	7	.070	0	z	1	3670...	38556	1.114	2.537	...	H2-1
11	MP4C	PIPE_2.0	.278	5.417	1	.091	5.417		8	1491...	32130	1.872	1.872	...	H1-...
12	MP1C	PIPE_2.0	.262	5.417	1	.080	3.583		2	1491...	32130	1.872	1.872	...	H1-...
13	MP4B	PIPE_2.0	.258	5.417	2	.085	5.417		5	1491...	32130	1.872	1.872	...	H1-...
14	MP4A	PIPE_2.0	.251	5.417	5	.088	1.167		12	1491...	32130	1.872	1.872	...	H1-...
15	M29	PL3/8x6	.243	.133	12	.201	0	y	44	6977...	72900	.57	9.113	...	H1-...
16	MP1B	PIPE_2.0	.242	5.417	8	.080	1.167		11	1491...	32130	1.872	1.872	...	H1-...
17	M101	PL3/8x6	.236	.133	8	.173	0	y	18	6977...	72900	.57	9.113	...	H1-...
18	MP1A	PIPE_2.0	.236	5.417	5	.081	1.167		7	1491...	32130	1.872	1.872	...	H1-...
19	M46	PL3/8x6	.229	.133	4	.179	0	y	24	6977...	72900	.57	9.113	...	H1-...
20	M99	PL3/8x6	.221	.133	7	.169	0	y	15	6977...	72900	.57	9.113	...	H1-...
21	M96	PL1/2x6	.221	.567	1	.100	.567	y	14	6082...	97200	1.012	12.15	...	H1-...
22	M44	PL3/8x6	.217	.133	2	.196	0	y	35	6977...	72900	.57	9.113	...	H1-...
23	M43	PL3/8x6	.214	.219	2	.103	.219	y	24	6289...	72900	.57	9.113	...	H1-...
24	M26	PL3/8x6	.211	.219	10	.103	.219	y	44	6289...	72900	.57	9.113	...	H1-...
25	M98	PL3/8x6	.210	.219	6	.102	.219	y	16	6289...	72900	.57	9.113	...	H1-...
26	M41	PL1/2x6	.210	.567	8	.100	.567	y	18	6082...	97200	1.012	12.15	...	H1-...
27	M27	PL3/8x6	.210	.133	11	.165	0	y	19	6977...	72900	.57	9.113	...	H1-...
28	M24	PL1/2x6	.209	.567	5	.103	.567	y	14	6082...	97200	1.012	12.15	...	H1-...
29	M77	PIPE_3.0	.168	8.333	11	.085	11.719		11	2825...	65205	5.749	5.749	...	H1-...
30	M64	PIPE_3.0	.168	8.333	7	.088	11.719		7	2825...	65205	5.749	5.749	...	H1-...
31	M22	L2x2x3	.162	0	6	.009	4.264	z	14	1572...	2339...	.558	1.22	...	H2-1
32	M90	PIPE_3.0	.162	8.333	3	.082	11.719		2	2825...	65205	5.749	5.749	...	H1-...
33	M94	L2x2x3	.159	0	2	.009	4.264	z	22	1572...	2339...	.558	1.22	...	H2-1
34	M93	L2x2x3	.158	0	12	.009	4.264	y	14	1572...	2339...	.558	1.218	...	H2-1
35	M38	L2x2x3	.154	0	8	.009	4.264	y	23	1572...	2339...	.558	1.218	...	H2-1
36	M39	L2x2x3	.153	0	10	.009	4.264	z	18	1572...	2339...	.558	1.22	...	H2-1
37	M28	PL3/8x6	.146	.219	2	.086	.219	y	35	6289...	72900	.57	9.113	...	H1-...
38	M21	L2x2x3	.144	4.264	11	.009	4.264	y	19	1572...	2339...	.558	1.183	...	H2-1
39	M59	PIPE_3.0	.144	8.333	12	.062	11.458		2	2825...	65205	5.749	5.749	...	H1-...
40	M91	HSS4X4X4	.136	0	4	.061	0	z	4	1245...	1395...	16.181	16.181	...	H1-...
41	M58	PIPE_3.0	.134	8.333	8	.062	11.458		10	2825...	65205	5.749	5.749	...	H1-...
42	M20	HSS4X4X4	.133	0	8	.059	0	y	45	1245...	1395...	16.181	16.181	...	H1-...
43	M100	PL3/8x6	.129	.219	10	.080	.219	y	7	6289...	72900	.57	9.113	...	H1-...
44	M37	HSS4X4X4	.127	0	12	.057	0	y	31	1245...	1395...	16.181	16.181	...	H1-...
45	M57	PIPE_3.0	.125	8.333	4	.061	11.458		6	2825...	65205	5.749	5.749	...	H1-...
46	M45	PL3/8x6	.119	.219	9	.099	.219	y	26	6289...	72900	.57	9.113	...	H1-...
47	M52	LL2.5x2.5x3x3	.085	0	1	.002	0	y	14	4462...	58320	3.954	2.55	1	H1-...
48	M19	HSS4X4X4	.085	2.391	18	.036	2.391	y	44	1362...	1395...	16.181	16.181	...	H1-...
49	M36	HSS4X4X4	.085	2.391	22	.033	.299	z	10	1362...	1395...	16.181	16.181	...	H1-...
50	M35	HSS4X4X4	.084	2.391	20	.035	2.391	y	35	1362...	1395...	16.181	16.181	...	H1-...
51	M53A	HSS4X4X4	.083	2.391	19	.033	.299	z	2	1362...	1395...	16.181	16.181	...	H1-...
52	M52A	HSS4X4X4	.083	2.391	24	.031	.299	z	1	1362...	1395...	16.181	16.181	...	H1-...
53	M18	HSS4X4X4	.082	2.391	16	.030	.299	z	5	1362...	1395...	16.181	16.181	...	H1-...
54	M54A	LL2.5x2.5x3x3	.080	4.323	17	.002	0	y	42	4462...	58320	3.954	2.55	1	H1-...
55	M56	LL2.5x2.5x3x3	.080	4.323	21	.002	4.323	y	32	4462...	58320	3.954	2.55	1	H1-...
56	M97	PL1/2x6	.055	.094	1	.174	0	y	1	9534...	97200	1.012	12.15	...	H1-...
57	M95	PL1/2x6	.052	.137	1	.147	.23	y	12	9534...	97200	1.012	12.15	...	H1-...
58	M23	PL1/2x6	.050	.137	5	.138	.23	y	4	9534...	97200	1.012	12.15	...	H1-...
59	M42	PL1/2x6	.050	.094	9	.159	0	y	9	9534...	97200	1.012	12.15	...	H1-...
60	M40	PL1/2x6	.049	.137	8	.142	.23	y	8	9534...	97200	1.012	12.15	...	H1-...

Envelope AISC 15th(360-16): LRFD Steel Code Checks (Continued)

	Member	Shape	Code Check	Loc[ft]	LC	Shear Check	Loc[ft]	...	LC	phi*P...	phi*P...	phi*...	phi*...	...	Eqn
61	M25	PL1/2x6	.049	.094	5	.163	0	y	6	9534...	97200	1.012	12.15	...	H1-...
62	A5	PIPE_2.0	.043	4.479	8	.004	4.479		9	8922...	32130	1.872	1.872	...	H1-...

TIA-222-H CONNECTION CHECK
Mount to Tower Connection - Typ. All Sectors
2021740.467473.01

Bolt Information		
Bolt Diameter (d)	0.625	in
Net Tensile Area (An)	0.226	in^2
# of Bolts Total (n)	4	
Bolt Distance Up-Down	6	in
Bolt Distance Left-Right	6	in
Bolt Grade	A325N	
Bolt Tensile Strength (F_{ub})	120	ksi

Flange Information		
Height (h)	8	in
Width (w)	8	in
Thickness (t)	0.75	in
Steel Grade	A36	
Plate Yield Strength (Fy)	36	ksi
Support Arm Height	4	in
Support Arm Width	4	in

RISA 3D Reactions		
Moment (M)	0.37	k-ft
Axial (T)	2.85	kips
Shear (V)	4.98	kips

Bolt Capacity		
Nominal Tensile Strength (R_{nt})	27.120	kips
Nominal Shear Strength (R_{nv})	18.41	kips
Bolt Tensile Force (T_{ub})	1.96	kips
Bolt Shear Force (V_{ub})	1.245	kips
$T_{ub}/\phi R_{nt}$	0.09631	
$V_{ub}/\phi R_{nv}$	0.09017	
$(V_{ub}/\phi R_{nv})^2+(T_{ub}/\phi R_{nt})^2$	0.01741	
Bolt Capacity =	9.6%	OK

Plate Capacity		
Bolt Circle (D_{BC})	8.485	in
Effective Width (B_{eff})	5.66	in
Flexural Moment (M_u)	2.77	k-in
Flexural Strength ($ØM_n$)	25.77	k-in
Plate Capacity=	10.7%	OK

Weld Capacity		
Fillet (leg) =	0.188	in
Throat (eff) =	0.13	in
Fexx =	70.00	ksi
ø =	0.75	
øRn =	4.18	kips/in
Weld Capacity=	32.9%	OK

TIA-222-H CONNECTION CHECK
Platform Kickers to Tower Connection - Typ. All Sectors
2021740.467473.01

Bolt Information		
Bolt Diameter (d)	0.625	in
Net Tensile Area (An)	0.226	in^2
# of Bolts Total (n)	4	
Bolt Distance Up-Down	6	in
Bolt Distance Left-Right	6	in
Bolt Grade	A325N	
Bolt Tensile Strength (F_{ub})	120	ksi

RISA 3D Reactions		
Moment (M)	0.00	k-ft
Axial (T)	-1.69	kips
Shear (V)	3.41	kips

Bolt Capacity		
Nominal Tensile Strength (R_{nt})	27.120	kips
Nominal Shear Strength (R_{nv})	18.41	kips
Bolt Tensile Force (T_{ub})	0.42	kips
Bolt Shear Force (V_{ub})	0.854	kips
$T_{ub}/\phi R_{nt}$	0.02078	
$V_{ub}/\phi R_{nv}$	0.06183	
$(V_{ub}/\phi R_{nv})^2+(T_{ub}/\phi R_{nt})^2$	0.00425	
Bolt Capacity =	6.2%	OK

Mount Desktop – Post Modification Inspection (PMI) Report Requirements

Documents & Photos Required from Contractor – Passing Mount Analysis

Purpose – to provide GPD the proper documentation in order to complete the required Mount Desktop review of the Post Modification Inspection Report.

- Contractor is responsible for making certain the photos provided as noted below provide confirmation that the installation was completed in accordance with this Passing Mount Analysis.
- Contractor shall relay any data that can impact the performance of the mount, this includes safety issues.

Base Requirements:

- Any special photos outside of the standard requirements will be indicated on the passing MA
- Verification that loading is as communicated in the Passing Mount Analysis. NOTE If loading is different than what is conveyed contact GPD immediately.
- Each photo should be time and date stamped
- Photos should be high resolution and submitted in a Zip File and should be organized in the file structure as depicted in Schedule A attached.
- Contractor shall ensure that the safety climb wire rope is supported and not adversely impacted by the install of the modification components. This may involve the install of wire rope guides, or other items to protect the wire rope.
- The photos in the file structure should be uploaded to ***https://pmi.vzwsmart.com*** as depicted on the drawings

Photo Requirements:

- *Base and "During Installation Photos"*
  - Base pictures include
    - Photo of Gate Signs showing the tower owner, site name, and number
    - Photo of carrier shelter showing the carrier site name and number if available
    - Photos of the galvanizing compound and/or paint used (if applicable), clearly showing the label and name
  - "During Installation Photos if provided - must be placed only in this folder
- *Photos taken at ground level*
  - Overall tower structure before and after installation of the equipment modifications
  - Photos of the appropriate mount before and after installation of the modifications; if the mounts are at different rad elevations, pictures must be provided for all elevations that the modifications were installed
- *Photos taken at Mount Elevation*
  - Photos showing each individual sector before and also after installation of equipment.

- These photos should also certify that the placement and geometry of the equipment on the mount is as depicted on the sketch and table in the mount analysis
- Photos showing the safety climb wire rope above and below the mount prior to modification.
- Photos showing the climbing facility and safety climb if present.

Antenna & equipment placement and Geometry Confirmation:

- The contractor must certify that the antenna & equipment placement and geometry is in accordance with the antenna placement diagrams as included in this mount analysis.

☐ The contractor certifies that the photos support and the equipment on the mount is as depicted on the antenna placement diagrams as included in this mount analysis.

☐ The contractor notes that the equipment on the mount is not in accordance with the antenna placement diagrams and has accordingly marked up the diagrams or provided a diagram outlining the differences.

Certifying Individual: Company _____

Name _____

Signature _____

Special Instructions / Validation as required from the MA or any other information the contractor deems necessary to share that was identified:

Issue:

1. Contractor shall verify all the dimensions and member sizes shown in the mount geometry verification requirements section of the mount analysis report. Contact EOR if these documents are not available to the general contractor.
2. Contractor shall install the proposed stacked panels on a new 8'-0" p2.5STD pipe in Position 2 using VZWSMART-MSK1 crossover plate assemblies. The top pf the new pipe shall be installed 1'-10" above the upper face horizontal. Typical for all sectors.

Response:

Schedule A – Photo & Document File Structure

- VzW Site Number / Name
  - Base & "During Installation" Photos
  - Pre-Installation Photos
    - Alpha
    - Beta
    - Gamma
    - Ground Level
    - Tape Drop
  - Post-Installation Photos
    - Alpha
    - Beta
    - Gamma
    - Ground Level
    - Tape Drop
    - Photos of climbing facility and safety climb – If Present
  - Certifications – Submission of this document including certifications
  - Specific Required Additional Photos

Structure: 467473-VZW - MILLDALE CT

Sector: **A** 6/29/2021

Structure Type: Monopole 10039594

Mount Elev: 136.25 Page: 1

Plan View

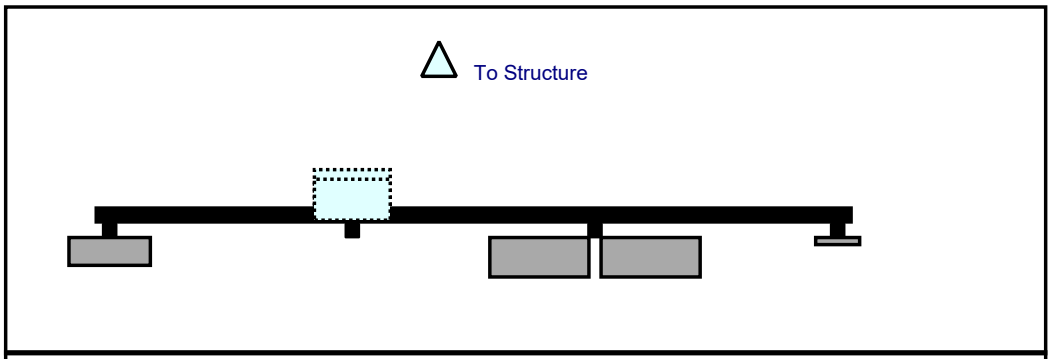

Front View
Looking at Structure

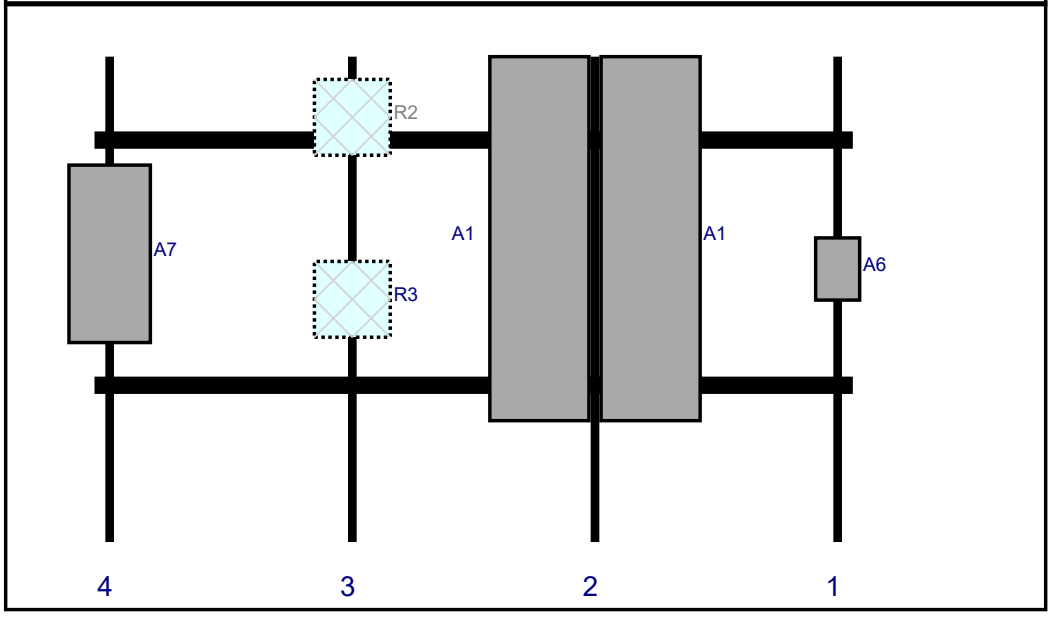

Ref#	Model	Height (in)	Width (in)	H Dist Frm L.	Pipe #	Pipe Pos V	Ant Pos	C. Ant Frm T.	Ant H Off	Status	Validation
A6	XXDWMM-12.5-65	12.3	8.7	147	1	a	Front	42	0	Added	
A1	NNHH-65B-R4	72	19.6	99	2	a	Front	36	-11	Retained	03/24/2021
A1	NNHH-65B-R4	72	19.6	99	2	b	Front	36	11	Retained	03/24/2021
R2	B2/B66A RRH-BR049 (RFV01U-D1A)	15	15	51	3	a	Behind	12	0	Retained	03/24/2021
R3	B5/B13 RRH-BR04C (RFV01U-D2A)	15	15	51	3	a	Behind	48	0	Retained	03/24/2021
A7	MT6407-77A	35.1	16.1	3	4	a	Front	39	0	Added	

Copyright 2019 by Tower Engineering Solutions, LLC. All Rights Reserved

Plan View

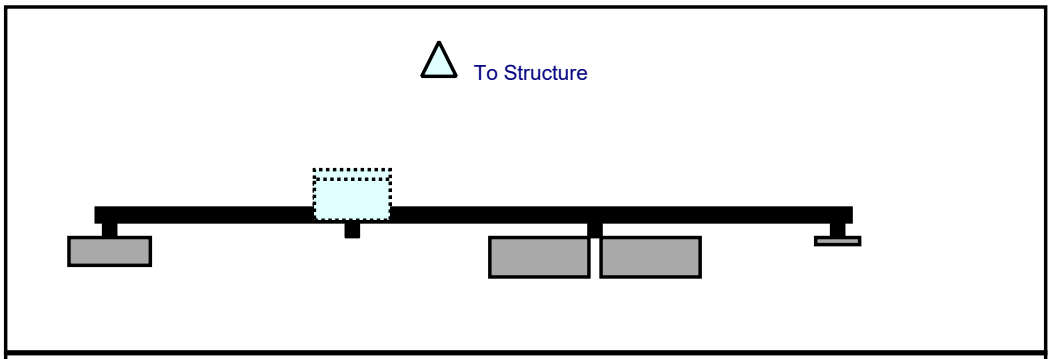

Front View
Looking at Structure

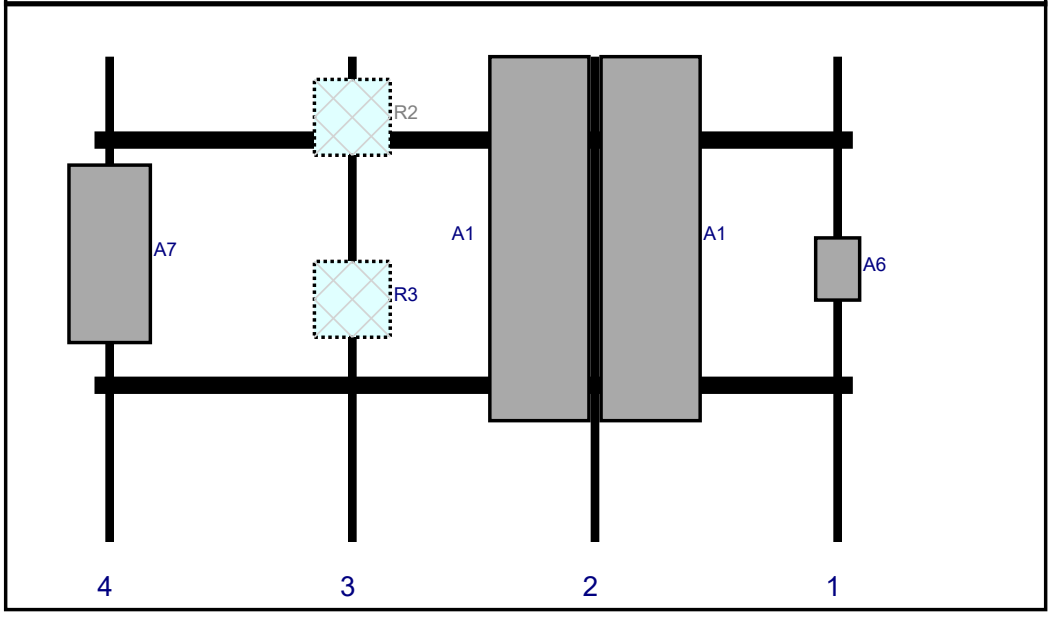

Ref#	Model	Height (in)	Width (in)	H Dist Frm L.	Pipe #	Pipe Pos V	Ant Pos	C. Ant Frm T.	Ant H Off	Status	Validation
A6	XXDWMM-12.5-65	12.3	8.7	147	1	a	Front	42	0	Added	
A1	NNHH-65B-R4	72	19.6	99	2	a	Front	36	-11	Retained	03/24/2021
A1	NNHH-65B-R4	72	19.6	99	2	b	Front	36	11	Retained	03/24/2021
R2	B2/B66A RRH-BR049 (RFV01U-D1A)	15	15	51	3	a	Behind	12	0	Retained	03/24/2021
R3	B5/B13 RRH-BR04C (RFV01U-D2A)	15	15	51	3	a	Behind	48	0	Retained	03/24/2021
A7	MT6407-77A	35.1	16.1	3	4	a	Front	39	0	Added	

Copyright 2019 by Tower Engineering Solutions, LLC. All Rights Reserved

Plan View

Front View
Looking at Structure

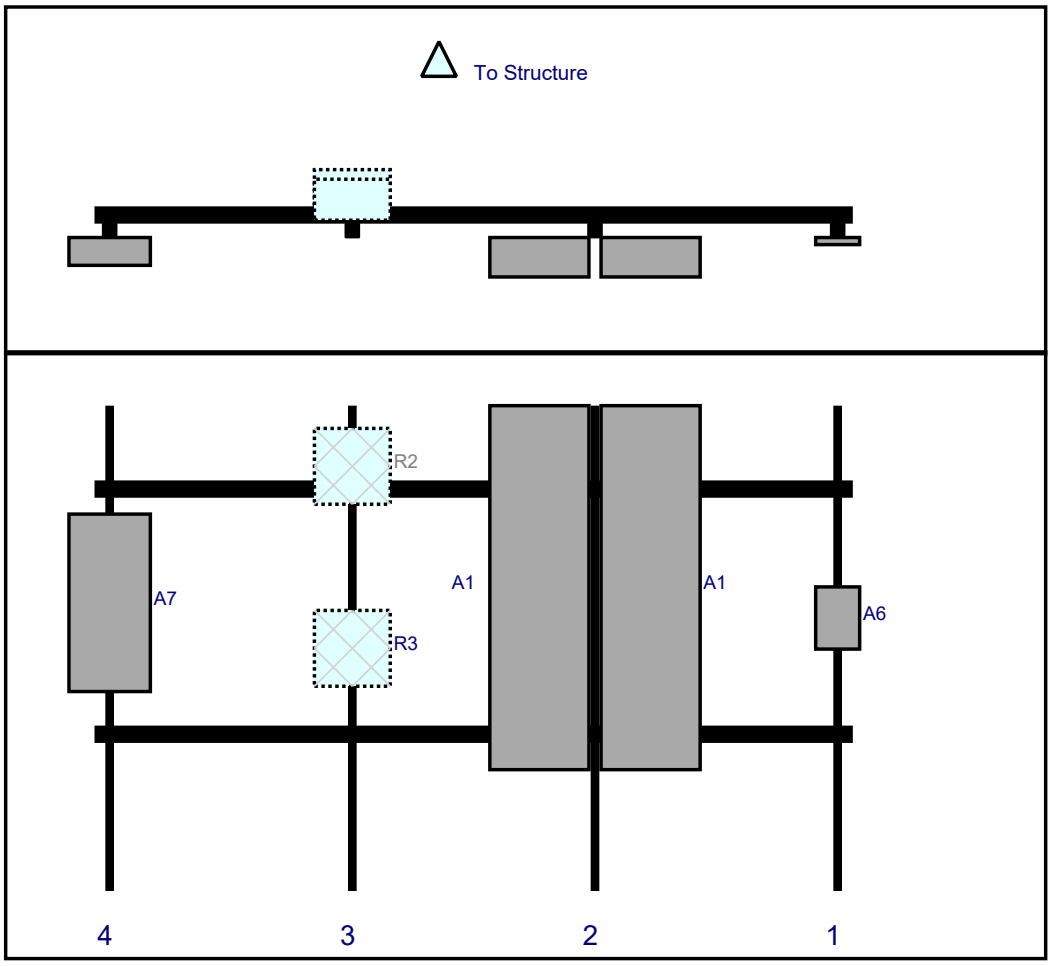

Ref#	Model	Height (in)	Width (in)	H Dist Frm L.	Pipe #	Pipe Pos V	Ant Pos	C. Ant Frm T.	Ant H Off	Status	Validation
A6	XXDWMM-12.5-65	12.3	8.7	147	1	a	Front	42	0	Added	
A1	NNHH-65B-R4	72	19.6	99	2	a	Front	36	-11	Retained	03/24/2021
A1	NNHH-65B-R4	72	19.6	99	2	b	Front	36	11	Retained	03/24/2021
R2	B2/B66A RRH-BR049 (RFV01U-D1A)	15	15	51	3	a	Behind	12	0	Retained	03/24/2021
R3	B5/B13 RRH-BR04C (RFV01U-D2A)	15	15	51	3	a	Behind	48	0	Retained	03/24/2021
A7	MT6407-77A	35.1	16.1	3	4	a	Front	39	0	Added	

Copyright 2019 by Tower Engineering Solutions, LLC. All Rights Reserved

GPD Engineering and Architecture
Professional Corporation

June 29, 2021
2021740.467473.01

Subject	TIA-222-H Usage
Site Information	Site ID: 467473-VZW / MILLDALE CT Site Name: MILLDALE CT Carrier Name: Verizon Wireless Address: 1394 Meriden Waterbury Rd, Southington, Connecticut, 6479, Hartford County Latitude: 41.564275° Longitude: -72.891861°
Structure Information	Tower Type: Monopole Mount Type: 12.50-Ft Platform Mount

To Whom It May Concern,

We respectfully submit the above referenced Antenna Mount Structural Analysis report in conformance with ANSI/TIA-222-H, Structural Standard for Antenna Supporting Structures and Antennas and Small Wind Turbine Support Structures.

The 2015 International Building Code states that, in Section 3108, telecommunication towers shall be designed and constructed in accordance with the provisions of TIA-222. TIA-222-H is the latest revision of the TIA-222 Standard, effective as of January 01, 2018.

As with all ANSI standards and engineering best practice is to apply the most current revision of the standard. This ensures the engineer is applying all updates. As an example, the TIA-222-H Standard includes updates to bring it in line with the latest AISC and ACI standards and it also incorporates the latest wind speed maps by ASCE 7 based on updated studies of the wind data.

The TIA-222-H standard clarifies these specific requirements for the antenna mount analysis such as modeling methods, seismic analysis, 30-degree increment wind directions and maintenance loading. Therefore, it is our opinion that TIA-222-H is the most appropriate standard for antenna mount structural analysis and is acceptable for use at this site to ensure the engineer is taking into account the most current engineering standard available.

Sincerely,

GPD Group

Christopher J. Scheks, *P.E.*
Connecticut #: 30026

Exhibit E

Site Name: ***MILLDALE CT***
Cumulative Power Density

Operator	Operating Frequency	Number of Trans.	ERP Per Trans.	Total ERP	Distance to Target	Calculated Power Density	Maximum Permissible Exposure*	Fraction of MPE
	(MHz)		(watts)	(watts)	(feet)	(mW/cm^2)	(mW/cm^2)	(%)
VZW 700	751	4	621	2484	138	0.0047	0.5007	0.94%
VZW CDMA	869	2	394	789	138	0.0015	0.5793	0.26%
VZW Cellular	869	4	735	2940	138	0.0056	0.5793	0.96%
VZW PCS	1980	4	1245	4980	138	0.0094	1.0000	0.94%
VZW AWS	2125	4	1489	5956	138	0.0112	1.0000	1.12%
VZW CBAND	3730	4	6531	26124	138	0.0493	1.0000	4.93%
VZW CBRS	3625	4	12	48	138	0.0001	1.0000	0.01%
Total Percentage of Maximum Permissible Exposure								9.16%

*Guidelines adopted by the FCC on August 1, 1996, 47 CFR Part 1 based on NCRP Report 86, 1986 and generally on ANSI/IEEE C95.1-1992
**Calculation includes a -10 dB Off Beam Antenna Pattern Adjustment pursuant to Attachments B and C of the Siting Council's November 10, 2015 Memorandum for Exempt Modification filings

MHz = Megahertz
mW/cm^2 = milliwatts per square centimeter
ERP = Effective Radiated Power

Absolute worst case maximum values used.

Exhibit F

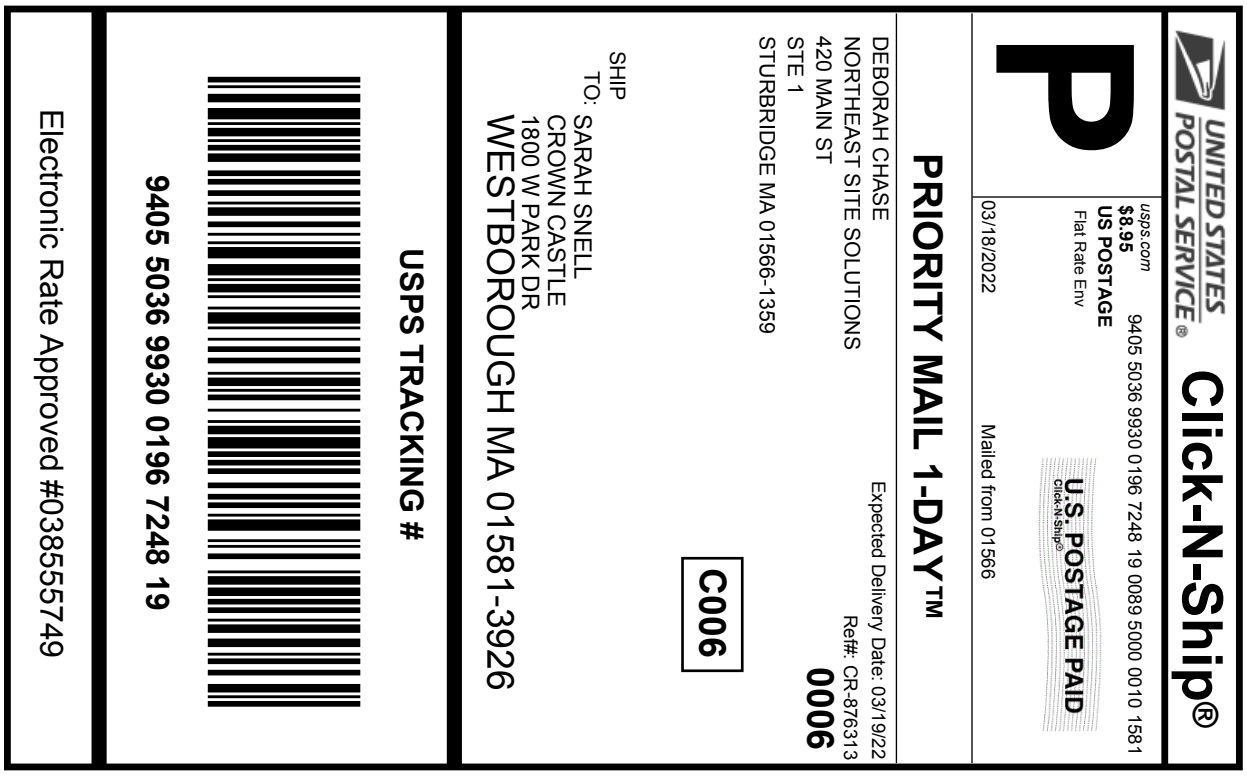

Cut on dotted line.

Instructions

1. **Each Click-N-Ship® label is unique. Labels are to be used as printed and used only once. DO NOT PHOTO COPY OR ALTER LABEL.**
2. **Place your label so it does not wrap around the edge of the package.**
3. **Adhere your label to the package. A self-adhesive label is recommended. If tape or glue is used, DO NOT TAPE OVER BARCODE. Be sure all edges are secure.**
4. **To mail your package with PC Postage®, you may schedule a Package Pickup online, hand to your letter carrier, take to a Post Office™, or drop in a USPS collection box.**
5. **Mail your package on the "Ship Date" you selected when creating this label.**

Click-N-Ship® Label Record

USPS TRACKING # :
9405 5036 9930 0196 7248 19

Trans. #:	559147277
Print Date:	03/18/2022
Ship Date:	03/18/2022
Expected Delivery Date:	03/19/2022

Priority Mail® Postage:	**$8.95**
Total:	**$8.95**

From: DEBORAH CHASE
NORTHEAST SITE SOLUTIONS
420 MAIN ST
STE 1
STURBRIDGE MA 01566-1359

Ref#: CR-876313

To: SARAH SNELL
CROWN CASTLE
1800 W PARK DR
WESTBOROUGH MA 01581-3926

* Retail Pricing Priority Mail rates apply. There is no fee for USPS Tracking® service on Priority Mail service with use of this electronic rate shipping label. Refunds for unused postage paid labels can be requested online 30 days from the print date.

Thank you for shipping with the United States Postal Service!
Check the status of your shipment on the USPS Tracking® page at usps.com

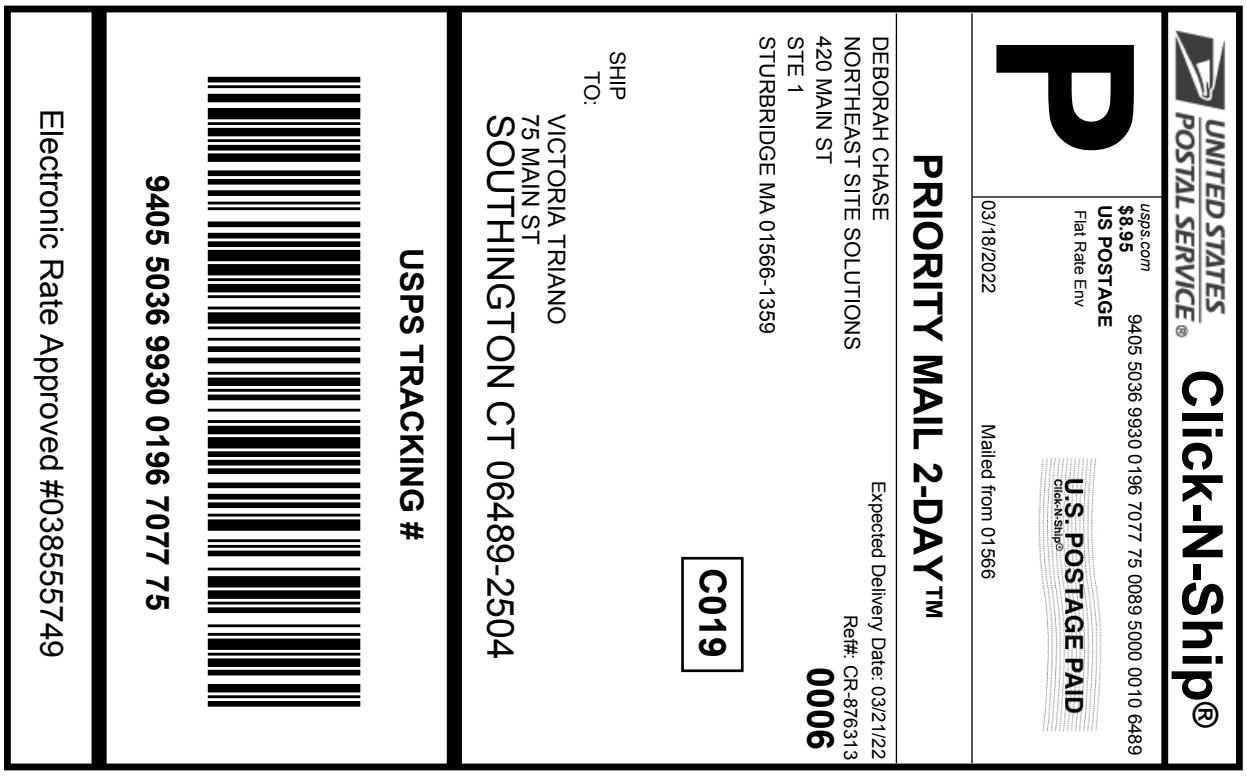

Cut on dotted line.

Instructions

1. **Each Click-N-Ship® label is unique. Labels are to be used as printed and used only once. DO NOT PHOTO COPY OR ALTER LABEL.**
2. **Place your label so it does not wrap around the edge of the package.**
3. **Adhere your label to the package. A self-adhesive label is recommended. If tape or glue is used, DO NOT TAPE OVER BARCODE. Be sure all edges are secure.**
4. **To mail your package with PC Postage®, you may schedule a Package Pickup online, hand to your letter carrier, take to a Post Office™, or drop in a USPS collection box.**
5. **Mail your package on the "Ship Date" you selected when creating this label.**

Click-N-Ship® Label Record

USPS TRACKING # :
9405 5036 9930 0196 7077 75

Trans. #:	559145789
Print Date:	03/18/2022
Ship Date:	03/18/2022
Expected Delivery Date:	03/21/2022

Priority Mail® Postage:	**$8.95**
Total:	**$8.95**

From: DEBORAH CHASE
NORTHEAST SITE SOLUTIONS
420 MAIN ST
STE 1
STURBRIDGE MA 01566-1359

Ref#: CR-876313

To: VICTORIA TRIANO
75 MAIN ST
SOUTHINGTON CT 06489-2504

* Retail Pricing Priority Mail rates apply. There is no fee for USPS Tracking® service on Priority Mail service with use of this electronic rate shipping label. Refunds for unused postage paid labels can be requested online 30 days from the print date.

Thank you for shipping with the United States Postal Service!
Check the status of your shipment on the USPS Tracking® page at usps.com

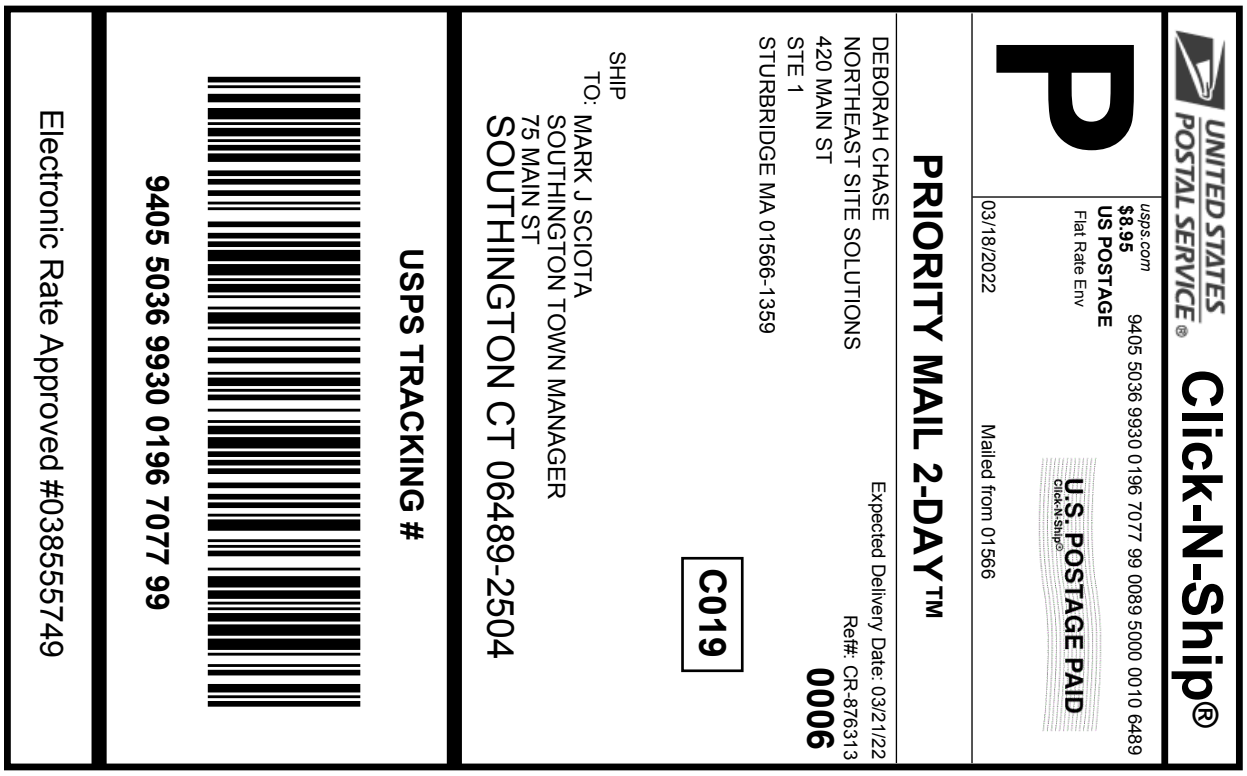

Cut on dotted line.

Instructions

1. **Each Click-N-Ship® label is unique. Labels are to be used as printed and used only once. DO NOT PHOTO COPY OR ALTER LABEL.**
2. **Place your label so it does not wrap around the edge of the package.**
3. **Adhere your label to the package. A self-adhesive label is recommended. If tape or glue is used, DO NOT TAPE OVER BARCODE. Be sure all edges are secure.**
4. **To mail your package with PC Postage®, you may schedule a Package Pickup online, hand to your letter carrier, take to a Post Office™, or drop in a USPS collection box.**
5. **Mail your package on the "Ship Date" you selected when creating this label.**

Click-N-Ship® Label Record

USPS TRACKING # :
9405 5036 9930 0196 7077 99

Trans. #:	559145789
Print Date:	03/18/2022
Ship Date:	03/18/2022
Expected Delivery Date:	03/21/2022

Priority Mail® Postage:	**$8.95**
Total:	**$8.95**

From: DEBORAH CHASE
NORTHEAST SITE SOLUTIONS
420 MAIN ST
STE 1
STURBRIDGE MA 01566-1359

Ref#: CR-876313

To: MARK J SCIOTA
SOUTHINGTON TOWN MANAGER
75 MAIN ST
SOUTHINGTON CT 06489-2504

* Retail Pricing Priority Mail rates apply. There is no fee for USPS Tracking® service on Priority Mail service with use of this electronic rate shipping label. Refunds for unused postage paid labels can be requested online 30 days from the print date.

Thank you for shipping with the United States Postal Service!
Check the status of your shipment on the USPS Tracking® page at usps.com

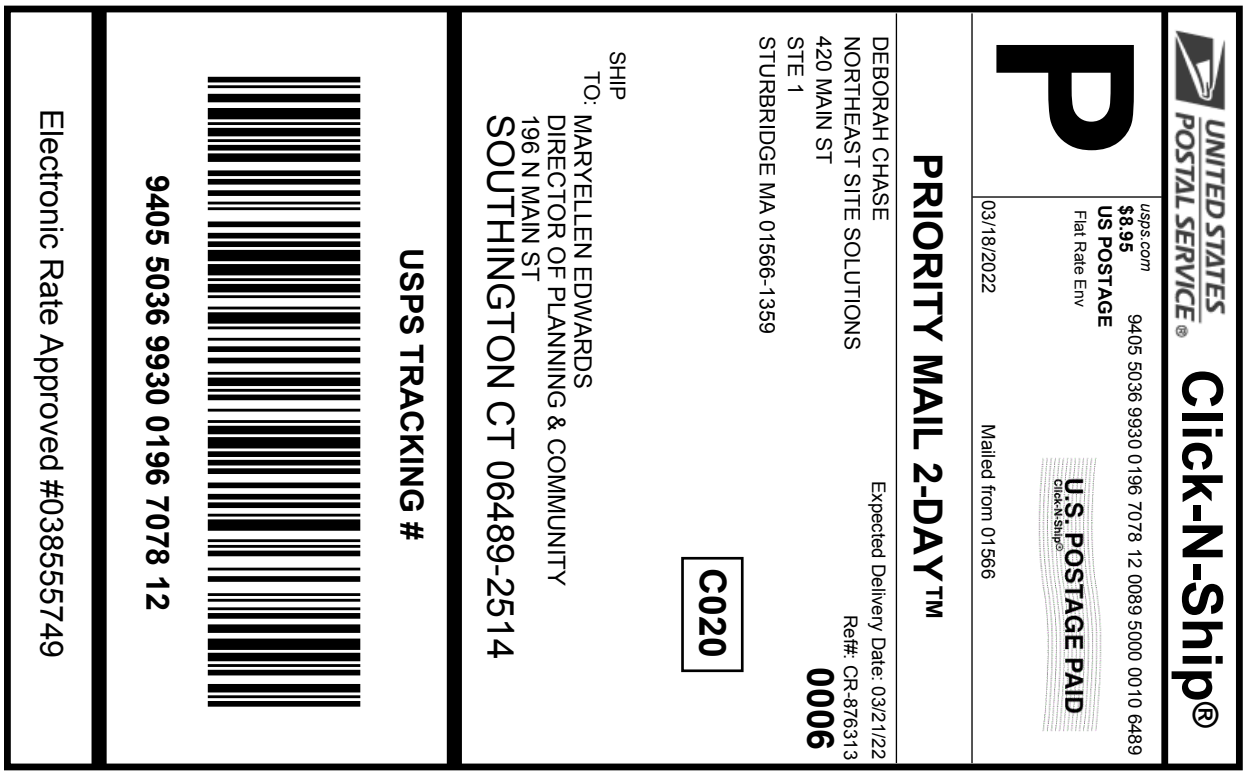

Cut on dotted line.

Instructions

1. **Each Click-N-Ship® label is unique. Labels are to be used as printed and used only once. DO NOT PHOTO COPY OR ALTER LABEL.**
2. **Place your label so it does not wrap around the edge of the package.**
3. **Adhere your label to the package. A self-adhesive label is recommended. If tape or glue is used, DO NOT TAPE OVER BARCODE. Be sure all edges are secure.**
4. **To mail your package with PC Postage®, you may schedule a Package Pickup online, hand to your letter carrier, take to a Post Office™, or drop in a USPS collection box.**
5. **Mail your package on the "Ship Date" you selected when creating this label.**

Click-N-Ship® Label Record

USPS TRACKING # :
9405 5036 9930 0196 7078 12

Trans. #:	559145789
Print Date:	03/18/2022
Ship Date:	03/18/2022
Expected Delivery Date:	03/21/2022

Priority Mail® Postage:	**$8.95**
Total:	**$8.95**

From: DEBORAH CHASE
NORTHEAST SITE SOLUTIONS
420 MAIN ST
STE 1
STURBRIDGE MA 01566-1359

Ref#: CR-876313

To: MARYELLEN EDWARDS
DIRECTOR OF PLANNING & COMMUNITY DEVELOPMENT
196 N MAIN ST
SOUTHINGTON CT 06489-2514

* Retail Pricing Priority Mail rates apply. There is no fee for USPS Tracking® service on Priority Mail service with use of this electronic rate shipping label. Refunds for unused postage paid labels can be requested online 30 days from the print date.

Thank you for shipping with the United States Postal Service!
Check the status of your shipment on the USPS Tracking® page at usps.com

876313 Crown VZW

UNITED STATES POSTAL SERVICE.

FARMINGTON
210 MAIN ST
FARMINGTON, CT 06032-9998
(800)275-8777

03/18/2022 03:21 PM

Product	Qty	Unit Price	Price
Prepaid Mail Westborough, MA 01581 Weight: 0 lb 1.90 oz Acceptance Date: Fri 03/18/2022 Tracking #: 9405 5036 9930 0196 7248 19	1		$0.00
Prepaid Mail Southington, CT 06489 Weight: 0 lb 8.90 oz Acceptance Date: Fri 03/18/2022 Tracking #: 9405 5036 9930 0196 7077 75	1		$0.00
Prepaid Mail Southington, CT 06489 Weight: 0 lb 8.90 oz Acceptance Date: Fri 03/18/2022 Tracking #: 9405 5036 9930 0196 7077 99	1		$0.00
Prepaid Mail Southington, CT 06489 Weight: 0 lb 8.90 oz Acceptance Date: Fri 03/18/2022 Tracking #: 9405 5036 9930 0196 7078 12	1		$0.00
Grand Total:			$0.00

****
Every household in the U.S. is now
eligible to receive a second set
of 4 free test kits.
Go to www.covidtests.gov
****