Date: **August 10, 2021**

Darcy Tarr
Crown Castle
3530 Toringdon Way, Suite 300
Charlotte, NC 28277
(704) 405-6589

Trylon
1825 W. Walnut Hill Lane,
Suite 302
Irving, TX 75038
214-930-1730

Subject:	**Mount Replacement Analysis Report**	
Carrier Designation:	**Dish Network Equipment Change Out**	
	Carrier Site Number:	BOBDL00077A
	Carrier Site Name:	CT-CCI-T-876313
Crown Castle Designation:	**Crown Castle BU Number:**	876313
	Crown Castle Site Name:	West Johnson Ave. Burnt House
	Crown Castle JDE Job Number:	650067
	Crown Castle Order Number:	556616 Rev. 0
Engineering Firm Designation:	**Trylon Report Designation:**	189055
Site Data:	**1394 Meriden Waterbury Tpk, Southington, Hartford County, CT, 06489**	
	Latitude 41°33'51.39" Longitude -72°53'30.70"	
Structure Information:	**Tower Height & Type:**	**160.0 ft Monopole**
	Mount Elevation:	**119.0 ft**
	Mount Type:	**8.0 ft T-Arm**

Dear Darcy Tarr,

Trylon is pleased to submit this **"Mount Replacement Analysis Report"** to determine the structural integrity of Dish Network's antenna mounting system with the proposed appurtenance and equipment addition on the abovementioned supporting tower structure. Analysis of the existing supporting tower structure is to be completed by others and therefore is not part of this analysis. Analysis of the antenna mounting system as a tie-off point for fall protection or rigging is not part of this document.

The purpose of the analysis is to determine acceptability of the mount stress level. Based on our analysis we have determined the mount stress level to be:

T-Arm **Sufficient**
***Sufficient upon completion of the changes listed in the 'Recommendations' section of this report.**

This analysis utilizes an ultimate 3-second gust wind speed of 125 mph as required by the 2018 Connecticut State Building Code. Applicable Standard references and design criteria are listed in Section 2 - Analysis Criteria.

Mount analysis prepared by: Bryan P. Mawhinney

Respectfully Submitted by:
Jinshan Wang, P.E.

STATE OF CONNECTICUT
JINSHAN WANG
Aug 10, 2021
PEN.0034086
LICENSED
PROFESSIONAL ENGINEER

Jinshan Wang
Digitally signed by Jinshan Wang
Date: 2021.08.10 16:24:00 -04'00'

TABLE OF CONTENTS

1) INTRODUCTION

2) ANALYSIS CRITERIA
Table 1 - Proposed Equipment Configuration

3) ANALYSIS PROCEDURE
Table 2 - Documents Provided
3.1) Analysis Method
3.2) Assumptions

4) ANALYSIS RESULTS
Table 3 - Mount Component Stresses vs. Capacity
4.1) Recommendations

5) APPENDIX A
Wire Frame and Rendered Models

6) APPENDIX B
Software Input Calculations

7) APPENDIX C
Software Analysis Output

8) APPENDIX D
Additional Calculations

9) APPENDIX E
Supplemental Drawings

1) INTRODUCTION

This is a proposed 3 sector 8.0 ft T-Arm, designed by Commscope.

2) ANALYSIS CRITERIA

Building Code:	2015 IBC / 2018 CTSBC
TIA-222 Revision:	TIA-222-H
Risk Category:	II
Ultimate Wind Speed:	125 mph
Exposure Category:	B
Topographic Factor at Base:	1.0
Topographic Factor at Mount:	1.0
Ice Thickness:	1.5 in
Wind Speed with Ice:	50 mph
Seismic S_s:	0.185
Seismic S_1:	0.064
Live Loading Wind Speed:	30 mph
Man Live Load at Mid/End-Points:	250 lb
Man Live Load at Mount Pipes:	500 lb

Table 1 - Proposed Equipment Configuration

Mount Centerline (ft)	Antenna Centerline (ft)	Number of Antennas	Antenna Manufacturer	Antenna Model	Mount / Modification Details
119.0	119.0	3	JMA WIRELESS	MX08FRO665-21	8.0 ft T-Arm [Commscope MC-K6MHDX-9-96]
		3	FUJITSU	TA08025-B604	
		3	FUJITSU	TA08025-B605	
		1	RAYCAP	RDIDC-9181-PF-48	

3) ANALYSIS PROCEDURE

Table 2 - Documents Provided

Document	Remarks	Reference	Source
Crown Application	Dish Network Application	556616 Rev. 0	CCI Sites
Tower Structural Analysis Reports	Crown Castle	9791165	CCI Sites
Mount Manufacturer Drawings	Commscope	MC-PK8-DSH	TSA

3.1) Analysis Method

RISA-3D (Version 17.0.4), a commercially available analysis software package, was used to create a three-dimensional model of the antenna mounting system and calculate member stresses for various loading cases.

A tool internally developed, using Microsoft Excel, by Trylon was used to calculate wind loading on all appurtenances, dishes, and mount members for various load cases. Selected output from the analysis is included in Appendix B.

This analysis was performed in accordance with Crown Castle's ENG-SOW-10208 *Tower Mount Analysis* (Revision B).

3.2) Assumptions

1) The antenna mounting system was properly fabricated, installed and maintained in good condition in accordance with its original design and manufacturer's specifications.
2) The configuration of antennas, mounts, and other appurtenances are as specified in Table 1 and the referenced drawings.
3) All member connections are assumed to have been designed to meet or exceed the load carrying capacity of the connected member unless otherwise specified in this report.
4) The analysis will be required to be revised if the existing conditions in the field differ from those shown in the above-referenced documents or assumed in this analysis. No allowance was made for any damaged, missing, or rusted members.
5) Prior structural modifications to the tower mounting system are assumed to be installed as shown per available data.
6) Steel grades have been assumed as follows, unless noted otherwise:

Channel, Solid Round, Angle, Plate	ASTM A36 (GR 36)
HSS (Rectangular)	ASTM A500 (GR B-46)
Pipe	ASTM A53 (GR 35)
Connection Bolts	ASTM A325

This analysis may be affected if any assumptions are not valid or have been made in error. Trylon should be notified to determine the effect on the structural integrity of the antenna mounting system.

4) ANALYSIS RESULTS

Table 3 - Mount Component Stresses vs. Capacity (T-Arm, Worst Case Sector)

Notes	Component	Critical Member	Centerline (ft)	% Capacity	Pass / Fail
1, 2	Mount Pipe(s)	MP2	119.0	30.0	Pass
	Horizontal(s)	H1		41.8	Pass
	Standoff(s)	M1		31.6	Pass
	Mount Connection(s)	--		25.9	Pass

Structure Rating (max from all components) =	**41.8%**

Notes:
1) See additional documentation in "Appendix C - Software Analysis Output" for calculations supporting the % capacity consumed.
2) Rating per TIA-222-H, Section 15.5

4.1) Recommendations

The mount has sufficient capacity to carry the proposed loading configuration. In order for the results of the analysis to be considered valid, the proposed mount listed below must be installed.

1. Commscope MC-K6MHDX-9-96.

No structural modifications are required at this time, provided that the above-listed changes are implemented.

APPENDIX A

WIRE FRAME AND RENDERED MODELS

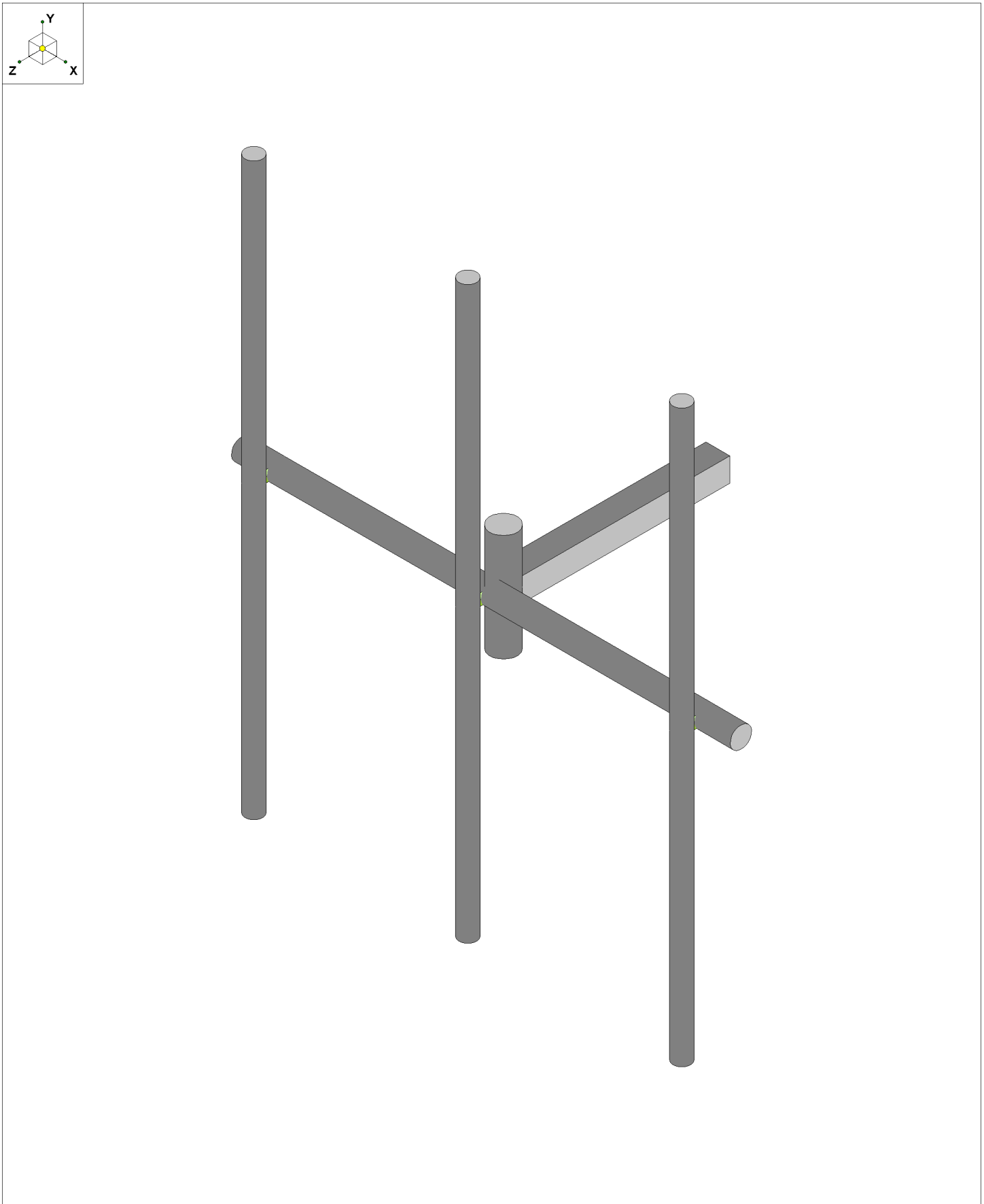

	MC-K6MHDX-9-96	SK - 1
		Aug 10, 2021 at 10:17 AM
		MC-K6MHDX-9-96_loaded.r3d

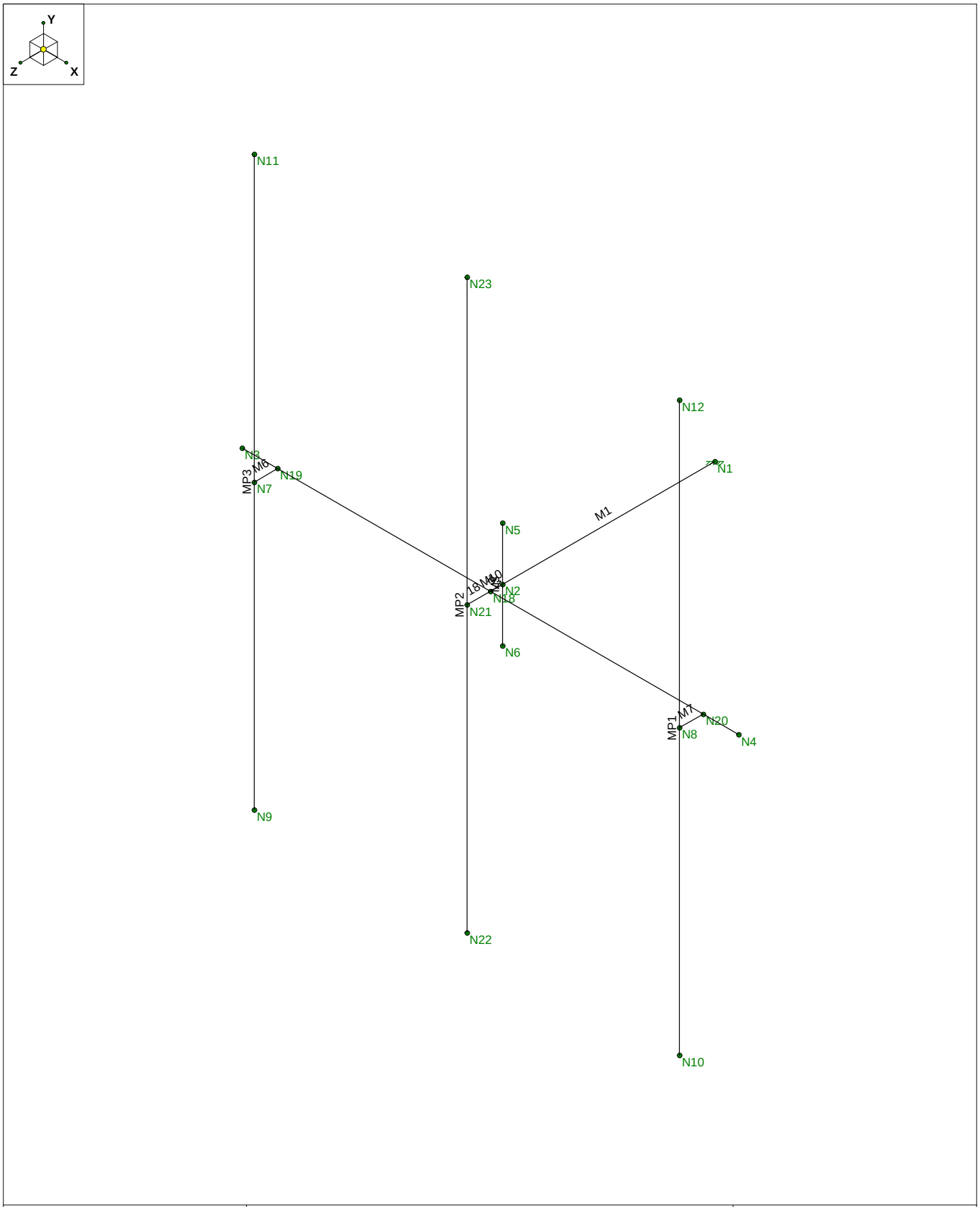

	MC-K6MHDX-9-96	SK - 2
		Aug 10, 2021 at 10:18 AM
		MC-K6MHDX-9-96_loaded.r3d

APPENDIX B

SOFTWARE INPUT CALCULATIONS

ASCE 7 Hazards Report

Address:
No Address at This Location

Standard: ASCE/SEI 7-10
Risk Category: II
Soil Class: D - Stiff Soil

Elevation: 133.13 ft (NAVD 88)
Latitude: 41.564275
Longitude: -72.891861

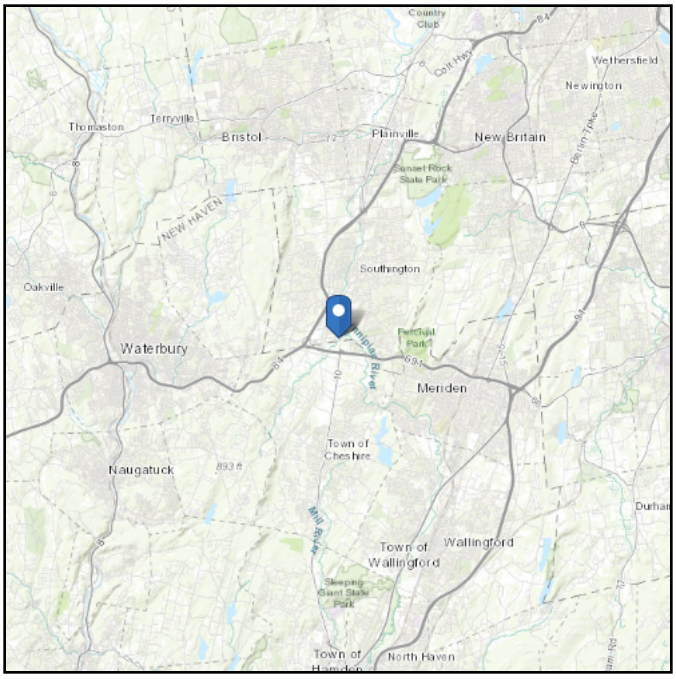

Seismic

Site Soil Class: D - Stiff Soil

Results:

S_S :	0.185	S_{DS} :	0.197
S_1 :	0.064	S_{D1} :	0.102
F_a :	1.6	T_L :	6
F_v :	2.4	PGA :	0.095
S_{MS} :	0.296	PGA_M :	0.152
S_{M1} :	0.152	F_{PGA} :	1.6
		I_e :	1

Seismic Design Category B

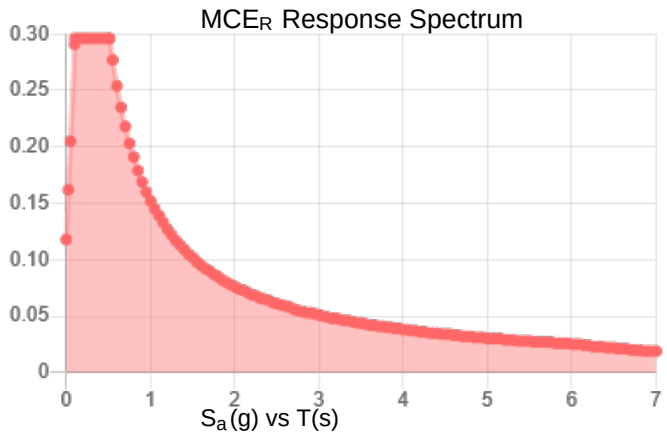

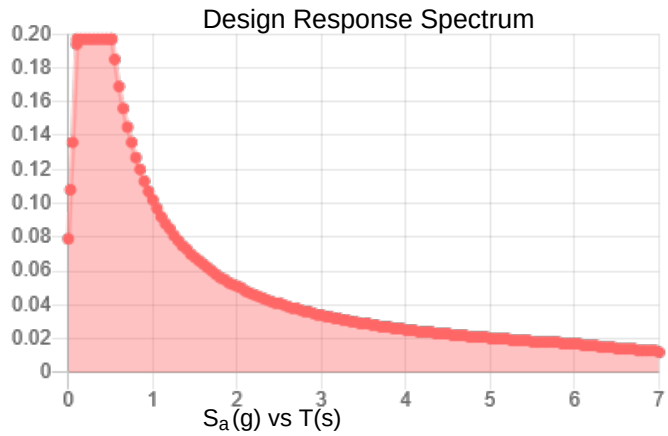

Data Accessed: Mon Aug 02 2021

Date Source: USGS Seismic Design Maps based on ASCE/SEI 7-10, incorporating Supplement 1 and errata of March 31, 2013, and ASCE/SEI 7-10 Table 1.5-2. Additional data for site-specific ground motion procedures in accordance with ASCE/SEI 7-10 Ch. 21 are available from USGS.

Ice

Results:

Ice Thickness:	0.75 in.
Concurrent Temperature:	15 F
Gust Speed:	50 mph
Data Source:	Standard ASCE/SEI 7-10, Figs. 10-2 through 10-8
Date Accessed:	Mon Aug 02 2021

Ice thicknesses on structures in exposed locations at elevations higher than the surrounding terrain and in valleys and gorges may exceed the mapped values.

Values provided are equivalent radial ice thicknesses due to freezing rain with concurrent 3-second gust speeds, for a 50-year mean recurrence interval, and temperatures concurrent with ice thicknesses due to freezing rain. Thicknesses for ice accretions caused by other sources shall be obtained from local meteorological studies. Ice thicknesses in exposed locations at elevations higher than the surrounding terrain and in valleys and gorges may exceed the mapped values.

The ASCE 7 Hazard Tool is provided for your convenience, for informational purposes only, and is provided “as is” and without warranties of any kind. The location data included herein has been obtained from information developed, produced, and maintained by third party providers; or has been extrapolated from maps incorporated in the ASCE 7 standard. While ASCE has made every effort to use data obtained from reliable sources or methodologies, ASCE does not make any representations or warranties as to the accuracy, completeness, reliability, currency, or quality of any data provided herein. Any third-party links provided by this Tool should not be construed as an endorsement, affiliation, relationship, or sponsorship of such third-party content by or from ASCE.

ASCE does not intend, nor should anyone interpret, the results provided by this Tool to replace the sound judgment of a competent professional, having knowledge and experience in the appropriate field(s) of practice, nor to substitute for the standard of care required of such professionals in interpreting and applying the contents of this Tool or the ASCE 7 standard.

In using this Tool, you expressly assume all risks associated with your use. Under no circumstances shall ASCE or its officers, directors, employees, members, affiliates, or agents be liable to you or any other person for any direct, indirect, special, incidental, or consequential damages arising from or related to your use of, or reliance on, the Tool or any information obtained therein. To the fullest extent permitted by law, you agree to release and hold harmless ASCE from any and all liability of any nature arising out of or resulting from any use of data provided by the ASCE 7 Hazard Tool.

Trylon
1825 W. Walnut Hill Lane Suite 120
Irving, TX 75038

TIA LOAD CALCULATOR 2.0

PROJECT DATA	
Job Code:	189055
Carrier Site ID:	BOBDL00077A
Carrier Site Name:	CT-CCI-T-876313

CODES AND STANDARDS	
Building Code:	2015 IBC
Local Building Code:	2018 CTSBC
Design Standard:	TIA-222-H

STRUCTURE DETAILS		
Mount Type:	T-Arm	--
Mount Elevation:	119.0	ft.
Number of Sectors:	3	--
Structure Type:	Monopole	--
Structure Height:	160.0	ft.

ANALYSIS CRITERIA		
Structure Risk Category:	II	--
Exposure Category:	B	--
Site Class:	D - Default	--
Ground Elevation:	133	ft.

TOPOGRAPHIC DATA		
Topographic Category:	1.00	--
Topographic Feature:	N/A	--
Crest Point Elevation:	0.00	ft.
Base Point Elevation:	0.00	ft.
Crest to Mid-Height (L/2):	0.00	ft.
Distance from Crest (x):	0.00	ft.
Base Topo Factor (K_{zt}):	1.00	--
Mount Topo Factor (K_{zt}):	1.00	--

WIND PARAMETERS		
Design Wind Speed:	125	mph
Wind Escalation Factor (K_s):	1.00	--
Velocity Coefficient (K_z):	1.04	--
Directionality Factor (K_d):	0.95	--
Gust Effect Factor (Gh):	1.00	--
Shielding Factor (K_a):	0.90	--
Velocity Pressure (q_z):	39.28	psf

ICE PARAMETERS		
Design Ice Wind Speed:	50	mph
Design Ice Thickness (t_i):	1.50	in
Importance Factor (I_i):	1.00	--
Ice Velocity Pressure (q_{zi}):	39.28	psf
Mount Ice Thickness (t_{iz}):	1.71	in

WIND STRUCTURE CALCULATIONS		
Flat Member Pressure:	70.70	psf
Round Member Pressure:	42.42	psf
Ice Wind Pressure:	7.43	psf

SEISMIC PARAMETERS		
Importance Factor (I_e):	1.00	--
Short Period Accel .(S_s):	0.19	g
1 Second Accel (S_1):	0.06	g
Short Period Des. (S_{DS}):	0.20	g
1 Second Des. (S_{D1}):	0.10	g
Short Period Coeff. (F_a):	1.60	--
1 Second Coeff. (F_v):	2.40	--
Response Coefficient (Cs):	0.10	--
Amplification Factor (A_S):	1.20	--

LOAD COMBINATIONS [LRFD]

#	Description
1	1.4DL
2	1.2DL + 1WL 0 AZI
3	1.2DL + 1WL 30 AZI
4	1.2DL + 1WL 45 AZI
5	1.2DL + 1WL 60 AZI
6	1.2DL + 1WL 90 AZI
7	1.2DL + 1WL 120 AZI
8	1.2DL + 1WL 135 AZI
9	1.2DL + 1WL 150 AZI
10	1.2DL + 1WL 180 AZI
11	1.2DL + 1WL 210 AZI
12	1.2DL + 1WL 225 AZI
13	1.2DL + 1WL 240 AZI
14	1.2DL + 1WL 270 AZI
15	1.2DL + 1WL 300 AZI
16	1.2DL + 1WL 315 AZI
17	1.2DL + 1WL 330 AZI
18	0.9DL + 1WL 0 AZI
19	0.9DL + 1WL 30 AZI
20	0.9DL + 1WL 45 AZI
21	0.9DL + 1WL 60 AZI
22	0.9DL + 1WL 90 AZI
23	0.9DL + 1WL 120 AZI
24	0.9DL + 1WL 135 AZI
25	0.9DL + 1WL 150 AZI
26	0.9DL + 1WL 180 AZI
27	0.9DL + 1WL 210 AZI
28	0.9DL + 1WL 225 AZI
29	0.9DL + 1WL 240 AZI
30	0.9DL + 1WL 270 AZI
31	0.9DL + 1WL 300 AZI
32	0.9DL + 1WL 315 AZI
33	0.9DL + 1WL 330 AZI
34	1.2DL + 1DLi + 1WLi 0 AZI
35	1.2DL + 1DLi + 1WLi 30 AZI
36	1.2DL + 1DLi + 1WLi 45 AZI
37	1.2DL + 1DLi + 1WLi 60 AZI
38	1.2DL + 1DLi + 1WLi 90 AZI
39	1.2DL + 1DLi + 1WLi 120 AZI
40	1.2DL + 1DLi + 1WLi 135 AZI
41	1.2DL + 1DLi + 1WLi 150 AZI

#	Description
42	1.2DL + 1DLi + 1WLi 180 AZI
43	1.2DL + 1DLi + 1WLi 210 AZI
44	1.2DL + 1DLi + 1WLi 225 AZI
45	1.2DL + 1DLi + 1WLi 240 AZI
46	1.2DL + 1DLi + 1WLi 270 AZI
47	1.2DL + 1DLi + 1WLi 300 AZI
48	1.2DL + 1DLi + 1WLi 315 AZI
49	1.2DL + 1DLi + 1WLi 330 AZI
50	(1.2+0.2Sds) + 1.0E 0 AZI
51	(1.2+0.2Sds) + 1.0E 30 AZI
52	(1.2+0.2Sds) + 1.0E 45 AZI
53	(1.2+0.2Sds) + 1.0E 60 AZI
54	(1.2+0.2Sds) + 1.0E 90 AZI
55	(1.2+0.2Sds) + 1.0E 120 AZI
56	(1.2+0.2Sds) + 1.0E 135 AZI
57	(1.2+0.2Sds) + 1.0E 150 AZI
58	(1.2+0.2Sds) + 1.0E 180 AZI
59	(1.2+0.2Sds) + 1.0E 210 AZI
60	(1.2+0.2Sds) + 1.0E 225 AZI
61	(1.2+0.2Sds) + 1.0E 240 AZI
62	(1.2+0.2Sds) + 1.0E 270 AZI
63	(1.2+0.2Sds) + 1.0E 300 AZI
64	(1.2+0.2Sds) + 1.0E 315 AZI
65	(1.2+0.2Sds) + 1.0E 330 AZI
66	(0.9-0.2Sds) + 1.0E 0 AZI
67	(0.9-0.2Sds) + 1.0E 30 AZI
68	(0.9-0.2Sds) + 1.0E 45 AZI
69	(0.9-0.2Sds) + 1.0E 60 AZI
70	(0.9-0.2Sds) + 1.0E 90 AZI
71	(0.9-0.2Sds) + 1.0E 120 AZI
72	(0.9-0.2Sds) + 1.0E 135 AZI
73	(0.9-0.2Sds) + 1.0E 150 AZI
74	(0.9-0.2Sds) + 1.0E 180 AZI
75	(0.9-0.2Sds) + 1.0E 210 AZI
76	(0.9-0.2Sds) + 1.0E 225 AZI
77	(0.9-0.2Sds) + 1.0E 240 AZI
78	(0.9-0.2Sds) + 1.0E 270 AZI
79	(0.9-0.2Sds) + 1.0E 300 AZI
80	(0.9-0.2Sds) + 1.0E 315 AZI
81	(0.9-0.2Sds) + 1.0E 330 AZI
82-88	1.2D + 1.5 Lv1

#	Description
89	1.2D + 1.5Lm + 1.0Wm 0 AZI - MP1
90	1.2D + 1.5Lm + 1.0Wm 30 AZI - MP1
91	1.2D + 1.5Lm + 1.0Wm 45 AZI - MP1
92	1.2D + 1.5Lm + 1.0Wm 60 AZI - MP1
93	1.2D + 1.5Lm + 1.0Wm 90 AZI - MP1
94	1.2D + 1.5Lm + 1.0Wm 120 AZI - MP1
95	1.2D + 1.5Lm + 1.0Wm 135 AZI - MP1
96	1.2D + 1.5Lm + 1.0Wm 150 AZI - MP1
97	1.2D + 1.5Lm + 1.0Wm 180 AZI - MP1
98	1.2D + 1.5Lm + 1.0Wm 210 AZI - MP1
99	1.2D + 1.5Lm + 1.0Wm 225 AZI - MP1
100	1.2D + 1.5Lm + 1.0Wm 240 AZI - MP1
101	1.2D + 1.5Lm + 1.0Wm 270 AZI - MP1
102	1.2D + 1.5Lm + 1.0Wm 300 AZI - MP1
103	1.2D + 1.5Lm + 1.0Wm 315 AZI - MP1
104	1.2D + 1.5Lm + 1.0Wm 330 AZI - MP1
105	1.2D + 1.5Lm + 1.0Wm 0 AZI - MP2
106	1.2D + 1.5Lm + 1.0Wm 30 AZI - MP2
107	1.2D + 1.5Lm + 1.0Wm 45 AZI - MP2
108	1.2D + 1.5Lm + 1.0Wm 60 AZI - MP2
109	1.2D + 1.5Lm + 1.0Wm 90 AZI - MP2
110	1.2D + 1.5Lm + 1.0Wm 120 AZI - MP2
111	1.2D + 1.5Lm + 1.0Wm 135 AZI - MP2
112	1.2D + 1.5Lm + 1.0Wm 150 AZI - MP2
113	1.2D + 1.5Lm + 1.0Wm 180 AZI - MP2
114	1.2D + 1.5Lm + 1.0Wm 210 AZI - MP2
115	1.2D + 1.5Lm + 1.0Wm 225 AZI - MP2
116	1.2D + 1.5Lm + 1.0Wm 240 AZI - MP2
117	1.2D + 1.5Lm + 1.0Wm 270 AZI - MP2
118	1.2D + 1.5Lm + 1.0Wm 300 AZI - MP2
119	1.2D + 1.5Lm + 1.0Wm 315 AZI - MP2
120	1.2D + 1.5Lm + 1.0Wm 330 AZI - MP2

#	Description
121	1.2D + 1.5Lm + 1.0Wm 0 AZI - MP3
122	1.2D + 1.5Lm + 1.0Wm 30 AZI - MP3
123	1.2D + 1.5Lm + 1.0Wm 45 AZI - MP3
124	1.2D + 1.5Lm + 1.0Wm 60 AZI - MP3
125	1.2D + 1.5Lm + 1.0Wm 90 AZI - MP3
126	1.2D + 1.5Lm + 1.0Wm 120 AZI - MP3
127	1.2D + 1.5Lm + 1.0Wm 135 AZI - MP3
128	1.2D + 1.5Lm + 1.0Wm 150 AZI - MP3
129	1.2D + 1.5Lm + 1.0Wm 180 AZI - MP3
130	1.2D + 1.5Lm + 1.0Wm 210 AZI - MP3
131	1.2D + 1.5Lm + 1.0Wm 225 AZI - MP3
132	1.2D + 1.5Lm + 1.0Wm 240 AZI - MP3
133	1.2D + 1.5Lm + 1.0Wm 270 AZI - MP3
134	1.2D + 1.5Lm + 1.0Wm 300 AZI - MP3
135	1.2D + 1.5Lm + 1.0Wm 315 AZI - MP3
136	1.2D + 1.5Lm + 1.0Wm 330 AZI - MP3
137	1.2D + 1.5Lm + 1.0Wm 0 AZI - MP4
138	1.2D + 1.5Lm + 1.0Wm 30 AZI - MP4
139	1.2D + 1.5Lm + 1.0Wm 45 AZI - MP4
140	1.2D + 1.5Lm + 1.0Wm 60 AZI - MP4
141	1.2D + 1.5Lm + 1.0Wm 90 AZI - MP4
142	1.2D + 1.5Lm + 1.0Wm 120 AZI - MP4
143	1.2D + 1.5Lm + 1.0Wm 135 AZI - MP4
144	1.2D + 1.5Lm + 1.0Wm 150 AZI - MP4
145	1.2D + 1.5Lm + 1.0Wm 180 AZI - MP4
146	1.2D + 1.5Lm + 1.0Wm 210 AZI - MP4
147	1.2D + 1.5Lm + 1.0Wm 225 AZI - MP4
148	1.2D + 1.5Lm + 1.0Wm 240 AZI - MP4
149	1.2D + 1.5Lm + 1.0Wm 270 AZI - MP4
150	1.2D + 1.5Lm + 1.0Wm 300 AZI - MP4
151	1.2D + 1.5Lm + 1.0Wm 315 AZI - MP4
152	1.2D + 1.5Lm + 1.0Wm 330 AZI - MP4

*This page shows an example of maintenance loads for (4) pipes, the number of mount pipe LCs may vary per site

EQUIPMENT LOADING

Appurtenance Name/Location	Qty.	Elevation [ft]	--	EPA_N (ft2)	EPA_T (ft2)	Weight (lbs)
MX08FRO665-21	1	119	No Ice	12.49	5.87	82.50
MP2, 0	--	--	w/ Ice	13.70	6.98	279.49
TA08025-B604	1	119	No Ice	1.96	0.98	63.90
MP2, 0	--	--	w/ Ice	2.38	1.31	68.58
TA08025-B605	1	119	No Ice	1.96	1.13	75.00
MP2, 0	--	--	w/ Ice	2.38	1.47	73.07
RDIDC-9181-PF-48	1	119	No Ice	2.01	1.17	21.85
MP2, 0	--	--	w/ Ice	2.44	1.52	72.01
			No Ice			
--	--	--	w/ Ice			
			No Ice			
--	--	--	w/ Ice			
			No Ice			
--	--	--	w/ Ice			
			No Ice			
--	--	--	w/ Ice			
			No Ice			
--	--	--	w/ Ice			
			No Ice			
--	--	--	w/ Ice			
			No Ice			
--	--	--	w/ Ice			
			No Ice			
--	--	--	w/ Ice			
			No Ice			
--	--	--	w/ Ice			
			No Ice			
--	--	--	w/ Ice			
			No Ice			
--	--	--	w/ Ice			
			No Ice			
--	--	--	w/ Ice			
			No Ice			
--	--	--	w/ Ice			
			No Ice			
--	--	--	w/ Ice			
			No Ice			
--	--	--	w/ Ice			
			No Ice			
--	--	--	w/ Ice			
			No Ice			
--	--	--	w/ Ice			
			No Ice			
--	--	--	w/ Ice			
			No Ice			
--	--	--	w/ Ice			
			No Ice			
--	--	--	w/ Ice			
			No Ice			
--	--	--	w/ Ice			
			No Ice			
--	--	--	w/ Ice			

EQUIPMENT LOADING [CONT.]

Appurtenance Name/Location	Qty.	Elevation [ft]	--	EPA_N (ft2)	EPA_T (ft2)	Weight (lbs)
			No Ice			
--	--	--	w/ Ice			
			No Ice			
--	--	--	w/ Ice			
			No Ice			
--	--	--	w/ Ice			
			No Ice			
--	--	--	w/ Ice			
			No Ice			
--	--	--	w/ Ice			
			No Ice			
--	--	--	w/ Ice			
			No Ice			
--	--	--	w/ Ice			
			No Ice			
--	--	--	w/ Ice			
			No Ice			
--	--	--	w/ Ice			
			No Ice			
--	--	--	w/ Ice			
			No Ice			
--	--	--	w/ Ice			
			No Ice			
--	--	--	w/ Ice			
			No Ice			
--	--	--	w/ Ice			

EQUIPMENT WIND CALCULATIONS

Appurtenance Name	Qty.	Elevation [ft]	K_{zt}	K_z	K_d	t_d	q_z [psf]	q_{zi} [psf]
MX08FRO665-21	1	119	1.00	1.04	0.95	1.71	39.28	6.28
TA08025-B604	1	119	1.00	1.04	0.95	1.71	39.28	6.28
TA08025-B605	1	119	1.00	1.04	0.95	1.71	39.28	6.28
RDIDC-9181-PF-48	1	119	1.00	1.04	0.95	1.71	39.28	6.28

EQUIPMENT LATERAL WIND FORCE CALCULATIONS

Appurtenance Name	Qty.	--	0° 180°	30° 210°	60° 240°	90° 270°	120° 300°	150° 330°
MX08FRO665-21	1	No Ice	441.47	265.90	382.95	207.38	382.95	265.90
MP2, 0	--	w/ Ice	77.46	48.95	67.96	39.45	67.96	48.95
TA08025-B604	1	No Ice	69.41	43.36	60.73	34.68	60.73	43.36
MP2, 0	--	w/ Ice	13.47	8.90	11.94	7.38	11.94	8.90
TA08025-B605	1	No Ice	69.41	47.30	62.04	39.93	62.04	47.30
MP2, 0	--	w/ Ice	13.47	9.59	12.17	8.30	12.17	9.59
RDIDC-9181-PF-48	1	No Ice	71.12	48.75	63.66	41.29	63.66	48.75
MP2, 0	--	w/ Ice	13.77	9.89	12.48	8.60	12.48	9.89
		No Ice						
--	--	w/ Ice						
		No Ice						
--	--	w/ Ice						
		No Ice						
--	--	w/ Ice						
		No Ice						
--	--	w/ Ice						
		No Ice						
--	--	w/ Ice						
		No Ice						
--	--	w/ Ice						
		No Ice						
--	--	w/ Ice						
		No Ice						
--	--	w/ Ice						
		No Ice						
--	--	w/ Ice						
		No Ice						
--	--	w/ Ice						
		No Ice						
--	--	w/ Ice						
		No Ice						
--	--	w/ Ice						
		No Ice						
--	--	w/ Ice						
		No Ice						
--	--	w/ Ice						
		No Ice						
--	--	w/ Ice						
		No Ice						
--	--	w/ Ice						
		No Ice						
--	--	w/ Ice						
		No Ice						
--	--	w/ Ice						
		No Ice						
--	--	w/ Ice						

EQUIPMENT LATERAL WIND FORCE CALCULATIONS [CONT.]

Appurtenance Name	*Qty.*	*--*	*0° 180°*	*30° 210°*	*60° 240°*	*90° 270°*	*120° 300°*	*150° 330°*
		No Ice						
--	--	w/ Ice						
		No Ice						
--	--	w/ Ice						
		No Ice						
--	--	w/ Ice						
		No Ice						
--	--	w/ Ice						
		No Ice						
--	--	w/ Ice						
		No Ice						
--	--	w/ Ice						
		No Ice						
--	--	w/ Ice						
		No Ice						
--	--	w/ Ice						
		No Ice						
--	--	w/ Ice						
		No Ice						
--	--	w/ Ice						
		No Ice						
--	--	w/ Ice						
		No Ice						
--	--	w/ Ice						

EQUIPMENT SEISMIC FORCE CALCULATIONS

Appurtenance Name	*Qty.*	*Elevation [ft]*	*Weight [lbs]*	F_p [lbs]
MX08FRO665-21	1	119	82.5	9.77
TA08025-B604	1	119	63.9	7.57
TA08025-B605	1	119	75	8.88
RDIDC-9181-PF-48	1	119	21.85	2.59

APPENDIX C

SOFTWARE ANALYSIS OUTPUT

(Global) Model Settings

Display Sections for Member Calcs	5
Max Internal Sections for Member Calcs	97
Include Shear Deformation?	Yes
Increase Nailing Capacity for Wind?	Yes
Include Warping?	Yes
Trans Load Btwn Intersecting Wood Wall?	Yes
Area Load Mesh (in^2)	144
Merge Tolerance (in)	.12
P-Delta Analysis Tolerance	0.50%
Include P-Delta for Walls?	Yes
Automatically Iterate Stiffness for Walls?	Yes
Max Iterations for Wall Stiffness	3
Gravity Acceleration (in/sec^2)	386.4
Wall Mesh Size (in)	24
Eigensolution Convergence Tol. (1.E-)	4
Vertical Axis	Y
Global Member Orientation Plane	XZ
Static Solver	Sparse Accelerated
Dynamic Solver	Accelerated Solver

Hot Rolled Steel Code	AISC 15th(360-16): LRFD
Adjust Stiffness?	Yes(Iterative)
RISAConnection Code	AISC 14th(360-10): LRFD
Cold Formed Steel Code	AISI S100-12: LRFD
Wood Code	AWC NDS-15: ASD
Wood Temperature	< 100F
Concrete Code	ACI 318-14
Masonry Code	ACI 530-13: Strength
Aluminum Code	AA ADM1-10: LRFD - Building
Stainless Steel Code	AISC 14th(360-10): ASD
Adjust Stiffness?	Yes(Iterative)

Number of Shear Regions	4
Region Spacing Increment (in)	4
Biaxial Column Method	Exact Integration
Parme Beta Factor (PCA)	.65
Concrete Stress Block	Rectangular
Use Cracked Sections?	Yes
Use Cracked Sections Slab?	Yes
Bad Framing Warnings?	No
Unused Force Warnings?	Yes
Min 1 Bar Diam. Spacing?	No
Concrete Rebar Set	REBAR_SET_ASTMA615
Min % Steel for Column	1
Max % Steel for Column	8

(Global) Model Settings, Continued

Seismic Code	ASCE 7-10
Seismic Base Elevation (in)	Not Entered
Add Base Weight?	Yes
Ct X	.02
Ct Z	.02
T X (sec)	Not Entered
T Z (sec)	Not Entered
R X	3
R Z	3
Ct Exp. X	.75
Ct Exp. Z	.75
SD1	1
SDS	1
S1	1
TL (sec)	5
Risk Cat	I or II
Drift Cat	Other
Om Z	1
Om X	1
Cd Z	1
Cd X	1
Rho Z	1
Rho X	1

Material Takeoff

	Material	Size	Pieces	Length[in]	Weight[K]
1	General				
2	RIGID		4	14	0
3	Total General		4	14	0
4					
5	Hot Rolled Steel				
6	A500 Gr.B Rect	HSS4X4X4	1	36	.037
7	A53 Gr.B	PIPE_2.5	3	288	.131
8	A53 Gr.B	PIPE_3.0	1	84	.049
9	A53 Gr.B	PIPE_4.0	1	18	.015
10	Total HR Steel		6	426	.233

Joint Coordinates and Temperatures

	Label	X [in]	Y [in]	Z [in]	Temp [F]	Detach From Diap...
1	N1	0	0	-2	0	
2	N2	0	0	34	0	
3	N3	-42	0	36	0	
4	N4	42	0	36	0	
5	N5	0	9	34	0	
6	N6	0	-9	34	0	
7	N7	-36	0	40	0	
8	N8	36	0	40	0	
9	N9	-36	-48	40	0	
10	N10	36	-48	40	0	
11	N11	-36	48	40	0	

Joint Coordinates and Temperatures (Continued)

	Label	X [in]	Y [in]	Z [in]	Temp [F]	Detach From Diap...
12	N12	36	48	40	0	
13	N19	-36	0	36	0	
14	N20	36	0	36	0	
15	N21	0	0	40	0	
16	N22	0	-48	40	0	
17	N23	0	48	40	0	
18	N18	0	0	36	0	

Member Primary Data

	Label	I Joint	J Joint	K Joint	Rotate(de...	Section/Shape	Type	Design List	Material	Design Rul...
1	M1	N2	N1			Standoffs	Beam	Tube	A500 Gr....	Typical
2	H1	N3	N4			Horizontals	Beam	Pipe	A53 Gr.B	Typical
3	M3	N5	N6			Vertical Standoff	Beam	Pipe	A53 Gr.B	Typical
4	MP1	N12	N10			Pipe Mounts	Beam	Pipe	A53 Gr.B	Typical
5	MP3	N11	N9			Pipe Mounts	Beam	Pipe	A53 Gr.B	Typical
6	M6	N7	N19			RIGID	None	None	RIGID	Typical
7	M7	N8	N20			RIGID	None	None	RIGID	Typical
8	MP2	N23	N22			Pipe Mounts	Beam	Pipe	A53 Gr.B	Typical
9	18	N21	N18			RIGID	None	None	RIGID	Typical
10	M10	N18	N2			RIGID	None	None	RIGID	Typical

Member Advanced Data

	Label	I Release	J Release	I Offset[in]	J Offset[in]	T/C Only	Physical	Defl Rat...	Analysis ...	Inactive	Seismic...
1	M1						Yes				None
2	H1						Yes				None
3	M3						Yes				None
4	MP1						Yes				None
5	MP3						Yes				None
6	M6						Yes	** NA **			None
7	M7						Yes	** NA **			None
8	MP2						Yes				None
9	18						Yes	** NA **			None
10	M10						Yes	** NA **			None

Hot Rolled Steel Design Parameters

	Label	Shape	Length[in]	Lbyy[in]	Lbzz[in]	Lcomp top[in]	Lcomp bot[in]	L-torqu...	Kyy	Kzz	Cb	Function
1	M1	Standoffs	36			Lbyy						Lateral
2	H1	Horizontals	84	81.9	81.9	81.9	81.9	81.9	2.1	2.1		Lateral
3	M3	Vertical Sta...	18	18.9	18.9	18.9	18.9	18.9	2.1	2.1		Lateral
4	MP1	Pipe Mounts	96	100.8	100.8	100.8	100.8	100.8	2.1	2.1		Lateral
5	MP3	Pipe Mounts	96	100.8	100.8	100.8	100.8	100.8	2.1	2.1		Lateral
6	MP2	Pipe Mounts	96	100.8	100.8	100.8	100.8	100.8	2.1	2.1		Lateral

Hot Rolled Steel Section Sets

	Label	Shape	Type	Design List	Material	Design ...	A [in2]	Iyy [in4]	Izz [in4]	J [in4]
1	Standoffs	HSS4X4X4	Beam	Tube	A500 Gr.B Rect	Typical	3.37	7.8	7.8	12.8
2	Horizontals	PIPE_3.0	Beam	Pipe	A53 Gr.B	Typical	2.07	2.85	2.85	5.69
3	Vertical Standoff	PIPE_4.0	Beam	Pipe	A53 Gr.B	Typical	2.96	6.82	6.82	13.6
4	Pipe Mounts	PIPE_2.5	Beam	Pipe	A53 Gr.B	Typical	1.61	1.45	1.45	2.89

Hot Rolled Steel Properties

	Label	E [ksi]	G [ksi]	Nu	Therm (/1E...	Density[k/ft...	Yield[psi]	Ry	Fu[psi]	Rt
1	A992	29000	11154	.3	.65	.49	50000	1.1	65000	1.1
2	A36 Gr.36	29000	11154	.3	.65	.49	36000	1.5	58000	1.2
3	A572 Gr.50	29000	11154	.3	.65	.49	50000	1.1	65000	1.1
4	A500 Gr.B RND	29000	11154	.3	.65	.527	42000	1.4	58000	1.3
5	A500 Gr.B Rect	29000	11154	.3	.65	.527	46000	1.4	58000	1.3
6	A53 Gr.B	29000	11154	.3	.65	.49	35000	1.6	60000	1.2
7	A1085	29000	11154	.3	.65	.49	50000	1.4	65000	1.3

Member Point Loads (BLC 1 : Self Weight)

	Member Label	Direction	Magnitude[lb,lb-ft]	Location[in,%]
1	MP2	Y	-41.25	0
2	MP2	Y	-41.25	72
3	MP2	Y	-63.9	%50
4	MP2	Y	-75	%50
5	MP2	Y	-21.85	%25

Member Point Loads (BLC 4 : Wind Load 0 AZI)

	Member Label	Direction	Magnitude[lb,lb-ft]	Location[in,%]
1	MP2	Z	-220.736	0
2	MP2	Z	-220.736	72
3	MP2	Z	-69.408	%50
4	MP2	Z	-69.408	%50
5	MP2	Z	-71.118	%25
6	MP2	X	0	0
7	MP2	X	0	72
8	MP2	X	0	%50
9	MP2	X	0	%50
10	MP2	X	0	%25

Member Point Loads (BLC 5 : Wind Load 30 AZI)

	Member Label	Direction	Magnitude[lb,lb-ft]	Location[in,%]
1	MP2	Z	-165.822	0
2	MP2	Z	-165.822	72
3	MP2	Z	-52.591	%50
4	MP2	Z	-53.726	%50
5	MP2	Z	-55.133	%25
6	MP2	X	-95.737	0
7	MP2	X	-95.737	72
8	MP2	X	-30.363	%50
9	MP2	X	-31.019	%50

Member Point Loads (BLC 5 : Wind Load 30 AZI) (Continued)

	Member Label	Direction	Magnitude[lb,lb-ft]	Location[in,%]
10	MP2	X	-31.831	%25

Member Point Loads (BLC 6 : Wind Load 45 AZI)

	Member Label	Direction	Magnitude[lb,lb-ft]	Location[in,%]
1	MP2	Z	-114.702	0
2	MP2	Z	-114.702	72
3	MP2	Z	-36.801	%50
4	MP2	Z	-38.655	%50
5	MP2	Z	-39.744	%25
6	MP2	X	-114.702	0
7	MP2	X	-114.702	72
8	MP2	X	-36.801	%50
9	MP2	X	-38.655	%50
10	MP2	X	-39.744	%25

Member Point Loads (BLC 7 : Wind Load 60 AZI)

	Member Label	Direction	Magnitude[lb,lb-ft]	Location[in,%]
1	MP2	Z	-66.476	0
2	MP2	Z	-66.476	72
3	MP2	Z	-21.682	%50
4	MP2	Z	-23.648	%50
5	MP2	Z	-24.375	%25
6	MP2	X	-115.14	0
7	MP2	X	-115.14	72
8	MP2	X	-37.554	%50
9	MP2	X	-40.96	%50
10	MP2	X	-42.219	%25

Member Point Loads (BLC 8 : Wind Load 90 AZI)

	Member Label	Direction	Magnitude[lb,lb-ft]	Location[in,%]
1	MP2	Z	-6.349e-15	0
2	MP2	Z	-6.349e-15	72
3	MP2	Z	-2.124e-15	%50
4	MP2	Z	-2.445e-15	%50
5	MP2	Z	-2.529e-15	%25
6	MP2	X	-103.691	0
7	MP2	X	-103.691	72
8	MP2	X	-34.682	%50
9	MP2	X	-39.926	%50
10	MP2	X	-41.294	%25

Member Point Loads (BLC 9 : Wind Load 120 AZI)

	Member Label	Direction	Magnitude[lb,lb-ft]	Location[in,%]
1	MP2	Z	66.476	0
2	MP2	Z	66.476	72
3	MP2	Z	21.682	%50
4	MP2	Z	23.648	%50
5	MP2	Z	24.375	%25
6	MP2	X	-115.14	0
7	MP2	X	-115.14	72

Member Point Loads (BLC 9 : Wind Load 120 AZI) (Continued)

	Member Label	Direction	Magnitude[lb,lb-ft]	Location[in,%]
8	MP2	X	-37.554	%50
9	MP2	X	-40.96	%50
10	MP2	X	-42.219	%25

Member Point Loads (BLC 10 : Wind Load 135 AZI)

	Member Label	Direction	Magnitude[lb,lb-ft]	Location[in,%]
1	MP2	Z	114.702	0
2	MP2	Z	114.702	72
3	MP2	Z	36.801	%50
4	MP2	Z	38.655	%50
5	MP2	Z	39.744	%25
6	MP2	X	-114.702	0
7	MP2	X	-114.702	72
8	MP2	X	-36.801	%50
9	MP2	X	-38.655	%50
10	MP2	X	-39.744	%25

Member Point Loads (BLC 11 : Wind Load 150 AZI)

	Member Label	Direction	Magnitude[lb,lb-ft]	Location[in,%]
1	MP2	Z	165.822	0
2	MP2	Z	165.822	72
3	MP2	Z	52.591	%50
4	MP2	Z	53.726	%50
5	MP2	Z	55.133	%25
6	MP2	X	-95.737	0
7	MP2	X	-95.737	72
8	MP2	X	-30.363	%50
9	MP2	X	-31.019	%50
10	MP2	X	-31.831	%25

Member Point Loads (BLC 12 : Ice Weight)

	Member Label	Direction	Magnitude[lb,lb-ft]	Location[in,%]
1	MP2	Y	-139.744	0
2	MP2	Y	-139.744	72
3	MP2	Y	-68.584	%50
4	MP2	Y	-73.072	%50
5	MP2	Y	-72.015	%25

Member Point Loads (BLC 15 : Ice Wind Load 0 AZI)

	Member Label	Direction	Magnitude[lb,lb-ft]	Location[in,%]
1	MP2	Z	-38.732	0
2	MP2	Z	-38.732	72
3	MP2	Z	-13.465	%50
4	MP2	Z	-13.465	%50
5	MP2	Z	-13.774	%25
6	MP2	X	0	0
7	MP2	X	0	72
8	MP2	X	0	%50
9	MP2	X	0	%50
10	MP2	X	0	%25

Member Point Loads (BLC 16 : Ice Wind Load 30 AZI)

	Member Label	Direction	Magnitude[lb,lb-ft]	Location[in,%]
1	MP2	Z	-29.428	0
2	MP2	Z	-29.428	72
3	MP2	Z	-10.344	%50
4	MP2	Z	-10.543	%50
5	MP2	Z	-10.808	%25
6	MP2	X	-16.99	0
7	MP2	X	-16.99	72
8	MP2	X	-5.972	%50
9	MP2	X	-6.087	%50
10	MP2	X	-6.24	%25

Member Point Loads (BLC 17 : Ice Wind Load 45 AZI)

	Member Label	Direction	Magnitude[lb,lb-ft]	Location[in,%]
1	MP2	Z	-20.668	0
2	MP2	Z	-20.668	72
3	MP2	Z	-7.371	%50
4	MP2	Z	-7.695	%50
5	MP2	Z	-7.909	%25
6	MP2	X	-20.668	0
7	MP2	X	-20.668	72
8	MP2	X	-7.371	%50
9	MP2	X	-7.695	%50
10	MP2	X	-7.909	%25

Member Point Loads (BLC 18 : Ice Wind Load 60 AZI)

	Member Label	Direction	Magnitude[lb,lb-ft]	Location[in,%]
1	MP2	Z	-12.239	0
2	MP2	Z	-12.239	72
3	MP2	Z	-4.452	%50
4	MP2	Z	-4.796	%50
5	MP2	Z	-4.945	%25
6	MP2	X	-21.198	0
7	MP2	X	-21.198	72
8	MP2	X	-7.711	%50
9	MP2	X	-8.307	%50
10	MP2	X	-8.566	%25

Member Point Loads (BLC 19 : Ice Wind Load 90 AZI)

	Member Label	Direction	Magnitude[lb,lb-ft]	Location[in,%]
1	MP2	Z	-1.208e-15	0
2	MP2	Z	-1.208e-15	72
3	MP2	Z	-4.521e-16	%50
4	MP2	Z	-5.083e-16	%50
5	MP2	Z	-5.264e-16	%25
6	MP2	X	-19.726	0
7	MP2	X	-19.726	72
8	MP2	X	-7.383	%50
9	MP2	X	-8.3	%50
10	MP2	X	-8.596	%25

Member Point Loads (BLC 20 : Ice Wind Load 120 AZI)

	Member Label	Direction	Magnitude[lb,lb-ft]	Location[in,%]
1	MP2	Z	12.239	0
2	MP2	Z	12.239	72
3	MP2	Z	4.452	%50
4	MP2	Z	4.796	%50
5	MP2	Z	4.945	%25
6	MP2	X	-21.198	0
7	MP2	X	-21.198	72
8	MP2	X	-7.711	%50
9	MP2	X	-8.307	%50
10	MP2	X	-8.566	%25

Member Point Loads (BLC 21 : Ice Wind Load 135 AZI)

	Member Label	Direction	Magnitude[lb,lb-ft]	Location[in,%]
1	MP2	Z	20.668	0
2	MP2	Z	20.668	72
3	MP2	Z	7.371	%50
4	MP2	Z	7.695	%50
5	MP2	Z	7.909	%25
6	MP2	X	-20.668	0
7	MP2	X	-20.668	72
8	MP2	X	-7.371	%50
9	MP2	X	-7.695	%50
10	MP2	X	-7.909	%25

Member Point Loads (BLC 22 : Ice Wind Load 150 AZI)

	Member Label	Direction	Magnitude[lb,lb-ft]	Location[in,%]
1	MP2	Z	29.428	0
2	MP2	Z	29.428	72
3	MP2	Z	10.344	%50
4	MP2	Z	10.543	%50
5	MP2	Z	10.808	%25
6	MP2	X	-16.99	0
7	MP2	X	-16.99	72
8	MP2	X	-5.972	%50
9	MP2	X	-6.087	%50
10	MP2	X	-6.24	%25

Member Point Loads (BLC 23 : Seismic Load Z)

	Member Label	Direction	Magnitude[lb,lb-ft]	Location[in,%]
1	MP2	Z	-4.884	0
2	MP2	Z	-4.884	72
3	MP2	Z	-7.566	%50
4	MP2	Z	-8.88	%50
5	MP2	Z	-2.587	%25

Member Point Loads (BLC 24 : Seismic Load X)

	Member Label	Direction	Magnitude[lb,lb-ft]	Location[in,%]
1	MP2	X	-4.884	0
2	MP2	X	-4.884	72
3	MP2	X	-7.566	%50

Member Point Loads (BLC 24 : Seismic Load X) (Continued)

	Member Label	Direction	Magnitude[lb,lb-ft]	Location[in,%]
4	MP2	X	-8.88	%50
5	MP2	X	-2.587	%25

Member Point Loads (BLC 25 : Live Load 1 (Lv))

	Member Label	Direction	Magnitude[lb,lb-ft]	Location[in,%]
1	H1	Y	-250	0

Member Point Loads (BLC 26 : Live Load 2 (Lv))

	Member Label	Direction	Magnitude[lb,lb-ft]	Location[in,%]
1	H1	Y	-250	%50

Member Point Loads (BLC 27 : Live Load 3 (Lv))

	Member Label	Direction	Magnitude[lb,lb-ft]	Location[in,%]
1	H1	Y	-250	%100

Member Point Loads (BLC 28 : Maintenance Load 1 (Lm))

	Member Label	Direction	Magnitude[lb,lb-ft]	Location[in,%]
1	MP1	Y	-500	%50

Member Point Loads (BLC 29 : Maintenance Load 2 (Lm))

	Member Label	Direction	Magnitude[lb,lb-ft]	Location[in,%]
1	MP3	Y	-500	%50

Member Point Loads (BLC 30 : Maintenance Load 3 (Lm))

	Member Label	Direction	Magnitude[lb,lb-ft]	Location[in,%]
1	MP2	Y	-500	%50

Member Distributed Loads (BLC 2 : Structure Wind Z)

	Member Label	Direction	Start Magnitude[lb/ft,...	End Magnitude[lb/ft,F...	Start Location[in,%]	End Location[in,%]
1	M1	SZ	-70.698	-70.698	0	%100
2	H1	SZ	-42.419	-42.419	0	%100
3	M3	SZ	-42.419	-42.419	0	%100
4	MP1	SZ	-42.419	-42.419	0	%100
5	MP3	SZ	-42.419	-42.419	0	%100
6	M6	SZ	-70.698	-70.698	0	%100
7	M7	SZ	-70.698	-70.698	0	%100
8	MP2	SZ	-42.419	-42.419	0	%100
9	18	SZ	-70.698	-70.698	0	%100

Member Distributed Loads (BLC 3 : Structure Wind X)

	Member Label	Direction	Start Magnitude[lb/ft,...	End Magnitude[lb/ft,F...	Start Location[in,%]	End Location[in,%]
1	M1	SX	-70.698	-70.698	0	%100
2	H1	SX	-42.419	-42.419	0	%100
3	M3	SX	-42.419	-42.419	0	%100
4	MP1	SX	-42.419	-42.419	0	%100
5	MP3	SX	-42.419	-42.419	0	%100
6	M6	SX	-70.698	-70.698	0	%100

Member Distributed Loads (BLC 3 : Structure Wind X) (Continued)

	Member Label	Direction	Start Magnitude[lb/ft,...	End Magnitude[lb/ft,F...	Start Location[in,%]	End Location[in,%]
7	M7	SX	-70.698	-70.698	0	%100
8	MP2	SX	-42.419	-42.419	0	%100
9	18	SX	-70.698	-70.698	0	%100

Member Distributed Loads (BLC 12 : Ice Weight)

	Member Label	Direction	Start Magnitude[lb/ft,...	End Magnitude[lb/ft,F...	Start Location[in,%]	End Location[in,%]
1	M1	Y	-15.338	-15.338	0	%100
2	H1	Y	-10.845	-10.845	0	%100
3	M3	Y	-12.928	-12.928	0	%100
4	MP1	Y	-9.542	-9.542	0	%100
5	MP3	Y	-9.542	-9.542	0	%100
6	M6	Y	0	0	0	%100
7	M7	Y	0	0	0	%100
8	MP2	Y	-9.542	-9.542	0	%100
9	18	Y	0	0	0	%100

Member Distributed Loads (BLC 13 : Ice Structure Wind Z)

	Member Label	Direction	Start Magnitude[lb/ft,...	End Magnitude[lb/ft,F...	Start Location[in,%]	End Location[in,%]
1	M1	SZ	-11.908	-11.908	0	%100
2	H1	SZ	-14.668	-14.668	0	%100
3	M3	SZ	-13.06	-13.06	0	%100
4	MP1	SZ	-16.242	-16.242	0	%100
5	MP3	SZ	-16.242	-16.242	0	%100
6	M6	SZ	0	0	0	%100
7	M7	SZ	0	0	0	%100
8	MP2	SZ	-16.242	-16.242	0	%100
9	18	SZ	0	0	0	%100

Member Distributed Loads (BLC 14 : Ice Structure Wind X)

	Member Label	Direction	Start Magnitude[lb/ft,...	End Magnitude[lb/ft,F...	Start Location[in,%]	End Location[in,%]
1	M1	SX	-11.908	-11.908	0	%100
2	H1	SX	-14.668	-14.668	0	%100
3	M3	SX	-13.06	-13.06	0	%100
4	MP1	SX	-16.242	-16.242	0	%100
5	MP3	SX	-16.242	-16.242	0	%100
6	M6	SX	0	0	0	%100
7	M7	SX	0	0	0	%100
8	MP2	SX	-16.242	-16.242	0	%100
9	18	SX	0	0	0	%100

Member Area Loads

Joint A	Joint B	Joint C	Joint D	Direction	Distribution	Magnitude[psf]
No Data to Print ...						

Basic Load Cases

	BLC Description	Category	X Gravity	Y Gravity	Z Gravity	Joint	Point	Distributed	Area(Me...	Surface(...
1	Self Weight	DL		-1			5			
2	Structure Wind Z	WLZ						9		
3	Structure Wind X	WLX						9		
4	Wind Load 0 AZI	WLZ					10			
5	Wind Load 30 AZI	None					10			
6	Wind Load 45 AZI	None					10			
7	Wind Load 60 AZI	None					10			
8	Wind Load 90 AZI	WLX					10			
9	Wind Load 120 AZI	None					10			
10	Wind Load 135 AZI	None					10			
11	Wind Load 150 AZI	None					10			
12	Ice Weight	OL1					5	9		
13	Ice Structure Wind Z	OL2						9		
14	Ice Structure Wind X	OL3						9		
15	Ice Wind Load 0 AZI	OL2					10			
16	Ice Wind Load 30 AZI	None					10			
17	Ice Wind Load 45 AZI	None					10			
18	Ice Wind Load 60 AZI	None					10			
19	Ice Wind Load 90 AZI	OL3					10			
20	Ice Wind Load 120 AZI	None					10			
21	Ice Wind Load 135 AZI	None					10			
22	Ice Wind Load 150 AZI	None					10			
23	Seismic Load Z	ELZ			-.118		5			
24	Seismic Load X	ELX	-.118				5			
25	Live Load 1 (Lv)	None					1			
26	Live Load 2 (Lv)	None					1			
27	Live Load 3 (Lv)	None					1			
28	Maintenance Load 1 (Lm)	None					1			
29	Maintenance Load 2 (Lm)	None					1			
30	Maintenance Load 3 (Lm)	None					1			

Load Combinations

	Description	Solve	PDelta	SRSS	BLC	Fa...	B...	Fa...	B...	Fact..	B...	Fa...	B...	Fa...	B...	Fa...	B...	Fa...	B...	Fa...	B...	Fa...	B...	Fa...
1	1.4DL	Yes	Y		DL	1.4																		
2	1.2DL + 1WL 0 AZI	Yes	Y		DL	1.2	2	1	3		4	1												
3	1.2DL + 1WL 30 AZI	Yes	Y		DL	1.2	2	.866	3	.5	5	1												
4	1.2DL + 1WL 45 AZI	Yes	Y		DL	1.2	2	.707	3	.707	6	1												
5	1.2DL + 1WL 60 AZI	Yes	Y		DL	1.2	2	.5	3	.866	7	1												
6	1.2DL + 1WL 90 AZI	Yes	Y		DL	1.2	2		3	1	8	1												
7	1.2DL + 1WL 120 AZI	Yes	Y		DL	1.2	2	-.5	3	.866	9	1												
8	1.2DL + 1WL 135 AZI	Yes	Y		DL	1.2	2	-.7...	3	.707	10	1												
9	1.2DL + 1WL 150 AZI	Yes	Y		DL	1.2	2	-.8...	3	.5	11	1												
10	1.2DL + 1WL 180 AZI	Yes	Y		DL	1.2	2	-1	3		4	-1												
11	1.2DL + 1WL 210 AZI	Yes	Y		DL	1.2	2	-.8...	3	-.5	5	-1												
12	1.2DL + 1WL 225 AZI	Yes	Y		DL	1.2	2	-.7...	3	-.707	6	-1												
13	1.2DL + 1WL 240 AZI	Yes	Y		DL	1.2	2	-.5	3	-.866	7	-1												
14	1.2DL + 1WL 270 AZI	Yes	Y		DL	1.2	2		3	-1	8	-1												
15	1.2DL + 1WL 300 AZI	Yes	Y		DL	1.2	2	.5	3	-.866	9	-1												
16	1.2DL + 1WL 315 AZI	Yes	Y		DL	1.2	2	.707	3	-.707	10	-1												
17	1.2DL + 1WL 330 AZI	Yes	Y		DL	1.2	2	.866	3	-.5	11	-1												

Load Combinations (Continued)

	Description	Solve	PDelta	SRSS	BLC	Fa...	B...	Fa...	B...	Fact...	B...	Fa...	B...	Fa...	B...	Fa...	B...	Fa...	B...	Fa...	B...	Fa...	B...	Fa...
18	0.9DL + 1WL 0 AZI	Yes	Y		DL	.9	2	1	3		4	1												
19	0.9DL + 1WL 30 AZI	Yes	Y		DL	.9	2	.866	3	.5	5	1												
20	0.9DL + 1WL 45 AZI	Yes	Y		DL	.9	2	.707	3	.707	6	1												
21	0.9DL + 1WL 60 AZI	Yes	Y		DL	.9	2	.5	3	.866	7	1												
22	0.9DL + 1WL 90 AZI	Yes	Y		DL	.9	2		3	1	8	1												
23	0.9DL + 1WL 120 AZI	Yes	Y		DL	.9	2	-.5	3	.866	9	1												
24	0.9DL + 1WL 135 AZI	Yes	Y		DL	.9	2	-.7...	3	.707	10	1												
25	0.9DL + 1WL 150 AZI	Yes	Y		DL	.9	2	-.8...	3	.5	11	1												
26	0.9DL + 1WL 180 AZI	Yes	Y		DL	.9	2	-1	3		4	-1												
27	0.9DL + 1WL 210 AZI	Yes	Y		DL	.9	2	-.8...	3	-.5	5	-1												
28	0.9DL + 1WL 225 AZI	Yes	Y		DL	.9	2	-.7...	3	-.707	6	-1												
29	0.9DL + 1WL 240 AZI	Yes	Y		DL	.9	2	-.5	3	-.866	7	-1												
30	0.9DL + 1WL 270 AZI	Yes	Y		DL	.9	2		3	-1	8	-1												
31	0.9DL + 1WL 300 AZI	Yes	Y		DL	.9	2	.5	3	-.866	9	-1												
32	0.9DL + 1WL 315 AZI	Yes	Y		DL	.9	2	.707	3	-.707	10	-1												
33	0.9DL + 1WL 330 AZI	Yes	Y		DL	.9	2	.866	3	-.5	11	-1												
34	1.2DL + 1DLi + 1WLi 0 ...	Yes	Y		DL	1.2	O...	1	13	1	14		15	1										
35	1.2DL + 1DLi + 1WLi 30 ...	Yes	Y		DL	1.2	O...	1	13	.866	14	.5	16	1										
36	1.2DL + 1DLi + 1WLi 45 ...	Yes	Y		DL	1.2	O...	1	13	.707	14	.707	17	1										
37	1.2DL + 1DLi + 1WLi 60 ...	Yes	Y		DL	1.2	O...	1	13	.5	14	.866	18	1										
38	1.2DL + 1DLi + 1WLi 90 ...	Yes	Y		DL	1.2	O...	1	13		14	1	19	1										
39	1.2DL + 1DLi + 1WLi 12...	Yes	Y		DL	1.2	O...	1	13	-.5	14	.866	20	1										
40	1.2DL + 1DLi + 1WLi 13...	Yes	Y		DL	1.2	O...	1	13	-.707	14	.707	21	1										
41	1.2DL + 1DLi + 1WLi 15...	Yes	Y		DL	1.2	O...	1	13	-.866	14	.5	22	1										
42	1.2DL + 1DLi + 1WLi 18...	Yes	Y		DL	1.2	O...	1	13	-1	14		15	-1										
43	1.2DL + 1DLi + 1WLi 21...	Yes	Y		DL	1.2	O...	1	13	-.866	14	-.5	16	-1										
44	1.2DL + 1DLi + 1WLi 22...	Yes	Y		DL	1.2	O...	1	13	-.707	14	-.7...	17	-1										
45	1.2DL + 1DLi + 1WLi 24...	Yes	Y		DL	1.2	O...	1	13	-.5	14	-.8...	18	-1										
46	1.2DL + 1DLi + 1WLi 27...	Yes	Y		DL	1.2	O...	1	13		14	-1	19	-1										
47	1.2DL + 1DLi + 1WLi 30...	Yes	Y		DL	1.2	O...	1	13	.5	14	-.8...	20	-1										
48	1.2DL + 1DLi + 1WLi 31...	Yes	Y		DL	1.2	O...	1	13	.707	14	-.7...	21	-1										
49	1.2DL + 1DLi + 1WLi 33...	Yes	Y		DL	1.2	O...	1	13	.866	14	-.5	22	-1										
50	(1.2+0.2Sds)DL + 1E 0 ...	Yes	Y		DL	1....	23	1	24															
51	(1.2+0.2Sds)DL + 1E 30...	Yes	Y		DL	1....	23	.866	24	.5														
52	(1.2+0.2Sds)DL + 1E 45...	Yes	Y		DL	1....	23	.707	24	.707														
53	(1.2+0.2Sds)DL + 1E 60...	Yes	Y		DL	1....	23	.5	24	.866														
54	(1.2+0.2Sds)DL + 1E 90...	Yes	Y		DL	1....	23		24	1														
55	(1.2+0.2Sds)DL + 1E 12...	Yes	Y		DL	1....	23	-.5	24	.866														
56	(1.2+0.2Sds)DL + 1E 13...	Yes	Y		DL	1....	23	-.7...	24	.707														
57	(1.2+0.2Sds)DL + 1E 15...	Yes	Y		DL	1....	23	-.8...	24	.5														
58	(1.2+0.2Sds)DL + 1E 18...	Yes	Y		DL	1....	23	-1	24															
59	(1.2+0.2Sds)DL + 1E 21...	Yes	Y		DL	1....	23	-.8...	24	-.5														
60	(1.2+0.2Sds)DL + 1E 22...	Yes	Y		DL	1....	23	-.7...	24	-.707														
61	(1.2+0.2Sds)DL + 1E 24...	Yes	Y		DL	1....	23	-.5	24	-.866														
62	(1.2+0.2Sds)DL + 1E 27...	Yes	Y		DL	1....	23		24	-1														
63	(1.2+0.2Sds)DL + 1E 30...	Yes	Y		DL	1....	23	.5	24	-.866														
64	(1.2+0.2Sds)DL + 1E 31...	Yes	Y		DL	1....	23	.707	24	-.707														
65	(1.2+0.2Sds)DL + 1E 33...	Yes	Y		DL	1....	23	.866	24	-.5														
66	(0.9-0.2Sds)DL + 1E 0 A...	Yes	Y		DL	.861	23	1	24															
67	(0.9-0.2Sds)DL + 1E 30 ...	Yes	Y		DL	.861	23	.866	24	.5														
68	(0.9-0.2Sds)DL + 1E 45 ...	Yes	Y		DL	.861	23	.707	24	.707														
69	(0.9-0.2Sds)DL + 1E 60 ...	Yes	Y		DL	.861	23	.5	24	.866														

Load Combinations (Continued)

	Description	Solve	PDelta	SRSS	BLC	Fa...	B...	Fa...	B...	Fact...	B...	Fa...	B...	Fa...	B...	Fa...	B...	Fa...	B...	Fa...	B...	Fa...	B...	Fa...
70	(0.9-0.2Sds)DL + 1E 90 ...	Yes	Y		DL	.861	23		24	1														
71	(0.9-0.2Sds)DL + 1E 12...	Yes	Y		DL	.861	23	-.5	24	.866														
72	(0.9-0.2Sds)DL + 1E 13...	Yes	Y		DL	.861	23	-.7...	24	.707														
73	(0.9-0.2Sds)DL + 1E 15...	Yes	Y		DL	.861	23	-.8...	24	.5														
74	(0.9-0.2Sds)DL + 1E 18...	Yes	Y		DL	.861	23	-1	24															
75	(0.9-0.2Sds)DL + 1E 21...	Yes	Y		DL	.861	23	-.8...	24	-.5														
76	(0.9-0.2Sds)DL + 1E 22...	Yes	Y		DL	.861	23	-.7...	24	-.707														
77	(0.9-0.2Sds)DL + 1E 24...	Yes	Y		DL	.861	23	-.5	24	-.866														
78	(0.9-0.2Sds)DL + 1E 27...	Yes	Y		DL	.861	23		24	-1														
79	(0.9-0.2Sds)DL + 1E 30...	Yes	Y		DL	.861	23	.5	24	-.866														
80	(0.9-0.2Sds)DL + 1E 31...	Yes	Y		DL	.861	23	.707	24	-.707														
81	(0.9-0.2Sds)DL + 1E 33...	Yes	Y		DL	.861	23	.866	24	-.5														
82	1.2DL + 1Lv1	Yes	Y		DL	1.2	25	1.5																
83	1.2DL + 1Lv2	Yes	Y		DL	1.2	26	1.5																
84	1.2DL + 1Lv3	Yes	Y		DL	1.2	27	1.5																
85	1.2DL + 1.5Lm + 1Wm 0...	Yes	Y		DL	1.2	28	1.5	2	.058	3		4	.058										
86	1.2DL + 1.5Lm + 1Wm 3...	Yes	Y		DL	1.2	28	1.5	2	.05	3	.029	5	.058										
87	1.2DL + 1.5Lm + 1Wm 4...	Yes	Y		DL	1.2	28	1.5	2	.041	3	.041	6	.058										
88	1.2DL + 1.5Lm + 1Wm 6...	Yes	Y		DL	1.2	28	1.5	2	.029	3	.05	7	.058										
89	1.2DL + 1.5Lm + 1Wm 9...	Yes	Y		DL	1.2	28	1.5	2		3	.058	8	.058										
90	1.2DL + 1.5Lm + 1Wm 1...	Yes	Y		DL	1.2	28	1.5	2	-.029	3	.05	9	.058										
91	1.2DL + 1.5Lm + 1Wm 1...	Yes	Y		DL	1.2	28	1.5	2	-.041	3	.041	10	.058										
92	1.2DL + 1.5Lm + 1Wm 1...	Yes	Y		DL	1.2	28	1.5	2	-.05	3	.029	11	.058										
93	1.2DL + 1.5Lm + 1Wm 1...	Yes	Y		DL	1.2	28	1.5	2	-.058	3		4	-.0...										
94	1.2DL + 1.5Lm + 1Wm 2...	Yes	Y		DL	1.2	28	1.5	2	-.05	3	-.0...	5	-.0...										
95	1.2DL + 1.5Lm + 1Wm 2...	Yes	Y		DL	1.2	28	1.5	2	-.041	3	-.0...	6	-.0...										
96	1.2DL + 1.5Lm + 1Wm 2...	Yes	Y		DL	1.2	28	1.5	2	-.029	3	-.05	7	-.0...										
97	1.2DL + 1.5Lm + 1Wm 2...	Yes	Y		DL	1.2	28	1.5	2		3	-.0...	8	-.0...										
98	1.2DL + 1.5Lm + 1Wm 3...	Yes	Y		DL	1.2	28	1.5	2	.029	3	-.05	9	-.0...										
99	1.2DL + 1.5Lm + 1Wm 3...	Yes	Y		DL	1.2	28	1.5	2	.041	3	-.0...	10	-.0...										
100	1.2DL + 1.5Lm + 1Wm 3...	Yes	Y		DL	1.2	28	1.5	2	.05	3	-.0...	11	-.0...										
101	1.2DL + 1.5Lm + 1Wm 0...	Yes	Y		DL	1.2	29	1.5	2	.058	3		4	.058										
102	1.2DL + 1.5Lm + 1Wm 3...	Yes	Y		DL	1.2	29	1.5	2	.05	3	.029	5	.058										
103	1.2DL + 1.5Lm + 1Wm 4...	Yes	Y		DL	1.2	29	1.5	2	.041	3	.041	6	.058										
104	1.2DL + 1.5Lm + 1Wm 6...	Yes	Y		DL	1.2	29	1.5	2	.029	3	.05	7	.058										
105	1.2DL + 1.5Lm + 1Wm 9...	Yes	Y		DL	1.2	29	1.5	2		3	.058	8	.058										
106	1.2DL + 1.5Lm + 1Wm 1...	Yes	Y		DL	1.2	29	1.5	2	-.029	3	.05	9	.058										
107	1.2DL + 1.5Lm + 1Wm 1...	Yes	Y		DL	1.2	29	1.5	2	-.041	3	.041	10	.058										
108	1.2DL + 1.5Lm + 1Wm 1...	Yes	Y		DL	1.2	29	1.5	2	-.05	3	.029	11	.058										
109	1.2DL + 1.5Lm + 1Wm 1...	Yes	Y		DL	1.2	29	1.5	2	-.058	3		4	-.0...										
110	1.2DL + 1.5Lm + 1Wm 2...	Yes	Y		DL	1.2	29	1.5	2	-.05	3	-.0...	5	-.0...										
111	1.2DL + 1.5Lm + 1Wm 2...	Yes	Y		DL	1.2	29	1.5	2	-.041	3	-.0...	6	-.0...										
112	1.2DL + 1.5Lm + 1Wm 2...	Yes	Y		DL	1.2	29	1.5	2	-.029	3	-.05	7	-.0...										
113	1.2DL + 1.5Lm + 1Wm 2...	Yes	Y		DL	1.2	29	1.5	2		3	-.0...	8	-.0...										
114	1.2DL + 1.5Lm + 1Wm 3...	Yes	Y		DL	1.2	29	1.5	2	.029	3	-.05	9	-.0...										
115	1.2DL + 1.5Lm + 1Wm 3...	Yes	Y		DL	1.2	29	1.5	2	.041	3	-.0...	10	-.0...										
116	1.2DL + 1.5Lm + 1Wm 3...	Yes	Y		DL	1.2	29	1.5	2	.05	3	-.0...	11	-.0...										
117	1.2DL + 1.5Lm + 1Wm 0...	Yes	Y		DL	1.2	30	1.5	2	.058	3		4	.058										
118	1.2DL + 1.5Lm + 1Wm 3...	Yes	Y		DL	1.2	30	1.5	2	.05	3	.029	5	.058										
119	1.2DL + 1.5Lm + 1Wm 4...	Yes	Y		DL	1.2	30	1.5	2	.041	3	.041	6	.058										
120	1.2DL + 1.5Lm + 1Wm 6...	Yes	Y		DL	1.2	30	1.5	2	.029	3	.05	7	.058										
121	1.2DL + 1.5Lm + 1Wm 9...	Yes	Y		DL	1.2	30	1.5	2		3	.058	8	.058										

Load Combinations (Continued)

	Description	Solve	PDelta	SRSS	BLC	Fa...	B...	Fa...	B...	Fact...	B...	Fa...	B...	Fa...	B...	Fa...	B...	Fa...	B...	Fa...	B...	Fa...	B...	Fa...
122	1.2DL + 1.5Lm + 1Wm 1...	Yes	Y		DL	1.2	30	1.5	2	-.029	3	.05	9	.058										
123	1.2DL + 1.5Lm + 1Wm 1...	Yes	Y		DL	1.2	30	1.5	2	-.041	3	.041	10	.058										
124	1.2DL + 1.5Lm + 1Wm 1...	Yes	Y		DL	1.2	30	1.5	2	-.05	3	.029	11	.058										
125	1.2DL + 1.5Lm + 1Wm 1...	Yes	Y		DL	1.2	30	1.5	2	-.058	3		4	-.0...										
126	1.2DL + 1.5Lm + 1Wm 2...	Yes	Y		DL	1.2	30	1.5	2	-.05	3	-.0...	5	-.0...										
127	1.2DL + 1.5Lm + 1Wm 2...	Yes	Y		DL	1.2	30	1.5	2	-.041	3	-.0...	6	-.0...										
128	1.2DL + 1.5Lm + 1Wm 2...	Yes	Y		DL	1.2	30	1.5	2	-.029	3	-.05	7	-.0...										
129	1.2DL + 1.5Lm + 1Wm 2...	Yes	Y		DL	1.2	30	1.5	2		3	-.0...	8	-.0...										
130	1.2DL + 1.5Lm + 1Wm 3...	Yes	Y		DL	1.2	30	1.5	2	.029	3	-.05	9	-.0...										
131	1.2DL + 1.5Lm + 1Wm 3...	Yes	Y		DL	1.2	30	1.5	2	.041	3	-.0...	10	-.0...										
132	1.2DL + 1.5Lm + 1Wm 3...	Yes	Y		DL	1.2	30	1.5	2	.05	3	-.0...	11	-.0...										

Envelope Joint Reactions

	Joint		X [lb]	LC	Y [lb]	LC	Z [lb]	LC	MX [lb-ft]	LC	MY [lb-ft]	LC	MZ [lb-ft]	LC
1	N1	max	661.754	22	1434.866	34	1005.779	18	-828.163	18	2162.802	22	2269.154	98
2		min	-661.754	14	409.738	74	-1005.779	10	-4883.903	42	-2162.802	14	-2269.154	106
3	Totals:	max	661.754	22	1434.866	34	1005.779	18						
4		min	-661.754	14	409.738	74	-1005.779	10						

Envelope AISC 15th(360-16): LRFD Steel Code Checks

	Member	Shape	Code Che...	Lo...	LC	She...	Lo...	...	LC	phi*Pnc [lb]	phi*Pnt [lb]	phi*Mn y-y [lb...	phi*M.....		Eqn
1	H1	PIPE_3.0	.428	42	89	.095	42		116	21765.984	65205	5748.75	5748...	1	H1-1b
2	M1	HSS4X...	.332	36	45	.200	36	y	104	134360.669	139518	16180.5	1618...	...	H1-1b
3	MP2	PIPE_2.5	.315	48	10	.022	48		10	7310.519	50715	3596.25	3596...	1	H1-1b
4	MP3	PIPE_2.5	.024	48	10	.003	48		10	7310.519	50715	3596.25	3596...	1	H1-1b
5	MP1	PIPE_2.5	.024	48	10	.003	48		10	7310.519	50715	3596.25	3596...	1	H1-1b
6	M3	PIPE_4.0	.000	9	10	.000	9		10	90033.633	93240	10631.25	1063...	1	H1-1b

APPENDIX D

ADDITIONAL CALCUATIONS

Trylon

Analysis date: 8/10/2021

BOLT TOOL 1.5.2

Project Data	
Job Code:	189055
Carrier Site ID:	BOBDL00077A
Carrier Site Name:	CT-CCI-T-876313

Code	
Design Standard:	TIA-222-H
Slip Check:	Yes
Pretension Standard:	TIA-222-H

Bolt Properties		
Connection Type:	U-Bolt	
Diameter:	0.625	in
Grade:	A307	--
Yield Strength (Fy):	36	ksi
Ultimate Strength (Fu):	60	ksi
Number of Bolts:	2	--
Threads Included:	Yes	--
Double Shear:	No	--
Connection Pipe Size:	5	in

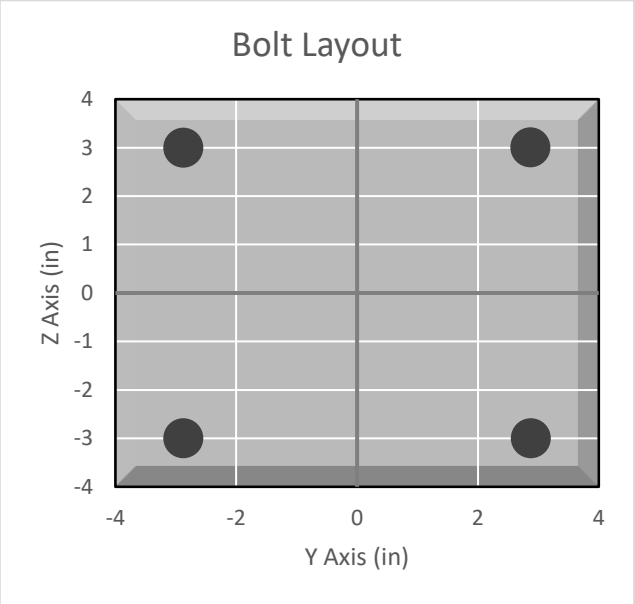

Connection Description
Mount Pipes to Horizontal

Bolt Check*		
Tensile Capacity (ϕT_n):	10170.1	lbs
Shear Capacity (ϕV_n):	6902.9	lbs
Tension Force (T_u):	883.4	lbs
Shear Force (V_u):	85.4	lbs
Tension Usage:	8.3%	--
Shear Usage:	1.2%	--
Interaction:	8.3%	Pass
Controlling Member:	18	--
Controlling LC:	10	--

**Rating per TIA-222-H Section 15.5*

Slip Check*		
Sliding Capacity (ϕR_{ns}):	14726.2	lbs
Torsion Capacity (ϕR_{nr}):	3068.0	lb-ft
Sliding Force (V_{us}):	0.0	lbs
Torsional Force (T_{ur}):	700.3	lb-ft
Sliding Usage:	0.0%	--
Torsion Usage:	23.1%	--
Interaction:	23.1%	Pass
Controlling Member:	18	--
Controlling LC:	10	--

**Rating per TIA-222-H Section 15.5*

Trylon

Analysis date: 8/10/2021

BOLT TOOL 1.5.2

Project Data	
Job Code:	189055
Carrier Site ID:	BOBDL00077A
Carrier Site Name:	CT-CCI-T-876313

Code	
Design Standard:	TIA-222-H
Slip Check:	Yes
Pretension Standard:	TIA-222-H

Bolt Properties		
Connection Type:	U-Bolt	
Diameter:	0.625	in
Grade:	A307	--
Yield Strength (Fy):	36	ksi
Ultimate Strength (Fu):	60	ksi
Number of Bolts:	2	--
Threads Included:	Yes	--
Double Shear:	No	--
Connection Pipe Size:	5	in

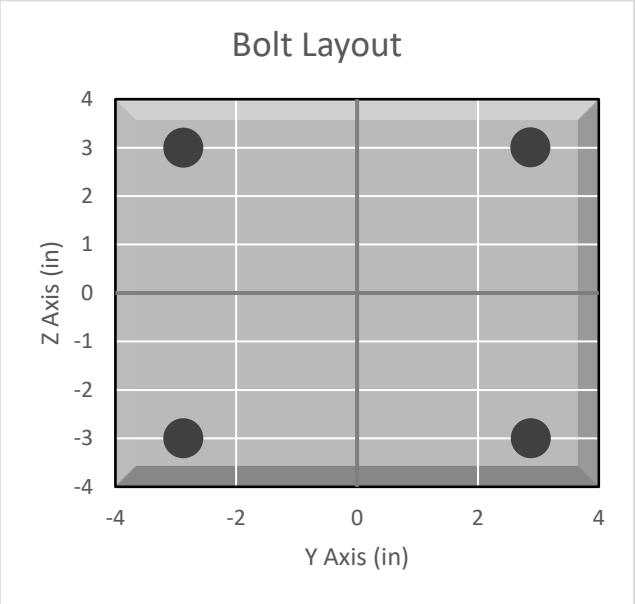

Connection Description
Mount Horizontal to Connector Pipe

Bolt Check*		
Tensile Capacity (ϕT_n):	10170.1	lbs
Shear Capacity (ϕV_n):	6902.9	lbs
Tension Force (T_u):	611.8	lbs
Shear Force (V_u):	1875.1	lbs
Tension Usage:	5.7%	--
Shear Usage:	25.9%	--
Interaction:	25.9%	Pass
Controlling Member:	M10	--
Controlling LC:	104	--

**Rating per TIA-222-H Section 15.5*

Slip Check*		
Sliding Capacity (ϕR_{ns}):	14505.5	lbs
Torsion Capacity (ϕR_{nr}):	3022.0	lb-ft
Sliding Force (V_{us}):	507.8	lbs
Torsional Force (T_{ur}):	280.8	lb-ft
Sliding Usage:	3.3%	--
Torsion Usage:	9.0%	--
Interaction:	9.6%	Pass
Controlling Member:	M10	--
Controlling LC:	7	--

**Rating per TIA-222-H Section 15.5*

Trylon

Analysis date: 8/10/2021

BOLT TOOL 1.5.2

Project Data	
Job Code:	189055
Carrier Site ID:	BOBDL00077A
Carrier Site Name:	CT-CCI-T-876313

Code	
Design Standard:	TIA-222-H
Slip Check:	No
Pretension Standard:	TIA-222-H

Bolt Properties		
Connection Type:	Bolt	
Diameter:	0.625	in
Grade:	A325	--
Yield Strength (Fy):	92	ksi
Ultimate Strength (Fu):	120	ksi
Number of Bolts:	4	--
Threads Included:	Yes	--
Double Shear:	No	--
Connection Pipe Size:	-	in

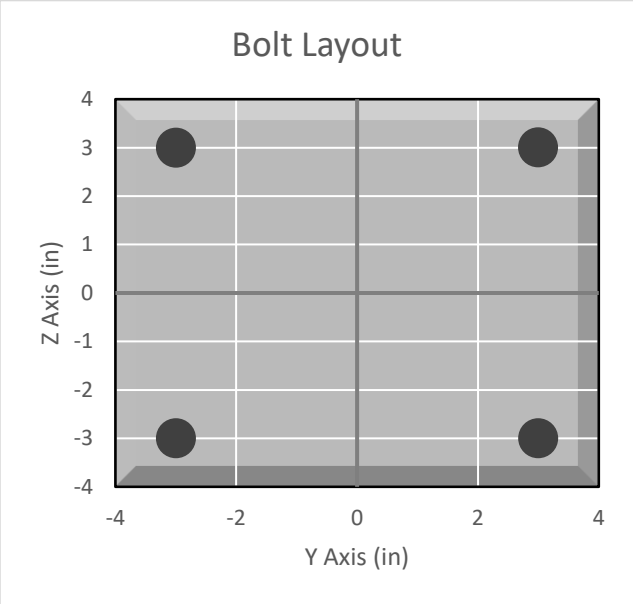

Connection Description
Mount Standoff to Collar

Bolt Check*		
Tensile Capacity (ϕT_n):	20340.1	lbs
Shear Capacity (ϕV_n):	13805.8	lbs
Tension Force (T_u):	5392.4	lbs
Shear Force (V_u):	395.3	lbs
Tension Usage:	25.2%	--
Shear Usage:	2.7%	--
Interaction:	25.2%	Pass
Controlling Member:	M1	--
Controlling LC:	39	--

**Rating per TIA-222-H Section 15.5*

APPENDIX E

SUPPLEMENTAL DRAWINGS

REVISIONS				
REV.	IPS	DESCRIPTION	BY	DATE
A	10539PC	NEW RELEASED.	XZ1054	3/11/2021

NOTES:

1.0 GENERAL NOTES
  1.1 ALL METRIC DIMENSIONS ARE IN BRACKETS.
2.0 DESIGN NOTES
  2.1 FOR PATENT INFORMATION: HTTPS://WWW.CS-PAT.COM
  2.2 USE STANDARD TORQUE VALUES FOR 5/8" BOLTS
  2.3 TORQUE U-BOLTS TO 44 FT-LBS
3.0 MANUFACTURING/SPECIAL REQUIREMENTS
4.0 TEST
5.0 PACKAGING
  5.1 PACKAGING SHALL MEET COMMSCOPE REQUIREMENTS PER DOCUMENT IS-PL-3005

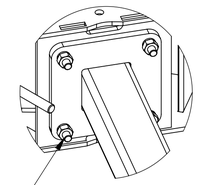

DETAIL C
SCALE 1 : 6

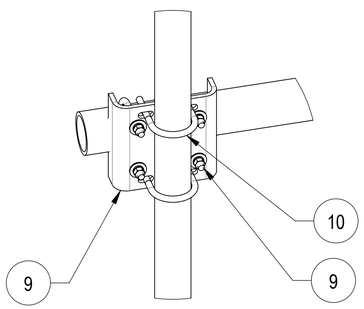

DETAIL A
SCALE 1 : 6

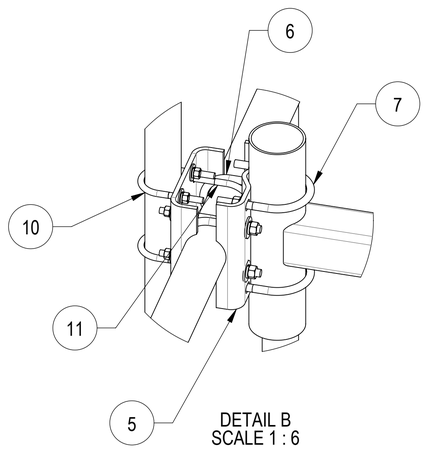

DETAIL B
SCALE 1 : 6

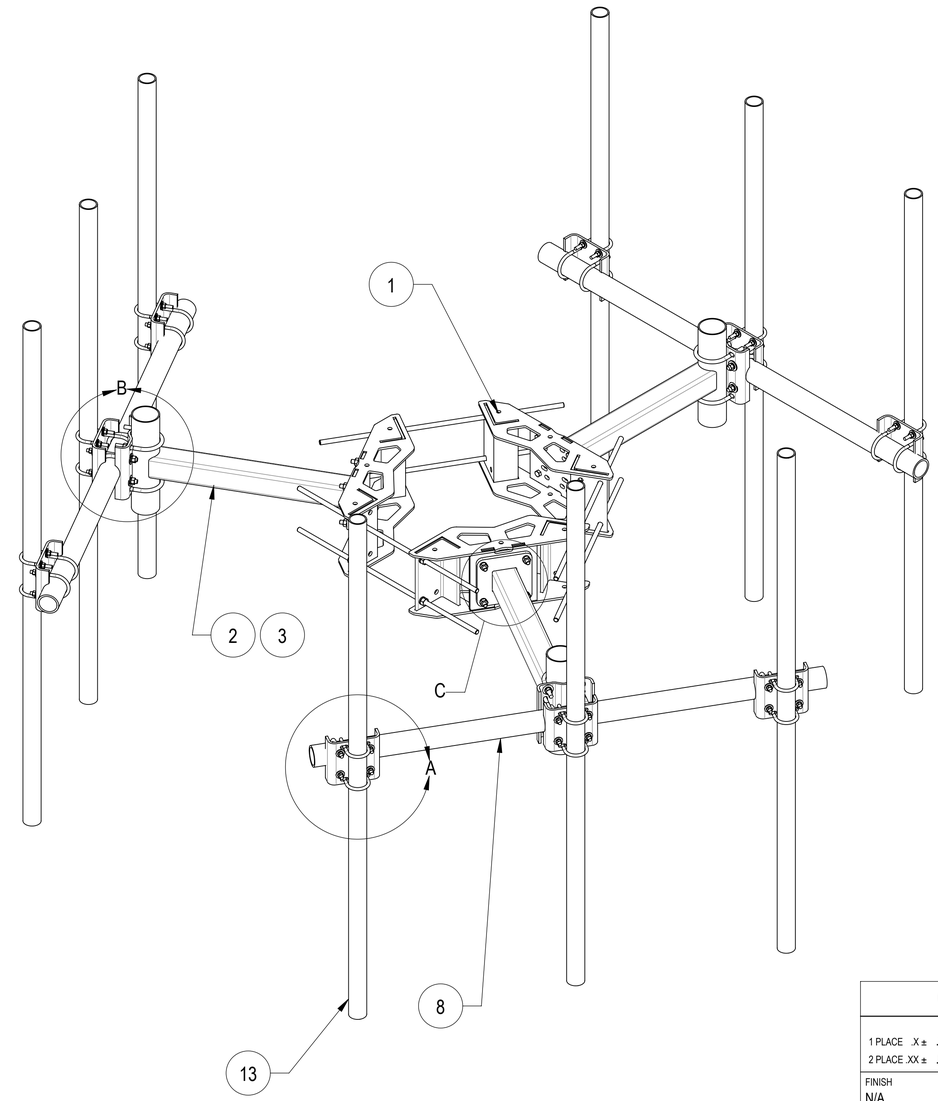

ITEM NO.	PART NUMBER	DESCRIPTION	QTY.
1	MC-RM1550-3	12" - 50" OD RINGMOUNT	1
2	MT197.01	36" SINGLE SUPPORT ARM	3
3	MT197H	HARDWARE KIT (NEXT ITEM)	3
4	GB-0524A	5/8" X 2-1/2" GALV BOLT KIT (A325)	12
5	MT216.13	CENTER BRACKET	3
6	GUB-53560	5/8" X 3-5/8" X 6" GALV U-BOLT	6
7	GUB-5456	5/8" X 4-5/8" X 6½" GALV U-BOLT	6
8	MTC333912	84" X 3-1/2" OD PIPE	3
9	MT219H3501	3.5"OD Clamp Bracket	9
10	GUB-4352	1/2" X 3" X 5-1/4" GALV U-BOLT	18
11	GUB-4356	1/2" X 3-5/8" X 6" GALV U-BOLT	18
13	MT54696	∅2.875" O.D. X 96 PIPE	9

DENSITY	0.28	lbs/in³
MASS	1203.02	lbs
VOLUME	4265.23	in³
SURFACE AREA	35860.22	in²
HEIGHT	96"	
LENGTH	131.5"	
WIDTH	151.9"	

© 2021 CommScope, Inc. Confidential

COMMSCOPE, INC. OF NORTH CAROLINA

TOLERANCES: 1 PLACE .X ± .12; 2 PLACE .XX ± .06; 3 PLACE .XXX ± .03; ANGLES ± 2°; FRACTIONS ± 1/32

SAP MATERIAL MASTER: MC-K6MHDX-9-96

FINISH: N/A

MATERIAL: A36, A53

UNLESS OTHERWISE SPECIFIED DIMENSIONS ARE IN INCHES INTERPRET PER ANSI Y 14.5M-1994

	NAME	DATE
CE	XZ1054	03/08/2021
RW	ROGHANSON	03/16/2021
AD	BCAMPBELLCON	03/19/2021
RE		

ECN 10539PC

TITLE: T-ARM, MCK6, 3, 4" x 84" , 9, 2-7/8"x96

SCALE: 1:32

DOCUMENT NO.: MC-K6MHDX-9-96

SIZE: D

Auth Group: INSL

MODEL VERSION	MODEL STATUS	MODEL REVISION	DRAWING VERSION	DRAWING STATUS	DRAWING REVISION
00	AD	A	00	AD	A

SHEET 1 OF 2

NOTES:

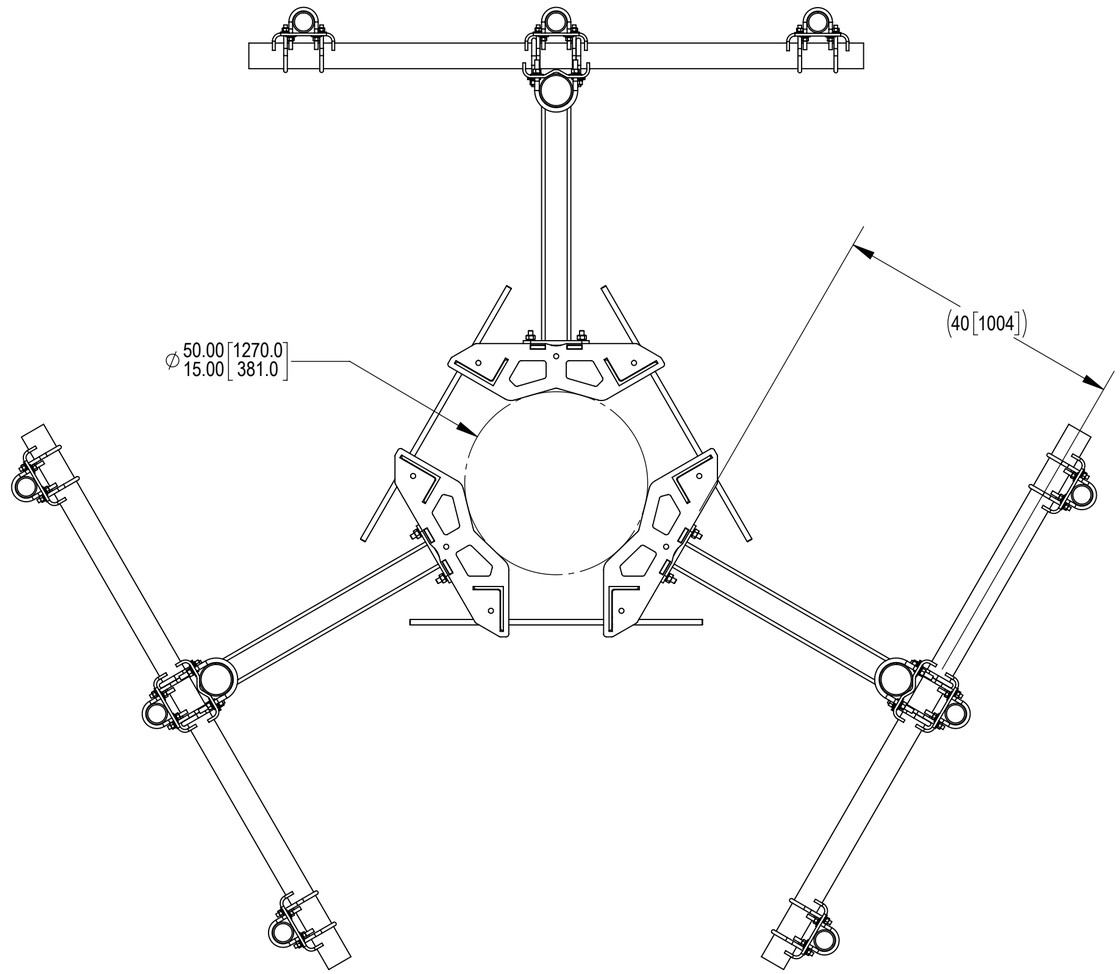

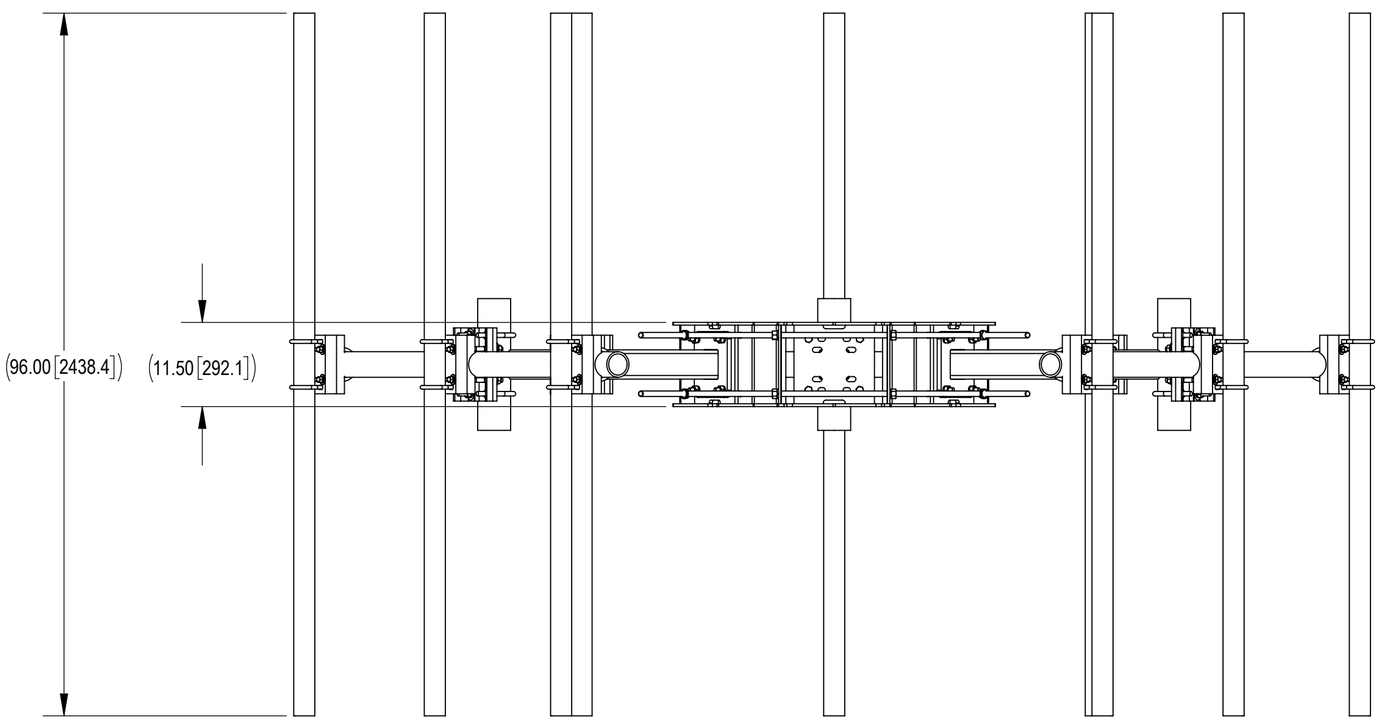

© 2021 CommScope, Inc. Confidential

COMMSCOPE, INC. OF NORTH CAROLINA			
TITLE T-ARM, MCK6, 3, 4” x 84” , 9, 2-7/8"x96			
SIZE C	SCALE 1:32	DOCUMENT NO. MC-K6MHDX-9-96	
		DRAWING	SHEET
		VERSION: 00 / STATUS: AD / REVISION: A	2 OF 2