Crown Castle
3 Corporate Park Drive, Suite 101
Clifton Park, NY 12065

September 9, 2020

Melanie A. Bachman
Executive Director
Connecticut Siting Council
10 Franklin Square
New Britain, CT 06051

RE: **Notice of Exempt Modification for AT&T - 841298**
250 Meriden Waterbury Turnpike, Southington, CT 06489
Latitude: 41° 33′ 24.54″ / Longitude: -72° 51′ 10.84″

Dear Ms. Bachman:

AT&T currently maintains three (3) antennas at the 120-foot mount on the existing 120-foot Lattice Tower, located at 250 Meriden Waterbury Turnpike, Southington, CT. The property is owned by John Rogus and the Tower is owned by Crown Castle. AT&T now intends to relocate their three (3) existing antennas to a lower rad of 110' and add three (3) new antennas to the 120-foot mount for a final antenna inventory of six (6) antennas. move and replace six (6) existing antennas with six (6) new antennas. The new antennas will be installed at the 136-ft level of the tower. AT&T is also proposing tower mount modifications as shown on the enclosed Mount Analysis, as well as, structural reinforcement as shown in Appendix D of the Structural Analysis Report.

In 1999, AT&T received Council approval to replace two (2) existing communications towers at the Site with a single 80-foot lattice tower and install its antennas at the top of the tower (TS-SCLP-131-990317). Subsequently, the Council approved a tower extension in Petition No. 1349 which increased the height of the tower to 120 feet overall.

Please accept this letter as notification pursuant to Regulations of Connecticut State Agencies §16-50j-73, for construction that constitutes an exempt modification pursuant to R.C.S.A. § 16-50j-72(b)(2). In accordance with R.C.S.A. § 16-50j-73, a copy of this letter is being sent to Mark Sciota, Town Manager for the Town of Southington, David Perkins, Robert A. Phillips, Director of Planning & Community Developement, Mr. John Rogus as the property owner and Crown Castle is the tower owner.

1. The proposed modifications will not result in an increase in the height of the existing tower.

2. The proposed modifications will not require the extension of the site boundary.

3. The proposed modification will not increase noise levels at the facility by six decibels or more, or to levels that exceed state and local criteria.

4. The operation of the replacement antennas will not increase radio frequency emissions at the facility to a level at or above the Federal Communication Commission safety standard.
5. The proposed modifications will not cause a change or alteration in the physical or environmental characteristics of the site.

6. The existing structure and its foundation can support the proposed loading.

For the foregoing reasons, AT&T respectfully submits that the proposed modifications to the above-reference telecommunications facility constitutes an exempt modification under R.C.S.A. § 16-50j-72(b)(2). Please send approval/rejection letter to Attn: Anne Marie Zsamba.

Sincerely,

Anne Marie Zsamba
Site Acquisition Specialist
3 Corporate Park Drive, Suite 101
Clifton Park, NY 12065
(201) 236-9224
AnneMarie.Zsamba@crowncastle.com

Attachments
cc:

Mark J. Sciota, Town Manager (*via email only to sciotam@southington.org*)
Southington Town Hall
75 Main Street
Southington, CT 06489

Robert Phillips, MS, MPA, AICP, Director of Planning (*via email only to PhillipsR@southington.org*)
196 North Main Street
Southington, CT 06489

John Rogus
250 Meriden Waterbury Turnpike
Southington, CT 06489

Crown Castle, Tower Owner

After printing this label:
1. Use the 'Print' button on this page to print your label to your laser or inkjet printer.
2. Fold the printed page along the horizontal line.
3. Place label in shipping pouch and affix it to your shipment so that the barcode portion of the label can be read and scanned.

Warning: Use only the printed original label for shipping. Using a photocopy of this label for shipping purposes is fraudulent and could result in additional billing charges, along with the cancellation of your FedEx account number.
Use of this system constitutes your agreement to the service conditions in the current FedEx Service Guide, available on fedex.com.FedEx will not be responsible for any claim in excess of $100 per package, whether the result of loss, damage, delay, non-delivery,misdelivery,or misinformation, unless you declare a higher value, pay an additional charge, document your actual loss and file a timely claim.Limitations found in the current FedEx Service Guide apply. Your right to recover from FedEx for any loss, including intrinsic value of the package, loss of sales, income interest, profit, attorney's fees, costs, and other forms of damage whether direct, incidental,consequential, or special is limited to the greater of $100 or the authorized declared value. Recovery cannot exceed actual documented loss.Maximum for items of extraordinary value is $1,000, e.g. jewelry, precious metals, negotiable instruments and other items listed in our ServiceGuide. Written claims must be filed within strict time limits, see current FedEx Service Guide.

From: Zsamba, Anne Marie
To: sciotam@southington.org
Subject: Notice of Exempt Modification - AT&T - 250 Meriden Waterbury Turnpike, Southington
Date: Wednesday, September 9, 2020 4:49:00 AM
Attachments: EM-AT&T-250 MERIDEN WATERBURY TPK SOUTHINGTON-841298-notice.pdf

---

Dear Town Manager Sciota:

Attached please find AT&T's exempt modification application that is being submitted to the Connecticut Siting Council today, September 9, 2020.

In light of the present circumstances with Covid-19, The Council has advised that electronic notification of this filing is acceptable. If you could kindly confirm receipt. Thank you.

Best,
Anne Marie Zsamba

ANNE MARIE ZSAMBA
Site Acquisition Specialist
T: (201) 236-9224
M: (518) 350-3639
F: (724) 416-6112

CROWN CASTLE
3 Corporate Park Drive, Suite 101
Clifton Park, NY 12065
CrownCastle.com

From: Zsamba, Anne Marie
To: PhillipsR@southington.org
Subject: Notice of Exempt Modification - AT&T - 250 Meriden Waterbury Turnpike, Southington
Date: Wednesday, September 9, 2020 4:49:00 AM
Attachments: EM-AT&T-250 MERIDEN WATERBURY TPK SOUTHINGTON-841298-notice.pdf

---

Dear Director of Planning Phillips:

Attached please find AT&T's exempt modification application that is being submitted to the Connecticut Siting Council today, September 9, 2020.

In light of the present circumstances with Covid-19, The Council has advised that electronic notification of this filing is acceptable. If you could kindly confirm receipt. Thank you.

Best,
Anne Marie Zsamba

ANNE MARIE ZSAMBA
Site Acquisition Specialist
T: (201) 236-9224
M: (518) 350-3639
F: (724) 416-6112

CROWN CASTLE
3 Corporate Park Drive, Suite 101
Clifton Park, NY 12065
CrownCastle.com

Exhibit A

Original Facility Approval

STATE OF CONNECTICUT
CONNECTICUT SITING COUNCIL
Ten Franklin Square, New Britain, CT 06051
Phone: (860) 827-2935 Fax: (860) 827-2950
E-Mail: siting.council@ct.gov
www.ct.gov/csc

CERTIFIED MAIL
RETURN RECEIPT REQUESTED

October 26, 2018

Lucia Chiocchio, Esq.
Cuddy & Feder, LLP
445 Hamilton Avenue, 14th Floor
White Plains, NY 10601

RE: **PETITION NO. 1349** – New Cingular Wireless PCS, LLC petition for a declaratory ruling, pursuant to Connecticut General Statutes §4-176 and §16-50k, for the proposed extension of an existing wireless telecommunications facility located at 250 Meriden Waterbury Turnpike, Southington, Connecticut.

Dear Attorney Chiocchio:

At a public meeting held on October 25, 2018, the Connecticut Siting Council (Council) considered and ruled that the above-referenced proposal would not have a substantial adverse environmental effect, and pursuant to Connecticut General Statutes § 16-50k, would not require a Certificate of Environmental Compatibility and Public Need with the following conditions:

1. Prior to AT&T's antenna installation the tower modification shall be carried out in accordance with the Structural Modification Report and Modification Drawings prepared by Paul J. Ford, dated March 16, 2018 and March 19, 2018 respectively, and stamped and signed by Joseph Pachicarah Jacobs;

2. Within 45 days following completion of proposed modifications, AT&T shall provide documentation that its installation complied with the recommendations of the Tower Modification Schedule;

3. Approval of any minor project changes be delegated to Council staff;

4. Unless otherwise approved by the Council, if the facility authorized herein is not fully constructed within three years from the date of the mailing of the Council's decision, this decision shall be void, and the facility owner/operator shall dismantle the facility and remove all associated equipment or reapply for any continued or new use to the Council before any such use is made. The time between the filing and resolution of any appeals of the Council's decision shall not be counted in calculating this deadline. Authority to monitor and modify this schedule, as necessary, is delegated to the Executive Director. The facility owner/operator shall provide written notice to the Executive Director of any schedule changes as soon as is practicable;

5. Any request for extension of the time period to fully construct the facility shall be filed with the Council not later than 60 days prior to the expiration date of this decision and shall be served on all parties and intervenors, if applicable, and the Town of Southington;

6. Within 45 days after completion of construction, the Council shall be notified in writing that construction has been completed;

7. Any nonfunctioning antenna and associated antenna mounting equipment on this facility owned and operated by the Petitioner shall be removed within 60 days of the date the antenna ceased to function;

8. The facility owner/operator shall remit timely payments associated with annual assessments and invoices submitted by the Council for expenses attributable to the facility under Conn. Gen. Stat. §16-50v;

9. This Declaratory Ruling may be transferred, provided the facility owner/operator/transferor is current with payments to the Council for annual assessments and invoices under Conn. Gen. Stat. §16-50v and the transferee provides written confirmation that the transferee agrees to comply with the terms, limitations and conditions contained in the Declaratory Ruling, including timely payments to the Council for annual assessments and invoices under Conn. Gen. Stat. §16-50v; and

10. If the facility owner/operator is a wholly owned subsidiary of a corporation or other entity and is sold/transferred to another corporation or other entity, the Council shall be notified of such sale and/or transfer and of any change in contact information for the individual or representative responsible for management and operations of the facility within 30 days of the sale and/or transfer.

This decision is under the exclusive jurisdiction of the Council and is not applicable to any other modification or construction. All work is to be implemented as specified in the petition received September 4, 2018 and additional information received on October 5, 2018 and October 11, 2018.

Enclosed for your information is a copy of the staff report on this project.

Sincerely,

Robert Stein

Robert Stein
Chairman

RS/IN/lm

Enclosure: Staff Report dated October 25, 2018

c: The Honorable Christopher Palmieri, Chairman, Town of Southington
Mark J. Sciota, Town Manager, Town of Southington
Robert Phillips, Director of Planning and Community Development, Town of Southington
John Rogus, property owner

STATE OF CONNECTICUT
CONNECTICUT SITING COUNCIL
Ten Franklin Square, New Britain, CT 06051
Phone: (860) 827-2935 Fax: (860) 827-2950
E-Mail: siting.council@ct.gov
www.ct.gov/csc

Petition No. 1349
New Cingular Wireless PCS, LLC
Southington, Connecticut
Staff Report
October 25, 2018

On September 4, 2018, New Cingular Wireless PCS, LLC (AT&T) submitted a petition (Petition) to the Connecticut Siting Council (Council) for a declaratory ruling pursuant to Connecticut General Statutes (CGS) §4-176 and §16-50k for the proposed extension of an existing wireless telecommunications facility located at 250 Meriden Waterbury Turnpike, Southington, Connecticut. A field review of the proposed project was conducted on September 25, 2018. Council member Daniel Lynch and Fred Cunliffe and Ifeanyi Nwankwo of the Council staff attended the field review. Kristen Motel Esq., Mark Roberts and Brian Huff attended the field review as representatives of AT&T. At the request of the Council, AT&T attempted to fly a balloon during the field review to simulate the proposed extension of the facility, but it was unsuccessful due to weather conditions. AT&T conducted a second balloon float at the site on October 1, 2018. Two balloons were flown, one red (2-feet in diameter) and one white (3.5-feet in diameter) and flown at elevations of 110-feet and 120-feet above ground level, respectively.

The existing facility is located on a 1.2 acre parcel containing a commercial building, associated outbuildings and a parking area within a Business District Zone. The surrounding area consists of a mix of residential, commercial and retail uses to the north and west and residential uses to the south and east.

The existing facility consists of an 80-foot self-supporting lattice tower owned by Crown Castle. AT&T currently has nine antennas mounted at a center line height of 78-feet above ground level (agl) and Verizon has six antennas mounted at a center line height of 60-feet agl. AT&T and Verizon have associated equipment located at the base of the tower. The equipment shelter is locked and the tower is equipped with an anti-climbing shield.

AT&T proposes to extend the height of the existing self-supporting lattice tower to 120-feet agl. AT&T would remove its existing antennas and install three new 700/850 MHz antennas at the top of the lattice extension. Antennas would be installed at a centerline height of 120-feet agl. The height at the top of AT&T's antennas would be 123-feet agl. AT&T would also install six remote radio head units (RRU's), one surge arrestor, nine cables and an 11-foot lightning mast at the same 120-foot level. The proposed equipment is dual technology capable and compatible with 5G. Aside from minor equipment upgrades within AT&T's equipment shelter, there will be no changes to the existing equipment area at ground level. Existing access to the site would continue to be used. Verizon's existing antennas and equipment would not be affected.

AT&T has backup power batteries within its equipment shelter. These batteries can handle periods of commercial power outages of up to eight hours. For extended commercial power outages, AT&T would utilize a mobile diesel generator that would be transported to the site. This method of backup power has been successfully deployed several times during the sites existence.

AT&T states that in the event of a tower failure due to a catastrophic event, the tower's control section (40 – 60 foot along the legs of the tower) would cause it to collapse upon itself keeping it within the subject parcel.

The purpose of the proposed modification is to provide reliable wireless service in this area of Southington. The existing AT&T antennas are currently at or below the height of the surrounding tree canopy and as a result two of the three sectors of antennas are blocked by the tree line. AT&T dropped call data for this site indicates elevated voice and data drops, as well as substandard data service, that drive the need for the proposed height extension. The proposed height is the lowest height AT&T could locate antennas to gain the coverage necessary to provide reliable service, particularly north along State Route 120. Reducing the height to 100-feet would decrease coverage by one-half to the area.

The proposed extension would have a minimal impact on visibility. The proposed extension would be consistent with the existing tower in design, color and material. Views from the closest residential areas on Meriden Waterbury Turnpike and Orchard Lane are not expected to be substantial. The existing facility can be seen from West Peak and Castle Craig (0.5 miles and 0.9 miles northeast respectively, of the AT&T facility) within Hubbard Park in Meriden. The proposed extension would also be visible from these locations.

There are no schools or child day care centers within 1,000-feet of the tower. The nearest school is South End Elementary School located approximately 8,270-feet from the site. There are 72 residences within 1000-feet of the existing site. The closest residence is within approximately 10-feet and is located on the subject parcel. The closest off-site residence is within approximately 200-feet and is located at Orchard Lane.

The site is outside of the 100-year and 500-year flood zones. The nearest wetland is approximately 1,155-feet to the northwest of the site. No aviation marking or lighting is required. The nearest Important Bird Areas to the site (East Rock Park (11 miles away) and Naugatuck State Forest (12 miles away)) would not be adversely impacted by the proposed modification. Furthermore, the proposed modifications would comply with the recommended guidelines of the U.S. Fish and Wildlife Service for minimizing the potential for telecommunication towers to impact bird species.

There will be no ground disturbance or tree removal for the proposed extension.

A Professional Engineer duly licensed in the State of Connecticut has certified that the tower is structurally adequate to support the proposed loading with certain conditions. The maximum worst-case power density would be 25.2% of the applicable limit. AT&T's RF Tier rating for this facility is Tier 1 (level of priority to maintain network continuity) since it provides service to an interstate highway (I-691).

Notice was provided to the Town of Southington, the property owner and abutting property owners on August 29, 2018. No comments have been received to date.

AT&T contends that this proposal will not have a substantial adverse environmental effect. Staff recommends approval with the following conditions:

- Prior to AT&T's antenna installation the tower modification shall be carried out in accordance with the Structural Modification Report and Modification Drawings prepared by Paul J. Ford, dated March 16, 2018 and March 19, 2018 respectively, and stamped and signed by Joseph Pachicarah Jacobs;
- Within 45 days following completion of proposed modifications, AT&T shall provide documentation that its installation complied with the recommendations of the Tower Modification Schedule; and
- Approval of any minor project changes be delegated to Council staff.

View of Balloon float from Commercial district on Meriden Avenue

Photo-simulation showing proposed tower extension from commercial district on Meriden Avenue

View of Balloon float from nearby residential area on Orchard Lane

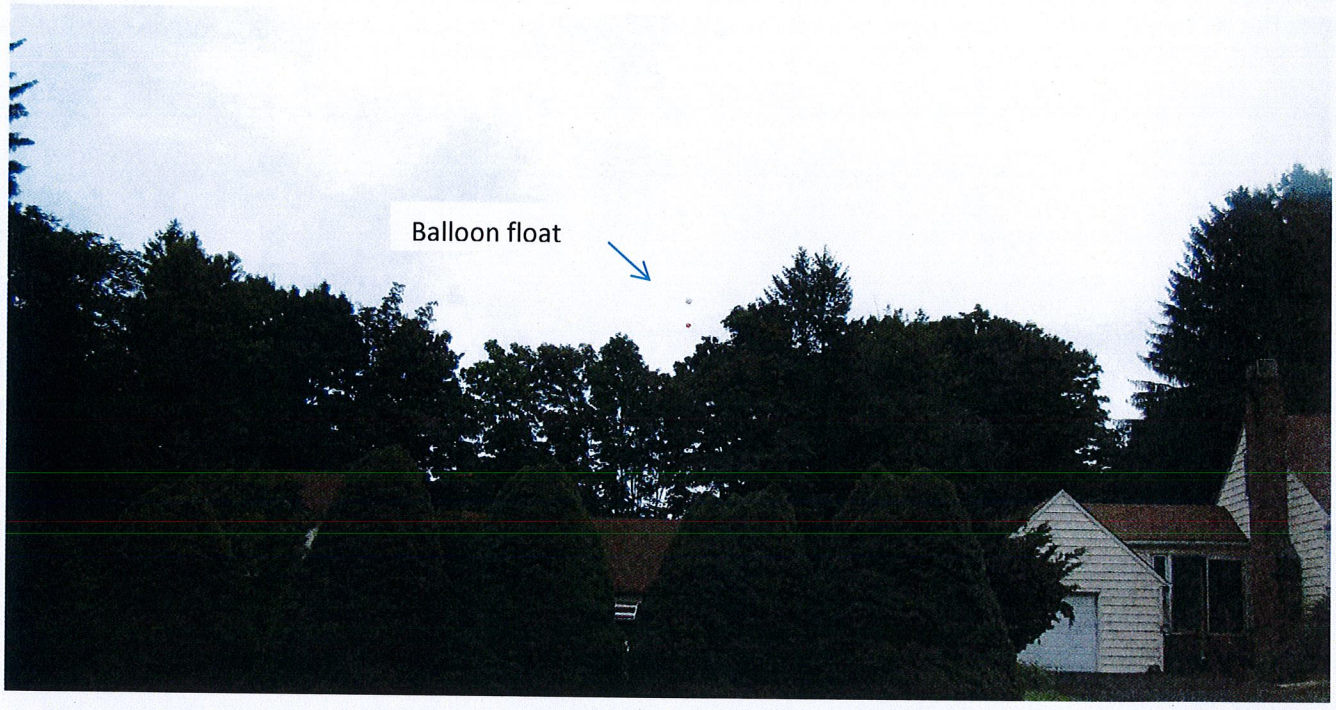

Photo-simulation showing proposed tower extension from nearby residential area on Orchard lane

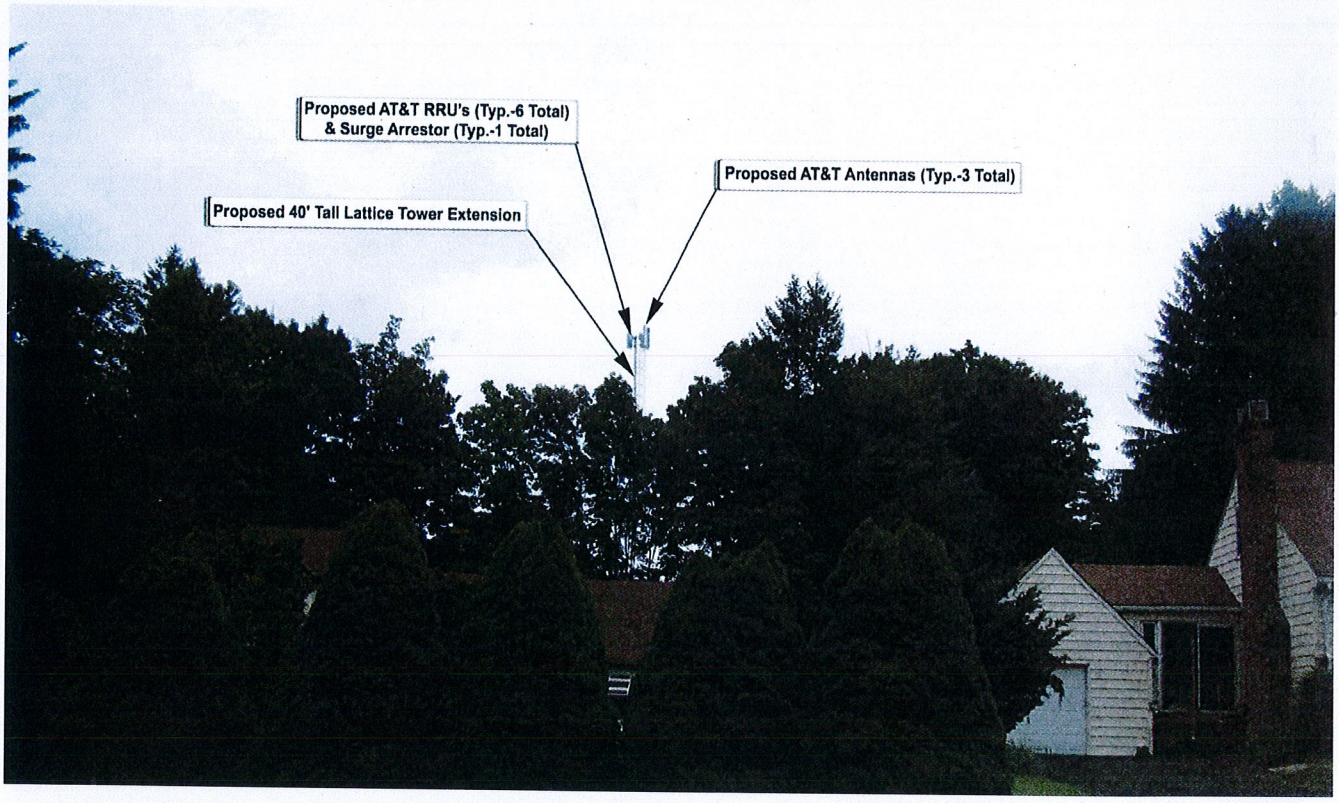

View of Balloon float from the Tower Farm on West Peak

Photo-simulation showing proposed tower extension from the Tower Farm on West Peak

Exhibit B

Property Card

250 MERIDEN WATERBURY TPKE

Location	250 MERIDEN WATERBURY TPKE	**Mblu**	015/ / 080/ /
		Acct#	10848
Owner	ROGUS JOHN	**Assessment**	$211,660
Appraisal	$302,370	**PID**	398
Building Count	2		

Current Value

Appraisal			
Valuation Year	**Improvements**	**Land**	**Total**
2016	$165,770	$136,600	$302,370

Assessment			
Valuation Year	**Improvements**	**Land**	**Total**
2016	$116,040	$95,620	$211,660

Owner of Record

Owner	ROGUS JOHN	**Sale Price**	$0
Co-Owner		**Certificate**	
Address	250 MERIDEN WATERBURY TPKE SOUTHINGTON, CT 06489	**Book & Page**	1267/0806
		Sale Date	12/28/2012
		Instrument	29

Ownership History

Ownership History					
Owner	**Sale Price**	**Certificate**	**Book & Page**	**Instrument**	**Sale Date**
ROGUS JOHN	$0		1267/0806	29	12/28/2012
ROGUS JOHN JR & JAN	$0		0311/0085	29	07/10/1980

Building Information

Building 1 : Section 1

Year Built:	1936
Living Area:	1,740
Building Percent Good:	62

Building Attributes	
Field	**Description**
STYLE	Retail
MODEL	Comm/Ind
Grade	C-
Stories:	1
Occupancy	1.00
Exterior Wall 1	Clapboard
Exterior Wall 2	
Roof Structure	Gable
Roof Cover	Asphalt Shingl
Interior Wall 1	Average
Interior Wall 2	
Interior Floor 1	Average
Interior Floor 2	
Heating Fuel	Typical
Heating Type	Unit Heater
AC Type	None
Struct Class	
Bldg Use	Multi Use - Comm
Total Bedrooms	
Total Baths	
Usrfld 217	0
Wet Sprinkler	0
Dry Sprinkler	0
1st Floor Use:	
Heat/AC	Heat Only
Frame Type	Wood Frame
Baths/Plumbing	None
Ceiling/Wall	Typical
Rooms/Prtns	Average
Wall Height	9.00
Usrfld 214	0.00

Building Photo

(http://images.vgsi.com/photos2/SouthingtonCTPhotos//\00\05\57\30.jpg)

Building Layout

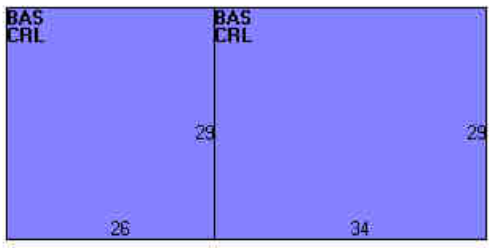

(http://images.vgsi.com/photos2/SouthingtonCTPhotos//Sketches/398_398

Building Sub-Areas (sq ft)			Legend
Code	**Description**	**Gross Area**	**Living Area**
BAS	First Floor	1,740	1,740
CRL	Crawl Space	1,740	0
		3,480	1,740

Building 2 : Section 1

Year Built: 1936
Living Area: 1,188
Building Percent Good: 66

Building Attributes : Bldg 2 of 2	
Field	**Description**
Style	Cape

Model	Residential
Grade:	C
Stories	1.5
Occupancy	
Exterior Wall 1	Vinyl Siding
Exterior Wall 2	
Roof Structure	Gable
Roof Cover	Asphalt Shingl
Interior Wall 1	Average
Interior Wall 2	
Interior Flr 1	Average
Interior Flr 2	
Heat Fuel	Gas
Heat Type:	Forced Hot Air
AC Type:	None
Total Bedrooms:	2
Full Bthrms:	1
Half Baths:	1
Extra Fixtures	0
Total Rooms:	5
Bath Style:	Average
Kitchen Style:	Average
Total Kitchens	1
Fireplaces	1
Whirlpool Tubs	0
Usrfld 104	
Fin Bsmt Area	None
Fin Bsmt Quality	
Usrfld 107	
Bsmt Garages	0
.	
Usrfld 108	
Bsmt Type	Full
Attic Type	None
Cath Ceiling	No
Usrfld 300	
Usrfld 301	

Building Photo

(http://images.vgsi.com/photos2/SouthingtonCTPhotos//default.jpg)

Building Layout

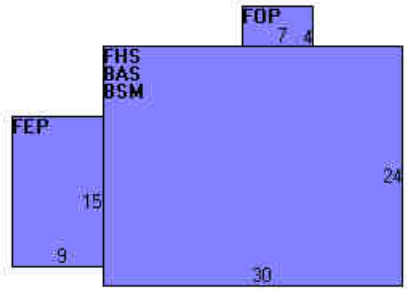

(http://images.vgsi.com/photos2/SouthingtonCTPhotos//Sketches/398_200

Building Sub-Areas (sq ft)			Legend
Code	**Description**	**Gross Area**	**Living Area**
BAS	First Floor	720	720
FHS	Finished Half Story	720	468
BSM	Basement	720	0
FEP	Finished Enclosed Porch	135	0
FOP	Open Porch	28	0
		2,323	1,188

Extra Features

Extra Features	Legend

No Data for Extra Features

Land

Land Use

Use Code	031
Description	Multi Use - Comm
Zone	B
Alt Land Appr	No
Category	

Land Line Valuation

Size (Acres)	1.22
Depth	

Outbuildings

Outbuildings					Legend
Code	**Description**	**Sub Code**	**Sub Description**	**Size**	**Bldg #**
PAV1	Paving	AS	Asphalt	2625.00 S.F.	1
FGR1	Garage			520.00 S.F.	1
SHD1	Shed	FR	Frame	462.00 S.F.	1
SHD1	Shed	FR	Frame	414.00 S.F.	1

Valuation History

Appraisal			
Valuation Year	**Improvements**	**Land**	**Total**
2018	$165,770	$136,600	$302,370
2017	$165,770	$136,600	$302,370
2016	$165,770	$141,250	$307,020
2015	$165,770	$141,250	$307,020
2014	$162,180	$147,740	$309,920

Assessment			
Valuation Year	**Improvements**	**Land**	**Total**
2018	$116,040	$95,620	$211,660
2017	$116,040	$95,620	$211,660
2016	$116,040	$98,880	$214,920
2015	$116,040	$98,880	$214,920
2014	$113,530	$103,420	$216,950

(c) 2020 Vision Government Solutions, Inc. All rights reserved.

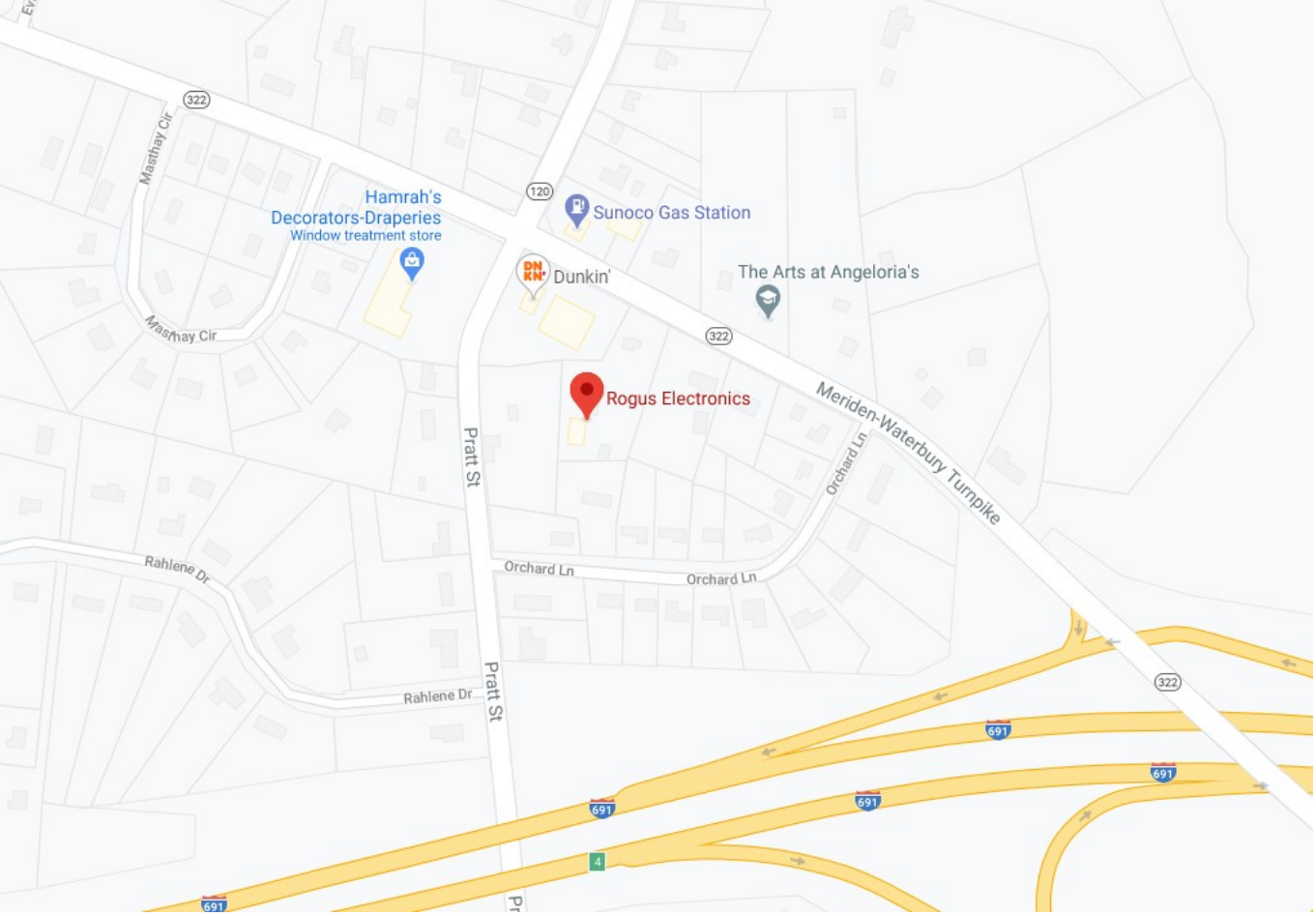
322
Masthay Cir
120
Hamrah's
Decorators-Draperies
Window treatment store
Sunoco Gas Station
Dunkin'
The Arts at Angeloria's
Masthay Cir
322
Rogus Electronics
Meriden-Waterbury Turnpike
Pratt St
Orchard Ln
Orchard Ln
Orchard Ln
Rahlene Dr
Rahlene Dr
Pratt St
322
691
691
691
691
4
691

Exhibit C

Construction Drawings

DocuSign Envelope ID: F6847E62-D2B2-4A72-B188-7BC9CF9CB848

AT&T

AT&T SITE NUMBER: 59347
AT&T SITE NAME: CTL01033
AT&T FA CODE: 10035233
AT&T PACE NUMBER: MRCTB046491
AT&T PROJECT: LTE 3C

BUSINESS UNIT #: 841298
SITE ADDRESS: 250 MERIDEN WATERBURY TURNPIKE SOUTHINGTON, CT 06489
COUNTY: HARTFORD
SITE TYPE: SELF SUPPORT TOWER
TOWER HEIGHT: 120'-0"

SITE INFORMATION

CROWN CASTLE USA INC. SITE NAME:	SOUTHINGTON ROGUS
SITE ADDRESS:	250 MERIDEN WATERBURY TURNPIKE SOUTHINGTON, CT 06489
COUNTY:	HARTFORD
MAP/PARCEL #:	SOUT-000015-000080
AREA OF CONSTRUCTION:	EXISTING
LATITUDE:	41° 33' 24.54"
LONGITUDE:	-72° 51' 10.84"
LAT/LONG TYPE:	NAD83
GROUND ELEVATION:	345 FT.
CURRENT ZONING:	NOT REQUIRED
JURISDICTION:	TOWN OF SOUTHINGTON
OCCUPANCY CLASSIFICATION:	U
TYPE OF CONSTRUCTION:	IIB
A.D.A. COMPLIANCE:	FACILITY IS UNMANNED AND NOT FOR HUMAN HABITATION
PROPERTY OWNER:	ROGUS, JOHN 250 MERIDEN-WATERBURY TURNPIKE SOUTHINGTON, CT 06489
TOWER OWNER:	CCATT LLC 2000 CORPORATE DRIVE CANONSBURG, PA 15317
CARRIER/APPLICANT:	AT&T TOWER ASSET GROUP 575 MOROSGO DRIVE ATLANTA, GA 30324-3300
ELECTRIC PROVIDER:	CONNECTICUT LIGHT & POWER CO (800) 268-2000
TELCO PROVIDER:	AT&T (866) 620-6900

DRAWING INDEX

SHEET #	SHEET DESCRIPTION
T-1	TITLE SHEET
T-2	GENERAL NOTES
C-1.1	SITE PLAN
C-1.2	EXISTING & FINAL EQUIPMENT PLANS
C-2	FINAL ELEVATION & ANTENNA PLANS
C-3	FINAL EQUIPMENT SCHEDULE
C-4	EQUIPMENT SPECS
G-1	GROUNDING SCHEMATIC
G-2	GROUNDING DETAILS
ATTACHED	PLUMBING DIAGRAM
ATTACHED	MOUNT SPECIFICATIONS

ALL DRAWINGS CONTAINED HEREIN ARE FORMATTED FOR 11X17. CONTRACTOR SHALL VERIFY ALL PLANS AND EXISTING DIMENSIONS AND CONDITIONS ON THE JOB SITE AND SHALL IMMEDIATELY NOTIFY THE ENGINEER IN WRITING OF ANY DISCREPANCIES BEFORE PROCEEDING WITH THE WORK OR BE RESPONSIBLE FOR SAME.

CALL CONNECTICUT ONE CALL
(800) 922-4455 CBYD.COM
CALL 2 WORKING DAYS
BEFORE YOU DIG!

LOCATION MAP

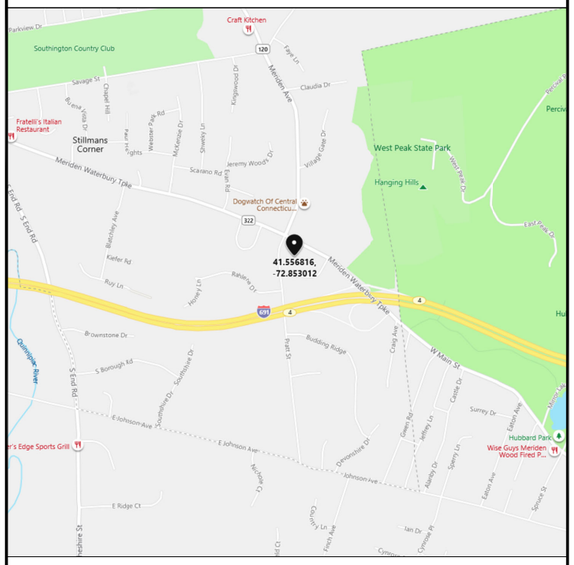

NO SCALE

SITE PHOTO

PROJECT TEAM

A&E FIRM:	CROWN CASTLE USA INC. 2000 CORPORATE DRIVE CANONSBURG, PA 15317 CROWNAE.APPROVAL@CROWNCASTLE.COM
CROWN CASTLE USA INC. DISTRICT CONTACTS:	3 CORPORATE PARK DRIVE, SUITE 101 CLIFTON PARK, NY 12065 VERONICA DELIA - PROJECT MANAGER (610) 635-3222 JASON D'AMICO - CONSTRUCTION MANAGER (860) 209-0104

PROJECT DESCRIPTION

THE PURPOSE OF THIS PROJECT IS TO ENHANCE BROADBAND CONNECTIVITY AND CAPACITY TO THE EXISTING ELIGIBLE WIRELESS FACILITY.

TOWER SCOPE OF WORK:
- REMOVE (3) ERICSSON - RRUS 11 B12 RRHs
- REMOVE (3) ERICSSON - RADIO 4415 B25 RRHs
- REMOVE ALL EQUIPMENT, FEEDLINES, & MOUNTS AT MCL 76'-0"
- RELOCATE (3) CCI ANTENNAS - OPA-65R-LCUU-H6 ANTENNAS
- INSTALL (3) CCI ANTENNA - TPA65R-BU8DA-K ANTENNAS
- INSTALL (3) ERICSSON - RADIO 4449 B5/12 RRHs
- INSTALL (3) ERICSSON - RADIO 8843 B2/66A RRHs
- INSTALL (1) RAYCAP - DC6-48-60-18-8C-EV SQUID
- INSTALL (2) #8AWG DC CABLES (3/4")
- INSTALL (1) FIBER CABLE (3/8")
- INSTALL (6) VALMONT - RRUDSM BACK TO BACK RRH MOUNTS
- INSTALL VALMONT - USF-2U MOUNT WITH MODIFICATIONS PER MOUNT ANALYSIS BY POWER OF DESIGN GROUP DATED MAY 22, 2020

GROUND SCOPE OF WORK:
- INSTALL (1) FIF RACK
- INSTALL (1) 6630
- INSTALL (1) FIBER MANAGEMENT BOX
- INSTALL (2) BREAKER PANELS WITH (18) UP-CONVERTERS

INSTALLER NOTE:
NO PROPOSED LOADING TO BE ADDED UNTIL MOUNT MODIFICATIONS ARE INSTALLED PER MOUNT ANALYSIS BY POWER OF DESIGN GROUP DATED MAY 22, 2020.

INSTALLER NOTE:
NO PROPOSED LOADING TO BE ADDED UNTIL TOWER MODIFICATIONS ARE INSTALLED PER TOWER MODIFICATION DESIGN BY PAUL J. FORD & CO. DATED JULY 15, 2020.

APPLICABLE CODES/REFERENCE DOCUMENTS

ALL WORK SHALL BE PERFORMED AND MATERIALS INSTALLED IN ACCORDANCE WITH THE CURRENT EDITIONS OF THE FOLLOWING CODES AS ADOPTED BY THE LOCAL GOVERNING AUTHORITIES. NOTHING IN THESE PLANS IS TO BE CONSTRUED TO PERMIT WORK NOT CONFORMING TO THESE CODES:

CODE TYPE	CODE
BUILDING	2018 CT STATE BUILDING CODE/2015 IBC W/ CT AMENDMENTS
MECHANICAL	2018 CT STATE BUILDING CODE/2015 IMC W/ CT AMENDMENTS
ELECTRICAL	2018 CT STATE BUILDING CODE/2017 NEC W/ CT AMENDMENTS

REFERENCE DOCUMENTS:

STRUCTURAL ANALYSIS:	PAUL J. FORD & CO.
DATED:	JULY 15, 2020
MOUNT ANALYSIS:	POWER OF DESIGN GROUP
DATED:	MAY 22, 2020
RFDS REVISION:	FINAL
DATED:	04/30/2020
ORDER ID:	517069
REVISION:	1

NOTE:
PRIOR TO ACCESSING/ENTERING THE SITE YOU MUST CONTACT THE CROWN NOC AT (800) 788-7011 & CROWN CONSTRUCTION MANAGER.

AT&T
575 MOROSGO DRIVE
ATLANTA, GA 30324-3300

CROWN CASTLE
3 CORPORATE PARK DRIVE, SUITE 101
CLIFTON PARK, NY 12065

AT&T SITE NUMBER: **59347**

BU #: **841298**
SOUTHINGTON ROGUS

250 MERIDEN WATERBURY TURNPIKE
SOUTHINGTON, CT 06489

EXISTING 120'-0" SELF SUPPORT TOWER

ISSUED FOR:

REV	DATE	DRWN	DESCRIPTION	DES./QA
A	05/12/20	CJ	PRELIMINARY	LR
B	05/21/20	CJ	PRELIMINARY	LR
C	07/27/20	CJ	PRELIMINARY	LR
0	08/21/20	CJ	CONSTRUCTION	MB

DocuSigned by:
Noam Barlavi
7E8A38AFADCC448D...
8/21/2020 | 9:55:18 AM EDT

STATE OF CONNECTICUT
NOAM BARLAVI
30501
LICENSED
PROFESSIONAL ENGINEER

Crown Castle USA Inc.
Certificate of Registration #PEC.0001101

IT IS A VIOLATION OF LAW FOR ANY PERSON, UNLESS THEY ARE ACTING UNDER THE DIRECTION OF A LICENSED PROFESSIONAL ENGINEER, TO ALTER THIS DOCUMENT.

SHEET NUMBER: T-1
REVISION: 0

CROWN CASTLE USA INC. SITE ACTIVITY REQUIREMENTS:

1. NOTICE TO PROCEED– NO WORK SHALL COMMENCE PRIOR TO CROWN CASTLE USA INC. WRITTEN NOTICE TO PROCEED (NTP) AND THE ISSUANCE OF A PURCHASE ORDER. PRIOR TO ACCESSING/ENTERING THE SITE YOU MUST CONTACT THE CROWN CASTLE USA INC. NOC AT 800–788–7011 & THE CROWN CASTLE USA INC. CONSTRUCTION MANAGER.
2. "LOOK UP" – CROWN CASTLE USA INC. SAFETY CLIMB REQUIREMENT:
THE INTEGRITY OF THE SAFETY CLIMB AND ALL COMPONENTS OF THE CLIMBING FACILITY SHALL BE CONSIDERED DURING ALL STAGES OF DESIGN, INSTALLATION, AND INSPECTION. TOWER MODIFICATION, MOUNT REINFORCEMENTS, AND/OR EQUIPMENT INSTALLATIONS SHALL NOT COMPROMISE THE INTEGRITY OR FUNCTIONAL USE OF THE SAFETY CLIMB OR ANY COMPONENTS OF THE CLIMBING FACILITY ON THE STRUCTURE. THIS SHALL INCLUDE, BUT NOT BE LIMITED TO: PINCHING OF THE WIRE ROPE, BENDING OF THE WIRE ROPE FROM ITS SUPPORTS, DIRECT CONTACT OR CLOSE PROXIMITY TO THE WIRE ROPE WHICH MAY CAUSE FRICTIONAL WEAR, IMPACT TO THE ANCHORAGE POINTS IN ANY WAY, OR TO IMPEDE/BLOCK ITS INTENDED USE. ANY COMPROMISED SAFETY CLIMB, INCLUDING EXISTING CONDITIONS MUST BE TAGGED OUT AND REPORTED TO YOUR CROWN CASTLE USA INC. POC OR CALL THE NOC TO GENERATE A SAFETY CLIMB MAINTENANCE AND CONTRACTOR NOTICE TICKET.
3. PRIOR TO THE START OF CONSTRUCTION, ALL REQUIRED JURISDICTIONAL PERMITS SHALL BE OBTAINED. THIS INCLUDES, BUT IS NOT LIMITED TO, BUILDING, ELECTRICAL, MECHANICAL, FIRE, FLOOD ZONE, ENVIRONMENTAL, AND ZONING. AFTER ONSITE ACTIVITIES AND CONSTRUCTION ARE COMPLETED, ALL REQUIRED PERMITS SHALL BE SATISFIED AND CLOSED OUT ACCORDING TO LOCAL JURISDICTIONAL REQUIREMENTS.
4. ALL CONSTRUCTION MEANS AND METHODS; INCLUDING BUT NOT LIMITED TO, ERECTION PLANS, RIGGING PLANS, CLIMBING PLANS, AND RESCUE PLANS SHALL BE THE RESPONSIBILITY OF THE GENERAL CONTRACTOR RESPONSIBLE FOR THE EXECUTION OF THE WORK CONTAINED HEREIN, AND SHALL MEET ANSI/ASSE A10.48 (LATEST EDITION); FEDERAL, STATE, AND LOCAL REGULATIONS; AND ANY APPLICABLE INDUSTRY CONSENSUS STANDARDS RELATED TO THE CONSTRUCTION ACTIVITIES BEING PERFORMED. ALL RIGGING PLANS SHALL ADHERE TO ANSI/ASSE A10.48 (LATEST EDITION) AND CROWN CASTLE USA INC. STANDARD CED–STD–10253, INCLUDING THE REQUIRED INVOLVEMENT OF A QUALIFIED ENGINEER FOR CLASS IV CONSTRUCTION, TO CERTIFY THE SUPPORTING STRUCTURE(S) IN ACCORDANCE WITH ANSI/TIA–322 (LATEST EDITION).
5. ALL SITE WORK TO COMPLY WITH QAS–STD–10068 "INSTALLATION STANDARDS FOR CONSTRUCTION ACTIVITIES ON CROWN CASTLE USA INC. TOWER SITE" AND LATEST VERSION OF ANSI/TIA–1019–A–2012 "STANDARD FOR INSTALLATION, ALTERATION, AND MAINTENANCE OF ANTENNA SUPPORTING STRUCTURES AND ANTENNAS."
6. IF THE SPECIFIED EQUIPMENT CAN NOT BE INSTALLED AS SHOWN ON THESE DRAWINGS, THE CONTRACTOR SHALL PROPOSE AN ALTERNATIVE INSTALLATION FOR APPROVAL BY CROWN CASTLE USA INC. PRIOR TO PROCEEDING WITH ANY SUCH CHANGE OF INSTALLATION.
7. ALL MATERIALS FURNISHED AND INSTALLED SHALL BE IN STRICT ACCORDANCE WITH ALL APPLICABLE CODES, REGULATIONS AND ORDINANCES. CONTRACTOR SHALL ISSUE ALL APPROPRIATE NOTICES AND COMPLY WITH ALL LAWS, ORDINANCES, RULES, REGULATIONS AND LAWFUL ORDERS OF ANY PUBLIC AUTHORITY REGARDING THE PERFORMANCE OF THE WORK. ALL WORK CARRIED OUT SHALL COMPLY WITH ALL APPLICABLE MUNICIPAL AND UTILITY COMPANY SPECIFICATIONS AND LOCAL JURISDICTIONAL CODES, ORDINANCES AND APPLICABLE REGULATIONS.
8. THE CONTRACTOR SHALL INSTALL ALL EQUIPMENT AND MATERIALS IN ACCORDANCE WITH MANUFACTURER'S RECOMMENDATIONS UNLESS SPECIFICALLY STATED OTHERWISE.
9. THE CONTRACTOR SHALL CONTACT UTILITY LOCATING SERVICES PRIOR TO THE START OF CONSTRUCTION.
10. ALL EXISTING ACTIVE SEWER, WATER, GAS, ELECTRIC AND OTHER UTILITIES WHERE ENCOUNTERED IN THE WORK, SHALL BE PROTECTED AT ALL TIMES AND WHERE REQUIRED FOR THE PROPER EXECUTION OF THE WORK, SHALL BE RELOCATED AS DIRECTED BY CONTRACTOR. EXTREME CAUTION SHOULD BE USED BY THE CONTRACTOR WHEN EXCAVATING OR DRILLING PIERS AROUND OR NEAR UTILITIES. CONTRACTOR SHALL PROVIDE SAFETY TRAINING FOR THE WORKING CREW. THIS WILL INCLUDE BUT NOT BE LIMITED TO A) FALL PROTECTION B) CONFINED SPACE C) ELECTRICAL SAFETY D) TRENCHING AND EXCAVATION E) CONSTRUCTION SAFETY PROCEDURES.
11. ALL SITE WORK SHALL BE AS INDICATED ON THE STAMPED CONSTRUCTION DRAWINGS AND PROJECT SPECIFICATIONS, LATEST APPROVED REVISION.
12. CONTRACTOR SHALL KEEP THE SITE FREE FROM ACCUMULATING WASTE MATERIAL, DEBRIS, AND TRASH AT THE COMPLETION OF THE WORK. IF NECESSARY, RUBBISH, STUMPS, DEBRIS, STICKS, STONES AND OTHER REFUSE SHALL BE REMOVED FROM THE SITE AND DISPOSED OF LEGALLY.
13. ALL EXISTING INACTIVE SEWER, WATER, GAS, ELECTRIC AND OTHER UTILITIES, WHICH INTERFERE WITH THE EXECUTION OF THE WORK, SHALL BE REMOVED AND/OR CAPPED, PLUGGED OR OTHERWISE DISCONTINUED AT POINTS WHICH WILL NOT INTERFERE WITH THE EXECUTION OF THE WORK, SUBJECT TO THE APPROVAL OF CONTRACTOR, TOWER OWNER, CROWN CASTLE USA INC., AND/OR LOCAL UTILITIES.
14. THE CONTRACTOR SHALL PROVIDE SITE SIGNAGE IN ACCORDANCE WITH THE TECHNICAL SPECIFICATION FOR SITE SIGNAGE REQUIRED BY LOCAL JURISDICTION AND SIGNAGE REQUIRED ON INDIVIDUAL PIECES OF EQUIPMENT, ROOMS, AND SHELTERS.
15. THE SITE SHALL BE GRADED TO CAUSE SURFACE WATER TO FLOW AWAY FROM THE CARRIER'S EQUIPMENT AND TOWER AREAS.
16. THE SUB GRADE SHALL BE COMPACTED AND BROUGHT TO A SMOOTH UNIFORM GRADE PRIOR TO FINISHED SURFACE APPLICATION.
17. THE AREAS OF THE OWNERS PROPERTY DISTURBED BY THE WORK AND NOT COVERED BY THE TOWER, EQUIPMENT OR DRIVEWAY, SHALL BE GRADED TO A UNIFORM SLOPE, AND STABILIZED TO PREVENT EROSION AS SPECIFIED ON THE CONSTRUCTION DRAWINGS AND/OR PROJECT SPECIFICATIONS.
18. CONTRACTOR SHALL MINIMIZE DISTURBANCE TO EXISTING SITE DURING CONSTRUCTION. EROSION CONTROL MEASURES, IF REQUIRED DURING CONSTRUCTION, SHALL BE IN CONFORMANCE WITH THE LOCAL GUIDELINES FOR EROSION AND SEDIMENT CONTROL.
19. THE CONTRACTOR SHALL PROTECT EXISTING IMPROVEMENTS, PAVEMENTS, CURBS, LANDSCAPING AND STRUCTURES. ANY DAMAGED PART SHALL BE REPAIRED AT CONTRACTOR'S EXPENSE TO THE SATISFACTION OF OWNER.
20. CONTRACTOR SHALL LEGALLY AND PROPERLY DISPOSE OF ALL SCRAP MATERIALS SUCH AS COAXIAL CABLES AND OTHER ITEMS REMOVED FROM THE EXISTING FACILITY. ANTENNAS REMOVED SHALL BE RETURNED TO THE OWNER'S DESIGNATED LOCATION.
21. CONTRACTOR SHALL LEAVE PREMISES IN CLEAN CONDITION. TRASH AND DEBRIS SHOULD BE REMOVED FROM SITE ON A DAILY BASIS.
22. NO FILL OR EMBANKMENT MATERIAL SHALL BE PLACED ON FROZEN GROUND. FROZEN MATERIALS, SNOW OR ICE SHALL NOT BE PLACED IN ANY FILL OR EMBANKMENT.

GENERAL NOTES:

1. FOR THE PURPOSE OF CONSTRUCTION DRAWING, THE FOLLOWING DEFINITIONS SHALL APPLY:
CONTRACTOR: GENERAL CONTRACTOR RESPONSIBLE FOR CONSTRUCTION
CARRIER: AT&T
TOWER OWNER: CROWN CASTLE USA INC.
2. THESE DRAWINGS HAVE BEEN PREPARED USING STANDARDS OF PROFESSIONAL CARE AND COMPLETENESS NORMALLY EXERCISED UNDER SIMILAR CIRCUMSTANCES BY REPUTABLE ENGINEERS IN THIS OR SIMILAR LOCALITIES. IT IS ASSUMED THAT THE WORK DEPICTED WILL BE PERFORMED BY AN EXPERIENCED CONTRACTOR AND/OR WORKPEOPLE WHO HAVE A WORKING KNOWLEDGE OF THE APPLICABLE CODE STANDARDS AND REQUIREMENTS AND OF INDUSTRY ACCEPTED STANDARD GOOD PRACTICE. AS NOT EVERY CONDITION OR ELEMENT IS (OR CAN BE) EXPLICITLY SHOWN ON THESE DRAWINGS, THE CONTRACTOR SHALL USE INDUSTRY ACCEPTED STANDARD GOOD PRACTICE FOR MISCELLANEOUS WORK NOT EXPLICITLY SHOWN.
3. THESE DRAWINGS REPRESENT THE FINISHED STRUCTURE. THEY DO NOT INDICATE THE MEANS OR METHODS OF CONSTRUCTION. THE CONTRACTOR SHALL BE SOLELY RESPONSIBLE FOR THE CONSTRUCTION MEANS, METHODS, TECHNIQUES, SEQUENCES, AND PROCEDURES. THE CONTRACTOR SHALL PROVIDE ALL MEASURES NECESSARY FOR PROTECTION OF LIFE AND PROPERTY DURING CONSTRUCTION. SUCH MEASURES SHALL INCLUDE, BUT NOT BE LIMITED TO, BRACING, FORMWORK, SHORING, ETC. SITE VISITS BY THE ENGINEER OR HIS REPRESENTATIVE WILL NOT INCLUDE INSPECTION OF THESE ITEMS AND IS FOR STRUCTURAL OBSERVATION OF THE FINISHED STRUCTURE ONLY.
4. NOTES AND DETAILS IN THE CONSTRUCTION DRAWINGS SHALL TAKE PRECEDENCE OVER GENERAL NOTES AND TYPICAL DETAILS. WHERE NO DETAILS ARE SHOWN, CONSTRUCTION SHALL CONFORM TO SIMILAR WORK ON THE PROJECT, AND/OR AS PROVIDED FOR IN THE CONTRACT DOCUMENTS. WHERE DISCREPANCIES OCCUR BETWEEN PLANS, DETAILS, GENERAL NOTES, AND SPECIFICATIONS, THE GREATER, MORE STRICT REQUIREMENTS, SHALL GOVERN. IF FURTHER CLARIFICATION IS REQUIRED CONTACT THE ENGINEER OF RECORD.
5. SUBSTANTIAL EFFORT HAS BEEN MADE TO PROVIDE ACCURATE DIMENSIONS AND MEASUREMENTS ON THE DRAWINGS TO ASSIST IN THE FABRICATION AND/OR PLACEMENT OF CONSTRUCTION ELEMENTS BUT IT IS THE SOLE RESPONSIBILITY OF THE CONTRACTOR TO FIELD VERIFY THE DIMENSIONS, MEASUREMENTS, AND/OR CLEARANCES SHOWN IN THE CONSTRUCTION DRAWINGS PRIOR TO FABRICATION OR CUTTING OF ANY NEW OR EXISTING CONSTRUCTION ELEMENTS. IF IT IS DETERMINED THAT THERE ARE DISCREPANCIES AND/OR CONFLICTS WITH THE CONSTRUCTION DRAWINGS THE ENGINEER OF RECORD IS TO BE NOTIFIED AS SOON AS POSSIBLE.
6. PRIOR TO THE SUBMISSION OF BIDS, THE BIDDING CONTRACTOR SHALL VISIT THE CELL SITE TO FAMILIARIZE WITH THE EXISTING CONDITIONS AND TO CONFIRM THAT THE WORK CAN BE ACCOMPLISHED AS SHOWN ON THE CONSTRUCTION DRAWINGS. ANY DISCREPANCY FOUND SHALL BE BROUGHT TO THE ATTENTION OF CROWN CASTLE.
7. ALL MATERIALS FURNISHED AND INSTALLED SHALL BE IN STRICT ACCORDANCE WITH ALL APPLICABLE CODES, REGULATIONS AND ORDINANCES. CONTRACTOR SHALL ISSUE ALL APPROPRIATE NOTICES AND COMPLY WITH ALL LAWS, ORDINANCES, RULES, REGULATIONS AND LAWFUL ORDERS OF ANY PUBLIC AUTHORITY REGARDING THE PERFORMANCE OF THE WORK. ALL WORK CARRIED OUT SHALL COMPLY WITH ALL APPLICABLE MUNICIPAL AND UTILITY COMPANY SPECIFICATIONS AND LOCAL JURISDICTIONAL CODES, ORDINANCES AND APPLICABLE REGULATIONS.
8. UNLESS NOTED OTHERWISE, THE WORK SHALL INCLUDE FURNISHING MATERIALS, EQUIPMENT, APPURTENANCES AND LABOR NECESSARY TO COMPLETE ALL INSTALLATIONS AS INDICATED ON THE DRAWINGS.
9. THE CONTRACTOR SHALL INSTALL ALL EQUIPMENT AND MATERIALS IN ACCORDANCE WITH MANUFACTURER'S RECOMMENDATIONS UNLESS SPECIFICALLY STATED OTHERWISE.
10. IF THE SPECIFIED EQUIPMENT CAN NOT BE INSTALLED AS SHOWN ON THESE DRAWINGS, THE CONTRACTOR SHALL PROPOSE AN ALTERNATIVE INSTALLATION FOR APPROVAL BY THE CARRIER AND CROWN CASTLE PRIOR TO PROCEEDING WITH ANY SUCH CHANGE OF INSTALLATION.
11. CONTRACTOR IS TO PERFORM A SITE INVESTIGATION AND IS TO DETERMINE THE BEST ROUTING OF ALL CONDUITS FOR POWER, AND TELCO AND FOR GROUNDING CABLES AS SHOWN IN THE POWER, TELCO, AND GROUNDING PLAN DRAWINGS.
12. THE CONTRACTOR SHALL PROTECT EXISTING IMPROVEMENTS, PAVEMENTS, CURBS, LANDSCAPING AND STRUCTURES. ANY DAMAGED PART SHALL BE REPAIRED AT CONTRACTOR'S EXPENSE TO THE SATISFACTION OF CROWN CASTLE USA INC.
13. CONTRACTOR SHALL LEGALLY AND PROPERLY DISPOSE OF ALL SCRAP MATERIALS SUCH AS COAXIAL CABLES AND OTHER ITEMS REMOVED FROM THE EXISTING FACILITY. ANTENNAS REMOVED SHALL BE RETURNED TO THE OWNER'S DESIGNATED LOCATION.
14. CONTRACTOR SHALL LEAVE PREMISES IN CLEAN CONDITION. TRASH AND DEBRIS SHOULD BE REMOVED FROM SITE ON A DAILY BASIS.

CONCRETE, FOUNDATIONS, AND REINFORCING STEEL:

1. ALL CONCRETE WORK SHALL BE IN ACCORDANCE WITH THE ACI 301, ACI 318, ACI 336, ASTM A184, ASTM A185 AND THE DESIGN AND CONSTRUCTION SPECIFICATION FOR CAST–IN–PLACE CONCRETE.
2. UNLESS NOTED OTHERWISE, SOIL BEARING PRESSURE USED FOR DESIGN OF SLABS AND FOUNDATIONS IS ASSUMED TO BE 1000 psf.
3. ALL CONCRETE SHALL HAVE A MINIMUM COMPRESSIVE STRENGTH (f'c) OF 3000 psi AT 28 DAYS, UNLESS NOTED OTHERWISE. NO MORE THAN 90 MINUTES SHALL ELAPSE FROM BATCH TIME TO TIME OF PLACEMENT UNLESS APPROVED BY THE ENGINEER OF RECORD. TEMPERATURE OF CONCRETE SHALL NOT EXCEED 90°f AT TIME OF PLACEMENT.
4. CONCRETE EXPOSED TO FREEZE–THAW CYCLES SHALL CONTAIN AIR ENTRAINING ADMIXTURES. AMOUNT OF AIR ENTRAINMENT TO BE BASED ON SIZE OF AGGREGATE AND F3 CLASS EXPOSURE (VERY SEVERE). CEMENT USED TO BE TYPE II PORTLAND CEMENT WITH A MAXIMUM WATER–TO–CEMENT RATIO (W/C) OF 0.45.
5. ALL STEEL REINFORCING SHALL CONFORM TO ASTM A615. ALL WELDED WIRE FABRIC (WWF) SHALL CONFORM TO ASTM A185. ALL SPLICES SHALL BE CLASS "B" TENSION SPLICES, UNLESS NOTED OTHERWISE. ALL HOOKS SHALL BE STANDARD 90 DEGREE HOOKS, UNLESS NOTED OTHERWISE. YIELD STRENGTH (Fy) OF STANDARD DEFORMED BARS ARE AS FOLLOWS:
#4 BARS AND SMALLER ... 40 ksi
#5 BARS AND LARGER ... 60 ksi
6. THE FOLLOWING MINIMUM CONCRETE COVER SHALL BE PROVIDED FOR REINFORCING STEEL UNLESS SHOWN OTHERWISE ON DRAWINGS:
CONCRETE CAST AGAINST AND PERMANENTLY EXPOSED TO EARTH ... 3"
CONCRETE EXPOSED TO EARTH OR WEATHER:
#6 BARS AND LARGER ... 2"
#5 BARS AND SMALLER ... 1–1/2"
CONCRETE NOT EXPOSED TO EARTH OR WEATHER:
SLAB AND WALLS ... 3/4"
BEAMS AND COLUMNS ... 1–1/2"
7. A TOOLED EDGE OR A 3/4" CHAMFER SHALL BE PROVIDED AT ALL EXPOSED EDGES OF CONCRETE, UNLESS NOTED OTHERWISE, IN ACCORDANCE WITH ACI 301 SECTION 4.2.4.

GREENFIELD GROUNDING NOTES:

1. ALL GROUND ELECTRODE SYSTEMS (INCLUDING TELECOMMUNICATION, RADIO, LIGHTNING PROTECTION AND AC POWER GES'S) SHALL BE BONDED TOGETHER AT OR BELOW GRADE, BY TWO OR MORE COPPER BONDING CONDUCTORS IN ACCORDANCE WITH THE NEC.
2. THE CONTRACTOR SHALL PERFORM IEEE FALL–OF–POTENTAL RESISTANCE TO EARTH TESTING (PER IEEE 1100 AND 81) FOR GROUND ELECTRODE SYSTEMS, THE CONTRACTOR SHALL FURNISH AND INSTALL SUPPLEMENTAL GROUND ELECTRODES AS NEEDED TO ACHIEVE A TEST RESULT OF 5 OHMS OR LESS.
3. THE CONTRACTOR IS RESPONSIBLE FOR PROPERLY SEQUENCING GROUNDING AND UNDERGROUND CONDUIT INSTALLATION AS TO PREVENT ANY LOSS OF CONTINUITY IN THE GROUNDING SYSTEM OR DAMAGE TO THE CONDUIT AND PROVIDE TESTING RESULTS.
4. METAL CONDUIT AND TRAY SHALL BE GROUNDED AND MADE ELECTRICALLY CONTINUOUS WITH LISTED BONDING FITTINGS OR BY BONDING ACROSS THE DISCONTINUITY WITH #6 COPPER WIRE UL APPROVED GROUNDING TYPE CONDUIT CLAMPS.
5. METAL RACEWAY SHALL NOT BE USED AS THE NEC REQUIRED EQUIPMENT GROUND CONDUCTOR. STRANDED COPPER CONDUCTORS WITH GREEN INSULATION, SIZED IN ACCORDANCE WITH THE NEC, SHALL BE FURNISHED AND INSTALLED WITH THE POWER CIRCUITS TO BTS EQUIPMENT.
6. EACH CABINET FRAME SHALL BE DIRECTLY CONNECTED TO THE MASTER GROUND BAR WITH GREEN INSULATED SUPPLEMENTAL EQUIPMENT GROUND WIRES, #6 STRANDED COPPER OR LARGER FOR INDOOR BTS; #2 BARE SOLID TINNED COPPER FOR OUTDOOR BTS.
7. CONNECTIONS TO THE GROUND BUS SHALL NOT BE DOUBLED UP OR STACKED BACK TO BACK CONNECTIONS ON OPPOSITE SIDE OF THE GROUND BUS ARE PERMITTED.
8. ALL EXTERIOR GROUND CONDUCTORS BETWEEN EQUIPMENT/GROUND BARS AND THE GROUND RING SHALL BE #2 SOLID TINNED COPPER UNLESS OTHERWISE INDICATED.
9. ALUMINUM CONDUCTOR OR COPPER CLAD STEEL CONDUCTOR SHALL NOT BE USED FOR GROUNDING CONNECTIONS.
10. USE OF 90° BENDS IN THE PROTECTION GROUNDING CONDUCTORS SHALL BE AVOIDED WHEN 45° BENDS CAN BE ADEQUATELY SUPPORTED.
11. EXOTHERMIC WELDS SHALL BE USED FOR ALL GROUNDING CONNECTIONS BELOW GRADE.
12. ALL GROUND CONNECTIONS ABOVE GRADE (INTERIOR AND EXTERIOR) SHALL BE FORMED USING HIGH PRESS CRIMPS.
13. COMPRESSION GROUND CONNECTIONS MAY BE REPLACED BY EXOTHERMIC WELD CONNECTIONS.
14. ICE BRIDGE BONDING CONDUCTORS SHALL BE EXOTHERMICALLY BONDED OR BOLTED TO THE BRIDGE AND THE TOWER GROUND BAR.
15. APPROVED ANTIOXIDANT COATINGS (i.e. CONDUCTIVE GEL OR PASTE) SHALL BE USED ON ALL COMPRESSION AND BOLTED GROUND CONNECTIONS.
16. ALL EXTERIOR GROUND CONNECTIONS SHALL BE COATED WITH A CORROSION RESISTANT MATERIAL.
17. MISCELLANEOUS ELECTRICAL AND NON–ELECTRICAL METAL BOXES, FRAMES AND SUPPORTS SHALL BE BONDED TO THE GROUND RING, IN ACCORDANCE WITH THE NEC.
18. BOND ALL METALLIC OBJECTS WITHIN 6 ft OF MAIN GROUND RING WITH (1) #2 BARE SOLID TINNED COPPER GROUND CONDUCTOR.
19. GROUND CONDUCTORS USED FOR THE FACILITY GROUNDING AND LIGHTNING PROTECTION SYSTEMS SHALL NOT BE ROUTED THROUGH METALLIC OBJECTS THAT FORM A RING AROUND THE CONDUCTOR, SUCH AS METALLIC CONDUITS, METAL SUPPORT CLIPS OR SLEEVES THROUGH WALLS OR FLOORS. WHEN IT IS REQUIRED TO BE HOUSED IN CONDUIT TO MEET CODE REQUIREMENTS OR LOCAL CONDITIONS, NON–METALLIC MATERIAL SUCH AS PVC CONDUIT SHALL BE USED. WHERE USE OF METAL CONDUIT IS UNAVOIDABLE (i.e., NONMETALLIC CONDUIT PROHIBITED BY LOCAL CODE) THE GROUND CONDUCTOR SHALL BE BONDED TO EACH END OF THE METAL CONDUIT.
20. ALL GROUNDS THAT TRANSITION FROM BELOW GRADE TO ABOVE GRADE MUST BE #2 BARE SOLID TINNED COPPER IN 3/4" NON–METALLIC, FLEXIBLE CONDUIT FROM 24" BELOW GRADE TO WITHIN 3" TO 6" OF CAD–WELD TERMINATION POINT. THE EXPOSED END OF THE CONDUIT MUST BE SEALED WITH SILICONE CAULK. (ADD TRANSITIONING GROUND STANDARD DETAIL AS WELL).
21. BUILDINGS WHERE THE MAIN GROUNDING CONDUCTORS ARE REQUIRED TO BE ROUTED TO GRADE, THE CONTRACTOR SHALL ROUTE TWO GROUNDING CONDUCTORS FROM THE ROOFTOP, TOWERS, AND WATER TOWERS GROUNDING RING, TO THE EXISTING GROUNDING SYSTEM, THE GROUNDING CONDUCTORS SHALL NOT BE SMALLER THAN 2/0 COPPER. ROOFTOP GROUNDING RING SHALL BE BONDED TO THE EXISTING GROUNDING SYSTEM, THE BUILDING STEEL COLUMNS, LIGHTNING PROTECTION SYSTEM, AND BUILDING MAIN WATER LINE (FERROUS OR NONFERROUS METAL PIPING ONLY).

ELECTRICAL INSTALLATION NOTES:

1. ALL ELECTRICAL WORK SHALL BE PERFORMED IN ACCORDANCE WITH THE PROJECT SPECIFICATIONS, NEC AND ALL APPLICABLE FEDERAL, STATE, AND LOCAL CODES/ORDINANCES.
2. CONDUIT ROUTINGS ARE SCHEMATIC. CONTRACTOR SHALL INSTALL CONDUITS SO THAT ACCESS TO EQUIPMENT IS NOT BLOCKED AND TRIP HAZARDS ARE ELIMINATED.
3. WIRING, RACEWAY AND SUPPORT METHODS AND MATERIALS SHALL COMPLY WITH THE REQUIREMENTS OF THE NEC.
4. ALL CIRCUITS SHALL BE SEGREGATED AND MAINTAIN MINIMUM CABLE SEPARATION AS REQUIRED BY THE NEC.
4.1. ALL EQUIPMENT SHALL BEAR THE UNDERWRITERS LABORATORIES LABEL OF APPROVAL, AND SHALL CONFORM TO REQUIREMENT OF THE NATIONAL ELECTRICAL CODE.
4.2. ALL OVERCURRENT DEVICES SHALL HAVE AN INTERRUPTING CURRENT RATING THAT SHALL BE GREATER THAN THE SHORT CIRCUIT CURRENT TO WHICH THEY ARE SUBJECTED, 22,000 AIC MINIMUM. VERYIFY AVAILABLE SHORT CIRCUIT CURRENT DOES NOT EXCEED THE RATING OF ELECTRICAL EQUIPMENT IN ACCORDANCE WITH ARTICLE 110.24 NEC OR THE MOST CURRENT ADOPTED CODE PRE THE GOVERNING JURISDICTION.
5. EACH END OF EVERY POWER PHASE CONDUCTOR, GROUNDING CONDUCTOR, AND TELCO CONDUCTOR OR CABLE SHALL BE LABELED WITH COLOR–CODED INSULATION OR ELECTRICAL TAPE (3M BRAND, 1/2" PLASTIC ELECTRICAL TAPE WITH UV PROTECTION, OR EQUAL). THE IDENTIFICATION METHOD SHALL CONFORM WITH NEC AND OSHA.
6. ALL ELECTRICAL COMPONENTS SHALL BE CLEARLY LABELED WITH LAMICOID TAGS SHOWING THEIR RATED VOLTAGE, PHASE CONFIGURATION, WIRE CONFIGURATION, POWER OR AMPACITY RATING AND BRANCH CIRCUIT ID NUMBERS (i.e. PANEL BOARD AND CIRCUIT ID'S).
7. PANEL BOARDS (ID NUMBERS) SHALL BE CLEARLY LABELED WITH PLASTIC LABELS.
8. ALL TIE WRAPS SHALL BE CUT FLUSH WITH APPROVED CUTTING TOOL TO REMOVE SHARP EDGES.
9. ALL POWER AND EQUIPMENT GROUND WIRING IN TUBING OR CONDUIT SHALL BE SINGLE COPPER CONDUCTOR (#14 OR LARGER) WITH TYPE THHW, THWN, THWN–2, XHHW, XHHW–2, THW, THW–2, RHW, OR RHW–2 INSULATION UNLESS OTHERWISE SPECIFIED.
10. SUPPLEMENTAL EQUIPMENT GROUND WIRING LOCATED INDOORS SHALL BE SINGLE COPPER CONDUCTOR (#6 OR LARGER) WITH TYPE THHW, THWN, THWN–2, XHHW, XHHW–2, THW, THW–2, RHW, OR RHW–2 INSULATION UNLESS OTHERWISE SPECIFIED.
11. POWER AND CONTROL WIRING IN FLEXIBLE CORD SHALL BE MULTI–CONDUCTOR, TYPE SOOW CORD (#14 OR LARGER) UNLESS OTHERWISE SPECIFIED.
12. POWER AND CONTROL WIRING FOR USE IN CABLE TRAY SHALL BE MULTI–CONDUCTOR, TYPE TC CABLE (#14 OR LARGER), WITH TYPE THHW, THWN, THWN–2, XHHW, XHHW–2, THW, THW–2, RHW, OR RHW–2 INSULATION UNLESS OTHERWISE SPECIFIED.
13. ALL POWER AND GROUNDING CONNECTIONS SHALL BE CRIMP–STYLE, COMPRESSION WIRE LUGS AND WIRE NUTS BY THOMAS AND BETTS (OR EQUAL). LUGS AND WIRE NUTS SHALL BE RATED FOR OPERATION NOT LESS THAN 75° C (90° C IF AVAILABLE).
14. RACEWAY AND CABLE TRAY SHALL BE LISTED OR LABELED FOR ELECTRICAL USE IN ACCORDANCE WITH NEMA, UL, ANSI/IEEE AND NEC.
15. ELECTRICAL METALLIC TUBING (EMT), INTERMEDIATE METAL CONDUIT (IMC), OR RIGID METAL CONDUIT (RMC) SHALL BE USED FOR EXPOSED INDOOR LOCATIONS.
16. ELECTRICAL METALLIC TUBING (EMT) OR METAL–CLAD CABLE (MC) SHALL BE USED FOR CONCEALED INDOOR LOCATIONS.
17. SCHEDULE 40 PVC UNDERGROUND ON STRAIGHTS AND SCHEDULE 80 PVC FOR ALL ELBOWS/90s AND ALL APPROVED ABOVE GRADE PVC CONDUIT.
18. LIQUID–TIGHT FLEXIBLE METALLIC CONDUIT (LIQUID–TITE FLEX) SHALL BE USED INDOORS AND OUTDOORS, WHERE VIBRATION OCCURS OR FLEXIBILITY IS NEEDED.
19. CONDUIT AND TUBING FITTINGS SHALL BE THREADED OR COMPRESSION–TYPE AND APPROVED FOR THE LOCATION USED. SET SCREW FITTINGS ARE NOT ACCEPTABLE.
20. CABINETS, BOXES AND WIRE WAYS SHALL BE LABELED FOR ELECTRICAL USE IN ACCORDANCE WITH NEMA, UL, ANSI/IEEE AND THE NEC.
21. WIREWAYS SHALL BE METAL WITH AN ENAMEL FINISH AND INCLUDE A HINGED COVER, DESIGNED TO SWING OPEN DOWNWARDS (WIREMOLD SPECMATE WIREWAY).
22. SLOTTED WIRING DUCT SHALL BE PVC AND INCLUDE COVER (PANDUIT TYPE E OR EQUAL).
23. CONDUITS SHALL BE FASTENED SECURELY IN PLACE WITH APPROVED NON–PERFORATED STRAPS AND HANGERS. EXPLOSIVE DEVICES (i.e. POWDER–ACTUATED) FOR ATTACHING HANGERS TO STRUCTURE WILL NOT BE PERMITTED. CLOSELY FOLLOW THE LINES OF THE STRUCTURE, MAINTAIN CLOSE PROXIMITY TO THE STRUCTURE AND KEEP CONDUITS IN TIGHT ENVELOPES. CHANGES IN DIRECTION TO ROUTE AROUND OBSTACLES SHALL BE MADE WITH CONDUIT OUTLET BODIES. CONDUIT SHALL BE INSTALLED IN A NEAT AND WORKMANLIKE MANNER. PARALLEL AND PERPENDICULAR TO STRUCTURE WALL AND CEILING LINES. ALL CONDUIT SHALL BE FISHED TO CLEAR OBSTRUCTIONS. ENDS OF CONDUITS SHALL BE TEMPORARILY CAPPED FLUSH TO FINISH GRADE TO PREVENT CONCRETE, PLASTER OR DIRT FROM ENTERING. CONDUITS SHALL BE RIGIDLY CLAMPED TO BOXES BY GALVANIZED MALLEABLE IRON BUSHING ON INSIDE AND GALVANIZED MALLEABLE IRON LOCKNUT ON OUTSIDE AND INSIDE.
24. EQUIPMENT CABINETS, TERMINAL BOXES, JUNCTION BOXES AND PULL BOXES SHALL BE GALVANIZED OR EPOXY–COATED SHEET STEEL. SHALL MEET OR EXCEED UL 50 AND BE RATED NEMA 1 (OR BETTER) FOR INTERIOR LOCATIONS AND NEMA 3R (OR BETTER) FOR EXTERIOR LOCATIONS.
25. METAL RECEPTACLE, SWITCH AND DEVICE BOXES SHALL BE GALVANIZED, EPOXY–COATED OR NON–CORRODING; SHALL MEET OR EXCEED UL 514A AND NEMA OS 1 AND BE RATED NEMA 1 (OR BETTER) FOR INTERIOR LOCATIONS AND WEATHER PROTECTED (WP OR BETTER) FOR EXTERIOR LOCATIONS.
26. NONMETALLIC RECEPTACLE, SWITCH AND DEVICE BOXES SHALL MEET OR EXCEED NEMA OS 2 (NEWEST REVISION) AND BE RATED NEMA 1 (OR BETTER) FOR INTERIOR LOCATIONS AND WEATHER PROTECTED (WP OR BETTER) FOR EXTERIOR LOCATIONS.
27. THE CONTRACTOR SHALL NOTIFY AND OBTAIN NECESSARY AUTHORIZATION FROM THE CARRIER AND/OR CROWN CASTLE USA INC. BEFORE COMMENCING WORK ON THE AC POWER DISTRIBUTION PANELS.
28. THE CONTRACTOR SHALL PROVIDE NECESSARY TAGGING ON THE BREAKERS, CABLES AND DISTRIBUTION PANELS IN ACCORDANCE WITH THE APPLICABLE CODES AND STANDARDS TO SAFEGUARD LIFE AND PROPERTY.
29. INSTALL LAMICOID LABEL ON THE METER CENTER TO SHOW "AT&T".
30. ALL EMPTY/SPARE CONDUITS THAT ARE INSTALLED ARE TO HAVE A METERED MULE TAPE PULL CORD INSTALLED.

CONDUCTOR COLOR CODE		
SYSTEM	CONDUCTOR	COLOR
120/240V, 1Ø	A PHASE	BLACK
	B PHASE	RED
	NEUTRAL	WHITE
	GROUND	GREEN
120/208V, 3Ø	A PHASE	BLACK
	B PHASE	RED
	C PHASE	BLUE
	NEUTRAL	WHITE
	GROUND	GREEN
277/480V, 3Ø	A PHASE	BROWN
	B PHASE	ORANGE OR PURPLE
	C PHASE	YELLOW
	NEUTRAL	GREY
	GROUND	GREEN
DC VOLTAGE	POS (+)	RED**
	NEG (–)	BLACK**

* SEE NEC 210.5(C)(1) AND (2)
** POLARITY MARKED AT TERMINATION

APWA UNIFORM COLOR CODE:

WHITE	PROPOSED EXCAVATION
PINK	TEMPORARY SURVEY MARKINGS
RED	ELECTRIC POWER LINES, CABLES, CONDUIT, AND LIGHTING CABLES
YELLOW	GAS, OIL, STEAM, PETROLEUM, OR GASEOUS MATERIALS
ORANGE	COMMUNICATION, ALARM OR SIGNAL LINES, CABLES, OR CONDUIT AND TRAFFIC LOOPS
BLUE	POTABLE WATER
PURPLE	RECLAIMED WATER, IRRIGATION, AND SLURRY LINES
GREEN	SEWERS AND DRAIN LINES

ABBREVIATIONS:

ANT	ANTENNA
(E)	EXISTING
FIF	FACILITY INTERFACE FRAME
GEN	GENERATOR
GPS	GLOBAL POSITIONING SYSTEM
GSM	GLOBAL SYSTEM FOR MOBILE
LTE	LONG TERM EVOLUTION
MGB	MASTER GROUND BAR
MW	MICROWAVE
(N)	NEW
NEC	NATIONAL ELECTRIC CODE
(P)	PROPOSED
PP	POWER PLANT
QTY	QUANTITY
RECT	RECTIFIER
RBS	RADIO BASE STATION
RET	REMOTE ELECTRIC TILT
RFDS	RADIO FREQUENCY DATA SHEET
RRH	REMOTE RADIO HEAD
RRU	REMOTE RADIO UNIT
SIAD	SMART INTEGRATED DEVICE
TMA	TOWER MOUNTED AMPLIFIER
TYP	TYPICAL
UMTS	UNIVERSAL MOBILE TELECOMMUNICATIONS SYSTEM
W.P.	WORK POINT

AT&T
575 MOROSGO DRIVE
ATLANTA, GA 30324-3300

CROWN CASTLE
3 CORPORATE PARK DRIVE, SUITE 101
CLIFTON PARK, NY 12065

AT&T SITE NUMBER: **59347**

BU #: **841298**
SOUTHINGTON ROGUS

250 MERIDEN WATERBURY TURNPIKE
SOUTHINGTON, CT 06489

EXISTING 120'-0" SELF SUPPORT TOWER

ISSUED FOR:

REV	DATE	DRWN	DESCRIPTION	DES./QA
A	05/12/20	CJ	PRELIMINARY	LR
B	05/21/20	CJ	PRELIMINARY	LR
C	07/27/20	CJ	PRELIMINARY	LR
0	08/21/20	CJ	CONSTRUCTION	MB

DocuSigned by:
Malham Barimani
0BA38AFADCC448D...
STATE OF CONNECTICUT
MALHAM BARIMANI
30501
LICENSED
PROFESSIONAL ENGINEER
8/21/2020 | 9:57:18 AM EDT

Crown Castle USA Inc.
Certificate of Registration #PEC.0001101

IT IS A VIOLATION OF LAW FOR ANY PERSON, UNLESS THEY ARE ACTING UNDER THE DIRECTION OF A LICENSED PROFESSIONAL ENGINEER, TO ALTER THIS DOCUMENT.

SHEET NUMBER: T-2
REVISION: 0

DocuSign Envelope ID: F6847E62-D2B2-4A72-B188-7BC9CF9CB848

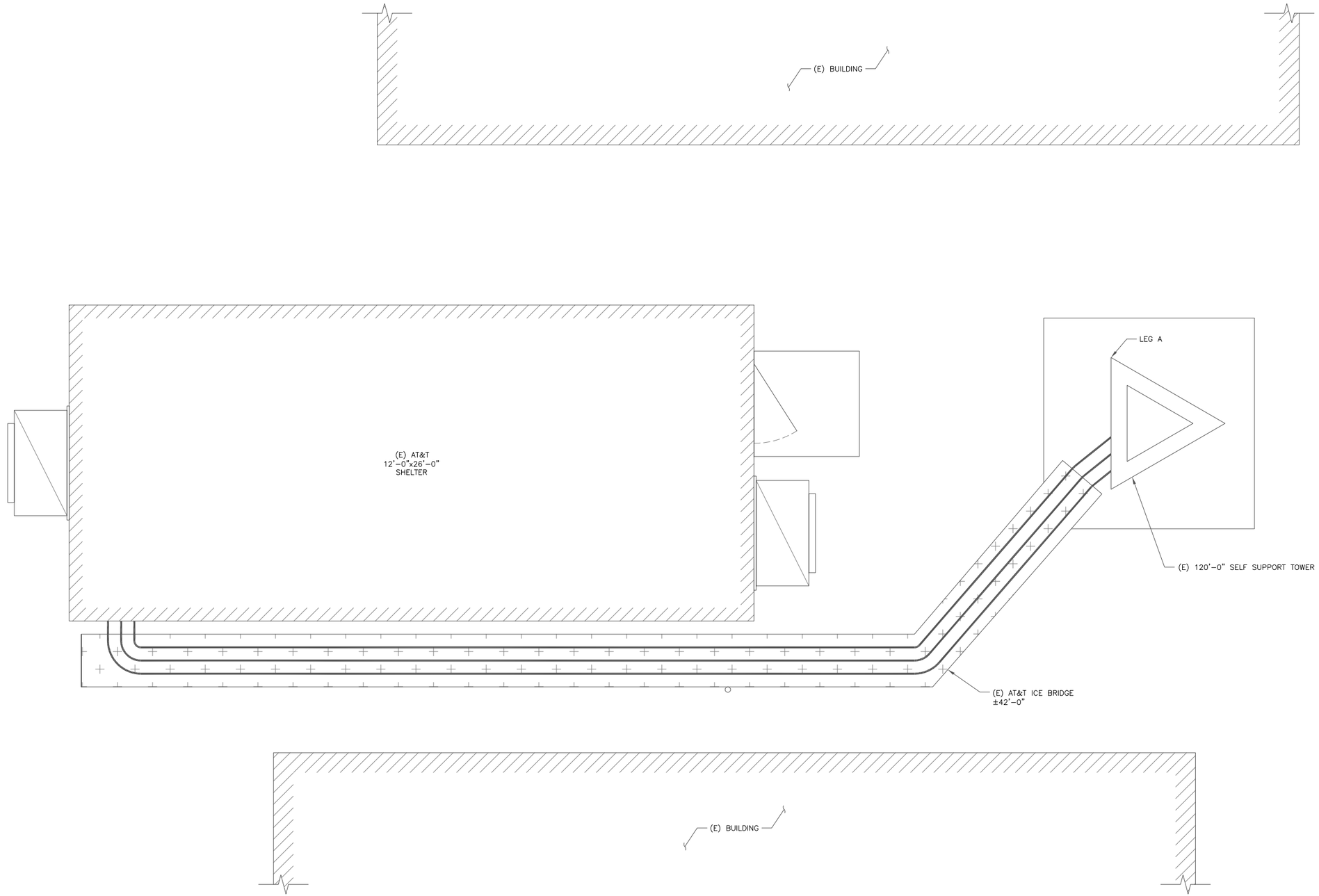

1 SITE PLAN
SCALE: 2' 1' 0 2' 1/2"=1'-0" (FULL SIZE) 1/4"=1'-0" (11x17)

N

AT&T
575 MOROSGO DRIVE
ATLANTA, GA 30324-3300

CROWN CASTLE
3 CORPORATE PARK DRIVE, SUITE 101
CLIFTON PARK, NY 12065

AT&T SITE NUMBER: **59347**

BU #: **841298**
SOUTHINGTON ROGUS

250 MERIDEN WATERBURY TURNPIKE
SOUTHINGTON, CT 06489

EXISTING 120'-0" SELF SUPPORT TOWER

ISSUED FOR:

REV	DATE	DRWN	DESCRIPTION	DES./QA
A	05/12/20	CJ	PRELIMINARY	LR
B	05/21/20	CJ	PRELIMINARY	LR
C	07/27/20	CJ	PRELIMINARY	LR
0	08/21/20	CJ	CONSTRUCTION	MB

DocuSigned by:
Mahan Barimani
NBA38AFADCC448D...
STATE OF CONNECTICUT
MAHAN BARIMANI
30501
LICENSED
PROFESSIONAL ENGINEER
8/21/2020 | 9:56:18 AM EDT

Crown Castle USA Inc.
Certificate of Registration #PEC.0001101

IT IS A VIOLATION OF LAW FOR ANY PERSON, UNLESS THEY ARE ACTING UNDER THE DIRECTION OF A LICENSED PROFESSIONAL ENGINEER, TO ALTER THIS DOCUMENT.

SHEET NUMBER: C-1.1
REVISION: 0

DocuSign Envelope ID: F6847E62-D2B2-4A72-B188-7BC9CF9CB848

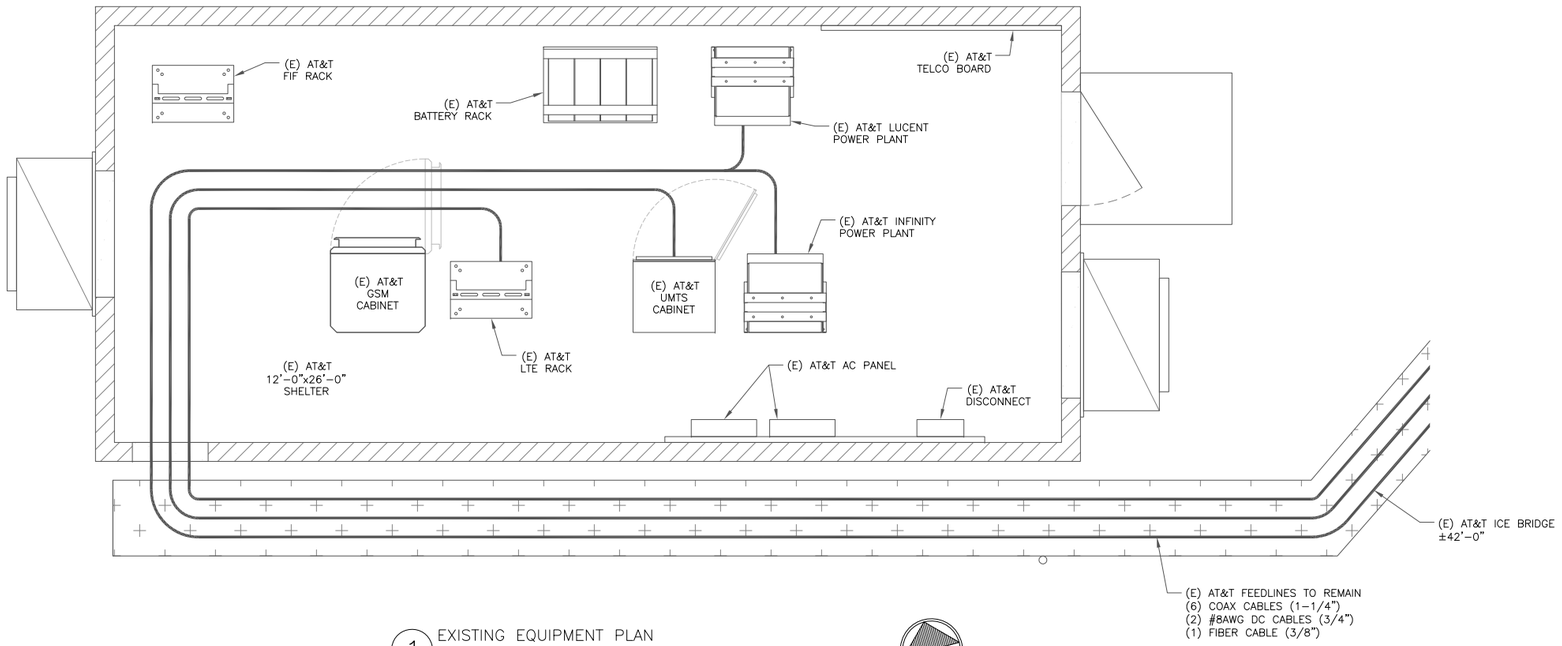

1 EXISTING EQUIPMENT PLAN
SCALE: 2' 1' 0 2' 1/2"=1'-0" (FULL SIZE) 1/4"=1'-0" (11x17)

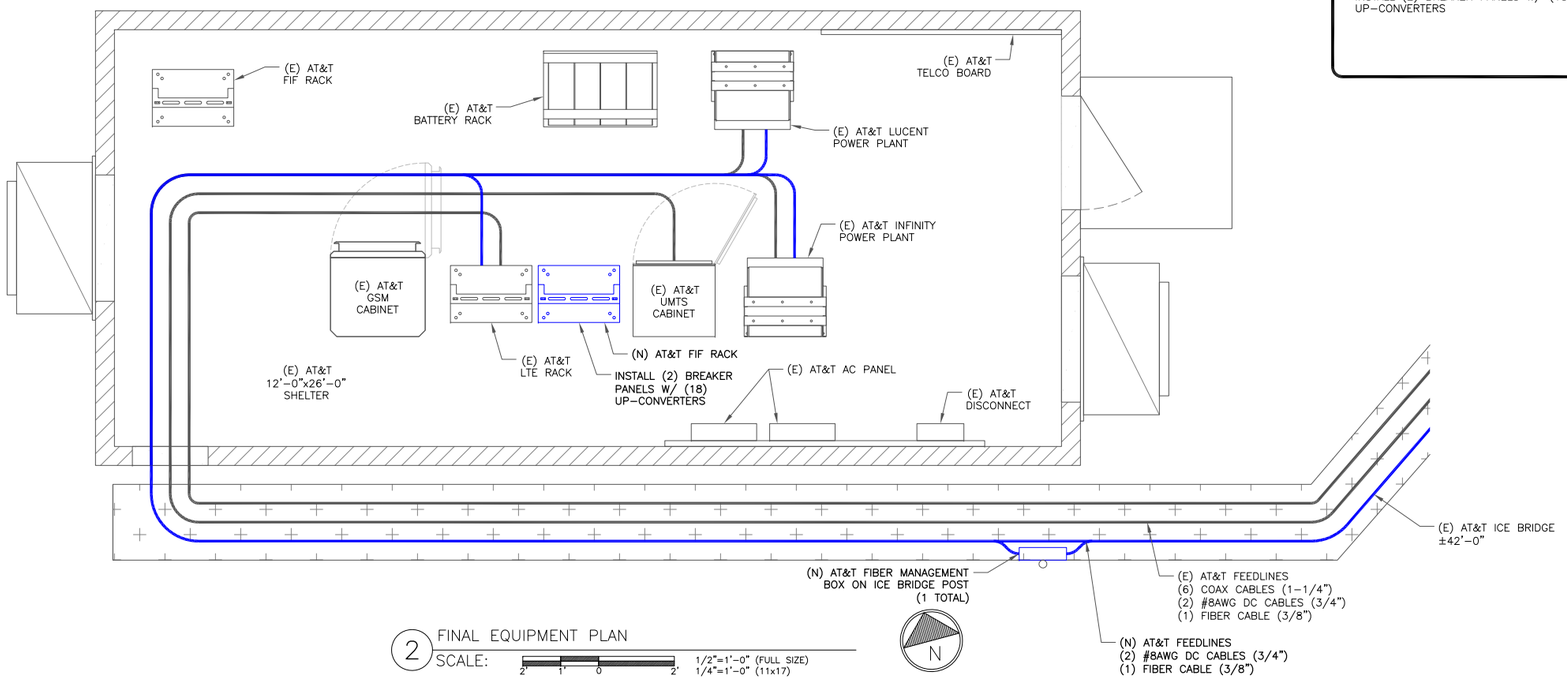

2 FINAL EQUIPMENT PLAN
SCALE: 2' 1' 0 2' 1/2"=1'-0" (FULL SIZE) 1/4"=1'-0" (11x17)

GROUND SCOPE OF WORK:

- INSTALL (1) FIF RACK
- INSTALL (1) 6630
- INSTALL (1) FIBER MANAGEMENT BOX
- INSTALL (2) BREAKER PANELS W/ (18) UP-CONVERTERS

AT&T
575 MOROSGO DRIVE
ATLANTA, GA 30324-3300

CROWN CASTLE
3 CORPORATE PARK DRIVE, SUITE 101
CLIFTON PARK, NY 12065

AT&T SITE NUMBER: **59347**

BU #: **841298**
SOUTHINGTON ROGUS

250 MERIDEN WATERBURY TURNPIKE
SOUTHINGTON, CT 06489

EXISTING 120'-0" SELF SUPPORT TOWER

ISSUED FOR:

REV	DATE	DRWN	DESCRIPTION	DES./QA
A	05/12/20	CJ	PRELIMINARY	LR
B	05/21/20	CJ	PRELIMINARY	LR
C	07/27/20	CJ	PRELIMINARY	LR
0	08/21/20	CJ	CONSTRUCTION	MB

DocuSigned by:
Mariam Bakhtiari
NBA3BAFADCC448...

STATE OF CONNECTICUT
MARIAM BAKHTIARI
30501
LICENSED PROFESSIONAL ENGINEER
8/21/2020 | 9:55:28 AM EDT

Crown Castle USA Inc.
Certificate of Registration #PEC.0001101

IT IS A VIOLATION OF LAW FOR ANY PERSON, UNLESS THEY ARE ACTING UNDER THE DIRECTION OF A LICENSED PROFESSIONAL ENGINEER, TO ALTER THIS DOCUMENT.

SHEET NUMBER: C-1.2
REVISION: 0

DocuSign Envelope ID: F6847E62-D2B2-4A72-B188-7BC9CF9CB848

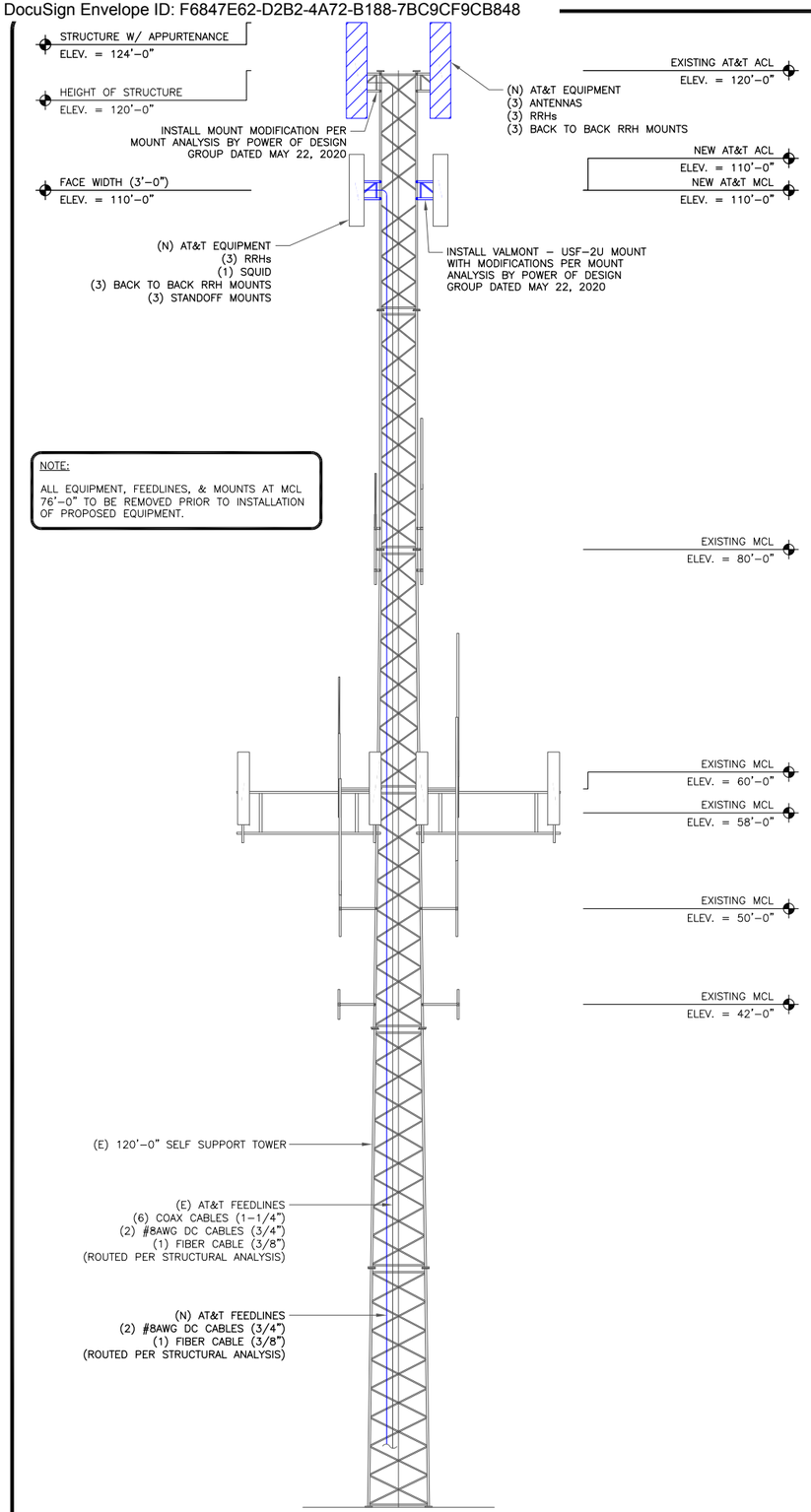

NOTE:

ALL EQUIPMENT, FEEDLINES, & MOUNTS AT MCL 76'-0" TO BE REMOVED PRIOR TO INSTALLATION OF PROPOSED EQUIPMENT.

1 FINAL ELEVATION
SCALE: NOT TO SCALE

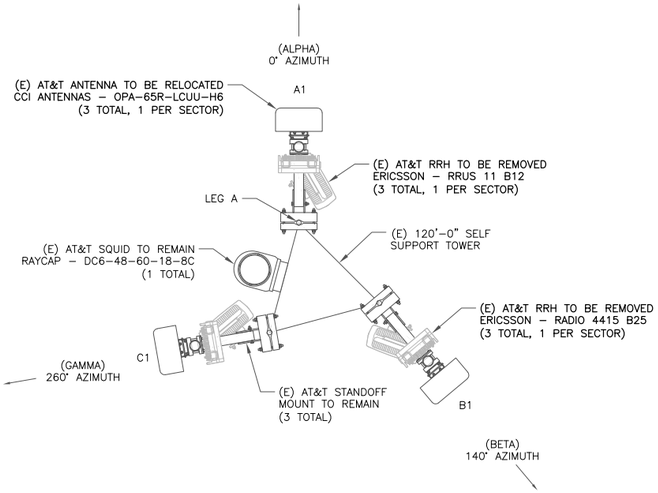

2 EXISTING ANTENNA PLAN @ 119'-0" MCL
SCALE: 2' 1' 0 2' 1/2"=1'-0" (FULL SIZE) 1/4"=1'-0" (11x17)

N

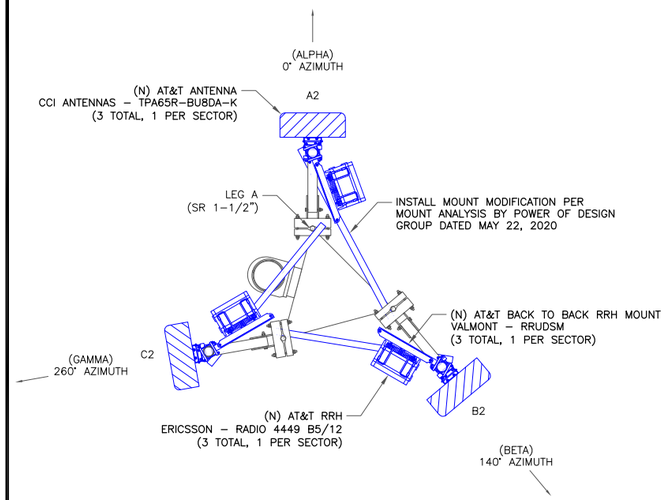

3 FINAL ANTENNA PLAN @ 119'-0" MCL
SCALE: 2' 1' 0 2' 1/2"=1'-0" (FULL SIZE) 1/4"=1'-0" (11x17)

N

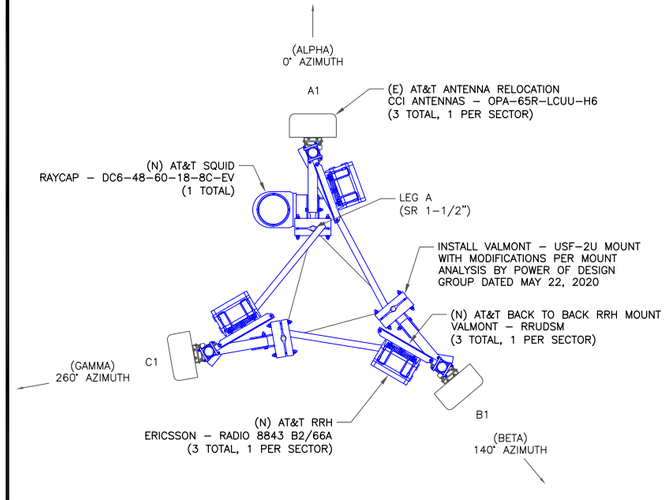

4 FINAL ANTENNA PLAN @ 110'-0" MCL
SCALE: 2' 1' 0 2' 1/2"=1'-0" (FULL SIZE) 1/4"=1'-0" (11x17)

N

"LOOK UP" - CROWN CASTLE USA INC.
SAFETY CLIMB REQUIREMENT:

THE INTEGRITY OF THE SAFETY CLIMB AND ALL COMPONENTS OF THE CLIMBING FACILITY SHALL BE CONSIDERED DURING ALL STAGES OF DESIGN, INSTALLATION, AND INSPECTION. TOWER MODIFICATION, MOUNT REINFORCEMENTS, AND/OR EQUIPMENT INSTALLATIONS SHALL NOT COMPROMISE THE INTEGRITY OR FUNCTIONAL USE OF THE SAFETY CLIMB OR ANY COMPONENTS OF THE CLIMBING FACILITY ON THE STRUCTURE. THIS SHALL INCLUDE, BUT NOT BE LIMITED TO: PINCHING OF THE WIRE ROPE, BENDING OF THE WIRE ROPE FROM ITS SUPPORTS, DIRECT CONTACT OR CLOSE PROXIMITY TO THE WIRE ROPE WHICH MAY CAUSE FRICTIONAL WEAR, IMPACT TO THE ANCHORAGE POINTS IN ANY WAY, OR TO IMPEDE/BLOCK ITS INTENDED USE. ANY COMPROMISED SAFETY CLIMB, INCLUDING EXISTING CONDITIONS MUST BE TAGGED OUT AND REPORTED TO YOUR CROWN CASTLE USA INC. POC OR CALL THE NOC TO GENERATE A SAFETY CLIMB MAINTENANCE AND CONTRACTOR NOTICE TICKET.

INSTALLER NOTES:

1. REFERENCE C-3 FOR FINAL EQUIPMENT SCHEDULE.
2. REFERENCE C-4 FOR NEW EQUIPMENT SPECIFICATIONS.
3. CONTRACTOR TO VERIFY ALL ANTENNA TIP HEIGHTS DO NOT EXCEED BEACON BASE HEIGHT.
4. 3'-0" MINIMUM DISTANCE REQUIRED BETWEEN LTE ANTENNAS ON SAME SECTOR.
4. 6'-0" MINIMUM DISTANCE REQUIRED BETWEEN 700BC & 700DE ANTENNAS ON SAME SECTOR.
5. 4'-0" MINIMUM DISTANCE REQUIRED BETWEEN LTE 700 ANTENNAS ON OPPOSING SECTORS.
6. ALL ANTENNA MEASUREMENT DISTANCES MUST BE EDGE TO EDGE (RELOCATE ANTENNAS AS NEEDED).
7. 8" MINIMUM DISTANCE REQUIRED BETWEEN ANTENNA & RADIO. SEE GENERIC EXAMPLE DETAIL ON SHEET C-4.

INSTALLER NOTE:

NO PROPOSED LOADING TO BE ADDED UNTIL TOWER MODIFICATIONS ARE INSTALLED PER TOWER MODIFICATION DESIGN BY PAUL J. FORD & CO. DATED JULY 17, 2020.

AT&T
575 MOROSGO DRIVE
ATLANTA, GA 30324-3300

CROWN CASTLE
3 CORPORATE PARK DRIVE, SUITE 101
CLIFTON PARK, NY 12065

AT&T SITE NUMBER: **59347**

BU #: **841298**
SOUTHINGTON ROGUS

250 MERIDEN WATERBURY TURNPIKE
SOUTHINGTON, CT 06489

EXISTING 120'-0" SELF SUPPORT TOWER

ISSUED FOR:

REV	DATE	DRWN	DESCRIPTION	DES./QA
A	05/12/20	CJ	PRELIMINARY	LR
B	05/21/20	CJ	PRELIMINARY	LR
C	07/27/20	CJ	PRELIMINARY	LR
0	08/21/20	CJ	CONSTRUCTION	MB

DocuSigned by:
Miriam Barriman
CBA3CAFADCC448D...
8/21/2020 | 9:58 AM EDT
STATE OF CONNECTICUT
MIRIAM BARRIMAN
30501
LICENSED
PROFESSIONAL ENGINEER

Crown Castle USA Inc.
Certificate of Registration #PEC.0001101

IT IS A VIOLATION OF LAW FOR ANY PERSON, UNLESS THEY ARE ACTING UNDER THE DIRECTION OF A LICENSED PROFESSIONAL ENGINEER, TO ALTER THIS DOCUMENT.

SHEET NUMBER: C-2

REVISION: 0

DocuSign Envelope ID: F6847E62-D2B2-4A72-B188-7BC9CF9CB848

FINAL EQUIPMENT SCHEDULE
(VERIFY WITH CURRENT RFDS)

ALPHA

POSITION	ANTENNA				RADIO			DIPLEXER			TMA		SURGE PROTECTION		CABLES			
	TECH.	STATUS/MANUFACTURER MODEL	AZIMUTH	RAD CENTER	QTY.	STATUS/MODEL	LOCATION	QTY.	STATUS	LOCATION	QTY.	STATUS	QTY.	STATUS/MODEL	QTY.	STATUS/TYPE	SIZE	LENGTH
A1	UMTS/LTE	(E) CCI ANTENNAS OPA-65R-LCUU-H6	0°	110'-0"	1	(N) RADIO 8843 B2/B66A	TOWER	–	–	–	–	–	1	(N) DC6-48-60-18-8C-EV	2	(E) COAX	1-5/8"	160'-0"
															2	(N) #8AWG DC	3/4"	160'-0"
															1	(N) FIBER	3/8"	160'-0"
A2	LTE/5G	(N) CCI ANTENNAS TPA65R-BU8DA-K	0°	120'-0"	1	(N) RADIO 4449 B5/12	TOWER	–	–	–	–	–	1	(E) DC6-48-60-18-8C	2	(E) #8WG DC	3/4"	170'-0"
															1	(E) FIBER	3/8"	170'-0"
A3	–	–	–	–	–	–	–	–	–	–	–	–	–	–	–	–	–	–
A4	–	–	–	–	–	–	–	–	–	–	–	–	–	–	–	–	–	–
A5	–	–	–	–	–	–	–	–	–	–	–	–	–	–	–	–	–	–

BETA

B1	UMTS/LTE	(E) CCI ANTENNAS OPA-65R-LCUU-H6	140°	110'-0"	1	(N) RADIO 8843 B2/B66A	TOWER	–	–	–	–	–	–	–	2	(E) COAX	1-5/8"	160'-0"
B2	LTE/5G	(N) CCI ANTENNAS TPA65R-BU8DA-K	140°	120'-0"	1	(N) RADIO 4449 B5/12	TOWER	–	–	–	–	–	–	–	–	–	–	–
B3	–	–	–	–	–	–	–	–	–	–	–	–	–	–	–	–	–	–
B4	–	–	–	–	–	–	–	–	–	–	–	–	–	–	–	–	–	–
B5	–	–	–	–	–	–	–	–	–	–	–	–	–	–	–	–	–	–

GAMMA

C1	UMTS/LTE	(E) CCI ANTENNAS OPA-65R-LCUU-H6	260°	110'-0"	1	(N) RADIO 8843 B2/B66A	TOWER	–	–	–	–	–	–	–	2	(E) COAX	1-5/8"	160'-0"
C2	LTE/5G	(N) CCI ANTENNAS TPA65R-BU8DA-K	260°	120'-0"	1	(N) RADIO 4449 B5/12	TOWER	–	–	–	–	–	–	–	–	–	–	–
C3	–	–	–	–	–	–	–	–	–	–	–	–	–	–	–	–	–	–
C4	–	–	–	–	–	–	–	–	–	–	–	–	–	–	–	–	–	–
C5	–	–	–	–	–	–	–	–	–	–	–	–	–	–	–	–	–	–

NOTE:
(E) – EXISTING
(N) – NEW

1 FINAL EQUIPMENT SCHEDULE
SCALE: NOT TO SCALE

AT&T
575 MOROSGO DRIVE
ATLANTA, GA 30324-3300

CROWN CASTLE
3 CORPORATE PARK DRIVE, SUITE 101
CLIFTON PARK, NY 12065

AT&T SITE NUMBER: **59347**

BU #: **841298**
SOUTHINGTON ROGUS

250 MERIDEN WATERBURY TURNPIKE
SOUTHINGTON, CT 06489

EXISTING 120'-0" SELF SUPPORT TOWER

ISSUED FOR:

REV	DATE	DRWN	DESCRIPTION	DES./QA
A	05/12/20	CJ	PRELIMINARY	LR
B	05/21/20	CJ	PRELIMINARY	LR
C	07/27/20	CJ	PRELIMINARY	LR
0	08/21/20	CJ	CONSTRUCTION	MB

DocuSigned by:
Mahan Barimani
MBA38AFADCC448D...

STATE OF CONNECTICUT
MAHAN BARIMANI
30501
LICENSED
PROFESSIONAL ENGINEER

8/21/2020 | 9:57:18 AM EDT

Crown Castle USA Inc.
Certificate of Registration #PEC.0001101

IT IS A VIOLATION OF LAW FOR ANY PERSON, UNLESS THEY ARE ACTING UNDER THE DIRECTION OF A LICENSED PROFESSIONAL ENGINEER, TO ALTER THIS DOCUMENT.

SHEET NUMBER: C-3
REVISION: 0

DocuSign Envelope ID: F6847E62-D2B2-4A72-B188-7BC9CF9CB848

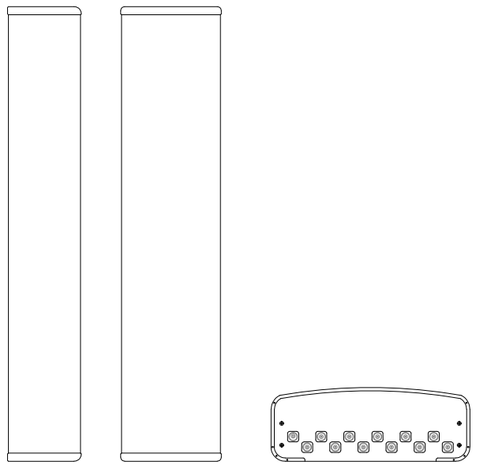

CCI ANTENNAS – TPA65R–BU8DA–K
WEIGHT (WITHOUT MOUNTING HARDWARE): 82.5 LBS
SIZE (HXWXD): 96X21X7.8 IN.
MOUNTING HARDWARE P/N: MBK–01
RATED WIND VELOCITY: 150.0 MPH

1 CCI ANTENNAS – TPA65R–BU8DA–K
SCALE: NOT TO SCALE

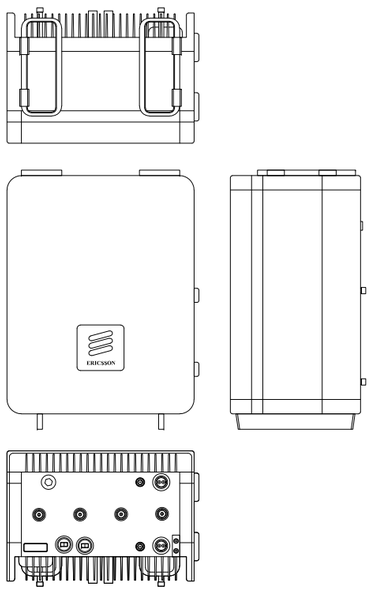

ERICSSON – RADIO 4449 B5/12
WEIGHT: 70.0 LBS
SIZE (HxWxD): 18.0x13.2x9.4 IN.

2 ERICSSON – RADIO 4449 B5/12
SCALE: NOT TO SCALE

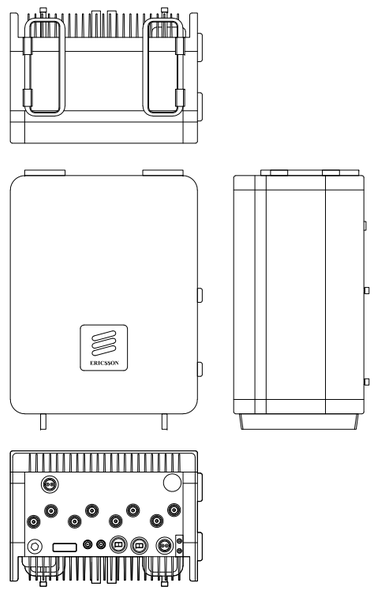

ERICSSON – RADIO 8843 B2/66A
WEIGHT: 75.0 LBS
SIZE (HxWxD): 18.0x13.2x11.3 IN.

3 ERICSSON – RADIO 8843 B2/66A
SCALE: NOT TO SCALE

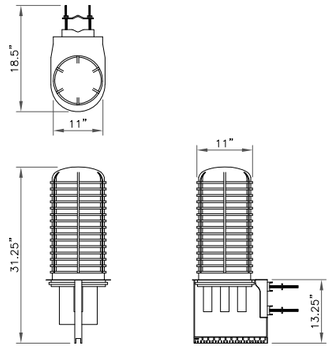

RAYCAP – DC6–48–60–18–8C–EV
WEIGHT (WITHOUT MOUNTING HARDWARE): 20.0 LBS
SIZE (HxWxD): 31.25x11.0x11.0 IN.

4 RAYCAP – DC6–48–60–18–8C–EV
SCALE: NOT TO SCALE

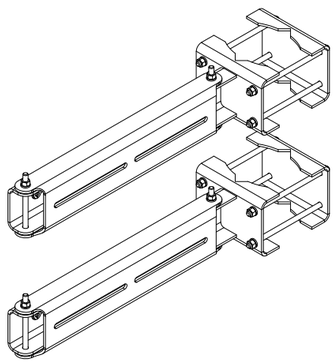

VALMONT – RRUDSM
DUAL SWIVEL MOUNT KITS FOR RRUs
(2 SWIVEL MOUNTS PER KIT)

5 VALMONT – RRUDSM
SCALE: NOT TO SCALE

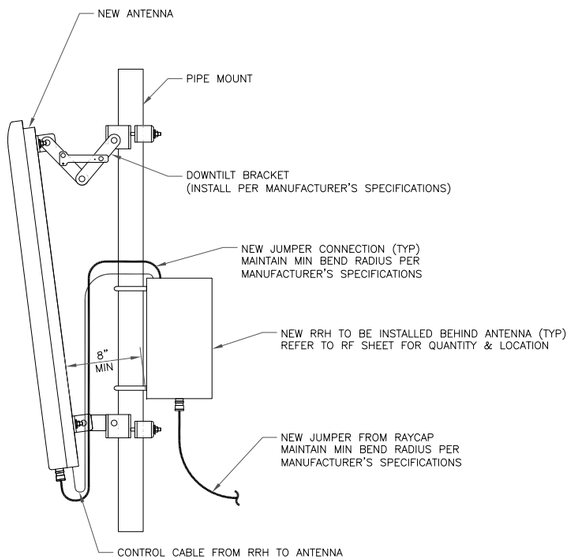

6 GENERIC ANTENNA MOUNTING ELEVATION
SCALE: NOT TO SCALE

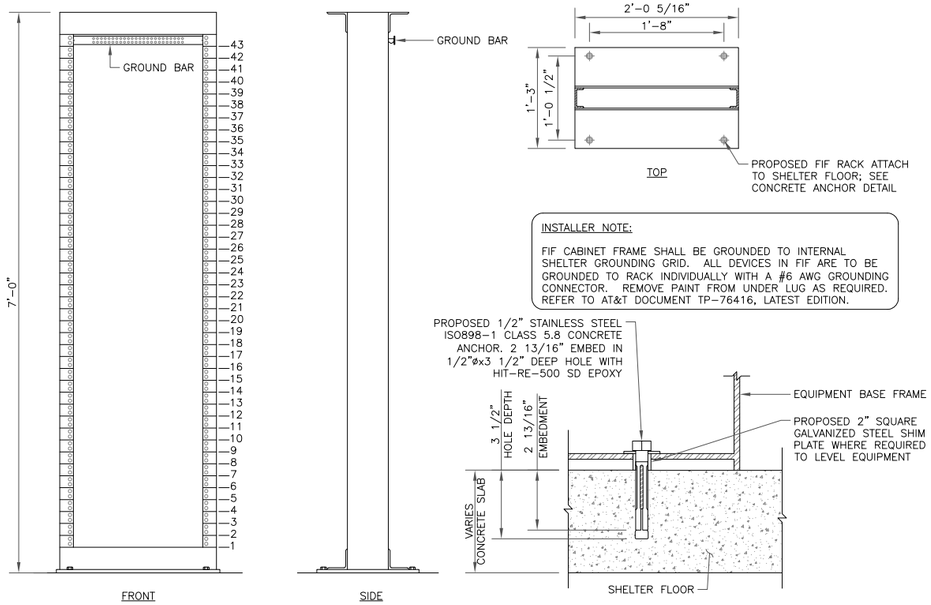

7 EQUIPMENT RACK DETAIL
SCALE: NOT TO SCALE

AT&T
575 MOROSGO DRIVE
ATLANTA, GA 30324-3300

CROWN CASTLE
3 CORPORATE PARK DRIVE, SUITE 101
CLIFTON PARK, NY 12065

AT&T SITE NUMBER: **59347**

BU #: **841298**
SOUTHINGTON ROGUS

250 MERIDEN WATERBURY TURNPIKE
SOUTHINGTON, CT 06489

EXISTING 120'-0" SELF SUPPORT TOWER

ISSUED FOR:

REV	DATE	DRWN	DESCRIPTION	DES./QA
A	05/12/20	CJ	PRELIMINARY	LR
B	05/21/20	CJ	PRELIMINARY	LR
C	07/27/20	CJ	PRELIMINARY	LR
0	08/21/20	CJ	CONSTRUCTION	MB

DocuSigned by:
Adam Baryiani
4DBA36AFADCC448...
STATE OF CONNECTICUT
ADAM BARYIANI
30501
LICENSED
PROFESSIONAL ENGINEER
8/21/2020 | 9:55:18 AM EDT
Crown Castle USA Inc.
Certificate of Registration #PEC.0001101

IT IS A VIOLATION OF LAW FOR ANY PERSON, UNLESS THEY ARE ACTING UNDER THE DIRECTION OF A LICENSED PROFESSIONAL ENGINEER, TO ALTER THIS DOCUMENT.

SHEET NUMBER: C-4

REVISION: 0

DocuSign Envelope ID: F6847E62-D2B2-4A72-B188-7BC9CF9CB848

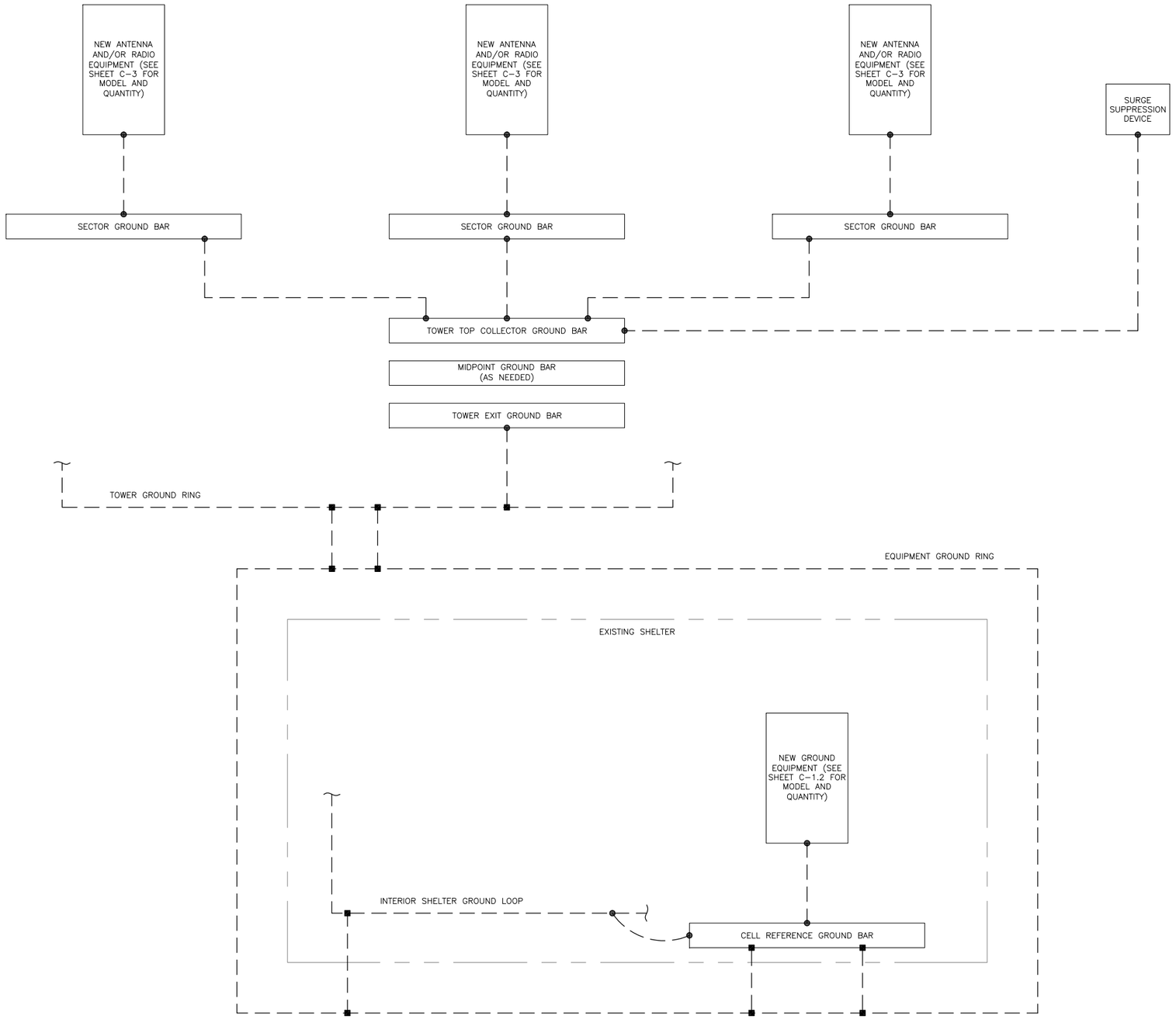

1 GROUNDING SCHEMATIC
SCALE: NOT TO SCALE

GROUNDING PLAN LEGEND:

- --- GROUND WIRE
- ■ EXOTHERMIC WELD
- ● MECHANICAL CONNECTION
- COPPER GROUND ROD
- GROUND ROD W/ TEST WELL

CELL REFERENCE GROUND BAR: POINT OF GROUND REFERENCE FOR ALL COMMUNICATIONS EQUIPMENT FRAMES. ALL BONDS ARE MADE WITH #2 STRANDED GREEN INSULATED COPPER CONDUCTORS. BOND TO GROUND RING WITH (2) #2 SOLID TINNED COPPER CONDUITS (ATT-TP-76416 7.6.7).

HATCH PLATE GROUND BAR: BOND TO THE INTERIOR GROUND RING WITH (2) #2 STRANDED GREEN INSULATED COPPER CONDUCTORS. WHEN A HATCH-PLATE AND A CELL REFERENCE GROUND BAR ARE BOTH PRESENT, THE CELL SITE REFERENCE GROUND BAR MUST BE CONNECTED TO THE HATCH-PLATE AND TO THE INTERIOR GROUND RING USING (2) #2 STRANDED GREEN INSULATED COPPER CONDUCTORS.

EXTERIOR CABLE ENTRY PORT GROUND BARS: LOCATED AT THE ENTRANCE TO THE CELL SITE BUILDING. BOND TO GROUND RING WITH A #2 SOLID TINNED COPPER CONDUCTORS WITH AN EXOTHERMIC WELD AND INSPECTION SLEEVE (ATT-TP-76416 7.6.7.2).

DURING ALL DC POWER SYSTEM CHANGES INCLUDING DC SYSTEM CHANGE OUTS, RECTIFIER REPLACEMENTS OR ADDITIONS, BREAKER DISTRIBUTION CHANGES, BATTERY ADDITIONS, BATTERY REPLACEMENTS AND INSTALLATIONS OR CHANGES TO DC CONVERTER SYSTEMS IT SHALL BE REQUIRED THAT SERVICES CONTRACTORS VERIFY ALL DC POWER SYSTEMS ARE EQUIPPED WITH MASTER DC SYSTEM RETURN GROUND CONDUCTOR FROM THE DC POWER SYSTEM COMMON RETURN BUS DIRECTLY CONNECTED TO THE CELL SITE REFERENCE GROUND BAR PER TP76300 SECTION H 6 AND TP76416 FIGURE 7-11 REQUIREMENTS.

AT&T
575 MOROSGO DRIVE
ATLANTA, GA 30324-3300

CROWN CASTLE
3 CORPORATE PARK DRIVE, SUITE 101
CLIFTON PARK, NY 12065

AT&T SITE NUMBER: **59347**

BU #: **841298**
SOUTHINGTON ROGUS

250 MERIDEN WATERBURY TURNPIKE
SOUTHINGTON, CT 06489

EXISTING 120'-0" SELF SUPPORT TOWER

ISSUED FOR:

REV	DATE	DRWN	DESCRIPTION	DES./QA
A	05/12/20	CJ	PRELIMINARY	LR
B	05/21/20	CJ	PRELIMINARY	LR
C	07/27/20	CJ	PRELIMINARY	LR
0	08/21/20	CJ	CONSTRUCTION	MB

DocuSigned by:
Nasim Barimani
NBA38AFADCC448D...
STATE OF CONNECTICUT
NASHAM BARIMANI
30501
LICENSED
PROFESSIONAL ENGINEER
8/21/2020 | 9:52:18 AM EDT

Crown Castle USA Inc.
Certificate of Registration #PEC.0001101

IT IS A VIOLATION OF LAW FOR ANY PERSON, UNLESS THEY ARE ACTING UNDER THE DIRECTION OF A LICENSED PROFESSIONAL ENGINEER, TO ALTER THIS DOCUMENT.

SHEET NUMBER: G-1
REVISION: 0

DocuSign Envelope ID: F6847E62-D2B2-4A72-B188-7BC9CF9CB848

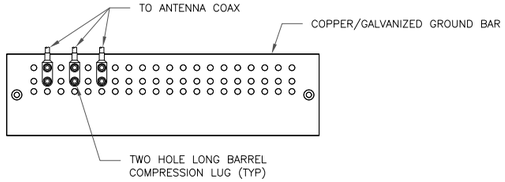

NOTES:

1. DOUBLING UP "OR STACKING" OF CONNECTIONS IS NOT PERMITTED.
2. EXTERIOR ANTIOXIDANT JOINT COMPOUND TO BE USED ON ALL EXTERIOR CONNECTIONS.
3. GROUND BAR SHALL NOT BE ISOLATED FROM TOWER. MOUNT DIRECTLY TO ANTENNA MOUNT STEEL.

1 ANTENNA SECTOR GROUND BAR DETAIL
SCALE: NOT TO SCALE

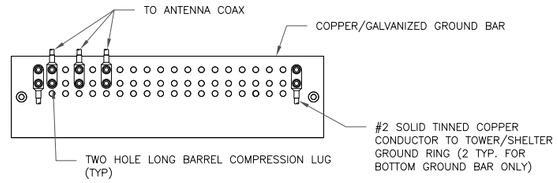

NOTES:

1. EXTERIOR ANTIOXIDANT JOINT COMPOUND TO BE USED ON ALL EXTERIOR CONNECTIONS.
2. GROUND BAR SHALL NOT BE ISOLATED FROM TOWER. MOUNT DIRECTLY TO TOWER STEEL (TOWER ONLY).
3. GROUND BAR SHALL BE ISOLATED FROM BUILDING OR SHELTER.

2 TOWER/SHELTER GROUND BAR DETAIL
SCALE: NOT TO SCALE

WIRE SIZE	BURNDY LUG	BOLT SIZE
#6 GREEN INSULATED	YA6C-2TC38	3/8" - 16 NC SS 2 BOLT
#2 SOLID TINNED	YA3C-2TC38	3/8" - 16 NC SS 2 BOLT
#2 STRANDED	YA2C-2TC38	3/8" - 16 NC SS 2 BOLT
#2/0 STRANDED	YA26-2TC38	3/8" - 16 NC SS 2 BOLT
#4/0 STRANDED	YA28-2N	1/2" - 16 NC SS 2 BOLT

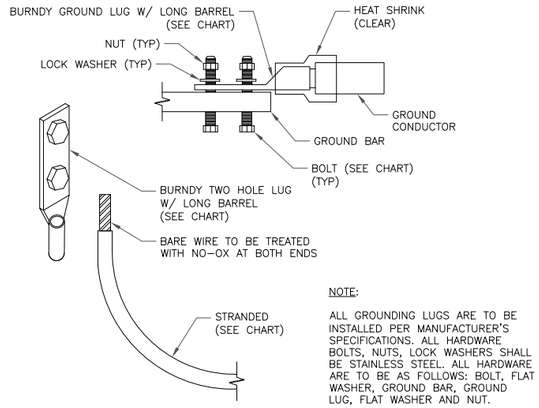

NOTE:

ALL GROUNDING LUGS ARE TO BE INSTALLED PER MANUFACTURER'S SPECIFICATIONS. ALL HARDWARE BOLTS, NUTS, LOCK WASHERS SHALL BE STAINLESS STEEL. ALL HARDWARE ARE TO BE AS FOLLOWS: BOLT, FLAT WASHER, GROUND BAR, GROUND LUG, FLAT WASHER AND NUT.

3 MECHANICAL LUG CONNECTION
SCALE: NOT TO SCALE

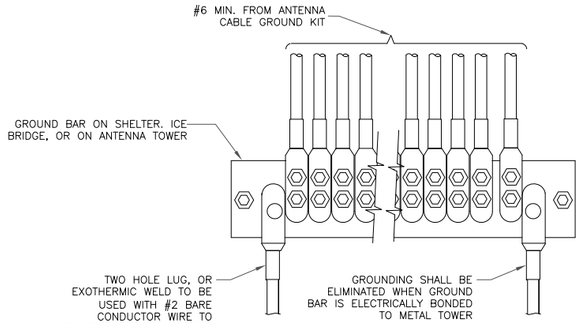

4 GROUNDWIRE INSTALLATION
SCALE: NOT TO SCALE

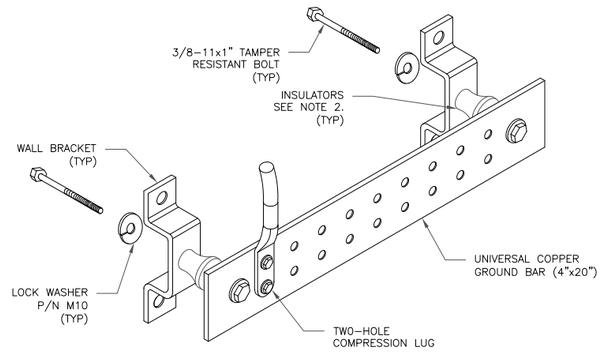

NOTES:

1. DOWN LEAD (HOME RUN) CONDUCTORS ARE NOT TO BE INSTALLED ON CROWN CASTLE USA INC. TOWER, PER THE GROUNDING DOWN CONDUCTOR POLICY QAS-STD-10091. NO MODIFICATION OR DRILLING TO TOWER STEEL IS ALLOWED IN ANY FORM OR FASHION, CAD-WELDING ON THE TOWER AND/OR IN THE AIR ARE NOT PERMITTED.

2. OMIT INSULATOR WHEN MOUNTING TO TOWER STEEL OR PLATFORM STEEL USE INSULATORS WHEN ATTACHING TO BUILDING OR SHELTERS.

5 GROUND BAR DETAIL
SCALE: NOT TO SCALE

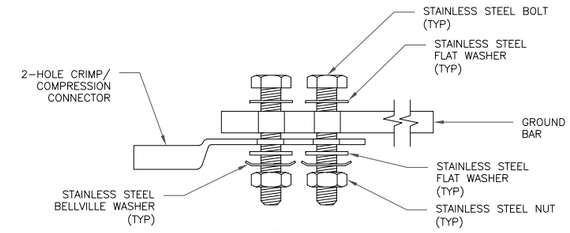

SINGLE CONNECTOR AT GROUND BARS

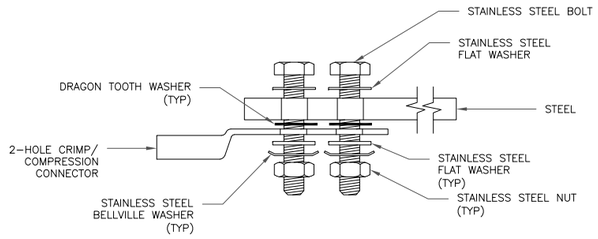

SINGLE CONNECTOR AT STEEL OBJECTS

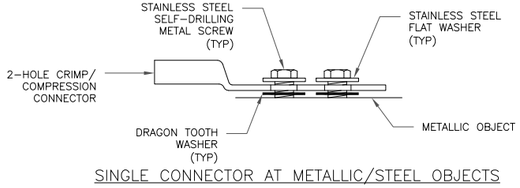

SINGLE CONNECTOR AT METALLIC/STEEL OBJECTS

8 HARDWARE DETAIL FOR EXTERIOR CONNECTIONS
SCALE: NOT TO SCALE

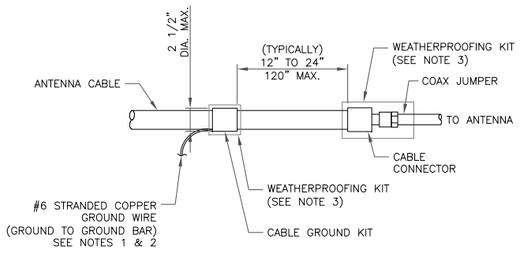

NOTES:

1. DO NOT INSTALL CABLE GROUND KIT AT A BEND AND ALWAYS DIRECT GROUND WIRE DOWN TO GROUND BAR.
2. GROUNDING KIT SHALL BE TYPE AND PART NUMBER AS SUPPLIED OR RECOMMENDED BY CABLE MANUFACTURER.
3. WEATHER PROOFING SHALL BE TWO-PART TAPE KIT, COLD SHRINK SHALL NOT BE USED.

6 CABLE GROUND KIT CONNECTION
SCALE: NOT TO SCALE

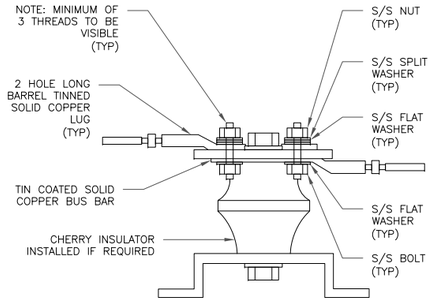

7 LUG DETAIL
SCALE: NOT TO SCALE

AT&T
575 MOROSGO DRIVE
ATLANTA, GA 30324-3300

CROWN CASTLE
3 CORPORATE PARK DRIVE, SUITE 101
CLIFTON PARK, NY 12065

AT&T SITE NUMBER: **59347**

BU #: **841298**
SOUTHINGTON ROGUS

250 MERIDEN WATERBURY TURNPIKE
SOUTHINGTON, CT 06489

EXISTING 120'-0" SELF SUPPORT TOWER

ISSUED FOR:

REV	DATE	DRWN	DESCRIPTION	DES./QA
A	05/12/20	CJ	PRELIMINARY	LR
B	05/21/20	CJ	PRELIMINARY	LR
C	07/27/20	CJ	PRELIMINARY	LR
0	08/21/20	CJ	CONSTRUCTION	MB

DocuSigned by:
Adam Barbour
NBA3614FADCC448D...
STATE OF CONNECTICUT
ADAM BARBOUR
30501
LICENSED PROFESSIONAL ENGINEER
8/21/2020 | 9:45:18 AM EDT

Crown Castle USA Inc.
Certificate of Registration #PEC.0001101

IT IS A VIOLATION OF LAW FOR ANY PERSON, UNLESS THEY ARE ACTING UNDER THE DIRECTION OF A LICENSED PROFESSIONAL ENGINEER, TO ALTER THIS DOCUMENT.

SHEET NUMBER: G-2

REVISION: 0

DocuSign Envelope ID: F6847E62-D2B2-4A72-B188-7BC9CF9CB848

Diagram - Sector	A	Diagram File Name - CT1033_A_B_C_LTE850_AWS_Rev3.vsd					
Atoll Site Name -	CTL01033	Location Name -	SOUTHINGTON ROGUS	Market -	CONNECTICUT	Market Cluster -	NEW ENGLAND

Comments: Important Note: For detailed radio to antenna wiring refer to the latest field notice - Antenna_Radio Connection Drawings Playbook v6.0_Ericsson

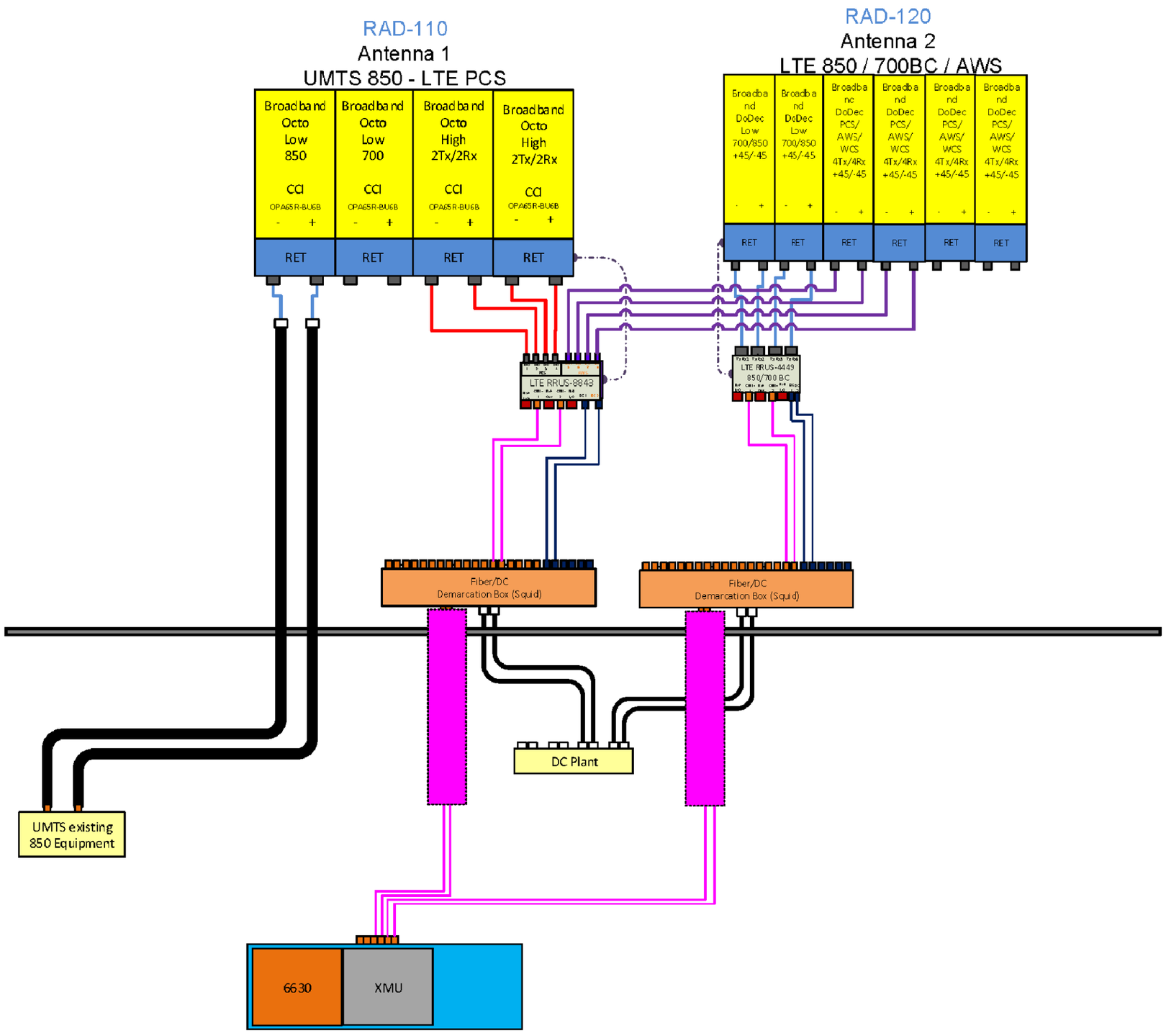

DocuSign Envelope ID: F6847E62-D2B2-4A72-B188-7BC9CF9CB848

Diagram - Sector	B	Diagram File Name - CT1033_A_B_C_LTE850_AWS_Rev3.vsd					
Atoll Site Name -	CTL01033	Location Name -	SOUTHINGTON ROGUS	Market -	CONNECTICUT	Market Cluster -	NEW ENGLAND

Comments: Important Note: For detailed radio to antenna wiring refer to the latest field notice - Antenna_Radio Connection Drawings Playbook v6.0_Ericsson

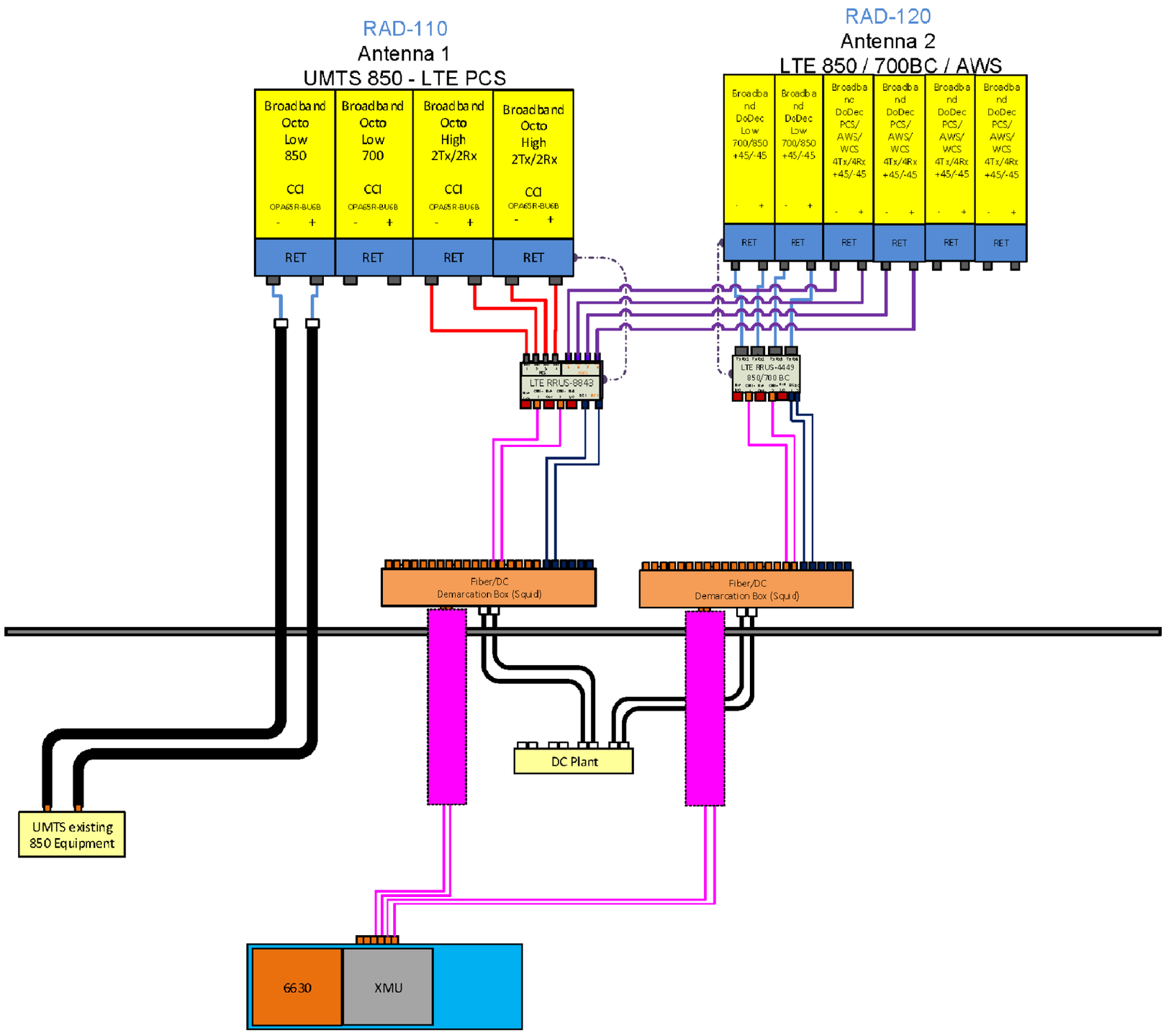

DocuSign Envelope ID: F6847E62-D2B2-4A72-B188-7BC9CF9CB848

Diagram - Sector	C	Diagram File Name - CT1033_A_B_C_LTE850_AWS_Rev3.vsd					
Atoll Site Name -	CTL01033	Location Name -	SOUTHINGTON ROGUS	Market -	CONNECTICUT	Market Cluster -	NEW ENGLAND

Comments: Important Note: For detailed radio to antenna wiring refer to the latest field notice - Antenna_Radio Connection Drawings Playbook v6.0_Ericsson

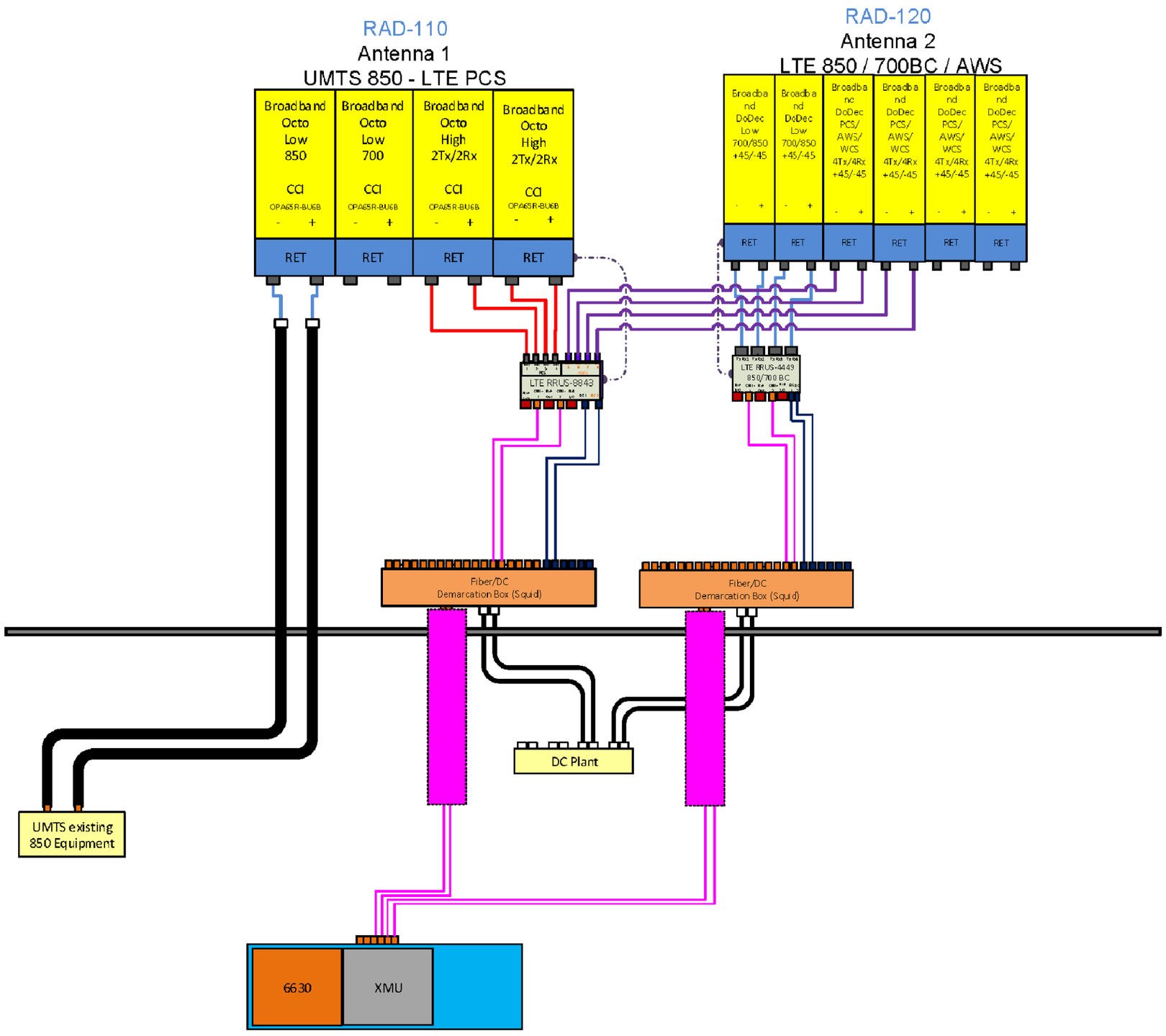

DocuSign Envelope ID: F6847E62-D2B2-4A72-B188-7BC9CF9CB848

ITEM	QTY	PART NO.	PART DESCRIPTION	LENGTH	UNIT WT.	NET WT.
1	1	CFM	UPPER GATE FOOT WELDMENT		13.90	13.90
2	1	CFS	LOWER GATE FOOT WELDMENT		12.72	12.72
3	2	GBB	GATE BACKING BAR		4.53	9.06
4	1	2PBG	24" PIPE MOUNT STANDOFF ARM		71.96	71.96
5	8	G12R-12	1/2" x 12" GALV. THREADED ROD		0.67	5.35
5	8	G12R-15	1/2" x 15" GALV. THREADED ROD		0.84	6.69
6	2	A1205	1/2" x 5" A325 HDG BOLT		0.34	0.69
7	18	G12FW	1/2" HDG USS FLATWASHER		0.03	0.61
8	18	G12LW	1/2" HDG LOCKWASHER		0.01	0.25
9	18	G12NUT	1/2" HDG HEAVY 2H HEX NUT		0.07	1.29
					TOTAL WT. #	128.25

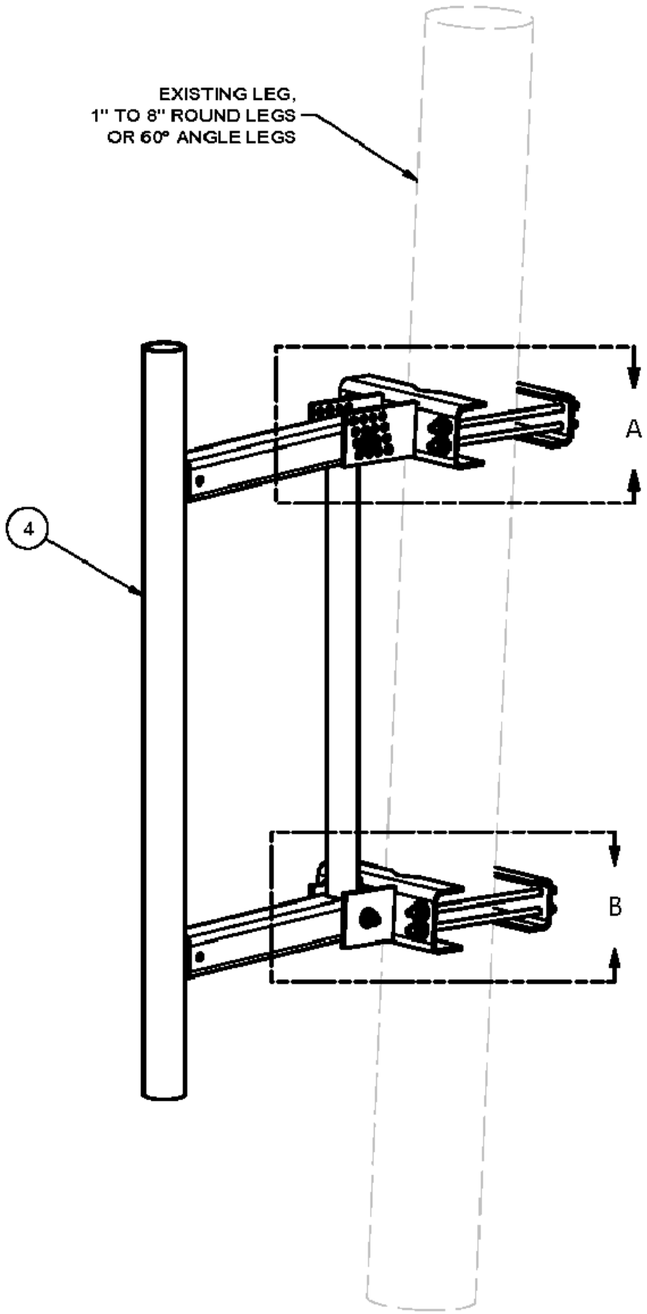

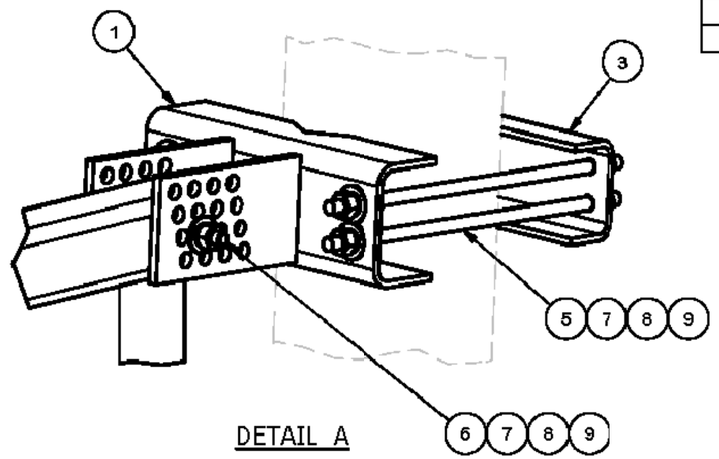

DETAIL A

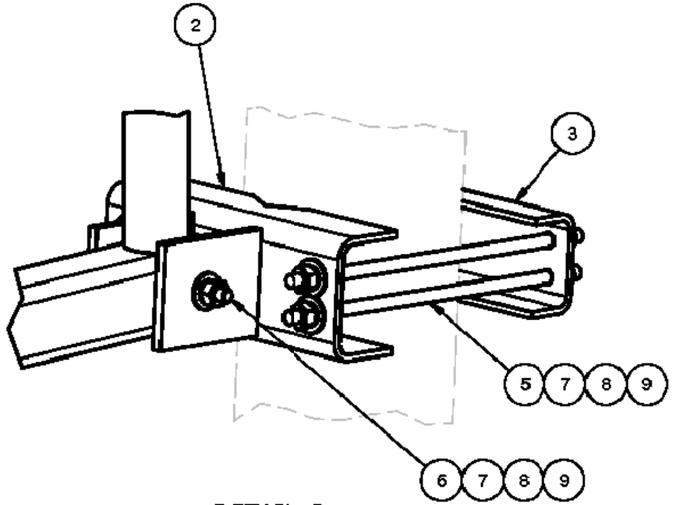

DETAIL B

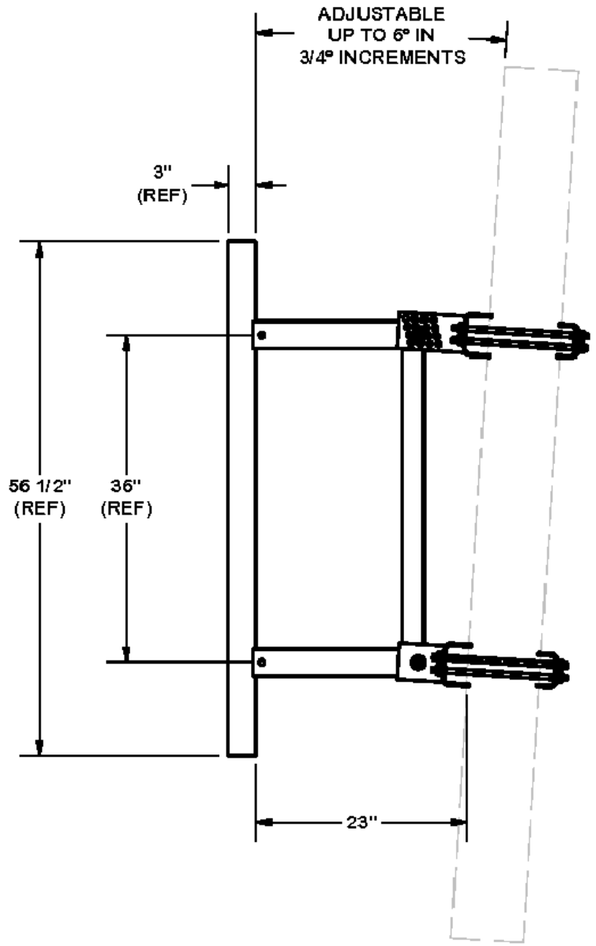

TOLERANCE NOTES

TOLERANCES ON DIMENSIONS, UNLESS OTHERWISE NOTED ARE:
SAWED, SHEARED AND GAS CUT EDGES *(± 0.030")*
DRILLED AND GAS CUT HOLES *(± 0.030")* - NO CONING OF HOLES
LASER CUT EDGES AND HOLES *(± 0.010")* - NO CONING OF HOLES
BENDS ARE ± 1/2 DEGREE
ALL OTHER MACHINING *(± 0.030")*
ALL OTHER ASSEMBLY *(± 0.060")*

PROPRIETARY NOTE:
THE DATA AND TECHNIQUES CONTAINED IN THIS DRAWING ARE PROPRIETARY INFORMATION OF VALMONT

DESCRIPTION: 24" ULTIMATE UNIVERSAL STANDOFF FRAME

CPD NO.	DRAWN BY	ENG. APPROVAL	PART NO.
	RCH 2/1/2011		USF-2U

GLASS	SUB	DRAWING USAGE	CHECKED BY	DWG. NO.
81	01	CUSTOMER	RMC 2/16/2011	USF-2U

SITE PRO | A valmont COMPANY
Engineering Support Team: 1-888-753-7446
Locations:
New York, NY
Atlanta, GA
Los Angeles, CA
Plymouth, IN
Salem, OR
Dallas, TX

Certificate Of Completion

Envelope Id: F6847E62D2B24A72B1887BC9CF9CB848
Status: Completed
Subject: Please DocuSign: 59347_841298_SOUTHINGTON ROGUS_AT&T LTE 3C FCD_REV 0_08.21.2020.pdf
Source Envelope:
Document Pages: 13
Signatures: 9
Certificate Pages: 3
Initials: 0
AutoNav: Enabled
EnvelopeId Stamping: Enabled
Time Zone: (UTC-05:00) Eastern Time (US & Canada)

Envelope Originator:
Whitney Sealover
2000 Corporate Drive
Canonsburg, PA 15317
Whitney.Sealover@crowncastle.com
IP Address: 8.20.92.226

Record Tracking

Status: Original
8/21/2020 9:51:51 AM
Holder: Whitney Sealover
Whitney.Sealover@crowncastle.com
Location: DocuSign

Signer Events	Signature	Timestamp
Maham Barimani maham.barimani@crowncastle.com Security Level: Email, Account Authentication (None)	DocuSigned by: Maham Barimani DBA38AFADCC448D... Signature Adoption: Pre-selected Style Using IP Address: 64.213.130.12	Sent: 8/21/2020 9:53:08 AM Viewed: 8/21/2020 9:57:04 AM Signed: 8/21/2020 9:57:18 AM

Electronic Record and Signature Disclosure:
Accepted: 8/21/2020 9:57:04 AM
ID: 59509998-c37c-49bd-ae71-72f5e7347638

In Person Signer Events	Signature	Timestamp

Editor Delivery Events	Status	Timestamp

Agent Delivery Events	Status	Timestamp

Intermediary Delivery Events	Status	Timestamp

Certified Delivery Events	Status	Timestamp

Carbon Copy Events	Status	Timestamp

Witness Events	Signature	Timestamp

Notary Events	Signature	Timestamp

Envelope Summary Events	Status	Timestamps
Envelope Sent	Hashed/Encrypted	8/21/2020 9:53:08 AM
Certified Delivered	Security Checked	8/21/2020 9:57:04 AM
Signing Complete	Security Checked	8/21/2020 9:57:18 AM
Completed	Security Checked	8/21/2020 9:57:18 AM

Payment Events	Status	Timestamps

Electronic Record and Signature Disclosure

ELECTRONIC RECORD AND SIGNATURE DISCLOSURE

In order to provide more efficient and faster service, Crown Castle ("we", "us" or "company") is pleased to announce the use of DocuSign, Inc. ("DocuSign") electronic signing system. The terms for providing such documents for execution and various other documents and records to you electronically through DocuSign are set forth below. Please read the information below carefully and if you can satisfactorily access this information electronically and agree to these terms, please confirm your agreement by clicking the "I agree" button at the bottom of this document.

Getting paper copies

At any time, you may request from us a paper copy of any document for execution or other document or record provided or made available electronically to you by us. You will be able to download and print documents we send to you through the DocuSign system during and immediately after each signing session and, if you elect to create a DocuSign signer account, you may access them for a limited period of time thereafter. To request paper copies of documents previously provided by us to you electronically, send an e-mail to esignature@CrownCastle.com, requesting the subject paper copies and stating your e-mail address, name, US Postal address and telephone number.

Withdrawing your consent to receive and/or execute documents electronically

If you elect to receive documents for execution and various other documents and records from us electronically, you may at any time change your mind and tell us that thereafter you want to receive such documents only in paper format. To withdraw your consent to electronic delivery and execution of documents, use the DocuSign 'Withdraw Consent' form on the signing page of a DocuSign envelope, instead of signing it. Thereafter, you will no longer be able to use the DocuSign system to electronically receive and execute documents or other records from us. You may also send an e-mail to esignature@CrownCastle.com stating that you are withdrawing your consent to electronic delivery and execution of documents through the DocuSign system and stating your e-mail address, name, US Postal Address, and telephone number.

Consequences of withdrawing consent to receive and/or execute documents electronically

If you elect to receive documents for execution and various other documents and other records only in paper format, it will slow the speed at which we can complete the subject transactions because of the increased delivery time.

Documents for execution, and other documents and records may be sent to you electronically

Unless you tell us otherwise in accordance with the procedures described herein, we may provide documents for execution, and other documents and records electronically to you through the DocuSign system during the course of our relationship with you. To reduce the chance of you inadvertently not receiving any document for execution or other document or record, we prefer to provide all documents for execution, and other documents and records by the same method and to the same address that you have given us. If you do not agree with this process, please let us know as described below.

How to contact Crown Castle

You may contact us to let us know of any changes related to contacting you electronically, to request paper copies of documents for execution and other documents and records from us, and to withdraw your prior consent to receive documents for execution and other documents and records electronically as follows:

To contact us by phone call: 724-416-2000
To contact us by email, send messages to: esignature@CrownCastle.com
To contact us by paper mail, send correspondence to
Crown Castle
2000 Corporate Drive
Canonsburg, PA 15317

To advise Crown Castle and DocuSign of your new e-mail address

To let us know of a change to the e-mail address where we should send documents for execution and other documents and records to you, you must send an email message to esignature@CrownCastle.com and state your previous e-mail address and your new e-mail address.

In addition, you must notify DocuSign, Inc. to arrange for your new email address to be reflected in your DocuSign account by following the process for changing e-mail in the DocuSign system.

Required hardware and software

Browsers:	Internet Explorer® 11 (Windows only); Windows Edge Current Version; Mozilla Firefox Current Version; Safari™ (Mac OS only) 6.2 or above; Google Chrome Current Version; **Note** : Pre-release (e.g., beta) versions of operating systems and browsers are not supported.
Mobile Signing:	Apple iOS 7.0 or above; Android 4.0 or above
PDF Reader:	Acrobat® Reader or similar software may be required to view and print PDF files
Screen Resolution:	1024 x 768

Enabled Security Settings:	Allow per session cookies

These minimum requirements are subject to change. If these requirements change, you will be asked to re-accept the disclosure. Pre-release (e.g. beta) versions of operating systems and browsers are not supported.

Acknowledging your access and consent to receive documents electronically

Please confirm that you were able to access this disclosure electronically (which is similar to the manner in which we will deliver documents for execution and other documents and records) and that you were able to print this disclosure on paper or electronically save it for your future reference and access or that you were able to e-mail this disclosure to an address where you will be able to print it on paper or save it for your future reference and access. Further, if you consent to receiving documents for execution and other documents and records in electronic format on the terms described above, please let us know by clicking the “I agree” button below.

By checking the 'I agree' box, I confirm that:

- You can access and read this Electronic Record and Signature Disclosure; and
- As a recipient, you can read, electronically sign and act upon this message, and you agree not to forward it or any other DocuSign e-mail communications. In the event another party needs to be added to the DocuSign communication, you must make a request to the e-mail originator.

Exhibit D

Structural Analysis Report

PAUL J. FORD & COMPANY

Date: **July 14, 2020**

Chanhdara Ratsavong
Crown Castle
6325 Ardrey Kell Rd, Suite 600
Charlotte, NC 28277

Paul J. Ford and Company
250 E. Broad St., Ste 600
Columbus, OH 43215
614-221-6679

Subject:	**Structural Modification Report**	
Carrier Designation:	***AT&T Mobility* Co-Locate**	
	Carrier Site Number:	59347
	Carrier Site Name:	CTL01033
Crown Castle Designation:	**Crown Castle BU Number:**	841298
	Crown Castle Site Name:	SOUTHINGTON ROGUS
	Crown Castle JDE Job Number:	605389
	Crown Castle Work Order Number:	1859123
	Crown Castle Order Number:	517069 Rev. 1
Engineering Firm Designation:	**Paul J. Ford and Company Project Number:**	37520-0805.003.8800
Site Data:	**250 MERIDEN WATERBURY TURNPIKE, SOUTHINGTON, Hartford County, CT**	
	Latitude *41° 33' 24.54"*, Longitude *-72° 51' 10.84"*	
	120 Foot - Self Support Tower	

Dear Chanhdara Ratsavong,

Paul J. Ford and Company is pleased to submit this **"Structural Modification Report"** to determine the structural integrity of the above mentioned tower.

The purpose of the analysis is to determine acceptability of the tower stress level. Based on our analysis we have determined the tower stress level for the structure and foundation, under the following load case, to be:

LC4.5: Modified Structure w/ Proposed Equipment Configuration	**Sufficient Capacity (Max % capacity = 89.1%)**

This analysis utilizes an ultimate 3-second gust wind speed of 125 mph as required by the 2018 Connecticut State Building Code and Appendix N. Applicable Standard references and design criteria are listed in Section 2 - Analysis Criteria.

All modifications and equipment proposed in this report shall be installed in accordance with the attached drawings for the determined available structural capacity to be effective.

Respectfully submitted by:

Richard W. Hoffman, P.E.
Project Manager
rhoffman@pauljford.com

JPJ

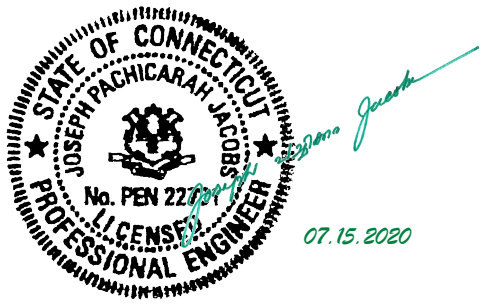

TABLE OF CONTENTS

1) INTRODUCTION

2) ANALYSIS CRITERIA
Table 1 - Proposed Equipment Configuration
Table 2 - Other Considered Equipment

3) ANALYSIS PROCEDURE
Table 3 - Documents Provided
3.1) Analysis Method
3.2) Assumptions

4) ANALYSIS RESULTS
Table 4 - Section Capacity (Summary)
Table 5 – Tower Component Stresses vs. Capacity – LC4.5
4.1) Recommendations

5) APPENDIX A
tnxTower Output

6) APPENDIX B
Base Level Drawing

7) APPENDIX C
Additional Calculations

8) APPENDIX D
Modification Drawings

1) INTRODUCTION

This tower is a 120 ft self-support tower, designed by Pirod and mapped by GPD in April of 2014. The original design standard and wind speed are unavailable.

The tower has been modified multiple times to accommodate additional loading.

2) ANALYSIS CRITERIA

TIA-222 Revision:	TIA-222-H
Risk Category:	II
Wind Speed:	125 mph
Exposure Category:	B
Topographic Factor:	1
Ice Thickness:	1.5 in
Wind Speed with Ice:	50 mph
Service Wind Speed:	60 mph

Table 1 - Proposed Equipment Configuration

Mounting Level (ft)	Center Line Elevation (ft)	Number of Antennas	Antenna Manufacturer	Antenna Model	Number of Feed Lines	Feed Line Size (in)
119.0	120.0	3	cci antennas	TPA65R-BU8D_CCIV2 w/ Mount Pipe	1 2	3/8 3/4
		3	ericsson	RRUS 4449 B5/B12		
		1	raycap	DC6-48-60-18-8C		
	119.0	3	tower mounts	8' x 2.375" Tie Back		
		1	tower mounts	Side Arm Mount [SO 304-3]		
110.0	110.0	3	tower mounts	8' x 2.375" Tie Back	1 2 6	3/8 3/4 1 1/4
		3	cci antennas	OPA-65R-LCUU-H6 w/ Mount Pipe		
		3	ericsson	RRUS 8843 B2/B66A		
		1	raycap	DC6-48-60-18-8C		
		1	tower mounts	Side Arm Mount [SO 304-3]		

Table 2 - Other Considered Equipment

Mounting Level (ft)	Center Line Elevation (ft)	Number of Antennas	Antenna Manufacturer	Antenna Model	Number of Feed Lines	Feed Line Size (in)
120.0	124	1	pctel	MFB9157	3	7/8
	123	1	scala	OGB6-900		
	122	1	rfs/celwave	BA1012-0		
	120	3	tower mounts	Pipe Mount [PM 601-3]		
60.0	67.0	1	rfs celwave	BA1012-0	2	7/8
		1	scala	OGD6-905/945		
	60.0	2	tower mounts	Side Arm Mount [SO 305-1]		

Mounting Level (ft)	Center Line Elevation (ft)	Number of Antennas	Antenna Manufacturer	Antenna Model	Number of Feed Lines	Feed Line Size (in)
55.0	58.0	3	alcatel lucent	B13 RRH4X30-4R	2	1 1/4
		3	alcatel lucent	B66A RRH4X45		
		6	commscope	SBNHH-1D65B w/ Mount Pipe		
		2	rfs celwave	DB-T1-6Z-8AB-0Z		
		3	tower mounts	6' x 4" Mount Pipe		
	55.0	3	tower mounts	6' x 2" Horizontal Mount Pipe		
50.0	60.0	1	scala	OGD6-905/945	2	7/8
	56.0	1	scala	OGB9-900-DT3		
	50.0	2	tower mounts	Side Arm Mount [SO 305-1]		

3) ANALYSIS PROCEDURE

Table 3 - Documents Provided

Document	Remarks	Reference	Source
4-GEOTECHNICAL REPORTS	GPD: 2014723.59347.01: 4/4/2014	5114302	CCISITES
4-TOWER FOUNDATION DRAWINGS/DESIGN/SPECS	GPD: 2014723.59347.01: 4/4/2014	5114267	CCISITES
4-TOWER MANUFACTURER DRAWINGS	GPD: 2014723.21.59347.01: 4/14/2014 (Mapped)	5114299	CCISITES
4-TOWER REINFORCEMENT DESIGN/DRAWINGS/DATA	Crown: 955387: Rev 1: 3/4/2015	5388189	CCISITES
4-POST-MODIFICATION INSPECTION	TEP: 55617: 3/24/2015	5610335	CCISITES
4-TOWER REINFORCEMENT DESIGN/DRAWINGS/DATA	Jacobs: 1080709:7/20/2015	5788781	CCISITES
4-POST-MODIFICATION INSPECTION	TEP: 55617_27883:3/23/2016	6175357	CCISITES
4-TOWER REINFORCEMENT DESIGN/DRAWINGS/DATA	PJF: 37518-0484.002.8800: 3/19/2018	7426751	CCISITES
4-POST-MODIFICATION INSPECTION	TEP: 55617.195661: 3/5/2019	8266808	CCISITES
4-MOUNT ANALYSIS REPORT	POD, 20-64395, 5/22/20	9095780	CCISITES

3.1) Analysis Method

tnxTower (version 8.0.7.4), a commercially available analysis software package, was used to create a three-dimensional model of the tower and calculate member stresses for various loading cases. Selected output from the analysis is included in Appendix A. When applicable, Crown Castle has calculated and provided the effective area for panel antennas using approved methods following the intent of the TIA-222 Standard.

tnxTower was used to determine the loads on the modified structure. Additional calculations were performed to determine the stresses in the reinforced leg sections. These calculations are presented in Appendix C.

3.2) Assumptions

1) Tower and structures were maintained in accordance with the TIA-222 standard.
2) The configuration of antennas, transmission cables, mounts and other appurtenances are as specified in Tables 1 and 2 and the referenced drawings.
3) The foundation (structural) capacity was unable to be determined due to the lack of existing reinforcing steel information. Therefore, it was assumed that the foundation was properly designed to meet the minimum amount of steel per ACI requirements. The minimum steel values were then used for the foundation analysis.
4) The structure will be modified in conformance with the attached proposed modification drawings.

This analysis may be affected if any assumptions are not valid or have been made in error. Paul J. Ford and Company should be notified to determine the effect on the structural integrity of the tower.

4) ANALYSIS RESULTS

Table 4 - Section Capacity (Summary)

Section No.	Elevation (ft)	Component Type	Size	Critical Element	P (K)	SF*P_allow (K)	% Capacity	Pass / Fail
T1	120 - 100	Leg	1 1/2	3	-16.29	55.54	29.3	Pass
T2	100 - 80	Leg	1 1/2	88	-42.06	55.54	75.7	Pass
T3	80 - 60	Leg	1 1/2	174	-65.02	75.28	86.4	Pass
T4	60 - 40	Leg	841298_1.75 SR w/0.154 x 2.375 HP	276	-95.80	107.54	89.1	Pass
T5	40 - 20	Leg	841298_2 SR w/0.276 x 2.875 HP	354	-126.26	148.42	85.1	Pass
T6	20 - 0	Leg	841298_2.25 SR w/0.276 x 2.875 HP	432	-155.17	187.86	82.6	Pass
T1	120 - 100	Diagonal	5/8	15	-1.90	4.53	41.9	Pass
T2	100 - 80	Diagonal	5/8	101	-2.49	4.53	55.0	Pass
T3	80 - 60	Diagonal	5/8	186	-2.65	3.71	71.5	Pass
T4	60 - 40	Diagonal	3/4	289	-2.87	6.32	45.5	Pass
T5	40 - 20	Diagonal	7/8	430	-3.45	10.63	32.5	Pass
T6	20 - 0	Diagonal	7/8	445	-3.11	8.30	37.4	Pass
T1	120 - 100	Horizontal	3/4	27	-0.37	6.28	5.8	Pass
T2	100 - 80	Horizontal	3/4	115	-1.08	6.28	17.2	Pass
T3	80 - 60	Horizontal	3/4	190	-1.46	4.79	30.4	Pass
T4	60 - 40	Horizontal	3/4	301	-1.31	3.77	34.6	Pass
T5	40 - 20	Horizontal	7/8	424	-1.79	6.33	28.3	Pass
T6	20 - 0	Horizontal	7/8	502	-1.57	5.03	31.2	Pass

Section No.	Elevation (ft)	Component Type	Size	Critical Element	P (K)	SF*P_allow (K)	% Capacity	Pass / Fail
T1	120 - 100	Secondary Horizontal	5/8	86	0.00	14.50	0.5	Pass
T2	100 - 80	Secondary Horizontal	5/8	172	0.00	14.50	0.5	Pass
T3	80 - 60	Secondary Horizontal	1x1	191	-1.17	12.39	9.5 14.5 (b)	Pass
T1	120 - 100	Top Girt	1	6	-0.21	16.35	1.3	Pass
T2	100 - 80	Top Girt	1	91	-0.34	16.35	2.1	Pass
T3	80 - 60	Top Girt	1	177	-0.45	16.26	2.8	Pass
T4	60 - 40	Top Girt	1	278	-0.30	13.60	2.2	Pass
T5	40 - 20	Top Girt	1	357	-0.39	11.07	3.5	Pass
T6	20 - 0	Top Girt	1	435	-0.34	8.81	3.8	Pass
T1	120 - 100	Bottom Girt	3/4	9	-0.99	6.28	15.7	Pass
T2	100 - 80	Bottom Girt	3/4	95	-1.47	6.28	23.5	Pass
T3	80 - 60	Bottom Girt	3/4	181	-1.65	4.63	35.7	Pass
T4	60 - 40	Bottom Girt	1	283	-1.95	11.14	17.5	Pass
T5	40 - 20	Bottom Girt	1	361	-1.88	8.86	21.3	Pass
T6	20 - 0	Bottom Girt	1	439	-1.76	7.17	24.5	Pass
							Summary	
						Leg (T4)	89.1	Pass
						Diagonal (T3)	71.5	Pass
						Horizontal (T4)	34.6	Pass
						Secondary Horizontal (T3)	14.5	Pass
						Top Girt (T6)	3.8	Pass
						Bottom Girt (T3)	35.7	Pass
						Bolt Checks	68.0	Pass
						RATING =	**89.1**	**Pass**

Table 5 - Tower Component Stresses vs. Capacity - LC4.5

Notes	Component	Elevation (ft)	% Capacity	Pass / Fail
1	Flange Jump / Leg Splice Connection	60	53.4	Pass
1	Flange Jump / Leg Splice Connection	40	76.6	Pass
1	Bridge Stiffener Connection	20	70.4	Pass
1	Anchor Rod Bracket	0	29.2	Pass
1	Anchor Rods	0	57.0	Pass
1	Base Foundation Structural	0	14.5	Pass
1	Base Foundation Soil Interaction	0	61.6	Pass

Structure Rating (max from all components) =	**89.1%**

Notes:
- All structural ratings are per TIA-222-H Section 15.5

1) See additional documentation in “Appendix C – Additional Calculations” for calculations supporting the % capacity consumed.

4.1) Recommendations

Perform the modifications detailed in Appendix D to remedy the deficiencies identified in Crown Castle Work Order No. 1854677.

APPENDIX A

TNXTOWER OUTPUT

Section	T6	T5	T4	T3	T2	T1
Legs	841298_2.25 SR w/0.276 x 2.875 HP	841298_2 SR w/0.276 x 2.875 HP	841298_1.75 SR w/0.154 x 2.375 HP		SR 1 1/2	
Leg Grade			A572-50			
Diagonals	SR 7/8		SR 3/4		SR 5/8	
Diagonal Grade			A36			
Top Girts			SR 1			
Bottom Girts		SR 1			SR 3/4	
Horizontals	SR 7/8		SR 3/4			
Sec. Horizontals		N.A.		1x1	SR 5/8	3
Face Width (ft)	5	4	3.5			
# Panels @ (ft)			54 @ 2.33333			
Weight (K)	6.9	1.6	1.1	1.0	0.7	0.7

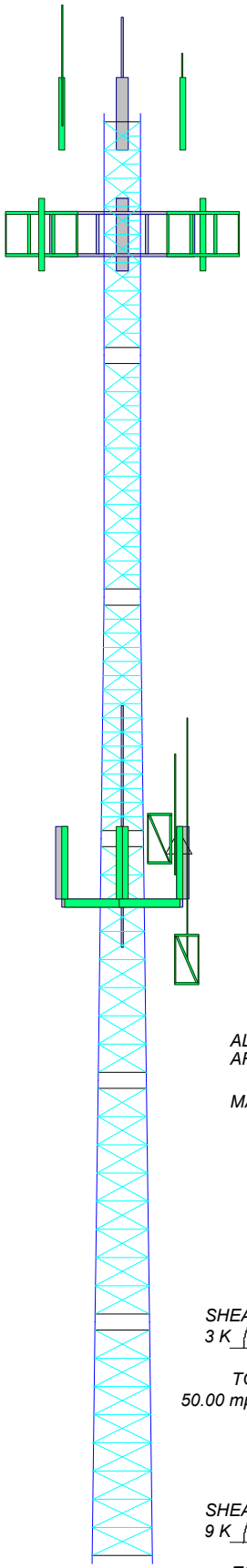

MATERIAL STRENGTH

GRADE	Fy	Fu	GRADE	Fy	Fu
A572-50	50 ksi	65 ksi	A36	36 ksi	58 ksi

TOWER DESIGN NOTES

1. Tower is located in Hartford County, Connecticut.
2. Tower designed for Exposure B to the TIA-222-H Standard.
3. Tower designed for a 125.00 mph basic wind in accordance with the TIA-222-H Standard.
4. Tower is also designed for a 50.00 mph basic wind with 1.50 in ice. Ice is considered to increase in thickness with height.
5. Deflections are based upon a 60.00 mph wind.
6. Tower Risk Category II.
7. Topographic Category 1 with Crest Height of 0.00 ft
8. TIA-222-H Annex S
9. TOWER RATING: 89.1%

ALL REACTIONS ARE FACTORED

MAX. CORNER REACTIONS AT BASE:
DOWN: 158 K
SHEAR: 4 K

UPLIFT: -148 K
SHEAR: 5 K

AXIAL 39 K
SHEAR 3 K *MOMENT 236 kip-ft*
TORQUE 0 kip-ft
50.00 mph WIND - 1.50 in ICE

AXIAL 15 K
SHEAR 9 K *MOMENT 664 kip-ft*
TORQUE 2 kip-ft
REACTIONS - 125.00 mph WIND

Paul J. Ford and Company
250 E. Broad St., Ste 600
Columbus, OH 43215
Phone: 614-221-6679
FAX:

Job: **37520-0805.003.8800**			
Project: ***841298, Southington Rogus; Southington, Connecticut***			
Client: Crown Castle	Drawn by: Rich Hoffman	App'd:	
Code: TIA-222-H	Date: 07/13/20	Scale: NTS	
Path: G:\TOWER\375_Crown_Castle\2020\37520-0805_841298_SOUTHINGTON ROGUS\37520-0805.003.8800_SDD_1859123\tnx\37520-0805.003.8800.eri		Dwg No. E-1	

Tower Input Data

The main tower is a 3x free standing tower with an overall height of 120.00 ft above the ground line.
The base of the tower is set at an elevation of 0.00 ft above the ground line.
The face width of the tower is 3.00 ft at the top and 5.00 ft at the base.
This tower is designed using the TIA-222-H standard.
The following design criteria apply:

Tower is located in Hartford County, Connecticut.
Tower base elevation above sea level: 343.00 ft.
Basic wind speed of 125.00 mph.
Risk Category II.
Exposure Category B.
Simplified Topographic Factor Procedure for wind speed-up calculations is used.
Topographic Category: 1.
Crest Height: 0.00 ft.
Nominal ice thickness of 1.50 in.
Ice thickness is considered to increase with height.
Ice density of 56 pcf.
A wind speed of 50.00 mph is used in combination with ice.
Temperature drop of 50 °F.
Deflections calculated using a wind speed of 60.00 mph.
TIA-222-H Annex S.
A non-linear (P-delta) analysis was used.
Pressures are calculated at each section.
Tower analysis based on target reliabilities in accordance with Annex S.
Load Modification Factors used: $K_{es}(F_w) = 0.95$, $K_{es}(t_i) = 0.85$.
Stress ratio used in tower member design is 1.05.
Local bending stresses due to climbing loads, feed line supports, and appurtenance mounts are not considered.

Options

	Consider Moments - Legs		Distribute Leg Loads As Uniform		Use ASCE 10 X-Brace Ly Rules
	Consider Moments - Horizontals		Assume Legs Pinned	√	Calculate Redundant Bracing Forces
	Consider Moments - Diagonals	√	Assume Rigid Index Plate		Ignore Redundant Members in FEA
	Use Moment Magnification	√	Use Clear Spans For Wind Area	√	SR Leg Bolts Resist Compression
	Use Code Stress Ratios	√	Use Clear Spans For KL/r		All Leg Panels Have Same Allowable
√	Use Code Safety Factors - Guys		Retension Guys To Initial Tension		Offset Girt At Foundation
	Escalate Ice	√	Bypass Mast Stability Checks	√	Consider Feed Line Torque
	Always Use Max Kz	√	Use Azimuth Dish Coefficients		Include Angle Block Shear Check
	Use Special Wind Profile	√	Project Wind Area of Appurt.		Use TIA-222-H Bracing Resist. Exemption
√	Include Bolts In Member Capacity		Autocalc Torque Arm Areas		Use TIA-222-H Tension Splice Exemption
	Leg Bolts Are At Top Of Section		Add IBC .6D+W Combination		Poles
√	Secondary Horizontal Braces Leg	√	Sort Capacity Reports By Component		Include Shear-Torsion Interaction
	Use Diamond Inner Bracing (4 Sided)		Triangulate Diamond Inner Bracing		Always Use Sub-Critical Flow
	SR Members Have Cut Ends		Treat Feed Line Bundles As Cylinder		Use Top Mounted Sockets
	SR Members Are Concentric		Ignore KL/ry For 60 Deg. Angle Legs		Pole Without Linear Attachments
					Pole With Shroud Or No Appurtenances
					Outside and Inside Corner Radii Are Known

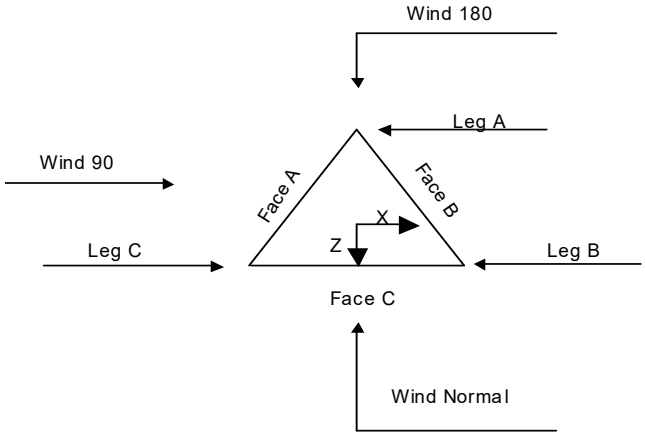

Triangular Tower

Tower Section Geometry

Tower Section	Tower Elevation ft	Assembly Database	Description	Section Width ft	Number of Sections	Section Length ft
T1	120.00-100.00			3.00	1	20.00
T2	100.00-80.00			3.00	1	20.00
T3	80.00-60.00			3.00	1	20.00
T4	60.00-40.00			3.50	1	20.00
T5	40.00-20.00			4.00	1	20.00
T6	20.00-0.00			4.50	1	20.00

Tower Section Geometry *(cont'd)*

Tower Section	Tower Elevation ft	Diagonal Spacing ft	Bracing Type	Has K Brace End Panels	Has Horizontals	Top Girt Offset in	Bottom Girt Offset in
T1	120.00-100.00	2.33	X Brace	No	Yes+Steps	8.00	8.00
T2	100.00-80.00	2.33	X Brace	No	Yes+Steps	8.00	8.00
T3	80.00-60.00	2.33	X Brace	No	Yes	8.00	8.00
T4	60.00-40.00	2.33	X Brace	No	Yes	8.00	8.00
T5	40.00-20.00	2.33	X Brace	No	Yes	8.00	8.00
T6	20.00-0.00	2.33	X Brace	No	Yes	8.00	8.00

Tower Section Geometry *(cont'd)*

Tower Elevation ft	Leg Type	Leg Size	Leg Grade	Diagonal Type	Diagonal Size	Diagonal Grade
T1 120.00-100.00	Solid Round	1 1/2	A572-50 (50 ksi)	Solid Round	5/8	A36 (36 ksi)

Tower Elevation ft	Leg Type	Leg Size	Leg Grade	Diagonal Type	Diagonal Size	Diagonal Grade
T2 100.00-80.00	Solid Round	1 1/2	A572-50 (50 ksi)	Solid Round	5/8	A36 (36 ksi)
T3 80.00-60.00	Solid Round	1 1/2	A572-50 (50 ksi)	Solid Round	5/8	A36 (36 ksi)
T4 60.00-40.00	Arbitrary Shape	841298_1.75 SR w/0.154 x 2.375 HP	A572-50 (50 ksi)	Solid Round	3/4	A36 (36 ksi)
T5 40.00-20.00	Arbitrary Shape	841298_2 SR w/0.276 x 2.875 HP	A572-50 (50 ksi)	Solid Round	7/8	A36 (36 ksi)
T6 20.00-0.00	Arbitrary Shape	841298_2.25 SR w/0.276 x 2.875 HP	A572-50 (50 ksi)	Solid Round	7/8	A36 (36 ksi)

Tower Section Geometry *(cont'd)*

Tower Elevation ft	Top Girt Type	Top Girt Size	Top Girt Grade	Bottom Girt Type	Bottom Girt Size	Bottom Girt Grade
T1 120.00-100.00	Solid Round	1	A36 (36 ksi)	Solid Round	3/4	A36 (36 ksi)
T2 100.00-80.00	Solid Round	1	A36 (36 ksi)	Solid Round	3/4	A36 (36 ksi)
T3 80.00-60.00	Solid Round	1	A36 (36 ksi)	Solid Round	3/4	A36 (36 ksi)
T4 60.00-40.00	Solid Round	1	A36 (36 ksi)	Solid Round	1	A36 (36 ksi)
T5 40.00-20.00	Solid Round	1	A36 (36 ksi)	Solid Round	1	A36 (36 ksi)
T6 20.00-0.00	Solid Round	1	A36 (36 ksi)	Solid Round	1	A36 (36 ksi)

Tower Section Geometry *(cont'd)*

Tower Elevation ft	No. of Mid Girts	Mid Girt Type	Mid Girt Size	Mid Girt Grade	Horizontal Type	Horizontal Size	Horizontal Grade
T1 120.00-100.00	None	Flat Bar		A36 (36 ksi)	Solid Round	3/4	A36 (36 ksi)
T2 100.00-80.00	None	Flat Bar		A36 (36 ksi)	Solid Round	3/4	A36 (36 ksi)
T3 80.00-60.00	None	Flat Bar		A36 (36 ksi)	Solid Round	3/4	A36 (36 ksi)
T4 60.00-40.00	None	Flat Bar		A36 (36 ksi)	Solid Round	3/4	A36 (36 ksi)
T5 40.00-20.00	None	Flat Bar		A36 (36 ksi)	Solid Round	7/8	A36 (36 ksi)
T6 20.00-0.00	None	Flat Bar		A36 (36 ksi)	Solid Round	7/8	A36 (36 ksi)

Tower Section Geometry *(cont'd)*

Tower Elevation ft	Secondary Horizontal Type	Secondary Horizontal Size	Secondary Horizontal Grade	Inner Bracing Type	Inner Bracing Size	Inner Bracing Grade
T1 120.00-	Solid Round	5/8	A572-50	Solid Round		A572-50

Tower Elevation ft	Secondary Horizontal Type	Secondary Horizontal Size	Secondary Horizontal Grade	Inner Bracing Type	Inner Bracing Size	Inner Bracing Grade
100.00			(50 ksi)			(50 ksi)
T2 100.00-80.00	Solid Round	5/8	A572-50 (50 ksi)	Solid Round		A572-50 (50 ksi)
T3 80.00-60.00	Flat Bar	1x1	A572-50 (50 ksi)	Solid Round		A572-50 (50 ksi)

Tower Section Geometry *(cont'd)*

Tower Elevation ft	Gusset Area (per face) ft^2	Gusset Thickness in	Gusset Grade	Adjust. Factor A_f	Adjust. Factor A_r	Weight Mult.	Double Angle Stitch Bolt Spacing Diagonals in	Double Angle Stitch Bolt Spacing Horizontals in	Double Angle Stitch Bolt Spacing Redundants in
T1 120.00-100.00	0.00	0.00	A36 (36 ksi)	1	1	1	36.00	36.00	36.00
T2 100.00-80.00	0.00	0.00	A36 (36 ksi)	1	1	1	36.00	36.00	36.00
T3 80.00-60.00	0.00	0.25	A36 (36 ksi)	1	1	1	36.00	36.00	36.00
T4 60.00-40.00	0.00	0.00	A36 (36 ksi)	1	1	1	36.00	36.00	36.00
T5 40.00-20.00	0.00	0.00	A36 (36 ksi)	1	1	1	36.00	36.00	36.00
T6 20.00-0.00	0.00	0.00	A36 (36 ksi)	1	1	1	36.00	36.00	36.00

Tower Section Geometry *(cont'd)*

Tower Elevation ft	Calc K Single Angles	Calc K Solid Rounds	K Factors[1] Legs	X Brace Diags X Y	K Brace Diags X Y	Single Diags X Y	Girts X Y	Horiz. X Y	Sec. Horiz. X Y	Inner Brace X Y
T1 120.00-100.00	No	No	1	0.9 0.9	1 1	1 1	0.7 0.7	0.7 0.7	1 1	1 1
T2 100.00-80.00	No	No	1	0.9 0.9	1 1	1 1	0.7 0.7	0.7 0.7	1 1	1 1
T3 80.00-60.00	No	No	1	0.9 0.9	1 1	1 1	0.7 0.7	0.7 0.7	1 1	1 1
T4 60.00-40.00	No	No	1	0.9 0.9	1 1	1 1	0.7 0.7	0.7 0.7	1 1	1 1
T5 40.00-20.00	No	No	1	0.9 0.9	1 1	1 1	0.7 0.7	0.7 0.7	1 1	1 1
T6 20.00-0.00	No	No	1	0.9 0.9	1 1	1 1	0.7 0.7	0.7 0.7	1 1	1 1

[1]*Note: K factors are applied to member segment lengths. K-braces without inner supporting members will have the K factor in the out-of-plane direction applied to the overall length.*

Tower Section Geometry *(cont'd)*

Tower Elevation ft	Leg		Diagonal		Top Girt		Bottom Girt		Mid Girt		Long Horizontal		Short Horizontal	
	Net Width Deduct in	U	Net Width Deduct in	U	Net Width Deduct in	U	Net Width Deduct in	U	Net Width Deduct in	U	Net Width Deduct in	U	Net Width Deduct in	U
T1 120.00-100.00	0.00	1	0.00	1	0.00	1	0.00	1	0.00	0.75	0.00	1	0.00	0.75
T2 100.00-80.00	0.00	1	0.00	1	0.00	1	0.00	1	0.00	0.75	0.00	1	0.00	0.75
T3 80.00-60.00	0.00	1	0.00	1	0.00	1	0.00	1	0.00	0.75	0.00	1	0.00	0.75
T4 60.00-40.00	0.00	1	0.00	1	0.00	1	0.00	1	0.00	0.75	0.00	1	0.00	0.75
T5 40.00-20.00	0.00	1	0.00	1	0.00	1	0.00	1	0.00	0.75	0.00	1	0.00	0.75
T6 20.00-0.00	0.00	1	0.00	1	0.00	1	0.00	1	0.00	0.75	0.00	1	0.00	0.75

Tower Section Geometry *(cont'd)*

Tower Elevation ft	Leg Connection Type	Leg		Diagonal		Top Girt		Bottom Girt		Mid Girt		Long Horizontal		Short Horizontal	
		Bolt Size in	No.	Bolt Size in	No.	Bolt Size in	No.	Bolt Size in	No.	Bolt Size in	No.	Bolt Size in	No.	Bolt Size in	No.
T1 120.00-100.00	Flange	0.63 A325N	4	0.63 A325N	0	0.63 A325N	0	0.63 A325N	0	0.63 A325N	0	0.63 A325N	0	0.63 A325N	0
T2 100.00-80.00	Flange	0.63 A325N	4	0.63 A325N	0	0.63 A325N	0	0.63 A325N	0	0.63 A325N	0	0.63 A325N	0	0.63 A325N	0
T3 80.00-60.00	Sleeve DS	0.63 A325N	0	0.63 A325N	0	0.63 A325N	0	0.63 A325N	0	0.63 A325N	0	0.63 A325N	0	0.50 A325N	1
T4 60.00-40.00	Sleeve DS	0.63 A325N	10	0.63 A325N	0	0.63 A325N	0	0.63 A325N	0	0.63 A325N	0	0.63 A325N	0	0.63 A325N	0
T5 40.00-20.00	Sleeve DS	0.75 A325N	10	0.63 A325N	0	0.63 A325N	0	0.63 A325N	0	0.63 A325N	0	0.63 A325N	0	0.63 A325N	0
T6 20.00-0.00	Flange	0.75 A325N	0	0.63 A325N	0	0.63 A325N	0	0.63 A325N	0	0.63 A325N	0	0.63 A325N	0	0.63 A325N	0

Feed Line/Linear Appurtenances - Entered As Round Or Flat

Description	Face or Leg	Allow Shield	Exclude From Torque Calculation	Component Type	Placement ft	Face Offset in	Lateral Offset (Frac FW)	#	# Per Row	Clear Spacing in	Width or Diameter in	Perimeter in	Weight plf
Safety Line 3/8 ****	B	No	No	Ar (CaAa)	120.00 - 8.00	0.00	0	1	1	0.38	0.38		0.22
LDF6-50A(1-1/4)	A	No	No	Ar (CaAa)	110.00 - 8.00	0.00	-0.25	6	6	1.00 0.50	1.55		0.60
FB-L98B-034-XXX(3/8)	A	No	No	Ar (CaAa)	110.00 - 8.00	0.00	-0.1	1	1	0.39	0.39		0.06
FB-L98B-034-XXX(3/8)	A	No	No	Ar (CaAa)	119.00 - 8.00	0.00	-0.4	1	1	0.39	0.39		0.06
WR-VG86ST-BRD(3/4)	A	No	No	Ar (CaAa)	110.00 - 8.00	0.00	-0.1	2	2	0.80	0.80		0.58
WR-VG86ST-BRD(3/4) **** ****	A	No	No	Ar (CaAa)	119.00 - 8.00	0.00	-0.4	2	2	0.80	0.80		0.58

Description	Face or Leg	Allow Shield	Exclude From Torque Calculation	Component Type	Placement ft	Face Offset in	Lateral Offset (Frac FW)	#	# Per Row	Clear Spacing in	Width or Diameter in	Perimeter in	Weight plf
HB114-U6S12-XXX-LI(1-1/4) ****	A	No	No	Ar (CaAa)	58.00 - 8.00	0.00	0.45	2	2	1.54	1.54		1.70
FLC 78-50J(7/8)	A	No	No	Ar (CaAa)	60.00 - 8.00	-1.00	-0.25	5	5	1.11	1.11		0.40
FLC 78-50J(7/8) ***	A	No	No	Ar (CaAa)	120.00 - 60.00	-1.00	-0.25	3	3	1.11	1.11		0.40
FLC 78-50J(7/8)	A	No	No	Ar (CaAa)	50.00 - 0.00	-1.00	-0.25	1	1	1.11	1.11		0.40
FLC 12-50J(1/2) ***	A	No	No	Ar (CaAa)	50.00 - 0.00	-1.00	-0.4	1	1	0.64	0.64		0.17
T-Brackets (Af)	A	No	No	Af (CaAa)	120.00 - 8.00	0.00	-0.25	1	1	1.00	1.00		8.40

Feed Line/Linear Appurtenances Section Areas

Tower Section	Tower Elevation ft	Face	A_R ft^2	A_F ft^2	C_AA_A In Face ft^2	C_AA_A Out Face ft^2	Weight K
T1	120.00-100.00	A	0.000	0.000	25.058	0.000	0.26
		B	0.000	0.000	0.750	0.000	0.00
		C	0.000	0.000	0.000	0.000	0.00
T2	100.00-80.00	A	0.000	0.000	36.540	0.000	0.31
		B	0.000	0.000	0.750	0.000	0.00
		C	0.000	0.000	0.000	0.000	0.00
T3	80.00-60.00	A	0.000	0.000	36.540	0.000	0.31
		B	0.000	0.000	0.750	0.000	0.00
		C	0.000	0.000	0.000	0.000	0.00
T4	60.00-40.00	A	0.000	0.000	48.284	0.000	0.40
		B	0.000	0.000	0.750	0.000	0.00
		C	0.000	0.000	0.000	0.000	0.00
T5	40.00-20.00	A	0.000	0.000	50.652	0.000	0.41
		B	0.000	0.000	0.750	0.000	0.00
		C	0.000	0.000	0.000	0.000	0.00
T6	20.00-0.00	A	0.000	0.000	31.793	0.000	0.25
		B	0.000	0.000	0.450	0.000	0.00
		C	0.000	0.000	0.000	0.000	0.00

Feed Line/Linear Appurtenances Section Areas - With Ice

Tower Section	Tower Elevation ft	Face or Leg	Ice Thickness in	A_R ft^2	A_F ft^2	C_AA_A In Face ft^2	C_AA_A Out Face ft^2	Weight K
T1	120.00-100.00	A	1.438	0.000	0.000	87.326	0.000	1.08
		B		0.000	0.000	6.503	0.000	0.07
		C		0.000	0.000	0.000	0.000	0.00
T2	100.00-80.00	A	1.410	0.000	0.000	120.811	0.000	1.44
		B		0.000	0.000	6.388	0.000	0.07
		C		0.000	0.000	0.000	0.000	0.00
T3	80.00-60.00	A	1.375	0.000	0.000	119.459	0.000	1.41
		B		0.000	0.000	6.248	0.000	0.06
		C		0.000	0.000	0.000	0.000	0.00
T4	60.00-40.00	A	1.329	0.000	0.000	154.111	0.000	1.80
		B		0.000	0.000	6.066	0.000	0.06
		C		0.000	0.000	0.000	0.000	0.00
T5	40.00-20.00	A	1.263	0.000	0.000	159.774	0.000	1.81
		B		0.000	0.000	5.802	0.000	0.05
		C		0.000	0.000	0.000	0.000	0.00

Tower Section	Tower Elevation ft	Face or Leg	Ice Thickness in	A_R ft^2	A_F ft^2	C_AA_A In Face ft^2	C_AA_A Out Face ft^2	Weight K
T6	20.00-0.00	A	1.132	0.000	0.000	96.719	0.000	1.04
		B		0.000	0.000	3.166	0.000	0.03
		C		0.000	0.000	0.000	0.000	0.00

Feed Line Center of Pressure

Section	Elevation ft	CP_X in	CP_Z in	CP_X Ice in	CP_Z Ice in
T1	120.00-100.00	-4.38	0.92	-2.30	0.49
T2	100.00-80.00	-5.84	1.06	-3.21	0.58
T3	80.00-60.00	-5.39	1.04	-2.60	0.49
T4	60.00-40.00	-5.67	-0.87	-3.84	-0.93
T5	40.00-20.00	-5.65	-1.07	-4.10	-1.16
T6	20.00-0.00	-4.17	-0.81	-3.26	-0.94

Shielding Factor Ka

Tower Section	Feed Line Record No.	Description	Feed Line Segment Elev.	K_a No Ice	K_a Ice
T1	1	Safety Line 3/8	100.00 - 120.00	0.6000	0.4135
T1	3	LDF6-50A(1-1/4)	100.00 - 110.00	0.6000	0.4135
T1	4	FB-L98B-034-XXX(3/8)	100.00 - 110.00	0.0000	0.0000
T1	5	FB-L98B-034-XXX(3/8)	100.00 - 119.00	0.0000	0.0000
T1	6	WR-VG86ST-BRD(3/4)	100.00 - 110.00	0.6000	0.4135
T1	7	WR-VG86ST-BRD(3/4)	100.00 - 119.00	0.6000	0.4135
T1	19	FLC 78-50J(7/8)	100.00 - 120.00	0.0000	0.0000
T1	24	T-Brackets (Af)	100.00 - 120.00	0.6000	0.4135
T2	1	Safety Line 3/8	80.00 - 100.00	0.6000	0.4214
T2	3	LDF6-50A(1-1/4)	80.00 - 100.00	0.6000	0.4214
T2	4	FB-L98B-034-XXX(3/8)	80.00 - 100.00	0.0000	0.0000
T2	5	FB-L98B-034-XXX(3/8)	80.00 - 100.00	0.0000	0.0000
T2	6	WR-VG86ST-BRD(3/4)	80.00 - 100.00	0.6000	0.4214
T2	7	WR-VG86ST-BRD(3/4)	80.00 - 100.00	0.6000	0.4214
T2	19	FLC 78-50J(7/8)	80.00 - 100.00	0.0000	0.0000
T2	24	T-Brackets (Af)	80.00 - 100.00	0.6000	0.4214
T3	1	Safety Line 3/8	60.00 - 80.00	0.6000	0.3404
T3	3	LDF6-50A(1-1/4)	60.00 - 80.00	0.6000	0.3404
T3	4	FB-L98B-034-XXX(3/8)	60.00 - 80.00	0.0000	0.0000

Tower Section	Feed Line Record No.	Description	Feed Line Segment Elev.	K_a No Ice	K_a Ice
T3	5	FB-L98B-034-XXX(3/8)	60.00 - 80.00	0.0000	0.0000
T3	6	WR-VG86ST-BRD(3/4)	60.00 - 80.00	0.6000	0.3404
T3	7	WR-VG86ST-BRD(3/4)	60.00 - 80.00	0.6000	0.3404
T3	19	FLC 78-50J(7/8)	60.00 - 80.00	0.0000	0.0000
T3	24	T-Brackets (Af)	60.00 - 80.00	0.6000	0.3404
T4	1	Safety Line 3/8	40.00 - 60.00	0.6000	0.4483
T4	3	LDF6-50A(1-1/4)	40.00 - 60.00	0.6000	0.4483
T4	4	FB-L98B-034-XXX(3/8)	40.00 - 60.00	0.0000	0.0000
T4	5	FB-L98B-034-XXX(3/8)	40.00 - 60.00	0.0000	0.0000
T4	6	WR-VG86ST-BRD(3/4)	40.00 - 60.00	0.6000	0.4483
T4	7	WR-VG86ST-BRD(3/4)	40.00 - 60.00	0.6000	0.4483
T4	16	HB114-U6S12-XXX-LI(1-1/4)	40.00 - 58.00	0.6000	0.4483
T4	18	FLC 78-50J(7/8)	40.00 - 60.00	0.0000	0.0000
T4	21	FLC 78-50J(7/8)	40.00 - 50.00	0.0000	0.0000
T4	22	FLC 12-50J(1/2)	40.00 - 50.00	0.0000	0.0000
T4	24	T-Brackets (Af)	40.00 - 60.00	0.6000	0.4483
T5	1	Safety Line 3/8	20.00 - 40.00	0.6000	0.4637
T5	3	LDF6-50A(1-1/4)	20.00 - 40.00	0.6000	0.4637
T5	4	FB-L98B-034-XXX(3/8)	20.00 - 40.00	0.0000	0.0000
T5	5	FB-L98B-034-XXX(3/8)	20.00 - 40.00	0.0000	0.0000
T5	6	WR-VG86ST-BRD(3/4)	20.00 - 40.00	0.6000	0.4637
T5	7	WR-VG86ST-BRD(3/4)	20.00 - 40.00	0.6000	0.4637
T5	16	HB114-U6S12-XXX-LI(1-1/4)	20.00 - 40.00	0.6000	0.4637
T5	18	FLC 78-50J(7/8)	20.00 - 40.00	0.0000	0.0000
T5	21	FLC 78-50J(7/8)	20.00 - 40.00	0.0000	0.0000
T5	22	FLC 12-50J(1/2)	20.00 - 40.00	0.0000	0.0000
T5	24	T-Brackets (Af)	20.00 - 40.00	0.6000	0.4637
T6	1	Safety Line 3/8	8.00 - 20.00	0.6000	0.5198
T6	3	LDF6-50A(1-1/4)	8.00 - 20.00	0.6000	0.5198
T6	4	FB-L98B-034-XXX(3/8)	8.00 - 20.00	0.0000	0.0000
T6	5	FB-L98B-034-XXX(3/8)	8.00 - 20.00	0.0000	0.0000
T6	6	WR-VG86ST-BRD(3/4)	8.00 - 20.00	0.6000	0.5198
T6	7	WR-VG86ST-BRD(3/4)	8.00 - 20.00	0.6000	0.5198
T6	16	HB114-U6S12-XXX-LI(1-1/4)	8.00 - 20.00	0.6000	0.5198
T6	18	FLC 78-50J(7/8)	8.00 - 20.00	0.0000	0.0000
T6	21	FLC 78-50J(7/8)	0.00 - 20.00	0.0000	0.0000
T6	22	FLC 12-50J(1/2)	0.00 - 20.00	0.0000	0.0000
T6	24	T-Brackets (Af)	8.00 - 20.00	0.6000	0.5198

Discrete Tower Loads

Description	Face or Leg	Offset Type	Offsets: Horz Lateral Vert ft ft ft	Azimuth Adjustment °	Placement ft		C_AA_A Front ft^2	C_AA_A Side ft^2	Weight K
TPA65R-BU8D_CCIV2 w/ Mount Pipe	A	From Leg	4.00 0 1	0.000	119.00	No Ice 1/2" Ice 1" Ice 2" Ice	15.89 16.81 17.76 19.70	7.89 8.74 9.60 11.37	0.12 0.23 0.36 0.66
RRUS 4449 B5/B12	A	From Leg	4.00 0 1	0.000	119.00	No Ice 1/2" Ice 1" Ice 2" Ice	1.97 2.14 2.33 2.72	1.41 1.56 1.73 2.07	0.07 0.09 0.11 0.16
DC6-48-60-18-8C	A	From Leg	4.00 0 1	0.000	119.00	No Ice 1/2" Ice 1" Ice 2" Ice	2.74 2.96 3.20 3.68	2.74 2.96 3.20 3.68	0.03 0.05 0.08 0.15
TPA65R-BU8D_CCIV2 w/ Mount Pipe	B	From Leg	4.00 0 1	0.000	119.00	No Ice 1/2" Ice 1" Ice 2" Ice	15.89 16.81 17.76 19.70	7.89 8.74 9.60 11.37	0.12 0.23 0.36 0.66
RRUS 4449 B5/B12	B	From Leg	4.00 0 1	0.000	119.00	No Ice 1/2" Ice 1" Ice 2" Ice	1.97 2.14 2.33 2.72	1.41 1.56 1.73 2.07	0.07 0.09 0.11 0.16
TPA65R-BU8D_CCIV2 w/ Mount Pipe	C	From Leg	4.00 0 1	0.000	119.00	No Ice 1/2" Ice 1" Ice 2" Ice	15.89 16.81 17.76 19.70	7.89 8.74 9.60 11.37	0.12 0.23 0.36 0.66
RRUS 4449 B5/B12	C	From Leg	4.00 0 1	0.000	119.00	No Ice 1/2" Ice 1" Ice 2" Ice	1.97 2.14 2.33 2.72	1.41 1.56 1.73 2.07	0.07 0.09 0.11 0.16
8' x 2" Tie Back	A	From Leg	0.00 0 0	0.000	119.00	No Ice 1/2" Ice 1" Ice 2" Ice	0.50 0.75 3.40 4.40	1.90 2.73 3.40 4.40	0.03 0.04 0.06 0.12
8' x 2" Tie Back	B	From Leg	0.00 0 0	0.000	119.00	No Ice 1/2" Ice 1" Ice 2" Ice	0.50 0.75 3.40 4.40	1.90 2.73 3.40 4.40	0.03 0.04 0.06 0.12
8' x 2" Tie Back	C	From Leg	0.00 0 0	0.000	119.00	No Ice 1/2" Ice 1" Ice 2" Ice	0.50 0.75 3.40 4.40	1.90 2.73 3.40 4.40	0.03 0.04 0.06 0.12
Side Arm Mount [SO 304-3]	C	None		0.000	119.00	No Ice 1/2" Ice 1" Ice 2" Ice	1.43 2.11 2.88 4.64	1.43 2.11 2.88 4.64	0.07 0.10 0.14 0.27
****									
OGB6-900	A	From Leg	4.00 0	0.000	120.00	No Ice 1/2"	1.18 1.77	1.18 1.77	0.01 0.02

Description	Face or Leg	Offset Type	Offsets: Horz Lateral Vert ft ft ft	Azimuth Adjustment °	Placement ft		C_AA_A Front ft^2	C_AA_A Side ft^2	Weight K
			3			Ice	2.13	2.13	0.03
						1" Ice	2.88	2.88	0.07
						2" Ice			
BA1012-0	B	From Leg	4.00 0 2	0.000	120.00	No Ice 1/2" Ice 1" Ice 2" Ice	0.47 0.96 1.31 1.91	0.47 0.96 1.31 1.91	0.00 0.01 0.01 0.04
MFB9157	C	From Leg	4.00 0 4	0.000	120.00	No Ice 1/2" Ice 1" Ice 2" Ice	1.20 2.02 2.86 4.00	1.20 2.02 2.86 4.00	0.00 0.01 0.03 0.08
Pipe Mount [PM 601-3]	C	None		0.000	120.00	No Ice 1/2" Ice 1" Ice 2" Ice	3.17 3.79 4.42 5.76	3.17 3.79 4.42 5.76	0.20 0.23 0.28 0.40
****									
OPA-65R-LCUU-H6 w/ Mount Pipe	A	From Leg	4.00 0 0	0.000	110.00	No Ice 1/2" Ice 1" Ice 2" Ice	9.19 9.94 10.71 12.30	6.21 6.93 7.66 9.17	0.11 0.18 0.26 0.45
RRUS 8843 B2/B66A	A	From Leg	4.00 0 0	0.000	110.00	No Ice 1/2" Ice 1" Ice 2" Ice	1.64 1.80 1.97 2.32	1.35 1.50 1.65 1.99	0.07 0.09 0.11 0.16
DC6-48-60-18-8C	A	From Leg	4.00 0 0	0.000	110.00	No Ice 1/2" Ice 1" Ice 2" Ice	2.74 2.96 3.20 3.68	2.74 2.96 3.20 3.68	0.03 0.05 0.08 0.15
OPA-65R-LCUU-H6 w/ Mount Pipe	B	From Leg	4.00 0 0	0.000	110.00	No Ice 1/2" Ice 1" Ice 2" Ice	9.19 9.94 10.71 12.30	6.21 6.93 7.66 9.17	0.11 0.18 0.26 0.45
RRUS 8843 B2/B66A	B	From Leg	4.00 0 0	0.000	110.00	No Ice 1/2" Ice 1" Ice 2" Ice	1.64 1.80 1.97 2.32	1.35 1.50 1.65 1.99	0.07 0.09 0.11 0.16
OPA-65R-LCUU-H6 w/ Mount Pipe	C	From Leg	4.00 0 0	0.000	110.00	No Ice 1/2" Ice 1" Ice 2" Ice	9.19 9.94 10.71 12.30	6.21 6.93 7.66 9.17	0.11 0.18 0.26 0.45
RRUS 8843 B2/B66A	C	From Leg	4.00 0 0	0.000	110.00	No Ice 1/2" Ice 1" Ice 2" Ice	1.64 1.80 1.97 2.32	1.35 1.50 1.65 1.99	0.07 0.09 0.11 0.16
8' x 2" Tie Back	A	From Leg	0.00 0 0	0.000	110.00	No Ice 1/2" Ice 1" Ice 2" Ice	0.50 0.75 3.40 4.40	1.90 2.73 3.40 4.40	0.03 0.04 0.06 0.12
8' x 2" Tie Back	B	From Leg	0.00 0 0	0.000	110.00	No Ice 1/2" Ice 1" Ice 2" Ice	0.50 0.75 3.40 4.40	1.90 2.73 3.40 4.40	0.03 0.04 0.06 0.12
8' x 2" Tie Back	C	From Leg	0.00	0.000	110.00	No Ice	0.50	1.90	0.03

Description	Face or Leg	Offset Type	Offsets: Horz Lateral Vert ft ft ft	Azimuth Adjustment °	Placement ft		C_AA_A Front ft^2	C_AA_A Side ft^2	Weight K
			0 0			1/2" Ice 1" Ice 2" Ice	0.75 3.40 4.40	2.73 3.40 4.40	0.04 0.06 0.12
Side Arm Mount [SO 304-3]	C	None		0.000	110.00	No Ice 1/2" Ice 1" Ice 2" Ice	1.43 2.11 2.88 4.64	1.43 2.11 2.88 4.64	0.07 0.10 0.14 0.27
****									
BA1012-0	B	From Leg	3.00 0 2	0.000	60.00	No Ice 1/2" Ice 1" Ice 2" Ice	0.47 0.96 1.31 1.91	0.47 0.96 1.31 1.91	0.00 0.01 0.01 0.04
OGD6-905/945	A	From Leg	3.00 0 6	0.000	60.00	No Ice 1/2" Ice 1" Ice 2" Ice	2.51 3.74 4.98 7.40	2.51 3.74 4.98 7.40	0.03 0.04 0.07 0.15
Side Arm Mount [SO 305-1]	A	From Leg	1.50 0 0	0.000	60.00	No Ice 1/2" Ice 1" Ice 2" Ice	0.53 0.78 1.06 1.73	1.52 2.07 2.66 3.91	0.03 0.04 0.06 0.13
Side Arm Mount [SO 305-1]	B	From Leg	1.50 0 0	0.000	60.00	No Ice 1/2" Ice 1" Ice 2" Ice	0.53 0.78 1.06 1.73	1.52 2.07 2.66 3.91	0.03 0.04 0.06 0.13
****									
B13 RRH4X30-4R	A	From Leg	0.50 0 3	0.000	55.00	No Ice 1/2" Ice 1" Ice 2" Ice	2.16 2.35 2.55 2.97	1.62 1.79 1.97 2.36	0.06 0.08 0.10 0.15
B66A RRH4X45	A	From Leg	0.50 0 3	0.000	55.00	No Ice 1/2" Ice 1" Ice 2" Ice	2.58 2.79 3.01 3.48	1.63 1.81 2.00 2.40	0.07 0.09 0.11 0.17
(2) SBNHH-1D65B w/ Mount Pipe	A	From Leg	0.50 0 3	0.000	55.00	No Ice 1/2" Ice 1" Ice 2" Ice	4.09 4.49 4.89 5.72	3.30 3.68 4.07 4.87	0.07 0.13 0.20 0.39
DB-T1-6Z-8AB-0Z	A	From Leg	0.50 0 3	0.000	55.00	No Ice 1/2" Ice 1" Ice 2" Ice	4.80 5.07 5.35 5.93	2.00 2.19 2.39 2.81	0.04 0.08 0.12 0.21
B13 RRH4X30-4R	B	From Leg	0.50 0 3	0.000	55.00	No Ice 1/2" Ice 1" Ice 2" Ice	2.16 2.35 2.55 2.97	1.62 1.79 1.97 2.36	0.06 0.08 0.10 0.15
B66A RRH4X45	B	From Leg	0.50 0 3	0.000	55.00	No Ice 1/2" Ice 1" Ice 2" Ice	2.58 2.79 3.01 3.48	1.63 1.81 2.00 2.40	0.07 0.09 0.11 0.17
(2) SBNHH-1D65B w/ Mount Pipe	B	From Leg	0.50 0 3	0.000	55.00	No Ice 1/2" Ice 1" Ice	4.09 4.49 4.89 5.72	3.30 3.68 4.07 4.87	0.07 0.13 0.20 0.39

Description	Face or Leg	Offset Type	Offsets: Horz Lateral Vert ft ft ft	Azimuth Adjustment °	Placement ft		C_AA_A Front ft^2	C_AA_A Side ft^2	Weight K
						2" Ice			
DB-T1-6Z-8AB-0Z	B	From Leg	0.50 0 3	0.000	55.00	No Ice 1/2" Ice 1" Ice 2" Ice	4.80 5.07 5.35 5.93	2.00 2.19 2.39 2.81	0.04 0.08 0.12 0.21
B13 RRH4X30-4R	C	From Leg	0.50 0 3	0.000	55.00	No Ice 1/2" Ice 1" Ice 2" Ice	2.16 2.35 2.55 2.97	1.62 1.79 1.97 2.36	0.06 0.08 0.10 0.15
B66A RRH4X45	C	From Leg	0.50 0 3	0.000	55.00	No Ice 1/2" Ice 1" Ice 2" Ice	2.58 2.79 3.01 3.48	1.63 1.81 2.00 2.40	0.07 0.09 0.11 0.17
(2) SBNHH-1D65B w/ Mount Pipe	C	From Leg	0.50 0 3	0.000	55.00	No Ice 1/2" Ice 1" Ice 2" Ice	4.09 4.49 4.89 5.72	3.30 3.68 4.07 4.87	0.07 0.13 0.20 0.39
6' x 2" Horizontal Mount Pipe	A	From Leg	0.50 0 0	0.000	55.00	No Ice 1/2" Ice 1" Ice 2" Ice	0.50 1.06 1.44 2.22	0.50 1.06 1.44 2.22	0.03 0.17 0.32 0.65
6' x 2" Horizontal Mount Pipe	B	From Leg	0.50 0 0	0.000	55.00	No Ice 1/2" Ice 1" Ice 2" Ice	0.50 1.06 1.44 2.22	0.50 1.06 1.44 2.22	0.03 0.17 0.32 0.65
6' x 2" Horizontal Mount Pipe	C	From Leg	0.50 0 0	0.000	55.00	No Ice 1/2" Ice 1" Ice 2" Ice	0.50 1.06 1.44 2.22	0.50 1.06 1.44 2.22	0.03 0.17 0.32 0.65
6' x 4" Mount Pipe	A	From Leg	0.50 0 3	0.000	55.00	No Ice 1/2" Ice 1" Ice 2" Ice	2.09 2.46 2.83 3.61	2.09 2.46 2.83 3.61	0.04 0.06 0.08 0.13
6' x 4" Mount Pipe	B	From Leg	0.50 0 3	0.000	55.00	No Ice 1/2" Ice 1" Ice 2" Ice	2.09 2.46 2.83 3.61	2.09 2.46 2.83 3.61	0.04 0.06 0.08 0.13
6' x 4" Mount Pipe	C	From Leg	0.50 0 3	0.000	55.00	No Ice 1/2" Ice 1" Ice 2" Ice	2.09 2.46 2.83 3.61	2.09 2.46 2.83 3.61	0.04 0.06 0.08 0.13
****									
OGB9-900-DT3	A	From Leg	4.00 0 6	0.000	50.00	No Ice 1/2" Ice 1" Ice 2" Ice	1.94 2.94 3.95 5.48	1.94 2.94 3.95 5.48	0.02 0.03 0.05 0.11
OGD6-905/945	B	From Leg	4.00 0 10	0.000	50.00	No Ice 1/2" Ice 1" Ice 2" Ice	2.51 3.74 4.98 7.40	2.51 3.74 4.98 7.40	0.03 0.04 0.07 0.15
Side Arm Mount [SO 305-1]	A	From Leg	4.00 0 0	0.000	50.00	No Ice 1/2" Ice Ice	0.53 0.78 1.06	1.52 2.07 2.66	0.03 0.04 0.06

Description	Face or Leg	Offset Type	Offsets: Horz Lateral Vert ft ft ft	Azimuth Adjustment °	Placement ft		C_AA_A Front ft^2	C_AA_A Side ft^2	Weight K
						1" Ice	1.73	3.91	0.13
						2" Ice			
Side Arm Mount [SO 305-1]	B	From Leg	4.00 0 0	0.000	50.00	No Ice	0.53	1.52	0.03
						1/2" Ice	0.78	2.07	0.04
						1" Ice	1.06	2.66	0.06
						2" Ice	1.73	3.91	0.13
****									
***									
(3) 0.5' x 3' Bridge Stiffeners	A	None		0.000	20.00	No Ice	2.10	2.10	0.12
						1/2" Ice	3.10	3.10	0.18
						1" Ice	4.10	4.10	0.24
						2" Ice	6.10	6.10	0.36
(3) 0.5' x 3' Bridge Stiffeners	B	None		0.000	20.00	No Ice	2.10	2.10	0.12
						1/2" Ice	3.10	3.10	0.18
						1" Ice	4.10	4.10	0.24
						2" Ice	6.10	6.10	0.36
(3) 0.5' x 3' Bridge Stiffeners	C	None		0.000	20.00	No Ice	2.10	2.10	0.12
						1/2" Ice	3.10	3.10	0.18
						1" Ice	4.10	4.10	0.24
						2" Ice	6.10	6.10	0.36
new jump plate	A	None		0.000	40.00	No Ice	4.00	4.00	0.12
						1/2" Ice	5.00	5.00	0.18
						1" Ice	6.00	6.00	0.24
						2" Ice	8.00	8.00	0.36
new jump plate	B	None		0.000	40.00	No Ice	4.00	4.00	0.12
						1/2" Ice	5.00	5.00	0.18
						1" Ice	6.00	6.00	0.24
						2" Ice	8.00	8.00	0.36
new jump plate	C	None		0.000	40.00	No Ice	4.00	4.00	0.12
						1/2" Ice	5.00	5.00	0.18
						1" Ice	6.00	6.00	0.24
						2" Ice	8.00	8.00	0.36
new jump plate	A	None		0.000	60.00	No Ice	4.00	4.00	0.12
						1/2" Ice	5.00	5.00	0.18
						1" Ice	6.00	6.00	0.24
						2" Ice	8.00	8.00	0.36
new jump plate	B	None		0.000	60.00	No Ice	4.00	4.00	0.12
						1/2" Ice	5.00	5.00	0.18
						1" Ice	6.00	6.00	0.24
						2" Ice	8.00	8.00	0.36
new jump plate	C	None		0.000	60.00	No Ice	4.00	4.00	0.12
						1/2" Ice	5.00	5.00	0.18
						1" Ice	6.00	6.00	0.24
						2" Ice	8.00	8.00	0.36

Load Combinations

Comb. No.	Description

Comb. No.	Description
1	Dead Only
2	1.2 Dead+1.0 Wind 0 deg - No Ice
3	0.9 Dead+1.0 Wind 0 deg - No Ice
4	1.2 Dead+1.0 Wind 30 deg - No Ice
5	0.9 Dead+1.0 Wind 30 deg - No Ice
6	1.2 Dead+1.0 Wind 60 deg - No Ice
7	0.9 Dead+1.0 Wind 60 deg - No Ice
8	1.2 Dead+1.0 Wind 90 deg - No Ice
9	0.9 Dead+1.0 Wind 90 deg - No Ice
10	1.2 Dead+1.0 Wind 120 deg - No Ice
11	0.9 Dead+1.0 Wind 120 deg - No Ice
12	1.2 Dead+1.0 Wind 150 deg - No Ice
13	0.9 Dead+1.0 Wind 150 deg - No Ice
14	1.2 Dead+1.0 Wind 180 deg - No Ice
15	0.9 Dead+1.0 Wind 180 deg - No Ice
16	1.2 Dead+1.0 Wind 210 deg - No Ice
17	0.9 Dead+1.0 Wind 210 deg - No Ice
18	1.2 Dead+1.0 Wind 240 deg - No Ice
19	0.9 Dead+1.0 Wind 240 deg - No Ice
20	1.2 Dead+1.0 Wind 270 deg - No Ice
21	0.9 Dead+1.0 Wind 270 deg - No Ice
22	1.2 Dead+1.0 Wind 300 deg - No Ice
23	0.9 Dead+1.0 Wind 300 deg - No Ice
24	1.2 Dead+1.0 Wind 330 deg - No Ice
25	0.9 Dead+1.0 Wind 330 deg - No Ice
26	1.2 Dead+1.0 Ice+1.0 Temp
27	1.2 Dead+1.0 Wind 0 deg+1.0 Ice+1.0 Temp
28	1.2 Dead+1.0 Wind 30 deg+1.0 Ice+1.0 Temp
29	1.2 Dead+1.0 Wind 60 deg+1.0 Ice+1.0 Temp
30	1.2 Dead+1.0 Wind 90 deg+1.0 Ice+1.0 Temp
31	1.2 Dead+1.0 Wind 120 deg+1.0 Ice+1.0 Temp
32	1.2 Dead+1.0 Wind 150 deg+1.0 Ice+1.0 Temp
33	1.2 Dead+1.0 Wind 180 deg+1.0 Ice+1.0 Temp
34	1.2 Dead+1.0 Wind 210 deg+1.0 Ice+1.0 Temp
35	1.2 Dead+1.0 Wind 240 deg+1.0 Ice+1.0 Temp
36	1.2 Dead+1.0 Wind 270 deg+1.0 Ice+1.0 Temp
37	1.2 Dead+1.0 Wind 300 deg+1.0 Ice+1.0 Temp
38	1.2 Dead+1.0 Wind 330 deg+1.0 Ice+1.0 Temp
39	Dead+Wind 0 deg - Service
40	Dead+Wind 30 deg - Service
41	Dead+Wind 60 deg - Service
42	Dead+Wind 90 deg - Service
43	Dead+Wind 120 deg - Service
44	Dead+Wind 150 deg - Service
45	Dead+Wind 180 deg - Service
46	Dead+Wind 210 deg - Service
47	Dead+Wind 240 deg - Service
48	Dead+Wind 270 deg - Service
49	Dead+Wind 300 deg - Service
50	Dead+Wind 330 deg - Service

Maximum Tower Deflections - Service Wind

Section No.	Elevation ft	Horz. Deflection in	Gov. Load Comb.	Tilt °	Twist °
T1	120 - 100	8.51	49	0.594	0.139
T2	100 - 80	6.02	49	0.570	0.116
T3	80 - 60	3.73	49	0.474	0.077
T4	60 - 40	2.01	49	0.316	0.044
T5	40 - 20	0.88	49	0.196	0.024
T6	20 - 0	0.23	49	0.095	0.011

Critical Deflections and Radius of Curvature - Service Wind

Elevation ft	Appurtenance	Gov. Load Comb.	Deflection in	Tilt °	Twist °	Radius of Curvature ft
120.00	OGB6-900	49	8.51	0.594	0.139	128549
119.00	TPA65R-BU8D_CCIV2 w/ Mount Pipe	49	8.38	0.593	0.138	128549
110.00	OPA-65R-LCUU-H6 w/ Mount Pipe	49	7.25	0.587	0.129	64274
60.00	BA1012-0	49	2.01	0.316	0.044	7768
55.00	B13 RRH4X30-4R	49	1.68	0.282	0.038	8327
50.00	OGB9-900-DT3	49	1.38	0.251	0.033	9091
40.00	new jump plate	49	0.88	0.196	0.024	10847
20.00	(3) 0.5' x 3' Bridge Stiffeners	49	0.23	0.095	0.011	9814

Maximum Tower Deflections - Design Wind

Section No.	Elevation ft	Horz. Deflection in	Gov. Load Comb.	Tilt °	Twist °
T1	120 - 100	34.82	22	2.424	0.590
T2	100 - 80	24.64	20	2.328	0.492
T3	80 - 60	15.30	20	1.942	0.325
T4	60 - 40	8.25	24	1.297	0.185
T5	40 - 20	3.63	24	0.803	0.098
T6	20 - 0	0.96	8	0.390	0.045

Critical Deflections and Radius of Curvature - Design Wind

Elevation ft	Appurtenance	Gov. Load Comb.	Deflection in	Tilt °	Twist °	Radius of Curvature ft
120.00	OGB6-900	22	34.82	2.424	0.590	32627
119.00	TPA65R-BU8D_CCIV2 w/ Mount Pipe	22	34.30	2.422	0.586	32627
110.00	OPA-65R-LCUU-H6 w/ Mount Pipe	22	29.69	2.397	0.549	16313
60.00	BA1012-0	24	8.25	1.297	0.185	1902
55.00	B13 RRH4X30-4R	24	6.88	1.155	0.159	2037
50.00	OGB9-900-DT3	24	5.67	1.028	0.136	2221
40.00	new jump plate	24	3.63	0.803	0.098	2642
20.00	(3) 0.5' x 3' Bridge Stiffeners	8	0.96	0.390	0.045	2394

Bolt Design Data

Section No.	Elevation ft	Component Type	Bolt Grade	Bolt Size in	Number Of Bolts	Maximum Load per Bolt K	Allowable Load per Bolt K	Ratio Load / Allowable	Allowable Ratio	Criteria
T1	120	Leg	A325N	0.63	4	4.13	20.34	0.203	1.05	Bolt Tension
T2	100	Leg	A325N	0.63	4	10.67	20.34	0.525	1.05	Bolt Tension
T3	80	Secondary Horizontal	A325N	0.50	1	1.35	8.84	0.152	1.05	Bolt Shear
T4	60	Leg	A325N	0.63	10	19.72	27.61	0.714	1.05	Bolt DS
T5	40	Leg	A325N	0.75	10	25.79	39.76	0.649	1.05	Bolt DS

Compression Checks

Leg Design Data (Compression)

Section No.	Elevation ft	Size	L ft	L_u ft	Kl/r	A in^2	P_u K	ϕP_n K	Ratio $\frac{P_u}{\phi P_n}$
T1	120 - 100	1 1/2	20.00	2.33	74.7 K=1.00	1.77	-16.29	52.90	0.308 [1]
T2	100 - 80	1 1/2	20.00	2.33	74.7 K=1.00	1.77	-42.06	52.90	0.795 [1]
T3	80 - 60	1 1/2	20.00	1.18	37.7 K=1.00	1.77	-65.02	71.69	0.907 [1]
T4	60 - 40	841298_1.75 SR w/0.154 x 2.375 HP	20.00	2.33	59.3 K=1.00	2.94	-95.80	102.42	0.935 [1]
T5	40 - 20	841298_2 SR w/0.276 x 2.875 HP	20.00	2.33	64.8 K=1.00	4.27	-126.26	141.35	0.893 [1]
T6	20 - 0	841298_2.25 SR w/0.276 x 2.875 HP	20.00	2.33	58.4 K=1.00	5.10	-155.17	178.92	0.867 [1]

[1] P_u / ϕP_n controls

Diagonal Design Data (Compression)

Section No.	Elevation ft	Size	L ft	L_u ft	Kl/r	A in^2	P_u K	ϕP_n K	Ratio $\frac{P_u}{\phi P_n}$
T1	120 - 100	5/8	3.80	1.82	125.9 K=0.90	0.31	-1.90	4.32	0.440 [1]
T2	100 - 80	5/8	3.80	1.82	125.9 K=0.90	0.31	-2.49	4.32	0.577 [1]
T3	80 - 60	5/8	4.17	2.03	140.1 K=0.90	0.31	-2.65	3.53	0.751 [1]
T4	60 - 40	3/4	4.59	2.23	128.3 K=0.90	0.44	-2.87	6.02	0.478 [1]
T5	40 - 20	7/8	4.67	2.26	111.5 K=0.90	0.60	-3.45	10.13	0.341 [1]
T6	20 - 0	7/8	5.48	2.65	130.9 K=0.90	0.60	-3.11	7.91	0.393 [1]

[1] P_u / ϕP_n controls

Horizontal Design Data (Compression)

Section No.	Elevation ft	Size	L ft	L_u ft	Kl/r	A in^2	P_u K	ϕP_n K	Ratio $\frac{P_u}{\phi P_n}$
T1	120 - 100	3/4	3.00	2.88	128.8 K=0.70	0.44	-0.37	5.98	0.061 [1]
T2	100 - 80	3/4	3.00	2.88	128.8 K=0.70	0.44	-1.08	5.98	0.180 [1]
T3	80 - 60	3/4	3.42	3.30	147.8 K=0.70	0.44	-1.46	4.57	0.319 [1]
T4	60 - 40	3/4	3.87	3.72	166.7 K=0.70	0.44	-1.31	3.59	0.364 [1]
T5	40 - 20	7/8	4.08	3.91	150.1 K=0.70	0.60	-1.79	6.03	0.297 [1]
T6	20 - 0	7/8	4.58	4.39	168.5	0.60	-1.57	4.79	0.327 [1]

Section No.	Elevation ft	Size	L ft	L_u ft	Kl/r	A in^2	P_u K	ϕP_n K	Ratio $\frac{P_u}{\phi P_n}$
					K=0.70				

[1] P_u / ϕP_n controls

Secondary Horizontal Design Data (Compression)

Section No.	Elevation ft	Size	L ft	L_u ft	Kl/r	A in^2	P_u K	ϕP_n K	Ratio $\frac{P_u}{\phi P_n}$
T1	120 - 100	5/8	1.50	1.44	110.4 K=1.00	0.31	-0.00	5.66	0.000 [1]
T2	100 - 80	5/8	1.50	1.44	110.4 K=1.00	0.31	-0.00	5.66	0.000 [1]
T3	80 - 60	1x1	3.45	3.33	138.4 K=1.00	1.00	-1.17	11.80	0.099 [1]

[1] P_u / ϕP_n controls

Top Girt Design Data (Compression)

Section No.	Elevation ft	Size	L ft	L_u ft	Kl/r	A in^2	P_u K	ϕP_n K	Ratio $\frac{P_u}{\phi P_n}$
T1	120 - 100	1	3.00	2.88	96.6 K=0.70	0.79	-0.21	15.57	0.014 [1]
T2	100 - 80	1	3.00	2.88	96.6 K=0.70	0.79	-0.34	15.57	0.022 [1]
T3	80 - 60	1	3.02	2.89	97.2 K=0.70	0.79	-0.45	15.48	0.029 [1]
T4	60 - 40	1	3.52	3.37	113.3 K=0.70	0.79	-0.30	12.95	0.023 [1]
T5	40 - 20	1	4.02	3.85	129.4 K=0.70	0.79	-0.39	10.54	0.037 [1]
T6	20 - 0	1	4.52	4.33	145.5 K=0.70	0.79	-0.34	8.39	0.040 [1]

[1] P_u / ϕP_n controls

Bottom Girt Design Data (Compression)

Section No.	Elevation ft	Size	L ft	L_u ft	Kl/r	A in^2	P_u K	ϕP_n K	Ratio $\frac{P_u}{\phi P_n}$
T1	120 - 100	3/4	3.00	2.88	128.8 K=0.70	0.44	-0.99	5.98	0.165 [1]
T2	100 - 80	3/4	3.00	2.88	128.8 K=0.70	0.44	-1.47	5.98	0.247 [1]
T3	80 - 60	3/4	3.48	3.36	150.5 K=0.70	0.44	-1.65	4.41	0.374 [1]
T4	60 - 40	1	3.98	3.84	128.9 K=0.70	0.79	-1.95	10.61	0.184 [1]
T5	40 - 20	1	4.48	4.32	145.0 K=0.70	0.79	-1.88	8.43	0.223 [1]
T6	20 - 0	1	4.98	4.80	161.1 K=0.70	0.79	-1.76	6.83	0.258 [1]

Section No.	Elevation	Size	L	L_u	Kl/r	A	P_u	ϕP_n	Ratio $\frac{P_u}{\phi P_n}$
	ft		ft	ft		in^2	K	K	

[1] $P_u / \phi P_n$ controls

Tension Checks

Leg Design Data (Tension)

Section No.	Elevation	Size	L	L_u	Kl/r	A	P_u	ϕP_n	Ratio $\frac{P_u}{\phi P_n}$
	ft		ft	ft		in^2	K	K	
T1	120 - 100	1 1/2	20.00	0.67	21.3	1.77	16.54	79.52	0.208 [1]
T2	100 - 80	1 1/2	20.00	0.67	21.3	1.77	42.69	79.52	0.537 [1]
T3	80 - 60	1 1/2	20.00	0.67	21.3	1.77	64.62	79.52	0.813 [1]
T4	60 - 40	841298_1.75 SR w/0.154 x 2.375 HP	20.00	0.67	16.9	2.94	92.83	132.44	0.701 [1]
T5	40 - 20	841298_2 SR w/0.276 x 2.875 HP	20.00	0.67	18.5	4.27	121.41	192.06	0.632 [1]
T6	20 - 0	841298_2.25 SR w/0.276 x 2.875 HP	20.00	0.67	16.7	5.10	148.45	229.63	0.646 [1]

[1] $P_u / \phi P_n$ controls

Diagonal Design Data (Tension)

Section No.	Elevation	Size	L	L_u	Kl/r	A	P_u	ϕP_n	Ratio $\frac{P_u}{\phi P_n}$
	ft		ft	ft		in^2	K	K	
T1	120 - 100	5/8	3.80	1.82	139.9	0.31	1.86	9.94	0.187 [1]
T2	100 - 80	5/8	3.80	1.82	139.9	0.31	2.45	9.94	0.246 [1]
T3	80 - 60	5/8	3.84	1.86	143.0	0.31	2.82	9.94	0.284 [1]
T4	60 - 40	3/4	4.59	2.23	142.6	0.44	2.77	14.31	0.194 [1]
T5	40 - 20	7/8	4.67	2.26	123.9	0.60	3.16	19.48	0.162 [1]
T6	20 - 0	7/8	5.11	2.47	135.4	0.60	3.12	19.48	0.160 [1]

[1] $P_u / \phi P_n$ controls

Horizontal Design Data (Tension)

Section No.	Elevation	Size	L	L_u	Kl/r	A	P_u	ϕP_n	Ratio $\frac{P_u}{\phi P_n}$
	ft		ft	ft		in^2	K	K	
T1	120 - 100	3/4	3.00	2.88	184.0	0.44	0.47	14.31	0.033 [1]
T2	100 - 80	3/4	3.00	2.88	184.0	0.44	1.25	14.31	0.087 [1]
T3	80 - 60	3/4	3.42	3.30	211.2	0.44	1.71	14.31	0.119 [1]
T4	60 - 40	3/4	3.58	3.43	219.5	0.44	1.72	14.31	0.120 [1]
T5	40 - 20	7/8	4.08	3.91	214.4	0.60	2.00	19.48	0.103 [1]
T6	20 - 0	7/8	4.58	4.39	240.7	0.60	1.77	19.48	0.091 [1]

[1] $P_u / \phi P_n$ controls

Secondary Horizontal Design Data (Tension)

Section No.	Elevation ft	Size	L ft	L_u ft	Kl/r	A in^2	P_u K	ϕP_n K	Ratio $\frac{P_u}{\phi P_n}$
T1	120 - 100	5/8	1.50	1.44	110.4	0.31	0.00	13.81	0.000 [1]
T2	100 - 80	5/8	1.50	1.44	110.4	0.31	0.00	13.81	0.000 [1]
T3	80 - 60	1x1	3.05	2.92	121.4	0.28	1.27	13.71	0.092 [1]

[1] P_u / ϕP_n controls

Top Girt Design Data (Tension)

Section No.	Elevation ft	Size	L ft	L_u ft	Kl/r	A in^2	P_u K	ϕP_n K	Ratio $\frac{P_u}{\phi P_n}$
T1	120 - 100	1	3.00	2.88	138.0	0.79	0.22	25.45	0.009 [1]
T2	100 - 80	1	3.00	2.88	138.0	0.79	0.51	25.45	0.020 [1]
T3	80 - 60	1	3.02	2.89	138.8	0.79	0.53	25.45	0.021 [1]
T4	60 - 40	1	3.52	3.37	161.8	0.79	0.21	25.45	0.008 [1]
T5	40 - 20	1	4.02	3.85	184.8	0.79	0.50	25.45	0.019 [1]
T6	20 - 0	1	4.52	4.33	207.8	0.79	0.44	25.45	0.017 [1]

[1] P_u / ϕP_n controls

Bottom Girt Design Data (Tension)

Section No.	Elevation ft	Size	L ft	L_u ft	Kl/r	A in^2	P_u K	ϕP_n K	Ratio $\frac{P_u}{\phi P_n}$
T1	120 - 100	3/4	3.00	2.88	184.0	0.44	0.94	14.31	0.066 [1]
T2	100 - 80	3/4	3.00	2.88	184.0	0.44	1.32	14.31	0.093 [1]
T3	80 - 60	3/4	3.48	3.36	214.9	0.44	1.60	14.31	0.112 [1]
T4	60 - 40	1	3.98	3.84	184.2	0.79	1.89	25.45	0.074 [1]
T5	40 - 20	1	4.48	4.32	207.2	0.79	1.88	25.45	0.074 [1]
T6	20 - 0	1	4.98	4.80	230.2	0.79	1.73	25.45	0.068 [1]

[1] P_u / ϕP_n controls

Section Capacity Table

Section No.	Elevation ft	Component Type	Size	Critical Element	P K	ϕP_{allow} K	% Capacity	Pass Fail
T1	120 - 100	Leg	1 1/2	3	-16.29	55.54	29.3	Pass
T2	100 - 80	Leg	1 1/2	88	-42.06	55.54	75.7	Pass
T3	80 - 60	Leg	1 1/2	174	-65.02	75.28	86.4	Pass
T4	60 - 40	Leg	841298_1.75 SR w/0.154 x 2.375 HP	276	-95.80	107.54	89.1	Pass
T5	40 - 20	Leg	841298_2 SR w/0.276 x 2.875 HP	354	-126.26	148.42	85.1	Pass
T6	20 - 0	Leg	841298_2.25 SR w/0.276 x 2.875 HP	432	-155.17	187.86	82.6	Pass
T1	120 - 100	Diagonal	5/8	15	-1.90	4.53	41.9	Pass
T2	100 - 80	Diagonal	5/8	101	-2.49	4.53	55.0	Pass
T3	80 - 60	Diagonal	5/8	186	-2.65	3.71	71.5	Pass
T4	60 - 40	Diagonal	3/4	289	-2.87	6.32	45.5	Pass
T5	40 - 20	Diagonal	7/8	430	-3.45	10.63	32.5	Pass

Section No.	Elevation ft	Component Type	Size	Critical Element	P K	ϕP_{allow} K	% Capacity	Pass Fail
T6	20 - 0	Diagonal	7/8	445	-3.11	8.30	37.4	Pass
T1	120 - 100	Horizontal	3/4	27	-0.37	6.28	5.8	Pass
T2	100 - 80	Horizontal	3/4	115	-1.08	6.28	17.2	Pass
T3	80 - 60	Horizontal	3/4	190	-1.46	4.79	30.4	Pass
T4	60 - 40	Horizontal	3/4	301	-1.31	3.77	34.6	Pass
T5	40 - 20	Horizontal	7/8	424	-1.79	6.33	28.3	Pass
T6	20 - 0	Horizontal	7/8	502	-1.57	5.03	31.2	Pass
T1	120 - 100	Secondary Horizontal	5/8	86	0.00	14.50	0.5	Pass
T2	100 - 80	Secondary Horizontal	5/8	172	0.00	14.50	0.5	Pass
T3	80 - 60	Secondary Horizontal	1x1	191	-1.17	12.39	9.5 14.5 (b)	Pass
T1	120 - 100	Top Girt	1	6	-0.21	16.35	1.3	Pass
T2	100 - 80	Top Girt	1	91	-0.34	16.35	2.1	Pass
T3	80 - 60	Top Girt	1	177	-0.45	16.26	2.8	Pass
T4	60 - 40	Top Girt	1	278	-0.30	13.60	2.2	Pass
T5	40 - 20	Top Girt	1	357	-0.39	11.07	3.5	Pass
T6	20 - 0	Top Girt	1	435	-0.34	8.81	3.8	Pass
T1	120 - 100	Bottom Girt	3/4	9	-0.99	6.28	15.7	Pass
T2	100 - 80	Bottom Girt	3/4	95	-1.47	6.28	23.5	Pass
T3	80 - 60	Bottom Girt	3/4	181	-1.65	4.63	35.7	Pass
T4	60 - 40	Bottom Girt	1	283	-1.95	11.14	17.5	Pass
T5	40 - 20	Bottom Girt	1	361	-1.88	8.86	21.3	Pass
T6	20 - 0	Bottom Girt	1	439	-1.76	7.17	24.5	Pass
							Summary	
						Leg (T4)	89.1	Pass
						Diagonal (T3)	71.5	Pass
						Horizontal (T4)	34.6	Pass
						Secondary Horizontal (T3)	14.5	Pass
						Top Girt (T6)	3.8	Pass
						Bottom Girt (T3)	35.7	Pass
						Bolt Checks	68.0	Pass
						RATING =	**89.1**	**Pass**

APPENDIX B

BASE LEVEL DRAWING

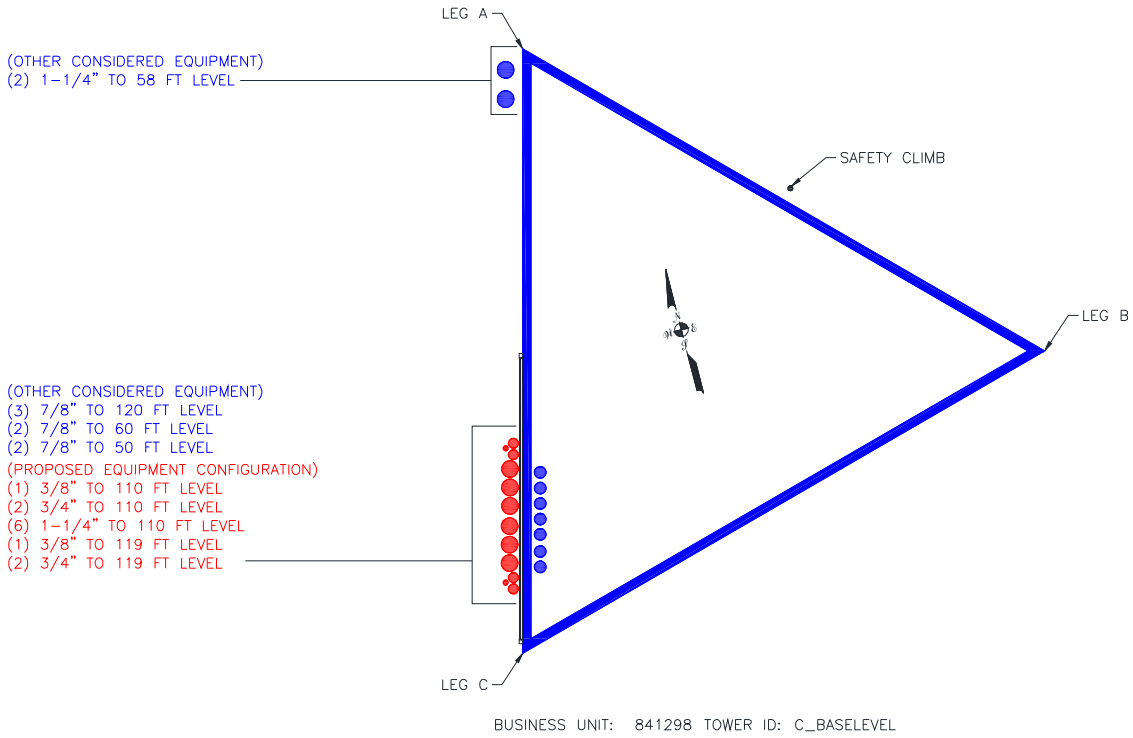
LEG A
(OTHER CONSIDERED EQUIPMENT)
(2) 1-1/4" TO 58 FT LEVEL
SAFETY CLIMB
LEG B
(OTHER CONSIDERED EQUIPMENT)
(3) 7/8" TO 120 FT LEVEL
(2) 7/8" TO 60 FT LEVEL
(2) 7/8" TO 50 FT LEVEL
(PROPOSED EQUIPMENT CONFIGURATION)
(1) 3/8" TO 110 FT LEVEL
(2) 3/4" TO 110 FT LEVEL
(6) 1-1/4" TO 110 FT LEVEL
(1) 3/8" TO 119 FT LEVEL
(2) 3/4" TO 119 FT LEVEL
LEG C
BUSINESS UNIT: 841298 TOWER ID: C_BASELEVEL

]

APPENDIX C

ADDITIONAL CALCULATIONS

PAUL J. FORD & COMPANY
250 E Broad St, Ste 600 • Columbus, OH 43215
Phone 614.221.6679 www.pauljford.com

Max ratio: 1.05
Rating includes max ratio? Y

Job Number: 37520-0805.003.8800
Site Number: 841298
Site Name: SOUTHINGTON ROGUS
WO No.: 1859123
Order No.: 517069 Rev 1
Engineer: RH

v1.6 - Effective 6/18/20 Date: 07/13/20

Modified Member Calculation Summary - TIA-222-H

Elevations		Existing Member			Reinforcement			Built-up Member						Capacity: ϕPn			Loads	Rating	
Bottom	Top	Type	L_u	Area	Type	a_i	Area	Connection Type	a_i/r_i	$(KL/r)_o$	$(KL/r)_m$	F'_y	F_{cr}	Comp.	Cope	Crushing	Comp.		
ft	ft		in	in^2		in	in^2		a_i/r_{ib}			ksi	ksi	kip	kip	kip	kip		
40	60	SR 1.750"	28.0	2.41	1/2 Sleeve 2.375" x 0.154"	12.0	0.54	Welded	34.91	59.28	59.28	50.00	38.67	102.41	N/A	108.24	95.80	89.1%	PASS
20	40	SR 2.000"	28.0	3.14	1/2 Sleeve 2.875" x 0.276"	12.0	1.13	Welded	29.60	49.94	49.94	50.00	41.66	160.05	N/A	141.37	126.26	85.1%	PASS
0	20	SR 2.250"	28.0	3.98	1/2 Sleeve 2.875" x 0.276"	12.0	1.13	Welded	29.60	44.76	44.76	50.00	43.19	198.33	N/A	178.92	155.17	82.6%	PASS

PAUL J. FORD & COMPANY
250 E Broad St, Ste 600 • Columbus, OH 43215
Phone 614.221.6679 www.pauljford.com

Job Number:	37520-0805.003.8800	**Page:**	1 of 1
Site Number:	SOUTHINGTON ROGUS	**Date:**	7/13/2020
Site Name:	841298	**Version:**	1.2
WO No.:	1859123	**Effective:**	1/30/2020
Order No.:	517069 Rev 1	**By:**	RH

Anchor Rod Bracket Plate Analysis

60-FT

Existing Leg Outer Diameter :	1.75	inches	Pipe Leg?:	No
Existing Pipe Leg Wall Thickness :		inches		
Existing Pipe Leg F_y :		ksi	Existing Pipe Leg Fu :	
Existing Pipe Leg Load :		kip		
Anchor CL to Structure Face:	6	inches		
Anchor Type :	Anchor Rod			
Anchor Size :	CCI-AR-0100			
Anchor Net Area :		in^2		
Anchor F_u :		ksi		
Anchor Design Tensile Capacity :		kip		
Anchor Analysis Tensile Load :	32.31	kip	1	Maximum Ratio
Tube Size :	HSS 3 x 3 x 0.375			
Tube Grade:	A500 Gr. C (Fy=50)			
Tube F_y :	50	ksi		
Tube Unbraced Length :	1	inches	Analysis Ratio	
Tube Compressive Capacity :	152.51	kip	0.212	
Washer Plate Thickness :	1.25	inches		
Washer Plate F_y :	A572 Gr. 50		Analysis Ratio	
Washer Shear Capacity	172.30	kip	0.188	
Bracket Plate Thickness :	0.375	inches		
Bracket Plate Height :	12	inches		
Bracket Plate Width :	4.5	inches		
Bracket Plate Grade:	A572 Gr. 50			
Bracket Plate F_y :	50	ksi	Bracket Plate Analysis Ratios	
Bracket Moment Capacity :	469	kip-in	Moment: 0.414	<--Governs Bracket Plate
Bracket Shear Capacity :	121.5	kip	Shear: 0.266	
			Interaction: 0.242	
Tube to Bracket Weld Size :	5	/16 inch		
Tube to Bracket Weld Length :	12	inches	Analysis Ratio	
Tube to Bracket Weld Capacity :	103.05	kip	0.314	
Structure to Bracket Weld Size :	5	/16 inch		
Structure to Bracket Weld Length :	12	inches	Analysis Ratio	
Structure to Bracket Weld Capacity	103.05	kip	0.314	
Local Pipe Moment :	193.86	kip-in	Analysis Ratio	
Local Pipe Moment Capacity :	N/A	kip-in	N/A	*Not Pipe Leg*
Local Pipe Shear :	8.078	kip	Analysis Ratio	
Local Pipe Shear Capacity :	N/A	kip	N/A	*Not Pipe Leg*

1" A193, GR BY THREADED ROD % CAPACITY
= 32.31 KIPS / 60.57 KIPS = 53.4% OK

(c) Copyright 2020 by Paul J. Ford and Company, all rights reserved.

PAUL J. FORD & COMPANY
250 E Broad St, Ste 600 • Columbus, OH 43215
Phone 614.221.6679 www.pauljford.com

Job Number:	37520-0805.003.8800	**Page:**	1 of 1
Site Number:	SOUTHINGTON ROGUS	**Date:**	7/13/2020
Site Name:	841298	**Version:**	1.2
WO No.:	1859123	**Effective:**	1/30/2020
Order No.:	517069 Rev 1	**By:**	RH

Anchor Rod Bracket Plate Analysis

40-FT

Existing Leg Outer Diameter :	2	inches	Pipe Leg?:	No
Existing Pipe Leg Wall Thickness :		inches		
Existing Pipe Leg F_y :		ksi	Existing Pipe Leg Fu :	
Existing Pipe Leg Load :		kip		
Anchor CL to Structure Face:	6	inches		
Anchor Type :	Anchor Rod			
Anchor Size :	CCI-AR-0100			
Anchor Net Area :		in^2		
Anchor F_u :		ksi		
Anchor Design Tensile Capacity :		kip		
Anchor Analysis Tensile Load :	46.415	kip	1	Maximum Ratio
Tube Size :	HSS 3 x 3 x 0.375			
Tube Grade:	A500 Gr. C (Fy=50)			
Tube F_y :	50	ksi		
Tube Unbraced Length :	1	inches	Analysis Ratio	
Tube Compressive Capacity :	152.51	kip	0.304	
Washer Plate Thickness :	1.25	inches		
Washer Plate F_y :	A572 Gr. 50		Analysis Ratio	
Washer Shear Capacity	172.30	kip	0.269	
Bracket Plate Thickness :	0.375	inches		
Bracket Plate Height :	12	inches		
Bracket Plate Width :	4.5	inches		
Bracket Plate Grade:	A572 Gr. 50			
Bracket Plate F_y :	50	ksi	Bracket Plate Analysis Ratios	
Bracket Moment Capacity :	469	kip-in	Moment: 0.594	<--Governs Bracket Plate
Bracket Shear Capacity :	121.5	kip	Shear: 0.382	
			Interaction: 0.499	
Tube to Bracket Weld Size :	5	/16 inch		
Tube to Bracket Weld Length :	12	inches	Analysis Ratio	
Tube to Bracket Weld Capacity :	103.05	kip	0.450	
Structure to Bracket Weld Size :	5	/16 inch		
Structure to Bracket Weld Length :	12	inches	Analysis Ratio	
Structure to Bracket Weld Capacity	103.05	kip	0.450	
Local Pipe Moment :	278.49	kip-in	Analysis Ratio	
Local Pipe Moment Capacity :	N/A	kip-in	N/A	*Not Pipe Leg*
Local Pipe Shear :	11.604	kip	Analysis Ratio	
Local Pipe Shear Capacity :	N/A	kip	N/A	*Not Pipe Leg*

1" A193, GR BY THREADED ROD % CAPACITY
= 46.42 KIPS / 60.57 KIPS = 76.6% OK

(c) Copyright 2020 by Paul J. Ford and Company, all rights reserved.

PAUL J. FORD AND COMPANY
STRUCTURAL ENGINEERS
250 East Broad Street • Suite 600 • Columbus, Ohio 43215-3708

20-ft Splice Jump Plate Analysis

	Analysis		
Clear Distance From Existing Leg :	3	inches	
Total Vertical Clear Distance :	24	inches	
Top Leg Compressive Capacity :	141.35	kip	Maximum Ratio
Top Leg Compressive Load :	126.26	kip	1.00
Number of Splice Jump Plates :	3		
Load per Plate :	42.0867	kip	
Plate F_y :	50	ksi	
Plate Thickness :	1	inches	
Vertical Plate Width :	3	inches	Analysis Ratio
Vertical Plate Height :	24	inches	0.517
Vertical Plate Compression Capacity :			
Horizontal Plate Height :	6	inches	
Horizontal Plate Length :	4.5	inches	
Horizontal Plate Moment Capacity :	404	kip-in	Analysis Ratio
Horizontal Plate Shear Capacity :	162.0	kip	0.407
Structure to Plate Weld Size :	8	/16 inch	
Structure to Plate Weld Length :	6	inches	Analysis Ratio
Structure to Plate Weld Capacity :	59.76	kip	0.704

PAUL J. FORD AND COMPANY
STRUCTURAL ENGINEERS
250 East Broad Street • Suite 600 • Columbus, Ohio 43215-3708

By RH Date 7/13/2020
Project # 37520-0805.003.8800

20-ft Splice Jump Plate Analysis

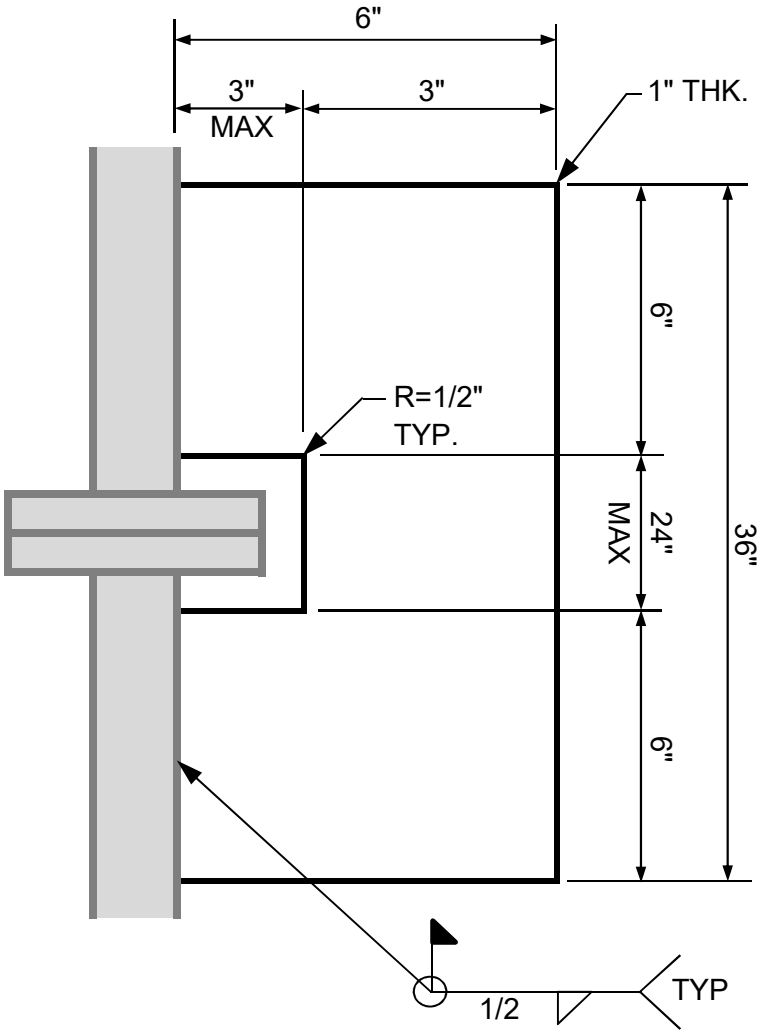

PAUL J. FORD & COMPANY
250 E Broad St, Ste 600 • Columbus, OH 43215
Phone 614.221.6679 www.pauljford.com

By RH Date 7/13/2020
Project # 37520-0805.003.8800

Existing and Post-Installed Anchor Rod Capacity

Loads

Compression:	158	kips	1.00	Maximum Ratio
Shear :	4	kips		

Existing Anchor Rods

Anchor Rod Condition (n) :	0.5	
Anchor Rod ø :	1 3/4	in
Anchor Rod Quantity :	2	
Anchor Rod Grade :	A572 Gr. 50	
F_y :	50	ksi
F_u :	65	ksi
Threads per Inch :	5	
Total Net Area :	3.80	in^2
Applied Compressive Load :	104.62	kip
Applied Shear Load :	4.00	kip
ϕ :	0.8	
Total Anchor Rod Capacity ϕRnt :	197.54	kip
Existing Anchor Rod Ratio :	0.570	
l_{ar} :	2.25	inches
Moment :	2.93	k-in
ϕR_{nv} :	52.77	kips
ϕR_{nt} :	98.77	kips
ϕR_{nm} :	26.59	k-in
Interaction Ratio :	0.411	
Governing Stress Ratio :	0.570	

Post-Installed Anchor Rods

Anchors Take Shear Load :	No	
Anchor Rod ø :	1 1/4	in
Anchor Rod Quantity :	2	
Anchor Rod Grade :	A193 Gr B7	
F_y :	105	ksi
F_u :	125	ksi
Threads per Inch :	7	
Total Net Area :	1.94	in^2
Applied Compressive Load :	53.38	kip
Applied Shear Load :	0.00	kip
ϕ :	0.8	
Total Anchor Rod Capacity ϕRnt :	193.82	kip
Post-Installed Anchor Rod Ratio :	0.275	
l_{ar} :	1.25	inches
Moment :	0.00	k-in
ϕR_{nv} :	51.77	kips
ϕR_{nt} :	96.91	kips
ϕR_{nm} :	20.35	k-in
Interaction Ratio :		

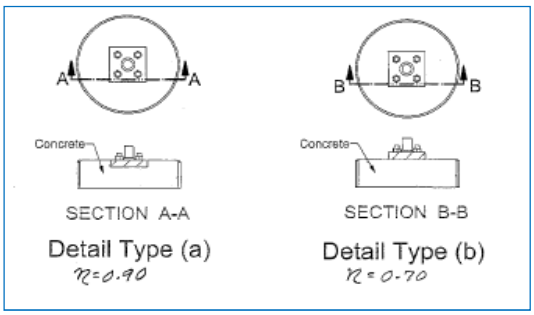

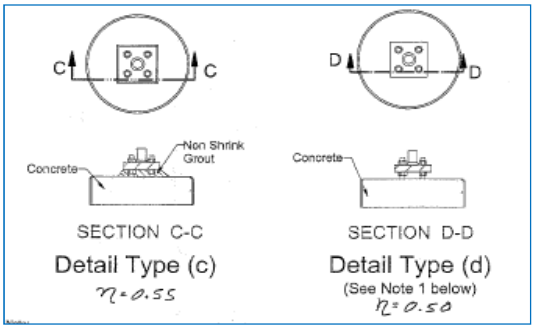

(c) Copyright 2017 by Paul J. Ford and Company, all rights reserved.

PAUL J. FORD & COMPANY
250 E Broad St, Ste 600 • Columbus, OH 43215
Phone 614.221.6679 www.pauljford.com

Anchor Rod Bracket Plate Analysis

Existing Leg Outer Diameter :	2.25	inches	Pipe Leg?:	No
Existing Pipe Le##		inches		
Existing Pipe Leg F_y :		ksi		
Existing Pipe Leg Load :		kip		
Anchor CL to Structure Face:	9.1875	inches		
Anchor Type :	Anchor Rod			
Anchor Size :	1.25" A193 Gr. B7			
Anchor Net Area :		in^2		
Anchor F_u :		ksi		
Anchor Design Tensile Capacity :		kip		
Anchor Analysis Tensile Load :	26.69	kip	1.00	Maximum Ratio
Tube Size :	Pipe 2.375 x 0.436 (XXS)			
Tube Grade:	A500 Gr. B (Fy=42)			
Tube F_y :	42	ksi		
Tube Unbraced Length :	8.5	inches	Analysis Ratio	
Tube Compressive Capacity :	91.28	kip	0.292	
Washer Plate Thickness :	1.25	inches		
Washer Plate F_y :	A572 Gr. 50		Analysis Ratio	
Washer Shear Capacity	212.06	kip	0.126	
Bracket Plate Thickness :	1.25	inches		
Bracket Plate Height :	16	inches		
Bracket Plate Width :	8	inches		
Bracket Plate Grade:	A572 Gr. 50			
Bracket Plate F_y :	50	ksi		
Bracket Moment Capacity :	3462	kip-in	Analysis Ratio	
Bracket Shear Capacity :	540.0	kip	0.086	
Tube to Bracket Weld Size :	5	/16 inch		
Tube to Bracket Weld Length :	14	inches	Analysis Ratio	
Tube to Bracket Weld Capacity :	97.91	kip	0.273	
Structure to Bracket Weld Size :	5	/16 inch		
Structure to Bracket Weld Length :	14	inches	Analysis Ratio	
Structure to Bracket Weld Capacity	97.91	kip	0.273	
Local Pipe Moment :	245.214	kip-in	Analysis Ratio	
Local Pipe Moment Capacity :	N/A	kip-in	N/A	*Not Pipe Leg*

(c) Copyright 2017 by Paul J. Ford and Company, all rights reserved.

SST Unit Base Foundation

BU # :	841298
Site Name:	Southington
App. Number:	517069, Rev. 1

TIA-222 Revision: H

Top & Bot. Pad Rein. Different?:	☐
Tower Centroid Offset?:	☐
Block Foundation?:	☑

Superstructure Analysis Reactions		
Global Moment, **M**:	664	ft-kips
Global Axial, **P**:	15	kips
Global Shear, **V**:	9	kips
Leg Compression, $\mathbf{P_{comp}}$:	158	kips
Leg Comp. Shear, $\mathbf{V_{u\_comp}}$:	4	kips
Leg Uplift, $\mathbf{P_{uplift}}$:	148	kips
Leg Uplift. Shear, $\mathbf{V_{u\_uplift}}$:	5	kips
Tower Height, **H**:	120	ft
Base Face Width, **BW**:	5	ft
BP Dist. Above Fdn, $\mathbf{bp_{dist}}$:	4	in
Anchor Bolt Circle, **BC**:	20.625	in

Foundation Analysis Checks	Capacity	Demand	Rating*	Check
Lateral (Sliding) (kips)	53.65	9.00	**16.0%**	**Pass**
Bearing Pressure (ksf)	3.75	1.72	**45.9%**	**Pass**
*Overturning (kip*ft)*	1162.70	716.50	**61.6%**	**Pass**
*Pad Flexure (kip*ft)*	1725.30	236.62	**13.1%**	**Pass**
Pad Shear - 1-way (kips)	502.81	47.18	**8.9%**	**Pass**
Pad Shear - Comp 2-way (ksi)	0.164	0.025	**14.5%**	**Pass**
*Flexural 2-way (Comp) (kip*ft)*	1112.87	0.00	**0.0%**	**Pass**
Pad Shear - Tension 2-way (ksi)	0.164	0.024	**13.6%**	**Pass**
*Flexural 2-way (Tension) (kip*ft)*	1112.87	0.00	**0.0%**	**Pass**

**Rating per TIA-222-H Section 15.5*

Soil Rating*:	**61.6%**
Structural Rating*:	**14.5%**

Pad Properties		
Depth, **D**:	5.50	ft
Pad Width, **W**:	16.00	ft
Pad Thickness, **T**:	3.25	ft
Pad Rebar Size (Bottom), **Sp**:	6	
Pad Rebar Quantity (Bottom), **mp**:	28	
Pad Clear Cover, $\mathbf{cc_{pad}}$:	6	in

Material Properties		
Rebar Grade, **Fy**:	60	ksi
Concrete Compressive Strength, **F'c**:	3	ksi
Dry Concrete Density, δ**c**:	150	pcf

Soil Properties		
Total Soil Unit Weight, γ:	110	pcf
Ultimate Gross Bearing, Qult:	5.000	ksf
Cohesion, **Cu**:		ksf
Friction Angle, φ:		degrees
SPT Blow Count, $\mathbf{N_{blows}}$:	7	
Base Friction, μ:	0.35	
Neglected Depth, **N**:	3.3	ft
Foundation Bearing on Rock?	No	
Groundwater Depth, **gw**:	99	ft

<-- Toggle between Gross and Net

ASCE 7 Hazards Report

Address:
No Address at This Location

Standard: ASCE/SEI 7-10
Risk Category: II
Soil Class: D - Stiff Soil

Elevation: 343.35 ft (NAVD 88)
Latitude: 41.556817
Longitude: -72.853011

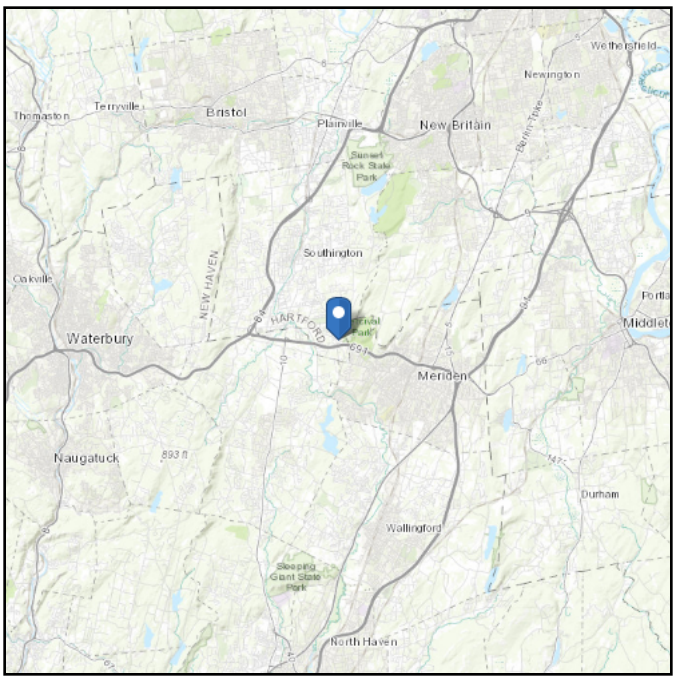

Wind

Results:

Wind Speed:	123 Vmph
10-year MRI	77 Vmph
25-year MRI	87 Vmph
50-year MRI	93 Vmph
100-year MRI	100 Vmph

125 mph per jurisdiction

Data Source: ASCE/SEI 7-10, Fig. 26.5-1A and Figs. CC-1–CC-4, incorporating errata of March 12, 2014

Date Accessed: Wed Jul 01 2020

Value provided is 3-second gust wind speeds at 33 ft above ground for Exposure C Category, based on linear interpolation between contours. Wind speeds are interpolated in accordance with the 7-10 Standard. Wind speeds correspond to approximately a 7% probability of exceedance in 50 years (annual exceedance probability = 0.00143, MRI = 700 years).

Site is in a hurricane-prone region as defined in ASCE/SEI 7-10 Section 26.2. Glazed openings need not be protected against wind-borne debris.

Mountainous terrain, gorges, ocean promontories, and special wind regions should be examined for unusual wind conditions.

Ice

Results:

Ice Thickness:	0.75 in.
Concurrent Temperature:	15 F
Gust Speed:	50 mph
Data Source:	Standard ASCE/SEI 7-10, Figs. 10-2 through 10-8
Date Accessed:	Wed Jul 01 2020

Ice thicknesses on structures in exposed locations at elevations higher than the surrounding terrain and in valleys and gorges may exceed the mapped values.

Values provided are equivalent radial ice thicknesses due to freezing rain with concurrent 3-second gust speeds, for a 50-year mean recurrence interval, and temperatures concurrent with ice thicknesses due to freezing rain. Thicknesses for ice accretions caused by other sources shall be obtained from local meteorological studies. Ice thicknesses in exposed locations at elevations higher than the surrounding terrain and in valleys and gorges may exceed the mapped values.

The ASCE 7 Hazard Tool is provided for your convenience, for informational purposes only, and is provided “as is” and without warranties of any kind. The location data included herein has been obtained from information developed, produced, and maintained by third party providers; or has been extrapolated from maps incorporated in the ASCE 7 standard. While ASCE has made every effort to use data obtained from reliable sources or methodologies, ASCE does not make any representations or warranties as to the accuracy, completeness, reliability, currency, or quality of any data provided herein. Any third-party links provided by this Tool should not be construed as an endorsement, affiliation, relationship, or sponsorship of such third-party content by or from ASCE.

ASCE does not intend, nor should anyone interpret, the results provided by this Tool to replace the sound judgment of a competent professional, having knowledge and experience in the appropriate field(s) of practice, nor to substitute for the standard of care required of such professionals in interpreting and applying the contents of this Tool or the ASCE 7 standard.

In using this Tool, you expressly assume all risks associated with your use. Under no circumstances shall ASCE or its officers, directors, employees, members, affiliates, or agents be liable to you or any other person for any direct, indirect, special, incidental, or consequential damages arising from or related to your use of, or reliance on, the Tool or any information obtained therein. To the fullest extent permitted by law, you agree to release and hold harmless ASCE from any and all liability of any nature arising out of or resulting from any use of data provided by the ASCE 7 Hazard Tool.

APPENDIX D

MODIFICATION DRAWINGS

Program Version 8.0.7.4 - 5/11/2020 File:G:/TOWER/375_Crown_Castle/2020/37520-0805_841298_SOUTHINGTON ROGUS/37520-0805.003.8800_SDD_1859123/tnx/37520-0805.002.8700_sdd.eri

MODIFIED 120' SELF SUPPORT TOWER

BU #841298; SOUTHINGTON ROGUS

250 MERIDEN WATERBURY TURNPIKE
SOUTHINGTON, CONNECTICUT 06489
HARTFORD COUNTY
LAT: 41° 33' 24.54"; LONG: -72° 51' 10.83"
ORDER: 517069 REV. 1; WO: 1859123

© Copyright 2020, by Paul J. Ford and Company. All Rights Reserved. This document and the data contained herein, is proprietary to Paul J. Ford and Company, issued in strict confidence and shall not, without the prior written permission of Paul J. Ford and Company, be reproduced, copied or used for any purpose other than the intended use for this specific project.

PJF PAUL J. FORD & COMPANY
250 E Broad St, Ste 600 · Columbus, OH 43215
Phone 614.221.6679 www.pauljford.com

CROWN CASTLE USA INC
3530 TORINGDON WAY SUITE 300 CHARLOTTE, NC 28277
(980) 209-8234

PROJECT CONTACTS

STRUCTURE OWNER:
CROWN CASTLE USA INC
MOD PM: DAN VADNEY AT DAN.VADNEY@CROWNCASTLE.COM
PH: (518) 373-3510

ENGINEER OF RECORD:
PJFMOD@PAULJFORD.COM

WIND DESIGN DATA	
REFERENCE STANDARD	ANSI/TIA-222-H-2017
LOCAL CODE	2018 CT BUILDING CODE (2015 IBC)
ULTIMATE WIND SPEED (3-SECOND GUST)	125 MPH
ICE THICKNESS	1.5 IN
ICE WIND SPEED	50 MPH
SERVICE WIND SPEED	60 MPH
RISK CATEGORY	II
EXPOSURE CATEGORY	B
MAXIMUM TOPOGRAPHIC FACTOR, K_{ZT}	1.0

SHEET INDEX	
SHEET NUMBER	DESCRIPTION
T-1	TITLE SHEET
MI-1	MI CHECKLIST AND NOTES
N-1	NOTES
N-2	NOTES
S-1	TOWER ELEVATION
S-2	WELD REPAIR DETAILS
S-3	FLANGE JUMP REINFORCING
S-4	SECONDARY HORIZONTAL

HOT WORK INCLUDED	
NA	BASE GRINDING ONLY
NA	BASE WELDING (AND GRINDING)
NA	AERIAL GRINDING ONLY
X	AERIAL WELDING (AND GRINDING)

TOWER MANUFACTURER: PIROD

TOWER MANUFACTURER #: 115911-1 U-5.0 x 80

QUALIFIED ENGINEERING SERVICES ARE AVAILABLE FROM PAUL J. FORD & COMPANY TO ASSIST CONTRACTORS IN CLASS IV RIGGING PLAN REVIEWS. FOR REQUESTED QUALIFIED ENGINEERING SERVICES, PLEASE CONTACT PJFMOD@PAULJFORD.COM.

ATTENTION ALL CONTRACTORS, ANYTIME YOU ACCESS A CROWN SITE FOR ANY REASON YOU ARE TO CALL THE CROWN NOC UPON ARRIVAL AND DEPARTURE, DAILY AT (800) 788-7011.

SAFETY CLIMB: "LOOK UP"
THE INTEGRITY OF THE WIRE ROPE SAFETY CLIMB SYSTEM SHALL BE CONSIDERED DURING ALL STAGES OF DESIGN, INSTALLATION AND INSPECTION. TOWER REINFORCEMENT INSTALLATIONS SHALL NOT COMPROMISE THE INTEGRITY OR FUNCTIONAL USE OF ANY WIRE ROPE SAFETY CLIMB ON THE STRUCTURE. THIS SHALL INCLUDE, BUT NOT BE LIMITED TO; PINCHING OF THE WIRE ROPE, BENDING OF THE WIRE ROPE FROM ITS SUPPORTS, DIRECT CONTACT OR CLOSE PROXIMITY TO THE WIRE ROPE WHICH MAY CAUSE FRICTIONAL WEAR, OR IMPACT TO THE ANCHORAGE POINTS IN ANY WAY. ANY COMPROMISED SAFETY CLIMB MUST BE REPORTED TO YOUR CROWN POC FOR RESOLUTION, INCLUDING EXISTING CONDITIONS

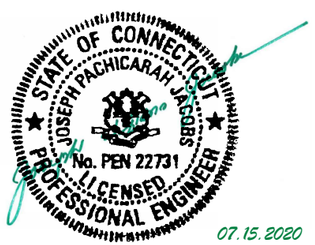

REV	DATE	DESCRIPTION

BU #841298; SOUTHINGTON ROGUS
SOUTHINGTON, CONNECTICUT
MODIFIED 120' SELF SUPPORT TOWER

PROJECT No:	A37520-0805.003.8800
DRAWN BY:	TAN
DESIGNED BY:	RWH
CHECKED BY:	JPJ
DATE:	7-14-2020

TITLE SHEET

T-1

37520-0805.003.DWG

CED-FRM-10354 MI CHECKLIST

REQUIRED	REPORT ITEM	APPLICABLE CROWN DOC #	BRIEF DESCRIPTION
PRE-CONSTRUCTION			
X	MI CHECKLIST DRAWING	CED-SOW-10007	THIS CHECKLIST SERVES AS A GUIDELINE FOR THE REQUIRED CONSTRUCTION DOCUMENTS AND INSPECTIONS FOR THIS MODIFICATION
X	EOR APPROVED SHOP DRAWINGS	CED-SOW-10007	ONCE THE PRE-MODIFICATION MAPPING IS COMPLETE AND PRIOR TO FABRICATION, THE CONTRACTOR SHALL PROVIDE DETAILED ASSEMBLY DRAWINGS AND/OR SHOP DRAWINGS. THESE INCLUDE, BUT ARE NOT LIMITED TO, A VISUAL LAYOUT OF NEW REINFORCEMENT, EXISTING REINFORCEMENT CONFIGURATION, PORTHOLES, MOUNTS, STEP PEGS, SAFETY CLIMBS AND ANY OTHER MISCELLANEOUS ITEMS WHICH MAY AFFECT SUCCESSFUL INSTALLATION OF MODIFICATIONS ON THE TOWER. THESE DRAWINGS SHALL BE SUBMITTED TO THE EOR FOR APPROVAL. SHOP DRAWING SUBMISSION SHALL INCLUDE THE EOR RFI FORM DETAILING ANY CHANGES FROM THE ORIGINAL DESIGN
X	FABRICATION INSPECTION	CED-SOW-10007	A LETTER FROM THE FABRICATOR, STATING THAT THE WORK WAS PERFORMED IN ACCORDANCE WITH INDUSTRY STANDARDS AND THE CONTRACT DOCUMENTS, SHALL BE PROVIDED TO THE MI INSPECTOR FOR INCLUSION IN THE MI REPORT.
X	FABRICATOR CERTIFIED WELD INSPECTION	CED-SOW-10007 CED-STD-10069	A CWI SHALL INSPECT ALL WELDING PERFORMED ON STRUCTURAL MEMBERS DURING FABRICATION. A WRITTEN REPORT SHALL BE PROVIDED TO THE MI INSPECTOR FOR INCLUSION IN THE MI REPORT.
X	MATERIAL TEST REPORTS (MTR)	CED-SOW-10007	MATERIAL TEST REPORTS SHALL BE PROVIDED FOR MATERIAL USED AS REQUIRED PER SECTION 9.2.5 OF CED-SOW-10007. MTRS SHALL BE PROVIDED TO THE MI INSPECTOR FOR INCLUSION IN THE MI REPORT.
NA	FABRICATOR NDE INSPECTION REPORT	CED-SOW-10066 CED-STD-10069	CRITICAL SHOP WELDS THAT REQUIRE TESTING ARE NOTED ON THESE CONTRACT DRAWINGS. A CERTIFIED NDT INSPECTOR SHALL PERFORM NON-DESTRUCTIVE EXAMINATION AND A REPORT SHALL BE PROVIDED TO THE MI INSPECTOR FOR INCLUSION IN THE MI REPORT.
NA	NDE OF MONOPOLE BASE PLATE	ENG-SOW-10033	A NDE OF THE POLE TO BASE PLATE CONNECTION IS REQUIRED AND A WRITTEN REPORT SHALL BE PROVIDED TO THE MI INSPECTOR FOR INCLUSION IN THE MI REPORT.
X	PACKING SLIPS	CED-SOW-10007	PACKING/SHIPPING LIST FOR ALL MATERIAL THAT WAS USED DURING CONSTRUCTION OF THE MODIFICATION.
ADDITIONAL TESTING AND INSPECTIONS:			
CONSTRUCTION			
NA	FOUNDATION INSPECTIONS	CED-SOW-10144	A VISUAL OBSERVATION OF THE EXCAVATION AND REBAR SHALL BE PERFORMED BEFORE PLACING THE CONCRETE. A VISUAL OBSERVATION OF THE REBAR SHALL BE PERFORMED BEFORE PLACING THE EPOXY. A SEALED WRITTEN REPORT SHALL BE PROVIDED TO THE MI INSPECTOR FOR INCLUSION IN THE MI REPORT.
NA	CONCRETE COMP. STRENGTH AND SLUMP TEST	CED-SOW-10144	THE CONCRETE MIX DESIGN, SLUMP TEST, AND COMPRESSIVE STRENGTH TESTS SHALL BE PROVIDED AS PART OF THE FOUNDATION REPORT.
NA	EARTHWORK	CED-SOW-10144	FOUNDATION SUB-GRADES SHALL BE INSPECTED AND APPROVED BY AN APPROVED FOUNDATION INSPECTOR AND RESULTS INCLUDED AS PART OF THE FOUNDATION REPORT.
NA	MICROPILE/ROCK ANCHOR	CED-SOW-10144	MICROPILES/ROCK ANCHORS SHALL BE INSPECTED BY THE FOUNDATION INSPECTION VENDOR AND SHALL BE INCLUDED AS PART OF THE FOUNDATION INSPECTION REPORT, ADDITIONAL TESTING AND/OR INSPECTION REQUIREMENTS ARE NOTED IN THESE CONTRACT DOCUMENTS.
NA	POST-INSTALLED ANCHOR ROD VERIFICATION	CED-SOW-10007 CED-FRM-10358	POST INSTALLED ANCHOR ROD VERIFICATION SHALL BE PERFORMED IN ACCORDANCE WITH CROWN REQUIREMENTS AND A REPORT SHALL BE PROVIDED TO THE MI INSPECTOR FOR INCLUSION IN THE MI REPORT.
NA	BASE PLATE GROUT VERIFICATION	ENG-STD-10323	THE GENERAL CONTRACTOR SHALL PROVIDE DOCUMENTATION TO THE MI INSPECTOR THAT CERTIFIES THAT THE GROUT WAS REMOVED AND/OR INSTALLED IN ACCORDANCE WITH CROWN REQUIREMENTS FOR INCLUSION IN THE MI REPORT.
X	FIELD CERTIFIED WELD INSPECTION	CED-SOW-10066 CED-STD-10069	A CROWN APPROVED CERTIFIED WELD INSPECTOR SHALL INSPECT AND TEST FIELD WELDS, FOLLOWING ALL PROCEDURES SPECIFIED IN CROWN STANDARD DOCUMENTS APPLICABLE TO WELD INSPECTIONS. A REPORT SHALL BE PROVIDED. NDE OF FIELD WELDS SHALL BE PERFORMED AS REQUIRED BY CROWN STANDARDS AND CONTRACT DOCUMENTS. THE NDE REPORT SHALL BE INCLUDED IN THE CWI REPORT.
X	ON-SITE COLD GALVANIZING VERIFICATION	ENG-STD-10149	THE GENERAL CONTRACTOR SHALL PROVIDE WRITTEN AND PHOTOGRAPHIC DOCUMENTATION TO THE MI INSPECTOR VERIFYING THAT ANY ON-SITE COLD GALVANIZING WAS APPLIED PER MANUFACTURER SPECIFICATIONS AND APPLICABLE STANDARDS.
NA	TENSION TWIST AND PLUMB	CED-PRC-10182 CED-STD-10261	THE GENERAL CONTRACTOR SHALL PROVIDE A REPORT IN ACCORDANCE WITH APPLICABLE STANDARDS DOCUMENTING TENSION TWIST AND PLUMB.
X	GC AS-BUILT DRAWINGS	CED-SOW-10007	THE GENERAL CONTRACTOR SHALL SUBMIT A LEGIBLE COPY OF THE ORIGINAL DESIGN DRAWINGS EITHER STATING "INSTALLED AS DESIGNED" OR NOTING ANY CHANGES THAT WERE REQUIRED AND APPROVED BY THE ENGINEER OF RECORD. EOR/RFI FORMS APPROVING ALL CHANGES SHALL BE SUBMITTED.
ADDITIONAL TESTING AND INSPECTIONS:			
POST-CONSTRUCTION			
X	CONSTRUCTION COMPLIANCE LETTER	CED-SOW-10007 CED-FRM-10358	A LETTER FROM THE GENERAL CONTRACTOR STATING THAT THE WORKMANSHIP WAS PERFORMED IN ACCORDANCE WITH INDUSTRY STANDARDS AND THESE CONTRACT DRAWINGS, INCLUDING LISTING ADDITIONAL PARTIES TO THE MODIFICATION PROCESS.
NA	POST-INSTALLED ANCHOR ROD PULL TESTS	CED-PRC-10119	POST-INSTALLED ANCHOR RODS SHALL BE TESTED BY A CROWN APPROVED PULL TEST INSPECTOR AND A REPORT SHALL BE PROVIDED INDICATING TESTING RESULTS.
X	PHOTOGRAPHS	CED-SOW-10007	PHOTOGRAPHS SHALL BE SUBMITTED TO THE MI. PHOTOS SHALL DOCUMENT ALL PHASES OF THE CONSTRUCTION. THE PHOTOS SHALL BE ORGANIZED IN A MANNER THAT EASILY IDENTIFIES THE EXACT LOCATION OF THE PHOTO.
X	BOLT HOLE INSTALLATION VERIFICATION REPORT	CED-SOW-10007	THE MI INSPECTOR SHALL VERIFY THE INSTALLATION AND TIGHTNESS 10% OF ALL NON PRE-TENSIONED BOLTS INSTALLED AS PART OF THE MODIFICATION. THE MI INSPECTOR SHALL LOOSEN THE NUT AND VERIFY THE BOLT HOLE SIZE AND CONDITION. THE MI REPORT SHALL CONTAIN THE COMPLETED BOLT INSTALLATION VERIFICATION REPORT, INCLUDING THE SUPPORTING PHOTOGRAPHS.
X	PUNCH LIST DEVELOPMENT AND CORRECTION DOCUMENTATION	CED-PRC-10283 CED-FRM-10285	FINAL PUNCH LIST INDICATING ALL NONCONFORMANCE(S) IDENTIFIED AND THE FINAL RESOLUTION/APPROVAL.
X	MI INSPECTOR REDLINE OR RECORD DRAWING(S)	CED-SOW-10007	THE MI INSPECTOR SHALL OBSERVE AND REPORT ANY DISCREPANCIES BETWEEN THE CONTRACTOR'S REDLINE DRAWING AND THE ACTUAL COMPLETED INSTALLATION.
ADDITIONAL TESTING AND INSPECTIONS:			

THE MI CHECKLIST SHALL BE REVIEWED PRIOR TO THE START OF CONSTRUCTION. ALL PARTIES TO THE MODIFICATION SHALL UNDERSTAND CROWN REQUIREMENTS AND INSPECTIONS/DOCUMENTATION THAT ARE APPLICABLE TO THE SOW THEY ARE PERFORMING. ERRORS ON THE CHECKLIST DO NOT ABSOLVE THE GC OR MI INSPECTOR FROM PERFORMING/COLLECTING DOCUMENTATION.

MODIFICATION INSPECTION NOTES

GENERAL

THE MI IS AN ON-SITE VISUAL AND HANDS-ON INSPECTION OF TOWER MODIFICATIONS INCLUDING A REVIEW OF CONSTRUCTION REPORTS AND ADDITIONAL PERTINENT DOCUMENTATION PROVIDED BY THE GENERAL CONTRACTOR (GC), AS WELL AS ANY INSPECTION DOCUMENTS PROVIDED BY 3RD PARTY INSPECTORS. THE MI IS TO ENSURE THE INSTALLATION WAS CONSTRUCTED IN ACCORDANCE WITH THE CONTRACT DOCUMENTS, NAMELY THE MODIFICATION DRAWINGS; IN ACCORDANCE WITH APPLICABLE CROWN STANDARDS; AND AS DESIGNED BY THE ENGINEER OF RECORD (EOR).

NO DOCUMENT, CODE OR POLICY CAN ANTICIPATE EVERY SITUATION THAT MAY ARISE. ACCORDINGLY, THIS CHECKLIST IS INTENDED TO SERVE AS A SOURCE OF GUIDING PRINCIPLES IN ESTABLISHING GUIDELINES FOR MODIFICATION INSPECTION.

THE MI IS TO CONFIRM INSTALLATION CONFIGURATION AND WORKMANSHIP ONLY AND IS NOT A REVIEW OF THE MODIFICATION DESIGN ITSELF, AND THE MI INSPECTOR DOES NOT TAKE OWNERSHIP OF THE MODIFICATION DESIGN. OWNERSHIP OF THE STRUCTURAL MODIFICATION DESIGN EFFECTIVENESS AND INTEGRITY RESIDES WITH THE EOR AT ALL TIMES. THE MI INSPECTOR SHALL INSPECT AND NOTE CONFORMANCE/NONCONFORMANCE AND PROVIDE TO THE CROWN POINT OF CONTACT (CROWN POC) FOR EVALUATION.

ALL MI'S SHALL BE CONDUCTED BY A CROWN APPROVED MI INSPECTOR, WORKING FOR A CROWN APPROVED MI VENDOR. SEE CROWN CED-LST-10173, "APPROVED MI VENDORS".

TO ENSURE THAT THE REQUIREMENTS OF THE MI ARE MET, IT IS VITAL THAT THE GENERAL CONTRACTOR (GC) AND THE MI INSPECTOR BEGIN COMMUNICATING AND COORDINATING AS SOON AS A PURCHASE ORDER (PO) IS RECEIVED. IT IS EXPECTED THAT EACH PARTY WILL BE PROACTIVE IN REACHING OUT TO THE OTHER PARTY. IF CONTACT INFORMATION IS NOT KNOWN THE GC AND/OR INSPECTOR SHALL CONTACT THE CROWN POINT OF CONTACT (CROWN POC).

REFER TO CROWN CED-SOW-10007, "MODIFICATION INSPECTION SOW", FOR FURTHER DETAILS AND REQUIREMENTS.

SERVICE LEVEL COMMITMENT

THE FOLLOWING RECOMMENDATIONS AND SUGGESTIONS ARE OFFERED TO ENHANCE THE EFFICIENCY AND EFFECTIVENESS OF DELIVERING AN MI REPORT:

- THE GC SHALL PROVIDE A MINIMUM OF 5 BUSINESS DAYS NOTICE, PREFERABLY 10, TO THE MI INSPECTOR AS TO WHEN THE SITE WILL BE READY FOR THE MI TO BE CONDUCTED.
- THE GC AND MI INSPECTOR COORDINATE CLOSELY THROUGHOUT THE ENTIRE PROJECT.
- WHEN POSSIBLE, IT IS PREFERRED TO HAVE THE GC AND MI INSPECTOR ON-SITE SIMULTANEOUSLY FOR ANY GUY WIRE TENSIONING OR RE-TENSIONING OPERATIONS.
- WHEN POSSIBLE, IT IS PREFERRED TO HAVE THE GC AND MI INSPECTOR ON-SITE DURING THE MI TO HAVE ANY MINOR DEFICIENCIES CORRECTED DURING THE INITIAL MI. THEREFORE, THE GC MAY CHOOSE TO COORDINATE THE MI CAREFULLY TO ENSURE ALL CONSTRUCTION FACILITIES ARE AT THEIR DISPOSAL WHEN THE MI INSPECTOR IS ON SITE.

REQUIRED PHOTOS

BETWEEN THE GC AND THE MI INSPECTOR THE FOLLOWING PHOTOGRAPHS, AT A MINIMUM, ARE TO BE TAKEN AND INCLUDED IN THE MI REPORT:

- PRE-CONSTRUCTION GENERAL SITE CONDITION
- PHOTOGRAPHS DURING THE REINFORCEMENT MODIFICATION CONSTRUCTION/ERECTION AND INSPECTION
  - RAW MATERIALS
  - PHOTOS OF ALL CRITICAL DETAILS
  - FOUNDATION MODIFICATIONS
  - WELD PREPARATION
  - BOLT INSTALLATION
  - FINAL INSTALLED CONDITION
  - SURFACE COATING REPAIR
- POST CONSTRUCTION PHOTOGRAPHS
  - FINAL INFIELD CONDITION

PHOTOS OF ELEVATED MODIFICATIONS TAKEN ONLY FROM THE GROUND SHALL BE CONSIDERED INADEQUATE.

THIS IS NOT A COMPLETE LIST OF REQUIRED PHOTOS, FOR A COMPLETE LIST OF PHOTOS SEE CED-SOW-10007.

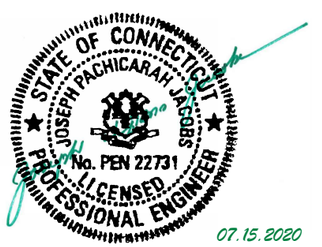

REV	DATE	DESCRIPTION

© Copyright 2020, by Paul J. Ford and Company. All Rights Reserved. This document and the data contained herein, is proprietary to Paul J. Ford and Company, issued in strict confidence and shall not, without the prior written permission of Paul J. Ford and Company, be reproduced, copied or used for any purpose other than the intended use for this specific project.

PJF PAUL J. FORD & COMPANY
250 E Broad St, Ste 600 · Columbus, OH 43215
Phone 614.221.6679 www.pauljford.com

CROWN CASTLE USA INC
3530 TORINGDON WAY SUITE 300 CHARLOTTE, NC 28277
(980) 209-8234

BU #841298; SOUTHINGTON ROGUS
SOUTHINGTON, CONNECTICUT
MODIFIED 120' SELF SUPPORT TOWER

PROJECT No:	A37520-0805.003.8800
DRAWN BY:	TAN
DESIGNED BY:	RWH
CHECKED BY:	JPJ
DATE:	7-14-2020

MI CHECKLIST AND NOTES

MI-1

37520-0805.003.DWG

GENERAL NOTES:

1. The General Contractor (GC) shall reference CED-STD-10159, "Tower Modification Construction Specifications", as a continuation of the following General Notes. The GC shall keep a copy of this document with the Structural Design Drawings (SDD) at all times, and shall ensure that all Contractor Personnel are aware of the information enclosed within the General Notes and CED-STD-10159.
2. The Contract Documents are the property of Crown Castle (Crown). They are provided to the GC and its Lower Tier Contractors and material suppliers for the limited purpose of use in completing the Work for this Site, and shall be kept in strict confidence and not disclosed to any third parties. The Contract Documents shall not be used for any other purpose whatsoever without the prior written consent of Crown.
3. Detail drawings, including notes and tables, shall govern over general notes and typical details. Contact the Crown Point of Contact (POC) and Engineer of Record (EOR) for clarification as needed.
4. Do not scale drawings.
5. Any Work performed without a prefabrication mapping is done at the risk of the GC and/or fabricator. All dimensions of existing structural elements are assumed based on the available documentation and are preliminary until field-verified by the GC, unless noted otherwise (UNO). Where discrepancies are found, GC shall contact the Crown POC and EOR through RFI.
6. For this analysis and modification, the tower has been assumed to be in good condition without any structural defects, UNO. If the GC discovers any indication of an existing structural defect, contact the Crown POC and EOR immediately.
7. All construction means and methods, including but not limited to erection plans, rigging plans, climbing plans, and rescue plans, shall be the responsibility of the GC responsible for the execution of the Work contained herein, and shall meet ANSI/ASSE A10.48 (latest edition); federal, state, and local regulations; and any applicable industry consensus standards related to the construction activities being performed. All rigging plans shall adhere to ANSI/ASSE A10.48 (latest edition) and Crown standard CED-STD-10253, "Rigging Program", including the required involvement of a qualified engineer for class IV construction to certify the supporting structure(s) in accordance with the ANSI/TIA-322 (latest edition).
8. The structural integrity of the modification design extends to the complete condition only. The GC must be cognizant that the removal of any structural component of an existing tower has the potential to cause the partial or complete collapse of the structure. All necessary precautions must be taken to ensure structural integrity, including, but not limited to, engineering assessment of construction stresses with installation maximum wind speed and/or temporary bracing and shoring.
9. Aerial and underground utilities and facilities may or may not be shown on the drawings. The GC shall take every precaution to preserve and protect these items, which may include aerial or underground power lines, telephone lines, water lines, sewer lines, cable television facilities, pipelines, structures and other public and private improvements within or adjacent to the Work area. The responsibility for determining the actual on-site location of these items shall rest exclusively with the GC.
10. All manufacturer's hardware assembly instructions shall be followed, UNO. Conflicting notes shall be brought to the attention of the EOR and the Crown POC.
11. The GC shall fabricate all required items per the materials specified below, UNO on the detail drawing sheets. If the GC finds for any component that the materials have not been clearly specified, the GC shall submit an RFI to the EOR to confirm the required material.

All structural elements shall be new and shall conform to the following requirements, UNO:

Monopoles:

- Structural shapes and plates: ASTM A572 Grade 65 (FY = 65 KSI)
- Welding electrodes, SMAW: E80XX
- Welding electrodes, FCAW: E8XT-XX

Self-Support and Guyed Towers:

- Structural shapes and plates: ASTM A572 Grade 50 (FY = 50 KSI)
- Welding electrodes, SMAW: E70XX
- Welding electrodes, FCAW: E7XT-XX

All tower types:

- Steel angle: ASTM A572 Grade 50 (FY = 50 KSI)
- Solid rod: ASTM A36 (FY = 36 KSI)
- Pipe/tube (round): ASTM A500 Grade C (FY = 46 KSI)
- Pipe/tube (square): ASTM A500 Grade C (FY = 50 KSI)
- Bolts: ASTM F3125 Grade A325 Type 1
- U-bolts: ASTM A307 Grade A, or SAE J429 Grade 2
- Nuts: ASTM A563 Grade DH
- Washers: ASTM F436 Type 1
- Guy Wires: ASTM A475 Grade EHS
- Bridge Strand: ASTM A586 Grade 1

12. After fabrication, hot-dip galvanize all steel items, UNO. Galvanize per ASTM A123, ASTM A153/A153M, or ASTM A653 G90, as applicable. ASTM A490 bolts shall not be hot-dip galvanized, but shall instead be coated with Magni 565 or EOR approved equivalent, per ASTM F2833.
13. Contractor Personnel shall not drill holes in any new or existing structural members, other than those drilled holes shown on structural drawings, without the approval of the EOR.
14. For a list of Crown-approved cold galvanizing compounds, refer to ENG-STD-10149, “Tower Protective Coatings Guidelines”.
15. All exposed structural steel as the result of this scope of Work including welds (after final inspection of the weld by the CWI), field drilled holes, and shaft interiors (where accessible), shall be cleaned and two (2) coats cold galvanizing shall be applied by brush in accordance with ENG-STD-10149, “Tower Protective Coatings Guidelines”. Photo documentation is required to be submitted to the MI Inspector.
16. If removal of existing modifications is required per the modification scope, the GC shall clean and cold galvanize any existing empty bolt holes, UNO. If additional unexpected, oversized, or slotted holes are found, the GC shall contact the EOR and Crown POC for guidance prior to proceeding with the modifications.
17. All Work involving base plate grout scope items or resulting in disturbance of base plate grout shall reference ENG-STD-10323, "Base Plate Grout", and shall follow any Base Plate Grout Removal Notes contained herein.
18. All tower grounding affected by the Work shall be repaired or replaced in accordance with OPS-STD-10090, "Tower Grounding", and OPS-BUL-10133, "Grounding Repair Recommendation".
19. If scope of modification requires removal or covering of tower ID tag, the tag must be replaced.
20. Any hardware removed from the existing tower shall be replaced with new hardware of equal size and quality, UNO. No existing fasteners shall be reused.
21. All joints using ASTM A325 or A490 bolts, U-bolts, V-bolts, and threaded rods shall be snug tightened, UNO.
22. A nut locking device shall be installed on all proposed and/or replaced snug tightened ASTM A325 or A490 bolts, U-bolts, V-bolts, and threaded rods.
23. All joints are bearing type connections UNO. If no bolt length is given in the Bill of Materials, the connection may include threads in the shear planes, and the GC is responsible for sizing the length of the bolt.
24. Blind bolts shall be installed per the installation specifications on the corresponding Approved Fastener sheets contained in CED-CAT-10300, "Monopole Standard Drawings and Approved Reinforcement Components".
25. If ASTM A325 or A490 bolts, and/or threaded rods are specified to be pre-tensioned, these shall be installed and tightened to the pretensioned condition according to the requirements of the RCSC Specification for Structural Joints Using ASTM High Strength Bolts.
26. All proposed and/or replaced bolts shall be of sufficient length such that the end of the bolt be at least flush with the face of the nut. It is not permitted for the bolt end to be below the face of the nut after tightening is completed.

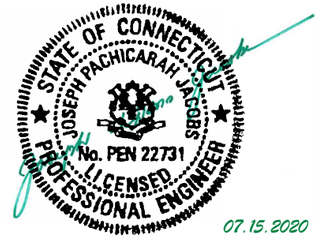

REV	DATE	DESCRIPTION

© Copyright 2020, by Paul J. Ford and Company. All Rights Reserved. This document and the data contained herein, is proprietary to Paul J. Ford and Company, issued in strict confidence and shall not, without the prior written permission of Paul J. Ford and Company, be reproduced, copied or used for any purpose other than the intended use for this specific project.

PJF PAUL J. FORD & COMPANY
250 E Broad St, Ste 600 · Columbus, OH 43215
Phone 614.221.6679 www.pauljford.com

CROWN CASTLE USA INC
3530 TORINGDON WAY SUITE 300 CHARLOTTE, NC 28277
(980) 209-8234

BU #841298; SOUTHINGTON ROGUS
SOUTHINGTON, CONNECTICUT
MODIFIED 120' SELF SUPPORT TOWER

PROJECT No:	A37520-0805.003.8800
DRAWN BY:	TAN
DESIGNED BY:	RWH
CHECKED BY:	JPJ
DATE:	7-14-2020

NOTES

N-1

37520-0805.003.DWG

GENERAL NOTES:

1. THIS TOWER MODIFICATION DRAWING IS BASED UPON A STRUCTURAL ANALYSIS PERFORMED BY PAUL J. FORD AND COMPANY DATED 7-14-2020.

2. PAUL J. FORD AND COMPANY HAS NOT PERFORMED A FIELD VISIT TO VERIFY THE EXISTING TOWER MEMBER SIZES AND DIMENSIONS. THE MODIFICATIONS SHOWN ON THESE PAGES WERE DEVELOPED USING INFORMATION PROVIDED TO US BY CROWN CASTLE.

3. PAUL J. FORD AND COMPANY WAS NOT PROVIDED WITH THE EXACT LOCATION OF EVERY EXISTING APPURTENANCE THAT COULD POTENTIALLY INTERFERE WITH THE MODIFICATIONS AS INDICATED ON THESE DRAWINGS. IT IS IMPORTANT THAT THE MODIFICATION MATERIAL BE PLACED IN THE PROPER LOCATION TO BE EFFECTIVE. THIS MAY REQUIRE THE REPOSITIONING OF SOME EXISTING NON-STRUCTURAL ITEMS CURRENTLY ATTACHED TO THE TOWER.

4. THE CONTRACTOR MUST BE EXPERIENCED IN THE PERFORMANCE OF WORK SIMILAR TO THAT DESCRIBED ON THESE DRAWINGS. BY ACCEPTANCE OF THIS PROJECT, THE CONTRACTOR IS ATTESTING THAT HE DOES HAVE SUFFICIENT EXPERIENCE AND ABILITY, THAT HE IS KNOWLEDGEABLE OF THE WORK TO BE PERFORMED AND THAT HE IS PROPERLY LICENSED TO DO THIS WORK IN THE JURISDICTION IN WHICH THE WORK IS TO BE PERFORMED.

5. INSPECTIONS SHALL BE COMPLETED IN ACCORDANCE WITH LOCAL BUILDING CODES.

CONSTRUCTION NOTES:

1. REFER TO CCI DOC ENG-PLN-10015 FOR CUTTING AND WELDING SAFETY PLAN. (USE WHEN YOU HAVE ON SITE CUTTING AND WELDING)

MATERIAL NOTES:

1. ALL MATERIAL GRADES GREATER THAN 36 KSI WILL REQUIRE MATERIAL TEST REPORTS.

2. ALL HOLES IN THE NEW STEEL MEMBERS SHALL BE SIZED 1/16" LARGER THAN THE BOLT DIAMETER. SLOTTED OR OVERSIZED HOLES ARE NOT PERMITTED, UNO.

3. ALL THREADED ROD FOR FLANGE JUMPS SHALL BE ASTM A193, GR B7 MATERIAL.

4. ALL SQUARE BAR SHALL BE ASTM A572, GR 50 (FY = 50 KSI) MATERIAL.

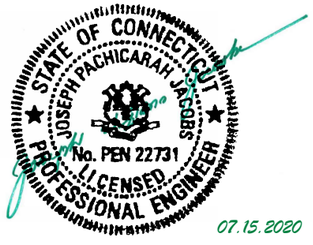

REV	DATE	DESCRIPTION

© Copyright 2020, by Paul J. Ford and Company. All Rights Reserved. This document and the data contained herein, is proprietary to Paul J. Ford and Company, issued in strict confidence and shall not, without the prior written permission of Paul J. Ford and Company, be reproduced, copied or used for any purpose other than the intended use for this specific project.

PJF PAUL J. FORD & COMPANY
250 E Broad St, Ste 600 · Columbus, OH 43215
Phone 614.221.6679 www.pauljford.com

CROWN CASTLE USA INC
3530 TORINGDON WAY SUITE 300 CHARLOTTE, NC 28277
(980) 209-8234

BU #841298; SOUTHINGTON ROGUS
SOUTHINGTON, CONNECTICUT
MODIFIED 120' SELF SUPPORT TOWER

PROJECT No:	A37520-0805.003.8800
DRAWN BY:	TAN
DESIGNED BY:	RWH
CHECKED BY:	JPJ
DATE:	7-14-2020

NOTES

N-2

37520-0805.003.DWG

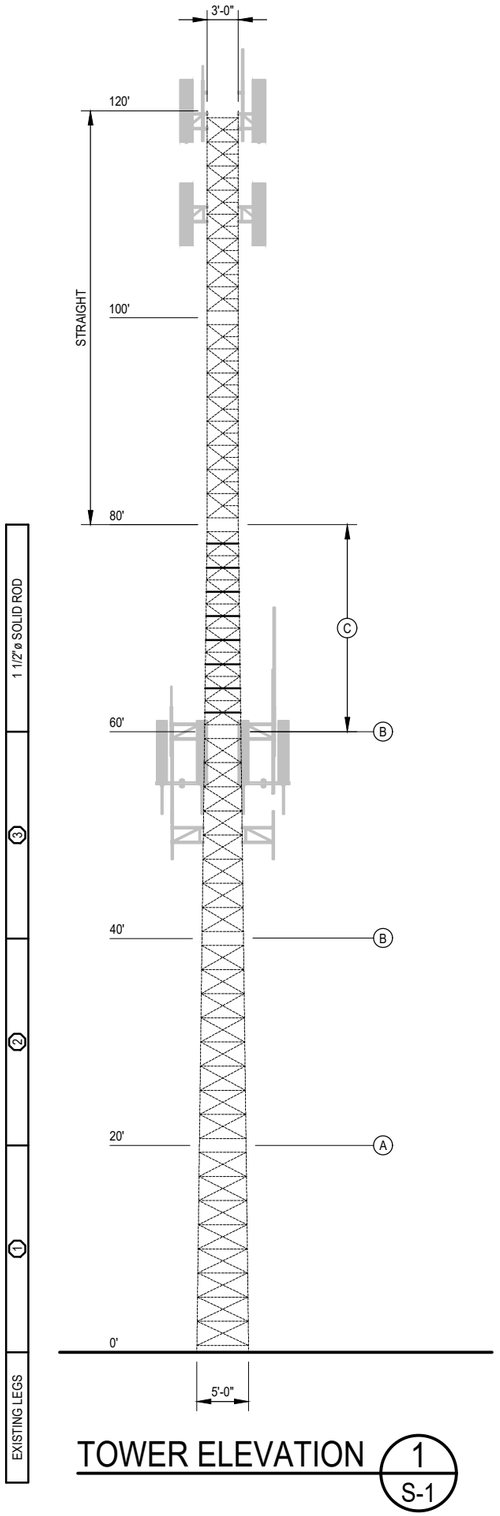

TOWER ELEVATION 1 / S-1

TOWER MODIFICATION SCHEDULE

	ELEVATION	TOWER MODIFICATION DESCRIPTION	REFERENCE SHEETS
A	20'±	REPAIR WELD ON EXISTING HALF SLEEVES AND EXISTING BRIDGE STIFFENERS	S-2
B	40'± & 60'±	INSTALL NEW FLANGE JUMP REINFORCING	S-3
C	60'± TO 80'±	INSTALL NEW SQUARE BAR SECONDARY HORIZONTALS	S-4

PRIOR TO FABRICATION AND INSTALLATION, CONTRACTOR SHALL FIELD VERIFY ALL LENGTHS AND QUANTITIES GIVEN. LENGTH AND QUANTITIES PROVIDED ARE FOR QUOTING PURPOSE ONLY AND SHALL NOT BE USED FOR FABRICATION.

FOR PARTS NOT DETAILED WITHIN THE DRAWING AND STARTING WITH "CCI-", SEE THE FOLLOWING CATALOG FOR DETAILS: CED-CAT-10302, SELF-SUPPORT TOWER STANDARD DRAWINGS AND APPROVED REINFORCEMENT COMPONENTS

EXISTING TOWER MEMBER

1	2 1/4"ø SOLID ROD W/ 2.875" OD x 0.276" THK HALF SLEEVE
2	2"ø SOLID ROD W/ 2.875" OD x 0.276" THK HALF SLEEVE
3	1 3/4"ø SOLID ROD W/ 2.375" OD x 0.154" THK HALF SLEEVE

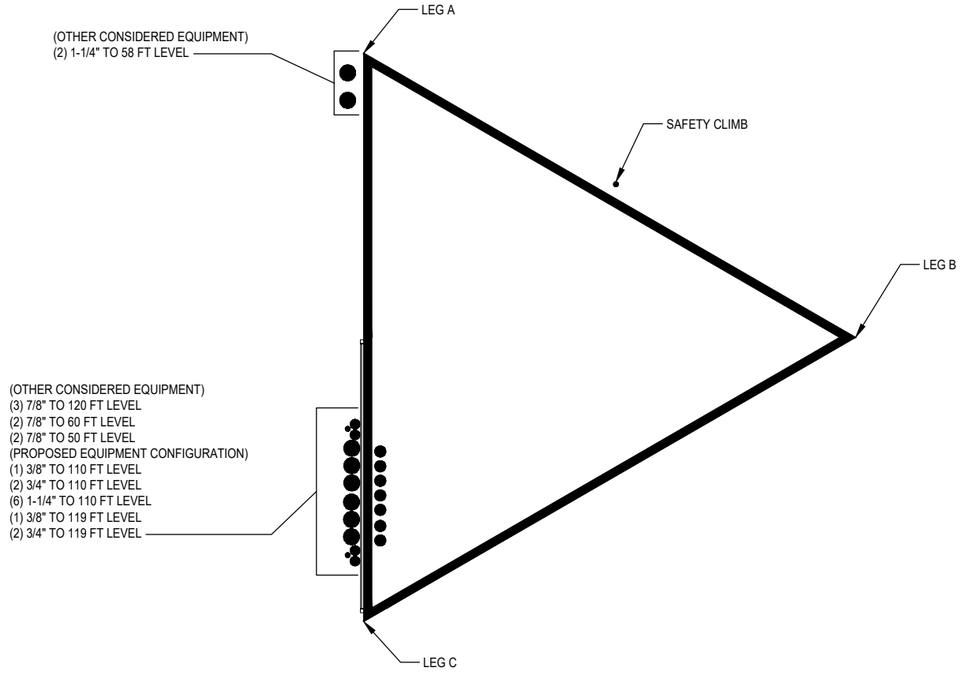

COAX LAYOUT 2 / S-1

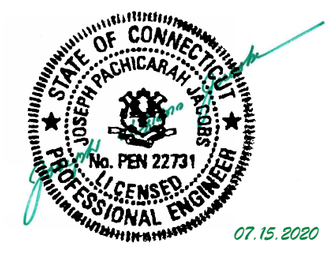

07.15.2020

REV	DATE	DESCRIPTION

© Copyright 2020, by Paul J. Ford and Company, All Rights Reserved. This document and the data contained herein, is proprietary to Paul J. Ford and Company, issued in strict confidence and shall not, without the prior written permission of Paul J. Ford and Company, be reproduced, copied or used for any purpose other than the intended use for this specific project.

PAUL J. FORD & COMPANY
250 E Broad St, Ste 600 · Columbus, OH 43215
Phone 614.221.6679 www.pauljford.com

CROWN CASTLE USA INC
3530 TORINGDON WAY SUITE 300 CHARLOTTE, NC 28277
(980) 209-8234

BU #841298; SOUTHINGTON ROGUS

SOUTHINGTON, CONNECTICUT
MODIFIED 120' SELF SUPPORT TOWER

PROJECT No:	A37520-0805.003.8800
DRAWN BY:	TAN
DESIGNED BY:	RWH
CHECKED BY:	JPJ
DATE:	7-14-2020

TOWER ELEVATION

S-1

37520-0805.003.DWG

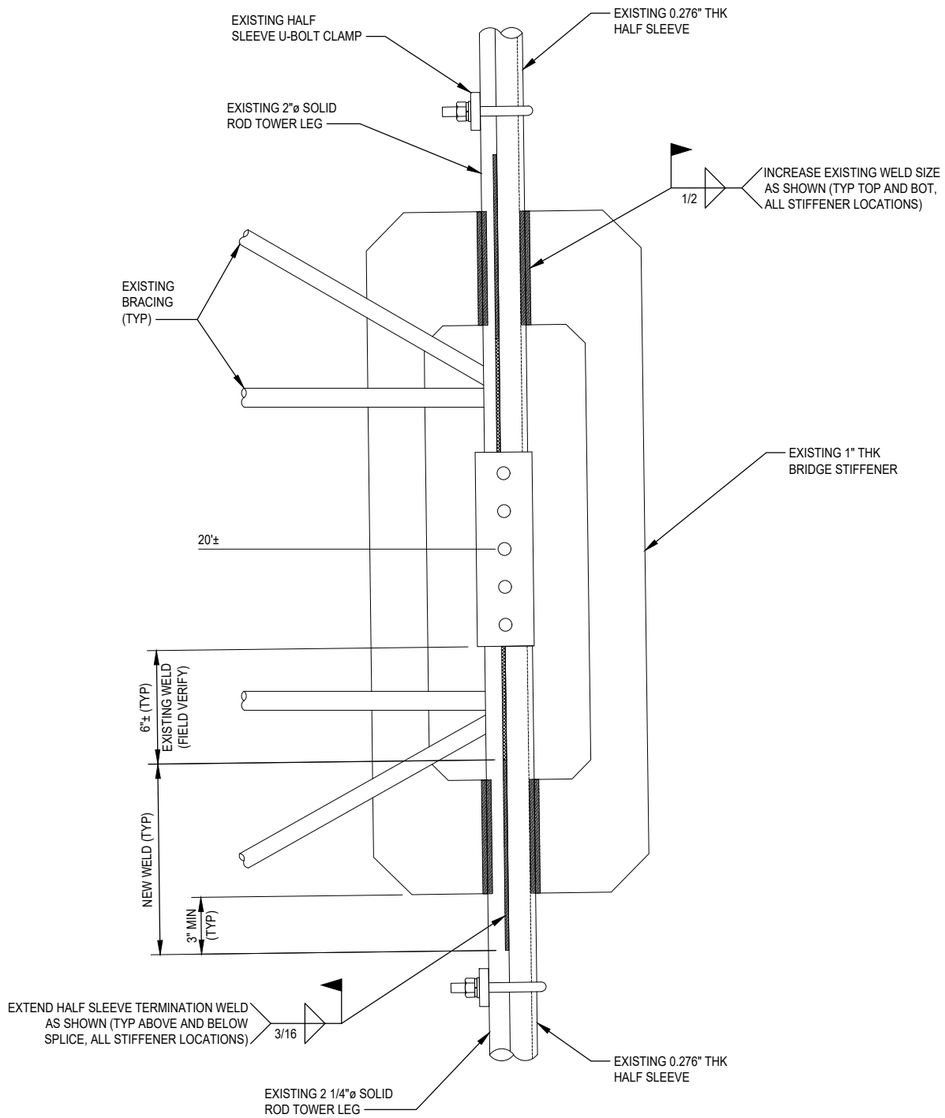

A WELD REPAIR 1/S-2

PRIOR TO CONSTRUCTION, CONTRACTOR SHALL VERIFY THAT ALL BRIDGE STIFFENER WELD SIZES CAN BE INCREASED AND STILL FALL ENTIRELY ON THE EXISTING REINFORCING HALF SLEEVES. IF THIS CANNOT BE DONE, CONTRACTOR SHALL NOTIFY CROWN CASTLE AND PJF IMMEDIATELY SO THAT AN ALTERNATE REINFORCING DESIGN CAN BE PROVIDED.

STATE OF CONNECTICUT
JOSEPH PACHICARAH JACOBS
No. PEN 22731
LICENSED
PROFESSIONAL ENGINEER

07.15.2020

REV	DATE	DESCRIPTION

© Copyright 2020, by Paul J. Ford and Company. All Rights Reserved. This document and the data contained herein, is proprietary to Paul J. Ford and Company, issued in strict confidence and shall not, without the prior written permission of Paul J. Ford and Company, be reproduced, copied or used for any purpose other than the intended use for this specific project.

PJF PAUL J. FORD & COMPANY
250 E Broad St, Ste 600 · Columbus, OH 43215
Phone 614.221.6679 www.pauljford.com

CROWN CASTLE USA INC
3530 TORINGDON WAY SUITE 300 CHARLOTTE, NC 28277
(980) 209-8234

BU #841298; SOUTHINGTON ROGUS
SOUTHINGTON, CONNECTICUT
MODIFIED 120' SELF SUPPORT TOWER

PROJECT No:	A37520-0805.003.8800
DRAWN BY:	TAN
DESIGNED BY:	RWH
CHECKED BY:	JPJ
DATE:	7-14-2020

WELD REPAIR DETAILS

S-2

37520-0805.003.DWG

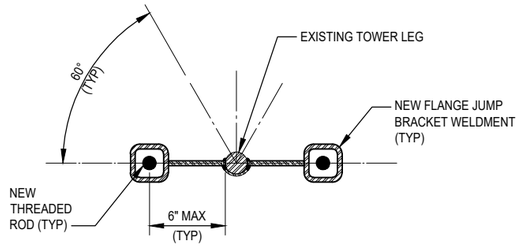

SECTION 2 / S-3

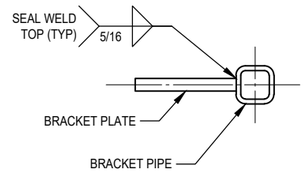

BRACKET WELDMENT

MATERIAL LIST			
ELEVATION	QTY	MATERIAL	LENGTH
60'±	12	FLANGE JUMP WELDMENT	
	24	WASHER PLATE 1 1/4" x 3 1/2"	0'-3 1/2"±
	6	1" THREADED ROD	4'-2"±
40'±	12	FLANGE JUMP WELDMENT	
	24	WASHER PLATE 1 1/4" x 3 1/2"	0'-3 1/2"±
	6	1" THREADED ROD	4'-2"±

© Copyright 2020, by Paul J. Ford and Company. All Rights Reserved. This document and the data contained herein, is proprietary to Paul J. Ford and Company, issued in strict confidence and shall not, without the prior written permission of Paul J. Ford and Company, be reproduced, copied or used for any purpose other than the intended use for this specific project.

PJF PAUL J. FORD & COMPANY
250 E Broad St, Ste 600 · Columbus, OH 43215
Phone 614.221.6679 www.pauljford.com

CROWN CASTLE USA INC
3530 TORINGDON WAY SUITE 300 CHARLOTTE, NC 28277
(980) 209-8234

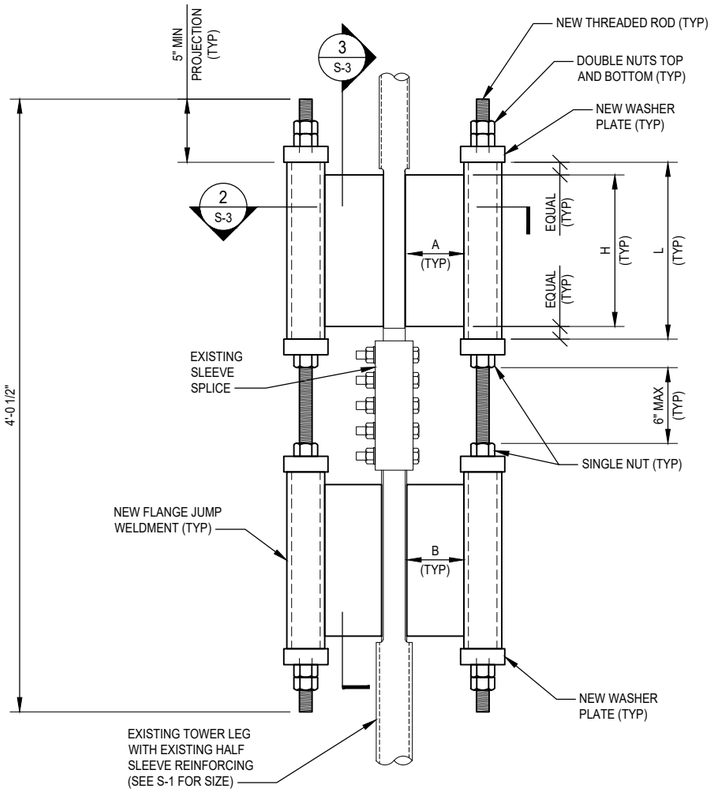

B FLANGE JUMP 1 / S-3

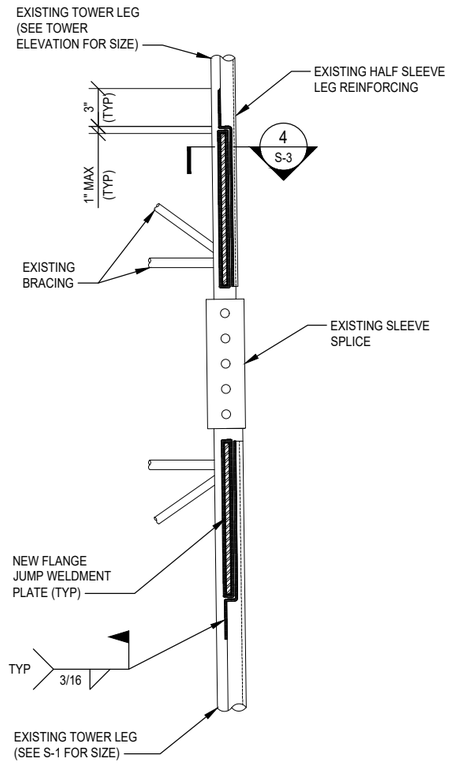

HALF SLEEVE COPING DETAIL 3 / S-3

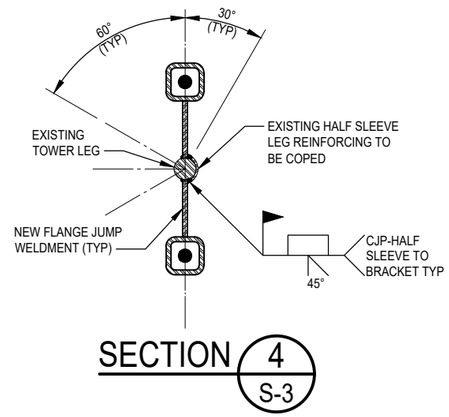

SECTION 4 / S-3

FLANGE REINFORCEMENT SCHEDULE								
EL (FT)	ROD SIZE	BRACKET PLATE				BRACKET PIPE		
		A (in)	B (in)	H (in)	THK (in)	SIZE	L (in)	PLATE WASHER
60±	1"ø	4 1/2	4 3/8	12	3/8	HSS 3 x 3 x 3/8	14	1 1/4" x 3 1/2" x 3 1/2" w/ 1 1/8"ø HOLE
40±	1"ø	4 1/2	4 3/8	12	3/8	HSS 3 x 3 x 3/8	14	1 1/4" x 3 1/2" x 3 1/2" w/ 1 1/8"ø HOLE

STATE OF CONNECTICUT
JOSEPH PACHICARAH JACOBS
No. PEN 22731
LICENSED PROFESSIONAL ENGINEER
07.15.2020

REV	DATE	DESCRIPTION

BU #841298; SOUTHINGTON ROGUS
SOUTHINGTON, CONNECTICUT
MODIFIED 120' SELF SUPPORT TOWER

PROJECT No:	A37520-0805.003.8800
DRAWN BY:	TAN
DESIGNED BY:	RWH
CHECKED BY:	JPJ
DATE:	7-14-2020

FLANGE JUMP REINFORCING

S-3

37520-0805.003.DWG

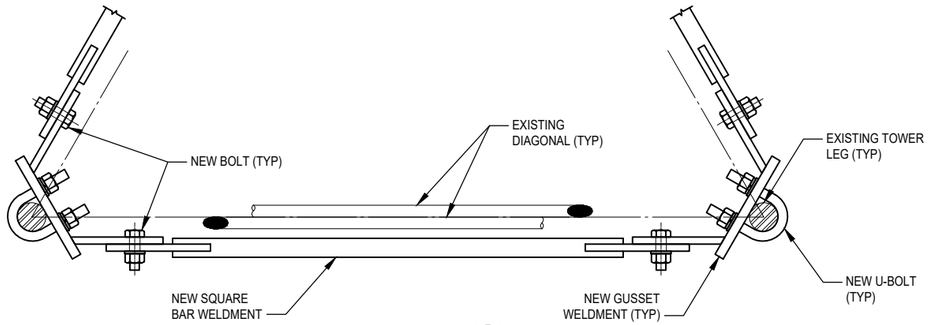

SECTION 2 / S-4

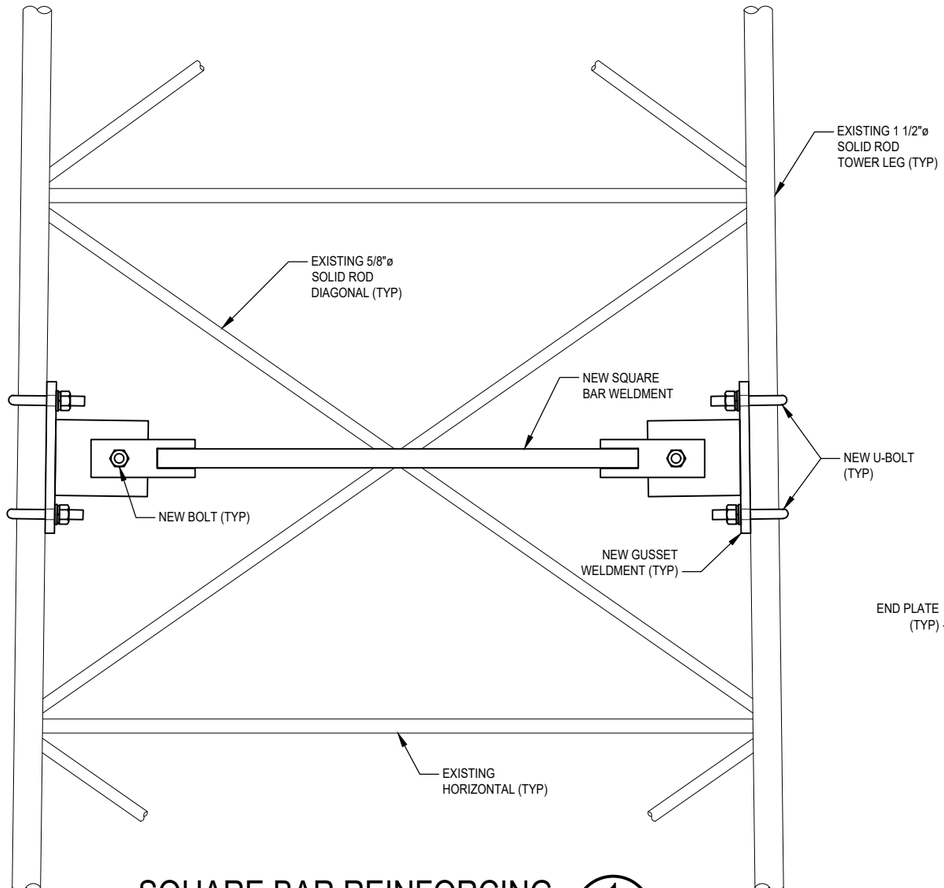

SQUARE BAR REINFORCING 1 / S-4

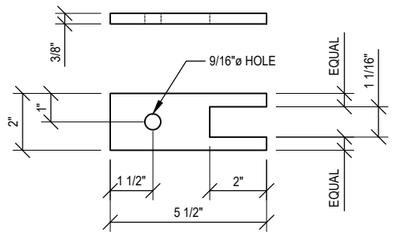

END PLATE

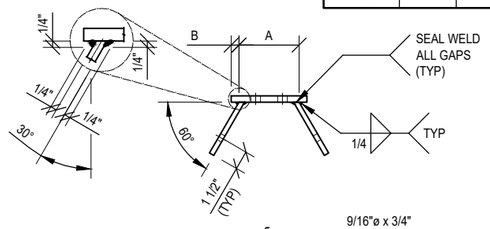

SOLID ROD LED ø	ASSEMBLY		BACKER PLATE		U-BOLT		
	A (in)	B (in)	C (in)	D (in)	E (in)	F (in)	G (in)
1 1/2"	4 3/4	5/8	6	2 1/8	3 1/2	1 5/8	1/2

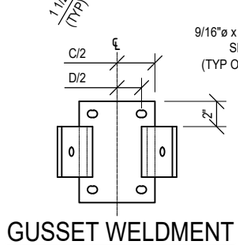

GUSSET WELDMENT

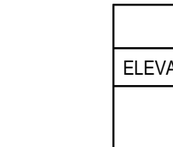

U-BOLT

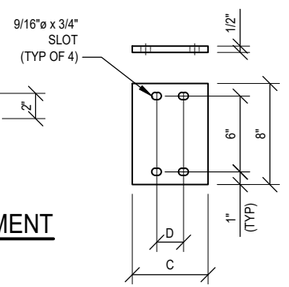

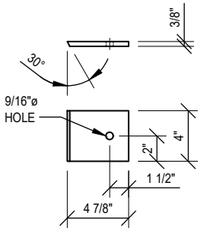

GUSSET PLATE
TYPICAL FOR ALL ASSEMBLIES

BACKER PLATE

GUSSET WELDMENT NOTES:

1. ALL HOLES TO BE SHOP FABRICATED, UNLESS NOTED OTHERWISE.
2. TOLERANCES, UNLESS NOTED OTHERWISE: FRACTIONS ± 1/16"
   ANGLES ± 1/2 DEGREE
   DECIMALS ± .010"
3. U-BOLTS SHALL BE SNUG TIGHT.
4. USE 2 U-BOLTS PER ASSEMBLY, COMPLETE WITH NUTS (ASTM A563), WASHERS (ASTM F436), AND LOCK WASHERS.
5. NO FIELD FABRICATION PERMITTED ON THIS PART.
6. STANDARD 9/16"ø HOLES IN PLACE OF SLOTTED HORIZONTAL HOLES ON THE BACKER PLATE ARE PERMITTED.

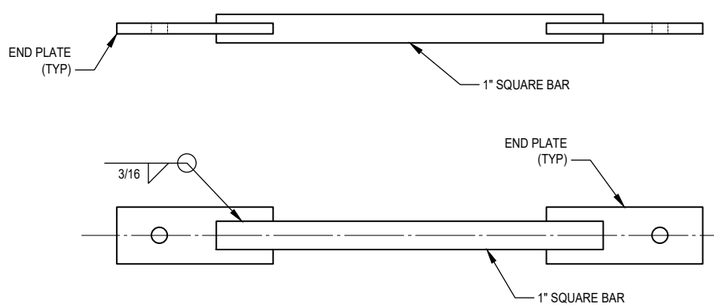

SQUARE BAR WELDMENT

MATERIAL LIST			
ELEVATION	QTY	MATERIAL	LENGTH
60'± TO 80'±	24	1" SQUARE BAR WELDMENT	VARIES
	24	GUSSET WELDMENT	-
	48	1/2"ø BOLTS	1 3/4"
	48	1/2"ø U-BOLTS	-

© Copyright 2020, by Paul J. Ford and Company. All Rights Reserved. This document and the data contained herein, is proprietary to Paul J. Ford and Company, issued in strict confidence and shall not, without the prior written permission of Paul J. Ford and Company, be reproduced, copied or used for any purpose other than the intended use for this specific project.

PJF PAUL J. FORD & COMPANY
250 E Broad St, Ste 600 · Columbus, OH 43215
Phone 614.221.6679 www.pauljford.com

CROWN CASTLE USA INC
3530 TORINGDON WAY SUITE 300 CHARLOTTE, NC 28277
(980) 209-8234

BU #841298; SOUTHINGTON ROGUS
SOUTHINGTON, CONNECTICUT
MODIFIED 120' SELF SUPPORT TOWER

PROJECT No:	A37520-0805.003.8800
DRAWN BY:	TAN
DESIGNED BY:	RWH
CHECKED BY:	JPJ
DATE:	7-14-2020

SECONDARY HORIZONTAL

S-4

STATE OF CONNECTICUT · JOSEPH PACHICARAH JACOBS · No. PEN 22731 · LICENSED PROFESSIONAL ENGINEER

07.15.2020

REV	DATE	DESCRIPTION

37520-0805.003.DWG

Exhibit E

Mount Analysis

Date: **May 22, 2020**

Darcy Tarr
Crown Castle
3530 Toringdon Way, Suite 300
Charlotte, NC 28277
(704)-405-6619

POD Group
1033 E Turkeyfoot Lake Rd. Suite 206
Akron, OH 44312
(330) 961-7432
jcheronis@podgrp.com

Subject:	**Mount Analysis Report**	
Carrier Designation:	**AT&T**	
	Carrier Site Number:	**59347**
	Carrier Site Name:	**CTL01033**
	FA Number:	**10035233**
	PACE Ref Number:	**MRCTB046491**
Crown Castle Designation:	**Crown Castle BU Number:**	**841298**
	Crown Castle Site Name:	**SOUTHINGTON ROGUS**
	Crown Castle JDE Job Number:	**605389**
	Crown Castle Order Number:	**517069 Rev 1**
Engineering Firm Designation:	**POD Report Designation:**	**20-64395**
Site Data:	**250 Meriden Waterbury Turnpike, Southington, Hartford County, CT, 06489 Latitude 41° 33' 24.54" Longitude -72° 51' 10.84"**	
Structure Information:	**Tower Height & Type:**	**120 ft Self-Support**
	Mount Elevation:	**119 ft & 110 ft**
	Mount Type:	**2.5 ft Sidearm & 2.5' Side Arm**

Dear Darcy Tarr,

POD Group is pleased to submit this "Mount Analysis Report" to determine the structural integrity of AT&T's antenna mounting system with the proposed appurtenance and equipment addition on the abovementioned supporting tower structure. Analysis of the existing supporting tower structure is to be completed by others and therefore is not part of this analysis. Analysis of the antenna mounting system as a tie-off point for fall protection or rigging is not part of this document.

The purpose of the analysis is to determine acceptability of the mount stress level. Based on our analysis we have determined the mount stress level to be:

2.5 ft Sidearm @ 119 ft (Alpha)	**Sufficient***
2.5 ft Sidearm @ 119 ft (Beta& Gamma)	**Sufficient***
2.5 ft Sidearm @ 110 ft (Alpha)	**Sufficient***
2.5 ft Sidearm @ 110 ft (Beta & Gamma)	**Sufficient***

***The mount has sufficient capacity once the loading changes, as described in Section 4.1, 4.2, 4.3 & 4.4 Recommendations of this report, are completed.**

The analysis has been performed in accordance with the TIA-222-H Standard based upon an ultimate 3-second gust wind speed of 118 mph. Applicable Standard references and design criteria are listed in Section 2 - Analysis Criteria.

Mount structural analysis prepared by: Logan Traphagen

Respectfully submitted by:
Jason Cheronis, P.E.
Connecticut PE #: 0032793

5/22/2020

TABLE OF CONTENTS

1) INTRODUCTION

2) ANALYSIS CRITERIA

Table 1 – Proposed Equipment Configuration

3) ANALYSIS PROCEDURE

Table 2 – Documents Provided
3.1) Analysis Method
3.2) Assumptions

4) ANALYSIS RESULTS

Table 3 - Mount Component Stresses vs. Capacity (Alpha @ 119 ft)
Table 4 - Tieback End Reactions (Alpha @ 119 ft)
4.1) Recommendations (Alpha @ 119 ft)
Table 5 - Mount Component Stresses vs. Capacity (Beta & Gamma @ 119 ft)
Table 6 - Tieback End Reactions (Beta & Gamma @ 119 ft)
4.2) Recommendations (Beta & Gamma @ 119 ft)
Table 7 - Mount Component Stresses vs. Capacity (Alpha @ 110 ft)
Table 8 - Tieback End Reactions (Alpha @ 110 ft)
4.3) Recommendations (Alpha @ 110 ft)
Table 9 - Mount Component Stresses vs. Capacity (Beta & Gamma @ 110 ft)
Table 10 - Tieback End Reactions (Beta & Gamma @ 110 ft)
4.4) Recommendations (Beta & Gamma @ 110 ft)
Table 11 – AT&T Classification

5) DISCLAIMER OF WARRANTIES

6) APPENDIX A

Wire Frame and Rendered Models (Alpha @ 119 ft)

7) APPENDIX B

Software Input Calculations (Alpha @ 119 ft)

8) APPENDIX C

Software Analysis Output (Alpha @ 119 ft)

9) APPENDIX D

Wire Frame and Rendered Models (Beta & Gamma @ 119 ft)

10) APPENDIX E

Software Input Calculations (Beta & Gamma @ 119 ft)

11) APPENDIX F

Software Analysis Output (Beta & Gamma @ 119 ft)

12) APPENDIX G

Wire Frame and Rendered Models (Alpha @ 110 ft)

13) APPENDIX H

Software Input Calculations (Alpha @ 110 ft)

14) APPENDIX I
Software Analysis Output (Alpha @ 110 ft)

15) APPENDIX J
Additional Calculations (Alpha @ 110 ft)

16) APPENDIX K
Wire Frame and Rendered Models (Beta & Gamma @ 110 ft)

17) APPENDIX L
Software Input Calculations (Beta & Gamma @ 110 ft)

18) APPENDIX M
Software Analysis Output (Beta & Gamma @ 110 ft)

19) APPENDIX N
Additional Calculations (Beta & Gamma @ 110 ft)

20) APPENDIX O
Wind Speed Documentation

21) APPENDIX P
Mount Specifications and Parts

1) INTRODUCTION

The mounts are an existing 2.5 ft sidearm and proposed 2.5 ft sidearm manufactured by SitePro1 P/N: USF-2U with an 8'-0" P2 STD mount pipe connected with SitePro1 crossover P/N SCP10K. The existing mount is installed at the 119 ft elevation on (3) sector and the proposed mount is to be installed at 110 ft elevation on (3) sectors of the 120 ft self-support tower.

2) ANALYSIS CRITERIA

TIA-222 Revision:	TIA-222-H
Risk Category:	II
Ultimate Wind Speed:	118 mph
Exposure Category:	B
Topographic Factor at Base:	1.000
Topographic Factor at Mount:	1.000
Ice Thickness:	1.5 in
Wind Speed with Ice:	50 mph
Seismic S_s:	0.200
Seismic S_1:	0.055
Live Loading Wind Speed:	30 mph
Man Live Load at Mid/End-Points:	250 lb
Man Live Load at Mount Pipes:	500 lb

Table 1 - Proposed Equipment Configuration

Mount Centerline (ft)	Antenna Centerline (ft)	Number of Antennas	Antenna Manufacturer	Antenna Model	Mount / Modification Details	Note
119	120	3	CCI	TPA65R-BU8D_CCIV2	2.5 ft Sidearm	-
		1	Raycap	DC6-48-60-18-8C		
		3	Ericsson	RRUS 4449 B5/B12		
110	110	3	CCI	OPA-65R-LCUU-H6	2.5 ft Sidearm	
		1	Raycap	DC6-48-60-18-8C		
		3	Ericsson	RRUS 8843 B2/B66A		

3) ANALYSIS PROCEDURE

Table 2 - Documents Provided

Document	Remarks	Reference	Source
Crown Application	-	Crown Castle App ID: 517069 Rev 1 Dated: 4/27/2020	Crown
RFDS	-	AT&T Name: CTL01033 Dated: 3/30/2020	AT&T
Tower Mapping	-	GPD Group Project No: 2014723.21 Dated: 4/14/2014	Crown
Structural Analysis	-	PFJ & Company Project #: 37518-0484.003.8700 Dated: 4/2/2018	Crown
Levels Drawings	-	Crown Castle Sheet #: A1-119 Dated: 8/13/2019	Crown
Mount Specs	-	SitePro1 Part #: USF-2U Dated: 7/8/2017	SitePro1
Mount Specs	-	SitePro1 Part #: SCPxxK Dated: 2/18/2013	SitePro1
Mount Specs	-	SitePro1 Part #: PUCK Dated: 9/1/2010	SitePro1
Mount Specs	-	SitePro1 Part #: STK-U Dated: 2/18/2013	SitePro1
Previous Mount Analysis	-	POD Job #: 20-63612 Dated: 4/29/2020	POD

3.1) Analysis Method

RISA-3D (Version 17.0.4), a commercially available analysis software package, was used to create a three-dimensional model of the antenna mounting system and calculate member stresses for various loading cases. Selected output from the analysis are included in the Appendices.

A tool internally developed, using Microsoft Excel, by POD Group, was used to calculate wind loading on all appurtenances, dishes, and mount members for various load cases. Selected output from the calculations are included in Appendices B/E/H/L.

This analysis was performed in accordance with Crown Castle's ENG-SOW-10208 Tower Mount Analysis (Revision B). In addition, this analysis is in accordance with AT&T's mount technical directive.

3.2) Assumptions

1) The antenna mounting system was properly fabricated, installed and maintained in good condition in accordance with its original design and manufacturer's specifications.
2) The configuration of antennas, mounts, and other appurtenances are as specified in Table 1 and the referenced drawings.
3) All member connections are assumed to have been designed to meet or exceed the load carrying capacity of the connected member unless otherwise specified in this report.
4) The weight of the mount was increased 10% in the analysis to account for connections, coax, and jumpers.
5) Member sizes have been assumed from photos of the site and past experience with similar mounting systems. If the sizes assumed in this report differ from the actual member sizes, POD shall be contacted immediately and the results of the analysis shall be considered null and void.
6) All structural members shall be verified in accordance with AT&T Mount Technical Directive.
7) The analysis will be required to be revised if the existing conditions in the field differ from those shown in the above-referenced documents or assumed in this analysis. No allowance was made for any damaged, missing, or rusted members.
8) Standoff end connection assumed fixed
9) Steel grades have been assumed as follows, unless noted otherwise:
    a. Channel, Solid Round, Angle, Plate — ASTM A36 (GR 36)
    b. HSS (Rectangular) — ASTM 500 (GR B-46)
    c. Pipe — ASTM A53 (GR 35)
    d. Connection Bolts — ASTM A325

If any of these assumptions are not valid or have been made in error, this analysis may be affected, and POD should be allowed to review any new information to determine its effect on the structural integrity of the mount.

4) ANALYSIS RESULTS

Table 3 - Mount Component Stresses vs. Capacity (2.5 ft Standoff, Alpha @ 119ft)

Notes	Component	Critical Member	Centerline (ft)	% Capacity	Pass / Fail
1	Tieback	TIEBACK	119	66.7	Pass
-	Mount Pipe	MP ALPHA1		45.6	Pass
	Vertical	SO VERT1		23.9	Pass
	Connection	CONNECTION1		21.3	Pass
	Plate	SO PLATE1		15.0	Pass
	Standoff	SO1		14.3	Pass

Structure Rating (max from all components) =	66.7%

Notes:
1) Capacity based upon tieback connection data table

Table 4 - Tieback Connection Data Table (Alpha)

Tower Connection Node No.	Existing / Proposed	Resultant End Reaction (lb)	Connected Member Type	Connected Member Size	Member Compressive Capacity (lb)[2]	Notes
N37A	Proposed	1763	Leg	1-1/2	2645	1,2

Notes:
1) Tieback connection point is within 25% of either end of the connected tower member
2) Reduced member compressive capacity according to CED-STD-10294 *Standard for Installation of Mounts and Appurtenances*

4.1) Recommendations (Alpha @ 119 ft)

The mount has sufficient capacity to carry the proposed loading configuration. However, the mount can rotate horizontally about the tower leg and therefore was found to be unstable. In order for the results of the analysis to be considered valid, the loading modification listed below must be completed.

1. Installation of a tieback, (1) SitePro1 tieback (P/N: STK-U) replacing mount connection with (1) SitePro1 pipe connection (P/N: PUCK). Tieback must be installed to the front side arm vertical closest to the existing mount pipe attached at center of member and attached back to adjacent tower leg at same elevation tieback is connected to mount.

    - All critical measurements and manufacturer specifications for the above specified modification part shall be field verified prior to material ordering.
    - The contractor shall provide shop drawings to POD prior to material ordering and/or fabrication of the above specified modification part.
    - Any substitutes, additions, or alterations shall be approved by POD prior to material ordering and/or fabrication.

If any of these guidelines are not met, POD shall not be held liable.

Table 5 - Mount Component Stresses vs. Capacity (2.5 ft Standoff, Beta & Gamma @ 119ft)

Notes	Component	Critical Member	Centerline (ft)	% Capacity	Pass / Fail
1	Tieback	TIEBACK	119	63.3	Pass
-	Mount Pipe	MP ALPHA1		44.5	Pass
	Connection	CONNECTION1		25.5	Pass
	Vertical	SO VERT1		23.3	Pass
	Plate	PLATE1		15.9	Pass
	Standoff	SO1		15.2	Pass

Structure Rating (max from all components) =	63.3%

Notes:
1) Capacity based upon tieback connection data table

Table 6 - Tieback Connection Data Table (Beta & Gamma @ 119 ft)

Tower Connection Node No.	Existing / Proposed	Resultant End Reaction (lb)	Connected Member Type	Connected Member Size	Member Compressive Capacity (lb)[2]	Notes
N37A	Proposed	1674	Leg	1-1/2	2645	1,2

Notes:
1) Tieback connection point is within 25% of either end of the connected tower member
2) Reduced member compressive capacity according to CED-STD-10294 *Standard for Installation of Mounts and Appurtenances*

4.2) Recommendations (Beta & Gamma @ 119 ft)

The mount has sufficient capacity to carry the proposed loading configuration. However, the mount can rotate horizontally about the tower leg and therefore was found to be unstable. In order for the results of the analysis to be considered valid, the loading modification listed below must be completed.

1. Installation of tiebacks, (2) SitePro1 tieback (P/N: STK-U) replacing mount connection with (2) SitePro1 pipe connection (P/N: PUCK). Tieback must be installed to the front side arm vertical closest to the existing mount pipe attached at center of member and attached back to adjacent tower leg at same elevation tieback is connected to mount.

    - All critical measurements and manufacturer specifications for the above specified modification part shall be field verified prior to material ordering.
    - The contractor shall provide shop drawings to POD prior to material ordering and/or fabrication of the above specified modification part.
    - Any substitutes, additions, or alterations shall be approved by POD prior to material ordering and/or fabrication.

If any of these guidelines are not met, POD shall not be held liable.

Table 7 - Mount Component Stresses vs. Capacity (2.5 ft Sidearm, Alpha @ 110ft)

Notes	Component	Critical Member	Centerline (ft)	% Capacity	Pass / Fail
1	Tieback	TIEBACK	110	55.8	Pass
-	Vertical	SO VERT1		23.4	Pass
	Connection	CONNECTION2		15.9	Pass
	Standoff	SO1		13.0	Pass
	Mount Pipe	MP ALPHA1		8.0	Pass
	Plate	SO PLATE3		4.0	Pass
2	Bolts	-		6.4	Pass

Structure Rating (max from all components) =	55.8%

Notes:
1) Capacity based upon tieback connection data table
2) See additional documentation in “Appendix J – Additional Calculations” for calculations supporting the % capacity

Table 8 - Tieback Connection Data Table (Alpha @ 110 ft)

Tower Connection Node No.	Existing / Proposed	Resultant End Reaction (lb)	Connected Member Type	Connected Member Size	Member Compressive Capacity $(lb)^2$	Notes
N37A	Proposed	1476	Leg	1-1/2	2645	1,2

Notes:
1) Tieback connection point is within 25% of either end of the connected tower member
2) Reduced member compressive capacity according to CED-STD-10294 *Standard for Installation of Mounts and Appurtenances*

4.3) Recommendations (Alpha @ 110 ft)

The proposed SitePro1 mount (P/N: USF-2U) with 8’-0” P2 STD mount pipe mounted at center elevation of mount using SitePro1 crossover clamps (P/N: SCP10K), a SitePro1 Tieback (P/N: STK-U) replacing mount connection with SitePro1 connection (P/N: PUCK) is to be connected to center of mount front vertical and connected back to the adjacent tower leg at the same elevation it is connected to mount has sufficient capacity to carry the proposed loading configuration once the mount is installed properly.

Table 9 - Mount Component Stresses vs. Capacity (2.5 ft Sidearm, Beta & Gamma @ 110ft)

Notes	Component	Critical Member	Centerline (ft)	% Capacity	Pass / Fail
1	Tieback	TIEBACK	110	50.1	Pass
-	Vertical	SO VERT1		22.7	Pass
	Connection	CONNECTION2		15.5	Pass
	Standoff	SO1		12.6	Pass
	Mount Pipe	MP ALPHA1		6.6	Pass
	Plate	SO PLATE3		3.7	Pass
2	Bolts	-		6.9	Pass

Structure Rating (max from all components) =	50.1%

Notes:
1) Capacity based on tieback connection data table
2) See additional documentation in "Appendix N – Additional Calculations" for calculations supporting the % capacity

Table 10 - Tieback Connection Data Table (Beta & Gamma @ 110 ft)

Tower Connection Node No.	Existing / Proposed	Resultant End Reaction (lb)	Connected Member Type	Connected Member Size	Member Compressive Capacity (lb)[2]	Notes
N37A	Proposed	1324	Leg	1-1/2	2645	1,2

Notes:
1) Tieback connection point is within 25% of either end of the connected tower member
2) Reduced member compressive capacity according to CED-STD-10294 *Standard for Installation of Mounts and Appurtenances*

4.4) Recommendations (Beta & Gamma @ 110 ft)

The proposed SitePro1 mount (P/N: USF-2U) with 8'-0" P2 STD mount pipe mounted at center elevation of mount using SitePro1 crossover clamps (P/N: SCP10K), a SitePro1 Tieback (P/N: STK-U) replacing mount connection with SitePro1 connection (P/N: PUCK) is to be connected to center of mount front vertical and connected back to the adjacent tower leg at the same elevation it is connected to mount has sufficient capacity to carry the proposed loading configuration once the mount is installed properly.

Table 11 – AT&T Specification

Wind Speed (mph)	Ice Thickness (in)	Height (ft)	Exposure	Class	Topo	# of Pipes	Allowable EPA per Pipe (ft sq.)	Allowable Weight per Sector (lbs)
118	1.5	119	B	II	1	1	18.66	2800
118	1.5	110	B	II	1	1	15.83	3000

5) DISCLAIMER OF WARRANTIES

Power of Design has not performed a site visit to the structure to verify the member sizes or antenna/coax loading unless noted otherwise. If the existing conditions are not as represented in this report, we should be contacted immediately to evaluate the significance of the discrepancy. This is not a condition assessment of the structure or foundation. This report does not replace a full structure inspection. The structure, foundations, and mounting systems are assumed to have been properly fabricated, erected, maintained, in good condition, twist free, and plumb.

The engineering services rendered by POD in connection with this Structural Analysis are limited to a computer analysis of the structure and theoretical capacity of its main structural members. No allowance was made for any damaged, bent, missing, loose, or rusted members (above and below ground). No allowance was made for loose bolts or cracked welds.

POD does not analyze the fabrication of the structure (including welding). It is not possible to have all the very detailed information needed to perform a thorough analysis of every structural sub-component and connection of an existing structure. POD provides a limited scope of service in that we cannot verify the adequacy of every weld, plate connection detail, etc. The purpose of this report is to assess the feasibility of adding appurtenances usually accompanied by transmission lines to the structure.

It is the owner's responsibility to determine the amount of ice accumulation in excess of the code specified amount, if any, that should be considered in the structural analysis.

The attached sketches are a schematic representation of the analyzed structure. If any material is fabricated from these sketches, the contractor shall be responsible for field verifying the existing conditions, proper fit, and clearance in the field. Any mentions of structural modifications are reasonable estimates and should not be used as a precise construction document. Precise modification drawings are obtainable from POD, but are beyond the scope of this report.

POD makes no warranties, expressed and/or implied, in connection with this report and disclaims any liability arising from material, fabrication, and erection of this structure. POD will not be responsible whatsoever, for or on account of, consequential or incidental damages sustained by any person, firm, or organization as a result of any data or conclusions contained in this report. The maximum liability of POD pursuant to this report will be limited to the total fee received for preparation of this report.

APPENDIX A

Wire Frame and Rendered Models (Alpha @ 119 ft)

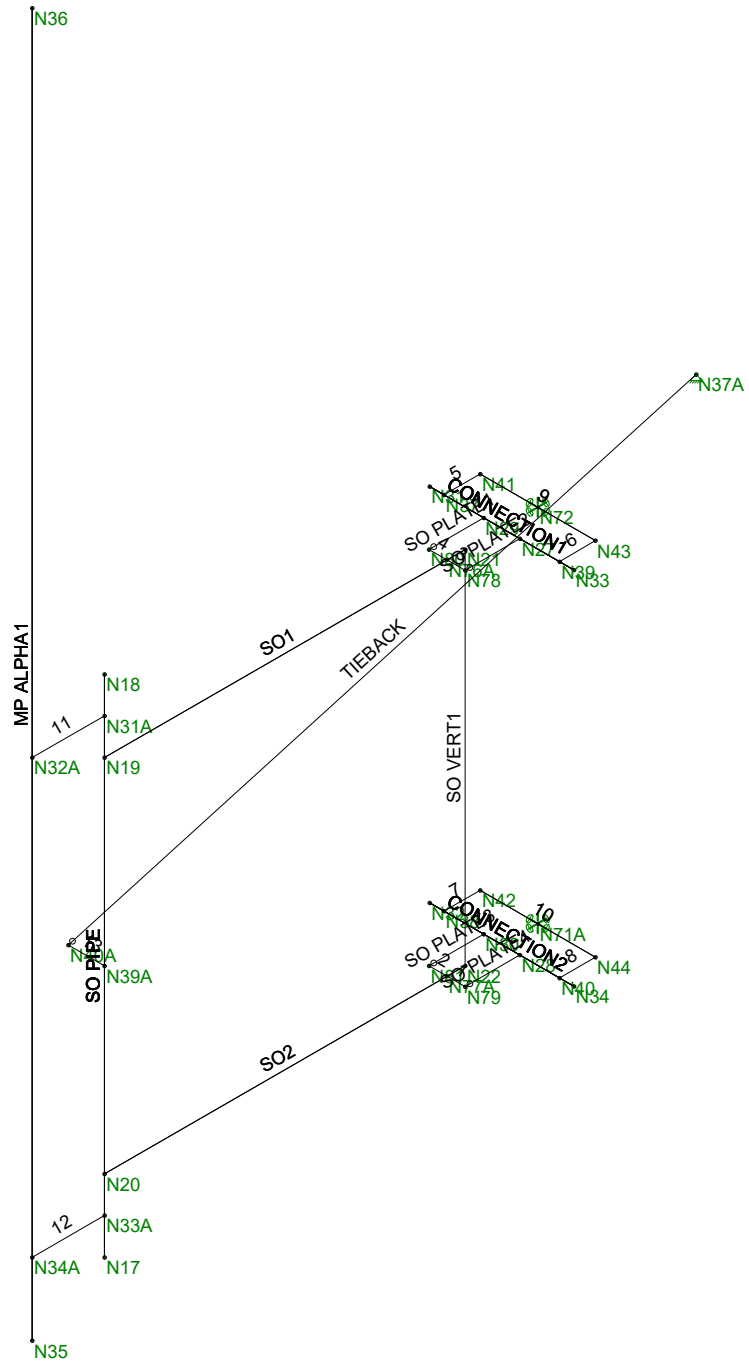

POD		
LT	841298	May 22, 2020 at 8:17 AM
20-64395		841298 119 ft Elevation Mount Alp...

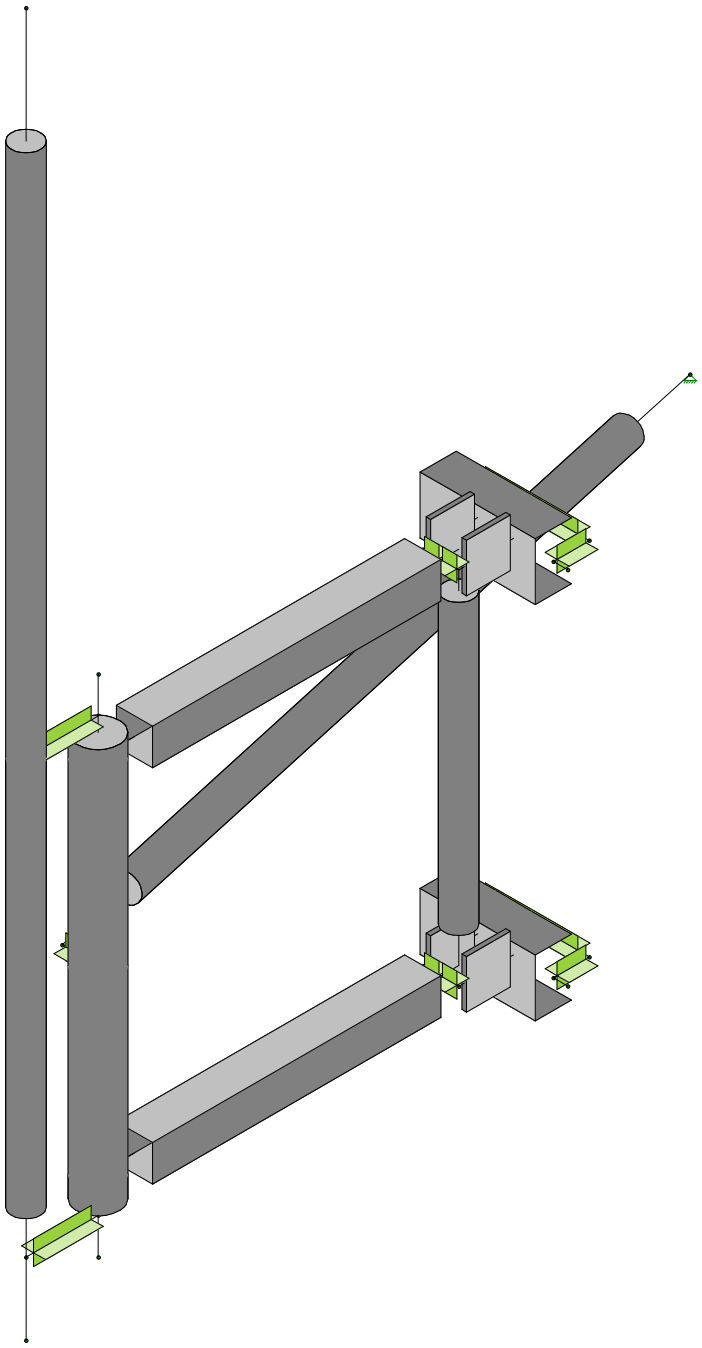

POD	841298	
LT		May 22, 2020 at 8:17 AM
20-64395		841298 119 ft Elevation Mount Alp...

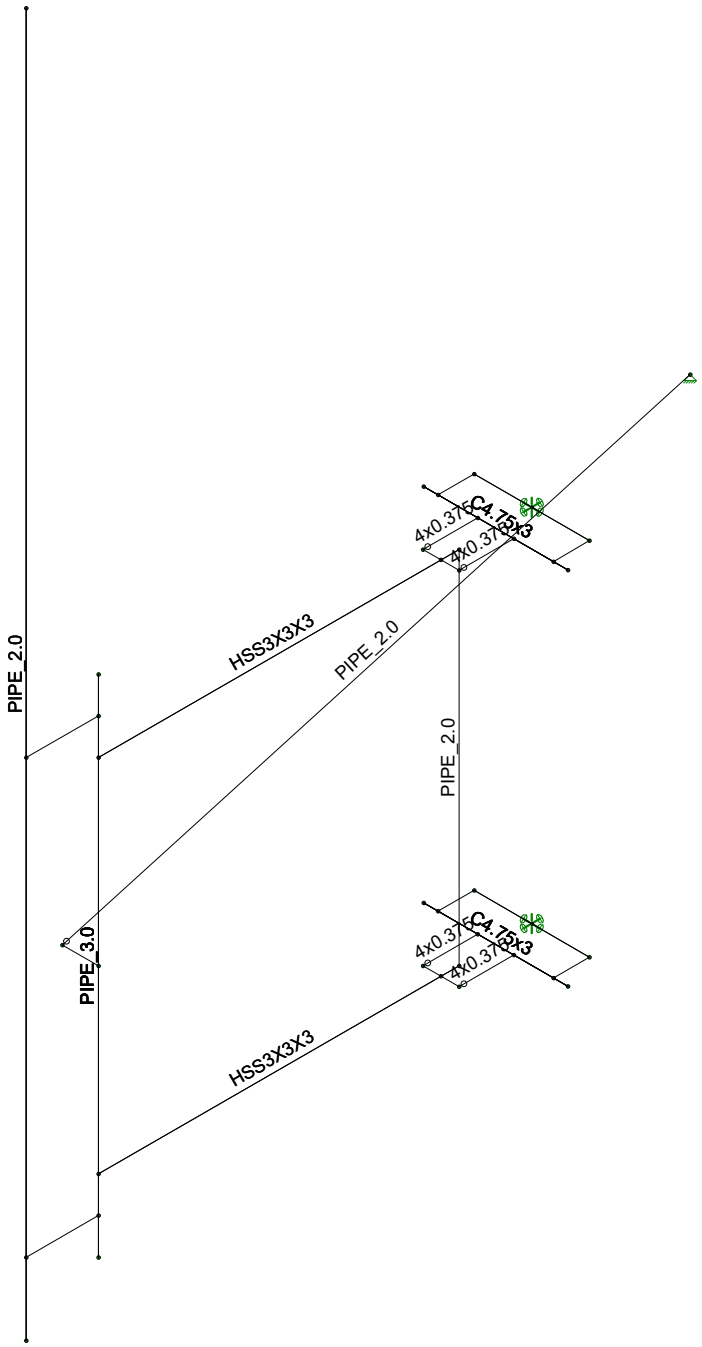

POD	841298	
LT		May 22, 2020 at 8:17 AM
20-64395		841298 119 ft Elevation Mount Alp...

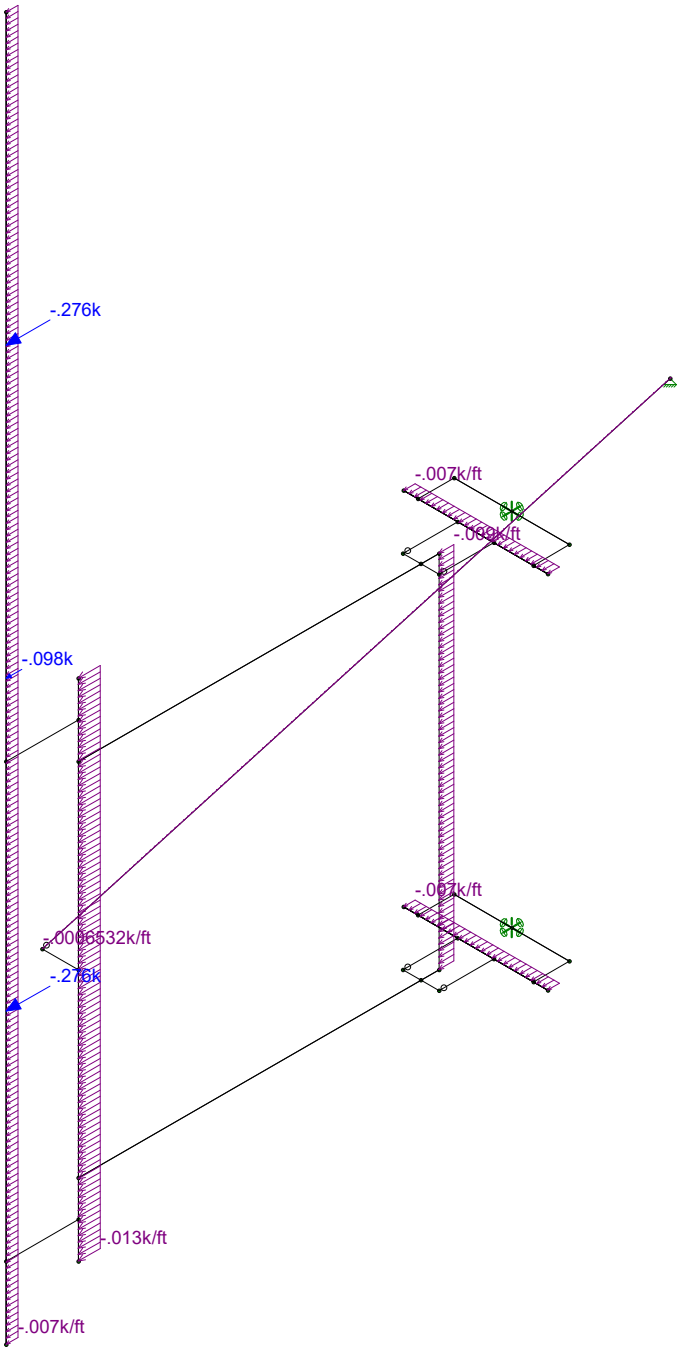

Loads: BLC 1, Wind Load (0)

POD	841298	
LT		May 22, 2020 at 8:17 AM
20-64395		841298 119 ft Elevation Mount Alp...

APPENDIX B

Software Input Calculations (Alpha @ 119 ft)

POD
POWER OF DESIGN

POD Job #	**20-64395**
Site Number	**841298**
Site Name	**SOUTHINGTON ROGUS**

General Site Information

Mount Type	MF	Risk Category	II	I (seismic)	1	
V (Wind Speed)	118	I(ice)	1	Sms	0.320	
Zs	343			Sm1	0.132	
ti	1.5	Ss	0.2	Sds	0.213	
Vi	50	S1	0.055	Sd1	0.088	
Kzt	1	Soil Site Class	D (assumed)	Seismic Design Category		
Exposure	B	Fa	1.600	B		
zg	1200	Fv	2.400	Seismic Analysis Not Required		
α	7			R	2	TIA-222-H 16.7
Kmin	0.7	Tower Type	Self Support	As	1	TIA-222-H 16.7
G_H	1	Tower Height	120	Cs, Min	0.03	TIA-222-H 2.7.7.1.1
Ke	0.99			Cs	0.10666667	TIA-222-H 2.7.7.1.1
K_D	0.95					
K_a	0.9					

Appurtenance Information

Model	Shielded	% Shielded	Centerline	Spacing (in)	# on MP 1	# on MP 2	# on MP 3	# on MP 4
TPA65R-BU8D_CCIV2			120	48	1			
DC6-48-60-18-8C			120		1			
RRUS 4449 B5/B12			120		1			

Mount Information

Elevation (ft)	119
K_z	1.04
Kiz	1.14
tiz	1.71

	Length (ft)	Width (in)	Centerline
Mount Pipes	8	2.375	120

Round Members

Member	Length (ft)	Width (in)	Frame Member	# of Members
SO VERT1	2.5	2.375	Yes	1
SO PIPE	3.5	3.5	Yes	1
TIEBACK	2.875	2.375	No	1

Flat Members

Member	Length (ft)	Width (in)	Shape	A	B	C	D	Frame Member	# of Members
SO	2.5	3	Square HSS	3	0.1875	3		Yes	2
PLATE	0.38	4	Channel		4		0.375	No	4
CHANNEL	1	4.75	Channel	3	4.75	0.25	0.25	No	2

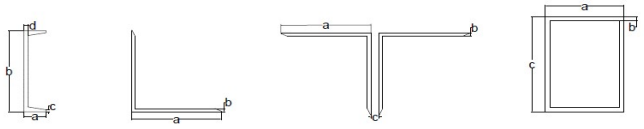

Version 2.2

Appurtenance Wind Calculations

Model	Height	Width	Depth	Weight (lbs)	Kz	qz (lb/ft$_2$)	$(EPA)_N$ (ft^2)	$(EPA)_T$(ft^2)	Wind Force (Kips) Front	Side	Alpha	Beta	Gamma
TPA65R-BU8D_CCIV2	96.0	20.7	7.7	87.1	1.04	34.82	16.08	7.31	0.560	0.255	0.560	0.331	0.331
DC6-48-60-18-8C	31.4	10.2	10.2	26.2	1.04	34.82	1.03	1.14	0.036	0.040	0.036	0.039	0.039
RRUS 4449 B5/B12	17.9	13.2	9.4	71.0	1.04	34.82	1.77	1.27	0.062	0.044	0.062	0.049	0.049

Appurtenance Ice Calculations

Model	tiz (in)	Height	Width	Depth	Weight (lbs)	Kiz	qz (lb/ft$_2$)	$(EPA)_N$ (ft^2)	$(EPA)_T$(ft^2)	Wind Force (Kips) Front	Side	Alpha	Beta	Gamma
TPA65R-BU8D_CCIV2	1.71	99.41	24.11	11.11	367.49	1.14	6.25	11.03	5.83	0.069	0.036	0.069	0.045	0.045
DC6-48-60-18-8C	1.71	34.82	13.65	13.65	103.64	1.14	6.25	2.08	2.08	0.013	0.013	0.013	0.013	0.013
RRUS 4449 B5/B12	1.71	21.31	16.60	12.85	75.18	1.14	6.25	1.55	1.20	0.010	0.008	0.010	0.008	0.008

Round Members

Member	q_z (lb/ft^2)	Wind Calculations Ar	C	Rrf	Cas	EPA (ft^2)	Load (k/ft)	Width (in)	Weight (k/ft)	Ice Calculations q_z (lb/ft^2)	Arice	Rrfice	Cas	EPA (ft^2)	Load (k/ft)
SO VERT1	34.74	0.49	23.65	0.85	1.68	0.63	0.009	5.79	0.01	6.24	1.21	1.19	1.68	2.16	0.005
SO PIPE	34.74	1.02	34.86	0.85	1.68	1.31	0.013	6.91	0.01	6.24	2.02	1.19	1.68	3.61	0.006
TIEBACK	34.74	0.57	23.65	0.85	1.20	0.52	0.003	5.79	0.01	6.24	1.39	1.19	1.20	1.78	0.002

Flat Members

Member	q_z (lb/ft^2)	Wind Calculations Af	Cas	EPA	Load (k/ft)	Width (in)	Weight (k/ft)	Ice Calculations q_z (lb/ft^2)	Arice	Rrfice	Cas	EPA	Load (k/ft)
SO	34.74	1.25	1.68	0.94	0.013	6.41	0.01	6.24	2.67	1.19	1.68	2.39	0.006
PLATE	34.74	0.51	1.20	0.14	0.006	7.41	0.01	6.24	0.94	1.19	1.68	0.42	0.003
CHANNEL	34.74	0.79	1.20	0.43	0.007	8.16	0.02	6.24	1.36	1.19	1.68	1.22	0.004

Appurtenance Seismic Calculations

Model	Weight	Sds	ρ	Cs	As	Ev	Eh
TPA65R-BU8D_CCIV2	87.1	0.213	1.000	0.107	1.000	0.004	0.009
DC6-48-60-18-8C	26.2	0.213	1.000	0.107	1.000	0.001	0.003
RRUS 4449 B5/B12	71.0	0.213	1.000	0.107	1.000	0.003	0.008

Version 2.1

APPENDIX C

Software Analysis Output (Alpha @ 119 ft)

Hot Rolled Steel Design Parameters

	Label	Shape	Lengt...	Lbyy[ft]	Lbzz[ft]	Lcomp top[ft]	Lcomp bot[ft]	L-tor...	Kyy	Kzz	Cb	Func...
1	TIEBACK	PIPE_2.0	5.741			Lbyy						Lateral
2	SO2	HSS3X3...	2.5			Lbyy						Lateral
3	SO1	HSS3X3...	2.5			Lbyy						Lateral
4	SO VERT1	PIPE_2.0	2.5	2.25	2.25	Lbyy						Lateral
5	SO PLATE4	4x0.375	.38			Lbyy						Lateral
6	SO PLATE3	4x0.375	.38			Lbyy						Lateral
7	SO PLATE2	4x0.375	.38			Lbyy						Lateral
8	SO PLATE1	4x0.375	.38			Lbyy						Lateral
9	SO PIPE	PIPE_3.0	3.5			Lbyy						Lateral
10	MP ALPHA1	PIPE_2.0	8			Lbyy						Lateral
11	CONNECTION2	C4.75x3	1			Lbyy						Lateral
12	CONNECTION1	C4.75x3	1			Lbyy						Lateral

Member Primary Data

	Label	I Joint	J Joint	K Joint	Rotat...	Section/Shape	Type	Design List	Material	Design Rules
1	TIEBACK	N40A	N37A			PIPE_2.0	Beam	Pipe	A53 Gr.B	Typical
2	SO2	N20	N22			HSS3X3X3	Beam	SquareTube	A500 Gr.B Rect	Typical
3	SO1	N19	N21			HSS3X3X3	Beam	SquareTube	A500 Gr.B Rect	Typical
4	SO VERT1	N21	N22			PIPE_2.0	Beam	Pipe	A53 Gr.B	Typical
5	SO PLATE4	N79	N28		90	4x0.375	Beam	RECT	A36 Gr.36	Typical
6	SO PLATE3	N81	N30		90	4x0.375	Beam	RECT	A36 Gr.36	Typical
7	SO PLATE2	N78	N27		90	4x0.375	Beam	RECT	A36 Gr.36	Typical
8	SO PLATE1	N80	N29		90	4x0.375	Beam	RECT	A36 Gr.36	Typical
9	SO PIPE	N17	N18			PIPE_3.0	Beam	Pipe	A53 Gr.B	Typical
10	MP ALPHA1	N35	N36			PIPE_2.0	Beam	Pipe	A53 Gr.B	Typical
11	CONNECTION2	N32	N34		270	C4.75x3	Beam	Channel	A36 Gr.36	Typical
12	CONNECTION1	N31	N33		270	C4.75x3	Beam	Channel	A36 Gr.36	Typical
13	13	N39A	N40A			RIGID	None	None	RIGID	Typical
14	12	N33A	N34A			RIGID	None	None	RIGID	Typical
15	11	N31A	N32A			RIGID	None	None	RIGID	Typical
16	10	N42	N44			RIGID	None	None	RIGID	Typical
17	9	N41	N43			RIGID	None	None	RIGID	Typical
18	8	N40	N44			RIGID	None	None	RIGID	Typical
19	7	N38	N42			RIGID	None	None	RIGID	Typical
20	6	N39	N43			RIGID	None	None	RIGID	Typical
21	5	N37	N41			RIGID	None	None	RIGID	Typical
22	4	N80	N76A			RIGID	None	None	RIGID	Typical
23	3	N78	N76A			RIGID	None	None	RIGID	Typical
24	2	N81	N77A			RIGID	None	None	RIGID	Typical
25	1	N79	N77A			RIGID	None	None	RIGID	Typical

Member Advanced Data

	Label	I Release	J Release	I Offset[in]	J Offset[in]	T/C Only	Physic...	Defl Ratio Op...	Analysis Offset[in]	Inactive	Seismi...
1	TIEBACK	BenPIN					Yes	Default			None
2	SO2						Yes				None
3	SO1						Yes				None
4	SO VERT1						Yes	Default			None
5	SO PLATE4	OOOOOX					Yes	Default			None

Member Advanced Data (Continued)

	Label	I Release	J Release	I Offset[in]	J Offset[in]	T/C Only	Physic...	Defl Ratio Op...	Analysis Offset[in]	Inactive	Seismi...
6	SO PLATE3	OOOOOX					Yes	Default			None
7	SO PLATE2	OOOOOX					Yes	Default			None
8	SO PLATE1	OOOOOX					Yes	Default			None
9	SO PIPE						Yes				None
10	MP ALPHA1						Yes				None
11	CONNECTIO...						Yes				None
12	CONNECTIO...						Yes				None
13	13						Yes	** NA **			None
14	12						Yes	** NA **			None
15	11						Yes	** NA **			None
16	10						Yes	** NA **			None
17	9						Yes	** NA **			None
18	8						Yes	** NA **			None
19	7						Yes	** NA **			None
20	6						Yes	** NA **			None
21	5						Yes	** NA **			None
22	4						Yes	** NA **			None
23	3						Yes	** NA **			None
24	2						Yes	** NA **			None
25	1						Yes	** NA **			None

Hot Rolled Steel Properties

	Label	E [ksi]	G [ksi]	Nu	Therm (/1...	Density[k/f...	Yield[ksi]	Ry	Fu[ksi]	Rt
1	A992	29000	11154	.3	.65	.49	50	1.1	65	1.1
2	A36 Gr.36	29000	11154	.3	.65	.49	36	1.5	58	1.2
3	A572 Gr.50	29000	11154	.3	.65	.49	50	1.1	65	1.1
4	A500 Gr.B RND	29000	11154	.3	.65	.527	42	1.4	58	1.3
5	A500 Gr.B Rect	29000	11154	.3	.65	.527	46	1.4	58	1.3
6	A53 Gr.B	29000	11154	.3	.65	.49	35	1.6	60	1.2
7	A1085	29000	11154	.3	.65	.49	50	1.4	65	1.3

Member Point Loads (BLC 1 : Wind Load (0))

	Member Label	Direction	Magnitude[k,k-ft]	Location[ft,%]
1	MP ALPHA1	Y	-.276	6
2	MP ALPHA1	Y	-.062	4
3	MP ALPHA1	Y	-.036	4
4	MP ALPHA1	Y	-.276	2

Member Point Loads (BLC 2 : Dead Load)

	Member Label	Direction	Magnitude[k,k-ft]	Location[ft,%]
1	MP ALPHA1	Z	-.044	6
2	MP ALPHA1	Z	-.071	4
3	MP ALPHA1	Z	-.026	4
4	MP ALPHA1	Z	-.044	2

Member Point Loads (BLC 3 : Live Load)

	Member Label	Direction	Magnitude[k,k-ft]	Location[ft,%]
1	SO1	Z	-.5	0

Member Point Loads (BLC 4 : Ice Wind Load (0))

	Member Label	Direction	Magnitude[k,k-ft]	Location[ft,%]
1	MP ALPHA1	Y	-.054	6
2	MP ALPHA1	Y	-.01	4
3	MP ALPHA1	Y	-.013	4
4	MP ALPHA1	Y	-.054	2

Member Point Loads (BLC 5 : Ice Dead Load)

	Member Label	Direction	Magnitude[k,k-ft]	Location[ft,%]
1	MP ALPHA1	Z	-.184	6
2	MP ALPHA1	Z	-.075	4
3	MP ALPHA1	Z	-.104	4
4	MP ALPHA1	Z	-.184	2

Member Point Loads (BLC 6 : Wind Load (30))

	Member Label	Direction	Magnitude[k,k-ft]	Location[ft,%]
1	MP ALPHA1	Y	-.202	6
2	MP ALPHA1	X	-.116	6
3	MP ALPHA1	Y	-.05	4
4	MP ALPHA1	X	-.029	4
5	MP ALPHA1	Y	-.032	4
6	MP ALPHA1	X	-.018	4
7	MP ALPHA1	Y	-.202	2
8	MP ALPHA1	X	-.116	2

Member Point Loads (BLC 7 : Ice Wind Load (30))

	Member Label	Direction	Magnitude[k,k-ft]	Location[ft,%]
1	MP ALPHA1	Y	-.04	6
2	MP ALPHA1	X	-.023	6
3	MP ALPHA1	Y	-.008	4
4	MP ALPHA1	X	-.005	4
5	MP ALPHA1	Y	-.011	4
6	MP ALPHA1	X	-.006	4
7	MP ALPHA1	Y	-.04	2
8	MP ALPHA1	X	-.023	2

Member Point Loads (BLC 8 : Wind Load (60))

	Member Label	Direction	Magnitude[k,k-ft]	Location[ft,%]
1	MP ALPHA1	Y	-.073	6
2	MP ALPHA1	X	-.127	6
3	MP ALPHA1	Y	-.024	4
4	MP ALPHA1	X	-.042	4
5	MP ALPHA1	Y	-.019	4
6	MP ALPHA1	X	-.034	4
7	MP ALPHA1	Y	-.073	2
8	MP ALPHA1	X	-.127	2

Member Point Loads (BLC 9 : Ice Wind Load (60))

	Member Label	Direction	Magnitude[k,k-ft]	Location[ft,%]
1	MP ALPHA1	Y	-.016	6
2	MP ALPHA1	X	-.028	6

Member Point Loads (BLC 9 : Ice Wind Load (60)) (Continued)

	Member Label	Direction	Magnitude[k,k-ft]	Location[ft,%]
3	MP ALPHA1	Y	-.004	4
4	MP ALPHA1	X	-.007	4
5	MP ALPHA1	Y	-.006	4
6	MP ALPHA1	X	-.011	4
7	MP ALPHA1	Y	-.016	2
8	MP ALPHA1	X	-.028	2

Member Point Loads (BLC 10 : Wind Load (90))

	Member Label	Direction	Magnitude[k,k-ft]	Location[ft,%]
1	MP ALPHA1	X	-.104	6
2	MP ALPHA1	X	-.044	4
3	MP ALPHA1	X	-.04	4
4	MP ALPHA1	X	-.104	2

Member Point Loads (BLC 11 : Ice Wind Load (90))

	Member Label	Direction	Magnitude[k,k-ft]	Location[ft,%]
1	MP ALPHA1	X	-.025	6
2	MP ALPHA1	X	-.008	4
3	MP ALPHA1	X	-.013	4
4	MP ALPHA1	X	-.025	2

Member Point Loads (BLC 12 : Wind Load (120))

	Member Label	Direction	Magnitude[k,k-ft]	Location[ft,%]
1	MP ALPHA1	Y	.073	6
2	MP ALPHA1	X	-.127	6
3	MP ALPHA1	Y	.024	4
4	MP ALPHA1	X	-.042	4
5	MP ALPHA1	Y	.019	4
6	MP ALPHA1	X	-.034	4
7	MP ALPHA1	Y	.073	2
8	MP ALPHA1	X	-.127	2

Member Point Loads (BLC 13 : Ice Wind Load (120))

	Member Label	Direction	Magnitude[k,k-ft]	Location[ft,%]
1	MP ALPHA1	Y	.016	6
2	MP ALPHA1	X	-.028	6
3	MP ALPHA1	Y	.004	4
4	MP ALPHA1	X	-.007	4
5	MP ALPHA1	Y	.006	4
6	MP ALPHA1	X	-.011	4
7	MP ALPHA1	Y	.016	2
8	MP ALPHA1	X	-.028	2

Member Point Loads (BLC 14 : Wind Load (150))

	Member Label	Direction	Magnitude[k,k-ft]	Location[ft,%]
1	MP ALPHA1	Y	.202	6
2	MP ALPHA1	X	-.116	6
3	MP ALPHA1	Y	.05	4
4	MP ALPHA1	X	-.029	4

Member Point Loads (BLC 14 : Wind Load (150)) (Continued)

	Member Label	Direction	Magnitude[k,k-ft]	Location[ft,%]
5	MP ALPHA1	Y	.032	4
6	MP ALPHA1	X	-.018	4
7	MP ALPHA1	Y	.202	2
8	MP ALPHA1	X	-.116	2

Member Point Loads (BLC 15 : Ice Wind Load (150))

	Member Label	Direction	Magnitude[k,k-ft]	Location[ft,%]
1	MP ALPHA1	Y	.04	6
2	MP ALPHA1	X	-.023	6
3	MP ALPHA1	Y	.008	4
4	MP ALPHA1	X	-.005	4
5	MP ALPHA1	Y	.011	4
6	MP ALPHA1	X	-.006	4
7	MP ALPHA1	Y	.04	2
8	MP ALPHA1	X	-.023	2

Member Point Loads (BLC 16 : Wind Load (180))

	Member Label	Direction	Magnitude[k,k-ft]	Location[ft,%]
1	MP ALPHA1	Y	.276	6
2	MP ALPHA1	Y	.062	4
3	MP ALPHA1	Y	.036	4
4	MP ALPHA1	Y	.276	2

Member Point Loads (BLC 17 : Ice Wind Load (180))

	Member Label	Direction	Magnitude[k,k-ft]	Location[ft,%]
1	MP ALPHA1	Y	.054	6
2	MP ALPHA1	Y	.01	4
3	MP ALPHA1	Y	.013	4
4	MP ALPHA1	Y	.054	2

Member Point Loads (BLC 18 : Wind Load (210))

	Member Label	Direction	Magnitude[k,k-ft]	Location[ft,%]
1	MP ALPHA1	Y	.202	6
2	MP ALPHA1	X	.116	6
3	MP ALPHA1	Y	.05	4
4	MP ALPHA1	X	.029	4
5	MP ALPHA1	Y	.032	4
6	MP ALPHA1	X	.018	4
7	MP ALPHA1	Y	.202	2
8	MP ALPHA1	X	.116	2

Member Point Loads (BLC 19 : Ice Wind Load (210))

	Member Label	Direction	Magnitude[k,k-ft]	Location[ft,%]
1	MP ALPHA1	Y	.04	6
2	MP ALPHA1	X	.023	6
3	MP ALPHA1	Y	.008	4
4	MP ALPHA1	X	.005	4
5	MP ALPHA1	Y	.011	4
6	MP ALPHA1	X	.006	4

Member Point Loads (BLC 19 : Ice Wind Load (210)) (Continued)

	Member Label	Direction	Magnitude[k,k-ft]	Location[ft,%]
7	MP ALPHA1	Y	.04	2
8	MP ALPHA1	X	.023	2

Member Point Loads (BLC 20 : Wind Load (240))

	Member Label	Direction	Magnitude[k,k-ft]	Location[ft,%]
1	MP ALPHA1	Y	.073	6
2	MP ALPHA1	X	.127	6
3	MP ALPHA1	Y	.024	4
4	MP ALPHA1	X	.042	4
5	MP ALPHA1	Y	.019	4
6	MP ALPHA1	X	.034	4
7	MP ALPHA1	Y	.073	2
8	MP ALPHA1	X	.127	2

Member Point Loads (BLC 21 : Ice Wind Load (240))

	Member Label	Direction	Magnitude[k,k-ft]	Location[ft,%]
1	MP ALPHA1	Y	.016	6
2	MP ALPHA1	X	.028	6
3	MP ALPHA1	Y	.004	4
4	MP ALPHA1	X	.007	4
5	MP ALPHA1	Y	.006	4
6	MP ALPHA1	X	.011	4
7	MP ALPHA1	Y	.016	2
8	MP ALPHA1	X	.028	2

Member Point Loads (BLC 22 : Wind Load (270))

	Member Label	Direction	Magnitude[k,k-ft]	Location[ft,%]
1	MP ALPHA1	X	.104	6
2	MP ALPHA1	X	.044	4
3	MP ALPHA1	X	.04	4
4	MP ALPHA1	X	.104	2

Member Point Loads (BLC 23 : Ice Wind Load (270))

	Member Label	Direction	Magnitude[k,k-ft]	Location[ft,%]
1	MP ALPHA1	X	.025	6
2	MP ALPHA1	X	.008	4
3	MP ALPHA1	X	.013	4
4	MP ALPHA1	X	.025	2

Member Point Loads (BLC 24 : Wind Load (300))

	Member Label	Direction	Magnitude[k,k-ft]	Location[ft,%]
1	MP ALPHA1	Y	-.073	6
2	MP ALPHA1	X	.127	6
3	MP ALPHA1	Y	-.024	4
4	MP ALPHA1	X	.042	4
5	MP ALPHA1	Y	-.019	4
6	MP ALPHA1	X	.034	4
7	MP ALPHA1	Y	-.073	2
8	MP ALPHA1	X	.127	2

Member Point Loads (BLC 25 : Ice Wind Load (300))

	Member Label	Direction	Magnitude[k,k-ft]	Location[ft,%]
1	MP ALPHA1	Y	-.016	6
2	MP ALPHA1	X	.028	6
3	MP ALPHA1	Y	-.004	4
4	MP ALPHA1	X	.007	4
5	MP ALPHA1	Y	-.006	4
6	MP ALPHA1	X	.011	4
7	MP ALPHA1	Y	-.016	2
8	MP ALPHA1	X	.028	2

Member Point Loads (BLC 26 : Wind Load (330))

	Member Label	Direction	Magnitude[k,k-ft]	Location[ft,%]
1	MP ALPHA1	Y	-.202	6
2	MP ALPHA1	X	.116	6
3	MP ALPHA1	Y	-.05	4
4	MP ALPHA1	X	.029	4
5	MP ALPHA1	Y	-.032	4
6	MP ALPHA1	X	.018	4
7	MP ALPHA1	Y	-.202	2
8	MP ALPHA1	X	.116	2

Member Point Loads (BLC 27 : Ice Wind Load (330))

	Member Label	Direction	Magnitude[k,k-ft]	Location[ft,%]
1	MP ALPHA1	Y	-.04	6
2	MP ALPHA1	X	.023	6
3	MP ALPHA1	Y	-.008	4
4	MP ALPHA1	X	.005	4
5	MP ALPHA1	Y	-.011	4
6	MP ALPHA1	X	.006	4
7	MP ALPHA1	Y	-.04	2
8	MP ALPHA1	X	.023	2

Member Point Loads (BLC 28 : Maintanence (0))

	Member Label	Direction	Magnitude[k,k-ft]	Location[ft,%]
1	MP ALPHA1	Y	-.018	6
2	MP ALPHA1	Y	-.004	4
3	MP ALPHA1	Y	-.002	4
4	MP ALPHA1	Y	-.018	2

Member Point Loads (BLC 29 : Maintanence (30))

	Member Label	Direction	Magnitude[k,k-ft]	Location[ft,%]
1	MP ALPHA1	Y	-.013	6
2	MP ALPHA1	X	-.008	6
3	MP ALPHA1	Y	-.003	4
4	MP ALPHA1	X	-.002	4
5	MP ALPHA1	Y	-.002	4
6	MP ALPHA1	X	-.001	4
7	MP ALPHA1	Y	-.013	2
8	MP ALPHA1	X	-.008	2

Member Point Loads (BLC 30 : Maintanence (60))

	Member Label	Direction	Magnitude[k,k-ft]	Location[ft,%]
1	MP ALPHA1	Y	-.005	6
2	MP ALPHA1	X	-.008	6
3	MP ALPHA1	Y	-.002	4
4	MP ALPHA1	X	-.003	4
5	MP ALPHA1	Y	-.001	4
6	MP ALPHA1	X	-.002	4
7	MP ALPHA1	Y	-.005	2
8	MP ALPHA1	X	-.008	2

Member Point Loads (BLC 31 : Maintanence (90))

	Member Label	Direction	Magnitude[k,k-ft]	Location[ft,%]
1	MP ALPHA1	X	-.007	6
2	MP ALPHA1	X	-.003	4
3	MP ALPHA1	X	-.003	4
4	MP ALPHA1	X	-.007	2

Member Point Loads (BLC 32 : Maintanence (120))

	Member Label	Direction	Magnitude[k,k-ft]	Location[ft,%]
1	MP ALPHA1	Y	.005	6
2	MP ALPHA1	X	-.008	6
3	MP ALPHA1	Y	.002	4
4	MP ALPHA1	X	-.003	4
5	MP ALPHA1	Y	.001	4
6	MP ALPHA1	X	-.002	4
7	MP ALPHA1	Y	.005	2
8	MP ALPHA1	X	-.008	2

Member Point Loads (BLC 33 : Maintanence (150))

	Member Label	Direction	Magnitude[k,k-ft]	Location[ft,%]
1	MP ALPHA1	Y	.013	6
2	MP ALPHA1	X	-.008	6
3	MP ALPHA1	Y	.003	4
4	MP ALPHA1	X	-.002	4
5	MP ALPHA1	Y	.002	4
6	MP ALPHA1	X	-.001	4
7	MP ALPHA1	Y	.013	2
8	MP ALPHA1	X	-.008	2

Member Point Loads (BLC 34 : Maintanence (180))

	Member Label	Direction	Magnitude[k,k-ft]	Location[ft,%]
1	MP ALPHA1	Y	.018	6
2	MP ALPHA1	Y	.004	4
3	MP ALPHA1	Y	.002	4
4	MP ALPHA1	Y	.018	2

Member Point Loads (BLC 35 : Maintanence (210))

	Member Label	Direction	Magnitude[k,k-ft]	Location[ft,%]
1	MP ALPHA1	Y	.013	6
2	MP ALPHA1	X	.008	6

Member Point Loads (BLC 35 : Maintanence (210)) (Continued)

	Member Label	Direction	Magnitude[k,k-ft]	Location[ft,%]
3	MP ALPHA1	Y	.003	4
4	MP ALPHA1	X	.002	4
5	MP ALPHA1	Y	.002	4
6	MP ALPHA1	X	.001	4
7	MP ALPHA1	Y	.013	2
8	MP ALPHA1	X	.008	2

Member Point Loads (BLC 36 : Maintanence (240))

	Member Label	Direction	Magnitude[k,k-ft]	Location[ft,%]
1	MP ALPHA1	Y	.005	6
2	MP ALPHA1	X	.008	6
3	MP ALPHA1	Y	.002	4
4	MP ALPHA1	X	.003	4
5	MP ALPHA1	Y	.001	4
6	MP ALPHA1	X	.002	4
7	MP ALPHA1	Y	.005	2
8	MP ALPHA1	X	.008	2

Member Point Loads (BLC 37 : Maintanence (270))

	Member Label	Direction	Magnitude[k,k-ft]	Location[ft,%]
1	MP ALPHA1	X	.007	6
2	MP ALPHA1	X	.003	4
3	MP ALPHA1	X	.003	4
4	MP ALPHA1	X	.007	2

Member Point Loads (BLC 38 : Maintanence (300))

	Member Label	Direction	Magnitude[k,k-ft]	Location[ft,%]
1	MP ALPHA1	Y	-.005	6
2	MP ALPHA1	X	.008	6
3	MP ALPHA1	Y	-.002	4
4	MP ALPHA1	X	.003	4
5	MP ALPHA1	Y	-.001	4
6	MP ALPHA1	X	.002	4
7	MP ALPHA1	Y	-.005	2
8	MP ALPHA1	X	.008	2

Member Point Loads (BLC 39 : Maintanence (330))

	Member Label	Direction	Magnitude[k,k-ft]	Location[ft,%]
1	MP ALPHA1	Y	-.013	6
2	MP ALPHA1	X	.008	6
3	MP ALPHA1	Y	-.003	4
4	MP ALPHA1	X	.002	4
5	MP ALPHA1	Y	-.002	4
6	MP ALPHA1	X	.001	4
7	MP ALPHA1	Y	-.013	2
8	MP ALPHA1	X	.008	2

Member Distributed Loads (BLC 1 : Wind Load (0))

	Member Label	Direction	Start Magnitude[k/ft,F,ksf]	End Magnitude[k/ft,F,ksf]	Start Location[ft,...	End Location[ft,...
1	TIEBACK	PY	-.003	-.003	0	0
2	SO2	PY	-.013	-.013	0	0
3	SO1	PY	-.013	-.013	0	0
4	SO VERT1	PY	-.009	-.009	0	0
5	SO PLATE4	PY	-.006	-.006	0	0
6	SO PLATE3	PY	-.006	-.006	0	0
7	SO PLATE2	PY	-.006	-.006	0	0
8	SO PLATE1	PY	-.006	-.006	0	0
9	SO PIPE	PY	-.013	-.013	0	0
10	MP ALPHA1	PY	-.007	-.007	0	0
11	CONNECTION2	PY	-.007	-.007	0	0
12	CONNECTION1	PY	-.007	-.007	0	0

Member Distributed Loads (BLC 4 : Ice Wind Load (0))

	Member Label	Direction	Start Magnitude[k/ft,F,ksf]	End Magnitude[k/ft,F,ksf]	Start Location[ft,...	End Location[ft,...
1	TIEBACK	PY	-.002	-.002	0	0
2	SO2	PY	-.006	-.006	0	0
3	SO1	PY	-.006	-.006	0	0
4	SO VERT1	PY	-.005	-.005	0	0
5	SO PLATE4	PY	-.003	-.003	0	0
6	SO PLATE3	PY	-.003	-.003	0	0
7	SO PLATE2	PY	-.003	-.003	0	0
8	SO PLATE1	PY	-.003	-.003	0	0
9	SO PIPE	PY	-.006	-.006	0	0
10	MP ALPHA1	PY	-.003	-.003	0	0
11	CONNECTION2	PY	-.004	-.004	0	0
12	CONNECTION1	PY	-.004	-.004	0	0

Member Distributed Loads (BLC 5 : Ice Dead Load)

	Member Label	Direction	Start Magnitude[k/ft,F,ksf]	End Magnitude[k/ft,F,ksf]	Start Location[ft,...	End Location[ft,...
1	TIEBACK	Z	-.009	-.009	0	0
2	SO2	Z	-.012	-.012	0	0
3	SO1	Z	-.012	-.012	0	0
4	SO VERT1	Z	-.009	-.009	0	0
5	SO PLATE4	Z	-.01	-.01	0	0
6	SO PLATE3	Z	-.01	-.01	0	0
7	SO PLATE2	Z	-.01	-.01	0	0
8	SO PLATE1	Z	-.01	-.01	0	0
9	SO PIPE	Z	-.011	-.011	0	0
10	MP ALPHA1	Z	-.009	-.009	0	0
11	CONNECTION2	Z	-.019	-.019	0	0
12	CONNECTION1	Z	-.019	-.019	0	0

Member Distributed Loads (BLC 6 : Wind Load (30))

	Member Label	Direction	Start Magnitude[k/ft,F,ksf]	End Magnitude[k/ft,F,ksf]	Start Location[ft,...	End Location[ft,...
1	TIEBACK	PY	-.003	-.003	0	0
2	SO2	PY	-.011	-.011	0	0
3	SO1	PY	-.011	-.011	0	0
4	SO VERT1	PY	-.008	-.008	0	0

Member Distributed Loads (BLC 6 : Wind Load (30)) (Continued)

	Member Label	Direction	Start Magnitude[k/ft,F,ksf]	End Magnitude[k/ft,F,ksf]	Start Location[ft,...	End Location[ft,...
5	SO PLATE4	PY	-.005	-.005	0	0
6	SO PLATE3	PY	-.005	-.005	0	0
7	SO PLATE2	PY	-.005	-.005	0	0
8	SO PLATE1	PY	-.005	-.005	0	0
9	SO PIPE	PY	-.011	-.011	0	0
10	MP ALPHA1	PY	-.006	-.006	0	0
11	CONNECTION2	PY	-.006	-.006	0	0
12	CONNECTION1	PY	-.006	-.006	0	0
13	TIEBACK	PX	-.002	-.002	0	0
14	SO2	PX	-.006	-.006	0	0
15	SO1	PX	-.006	-.006	0	0
16	SO VERT1	PX	-.004	-.004	0	0
17	SO PLATE4	PX	-.003	-.003	0	0
18	SO PLATE3	PX	-.003	-.003	0	0
19	SO PLATE2	PX	-.003	-.003	0	0
20	SO PLATE1	PX	-.003	-.003	0	0
21	SO PIPE	PX	-.006	-.006	0	0
22	MP ALPHA1	PX	-.004	-.004	0	0
23	CONNECTION2	PX	-.004	-.004	0	0
24	CONNECTION1	PX	-.004	-.004	0	0

Member Distributed Loads (BLC 7 : Ice Wind Load (30))

	Member Label	Direction	Start Magnitude[k/ft,F,ksf]	End Magnitude[k/ft,F,ksf]	Start Location[ft,...	End Location[ft,...
1	TIEBACK	PY	-.002	-.002	0	0
2	SO2	PY	-.005	-.005	0	0
3	SO1	PY	-.005	-.005	0	0
4	SO VERT1	PY	-.004	-.004	0	0
5	SO PLATE4	PY	-.003	-.003	0	0
6	SO PLATE3	PY	-.003	-.003	0	0
7	SO PLATE2	PY	-.003	-.003	0	0
8	SO PLATE1	PY	-.003	-.003	0	0
9	SO PIPE	PY	-.005	-.005	0	0
10	MP ALPHA1	PY	-.003	-.003	0	0
11	CONNECTION2	PY	-.003	-.003	0	0
12	CONNECTION1	PY	-.003	-.003	0	0
13	TIEBACK	PX	-.001	-.001	0	0
14	SO2	PX	-.003	-.003	0	0
15	SO1	PX	-.003	-.003	0	0
16	SO VERT1	PX	-.003	-.003	0	0
17	SO PLATE4	PX	-.002	-.002	0	0
18	SO PLATE3	PX	-.002	-.002	0	0
19	SO PLATE2	PX	-.002	-.002	0	0
20	SO PLATE1	PX	-.002	-.002	0	0
21	SO PIPE	PX	-.003	-.003	0	0
22	MP ALPHA1	PX	-.002	-.002	0	0
23	CONNECTION2	PX	-.002	-.002	0	0
24	CONNECTION1	PX	-.002	-.002	0	0

Member Distributed Loads (BLC 8 : Wind Load (60))

	Member Label	Direction	Start Magnitude[k/ft,F,ksf]	End Magnitude[k/ft,F,ksf]	Start Location[ft,...	End Location[ft,...
1	TIEBACK	PY	-.002	-.002	0	0

Member Distributed Loads (BLC 8 : Wind Load (60)) (Continued)

	Member Label	Direction	Start Magnitude[k/ft,F,ksf]	End Magnitude[k/ft,F,ksf]	Start Location[ft,...	End Location[ft,...
2	SO2	PY	-.006	-.006	0	0
3	SO1	PY	-.006	-.006	0	0
4	SO VERT1	PY	-.004	-.004	0	0
5	SO PLATE4	PY	-.003	-.003	0	0
6	SO PLATE3	PY	-.003	-.003	0	0
7	SO PLATE2	PY	-.003	-.003	0	0
8	SO PLATE1	PY	-.003	-.003	0	0
9	SO PIPE	PY	-.006	-.006	0	0
10	MP ALPHA1	PY	-.004	-.004	0	0
11	CONNECTION2	PY	-.004	-.004	0	0
12	CONNECTION1	PY	-.004	-.004	0	0
13	TIEBACK	PX	-.003	-.003	0	0
14	SO2	PX	-.011	-.011	0	0
15	SO1	PX	-.011	-.011	0	0
16	SO VERT1	PX	-.008	-.008	0	0
17	SO PLATE4	PX	-.005	-.005	0	0
18	SO PLATE3	PX	-.005	-.005	0	0
19	SO PLATE2	PX	-.005	-.005	0	0
20	SO PLATE1	PX	-.005	-.005	0	0
21	SO PIPE	PX	-.011	-.011	0	0
22	MP ALPHA1	PX	-.006	-.006	0	0
23	CONNECTION2	PX	-.006	-.006	0	0
24	CONNECTION1	PX	-.006	-.006	0	0

Member Distributed Loads (BLC 9 : Ice Wind Load (60))

	Member Label	Direction	Start Magnitude[k/ft,F,ksf]	End Magnitude[k/ft,F,ksf]	Start Location[ft,...	End Location[ft,...
1	TIEBACK	PY	-.001	-.001	0	0
2	SO2	PY	-.003	-.003	0	0
3	SO1	PY	-.003	-.003	0	0
4	SO VERT1	PY	-.003	-.003	0	0
5	SO PLATE4	PY	-.002	-.002	0	0
6	SO PLATE3	PY	-.002	-.002	0	0
7	SO PLATE2	PY	-.002	-.002	0	0
8	SO PLATE1	PY	-.002	-.002	0	0
9	SO PIPE	PY	-.003	-.003	0	0
10	MP ALPHA1	PY	-.002	-.002	0	0
11	CONNECTION2	PY	-.002	-.002	0	0
12	CONNECTION1	PY	-.002	-.002	0	0
13	TIEBACK	PX	-.002	-.002	0	0
14	SO2	PX	-.005	-.005	0	0
15	SO1	PX	-.005	-.005	0	0
16	SO VERT1	PX	-.004	-.004	0	0
17	SO PLATE4	PX	-.003	-.003	0	0
18	SO PLATE3	PX	-.003	-.003	0	0
19	SO PLATE2	PX	-.003	-.003	0	0
20	SO PLATE1	PX	-.003	-.003	0	0
21	SO PIPE	PX	-.005	-.005	0	0
22	MP ALPHA1	PX	-.003	-.003	0	0
23	CONNECTION2	PX	-.003	-.003	0	0
24	CONNECTION1	PX	-.003	-.003	0	0

Member Distributed Loads (BLC 10 : Wind Load (90))

	Member Label	Direction	Start Magnitude[k/ft,F,ksf]	End Magnitude[k/ft,F,ksf]	Start Location[ft,...	End Location[ft,...
1	TIEBACK	PX	-.003	-.003	0	0
2	SO2	PX	-.013	-.013	0	0
3	SO1	PX	-.013	-.013	0	0
4	SO VERT1	PX	-.009	-.009	0	0
5	SO PLATE4	PX	-.006	-.006	0	0
6	SO PLATE3	PX	-.006	-.006	0	0
7	SO PLATE2	PX	-.006	-.006	0	0
8	SO PLATE1	PX	-.006	-.006	0	0
9	SO PIPE	PX	-.013	-.013	0	0
10	MP ALPHA1	PX	-.007	-.007	0	0
11	CONNECTION2	PX	-.007	-.007	0	0
12	CONNECTION1	PX	-.007	-.007	0	0

Member Distributed Loads (BLC 11 : Ice Wind Load (90))

	Member Label	Direction	Start Magnitude[k/ft,F,ksf]	End Magnitude[k/ft,F,ksf]	Start Location[ft,...	End Location[ft,...
1	TIEBACK	PX	-.002	-.002	0	0
2	SO2	PX	-.006	-.006	0	0
3	SO1	PX	-.006	-.006	0	0
4	SO VERT1	PX	-.005	-.005	0	0
5	SO PLATE4	PX	-.003	-.003	0	0
6	SO PLATE3	PX	-.003	-.003	0	0
7	SO PLATE2	PX	-.003	-.003	0	0
8	SO PLATE1	PX	-.003	-.003	0	0
9	SO PIPE	PX	-.006	-.006	0	0
10	MP ALPHA1	PX	-.003	-.003	0	0
11	CONNECTION2	PX	-.004	-.004	0	0
12	CONNECTION1	PX	-.004	-.004	0	0

Member Distributed Loads (BLC 12 : Wind Load (120))

	Member Label	Direction	Start Magnitude[k/ft,F,ksf]	End Magnitude[k/ft,F,ksf]	Start Location[ft,...	End Location[ft,...
1	TIEBACK	PY	.002	.002	0	0
2	SO2	PY	.006	.006	0	0
3	SO1	PY	.006	.006	0	0
4	SO VERT1	PY	.004	.004	0	0
5	SO PLATE4	PY	.003	.003	0	0
6	SO PLATE3	PY	.003	.003	0	0
7	SO PLATE2	PY	.003	.003	0	0
8	SO PLATE1	PY	.003	.003	0	0
9	SO PIPE	PY	.006	.006	0	0
10	MP ALPHA1	PY	.004	.004	0	0
11	CONNECTION2	PY	.004	.004	0	0
12	CONNECTION1	PY	.004	.004	0	0
13	TIEBACK	PX	-.003	-.003	0	0
14	SO2	PX	-.011	-.011	0	0
15	SO1	PX	-.011	-.011	0	0
16	SO VERT1	PX	-.008	-.008	0	0
17	SO PLATE4	PX	-.005	-.005	0	0
18	SO PLATE3	PX	-.005	-.005	0	0
19	SO PLATE2	PX	-.005	-.005	0	0
20	SO PLATE1	PX	-.005	-.005	0	0
21	SO PIPE	PX	-.011	-.011	0	0

Member Distributed Loads (BLC 12 : Wind Load (120)) (Continued)

	Member Label	Direction	Start Magnitude[k/ft,F,ksf]	End Magnitude[k/ft,F,ksf]	Start Location[ft,...	End Location[ft,...
22	MP ALPHA1	PX	-.006	-.006	0	0
23	CONNECTION2	PX	-.006	-.006	0	0
24	CONNECTION1	PX	-.006	-.006	0	0

Member Distributed Loads (BLC 13 : Ice Wind Load (120))

	Member Label	Direction	Start Magnitude[k/ft,F,ksf]	End Magnitude[k/ft,F,ksf]	Start Location[ft,...	End Location[ft,...
1	TIEBACK	PY	.001	.001	0	0
2	SO2	PY	.003	.003	0	0
3	SO1	PY	.003	.003	0	0
4	SO VERT1	PY	.003	.003	0	0
5	SO PLATE4	PY	.002	.002	0	0
6	SO PLATE3	PY	.002	.002	0	0
7	SO PLATE2	PY	.002	.002	0	0
8	SO PLATE1	PY	.002	.002	0	0
9	SO PIPE	PY	.003	.003	0	0
10	MP ALPHA1	PY	.002	.002	0	0
11	CONNECTION2	PY	.002	.002	0	0
12	CONNECTION1	PY	.002	.002	0	0
13	TIEBACK	PX	-.002	-.002	0	0
14	SO2	PX	-.005	-.005	0	0
15	SO1	PX	-.005	-.005	0	0
16	SO VERT1	PX	-.004	-.004	0	0
17	SO PLATE4	PX	-.003	-.003	0	0
18	SO PLATE3	PX	-.003	-.003	0	0
19	SO PLATE2	PX	-.003	-.003	0	0
20	SO PLATE1	PX	-.003	-.003	0	0
21	SO PIPE	PX	-.005	-.005	0	0
22	MP ALPHA1	PX	-.003	-.003	0	0
23	CONNECTION2	PX	-.003	-.003	0	0
24	CONNECTION1	PX	-.003	-.003	0	0

Member Distributed Loads (BLC 14 : Wind Load (150))

	Member Label	Direction	Start Magnitude[k/ft,F,ksf]	End Magnitude[k/ft,F,ksf]	Start Location[ft,...	End Location[ft,...
1	TIEBACK	PY	.003	.003	0	0
2	SO2	PY	.011	.011	0	0
3	SO1	PY	.011	.011	0	0
4	SO VERT1	PY	.008	.008	0	0
5	SO PLATE4	PY	.005	.005	0	0
6	SO PLATE3	PY	.005	.005	0	0
7	SO PLATE2	PY	.005	.005	0	0
8	SO PLATE1	PY	.005	.005	0	0
9	SO PIPE	PY	.011	.011	0	0
10	MP ALPHA1	PY	.006	.006	0	0
11	CONNECTION2	PY	.006	.006	0	0
12	CONNECTION1	PY	.006	.006	0	0
13	TIEBACK	PX	-.002	-.002	0	0
14	SO2	PX	-.006	-.006	0	0
15	SO1	PX	-.006	-.006	0	0
16	SO VERT1	PX	-.004	-.004	0	0
17	SO PLATE4	PX	-.003	-.003	0	0
18	SO PLATE3	PX	-.003	-.003	0	0

Member Distributed Loads (BLC 14 : Wind Load (150)) (Continued)

	Member Label	Direction	Start Magnitude[k/ft,F,ksf]	End Magnitude[k/ft,F,ksf]	Start Location[ft,...	End Location[ft,...
19	SO PLATE2	PX	-.003	-.003	0	0
20	SO PLATE1	PX	-.003	-.003	0	0
21	SO PIPE	PX	-.006	-.006	0	0
22	MP ALPHA1	PX	-.004	-.004	0	0
23	CONNECTION2	PX	-.004	-.004	0	0
24	CONNECTION1	PX	-.004	-.004	0	0

Member Distributed Loads (BLC 15 : Ice Wind Load (150))

	Member Label	Direction	Start Magnitude[k/ft,F,ksf]	End Magnitude[k/ft,F,ksf]	Start Location[ft,...	End Location[ft,...
1	TIEBACK	PY	.002	.002	0	0
2	SO2	PY	.005	.005	0	0
3	SO1	PY	.005	.005	0	0
4	SO VERT1	PY	.004	.004	0	0
5	SO PLATE4	PY	.003	.003	0	0
6	SO PLATE3	PY	.003	.003	0	0
7	SO PLATE2	PY	.003	.003	0	0
8	SO PLATE1	PY	.003	.003	0	0
9	SO PIPE	PY	.005	.005	0	0
10	MP ALPHA1	PY	.003	.003	0	0
11	CONNECTION2	PY	.003	.003	0	0
12	CONNECTION1	PY	.003	.003	0	0
13	TIEBACK	PX	-.001	-.001	0	0
14	SO2	PX	-.003	-.003	0	0
15	SO1	PX	-.003	-.003	0	0
16	SO VERT1	PX	-.003	-.003	0	0
17	SO PLATE4	PX	-.002	-.002	0	0
18	SO PLATE3	PX	-.002	-.002	0	0
19	SO PLATE2	PX	-.002	-.002	0	0
20	SO PLATE1	PX	-.002	-.002	0	0
21	SO PIPE	PX	-.003	-.003	0	0
22	MP ALPHA1	PX	-.002	-.002	0	0
23	CONNECTION2	PX	-.002	-.002	0	0
24	CONNECTION1	PX	-.002	-.002	0	0

Member Distributed Loads (BLC 16 : Wind Load (180))

	Member Label	Direction	Start Magnitude[k/ft,F,ksf]	End Magnitude[k/ft,F,ksf]	Start Location[ft,...	End Location[ft,...
1	TIEBACK	PY	.003	.003	0	0
2	SO2	PY	.013	.013	0	0
3	SO1	PY	.013	.013	0	0
4	SO VERT1	PY	.009	.009	0	0
5	SO PLATE4	PY	.006	.006	0	0
6	SO PLATE3	PY	.006	.006	0	0
7	SO PLATE2	PY	.006	.006	0	0
8	SO PLATE1	PY	.006	.006	0	0
9	SO PIPE	PY	.013	.013	0	0
10	MP ALPHA1	PY	.007	.007	0	0
11	CONNECTION2	PY	.007	.007	0	0
12	CONNECTION1	PY	.007	.007	0	0

Member Distributed Loads (BLC 17 : Ice Wind Load (180))

Member Label	Direction	Start Magnitude[k/ft,F,ksf]	End Magnitude[k/ft,F,ksf]	Start Location[ft,...	End Location[ft,...

Member Distributed Loads (BLC 17 : Ice Wind Load (180)) (Continued)

	Member Label	Direction	Start Magnitude[k/ft,F,ksf]	End Magnitude[k/ft,F,ksf]	Start Location[ft,...	End Location[ft,...
1	TIEBACK	PY	.002	.002	0	0
2	SO2	PY	.006	.006	0	0
3	SO1	PY	.006	.006	0	0
4	SO VERT1	PY	.005	.005	0	0
5	SO PLATE4	PY	.003	.003	0	0
6	SO PLATE3	PY	.003	.003	0	0
7	SO PLATE2	PY	.003	.003	0	0
8	SO PLATE1	PY	.003	.003	0	0
9	SO PIPE	PY	.006	.006	0	0
10	MP ALPHA1	PY	.003	.003	0	0
11	CONNECTION2	PY	.004	.004	0	0
12	CONNECTION1	PY	.004	.004	0	0

Member Distributed Loads (BLC 18 : Wind Load (210))

	Member Label	Direction	Start Magnitude[k/ft,F,ksf]	End Magnitude[k/ft,F,ksf]	Start Location[ft,...	End Location[ft,...
1	TIEBACK	PY	.003	.003	0	0
2	SO2	PY	.011	.011	0	0
3	SO1	PY	.011	.011	0	0
4	SO VERT1	PY	.008	.008	0	0
5	SO PLATE4	PY	.005	.005	0	0
6	SO PLATE3	PY	.005	.005	0	0
7	SO PLATE2	PY	.005	.005	0	0
8	SO PLATE1	PY	.005	.005	0	0
9	SO PIPE	PY	.011	.011	0	0
10	MP ALPHA1	PY	.006	.006	0	0
11	CONNECTION2	PY	.006	.006	0	0
12	CONNECTION1	PY	.006	.006	0	0
13	TIEBACK	PX	.002	.002	0	0
14	SO2	PX	.006	.006	0	0
15	SO1	PX	.006	.006	0	0
16	SO VERT1	PX	.004	.004	0	0
17	SO PLATE4	PX	.003	.003	0	0
18	SO PLATE3	PX	.003	.003	0	0
19	SO PLATE2	PX	.003	.003	0	0
20	SO PLATE1	PX	.003	.003	0	0
21	SO PIPE	PX	.006	.006	0	0
22	MP ALPHA1	PX	.004	.004	0	0
23	CONNECTION2	PX	.004	.004	0	0
24	CONNECTION1	PX	.004	.004	0	0

Member Distributed Loads (BLC 19 : Ice Wind Load (210))

	Member Label	Direction	Start Magnitude[k/ft,F,ksf]	End Magnitude[k/ft,F,ksf]	Start Location[ft,...	End Location[ft,...
1	TIEBACK	PY	.002	.002	0	0
2	SO2	PY	.005	.005	0	0
3	SO1	PY	.005	.005	0	0
4	SO VERT1	PY	.004	.004	0	0
5	SO PLATE4	PY	.003	.003	0	0
6	SO PLATE3	PY	.003	.003	0	0
7	SO PLATE2	PY	.003	.003	0	0
8	SO PLATE1	PY	.003	.003	0	0
9	SO PIPE	PY	.005	.005	0	0

Member Distributed Loads (BLC 19 : Ice Wind Load (210)) (Continued)

	Member Label	Direction	Start Magnitude[k/ft,F,ksf]	End Magnitude[k/ft,F,ksf]	Start Location[ft,...	End Location[ft,...
10	MP ALPHA1	PY	.003	.003	0	0
11	CONNECTION2	PY	.003	.003	0	0
12	CONNECTION1	PY	.003	.003	0	0
13	TIEBACK	PX	.001	.001	0	0
14	SO2	PX	.003	.003	0	0
15	SO1	PX	.003	.003	0	0
16	SO VERT1	PX	.003	.003	0	0
17	SO PLATE4	PX	.002	.002	0	0
18	SO PLATE3	PX	.002	.002	0	0
19	SO PLATE2	PX	.002	.002	0	0
20	SO PLATE1	PX	.002	.002	0	0
21	SO PIPE	PX	.003	.003	0	0
22	MP ALPHA1	PX	.002	.002	0	0
23	CONNECTION2	PX	.002	.002	0	0
24	CONNECTION1	PX	.002	.002	0	0

Member Distributed Loads (BLC 20 : Wind Load (240))

	Member Label	Direction	Start Magnitude[k/ft,F,ksf]	End Magnitude[k/ft,F,ksf]	Start Location[ft,...	End Location[ft,...
1	TIEBACK	PY	.002	.002	0	0
2	SO2	PY	.006	.006	0	0
3	SO1	PY	.006	.006	0	0
4	SO VERT1	PY	.004	.004	0	0
5	SO PLATE4	PY	.003	.003	0	0
6	SO PLATE3	PY	.003	.003	0	0
7	SO PLATE2	PY	.003	.003	0	0
8	SO PLATE1	PY	.003	.003	0	0
9	SO PIPE	PY	.006	.006	0	0
10	MP ALPHA1	PY	.004	.004	0	0
11	CONNECTION2	PY	.004	.004	0	0
12	CONNECTION1	PY	.004	.004	0	0
13	TIEBACK	PX	.003	.003	0	0
14	SO2	PX	.011	.011	0	0
15	SO1	PX	.011	.011	0	0
16	SO VERT1	PX	.008	.008	0	0
17	SO PLATE4	PX	.005	.005	0	0
18	SO PLATE3	PX	.005	.005	0	0
19	SO PLATE2	PX	.005	.005	0	0
20	SO PLATE1	PX	.005	.005	0	0
21	SO PIPE	PX	.011	.011	0	0
22	MP ALPHA1	PX	.006	.006	0	0
23	CONNECTION2	PX	.006	.006	0	0
24	CONNECTION1	PX	.006	.006	0	0

Member Distributed Loads (BLC 21 : Ice Wind Load (240))

	Member Label	Direction	Start Magnitude[k/ft,F,ksf]	End Magnitude[k/ft,F,ksf]	Start Location[ft,...	End Location[ft,...
1	TIEBACK	PY	.001	.001	0	0
2	SO2	PY	.003	.003	0	0
3	SO1	PY	.003	.003	0	0
4	SO VERT1	PY	.003	.003	0	0
5	SO PLATE4	PY	.002	.002	0	0
6	SO PLATE3	PY	.002	.002	0	0

Member Distributed Loads (BLC 21 : Ice Wind Load (240)) (Continued)

	Member Label	Direction	Start Magnitude[k/ft,F,ksf]	End Magnitude[k/ft,F,ksf]	Start Location[ft,...	End Location[ft,...
7	SO PLATE2	PY	.002	.002	0	0
8	SO PLATE1	PY	.002	.002	0	0
9	SO PIPE	PY	.003	.003	0	0
10	MP ALPHA1	PY	.002	.002	0	0
11	CONNECTION2	PY	.002	.002	0	0
12	CONNECTION1	PY	.002	.002	0	0
13	TIEBACK	PX	.002	.002	0	0
14	SO2	PX	.005	.005	0	0
15	SO1	PX	.005	.005	0	0
16	SO VERT1	PX	.004	.004	0	0
17	SO PLATE4	PX	.003	.003	0	0
18	SO PLATE3	PX	.003	.003	0	0
19	SO PLATE2	PX	.003	.003	0	0
20	SO PLATE1	PX	.003	.003	0	0
21	SO PIPE	PX	.005	.005	0	0
22	MP ALPHA1	PX	.003	.003	0	0
23	CONNECTION2	PX	.003	.003	0	0
24	CONNECTION1	PX	.003	.003	0	0

Member Distributed Loads (BLC 22 : Wind Load (270))

	Member Label	Direction	Start Magnitude[k/ft,F,ksf]	End Magnitude[k/ft,F,ksf]	Start Location[ft,...	End Location[ft,...
1	TIEBACK	PX	.003	.003	0	0
2	SO2	PX	.013	.013	0	0
3	SO1	PX	.013	.013	0	0
4	SO VERT1	PX	.009	.009	0	0
5	SO PLATE4	PX	.006	.006	0	0
6	SO PLATE3	PX	.006	.006	0	0
7	SO PLATE2	PX	.006	.006	0	0
8	SO PLATE1	PX	.006	.006	0	0
9	SO PIPE	PX	.013	.013	0	0
10	MP ALPHA1	PX	.007	.007	0	0
11	CONNECTION2	PX	.007	.007	0	0
12	CONNECTION1	PX	.007	.007	0	0

Member Distributed Loads (BLC 23 : Ice Wind Load (270))

	Member Label	Direction	Start Magnitude[k/ft,F,ksf]	End Magnitude[k/ft,F,ksf]	Start Location[ft,...	End Location[ft,...
1	TIEBACK	PX	.002	.002	0	0
2	SO2	PX	.006	.006	0	0
3	SO1	PX	.006	.006	0	0
4	SO VERT1	PX	.005	.005	0	0
5	SO PLATE4	PX	.003	.003	0	0
6	SO PLATE3	PX	.003	.003	0	0
7	SO PLATE2	PX	.003	.003	0	0
8	SO PLATE1	PX	.003	.003	0	0
9	SO PIPE	PX	.006	.006	0	0
10	MP ALPHA1	PX	.003	.003	0	0
11	CONNECTION2	PX	.004	.004	0	0
12	CONNECTION1	PX	.004	.004	0	0

Member Distributed Loads (BLC 24 : Wind Load (300))

Member Label	Direction	Start Magnitude[k/ft,F,ksf]	End Magnitude[k/ft,F,ksf]	Start Location[ft,...	End Location[ft,...

Member Distributed Loads (BLC 24 : Wind Load (300)) (Continued)

	Member Label	Direction	Start Magnitude[k/ft,F,ksf]	End Magnitude[k/ft,F,ksf]	Start Location[ft,...	End Location[ft,...
1	TIEBACK	PY	-.002	-.002	0	0
2	SO2	PY	-.006	-.006	0	0
3	SO1	PY	-.006	-.006	0	0
4	SO VERT1	PY	-.004	-.004	0	0
5	SO PLATE4	PY	-.003	-.003	0	0
6	SO PLATE3	PY	-.003	-.003	0	0
7	SO PLATE2	PY	-.003	-.003	0	0
8	SO PLATE1	PY	-.003	-.003	0	0
9	SO PIPE	PY	-.006	-.006	0	0
10	MP ALPHA1	PY	-.004	-.004	0	0
11	CONNECTION2	PY	-.004	-.004	0	0
12	CONNECTION1	PY	-.004	-.004	0	0
13	TIEBACK	PX	.003	.003	0	0
14	SO2	PX	.011	.011	0	0
15	SO1	PX	.011	.011	0	0
16	SO VERT1	PX	.008	.008	0	0
17	SO PLATE4	PX	.005	.005	0	0
18	SO PLATE3	PX	.005	.005	0	0
19	SO PLATE2	PX	.005	.005	0	0
20	SO PLATE1	PX	.005	.005	0	0
21	SO PIPE	PX	.011	.011	0	0
22	MP ALPHA1	PX	.006	.006	0	0
23	CONNECTION2	PX	.006	.006	0	0
24	CONNECTION1	PX	.006	.006	0	0

Member Distributed Loads (BLC 25 : Ice Wind Load (300))

	Member Label	Direction	Start Magnitude[k/ft,F,ksf]	End Magnitude[k/ft,F,ksf]	Start Location[ft,...	End Location[ft,...
1	TIEBACK	PY	-.001	-.001	0	0
2	SO2	PY	-.003	-.003	0	0
3	SO1	PY	-.003	-.003	0	0
4	SO VERT1	PY	-.003	-.003	0	0
5	SO PLATE4	PY	-.002	-.002	0	0
6	SO PLATE3	PY	-.002	-.002	0	0
7	SO PLATE2	PY	-.002	-.002	0	0
8	SO PLATE1	PY	-.002	-.002	0	0
9	SO PIPE	PY	-.003	-.003	0	0
10	MP ALPHA1	PY	-.002	-.002	0	0
11	CONNECTION2	PY	-.002	-.002	0	0
12	CONNECTION1	PY	-.002	-.002	0	0
13	TIEBACK	PX	.002	.002	0	0
14	SO2	PX	.005	.005	0	0
15	SO1	PX	.005	.005	0	0
16	SO VERT1	PX	.004	.004	0	0
17	SO PLATE4	PX	.003	.003	0	0
18	SO PLATE3	PX	.003	.003	0	0
19	SO PLATE2	PX	.003	.003	0	0
20	SO PLATE1	PX	.003	.003	0	0
21	SO PIPE	PX	.005	.005	0	0
22	MP ALPHA1	PX	.003	.003	0	0
23	CONNECTION2	PX	.003	.003	0	0
24	CONNECTION1	PX	.003	.003	0	0

Member Distributed Loads (BLC 26 : Wind Load (330))

	Member Label	Direction	Start Magnitude[k/ft,F,ksf]	End Magnitude[k/ft,F,ksf]	Start Location[ft,...	End Location[ft,...
1	TIEBACK	PY	-.003	-.003	0	0
2	SO2	PY	-.011	-.011	0	0
3	SO1	PY	-.011	-.011	0	0
4	SO VERT1	PY	-.008	-.008	0	0
5	SO PLATE4	PY	-.005	-.005	0	0
6	SO PLATE3	PY	-.005	-.005	0	0
7	SO PLATE2	PY	-.005	-.005	0	0
8	SO PLATE1	PY	-.005	-.005	0	0
9	SO PIPE	PY	-.011	-.011	0	0
10	MP ALPHA1	PY	-.006	-.006	0	0
11	CONNECTION2	PY	-.006	-.006	0	0
12	CONNECTION1	PY	-.006	-.006	0	0
13	TIEBACK	PX	.002	.002	0	0
14	SO2	PX	.006	.006	0	0
15	SO1	PX	.006	.006	0	0
16	SO VERT1	PX	.004	.004	0	0
17	SO PLATE4	PX	.003	.003	0	0
18	SO PLATE3	PX	.003	.003	0	0
19	SO PLATE2	PX	.003	.003	0	0
20	SO PLATE1	PX	.003	.003	0	0
21	SO PIPE	PX	.006	.006	0	0
22	MP ALPHA1	PX	.004	.004	0	0
23	CONNECTION2	PX	.004	.004	0	0
24	CONNECTION1	PX	.004	.004	0	0

Member Distributed Loads (BLC 27 : Ice Wind Load (330))

	Member Label	Direction	Start Magnitude[k/ft,F,ksf]	End Magnitude[k/ft,F,ksf]	Start Location[ft,...	End Location[ft,...
1	TIEBACK	PY	-.002	-.002	0	0
2	SO2	PY	-.005	-.005	0	0
3	SO1	PY	-.005	-.005	0	0
4	SO VERT1	PY	-.004	-.004	0	0
5	SO PLATE4	PY	-.003	-.003	0	0
6	SO PLATE3	PY	-.003	-.003	0	0
7	SO PLATE2	PY	-.003	-.003	0	0
8	SO PLATE1	PY	-.003	-.003	0	0
9	SO PIPE	PY	-.005	-.005	0	0
10	MP ALPHA1	PY	-.003	-.003	0	0
11	CONNECTION2	PY	-.003	-.003	0	0
12	CONNECTION1	PY	-.003	-.003	0	0
13	TIEBACK	PX	.001	.001	0	0
14	SO2	PX	.003	.003	0	0
15	SO1	PX	.003	.003	0	0
16	SO VERT1	PX	.003	.003	0	0
17	SO PLATE4	PX	.002	.002	0	0
18	SO PLATE3	PX	.002	.002	0	0
19	SO PLATE2	PX	.002	.002	0	0
20	SO PLATE1	PX	.002	.002	0	0
21	SO PIPE	PX	.003	.003	0	0
22	MP ALPHA1	PX	.002	.002	0	0
23	CONNECTION2	PX	.002	.002	0	0
24	CONNECTION1	PX	.002	.002	0	0

Envelope Joint Reactions

	Joint		X [k]	LC	Y [k]	LC	Z [k]	LC	MX [k-ft]	LC	MY [k-ft]	LC	MZ [k-ft]	LC
1	N72	max	.213	8	1.751	5	.629	15	-.065	32	.235	14	0	41
2		min	-.208	32	-1.037	23	.113	32	-.381	15	-.235	26	0	1
3	N71A	max	.083	26	.54	14	.637	33	-.067	14	.16	14	0	41
4		min	-.084	14	-1.418	30	.117	14	-.387	33	-.16	26	0	1
5	N37A	max	.388	14	1.719	26	.039	30	0	41	0	41	0	41
6		min	-.392	26	-1.713	14	.012	8	0	1	0	1	0	1
7	Totals:	max	.516	14	.792	2	1.257	36						
8		min	-.516	26	-.792	20	.412	23						

Basic Load Cases

	BLC Description	Category	X Gravity	Y Gravity	Z Gravity	Joint	Point	Distribu...	Area(M...	Surface...
1	Wind Load (0)	WL					4	12		
2	Dead Load	DL			-1.1		4			
3	Live Load	LL					1			
4	Ice Wind Load (0)	OL1					4	12		
5	Ice Dead Load	OL2					4	12		
6	Wind Load (30)	WL					8	24		
7	Ice Wind Load (30)	OL1					8	24		
8	Wind Load (60)	WL					8	24		
9	Ice Wind Load (60)	OL1					8	24		
10	Wind Load (90)	WL					4	12		
11	Ice Wind Load (90)	OL1					4	12		
12	Wind Load (120)	WL					8	24		
13	Ice Wind Load (120)	OL1					8	24		
14	Wind Load (150)	WL					8	24		
15	Ice Wind Load (150)	OL1					8	24		
16	Wind Load (180)	WL					4	12		
17	Ice Wind Load (180)	OL1					4	12		
18	Wind Load (210)	WL					8	24		
19	Ice Wind Load (210)	OL1					8	24		
20	Wind Load (240)	WL					8	24		
21	Ice Wind Load (240)	OL1					8	24		
22	Wind Load (270)	WL					4	12		
23	Ice Wind Load (270)	OL1					4	12		
24	Wind Load (300)	WL					8	24		
25	Ice Wind Load (300)	OL1					8	24		
26	Wind Load (330)	WL					8	24		
27	Ice Wind Load (330)	OL1					8	24		
28	Maintanence (0)	OL3					4			
29	Maintanence (30)	OL3					8			
30	Maintanence (60)	OL3					8			
31	Maintanence (90)	OL3					4			
32	Maintanence (120)	OL3					8			
33	Maintanence (150)	OL3					8			
34	Maintanence (180)	OL3					4			
35	Maintanence (210)	OL3					8			
36	Maintanence (240)	OL3					8			
37	Maintanence (270)	OL3					4			
38	Maintanence (300)	OL3					8			

Basic Load Cases (Continued)

	BLC Description	Category	X Gravity	Y Gravity	Z Gravity	Joint	Point	Distribu...	Area(M...	Surface...
39	Maintanence (330)	OL3					8			
40	Earthquake (x-direction)	EL	-.117							
41	Earthquake (y-direction)	EL		-.117						
42	Earthquake (z-direction)	EL			-.047					

Load Combinations

	Description	Solve	P...	S...	B...	Fa...	B...	Fa...	B...	Fa...	B...	Fa...	B...	Fa...	B...	Fa...	B...	Fa...	B...	Fa...	B...	Fa...	B...	Fa...	B...	Fa...
1	1.4D	Yes	Y		2	1.4																				
2	1.2D + 1.0W(0)	Yes	Y		2	1.2	1	1																		
3	1.2D + 1.0Di + 1.0Wi(0)	Yes	Y		2	1.2	5	1	4	1																
4	1.2D + 1.5L + 1.0Wl(0)	Yes	Y		2	1.2	3	1.5	28	1																
5	1.2D + 1.0W(30)	Yes	Y		2	1.2	6	1																		
6	1.2D + 1.0Di + 1.0Wi(30)	Yes	Y		2	1.2	5	1	7	1																
7	1.2D + 1.5L + 1.0Wl(30)	Yes	Y		2	1.2	3	1.5	29	1																
8	1.2D + 1.0W(60)	Yes	Y		2	1.2	8	1																		
9	1.2D + 1.0Di + 1.0Wi(60)	Yes	Y		2	1.2	5	1	9	1																
10	1.2D + 1.5L + 1.0Wl(60)	Yes	Y		2	1.2	3	1.5	30	1																
11	1.2D + 1.0W(90)	Yes	Y		2	1.2	10	1																		
12	1.2D + 1.0Di + 1.0Wi(90)	Yes	Y		2	1.2	5	1	11	1																
13	1.2D + 1.5L + 1.0Wl(90)	Yes	Y		2	1.2	3	1.5	31	1																
14	1.2D + 1.0W(120)	Yes	Y		2	1.2	12	1																		
15	1.2D + 1.0Di + 1.0Wi(120)	Yes	Y		2	1.2	5	1	13	1																
16	1.2D + 1.5L + 1.0Wl(120)	Yes	Y		2	1.2	3	1.5	32	1																
17	1.2D + 1.0W(150)	Yes	Y		2	1.2	14	1																		
18	1.2D + 1.0Di + 1.0Wi(150)	Yes	Y		2	1.2	5	1	15	1																
19	1.2D + 1.5L + 1.0Wl(150)	Yes	Y		2	1.2	3	1.5	33	1																
20	1.2D + 1.0W(180)	Yes	Y		2	1.2	16	1																		
21	1.2D + 1.0Di + 1.0Wi(180)	Yes	Y		2	1.2	5	1	17	1																
22	1.2D + 1.5L + 1.0Wl(180)	Yes	Y		2	1.2	3	1.5	34	1																
23	1.2D + 1.0W(210)	Yes	Y		2	1.2	18	1																		
24	1.2D + 1.0Di + 1.0Wi(210)	Yes	Y		2	1.2	5	1	19	1																
25	1.2D + 1.5L + 1.0Wl(210)	Yes	Y		2	1.2	3	1.5	35	1																
26	1.2D + 1.0W(240)	Yes	Y		2	1.2	20	1																		
27	1.2D + 1.0Di + 1.0Wi(240)	Yes	Y		2	1.2	5	1	21	1																
28	1.2D + 1.5L + 1.0Wl(240)	Yes	Y		2	1.2	3	1.5	36	1																
29	1.2D + 1.0W(270)	Yes	Y		2	1.2	22	1																		
30	1.2D + 1.0Di + 1.0Wi(270)	Yes	Y		2	1.2	5	1	23	1																
31	1.2D + 1.5L + 1.0Wl(270)	Yes	Y		2	1.2	3	1.5	37	1																
32	1.2D + 1.0W(300)	Yes	Y		2	1.2	24	1																		
33	1.2D + 1.0Di + 1.0Wi(300)	Yes	Y		2	1.2	5	1	25	1																
34	1.2D + 1.5L + 1.0Wl(300)	Yes	Y		2	1.2	3	1.5	38	1																
35	1.2D + 1.0W(330)	Yes	Y		2	1.2	26	1																		
36	1.2D + 1.0Di + 1.0Wi(330)	Yes	Y		2	1.2	5	1	27	1																
37	1.2D + 1.5L + 1.0Wl(330)	Yes	Y		2	1.2	3	1.5	39	1																
38	1.2D + 1.0E(x) + 1.0E(z) + L	Yes	Y		2	1.2	40	1	42	1	3	1														
39	1.2D + 1.0E(y) + 1.0E(z) + L	Yes	Y		2	1.2	41	1	42	1	3	1														
40	1.2D - 1.0E(x) + 1.0E(z) + L	Yes	Y		2	1.2	40	-1	42	1	3	1														
41	1.2D - 1.0E(y) + 1.0E(z) + L	Yes	Y		2	1.2	41	-1	42	1	3	1														

Envelope AISC 15th(360-16): LRFD Steel Code Checks

	Member	Shape	Code Check	Loc[ft]	LC	Shear Check	Loc[ft]	Dir	LC	phi*...	phi*...	phi*...	phi*...	...	Eqn
1	MP ALPHA1	PIPE 2.0	.456	3.5	2	.058	3.5		17	14.9...	32.13	1.872	1.872	...	H1-...
2	SO VERT1	PIPE 2.0	.239	0	6	.073	0		32	30.2...	32.13	1.872	1.872	...	H1-...
3	CONNECTI...	C4.75x3	.213	.104	8	.164	.375	y	14	92.6...	97.2	10.8...	9.871	...	H1-...
4	CONNECTI...	C4.75x3	.196	.896	33	.113	.625	y	32	92.6...	97.2	10.61	9.871	...	H1-...
5	SO PIPE	PIPE 3.0	.182	2.99	9	.147	1.75		32	61.0...	65.2...	5.749	5.749	...	H1-...
6	SO PLATE1	4x0.375	.150	.38	8	.100	.38	y	14	44.2...	48.6	.38	4.05	...	H1-...
7	SO1	HSS3X3X3	.143	0	12	.065	2.37	z	14	74.69	78.2...	6.796	6.796	...	H1-...
8	SO PLATE2	4x0.375	.136	.38	32	.096	.38	y	26	44.2...	48.6	.38	4.05	...	H1-...
9	SO2	HSS3X3X3	.133	0	33	.046	2.37	z	32	74.69	78.2...	6.796	6.796	...	H1-...
10	SO PLATE4	4x0.375	.094	.38	32	.070	.38	y	32	44.2...	48.6	.38	4.05	...	H1-...
11	TIEBACK	PIPE 2.0	.081	5.741	14	.004	0		30	21.6...	32.13	1.872	1.872	...	H1-...
12	SO PLATE3	4x0.375	.080	.38	8	.066	.38	y	8	44.2...	48.6	.38	4.05	...	H1-...

APPENDIX D

Wire Frame and Rendered Models (Beta & Gamma @ 119 ft)

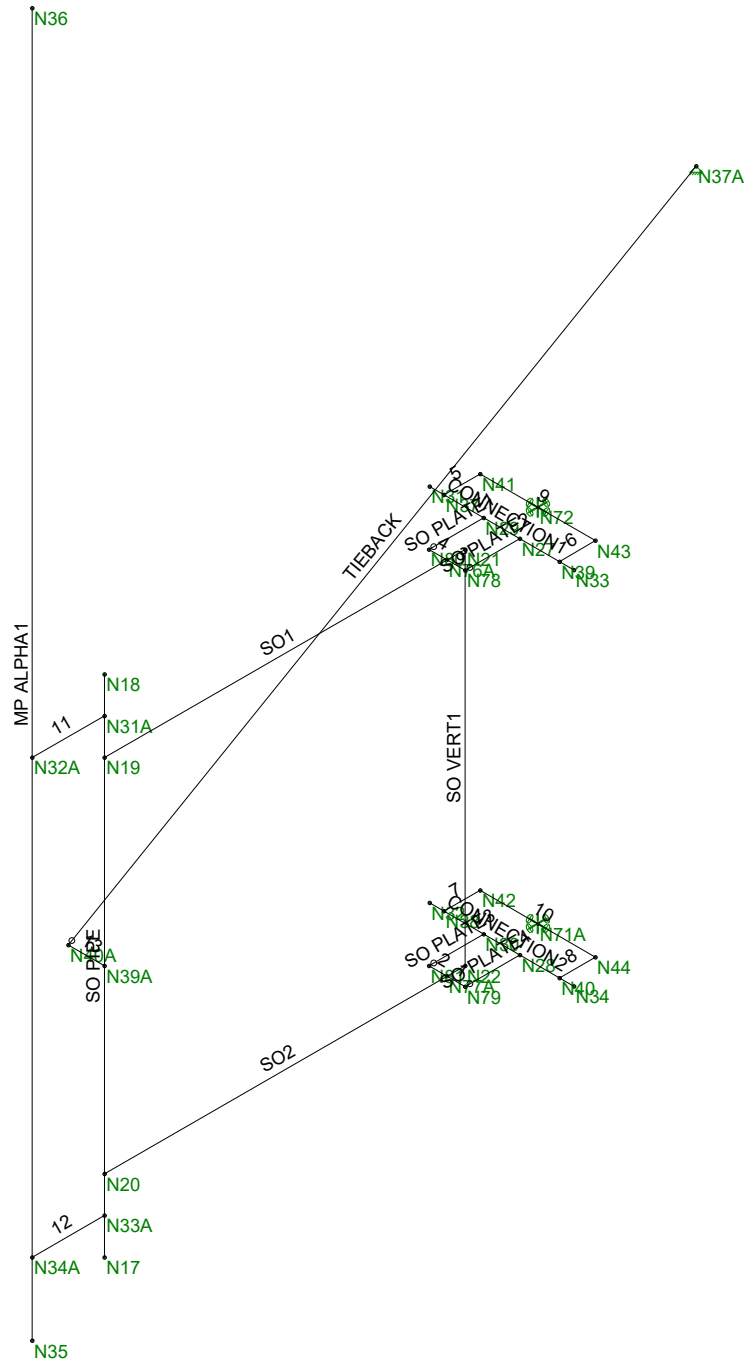

POD		
LT	841298	May 22, 2020 at 8:24 AM
20-64395		841298 119 ft Elevation Mount Bet...

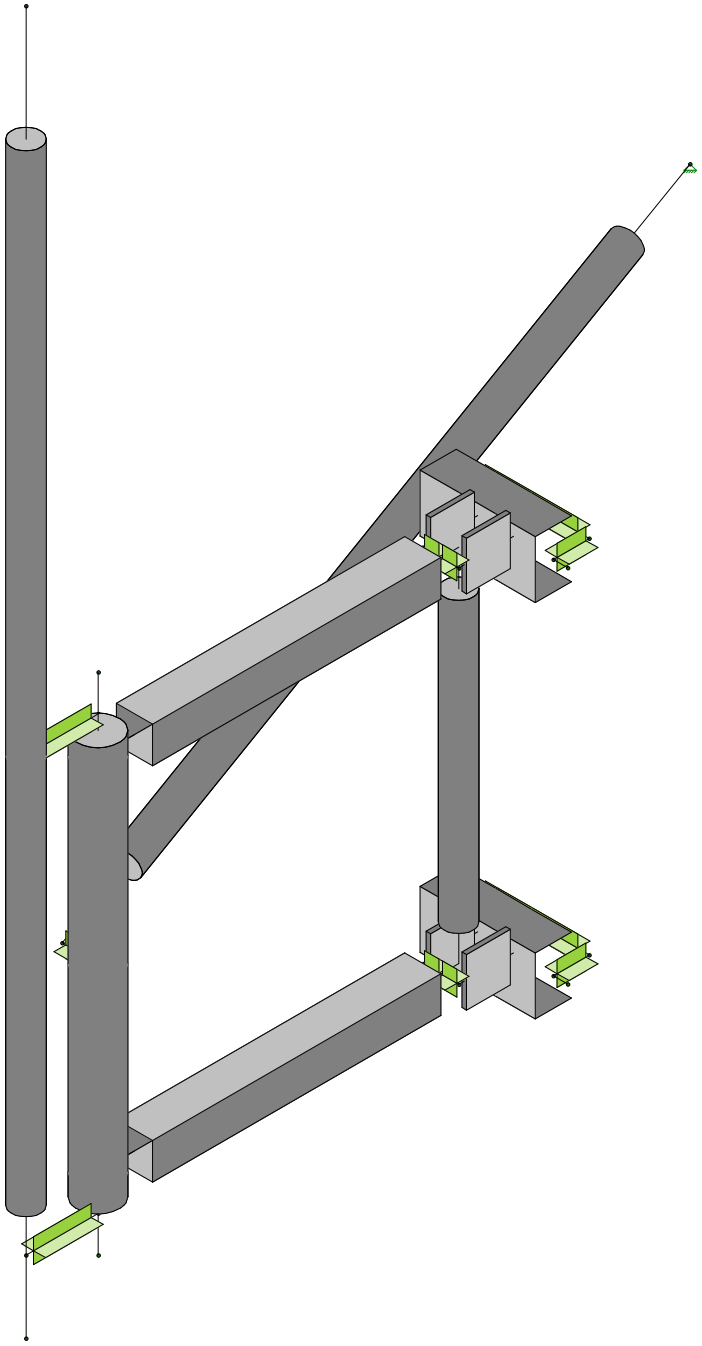

POD	841298	
LT		May 22, 2020 at 8:24 AM
20-64395		841298 119 ft Elevation Mount Bet...

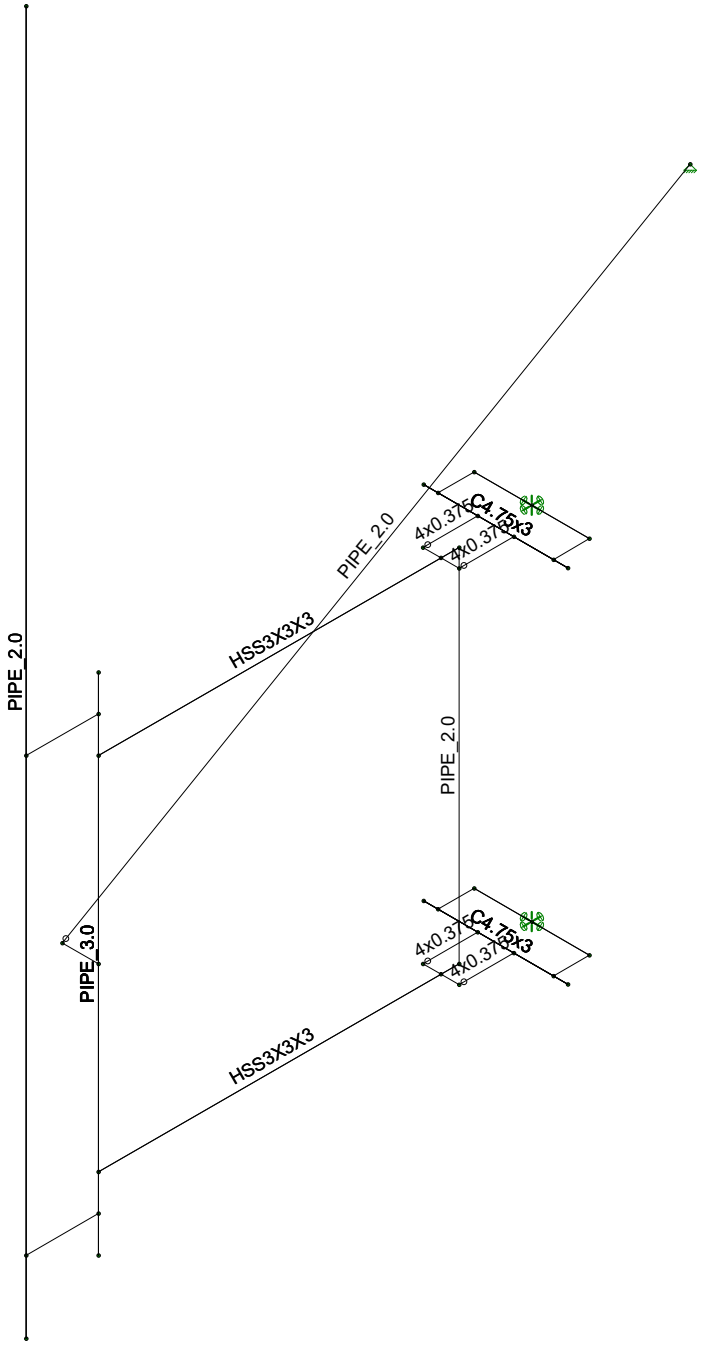

POD	841298	
LT		May 22, 2020 at 8:24 AM
20-64395		841298 119 ft Elevation Mount Bet...

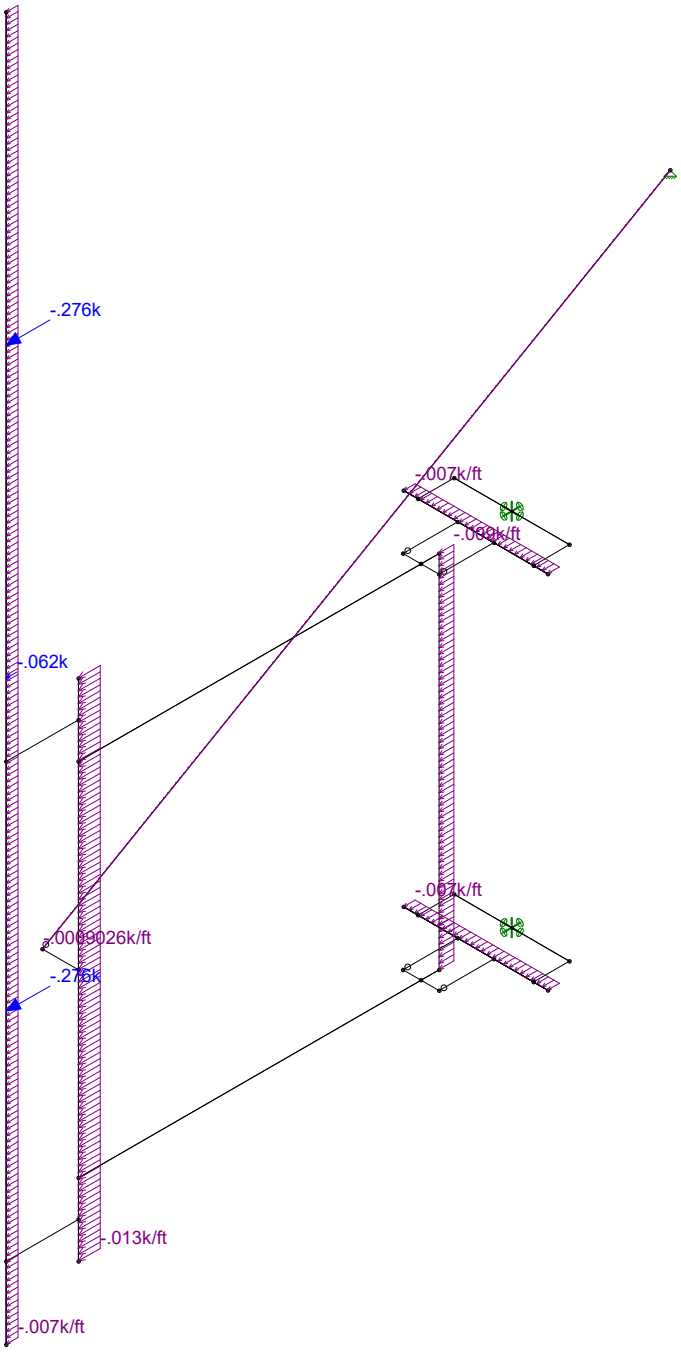

Loads: BLC 1, Wind Load (0)

POD	841298	
LT		May 22, 2020 at 8:26 AM
20-64395		841298 119 ft Elevation Mount Bet...

APPENDIX E

Software Input Calculations (Beta & Gamma @ 119 ft)

POD
POWER OF DESIGN

POD Job #	**20-64395**
Site Number	**841298**
Site Name	**SOUTHINGTON ROGUS**

General Site Information

Mount Type	MF	Risk Category	II	I (seismic)	1	
V (Wind Speed)	118	I(ice)	1	Sms	0.320	
Zs	343			Sm1	0.132	
ti	1.5	Ss	0.2	Sds	0.213	
Vi	50	S1	0.055	Sd1	0.088	
Kzt	1	Soil Site Class	D (assumed)	Seismic Design Category		
Exposure	B	Fa	1.600	B		
zg	1200	Fv	2.400	Seismic Analysis Not Required		
α	7			R	2	TIA-222-H 16.7
Kmin	0.7	Tower Type	Self Support	As	1	TIA-222-H 16.7
G_H	1	Tower Height	120	Cs, Min	0.03	TIA-222-H 2.7.7.1.1
Ke	0.99			Cs	0.10666667	TIA-222-H 2.7.7.1.1
K_D	0.95					
K_a	0.9					

Appurtenance Information

Model	Shielded	% Shielded	Centerline	Spacing (in)	# on MP 1	# on MP 2	# on MP 3	# on MP 4
TPA65R-BU8D_CCIV2			120	48	1			
DC6-48-60-18-8C			120					
RRUS 4449 B5/B12			120		1			

Mount Information

Elevation (ft)	119
K_z	1.04
Kiz	1.14
tiz	1.71

	Length (ft)	Width (in)	Centerline
Mount Pipes	8	2.375	120

Round Members

Member	Length (ft)	Width (in)	Frame Member	# of Members
SO VERT1	2.5	2.375	Yes	1
SO PIPE	3.5	3.5	Yes	1
TIEBACK	2.875	2.375	No	1

Flat Members

Member	Length (ft)	Width (in)	Shape	A	B	C	D	Frame Member	# of Members
SO	2.5	3	Square HSS	3	0.1875	3		Yes	2
PLATE	0.38	4	Channel		4		0.375	No	4
CHANNEL	1	4.75	Channel	3	4.75	0.25	0.25	No	2

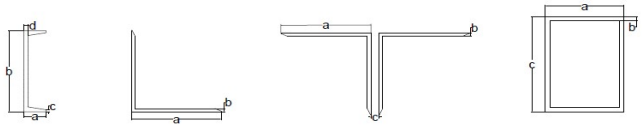

Version 2.2

Appurtenance Wind Calculations

Model	Height	Width	Depth	Weight (lbs)	Kz	qz (lb/ft$_2$)	$(EPA)_N$ (ft^2)	$(EPA)_T$(ft^2)	Wind Force (Kips) Front	Side	Alpha	Beta	Gamma
TPA65R-BU8D_CCIV2	96.0	20.7	7.7	87.1	1.04	34.82	16.08	7.31	0.560	0.255	0.484	0.484	0.255
DC6-48-60-18-8C	31.4	10.2	10.2	26.2	1.04	34.82	1.03	1.14	0.036	0.040	0.037	0.037	0.040
RRUS 4449 B5/B12	17.9	13.2	9.4	71.0	1.04	34.82	1.77	1.27	0.062	0.044	0.057	0.057	0.044

Appurtenance Ice Calculations

Model	tiz (in)	Height	Width	Depth	Weight (lbs)	Kiz	qz (lb/ft$_2$)	$(EPA)_N$ (ft^2)	$(EPA)_T$(ft^2)	Wind Force (Kips) Front	Side	Alpha	Beta	Gamma
TPA65R-BU8D_CCIV2	1.71	99.41	24.11	11.11	367.49	1.14	6.25	11.03	5.83	0.069	0.036	0.061	0.061	0.036
DC6-48-60-18-8C	1.71	34.82	13.65	13.65	103.64	1.14	6.25	2.08	2.08	0.013	0.013	0.013	0.013	0.013
RRUS 4449 B5/B12	1.71	21.31	16.60	12.85	75.18	1.14	6.25	1.55	1.20	0.010	0.008	0.009	0.009	0.008

Round Members

Member	q_z (lb/ft^2)	Wind Calculations Ar	C	Rrf	Cas	EPA (ft^2)	Load (k/ft)	Width (in)	Weight (k/ft)	Ice Calculations q_z (lb/ft^2)	Arice	Rrfice	Cas	EPA (ft^2)	Load (k/ft)
SO VERT1	34.74	0.49	23.65	0.85	1.68	0.63	0.009	5.79	0.01	6.24	1.21	1.19	1.68	2.16	0.005
SO PIPE	34.74	1.02	34.86	0.85	1.68	1.31	0.013	6.91	0.01	6.24	2.02	1.19	1.68	3.61	0.006
TIEBACK	34.74	0.57	23.65	0.85	1.20	0.52	0.003	5.79	0.01	6.24	1.39	1.19	1.20	1.78	0.002

Flat Members

Member	q_z (lb/ft^2)	Wind Calculations Af	Cas	EPA	Load (k/ft)	Width (in)	Weight (k/ft)	Ice Calculations q_z (lb/ft^2)	Arice	Rrfice	Cas	EPA	Load (k/ft)
SO	34.74	1.25	1.68	0.94	0.013	6.41	0.01	6.24	2.67	1.19	1.68	2.39	0.006
PLATE	34.74	0.51	1.20	0.14	0.006	7.41	0.01	6.24	0.94	1.19	1.68	0.42	0.003
CHANNEL	34.74	0.79	1.20	0.43	0.007	8.16	0.02	6.24	1.36	1.19	1.68	1.22	0.004

Appurtenance Seismic Calculations

Model	Weight	Sds	ρ	Cs	As	Ev	Eh
TPA65R-BU8D_CCIV2	87.1	0.213	1.000	0.107	1.000	0.004	0.009
DC6-48-60-18-8C	26.2	0.213	1.000	0.107	1.000	0.001	0.003
RRUS 4449 B5/B12	71.0	0.213	1.000	0.107	1.000	0.003	0.008

Version 2.1

APPENDIX F

Software Analysis Output (Beta & Gamma @ 119 ft)

Hot Rolled Steel Design Parameters

	Label	Shape	Lengt...	Lbyy[ft]	Lbzz[ft]	Lcomp top[ft]	Lcomp bot[ft]	L-tor...	Kyy	Kzz	Cb	Func...
1	TIEBACK	PIPE_2.0	5.875			Lbyy						Lateral
2	SO2	HSS3X3...	2.5			Lbyy						Lateral
3	SO1	HSS3X3...	2.5			Lbyy						Lateral
4	SO VERT1	PIPE_2.0	2.5	2.25	2.25	Lbyy						Lateral
5	SO PLATE4	4x0.375	.38			Lbyy						Lateral
6	SO PLATE3	4x0.375	.38			Lbyy						Lateral
7	SO PLATE2	4x0.375	.38			Lbyy						Lateral
8	SO PLATE1	4x0.375	.38			Lbyy						Lateral
9	SO PIPE	PIPE_3.0	3.5			Lbyy						Lateral
10	MP ALPHA1	PIPE_2.0	8			Lbyy						Lateral
11	CONNECTION2	C4.75x3	1			Lbyy						Lateral
12	CONNECTION1	C4.75x3	1			Lbyy						Lateral

Member Primary Data

	Label	I Joint	J Joint	K Joint	Rotat...	Section/Shape	Type	Design List	Material	Design Rules
1	TIEBACK	N40A	N37A			PIPE_2.0	Beam	Pipe	A53 Gr.B	Typical
2	SO2	N20	N22			HSS3X3X3	Beam	SquareTube	A500 Gr.B Rect	Typical
3	SO1	N19	N21			HSS3X3X3	Beam	SquareTube	A500 Gr.B Rect	Typical
4	SO VERT1	N21	N22			PIPE_2.0	Beam	Pipe	A53 Gr.B	Typical
5	SO PLATE4	N79	N28		90	4x0.375	Beam	RECT	A36 Gr.36	Typical
6	SO PLATE3	N81	N30		90	4x0.375	Beam	RECT	A36 Gr.36	Typical
7	SO PLATE2	N78	N27		90	4x0.375	Beam	RECT	A36 Gr.36	Typical
8	SO PLATE1	N80	N29		90	4x0.375	Beam	RECT	A36 Gr.36	Typical
9	SO PIPE	N17	N18			PIPE_3.0	Beam	Pipe	A53 Gr.B	Typical
10	MP ALPHA1	N35	N36			PIPE_2.0	Beam	Pipe	A53 Gr.B	Typical
11	CONNECTION2	N32	N34		270	C4.75x3	Beam	Channel	A36 Gr.36	Typical
12	CONNECTION1	N31	N33		270	C4.75x3	Beam	Channel	A36 Gr.36	Typical
13	13	N39A	N40A			RIGID	None	None	RIGID	Typical
14	12	N33A	N34A			RIGID	None	None	RIGID	Typical
15	11	N31A	N32A			RIGID	None	None	RIGID	Typical
16	10	N42	N44			RIGID	None	None	RIGID	Typical
17	9	N41	N43			RIGID	None	None	RIGID	Typical
18	8	N40	N44			RIGID	None	None	RIGID	Typical
19	7	N38	N42			RIGID	None	None	RIGID	Typical
20	6	N39	N43			RIGID	None	None	RIGID	Typical
21	5	N37	N41			RIGID	None	None	RIGID	Typical
22	4	N80	N76A			RIGID	None	None	RIGID	Typical
23	3	N78	N76A			RIGID	None	None	RIGID	Typical
24	2	N81	N77A			RIGID	None	None	RIGID	Typical
25	1	N79	N77A			RIGID	None	None	RIGID	Typical

Member Advanced Data

	Label	I Release	J Release	I Offset[in]	J Offset[in]	T/C Only	Physic...	Defl Ratio Op...	Analysis Offset[in]	Inactive	Seismi...
1	TIEBACK	BenPIN					Yes	Default			None
2	SO2						Yes				None
3	SO1						Yes				None
4	SO VERT1						Yes	Default			None
5	SO PLATE4	OOOOOX					Yes	Default			None

Member Advanced Data (Continued)

	Label	I Release	J Release	I Offset[in]	J Offset[in]	T/C Only	Physic...	Defl Ratio Op...	Analysis Offset[in]	Inactive	Seismi...
6	SO PLATE3	OOOOOX					Yes	Default			None
7	SO PLATE2	OOOOOX					Yes	Default			None
8	SO PLATE1	OOOOOX					Yes	Default			None
9	SO PIPE						Yes				None
10	MP ALPHA1						Yes				None
11	CONNECTIO...						Yes				None
12	CONNECTIO...						Yes				None
13	13						Yes	** NA **			None
14	12						Yes	** NA **			None
15	11						Yes	** NA **			None
16	10						Yes	** NA **			None
17	9						Yes	** NA **			None
18	8						Yes	** NA **			None
19	7						Yes	** NA **			None
20	6						Yes	** NA **			None
21	5						Yes	** NA **			None
22	4						Yes	** NA **			None
23	3						Yes	** NA **			None
24	2						Yes	** NA **			None
25	1						Yes	** NA **			None

Hot Rolled Steel Properties

	Label	E [ksi]	G [ksi]	Nu	Therm (/1...	Density[k/f...	Yield[ksi]	Ry	Fu[ksi]	Rt
1	A992	29000	11154	.3	.65	.49	50	1.1	65	1.1
2	A36 Gr.36	29000	11154	.3	.65	.49	36	1.5	58	1.2
3	A572 Gr.50	29000	11154	.3	.65	.49	50	1.1	65	1.1
4	A500 Gr.B RND	29000	11154	.3	.65	.527	42	1.4	58	1.3
5	A500 Gr.B Rect	29000	11154	.3	.65	.527	46	1.4	58	1.3
6	A53 Gr.B	29000	11154	.3	.65	.49	35	1.6	60	1.2
7	A1085	29000	11154	.3	.65	.49	50	1.4	65	1.3

Member Point Loads (BLC 1 : Wind Load (0))

	Member Label	Direction	Magnitude[k,k-ft]	Location[ft,%]
1	MP ALPHA1	Y	-.276	6
2	MP ALPHA1	Y	-.062	4
3	MP ALPHA1	Y	-.276	2

Member Point Loads (BLC 2 : Dead Load)

	Member Label	Direction	Magnitude[k,k-ft]	Location[ft,%]
1	MP ALPHA1	Z	-.044	6
2	MP ALPHA1	Z	-.071	4
3	MP ALPHA1	Z	-.044	2

Member Point Loads (BLC 3 : Live Load)

	Member Label	Direction	Magnitude[k,k-ft]	Location[ft,%]
1	SO1	Z	-.5	0

Member Point Loads (BLC 4 : Ice Wind Load (0))

	Member Label	Direction	Magnitude[k,k-ft]	Location[ft,%]
1	MP ALPHA1	Y	-.054	6
2	MP ALPHA1	Y	-.01	4
3	MP ALPHA1	Y	-.054	2

Member Point Loads (BLC 5 : Ice Dead Load)

	Member Label	Direction	Magnitude[k,k-ft]	Location[ft,%]
1	MP ALPHA1	Z	-.184	6
2	MP ALPHA1	Z	-.075	4
3	MP ALPHA1	Z	-.184	2

Member Point Loads (BLC 6 : Wind Load (30))

	Member Label	Direction	Magnitude[k,k-ft]	Location[ft,%]
1	MP ALPHA1	Y	-.202	6
2	MP ALPHA1	X	-.116	6
3	MP ALPHA1	Y	-.05	4
4	MP ALPHA1	X	-.029	4
5	MP ALPHA1	Y	-.202	2
6	MP ALPHA1	X	-.116	2

Member Point Loads (BLC 7 : Ice Wind Load (30))

	Member Label	Direction	Magnitude[k,k-ft]	Location[ft,%]
1	MP ALPHA1	Y	-.04	6
2	MP ALPHA1	X	-.023	6
3	MP ALPHA1	Y	-.008	4
4	MP ALPHA1	X	-.005	4
5	MP ALPHA1	Y	-.04	2
6	MP ALPHA1	X	-.023	2

Member Point Loads (BLC 8 : Wind Load (60))

	Member Label	Direction	Magnitude[k,k-ft]	Location[ft,%]
1	MP ALPHA1	Y	-.073	6
2	MP ALPHA1	X	-.127	6
3	MP ALPHA1	Y	-.024	4
4	MP ALPHA1	X	-.042	4
5	MP ALPHA1	Y	-.073	2
6	MP ALPHA1	X	-.127	2

Member Point Loads (BLC 9 : Ice Wind Load (60))

	Member Label	Direction	Magnitude[k,k-ft]	Location[ft,%]
1	MP ALPHA1	Y	-.016	6
2	MP ALPHA1	X	-.028	6
3	MP ALPHA1	Y	-.004	4
4	MP ALPHA1	X	-.007	4
5	MP ALPHA1	Y	-.016	2
6	MP ALPHA1	X	-.028	2

Member Point Loads (BLC 10 : Wind Load (90))

	Member Label	Direction	Magnitude[k,k-ft]	Location[ft,%]
1	MP ALPHA1	X	-.104	6

Member Point Loads (BLC 10 : Wind Load (90)) (Continued)

	Member Label	Direction	Magnitude[k,k-ft]	Location[ft,%]
2	MP ALPHA1	X	-.044	4
3	MP ALPHA1	X	-.104	2

Member Point Loads (BLC 11 : Ice Wind Load (90))

	Member Label	Direction	Magnitude[k,k-ft]	Location[ft,%]
1	MP ALPHA1	X	-.025	6
2	MP ALPHA1	X	-.008	4
3	MP ALPHA1	X	-.025	2

Member Point Loads (BLC 12 : Wind Load (120))

	Member Label	Direction	Magnitude[k,k-ft]	Location[ft,%]
1	MP ALPHA1	Y	.073	6
2	MP ALPHA1	X	-.127	6
3	MP ALPHA1	Y	.024	4
4	MP ALPHA1	X	-.042	4
5	MP ALPHA1	Y	.073	2
6	MP ALPHA1	X	-.127	2

Member Point Loads (BLC 13 : Ice Wind Load (120))

	Member Label	Direction	Magnitude[k,k-ft]	Location[ft,%]
1	MP ALPHA1	Y	.016	6
2	MP ALPHA1	X	-.028	6
3	MP ALPHA1	Y	.004	4
4	MP ALPHA1	X	-.007	4
5	MP ALPHA1	Y	.016	2
6	MP ALPHA1	X	-.028	2

Member Point Loads (BLC 14 : Wind Load (150))

	Member Label	Direction	Magnitude[k,k-ft]	Location[ft,%]
1	MP ALPHA1	Y	.202	6
2	MP ALPHA1	X	-.116	6
3	MP ALPHA1	Y	.05	4
4	MP ALPHA1	X	-.029	4
5	MP ALPHA1	Y	.202	2
6	MP ALPHA1	X	-.116	2

Member Point Loads (BLC 15 : Ice Wind Load (150))

	Member Label	Direction	Magnitude[k,k-ft]	Location[ft,%]
1	MP ALPHA1	Y	.04	6
2	MP ALPHA1	X	-.023	6
3	MP ALPHA1	Y	.008	4
4	MP ALPHA1	X	-.005	4
5	MP ALPHA1	Y	.04	2
6	MP ALPHA1	X	-.023	2

Member Point Loads (BLC 16 : Wind Load (180))

	Member Label	Direction	Magnitude[k,k-ft]	Location[ft,%]
1	MP ALPHA1	Y	.276	6
2	MP ALPHA1	Y	.062	4

Member Point Loads (BLC 16 : Wind Load (180)) (Continued)

	Member Label	Direction	Magnitude[k,k-ft]	Location[ft,%]
3	MP ALPHA1	Y	.276	2

Member Point Loads (BLC 17 : Ice Wind Load (180))

	Member Label	Direction	Magnitude[k,k-ft]	Location[ft,%]
1	MP ALPHA1	Y	.054	6
2	MP ALPHA1	Y	.01	4
3	MP ALPHA1	Y	.054	2

Member Point Loads (BLC 18 : Wind Load (210))

	Member Label	Direction	Magnitude[k,k-ft]	Location[ft,%]
1	MP ALPHA1	Y	.202	6
2	MP ALPHA1	X	.116	6
3	MP ALPHA1	Y	.05	4
4	MP ALPHA1	X	.029	4
5	MP ALPHA1	Y	.202	2
6	MP ALPHA1	X	.116	2

Member Point Loads (BLC 19 : Ice Wind Load (210))

	Member Label	Direction	Magnitude[k,k-ft]	Location[ft,%]
1	MP ALPHA1	Y	.04	6
2	MP ALPHA1	X	.023	6
3	MP ALPHA1	Y	.008	4
4	MP ALPHA1	X	.005	4
5	MP ALPHA1	Y	.04	2
6	MP ALPHA1	X	.023	2

Member Point Loads (BLC 20 : Wind Load (240))

	Member Label	Direction	Magnitude[k,k-ft]	Location[ft,%]
1	MP ALPHA1	Y	.073	6
2	MP ALPHA1	X	.127	6
3	MP ALPHA1	Y	.024	4
4	MP ALPHA1	X	.042	4
5	MP ALPHA1	Y	.073	2
6	MP ALPHA1	X	.127	2

Member Point Loads (BLC 21 : Ice Wind Load (240))

	Member Label	Direction	Magnitude[k,k-ft]	Location[ft,%]
1	MP ALPHA1	Y	.016	6
2	MP ALPHA1	X	.028	6
3	MP ALPHA1	Y	.004	4
4	MP ALPHA1	X	.007	4
5	MP ALPHA1	Y	.016	2
6	MP ALPHA1	X	.028	2

Member Point Loads (BLC 22 : Wind Load (270))

	Member Label	Direction	Magnitude[k,k-ft]	Location[ft,%]
1	MP ALPHA1	X	.104	6
2	MP ALPHA1	X	.044	4
3	MP ALPHA1	X	.104	2

Member Point Loads (BLC 23 : Ice Wind Load (270))

	Member Label	Direction	Magnitude[k,k-ft]	Location[ft,%]
1	MP ALPHA1	X	.025	6
2	MP ALPHA1	X	.008	4
3	MP ALPHA1	X	.025	2

Member Point Loads (BLC 24 : Wind Load (300))

	Member Label	Direction	Magnitude[k,k-ft]	Location[ft,%]
1	MP ALPHA1	Y	-.073	6
2	MP ALPHA1	X	.127	6
3	MP ALPHA1	Y	-.024	4
4	MP ALPHA1	X	.042	4
5	MP ALPHA1	Y	-.073	2
6	MP ALPHA1	X	.127	2

Member Point Loads (BLC 25 : Ice Wind Load (300))

	Member Label	Direction	Magnitude[k,k-ft]	Location[ft,%]
1	MP ALPHA1	Y	-.016	6
2	MP ALPHA1	X	.028	6
3	MP ALPHA1	Y	-.004	4
4	MP ALPHA1	X	.007	4
5	MP ALPHA1	Y	-.016	2
6	MP ALPHA1	X	.028	2

Member Point Loads (BLC 26 : Wind Load (330))

	Member Label	Direction	Magnitude[k,k-ft]	Location[ft,%]
1	MP ALPHA1	Y	-.202	6
2	MP ALPHA1	X	.116	6
3	MP ALPHA1	Y	-.05	4
4	MP ALPHA1	X	.029	4
5	MP ALPHA1	Y	-.202	2
6	MP ALPHA1	X	.116	2

Member Point Loads (BLC 27 : Ice Wind Load (330))

	Member Label	Direction	Magnitude[k,k-ft]	Location[ft,%]
1	MP ALPHA1	Y	-.04	6
2	MP ALPHA1	X	.023	6
3	MP ALPHA1	Y	-.008	4
4	MP ALPHA1	X	.005	4
5	MP ALPHA1	Y	-.04	2
6	MP ALPHA1	X	.023	2

Member Point Loads (BLC 28 : Maintanence (0))

	Member Label	Direction	Magnitude[k,k-ft]	Location[ft,%]
1	MP ALPHA1	Y	-.018	6
2	MP ALPHA1	Y	-.004	4
3	MP ALPHA1	Y	-.018	2

Member Point Loads (BLC 29 : Maintanence (30))

	Member Label	Direction	Magnitude[k,k-ft]	Location[ft,%]
1	MP ALPHA1	Y	-.013	6

Member Point Loads (BLC 29 : Maintanence (30)) (Continued)

	Member Label	Direction	Magnitude[k,k-ft]	Location[ft,%]
2	MP ALPHA1	X	-.008	6
3	MP ALPHA1	Y	-.003	4
4	MP ALPHA1	X	-.002	4
5	MP ALPHA1	Y	-.013	2
6	MP ALPHA1	X	-.008	2

Member Point Loads (BLC 30 : Maintanence (60))

	Member Label	Direction	Magnitude[k,k-ft]	Location[ft,%]
1	MP ALPHA1	Y	-.005	6
2	MP ALPHA1	X	-.008	6
3	MP ALPHA1	Y	-.002	4
4	MP ALPHA1	X	-.003	4
5	MP ALPHA1	Y	-.005	2
6	MP ALPHA1	X	-.008	2

Member Point Loads (BLC 31 : Maintanence (90))

	Member Label	Direction	Magnitude[k,k-ft]	Location[ft,%]
1	MP ALPHA1	X	-.007	6
2	MP ALPHA1	X	-.003	4
3	MP ALPHA1	X	-.007	2

Member Point Loads (BLC 32 : Maintanence (120))

	Member Label	Direction	Magnitude[k,k-ft]	Location[ft,%]
1	MP ALPHA1	Y	.005	6
2	MP ALPHA1	X	-.008	6
3	MP ALPHA1	Y	.002	4
4	MP ALPHA1	X	-.003	4
5	MP ALPHA1	Y	.005	2
6	MP ALPHA1	X	-.008	2

Member Point Loads (BLC 33 : Maintanence (150))

	Member Label	Direction	Magnitude[k,k-ft]	Location[ft,%]
1	MP ALPHA1	Y	.013	6
2	MP ALPHA1	X	-.008	6
3	MP ALPHA1	Y	.003	4
4	MP ALPHA1	X	-.002	4
5	MP ALPHA1	Y	.013	2
6	MP ALPHA1	X	-.008	2

Member Point Loads (BLC 34 : Maintanence (180))

	Member Label	Direction	Magnitude[k,k-ft]	Location[ft,%]
1	MP ALPHA1	Y	.018	6
2	MP ALPHA1	Y	.004	4
3	MP ALPHA1	Y	.018	2

Member Point Loads (BLC 35 : Maintanence (210))

	Member Label	Direction	Magnitude[k,k-ft]	Location[ft,%]
1	MP ALPHA1	Y	.013	6
2	MP ALPHA1	X	.008	6

Member Point Loads (BLC 35 : Maintanence (210)) (Continued)

	Member Label	Direction	Magnitude[k,k-ft]	Location[ft,%]
3	MP ALPHA1	Y	.003	4
4	MP ALPHA1	X	.002	4
5	MP ALPHA1	Y	.013	2
6	MP ALPHA1	X	.008	2

Member Point Loads (BLC 36 : Maintanence (240))

	Member Label	Direction	Magnitude[k,k-ft]	Location[ft,%]
1	MP ALPHA1	Y	.005	6
2	MP ALPHA1	X	.008	6
3	MP ALPHA1	Y	.002	4
4	MP ALPHA1	X	.003	4
5	MP ALPHA1	Y	.005	2
6	MP ALPHA1	X	.008	2

Member Point Loads (BLC 37 : Maintanence (270))

	Member Label	Direction	Magnitude[k,k-ft]	Location[ft,%]
1	MP ALPHA1	X	.007	6
2	MP ALPHA1	X	.003	4
3	MP ALPHA1	X	.007	2

Member Point Loads (BLC 38 : Maintanence (300))

	Member Label	Direction	Magnitude[k,k-ft]	Location[ft,%]
1	MP ALPHA1	Y	-.005	6
2	MP ALPHA1	X	.008	6
3	MP ALPHA1	Y	-.002	4
4	MP ALPHA1	X	.003	4
5	MP ALPHA1	Y	-.005	2
6	MP ALPHA1	X	.008	2

Member Point Loads (BLC 39 : Maintanence (330))

	Member Label	Direction	Magnitude[k,k-ft]	Location[ft,%]
1	MP ALPHA1	Y	-.013	6
2	MP ALPHA1	X	.008	6
3	MP ALPHA1	Y	-.003	4
4	MP ALPHA1	X	.002	4
5	MP ALPHA1	Y	-.013	2
6	MP ALPHA1	X	.008	2

Member Distributed Loads (BLC 1 : Wind Load (0))

	Member Label	Direction	Start Magnitude[k/ft,F,ksf]	End Magnitude[k/ft,F,ksf]	Start Location[ft,...	End Location[ft,...
1	TIEBACK	PY	-.003	-.003	0	0
2	SO2	PY	-.013	-.013	0	0
3	SO1	PY	-.013	-.013	0	0
4	SO VERT1	PY	-.009	-.009	0	0
5	SO PLATE4	PY	-.006	-.006	0	0
6	SO PLATE3	PY	-.006	-.006	0	0
7	SO PLATE2	PY	-.006	-.006	0	0
8	SO PLATE1	PY	-.006	-.006	0	0

Member Distributed Loads (BLC 1 : Wind Load (0)) (Continued)

	Member Label	Direction	Start Magnitude[k/ft,F,ksf]	End Magnitude[k/ft,F,ksf]	Start Location[ft,...	End Location[ft,...
9	SO PIPE	PY	-.013	-.013	0	0
10	MP ALPHA1	PY	-.007	-.007	0	0
11	CONNECTION2	PY	-.007	-.007	0	0
12	CONNECTION1	PY	-.007	-.007	0	0

Member Distributed Loads (BLC 4 : Ice Wind Load (0))

	Member Label	Direction	Start Magnitude[k/ft,F,ksf]	End Magnitude[k/ft,F,ksf]	Start Location[ft,...	End Location[ft,...
1	TIEBACK	PY	-.002	-.002	0	0
2	SO2	PY	-.006	-.006	0	0
3	SO1	PY	-.006	-.006	0	0
4	SO VERT1	PY	-.005	-.005	0	0
5	SO PLATE4	PY	-.003	-.003	0	0
6	SO PLATE3	PY	-.003	-.003	0	0
7	SO PLATE2	PY	-.003	-.003	0	0
8	SO PLATE1	PY	-.003	-.003	0	0
9	SO PIPE	PY	-.006	-.006	0	0
10	MP ALPHA1	PY	-.003	-.003	0	0
11	CONNECTION2	PY	-.004	-.004	0	0
12	CONNECTION1	PY	-.004	-.004	0	0

Member Distributed Loads (BLC 5 : Ice Dead Load)

	Member Label	Direction	Start Magnitude[k/ft,F,ksf]	End Magnitude[k/ft,F,ksf]	Start Location[ft,...	End Location[ft,...
1	TIEBACK	Z	-.009	-.009	0	0
2	SO2	Z	-.012	-.012	0	0
3	SO1	Z	-.012	-.012	0	0
4	SO VERT1	Z	-.009	-.009	0	0
5	SO PLATE4	Z	-.01	-.01	0	0
6	SO PLATE3	Z	-.01	-.01	0	0
7	SO PLATE2	Z	-.01	-.01	0	0
8	SO PLATE1	Z	-.01	-.01	0	0
9	SO PIPE	Z	-.011	-.011	0	0
10	MP ALPHA1	Z	-.009	-.009	0	0
11	CONNECTION2	Z	-.019	-.019	0	0
12	CONNECTION1	Z	-.019	-.019	0	0

Member Distributed Loads (BLC 6 : Wind Load (30))

	Member Label	Direction	Start Magnitude[k/ft,F,ksf]	End Magnitude[k/ft,F,ksf]	Start Location[ft,...	End Location[ft,...
1	TIEBACK	PY	-.003	-.003	0	0
2	SO2	PY	-.011	-.011	0	0
3	SO1	PY	-.011	-.011	0	0
4	SO VERT1	PY	-.008	-.008	0	0
5	SO PLATE4	PY	-.005	-.005	0	0
6	SO PLATE3	PY	-.005	-.005	0	0
7	SO PLATE2	PY	-.005	-.005	0	0
8	SO PLATE1	PY	-.005	-.005	0	0
9	SO PIPE	PY	-.011	-.011	0	0
10	MP ALPHA1	PY	-.006	-.006	0	0
11	CONNECTION2	PY	-.006	-.006	0	0
12	CONNECTION1	PY	-.006	-.006	0	0
13	TIEBACK	PX	-.002	-.002	0	0

Member Distributed Loads (BLC 6 : Wind Load (30)) (Continued)

	Member Label	Direction	Start Magnitude[k/ft,F,ksf]	End Magnitude[k/ft,F,ksf]	Start Location[ft,...	End Location[ft,...
14	SO2	PX	-.006	-.006	0	0
15	SO1	PX	-.006	-.006	0	0
16	SO VERT1	PX	-.004	-.004	0	0
17	SO PLATE4	PX	-.003	-.003	0	0
18	SO PLATE3	PX	-.003	-.003	0	0
19	SO PLATE2	PX	-.003	-.003	0	0
20	SO PLATE1	PX	-.003	-.003	0	0
21	SO PIPE	PX	-.006	-.006	0	0
22	MP ALPHA1	PX	-.004	-.004	0	0
23	CONNECTION2	PX	-.004	-.004	0	0
24	CONNECTION1	PX	-.004	-.004	0	0

Member Distributed Loads (BLC 7 : Ice Wind Load (30))

	Member Label	Direction	Start Magnitude[k/ft,F,ksf]	End Magnitude[k/ft,F,ksf]	Start Location[ft,...	End Location[ft,...
1	TIEBACK	PY	-.002	-.002	0	0
2	SO2	PY	-.005	-.005	0	0
3	SO1	PY	-.005	-.005	0	0
4	SO VERT1	PY	-.004	-.004	0	0
5	SO PLATE4	PY	-.003	-.003	0	0
6	SO PLATE3	PY	-.003	-.003	0	0
7	SO PLATE2	PY	-.003	-.003	0	0
8	SO PLATE1	PY	-.003	-.003	0	0
9	SO PIPE	PY	-.005	-.005	0	0
10	MP ALPHA1	PY	-.003	-.003	0	0
11	CONNECTION2	PY	-.003	-.003	0	0
12	CONNECTION1	PY	-.003	-.003	0	0
13	TIEBACK	PX	-.001	-.001	0	0
14	SO2	PX	-.003	-.003	0	0
15	SO1	PX	-.003	-.003	0	0
16	SO VERT1	PX	-.003	-.003	0	0
17	SO PLATE4	PX	-.002	-.002	0	0
18	SO PLATE3	PX	-.002	-.002	0	0
19	SO PLATE2	PX	-.002	-.002	0	0
20	SO PLATE1	PX	-.002	-.002	0	0
21	SO PIPE	PX	-.003	-.003	0	0
22	MP ALPHA1	PX	-.002	-.002	0	0
23	CONNECTION2	PX	-.002	-.002	0	0
24	CONNECTION1	PX	-.002	-.002	0	0

Member Distributed Loads (BLC 8 : Wind Load (60))

	Member Label	Direction	Start Magnitude[k/ft,F,ksf]	End Magnitude[k/ft,F,ksf]	Start Location[ft,...	End Location[ft,...
1	TIEBACK	PY	-.002	-.002	0	0
2	SO2	PY	-.006	-.006	0	0
3	SO1	PY	-.006	-.006	0	0
4	SO VERT1	PY	-.004	-.004	0	0
5	SO PLATE4	PY	-.003	-.003	0	0
6	SO PLATE3	PY	-.003	-.003	0	0
7	SO PLATE2	PY	-.003	-.003	0	0
8	SO PLATE1	PY	-.003	-.003	0	0
9	SO PIPE	PY	-.006	-.006	0	0
10	MP ALPHA1	PY	-.004	-.004	0	0

Member Distributed Loads (BLC 8 : Wind Load (60)) (Continued)

	Member Label	Direction	Start Magnitude[k/ft,F,ksf]	End Magnitude[k/ft,F,ksf]	Start Location[ft,...	End Location[ft,...
11	CONNECTION2	PY	-.004	-.004	0	0
12	CONNECTION1	PY	-.004	-.004	0	0
13	TIEBACK	PX	-.003	-.003	0	0
14	SO2	PX	-.011	-.011	0	0
15	SO1	PX	-.011	-.011	0	0
16	SO VERT1	PX	-.008	-.008	0	0
17	SO PLATE4	PX	-.005	-.005	0	0
18	SO PLATE3	PX	-.005	-.005	0	0
19	SO PLATE2	PX	-.005	-.005	0	0
20	SO PLATE1	PX	-.005	-.005	0	0
21	SO PIPE	PX	-.011	-.011	0	0
22	MP ALPHA1	PX	-.006	-.006	0	0
23	CONNECTION2	PX	-.006	-.006	0	0
24	CONNECTION1	PX	-.006	-.006	0	0

Member Distributed Loads (BLC 9 : Ice Wind Load (60))

	Member Label	Direction	Start Magnitude[k/ft,F,ksf]	End Magnitude[k/ft,F,ksf]	Start Location[ft,...	End Location[ft,...
1	TIEBACK	PY	-.001	-.001	0	0
2	SO2	PY	-.003	-.003	0	0
3	SO1	PY	-.003	-.003	0	0
4	SO VERT1	PY	-.003	-.003	0	0
5	SO PLATE4	PY	-.002	-.002	0	0
6	SO PLATE3	PY	-.002	-.002	0	0
7	SO PLATE2	PY	-.002	-.002	0	0
8	SO PLATE1	PY	-.002	-.002	0	0
9	SO PIPE	PY	-.003	-.003	0	0
10	MP ALPHA1	PY	-.002	-.002	0	0
11	CONNECTION2	PY	-.002	-.002	0	0
12	CONNECTION1	PY	-.002	-.002	0	0
13	TIEBACK	PX	-.002	-.002	0	0
14	SO2	PX	-.005	-.005	0	0
15	SO1	PX	-.005	-.005	0	0
16	SO VERT1	PX	-.004	-.004	0	0
17	SO PLATE4	PX	-.003	-.003	0	0
18	SO PLATE3	PX	-.003	-.003	0	0
19	SO PLATE2	PX	-.003	-.003	0	0
20	SO PLATE1	PX	-.003	-.003	0	0
21	SO PIPE	PX	-.005	-.005	0	0
22	MP ALPHA1	PX	-.003	-.003	0	0
23	CONNECTION2	PX	-.003	-.003	0	0
24	CONNECTION1	PX	-.003	-.003	0	0

Member Distributed Loads (BLC 10 : Wind Load (90))

	Member Label	Direction	Start Magnitude[k/ft,F,ksf]	End Magnitude[k/ft,F,ksf]	Start Location[ft,...	End Location[ft,...
1	TIEBACK	PX	-.003	-.003	0	0
2	SO2	PX	-.013	-.013	0	0
3	SO1	PX	-.013	-.013	0	0
4	SO VERT1	PX	-.009	-.009	0	0
5	SO PLATE4	PX	-.006	-.006	0	0
6	SO PLATE3	PX	-.006	-.006	0	0
7	SO PLATE2	PX	-.006	-.006	0	0

Member Distributed Loads (BLC 10 : Wind Load (90)) (Continued)

	Member Label	Direction	Start Magnitude[k/ft,F,ksf]	End Magnitude[k/ft,F,ksf]	Start Location[ft,...	End Location[ft,...
8	SO PLATE1	PX	-.006	-.006	0	0
9	SO PIPE	PX	-.013	-.013	0	0
10	MP ALPHA1	PX	-.007	-.007	0	0
11	CONNECTION2	PX	-.007	-.007	0	0
12	CONNECTION1	PX	-.007	-.007	0	0

Member Distributed Loads (BLC 11 : Ice Wind Load (90))

	Member Label	Direction	Start Magnitude[k/ft,F,ksf]	End Magnitude[k/ft,F,ksf]	Start Location[ft,...	End Location[ft,...
1	TIEBACK	PX	-.002	-.002	0	0
2	SO2	PX	-.006	-.006	0	0
3	SO1	PX	-.006	-.006	0	0
4	SO VERT1	PX	-.005	-.005	0	0
5	SO PLATE4	PX	-.003	-.003	0	0
6	SO PLATE3	PX	-.003	-.003	0	0
7	SO PLATE2	PX	-.003	-.003	0	0
8	SO PLATE1	PX	-.003	-.003	0	0
9	SO PIPE	PX	-.006	-.006	0	0
10	MP ALPHA1	PX	-.003	-.003	0	0
11	CONNECTION2	PX	-.004	-.004	0	0
12	CONNECTION1	PX	-.004	-.004	0	0

Member Distributed Loads (BLC 12 : Wind Load (120))

	Member Label	Direction	Start Magnitude[k/ft,F,ksf]	End Magnitude[k/ft,F,ksf]	Start Location[ft,...	End Location[ft,...
1	TIEBACK	PY	.002	.002	0	0
2	SO2	PY	.006	.006	0	0
3	SO1	PY	.006	.006	0	0
4	SO VERT1	PY	.004	.004	0	0
5	SO PLATE4	PY	.003	.003	0	0
6	SO PLATE3	PY	.003	.003	0	0
7	SO PLATE2	PY	.003	.003	0	0
8	SO PLATE1	PY	.003	.003	0	0
9	SO PIPE	PY	.006	.006	0	0
10	MP ALPHA1	PY	.004	.004	0	0
11	CONNECTION2	PY	.004	.004	0	0
12	CONNECTION1	PY	.004	.004	0	0
13	TIEBACK	PX	-.003	-.003	0	0
14	SO2	PX	-.011	-.011	0	0
15	SO1	PX	-.011	-.011	0	0
16	SO VERT1	PX	-.008	-.008	0	0
17	SO PLATE4	PX	-.005	-.005	0	0
18	SO PLATE3	PX	-.005	-.005	0	0
19	SO PLATE2	PX	-.005	-.005	0	0
20	SO PLATE1	PX	-.005	-.005	0	0
21	SO PIPE	PX	-.011	-.011	0	0
22	MP ALPHA1	PX	-.006	-.006	0	0
23	CONNECTION2	PX	-.006	-.006	0	0
24	CONNECTION1	PX	-.006	-.006	0	0

Member Distributed Loads (BLC 13 : Ice Wind Load (120))

	Member Label	Direction	Start Magnitude[k/ft,F,ksf]	End Magnitude[k/ft,F,ksf]	Start Location[ft,...	End Location[ft,...

Member Distributed Loads (BLC 13 : Ice Wind Load (120)) (Continued)

	Member Label	Direction	Start Magnitude[k/ft,F,ksf]	End Magnitude[k/ft,F,ksf]	Start Location[ft,...	End Location[ft,...
1	TIEBACK	PY	.001	.001	0	0
2	SO2	PY	.003	.003	0	0
3	SO1	PY	.003	.003	0	0
4	SO VERT1	PY	.003	.003	0	0
5	SO PLATE4	PY	.002	.002	0	0
6	SO PLATE3	PY	.002	.002	0	0
7	SO PLATE2	PY	.002	.002	0	0
8	SO PLATE1	PY	.002	.002	0	0
9	SO PIPE	PY	.003	.003	0	0
10	MP ALPHA1	PY	.002	.002	0	0
11	CONNECTION2	PY	.002	.002	0	0
12	CONNECTION1	PY	.002	.002	0	0
13	TIEBACK	PX	-.002	-.002	0	0
14	SO2	PX	-.005	-.005	0	0
15	SO1	PX	-.005	-.005	0	0
16	SO VERT1	PX	-.004	-.004	0	0
17	SO PLATE4	PX	-.003	-.003	0	0
18	SO PLATE3	PX	-.003	-.003	0	0
19	SO PLATE2	PX	-.003	-.003	0	0
20	SO PLATE1	PX	-.003	-.003	0	0
21	SO PIPE	PX	-.005	-.005	0	0
22	MP ALPHA1	PX	-.003	-.003	0	0
23	CONNECTION2	PX	-.003	-.003	0	0
24	CONNECTION1	PX	-.003	-.003	0	0

Member Distributed Loads (BLC 14 : Wind Load (150))

	Member Label	Direction	Start Magnitude[k/ft,F,ksf]	End Magnitude[k/ft,F,ksf]	Start Location[ft,...	End Location[ft,...
1	TIEBACK	PY	.003	.003	0	0
2	SO2	PY	.011	.011	0	0
3	SO1	PY	.011	.011	0	0
4	SO VERT1	PY	.008	.008	0	0
5	SO PLATE4	PY	.005	.005	0	0
6	SO PLATE3	PY	.005	.005	0	0
7	SO PLATE2	PY	.005	.005	0	0
8	SO PLATE1	PY	.005	.005	0	0
9	SO PIPE	PY	.011	.011	0	0
10	MP ALPHA1	PY	.006	.006	0	0
11	CONNECTION2	PY	.006	.006	0	0
12	CONNECTION1	PY	.006	.006	0	0
13	TIEBACK	PX	-.002	-.002	0	0
14	SO2	PX	-.006	-.006	0	0
15	SO1	PX	-.006	-.006	0	0
16	SO VERT1	PX	-.004	-.004	0	0
17	SO PLATE4	PX	-.003	-.003	0	0
18	SO PLATE3	PX	-.003	-.003	0	0
19	SO PLATE2	PX	-.003	-.003	0	0
20	SO PLATE1	PX	-.003	-.003	0	0
21	SO PIPE	PX	-.006	-.006	0	0
22	MP ALPHA1	PX	-.004	-.004	0	0
23	CONNECTION2	PX	-.004	-.004	0	0
24	CONNECTION1	PX	-.004	-.004	0	0

Member Distributed Loads (BLC 15 : Ice Wind Load (150))

	Member Label	Direction	Start Magnitude[k/ft,F,ksf]	End Magnitude[k/ft,F,ksf]	Start Location[ft,...	End Location[ft,...
1	TIEBACK	PY	.002	.002	0	0
2	SO2	PY	.005	.005	0	0
3	SO1	PY	.005	.005	0	0
4	SO VERT1	PY	.004	.004	0	0
5	SO PLATE4	PY	.003	.003	0	0
6	SO PLATE3	PY	.003	.003	0	0
7	SO PLATE2	PY	.003	.003	0	0
8	SO PLATE1	PY	.003	.003	0	0
9	SO PIPE	PY	.005	.005	0	0
10	MP ALPHA1	PY	.003	.003	0	0
11	CONNECTION2	PY	.003	.003	0	0
12	CONNECTION1	PY	.003	.003	0	0
13	TIEBACK	PX	-.001	-.001	0	0
14	SO2	PX	-.003	-.003	0	0
15	SO1	PX	-.003	-.003	0	0
16	SO VERT1	PX	-.003	-.003	0	0
17	SO PLATE4	PX	-.002	-.002	0	0
18	SO PLATE3	PX	-.002	-.002	0	0
19	SO PLATE2	PX	-.002	-.002	0	0
20	SO PLATE1	PX	-.002	-.002	0	0
21	SO PIPE	PX	-.003	-.003	0	0
22	MP ALPHA1	PX	-.002	-.002	0	0
23	CONNECTION2	PX	-.002	-.002	0	0
24	CONNECTION1	PX	-.002	-.002	0	0

Member Distributed Loads (BLC 16 : Wind Load (180))

	Member Label	Direction	Start Magnitude[k/ft,F,ksf]	End Magnitude[k/ft,F,ksf]	Start Location[ft,...	End Location[ft,...
1	TIEBACK	PY	.003	.003	0	0
2	SO2	PY	.013	.013	0	0
3	SO1	PY	.013	.013	0	0
4	SO VERT1	PY	.009	.009	0	0
5	SO PLATE4	PY	.006	.006	0	0
6	SO PLATE3	PY	.006	.006	0	0
7	SO PLATE2	PY	.006	.006	0	0
8	SO PLATE1	PY	.006	.006	0	0
9	SO PIPE	PY	.013	.013	0	0
10	MP ALPHA1	PY	.007	.007	0	0
11	CONNECTION2	PY	.007	.007	0	0
12	CONNECTION1	PY	.007	.007	0	0

Member Distributed Loads (BLC 17 : Ice Wind Load (180))

	Member Label	Direction	Start Magnitude[k/ft,F,ksf]	End Magnitude[k/ft,F,ksf]	Start Location[ft,...	End Location[ft,...
1	TIEBACK	PY	.002	.002	0	0
2	SO2	PY	.006	.006	0	0
3	SO1	PY	.006	.006	0	0
4	SO VERT1	PY	.005	.005	0	0
5	SO PLATE4	PY	.003	.003	0	0
6	SO PLATE3	PY	.003	.003	0	0
7	SO PLATE2	PY	.003	.003	0	0
8	SO PLATE1	PY	.003	.003	0	0
9	SO PIPE	PY	.006	.006	0	0

Member Distributed Loads (BLC 17 : Ice Wind Load (180)) (Continued)

	Member Label	Direction	Start Magnitude[k/ft,F,ksf]	End Magnitude[k/ft,F,ksf]	Start Location[ft,...	End Location[ft,...
10	MP ALPHA1	PY	.003	.003	0	0
11	CONNECTION2	PY	.004	.004	0	0
12	CONNECTION1	PY	.004	.004	0	0

Member Distributed Loads (BLC 18 : Wind Load (210))

	Member Label	Direction	Start Magnitude[k/ft,F,ksf]	End Magnitude[k/ft,F,ksf]	Start Location[ft,...	End Location[ft,...
1	TIEBACK	PY	.003	.003	0	0
2	SO2	PY	.011	.011	0	0
3	SO1	PY	.011	.011	0	0
4	SO VERT1	PY	.008	.008	0	0
5	SO PLATE4	PY	.005	.005	0	0
6	SO PLATE3	PY	.005	.005	0	0
7	SO PLATE2	PY	.005	.005	0	0
8	SO PLATE1	PY	.005	.005	0	0
9	SO PIPE	PY	.011	.011	0	0
10	MP ALPHA1	PY	.006	.006	0	0
11	CONNECTION2	PY	.006	.006	0	0
12	CONNECTION1	PY	.006	.006	0	0
13	TIEBACK	PX	.002	.002	0	0
14	SO2	PX	.006	.006	0	0
15	SO1	PX	.006	.006	0	0
16	SO VERT1	PX	.004	.004	0	0
17	SO PLATE4	PX	.003	.003	0	0
18	SO PLATE3	PX	.003	.003	0	0
19	SO PLATE2	PX	.003	.003	0	0
20	SO PLATE1	PX	.003	.003	0	0
21	SO PIPE	PX	.006	.006	0	0
22	MP ALPHA1	PX	.004	.004	0	0
23	CONNECTION2	PX	.004	.004	0	0
24	CONNECTION1	PX	.004	.004	0	0

Member Distributed Loads (BLC 19 : Ice Wind Load (210))

	Member Label	Direction	Start Magnitude[k/ft,F,ksf]	End Magnitude[k/ft,F,ksf]	Start Location[ft,...	End Location[ft,...
1	TIEBACK	PY	.002	.002	0	0
2	SO2	PY	.005	.005	0	0
3	SO1	PY	.005	.005	0	0
4	SO VERT1	PY	.004	.004	0	0
5	SO PLATE4	PY	.003	.003	0	0
6	SO PLATE3	PY	.003	.003	0	0
7	SO PLATE2	PY	.003	.003	0	0
8	SO PLATE1	PY	.003	.003	0	0
9	SO PIPE	PY	.005	.005	0	0
10	MP ALPHA1	PY	.003	.003	0	0
11	CONNECTION2	PY	.003	.003	0	0
12	CONNECTION1	PY	.003	.003	0	0
13	TIEBACK	PX	.001	.001	0	0
14	SO2	PX	.003	.003	0	0
15	SO1	PX	.003	.003	0	0
16	SO VERT1	PX	.003	.003	0	0
17	SO PLATE4	PX	.002	.002	0	0
18	SO PLATE3	PX	.002	.002	0	0

Member Distributed Loads (BLC 19 : Ice Wind Load (210)) (Continued)

	Member Label	Direction	Start Magnitude[k/ft,F,ksf]	End Magnitude[k/ft,F,ksf]	Start Location[ft,...	End Location[ft,...
19	SO PLATE2	PX	.002	.002	0	0
20	SO PLATE1	PX	.002	.002	0	0
21	SO PIPE	PX	.003	.003	0	0
22	MP ALPHA1	PX	.002	.002	0	0
23	CONNECTION2	PX	.002	.002	0	0
24	CONNECTION1	PX	.002	.002	0	0

Member Distributed Loads (BLC 20 : Wind Load (240))

	Member Label	Direction	Start Magnitude[k/ft,F,ksf]	End Magnitude[k/ft,F,ksf]	Start Location[ft,...	End Location[ft,...
1	TIEBACK	PY	.002	.002	0	0
2	SO2	PY	.006	.006	0	0
3	SO1	PY	.006	.006	0	0
4	SO VERT1	PY	.004	.004	0	0
5	SO PLATE4	PY	.003	.003	0	0
6	SO PLATE3	PY	.003	.003	0	0
7	SO PLATE2	PY	.003	.003	0	0
8	SO PLATE1	PY	.003	.003	0	0
9	SO PIPE	PY	.006	.006	0	0
10	MP ALPHA1	PY	.004	.004	0	0
11	CONNECTION2	PY	.004	.004	0	0
12	CONNECTION1	PY	.004	.004	0	0
13	TIEBACK	PX	.003	.003	0	0
14	SO2	PX	.011	.011	0	0
15	SO1	PX	.011	.011	0	0
16	SO VERT1	PX	.008	.008	0	0
17	SO PLATE4	PX	.005	.005	0	0
18	SO PLATE3	PX	.005	.005	0	0
19	SO PLATE2	PX	.005	.005	0	0
20	SO PLATE1	PX	.005	.005	0	0
21	SO PIPE	PX	.011	.011	0	0
22	MP ALPHA1	PX	.006	.006	0	0
23	CONNECTION2	PX	.006	.006	0	0
24	CONNECTION1	PX	.006	.006	0	0

Member Distributed Loads (BLC 21 : Ice Wind Load (240))

	Member Label	Direction	Start Magnitude[k/ft,F,ksf]	End Magnitude[k/ft,F,ksf]	Start Location[ft,...	End Location[ft,...
1	TIEBACK	PY	.001	.001	0	0
2	SO2	PY	.003	.003	0	0
3	SO1	PY	.003	.003	0	0
4	SO VERT1	PY	.003	.003	0	0
5	SO PLATE4	PY	.002	.002	0	0
6	SO PLATE3	PY	.002	.002	0	0
7	SO PLATE2	PY	.002	.002	0	0
8	SO PLATE1	PY	.002	.002	0	0
9	SO PIPE	PY	.003	.003	0	0
10	MP ALPHA1	PY	.002	.002	0	0
11	CONNECTION2	PY	.002	.002	0	0
12	CONNECTION1	PY	.002	.002	0	0
13	TIEBACK	PX	.002	.002	0	0
14	SO2	PX	.005	.005	0	0
15	SO1	PX	.005	.005	0	0

Member Distributed Loads (BLC 21 : Ice Wind Load (240)) (Continued)

	Member Label	Direction	Start Magnitude[k/ft,F,ksf]	End Magnitude[k/ft,F,ksf]	Start Location[ft,...	End Location[ft,...
16	SO VERT1	PX	.004	.004	0	0
17	SO PLATE4	PX	.003	.003	0	0
18	SO PLATE3	PX	.003	.003	0	0
19	SO PLATE2	PX	.003	.003	0	0
20	SO PLATE1	PX	.003	.003	0	0
21	SO PIPE	PX	.005	.005	0	0
22	MP ALPHA1	PX	.003	.003	0	0
23	CONNECTION2	PX	.003	.003	0	0
24	CONNECTION1	PX	.003	.003	0	0

Member Distributed Loads (BLC 22 : Wind Load (270))

	Member Label	Direction	Start Magnitude[k/ft,F,ksf]	End Magnitude[k/ft,F,ksf]	Start Location[ft,...	End Location[ft,...
1	TIEBACK	PX	.003	.003	0	0
2	SO2	PX	.013	.013	0	0
3	SO1	PX	.013	.013	0	0
4	SO VERT1	PX	.009	.009	0	0
5	SO PLATE4	PX	.006	.006	0	0
6	SO PLATE3	PX	.006	.006	0	0
7	SO PLATE2	PX	.006	.006	0	0
8	SO PLATE1	PX	.006	.006	0	0
9	SO PIPE	PX	.013	.013	0	0
10	MP ALPHA1	PX	.007	.007	0	0
11	CONNECTION2	PX	.007	.007	0	0
12	CONNECTION1	PX	.007	.007	0	0

Member Distributed Loads (BLC 23 : Ice Wind Load (270))

	Member Label	Direction	Start Magnitude[k/ft,F,ksf]	End Magnitude[k/ft,F,ksf]	Start Location[ft,...	End Location[ft,...
1	TIEBACK	PX	.002	.002	0	0
2	SO2	PX	.006	.006	0	0
3	SO1	PX	.006	.006	0	0
4	SO VERT1	PX	.005	.005	0	0
5	SO PLATE4	PX	.003	.003	0	0
6	SO PLATE3	PX	.003	.003	0	0
7	SO PLATE2	PX	.003	.003	0	0
8	SO PLATE1	PX	.003	.003	0	0
9	SO PIPE	PX	.006	.006	0	0
10	MP ALPHA1	PX	.003	.003	0	0
11	CONNECTION2	PX	.004	.004	0	0
12	CONNECTION1	PX	.004	.004	0	0

Member Distributed Loads (BLC 24 : Wind Load (300))

	Member Label	Direction	Start Magnitude[k/ft,F,ksf]	End Magnitude[k/ft,F,ksf]	Start Location[ft,...	End Location[ft,...
1	TIEBACK	PY	-.002	-.002	0	0
2	SO2	PY	-.006	-.006	0	0
3	SO1	PY	-.006	-.006	0	0
4	SO VERT1	PY	-.004	-.004	0	0
5	SO PLATE4	PY	-.003	-.003	0	0
6	SO PLATE3	PY	-.003	-.003	0	0
7	SO PLATE2	PY	-.003	-.003	0	0
8	SO PLATE1	PY	-.003	-.003	0	0

Member Distributed Loads (BLC 24 : Wind Load (300)) (Continued)

	Member Label	Direction	Start Magnitude[k/ft,F,ksf]	End Magnitude[k/ft,F,ksf]	Start Location[ft,...	End Location[ft,...
9	SO PIPE	PY	-.006	-.006	0	0
10	MP ALPHA1	PY	-.004	-.004	0	0
11	CONNECTION2	PY	-.004	-.004	0	0
12	CONNECTION1	PY	-.004	-.004	0	0
13	TIEBACK	PX	.003	.003	0	0
14	SO2	PX	.011	.011	0	0
15	SO1	PX	.011	.011	0	0
16	SO VERT1	PX	.008	.008	0	0
17	SO PLATE4	PX	.005	.005	0	0
18	SO PLATE3	PX	.005	.005	0	0
19	SO PLATE2	PX	.005	.005	0	0
20	SO PLATE1	PX	.005	.005	0	0
21	SO PIPE	PX	.011	.011	0	0
22	MP ALPHA1	PX	.006	.006	0	0
23	CONNECTION2	PX	.006	.006	0	0
24	CONNECTION1	PX	.006	.006	0	0

Member Distributed Loads (BLC 25 : Ice Wind Load (300))

	Member Label	Direction	Start Magnitude[k/ft,F,ksf]	End Magnitude[k/ft,F,ksf]	Start Location[ft,...	End Location[ft,...
1	TIEBACK	PY	-.001	-.001	0	0
2	SO2	PY	-.003	-.003	0	0
3	SO1	PY	-.003	-.003	0	0
4	SO VERT1	PY	-.003	-.003	0	0
5	SO PLATE4	PY	-.002	-.002	0	0
6	SO PLATE3	PY	-.002	-.002	0	0
7	SO PLATE2	PY	-.002	-.002	0	0
8	SO PLATE1	PY	-.002	-.002	0	0
9	SO PIPE	PY	-.003	-.003	0	0
10	MP ALPHA1	PY	-.002	-.002	0	0
11	CONNECTION2	PY	-.002	-.002	0	0
12	CONNECTION1	PY	-.002	-.002	0	0
13	TIEBACK	PX	.002	.002	0	0
14	SO2	PX	.005	.005	0	0
15	SO1	PX	.005	.005	0	0
16	SO VERT1	PX	.004	.004	0	0
17	SO PLATE4	PX	.003	.003	0	0
18	SO PLATE3	PX	.003	.003	0	0
19	SO PLATE2	PX	.003	.003	0	0
20	SO PLATE1	PX	.003	.003	0	0
21	SO PIPE	PX	.005	.005	0	0
22	MP ALPHA1	PX	.003	.003	0	0
23	CONNECTION2	PX	.003	.003	0	0
24	CONNECTION1	PX	.003	.003	0	0

Member Distributed Loads (BLC 26 : Wind Load (330))

	Member Label	Direction	Start Magnitude[k/ft,F,ksf]	End Magnitude[k/ft,F,ksf]	Start Location[ft,...	End Location[ft,...
1	TIEBACK	PY	-.003	-.003	0	0
2	SO2	PY	-.011	-.011	0	0
3	SO1	PY	-.011	-.011	0	0
4	SO VERT1	PY	-.008	-.008	0	0
5	SO PLATE4	PY	-.005	-.005	0	0

Member Distributed Loads (BLC 26 : Wind Load (330)) (Continued)

	Member Label	Direction	Start Magnitude[k/ft,F,ksf]	End Magnitude[k/ft,F,ksf]	Start Location[ft,...	End Location[ft,...
6	SO PLATE3	PY	-.005	-.005	0	0
7	SO PLATE2	PY	-.005	-.005	0	0
8	SO PLATE1	PY	-.005	-.005	0	0
9	SO PIPE	PY	-.011	-.011	0	0
10	MP ALPHA1	PY	-.006	-.006	0	0
11	CONNECTION2	PY	-.006	-.006	0	0
12	CONNECTION1	PY	-.006	-.006	0	0
13	TIEBACK	PX	.002	.002	0	0
14	SO2	PX	.006	.006	0	0
15	SO1	PX	.006	.006	0	0
16	SO VERT1	PX	.004	.004	0	0
17	SO PLATE4	PX	.003	.003	0	0
18	SO PLATE3	PX	.003	.003	0	0
19	SO PLATE2	PX	.003	.003	0	0
20	SO PLATE1	PX	.003	.003	0	0
21	SO PIPE	PX	.006	.006	0	0
22	MP ALPHA1	PX	.004	.004	0	0
23	CONNECTION2	PX	.004	.004	0	0
24	CONNECTION1	PX	.004	.004	0	0

Member Distributed Loads (BLC 27 : Ice Wind Load (330))

	Member Label	Direction	Start Magnitude[k/ft,F,ksf]	End Magnitude[k/ft,F,ksf]	Start Location[ft,...	End Location[ft,...
1	TIEBACK	PY	-.002	-.002	0	0
2	SO2	PY	-.005	-.005	0	0
3	SO1	PY	-.005	-.005	0	0
4	SO VERT1	PY	-.004	-.004	0	0
5	SO PLATE4	PY	-.003	-.003	0	0
6	SO PLATE3	PY	-.003	-.003	0	0
7	SO PLATE2	PY	-.003	-.003	0	0
8	SO PLATE1	PY	-.003	-.003	0	0
9	SO PIPE	PY	-.005	-.005	0	0
10	MP ALPHA1	PY	-.003	-.003	0	0
11	CONNECTION2	PY	-.003	-.003	0	0
12	CONNECTION1	PY	-.003	-.003	0	0
13	TIEBACK	PX	.001	.001	0	0
14	SO2	PX	.003	.003	0	0
15	SO1	PX	.003	.003	0	0
16	SO VERT1	PX	.003	.003	0	0
17	SO PLATE4	PX	.002	.002	0	0
18	SO PLATE3	PX	.002	.002	0	0
19	SO PLATE2	PX	.002	.002	0	0
20	SO PLATE1	PX	.002	.002	0	0
21	SO PIPE	PX	.003	.003	0	0
22	MP ALPHA1	PX	.002	.002	0	0
23	CONNECTION2	PX	.002	.002	0	0
24	CONNECTION1	PX	.002	.002	0	0

Envelope Joint Reactions

	Joint		X [k]	LC	Y [k]	LC	Z [k]	LC	MX [k-ft]	LC	MY [k-ft]	LC	MZ [k-ft]	LC
1	N72	max	.216	8	1.901	5	.611	15	.052	32	.236	14	0	41
2		min	-.21	32	-1.267	23	-.073	32	-.37	15	-.237	26	0	1
3	N71A	max	.091	26	.169	14	.578	9	-.037	26	.166	14	0	41
4		min	-.09	14	-1.14	30	.068	26	-.349	9	-.167	26	0	1
5	N37A	max	.358	14	1.592	26	.369	26	0	41	0	41	0	41
6		min	-.364	26	-1.582	14	-.34	14	0	1	0	1	0	1
7	Totals:	max	.482	14	.757	2	1.131	19						
8		min	-.482	32	-.757	20	.381	26						

Basic Load Cases

	BLC Description	Category	X Gravity	Y Gravity	Z Gravity	Joint	Point	Distribu...	Area(M...	Surface...
1	Wind Load (0)	WL					3	12		
2	Dead Load	DL			-1.1		3			
3	Live Load	LL					1			
4	Ice Wind Load (0)	OL1					3	12		
5	Ice Dead Load	OL2					3	12		
6	Wind Load (30)	WL					6	24		
7	Ice Wind Load (30)	OL1					6	24		
8	Wind Load (60)	WL					6	24		
9	Ice Wind Load (60)	OL1					6	24		
10	Wind Load (90)	WL					3	12		
11	Ice Wind Load (90)	OL1					3	12		
12	Wind Load (120)	WL					6	24		
13	Ice Wind Load (120)	OL1					6	24		
14	Wind Load (150)	WL					6	24		
15	Ice Wind Load (150)	OL1					6	24		
16	Wind Load (180)	WL					3	12		
17	Ice Wind Load (180)	OL1					3	12		
18	Wind Load (210)	WL					6	24		
19	Ice Wind Load (210)	OL1					6	24		
20	Wind Load (240)	WL					6	24		
21	Ice Wind Load (240)	OL1					6	24		
22	Wind Load (270)	WL					3	12		
23	Ice Wind Load (270)	OL1					3	12		
24	Wind Load (300)	WL					6	24		
25	Ice Wind Load (300)	OL1					6	24		
26	Wind Load (330)	WL					6	24		
27	Ice Wind Load (330)	OL1					6	24		
28	Maintanence (0)	OL3					3			
29	Maintanence (30)	OL3					6			
30	Maintanence (60)	OL3					6			
31	Maintanence (90)	OL3					3			
32	Maintanence (120)	OL3					6			
33	Maintanence (150)	OL3					6			
34	Maintanence (180)	OL3					3			
35	Maintanence (210)	OL3					6			
36	Maintanence (240)	OL3					6			
37	Maintanence (270)	OL3					3			
38	Maintanence (300)	OL3					6			

Basic Load Cases (Continued)

	BLC Description	Category	X Gravity	Y Gravity	Z Gravity	Joint	Point	Distribu...	Area(M...	Surface...
39	Maintanence (330)	OL3					6			
40	Earthquake (x-direction)	EL	-.117							
41	Earthquake (y-direction)	EL		-.117						
42	Earthquake (z-direction)	EL			-.047					

Load Combinations

	Description	Solve	P...	S...	B...	Fa...	B...	Fa...	B...	Fa...	B...	Fa...	B...	Fa...	B...	Fa...	B...	Fa...	B...	Fa...	B...	Fa...	B...	Fa...	B...	Fa...
1	1.4D	Yes	Y		2	1.4																				
2	1.2D + 1.0W(0)	Yes	Y		2	1.2	1	1																		
3	1.2D + 1.0Di + 1.0Wi(0)	Yes	Y		2	1.2	5	1	4	1																
4	1.2D + 1.5L + 1.0Wl(0)	Yes	Y		2	1.2	3	1.5	28	1																
5	1.2D + 1.0W(30)	Yes	Y		2	1.2	6	1																		
6	1.2D + 1.0Di + 1.0Wi(30)	Yes	Y		2	1.2	5	1	7	1																
7	1.2D + 1.5L + 1.0Wl(30)	Yes	Y		2	1.2	3	1.5	29	1																
8	1.2D + 1.0W(60)	Yes	Y		2	1.2	8	1																		
9	1.2D + 1.0Di + 1.0Wi(60)	Yes	Y		2	1.2	5	1	9	1																
10	1.2D + 1.5L + 1.0Wl(60)	Yes	Y		2	1.2	3	1.5	30	1																
11	1.2D + 1.0W(90)	Yes	Y		2	1.2	10	1																		
12	1.2D + 1.0Di + 1.0Wi(90)	Yes	Y		2	1.2	5	1	11	1																
13	1.2D + 1.5L + 1.0Wl(90)	Yes	Y		2	1.2	3	1.5	31	1																
14	1.2D + 1.0W(120)	Yes	Y		2	1.2	12	1																		
15	1.2D + 1.0Di + 1.0Wi(120)	Yes	Y		2	1.2	5	1	13	1																
16	1.2D + 1.5L + 1.0Wl(120)	Yes	Y		2	1.2	3	1.5	32	1																
17	1.2D + 1.0W(150)	Yes	Y		2	1.2	14	1																		
18	1.2D + 1.0Di + 1.0Wi(150)	Yes	Y		2	1.2	5	1	15	1																
19	1.2D + 1.5L + 1.0Wl(150)	Yes	Y		2	1.2	3	1.5	33	1																
20	1.2D + 1.0W(180)	Yes	Y		2	1.2	16	1																		
21	1.2D + 1.0Di + 1.0Wi(180)	Yes	Y		2	1.2	5	1	17	1																
22	1.2D + 1.5L + 1.0Wl(180)	Yes	Y		2	1.2	3	1.5	34	1																
23	1.2D + 1.0W(210)	Yes	Y		2	1.2	18	1																		
24	1.2D + 1.0Di + 1.0Wi(210)	Yes	Y		2	1.2	5	1	19	1																
25	1.2D + 1.5L + 1.0Wl(210)	Yes	Y		2	1.2	3	1.5	35	1																
26	1.2D + 1.0W(240)	Yes	Y		2	1.2	20	1																		
27	1.2D + 1.0Di + 1.0Wi(240)	Yes	Y		2	1.2	5	1	21	1																
28	1.2D + 1.5L + 1.0Wl(240)	Yes	Y		2	1.2	3	1.5	36	1																
29	1.2D + 1.0W(270)	Yes	Y		2	1.2	22	1																		
30	1.2D + 1.0Di + 1.0Wi(270)	Yes	Y		2	1.2	5	1	23	1																
31	1.2D + 1.5L + 1.0Wl(270)	Yes	Y		2	1.2	3	1.5	37	1																
32	1.2D + 1.0W(300)	Yes	Y		2	1.2	24	1																		
33	1.2D + 1.0Di + 1.0Wi(300)	Yes	Y		2	1.2	5	1	25	1																
34	1.2D + 1.5L + 1.0Wl(300)	Yes	Y		2	1.2	3	1.5	38	1																
35	1.2D + 1.0W(330)	Yes	Y		2	1.2	26	1																		
36	1.2D + 1.0Di + 1.0Wi(330)	Yes	Y		2	1.2	5	1	27	1																
37	1.2D + 1.5L + 1.0Wl(330)	Yes	Y		2	1.2	3	1.5	39	1																
38	1.2D + 1.0E(x) + 1.0E(z) + L	Yes	Y		2	1.2	40	1	42	1	3	1														
39	1.2D + 1.0E(y) + 1.0E(z) + L	Yes	Y		2	1.2	41	1	42	1	3	1														
40	1.2D - 1.0E(x) + 1.0E(z) + L	Yes	Y		2	1.2	40	-1	42	1	3	1														
41	1.2D - 1.0E(y) + 1.0E(z) + L	Yes	Y		2	1.2	41	-1	42	1	3	1														

Envelope AISC 15th(360-16): LRFD Steel Code Checks

	Member	Shape	Code Check	Loc[ft]	LC	Shear Check	Loc[ft]	Dir	LC	phi*...	phi*...	phi*...	phi*...	...	Eqn
1	MP ALPHA1	PIPE_2.0	.445	3.5	2	.055	3.5		23	14.9...	32.13	1.872	1.872	...	H1-...
2	CONNECTI...	C4.75x3	.255	.104	8	.168	.375	y	14	92.6...	97.2	10.8...	9.871	...	H1-...
3	SO VERT1	PIPE_2.0	.233	0	7	.084	0		8	30.2...	32.13	1.872	1.872	...	H1-...
4	SO PIPE	PIPE_3.0	.181	2.99	5	.149	2.99		8	61.0...	65.2...	5.749	5.749	...	H1-...
5	CONNECTI...	C4.75x3	.176	.104	9	.118	.375	y	14	92.6...	97.2	10.61	9.871	...	H1-...
6	SO PLATE1	4x0.375	.159	.38	8	.104	.38	y	14	44.2...	48.6	.38	4.05	...	H1-...
7	SO1	HSS3X3X3	.152	0	14	.072	2.37	z	14	74.69	78.2...	6.796	6.796	...	H1-...
8	SO PLATE2	4x0.375	.129	.38	26	.092	.38	y	26	44.2...	48.6	.38	4.05	...	H1-...
9	SO2	HSS3X3X3	.126	0	10	.049	2.37	z	8	74.69	78.2...	6.796	6.796	...	H1-...
10	SO PLATE3	4x0.375	.092	.38	8	.073	.38	y	8	44.2...	48.6	.38	4.05	...	H1-...
11	SO PLATE4	4x0.375	.087	.38	32	.068	.38	y	32	44.2...	48.6	.38	4.05	...	H1-...
12	TIEBACK	PIPE_2.0	.078	0	14	.004	5.875		15	21.24	32.13	1.872	1.872	...	H1-...

APPENDIX G

Wire Frame and Rendered Models (Alpha @ 110 ft)

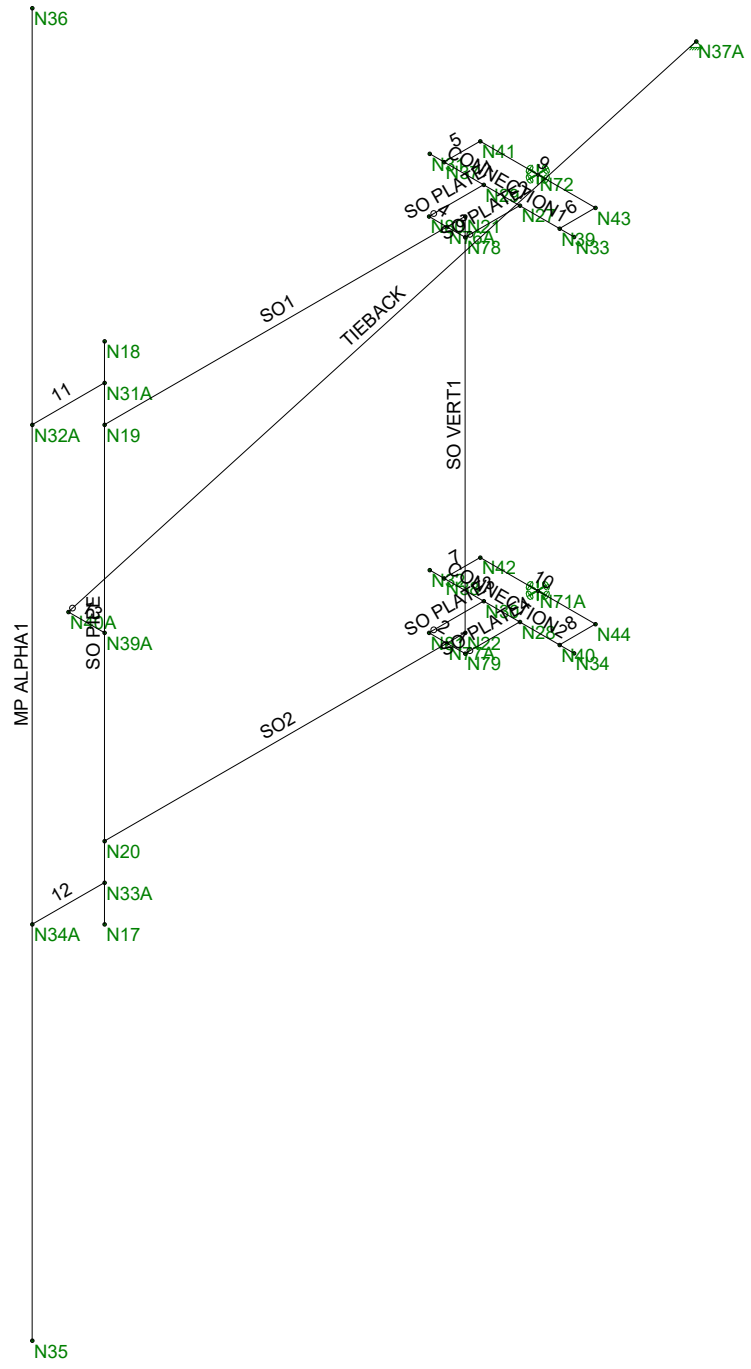

POD	841298	
LT		May 22, 2020 at 12:04 PM
20-64395		841298 110 ft Elevation Mount Alp...

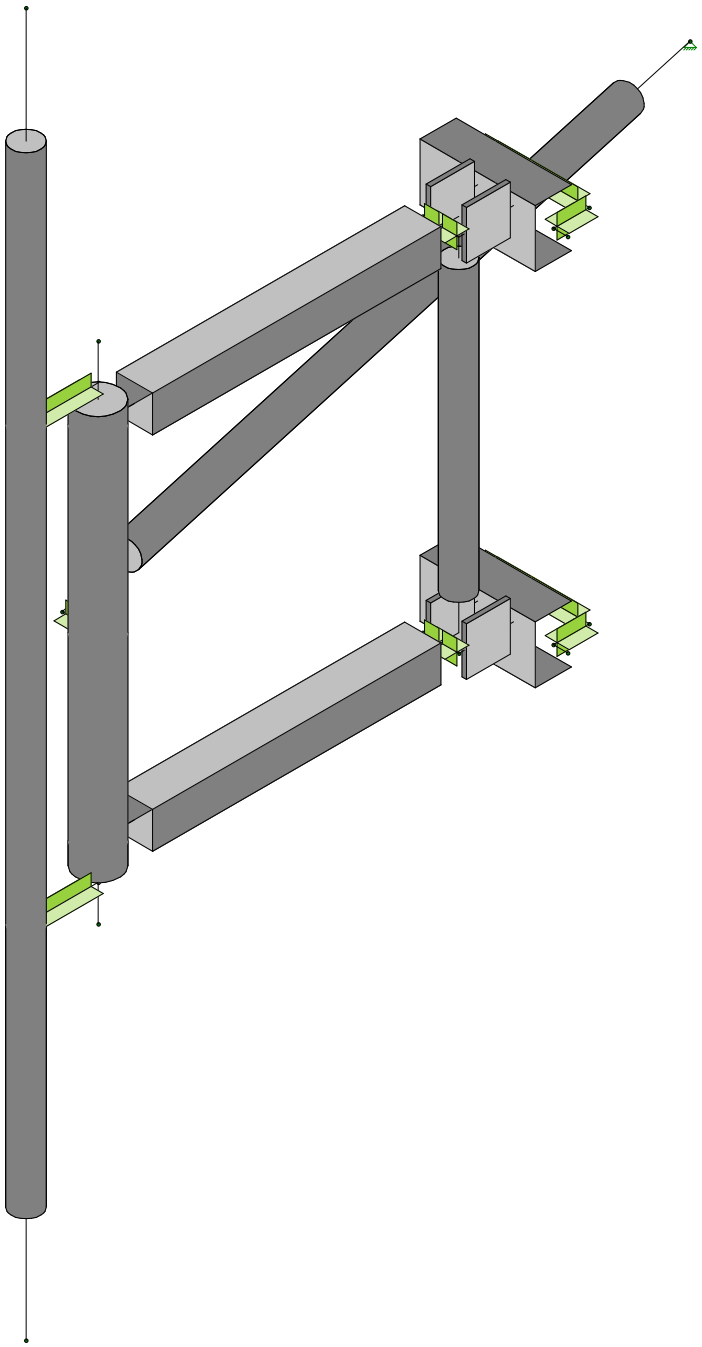

POD	841298	
LT		May 22, 2020 at 12:04 PM
20-64395		841298 110 ft Elevation Mount Alp...

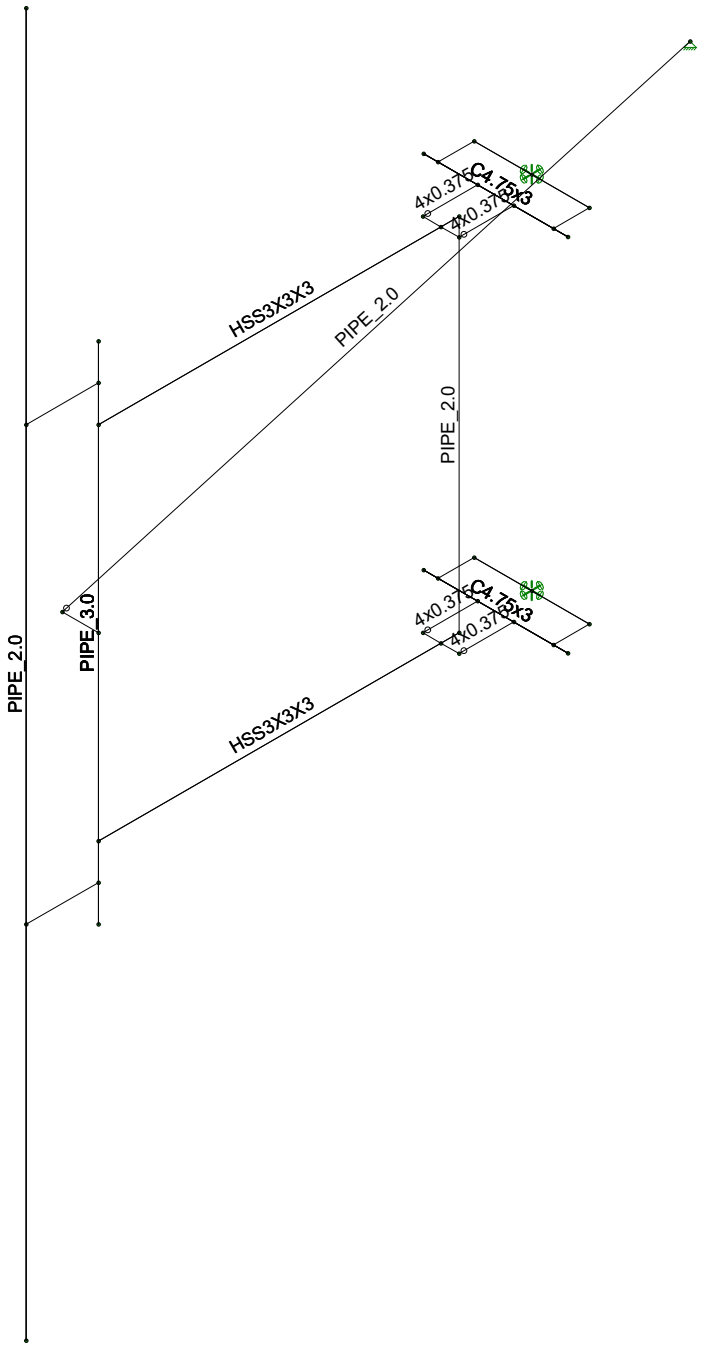

POD	841298	
LT		May 22, 2020 at 12:04 PM
20-64395		841298 110 ft Elevation Mount Alp...

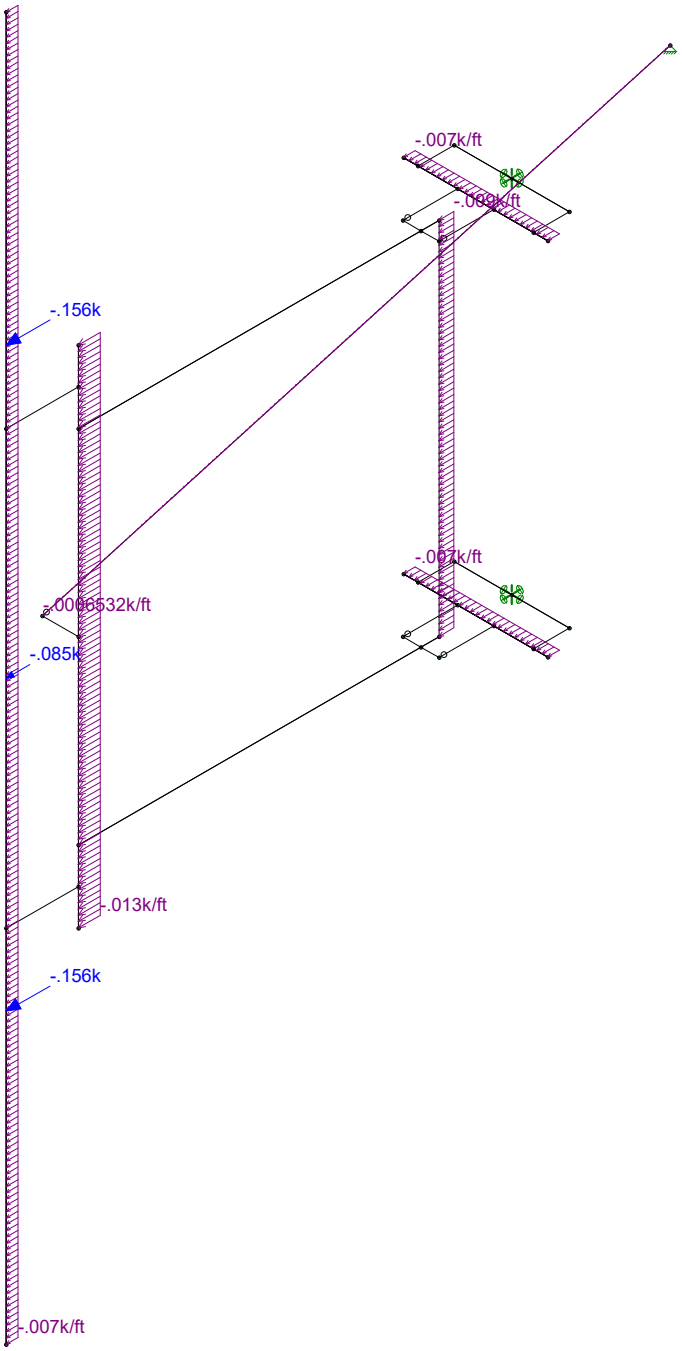

Loads: BLC 1, Wind Load (0)

POD	841298	
LT		May 22, 2020 at 12:05 PM
20-64395		841298 110 ft Elevation Mount Alp...

APPENDIX H

Software Input Calculations (Alpha @ 110 ft)

POWER OF DESIGN

POD Job #	**20-64395**
Site Number	**841298**
Site Name	**SOUTHINGTON ROGUS**

General Site Information

Mount Type	MF	Risk Category	II	I (seismic)	1	
V (Wind Speed)	118	I(ice)	1	Sms	0.320	
Zs	343			Sm1	0.132	
ti	1.5	Ss	0.2	Sds	0.213	
Vi	50	S1	0.055	Sd1	0.088	
Kzt	1	Soil Site Class	D (assumed)	Seismic Design Category		
Exposure	B	Fa	1.600	B		
zg	1200	Fv	2.400	Seismic Analysis Not Required		
α	7			R	2	TIA-222-H 16.7
Kmin	0.7	Tower Type	Self Support	As	1	TIA-222-H 16.7
G_H	1	Tower Height	120	Cs, Min	0.03	TIA-222-H 2.7.7.1.1
Ke	0.99			Cs	0.10666667	TIA-222-H 2.7.7.1.1
K_D	0.95					
K_a	0.9					

Appurtenance Information

Model	Shielded	% Shielded	Centerline	Spacing (in)	# on MP 1	# on MP 2	# on MP 3	# on MP 4
OPA-65R-LCUU-H6			110	48	1			
DC6-48-60-18-8C			110		1			
RRUS 8843 B2/B66A			110		1			

Mount Information

Elevation (ft)	110
K_z	1.02
Kiz	1.13
tiz	1.69

	Length (ft)	Width (in)	Centerline
Mount Pipes	8	2.375	110

Round Members

Member	Length (ft)	Width (in)	Frame Member	# of Members
SO VERT1	2.5	2.375	Yes	1
SO PIPE	3.5	3.5	Yes	1
TIEBACK	2.875	2.375	No	1

Flat Members

Member	Length (ft)	Width (in)	Shape	A	B	C	D	Frame Member	# of Members
SO	2.5	3	Square HSS	3	0.1875	3		Yes	2
PLATE	0.38	4	Channel		4		0.375	No	4
CHANNEL	1	4.75	Channel	3	4.75	0.25	0.25	No	2
Tilt Insert Plate	0.604	6.125	Channel	0	6.125	0	0.75	No	2
Connection	1.167	5	Channel	0.189	5	0.32	0.325	No	2
Tabs	0.5	3	Channel	0	3	0	0.5	No	4

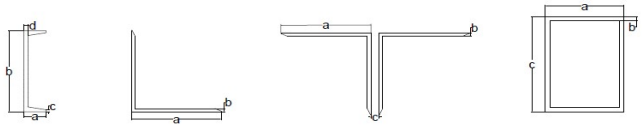

Version 2.2

Appurtenance Wind Calculations

Model	Height	Width	Depth	Weight (lbs)	Kz	qz (lb/ft$_z$)	$(EPA)_N$ (ft^2)	$(EPA)_T$(ft^2)	Wind Force (Kips) Front	Side	Alpha	Beta	Gamma
DMP65R-BU8D	96.0	20.7	7.7	105.6	1.04	34.82	15.86	5.95	0.552	0.207	0.466	0.466	0.207
DC6-48-60-18-8C	31.4	10.2	10.2	26.2	1.04	34.82	1.03	1.14	0.036	0.040	0.037	0.037	0.040
RRUS 4449 B5/B12	17.9	13.2	9.4	71.0	1.04	34.82	1.77	1.27	0.062	0.044	0.057	0.057	0.044
OPA-65R-LCUU-H6	72.0	14.4	7.3	80.0	1.02	33.96	9.20	4.63	0.312	0.157	0.274	0.274	0.157
DC6-48-60-18-8C	31.4	10.2	10.2	26.2	1.02	33.96	1.03	1.14	0.035	0.039	0.036	0.036	0.039
RRUS 8843 B2/B66A	14.9	13.2	10.9	72.0	1.02	33.96	1.48	1.22	0.050	0.041	0.048	0.048	0.041

Appurtenance Ice Calculations

Model	tiz (in)	Height	Width	Depth	Weight (lbs)	Kiz	qz (lb/ft$_z$)	$(EPA)_N$ (ft^2)	$(EPA)_T$(ft^2)	Wind Force (Kips) Front	Side	Alpha	Beta	Gamma
DMP65R-BU8D	1.71	99.41	24.11	11.11	367.49	1.14	6.25	17.22	7.99	0.108	0.050	0.093	0.093	0.050
DC6-48-60-18-8C	1.71	34.82	13.65	13.65	103.64	1.14	6.25	2.08	2.08	0.013	0.013	0.013	0.013	0.013
RRUS 4449 B5/B12	1.71	21.31	16.60	12.85	75.18	1.14	6.25	1.55	1.20	0.010	0.008	0.009	0.009	0.008
OPA-65R-LCUU-H6	1.69	75.41	17.81	10.71	221.13	1.13	6.10	10.70	6.40	0.065	0.039	0.059	0.059	0.039
DC6-48-60-18-8C	1.69	34.82	13.65	13.65	103.64	1.13	6.10	2.08	2.08	0.013	0.013	0.013	0.013	0.013
RRUS 8843 B2/B66A	1.69	18.31	16.61	14.31	71.65	1.13	6.10	1.33	1.15	0.008	0.007	0.008	0.008	0.007

Round Members

Member	Wind Calculations q_z (lb/ft^2)	Ar	C	Rrf	Cas	EPA (ft^2)	Load (k/ft)	Ice Calculations Width (in)	Weight (k/ft)	q_z (lb/ft^2)	Arice	Rrfice	Cas	EPA (ft^2)	Load (k/ft)
SO VERT1	33.96	0.49	23.39	0.60	1.90	0.51	0.007	5.76	0.01	6.10	1.20	0.61	1.90	1.25	0.003
SO PIPE	33.96	1.02	34.47	0.60	1.90	1.05	0.010	6.88	0.01	6.10	2.01	0.61	1.90	2.09	0.004
TIEBACK	33.96	0.57	23.39	0.60	1.20	0.37	0.002	5.76	0.01	6.10	1.38	0.61	1.20	0.91	0.001
SO	33.96	0.79	23.39	0.60	1.20	0.26	0.002	5.76	0.01	6.10	1.92	0.61	1.20	0.63	0.001
Tieback	33.96	2.62	23.39	0.60	1.20	0.85	0.002	5.76	0.01	6.10	6.36	0.61	1.20	2.10	0.001

Flat Members

Member	Wind Calculations q_z (lb/ft^2)	Af	Cas	EPA	Load (k/ft)	Ice Calculations Width (in)	Weight (k/ft)	q_z (lb/ft^2)	Arice	Rrfice	Cas	EPA	Load (k/ft)
SO	33.96	1.25	1.90	1.07	0.015	6.38	0.01	6.10	2.66	0.61	1.90	1.39	0.003
PLATE	33.96	0.51	1.20	0.14	0.006	7.38	0.01	6.10	0.94	0.61	1.90	0.24	0.002
CHANNEL	33.96	0.79	1.20	0.43	0.007	8.13	0.02	6.10	1.36	0.61	1.90	0.71	0.002
Tilt Insert Plate	33.96	0.62	1.20	0.33	0.009	9.51	0.01	6.10	0.96	0.61	1.90	0.50	0.003
Connection	33.96	0.97	1.20	0.53	0.008	8.38	0.01	6.10	1.63	0.61	1.90	0.85	0.002
Tabs	33.96	0.50	1.20	0.14	0.005	6.38	0.01	6.10	1.06	0.61	1.90	0.28	0.002

Appurtenance Seismic Calculations

Model	Weight	Sds	ρ	Cs	As	Ev	Eh
DMP65R-BU8D	105.6	0.213	1.000	0.107	1.000	0.005	0.011
DC6-48-60-18-8C	26.2	0.213	1.000	0.107	1.000	0.001	0.003
RRUS 4449 B5/B12	71.0	0.213	1.000	0.107	1.000	0.003	0.008
OPA-65R-LCUU-H6	80.0	0.213	1.000	0.107	1.000	0.003	0.009
DC6-48-60-18-8C	26.2	0.213	1.000	0.107	1.000	0.001	0.003
RRUS 8843 B2/B66A	72.0	0.213	1.000	0.107	1.000	0.003	0.008

Version 2.1

APPENDIX I

Software Analysis Output (Alpha @ 110 ft)

Hot Rolled Steel Design Parameters

	Label	Shape	Lengt...	Lbyy[ft]	Lbzz[ft]	Lcomp top[ft]	Lcomp bot[ft]	L-tor...	Kyy	Kzz	Cb	Func...
1	TIEBACK	PIPE_2.0	5.741			Lbyy						Lateral
2	SO2	HSS3X3...	2.5			Lbyy						Lateral
3	SO1	HSS3X3...	2.5			Lbyy						Lateral
4	SO VERT1	PIPE_2.0	2.5	2.25	2.25	Lbyy						Lateral
5	SO PLATE4	4x0.375	.38			Lbyy						Lateral
6	SO PLATE3	4x0.375	.38			Lbyy						Lateral
7	SO PLATE2	4x0.375	.38			Lbyy						Lateral
8	SO PLATE1	4x0.375	.38			Lbyy						Lateral
9	SO PIPE	PIPE_3.0	3.5			Lbyy						Lateral
10	MP ALPHA1	PIPE_2.0	8			Lbyy						Lateral
11	CONNECTION2	C4.75x3	1			Lbyy						Lateral
12	CONNECTION1	C4.75x3	1			Lbyy						Lateral

Member Primary Data

	Label	I Joint	J Joint	K Joint	Rotat...	Section/Shape	Type	Design List	Material	Design Rules
1	TIEBACK	N40A	N37A			PIPE_2.0	Beam	Pipe	A53 Gr.B	Typical
2	SO2	N20	N22			HSS3X3X3	Beam	SquareTube	A500 Gr.B Rect	Typical
3	SO1	N19	N21			HSS3X3X3	Beam	SquareTube	A500 Gr.B Rect	Typical
4	SO VERT1	N21	N22			PIPE_2.0	Beam	Pipe	A53 Gr.B	Typical
5	SO PLATE4	N79	N28		90	4x0.375	Beam	RECT	A36 Gr.36	Typical
6	SO PLATE3	N81	N30		90	4x0.375	Beam	RECT	A36 Gr.36	Typical
7	SO PLATE2	N78	N27		90	4x0.375	Beam	RECT	A36 Gr.36	Typical
8	SO PLATE1	N80	N29		90	4x0.375	Beam	RECT	A36 Gr.36	Typical
9	SO PIPE	N17	N18			PIPE_3.0	Beam	Pipe	A53 Gr.B	Typical
10	MP ALPHA1	N35	N36			PIPE_2.0	Beam	Pipe	A53 Gr.B	Typical
11	CONNECTION2	N32	N34		270	C4.75x3	Beam	Channel	A36 Gr.36	Typical
12	CONNECTION1	N31	N33		270	C4.75x3	Beam	Channel	A36 Gr.36	Typical
13	13	N39A	N40A			RIGID	None	None	RIGID	Typical
14	12	N33A	N34A			RIGID	None	None	RIGID	Typical
15	11	N31A	N32A			RIGID	None	None	RIGID	Typical
16	10	N42	N44			RIGID	None	None	RIGID	Typical
17	9	N41	N43			RIGID	None	None	RIGID	Typical
18	8	N40	N44			RIGID	None	None	RIGID	Typical
19	7	N38	N42			RIGID	None	None	RIGID	Typical
20	6	N39	N43			RIGID	None	None	RIGID	Typical
21	5	N37	N41			RIGID	None	None	RIGID	Typical
22	4	N80	N76A			RIGID	None	None	RIGID	Typical
23	3	N78	N76A			RIGID	None	None	RIGID	Typical
24	2	N81	N77A			RIGID	None	None	RIGID	Typical
25	1	N79	N77A			RIGID	None	None	RIGID	Typical

Member Advanced Data

	Label	I Release	J Release	I Offset[in]	J Offset[in]	T/C Only	Physic...	Defl Ratio Op...	Analysis Offset[in]	Inactive	Seismi...
1	TIEBACK	BenPIN					Yes	Default			None
2	SO2						Yes				None
3	SO1						Yes				None
4	SO VERT1						Yes	Default			None
5	SO PLATE4	OOOOOX					Yes	Default			None

Member Advanced Data (Continued)

	Label	I Release	J Release	I Offset[in]	J Offset[in]	T/C Only	Physic...	Defl Ratio Op...	Analysis Offset[in]	Inactive	Seismi...
6	SO PLATE3	OOOOOX					Yes	Default			None
7	SO PLATE2	OOOOOX					Yes	Default			None
8	SO PLATE1	OOOOOX					Yes	Default			None
9	SO PIPE						Yes				None
10	MP ALPHA1						Yes				None
11	CONNECTIO...						Yes				None
12	CONNECTIO...						Yes				None
13	13						Yes	** NA **			None
14	12						Yes	** NA **			None
15	11						Yes	** NA **			None
16	10						Yes	** NA **			None
17	9						Yes	** NA **			None
18	8						Yes	** NA **			None
19	7						Yes	** NA **			None
20	6						Yes	** NA **			None
21	5						Yes	** NA **			None
22	4						Yes	** NA **			None
23	3						Yes	** NA **			None
24	2						Yes	** NA **			None
25	1						Yes	** NA **			None

Hot Rolled Steel Properties

	Label	E [ksi]	G [ksi]	Nu	Therm (/1...	Density[k/f...	Yield[ksi]	Ry	Fu[ksi]	Rt
1	A992	29000	11154	.3	.65	.49	50	1.1	65	1.1
2	A36 Gr.36	29000	11154	.3	.65	.49	36	1.5	58	1.2
3	A572 Gr.50	29000	11154	.3	.65	.49	50	1.1	65	1.1
4	A500 Gr.B RND	29000	11154	.3	.65	.527	42	1.4	58	1.3
5	A500 Gr.B Rect	29000	11154	.3	.65	.527	46	1.4	58	1.3
6	A53 Gr.B	29000	11154	.3	.65	.49	35	1.6	60	1.2
7	A1085	29000	11154	.3	.65	.49	50	1.4	65	1.3

Member Point Loads (BLC 1 : Wind Load (0))

	Member Label	Direction	Magnitude[k,k-ft]	Location[ft,%]
1	MP ALPHA1	Y	-.156	6
2	MP ALPHA1	Y	-.05	4
3	MP ALPHA1	Y	-.035	4
4	MP ALPHA1	Y	-.156	2

Member Point Loads (BLC 2 : Dead Load)

	Member Label	Direction	Magnitude[k,k-ft]	Location[ft,%]
1	MP ALPHA1	Z	-.04	6
2	MP ALPHA1	Z	-.072	4
3	MP ALPHA1	Z	-.026	4
4	MP ALPHA1	Z	-.04	2

Member Point Loads (BLC 3 : Live Load)

	Member Label	Direction	Magnitude[k,k-ft]	Location[ft,%]
1	SO1	Z	-.5	0

Member Point Loads (BLC 4 : Ice Wind Load (0))

	Member Label	Direction	Magnitude[k,k-ft]	Location[ft,%]
1	MP ALPHA1	Y	-.033	6
2	MP ALPHA1	Y	-.008	4
3	MP ALPHA1	Y	-.013	4
4	MP ALPHA1	Y	-.033	2

Member Point Loads (BLC 5 : Ice Dead Load)

	Member Label	Direction	Magnitude[k,k-ft]	Location[ft,%]
1	MP ALPHA1	Z	-.111	6
2	MP ALPHA1	Z	-.072	4
3	MP ALPHA1	Z	-.104	4
4	MP ALPHA1	Z	-.111	2

Member Point Loads (BLC 6 : Wind Load (30))

	Member Label	Direction	Magnitude[k,k-ft]	Location[ft,%]
1	MP ALPHA1	Y	-.118	6
2	MP ALPHA1	X	-.068	6
3	MP ALPHA1	Y	-.041	4
4	MP ALPHA1	X	-.024	4
5	MP ALPHA1	Y	-.031	4
6	MP ALPHA1	X	-.018	4
7	MP ALPHA1	Y	-.118	2
8	MP ALPHA1	X	-.068	2

Member Point Loads (BLC 7 : Ice Wind Load (30))

	Member Label	Direction	Magnitude[k,k-ft]	Location[ft,%]
1	MP ALPHA1	Y	-.025	6
2	MP ALPHA1	X	-.015	6
3	MP ALPHA1	Y	-.007	4
4	MP ALPHA1	X	-.004	4
5	MP ALPHA1	Y	-.011	4
6	MP ALPHA1	X	-.006	4
7	MP ALPHA1	Y	-.025	2
8	MP ALPHA1	X	-.015	2

Member Point Loads (BLC 8 : Wind Load (60))

	Member Label	Direction	Magnitude[k,k-ft]	Location[ft,%]
1	MP ALPHA1	Y	-.049	6
2	MP ALPHA1	X	-.085	6
3	MP ALPHA1	Y	-.022	4
4	MP ALPHA1	X	-.038	4
5	MP ALPHA1	Y	-.019	4
6	MP ALPHA1	X	-.033	4
7	MP ALPHA1	Y	-.049	2
8	MP ALPHA1	X	-.085	2

Member Point Loads (BLC 9 : Ice Wind Load (60))

	Member Label	Direction	Magnitude[k,k-ft]	Location[ft,%]
1	MP ALPHA1	Y	-.011	6
2	MP ALPHA1	X	-.02	6

Member Point Loads (BLC 9 : Ice Wind Load (60)) (Continued)

	Member Label	Direction	Magnitude[k,k-ft]	Location[ft,%]
3	MP ALPHA1	Y	-.004	4
4	MP ALPHA1	X	-.006	4
5	MP ALPHA1	Y	-.006	4
6	MP ALPHA1	X	-.011	4
7	MP ALPHA1	Y	-.011	2
8	MP ALPHA1	X	-.02	2

Member Point Loads (BLC 10 : Wind Load (90))

	Member Label	Direction	Magnitude[k,k-ft]	Location[ft,%]
1	MP ALPHA1	X	-.079	6
2	MP ALPHA1	X	-.041	4
3	MP ALPHA1	X	-.039	4
4	MP ALPHA1	X	-.079	2

Member Point Loads (BLC 11 : Ice Wind Load (90))

	Member Label	Direction	Magnitude[k,k-ft]	Location[ft,%]
1	MP ALPHA1	X	-.02	6
2	MP ALPHA1	X	-.007	4
3	MP ALPHA1	X	-.013	4
4	MP ALPHA1	X	-.02	2

Member Point Loads (BLC 12 : Wind Load (120))

	Member Label	Direction	Magnitude[k,k-ft]	Location[ft,%]
1	MP ALPHA1	Y	.049	6
2	MP ALPHA1	X	-.085	6
3	MP ALPHA1	Y	.022	4
4	MP ALPHA1	X	-.038	4
5	MP ALPHA1	Y	.019	4
6	MP ALPHA1	X	-.033	4
7	MP ALPHA1	Y	.049	2
8	MP ALPHA1	X	-.085	2

Member Point Loads (BLC 13 : Ice Wind Load (120))

	Member Label	Direction	Magnitude[k,k-ft]	Location[ft,%]
1	MP ALPHA1	Y	.011	6
2	MP ALPHA1	X	-.02	6
3	MP ALPHA1	Y	.004	4
4	MP ALPHA1	X	-.006	4
5	MP ALPHA1	Y	.006	4
6	MP ALPHA1	X	-.011	4
7	MP ALPHA1	Y	.011	2
8	MP ALPHA1	X	-.02	2

Member Point Loads (BLC 14 : Wind Load (150))

	Member Label	Direction	Magnitude[k,k-ft]	Location[ft,%]
1	MP ALPHA1	Y	.118	6
2	MP ALPHA1	X	-.068	6
3	MP ALPHA1	Y	.041	4
4	MP ALPHA1	X	-.024	4

Member Point Loads (BLC 14 : Wind Load (150)) (Continued)

	Member Label	Direction	Magnitude[k,k-ft]	Location[ft,%]
5	MP ALPHA1	Y	.031	4
6	MP ALPHA1	X	-.018	4
7	MP ALPHA1	Y	.118	2
8	MP ALPHA1	X	-.068	2

Member Point Loads (BLC 15 : Ice Wind Load (150))

	Member Label	Direction	Magnitude[k,k-ft]	Location[ft,%]
1	MP ALPHA1	Y	.025	6
2	MP ALPHA1	X	-.015	6
3	MP ALPHA1	Y	.007	4
4	MP ALPHA1	X	-.004	4
5	MP ALPHA1	Y	.011	4
6	MP ALPHA1	X	-.006	4
7	MP ALPHA1	Y	.025	2
8	MP ALPHA1	X	-.015	2

Member Point Loads (BLC 16 : Wind Load (180))

	Member Label	Direction	Magnitude[k,k-ft]	Location[ft,%]
1	MP ALPHA1	Y	.156	6
2	MP ALPHA1	Y	.05	4
3	MP ALPHA1	Y	.035	4
4	MP ALPHA1	Y	.156	2

Member Point Loads (BLC 17 : Ice Wind Load (180))

	Member Label	Direction	Magnitude[k,k-ft]	Location[ft,%]
1	MP ALPHA1	Y	.033	6
2	MP ALPHA1	Y	.008	4
3	MP ALPHA1	Y	.013	4
4	MP ALPHA1	Y	.033	2

Member Point Loads (BLC 18 : Wind Load (210))

	Member Label	Direction	Magnitude[k,k-ft]	Location[ft,%]
1	MP ALPHA1	Y	.118	6
2	MP ALPHA1	X	.068	6
3	MP ALPHA1	Y	.041	4
4	MP ALPHA1	X	.024	4
5	MP ALPHA1	Y	.031	4
6	MP ALPHA1	X	.018	4
7	MP ALPHA1	Y	.118	2
8	MP ALPHA1	X	.068	2

Member Point Loads (BLC 19 : Ice Wind Load (210))

	Member Label	Direction	Magnitude[k,k-ft]	Location[ft,%]
1	MP ALPHA1	Y	.025	6
2	MP ALPHA1	X	.015	6
3	MP ALPHA1	Y	.007	4
4	MP ALPHA1	X	.004	4
5	MP ALPHA1	Y	.011	4
6	MP ALPHA1	X	.006	4

Member Point Loads (BLC 19 : Ice Wind Load (210)) (Continued)

	Member Label	Direction	Magnitude[k,k-ft]	Location[ft,%]
7	MP ALPHA1	Y	.025	2
8	MP ALPHA1	X	.015	2

Member Point Loads (BLC 20 : Wind Load (240))

	Member Label	Direction	Magnitude[k,k-ft]	Location[ft,%]
1	MP ALPHA1	Y	.049	6
2	MP ALPHA1	X	.085	6
3	MP ALPHA1	Y	.022	4
4	MP ALPHA1	X	.038	4
5	MP ALPHA1	Y	.019	4
6	MP ALPHA1	X	.033	4
7	MP ALPHA1	Y	.049	2
8	MP ALPHA1	X	.085	2

Member Point Loads (BLC 21 : Ice Wind Load (240))

	Member Label	Direction	Magnitude[k,k-ft]	Location[ft,%]
1	MP ALPHA1	Y	.011	6
2	MP ALPHA1	X	.02	6
3	MP ALPHA1	Y	.004	4
4	MP ALPHA1	X	.006	4
5	MP ALPHA1	Y	.006	4
6	MP ALPHA1	X	.011	4
7	MP ALPHA1	Y	.011	2
8	MP ALPHA1	X	.02	2

Member Point Loads (BLC 22 : Wind Load (270))

	Member Label	Direction	Magnitude[k,k-ft]	Location[ft,%]
1	MP ALPHA1	X	.079	6
2	MP ALPHA1	X	.041	4
3	MP ALPHA1	X	.039	4
4	MP ALPHA1	X	.079	2

Member Point Loads (BLC 23 : Ice Wind Load (270))

	Member Label	Direction	Magnitude[k,k-ft]	Location[ft,%]
1	MP ALPHA1	X	.02	6
2	MP ALPHA1	X	.007	4
3	MP ALPHA1	X	.013	4
4	MP ALPHA1	X	.02	2

Member Point Loads (BLC 24 : Wind Load (300))

	Member Label	Direction	Magnitude[k,k-ft]	Location[ft,%]
1	MP ALPHA1	Y	-.049	6
2	MP ALPHA1	X	.085	6
3	MP ALPHA1	Y	-.022	4
4	MP ALPHA1	X	.038	4
5	MP ALPHA1	Y	-.019	4
6	MP ALPHA1	X	.033	4
7	MP ALPHA1	Y	-.049	2
8	MP ALPHA1	X	.085	2

Member Point Loads (BLC 25 : Ice Wind Load (300))

	Member Label	Direction	Magnitude[k,k-ft]	Location[ft,%]
1	MP ALPHA1	Y	-.011	6
2	MP ALPHA1	X	.02	6
3	MP ALPHA1	Y	-.004	4
4	MP ALPHA1	X	.006	4
5	MP ALPHA1	Y	-.006	4
6	MP ALPHA1	X	.011	4
7	MP ALPHA1	Y	-.011	2
8	MP ALPHA1	X	.02	2

Member Point Loads (BLC 26 : Wind Load (330))

	Member Label	Direction	Magnitude[k,k-ft]	Location[ft,%]
1	MP ALPHA1	Y	-.118	6
2	MP ALPHA1	X	.068	6
3	MP ALPHA1	Y	-.041	4
4	MP ALPHA1	X	.024	4
5	MP ALPHA1	Y	-.031	4
6	MP ALPHA1	X	.018	4
7	MP ALPHA1	Y	-.118	2
8	MP ALPHA1	X	.068	2

Member Point Loads (BLC 27 : Ice Wind Load (330))

	Member Label	Direction	Magnitude[k,k-ft]	Location[ft,%]
1	MP ALPHA1	Y	-.025	6
2	MP ALPHA1	X	.015	6
3	MP ALPHA1	Y	-.007	4
4	MP ALPHA1	X	.004	4
5	MP ALPHA1	Y	-.011	4
6	MP ALPHA1	X	.006	4
7	MP ALPHA1	Y	-.025	2
8	MP ALPHA1	X	.015	2

Member Point Loads (BLC 28 : Maintanence (0))

	Member Label	Direction	Magnitude[k,k-ft]	Location[ft,%]
1	MP ALPHA1	Y	-.018	6
2	MP ALPHA1	Y	-.004	4
3	MP ALPHA1	Y	-.002	4
4	MP ALPHA1	Y	-.018	2

Member Point Loads (BLC 29 : Maintanence (30))

	Member Label	Direction	Magnitude[k,k-ft]	Location[ft,%]
1	MP ALPHA1	Y	-.013	6
2	MP ALPHA1	X	-.008	6
3	MP ALPHA1	Y	-.003	4
4	MP ALPHA1	X	-.002	4
5	MP ALPHA1	Y	-.002	4
6	MP ALPHA1	X	-.001	4
7	MP ALPHA1	Y	-.013	2
8	MP ALPHA1	X	-.008	2

Member Point Loads (BLC 30 : Maintanence (60))

	Member Label	Direction	Magnitude[k,k-ft]	Location[ft,%]
1	MP ALPHA1	Y	-.005	6
2	MP ALPHA1	X	-.008	6
3	MP ALPHA1	Y	-.002	4
4	MP ALPHA1	X	-.003	4
5	MP ALPHA1	Y	-.001	4
6	MP ALPHA1	X	-.002	4
7	MP ALPHA1	Y	-.005	2
8	MP ALPHA1	X	-.008	2

Member Point Loads (BLC 31 : Maintanence (90))

	Member Label	Direction	Magnitude[k,k-ft]	Location[ft,%]
1	MP ALPHA1	X	-.007	6
2	MP ALPHA1	X	-.003	4
3	MP ALPHA1	X	-.003	4
4	MP ALPHA1	X	-.007	2

Member Point Loads (BLC 32 : Maintanence (120))

	Member Label	Direction	Magnitude[k,k-ft]	Location[ft,%]
1	MP ALPHA1	Y	.005	6
2	MP ALPHA1	X	-.008	6
3	MP ALPHA1	Y	.002	4
4	MP ALPHA1	X	-.003	4
5	MP ALPHA1	Y	.001	4
6	MP ALPHA1	X	-.002	4
7	MP ALPHA1	Y	.005	2
8	MP ALPHA1	X	-.008	2

Member Point Loads (BLC 33 : Maintanence (150))

	Member Label	Direction	Magnitude[k,k-ft]	Location[ft,%]
1	MP ALPHA1	Y	.013	6
2	MP ALPHA1	X	-.008	6
3	MP ALPHA1	Y	.003	4
4	MP ALPHA1	X	-.002	4
5	MP ALPHA1	Y	.002	4
6	MP ALPHA1	X	-.001	4
7	MP ALPHA1	Y	.013	2
8	MP ALPHA1	X	-.008	2

Member Point Loads (BLC 34 : Maintanence (180))

	Member Label	Direction	Magnitude[k,k-ft]	Location[ft,%]
1	MP ALPHA1	Y	.018	6
2	MP ALPHA1	Y	.004	4
3	MP ALPHA1	Y	.002	4
4	MP ALPHA1	Y	.018	2

Member Point Loads (BLC 35 : Maintanence (210))

	Member Label	Direction	Magnitude[k,k-ft]	Location[ft,%]
1	MP ALPHA1	Y	.013	6
2	MP ALPHA1	X	.008	6

Member Point Loads (BLC 35 : Maintanence (210)) (Continued)

	Member Label	Direction	Magnitude[k,k-ft]	Location[ft,%]
3	MP ALPHA1	Y	.003	4
4	MP ALPHA1	X	.002	4
5	MP ALPHA1	Y	.002	4
6	MP ALPHA1	X	.001	4
7	MP ALPHA1	Y	.013	2
8	MP ALPHA1	X	.008	2

Member Point Loads (BLC 36 : Maintanence (240))

	Member Label	Direction	Magnitude[k,k-ft]	Location[ft,%]
1	MP ALPHA1	Y	.005	6
2	MP ALPHA1	X	.008	6
3	MP ALPHA1	Y	.002	4
4	MP ALPHA1	X	.003	4
5	MP ALPHA1	Y	.001	4
6	MP ALPHA1	X	.002	4
7	MP ALPHA1	Y	.005	2
8	MP ALPHA1	X	.008	2

Member Point Loads (BLC 37 : Maintanence (270))

	Member Label	Direction	Magnitude[k,k-ft]	Location[ft,%]
1	MP ALPHA1	X	.007	6
2	MP ALPHA1	X	.003	4
3	MP ALPHA1	X	.003	4
4	MP ALPHA1	X	.007	2

Member Point Loads (BLC 38 : Maintanence (300))

	Member Label	Direction	Magnitude[k,k-ft]	Location[ft,%]
1	MP ALPHA1	Y	-.005	6
2	MP ALPHA1	X	.008	6
3	MP ALPHA1	Y	-.002	4
4	MP ALPHA1	X	.003	4
5	MP ALPHA1	Y	-.001	4
6	MP ALPHA1	X	.002	4
7	MP ALPHA1	Y	-.005	2
8	MP ALPHA1	X	.008	2

Member Point Loads (BLC 39 : Maintanence (330))

	Member Label	Direction	Magnitude[k,k-ft]	Location[ft,%]
1	MP ALPHA1	Y	-.013	6
2	MP ALPHA1	X	.008	6
3	MP ALPHA1	Y	-.003	4
4	MP ALPHA1	X	.002	4
5	MP ALPHA1	Y	-.002	4
6	MP ALPHA1	X	.001	4
7	MP ALPHA1	Y	-.013	2
8	MP ALPHA1	X	.008	2

Member Distributed Loads (BLC 1 : Wind Load (0))

	Member Label	Direction	Start Magnitude[k/ft,F,ksf]	End Magnitude[k/ft,F,ksf]	Start Location[ft,...	End Location[ft,...
1	TIEBACK	PY	-.003	-.003	0	0
2	SO2	PY	-.013	-.013	0	0
3	SO1	PY	-.013	-.013	0	0
4	SO VERT1	PY	-.009	-.009	0	0
5	SO PLATE4	PY	-.006	-.006	0	0
6	SO PLATE3	PY	-.006	-.006	0	0
7	SO PLATE2	PY	-.006	-.006	0	0
8	SO PLATE1	PY	-.006	-.006	0	0
9	SO PIPE	PY	-.013	-.013	0	0
10	MP ALPHA1	PY	-.007	-.007	0	0
11	CONNECTION2	PY	-.007	-.007	0	0
12	CONNECTION1	PY	-.007	-.007	0	0

Member Distributed Loads (BLC 4 : Ice Wind Load (0))

	Member Label	Direction	Start Magnitude[k/ft,F,ksf]	End Magnitude[k/ft,F,ksf]	Start Location[ft,...	End Location[ft,...
1	TIEBACK	PY	-.002	-.002	0	0
2	SO2	PY	-.006	-.006	0	0
3	SO1	PY	-.006	-.006	0	0
4	SO VERT1	PY	-.005	-.005	0	0
5	SO PLATE4	PY	-.003	-.003	0	0
6	SO PLATE3	PY	-.003	-.003	0	0
7	SO PLATE2	PY	-.003	-.003	0	0
8	SO PLATE1	PY	-.003	-.003	0	0
9	SO PIPE	PY	-.006	-.006	0	0
10	MP ALPHA1	PY	-.003	-.003	0	0
11	CONNECTION2	PY	-.004	-.004	0	0
12	CONNECTION1	PY	-.004	-.004	0	0

Member Distributed Loads (BLC 5 : Ice Dead Load)

	Member Label	Direction	Start Magnitude[k/ft,F,ksf]	End Magnitude[k/ft,F,ksf]	Start Location[ft,...	End Location[ft,...
1	TIEBACK	Z	-.009	-.009	0	0
2	SO2	Z	-.012	-.012	0	0
3	SO1	Z	-.012	-.012	0	0
4	SO VERT1	Z	-.009	-.009	0	0
5	SO PLATE4	Z	-.01	-.01	0	0
6	SO PLATE3	Z	-.01	-.01	0	0
7	SO PLATE2	Z	-.01	-.01	0	0
8	SO PLATE1	Z	-.01	-.01	0	0
9	SO PIPE	Z	-.011	-.011	0	0
10	MP ALPHA1	Z	-.009	-.009	0	0
11	CONNECTION2	Z	-.019	-.019	0	0
12	CONNECTION1	Z	-.019	-.019	0	0

Member Distributed Loads (BLC 6 : Wind Load (30))

	Member Label	Direction	Start Magnitude[k/ft,F,ksf]	End Magnitude[k/ft,F,ksf]	Start Location[ft,...	End Location[ft,...
1	TIEBACK	PY	-.003	-.003	0	0
2	SO2	PY	-.011	-.011	0	0
3	SO1	PY	-.011	-.011	0	0
4	SO VERT1	PY	-.008	-.008	0	0

Member Distributed Loads (BLC 6 : Wind Load (30)) (Continued)

	Member Label	Direction	Start Magnitude[k/ft,F,ksf]	End Magnitude[k/ft,F,ksf]	Start Location[ft,...	End Location[ft,...
5	SO PLATE4	PY	-.005	-.005	0	0
6	SO PLATE3	PY	-.005	-.005	0	0
7	SO PLATE2	PY	-.005	-.005	0	0
8	SO PLATE1	PY	-.005	-.005	0	0
9	SO PIPE	PY	-.011	-.011	0	0
10	MP ALPHA1	PY	-.006	-.006	0	0
11	CONNECTION2	PY	-.006	-.006	0	0
12	CONNECTION1	PY	-.006	-.006	0	0
13	TIEBACK	PX	-.002	-.002	0	0
14	SO2	PX	-.006	-.006	0	0
15	SO1	PX	-.006	-.006	0	0
16	SO VERT1	PX	-.004	-.004	0	0
17	SO PLATE4	PX	-.003	-.003	0	0
18	SO PLATE3	PX	-.003	-.003	0	0
19	SO PLATE2	PX	-.003	-.003	0	0
20	SO PLATE1	PX	-.003	-.003	0	0
21	SO PIPE	PX	-.006	-.006	0	0
22	MP ALPHA1	PX	-.004	-.004	0	0
23	CONNECTION2	PX	-.004	-.004	0	0
24	CONNECTION1	PX	-.004	-.004	0	0

Member Distributed Loads (BLC 7 : Ice Wind Load (30))

	Member Label	Direction	Start Magnitude[k/ft,F,ksf]	End Magnitude[k/ft,F,ksf]	Start Location[ft,...	End Location[ft,...
1	TIEBACK	PY	-.002	-.002	0	0
2	SO2	PY	-.005	-.005	0	0
3	SO1	PY	-.005	-.005	0	0
4	SO VERT1	PY	-.004	-.004	0	0
5	SO PLATE4	PY	-.003	-.003	0	0
6	SO PLATE3	PY	-.003	-.003	0	0
7	SO PLATE2	PY	-.003	-.003	0	0
8	SO PLATE1	PY	-.003	-.003	0	0
9	SO PIPE	PY	-.005	-.005	0	0
10	MP ALPHA1	PY	-.003	-.003	0	0
11	CONNECTION2	PY	-.003	-.003	0	0
12	CONNECTION1	PY	-.003	-.003	0	0
13	TIEBACK	PX	-.001	-.001	0	0
14	SO2	PX	-.003	-.003	0	0
15	SO1	PX	-.003	-.003	0	0
16	SO VERT1	PX	-.003	-.003	0	0
17	SO PLATE4	PX	-.002	-.002	0	0
18	SO PLATE3	PX	-.002	-.002	0	0
19	SO PLATE2	PX	-.002	-.002	0	0
20	SO PLATE1	PX	-.002	-.002	0	0
21	SO PIPE	PX	-.003	-.003	0	0
22	MP ALPHA1	PX	-.002	-.002	0	0
23	CONNECTION2	PX	-.002	-.002	0	0
24	CONNECTION1	PX	-.002	-.002	0	0

Member Distributed Loads (BLC 8 : Wind Load (60))

	Member Label	Direction	Start Magnitude[k/ft,F,ksf]	End Magnitude[k/ft,F,ksf]	Start Location[ft,...	End Location[ft,...
1	TIEBACK	PY	-.002	-.002	0	0

Member Distributed Loads (BLC 8 : Wind Load (60)) (Continued)

	Member Label	Direction	Start Magnitude[k/ft,F,ksf]	End Magnitude[k/ft,F,ksf]	Start Location[ft,...	End Location[ft,...
2	SO2	PY	-.006	-.006	0	0
3	SO1	PY	-.006	-.006	0	0
4	SO VERT1	PY	-.004	-.004	0	0
5	SO PLATE4	PY	-.003	-.003	0	0
6	SO PLATE3	PY	-.003	-.003	0	0
7	SO PLATE2	PY	-.003	-.003	0	0
8	SO PLATE1	PY	-.003	-.003	0	0
9	SO PIPE	PY	-.006	-.006	0	0
10	MP ALPHA1	PY	-.004	-.004	0	0
11	CONNECTION2	PY	-.004	-.004	0	0
12	CONNECTION1	PY	-.004	-.004	0	0
13	TIEBACK	PX	-.003	-.003	0	0
14	SO2	PX	-.011	-.011	0	0
15	SO1	PX	-.011	-.011	0	0
16	SO VERT1	PX	-.008	-.008	0	0
17	SO PLATE4	PX	-.005	-.005	0	0
18	SO PLATE3	PX	-.005	-.005	0	0
19	SO PLATE2	PX	-.005	-.005	0	0
20	SO PLATE1	PX	-.005	-.005	0	0
21	SO PIPE	PX	-.011	-.011	0	0
22	MP ALPHA1	PX	-.006	-.006	0	0
23	CONNECTION2	PX	-.006	-.006	0	0
24	CONNECTION1	PX	-.006	-.006	0	0

Member Distributed Loads (BLC 9 : Ice Wind Load (60))

	Member Label	Direction	Start Magnitude[k/ft,F,ksf]	End Magnitude[k/ft,F,ksf]	Start Location[ft,...	End Location[ft,...
1	TIEBACK	PY	-.001	-.001	0	0
2	SO2	PY	-.003	-.003	0	0
3	SO1	PY	-.003	-.003	0	0
4	SO VERT1	PY	-.003	-.003	0	0
5	SO PLATE4	PY	-.002	-.002	0	0
6	SO PLATE3	PY	-.002	-.002	0	0
7	SO PLATE2	PY	-.002	-.002	0	0
8	SO PLATE1	PY	-.002	-.002	0	0
9	SO PIPE	PY	-.003	-.003	0	0
10	MP ALPHA1	PY	-.002	-.002	0	0
11	CONNECTION2	PY	-.002	-.002	0	0
12	CONNECTION1	PY	-.002	-.002	0	0
13	TIEBACK	PX	-.002	-.002	0	0
14	SO2	PX	-.005	-.005	0	0
15	SO1	PX	-.005	-.005	0	0
16	SO VERT1	PX	-.004	-.004	0	0
17	SO PLATE4	PX	-.003	-.003	0	0
18	SO PLATE3	PX	-.003	-.003	0	0
19	SO PLATE2	PX	-.003	-.003	0	0
20	SO PLATE1	PX	-.003	-.003	0	0
21	SO PIPE	PX	-.005	-.005	0	0
22	MP ALPHA1	PX	-.003	-.003	0	0
23	CONNECTION2	PX	-.003	-.003	0	0
24	CONNECTION1	PX	-.003	-.003	0	0

Member Distributed Loads (BLC 10 : Wind Load (90))

	Member Label	Direction	Start Magnitude[k/ft,F,ksf]	End Magnitude[k/ft,F,ksf]	Start Location[ft,...	End Location[ft,...
1	TIEBACK	PX	-.003	-.003	0	0
2	SO2	PX	-.013	-.013	0	0
3	SO1	PX	-.013	-.013	0	0
4	SO VERT1	PX	-.009	-.009	0	0
5	SO PLATE4	PX	-.006	-.006	0	0
6	SO PLATE3	PX	-.006	-.006	0	0
7	SO PLATE2	PX	-.006	-.006	0	0
8	SO PLATE1	PX	-.006	-.006	0	0
9	SO PIPE	PX	-.013	-.013	0	0
10	MP ALPHA1	PX	-.007	-.007	0	0
11	CONNECTION2	PX	-.007	-.007	0	0
12	CONNECTION1	PX	-.007	-.007	0	0

Member Distributed Loads (BLC 11 : Ice Wind Load (90))

	Member Label	Direction	Start Magnitude[k/ft,F,ksf]	End Magnitude[k/ft,F,ksf]	Start Location[ft,...	End Location[ft,...
1	TIEBACK	PX	-.002	-.002	0	0
2	SO2	PX	-.006	-.006	0	0
3	SO1	PX	-.006	-.006	0	0
4	SO VERT1	PX	-.005	-.005	0	0
5	SO PLATE4	PX	-.003	-.003	0	0
6	SO PLATE3	PX	-.003	-.003	0	0
7	SO PLATE2	PX	-.003	-.003	0	0
8	SO PLATE1	PX	-.003	-.003	0	0
9	SO PIPE	PX	-.006	-.006	0	0
10	MP ALPHA1	PX	-.003	-.003	0	0
11	CONNECTION2	PX	-.004	-.004	0	0
12	CONNECTION1	PX	-.004	-.004	0	0

Member Distributed Loads (BLC 12 : Wind Load (120))

	Member Label	Direction	Start Magnitude[k/ft,F,ksf]	End Magnitude[k/ft,F,ksf]	Start Location[ft,...	End Location[ft,...
1	TIEBACK	PY	.002	.002	0	0
2	SO2	PY	.006	.006	0	0
3	SO1	PY	.006	.006	0	0
4	SO VERT1	PY	.004	.004	0	0
5	SO PLATE4	PY	.003	.003	0	0
6	SO PLATE3	PY	.003	.003	0	0
7	SO PLATE2	PY	.003	.003	0	0
8	SO PLATE1	PY	.003	.003	0	0
9	SO PIPE	PY	.006	.006	0	0
10	MP ALPHA1	PY	.004	.004	0	0
11	CONNECTION2	PY	.004	.004	0	0
12	CONNECTION1	PY	.004	.004	0	0
13	TIEBACK	PX	-.003	-.003	0	0
14	SO2	PX	-.011	-.011	0	0
15	SO1	PX	-.011	-.011	0	0
16	SO VERT1	PX	-.008	-.008	0	0
17	SO PLATE4	PX	-.005	-.005	0	0
18	SO PLATE3	PX	-.005	-.005	0	0
19	SO PLATE2	PX	-.005	-.005	0	0
20	SO PLATE1	PX	-.005	-.005	0	0
21	SO PIPE	PX	-.011	-.011	0	0

Member Distributed Loads (BLC 12 : Wind Load (120)) (Continued)

	Member Label	Direction	Start Magnitude[k/ft,F,ksf]	End Magnitude[k/ft,F,ksf]	Start Location[ft,...	End Location[ft,...
22	MP ALPHA1	PX	-.006	-.006	0	0
23	CONNECTION2	PX	-.006	-.006	0	0
24	CONNECTION1	PX	-.006	-.006	0	0

Member Distributed Loads (BLC 13 : Ice Wind Load (120))

	Member Label	Direction	Start Magnitude[k/ft,F,ksf]	End Magnitude[k/ft,F,ksf]	Start Location[ft,...	End Location[ft,...
1	TIEBACK	PY	.001	.001	0	0
2	SO2	PY	.003	.003	0	0
3	SO1	PY	.003	.003	0	0
4	SO VERT1	PY	.003	.003	0	0
5	SO PLATE4	PY	.002	.002	0	0
6	SO PLATE3	PY	.002	.002	0	0
7	SO PLATE2	PY	.002	.002	0	0
8	SO PLATE1	PY	.002	.002	0	0
9	SO PIPE	PY	.003	.003	0	0
10	MP ALPHA1	PY	.002	.002	0	0
11	CONNECTION2	PY	.002	.002	0	0
12	CONNECTION1	PY	.002	.002	0	0
13	TIEBACK	PX	-.002	-.002	0	0
14	SO2	PX	-.005	-.005	0	0
15	SO1	PX	-.005	-.005	0	0
16	SO VERT1	PX	-.004	-.004	0	0
17	SO PLATE4	PX	-.003	-.003	0	0
18	SO PLATE3	PX	-.003	-.003	0	0
19	SO PLATE2	PX	-.003	-.003	0	0
20	SO PLATE1	PX	-.003	-.003	0	0
21	SO PIPE	PX	-.005	-.005	0	0
22	MP ALPHA1	PX	-.003	-.003	0	0
23	CONNECTION2	PX	-.003	-.003	0	0
24	CONNECTION1	PX	-.003	-.003	0	0

Member Distributed Loads (BLC 14 : Wind Load (150))

	Member Label	Direction	Start Magnitude[k/ft,F,ksf]	End Magnitude[k/ft,F,ksf]	Start Location[ft,...	End Location[ft,...
1	TIEBACK	PY	.003	.003	0	0
2	SO2	PY	.011	.011	0	0
3	SO1	PY	.011	.011	0	0
4	SO VERT1	PY	.008	.008	0	0
5	SO PLATE4	PY	.005	.005	0	0
6	SO PLATE3	PY	.005	.005	0	0
7	SO PLATE2	PY	.005	.005	0	0
8	SO PLATE1	PY	.005	.005	0	0
9	SO PIPE	PY	.011	.011	0	0
10	MP ALPHA1	PY	.006	.006	0	0
11	CONNECTION2	PY	.006	.006	0	0
12	CONNECTION1	PY	.006	.006	0	0
13	TIEBACK	PX	-.002	-.002	0	0
14	SO2	PX	-.006	-.006	0	0
15	SO1	PX	-.006	-.006	0	0
16	SO VERT1	PX	-.004	-.004	0	0
17	SO PLATE4	PX	-.003	-.003	0	0
18	SO PLATE3	PX	-.003	-.003	0	0

Member Distributed Loads (BLC 14 : Wind Load (150)) (Continued)

	Member Label	Direction	Start Magnitude[k/ft,F,ksf]	End Magnitude[k/ft,F,ksf]	Start Location[ft,...	End Location[ft,...
19	SO PLATE2	PX	-.003	-.003	0	0
20	SO PLATE1	PX	-.003	-.003	0	0
21	SO PIPE	PX	-.006	-.006	0	0
22	MP ALPHA1	PX	-.004	-.004	0	0
23	CONNECTION2	PX	-.004	-.004	0	0
24	CONNECTION1	PX	-.004	-.004	0	0

Member Distributed Loads (BLC 15 : Ice Wind Load (150))

	Member Label	Direction	Start Magnitude[k/ft,F,ksf]	End Magnitude[k/ft,F,ksf]	Start Location[ft,...	End Location[ft,...
1	TIEBACK	PY	.002	.002	0	0
2	SO2	PY	.005	.005	0	0
3	SO1	PY	.005	.005	0	0
4	SO VERT1	PY	.004	.004	0	0
5	SO PLATE4	PY	.003	.003	0	0
6	SO PLATE3	PY	.003	.003	0	0
7	SO PLATE2	PY	.003	.003	0	0
8	SO PLATE1	PY	.003	.003	0	0
9	SO PIPE	PY	.005	.005	0	0
10	MP ALPHA1	PY	.003	.003	0	0
11	CONNECTION2	PY	.003	.003	0	0
12	CONNECTION1	PY	.003	.003	0	0
13	TIEBACK	PX	-.001	-.001	0	0
14	SO2	PX	-.003	-.003	0	0
15	SO1	PX	-.003	-.003	0	0
16	SO VERT1	PX	-.003	-.003	0	0
17	SO PLATE4	PX	-.002	-.002	0	0
18	SO PLATE3	PX	-.002	-.002	0	0
19	SO PLATE2	PX	-.002	-.002	0	0
20	SO PLATE1	PX	-.002	-.002	0	0
21	SO PIPE	PX	-.003	-.003	0	0
22	MP ALPHA1	PX	-.002	-.002	0	0
23	CONNECTION2	PX	-.002	-.002	0	0
24	CONNECTION1	PX	-.002	-.002	0	0

Member Distributed Loads (BLC 16 : Wind Load (180))

	Member Label	Direction	Start Magnitude[k/ft,F,ksf]	End Magnitude[k/ft,F,ksf]	Start Location[ft,...	End Location[ft,...
1	TIEBACK	PY	.003	.003	0	0
2	SO2	PY	.013	.013	0	0
3	SO1	PY	.013	.013	0	0
4	SO VERT1	PY	.009	.009	0	0
5	SO PLATE4	PY	.006	.006	0	0
6	SO PLATE3	PY	.006	.006	0	0
7	SO PLATE2	PY	.006	.006	0	0
8	SO PLATE1	PY	.006	.006	0	0
9	SO PIPE	PY	.013	.013	0	0
10	MP ALPHA1	PY	.007	.007	0	0
11	CONNECTION2	PY	.007	.007	0	0
12	CONNECTION1	PY	.007	.007	0	0

Member Distributed Loads (BLC 17 : Ice Wind Load (180))

Member Label	Direction	Start Magnitude[k/ft,F,ksf]	End Magnitude[k/ft,F,ksf]	Start Location[ft,...	End Location[ft,...

Member Distributed Loads (BLC 17 : Ice Wind Load (180)) (Continued)

	Member Label	Direction	Start Magnitude[k/ft,F,ksf]	End Magnitude[k/ft,F,ksf]	Start Location[ft,...	End Location[ft,...
1	TIEBACK	PY	.002	.002	0	0
2	SO2	PY	.006	.006	0	0
3	SO1	PY	.006	.006	0	0
4	SO VERT1	PY	.005	.005	0	0
5	SO PLATE4	PY	.003	.003	0	0
6	SO PLATE3	PY	.003	.003	0	0
7	SO PLATE2	PY	.003	.003	0	0
8	SO PLATE1	PY	.003	.003	0	0
9	SO PIPE	PY	.006	.006	0	0
10	MP ALPHA1	PY	.003	.003	0	0
11	CONNECTION2	PY	.004	.004	0	0
12	CONNECTION1	PY	.004	.004	0	0

Member Distributed Loads (BLC 18 : Wind Load (210))

	Member Label	Direction	Start Magnitude[k/ft,F,ksf]	End Magnitude[k/ft,F,ksf]	Start Location[ft,...	End Location[ft,...
1	TIEBACK	PY	.003	.003	0	0
2	SO2	PY	.011	.011	0	0
3	SO1	PY	.011	.011	0	0
4	SO VERT1	PY	.008	.008	0	0
5	SO PLATE4	PY	.005	.005	0	0
6	SO PLATE3	PY	.005	.005	0	0
7	SO PLATE2	PY	.005	.005	0	0
8	SO PLATE1	PY	.005	.005	0	0
9	SO PIPE	PY	.011	.011	0	0
10	MP ALPHA1	PY	.006	.006	0	0
11	CONNECTION2	PY	.006	.006	0	0
12	CONNECTION1	PY	.006	.006	0	0
13	TIEBACK	PX	.002	.002	0	0
14	SO2	PX	.006	.006	0	0
15	SO1	PX	.006	.006	0	0
16	SO VERT1	PX	.004	.004	0	0
17	SO PLATE4	PX	.003	.003	0	0
18	SO PLATE3	PX	.003	.003	0	0
19	SO PLATE2	PX	.003	.003	0	0
20	SO PLATE1	PX	.003	.003	0	0
21	SO PIPE	PX	.006	.006	0	0
22	MP ALPHA1	PX	.004	.004	0	0
23	CONNECTION2	PX	.004	.004	0	0
24	CONNECTION1	PX	.004	.004	0	0

Member Distributed Loads (BLC 19 : Ice Wind Load (210))

	Member Label	Direction	Start Magnitude[k/ft,F,ksf]	End Magnitude[k/ft,F,ksf]	Start Location[ft,...	End Location[ft,...
1	TIEBACK	PY	.002	.002	0	0
2	SO2	PY	.005	.005	0	0
3	SO1	PY	.005	.005	0	0
4	SO VERT1	PY	.004	.004	0	0
5	SO PLATE4	PY	.003	.003	0	0
6	SO PLATE3	PY	.003	.003	0	0
7	SO PLATE2	PY	.003	.003	0	0
8	SO PLATE1	PY	.003	.003	0	0
9	SO PIPE	PY	.005	.005	0	0

Member Distributed Loads (BLC 19 : Ice Wind Load (210)) (Continued)

	Member Label	Direction	Start Magnitude[k/ft,F,ksf]	End Magnitude[k/ft,F,ksf]	Start Location[ft,...	End Location[ft,...
10	MP ALPHA1	PY	.003	.003	0	0
11	CONNECTION2	PY	.003	.003	0	0
12	CONNECTION1	PY	.003	.003	0	0
13	TIEBACK	PX	.001	.001	0	0
14	SO2	PX	.003	.003	0	0
15	SO1	PX	.003	.003	0	0
16	SO VERT1	PX	.003	.003	0	0
17	SO PLATE4	PX	.002	.002	0	0
18	SO PLATE3	PX	.002	.002	0	0
19	SO PLATE2	PX	.002	.002	0	0
20	SO PLATE1	PX	.002	.002	0	0
21	SO PIPE	PX	.003	.003	0	0
22	MP ALPHA1	PX	.002	.002	0	0
23	CONNECTION2	PX	.002	.002	0	0
24	CONNECTION1	PX	.002	.002	0	0

Member Distributed Loads (BLC 20 : Wind Load (240))

	Member Label	Direction	Start Magnitude[k/ft,F,ksf]	End Magnitude[k/ft,F,ksf]	Start Location[ft,...	End Location[ft,...
1	TIEBACK	PY	.002	.002	0	0
2	SO2	PY	.006	.006	0	0
3	SO1	PY	.006	.006	0	0
4	SO VERT1	PY	.004	.004	0	0
5	SO PLATE4	PY	.003	.003	0	0
6	SO PLATE3	PY	.003	.003	0	0
7	SO PLATE2	PY	.003	.003	0	0
8	SO PLATE1	PY	.003	.003	0	0
9	SO PIPE	PY	.006	.006	0	0
10	MP ALPHA1	PY	.004	.004	0	0
11	CONNECTION2	PY	.004	.004	0	0
12	CONNECTION1	PY	.004	.004	0	0
13	TIEBACK	PX	.003	.003	0	0
14	SO2	PX	.011	.011	0	0
15	SO1	PX	.011	.011	0	0
16	SO VERT1	PX	.008	.008	0	0
17	SO PLATE4	PX	.005	.005	0	0
18	SO PLATE3	PX	.005	.005	0	0
19	SO PLATE2	PX	.005	.005	0	0
20	SO PLATE1	PX	.005	.005	0	0
21	SO PIPE	PX	.011	.011	0	0
22	MP ALPHA1	PX	.006	.006	0	0
23	CONNECTION2	PX	.006	.006	0	0
24	CONNECTION1	PX	.006	.006	0	0

Member Distributed Loads (BLC 21 : Ice Wind Load (240))

	Member Label	Direction	Start Magnitude[k/ft,F,ksf]	End Magnitude[k/ft,F,ksf]	Start Location[ft,...	End Location[ft,...
1	TIEBACK	PY	.001	.001	0	0
2	SO2	PY	.003	.003	0	0
3	SO1	PY	.003	.003	0	0
4	SO VERT1	PY	.003	.003	0	0
5	SO PLATE4	PY	.002	.002	0	0
6	SO PLATE3	PY	.002	.002	0	0

Member Distributed Loads (BLC 21 : Ice Wind Load (240)) (Continued)

	Member Label	Direction	Start Magnitude[k/ft,F,ksf]	End Magnitude[k/ft,F,ksf]	Start Location[ft,...	End Location[ft,...
7	SO PLATE2	PY	.002	.002	0	0
8	SO PLATE1	PY	.002	.002	0	0
9	SO PIPE	PY	.003	.003	0	0
10	MP ALPHA1	PY	.002	.002	0	0
11	CONNECTION2	PY	.002	.002	0	0
12	CONNECTION1	PY	.002	.002	0	0
13	TIEBACK	PX	.002	.002	0	0
14	SO2	PX	.005	.005	0	0
15	SO1	PX	.005	.005	0	0
16	SO VERT1	PX	.004	.004	0	0
17	SO PLATE4	PX	.003	.003	0	0
18	SO PLATE3	PX	.003	.003	0	0
19	SO PLATE2	PX	.003	.003	0	0
20	SO PLATE1	PX	.003	.003	0	0
21	SO PIPE	PX	.005	.005	0	0
22	MP ALPHA1	PX	.003	.003	0	0
23	CONNECTION2	PX	.003	.003	0	0
24	CONNECTION1	PX	.003	.003	0	0

Member Distributed Loads (BLC 22 : Wind Load (270))

	Member Label	Direction	Start Magnitude[k/ft,F,ksf]	End Magnitude[k/ft,F,ksf]	Start Location[ft,...	End Location[ft,...
1	TIEBACK	PX	.003	.003	0	0
2	SO2	PX	.013	.013	0	0
3	SO1	PX	.013	.013	0	0
4	SO VERT1	PX	.009	.009	0	0
5	SO PLATE4	PX	.006	.006	0	0
6	SO PLATE3	PX	.006	.006	0	0
7	SO PLATE2	PX	.006	.006	0	0
8	SO PLATE1	PX	.006	.006	0	0
9	SO PIPE	PX	.013	.013	0	0
10	MP ALPHA1	PX	.007	.007	0	0
11	CONNECTION2	PX	.007	.007	0	0
12	CONNECTION1	PX	.007	.007	0	0

Member Distributed Loads (BLC 23 : Ice Wind Load (270))

	Member Label	Direction	Start Magnitude[k/ft,F,ksf]	End Magnitude[k/ft,F,ksf]	Start Location[ft,...	End Location[ft,...
1	TIEBACK	PX	.002	.002	0	0
2	SO2	PX	.006	.006	0	0
3	SO1	PX	.006	.006	0	0
4	SO VERT1	PX	.005	.005	0	0
5	SO PLATE4	PX	.003	.003	0	0
6	SO PLATE3	PX	.003	.003	0	0
7	SO PLATE2	PX	.003	.003	0	0
8	SO PLATE1	PX	.003	.003	0	0
9	SO PIPE	PX	.006	.006	0	0
10	MP ALPHA1	PX	.003	.003	0	0
11	CONNECTION2	PX	.004	.004	0	0
12	CONNECTION1	PX	.004	.004	0	0

Member Distributed Loads (BLC 24 : Wind Load (300))

Member Label	Direction	Start Magnitude[k/ft,F,ksf]	End Magnitude[k/ft,F,ksf]	Start Location[ft,...	End Location[ft,...

Member Distributed Loads (BLC 24 : Wind Load (300)) (Continued)

	Member Label	Direction	Start Magnitude[k/ft,F,ksf]	End Magnitude[k/ft,F,ksf]	Start Location[ft,...	End Location[ft,...
1	TIEBACK	PY	-.002	-.002	0	0
2	SO2	PY	-.006	-.006	0	0
3	SO1	PY	-.006	-.006	0	0
4	SO VERT1	PY	-.004	-.004	0	0
5	SO PLATE4	PY	-.003	-.003	0	0
6	SO PLATE3	PY	-.003	-.003	0	0
7	SO PLATE2	PY	-.003	-.003	0	0
8	SO PLATE1	PY	-.003	-.003	0	0
9	SO PIPE	PY	-.006	-.006	0	0
10	MP ALPHA1	PY	-.004	-.004	0	0
11	CONNECTION2	PY	-.004	-.004	0	0
12	CONNECTION1	PY	-.004	-.004	0	0
13	TIEBACK	PX	.003	.003	0	0
14	SO2	PX	.011	.011	0	0
15	SO1	PX	.011	.011	0	0
16	SO VERT1	PX	.008	.008	0	0
17	SO PLATE4	PX	.005	.005	0	0
18	SO PLATE3	PX	.005	.005	0	0
19	SO PLATE2	PX	.005	.005	0	0
20	SO PLATE1	PX	.005	.005	0	0
21	SO PIPE	PX	.011	.011	0	0
22	MP ALPHA1	PX	.006	.006	0	0
23	CONNECTION2	PX	.006	.006	0	0
24	CONNECTION1	PX	.006	.006	0	0

Member Distributed Loads (BLC 25 : Ice Wind Load (300))

	Member Label	Direction	Start Magnitude[k/ft,F,ksf]	End Magnitude[k/ft,F,ksf]	Start Location[ft,...	End Location[ft,...
1	TIEBACK	PY	-.001	-.001	0	0
2	SO2	PY	-.003	-.003	0	0
3	SO1	PY	-.003	-.003	0	0
4	SO VERT1	PY	-.003	-.003	0	0
5	SO PLATE4	PY	-.002	-.002	0	0
6	SO PLATE3	PY	-.002	-.002	0	0
7	SO PLATE2	PY	-.002	-.002	0	0
8	SO PLATE1	PY	-.002	-.002	0	0
9	SO PIPE	PY	-.003	-.003	0	0
10	MP ALPHA1	PY	-.002	-.002	0	0
11	CONNECTION2	PY	-.002	-.002	0	0
12	CONNECTION1	PY	-.002	-.002	0	0
13	TIEBACK	PX	.002	.002	0	0
14	SO2	PX	.005	.005	0	0
15	SO1	PX	.005	.005	0	0
16	SO VERT1	PX	.004	.004	0	0
17	SO PLATE4	PX	.003	.003	0	0
18	SO PLATE3	PX	.003	.003	0	0
19	SO PLATE2	PX	.003	.003	0	0
20	SO PLATE1	PX	.003	.003	0	0
21	SO PIPE	PX	.005	.005	0	0
22	MP ALPHA1	PX	.003	.003	0	0
23	CONNECTION2	PX	.003	.003	0	0
24	CONNECTION1	PX	.003	.003	0	0

Member Distributed Loads (BLC 26 : Wind Load (330))

	Member Label	Direction	Start Magnitude[k/ft,F,ksf]	End Magnitude[k/ft,F,ksf]	Start Location[ft,...	End Location[ft,...
1	TIEBACK	PY	-.003	-.003	0	0
2	SO2	PY	-.011	-.011	0	0
3	SO1	PY	-.011	-.011	0	0
4	SO VERT1	PY	-.008	-.008	0	0
5	SO PLATE4	PY	-.005	-.005	0	0
6	SO PLATE3	PY	-.005	-.005	0	0
7	SO PLATE2	PY	-.005	-.005	0	0
8	SO PLATE1	PY	-.005	-.005	0	0
9	SO PIPE	PY	-.011	-.011	0	0
10	MP ALPHA1	PY	-.006	-.006	0	0
11	CONNECTION2	PY	-.006	-.006	0	0
12	CONNECTION1	PY	-.006	-.006	0	0
13	TIEBACK	PX	.002	.002	0	0
14	SO2	PX	.006	.006	0	0
15	SO1	PX	.006	.006	0	0
16	SO VERT1	PX	.004	.004	0	0
17	SO PLATE4	PX	.003	.003	0	0
18	SO PLATE3	PX	.003	.003	0	0
19	SO PLATE2	PX	.003	.003	0	0
20	SO PLATE1	PX	.003	.003	0	0
21	SO PIPE	PX	.006	.006	0	0
22	MP ALPHA1	PX	.004	.004	0	0
23	CONNECTION2	PX	.004	.004	0	0
24	CONNECTION1	PX	.004	.004	0	0

Member Distributed Loads (BLC 27 : Ice Wind Load (330))

	Member Label	Direction	Start Magnitude[k/ft,F,ksf]	End Magnitude[k/ft,F,ksf]	Start Location[ft,...	End Location[ft,...
1	TIEBACK	PY	-.002	-.002	0	0
2	SO2	PY	-.005	-.005	0	0
3	SO1	PY	-.005	-.005	0	0
4	SO VERT1	PY	-.004	-.004	0	0
5	SO PLATE4	PY	-.003	-.003	0	0
6	SO PLATE3	PY	-.003	-.003	0	0
7	SO PLATE2	PY	-.003	-.003	0	0
8	SO PLATE1	PY	-.003	-.003	0	0
9	SO PIPE	PY	-.005	-.005	0	0
10	MP ALPHA1	PY	-.003	-.003	0	0
11	CONNECTION2	PY	-.003	-.003	0	0
12	CONNECTION1	PY	-.003	-.003	0	0
13	TIEBACK	PX	.001	.001	0	0
14	SO2	PX	.003	.003	0	0
15	SO1	PX	.003	.003	0	0
16	SO VERT1	PX	.003	.003	0	0
17	SO PLATE4	PX	.002	.002	0	0
18	SO PLATE3	PX	.002	.002	0	0
19	SO PLATE2	PX	.002	.002	0	0
20	SO PLATE1	PX	.002	.002	0	0
21	SO PIPE	PX	.003	.003	0	0
22	MP ALPHA1	PX	.002	.002	0	0
23	CONNECTION2	PX	.002	.002	0	0
24	CONNECTION1	PX	.002	.002	0	0

Envelope Joint Reactions

	Joint		X [k]	LC	Y [k]	LC	Z [k]	LC	MX [k-ft]	LC	MY [k-ft]	LC	MZ [k-ft]	LC
1	N72	max	.064	11	1.225	9	.58	19	-.076	32	.018	14	0	41
2		min	-.061	29	-.443	26	.13	32	-.359	19	-.017	26	0	1
3	N71A	max	.062	11	.44	8	.568	37	-.076	14	.019	26	0	41
4		min	-.062	29	-1.226	27	.131	14	-.352	37	-.017	14	0	1
5	N37A	max	.327	11	1.439	29	.039	30	0	41	0	41	0	41
6		min	-.33	29	-1.433	11	.013	11	0	1	0	1	0	1
7	Totals:	max	.453	11	.539	2	1.153	37						
8		min	-.453	29	-.539	20	.403	2						

Basic Load Cases

	BLC Description	Category	X Gravity	Y Gravity	Z Gravity	Joint	Point	Distribu...	Area(M...	Surface...
1	Wind Load (0)	WL					4	12		
2	Dead Load	DL			-1.1		4			
3	Live Load	LL					1			
4	Ice Wind Load (0)	OL1					4	12		
5	Ice Dead Load	OL2					4	12		
6	Wind Load (30)	WL					8	24		
7	Ice Wind Load (30)	OL1					8	24		
8	Wind Load (60)	WL					8	24		
9	Ice Wind Load (60)	OL1					8	24		
10	Wind Load (90)	WL					4	12		
11	Ice Wind Load (90)	OL1					4	12		
12	Wind Load (120)	WL					8	24		
13	Ice Wind Load (120)	OL1					8	24		
14	Wind Load (150)	WL					8	24		
15	Ice Wind Load (150)	OL1					8	24		
16	Wind Load (180)	WL					4	12		
17	Ice Wind Load (180)	OL1					4	12		
18	Wind Load (210)	WL					8	24		
19	Ice Wind Load (210)	OL1					8	24		
20	Wind Load (240)	WL					8	24		
21	Ice Wind Load (240)	OL1					8	24		
22	Wind Load (270)	WL					4	12		
23	Ice Wind Load (270)	OL1					4	12		
24	Wind Load (300)	WL					8	24		
25	Ice Wind Load (300)	OL1					8	24		
26	Wind Load (330)	WL					8	24		
27	Ice Wind Load (330)	OL1					8	24		
28	Maintanence (0)	OL3					4			
29	Maintanence (30)	OL3					8			
30	Maintanence (60)	OL3					8			
31	Maintanence (90)	OL3					4			
32	Maintanence (120)	OL3					8			
33	Maintanence (150)	OL3					8			
34	Maintanence (180)	OL3					4			
35	Maintanence (210)	OL3					8			
36	Maintanence (240)	OL3					8			
37	Maintanence (270)	OL3					4			
38	Maintanence (300)	OL3					8			

Basic Load Cases (Continued)

	BLC Description	Category	X Gravity	Y Gravity	Z Gravity	Joint	Point	Distribu...	Area(M...	Surface...
39	Maintanence (330)	OL3					8			
40	Earthquake (x-direction)	EL	-.117							
41	Earthquake (y-direction)	EL		-.117						
42	Earthquake (z-direction)	EL			-.047					

Load Combinations

	Description	Solve	P...	S...	B...	Fa...	B...	Fa...	B...	Fa...	B...	Fa...	B...	Fa...	B...	Fa...	B...	Fa...	B...	Fa...	B...	Fa...	B...	Fa...	B...	Fa...
1	1.4D	Yes	Y		2	1.4																				
2	1.2D + 1.0W(0)	Yes	Y		2	1.2	1	1																		
3	1.2D + 1.0Di + 1.0Wi(0)	Yes	Y		2	1.2	5	1	4	1																
4	1.2D + 1.5L + 1.0Wl(0)	Yes	Y		2	1.2	3	1.5	28	1																
5	1.2D + 1.0W(30)	Yes	Y		2	1.2	6	1																		
6	1.2D + 1.0Di + 1.0Wi(30)	Yes	Y		2	1.2	5	1	7	1																
7	1.2D + 1.5L + 1.0Wl(30)	Yes	Y		2	1.2	3	1.5	29	1																
8	1.2D + 1.0W(60)	Yes	Y		2	1.2	8	1																		
9	1.2D + 1.0Di + 1.0Wi(60)	Yes	Y		2	1.2	5	1	9	1																
10	1.2D + 1.5L + 1.0Wl(60)	Yes	Y		2	1.2	3	1.5	30	1																
11	1.2D + 1.0W(90)	Yes	Y		2	1.2	10	1																		
12	1.2D + 1.0Di + 1.0Wi(90)	Yes	Y		2	1.2	5	1	11	1																
13	1.2D + 1.5L + 1.0Wl(90)	Yes	Y		2	1.2	3	1.5	31	1																
14	1.2D + 1.0W(120)	Yes	Y		2	1.2	12	1																		
15	1.2D + 1.0Di + 1.0Wi(120)	Yes	Y		2	1.2	5	1	13	1																
16	1.2D + 1.5L + 1.0Wl(120)	Yes	Y		2	1.2	3	1.5	32	1																
17	1.2D + 1.0W(150)	Yes	Y		2	1.2	14	1																		
18	1.2D + 1.0Di + 1.0Wi(150)	Yes	Y		2	1.2	5	1	15	1																
19	1.2D + 1.5L + 1.0Wl(150)	Yes	Y		2	1.2	3	1.5	33	1																
20	1.2D + 1.0W(180)	Yes	Y		2	1.2	16	1																		
21	1.2D + 1.0Di + 1.0Wi(180)	Yes	Y		2	1.2	5	1	17	1																
22	1.2D + 1.5L + 1.0Wl(180)	Yes	Y		2	1.2	3	1.5	34	1																
23	1.2D + 1.0W(210)	Yes	Y		2	1.2	18	1																		
24	1.2D + 1.0Di + 1.0Wi(210)	Yes	Y		2	1.2	5	1	19	1																
25	1.2D + 1.5L + 1.0Wl(210)	Yes	Y		2	1.2	3	1.5	35	1																
26	1.2D + 1.0W(240)	Yes	Y		2	1.2	20	1																		
27	1.2D + 1.0Di + 1.0Wi(240)	Yes	Y		2	1.2	5	1	21	1																
28	1.2D + 1.5L + 1.0Wl(240)	Yes	Y		2	1.2	3	1.5	36	1																
29	1.2D + 1.0W(270)	Yes	Y		2	1.2	22	1																		
30	1.2D + 1.0Di + 1.0Wi(270)	Yes	Y		2	1.2	5	1	23	1																
31	1.2D + 1.5L + 1.0Wl(270)	Yes	Y		2	1.2	3	1.5	37	1																
32	1.2D + 1.0W(300)	Yes	Y		2	1.2	24	1																		
33	1.2D + 1.0Di + 1.0Wi(300)	Yes	Y		2	1.2	5	1	25	1																
34	1.2D + 1.5L + 1.0Wl(300)	Yes	Y		2	1.2	3	1.5	38	1																
35	1.2D + 1.0W(330)	Yes	Y		2	1.2	26	1																		
36	1.2D + 1.0Di + 1.0Wi(330)	Yes	Y		2	1.2	5	1	27	1																
37	1.2D + 1.5L + 1.0Wl(330)	Yes	Y		2	1.2	3	1.5	39	1																
38	1.2D + 1.0E(x) + 1.0E(z) + L	Yes	Y		2	1.2	40	1	42	1	3	1														
39	1.2D + 1.0E(y) + 1.0E(z) + L	Yes	Y		2	1.2	41	1	42	1	3	1														
40	1.2D - 1.0E(x) + 1.0E(z) + L	Yes	Y		2	1.2	40	-1	42	1	3	1														
41	1.2D - 1.0E(y) + 1.0E(z) + L	Yes	Y		2	1.2	41	-1	42	1	3	1														

Envelope AISC 15th(360-16): LRFD Steel Code Checks

	Member	Shape	Code Check	Loc[ft]	LC	Shear Check	Loc[ft]	Dir	LC	phi*...	phi*...	phi*...	phi*...	...	Eqn
1	SO VERT1	PIPE_2.0	.234	0	19	.037	0		25	30.2...	32.13	1.872	1.872	...	H1-...
2	CONNECTI...	C4.75x3	.159	.104	28	.059	.375	y	37	92.6...	97.2	10.61	9.871	...	H1-...
3	CONNECTI...	C4.75x3	.158	.104	10	.060	.375	y	19	92.6...	97.2	10.8...	9.871	...	H1-...
4	SO PIPE	PIPE_3.0	.150	.51	30	.084	1.75		29	61.0...	65.2...	5.749	5.749	...	H1-...
5	SO1	HSS3X3X3	.130	0	16	.026	2.37	z	19	74.69	78.2...	6.796	6.796	...	H1-...
6	SO2	HSS3X3X3	.128	0	34	.026	2.37	z	37	74.69	78.2...	6.796	6.796	...	H1-...
7	MP ALPHA1	PIPE_2.0	.080	2.5	27	.018	5.5		2	14.9...	32.13	1.872	1.872	...	H1-...
8	TIEBACK	PIPE_2.0	.068	5.741	11	.004	0		30	21.6...	32.13	1.872	1.872	...	H1-...
9	SO PLATE3	4x0.375	.040	.38	30	.016	.38	y	30	44.2...	48.6	.38	4.05	...	H1-...
10	SO PLATE1	4x0.375	.039	.38	12	.016	.38	y	12	44.2...	48.6	.38	4.05	...	H1-...
11	SO PLATE4	4x0.375	.035	.38	30	.015	.38	y	7	44.2...	48.6	.38	4.05	...	H1-...
12	SO PLATE2	4x0.375	.035	.38	12	.015	.38	y	25	44.2...	48.6	.38	4.05	...	H1-...

APPENDIX J

Additional Calculations (Alpha @ 110 ft)

POD
POWER OF DESIGN

POD Job #	**20-64395**
Site Number	**841298**
Site Name	**SOUTHINGTON ROGUS**

Connection Type	Single Shear

RISA 3D Forces

Axial (Bolts)	0.029	kips
Shear (Bolts)	0.569	kips
Axial Force (Member)	0.671	kips

Bolt/Member Information

Member Label	Plate3	
# of Bolts	1	
Diameter	0.5	inches
Bolt Grade	A325	
Member Grade	A36	
Threads Included?	Yes	
L_b	0	inches
L_c	1	inches
t	0.5	inches

Shear Capacity	**6.4%**
Axial Capacity	**0.2%**
Bearing Capacity	**2.4%**
Combined Capacity	**0.4%**

Ver 1.0 - 2/28/2020

APPENDIX K

Wire Frame and Rendered Models (Beta & Gamma @ 110 ft)

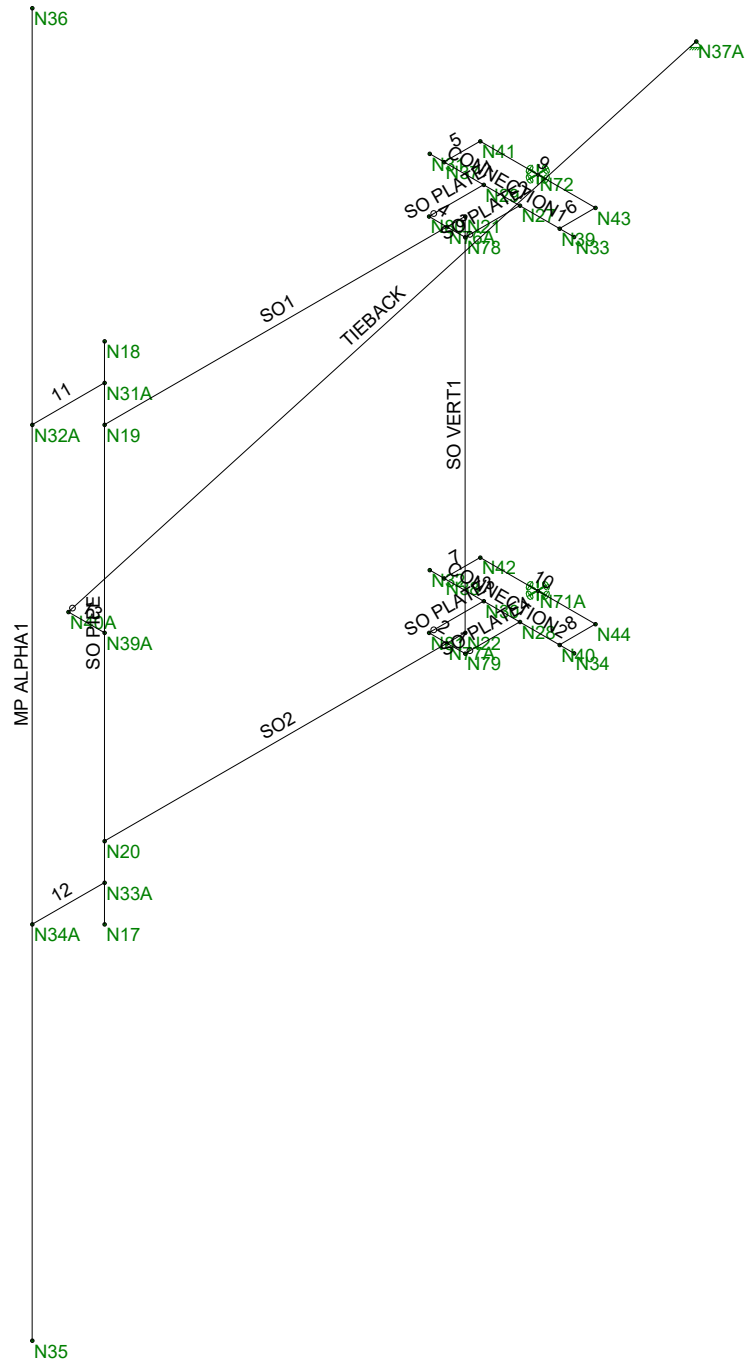

POD	841298	
LT		May 22, 2020 at 12:04 PM
20-64395		841298 110 ft Elevation Mount Alp...

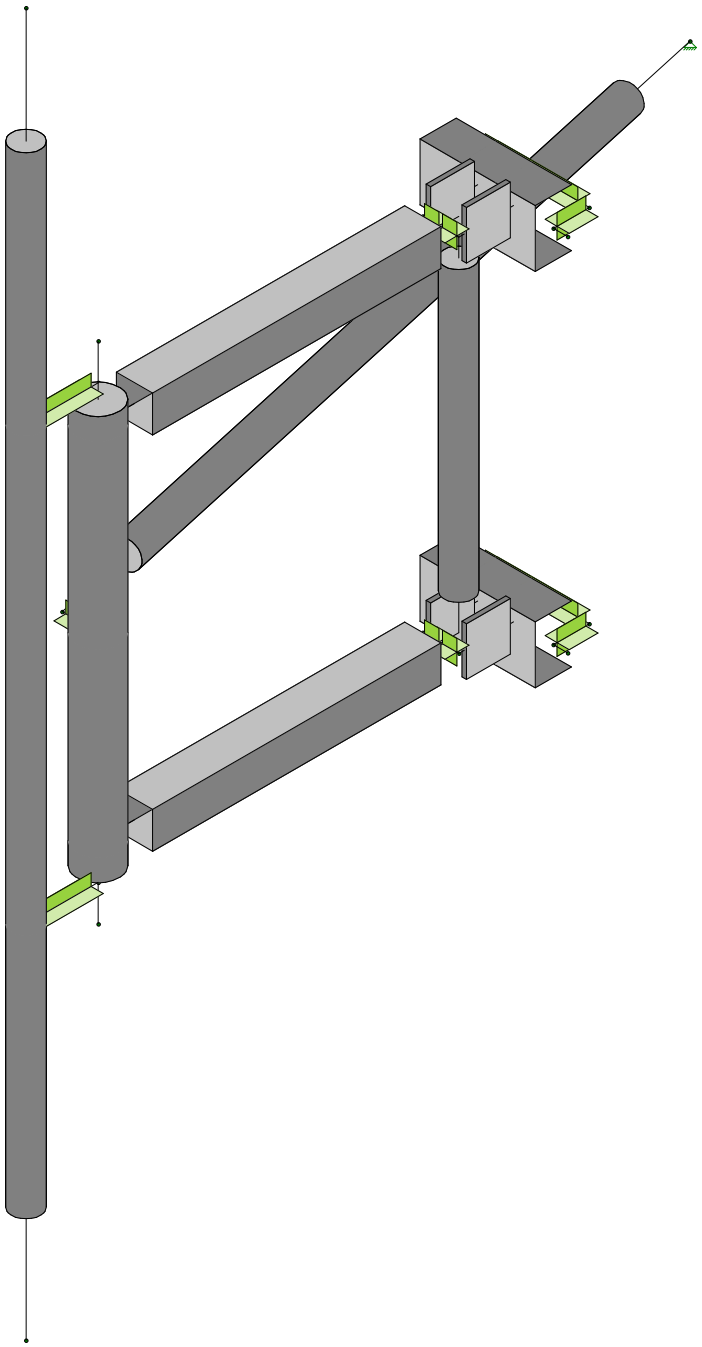

POD	841298	
LT		May 22, 2020 at 12:04 PM
20-64395		841298 110 ft Elevation Mount Alp...

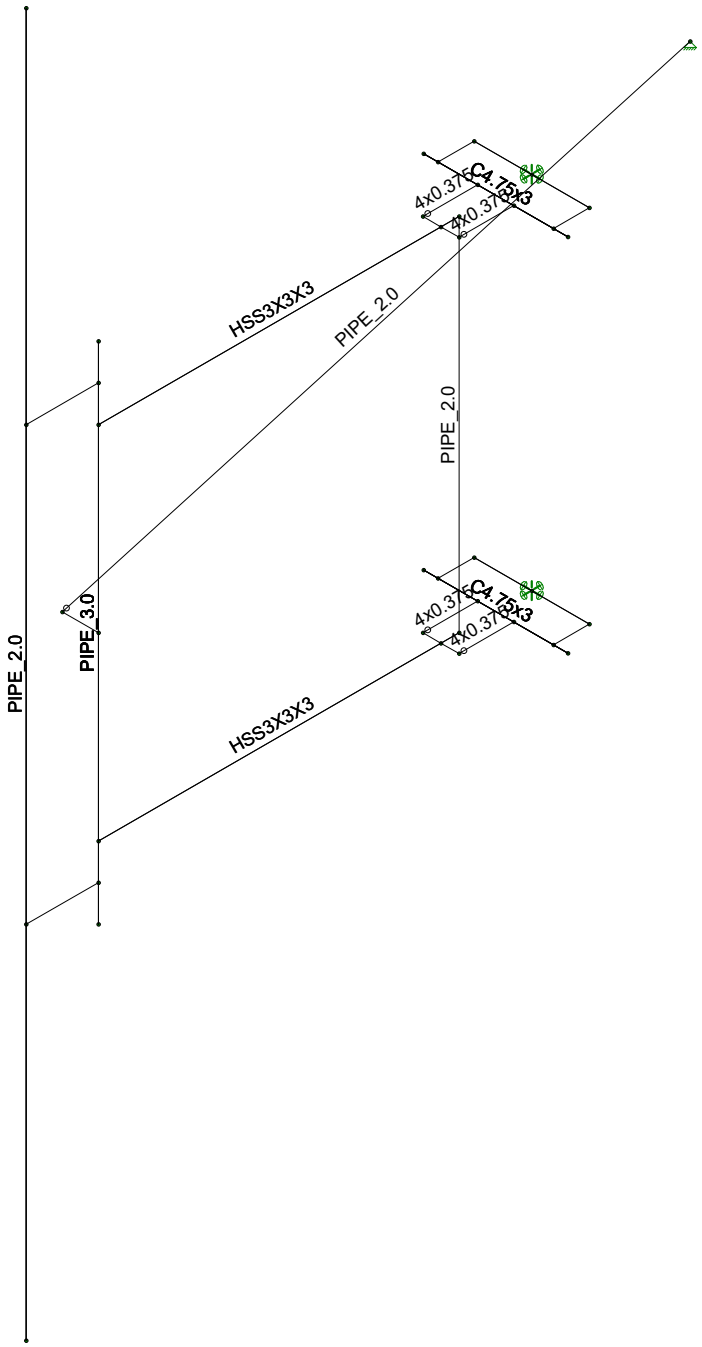

POD	841298	
LT		May 22, 2020 at 12:04 PM
20-64395		841298 110 ft Elevation Mount Alp...

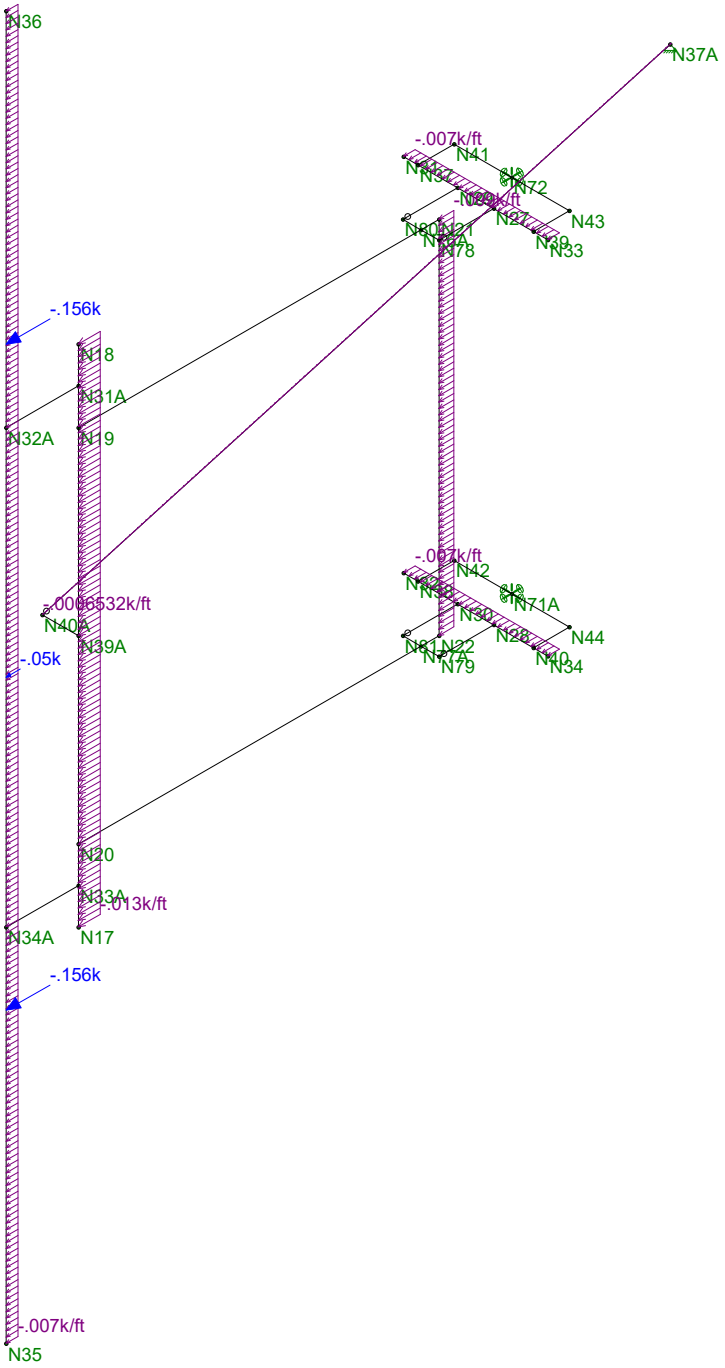

Loads: BLC 1, Wind Load (0)

POD	841298	
LT		May 22, 2020 at 12:13 PM
20-64395		841298 110 ft Elevation Beta Gam...

APPENDIX L

Software Input Calculations (Beta & Gamma @ 110 ft)

POD
POWER OF DESIGN

POD Job #	**20-64395**
Site Number	**841298**
Site Name	**SOUTHINGTON ROGUS**

General Site Information

Mount Type	MF	Risk Category	II	I (seismic)	1	
V (Wind Speed)	118	I(ice)	1	Sms	0.320	
Zs	343			Sm1	0.132	
ti	1.5	Ss	0.2	Sds	0.213	
Vi	50	S1	0.055	Sd1	0.088	
Kzt	1	Soil Site Class	D (assumed)	Seismic Design Category		
Exposure	B	Fa	1.600	B		
zg	1200	Fv	2.400	Seismic Analysis Not Required		
α	7			R	2	TIA-222-H 16.7
Kmin	0.7	Tower Type	Self Support	As	1	TIA-222-H 16.7
G_H	1	Tower Height	120	Cs, Min	0.03	TIA-222-H 2.7.7.1.1
Ke	0.99			Cs	0.10666667	TIA-222-H 2.7.7.1.1
K_D	0.95					
K_a	0.9					

Appurtenance Information

Model	Shielded	% Shielded	Centerline	Spacing (in)	# on MP 1	# on MP 2	# on MP 3	# on MP 4
OPA-65R-LCUU-H6			110	48	1			
DC6-48-60-18-8C			110					
RRUS 8843 B2/B66A			110		1			

Mount Information

Elevation (ft)	110
K_z	1.02
Kiz	1.13
tiz	1.69

	Length (ft)	Width (in)	Centerline
Mount Pipes	8	2.375	110

Round Members

Member	Length (ft)	Width (in)	Frame Member	# of Members
SO VERT1	2.5	2.375	Yes	1
SO PIPE	3.5	3.5	Yes	1
TIEBACK	2.875	2.375	No	1

Flat Members

Member	Length (ft)	Width (in)	Shape	A	B	C	D	Frame Member	# of Members
SO	2.5	3	Square HSS	3	0.1875	3		Yes	2
PLATE	0.38	4	Channel		4		0.375	No	4
CHANNEL	1	4.75	Channel	3	4.75	0.25	0.25	No	2
Tilt Insert Plate	0.604	6.125	Channel	0	6.125	0	0.75	No	2
Connection	1.167	5	Channel	0.189	5	0.32	0.325	No	2
Tabs	0.5	3	Channel	0	3	0	0.5	No	4

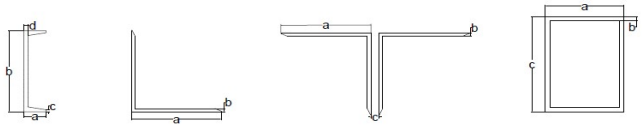

Version 2.2

Appurtenance Wind Calculations

Model	Height	Width	Depth	Weight (lbs)	Kz	qz (lb/ft$_z$)	$(EPA)_N$ (ft^2)	$(EPA)_T$(ft^2)	Wind Force (Kips) Front	Side	Alpha	Beta	Gamma
DMP65R-BU8D	96.0	20.7	7.7	105.6	1.04	34.82	15.86	5.95	0.552	0.207	0.466	0.466	0.207
DC6-48-60-18-8C	31.4	10.2	10.2	26.2	1.04	34.82	1.03	1.14	0.036	0.040	0.037	0.037	0.040
RRUS 4449 B5/B12	17.9	13.2	9.4	71.0	1.04	34.82	1.77	1.27	0.062	0.044	0.057	0.057	0.044
OPA-65R-LCUU-H6	72.0	14.4	7.3	80.0	1.02	33.96	9.20	4.63	0.312	0.157	0.274	0.274	0.157
DC6-48-60-18-8C	31.4	10.2	10.2	26.2	1.02	33.96	1.03	1.14	0.035	0.039	0.036	0.036	0.039
RRUS 8843 B2/B66A	14.9	13.2	10.9	72.0	1.02	33.96	1.48	1.22	0.050	0.041	0.048	0.048	0.041

Appurtenance Ice Calculations

Model	tiz (in)	Height	Width	Depth	Weight (lbs)	Kiz	qz (lb/ft$_z$)	$(EPA)_N$ (ft^2)	$(EPA)_T$(ft^2)	Wind Force (Kips) Front	Side	Alpha	Beta	Gamma
DMP65R-BU8D	1.71	99.41	24.11	11.11	367.49	1.14	6.25	17.22	7.99	0.108	0.050	0.093	0.093	0.050
DC6-48-60-18-8C	1.71	34.82	13.65	13.65	103.64	1.14	6.25	2.08	2.08	0.013	0.013	0.013	0.013	0.013
RRUS 4449 B5/B12	1.71	21.31	16.60	12.85	75.18	1.14	6.25	1.55	1.20	0.010	0.008	0.009	0.009	0.008
OPA-65R-LCUU-H6	1.69	75.41	17.81	10.71	221.13	1.13	6.10	10.70	6.40	0.065	0.039	0.059	0.059	0.039
DC6-48-60-18-8C	1.69	34.82	13.65	13.65	103.64	1.13	6.10	2.08	2.08	0.013	0.013	0.013	0.013	0.013
RRUS 8843 B2/B66A	1.69	18.31	16.61	14.31	71.65	1.13	6.10	1.33	1.15	0.008	0.007	0.008	0.008	0.007

Round Members

Member	Wind Calculations q_z (lb/ft^2)	Ar	C	Rrf	Cas	EPA (ft^2)	Load (k/ft)	Ice Calculations Width (in)	Weight (k/ft)	q_z (lb/ft^2)	Arice	Rrfice	Cas	EPA (ft^2)	Load (k/ft)
SO VERT1	33.96	0.49	23.39	0.60	1.90	0.51	0.007	5.76	0.01	6.10	1.20	0.61	1.90	1.25	0.003
SO PIPE	33.96	1.02	34.47	0.60	1.90	1.05	0.010	6.88	0.01	6.10	2.01	0.61	1.90	2.09	0.004
TIEBACK	33.96	0.57	23.39	0.60	1.20	0.37	0.002	5.76	0.01	6.10	1.38	0.61	1.20	0.91	0.001
SO	33.96	0.79	23.39	0.60	1.20	0.26	0.002	5.76	0.01	6.10	1.92	0.61	1.20	0.63	0.001
Tieback	33.96	2.62	23.39	0.60	1.20	0.85	0.002	5.76	0.01	6.10	6.36	0.61	1.20	2.10	0.001

Flat Members

Member	Wind Calculations q_z (lb/ft^2)	Af	Cas	EPA	Load (k/ft)	Ice Calculations Width (in)	Weight (k/ft)	q_z (lb/ft^2)	Arice	Rrfice	Cas	EPA	Load (k/ft)
SO	33.96	1.25	1.90	1.07	0.015	6.38	0.01	6.10	2.66	0.61	1.90	1.39	0.003
PLATE	33.96	0.51	1.20	0.14	0.006	7.38	0.01	6.10	0.94	0.61	1.90	0.24	0.002
CHANNEL	33.96	0.79	1.20	0.43	0.007	8.13	0.02	6.10	1.36	0.61	1.90	0.71	0.002
Tilt Insert Plate	33.96	0.62	1.20	0.33	0.009	9.51	0.01	6.10	0.96	0.61	1.90	0.50	0.003
Connection	33.96	0.97	1.20	0.53	0.008	8.38	0.01	6.10	1.63	0.61	1.90	0.85	0.002
Tabs	33.96	0.50	1.20	0.14	0.005	6.38	0.01	6.10	1.06	0.61	1.90	0.28	0.002

Appurtenance Seismic Calculations

Model	Weight	Sds	ρ	Cs	As	Ev	Eh
DMP65R-BU8D	105.6	0.213	1.000	0.107	1.000	0.005	0.011
DC6-48-60-18-8C	26.2	0.213	1.000	0.107	1.000	0.001	0.003
RRUS 4449 B5/B12	71.0	0.213	1.000	0.107	1.000	0.003	0.008
OPA-65R-LCUU-H6	80.0	0.213	1.000	0.107	1.000	0.003	0.009
DC6-48-60-18-8C	26.2	0.213	1.000	0.107	1.000	0.001	0.003
RRUS 8843 B2/B66A	72.0	0.213	1.000	0.107	1.000	0.003	0.008

Version 2.1

APPENDIX M

Software Analysis Output (Beta & Gamma @ 110 ft)

Hot Rolled Steel Design Parameters

	Label	Shape	Lengt...	Lbyy[ft]	Lbzz[ft]	Lcomp top[ft]	Lcomp bot[ft]	L-tor...	Kyy	Kzz	Cb	Func...
1	TIEBACK	PIPE_2.0	5.741			Lbyy						Lateral
2	SO2	PIPE_2.0	2			Lbyy						Lateral
3	SO1	PIPE_2.0	2			Lbyy						Lateral
4	SO VERT1	SR 3/4	2.5	2.25	2.25	Lbyy			.7	.7		Lateral
5	SO PIPE	PIPE_2.0	4.666			Lbyy						Lateral
6	P10	4x0.5"	.38			Lbyy						Lateral
7	P9	4x0.5"	.38			Lbyy						Lateral
8	P8	4x0.5"	.505			Lbyy						Lateral
9	P7	4x0.5"	.38			Lbyy						Lateral
10	P6	4x0.5"	.38			Lbyy						Lateral
11	P5	4x0.5"	.38			Lbyy						Lateral
12	P4	4x0.5"	.38			Lbyy						Lateral
13	P3	4x0.5"	.505			Lbyy						Lateral
14	P2	4x0.5"	.38			Lbyy						Lateral
15	P1	4x0.5"	.38			Lbyy						Lateral
16	MP ALPHA1	PIPE_2.0	8			Lbyy						Lateral
17	CONNECTION2	C4.75x3	1			Lbyy						Lateral
18	CONNECTION1	C4.75x3	1			Lbyy						Lateral

Member Primary Data

	Label	I Joint	J Joint	K Joint	Rotat...	Section/Shape	Type	Design List	Material	Design Rules
1	TIEBACK	N40A	N37A			PIPE 2.0	Beam	Pipe	A53 Gr.B	Typical
2	SO2	N20	N22			PIPE 2.0	Beam	Pipe	A53 Gr.B	Typical
3	SO1	N19	N21			PIPE 2.0	Beam	Pipe	A53 Gr.B	Typical
4	SO VERT1	N40B	N41A			SR 3/4	Beam	BAR	A36 Gr.36	Typical
5	SO PIPE	N17	N18			PIPE 2.0	Beam	Pipe	A53 Gr.B	Typical
6	P10	N56	N55		90	4x0.5"	Beam	RECT	A36 Gr.36	Typical
7	P9	N54	N53		90	4x0.5"	Beam	RECT	A36 Gr.36	Typical
8	P8	N22	N52			4x0.5"	Beam	RECT	A36 Gr.36	Typical
9	P7	N51	N42		90	4x0.5"	Beam	RECT	A36 Gr.36	Typical
10	P6	N50	N41B		90	4x0.5"	Beam	RECT	A36 Gr.36	Typical
11	P5	N35A	N34		90	4x0.5"	Beam	RECT	A36 Gr.36	Typical
12	P4	N33B	N32		90	4x0.5"	Beam	RECT	A36 Gr.36	Typical
13	P3	N21	N42A			4x0.5"	Beam	RECT	A36 Gr.36	Typical
14	P2	N80	N29		90	4x0.5"	Beam	RECT	A36 Gr.36	Typical
15	P1	N78	N27		90	4x0.5"	Beam	RECT	A36 Gr.36	Typical
16	MP ALPHA1	N35	N36			PIPE 2.0	Beam	Pipe	A53 Gr.B	Typical
17	CONNECTION2	N43A	N44		270	C4.75x3	Beam	Channel	A36 Gr.36	Typical
18	CONNECTION1	N31	N33		270	C4.75x3	Beam	Channel	A36 Gr.36	Typical
19	21	N42A	N63			RIGID	None	None	RIGID	Typical
20	20	N63	N38A			RIGID	None	None	RIGID	Typical
21	19	N39C	N63			RIGID	None	None	RIGID	Typical
22	18	N52	N62A			RIGID	None	None	RIGID	Typical
23	17	N62A	N61			RIGID	None	None	RIGID	Typical
24	16	N62	N62A			RIGID	None	None	RIGID	Typical
25	15	N59	N60			RIGID	None	None	RIGID	Typical
26	14	N58	N57			RIGID	None	None	RIGID	Typical
27	13	N45	N47			RIGID	None	None	RIGID	Typical
28	12	N46	N48			RIGID	None	None	RIGID	Typical

Member Primary Data (Continued)

	Label	I Joint	J Joint	K Joint	Rotat...	Section/Shape	Type	Design List	Material	Design Rules
29	11	N47	N48			RIGID	None	None	RIGID	Typical
30	8	N38	N39B			RIGID	None	None	RIGID	Typical
31	7	N37B	N36A			RIGID	None	None	RIGID	Typical
32	6	N39A	N40A			RIGID	None	None	RIGID	Typical
33	5	N33A	N34A			RIGID	None	None	RIGID	Typical
34	4	N31A	N32A			RIGID	None	None	RIGID	Typical
35	3	N41	N43			RIGID	None	None	RIGID	Typical
36	2	N39	N43			RIGID	None	None	RIGID	Typical
37	1	N37	N41			RIGID	None	None	RIGID	Typical

Member Advanced Data

	Label	I Release	J Release	I Offset[in]	J Offset[in]	T/C Only	Physic...	Defl Ratio Op...	Analysis Offset[in]	Inactive	Seismi...
1	TIEBACK	BenPIN					Yes	Default			None
2	SO2						Yes	Default			None
3	SO1						Yes				None
4	SO VERT1						Yes	Default			None
5	SO PIPE						Yes				None
6	P10						Yes	Default			None
7	P9						Yes	Default			None
8	P8						Yes	Default			None
9	P7						Yes	Default			None
10	P6						Yes	Default			None
11	P5						Yes	Default			None
12	P4						Yes	Default			None
13	P3						Yes	Default			None
14	P2						Yes	Default			None
15	P1						Yes	Default			None
16	MP ALPHA1						Yes				None
17	CONNECTIO...						Yes				None
18	CONNECTIO...						Yes				None
19	21						Yes	** NA **			None
20	20						Yes	** NA **			None
21	19						Yes	** NA **			None
22	18						Yes	** NA **			None
23	17						Yes	** NA **			None
24	16						Yes	** NA **			None
25	15						Yes	** NA **			None
26	14						Yes	** NA **			None
27	13						Yes	** NA **			None
28	12						Yes	** NA **			None
29	11						Yes	** NA **			None
30	8						Yes	** NA **			None
31	7						Yes	** NA **			None
32	6						Yes	** NA **			None
33	5						Yes	** NA **			None
34	4						Yes	** NA **			None
35	3						Yes	** NA **			None
36	2						Yes	** NA **			None
37	1						Yes	** NA **			None

Hot Rolled Steel Properties

	Label	E [ksi]	G [ksi]	Nu	Therm (/1...	Density[k/f...	Yield[ksi]	Ry	Fu[ksi]	Rt
1	A992	29000	11154	.3	.65	.49	50	1.1	65	1.1
2	A36 Gr.36	29000	11154	.3	.65	.49	36	1.5	58	1.2
3	A572 Gr.50	29000	11154	.3	.65	.49	50	1.1	65	1.1
4	A500 Gr.B RND	29000	11154	.3	.65	.527	42	1.4	58	1.3
5	A500 Gr.B Rect	29000	11154	.3	.65	.527	46	1.4	58	1.3
6	A53 Gr.B	29000	11154	.3	.65	.49	35	1.6	60	1.2
7	A1085	29000	11154	.3	.65	.49	50	1.4	65	1.3

Member Point Loads (BLC 1 : Wind Load (0))

	Member Label	Direction	Magnitude[k,k-ft]	Location[ft,%]
1	MP ALPHA1	Y	-.156	6
2	MP ALPHA1	Y	-.05	4
3	MP ALPHA1	Y	-.156	2

Member Point Loads (BLC 2 : Dead Load)

	Member Label	Direction	Magnitude[k,k-ft]	Location[ft,%]
1	MP ALPHA1	Z	-.04	6
2	MP ALPHA1	Z	-.072	4
3	MP ALPHA1	Z	-.04	2

Member Point Loads (BLC 3 : Live Load)

	Member Label	Direction	Magnitude[k,k-ft]	Location[ft,%]
1	SO1	Z	-.5	0

Member Point Loads (BLC 4 : Ice Wind Load (0))

	Member Label	Direction	Magnitude[k,k-ft]	Location[ft,%]
1	MP ALPHA1	Y	-.033	6
2	MP ALPHA1	Y	-.008	4
3	MP ALPHA1	Y	-.033	2

Member Point Loads (BLC 5 : Ice Dead Load)

	Member Label	Direction	Magnitude[k,k-ft]	Location[ft,%]
1	MP ALPHA1	Z	-.111	6
2	MP ALPHA1	Z	-.072	4
3	MP ALPHA1	Z	-.111	2

Member Point Loads (BLC 6 : Wind Load (30))

	Member Label	Direction	Magnitude[k,k-ft]	Location[ft,%]
1	MP ALPHA1	Y	-.118	6
2	MP ALPHA1	X	-.068	6
3	MP ALPHA1	Y	-.041	4
4	MP ALPHA1	X	-.024	4
5	MP ALPHA1	Y	-.118	2
6	MP ALPHA1	X	-.068	2

Member Point Loads (BLC 7 : Ice Wind Load (30))

Member Label	Direction	Magnitude[k,k-ft]	Location[ft,%]

Member Point Loads (BLC 7 : Ice Wind Load (30)) (Continued)

	Member Label	Direction	Magnitude[k,k-ft]	Location[ft,%]
1	MP ALPHA1	Y	-.025	6
2	MP ALPHA1	X	-.015	6
3	MP ALPHA1	Y	-.007	4
4	MP ALPHA1	X	-.004	4
5	MP ALPHA1	Y	-.025	2
6	MP ALPHA1	X	-.015	2

Member Point Loads (BLC 8 : Wind Load (60))

	Member Label	Direction	Magnitude[k,k-ft]	Location[ft,%]
1	MP ALPHA1	Y	-.049	6
2	MP ALPHA1	X	-.085	6
3	MP ALPHA1	Y	-.022	4
4	MP ALPHA1	X	-.038	4
5	MP ALPHA1	Y	-.049	2
6	MP ALPHA1	X	-.085	2

Member Point Loads (BLC 9 : Ice Wind Load (60))

	Member Label	Direction	Magnitude[k,k-ft]	Location[ft,%]
1	MP ALPHA1	Y	-.011	6
2	MP ALPHA1	X	-.02	6
3	MP ALPHA1	Y	-.004	4
4	MP ALPHA1	X	-.006	4
5	MP ALPHA1	Y	-.011	2
6	MP ALPHA1	X	-.02	2

Member Point Loads (BLC 10 : Wind Load (90))

	Member Label	Direction	Magnitude[k,k-ft]	Location[ft,%]
1	MP ALPHA1	X	-.079	6
2	MP ALPHA1	X	-.041	4
3	MP ALPHA1	X	-.079	2

Member Point Loads (BLC 11 : Ice Wind Load (90))

	Member Label	Direction	Magnitude[k,k-ft]	Location[ft,%]
1	MP ALPHA1	X	-.02	6
2	MP ALPHA1	X	-.007	4
3	MP ALPHA1	X	-.02	2

Member Point Loads (BLC 12 : Wind Load (120))

	Member Label	Direction	Magnitude[k,k-ft]	Location[ft,%]
1	MP ALPHA1	Y	.049	6
2	MP ALPHA1	X	-.085	6
3	MP ALPHA1	Y	.022	4
4	MP ALPHA1	X	-.038	4
5	MP ALPHA1	Y	.049	2
6	MP ALPHA1	X	-.085	2

Member Point Loads (BLC 13 : Ice Wind Load (120))

	Member Label	Direction	Magnitude[k,k-ft]	Location[ft,%]
1	MP ALPHA1	Y	.011	6

Member Point Loads (BLC 13 : Ice Wind Load (120)) (Continued)

	Member Label	Direction	Magnitude[k,k-ft]	Location[ft,%]
2	MP ALPHA1	X	-.02	6
3	MP ALPHA1	Y	.004	4
4	MP ALPHA1	X	-.006	4
5	MP ALPHA1	Y	.011	2
6	MP ALPHA1	X	-.02	2

Member Point Loads (BLC 14 : Wind Load (150))

	Member Label	Direction	Magnitude[k,k-ft]	Location[ft,%]
1	MP ALPHA1	Y	.118	6
2	MP ALPHA1	X	-.068	6
3	MP ALPHA1	Y	.041	4
4	MP ALPHA1	X	-.024	4
5	MP ALPHA1	Y	.118	2
6	MP ALPHA1	X	-.068	2

Member Point Loads (BLC 15 : Ice Wind Load (150))

	Member Label	Direction	Magnitude[k,k-ft]	Location[ft,%]
1	MP ALPHA1	Y	.025	6
2	MP ALPHA1	X	-.015	6
3	MP ALPHA1	Y	.007	4
4	MP ALPHA1	X	-.004	4
5	MP ALPHA1	Y	.025	2
6	MP ALPHA1	X	-.015	2

Member Point Loads (BLC 16 : Wind Load (180))

	Member Label	Direction	Magnitude[k,k-ft]	Location[ft,%]
1	MP ALPHA1	Y	.156	6
2	MP ALPHA1	Y	.05	4
3	MP ALPHA1	Y	.156	2

Member Point Loads (BLC 17 : Ice Wind Load (180))

	Member Label	Direction	Magnitude[k,k-ft]	Location[ft,%]
1	MP ALPHA1	Y	.033	6
2	MP ALPHA1	Y	.008	4
3	MP ALPHA1	Y	.033	2

Member Point Loads (BLC 18 : Wind Load (210))

	Member Label	Direction	Magnitude[k,k-ft]	Location[ft,%]
1	MP ALPHA1	Y	.118	6
2	MP ALPHA1	X	.068	6
3	MP ALPHA1	Y	.041	4
4	MP ALPHA1	X	.024	4
5	MP ALPHA1	Y	.118	2
6	MP ALPHA1	X	.068	2

Member Point Loads (BLC 19 : Ice Wind Load (210))

	Member Label	Direction	Magnitude[k,k-ft]	Location[ft,%]
1	MP ALPHA1	Y	.025	6
2	MP ALPHA1	X	.015	6

Member Point Loads (BLC 19 : Ice Wind Load (210)) (Continued)

	Member Label	Direction	Magnitude[k,k-ft]	Location[ft,%]
3	MP ALPHA1	Y	.007	4
4	MP ALPHA1	X	.004	4
5	MP ALPHA1	Y	.025	2
6	MP ALPHA1	X	.015	2

Member Point Loads (BLC 20 : Wind Load (240))

	Member Label	Direction	Magnitude[k,k-ft]	Location[ft,%]
1	MP ALPHA1	Y	.049	6
2	MP ALPHA1	X	.085	6
3	MP ALPHA1	Y	.022	4
4	MP ALPHA1	X	.038	4
5	MP ALPHA1	Y	.049	2
6	MP ALPHA1	X	.085	2

Member Point Loads (BLC 21 : Ice Wind Load (240))

	Member Label	Direction	Magnitude[k,k-ft]	Location[ft,%]
1	MP ALPHA1	Y	.011	6
2	MP ALPHA1	X	.02	6
3	MP ALPHA1	Y	.004	4
4	MP ALPHA1	X	.006	4
5	MP ALPHA1	Y	.011	2
6	MP ALPHA1	X	.02	2

Member Point Loads (BLC 22 : Wind Load (270))

	Member Label	Direction	Magnitude[k,k-ft]	Location[ft,%]
1	MP ALPHA1	X	.079	6
2	MP ALPHA1	X	.041	4
3	MP ALPHA1	X	.079	2

Member Point Loads (BLC 23 : Ice Wind Load (270))

	Member Label	Direction	Magnitude[k,k-ft]	Location[ft,%]
1	MP ALPHA1	X	.02	6
2	MP ALPHA1	X	.007	4
3	MP ALPHA1	X	.02	2

Member Point Loads (BLC 24 : Wind Load (300))

	Member Label	Direction	Magnitude[k,k-ft]	Location[ft,%]
1	MP ALPHA1	Y	-.049	6
2	MP ALPHA1	X	.085	6
3	MP ALPHA1	Y	-.022	4
4	MP ALPHA1	X	.038	4
5	MP ALPHA1	Y	-.049	2
6	MP ALPHA1	X	.085	2

Member Point Loads (BLC 25 : Ice Wind Load (300))

	Member Label	Direction	Magnitude[k,k-ft]	Location[ft,%]
1	MP ALPHA1	Y	-.011	6
2	MP ALPHA1	X	.02	6
3	MP ALPHA1	Y	-.004	4

Member Point Loads (BLC 25 : Ice Wind Load (300)) (Continued)

	Member Label	Direction	Magnitude[k,k-ft]	Location[ft,%]
4	MP ALPHA1	X	.006	4
5	MP ALPHA1	Y	-.011	2
6	MP ALPHA1	X	.02	2

Member Point Loads (BLC 26 : Wind Load (330))

	Member Label	Direction	Magnitude[k,k-ft]	Location[ft,%]
1	MP ALPHA1	Y	-.118	6
2	MP ALPHA1	X	.068	6
3	MP ALPHA1	Y	-.041	4
4	MP ALPHA1	X	.024	4
5	MP ALPHA1	Y	-.118	2
6	MP ALPHA1	X	.068	2

Member Point Loads (BLC 27 : Ice Wind Load (330))

	Member Label	Direction	Magnitude[k,k-ft]	Location[ft,%]
1	MP ALPHA1	Y	-.025	6
2	MP ALPHA1	X	.015	6
3	MP ALPHA1	Y	-.007	4
4	MP ALPHA1	X	.004	4
5	MP ALPHA1	Y	-.025	2
6	MP ALPHA1	X	.015	2

Member Point Loads (BLC 28 : Maintanence (0))

	Member Label	Direction	Magnitude[k,k-ft]	Location[ft,%]
1	MP ALPHA1	Y	-.018	6
2	MP ALPHA1	Y	-.004	4
3	MP ALPHA1	Y	-.018	2

Member Point Loads (BLC 29 : Maintanence (30))

	Member Label	Direction	Magnitude[k,k-ft]	Location[ft,%]
1	MP ALPHA1	Y	-.013	6
2	MP ALPHA1	X	-.008	6
3	MP ALPHA1	Y	-.003	4
4	MP ALPHA1	X	-.002	4
5	MP ALPHA1	Y	-.013	2
6	MP ALPHA1	X	-.008	2

Member Point Loads (BLC 30 : Maintanence (60))

	Member Label	Direction	Magnitude[k,k-ft]	Location[ft,%]
1	MP ALPHA1	Y	-.005	6
2	MP ALPHA1	X	-.008	6
3	MP ALPHA1	Y	-.002	4
4	MP ALPHA1	X	-.003	4
5	MP ALPHA1	Y	-.005	2
6	MP ALPHA1	X	-.008	2

Member Point Loads (BLC 31 : Maintanence (90))

	Member Label	Direction	Magnitude[k,k-ft]	Location[ft,%]
1	MP ALPHA1	X	-.007	6

Member Point Loads (BLC 31 : Maintanence (90)) (Continued)

	Member Label	Direction	Magnitude[k,k-ft]	Location[ft,%]
2	MP ALPHA1	X	-.003	4
3	MP ALPHA1	X	-.007	2

Member Point Loads (BLC 32 : Maintanence (120))

	Member Label	Direction	Magnitude[k,k-ft]	Location[ft,%]
1	MP ALPHA1	Y	.005	6
2	MP ALPHA1	X	-.008	6
3	MP ALPHA1	Y	.002	4
4	MP ALPHA1	X	-.003	4
5	MP ALPHA1	Y	.005	2
6	MP ALPHA1	X	-.008	2

Member Point Loads (BLC 33 : Maintanence (150))

	Member Label	Direction	Magnitude[k,k-ft]	Location[ft,%]
1	MP ALPHA1	Y	.013	6
2	MP ALPHA1	X	-.008	6
3	MP ALPHA1	Y	.003	4
4	MP ALPHA1	X	-.002	4
5	MP ALPHA1	Y	.013	2
6	MP ALPHA1	X	-.008	2

Member Point Loads (BLC 34 : Maintanence (180))

	Member Label	Direction	Magnitude[k,k-ft]	Location[ft,%]
1	MP ALPHA1	Y	.018	6
2	MP ALPHA1	Y	.004	4
3	MP ALPHA1	Y	.018	2

Member Point Loads (BLC 35 : Maintanence (210))

	Member Label	Direction	Magnitude[k,k-ft]	Location[ft,%]
1	MP ALPHA1	Y	.013	6
2	MP ALPHA1	X	.008	6
3	MP ALPHA1	Y	.003	4
4	MP ALPHA1	X	.002	4
5	MP ALPHA1	Y	.013	2
6	MP ALPHA1	X	.008	2

Member Point Loads (BLC 36 : Maintanence (240))

	Member Label	Direction	Magnitude[k,k-ft]	Location[ft,%]
1	MP ALPHA1	Y	.005	6
2	MP ALPHA1	X	.008	6
3	MP ALPHA1	Y	.002	4
4	MP ALPHA1	X	.003	4
5	MP ALPHA1	Y	.005	2
6	MP ALPHA1	X	.008	2

Member Point Loads (BLC 37 : Maintanence (270))

	Member Label	Direction	Magnitude[k,k-ft]	Location[ft,%]
1	MP ALPHA1	X	.007	6
2	MP ALPHA1	X	.003	4

Member Point Loads (BLC 37 : Maintanence (270)) (Continued)

	Member Label	Direction	Magnitude[k,k-ft]	Location[ft,%]
3	MP ALPHA1	X	.007	2

Member Point Loads (BLC 38 : Maintanence (300))

	Member Label	Direction	Magnitude[k,k-ft]	Location[ft,%]
1	MP ALPHA1	Y	-.005	6
2	MP ALPHA1	X	.008	6
3	MP ALPHA1	Y	-.002	4
4	MP ALPHA1	X	.003	4
5	MP ALPHA1	Y	-.005	2
6	MP ALPHA1	X	.008	2

Member Point Loads (BLC 39 : Maintanence (330))

	Member Label	Direction	Magnitude[k,k-ft]	Location[ft,%]
1	MP ALPHA1	Y	-.013	6
2	MP ALPHA1	X	.008	6
3	MP ALPHA1	Y	-.003	4
4	MP ALPHA1	X	.002	4
5	MP ALPHA1	Y	-.013	2
6	MP ALPHA1	X	.008	2

Member Distributed Loads (BLC 1 : Wind Load (0))

	Member Label	Direction	Start Magnitude[k/ft,F,ksf]	End Magnitude[k/ft,F,ksf]	Start Location[ft,...	End Location[ft,...
1	TIEBACK	PY	-.003	-.003	0	0
2	SO2	PY	-.013	-.013	0	0
3	SO1	PY	-.013	-.013	0	0
4	P1	PY	-.006	-.006	0	0
5	P2	PY	-.006	-.006	0	0
6	SO PIPE	PY	-.013	-.013	0	0
7	MP ALPHA1	PY	-.007	-.007	0	0
8	CONNECTION1	PY	-.007	-.007	0	0
9	SO VERT1	PY	-.009	-.009	0	0
10	P3	PY	-.006	-.006	0	0
11	P4	PY	-.006	-.006	0	0
12	P5	PY	-.006	-.006	0	0
13	P6	PY	-.006	-.006	0	0
14	P7	PY	-.006	-.006	0	0
15	CONNECTION2	PY	-.007	-.007	0	0
16	P8	PY	-.006	-.006	0	0
17	P9	PY	-.006	-.006	0	0
18	P10	PY	-.006	-.006	0	0

Member Distributed Loads (BLC 4 : Ice Wind Load (0))

	Member Label	Direction	Start Magnitude[k/ft,F,ksf]	End Magnitude[k/ft,F,ksf]	Start Location[ft,...	End Location[ft,...
1	TIEBACK	PY	-.002	-.002	0	0
2	SO2	PY	-.006	-.006	0	0
3	SO1	PY	-.006	-.006	0	0
4	P1	PY	-.003	-.003	0	0
5	P2	PY	-.003	-.003	0	0
6	SO PIPE	PY	-.006	-.006	0	0

Member Distributed Loads (BLC 4 : Ice Wind Load (0)) (Continued)

	Member Label	Direction	Start Magnitude[k/ft,F,ksf]	End Magnitude[k/ft,F,ksf]	Start Location[ft,...	End Location[ft,...
7	MP ALPHA1	PY	-.003	-.003	0	0
8	CONNECTION1	PY	-.004	-.004	0	0
9	SO VERT1	PY	-.005	-.005	0	0
10	P3	PY	-.003	-.003	0	0
11	P4	PY	-.003	-.003	0	0
12	P5	PY	-.003	-.003	0	0
13	P6	PY	-.003	-.003	0	0
14	P7	PY	-.003	-.003	0	0
15	CONNECTION2	PY	-.004	-.004	0	0
16	P8	PY	-.003	-.003	0	0
17	P9	PY	-.003	-.003	0	0
18	P10	PY	-.003	-.003	0	0

Member Distributed Loads (BLC 5 : Ice Dead Load)

	Member Label	Direction	Start Magnitude[k/ft,F,ksf]	End Magnitude[k/ft,F,ksf]	Start Location[ft,...	End Location[ft,...
1	TIEBACK	Z	-.009	-.009	0	0
2	SO2	Z	-.012	-.012	0	0
3	SO1	Z	-.012	-.012	0	0
4	P1	Z	-.01	-.01	0	0
5	P2	Z	-.01	-.01	0	0
6	SO PIPE	Z	-.011	-.011	0	0
7	MP ALPHA1	Z	-.009	-.009	0	0
8	CONNECTION1	Z	-.019	-.019	0	0
9	SO VERT1	Z	-.009	-.009	0	0
10	P3	Z	-.01	-.01	0	0
11	P4	Z	-.01	-.01	0	0
12	P5	Z	-.01	-.01	0	0
13	P6	Z	-.01	-.01	0	0
14	P7	Z	-.01	-.01	0	0
15	CONNECTION2	Z	-.019	-.019	0	0
16	P8	Z	-.01	-.01	0	0
17	P9	Z	-.01	-.01	0	0
18	P10	Z	-.01	-.01	0	0

Member Distributed Loads (BLC 6 : Wind Load (30))

	Member Label	Direction	Start Magnitude[k/ft,F,ksf]	End Magnitude[k/ft,F,ksf]	Start Location[ft,...	End Location[ft,...
1	TIEBACK	PY	-.003	-.003	0	0
2	SO2	PY	-.011	-.011	0	0
3	SO1	PY	-.011	-.011	0	0
4	P1	PY	-.005	-.005	0	0
5	P2	PY	-.005	-.005	0	0
6	SO PIPE	PY	-.011	-.011	0	0
7	MP ALPHA1	PY	-.006	-.006	0	0
8	CONNECTION1	PY	-.006	-.006	0	0
9	TIEBACK	PX	-.002	-.002	0	0
10	SO2	PX	-.006	-.006	0	0
11	SO1	PX	-.006	-.006	0	0
12	P1	PX	-.003	-.003	0	0
13	P2	PX	-.003	-.003	0	0
14	SO PIPE	PX	-.006	-.006	0	0
15	MP ALPHA1	PX	-.004	-.004	0	0

Member Distributed Loads (BLC 6 : Wind Load (30)) (Continued)

	Member Label	Direction	Start Magnitude[k/ft,F,ksf]	End Magnitude[k/ft,F,ksf]	Start Location[ft,...	End Location[ft,...
16	CONNECTION1	PX	-.004	-.004	0	0
17	SO VERT1	PY	-.008	-.008	0	0
18	SO VERT1	PX	-.004	-.004	0	0
19	P3	PY	-.005	-.005	0	0
20	P3	PX	-.003	-.003	0	0
21	P4	PY	-.005	-.005	0	0
22	P4	PX	-.003	-.003	0	0
23	P5	PY	-.005	-.005	0	0
24	P5	PX	-.003	-.003	0	0
25	P6	PY	-.005	-.005	0	0
26	P6	PX	-.003	-.003	0	0
27	P7	PY	-.005	-.005	0	0
28	P7	PX	-.003	-.003	0	0
29	CONNECTION2	PY	-.006	-.006	0	0
30	CONNECTION2	PX	-.004	-.004	0	0
31	P8	PY	-.005	-.005	0	0
32	P8	PX	-.003	-.003	0	0
33	P9	PY	-.005	-.005	0	0
34	P9	PX	-.003	-.003	0	0
35	P10	PY	-.005	-.005	0	0
36	P10	PX	-.003	-.003	0	0

Member Distributed Loads (BLC 7 : Ice Wind Load (30))

	Member Label	Direction	Start Magnitude[k/ft,F,ksf]	End Magnitude[k/ft,F,ksf]	Start Location[ft,...	End Location[ft,...
1	TIEBACK	PY	-.002	-.002	0	0
2	SO2	PY	-.005	-.005	0	0
3	SO1	PY	-.005	-.005	0	0
4	P1	PY	-.003	-.003	0	0
5	P2	PY	-.003	-.003	0	0
6	SO PIPE	PY	-.005	-.005	0	0
7	MP ALPHA1	PY	-.003	-.003	0	0
8	CONNECTION1	PY	-.003	-.003	0	0
9	TIEBACK	PX	-.001	-.001	0	0
10	SO2	PX	-.003	-.003	0	0
11	SO1	PX	-.003	-.003	0	0
12	P1	PX	-.002	-.002	0	0
13	P2	PX	-.002	-.002	0	0
14	SO PIPE	PX	-.003	-.003	0	0
15	MP ALPHA1	PX	-.002	-.002	0	0
16	CONNECTION1	PX	-.002	-.002	0	0
17	SO VERT1	PY	-.004	-.004	0	0
18	SO VERT1	PX	-.003	-.003	0	0
19	P3	PY	-.003	-.003	0	0
20	P3	PX	-.002	-.002	0	0
21	P4	PY	-.003	-.003	0	0
22	P4	PX	-.002	-.002	0	0
23	P5	PY	-.003	-.003	0	0
24	P5	PX	-.002	-.002	0	0
25	P6	PY	-.003	-.003	0	0
26	P6	PX	-.002	-.002	0	0
27	P7	PY	-.003	-.003	0	0

Member Distributed Loads (BLC 7 : Ice Wind Load (30)) (Continued)

	Member Label	Direction	Start Magnitude[k/ft,F,ksf]	End Magnitude[k/ft,F,ksf]	Start Location[ft,...	End Location[ft,...
28	P7	PX	-.002	-.002	0	0
29	CONNECTION2	PY	-.003	-.003	0	0
30	CONNECTION2	PX	-.002	-.002	0	0
31	P8	PY	-.003	-.003	0	0
32	P8	PX	-.002	-.002	0	0
33	P9	PY	-.003	-.003	0	0
34	P9	PX	-.002	-.002	0	0
35	P10	PY	-.003	-.003	0	0
36	P10	PX	-.002	-.002	0	0

Member Distributed Loads (BLC 8 : Wind Load (60))

	Member Label	Direction	Start Magnitude[k/ft,F,ksf]	End Magnitude[k/ft,F,ksf]	Start Location[ft,...	End Location[ft,...
1	TIEBACK	PY	-.002	-.002	0	0
2	SO2	PY	-.006	-.006	0	0
3	SO1	PY	-.006	-.006	0	0
4	P1	PY	-.003	-.003	0	0
5	P2	PY	-.003	-.003	0	0
6	SO PIPE	PY	-.006	-.006	0	0
7	MP ALPHA1	PY	-.004	-.004	0	0
8	CONNECTION1	PY	-.004	-.004	0	0
9	TIEBACK	PX	-.003	-.003	0	0
10	SO2	PX	-.011	-.011	0	0
11	SO1	PX	-.011	-.011	0	0
12	P1	PX	-.005	-.005	0	0
13	P2	PX	-.005	-.005	0	0
14	SO PIPE	PX	-.011	-.011	0	0
15	MP ALPHA1	PX	-.006	-.006	0	0
16	CONNECTION1	PX	-.006	-.006	0	0
17	SO VERT1	PY	-.004	-.004	0	0
18	SO VERT1	PX	-.008	-.008	0	0
19	P3	PY	-.003	-.003	0	0
20	P3	PX	-.005	-.005	0	0
21	P4	PY	-.003	-.003	0	0
22	P4	PX	-.005	-.005	0	0
23	P5	PY	-.003	-.003	0	0
24	P5	PX	-.005	-.005	0	0
25	P6	PY	-.003	-.003	0	0
26	P6	PX	-.005	-.005	0	0
27	P7	PY	-.003	-.003	0	0
28	P7	PX	-.005	-.005	0	0
29	CONNECTION2	PY	-.004	-.004	0	0
30	CONNECTION2	PX	-.006	-.006	0	0
31	P8	PY	-.003	-.003	0	0
32	P8	PX	-.005	-.005	0	0
33	P9	PY	-.003	-.003	0	0
34	P9	PX	-.005	-.005	0	0
35	P10	PY	-.003	-.003	0	0
36	P10	PX	-.005	-.005	0	0

Member Distributed Loads (BLC 9 : Ice Wind Load (60))

	Member Label	Direction	Start Magnitude[k/ft,F,ksf]	End Magnitude[k/ft,F,ksf]	Start Location[ft,...	End Location[ft,...

Member Distributed Loads (BLC 9 : Ice Wind Load (60)) (Continued)

	Member Label	Direction	Start Magnitude[k/ft,F,ksf]	End Magnitude[k/ft,F,ksf]	Start Location[ft,...	End Location[ft,...
1	TIEBACK	PY	-.001	-.001	0	0
2	SO2	PY	-.003	-.003	0	0
3	SO1	PY	-.003	-.003	0	0
4	P1	PY	-.002	-.002	0	0
5	P2	PY	-.002	-.002	0	0
6	SO PIPE	PY	-.003	-.003	0	0
7	MP ALPHA1	PY	-.002	-.002	0	0
8	CONNECTION1	PY	-.002	-.002	0	0
9	TIEBACK	PX	-.002	-.002	0	0
10	SO2	PX	-.005	-.005	0	0
11	SO1	PX	-.005	-.005	0	0
12	P1	PX	-.003	-.003	0	0
13	P2	PX	-.003	-.003	0	0
14	SO PIPE	PX	-.005	-.005	0	0
15	MP ALPHA1	PX	-.003	-.003	0	0
16	CONNECTION1	PX	-.003	-.003	0	0
17	SO VERT1	PY	-.003	-.003	0	0
18	SO VERT1	PX	-.004	-.004	0	0
19	P3	PY	-.002	-.002	0	0
20	P3	PX	-.003	-.003	0	0
21	P4	PY	-.002	-.002	0	0
22	P4	PX	-.003	-.003	0	0
23	P5	PY	-.002	-.002	0	0
24	P5	PX	-.003	-.003	0	0
25	P6	PY	-.002	-.002	0	0
26	P6	PX	-.003	-.003	0	0
27	P7	PY	-.002	-.002	0	0
28	P7	PX	-.003	-.003	0	0
29	CONNECTION2	PY	-.002	-.002	0	0
30	CONNECTION2	PX	-.003	-.003	0	0
31	P8	PY	-.002	-.002	0	0
32	P8	PX	-.003	-.003	0	0
33	P9	PY	-.002	-.002	0	0
34	P9	PX	-.003	-.003	0	0
35	P10	PY	-.002	-.002	0	0
36	P10	PX	-.003	-.003	0	0

Member Distributed Loads (BLC 10 : Wind Load (90))

	Member Label	Direction	Start Magnitude[k/ft,F,ksf]	End Magnitude[k/ft,F,ksf]	Start Location[ft,...	End Location[ft,...
1	TIEBACK	PX	-.003	-.003	0	0
2	SO2	PX	-.013	-.013	0	0
3	SO1	PX	-.013	-.013	0	0
4	P1	PX	-.006	-.006	0	0
5	P2	PX	-.006	-.006	0	0
6	SO PIPE	PX	-.013	-.013	0	0
7	MP ALPHA1	PX	-.007	-.007	0	0
8	CONNECTION1	PX	-.007	-.007	0	0
9	SO VERT1	PX	-.009	-.009	0	0
10	P3	PX	-.006	-.006	0	0
11	P4	PX	-.006	-.006	0	0
12	P5	PX	-.006	-.006	0	0

Member Distributed Loads (BLC 10 : Wind Load (90)) (Continued)

	Member Label	Direction	Start Magnitude[k/ft,F,ksf]	End Magnitude[k/ft,F,ksf]	Start Location[ft,...	End Location[ft,...
13	P6	PX	-.006	-.006	0	0
14	P7	PX	-.006	-.006	0	0
15	CONNECTION2	PX	-.007	-.007	0	0
16	P8	PX	-.006	-.006	0	0
17	P9	PX	-.006	-.006	0	0
18	P10	PX	-.006	-.006	0	0

Member Distributed Loads (BLC 11 : Ice Wind Load (90))

	Member Label	Direction	Start Magnitude[k/ft,F,ksf]	End Magnitude[k/ft,F,ksf]	Start Location[ft,...	End Location[ft,...
1	TIEBACK	PX	-.002	-.002	0	0
2	SO2	PX	-.006	-.006	0	0
3	SO1	PX	-.006	-.006	0	0
4	P1	PX	-.003	-.003	0	0
5	P2	PX	-.003	-.003	0	0
6	SO PIPE	PX	-.006	-.006	0	0
7	MP ALPHA1	PX	-.003	-.003	0	0
8	CONNECTION1	PX	-.004	-.004	0	0
9	SO VERT1	PX	-.005	-.005	0	0
10	P3	PX	-.003	-.003	0	0
11	P4	PX	-.003	-.003	0	0
12	P5	PX	-.003	-.003	0	0
13	P6	PX	-.003	-.003	0	0
14	P7	PX	-.003	-.003	0	0
15	CONNECTION2	PX	-.004	-.004	0	0
16	P8	PX	-.003	-.003	0	0
17	P9	PX	-.003	-.003	0	0
18	P10	PX	-.003	-.003	0	0

Member Distributed Loads (BLC 12 : Wind Load (120))

	Member Label	Direction	Start Magnitude[k/ft,F,ksf]	End Magnitude[k/ft,F,ksf]	Start Location[ft,...	End Location[ft,...
1	TIEBACK	PY	.002	.002	0	0
2	SO2	PY	.006	.006	0	0
3	SO1	PY	.006	.006	0	0
4	P1	PY	.003	.003	0	0
5	P2	PY	.003	.003	0	0
6	SO PIPE	PY	.006	.006	0	0
7	MP ALPHA1	PY	.004	.004	0	0
8	CONNECTION1	PY	.004	.004	0	0
9	TIEBACK	PX	-.003	-.003	0	0
10	SO2	PX	-.011	-.011	0	0
11	SO1	PX	-.011	-.011	0	0
12	P1	PX	-.005	-.005	0	0
13	P2	PX	-.005	-.005	0	0
14	SO PIPE	PX	-.011	-.011	0	0
15	MP ALPHA1	PX	-.006	-.006	0	0
16	CONNECTION1	PX	-.006	-.006	0	0
17	SO VERT1	PY	.004	.004	0	0
18	SO VERT1	PX	-.008	-.008	0	0
19	P3	PY	.003	.003	0	0
20	P3	PX	-.005	-.005	0	0
21	P4	PY	.003	.003	0	0

Member Distributed Loads (BLC 12 : Wind Load (120)) (Continued)

	Member Label	Direction	Start Magnitude[k/ft,F,ksf]	End Magnitude[k/ft,F,ksf]	Start Location[ft,...	End Location[ft,...
22	P4	PX	-.005	-.005	0	0
23	P5	PY	.003	.003	0	0
24	P5	PX	-.005	-.005	0	0
25	P6	PY	.003	.003	0	0
26	P6	PX	-.005	-.005	0	0
27	P7	PY	.003	.003	0	0
28	P7	PX	-.005	-.005	0	0
29	CONNECTION2	PY	.004	.004	0	0
30	CONNECTION2	PX	-.006	-.006	0	0
31	P8	PY	.003	.003	0	0
32	P8	PX	-.005	-.005	0	0
33	P9	PY	.003	.003	0	0
34	P9	PX	-.005	-.005	0	0
35	P10	PY	.003	.003	0	0
36	P10	PX	-.005	-.005	0	0

Member Distributed Loads (BLC 13 : Ice Wind Load (120))

	Member Label	Direction	Start Magnitude[k/ft,F,ksf]	End Magnitude[k/ft,F,ksf]	Start Location[ft,...	End Location[ft,...
1	TIEBACK	PY	.001	.001	0	0
2	SO2	PY	.003	.003	0	0
3	SO1	PY	.003	.003	0	0
4	P1	PY	.002	.002	0	0
5	P2	PY	.002	.002	0	0
6	SO PIPE	PY	.003	.003	0	0
7	MP ALPHA1	PY	.002	.002	0	0
8	CONNECTION1	PY	.002	.002	0	0
9	TIEBACK	PX	-.002	-.002	0	0
10	SO2	PX	-.005	-.005	0	0
11	SO1	PX	-.005	-.005	0	0
12	P1	PX	-.003	-.003	0	0
13	P2	PX	-.003	-.003	0	0
14	SO PIPE	PX	-.005	-.005	0	0
15	MP ALPHA1	PX	-.003	-.003	0	0
16	CONNECTION1	PX	-.003	-.003	0	0
17	SO VERT1	PY	.003	.003	0	0
18	SO VERT1	PX	-.004	-.004	0	0
19	P3	PY	.002	.002	0	0
20	P3	PX	-.003	-.003	0	0
21	P4	PY	.002	.002	0	0
22	P4	PX	-.003	-.003	0	0
23	P5	PY	.002	.002	0	0
24	P5	PX	-.003	-.003	0	0
25	P6	PY	.002	.002	0	0
26	P6	PX	-.003	-.003	0	0
27	P7	PY	.002	.002	0	0
28	P7	PX	-.003	-.003	0	0
29	CONNECTION2	PY	.002	.002	0	0
30	CONNECTION2	PX	-.003	-.003	0	0
31	P8	PY	.002	.002	0	0
32	P8	PX	-.003	-.003	0	0
33	P9	PY	.002	.002	0	0

Member Distributed Loads (BLC 13 : Ice Wind Load (120)) (Continued)

	Member Label	Direction	Start Magnitude[k/ft,F,ksf]	End Magnitude[k/ft,F,ksf]	Start Location[ft,...	End Location[ft,...
34	P9	PX	-.003	-.003	0	0
35	P10	PY	.002	.002	0	0
36	P10	PX	-.003	-.003	0	0

Member Distributed Loads (BLC 14 : Wind Load (150))

	Member Label	Direction	Start Magnitude[k/ft,F,ksf]	End Magnitude[k/ft,F,ksf]	Start Location[ft,...	End Location[ft,...
1	TIEBACK	PY	.003	.003	0	0
2	SO2	PY	.011	.011	0	0
3	SO1	PY	.011	.011	0	0
4	P1	PY	.005	.005	0	0
5	P2	PY	.005	.005	0	0
6	SO PIPE	PY	.011	.011	0	0
7	MP ALPHA1	PY	.006	.006	0	0
8	CONNECTION1	PY	.006	.006	0	0
9	TIEBACK	PX	-.002	-.002	0	0
10	SO2	PX	-.006	-.006	0	0
11	SO1	PX	-.006	-.006	0	0
12	P1	PX	-.003	-.003	0	0
13	P2	PX	-.003	-.003	0	0
14	SO PIPE	PX	-.006	-.006	0	0
15	MP ALPHA1	PX	-.004	-.004	0	0
16	CONNECTION1	PX	-.004	-.004	0	0
17	SO VERT1	PY	.008	.008	0	0
18	SO VERT1	PX	-.004	-.004	0	0
19	P3	PY	.005	.005	0	0
20	P3	PX	-.003	-.003	0	0
21	P4	PY	.005	.005	0	0
22	P4	PX	-.003	-.003	0	0
23	P5	PY	.005	.005	0	0
24	P5	PX	-.003	-.003	0	0
25	P6	PY	.005	.005	0	0
26	P6	PX	-.003	-.003	0	0
27	P7	PY	.005	.005	0	0
28	P7	PX	-.003	-.003	0	0
29	CONNECTION2	PY	.006	.006	0	0
30	CONNECTION2	PX	-.004	-.004	0	0
31	P8	PY	.005	.005	0	0
32	P8	PX	-.003	-.003	0	0
33	P9	PY	.005	.005	0	0
34	P9	PX	-.003	-.003	0	0
35	P10	PY	.005	.005	0	0
36	P10	PX	-.003	-.003	0	0

Member Distributed Loads (BLC 15 : Ice Wind Load (150))

	Member Label	Direction	Start Magnitude[k/ft,F,ksf]	End Magnitude[k/ft,F,ksf]	Start Location[ft,...	End Location[ft,...
1	TIEBACK	PY	.002	.002	0	0
2	SO2	PY	.005	.005	0	0
3	SO1	PY	.005	.005	0	0
4	P1	PY	.003	.003	0	0
5	P2	PY	.003	.003	0	0
6	SO PIPE	PY	.005	.005	0	0

Member Distributed Loads (BLC 15 : Ice Wind Load (150)) (Continued)

	Member Label	Direction	Start Magnitude[k/ft,F,ksf]	End Magnitude[k/ft,F,ksf]	Start Location[ft,...	End Location[ft,...
7	MP ALPHA1	PY	.003	.003	0	0
8	CONNECTION1	PY	.003	.003	0	0
9	TIEBACK	PX	-.001	-.001	0	0
10	SO2	PX	-.003	-.003	0	0
11	SO1	PX	-.003	-.003	0	0
12	P1	PX	-.002	-.002	0	0
13	P2	PX	-.002	-.002	0	0
14	SO PIPE	PX	-.003	-.003	0	0
15	MP ALPHA1	PX	-.002	-.002	0	0
16	CONNECTION1	PX	-.002	-.002	0	0
17	SO VERT1	PY	.004	.004	0	0
18	SO VERT1	PX	-.003	-.003	0	0
19	P3	PY	.003	.003	0	0
20	P3	PX	-.002	-.002	0	0
21	P4	PY	.003	.003	0	0
22	P4	PX	-.002	-.002	0	0
23	P5	PY	.003	.003	0	0
24	P5	PX	-.002	-.002	0	0
25	P6	PY	.003	.003	0	0
26	P6	PX	-.002	-.002	0	0
27	P7	PY	.003	.003	0	0
28	P7	PX	-.002	-.002	0	0
29	CONNECTION2	PY	.003	.003	0	0
30	CONNECTION2	PX	-.002	-.002	0	0
31	P8	PY	.003	.003	0	0
32	P8	PX	-.002	-.002	0	0
33	P9	PY	.003	.003	0	0
34	P9	PX	-.002	-.002	0	0
35	P10	PY	.003	.003	0	0
36	P10	PX	-.002	-.002	0	0

Member Distributed Loads (BLC 16 : Wind Load (180))

	Member Label	Direction	Start Magnitude[k/ft,F,ksf]	End Magnitude[k/ft,F,ksf]	Start Location[ft,...	End Location[ft,...
1	TIEBACK	PY	.003	.003	0	0
2	SO2	PY	.013	.013	0	0
3	SO1	PY	.013	.013	0	0
4	P1	PY	.006	.006	0	0
5	P2	PY	.006	.006	0	0
6	SO PIPE	PY	.013	.013	0	0
7	MP ALPHA1	PY	.007	.007	0	0
8	CONNECTION1	PY	.007	.007	0	0
9	SO VERT1	PY	.009	.009	0	0
10	P3	PY	.006	.006	0	0
11	P4	PY	.006	.006	0	0
12	P5	PY	.006	.006	0	0
13	P6	PY	.006	.006	0	0
14	P7	PY	.006	.006	0	0
15	CONNECTION2	PY	.007	.007	0	0
16	P8	PY	.006	.006	0	0
17	P9	PY	.006	.006	0	0
18	P10	PY	.006	.006	0	0

Member Distributed Loads (BLC 17 : Ice Wind Load (180))

	Member Label	Direction	Start Magnitude[k/ft,F,ksf]	End Magnitude[k/ft,F,ksf]	Start Location[ft,...	End Location[ft,...
1	TIEBACK	PY	.002	.002	0	0
2	SO2	PY	.006	.006	0	0
3	SO1	PY	.006	.006	0	0
4	P1	PY	.003	.003	0	0
5	P2	PY	.003	.003	0	0
6	SO PIPE	PY	.006	.006	0	0
7	MP ALPHA1	PY	.003	.003	0	0
8	CONNECTION1	PY	.004	.004	0	0
9	SO VERT1	PY	.005	.005	0	0
10	P3	PY	.003	.003	0	0
11	P4	PY	.003	.003	0	0
12	P5	PY	.003	.003	0	0
13	P6	PY	.003	.003	0	0
14	P7	PY	.003	.003	0	0
15	CONNECTION2	PY	.004	.004	0	0
16	P8	PY	.003	.003	0	0
17	P9	PY	.003	.003	0	0
18	P10	PY	.003	.003	0	0

Member Distributed Loads (BLC 18 : Wind Load (210))

	Member Label	Direction	Start Magnitude[k/ft,F,ksf]	End Magnitude[k/ft,F,ksf]	Start Location[ft,...	End Location[ft,...
1	TIEBACK	PY	.003	.003	0	0
2	SO2	PY	.011	.011	0	0
3	SO1	PY	.011	.011	0	0
4	P1	PY	.005	.005	0	0
5	P2	PY	.005	.005	0	0
6	SO PIPE	PY	.011	.011	0	0
7	MP ALPHA1	PY	.006	.006	0	0
8	CONNECTION1	PY	.006	.006	0	0
9	TIEBACK	PX	.002	.002	0	0
10	SO2	PX	.006	.006	0	0
11	SO1	PX	.006	.006	0	0
12	P1	PX	.003	.003	0	0
13	P2	PX	.003	.003	0	0
14	SO PIPE	PX	.006	.006	0	0
15	MP ALPHA1	PX	.004	.004	0	0
16	CONNECTION1	PX	.004	.004	0	0
17	SO VERT1	PY	.008	.008	0	0
18	SO VERT1	PX	.004	.004	0	0
19	P3	PY	.005	.005	0	0
20	P3	PX	.003	.003	0	0
21	P4	PY	.005	.005	0	0
22	P4	PX	.003	.003	0	0
23	P5	PY	.005	.005	0	0
24	P5	PX	.003	.003	0	0
25	P6	PY	.005	.005	0	0
26	P6	PX	.003	.003	0	0
27	P7	PY	.005	.005	0	0
28	P7	PX	.003	.003	0	0
29	CONNECTION2	PY	.006	.006	0	0
30	CONNECTION2	PX	.004	.004	0	0

Member Distributed Loads (BLC 18 : Wind Load (210)) (Continued)

	Member Label	Direction	Start Magnitude[k/ft,F,ksf]	End Magnitude[k/ft,F,ksf]	Start Location[ft,...	End Location[ft,...
31	P8	PY	.005	.005	0	0
32	P8	PX	.003	.003	0	0
33	P9	PY	.005	.005	0	0
34	P9	PX	.003	.003	0	0
35	P10	PY	.005	.005	0	0
36	P10	PX	.003	.003	0	0

Member Distributed Loads (BLC 19 : Ice Wind Load (210))

	Member Label	Direction	Start Magnitude[k/ft,F,ksf]	End Magnitude[k/ft,F,ksf]	Start Location[ft,...	End Location[ft,...
1	TIEBACK	PY	.002	.002	0	0
2	SO2	PY	.005	.005	0	0
3	SO1	PY	.005	.005	0	0
4	P1	PY	.003	.003	0	0
5	P2	PY	.003	.003	0	0
6	SO PIPE	PY	.005	.005	0	0
7	MP ALPHA1	PY	.003	.003	0	0
8	CONNECTION1	PY	.003	.003	0	0
9	TIEBACK	PX	.001	.001	0	0
10	SO2	PX	.003	.003	0	0
11	SO1	PX	.003	.003	0	0
12	P1	PX	.002	.002	0	0
13	P2	PX	.002	.002	0	0
14	SO PIPE	PX	.003	.003	0	0
15	MP ALPHA1	PX	.002	.002	0	0
16	CONNECTION1	PX	.002	.002	0	0
17	SO VERT1	PY	.004	.004	0	0
18	SO VERT1	PX	.003	.003	0	0
19	P3	PY	.003	.003	0	0
20	P3	PX	.002	.002	0	0
21	P4	PY	.003	.003	0	0
22	P4	PX	.002	.002	0	0
23	P5	PY	.003	.003	0	0
24	P5	PX	.002	.002	0	0
25	P6	PY	.003	.003	0	0
26	P6	PX	.002	.002	0	0
27	P7	PY	.003	.003	0	0
28	P7	PX	.002	.002	0	0
29	CONNECTION2	PY	.003	.003	0	0
30	CONNECTION2	PX	.002	.002	0	0
31	P8	PY	.003	.003	0	0
32	P8	PX	.002	.002	0	0
33	P9	PY	.003	.003	0	0
34	P9	PX	.002	.002	0	0
35	P10	PY	.003	.003	0	0
36	P10	PX	.002	.002	0	0

Member Distributed Loads (BLC 20 : Wind Load (240))

	Member Label	Direction	Start Magnitude[k/ft,F,ksf]	End Magnitude[k/ft,F,ksf]	Start Location[ft,...	End Location[ft,...
1	TIEBACK	PY	.002	.002	0	0
2	SO2	PY	.006	.006	0	0
3	SO1	PY	.006	.006	0	0

Member Distributed Loads (BLC 20 : Wind Load (240)) (Continued)

	Member Label	Direction	Start Magnitude[k/ft,F,ksf]	End Magnitude[k/ft,F,ksf]	Start Location[ft,...	End Location[ft,...
4	P1	PY	.003	.003	0	0
5	P2	PY	.003	.003	0	0
6	SO PIPE	PY	.006	.006	0	0
7	MP ALPHA1	PY	.004	.004	0	0
8	CONNECTION1	PY	.004	.004	0	0
9	TIEBACK	PX	.003	.003	0	0
10	SO2	PX	.011	.011	0	0
11	SO1	PX	.011	.011	0	0
12	P1	PX	.005	.005	0	0
13	P2	PX	.005	.005	0	0
14	SO PIPE	PX	.011	.011	0	0
15	MP ALPHA1	PX	.006	.006	0	0
16	CONNECTION1	PX	.006	.006	0	0
17	SO VERT1	PY	.004	.004	0	0
18	SO VERT1	PX	.008	.008	0	0
19	P3	PY	.003	.003	0	0
20	P3	PX	.005	.005	0	0
21	P4	PY	.003	.003	0	0
22	P4	PX	.005	.005	0	0
23	P5	PY	.003	.003	0	0
24	P5	PX	.005	.005	0	0
25	P6	PY	.003	.003	0	0
26	P6	PX	.005	.005	0	0
27	P7	PY	.003	.003	0	0
28	P7	PX	.005	.005	0	0
29	CONNECTION2	PY	.004	.004	0	0
30	CONNECTION2	PX	.006	.006	0	0
31	P8	PY	.003	.003	0	0
32	P8	PX	.005	.005	0	0
33	P9	PY	.003	.003	0	0
34	P9	PX	.005	.005	0	0
35	P10	PY	.003	.003	0	0
36	P10	PX	.005	.005	0	0

Member Distributed Loads (BLC 21 : Ice Wind Load (240))

	Member Label	Direction	Start Magnitude[k/ft,F,ksf]	End Magnitude[k/ft,F,ksf]	Start Location[ft,...	End Location[ft,...
1	TIEBACK	PY	.001	.001	0	0
2	SO2	PY	.003	.003	0	0
3	SO1	PY	.003	.003	0	0
4	P1	PY	.002	.002	0	0
5	P2	PY	.002	.002	0	0
6	SO PIPE	PY	.003	.003	0	0
7	MP ALPHA1	PY	.002	.002	0	0
8	CONNECTION1	PY	.002	.002	0	0
9	TIEBACK	PX	.002	.002	0	0
10	SO2	PX	.005	.005	0	0
11	SO1	PX	.005	.005	0	0
12	P1	PX	.003	.003	0	0
13	P2	PX	.003	.003	0	0
14	SO PIPE	PX	.005	.005	0	0
15	MP ALPHA1	PX	.003	.003	0	0

Member Distributed Loads (BLC 21 : Ice Wind Load (240)) (Continued)

	Member Label	Direction	Start Magnitude[k/ft,F,ksf]	End Magnitude[k/ft,F,ksf]	Start Location[ft,...	End Location[ft,...
16	CONNECTION1	PX	.003	.003	0	0
17	SO VERT1	PY	.003	.003	0	0
18	SO VERT1	PX	.004	.004	0	0
19	P3	PY	.002	.002	0	0
20	P3	PX	.003	.003	0	0
21	P4	PY	.002	.002	0	0
22	P4	PX	.003	.003	0	0
23	P5	PY	.002	.002	0	0
24	P5	PX	.003	.003	0	0
25	P6	PY	.002	.002	0	0
26	P6	PX	.003	.003	0	0
27	P7	PY	.002	.002	0	0
28	P7	PX	.003	.003	0	0
29	CONNECTION2	PY	.002	.002	0	0
30	CONNECTION2	PX	.003	.003	0	0
31	P8	PY	.002	.002	0	0
32	P8	PX	.003	.003	0	0
33	P9	PY	.002	.002	0	0
34	P9	PX	.003	.003	0	0
35	P10	PY	.002	.002	0	0
36	P10	PX	.003	.003	0	0

Member Distributed Loads (BLC 22 : Wind Load (270))

	Member Label	Direction	Start Magnitude[k/ft,F,ksf]	End Magnitude[k/ft,F,ksf]	Start Location[ft,...	End Location[ft,...
1	TIEBACK	PX	.003	.003	0	0
2	SO2	PX	.013	.013	0	0
3	SO1	PX	.013	.013	0	0
4	P1	PX	.006	.006	0	0
5	P2	PX	.006	.006	0	0
6	SO PIPE	PX	.013	.013	0	0
7	MP ALPHA1	PX	.007	.007	0	0
8	CONNECTION1	PX	.007	.007	0	0
9	SO VERT1	PX	.009	.009	0	0
10	P3	PX	.006	.006	0	0
11	P4	PX	.006	.006	0	0
12	P5	PX	.006	.006	0	0
13	P6	PX	.006	.006	0	0
14	P7	PX	.006	.006	0	0
15	CONNECTION2	PX	.007	.007	0	0
16	P8	PX	.006	.006	0	0
17	P9	PX	.006	.006	0	0
18	P10	PX	.006	.006	0	0

Member Distributed Loads (BLC 23 : Ice Wind Load (270))

	Member Label	Direction	Start Magnitude[k/ft,F,ksf]	End Magnitude[k/ft,F,ksf]	Start Location[ft,...	End Location[ft,...
1	TIEBACK	PX	.002	.002	0	0
2	SO2	PX	.006	.006	0	0
3	SO1	PX	.006	.006	0	0
4	P1	PX	.003	.003	0	0
5	P2	PX	.003	.003	0	0
6	SO PIPE	PX	.006	.006	0	0

Member Distributed Loads (BLC 23 : Ice Wind Load (270)) (Continued)

	Member Label	Direction	Start Magnitude[k/ft,F,ksf]	End Magnitude[k/ft,F,ksf]	Start Location[ft,...	End Location[ft,...
7	MP ALPHA1	PX	.003	.003	0	0
8	CONNECTION1	PX	.004	.004	0	0
9	SO VERT1	PX	.005	.005	0	0
10	P3	PX	.003	.003	0	0
11	P4	PX	.003	.003	0	0
12	P5	PX	.003	.003	0	0
13	P6	PX	.003	.003	0	0
14	P7	PX	.003	.003	0	0
15	CONNECTION2	PX	.004	.004	0	0
16	P8	PX	.003	.003	0	0
17	P9	PX	.003	.003	0	0
18	P10	PX	.003	.003	0	0

Member Distributed Loads (BLC 24 : Wind Load (300))

	Member Label	Direction	Start Magnitude[k/ft,F,ksf]	End Magnitude[k/ft,F,ksf]	Start Location[ft,...	End Location[ft,...
1	TIEBACK	PY	-.002	-.002	0	0
2	SO2	PY	-.006	-.006	0	0
3	SO1	PY	-.006	-.006	0	0
4	P1	PY	-.003	-.003	0	0
5	P2	PY	-.003	-.003	0	0
6	SO PIPE	PY	-.006	-.006	0	0
7	MP ALPHA1	PY	-.004	-.004	0	0
8	CONNECTION1	PY	-.004	-.004	0	0
9	TIEBACK	PX	.003	.003	0	0
10	SO2	PX	.011	.011	0	0
11	SO1	PX	.011	.011	0	0
12	P1	PX	.005	.005	0	0
13	P2	PX	.005	.005	0	0
14	SO PIPE	PX	.011	.011	0	0
15	MP ALPHA1	PX	.006	.006	0	0
16	CONNECTION1	PX	.006	.006	0	0
17	SO VERT1	PY	-.004	-.004	0	0
18	SO VERT1	PX	.008	.008	0	0
19	P3	PY	-.003	-.003	0	0
20	P3	PX	.005	.005	0	0
21	P4	PY	-.003	-.003	0	0
22	P4	PX	.005	.005	0	0
23	P5	PY	-.003	-.003	0	0
24	P5	PX	.005	.005	0	0
25	P6	PY	-.003	-.003	0	0
26	P6	PX	.005	.005	0	0
27	P7	PY	-.003	-.003	0	0
28	P7	PX	.005	.005	0	0
29	CONNECTION2	PY	-.004	-.004	0	0
30	CONNECTION2	PX	.006	.006	0	0
31	P8	PY	-.003	-.003	0	0
32	P8	PX	.005	.005	0	0
33	P9	PY	-.003	-.003	0	0
34	P9	PX	.005	.005	0	0
35	P10	PY	-.003	-.003	0	0
36	P10	PX	.005	.005	0	0

Member Distributed Loads (BLC 25 : Ice Wind Load (300))

	Member Label	Direction	Start Magnitude[k/ft,F,ksf]	End Magnitude[k/ft,F,ksf]	Start Location[ft,...	End Location[ft,...
1	TIEBACK	PY	-.001	-.001	0	0
2	SO2	PY	-.003	-.003	0	0
3	SO1	PY	-.003	-.003	0	0
4	P1	PY	-.002	-.002	0	0
5	P2	PY	-.002	-.002	0	0
6	SO PIPE	PY	-.003	-.003	0	0
7	MP ALPHA1	PY	-.002	-.002	0	0
8	CONNECTION1	PY	-.002	-.002	0	0
9	TIEBACK	PX	.002	.002	0	0
10	SO2	PX	.005	.005	0	0
11	SO1	PX	.005	.005	0	0
12	P1	PX	.003	.003	0	0
13	P2	PX	.003	.003	0	0
14	SO PIPE	PX	.005	.005	0	0
15	MP ALPHA1	PX	.003	.003	0	0
16	CONNECTION1	PX	.003	.003	0	0
17	SO VERT1	PY	-.003	-.003	0	0
18	SO VERT1	PX	.004	.004	0	0
19	P3	PY	-.002	-.002	0	0
20	P3	PX	.003	.003	0	0
21	P4	PY	-.002	-.002	0	0
22	P4	PX	.003	.003	0	0
23	P5	PY	-.002	-.002	0	0
24	P5	PX	.003	.003	0	0
25	P6	PY	-.002	-.002	0	0
26	P6	PX	.003	.003	0	0
27	P7	PY	-.002	-.002	0	0
28	P7	PX	.003	.003	0	0
29	CONNECTION2	PY	-.002	-.002	0	0
30	CONNECTION2	PX	.003	.003	0	0
31	P8	PY	-.002	-.002	0	0
32	P8	PX	.003	.003	0	0
33	P9	PY	-.002	-.002	0	0
34	P9	PX	.003	.003	0	0
35	P10	PY	-.002	-.002	0	0
36	P10	PX	.003	.003	0	0

Member Distributed Loads (BLC 26 : Wind Load (330))

	Member Label	Direction	Start Magnitude[k/ft,F,ksf]	End Magnitude[k/ft,F,ksf]	Start Location[ft,...	End Location[ft,...
1	TIEBACK	PY	-.003	-.003	0	0
2	SO2	PY	-.011	-.011	0	0
3	SO1	PY	-.011	-.011	0	0
4	P1	PY	-.005	-.005	0	0
5	P2	PY	-.005	-.005	0	0
6	SO PIPE	PY	-.011	-.011	0	0
7	MP ALPHA1	PY	-.006	-.006	0	0
8	CONNECTION1	PY	-.006	-.006	0	0
9	TIEBACK	PX	.002	.002	0	0
10	SO2	PX	.006	.006	0	0
11	SO1	PX	.006	.006	0	0
12	P1	PX	.003	.003	0	0

Member Distributed Loads (BLC 26 : Wind Load (330)) (Continued)

	Member Label	Direction	Start Magnitude[k/ft,F,ksf]	End Magnitude[k/ft,F,ksf]	Start Location[ft,...	End Location[ft,...
13	P2	PX	.003	.003	0	0
14	SO PIPE	PX	.006	.006	0	0
15	MP ALPHA1	PX	.004	.004	0	0
16	CONNECTION1	PX	.004	.004	0	0
17	SO VERT1	PY	-.008	-.008	0	0
18	SO VERT1	PX	.004	.004	0	0
19	P3	PY	-.005	-.005	0	0
20	P3	PX	.003	.003	0	0
21	P4	PY	-.005	-.005	0	0
22	P4	PX	.003	.003	0	0
23	P5	PY	-.005	-.005	0	0
24	P5	PX	.003	.003	0	0
25	P6	PY	-.005	-.005	0	0
26	P6	PX	.003	.003	0	0
27	P7	PY	-.005	-.005	0	0
28	P7	PX	.003	.003	0	0
29	CONNECTION2	PY	-.006	-.006	0	0
30	CONNECTION2	PX	.004	.004	0	0
31	P8	PY	-.005	-.005	0	0
32	P8	PX	.003	.003	0	0
33	P9	PY	-.005	-.005	0	0
34	P9	PX	.003	.003	0	0
35	P10	PY	-.005	-.005	0	0
36	P10	PX	.003	.003	0	0

Member Distributed Loads (BLC 27 : Ice Wind Load (330))

	Member Label	Direction	Start Magnitude[k/ft,F,ksf]	End Magnitude[k/ft,F,ksf]	Start Location[ft,...	End Location[ft,...
1	TIEBACK	PY	-.002	-.002	0	0
2	SO2	PY	-.005	-.005	0	0
3	SO1	PY	-.005	-.005	0	0
4	P1	PY	-.003	-.003	0	0
5	P2	PY	-.003	-.003	0	0
6	SO PIPE	PY	-.005	-.005	0	0
7	MP ALPHA1	PY	-.003	-.003	0	0
8	CONNECTION1	PY	-.003	-.003	0	0
9	TIEBACK	PX	.001	.001	0	0
10	SO2	PX	.003	.003	0	0
11	SO1	PX	.003	.003	0	0
12	P1	PX	.002	.002	0	0
13	P2	PX	.002	.002	0	0
14	SO PIPE	PX	.003	.003	0	0
15	MP ALPHA1	PX	.002	.002	0	0
16	CONNECTION1	PX	.002	.002	0	0
17	SO VERT1	PY	-.004	-.004	0	0
18	SO VERT1	PX	.003	.003	0	0
19	P3	PY	-.003	-.003	0	0
20	P3	PX	.002	.002	0	0
21	P4	PY	-.003	-.003	0	0
22	P4	PX	.002	.002	0	0
23	P5	PY	-.003	-.003	0	0
24	P5	PX	.002	.002	0	0

Member Distributed Loads (BLC 27 : Ice Wind Load (330)) (Continued)

	Member Label	Direction	Start Magnitude[k/ft,F,ksf]	End Magnitude[k/ft,F,ksf]	Start Location[ft,...	End Location[ft,...
25	P6	PY	-.003	-.003	0	0
26	P6	PX	.002	.002	0	0
27	P7	PY	-.003	-.003	0	0
28	P7	PX	.002	.002	0	0
29	CONNECTION2	PY	-.003	-.003	0	0
30	CONNECTION2	PX	.002	.002	0	0
31	P8	PY	-.003	-.003	0	0
32	P8	PX	.002	.002	0	0
33	P9	PY	-.003	-.003	0	0
34	P9	PX	.002	.002	0	0
35	P10	PY	-.003	-.003	0	0
36	P10	PX	.002	.002	0	0

Envelope Joint Reactions

	Joint		X [k]	LC	Y [k]	LC	Z [k]	LC	MX [k-ft]	LC	MY [k-ft]	LC	MZ [k-ft]	LC
1	N72	max	.063	11	1.001	8	.548	37	-.138	23	.019	11	0	41
2		min	-.057	29	-.509	26	.134	14	-.619	7	-.017	29	0	1
3	N37A	max	.308	11	1.37	29	.04	30	0	41	0	41	0	41
4		min	-.316	29	-1.355	11	.012	11	0	1	0	1	0	1
5	N49	max	.06	11	.503	8	.546	19	-.056	26	.012	26	0	41
6		min	-.057	29	-1.013	26	.134	32	-.49	7	-.01	14	0	1
7	Totals:	max	.431	11	.519	2	1.103	37						
8		min	-.431	29	-.519	20	.353	8						

Basic Load Cases

	BLC Description	Category	X Gravity	Y Gravity	Z Gravity	Joint	Point	Distribu...	Area(M...	Surface...
1	Wind Load (0)	WL					3	18		
2	Dead Load	DL			-1.1		3			
3	Live Load	LL					1			
4	Ice Wind Load (0)	OL1					3	18		
5	Ice Dead Load	OL2					3	18		
6	Wind Load (30)	WL					6	36		
7	Ice Wind Load (30)	OL1					6	36		
8	Wind Load (60)	WL					6	36		
9	Ice Wind Load (60)	OL1					6	36		
10	Wind Load (90)	WL					3	18		
11	Ice Wind Load (90)	OL1					3	18		
12	Wind Load (120)	WL					6	36		
13	Ice Wind Load (120)	OL1					6	36		
14	Wind Load (150)	WL					6	36		
15	Ice Wind Load (150)	OL1					6	36		
16	Wind Load (180)	WL					3	18		
17	Ice Wind Load (180)	OL1					3	18		
18	Wind Load (210)	WL					6	36		
19	Ice Wind Load (210)	OL1					6	36		
20	Wind Load (240)	WL					6	36		
21	Ice Wind Load (240)	OL1					6	36		
22	Wind Load (270)	WL					3	18		
23	Ice Wind Load (270)	OL1					3	18		

Basic Load Cases (Continued)

	BLC Description	Category	X Gravity	Y Gravity	Z Gravity	Joint	Point	Distribu...	Area(M...	Surface...
24	Wind Load (300)	WL					6	36		
25	Ice Wind Load (300)	OL1					6	36		
26	Wind Load (330)	WL					6	36		
27	Ice Wind Load (330)	OL1					6	36		
28	Maintanence (0)	OL3					3			
29	Maintanence (30)	OL3					6			
30	Maintanence (60)	OL3					6			
31	Maintanence (90)	OL3					3			
32	Maintanence (120)	OL3					6			
33	Maintanence (150)	OL3					6			
34	Maintanence (180)	OL3					3			
35	Maintanence (210)	OL3					6			
36	Maintanence (240)	OL3					6			
37	Maintanence (270)	OL3					3			
38	Maintanence (300)	OL3					6			
39	Maintanence (330)	OL3					6			
40	Earthquake (x-direction)	EL	-.117							
41	Earthquake (y-direction)	EL		-.117						
42	Earthquake (z-direction)	EL			-.047					

Load Combinations

	Description	Solve	P...	S...	B...	Fa...	B...	Fa...	B...	Fa...	B...	Fa...	B...	Fa...	B...	Fa...	B...	Fa...	B...	Fa...	B...	Fa...	B...	Fa...	B...	Fa...
1	1.4D	Yes	Y		2	1.4																				
2	1.2D + 1.0W(0)	Yes	Y		2	1.2	1	1																		
3	1.2D + 1.0Di + 1.0Wi(0)	Yes	Y		2	1.2	5	1	4	1																
4	1.2D + 1.5L + 1.0Wl(0)	Yes	Y		2	1.2	3	1.5	28	1																
5	1.2D + 1.0W(30)	Yes	Y		2	1.2	6	1																		
6	1.2D + 1.0Di + 1.0Wi(30)	Yes	Y		2	1.2	5	1	7	1																
7	1.2D + 1.5L + 1.0Wl(30)	Yes	Y		2	1.2	3	1.5	29	1																
8	1.2D + 1.0W(60)	Yes	Y		2	1.2	8	1																		
9	1.2D + 1.0Di + 1.0Wi(60)	Yes	Y		2	1.2	5	1	9	1																
10	1.2D + 1.5L + 1.0Wl(60)	Yes	Y		2	1.2	3	1.5	30	1																
11	1.2D + 1.0W(90)	Yes	Y		2	1.2	10	1																		
12	1.2D + 1.0Di + 1.0Wi(90)	Yes	Y		2	1.2	5	1	11	1																
13	1.2D + 1.5L + 1.0Wl(90)	Yes	Y		2	1.2	3	1.5	31	1																
14	1.2D + 1.0W(120)	Yes	Y		2	1.2	12	1																		
15	1.2D + 1.0Di + 1.0Wi(120)	Yes	Y		2	1.2	5	1	13	1																
16	1.2D + 1.5L + 1.0Wl(120)	Yes	Y		2	1.2	3	1.5	32	1																
17	1.2D + 1.0W(150)	Yes	Y		2	1.2	14	1																		
18	1.2D + 1.0Di + 1.0Wi(150)	Yes	Y		2	1.2	5	1	15	1																
19	1.2D + 1.5L + 1.0Wl(150)	Yes	Y		2	1.2	3	1.5	33	1																
20	1.2D + 1.0W(180)	Yes	Y		2	1.2	16	1																		
21	1.2D + 1.0Di + 1.0Wi(180)	Yes	Y		2	1.2	5	1	17	1																
22	1.2D + 1.5L + 1.0Wl(180)	Yes	Y		2	1.2	3	1.5	34	1																
23	1.2D + 1.0W(210)	Yes	Y		2	1.2	18	1																		
24	1.2D + 1.0Di + 1.0Wi(210)	Yes	Y		2	1.2	5	1	19	1																
25	1.2D + 1.5L + 1.0Wl(210)	Yes	Y		2	1.2	3	1.5	35	1																
26	1.2D + 1.0W(240)	Yes	Y		2	1.2	20	1																		
27	1.2D + 1.0Di + 1.0Wi(240)	Yes	Y		2	1.2	5	1	21	1																
28	1.2D + 1.5L + 1.0Wl(240)	Yes	Y		2	1.2	3	1.5	36	1																

Load Combinations (Continued)

	Description	Solve	P...	S...	B...	Fa...	B...	Fa...	B...	Fa...	B...	Fa...	B...	Fa...	B...	Fa...	B...	Fa...	B...	Fa...	B...	Fa...	B...	Fa...	B...	Fa...
29	1.2D + 1.0W(270)	Yes	Y		2	1.2	22	1																		
30	1.2D + 1.0Di + 1.0Wi(270)	Yes	Y		2	1.2	5	1	23	1																
31	1.2D + 1.5L + 1.0Wl(270)	Yes	Y		2	1.2	3	1.5	37	1																
32	1.2D + 1.0W(300)	Yes	Y		2	1.2	24	1																		
33	1.2D + 1.0Di + 1.0Wi(300)	Yes	Y		2	1.2	5	1	25	1																
34	1.2D + 1.5L + 1.0Wl(300)	Yes	Y		2	1.2	3	1.5	38	1																
35	1.2D + 1.0W(330)	Yes	Y		2	1.2	26	1																		
36	1.2D + 1.0Di + 1.0Wi(330)	Yes	Y		2	1.2	5	1	27	1																
37	1.2D + 1.5L + 1.0Wl(330)	Yes	Y		2	1.2	3	1.5	39	1																
38	1.2D + 1.0E(x) + 1.0E(z) + L	Yes	Y		2	1.2	40	1	42	1	3	1														
39	1.2D + 1.0E(y) + 1.0E(z) + L	Yes	Y		2	1.2	41	1	42	1	3	1														
40	1.2D - 1.0E(x) + 1.0E(z) + L	Yes	Y		2	1.2	40	-1	42	1	3	1														
41	1.2D - 1.0E(y) + 1.0E(z) + L	Yes	Y		2	1.2	41	-1	42	1	3	1														

Envelope AISC 15th(360-16): LRFD Steel Code Checks

	Member	Shape	Code Check	Loc[ft]	LC	Shear Check	Loc[ft]	Dir	LC	phi*...	phi*...	phi*...	phi*...	...	Eqn
1	SO1	PIPE_2.0	.515	0	19	.056	1.417		19	30.6...	32.13	1.872	1.872	...	H1-...
2	SO2	PIPE_2.0	.508	0	34	.055	2		25	30.6...	32.13	1.872	1.872	...	H1-...
3	P8	4x0.5"	.429	.505	19	.034	.505	y	29	59.0...	64.8	.675	5.4	...	H1-...
4	P3	4x0.5"	.422	.505	37	.031	.505	y	14	59.0...	64.8	.675	5.4	...	H1-...
5	SO PIPE	PIPE_2.0	.372	1.118	28	.193	2.333		29	24.7...	32.13	1.872	1.872	...	H1-...
6	SO VERT1	SR 3/4	.367	2.5	19	.009	0		28	8.518	14.3...	.184	.184	1	H1-...
7	CONNECTI...	C4.75x3	.319	.104	7	.146	.75	y	7	92.6...	97.2	10.8...	9.871	...	H1-...
8	CONNECTI...	C4.75x3	.242	.896	7	.104	.25	y	7	92.6...	97.2	10.61	9.871	...	H1-...
9	MP ALPHA1	PIPE_2.0	.195	2.5	28	.025	2.5		22	14.9...	32.13	1.872	1.872	...	H1-...
10	TIEBACK	PIPE_2.0	.064	5.741	11	.004	0		30	21.6...	32.13	1.872	1.872	...	H1-...
11	P1	4x0.5"	.057	.38	7	.019	.38	y	37	61.4...	64.8	.675	5.4	...	H1-...
12	P2	4x0.5"	.057	.38	7	.019	.38	y	7	61.4...	64.8	.675	5.4	...	H1-...
13	P5	4x0.5"	.053	.261	7	.026	.261	y	7	61.4...	64.8	.675	5.4	...	H1-...
14	P4	4x0.5"	.053	.261	7	.026	.261	y	37	61.4...	64.8	.675	5.4	...	H1-...
15	P6	4x0.5"	.044	.38	25	.019	.38	y	19	61.4...	64.8	.675	5.4	...	H1-...
16	P7	4x0.5"	.044	.38	22	.019	.38	y	25	61.4...	64.8	.675	5.4	...	H1-...
17	P10	4x0.5"	.041	.261	25	.026	.261	y	25	61.4...	64.8	.675	5.4	...	H1-...
18	P9	4x0.5"	.040	.261	25	.026	.261	y	19	61.4...	64.8	.675	5.4	...	H1-...

APPENDIX N

Additional Calculations (Beta & Gamma @ 110 ft)

POD
POWER OF DESIGN

POD Job #	**20-64395**
Site Number	**841298**
Site Name	**SOUTHINGTON ROGUS**

Connection Type	Single Shear	

RISA 3D Forces

Axial (Bolts)	0.026	kips
Shear (Bolts)	0.612	kips
Axial Force (Member)	0.612	kips

Bolt/Member Information

Member Label	Plate3	
# of Bolts	1	
Diameter	0.5	inches
Bolt Grade	A325	
Member Grade	A36	
Threads Included?	Yes	
L_b	0	inches
L_c	1	inches
t	0.5	inches

Shear Capacity	**6.9%**
Axial Capacity	**0.2%**
Bearing Capacity	**2.2%**
Combined Capacity	**0.5%**

Ver 1.0 - 2/28/2020

APPENDIX O

Wind Speed Documentation

Hazards by Location

Search Information

Coordinates: 41.556817, -72.853011

Elevation: 343 ft

Timestamp: 2020-04-27T21:01:01.802Z

Hazard Type: Wind

ASCE 7-16

MRI 10-Year	75 mph
MRI 25-Year	83 mph
MRI 50-Year	90 mph
MRI 100-Year	97 mph
Risk Category I	108 mph
Risk Category II	118 mph
Risk Category III	127 mph
Risk Category IV	⚠ 131 mph

You are in a wind-borne debris region if you are also within 1 mile of the coastal mean high water line.

ASCE 7-10

MRI 10-Year	77 mph
MRI 25-Year	86 mph
MRI 50-Year	93 mph
MRI 100-Year	99 mph
Risk Category I	112 mph
Risk Category II	123 mph
Risk Category III-IV	⚠ 132 mph

If the structure under consideration is a healthcare facility and you are also within 1 mile of the coastal mean high water line, you are in a wind-borne debris region. If other occupancy, use the Risk Category II basic wind speed contours to determine if you are in a wind-borne debris region.

ASCE 7-05

ASCE 7-05 Wind Speed	103 mph

The results indicated here DO NOT reflect any state or local amendments to the values or any delineation lines made during the building code adoption process. Users should confirm any output obtained from this tool with the local Authority Having Jurisdiction before proceeding with design.

Disclaimer

Hazard loads are interpolated from data provided in ASCE 7 and rounded up to the nearest whole integer. Per ASCE 7, islands and coastal areas outside the last contour should use the last wind speed contour of the coastal area – in some cases, this website will extrapolate past the last wind speed contour and therefore, provide a wind speed that is slightly higher. NOTE: For queries near wind-borne debris region boundaries, the resulting determination is sensitive to rounding which may affect whether or not it is considered to be within a wind-borne debris region.

Mountainous terrain, gorges, ocean promontories, and special wind regions shall be examined for unusual wind conditions.

While the information presented on this website is believed to be correct, ATC and its sponsors and contributors assume no responsibility or liability for its accuracy. The material presented in the report should not be used or relied upon for any specific application without competent examination and verification of its accuracy, suitability and applicability by engineers or other licensed professionals. ATC does not intend that the use of this information replace the sound judgment of such competent professionals, having experience and knowledge in the field of practice, nor to substitute for the standard of care required of such professionals in interpreting and applying the results of the report provided by this website. Users of the information from this website assume all liability arising from such use. Use of the output of this website does not imply approval by the governing building code bodies responsible for building code approval and interpretation for the building site described by latitude/longitude location in the report.

APPENDIX P

Mount Specification and Parts

PARTS LIST						
ITEM	QTY	PART NO.	PART DESCRIPTION	LENGTH	UNIT WT.	NET WT.
1	1	CFM	UPPER GATE FOOT WELDMENT		13.90	13.90
2	1	CFS	LOWER GATE FOOT WELDMENT		12.72	12.72
3	2	GBB	GATE BACKING BAR		4.53	9.06
4	1	2PBG	24" PIPE MOUNT STANDOFF ARM		71.96	71.96
5	8	G12R-12	1/2" x 12" GALV. THREADED ROD		0.67	5.35
5	8	G12R-15	1/2" x 15" GALV. THREADED ROD		0.84	6.69
6	2	A1205	1/2" x 5" A325 HDG BOLT		0.34	0.69
7	18	G12FW	1/2" HDG USS FLATWASHER		0.03	0.61
8	18	G12LW	1/2" HDG LOCKWASHER		0.01	0.25
9	18	G12NUT	1/2" HDG HEAVY 2H HEX NUT		0.07	1.29
					TOTAL WT. #	128.25

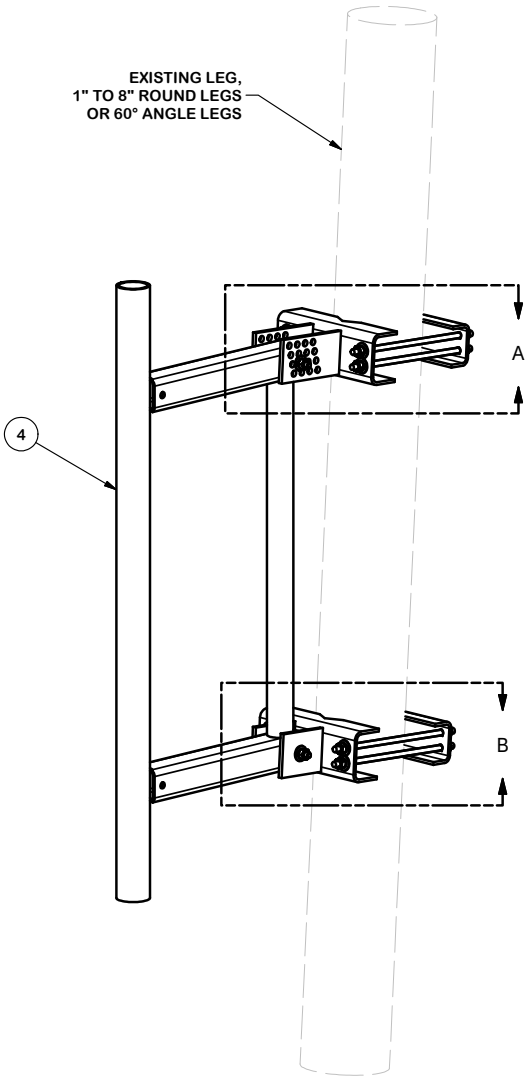

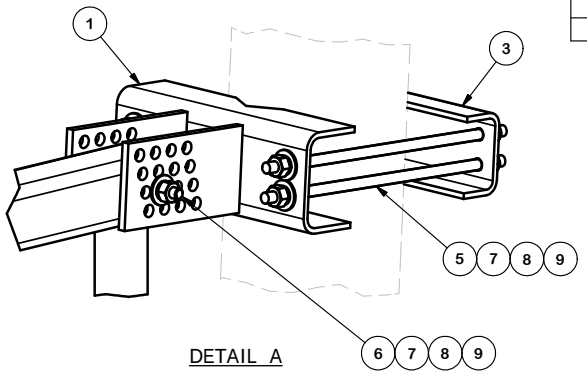

DETAIL A

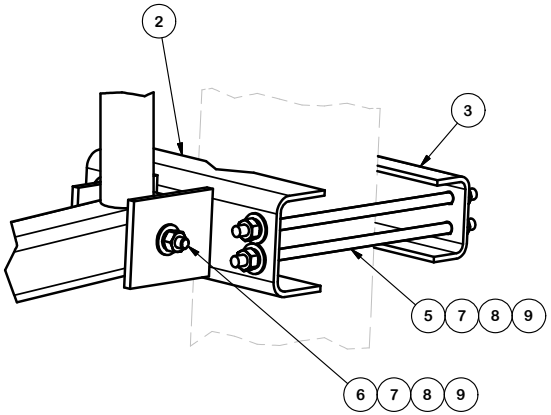

DETAIL B

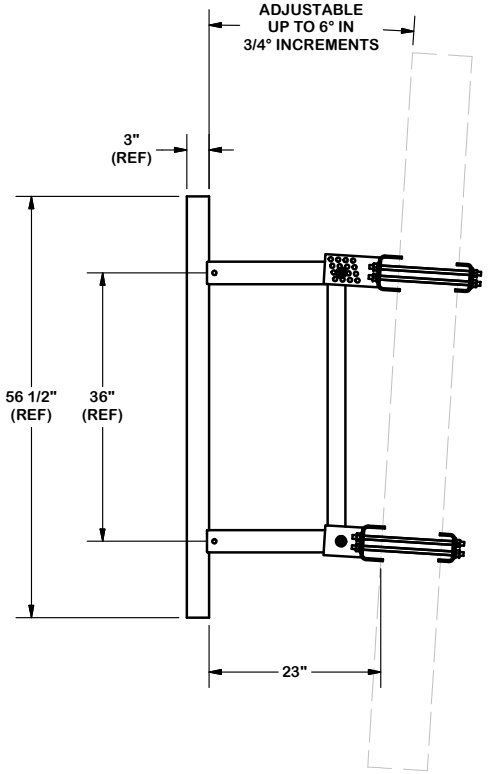

TOLERANCE NOTES

TOLERANCES ON DIMENSIONS, UNLESS OTHERWISE NOTED ARE:
SAWED, SHEARED AND GAS CUT EDGES *(± 0.030")*
DRILLED AND GAS CUT HOLES *(± 0.030")* - NO CONING OF HOLES
LASER CUT EDGES AND HOLES *(± 0.010")* - NO CONING OF HOLES
BENDS ARE ± 1/2 DEGREE
ALL OTHER MACHINING *(± 0.030")*
ALL OTHER ASSEMBLY *(± 0.060")*

PROPRIETARY NOTE:
THE DATA AND TECHNIQUES CONTAINED IN THIS DRAWING ARE PROPRIETARY INFORMATION OF VALMONT INDUSTRIES AND CONSIDERED A TRADE SECRET. ANY USE OR DISCLOSURE WITHOUT THE CONSENT OF VALMONT INDUSTRIES IS STRICTLY PROHIBITED.

DESCRIPTION: 24" ULTIMATE UNIVERSAL STANDOFF FRAME

SITE PRO 1 — A valmont COMPANY
Engineering Support Team: 1-888-753-7446
Locations: New York, NY; Atlanta, GA; Los Angeles, CA; Plymouth, IN; Salem, OR; Dallas, TX

CPD NO.	DRAWN BY	ENG. APPROVAL	PART NO.	PAGE
	RCH 2/1/2011		USF-2U	1 OF 1

CLASS	SUB	DRAWING USAGE	CHECKED BY	DWG. NO.
81	01	CUSTOMER	BMC 2/16/2011	USF-2U

PARTS LIST						
ITEM	QTY	PART NO.	PART DESCRIPTION	LENGTH	UNIT WT.	NET WT.
1	1	X-127594	FLAT DISK CLAMP PLATE 4" CENTERS (GALVANIZED)		2.48	2.48
2	2	X-100064	CLAMP (S) (4" V-CLAMP) GALVANIZED		0.91	1.83
3	2	G12065	1/2" x 6-1/2" HDG HEX BOLT GR5 FULL THREAD	6 1/2 in	0.41	0.82
4	2	G1204	1/2" x 4" HDG HEX BOLT GR5 FULL THREAD	4 in	0.27	0.54
5	4	G12FW	1/2" HDG USS FLATWASHER		0.03	0.14
6	4	G12LW	1/2" HDG LOCKWASHER		0.01	0.06
7	4	G12NUT	1/2" HDG HEAVY 2H HEX NUT		0.07	0.29
					TOTAL WT. #	6.16

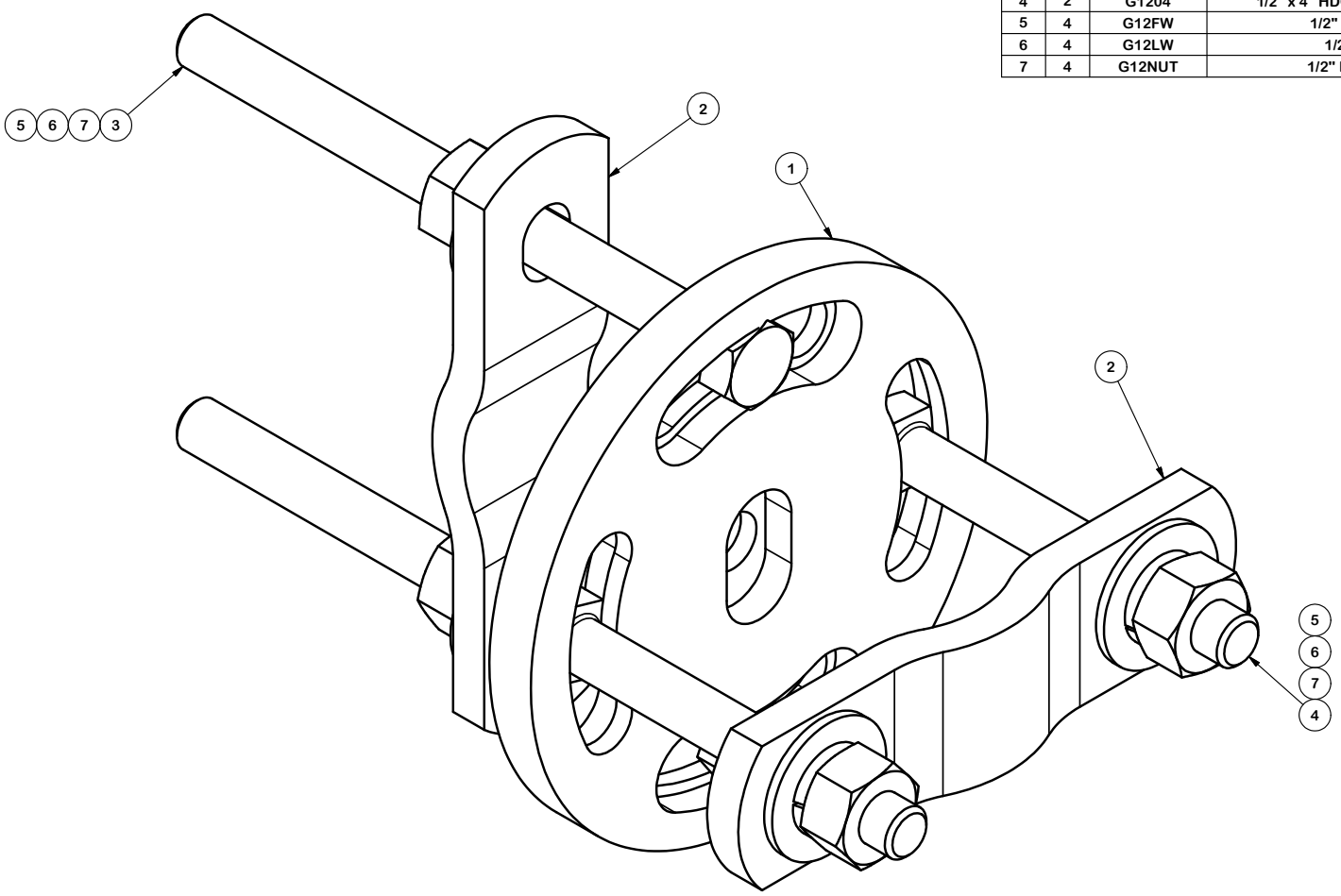

TOLERANCE NOTES

TOLERANCES ON DIMENSIONS, UNLESS OTHERWISE NOTED ARE:
SAWED, SHEARED AND GAS CUT EDGES *(± 0.030")*
DRILLED AND GAS CUT HOLES *(± 0.030")* - NO CONING OF HOLES
LASER CUT EDGES AND HOLES *(± 0.010")* - NO CONING OF HOLES
BENDS ARE ± 1/2 DEGREE
ALL OTHER MACHINING *(± 0.030")*
ALL OTHER ASSEMBLY *(± 0.060")*

PROPRIETARY NOTE:
THE DATA AND TECHNIQUES CONTAINED IN THIS DRAWING ARE PROPRIETARY INFORMATION OF VALMONT INDUSTRIES AND CONSIDERED A TRADE SECRET. ANY USE OR DISCLOSURE WITHOUT THE CONSENT OF VALMONT INDUSTRIES IS STRICTLY PROHIBITED.

DESCRIPTION: ADJUSTABLE CLAMP PLATE TIE-BACK ASSEMBLY

SITE PRO 1 — A valmont COMPANY

Engineering Support Team: 1-888-753-7446

Locations: New York, NY; Atlanta, GA; Los Angeles, CA; Plymouth, IN; Salem, OR; Dallas, TX

CPD NO.	DRAWN BY	ENG. APPROVAL	PART NO.
	CEK 8/30/2010		PUCK

CLASS	SUB	DRAWING USAGE	CHECKED BY	DWG. NO.
81	01	CUSTOMER	BMC 9/1/2010	PUCK

PARTS LIST						
ITEM	QTY	PART NO.	PART DESCRIPTION	LENGTH	UNIT WT.	NET WT.
1	8	SCP	CLAMP HALF, 1/2" THICK, 5-7/8"		1.25	10.00
2	B	C	1/2" THREADED ROD	D	E	F
3	16	G12NUT	1/2" HDG HEAVY 2H HEX NUT		0.07	1.14
4	16	G12LW	1/2" HDG LOCKWASHER		0.01	0.22
5	16	G12FW	1/2" HDG USS FLATWASHER		0.03	0.54

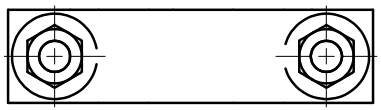

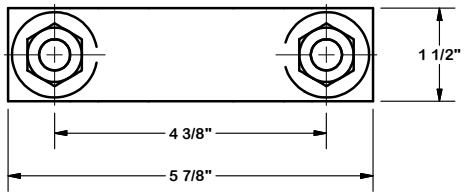

VARIABLE PARTS TABLE						
ASSEMBLY "A"	QTY "B"	PART "C"	LENGTH "D"	UNIT WT. "E"	NET WT. "F"	TOTAL WEIGHT
SCP08K	4	G12R-8	8"	.45	1.78	13.23
SCP10K	4	G12R-10	10"	.56	2.23	13.68

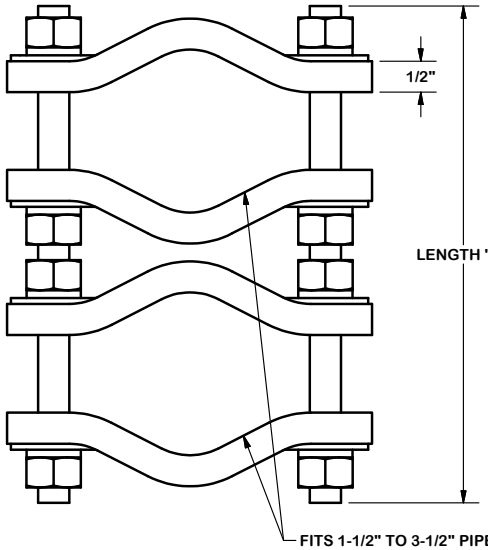

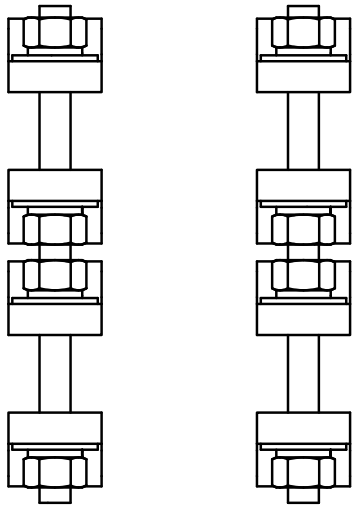

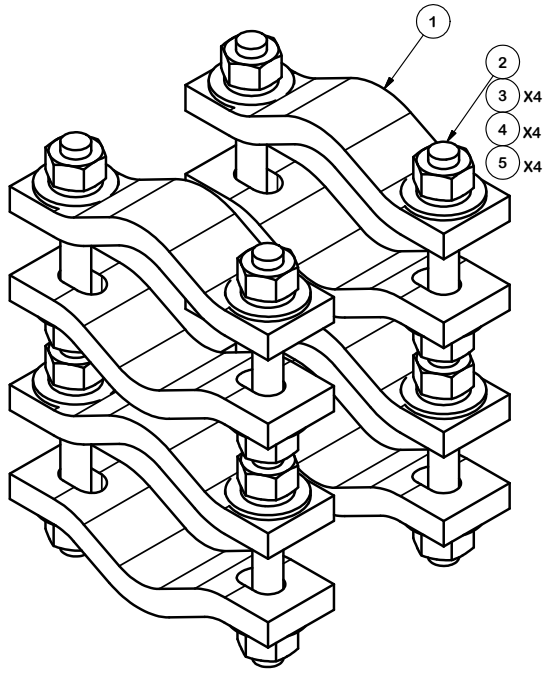

TOLERANCE NOTES

TOLERANCES ON DIMENSIONS, UNLESS OTHERWISE NOTED ARE:
SAWED, SHEARED AND GAS CUT EDGES *(± 0.030")*
DRILLED AND GAS CUT HOLES *(± 0.030")* - NO CONING OF HOLES
LASER CUT EDGES AND HOLES *(± 0.010")* - NO CONING OF HOLES
BENDS ARE ± 1/2 DEGREE
ALL OTHER MACHINING *(± 0.030")*
ALL OTHER ASSEMBLY *(± 0.060")*

PROPRIETARY NOTE:
THE DATA AND TECHNIQUES CONTAINED IN THIS DRAWING ARE PROPRIETARY INFORMATION OF VALMONT INDUSTRIES AND CONSIDERED A TRADE SECRET. ANY USE OR DISCLOSURE WITHOUT THE CONSENT OF VALMONT INDUSTRIES IS STRICTLY PROHIBITED.

DESCRIPTION
PIPE TO PIPE CLAMP SET
1-1/2" TO 3-1/2" PIPE
1/2" THICK CLAMP

SITE PRO 1 — A valmont COMPANY

Engineering Support Team: 1-888-753-7446

Locations: New York, NY; Atlanta, GA; Los Angeles, CA; Plymouth, IN; Salem, OR; Dallas, TX

CPD NO.	DRAWN BY	ENG. APPROVAL	PART NO.	PAGE
	KC8 8/21/2012		SEE ASSEMBLY "A"	1 OF 1
CLASS / SUB	DRAWING USAGE	CHECKED BY	DWG. NO.	
81 / 01	CUSTOMER	CEK 2/18/2013	SCPxxK	

PARTS LIST						
ITEM	QTY	PART NO.	PART DESCRIPTION	LENGTH	UNIT WT.	NET WT.
1	1	X-STA3	STIFF ARM ANGLE BRACKET	2 1/2 in	1.39	1.39
2	2	X-STU	STIFF ARM CHANNEL BRACKET		1.37	2.74
3	2	G12R-10	1/2" x 10" THREADED ROD (HDG.)		3.23	6.45
4	1	G12112	1/2" x 1-1/2" HDG HEX BOLT GR5	1 1/2 in	0.15	0.15
5	2	G1203	1/2" x 3" HDG HEX BOLT GR5 FULL THREAD	3 in	0.22	0.43
6	15	G12LW	1/2" HDG LOCKWASHER		0.01	0.21
7	17	G12FW	1/2" HDG USS FLATWASHER		0.03	0.58
8	15	G12NUT	1/2" HDG HEAVY 2H HEX NUT		0.07	1.07
9	1	G58112	5/8" x 1-1/2" HDG BOLT	1 1/2 in	0.25	0.25
10	1	G58LW	5/8" HDG LOCKWASHER		0.03	0.03
11	1	G58NUT	5/8" HDG HEAVY 2H HEX NUT		0.13	0.13
12	1	SCX1	CROSSOVER PLATE 2-3/8" X 2-3/8"		3.71	3.71
13	4	X-UB1212	1/2" X 2-1/2" X 4-1/2" X 2" U-BOLT (HDG.)		0.66	2.63
14	1	P2150	2-3/8" OD X 150" SCH 40 GALVANIZED PIPE	150 in	48.06	48.06
15	1	ACP	4-1/16" CLAMP HALF, 1/4" THK.		0.65	0.65
16	1	SAM	STIFF ARM MOUNT CLAMP		0.77	0.77
					TOTAL WT. #	63.79

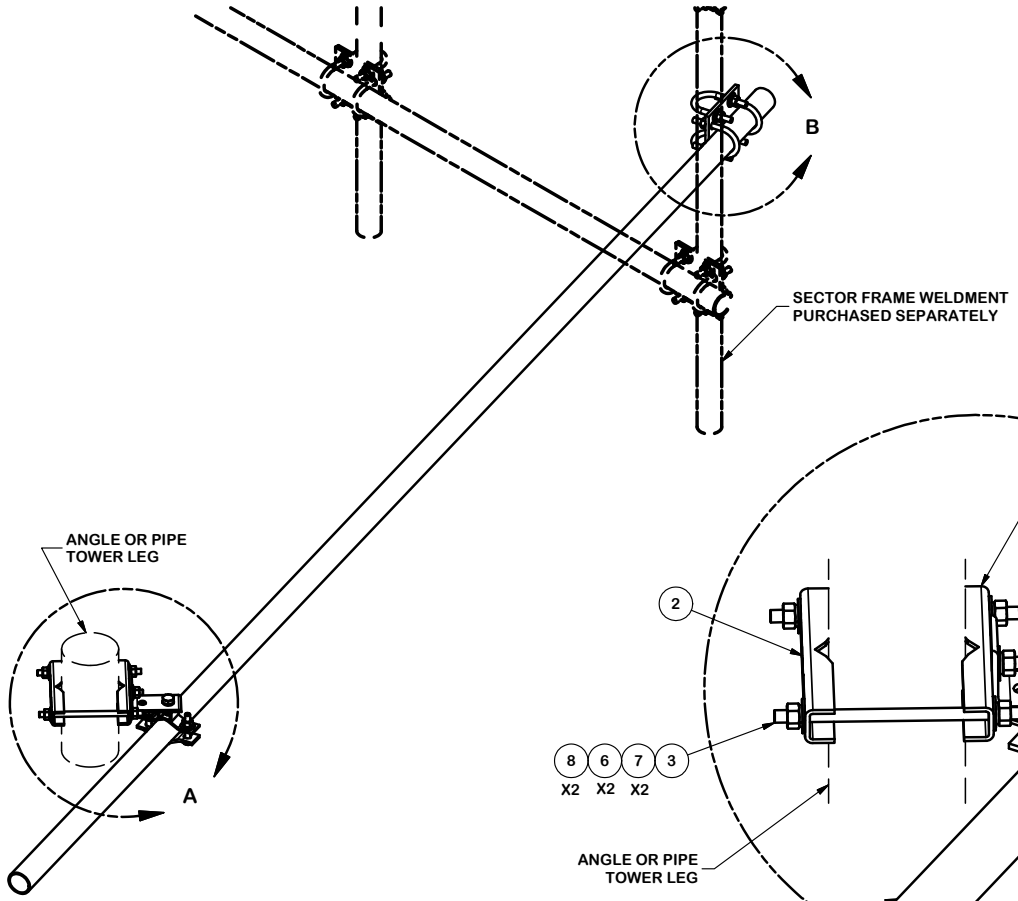

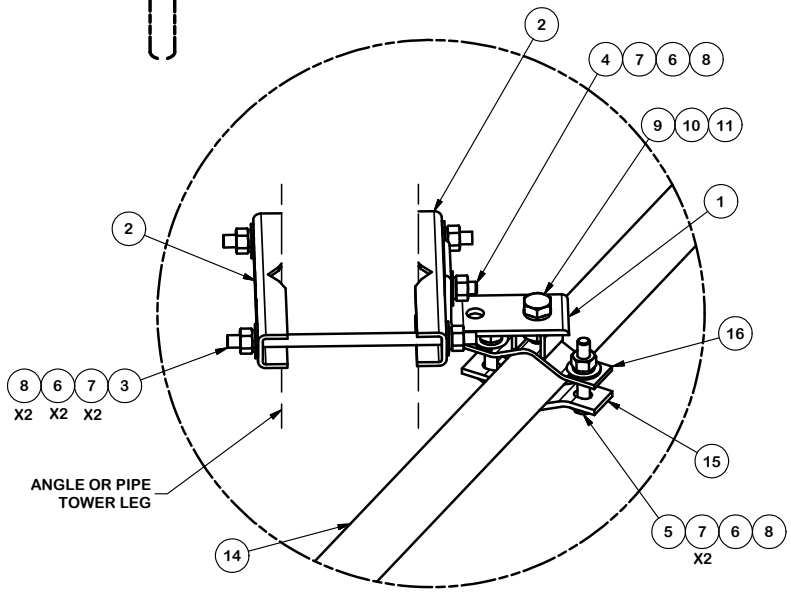

DETAIL A

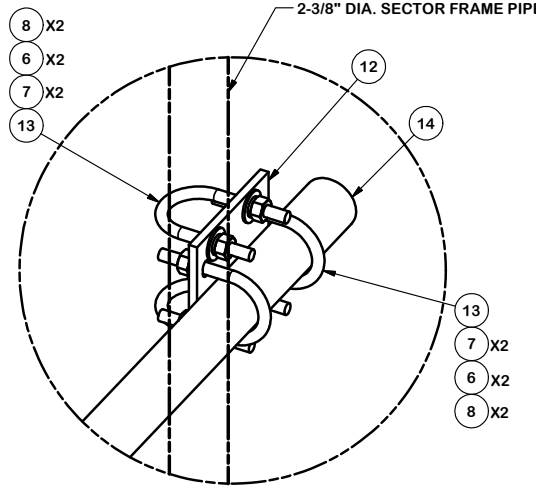

DETAIL B

TOLERANCE NOTES

TOLERANCES ON DIMENSIONS, UNLESS OTHERWISE NOTED ARE:
SAWED, SHEARED AND GAS CUT EDGES *(± 0.030")*
DRILLED AND GAS CUT HOLES *(± 0.030")* - NO CONING OF HOLES
LASER CUT EDGES AND HOLES *(± 0.010")* - NO CONING OF HOLES
BENDS ARE ± 1/2 DEGREE
ALL OTHER MACHINING *(± 0.030")*
ALL OTHER ASSEMBLY *(± 0.060")*

PROPRIETARY NOTE:
THE DATA AND TECHNIQUES CONTAINED IN THIS DRAWING ARE PROPRIETARY INFORMATION OF VALMONT INDUSTRIES AND CONSIDERED A TRADE SECRET. ANY USE OR DISCLOSURE WITHOUT THE CONSENT OF VALMONT INDUSTRIES IS STRICTLY PROHIBITED.

DESCRIPTION: SECTOR FRAME STIFF ARM KIT

SITE PRO 1 — A valmont COMPANY

Engineering Support Team: 1-888-753-7446

Locations: New York, NY; Atlanta, GA; Los Angeles, CA; Plymouth, IN; Salem, OR; Dallas, TX

CPD NO.	DRAWN BY	ENG. APPROVAL	PART NO.	PAGE
4647	KC8 8/16/2012		STK-U	1 OF 1
CLASS / SUB: 81 / 02	DRAWING USAGE: CUSTOMER	CHECKED BY: CEK 2/18/2013	DWG. NO.: STK-U	

Exhibit F

Power Density/RF Emissions Report

RF EMISSIONS COMPLIANCE REPORT

Crown Castle on behalf of AT&T Mobility, LLC

Crown Castle Site Name: SOUTHINGTON ROGUS
Crown Castle Site BU: 841298
AT&T Mobility, LLC FA #: 10035233
250 Meriden Waterbury Turnpike
Southington, CT
6/11/2020

Report Status:

AT&T Mobility, LLC is Compliant

Michael Fischer, P.E.
Registered Professional Engineer (Electrical)
Connecticut License Number 33928
Expires January 31, 2021

Signed 11 June 2020

Prepared By:

Site Safe, LLC

8618 Westwood Center Drive
Suite 315

Vienna, VA 22182

Voice: 703-276-1100
Fax: 703-276-1169

Engineering Statement in Re:
Electromagnetic Energy Analysis
Crown Castle
Southington, CT

My signature on the cover of this document indicates:

That I am registered as a Professional Engineer in the jurisdiction indicated; and

That I have extensive professional experience in the wireless communications engineering industry; and

That I am an employee of Site Safe, LLC in Vienna, Virginia; and

That I am thoroughly familiar with the Rules and Regulations of the Federal Communications Commission ("the FCC" and "the FCC Rules") both in general and specifically as they apply to the FCC's Guidelines for Human Exposure to Radio Frequency Electromagnetic Fields; and

That the technical information serving as the basis for this report was supplied by Crown Castle on behalf of AT&T Mobility, LLC (see attached Site Summary and Carrier documents) and that AT&T Mobility, LLC's installation involves communications equipment, antennas and associated technical equipment at a location referred to as "SOUTHINGTON ROGUS" ("the site"); and

That AT&T Mobility, LLC proposes to operate at the site with transmit antennas listed in the carrier summary and with a maximum effective radiated power as specified by AT&T Mobility, LLC and shown on the worksheet and that worst-case 100% duty cycle has been assumed; and

That this analysis has been performed with the assumption that the ground immediately surrounding the tower is primarily flat or falling; and

That at this time, the FCC requires that certain licensees address specific levels of radio frequency energy to which workers or members of the public might possibly be exposed (at §1.1307(b) of the FCC Rules); and

That such consideration of possible exposure of humans to radio frequency energy must utilize the standards set by the FCC, which is the federal agency having jurisdiction over communications facilities; and

That the FCC rules define two tiers of permissible exposure guidelines: 1) "uncontrolled environments," which defines situations in which persons may not be aware of (the "general public"), or may not be able to control their exposure to a transmission facility; and 2) "controlled environments," which defines situations in which persons are aware of their potential for exposure (industry personnel); and

That this statement specifically addresses the uncontrolled environment (which is more conservative than the controlled environment) and the limit set forth in the FCC rules for licensees of AT&T Mobility, LLC's operating frequencies as shown on the attached antenna worksheet; and

That when applying the uncontrolled environment standards, the predicted Maximum Power Density at two meters above ground level from the proposed AT&T Mobility, LLC operation is no more than 3.575% of the maximum permissible exposure limits in any accessible area on the ground; and

That it is understood per FCC Guidelines and OET 65 Appendix A, that regardless of the existent radio frequency environment, only those licensees whose contributions exceed 5% of the exposure limit pertinent to their operation(s) bear any responsibility for bringing any non-compliant area(s) into compliance; and

That when applying the uncontrolled environment standards, the cumulative predicted energy density from the proposed operation is no more than 18.314% of the maximum in any accessible area up to two meters above the ground per OET 65; and

That the calculations provided in this report are based on data provided by the client and antenna pattern data supplied by the antenna manufacturer, in accordance with FCC guidelines listed in OET 65. Horizontal and vertical antenna patterns are combined for modeling purposes to accurately reflect the energy two meters above ground level where on-axis energy refers to maximum energy two meters above the ground along the azimuth of the antenna and where area energy refers to the maximum energy anywhere two meters above the ground regardless of the antenna azimuth, accounting for cumulative energy from multiple antennas for the carrier(s) and frequency range(s) indicated; and

That the Occupational Safety and Health Administration has policies in place which address worker safety in and around communications sites, thus individual companies will be responsible for their employees' training regarding radio frequency safety; and

In summary, it is stated here that the proposed operation at the site will not result in exposure of the public to excessive levels of radio frequency energy as defined in the FCC Rules and Regulations, specifically 47 CFR 1.1307(b), and that AT&T Mobility, LLC's proposed operation is completely compliant.

Finally, it is stated that access to the tower should be restricted to communication industry professionals and approved contractor personnel trained in radio frequency safety and that this instant analysis addresses exposure levels at two meters above ground level and does not address exposure levels on the tower or in the immediate proximity of the antennas.

Crown Castle
SOUTHINGTON ROGUS
Site Summary

Carrier	Area Maximum Percentage MPE
AT&T Mobility, LLC (Proposed)	0.986 %
AT&T Mobility, LLC (Proposed)	0.881 %
AT&T Mobility, LLC (Proposed)	0.987 %
AT&T Mobility, LLC (Proposed)	0.721 %
Unknown Carrier	2.330 %
Unknown Carrier	0.241 %
Verizon Wireless	3.166 %
Verizon Wireless	2.470 %
Verizon Wireless	4.079 %
Verizon Wireless	2.453 %
Composite Site MPE:	18.314 %

AT&T Mobility, LLC (Proposed)
SOUTHINGTON ROGUS
Carrier Summary

Frequency:	2100	MHz
Maximum Permissible Exposure (MPE):	1000	$\mu W/cm^2$
Maximum power density at ground level:	9.85725	$\mu W/cm^2$
Highest percentage of Maximum Permissible Exposure:	0.98573	%

					On Axis		Area	
Antenna Make	**Model**	**Height (feet)**	**Orientation (degrees true)**	**ERP (Watts)**	**Max Power Density ($\mu W/cm^2$)**	**Percent of MPE**	**Max Power Density ($\mu W/cm^2$)**	**Percent of MPE**
CCI Antennas	TPA65R-BU8D	120	0	6609	9.285824	0.928582	9.758229	0.975823
CCI Antennas	TPA65R-BU8D	120	140	6609	9.285824	0.928582	9.758228	0.975823
CCI Antennas	TPA65R-BU8D	120	260	6609	9.285824	0.928582	9.758228	0.975823

AT&T Mobility, LLC (Proposed)
SOUTHINGTON ROGUS
Carrier Summary

Frequency:	737	MHz
Maximum Permissible Exposure (MPE):	491.33	$\mu W/cm^2$
Maximum power density at ground level:	4.32732	$\mu W/cm^2$
Highest percentage of Maximum Permissible Exposure:	0.88073	%

					On Axis		Area	
Antenna Make	**Model**	**Height (feet)**	**Orientation (degrees true)**	**ERP (Watts)**	**Max Power Density ($\mu W/cm^2$)**	**Percent of MPE**	**Max Power Density ($\mu W/cm^2$)**	**Percent of MPE**
CCI Antennas	TPA65R-BU8D	120	0	3549	1.487828	0.302814	2.891708	0.588543
CCI Antennas	TPA65R-BU8D	120	140	3549	1.487828	0.302814	2.891708	0.588543
CCI Antennas	TPA65R-BU8D	120	260	3549	1.487828	0.302814	2.891708	0.588543

AT&T Mobility, LLC (Proposed)
SOUTHINGTON ROGUS
Carrier Summary

Frequency:	1900	MHz
Maximum Permissible Exposure (MPE):	1000	$\mu W/cm^2$
Maximum power density at ground level:	9.86829	$\mu W/cm^2$
Highest percentage of Maximum Permissible Exposure:	0.98683	%

					On Axis		Area	
Antenna Make	**Model**	**Height (feet)**	**Orientation (degrees true)**	**ERP (Watts)**	**Max Power Density ($\mu W/cm^2$)**	**Percent of MPE**	**Max Power Density ($\mu W/cm^2$)**	**Percent of MPE**
CCI Antennas	OPA-65R-LCUU-H6	110	0	4679	7.728308	0.772831	9.668725	0.966873
CCI Antennas	OPA-65R-LCUU-H6	110	140	4679	7.728308	0.772831	9.668725	0.966873
CCI Antennas	OPA-65R-LCUU-H6	110	260	4679	7.728308	0.772831	9.668725	0.966873

AT&T Mobility, LLC (Proposed)
SOUTHINGTON ROGUS
Carrier Summary

Frequency:	850	MHz
Maximum Permissible Exposure (MPE):	566.67	$\mu W/cm^2$
Maximum power density at ground level:	4.08475	$\mu W/cm^2$
Highest percentage of Maximum Permissible Exposure:	0.72084	%

					On Axis		Area	
Antenna Make	**Model**	**Height (feet)**	**Orientation (degrees true)**	**ERP (Watts)**	**Max Power Density ($\mu W/cm^2$)**	**Percent of MPE**	**Max Power Density ($\mu W/cm^2$)**	**Percent of MPE**
CCI Antennas	OPA-65R-LCUU-H6	110	0	755	0.396698	0.070005	0.575352	0.101533
CCI Antennas	OPA-65R-LCUU-H6	110	140	755	0.396698	0.070005	0.575352	0.101533
CCI Antennas	OPA-65R-LCUU-H6	110	260	755	0.396698	0.070005	0.575352	0.101533
CCI Antennas	TPA65R-BU8D	120	0	4267	2.062285	0.363933	3.447846	0.608443
CCI Antennas	TPA65R-BU8D	120	140	4267	2.062285	0.363933	3.447846	0.608443
CCI Antennas	TPA65R-BU8D	120	260	4267	2.062285	0.363933	3.447846	0.608443

Unknown Carrier
SOUTHINGTON ROGUS
Carrier Summary

Frequency:	150	MHz
Maximum Permissible Exposure (MPE):	200	$\mu W/cm^2$
Maximum power density at ground level:	4.65997	$\mu W/cm^2$
Highest percentage of Maximum Permissible Exposure:	2.32998	%

					On Axis		Area	
Antenna Make	**Model**	**Height (feet)**	**Orientation (degrees true)**	**ERP (Watts)**	**Max Power Density ($\mu W/cm^2$)**	**Percent of MPE**	**Max Power Density ($\mu W/cm^2$)**	**Percent of MPE**
RFS	BA1012	62	0	100	4.659966	2.329983	4.659966	2.329983

Unknown Carrier
SOUTHINGTON ROGUS
Carrier Summary

Frequency:	900	MHz
Maximum Permissible Exposure (MPE):	600	$\mu W/cm^2$
Maximum power density at ground level:	1.44655	$\mu W/cm^2$
Highest percentage of Maximum Permissible Exposure:	0.24109	%

					On Axis		Area	
Antenna Make	**Model**	**Height (feet)**	**Orientation (degrees true)**	**ERP (Watts)**	**Max Power Density ($\mu W/cm^2$)**	**Percent of MPE**	**Max Power Density ($\mu W/cm^2$)**	**Percent of MPE**
Scala	OGD6-905-945	60	0	100	0.297636	0.049606	0.297636	0.049606
Scala	OGB9-900	56	0	100	0.917870	0.152978	0.917870	0.152978
Scala	OGD6-905-945	66	0	100	0.242813	0.040469	0.242813	0.040469

Verizon Wireless
SOUTHINGTON ROGUS
Carrier Summary

Frequency:	2100	MHz
Maximum Permissible Exposure (MPE):	1000	$\mu W/cm^2$
Maximum power density at ground level:	31.66008	$\mu W/cm^2$
Highest percentage of Maximum Permissible Exposure:	3.16601	%

					On Axis		Area	
Antenna Make	**Model**	**Height (feet)**	**Orientation (degrees true)**	**ERP (Watts)**	**Max Power Density ($\mu W/cm^2$)**	**Percent of MPE**	**Max Power Density ($\mu W/cm^2$)**	**Percent of MPE**
ANDREW	SBNHH-1D65B	58	350	7732	23.067268	2.306727	30.855938	3.085594
ANDREW	SBNHH-1D65B	58	120	7732	23.067268	2.306727	30.855938	3.085594
ANDREW	SBNHH-1D65B	58	240	7732	23.067268	2.306727	30.855938	3.085594

Verizon Wireless
SOUTHINGTON ROGUS
Carrier Summary

Frequency:	1900	MHz
Maximum Permissible Exposure (MPE):	1000	$\mu W/cm^2$
Maximum power density at ground level:	24.69604	$\mu W/cm^2$
Highest percentage of Maximum Permissible Exposure:	2.46960	%

					On Axis		Area	
Antenna Make	**Model**	**Height (feet)**	**Orientation (degrees true)**	**ERP (Watts)**	**Max Power Density ($\mu W/cm^2$)**	**Percent of MPE**	**Max Power Density ($\mu W/cm^2$)**	**Percent of MPE**
ANDREW	SBNHH-1D65B	58	350	4583	24.321278	2.432128	24.321278	2.432128
ANDREW	SBNHH-1D65B	58	120	4583	24.321278	2.432128	24.321278	2.432128
ANDREW	SBNHH-1D65B	58	240	4583	24.321278	2.432128	24.321278	2.432128

Verizon Wireless
SOUTHINGTON ROGUS
Carrier Summary

Frequency:	850	MHz
Maximum Permissible Exposure (MPE):	566.67	$\mu W/cm^2$
Maximum power density at ground level:	23.11631	$\mu W/cm^2$
Highest percentage of Maximum Permissible Exposure:	4.07935	%

					On Axis		Area	
Antenna Make	**Model**	**Height (feet)**	**Orientation (degrees true)**	**ERP (Watts)**	**Max Power Density ($\mu W/cm^2$)**	**Percent of MPE**	**Max Power Density ($\mu W/cm^2$)**	**Percent of MPE**
ANDREW	SBNHH-1D65B	58	350	2892	11.928283	2.104991	13.290760	2.345428
ANDREW	SBNHH-1D65B	58	120	2892	11.928283	2.104991	13.290760	2.345428
ANDREW	SBNHH-1D65B	58	240	2892	11.928283	2.104991	13.290760	2.345428

Verizon Wireless
SOUTHINGTON ROGUS
Carrier Summary

Frequency:	751	MHz
Maximum Permissible Exposure (MPE):	500.67	$\mu W/cm^2$
Maximum power density at ground level:	12.28378	$\mu W/cm^2$
Highest percentage of Maximum Permissible Exposure:	2.45348	%

					On Axis		Area	
Antenna Make	**Model**	**Height (feet)**	**Orientation (degrees true)**	**ERP (Watts)**	**Max Power Density ($\mu W/cm^2$)**	**Percent of MPE**	**Max Power Density ($\mu W/cm^2$)**	**Percent of MPE**
ANDREW	SBNHH-1D65B	58	350	2043	4.751294	0.948993	8.255748	1.648951
ANDREW	SBNHH-1D65B	58	120	2043	4.751294	0.948993	8.255748	1.648951
ANDREW	SBNHH-1D65B	58	240	2043	4.751294	0.948993	8.255748	1.648951