Robinson+Cole

KENNETH C. BALDWIN

280 Trumbull Street
Hartford, CT 06103-3597
Main (860) 275-8200
Fax (860) 275-8299
kbaldwin@rc.com
Direct (860) 275-8345

Also admitted in Massachusetts
and New York

December 1, 2023

Melanie A. Bachman, Esq.
Executive Director/Staff Attorney
Connecticut Siting Council
10 Franklin Square
New Britain, CT 06051

Re: **Notice of Exempt Modification – Facility Modification**
7 Surdan Mountain Road, Sharon, Connecticut

Dear Attorney Bachman:

Cellco Partnership d/b/a Verizon Wireless ("Cellco") currently maintains a wireless telecommunications facility at the above-referenced address (the "Property"). Cellco's facility consists of antennas and remote radio heads attached to a tower. Equipment associated with the facility is located on the ground adjacent to the tower. The tower was approved by the Town of Sharon ("Town") in January of 1998. Cellco's shared use of the tower was approved by the Siting Council ("Council") in May of 2009 (EM-VER-125-090402). A copy of the Town's tower approval and the Council's EM-VER-125-090402 approval are included in Attachment 1.

Cellco's proposed modification involves the installation of six (6) interference mitigation filters ("Filters") on its existing antenna platform and antenna mounting assembly. The Filter specification sheet is included in Attachment 2.

Please accept this letter as notification pursuant to R.C.S.A. § 16-50j-73, for construction that constitutes an exempt modification pursuant to R.C.S.A. § 16-50j-72(b)(2). In accordance with R.C.S.A. § 16-50j-73, a copy of this letter is being sent to Sharon's Chief Elected Official and Land Use Officer. A copy of this letter is also being sent to the Property owner.

The planned modifications to the facility fall squarely within those activities explicitly provided for in R.C.S.A. § 16-50j-72(b)(2).

1. The proposed modification will not result in an increase in the height of the existing tower. The Filters will be installed on Cellco's existing antenna platform and antenna mounting assembly.

2. The proposed modifications will not involve any change to ground-mounted equipment and therefore, will not require the extension of the site boundary.

3. The proposed modifications will not increase noise levels at the facility by six decibels or more, or to levels that exceed state and local criteria.

4. The installation of the new Filters will not result in a change to radio frequency (RF) emissions from the facility. Therefore, no new RF emissions information is included in this filing.

5. The proposed modifications will not cause a change or alteration in the physical or environmental characteristics of the site.

6. According to the attached Structural Analysis Report ("SA") and Antenna Mount Analysis Report ("MA"), the existing tower, foundation, antenna platform and mounting assembly can support Cellco's proposed modifications. A copy of the SA and MA are included in Attachment 3.

A copy of the parcel map and Property owner information is included in Attachment 4. A Certificate of Mailing verifying that this filing was sent to municipal officials and the property owner is included in Attachment 5.

For the foregoing reasons, Cellco respectfully submits that the proposed modifications to the above-referenced telecommunications facility constitutes an exempt modification under R.C.S.A. § 16-50j-72(b)(2).

Sincerely,

Kenneth C. Baldwin

Enclosures
Copy to:
Casey Flanagan, First Selectman
Jamie Casey, Land Use Administrator
Ann Adele Prindle, Property Owner
Alex Tyurin, Verizon Wireless

ATTACHMENT 1

TOWN OF SHARON, CONN.

ZONING PERMIT № 2640

Date 1/21 19 98

Permission is hereby given to Litchfield County Dispatch

of PO Box 1349 Litchfield, CT 06759

to erect a 195' telecomm tower (28'/leg) + a 22' x 58' building

located on 7 Sunset Mt Road, Map # 15 Lot # 2 one

Owner of property Warren Prindle

in accordance with application dated 1/13 19 98

Signed Elizabeth M Lee

Sharon Planning and Zoning Commission

ZBA decision 2/22/94

TOWN OF SHARON

ZONING PERMIT APPLICATION NO. _____

PERMIT FEE: $15.00 plus $10.00 (CT Fee) = $25.00

APPLICATION IS HEREBY MADE TO THE PLANNING & ZONING COMMISSION FOR A PERMIT TO:

( ) Construct (X) Enlarge ( ) Alter ( ) Move ( ) Other _____

The building(s) described below: existing tower & existing building Assessor Tax Map # 15 Lot # 2

Location of Property 7 Sardan Mt Road.

Subdivision/development: — Lot No. —

Name of Owner: Darien R Prindle Address: 7 Sardan Mt Rd

Name of Applicant: Litchfield County Dispatch Inc. Address: P.O. Box 1349 Litchfield CT 06759

Phone: 860-567-3877

ZONE: RR

Width of Lot _____ Depth of Lot _____ Area of Lot 4A. (dimensions of easement 75'X145')

Use of building(s): ( ) Dwelling for _____ families; ( ) Accessory; ( ) Commercial;

( ) Industrial; (X) Other telecommunication tower - bldg.

current bldg. is 8x10' (to be removed)

Size of Building(s) ~~or addition~~(s): ~~20~~ 22 (12) dia x 58'; ~~No. of stories~~ height 195' tower

size of tower - leg of triangle 28' height 195'

Additional Information:

ZBA approval for hgt. of tower 2/22/94

Complete a PLOT PLAN on reverse side. Show boundaries, location of existing building(s) if any, proposed construction / or work.

owner Signature Darien R Prindle

Date: 1-13-98 Applicant's Signature Alan T. Gamel Manager.

****

Approved by Planning and Zoning Commission. Date: 1/21/98

Permit No. 2640

Rejected Date: _____

Reason: _____

Signature: Elizabeth McHall for Planning & Zoning Commission

This permit is granted with the express condition that the applicant shall conform in all respects to the zoning regulations of the Town of Sharon. This permit may be revoked at any time upon violation of any provisions of said regulations. Any deviation from the approved application must be authorized by approval of the revised plans subject to the same procedures established for the examination of the original plans. ***Zoning permit expires 12 months from date of issue unless it has been renewed by ZEO or a valid building permit is in effect.***

TOWN OF SHARON
ZONING BOARD OF APPEALS
LEGAL NOTICE

At a regular quarterly meeting of the Sharon Zoning Board of Appeals held on February 22, 1994, the Board voted unanimously to approve Appeal #102 of Litchfield County Dispatch. A copy of this decision will be on file with the Town Clerk, Sharon, CT.

Dated at Sharon, Connecticut this 23rd day of February 1994.

Robert Loucks, Chairman
Sharon Zoning Board of Appeals

To appear in Waterbury Republican: 2/24

TOWN OF SHARON
ZONING BOARD OF APPEALS
LEGAL NOTICE

At a regular quarterly meeting of the Sharon Zoning Board of Appeals held ~~on February~~ ary 22, 1994, the Board voted unanimously to approve Appeal #102 of Litchfield County Dispatch. A copy of this decision will be on file with the Town Clerk, Sharon, CT.

Dated at Sharon, Connecticut this 23rd day of February, 1994

Robert Loucks, Chairman
Sharon Zoning Board
of Appeals

R-A FEBRUARY 24, 1994

TOWN OF SHARON
ZONING BOARD OF APPEALS
SHARON, CONNECTICUT 06069

LEGAL NOTICE

To Whom It May Concern, notice is hereby given that on Tuesday, February 22, 1994 at 7:30PM at the Sharon Town Hall, Assessors' Office, 63 Main Street, Sharon, CT, the Sharon Zoning Board of Appeals will hold a public hearing on the following application for a variance:

Appeal #102 of Litchfield County Dispatch to modify an existing building (height of existing antenna tower) to have a maximum height of 195 feet where the Regulations require 35 feet. The property is owned by Darien and Ann Adele Prindle and located at 7 Surdan Mountain Road, Sharon, CT, in the Rural Residence Zone.

At this hearing interested persons may be heard and written communication received. The application is on file at the Selectmen's Office, 63 Main Street, Sharon, CT.

Dated at Sharon, Connecticut this 8th day of February 1994.

Robert Loucks, Chairman
Sharon Zoning Board of Appeals

To Appear in Waterbury Republican: 2/9 & 2/17

Sent to:
Certified- Litchfield County Dispatch
Regular mail to:
Darien + Ann Prindle
Leo Niekerk
Fred Stillt Judith Cavanagh
Alfred Andrews

SHARON LEGAL NOTICE

To Whom It May Concern, notice is hereby given that on Tuesday, February 22, 1994 at 7:30PM at the Sharon Town Hall, Assessor's Office, 63 Main Street, Sharon, CT, the Sharon Zoning Board of Appeals will hold a public hearing on the following application for a variance:

Appeal #102 of Litchfield County Dispatch to modify an existing building (height of existing antenna tower) to have a maximum height of 195 feet where the Regulations require 35 feet. The property is owned by Darien and Ann Adele Prindle and located at 7 Surdan Mountain Road, Sharon, CT, in the Rural Residence Zone.

At this hearing interested persons may be heard and written communication received. The application is on file at the Selectmen's Office, 63 Main Street, Sharon, CT.

Dated at Sharon, Connecticut this 8th Day of February, 1994

Robert Loucks, Chairman
Sharon Zoning Board of Appeals

R-A FEB 9 and 17, 1994

STATE OF CONNECTICUT

CONNECTICUT SITING COUNCIL

Ten Franklin Square, New Britain, CT 06051

Phone: (860) 827-2935 Fax: (860) 827-2950

E-Mail: siting.council@ct.gov

Internet: ct.gov/csc

Daniel F. Caruso
Chairman

May 5, 2009

Kenneth C. Baldwin, Esq.
Robinson & Cole LLP
280 Trumbull Street
Hartford, CT 06103-3597

RE: **EM-VER-125-090402** – Cellco Partnership d/b/a Verizon Wireless notice of intent to modify an existing telecommunications facility located at 7 Surdan Mountain Road, Sharon, Connecticut.

Dear Attorney Baldwin:

The Connecticut Siting Council (Council) hereby acknowledges your notice to modify this existing telecommunications facility, pursuant to Section 16-50j-73 of the Regulations of Connecticut State Agencies.

The proposed modifications are to be implemented as specified here and in your notice dated April 2, 2009, including the placement of all necessary equipment and shelters within the tower compound. The modifications are in compliance with the exception criteria in Section 16-50j-72 (b) of the Regulations of Connecticut State Agencies as changes to an existing facility site that would not increase tower height, extend the boundaries of the tower site, increase noise levels at the tower site boundary by six decibels, and increase the total radio frequencies electromagnetic radiation power density measured at the tower site boundary to or above the standard adopted by the State Department of Environmental Protection pursuant to General Statutes § 22a-162. This facility has also been carefully modeled to ensure that radio frequency emissions are conservatively below State and federal standards applicable to the frequencies now used on this tower.

This decision is under the exclusive jurisdiction of the Council. Please be advised that the validity of this action shall expire one year from the date of this letter. Any additional change to this facility will require explicit notice to this agency pursuant to Regulations of Connecticut State Agencies Section 16-50j-73. Such notice shall include all relevant information regarding the proposed change with cumulative worst-case modeling of radio frequency exposure at the closest point of uncontrolled access to the tower base, consistent with Federal Communications Commission, Office of Engineering and Technology, Bulletin 65. Any deviation from this format may result in the Council implementing enforcement proceedings pursuant to General Statutes § 16-50u including, without limitation, imposition of expenses resulting from such failure and of civil penalties in an amount not less than one thousand dollars per day for each day of construction or operation in material violation.

Thank you for your attention and cooperation.

Very truly yours,

S. Derek Phelps
Executive Director

SDP/MP/laf

c: The Honorable Malcom M. Brown, First Selectman, Town of Sharon
Elizabeth H. Casey, Zoning Enforcement Officer, Town of Sharon
Litchfield County Dispatch

G:\EM\BAM-VERIZON\Sharon\dc042109SurdanMtnRd.DOC

ATTACHMENT 2

KA-6030

TWIN BANDSTOP 900MHZ INTERFERENCE MITIGATION FILTER

The KA-6030 is ideal for co-located 700, 850 and 900 networks. Utilising a 2.6MHz guardband the KA-6030 provides rejection of the 900 UL band while passing 700/850 UL and DL bands. Capable of being used in an outdoor environment the KA-6030 contains two identical bandstop filters, suitable for 2x2 MIMO configuration, offering excellent insertion loss, group delay and rejection.

FEATURES

- Passes full 700 and 850 bands
- Low insertion loss
- Rejection of 900MHz uplink
- DC/AISG pass
- Twin unit
- Dual twin mounting available

TECHNICAL SPECIFICATIONS

BAND NAME	700 PATH / 850 UPLINK PATH	850 DOWNLINK PATH
Passband	698 - 849MHz	869 - 891.5MHz
Insertion loss	0.1dB typical / 0.3dB maximum	0.5dB typical, 1.45dB maximum
Return loss	24dB typical, 18dB minimum	
Maximum input power (Per Port)	100W average	200W average and 66W per 5MHz
Rejection	53dB minimum @ 894.1 - 896.5MHz	
ELECTRICAL		
Impedance	50Ohms	
Intermodulation products	-160dBc maximum in UL Band (assuming 20MHz Signal), with 2 x 43dBm carriers -153dBc maximum with 2 x 43dBm	
DC / AISG		
Passband	0 - 13MHz	
Insertion loss	0.3dB maximum	
Return loss	15dB minimum	
Input voltage range	± 33V	
DC current rating	2A continuous, 4A peak	
Compliance	3GPP TS 25.461	
ENVIRONMENTAL		
For further details of environmental compliance, please contact Kaelus.		
Temperature range	-20°C to +60°C | -4°F to +140°F	
Ingress protection	IP67	
Altitude	2600m | 8530ft	
Lightning protection	RF port: ±5kA maximum (8/20us). IEC 61000-4-5 – Unit must be terminated with some lightning protection circuits.	
MTBF	>1,000,000 hours	
Compliance	ETSI EN 300 019 class 4.1H, RoHS, NEBS GR-487-CORE	

Contact Us: +1 303 768 8080 | +61 (0) 7 3907 1200 | www.kaelus.com

MECHANICAL	
Dimensions H x D x W	269 x 277 x 80mm | 10.60 x 10.90 x 3.15in (Excluding brackets and connectors)
Weight	8.0 kg | 17.8 lbs (no bracket)
Finish	Powder coated, light grey (RAL7035)
Connectors	RF: 4.3-10 (F) x 4
Mounting	Optional pole/wall bracket supplied with two metal clamps 45-178mm diameter poles or custom bracket. See ordering information.

ORDERING INFORMATION

PART NUMBER	CONFIGURATION	OPTIONAL FEATURES	CONNECTORS
KA-6030-2032	TWIN, 2 in / 2 out	DC/AISG PASS	4.3-10 (F)

Contact Us: +1 303 768 8080 | +61 (0) 7 3907 1200 | www.kaelus.com

ELECTRICAL BLOCK DIAGRAM

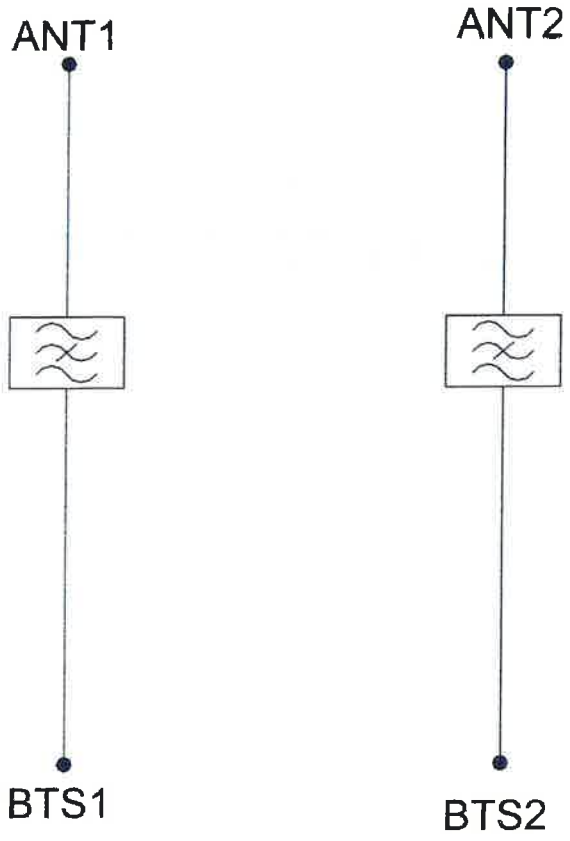

MECHANICAL BLOCK DIAGRAM

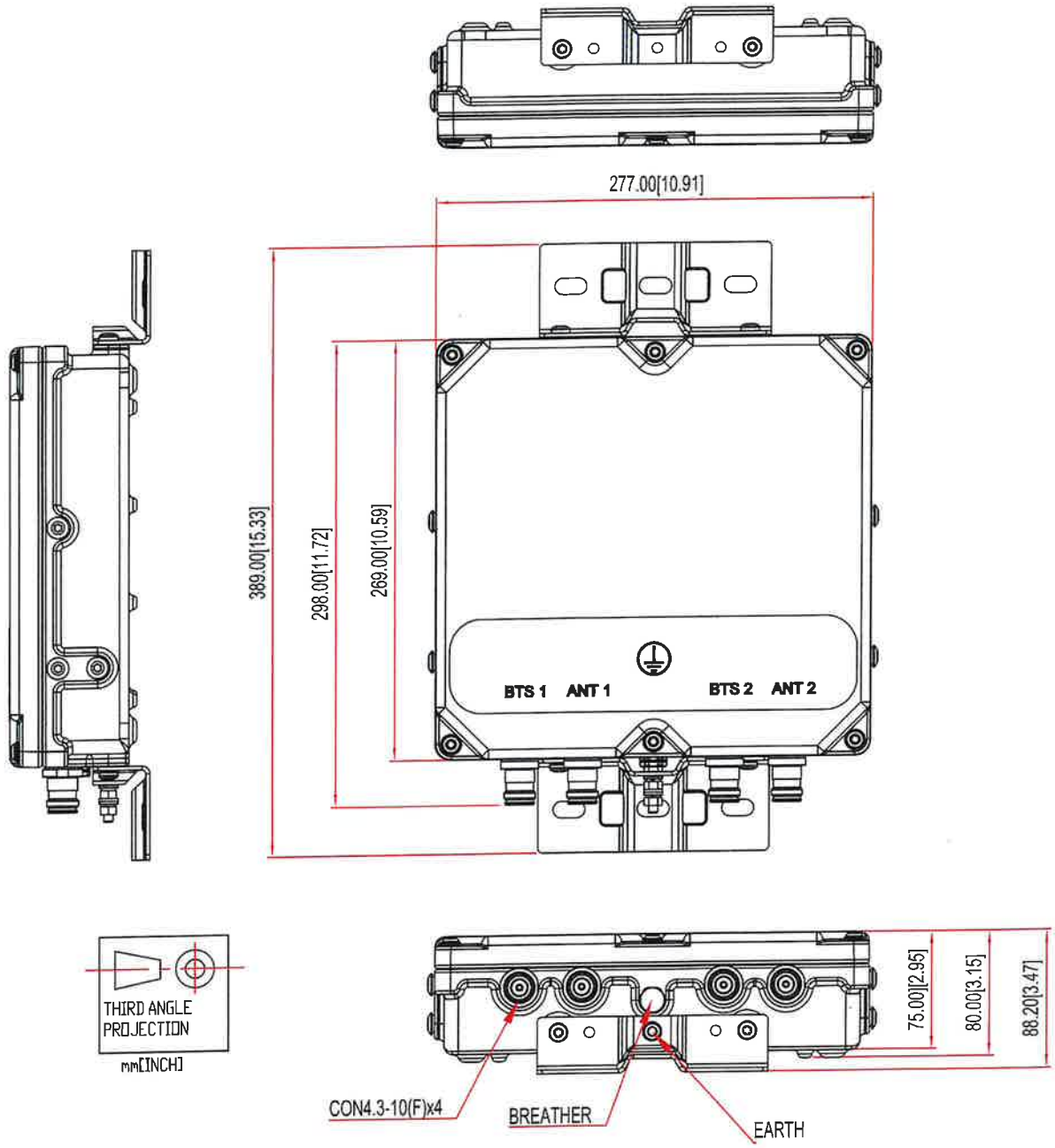

ATTACHMENT 3

CENTEK engineering

Centered on Solutions™

Structural Analysis Report

195-ft Existing Valmont Lattice Tower

Proposed Verizon Wireless
Antenna Upgrade

Verizon Site Ref: Cornwall 2

7 Surdan Mountain Road
Sharon, CT

CENTEK Project No. 23155.00

Date: November 27, 2023

Max Stress Ratio = 95%

STATE OF CONNECTICUT
TIMOTHY J. LYNN
No. 29336
LICENSED
PROFESSIONAL ENGINEER

Prepared for:

Verizon Wireless
20 Alexander Drive
Wallingford, CT 06492

63-2 North Branford Road, Branford, CT 06405 203.488.0580 Fax 203.488.8587 www.CentekEng.com

Table of Contents

Introduction

The purpose of this report is to summarize the results of the non-linear, P-Δ structural analysis of the equipment modification proposed by the Verizon on the existing lattice tower located in Sharon, Connecticut.

The host tower is a 195-ft, three legged, steel lattice tower originally designed and manufactured by PiROD Inc., Job No. A-115074, signed and sealed 10/14/1998. The tower geometry and structure member sizes were taken from a combination of the original design documents and a previous structural analysis prepared by Centek project no. 22022.17 dated July 25, 2022.

Antenna and appurtenance information were obtained from the aforementioned structural analysis prepared by Centek and information provided by Verizon.

The tower consists of eleven (11) vertical sections consisting of solid round/truss legs conforming to ASTM A572 Gr. 50. Horizontal and diagonal lateral support bracing consists of steel angle and solid round construction conforming to ASTM A572-50 and ASTM A36. The vertical tower sections are connected by bolted flange plates while the legs and bracing are connected by bolted and welded gusset connections. The tower face width is 4.50-ft at the top and 20.00-ft at the bottom.

Antenna and Appurtenance Summary

The existing, proposed and future loads considered in this analysis consist of the following:

- Unknown (Existing):
  Antennas: One (1) single dipole antenna leg mounted with a RAD center elevation of ±196.26-ft above grade level.
  Coax Cable: One (1) 7/8" ∅ coax cable running on the leg/face of the existing tower as specified in Section 3 of this report.
- Unknown (Existing):
  Equipment: One (1) vacant 6-ft PiROD Rigid Side arm face mounted to the existing tower with a RAD center elevation of ±196-ft above grade level.
- CSP (Existing):
  Antennas: One (1) RFS PA6-65AC Microwave dish and one (1) 6ft x 4in. pipe mount leg mounted with a RAD center elevation of ±194.25-ft above grade level.
  Coax Cable: One (1) WE-65 elliptical coax cable running on the leg/face of the existing tower as specified in Section 3 of this report.
- Unknown (Existing):
  Antennas: One (1) 9-ft Omni-directional whip antenna mounted on one (1) existing 4-ft side arm with a RAD center elevation of 192.75-ft above grade level.
  Coax Cables: One (1) 1-5/8" ∅ coax cable running on the leg/face of the existing tower as specified in Section 3 of this report.

- Unknown (Existing):
  Antennas: (1) Kathrein OGT9-840N-ft Omni-directional whip antenna mounted on a low profile rotatable platform with a RAD center elevation of 190.25-ft above grade level.
  Coax Cables: One (1) 1-5/8" ∅ coax cable running on the leg/face of the existing tower as specified in Section 3 of this report.
- Unknown (Existing):
  Antennas: One (1) DB222-A 2-Bay Dipole antenna mounted on an existing low profile rotatable platform with a RAD center elevation of 188.25-ft above grade level.
  Coax Cables: One (1) 7/8" ∅ coax cable running on the leg/face of the existing tower as specified in Section 3 of this report.
- Unknown (Existing):
  Antennas: One (1) RFS PD220 Omni-directional whip antenna mounted on an existing 6-ft side arm with a RAD center elevation of ±182.25-ft above grade level.
  Coax Cable: One (1) 7/8" ∅ coax cable running on the leg/face of the existing tower as specified in Section 3 of this report.
- CSP (Existing):
  Antennas: Two (2) Sinclair SC479-HF1LDF antennas (inverted), one (1) Sinclair SE414-SWBP4LDF antenna and one (1) Bird 432E-83I-01T TTA mounted to an existing low profile rotatable platform with an elevation of 182-ft above grade level.
  Coax Cables: Two (2) 1-5/8" ∅ and one (1) 1/2" ∅ coax cable running on the leg/face of the existing tower as specified in Section 3 of this report.
- Unknown (Existing):
  Antennas: One (1) BCD87077 Omni-directional whip antenna mounted on an existing 4-ft side arm with a RAD center elevation of ±181.50-ft above grade level.
  Coax Cable: One (1) 7/8" ∅ coax cable running on the leg/face of the existing tower as specified in Section 3 of this report.
- Unknown (Existing):
  Antennas: One (1) DB222-A 2-Bay Dipole antenna (inverted) mounted to an existing 4-ft side arm (same as Omni @180.25-ft) with a RAD center elevation of ±180.25-ft above grade level.
  Coax Cables: One (1) 7/8" ∅ coax cable running on the leg/face of the existing tower as specified in Section 3 of this report.
- Unknown (Existing):
  Antennas: One (1) 12-ft Omni-directional whip antenna (inverted) and one (1) 10-ft Omni-directional whip antenna (inverted) mounted on an existing low profile rotatable platform with respective RAD center elevations of 175.25-ft and 174.25-ft above grade level.
  Coax Cables: Two (2) 1-5/8" ∅ coax cables running on the leg/face of the existing tower as specified in Section 3 of this report.
- Unknown (Existing):
  Antennas: One (1) 12-ft Omni-directional whip antenna mounted on an existing 3-ft side arm with a RAD center elevation of 175.25-ft above grade level.
  Coax Cables: One (1) 7/8" ∅ coax cable running on the leg/face of the existing tower as specified in Section 3 of this report.

- Unknown (Existing):
  Antennas: One (1) Telewave ANT150D6-9, 4 bay dipole antenna (inverted) mounted on an existing low profile rotatable platform with a RAD center elevation of 173.75-ft above grade level.
  Coax Cables: One (1) 7/8" ∅ coax cable running on the leg/face of the existing tower as specified in Section 3 of this report.
- AT&T (Existing to Remain):
  Antenna: Three (3) Powerwave 7770 panel antennas, four (4) CCI DMP65R-BU6D panel antennas, two (2) CCI DMP65R-BU4D panel antenna, six (6) Powerwave LGP21401 TMAs, six (6) Powerwave LGP13519 Diplexers, three (3) Ericsson 8843 B2/B66A remote radio heads, three (3) 4478 B14 remote radio heads, three (3) 4449 B5/B12 remote radio heads and three (3) Raycap DC6-48-60-18-8F surge arrestors mounted on three (3) existing 12-ft T-Frames with a RAD center elevation of ±150-ft above grade level.
  Coax Cable: Twelve (12) 1-5/8" ∅ coax cables, three (3) fiber cable and six (6) dc control cables running on a leg/face of the existing tower as specified in Section 3 of this report.
- T-MOBILE (EXISTING):
  Antennas: Three (3) RFS APXVAARR24_43 panel antennas, three (3) Ericsson AIR6419 panel antennas, three (3) Ericsson 4460 remote radio heads and three (3) Ericsson 4449 B71 B12 remote radio heads mounted on (3) 10-ft T-Frames with a RAD center elevation of 140-ft above grade level.
  Coax Cables: Three (3) 6x12 and two (2) 6x24 fiber lines running on a leg of the existing tower.
- Eversource (Existing):
  Antennas: One (1) Sinclair SD210 single dipole antenna mounted to an existing PiROD 6-ft Rigid side arm with an elevation of ±135ft above grade level.
  Coax Cable: One (1) 7/8" ∅ coax cable running on the leg/face of the existing tower as specified in Section 3 of this report.
- Eversource (Existing):
  Antennas: Two (2) Andrew DB586-Y Omni-directional whip antennas (one upright, one inverted) and one (1) TTA mounted to an existing PiROD 6-ft Rigid side arm with respective RAD center elevations of ±130ft and ±125ft above grade level.
  Coax Cable: Two (2) 7/8" ∅ coax cables running on the leg/face of the existing tower as specified in Section 3 of this report.
- Unknown (Existing):
  Equipment: One (1) vacant 6-ft PiROD Rigid Side arm face mounted to the existing tower with a RAD center elevation of ±120.5-ft above grade level.
- Unknown (Existing):
  Antennas: One (1) DB212 Single Dipole antenna mounted to an existing PiROD 6-ft Rigid side arm with an elevation of ±120.67ft above grade level.
  Coax Cables: One (1) 7/8" ∅ coax cable running on the leg/face of the existing tower as specified in Section 3 of this report.

- Eversource (Existing):
  Antennas: One (1) dBspectra DS2C03F36D-D antenna mounted to a 4-ft side arm with an elevation of ±117.5ft above grade level.
  Coax Cables: Two (2) 7/8" ∅ coax cable running on the leg/face of the existing tower as specified in Section 3 of this report.
- Unknown (Existing):
  Antennas: One (1) DB205-L Omni-directional whip antenna mounted to an existing PiROD 6-ft Rigid side arm with an elevation of ±109.25ft above grade level.
  Coax Cables: One (1) 7/8" ∅ coax cable running on the leg/face of the existing tower as specified in Section 3 of this report.
- CSP (Existing):
  Antennas: One (1) RFS PA6-65AC Microwave dish and one (1) 6ft x 4in. pipe mount leg mounted with a RAD center elevation of ±102.25-ft above grade level.
  Coax Cable: One (1) WE-65 elliptical coax cable running on the leg/face of the existing tower as specified in Section 3 of this report.
- Unknown (Existing):
  Antennas: One (1) DB224-A 4 Bay Dipole antenna mounted to an existing 2-ft side arm with a RAD center elevation of ±94-ft above grade level.
  Coax Cables: One (1) 1/2" ∅ coax cable running on the leg/face of the existing tower as specified in Section 3 of this report.
- Unknown (Existing):
  Antennas: One (1) RFS PD220-2 Omni-directional whip antenna mounted to an existing PiROD 6-ft Rigid side arm with a RAD center elevation of ±90.41ft above grade level.
  Coax Cables: One (1) 1/2" ∅ coax cable running on the leg/face of the existing tower as specified in Section 3 of this report.
- Unknown (Existing):
  Antennas: One (1) 12-ftx3in. ∅ Omni-directional whip antenna (inverted) mounted to an existing PiROD 6-ft Rigid side arm with a RAD center elevation of ±79.5ft above grade level.
  Coax Cables: One (1) 1/2" ∅ coax cable running on the leg/face of the existing tower as specified in Section 3 of this report.
- Unknown (Existing):
  Antennas: One (1) Andrew DB432-A Yagi antenna leg mounted with a RAD center elevation of ±70.25ft above grade level.
  Coax Cables: One (1) 1/2" ∅ coax cable running on the leg/face of the existing tower as specified in Section 3 of this report.
- Unknown (Existing):
  Antennas: One (1) Channel Master 1.2M Dish antenna mounted on a side arm with a RAD center elevation of ±17-ft above grade level.
  Coax Cables: Two (2) 1/4" ∅ coax cables running on the leg/face of the existing tower as specified in Section 3 of this report.

- Verizon (Existing to Remain):
  Antennas: Six (6) Antel LPA80080-4CF mounted, six (6) JMA MX06FIT665-02 panel antennas, three (3) Samsung MT6407-77A panel antennas, three (3) Samsung B2/B66A remote radio heads, three (3) Samsung B5/B13 remote radio heads and one (1) main distribution box on three (3) existing 15-ft T-Frames with a RAD center elevation of ±161.2-ft above grade level.
  Coax Cable: Twelve (12) 1-5/8" ∅ coax cables running on a leg/face of the existing tower as specified in Section 3 of this report.
- **VERIZON (PROPOSED):**
  Antennas: Six (6) Kaelus KA-6030 filters mounted on three (3) existing 15-ft T-Frames with a RAD center elevation of ±161.2-ft above grade level.

Primary Assumptions Used in the Analysis

- The tower structure's theoretical capacity not including any assessment of the condition of the tower.
- The tower carries the horizontal and vertical loads due to the weight of antennas, ice load and wind.
- Tower is properly installed and maintained.
- Tower is in plumb condition.
- Tower loading for antennas and mounts as listed in this report.
- All bolts are appropriately tightened providing the necessary connection continuity.
- All welds are fabricated with ER-70S-6 electrodes.
- All members are assumed to be as specified in the original tower design documents.
- All members are "hot dipped" galvanized in accordance with ASTM A123 and ASTM A153 Standards.
- All member protective coatings are in good condition.
- All tower members were properly designed, detailed, fabricated, installed and have been properly maintained since erection.
- Any deviation from the analyzed antenna loading will require a new analysis for verification of structural adequacy.
- **The Verizon antenna mount information was taken from the mount analysis report prepared by Colliers Engineering & Design job no. 23777258 dated September 1, 2023.**

Analysis

The existing tower was analyzed using a comprehensive computer program entitled tnxTower. The program analyzes the tower, considering the worst case loading condition. The tower is considered as loaded by concentric forces along the tower, and the model assumes that the tower members are subjected to bending, axial, and shear forces.

The existing tower was analyzed for the controlling basic wind speed with no ice and the applicable wind and ice combination to determine stresses in members as per guidelines of TIA-222-H entitled "Structural Standard for Antenna Support Structures, Antennas and Small Wind Turbine Support Structures", the American Institute of Steel Construction (AISC) and the Manual of Steel Construction; Load and Resistance Factor Design (LRFD).

The controlling wind speed is determined by evaluating the local available wind speed data as provided in Appendix P of the CSBC[1] and the wind speed data available in the TIA-222-H Standard.

Tower Loading

Tower loading was determined by the basic wind speed as applied to projected surface areas with modification factors per TIA-222-H, gravity loads of the tower structure and its components, and the application of 1.0" radial ice on the tower structure and its components.

Load Cases:	Load Case 1; 125 mph (Risk Cat III) wind speed w/ no ice plus gravity load – used in calculation of tower stresses and rotation.	*[Appendix P of the 2022 CT Building Code]*
	Load Case 2; 40 mph wind speed w/ 1.00" radial ice plus gravity load – used in calculation of tower stresses.	*[Annex B of TIA-222-H]*
	Load Case 3; 60 mph wind speed w/ no radial ice plus gravity load – used in calculation of tower twist and sway.	

[1] The 2021 International Building Code as amended by the 2022 Connecticut State Building Code (CSBC).

Tower Capacity

- Calculated stresses were found to be within allowable limits.

Tower Section	Elevation	Stress Ratio (percentage of capacity)	Result
Leg (T3)	152'-0"- 172'-0"	94.5%	**PASS**
Diagonal (T5)	122'-0"- 142'-0"	89.1%	**PASS**

Foundation and Anchors

The existing foundation consists of three (3) rock anchored reinforced concrete pad and piers bearing directly on existing sub grade. The sub-grade conditions used in the analysis of the existing foundation were obtained from a combination of the aforementioned manufacturers original design documents; PiROD Job No. A-115075 (foundation alternate #2) and a geo-technical soils study report prepared by Clarence Welti & Associates, Inc., dated March 03, 1998. The tower legs are connected to the foundation by means of six (6) 1.25"∅, ASTM 687 Grade 105 anchor bolts per leg, embedded ±6-ft into the concrete foundation structure.

- The tower reactions developed from the governing Load Case of the were used in the verification of the foundation and anchor bolts:

Leg Reactions	Vector	Proposed Tower Reactions
Leg	Shear	**46 kips**
	Compression	**494 kips**
	Uplift	**440 kips**
Base	Shear	**78 kips**
	Compression	**71 kips**
	Moment	**8150 kip-ft**

- The anchor bolts were found to be within allowable limits.

Tower Section	Component	Stress Ratio (percentage of capacity)	Result
Anchor Bolts	Tension	73.5%	**PASS**

- The foundation was found to be within allowable limits.

Foundation Type	Design Limit	Allowable Limit/FS	Proposed Loading	Result
Rock Anchored Pad and Pier (x3)	Ultimate Bearing Pressure	20.00 ksf	7.1 ksf	**PASS**
	Rock Mass Uplift Resistance	1.00 (1)	1.32	**PASS**

Note 1: Minimum required Factor of Safety (FS) of 1.0 required per TIA-222-H section 9.4

Conclusion

This analysis shows that the subject tower **is adequate** to support the proposed antenna configuration.

The analysis is based, in part, on the information provided to this office by Verizon. If the existing conditions are different than the information in this report, Centek Engineering, Inc. must be contacted for resolution of any potential issues.

Please feel free to call with any questions or comments.

Respectfully Submitted by:

Timothy J. Lynn, PE
Structural Engineer

STATE OF CONNECTICUT
TIMOTHY J. LYNN
No. 29336
LICENSED
PROFESSIONAL ENGINEER

Standard Conditions for Furnishing of Professional Engineering Services on Existing Structures

All engineering services are performed on the basis that the information used is current and correct. This information may consist of, but is not necessarily limited to:

- Information supplied by the client regarding the structure itself, its foundations, the soil conditions, the antenna and feed line loading on the structure and its components, or other relevant information.
- Information from the field and/or drawings in the possession of Centek Engineering, Inc. or generated by field inspections or measurements of the structure.
- It is the responsibility of the client to ensure that the information provided to Centek Engineering, Inc. and used in the performance of our engineering services is correct and complete. In the absence of information to the contrary, we assume that all structures were constructed in accordance with the drawings and specifications and are in an un-corroded condition and have not deteriorated. It is therefore assumed that its capacity has not significantly changed from the "as new" condition.
- All services will be performed to the codes specified by the client, and we do not imply to meet any other codes or requirements unless explicitly agreed in writing. If wind and ice loads or other relevant parameters are to be different from the minimum values recommended by the codes, the client shall specify the exact requirement. In the absence of information to the contrary, all work will be performed in accordance with the latest revision of ANSI/ASCE10 & ANSI/EIA-222
- All services performed, results obtained, and recommendations made are in accordance with generally accepted engineering principles and practices. Centek Engineering, Inc. is not responsible for the conclusions, opinions and recommendations made by others based on the information we supply.

GENERAL DESCRIPTION OF STRUCTURAL ANALYSIS PROGRAM

tnxTower, is an integrated structural analysis and design software package for Designed specifically for the telecommunications industry, tnxTower, formerly RISA Tower, automates much of the tower analysis and design required by the TIA/EIA 222 Standard.

tnxTower Features:

- tnxTower can analyze and design 3- and 4-sided guyed towers, 3- and 4-sided self-supporting towers and either round or tapered ground mounted poles with or without guys.
- The program analyzes towers using the TIA-222-H standard or any of the previous TIA/EIA standards back to RS-222 (1959). Steel design is checked using the AISC ASD or the AISC LRFD specifications.
- Linear and non-linear (P-delta) analyses can be used in determining displacements and forces in the structure. Wind pressures and forces are automatically calculated.
- Extensive graphics plots include material take-off, shear-moment, leg compression, displacement, twist, feed line, guy anchor and stress plots.
- tnxTower contains unique features such as True Cable behavior, hog rod take-up, foundation stiffness and much more.

Section	11	12	13	14	15	16	17	18	19	20	21
Legs	SR1 3/4	SR 2	SR 2 1/4	Pipod 105245	Pipod 105217	Pipod 105218	Pipod 105218 mini. w/1" dia. S.R.	Pipod 105218 mini. w/1" dia. S.R.	Pipod 105220 mini. w/1" dia. S.R.		
Leg Grade					A572-50						
Diagonals			SR 7/8		L3x3x3/16	L3x3x1/4		L3 1/2x3 1/2x1/4		L3 1/2x3 1/2x3/16	L4x4x1/4
Diagonal Grade			A572-50					A572-50		A36	A572-50
Top Girts	L3x3x3/16		SR 1		L2 1/2x2 1/2x3/16	A36					
Bottom Girts	SR 7/8		SR 1								
Face Width (ft)	4.5										
# Panels @ (in)	5 @ 2.166	7 @ 2.27733	9 @ 2.344					18 @ 10			
Weight (K)	0.8	0.9	1.0	1.3	1.5	1.7	1.7	1.8	1.8	1.8	1.8

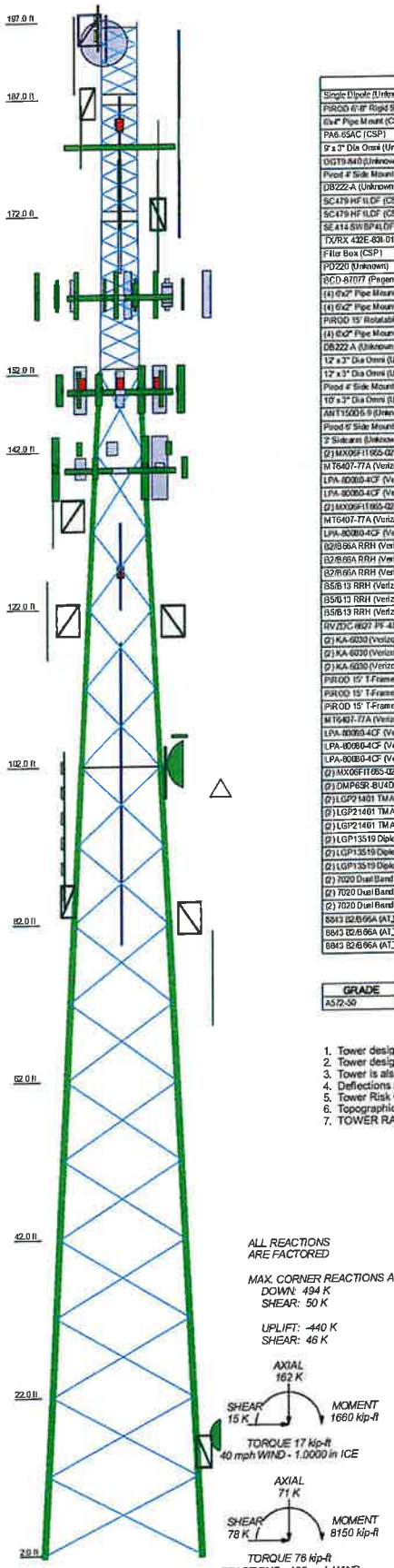

DESIGNED APPURTENANCE LOADING

TYPE	ELEVATION	TYPE	ELEVATION
Single Dipole (Unknown)	196.26	4478 B14 (AT&T)	150
PIROD 6'-8' Rigid Side Arm (Verizon)	196	4478 B14 (AT&T)	150
(6)4" Pipe Mount (CSP)	194.92	4478 B14 (AT&T)	150
PA6.65AC (CSP)	194.25	4449 B5/B12 (AT&T)	150
9' x 3" Dia Omni (Unknown)	192.75	4449 B5/B12 (AT&T)	150
OGT9-840 (Unknown)	190.25	4449 B5/B12 (AT&T)	150
Pipod 4' Side Mount Standoff (1) (Unknown)	190.5	DC6-48-60-18-8F Surge Arrestor (AT&T)	150
DB222-A (Unknown)	185.25	DC6-48-60-18-8F Surge Arrestor (AT&T)	150
SC479-HF1LDF (CSP (Inverted))	184	DC6-48-60-18-8F Surge Arrestor (AT&T)	150
SC479-HF1LDF (CSP (Inverted))	184	Pipod 12' T-Frame Sector Mount (1) (AT&T)	150
SE414 SWBP4LDF (DOD) (CSP)	184	Pipod 12' T-Frame Sector Mount (1) (AT&T)	150
TX/RX 432E-83I-01T (CSP)	184	Pipod 12' T-Frame Sector Mount (1) (AT&T)	150
Filler Box (CSP)	180	7770.00 (AT&T)	150
PD220 (Unknown)	182.25	7770.00 (AT&T)	150
6CD-87077 (Pagenet)	181.5	7770.00 (AT&T)	150
(4) 6x2" Pipe Mount (Unknown)	181.25	(2) DMP65R-BU8D (AT&T)	150
(4) 6x2" Pipe Mount (Unknown)	181.25	(2) DMP65R-BU8D (AT&T)	150
PIROD 15' Rotatable Platform (Lattice) (Unknown)	181.25	AIR6419 (T-Mobile)	140
(4) 6x2" Pipe Mount (Unknown)	181.25	AIR6419 (T-Mobile)	140
DB222-A (Unknown (Inverted))	180.25	AIR6419 (T-Mobile)	140
12' x 3" Dia Omni (Unknown)	175.25	APXVAARR24-43 (T-Mobile)	140
12' x 3" Dia Omni (Unknown (Inverted))	175.25	APXVAARR24-43 (T-Mobile)	140
Pipod 4' Side Mount Standoff (1) (Unknown)	174.25	APXVAARR24-43 (T-Mobile)	140
10' x 3" Dia Omni (Unknown (Inverted))	174.25	4460 B25+B66 (T-Mobile)	140
ANT1200B-9 (Unknown (Inverted))	173.75	4460 B25+B66 (T-Mobile)	140
Pipod 6' Side Mount Standoff (1) (Unknown)	172.25	4460 B25+B66 (T-Mobile)	140
2' Sidearm (Unknown)	170.2	Radio 4449 B71 B12 (T-Mobile)	140
(2) MX06FIT665-02 (Verizon)	162	Radio 4449 B71 B12 (T-Mobile)	140
MT6407-77A (Verizon)	162	Radio 4449 B71 B12 (T-Mobile)	140
LPA-80060-4CF (Verizon)	162	10-ft T-Frame (T-Mobile)	140
LPA-80060-4CF (Verizon)	162	10-ft T-Frame (T-Mobile)	140
(2) MX06FIT665-02 (Verizon)	162	10-ft T-Frame (T-Mobile)	140
MT6407-77A (Verizon)	162	SRL110A (Eversource)	135
LPA-80060-4CF (Verizon)	162	PIROD 6' Rigid Side Arm w/ 3" STD mount pipe (Eversource)	134
B2/B66A RRH (Verizon)	162	DB585Y (Eversource)	130
B2/B66A RRH (Verizon)	162	PIROD 6' Rigid Side Arm w/ 3" STD mount pipe (Eversource)	126
B2/B66A RRH (Verizon)	162	Tower Top Amplifier (Eversource)	126
B5/B13 RRH (Verizon)	162	DB585Y (Eversource)	125
B5/B13 RRH (Verizon)	162	OD212-1 (Unknown)	120.67
B5/B13 RRH (Verizon)	162	PIROD 6' Rigid Side Arm w/ 3" STD mount pipe (Unknown)	120.67
RVZDC-6627-PF-48 (Verizon)	162	PIROD 6' Rigid Side Arm w/ 3" STD mount pipe (Vacant)	120.5
(2) KA-6030 (Verizon - Proposed)	162	DS2C03F36D-O (Eversource)	117.5
(2) KA-6030 (Verizon - Proposed)	162	Pipod 4' Side Mount Standoff (1) (Eversource)	117.5
(2) KA-6030 (Verizon - Proposed)	162	DB2054 (Unknown)	109.25
PIROD 15' T-Frame (Verizon)	162	Ice Canopy	106
PIROD 15' T-Frame (Verizon)	162	PA6.65AC (CSP)	102.25
PIROD 15' T-Frame (Verizon)	162	6"x4" Pipe Mount (CSP)	101.2
MT6407-77A (Verizon)	162	PIROD 6' Rigid Side Arm w/ 3" STD mount pipe (Unknown)	100.83
LPA-80060-4CF (Verizon)	162	DB224 (Unknown)	94
LPA-80060-4CF (Verizon)	162	PD220 (Unknown)	90.41
LPA-80060-4CF (Verizon)	162	2-ft Stand Off (Unknown)	89
(2) MX06FIT665-02 (Verizon)	162	PIROD 6' Rigid Side Arm w/ 3" STD mount pipe (Unknown)	82.67
(2) DMP65R-BU4D (AT&T)	150	PIROD 6' Rigid Side Arm w/ 3" STD mount pipe (Unknown)	79.5
(2) LGP21401 TMA (AT&T)	150	12' x 3" Dia Omni (Unknown)	75
(2) LGP21401 TMA (AT&T)	150	OD432-A (Unknown)	70.25
(2) LGP21401 TMA (AT&T)	150	12M (Verizon)	17
(2) LGP13519 Diplexer (AT&T)	150	2-ft Stand Off (Unknown)	15
(2) LGP13519 Diplexer (AT&T)	150		
(2) LGP13519 Diplexer (AT&T)	150		
(2) 7020 Dual Band RET (AT&T)	150		
(2) 7020 Dual Band RET (AT&T)	150		
(2) 7020 Dual Band RET (AT&T)	150		
8843 B2/B66A (AT&T)	150		
8843 B2/B66A (AT&T)	150		
8843 B2/B66A (AT&T)	150		

MATERIAL STRENGTH

GRADE	Fy	Fu	GRADE	Fy	Fu
A572-50	50 ksi	65 ksi	A36	36 ksi	58 ksi

TOWER DESIGN NOTES

1. Tower designed for Exposure C to the TIA-222-H Standard.
2. Tower designed for a 125 mph basic wind in accordance with the TIA-222-H Standard.
3. Tower is also designed for a 40 mph basic wind with 1.00 in ice. Ice is considered to increase in thickness with height.
4. Deflections are based upon a 60 mph wind.
5. Tower Risk Category III.
6. Topographic Category 1 with Crest Height of 0.00 ft
7. TOWER RATING: 94.5%

Centek Engineering Inc.
63-2 North Branford Rd.
Branford, CT 06405
Phone: (203) 488-0580
FAX: (203) 488-8587

Job: 23155.00 - Cornwall 2			
Project: 7 Surden Mountain Road, Sharon, CT			
Client: Verizon Wireless	Drawn by: TJL	Appr'd:	
Code: TIA-222-H	Date: 11/27/23	Scale: NTS	
Path:		Dwg No. E-1	

Feed Line Plan

Round | Flat | App In Face | App Out Face | Truss-Leg

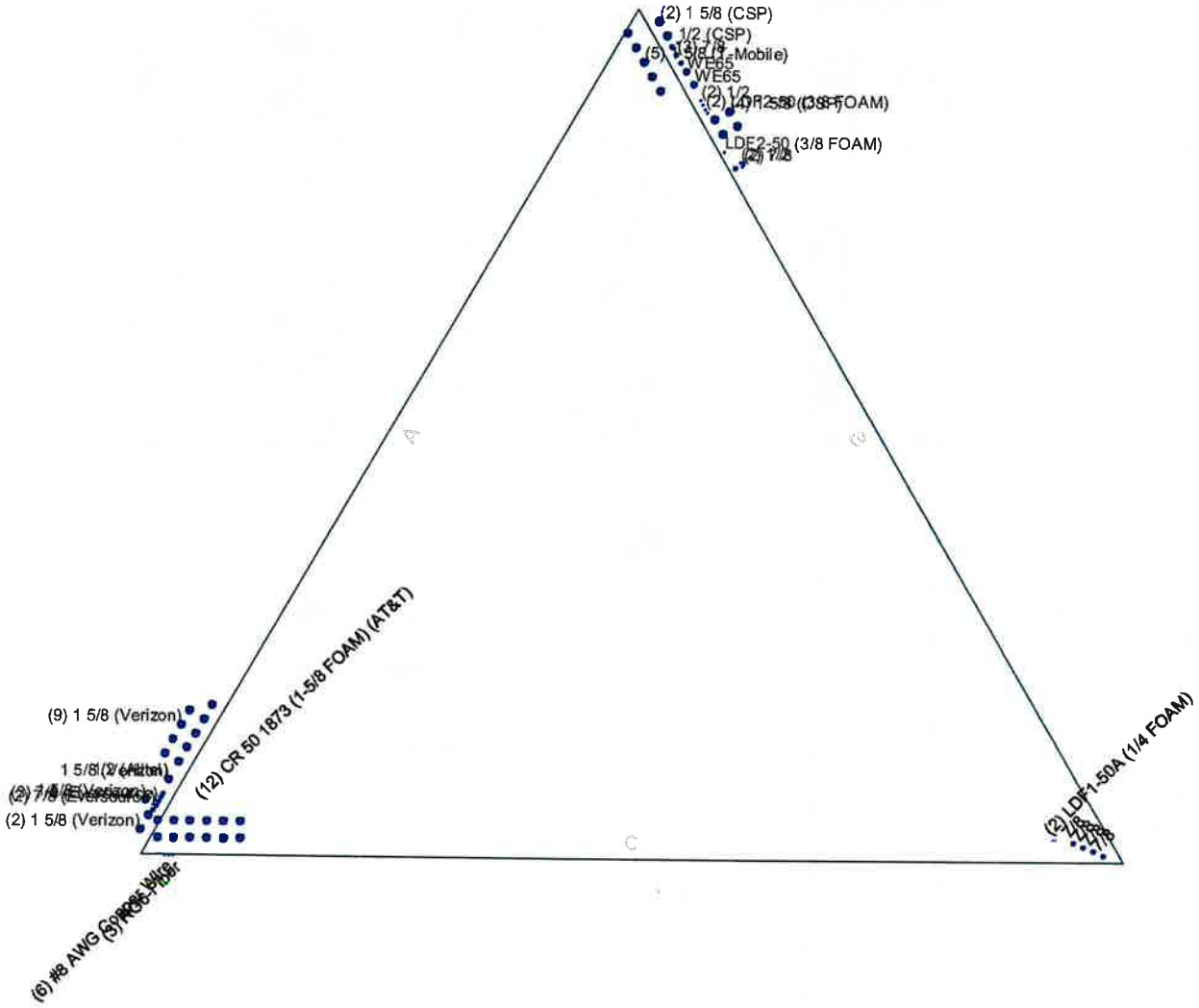

Centek Engineering Inc.	Job: 23155.00 - Cornwall 2		
63-2 North Branford Rd.	Project: 7 Surdan Mountain Road, Sharon, CT		
Branford, CT 06405	Client: Verizon Wireless	Drawn by: TJL	App'd:
Phone: (203) 488-0580	Code: TIA-222-H	Date: 11/27/23	Scale: NTS
FAX: (203) 488-8587	Path:		Dwg No. E-7

Feed Line Distribution Chart
2' - 197'

Round | Flat | App In Face | App Out Face | Truss Leg

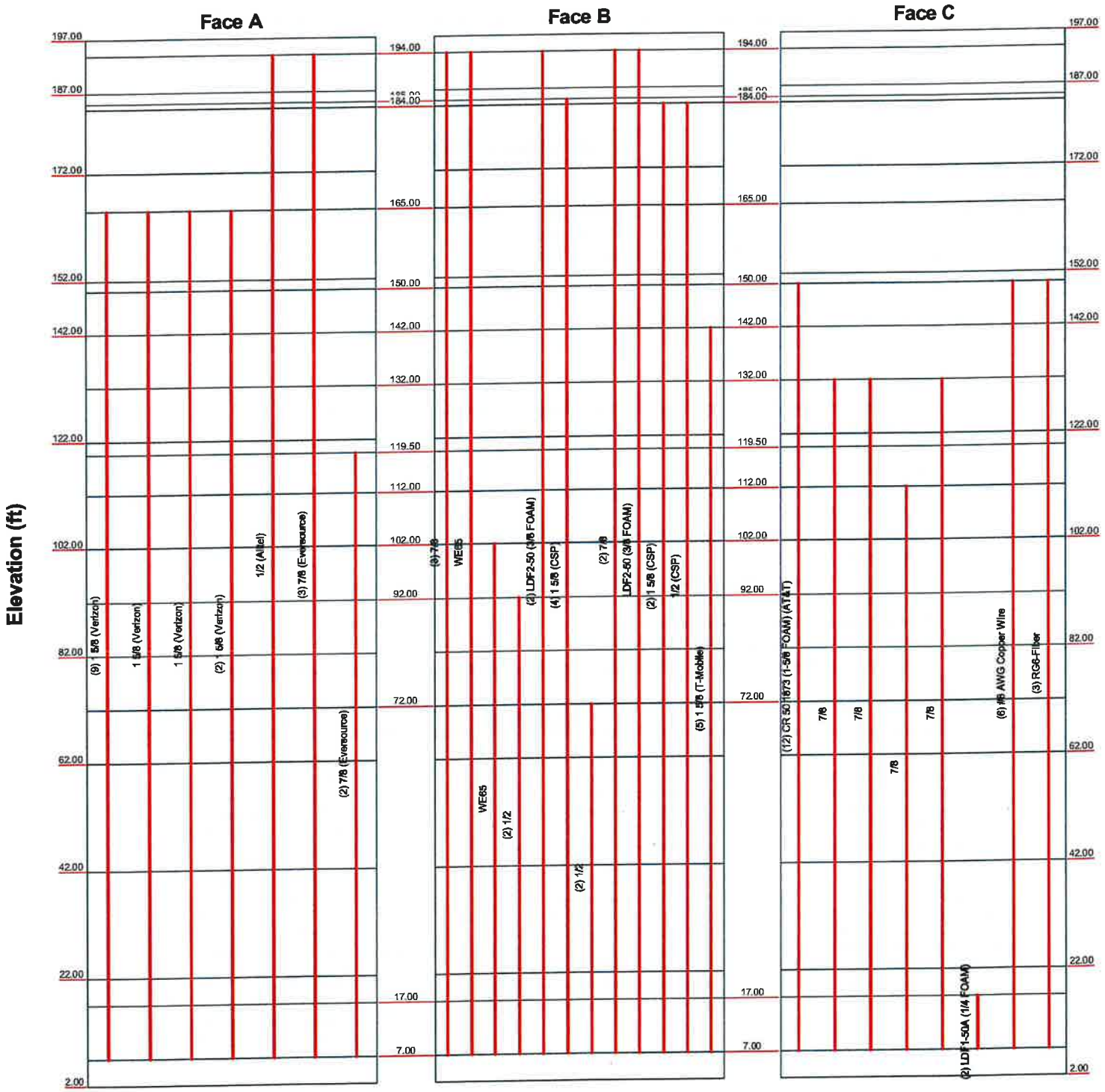

Centek Engineering Inc. 63-2 North Branford Rd. Branford, CT 06405 Phone: (203) 488-0580 FAX: (203) 488-8587	Job: 23155.00 - Cornwall 2		
	Project: 7 Surdan Mountain Road, Sharon, CT		
	Client: Verizon Wireless	Drawn by: TJL	App'd:
	Code: TIA-222-H	Date: 11/27/23	Scale: NTS
	Path:		Dwg No. E-7

Tower Input Data

The main tower is a 3x free standing tower with an overall height of 197.00 ft above the ground line.
The base of the tower is set at an elevation of 2.00 ft above the ground line.
The face width of the tower is 4.50 ft at the top and 20.00 ft at the base.
This tower is designed using the TIA-222-H standard.
The following design criteria apply:

Tower base elevation above sea level: 2.00 ft.
Basic wind speed of 125 mph.
Risk Category III.
Exposure Category C.
Simplified Topographic Factor Procedure for wind speed-up calculations is used.
Topographic Category: 1.
Crest Height: 0.00 ft.
Nominal ice thickness of 1.0000 in.
Ice thickness is considered to increase with height.
Ice density of 56 pcf.
A wind speed of 40 mph is used in combination with ice.
Temperature drop of 50 °F.
Deflections calculated using a wind speed of 60 mph.
A non-linear (P-delta) analysis was used.
Pressures are calculated at each section.
Stress ratio used in tower member design is 1.
Local bending stresses due to climbing loads, feed line supports, and appurtenance mounts are not considered.

Options

√ Consider Moments - Legs
Consider Moments - Horizontals
Consider Moments - Diagonals
Use Moment Magnification
√ Use Code Stress Ratios
√ Use Code Safety Factors - Guys
Escalate Ice
Always Use Max Kz
Use Special Wind Profile
√ Include Bolts In Member Capacity
Leg Bolts Are At Top Of Section
√ Secondary Horizontal Braces Leg
Use Diamond Inner Bracing (4 Sided)
√ SR Members Have Cut Ends
SR Members Are Concentric

Distribute Leg Loads As Uniform
Assume Legs Pinned
√ Assume Rigid Index Plate
√ Use Clear Spans For Wind Area
√ Use Clear Spans For KL/r
Retension Guys To Initial Tension
Bypass Mast Stability Checks
√ Use Azimuth Dish Coefficients
√ Project Wind Area of Appurt.
Autocalc Torque Arm Areas
Add IBC .6D+W Combination
√ Sort Capacity Reports By Component
Triangulate Diamond Inner Bracing
Treat Feed Line Bundles As Cylinder
Ignore KL/ry For 60 Deg. Angle Legs

Use ASCE 10 X-Brace Ly Rules
√ Calculate Redundant Bracing Forces
Ignore Redundant Members in FEA
√ SR Leg Bolts Resist Compression
√ All Leg Panels Have Same Allowable
Offset Girt At Foundation
√ Consider Feed Line Torque
Include Angle Block Shear Check
Use TIA-222-H Bracing Resist. Exemption
Use TIA-222-H Tension Splice Exemption

Poles

Include Shear-Torsion Interaction
Always Use Sub-Critical Flow
Use Top Mounted Sockets
Pole Without Linear Attachments
Pole With Shroud Or No Appurtenances
Outside and Inside Corner Radii Are Known

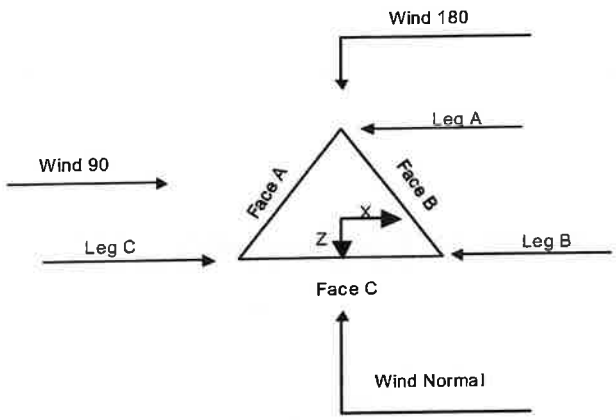

Triangular Tower

Tower Section Geometry

Tower Section	Tower Elevation ft	Assembly Database	Description	Section Width ft	Number of Sections	Section Length ft
T1	197.00-187.00		V4.5 111574	4.50	1	10.00
T2	187.00-172.00		V4.5 111574	4.50	1	15.00
T3	172.00-152.00		H5.0 116640	4.50	1	20.00
T4	152.00-142.00		U6.0 105245	5.00	1	10.00
T5	142.00-122.00		U8.0 105217	6.00	1	20.00
T6	122.00-102.00		U10.0 105217 L3x3/16	8.00	1	20.00
T7	102.00-82.00		U12.0 105218	10.00	1	20.00
T8	82.00-62.00		U14.0 105218	12.00	1	20.00
T9	62.00-42.00		U16.0 105219	14.00	1	20.00
T10	42.00-22.00		U18.0 105219	16.00	1	20.00
T11	22.00-2.00		U20.0 105219 L3.5x5/16	18.00	1	20.00

Tower Section Geometry *(cont'd)*

Tower Section	Tower Elevation ft	Diagonal Spacing ft	Bracing Type	Has K Brace End Panels	Has Horizontals	Top Girt Offset in	Bottom Girt Offset in
T1	197.00-187.00	2.17	X Brace	No	Steps	8.0160	8.0160
T2	187.00-172.00	2.28	X Brace	No	Steps	8.0160	8.0160
T3	172.00-152.00	2.34	X Brace	No	Steps	7.4880	7.4880
T4	152.00-142.00	10.00	X Brace	No	No	0.0000	0.0000

Tower Section	Tower Elevation ft	Diagonal Spacing ft	Bracing Type	Has K Brace End Panels	Has Horizontals	Top Girt Offset in	Bottom Girt Offset in
T5	142.00-122.00	10.00	X Brace	No	No	0.0000	0.0000
T6	122.00-102.00	10.00	X Brace	No	No	0.0000	0.0000
T7	102.00-82.00	10.00	X Brace	No	Yes	0.0000	0.0000
T8	82.00-62.00	10.00	X Brace	No	No	0.0000	0.0000
T9	62.00-42.00	10.00	X Brace	No	Yes	0.0000	0.0000
T10	42.00-22.00	10.00	X Brace	No	No	0.0000	0.0000
T11	22.00-2.00	10.00	X Brace	No	Yes	0.0000	0.0000

Tower Section Geometry *(cont'd)*

Tower Elevation ft	Leg Type	Leg Size	Leg Grade	Diagonal Type	Diagonal Size	Diagonal Grade
T1 197.00-187.00	Solid Round	1 3/4	A572-50 (50 ksi)	Solid Round	7/8	A572-50 (50 ksi)
T2 187.00-172.00	Solid Round	2	A572-50 (50 ksi)	Solid Round	7/8	A572-50 (50 ksi)
T3 172.00-152.00	Solid Round	2 1/4	A572-50 (50 ksi)	Solid Round	1	A572-50 (50 ksi)
T4 152.00-142.00	Truss Leg	Pirod 105245	A572-50 (50 ksi)	Single Angle	L2 1/2x2 1/2x3/16	A36 (36 ksi)
T5 142.00-122.00	Truss Leg	Pirod 105217	A572-50 (50 ksi)	Single Angle	L3x3x3/16	A572-50 (50 ksi)
T6 122.00-102.00	Truss Leg	Pirod 105218	A572-50 (50 ksi)	Single Angle	L3x3x1/4	A572-50 (50 ksi)
T7 102.00-82.00	Truss Leg	Pirod 105218 reinf. w/1" dia. S.R.	A572-50 (50 ksi)	Single Angle	L3x3x1/4	A572-50 (50 ksi)
T8 82.00-62.00	Truss Leg	Pirod 105219 reinf. w/1" dia. S.R.	A572-50 (50 ksi)	Single Angle	L3x3x5/16	A36 (36 ksi)
T9 62.00-42.00	Truss Leg	Pirod 105219 reinf. w/1" dia. S.R.	A572-50 (50 ksi)	Single Angle	L3 1/2x3 1/2x1/4	A572-50 (50 ksi)
T10 42.00-22.00	Truss Leg	Pirod 105220 reinf. w/1" dia. S.R.	A572-50 (50 ksi)	Single Angle	L3 1/2x3 1/2x5/16	A36 (36 ksi)
T11 22.00-2.00	Truss Leg	Pirod 105220 reinf. w/1" dia. S.R.	A572-50 (50 ksi)	Single Angle	L4x4x1/4	A572-50 (50 ksi)

Tower Section Geometry *(cont'd)*

Tower Elevation ft	Top Girt Type	Top Girt Size	Top Girt Grade	Bottom Girt Type	Bottom Girt Size	Bottom Girt Grade
T1 197.00-187.00	Single Angle	L3x3x5/16	A36 (36 ksi)	Solid Round	7/8	A572-50 (50 ksi)
T2 187.00-172.00	Solid Round	1	A572-50 (50 ksi)	Solid Round	1	A572-50 (50 ksi)
T3 172.00-152.00	Solid Round	1	A572-50 (50 ksi)	Solid Round	1	A572-50 (50 ksi)
T7 102.00-82.00	Single Angle	L3x3x3/16	A36 (36 ksi)	Single Angle		A36 (36 ksi)

Tower Section Geometry (cont'd)

Tower Elevation ft	Gusset Area (per face) ft²	Gusset Thickness in	Gusset Grade	Adjust. Factor A_f	Adjust. Factor A_r	Weight Mult.	Double Angle Stitch Bolt Spacing Diagonals in	Double Angle Stitch Bolt Spacing Horizontals in	Double Angle Stitch Bolt Spacing Redundants in
T1 197.00-187.00	0.00	0.0000	A36 (36 ksi)	1	1	1.02	36.0000	36.0000	36.0000
T2 187.00-172.00	0.00	0.0000	A36 (36 ksi)	1	1	1.02	36.0000	36.0000	36.0000
T3 172.00-152.00	0.00	0.0000	A36 (36 ksi)	1	1	1.02	36.0000	36.0000	36.0000
T4 152.00-142.00	1.78	0.5000	A36 (36 ksi)	1	1	1.05	36.0000	36.0000	36.0000
T5 142.00-122.00	3.22	0.5000	A36 (36 ksi)	1	1.02	1.05	36.0000	36.0000	36.0000
T6 122.00-102.00	3.22	0.5000	A36 (36 ksi)	1	1	1.05	36.0000	36.0000	36.0000
T7 102.00-82.00	3.22	0.5000	A36 (36 ksi)	1	1.02	1.05	36.0000	36.0000	36.0000
T8 82.00-62.00	3.22	0.5000	A36 (36 ksi)	1	1	1.05	36.0000	36.0000	36.0000
T9 62.00-42.00	3.22	0.5000	A36 (36 ksi)	1	1.02	1.05	36.0000	36.0000	36.0000
T10 42.00-22.00	3.22	0.5000	A36 (36 ksi)	1	1	1.05	36.0000	36.0000	36.0000
T11 22.00-2.00	3.22	0.5000	A36 (36 ksi)	1	1.02	1.05	36.0000	36.0000	36.0000

Tower Section Geometry (cont'd)

Tower Elevation ft	Calc K Single Angles	Calc K Solid Rounds	K Factors[1] Legs	X Brace Diags X Y	K Brace Diags X Y	Single Diags X Y	Girts X Y	Horiz. X Y	Sec. Horiz. X Y	Inner Brace X Y
T1 197.00-187.00	No	Yes	1	1 1	1 1	1 1	1 1	1 1	1 1	1 1
T2 187.00-172.00	No	Yes	1	1 1	1 1	1 1	0.5 0.5	1 1	1 1	1 1
T3 172.00-152.00	No	Yes	1	1 1	1 1	1 1	0.5 0.5	1 1	1 1	1 1
T4 152.00-142.00	Yes	No	1	1 1	1 1	1 1	1 1	1 1	1 1	1 1
T5 142.00-122.00	Yes	No	1	1 1	1 1	1 1	1 1	1 1	1 1	1 1
T6 122.00-102.00	Yes	No	1	1 1	1 1	1 1	1 1	1 1	1 1	1 1
T7 102.00-82.00	Yes	No	1	1 1	1 1	1 1	1 1	1 1	1 1	1 1
T8 82.00-62.00	Yes	No	1	1 1	1 1	1 1	1 1	1 1	1 1	1 1
T9 62.00-42.00	Yes	No	1	1 1	1 1	1 1	1 1	1 1	1 1	1 1
T10 42.00-22.00	Yes	No	1	1 1	1 1	1 1	1 1	1 1	1 1	1 1

Tower Elevation ft	Calc K Single Angles	Calc K Solid Rounds	K Factors[1] Legs	X Brace Diags X Y	K Brace Diags X Y	Single Diags X Y	Girts X Y	Horiz. X Y	Sec. Horiz. X Y	Inner Brace X Y
T11 22.00-2.00	Yes	No	1	1 1	1 1	1 1	1 1	1 1	1 1	1 1

[1]Note: K factors are applied to member segment lengths. K-braces without inner supporting members will have the K factor in the out-of-plane direction applied to the overall length.

Tower Section Geometry *(cont'd)*

Tower Elevation ft	Truss-Leg K Factors: Truss-Legs Used As Leg Members: Leg Panels	X Brace Diagonals	Z Brace Diagonals	Truss-Legs Used As Inner Members: Leg Panels	X Brace Diagonals	Z Brace Diagonals
T4 152.00-142.00	1	0.5	0.85	1	0.5	0.85
T5 142.00-122.00	1	0.5	0.85	1	0.5	0.85
T6 122.00-102.00	1	0.5	0.85	1	0.5	0.85
T7 102.00-82.00	1	0.5	0.85	1	0.5	0.85
T8 82.00-62.00	1	0.5	0.85	1	0.5	0.85
T9 62.00-42.00	1	0.5	0.85	1	0.5	0.85
T10 42.00-22.00	1	0.5	0.85	1	0.5	0.85
T11 22.00-2.00	1	0.5	0.85	1	0.5	0.85

Tower Section Geometry *(cont'd)*

Tower Elevation ft	Leg Net Width Deduct in	Leg U	Diagonal Net Width Deduct in	Diagonal U	Top Girt Net Width Deduct in	Top Girt U	Bottom Girt Net Width Deduct in	Bottom Girt U	Mid Girt Net Width Deduct in	Mid Girt U	Long Horizontal Net Width Deduct in	Long Horizontal U	Short Horizontal Net Width Deduct in	Short Horizontal U
T1 197.00-187.00	0.0000	1	0.0000	1	0.0000	1	0.0000	1	0.0000	1	0.0000	1	0.0000	1
T2 187.00-172.00	0.0000	1	0.0000	1	0.0000	1	0.0000	1	0.0000	1	0.0000	1	0.0000	1
T3 172.00-152.00	0.0000	1	0.0000	1	0.0000	1	0.0000	1	0.0000	1	0.0000	1	0.0000	1
T4 152.00-142.00	0.0000	1	0.0000	1	0.0000	1	0.0000	1	0.0000	1	0.0000	1	0.0000	1
T5 142.00-122.00	0.0000	1	0.0000	1	0.0000	1	0.0000	1	0.0000	1	0.0000	1	0.0000	1

Tower Elevation ft	Leg		Diagonal		Top Girt		Bottom Girt		Mid Girt		Long Horizontal		Short Horizontal	
	Net Width Deduct in	U	Net Width Deduct in	U	Net Width Deduct in	U	Net Width Deduct in	U	Net Width Deduct in	U	Net Width Deduct in	U	Net Width Deduct in	U
T6 122.00-102.00	0.0000	1	0.0000	1	0.0000	1	0.0000	1	0.0000	1	0.0000	1	0.0000	1
T7 102.00-82.00	0.0000	1	0.0000	1	0.0000	1	0.0000	1	0.0000	1	0.0000	1	0.0000	1
T8 82.00-62.00	0.0000	1	0.0000	1	0.0000	1	0.0000	1	0.0000	1	0.0000	1	0.0000	1
T9 62.00-42.00	0.0000	1	0.0000	1	0.0000	1	0.0000	1	0.0000	1	0.0000	1	0.0000	1
T10 42.00-22.00	0.0000	1	0.0000	1	0.0000	1	0.0000	1	0.0000	1	0.0000	1	0.0000	1
T11 22.00-2.00	0.0000	1	0.0000	1	0.0000	1	0.0000	1	0.0000	1	0.0000	1	0.0000	1

Tower Elevation ft	Redundant Horizontal		Redundant Diagonal		Redundant Sub-Diagonal		Redundant Sub-Horizontal		Redundant Vertical		Redundant Hip		Redundant Hip Diagonal	
	Net Width Deduct in	U	Net Width Deduct in	U	Net Width Deduct in	U	Net Width Deduct in	U	Net Width Deduct in	U	Net Width Deduct in	U	Net Width Deduct in	U
T1 197.00-187.00	0.0000	0.75	0.0000	0.75	0.0000	0.75	0.0000	0.75	0.0000	0.75	0.0000	0.75	0.0000	0.75
T2 187.00-172.00	0.0000	0.75	0.0000	0.75	0.0000	0.75	0.0000	0.75	0.0000	0.75	0.0000	0.75	0.0000	0.75
T3 172.00-152.00	0.0000	0.75	0.0000	0.75	0.0000	0.75	0.0000	0.75	0.0000	0.75	0.0000	0.75	0.0000	0.75
T4 152.00-142.00	0.0000	0.75	0.0000	0.75	0.0000	0.75	0.0000	0.75	0.0000	0.75	0.0000	0.75	0.0000	0.75
T5 142.00-122.00	0.0000	0.75	0.0000	0.75	0.0000	0.75	0.0000	0.75	0.0000	0.75	0.0000	0.75	0.0000	0.75
T6 122.00-102.00	0.0000	0.75	0.0000	0.75	0.0000	0.75	0.0000	0.75	0.0000	0.75	0.0000	0.75	0.0000	0.75
T7 102.00-82.00	0.0000	0.75	0.0000	0.75	0.0000	0.75	0.0000	0.75	0.0000	0.75	0.0000	0.75	0.0000	0.75
T8 82.00-62.00	0.0000	0.75	0.0000	0.75	0.0000	0.75	0.0000	0.75	0.0000	0.75	0.0000	0.75	0.0000	0.75
T9 62.00-42.00	0.0000	0.75	0.0000	0.75	0.0000	0.75	0.0000	0.75	0.0000	0.75	0.0000	0.75	0.0000	0.75
T10 42.00-22.00	0.0000	0.75	0.0000	0.75	0.0000	0.75	0.0000	0.75	0.0000	0.75	0.0000	0.75	0.0000	0.75
T11 22.00-2.00	0.0000	0.75	0.0000	0.75	0.0000	0.75	0.0000	0.75	0.0000	0.75	0.0000	0.75	0.0000	0.75

Tower Section Geometry *(cont'd)*

Tower Elevation ft	Leg Connection Type	Leg		Diagonal		Top Girt		Bottom Girt		Mid Girt		Long Horizontal		Short Horizontal	
		Bolt Size in	No.	Bolt Size in	No.	Bolt Size in	No.	Bolt Size in	No.	Bolt Size in	No.	Bolt Size in	No.	Bolt Size in	No.
T1 197.00-187.00	Sleeve DS	0.6250 A325N	5	0.6250 A325N	0	0.6250 A325N	0	0.6250 A325N	0	0.6250 A325N	0	0.6250 A325N	0	0.6250 A325N	0
T2 187.00-172.00	Sleeve DS	0.7500 A325N	5	0.6250 A325N	0	0.6250 A325N	0	0.6250 A325N	0	0.6250 A325N	0	0.6250 A325N	0	0.6250 A325N	0
T3 172.00-152.00	Flange	1.0000 A325N	6	0.6250 A325N	0	0.6250 A325N	0	0.6250 A325N	0	0.6250 A325N	0	0.6250 A325N	0	0.6250 A325N	0

Tower Elevation ft	Leg Connection Type	Leg Bolt Size in	Leg No.	Diagonal Bolt Size in	Diagonal No.	Top Girt Bolt Size in	Top Girt No.	Bottom Girt Bolt Size in	Bottom Girt No.	Mid Girt Bolt Size in	Mid Girt No.	Long Horizontal Bolt Size in	Long Horizontal No.	Short Horizontal Bolt Size in	Short Horizontal No.
T4 152.00-142.00	Flange	1.0000 A325N	6	1.0000 A325N	1	0.6250 A325N	0	0.6250 A325N	0	0.6250 A325N	0	0.6250 A325N	0	0.6250 A325N	0
T5 142.00-122.00	Flange	1.0000 A325N	6	1.0000 A325X	1	0.6250 A325N	0	0.6250 A325N	0	0.6250 A325N	0	0.6250 A325N	0	0.6250 A325N	0
T6 122.00-102.00	Flange	1.0000 A325N	6	1.0000 A325N	1	0.6250 A325N	0	0.6250 A325N	0	0.6250 A325N	0	0.6250 A325N	0	0.6250 A325N	0
T7 102.00-82.00	Flange	1.0000 A325N	6	1.0000 A325X	1	1.0000 A325N	1	0.6250 A325N	0	0.6250 A325N	0	0.6250 A325N	0	0.6250 A325N	0
T8 82.00-62.00	Flange	1.2500 A325N	6	1.2500 A325N	1	0.6250 A325N	0	0.6250 A325N	0	0.6250 A325X	0	0.6250 A325N	0	0.6250 A325X	0
T9 62.00-42.00	Flange	1.2500 A325N	6	1.2500 A325X	1	0.6250 A325N	0	0.6250 A325N	0	0.6250 A325X	0	0.6250 A325N	0	0.6250 A325X	0
T10 42.00-22.00	Flange	1.2500 A325N	6	1.2500 A325N	1	0.6250 A325N	0	0.6250 A325N	0	0.6250 A325X	0	0.6250 A325N	0	0.6250 A325X	0
T11 22.00-2.00	Flange	1.2500 A687	6	1.2500 A325X	1	0.6250 A325N	0	0.6250 A325N	0	0.6250 A325X	0	0.6250 A325N	0	0.6250 A325X	0

Feed Line/Linear Appurtenances - Entered As Round Or Flat

Description	Face or Leg	Allow Shield	Exclude From Torque Calculation	Component Type	Placement ft	Face Offset in	Lateral Offset (Frac FW)	#	# Per Row	Clear Spacing in	Width or Diameter in	Perimeter in	Weight plf
1 5/8 (Verizon)	A	No	No	Ar (CaAa)	165.00 - 7.00	2.0000	-0.365	9	5	1.9800	1.9800		1.04
1 5/8 (Verizon)	A	No	No	Ar (CaAa)	165.00 - 7.00	2.0000	-0.42	1	1	1.9800	1.9800		1.04
1 5/8 (Verizon)	A	No	No	Ar (CaAa)	165.00 - 7.00	4.5000	-0.45	1	1	1.9800	1.9800		1.04
1 5/8 (Verizon)	A	No	No	Ar (CaAa)	165.00 - 7.00	2.0000	-0.47	2	2	1.9800	1.9800		1.04
1/2 (Alltel)	A	No	No	Ar (CaAa)	194.00 - 7.00	3.0000	-0.42	1	1	0.5800	0.5800		0.25
7/8 (Eversource)	A	No	No	Ar (CaAa)	194.00 - 7.00	2.0000	-0.445	3	3	1.1100	1.1100		0.54
CR 50 1873 (1-5/8 FOAM) (AT&T)	C	No	No	Ar (CaAa)	150.00 - 7.00	-7.0000	0.44	12	6	1.9800	1.9800		0.83
7/8	C	No	No	Ar (CaAa)	132.00 - 7.00	-1.0000	-0.48	1	1	1.1100	1.1100		0.54
7/8	C	No	No	Ar (CaAa)	132.00 - 7.00	-2.0000	-0.47	1	1	1.1100	1.1100		0.54
7/8	C	No	No	Ar (CaAa)	112.00 - 7.00	-3.0000	-0.46	1	1	1.1100	1.1100		0.54
7/8	C	No	No	Ar (CaAa)	132.00 - 7.00	-4.0000	-0.45	1	1	1.1100	1.1100		0.54
7/8	B	No	No	Ar (CaAa)	194.00 - 7.00	2.0000	-0.44	3	3	1.1100	1.1100		0.54
WE65	B	No	No	Ar (CaAa)	194.00 - 7.00	2.0000	-0.42	1	1	1.5836	1.5836		0.53
WE65	B	No	No	Ar (CaAa)	102.00 - 7.00	2.0000	-0.405	1	1	1.5836	1.5836		0.53
1/2	B	No	No	Ar (CaAa)	92.00 - 7.00	2.0000	-0.385	2	2	0.5800	0.5800		0.25
LDF2-50 (3/8	B	No	No	Ar (CaAa)	194.00 -	2.0000	-0.375	2	2	0.4400	0.4400		0.08

Description	Face or Leg	Allow Shield	Exclude From Torque Calculation	Component Type	Placement ft	Face Offset in	Lateral Offset (Frac FW)	#	# Per Row	Clear Spacing in	Width or Diameter in	Perimeter in	Weight plf
FOAM)					7.00								
1 5/8 (CSP)	B	No	No	Ar (CaAa)	185.00 - 7.00	2.0000	-0.355	4	2	1.9800	1.9800		1.04
1/2	B	No	No	Ar (CaAa)	72.00 - 7.00	3.0000	-0.31	2	2	0.5800	0.5800		0.25
7/8	B	No	No	Ar (CaAa)	194.00 - 7.00	1.0000	-0.31	2	1	1.1100	1.1100		0.54
LDF1-50A (1/4 FOAM)	C	No	No	Ar (CaAa)	17.00 - 7.00	-5.0000	-0.43	2	2	0.3500	0.3500		0.06
#8 AWG Copper WIre	C	No	No	Ar (CaAa)	150.00 - 7.00	0.0000	0.48	6	6	0.2500	0.1285		0.05
RG6-Fiber	C	No	No	Ar (CaAa)	150.00 - 7.00	0.0000	0.47	3	3	0.5000	0.5000		1.00
LDF2-50 (3/8 FOAM)	B	No	No	Ar (CaAa)	194.00 - 7.00	1.0000	-0.33	1	1	0.4400	0.4400		0.08
1 5/8 (CSP)	B	No	No	Ar (CaAa)	184.00 - 7.00	2.0000	-0.47	2	2	1.9800	1.9800		1.04
1/2 (CSP)	B	No	No	Ar (CaAa)	184.00 - 7.00	4.0000	-0.45	1	1	0.5800	0.5800		0.25
1 5/8 (T-Mobile)	B	No	No	Ar (CaAa)	142.00 - 7.00	-4.0000	-0.45	5	5	1.9800	1.9800		1.04
7/8 (Eversource)	A	No	No	Ar (CaAa)	119.50 - 7.00	2.0000	-0.445	2	2	1.1100	1.1100		0.54

Feed Line/Linear Appurtenances Section Areas

Tower Section	Tower Elevation ft	Face	A_R ft^2	A_F ft^2	C_AA_A In Face ft^2	C_AA_A Out Face ft^2	Weight K
T1	197.00-187.00	A	0.000	0.000	2.737	0.000	0.01
		B	0.000	0.000	5.918	0.000	0.02
		C	0.000	0.000	0.000	0.000	0.00
T2	187.00-172.00	A	0.000	0.000	5.865	0.000	0.03
		B	0.000	0.000	28.424	0.000	0.13
		C	0.000	0.000	0.000	0.000	0.00
T3	172.00-152.00	A	0.000	0.000	41.282	0.000	0.21
		B	0.000	0.000	41.827	0.000	0.20
		C	0.000	0.000	0.000	0.000	0.00
T4	152.00-142.00	A	0.000	0.000	29.650	0.000	0.15
		B	0.000	0.000	20.914	0.000	0.10
		C	0.000	0.000	20.825	0.000	0.11
T5	142.00-122.00	A	0.000	0.000	59.300	0.000	0.31
		B	0.000	0.000	61.627	0.000	0.30
		C	0.000	0.000	55.392	0.000	0.28
T6	122.00-102.00	A	0.000	0.000	63.185	0.000	0.33
		B	0.000	0.000	61.627	0.000	0.30
		C	0.000	0.000	59.832	0.000	0.30
T7	102.00-82.00	A	0.000	0.000	63.740	0.000	0.33
		B	0.000	0.000	65.954	0.000	0.32
		C	0.000	0.000	60.942	0.000	0.31
T8	82.00-62.00	A	0.000	0.000	63.740	0.000	0.33
		B	0.000	0.000	68.274	0.000	0.33
		C	0.000	0.000	60.942	0.000	0.31
T9	62.00-42.00	A	0.000	0.000	63.740	0.000	0.33
		B	0.000	0.000	69.434	0.000	0.33
		C	0.000	0.000	60.942	0.000	0.31
T10	42.00-22.00	A	0.000	0.000	63.740	0.000	0.33

Tower Section	Tower Elevation ft	Face	A_R ft^2	A_F ft^2	C_AA_A In Face ft^2	C_AA_A Out Face ft^2	Weight K
		B	0.000	0.000	69.434	0.000	0.33
		C	0.000	0.000	60.942	0.000	0.31
T11	22.00-2.00	A	0.000	0.000	47.805	0.000	0.25
		B	0.000	0.000	52.076	0.000	0.25
		C	0.000	0.000	46.407	0.000	0.23

Feed Line/Linear Appurtenances Section Areas - With Ice

Tower Section	Tower Elevation ft	Face or Leg	Ice Thickness in	A_R ft^2	A_F ft^2	C_AA_A In Face ft^2	C_AA_A Out Face ft^2	Weight K
T1	197.00-187.00	A	1.371	0.000	0.000	10.327	0.000	0.11
		B		0.000	0.000	24.067	0.000	0.24
		C		0.000	0.000	0.000	0.000	0.00
T2	187.00-172.00	A	1.362	0.000	0.000	22.056	0.000	0.23
		B		0.000	0.000	90.041	0.000	1.06
		C		0.000	0.000	0.000	0.000	0.00
T3	172.00-152.00	A	1.348	0.000	0.000	93.553	0.000	1.41
		B		0.000	0.000	129.745	0.000	1.53
		C		0.000	0.000	0.000	0.000	0.00
T4	152.00-142.00	A	1.335	0.000	0.000	63.878	0.000	1.00
		B		0.000	0.000	64.570	0.000	0.76
		C		0.000	0.000	37.451	0.000	0.71
T5	142.00-122.00	A	1.321	0.000	0.000	127.299	0.000	1.98
		B		0.000	0.000	180.921	0.000	2.19
		C		0.000	0.000	104.596	0.000	1.90
T6	122.00-102.00	A	1.299	0.000	0.000	141.909	0.000	2.10
		B		0.000	0.000	179.794	0.000	2.16
		C		0.000	0.000	118.870	0.000	2.05
T7	102.00-82.00	A	1.274	0.000	0.000	143.112	0.000	2.09
		B		0.000	0.000	193.368	0.000	2.27
		C		0.000	0.000	121.666	0.000	2.07
T8	82.00-62.00	A	1.243	0.000	0.000	141.916	0.000	2.05
		B		0.000	0.000	204.578	0.000	2.31
		C		0.000	0.000	120.553	0.000	2.04
T9	62.00-42.00	A	1.204	0.000	0.000	140.372	0.000	2.01
		B		0.000	0.000	208.310	0.000	2.29
		C		0.000	0.000	119.118	0.000	2.00
T10	42.00-22.00	A	1.146	0.000	0.000	138.163	0.000	1.94
		B		0.000	0.000	204.307	0.000	2.19
		C		0.000	0.000	117.064	0.000	1.94
T11	22.00-2.00	A	1.039	0.000	0.000	100.517	0.000	1.37
		B		0.000	0.000	147.602	0.000	1.51
		C		0.000	0.000	89.861	0.000	1.40

Feed Line Center of Pressure

Section	Elevation ft	CP_X in	CP_Z in	CP_X Ice in	CP_Z Ice in
T1	197.00-187.00	-1.5379	-4.5250	-1.7558	-5.8916
T2	187.00-172.00	0.1190	-11.9565	-0.5619	-12.0870
T3	172.00-152.00	-7.9139	-6.8037	-6.2548	-8.6992
T4	152.00-142.00	-11.9438	-0.7341	-8.0307	-2.3657

Section	Elevation ft	CP_X in	CP_Z in	CP_X Ice in	CP_Z Ice in
T5	142.00-122.00	-13.4409	-2.4004	-10.6630	-5.0228
T6	122.00-102.00	-15.9179	-1.7628	-14.1145	-5.1540
T7	102.00-82.00	-17.4076	-2.3712	-16.0168	-6.9026
T8	82.00-62.00	-19.9415	-2.9617	-18.4786	-9.1624
T9	62.00-42.00	-21.4231	-3.2508	-20.1937	-10.5527
T10	42.00-22.00	-23.4327	-3.4047	-22.4642	-11.5161
T11	22.00-2.00	-20.2564	-2.7882	-20.0788	-9.9901

Shielding Factor Ka

Tower Section	Feed Line Record No.	Description	Feed Line Segment Elev.	K_a No Ice	K_a Ice
T1	5	1/2	187.00 - 194.00	0.6000	0.5376
T1	6	7/8	187.00 - 194.00	0.6000	0.5376
T1	12	7/8	187.00 - 194.00	0.6000	0.5376
T1	13	WE65	187.00 - 194.00	0.6000	0.5376
T1	16	LDF2-50 (3/8 FOAM)	187.00 - 194.00	0.6000	0.5376
T1	19	7/8	187.00 - 194.00	0.6000	0.5376
T1	23	LDF2-50 (3/8 FOAM)	187.00 - 194.00	0.6000	0.5376
T2	5	1/2	172.00 - 187.00	0.6000	0.5643
T2	6	7/8	172.00 - 187.00	0.6000	0.5643
T2	12	7/8	172.00 - 187.00	0.6000	0.5643
T2	13	WE65	172.00 - 187.00	0.6000	0.5643
T2	16	LDF2-50 (3/8 FOAM)	172.00 - 187.00	0.6000	0.5643
T2	17	1 5/8	172.00 - 185.00	0.6000	0.5643
T2	19	7/8	172.00 - 187.00	0.6000	0.5643
T2	23	LDF2-50 (3/8 FOAM)	172.00 - 187.00	0.6000	0.5643
T2	24	1 5/8	172.00 - 184.00	0.6000	0.5643
T2	25	1/2	172.00 - 184.00	0.6000	0.5643
T3	1	1 5/8	152.00 - 165.00	0.6000	0.5701
T3	2	1 5/8	152.00 - 165.00	0.6000	0.5701
T3	3	1 5/8	152.00 - 165.00	0.6000	0.5701
T3	4	1 5/8	152.00 - 165.00	0.6000	0.5701
T3	5	1/2	152.00 -	0.6000	0.5701

Tower Section	Feed Line Record No.	Description	Feed Line Segment Elev.	K_a No Ice	K_a Ice
T3	6	7/8	172.00 152.00 -	0.6000	0.5701
T3	12	7/8	172.00 152.00 -	0.6000	0.5701
T3	13	WE65	172.00 152.00 -	0.6000	0.5701
T3	16	LDF2-50 (3/8 FOAM)	172.00 152.00 -	0.6000	0.5701
T3	17	1 5/8	172.00 152.00 -	0.6000	0.5701
T3	19	7/8	172.00 152.00 -	0.6000	0.5701
T3	23	LDF2-50 (3/8 FOAM)	172.00 152.00 -	0.6000	0.5701
T3	24	1 5/8	172.00 152.00 -	0.6000	0.5701
T3	25	1/2	172.00 152.00 -	0.6000	0.5701
T4	1	1 5/8	172.00 142.00 -	0.6000	0.3372
T4	2	1 5/8	152.00 142.00 -	0.6000	0.3372
T4	3	1 5/8	152.00 142.00 -	0.6000	0.3372
T4	4	1 5/8	152.00 142.00 -	0.6000	0.3372
T4	5	1/2	152.00 142.00 -	0.6000	0.3372
T4	6	7/8	152.00 142.00 -	0.6000	0.3372
T4	7	CR 50 1873 (1-5/8 FOAM)	152.00 142.00 -	0.6000	0.3372
T4	12	7/8	150.00 142.00 -	0.6000	0.3372
T4	13	WE65	152.00 142.00 -	0.6000	0.3372
T4	16	LDF2-50 (3/8 FOAM)	152.00 142.00 -	0.6000	0.3372
T4	17	1 5/8	152.00 142.00 -	0.6000	0.3372
T4	19	7/8	152.00 142.00 -	0.6000	0.3372
T4	21	#8 AWG Copper WIre	152.00 142.00 -	0.6000	0.3372
T4	22	RG6-Fiber	150.00 142.00 -	0.6000	0.3372
T4	23	LDF2-50 (3/8 FOAM)	150.00 142.00 -	0.6000	0.3372
T4	24	1 5/8	152.00 142.00 -	0.6000	0.3372
T4	25	1/2	152.00 142.00 -	0.6000	0.3372
T5	1	1 5/8	152.00 122.00 -	0.6000	0.4375
T5	2	1 5/8	142.00 122.00 -	0.6000	0.4375
T5	3	1 5/8	142.00 122.00 -	0.6000	0.4375
T5	4	1 5/8	142.00 122.00 -	0.6000	0.4375
T5	5	1/2	142.00 122.00 -	0.6000	0.4375

Tower Section	Feed Line Record No.	Description	Feed Line Segment Elev.	K_a No Ice	K_a Ice
T5	6	7/8	142.00 122.00 - 142.00	0.6000	0.4375
T5	7	CR 50 1873 (1-5/8 FOAM)	122.00 - 142.00	0.6000	0.4375
T5	8	7/8	122.00 - 132.00	0.6000	0.4375
T5	9	7/8	122.00 - 132.00	0.6000	0.4375
T5	11	7/8	122.00 - 132.00	0.6000	0.4375
T5	12	7/8	122.00 - 142.00	0.6000	0.4375
T5	13	WE65	122.00 - 142.00	0.6000	0.4375
T5	16	LDF2-50 (3/8 FOAM)	122.00 - 142.00	0.6000	0.4375
T5	17	1 5/8	122.00 - 142.00	0.6000	0.4375
T5	19	7/8	122.00 - 142.00	0.6000	0.4375
T5	21	#8 AWG Copper WIre	122.00 - 142.00	0.6000	0.4375
T5	22	RG6-Fiber	122.00 - 142.00	0.6000	0.4375
T5	23	LDF2-50 (3/8 FOAM)	122.00 - 142.00	0.6000	0.4375
T5	24	1 5/8	122.00 - 142.00	0.6000	0.4375
T5	25	1/2	122.00 - 142.00	0.6000	0.4375
T5	26	1 5/8	122.00 - 142.00	0.6000	0.4375
T6	1	1 5/8	102.00 - 122.00	0.6000	0.5387
T6	2	1 5/8	102.00 - 122.00	0.6000	0.5387
T6	3	1 5/8	102.00 - 122.00	0.6000	0.5387
T6	4	1 5/8	102.00 - 122.00	0.6000	0.5387
T6	5	1/2	102.00 - 122.00	0.6000	0.5387
T6	6	7/8	102.00 - 122.00	0.6000	0.5387
T6	7	CR 50 1873 (1-5/8 FOAM)	102.00 - 122.00	0.6000	0.5387
T6	8	7/8	102.00 - 122.00	0.6000	0.5387
T6	9	7/8	102.00 - 122.00	0.6000	0.5387
T6	10	7/8	102.00 - 112.00	0.6000	0.5387
T6	11	7/8	102.00 - 122.00	0.6000	0.5387
T6	12	7/8	102.00 - 122.00	0.6000	0.5387
T6	13	WE65	102.00 - 122.00	0.6000	0.5387
T6	16	LDF2-50 (3/8 FOAM)	102.00 - 122.00	0.6000	0.5387
T6	17	1 5/8	102.00 -	0.6000	0.5387

Tower Section	Feed Line Record No.	Description	Feed Line Segment Elev.	K_a No Ice	K_a Ice
T6	19	7/8	122.00 102.00 - 122.00	0.6000	0.5387
T6	21	#8 AWG Copper WIre	102.00 - 122.00	0.6000	0.5387
T6	22	RG6-Fiber	102.00 - 122.00	0.6000	0.5387
T6	23	LDF2-50 (3/8 FOAM)	102.00 - 122.00	0.6000	0.5387
T6	24	1 5/8	102.00 - 122.00	0.6000	0.5387
T6	25	1/2	102.00 - 122.00	0.6000	0.5387
T6	26	1 5/8	102.00 - 122.00	0.6000	0.5387
T6	27	7/8	102.00 - 119.50	0.6000	0.5387
T7	1	1 5/8	82.00 - 102.00	0.6000	0.5754
T7	2	1 5/8	82.00 - 102.00	0.6000	0.5754
T7	3	1 5/8	82.00 - 102.00	0.6000	0.5754
T7	4	1 5/8	82.00 - 102.00	0.6000	0.5754
T7	5	1/2	82.00 - 102.00	0.6000	0.5754
T7	6	7/8	82.00 - 102.00	0.6000	0.5754
T7	7	CR 50 1873 (1-5/8 FOAM)	82.00 - 102.00	0.6000	0.5754
T7	8	7/8	82.00 - 102.00	0.6000	0.5754
T7	9	7/8	82.00 - 102.00	0.6000	0.5754
T7	10	7/8	82.00 - 102.00	0.6000	0.5754
T7	11	7/8	82.00 - 102.00	0.6000	0.5754
T7	12	7/8	82.00 - 102.00	0.6000	0.5754
T7	13	WE65	82.00 - 102.00	0.6000	0.5754
T7	14	WE65	82.00 - 102.00	0.6000	0.5754
T7	15	1/2	82.00 - 92.00	0.6000	0.5754
T7	16	LDF2-50 (3/8 FOAM)	82.00 - 102.00	0.6000	0.5754
T7	17	1 5/8	82.00 - 102.00	0.6000	0.5754
T7	19	7/8	82.00 - 102.00	0.6000	0.5754
T7	21	#8 AWG Copper WIre	82.00 - 102.00	0.6000	0.5754
T7	22	RG6-Fiber	82.00 - 102.00	0.6000	0.5754
T7	23	LDF2-50 (3/8 FOAM)	82.00 - 102.00	0.6000	0.5754
T7	24	1 5/8	82.00 - 102.00	0.6000	0.5754
T7	25	1/2	82.00 - 102.00	0.6000	0.5754
T7	26	1 5/8	82.00 - 102.00	0.6000	0.5754
T7	27	7/8	82.00 - 102.00	0.6000	0.5754
T8	1	1 5/8	62.00 - 82.00	0.6000	0.6000
T8	2	1 5/8	62.00 - 82.00	0.6000	0.6000
T8	3	1 5/8	62.00 - 82.00	0.6000	0.6000
T8	4	1 5/8	62.00 - 82.00	0.6000	0.6000
T8	5	1/2	62.00 - 82.00	0.6000	0.6000
T8	6	7/8	62.00 - 82.00	0.6000	0.6000
T8	7	CR 50 1873 (1-5/8 FOAM)	62.00 - 82.00	0.6000	0.6000
T8	8	7/8	62.00 - 82.00	0.6000	0.6000
T8	9	7/8	62.00 - 82.00	0.6000	0.6000
T8	10	7/8	62.00 - 82.00	0.6000	0.6000
T8	11	7/8	62.00 - 82.00	0.6000	0.6000
T8	12	7/8	62.00 - 82.00	0.6000	0.6000
T8	13	WE65	62.00 - 82.00	0.6000	0.6000
T8	14	WE65	62.00 - 82.00	0.6000	0.6000
T8	15	1/2	62.00 - 82.00	0.6000	0.6000
T8	16	LDF2-50 (3/8 FOAM)	62.00 - 82.00	0.6000	0.6000
T8	17	1 5/8	62.00 - 82.00	0.6000	0.6000
T8	18	1/2	62.00 - 72.00	0.6000	0.6000
T8	19	7/8	62.00 - 82.00	0.6000	0.6000
T8	21	#8 AWG Copper WIre	62.00 - 82.00	0.6000	0.6000

Tower Section	Feed Line Record No.	Description	Feed Line Segment Elev.	K_a No Ice	K_a Ice
T8	22	RG6-Fiber	62.00 - 82.00	0.6000	0.6000
T8	23	LDF2-50 (3/8 FOAM)	62.00 - 82.00	0.6000	0.6000
T8	24	1 5/8	62.00 - 82.00	0.6000	0.6000
T8	25	1/2	62.00 - 82.00	0.6000	0.6000
T8	26	1 5/8	62.00 - 82.00	0.6000	0.6000
T8	27	7/8	62.00 - 82.00	0.6000	0.6000
T9	1	1 5/8	42.00 - 62.00	0.6000	0.6000
T9	2	1 5/8	42.00 - 62.00	0.6000	0.6000
T9	3	1 5/8	42.00 - 62.00	0.6000	0.6000
T9	4	1 5/8	42.00 - 62.00	0.6000	0.6000
T9	5	1/2	42.00 - 62.00	0.6000	0.6000
T9	6	7/8	42.00 - 62.00	0.6000	0.6000
T9	7	CR 50 1873 (1-5/8 FOAM)	42.00 - 62.00	0.6000	0.6000
T9	8	7/8	42.00 - 62.00	0.6000	0.6000
T9	9	7/8	42.00 - 62.00	0.6000	0.6000
T9	10	7/8	42.00 - 62.00	0.6000	0.6000
T9	11	7/8	42.00 - 62.00	0.6000	0.6000
T9	12	7/8	42.00 - 62.00	0.6000	0.6000
T9	13	WE65	42.00 - 62.00	0.6000	0.6000
T9	14	WE65	42.00 - 62.00	0.6000	0.6000
T9	15	1/2	42.00 - 62.00	0.6000	0.6000
T9	16	LDF2-50 (3/8 FOAM)	42.00 - 62.00	0.6000	0.6000
T9	17	1 5/8	42.00 - 62.00	0.6000	0.6000
T9	18	1/2	42.00 - 62.00	0.6000	0.6000
T9	19	7/8	42.00 - 62.00	0.6000	0.6000
T9	21	#8 AWG Copper WIre	42.00 - 62.00	0.6000	0.6000
T9	22	RG6-Fiber	42.00 - 62.00	0.6000	0.6000
T9	23	LDF2-50 (3/8 FOAM)	42.00 - 62.00	0.6000	0.6000
T9	24	1 5/8	42.00 - 62.00	0.6000	0.6000
T9	25	1/2	42.00 - 62.00	0.6000	0.6000
T9	26	1 5/8	42.00 - 62.00	0.6000	0.6000
T9	27	7/8	42.00 - 62.00	0.6000	0.6000
T10	1	1 5/8	22.00 - 42.00	0.6000	0.6000
T10	2	1 5/8	22.00 - 42.00	0.6000	0.6000
T10	3	1 5/8	22.00 - 42.00	0.6000	0.6000
T10	4	1 5/8	22.00 - 42.00	0.6000	0.6000
T10	5	1/2	22.00 - 42.00	0.6000	0.6000
T10	6	7/8	22.00 - 42.00	0.6000	0.6000
T10	7	CR 50 1873 (1-5/8 FOAM)	22.00 - 42.00	0.6000	0.6000
T10	8	7/8	22.00 - 42.00	0.6000	0.6000
T10	9	7/8	22.00 - 42.00	0.6000	0.6000
T10	10	7/8	22.00 - 42.00	0.6000	0.6000
T10	11	7/8	22.00 - 42.00	0.6000	0.6000
T10	12	7/8	22.00 - 42.00	0.6000	0.6000
T10	13	WE65	22.00 - 42.00	0.6000	0.6000
T10	14	WE65	22.00 - 42.00	0.6000	0.6000
T10	15	1/2	22.00 - 42.00	0.6000	0.6000
T10	16	LDF2-50 (3/8 FOAM)	22.00 - 42.00	0.6000	0.6000
T10	17	1 5/8	22.00 - 42.00	0.6000	0.6000
T10	18	1/2	22.00 - 42.00	0.6000	0.6000
T10	19	7/8	22.00 - 42.00	0.6000	0.6000
T10	21	#8 AWG Copper WIre	22.00 - 42.00	0.6000	0.6000
T10	22	RG6-Fiber	22.00 - 42.00	0.6000	0.6000
T10	23	LDF2-50 (3/8 FOAM)	22.00 - 42.00	0.6000	0.6000
T10	24	1 5/8	22.00 - 42.00	0.6000	0.6000
T10	25	1/2	22.00 - 42.00	0.6000	0.6000
T10	26	1 5/8	22.00 - 42.00	0.6000	0.6000
T10	27	7/8	22.00 - 42.00	0.6000	0.6000
T11	1	1 5/8	7.00 - 22.00	0.6000	0.6000
T11	2	1 5/8	7.00 - 22.00	0.6000	0.6000
T11	3	1 5/8	7.00 - 22.00	0.6000	0.6000
T11	4	1 5/8	7.00 - 22.00	0.6000	0.6000

Tower Section	Feed Line Record No.	Description	Feed Line Segment Elev.	K_a No Ice	K_a Ice
T11	5	1/2	7.00 - 22.00	0.6000	0.6000
T11	6	7/8	7.00 - 22.00	0.6000	0.6000
T11	7	CR 50 1873 (1-5/8 FOAM)	7.00 - 22.00	0.6000	0.6000
T11	8	7/8	7.00 - 22.00	0.6000	0.6000
T11	9	7/8	7.00 - 22.00	0.6000	0.6000
T11	10	7/8	7.00 - 22.00	0.6000	0.6000
T11	11	7/8	7.00 - 22.00	0.6000	0.6000
T11	12	7/8	7.00 - 22.00	0.6000	0.6000
T11	13	WE65	7.00 - 22.00	0.6000	0.6000
T11	14	WE65	7.00 - 22.00	0.6000	0.6000
T11	15	1/2	7.00 - 22.00	0.6000	0.6000
T11	16	LDF2-50 (3/8 FOAM)	7.00 - 22.00	0.6000	0.6000
T11	17	1 5/8	7.00 - 22.00	0.6000	0.6000
T11	18	1/2	7.00 - 22.00	0.6000	0.6000
T11	19	7/8	7.00 - 22.00	0.6000	0.6000
T11	20	LDF1-50A (1/4 FOAM)	7.00 - 17.00	0.6000	0.6000
T11	21	#8 AWG Copper WIre	7.00 - 22.00	0.6000	0.6000
T11	22	RG6-Fiber	7.00 - 22.00	0.6000	0.6000
T11	23	LDF2-50 (3/8 FOAM)	7.00 - 22.00	0.6000	0.6000
T11	24	1 5/8	7.00 - 22.00	0.6000	0.6000
T11	25	1/2	7.00 - 22.00	0.6000	0.6000
T11	26	1 5/8	7.00 - 22.00	0.6000	0.6000
T11	27	7/8	7.00 - 22.00	0.6000	0.6000

Discrete Tower Loads

Description	Face or Leg	Offset Type	Offsets: Horz Lateral Vert ft ft ft	Azimuth Adjustment °	Placement ft		C_AA_A Front ft^2	C_AA_A Side ft^2	Weight K
Single Dipole (Unknown)	C	From Leg	0.50 0.00 0.00	0.0000	196.26	No Ice 1/2" Ice 1" Ice	0.90 1.40 1.90	0.90 1.40 1.90	0.01 0.02 0.02
PIROD 6'-8" Rigid Side Arm (Vacant)	A	From Face	3.00 0.00 0.00	0.0000	196.00	No Ice 1/2" Ice 1" Ice	8.00 9.60 11.20	8.00 9.60 11.20	0.19 0.22 0.26
6'x4" Pipe Mount (CSP)	A	From Face	0.67 0.00 0.00	0.0000	194.92	No Ice 1/2" Ice 1" Ice	1.70 2.46 2.83	1.70 2.46 2.83	0.05 0.07 0.09
OGT9-840 (Unknown)	A	From Leg	3.00 7.50 0.00	0.0000	190.25	No Ice 1/2" Ice 1" Ice	2.27 3.44 4.61	2.27 3.44 4.61	0.02 0.04 0.06
Filter Box (CSP)	C	From Face	0.00 0.00 0.00	0.0000	183.00	No Ice 1/2" Ice 1" Ice	3.00 3.21 3.44	1.20 1.35 1.50	0.04 0.06 0.09
10' x 3" Dia Omni (Unknown (Inverted))	A	From Leg	3.00 7.50 0.00	0.0000	174.25	No Ice 1/2" Ice 1" Ice	3.00 4.03 5.03	3.00 4.03 5.03	0.03 0.05 0.08
12' x 3" Dia Omni (Unknown (Inverted))	C	From Face	4.00 0.00 0.00	0.0000	175.25	No Ice 1/2" Ice 1" Ice	3.60 4.83 6.08	3.60 4.83 6.08	0.04 0.06 0.09
DB222-A	A	From Leg	3.00	0.0000	185.25	No Ice	1.60	1.60	0.02

Description	Face or Leg	Offset Type	Offsets: Horz Lateral Vert ft ft ft	Azimuth Adjustment °	Placement ft		C_AA_A Front ft^2	C_AA_A Side ft^2	Weight K
(Unknown)			-7.50			1/2" Ice	2.88	2.88	0.02
			0.00			1" Ice	4.16	4.16	0.03
ANT150D6-9	A	From Leg	3.00	0.0000	173.75	No Ice	4.00	4.00	0.03
(Unknown (Inverted))			-7.50			1/2" Ice	4.60	4.60	0.03
			0.00			1" Ice	5.20	5.20	0.04
9' x 3" Dia Omni	C	From Leg	4.00	-60.0000	192.75	No Ice	2.70	2.70	0.03
(Unknown)			0.00			1/2" Ice	3.63	3.63	0.05
			0.00			1" Ice	4.33	4.33	0.08
Pirod 4' Side Mount Standoff	C	From Leg	2.00	-60.0000	186.50	No Ice	2.72	2.72	0.05
(1)			0.00			1/2" Ice	4.91	4.91	0.09
(Unknown)			0.00			1" Ice	7.10	7.10	0.13
DB222-A	C	From Leg	4.00	-60.0000	180.25	No Ice	1.60	1.60	0.02
(Unknown (Inverted))			0.00			1/2" Ice	2.88	2.88	0.02
			0.00			1" Ice	4.16	4.16	0.03
BCD-87077	A	From Leg	4.00	0.0000	181.50	No Ice	3.06	3.06	0.03
(Pagenet)			0.00			1/2" Ice	4.27	4.27	0.05
			0.00			1" Ice	5.49	5.49	0.08
PiROD 15' Rotatable	C	None		0.0000	181.25	No Ice	24.90	24.90	1.81
Platform (Lattice)						1/2" Ice	30.70	30.70	2.44
(Unknown)						1" Ice	36.50	36.50	3.06
(4) 6'x2" Pipe Mount	A	From Leg	3.00	0.0000	181.25	No Ice	1.20	1.20	0.02
(Unknown)			0.00			1/2" Ice	1.80	1.80	0.03
			0.00			1" Ice	2.17	2.17	0.04
(4) 6'x2" Pipe Mount	B	From Leg	3.00	0.0000	181.25	No Ice	1.20	1.20	0.02
(Unknown)			0.00			1/2" Ice	1.80	1.80	0.03
			0.00			1" Ice	2.17	2.17	0.04
(4) 6'x2" Pipe Mount	C	From Leg	3.00	0.0000	181.25	No Ice	1.20	1.20	0.02
(Unknown)			0.00			1/2" Ice	1.80	1.80	0.03
			0.00			1" Ice	2.17	2.17	0.04
Pirod 4' Side Mount Standoff	A	From Leg	2.00	0.0000	174.25	No Ice	2.72	2.72	0.05
(1)			0.00			1/2" Ice	4.91	4.91	0.09
(Unknown)			0.00			1" Ice	7.10	7.10	0.13
PD220	B	From Leg	6.00	0.0000	182.25	No Ice	3.08	3.08	0.02
(Unknown)			0.00			1/2" Ice	5.30	5.30	0.05
			0.00			1" Ice	7.54	7.54	0.09
Pirod 6' Side Mount Standoff	B	From Leg	3.00	0.0000	172.25	No Ice	4.97	4.97	0.07
(1)			0.00			1/2" Ice	6.12	6.12	0.13
(Unknown)			0.00			1" Ice	7.27	7.27	0.19
12' x 3" Dia Omni	A	From Leg	2.50	-10.0000	175.25	No Ice	3.60	3.60	0.04
(Unknown)			0.00			1/2" Ice	4.83	4.83	0.06
			0.00			1" Ice	6.08	6.08	0.09
3' Sidearm	A	From Leg	1.25	-10.0000	170.20	No Ice	5.90	5.90	0.13
(Unknown)			0.00			1/2" Ice	6.60	6.60	0.15
			0.00			1" Ice	7.30	7.30	0.16
LPA-80080-4CF	A	From Leg	3.00	0.0000	162.00	No Ice	2.62	5.40	0.01
(Verizon)			6.00			1/2" Ice	2.92	5.73	0.05
			0.00			1" Ice	3.23	6.06	0.08
(2) MX06FIT665-02	A	From Leg	3.00	0.0000	162.00	No Ice	8.15	7.34	0.06
(Verizon)			6.00			1/2" Ice	8.60	7.78	0.12
			0.00			1" Ice	9.06	8.24	0.18
MT6407-77A	A	From Leg	3.00	0.0000	162.00	No Ice	4.71	1.84	0.09
(Verizon)			6.00			1/2" Ice	5.00	2.06	0.12
			0.00			1" Ice	5.29	2.29	0.15
LPA-80080-4CF	A	From Leg	3.00	0.0000	162.00	No Ice	2.62	5.40	0.01
(Verizon)			-6.00			1/2" Ice	2.92	5.73	0.05
			0.00			1" Ice	3.23	6.06	0.08
LPA-80080-4CF	B	From Leg	3.00	0.0000	162.00	No Ice	2.62	5.40	0.01

Description	Face or Leg	Offset Type	Offsets: Horz Lateral Vert ft ft ft	Azimuth Adjustment °	Placement ft		C_AA_A Front ft^2	C_AA_A Side ft^2	Weight K
(Verizon)			6.00			1/2" Ice	2.92	5.73	0.05
			0.00			1" Ice	3.23	6.06	0.08
(2) MX06FIT665-02	B	From Leg	3.00	0.0000	162.00	No Ice	8.15	7.34	0.06
(Verizon)			6.00			1/2" Ice	8.60	7.78	0.12
			0.00			1" Ice	9.06	8.24	0.18
MT6407-77A	B	From Leg	3.00	0.0000	162.00	No Ice	4.71	1.84	0.09
(Verizon)			6.00			1/2" Ice	5.00	2.06	0.12
			0.00			1" Ice	5.29	2.29	0.15
LPA-80080-4CF	B	From Leg	3.00	0.0000	162.00	No Ice	2.62	5.40	0.01
(Verizon)			-6.00			1/2" Ice	2.92	5.73	0.05
			0.00			1" Ice	3.23	6.06	0.08
LPA-80080-4CF	C	From Leg	3.00	0.0000	162.00	No Ice	2.62	5.40	0.01
(Verizon)			6.00			1/2" Ice	2.92	5.73	0.05
			0.00			1" Ice	3.23	6.06	0.08
(2) MX06FIT665-02	C	From Leg	3.00	0.0000	162.00	No Ice	8.15	7.34	0.06
(Verizon)			6.00			1/2" Ice	8.60	7.78	0.12
			0.00			1" Ice	9.06	8.24	0.18
MT6407-77A	C	From Leg	3.00	0.0000	162.00	No Ice	4.71	1.84	0.09
(Verizon)			6.00			1/2" Ice	5.00	2.06	0.12
			0.00			1" Ice	5.29	2.29	0.15
LPA-80080-4CF	C	From Leg	3.00	0.0000	162.00	No Ice	2.62	5.40	0.01
(Verizon)			-6.00			1/2" Ice	2.92	5.73	0.05
			0.00			1" Ice	3.23	6.06	0.08
B2/B66A RRH	A	From Leg	3.00	0.0000	162.00	No Ice	2.54	1.61	0.06
(Verizon)			6.00			1/2" Ice	2.75	1.79	0.08
			0.00			1" Ice	2.97	1.98	0.10
B2/B66A RRH	B	From Leg	3.00	0.0000	162.00	No Ice	2.54	1.61	0.06
(Verizon)			6.00			1/2" Ice	2.75	1.79	0.08
			0.00			1" Ice	2.97	1.98	0.10
B2/B66A RRH	C	From Leg	3.00	0.0000	162.00	No Ice	2.54	1.61	0.06
(Verizon)			6.00			1/2" Ice	2.75	1.79	0.08
			0.00			1" Ice	2.97	1.98	0.10
B5/B13 RRH	A	From Leg	3.00	0.0000	162.00	No Ice	1.87	1.02	0.07
(Verizon)			6.00			1/2" Ice	2.03	1.15	0.09
			0.00			1" Ice	2.21	1.29	0.11
B5/B13 RRH	B	From Leg	3.00	0.0000	162.00	No Ice	1.87	1.02	0.07
(Verizon)			6.00			1/2" Ice	2.03	1.15	0.09
			0.00			1" Ice	2.21	1.29	0.11
B5/B13 RRH	C	From Leg	3.00	0.0000	162.00	No Ice	1.87	1.02	0.07
(Verizon)			6.00			1/2" Ice	2.03	1.15	0.09
			0.00			1" Ice	2.21	1.29	0.11
RVZDC-6627-PF-48	A	From Leg	3.00	0.0000	162.00	No Ice	3.25	2.15	0.03
(Verizon)			6.00			1/2" Ice	3.48	2.35	0.06
			0.00			1" Ice	3.71	2.55	0.09
(2) KA-6030	A	From Leg	3.00	0.0000	162.00	No Ice	0.96	0.29	0.02
(Verizon - Proposed)			6.00			1/2" Ice	1.09	0.36	0.03
			0.00			1" Ice	1.22	0.45	0.04
(2) KA-6030	B	From Leg	3.00	0.0000	162.00	No Ice	0.96	0.29	0.02
(Verizon - Proposed)			6.00			1/2" Ice	1.09	0.36	0.03
			0.00			1" Ice	1.22	0.45	0.04
(2) KA-6030	C	From Leg	3.00	0.0000	162.00	No Ice	0.96	0.29	0.02
(Verizon - Proposed)			6.00			1/2" Ice	1.09	0.36	0.03
			0.00			1" Ice	1.22	0.45	0.04
PiROD 15' T-Frame	A	From Leg	1.50	0.0000	162.00	No Ice	15.00	15.00	0.50
(Verizon)			0.00			1/2" Ice	20.60	20.60	0.65
			0.00			1" Ice	26.20	26.20	0.80
PiROD 15' T-Frame	B	From Leg	1.50	0.0000	162.00	No Ice	15.00	15.00	0.50

Description	Face or Leg	Offset Type	Offsets: Horz Lateral Vert ft ft ft	Azimuth Adjustment °	Placement ft		C_AA_A Front ft^2	C_AA_A Side ft^2	Weight K
(Verizon)			0.00			1/2" Ice	20.60	20.60	0.65
			0.00			1" Ice	26.20	26.20	0.80
PiROD 15' T-Frame (Verizon)	C	From Leg	1.50	0.0000	162.00	No Ice	15.00	15.00	0.50
			0.00			1/2" Ice	20.60	20.60	0.65
			0.00			1" Ice	26.20	26.20	0.80
7770.00 (AT&T)	A	From Leg	3.00	0.0000	150.00	No Ice	5.51	2.93	0.04
			0.00			1/2" Ice	5.87	3.27	0.07
			0.00			1" Ice	6.23	3.63	0.11
7770.00 (AT&T)	B	From Leg	3.00	0.0000	150.00	No Ice	5.51	2.93	0.04
			0.00			1/2" Ice	5.87	3.27	0.07
			0.00			1" Ice	6.23	3.63	0.11
7770.00 (AT&T)	C	From Leg	3.00	0.0000	150.00	No Ice	5.51	2.93	0.04
			0.00			1/2" Ice	5.87	3.27	0.07
			0.00			1" Ice	6.23	3.63	0.11
(2) DMP65R-BU6D (AT&T)	A	From Leg	3.00	0.0000	150.00	No Ice	12.71	5.62	0.10
			0.00			1/2" Ice	13.21	6.07	0.17
			0.00			1" Ice	13.71	6.53	0.25
(2) DMP65R-BU6D (AT&T)	B	From Leg	3.00	0.0000	150.00	No Ice	12.71	5.62	0.10
			0.00			1/2" Ice	13.21	6.07	0.17
			0.00			1" Ice	13.71	6.53	0.25
(2) DMP65R-BU4D (AT&T)	C	From Leg	3.00	0.0000	150.00	No Ice	8.00	3.51	0.07
			0.00			1/2" Ice	8.38	3.81	0.12
			0.00			1" Ice	8.77	4.12	0.17
(2) LGP21401 TMA (AT&T)	A	From Leg	2.50	0.0000	150.00	No Ice	0.00	0.37	0.02
			0.00			1/2" Ice	0.00	0.48	0.02
			0.00			1" Ice	0.00	0.60	0.03
(2) LGP21401 TMA (AT&T)	B	From Leg	2.50	0.0000	150.00	No Ice	0.00	0.37	0.02
			0.00			1/2" Ice	0.00	0.48	0.02
			0.00			1" Ice	0.00	0.60	0.03
(2) LGP21401 TMA (AT&T)	C	From Leg	2.50	0.0000	150.00	No Ice	0.00	0.37	0.02
			0.00			1/2" Ice	0.00	0.48	0.02
			0.00			1" Ice	0.00	0.60	0.03
(2) LGP13519 Diplexer (AT&T)	A	From Leg	2.50	0.0000	150.00	No Ice	0.23	0.16	0.01
			0.00			1/2" Ice	0.29	0.21	0.01
			0.00			1" Ice	0.36	0.28	0.01
(2) LGP13519 Diplexer (AT&T)	B	From Leg	2.50	0.0000	150.00	No Ice	0.23	0.16	0.01
			0.00			1/2" Ice	0.29	0.21	0.01
			0.00			1" Ice	0.36	0.28	0.01
(2) LGP13519 Diplexer (AT&T)	C	From Leg	2.50	0.0000	150.00	No Ice	0.23	0.16	0.01
			0.00			1/2" Ice	0.29	0.21	0.01
			0.00			1" Ice	0.36	0.28	0.01
(2) 7020 Dual Band RET (AT&T)	A	From Leg	2.50	0.0000	150.00	No Ice	0.34	0.18	0.00
			0.00			1/2" Ice	0.42	0.24	0.01
			0.00			1" Ice	0.51	0.31	0.01
(2) 7020 Dual Band RET (AT&T)	B	From Leg	2.50	0.0000	150.00	No Ice	0.34	0.18	0.00
			0.00			1/2" Ice	0.42	0.24	0.01
			0.00			1" Ice	0.51	0.31	0.01
(2) 7020 Dual Band RET (AT&T)	C	From Leg	2.50	0.0000	150.00	No Ice	0.34	0.18	0.00
			0.00			1/2" Ice	0.42	0.24	0.01
			0.00			1" Ice	0.51	0.31	0.01
8843 B2/B66A (AT&T)	A	From Leg	2.50	0.0000	150.00	No Ice	1.64	1.35	0.07
			0.00			1/2" Ice	1.80	1.50	0.09
			0.00			1" Ice	1.97	1.65	0.11
8843 B2/B66A (AT&T)	B	From Leg	2.50	0.0000	150.00	No Ice	1.64	1.35	0.07
			0.00			1/2" Ice	1.80	1.50	0.09
			0.00			1" Ice	1.97	1.65	0.11
8843 B2/B66A	C	From Leg	2.50	0.0000	150.00	No Ice	1.64	1.35	0.07

Description	Face or Leg	Offset Type	Offsets: Horz Lateral Vert ft ft ft	Azimuth Adjustment °	Placement ft		C_AA_A Front ft^2	C_AA_A Side ft^2	Weight K
(AT&T)			0.00			1/2" Ice	1.80	1.50	0.09
			0.00			1" Ice	1.97	1.65	0.11
4478 B14	A	From Leg	2.50	0.0000	150.00	No Ice	1.84	1.06	0.06
(AT&T)			0.00			1/2" Ice	2.01	1.20	0.08
			0.00			1" Ice	2.19	1.34	0.09
4478 B14	B	From Leg	2.50	0.0000	150.00	No Ice	1.84	1.06	0.06
(AT&T)			0.00			1/2" Ice	2.01	1.20	0.08
			0.00			1" Ice	2.19	1.34	0.09
4478 B14	C	From Leg	2.50	0.0000	150.00	No Ice	1.84	1.06	0.06
(AT&T)			0.00			1/2" Ice	2.01	1.20	0.08
			0.00			1" Ice	2.19	1.34	0.09
4449 B5/B12	A	From Leg	2.50	0.0000	150.00	No Ice	1.97	1.41	0.07
(AT&T)			0.00			1/2" Ice	2.14	1.56	0.09
			0.00			1" Ice	2.33	1.73	0.11
4449 B5/B12	B	From Leg	2.50	0.0000	150.00	No Ice	1.97	1.41	0.07
(AT&T)			0.00			1/2" Ice	2.14	1.56	0.09
			0.00			1" Ice	2.33	1.73	0.11
4449 B5/B12	C	From Leg	2.50	0.0000	150.00	No Ice	1.97	1.41	0.07
(AT&T)			0.00			1/2" Ice	2.14	1.56	0.09
			0.00			1" Ice	2.33	1.73	0.11
DC6-48-60-18-8F Surge	A	From Leg	2.50	0.0000	150.00	No Ice	1.91	1.91	0.03
Arrestor			0.00			1/2" Ice	2.10	2.10	0.05
(AT&T)			0.00			1" Ice	2.29	2.29	0.07
DC6-48-60-18-8F Surge	B	From Leg	2.50	0.0000	150.00	No Ice	1.91	1.91	0.03
Arrestor			0.00			1/2" Ice	2.10	2.10	0.05
(AT&T)			0.00			1" Ice	2.29	2.29	0.07
DC6-48-60-18-8F Surge	C	From Leg	2.50	0.0000	150.00	No Ice	1.91	1.91	0.03
Arrestor			0.00			1/2" Ice	2.10	2.10	0.05
(AT&T)			0.00			1" Ice	2.29	2.29	0.07
Pirod 12' T-Frame Sector	A	From Leg	1.25	0.0000	150.00	No Ice	13.60	13.60	0.47
Mount (1)			0.00			1/2" Ice	18.40	18.40	0.60
(AT&T)			0.00			1" Ice	23.20	23.20	0.73
Pirod 12' T-Frame Sector	B	From Leg	1.25	0.0000	150.00	No Ice	13.60	13.60	0.47
Mount (1)			0.00			1/2" Ice	18.40	18.40	0.60
(AT&T)			0.00			1" Ice	23.20	23.20	0.73
Pirod 12' T-Frame Sector	C	From Leg	1.25	0.0000	150.00	No Ice	13.60	13.60	0.47
Mount (1)			0.00			1/2" Ice	18.40	18.40	0.60
(AT&T)			0.00			1" Ice	23.20	23.20	0.73
SRL110A	C	From Leg	6.00	0.0000	135.00	No Ice	9.00	9.00	0.03
(Eversource)			0.00			1/2" Ice	10.58	10.58	0.09
			0.00			1" Ice	12.16	12.16	0.14
PIROD 6' Rigid Side Arm w/	C	From Leg	3.00	0.0000	134.00	No Ice	2.60	3.41	0.20
3" STD mount pipe			0.00			1/2" Ice	4.21	7.18	0.30
(Eversource)			0.00			1" Ice	5.82	10.95	0.40
DB586-Y	A	From Leg	6.00	0.0000	130.00	No Ice	1.01	1.01	0.01
(Eversource)			0.00			1/2" Ice	1.28	1.28	0.02
			0.00			1" Ice	1.56	1.56	0.03
PIROD 6' Rigid Side Arm w/	A	From Leg	3.00	0.0000	126.00	No Ice	2.60	3.41	0.20
3" STD mount pipe			0.00			1/2" Ice	4.21	7.18	0.30
(Eversource)			0.00			1" Ice	5.82	10.95	0.40
Tower Top Amplifier	A	From Leg	3.00	0.0000	126.00	No Ice	2.10	2.10	0.04
(Eversource)			0.00			1/2" Ice	2.40	2.40	0.06
			0.00			1" Ice	2.70	2.70	0.08
DB586-Y	A	From Leg	6.00	0.0000	125.00	No Ice	1.01	1.01	0.01
(Eversource)			0.00			1/2" Ice	1.28	1.28	0.02
			0.00			1" Ice	1.56	1.56	0.03
PIROD 6' Rigid Side Arm w/	B	From Leg	3.00	0.0000	120.50	No Ice	2.60	3.41	0.20

Description	Face or Leg	Offset Type	Offsets: Horz Lateral ft	Vert ft	ft	Azimuth Adjustment °	Placement ft		C_AA_A Front ft^2	C_AA_A Side ft^2	Weight K
3" STD mount pipe			0.00					1/2" Ice	4.21	7.18	0.30
(Vacant)			0.00					1" Ice	5.82	10.95	0.40
DB212-1	C	From Leg	6.00			0.0000	120.67	No Ice	4.40	4.40	0.03
(Unknown)			0.00					1/2" Ice	8.42	8.42	0.07
			0.00					1" Ice	12.45	12.45	0.13
PIROD 6' Rigid Side Arm w/	C	From Leg	3.00			0.0000	120.67	No Ice	2.60	3.41	0.20
3" STD mount pipe			0.00					1/2" Ice	4.21	7.18	0.30
(Unknown)			0.00					1" Ice	5.82	10.95	0.40
DB205-L	A	From Leg	5.20			0.0000	109.25	No Ice	1.72	1.72	0.04
(Unknown)			0.00					1/2" Ice	3.45	3.45	0.05
			0.00					1" Ice	5.20	5.20	0.08
PIROD 6' Rigid Side Arm w/	A	From Leg	3.00			0.0000	100.83	No Ice	2.60	3.41	0.20
3" STD mount pipe			0.00					1/2" Ice	4.21	7.18	0.30
(Unknown)			0.00					1" Ice	5.82	10.95	0.40
Ice Canopy	B	From Leg	3.00			-50.0000	106.00	No Ice	3.73	2.80	0.30
			0.00					1/2" Ice	4.39	3.30	0.55
			0.00					1" Ice	5.05	3.80	0.80
6'8"x4" Pipe Mount	B	From Leg	0.67			0.0000	101.20	No Ice	2.04	2.04	0.07
(CSP)			0.00					1/2" Ice	3.01	3.01	0.09
			0.00					1" Ice	3.42	3.42	0.12
DB224	C	From Leg	2.00			60.0000	94.00	No Ice	3.15	3.15	0.03
(Unknown)			0.00					1/2" Ice	5.67	5.67	0.04
			0.00					1" Ice	8.19	8.19	0.05
2-ft Stand Off	C	From Leg	1.00			60.0000	85.00	No Ice	1.07	1.07	0.02
(Unknown)			0.00					1/2" Ice	1.62	1.62	0.03
			0.00					1" Ice	2.17	2.17	0.04
PD220	A	From Leg	5.20			0.0000	90.41	No Ice	3.08	3.08	0.02
(Unknown)			0.00					1/2" Ice	5.30	5.30	0.05
			0.00					1" Ice	7.54	7.54	0.09
PIROD 6' Rigid Side Arm w/	A	From Leg	3.00			0.0000	79.50	No Ice	2.60	3.41	0.20
3" STD mount pipe			0.00					1/2" Ice	4.21	7.18	0.30
(Unknown)			0.00					1" Ice	5.82	10.95	0.40
PIROD 6' Rigid Side Arm w/	B	From Leg	3.00			0.0000	82.67	No Ice	2.60	3.41	0.20
3" STD mount pipe			0.00					1/2" Ice	4.21	7.18	0.30
(Unknown)			0.00					1" Ice	5.82	10.95	0.40
12' x 3" Dia Omni	B	From Leg	6.00			0.0000	75.00	No Ice	3.60	3.60	0.04
(Unknown)			0.00					1/2" Ice	4.83	4.83	0.06
			0.00					1" Ice	6.08	6.08	0.09
DB432-A	A	From Leg	1.50			0.0000	70.25	No Ice	0.30	0.30	0.01
(Unknown)			0.00					1/2" Ice	0.54	0.54	0.01
			0.00					1" Ice	0.78	0.78	0.01
2-ft Stand Off	B	From Leg	1.00			0.0000	15.00	No Ice	1.07	1.07	0.02
(Unknown)			0.00					1/2" Ice	1.62	1.62	0.03
			0.00					1" Ice	2.17	2.17	0.04
SC479-HF1LDF	A	From Leg	3.00			0.0000	184.00	No Ice	4.52	4.52	0.03
(CSP (Inverted))			0.00					1/2" Ice	6.54	6.54	0.07
			-12.00					1" Ice	8.04	8.04	0.11
SC479-HF1LDF	B	From Leg	3.00			0.0000	184.00	No Ice	4.52	4.52	0.03
(CSP (Inverted))			0.00					1/2" Ice	6.54	6.54	0.07
			-12.00					1" Ice	8.04	8.04	0.11
SE414-SWBP4LDF (D00)	C	From Leg	3.00			0.0000	184.00	No Ice	1.90	4.27	0.01
(CSP)			0.00					1/2" Ice	2.22	4.61	0.04
			0.00					1" Ice	2.55	4.95	0.06
TX/RX 432E-83I-01T	A	From Leg	0.00			0.0000	184.00	No Ice	1.20	0.75	0.03
(CSP)			0.00					1/2" Ice	1.34	0.86	0.04
			0.00					1" Ice	1.48	0.98	0.05
AIR6419	A	From Leg	3.00			0.0000	140.00	No Ice	4.17	2.02	0.06

Description	Face or Leg	Offset Type	Offsets: Horz Lateral Vert ft ft ft	Azimuth Adjustment °	Placement ft		C_AA_A Front ft^2	C_AA_A Side ft^2	Weight K
(T-Mobile)			-5.00			1/2" Ice	4.44	2.23	0.09
			0.00			1" Ice	4.71	2.44	0.12
AIR6419	B	From Leg	3.00	0.0000	140.00	No Ice	4.17	2.02	0.06
(T-Mobile)			-5.00			1/2" Ice	4.44	2.23	0.09
			0.00			1" Ice	4.71	2.44	0.12
AIR6419	C	From Leg	3.00	0.0000	140.00	No Ice	4.17	2.02	0.06
(T-Mobile)			-5.00			1/2" Ice	4.44	2.23	0.09
			0.00			1" Ice	4.71	2.44	0.12
APXVAARR24-43	A	From Leg	3.00	0.0000	140.00	No Ice	20.24	8.89	0.15
(T-Mobile)			5.00			1/2" Ice	20.89	9.49	0.27
			0.00			1" Ice	21.54	10.09	0.39
APXVAARR24-43	B	From Leg	3.00	0.0000	140.00	No Ice	20.24	8.89	0.15
(T-Mobile)			5.00			1/2" Ice	20.89	9.49	0.27
			0.00			1" Ice	21.54	10.09	0.39
APXVAARR24-43	C	From Leg	3.00	0.0000	140.00	No Ice	20.24	8.89	0.15
(T-Mobile)			5.00			1/2" Ice	20.89	9.49	0.27
			0.00			1" Ice	21.54	10.09	0.39
4460 B25+B66	A	From Leg	3.00	0.0000	140.00	No Ice	2.56	1.98	0.11
(T-Mobile)			-1.00			1/2" Ice	2.76	2.16	0.13
			2.50			1" Ice	2.97	2.34	0.16
4460 B25+B66	B	From Leg	3.00	0.0000	140.00	No Ice	2.56	1.98	0.11
(T-Mobile)			-1.00			1/2" Ice	2.76	2.16	0.13
			2.50			1" Ice	2.97	2.34	0.16
4460 B25+B66	C	From Leg	3.00	0.0000	140.00	No Ice	2.56	1.98	0.11
(T-Mobile)			-1.00			1/2" Ice	2.76	2.16	0.13
			2.50			1" Ice	2.97	2.34	0.16
Radio 4449 B71 B12	A	From Leg	3.00	0.0000	140.00	No Ice	1.64	1.29	0.07
(T-Mobile)			5.00			1/2" Ice	1.80	1.44	0.09
			0.00			1" Ice	1.97	1.59	0.11
Radio 4449 B71 B12	B	From Leg	3.00	0.0000	140.00	No Ice	1.64	1.29	0.07
(T-Mobile)			5.00			1/2" Ice	1.80	1.44	0.09
			0.00			1" Ice	1.97	1.59	0.11
Radio 4449 B71 B12	C	From Leg	3.00	0.0000	140.00	No Ice	1.64	1.29	0.07
(T-Mobile)			5.00			1/2" Ice	1.80	1.44	0.09
			0.00			1" Ice	1.97	1.59	0.11
10-ft T-Frame	A	From Leg	1.00	0.0000	140.00	No Ice	13.60	13.60	0.38
(T-Mobile)			0.00			1/2" Ice	17.50	17.50	0.53
			0.00			1" Ice	21.40	21.40	0.68
10-ft T-Frame	B	From Leg	1.00	0.0000	140.00	No Ice	13.60	13.60	0.38
(T-Mobile)			0.00			1/2" Ice	17.50	17.50	0.53
			0.00			1" Ice	21.40	21.40	0.68
10-ft T-Frame	C	From Leg	1.00	0.0000	140.00	No Ice	13.60	13.60	0.38
(T-Mobile)			0.00			1/2" Ice	17.50	17.50	0.53
			0.00			1" Ice	21.40	21.40	0.68
DS2C03F36D-D	A	From Leg	4.00	0.0000	117.50	No Ice	7.30	7.30	0.08
(Eversource)			0.00			1/2" Ice	9.77	9.77	0.13
			9.00			1" Ice	12.25	12.25	0.20
Pirod 4' Side Mount Standoff	A	From Leg	4.00	0.0000	117.50	No Ice	2.72	2.72	0.05
(1)			0.00			1/2" Ice	4.91	4.91	0.09
(Eversource)			0.00			1" Ice	7.10	7.10	0.13

Dishes

Description	Face or Leg	Dish Type	Offset Type	Offsets: Horz Lateral Vert ft	Azimuth Adjustment °	3 dB Beam Width °	Elevation ft	Outside Diameter ft		Aperture Area ft^2	Weight K
PA6-65AC (CSP)	B	Paraboloid w/o Radome	From Leg	1.00 0.00 0.00	-50.0000		102.25	6.00	No Ice	28.27	0.09
									1/2" Ice	29.05	0.24
									1" Ice	29.83	0.39
PA6-65AC (CSP)	A	Paraboloid w/o Radome	From Face	1.00 0.00 0.00	-10.0000		194.25	6.00	No Ice	28.27	0.09
									1/2" Ice	29.05	0.24
									1" Ice	29.83	0.39
1.2M (Verizon)	B	Paraboloid w/o Radome	From Leg	2.00 0.00 0.00	40.0000		17.00	4.00	No Ice	12.17	0.17
									1/2" Ice	13.09	0.23
									1" Ice	14.01	0.30

Truss-Leg Interaction Properties

Section Designation	Area in^2	Area Ice in^2	Self Weight K	Ice Weight K	Equiv. Diameter in	Equiv. Diameter Ice in	Section Modulus S_x in^3	Section Modulus S_y in^3	Leg Area in^2
Pirod 105245	1090.3344	3016.1854	0.68	0.39	7.5718	20.9457	18.4723	21.3300	5.3014
Pirod 105217	2296.2363	5920.9186	0.59	0.71	7.9730	20.5587	18.4723	21.3300	5.3014
Pirod 105218	2425.3141	5977.6056	0.72	0.71	8.4212	20.7556	25.1958	29.0936	7.2158
Pirod 105218 reinf. w/1" dia. S.R.	2638.2422	6074.8002	0.98	0.64	9.1606	21.0931	38.1835	44.0905	10.8915
Pirod 105219 reinf. w/1" dia. S.R.	2799.7828	6114.7735	1.35	0.67	9.7215	21.2319	46.3174	53.4827	13.1787
Pirod 105219 reinf. w/1" dia. S.R.	2799.7828	6086.4561	1.35	0.64	9.7215	21.1335	46.3174	53.4827	13.1787
Pirod 105220 reinf. w/1" dia. S.R.	2877.1901	6084.7650	1.46	0.60	9.9902	21.1277	51.8434	59.8636	14.7262
Pirod 105220 reinf. w/1" dia. S.R.	2877.1901	6008.5740	1.46	0.52	9.9902	20.8631	51.8434	59.8636	14.7262

Tower Pressures - No Ice

$G_H = 0.850$

Section Elevation ft	z ft	K_Z	q_z psf	A_G ft^2	Face	A_F ft^2	A_R ft^2	A_{leg} ft^2	Leg %	C_AA_A In Face ft^2	C_AA_A Out Face ft^2
T1 197.00-187.00	192.00	1.452	49	46.458	A	1.089	6.053	2.917	40.84	2.737	0.000
					B	1.089	6.053		40.84	5.918	0.000
					C	1.089	6.053		40.84	0.000	0.000
T2 187.00-172.00	179.50	1.431	49	70.000	A	0.000	9.972	5.000	50.14	5.865	0.000
					B	0.000	9.972		50.14	28.424	0.000
					C	0.000	9.972		50.14	0.000	0.000
T3 172.00-152.00	162.00	1.401	48	98.750	A	0.000	15.045	7.501	49.85	41.282	0.000
					B	0.000	15.045		49.85	41.827	0.000
					C	0.000	15.045		49.85	0.000	0.000
T4 152.00-142.00	147.00	1.373	47	66.264	A	5.673	12.641	12.641	69.02	29.650	0.000
					B	5.673	12.641		69.02	20.914	0.000

Section Elevation ft	z ft	K_Z	q_z psf	A_G ft²	Face	A_F ft²	A_R ft²	A_{leg} ft²	Leg %	C_AA_A In Face ft²	C_AA_A Out Face ft²
					C	5.673	12.641		69.02	20.825	0.000
T5 142.00-122.00	132.00	1.342	46	162.528	A	13.687	27.153	26.621	65.18	59.300	0.000
					B	13.687	27.153		65.18	61.627	0.000
					C	13.687	27.153		65.18	55.392	0.000
T6 122.00-102.00	112.00	1.296	44	202.945	A	15.184	28.118	28.118	64.93	63.185	0.000
					B	15.184	28.118		64.93	61.627	0.000
					C	15.184	28.118		64.93	59.832	0.000
T7 102.00-82.00	92.00	1.244	42	243.613	A	18.990	31.198	30.586	60.94	63.740	0.000
					B	18.990	31.198		60.94	65.954	0.000
					C	18.990	31.198		60.94	60.942	0.000
T8 82.00-62.00	72.00	1.181	40	283.972	A	18.364	32.459	32.459	63.87	63.740	0.000
					B	18.364	32.459		63.87	68.274	0.000
					C	18.364	32.459		63.87	60.942	0.000
T9 62.00-42.00	52.00	1.103	37	323.972	A	22.855	33.108	32.459	58.00	63.740	0.000
					B	22.855	33.108		58.00	69.434	0.000
					C	22.855	33.108		58.00	60.942	0.000
T10 42.00-22.00	32.00	0.996	34	364.197	A	24.881	33.356	33.356	57.28	63.740	0.000
					B	24.881	33.356		57.28	69.434	0.000
					C	24.881	33.356		57.28	60.942	0.000
T11 22.00-2.00	12.00	0.85	29	404.197	A	30.345	34.023	33.356	51.82	47.805	0.000
					B	30.345	34.023		51.82	52.076	0.000
					C	30.345	34.023		51.82	46.407	0.000

Tower Pressure - With Ice

$G_H = 0.850$

Section Elevation ft	z ft	K_Z	q_z psf	t_Z in	A_G ft²	Face	A_F ft²	A_R ft²	A_{leg} ft²	Leg %	C_AA_A In Face ft²	C_AA_A Out Face ft²
T1 197.00-187.00	192.00	1.452	5	1.3714	48.744	A	1.089	21.451	7.488	33.22	10.327	0.000
						B	1.089	21.451		33.22	24.067	0.000
						C	1.089	21.451		33.22	0.000	0.000
T2 187.00-172.00	179.50	1.431	5	1.3622	73.406	A	0.000	31.982	11.811	36.93	22.056	0.000
						B	0.000	31.982		36.93	90.041	0.000
						C	0.000	31.982		36.93	0.000	0.000
T3 172.00-152.00	162.00	1.401	5	1.3483	103.245	A	0.000	44.380	16.491	37.16	93.553	0.000
						B	0.000	44.380		37.16	129.745	0.000
						C	0.000	44.380		37.16	0.000	0.000
T4 152.00-142.00	147.00	1.373	5	1.3353	68.492	A	5.673	39.720	34.968	77.03	63.878	0.000
						B	5.673	39.720		77.03	64.570	0.000
						C	5.673	39.720		77.03	37.451	0.000
T5 142.00-122.00	132.00	1.342	5	1.3210	166.937	A	13.687	80.209	68.643	73.11	127.299	0.000
						B	13.687	80.209		73.11	180.921	0.000
						C	13.687	80.209		73.11	104.596	0.000
T6 122.00-102.00	112.00	1.296	5	1.2995	207.282	A	15.184	80.443	69.300	72.47	141.909	0.000
						B	15.184	80.443		72.47	179.794	0.000
						C	15.184	80.443		72.47	118.870	0.000
T7 102.00-82.00	92.00	1.244	4	1.2742	247.865	A	18.990	86.261	70.427	66.91	143.112	0.000
						B	18.990	86.261		66.91	193.368	0.000
						C	18.990	86.261		66.91	121.666	0.000
T8 82.00-62.00	72.00	1.181	4	1.2433	288.121	A	18.364	84.187	70.891	69.13	141.916	0.000
						B	18.364	84.187		69.13	204.578	0.000
						C	18.364	84.187		69.13	120.553	0.000
T9 62.00-42.00	52.00	1.103	4	1.2035	327.988	A	22.855	86.467	70.562	64.55	140.372	0.000

Section Elevation ft	z ft	K_Z	q_z psf	t_Z in	A_G ft²	Face	A_F ft²	A_R ft²	A_{leg} ft²	Leg %	C_AA_A In Face ft²	C_AA_A Out Face ft²
						B	22.855	86.467		64.55	208.310	0.000
						C	22.855	86.467		64.55	119.118	0.000
T10 42.00-22.00	32.00	0.996	3	1.1465	368.023	A	24.881	85.419	70.543	63.96	138.163	0.000
						B	24.881	85.419		63.96	204.307	0.000
						C	24.881	85.419		63.96	117.064	0.000
T11 22.00-2.00	12.00	0.85	3	1.0394	407.666	A	30.345	86.053	69.659	59.85	100.517	0.000
						B	30.345	86.053		59.85	147.602	0.000
						C	30.345	86.053		59.85	89.861	0.000

Tower Pressure - Service

$G_H = 0.850$

Section Elevation ft	z ft	K_Z	q_z psf	A_G ft²	Face	A_F ft²	A_R ft²	A_{leg} ft²	Leg %	C_AA_A In Face ft²	C_AA_A Out Face ft²
T1	192.00	1.452	11	46.458	A	1.089	6.053	2.917	40.84	2.737	0.000
197.00-187.00					B	1.089	6.053		40.84	5.918	0.000
					C	1.089	6.053		40.84	0.000	0.000
T2	179.50	1.431	11	70.000	A	0.000	9.972	5.000	50.14	5.865	0.000
187.00-172.00					B	0.000	9.972		50.14	28.424	0.000
					C	0.000	9.972		50.14	0.000	0.000
T3	162.00	1.401	11	98.750	A	0.000	15.045	7.501	49.85	41.282	0.000
172.00-152.00					B	0.000	15.045		49.85	41.827	0.000
					C	0.000	15.045		49.85	0.000	0.000
T4	147.00	1.373	11	66.264	A	5.673	12.641	12.641	69.02	29.650	0.000
152.00-142.00					B	5.673	12.641		69.02	20.914	0.000
					C	5.673	12.641		69.02	20.825	0.000
T5	132.00	1.342	11	162.528	A	13.687	27.153	26.621	65.18	59.300	0.000
142.00-122.00					B	13.687	27.153		65.18	61.627	0.000
					C	13.687	27.153		65.18	55.392	0.000
T6	112.00	1.296	10	202.945	A	15.184	28.118	28.118	64.93	63.185	0.000
122.00-102.00					B	15.184	28.118		64.93	61.627	0.000
					C	15.184	28.118		64.93	59.832	0.000
T7	92.00	1.244	10	243.613	A	18.990	31.198	30.586	60.94	63.740	0.000
102.00-82.00					B	18.990	31.198		60.94	65.954	0.000
					C	18.990	31.198		60.94	60.942	0.000
T8 82.00-62.00	72.00	1.181	9	283.972	A	18.364	32.459	32.459	63.87	63.740	0.000
					B	18.364	32.459		63.87	68.274	0.000
					C	18.364	32.459		63.87	60.942	0.000
T9 62.00-42.00	52.00	1.103	9	323.972	A	22.855	33.108	32.459	58.00	63.740	0.000
					B	22.855	33.108		58.00	69.434	0.000
					C	22.855	33.108		58.00	60.942	0.000
T10	32.00	0.996	8	364.197	A	24.881	33.356	33.356	57.28	63.740	0.000
42.00-22.00					B	24.881	33.356		57.28	69.434	0.000
					C	24.881	33.356		57.28	60.942	0.000
T11 22.00-2.00	12.00	0.85	7	404.197	A	30.345	34.023	33.356	51.82	47.805	0.000
					B	30.345	34.023		51.82	52.076	0.000
					C	30.345	34.023		51.82	46.407	0.000

Tower Forces - No Ice - Wind Normal To Face

Section Elevation ft	Add Weight K	Self Weight K	Face	e	C_F	q_z psf	D_F	D_R	A_E ft²	F K	w plf	Ctrl. Face
T1 197.00-187.00	0.04	0.61	A	0.154	2.758	49	1	1	4.526	0.74	74.17	C
			B	0.154	2.758		1	1	4.526			
			C	0.154	2.758		1	1	4.526			
T2 187.00-172.00	0.16	0.94	A	0.142	2.799	49	1	1	5.652	1.51	100.38	C
			B	0.142	2.799		1	1	5.652			
			C	0.142	2.799		1	1	5.652			
T3 172.00-152.00	0.41	1.60	A	0.152	2.763	48	1	1	8.542	2.97	148.72	C
			B	0.152	2.763		1	1	8.542			
			C	0.152	2.763		1	1	8.542			
T4 152.00-142.00	0.47	1.24	A	0.276	2.361	47	1	1	13.156	2.93	293.10	C
			B	0.276	2.361		1	1	13.156			
			C	0.276	2.361		1	1	13.156			
T5 142.00-122.00	1.09	2.33	A	0.251	2.434	46	1	1	29.580	6.89	344.70	C
			B	0.251	2.434		1	1	29.580			
			C	0.251	2.434		1	1	29.580			
T6 122.00-102.00	1.13	3.00	A	0.213	2.552	44	1	1	31.407	7.15	357.62	C
			B	0.213	2.552		1	1	31.407			
			C	0.213	2.552		1	1	31.407			
T7 102.00-82.00	1.15	3.99	A	0.206	2.576	42	1	1	36.946	7.53	376.57	C
			B	0.206	2.576		1	1	36.946			
			C	0.206	2.576		1	1	36.946			
T8 82.00-62.00	1.16	5.31	A	0.179	2.668	40	1	1	36.902	7.31	365.59	C
			B	0.179	2.668		1	1	36.902			
			C	0.179	2.668		1	1	36.902			
T9 62.00-42.00	1.17	5.37	A	0.173	2.69	37	1	1	41.734	7.29	364.49	C
			B	0.173	2.69		1	1	41.734			
			C	0.173	2.69		1	1	41.734			
T10 42.00-22.00	1.17	6.16	A	0.16	2.735	34	1	1	43.848	6.80	340.14	C
			B	0.16	2.735		1	1	43.848			
			C	0.16	2.735		1	1	43.848			
T11 22.00-2.00	0.93	6.18	A	0.159	2.738	29	1	1	49.689	5.50	274.89	C
			B	0.159	2.738		1	1	49.689			
			C	0.159	2.738		1	1	49.689			
Sum Weight:	8.88	38.22						OTM	4805.25 kip-ft	56.63		

Tower Forces - No Ice - Wind 45 To Face

Section Elevation ft	Add Weight K	Self Weight K	Face	e	C_F	q_z psf	D_F	D_R	A_E ft²	F K	w plf	Ctrl. Face
T1 197.00-187.00	0.04	0.61	A	0.154	2.758	49	0.825	1	4.336	0.72	71.96	C
			B	0.154	2.758		0.825	1	4.336			
			C	0.154	2.758		0.825	1	4.336			
T2 187.00-172.00	0.16	0.94	A	0.142	2.799	49	0.825	1	5.652	1.51	100.38	C
			B	0.142	2.799		0.825	1	5.652			
			C	0.142	2.799		0.825	1	5.652			
T3 172.00-152.00	0.41	1.60	A	0.152	2.763	48	0.825	1	8.542	2.97	148.72	C
			B	0.152	2.763		0.825	1	8.542			
			C	0.152	2.763		0.825	1	8.542			
T4 152.00-142.00	0.47	1.24	A	0.276	2.361	47	0.825	1	12.163	2.84	283.80	C
			B	0.276	2.361		0.825	1	12.163			

Section Elevation ft	Add Weight K	Self Weight K	Face	e	C_F	q_z psf	D_F	D_R	A_E ft²	F K	w plf	Ctrl. Face
			C	0.276	2.361		0.825	1	12.163			
T5	1.09	2.33	A	0.251	2.434	46	0.825	1	27.185	6.67	333.40	C
142.00-122.00			B	0.251	2.434		0.825	1	27.185			
			C	0.251	2.434		0.825	1	27.185			
T6	1.13	3.00	A	0.213	2.552	44	0.825	1	28.749	6.90	344.92	C
122.00-102.00			B	0.213	2.552		0.825	1	28.749			
			C	0.213	2.552		0.825	1	28.749			
T7	1.15	3.99	A	0.206	2.576	42	0.825	1	33.623	7.22	361.19	C
102.00-82.00			B	0.206	2.576		0.825	1	33.623			
			C	0.206	2.576		0.825	1	33.623			
T8	1.16	5.31	A	0.179	2.668	40	0.825	1	33.688	7.02	350.96	C
82.00-62.00			B	0.179	2.668		0.825	1	33.688			
			C	0.179	2.668		0.825	1	33.688			
T9	1.17	5.37	A	0.173	2.69	37	0.825	1	37.735	6.95	347.34	C
62.00-42.00			B	0.173	2.69		0.825	1	37.735			
			C	0.173	2.69		0.825	1	37.735			
T10	1.17	6.16	A	0.16	2.735	34	0.825	1	39.494	6.46	323.00	C
42.00-22.00			B	0.16	2.735		0.825	1	39.494			
			C	0.16	2.735		0.825	1	39.494			
T11	0.93	6.18	A	0.159	2.738	29	0.825	1	44.379	5.14	257.04	C
22.00-2.00			B	0.159	2.738		0.825	1	44.379			
			C	0.159	2.738		0.825	1	44.379			
Sum Weight:	8.88	38.22						OTM	4651.09 kip-ft	54.39		

Tower Forces - No Ice - Wind 60 To Face

Section Elevation ft	Add Weight K	Self Weight K	Face	e	C_F	q_z psf	D_F	D_R	A_E ft²	F K	w plf	Ctrl. Face
T1	0.04	0.61	A	0.154	2.758	49	0.8	1	4.309	0.72	71.65	C
197.00-187.00			B	0.154	2.758		0.8	1	4.309			
			C	0.154	2.758		0.8	1	4.309			
T2	0.16	0.94	A	0.142	2.799	49	0.8	1	5.652	1.51	100.38	C
187.00-172.00			B	0.142	2.799		0.8	1	5.652			
			C	0.142	2.799		0.8	1	5.652			
T3	0.41	1.60	A	0.152	2.763	48	0.8	1	8.542	2.97	148.72	C
172.00-152.00			B	0.152	2.763		0.8	1	8.542			
			C	0.152	2.763		0.8	1	8.542			
T4	0.47	1.24	A	0.276	2.361	47	0.8	1	12.021	2.82	282.47	C
152.00-142.00			B	0.276	2.361		0.8	1	12.021			
			C	0.276	2.361		0.8	1	12.021			
T5	1.09	2.33	A	0.251	2.434	46	0.8	1	26.843	6.64	331.78	C
142.00-122.00			B	0.251	2.434		0.8	1	26.843			
			C	0.251	2.434		0.8	1	26.843			
T6	1.13	3.00	A	0.213	2.552	44	0.8	1	28.370	6.86	343.10	C
122.00-102.00			B	0.213	2.552		0.8	1	28.370			
			C	0.213	2.552		0.8	1	28.370			
T7	1.15	3.99	A	0.206	2.576	42	0.8	1	33.148	7.18	358.99	C
102.00-82.00			B	0.206	2.576		0.8	1	33.148			
			C	0.206	2.576		0.8	1	33.148			
T8	1.16	5.31	A	0.179	2.668	40	0.8	1	33.229	6.98	348.87	C
82.00-62.00			B	0.179	2.668		0.8	1	33.229			

Section Elevation ft	Add Weight K	Self Weight K	Face	e	C_F	q_z psf	D_F	D_R	A_E ft²	F K	w plf	Ctrl. Face
			C	0.179	2.668		0.8	1	33.229			
T9	1.17	5.37	A	0.173	2.69	37	0.8	1	37.163	6.90	344.89	C
62.00-42.00			B	0.173	2.69		0.8	1	37.163			
			C	0.173	2.69		0.8	1	37.163			
T10	1.17	6.16	A	0.16	2.735	34	0.8	1	38.872	6.41	320.56	C
42.00-22.00			B	0.16	2.735		0.8	1	38.872			
			C	0.16	2.735		0.8	1	38.872			
T11	0.93	6.18	A	0.159	2.738	29	0.8	1	43.620	5.09	254.48	C
22.00-2.00			B	0.159	2.738		0.8	1	43.620			
			C	0.159	2.738		0.8	1	43.620			
Sum Weight:	8.88	38.22						OTM	4629.06 kip-ft	54.07		

Tower Forces - No Ice - Wind 90 To Face

Section Elevation ft	Add Weight K	Self Weight K	Face	e	C_F	q_z psf	D_F	D_R	A_E ft²	F K	w plf	Ctrl. Face
T1	0.04	0.61	A	0.154	2.758	49	0.85	1	4.363	0.72	72.28	C
197.00-187.00			B	0.154	2.758		0.85	1	4.363			
			C	0.154	2.758		0.85	1	4.363			
T2	0.16	0.94	A	0.142	2.799	49	0.85	1	5.652	1.51	100.38	C
187.00-172.00			B	0.142	2.799		0.85	1	5.652			
			C	0.142	2.799		0.85	1	5.652			
T3	0.41	1.60	A	0.152	2.763	48	0.85	1	8.542	2.97	148.72	C
172.00-152.00			B	0.152	2.763		0.85	1	8.542			
			C	0.152	2.763		0.85	1	8.542			
T4	0.47	1.24	A	0.276	2.361	47	0.85	1	12.305	2.85	285.13	C
152.00-142.00			B	0.276	2.361		0.85	1	12.305			
			C	0.276	2.361		0.85	1	12.305			
T5	1.09	2.33	A	0.251	2.434	46	0.85	1	27.527	6.70	335.01	C
142.00-122.00			B	0.251	2.434		0.85	1	27.527			
			C	0.251	2.434		0.85	1	27.527			
T6	1.13	3.00	A	0.213	2.552	44	0.85	1	29.129	6.93	346.73	C
122.00-102.00			B	0.213	2.552		0.85	1	29.129			
			C	0.213	2.552		0.85	1	29.129			
T7	1.15	3.99	A	0.206	2.576	42	0.85	1	34.098	7.27	363.39	C
102.00-82.00			B	0.206	2.576		0.85	1	34.098			
			C	0.206	2.576		0.85	1	34.098			
T8	1.16	5.31	A	0.179	2.668	40	0.85	1	34.147	7.06	353.05	C
82.00-62.00			B	0.179	2.668		0.85	1	34.147			
			C	0.179	2.668		0.85	1	34.147			
T9	1.17	5.37	A	0.173	2.69	37	0.85	1	38.306	7.00	349.79	C
62.00-42.00			B	0.173	2.69		0.85	1	38.306			
			C	0.173	2.69		0.85	1	38.306			
T10	1.17	6.16	A	0.16	2.735	34	0.85	1	40.116	6.51	325.45	C
42.00-22.00			B	0.16	2.735		0.85	1	40.116			
			C	0.16	2.735		0.85	1	40.116			
T11	0.93	6.18	A	0.159	2.738	29	0.85	1	45.137	5.19	259.59	C
22.00-2.00			B	0.159	2.738		0.85	1	45.137			
			C	0.159	2.738		0.85	1	45.137			
Sum Weight:	8.88	38.22						OTM	4673.11 kip-ft	54.71		

Tower Forces - With Ice - Wind Normal To Face

Section Elevation ft	Add Weight K	Self Weight K	Face	e	C_F	q_z psf	D_F	D_R	A_E ft²	F K	w plf	Ctrl. Face
T1	0.34	1.40	A	0.462	1.954	5	1	1	15.363	0.21	20.84	C
197.00-187.00			B	0.462	1.954		1	1	15.363			
			C	0.462	1.954		1	1	15.363			
T2	1.28	1.98	A	0.436	1.998	5	1	1	20.866	0.44	29.64	C
187.00-172.00			B	0.436	1.998		1	1	20.866			
			C	0.436	1.998		1	1	20.866			
T3	2.95	3.05	A	0.43	2.008	5	1	1	28.832	0.77	38.39	C
172.00-152.00			B	0.43	2.008		1	1	28.832			
			C	0.43	2.008		1	1	28.832			
T4	2.65	2.37	A	0.663	1.778	5	1	1	36.391	0.49	49.01	C
152.00-142.00			B	0.663	1.778		1	1	36.391			
			C	0.663	1.778		1	1	36.391			
T5	6.40	5.79	A	0.562	1.832	5	1	1	70.918	1.23	61.66	C
142.00-122.00			B	0.562	1.832		1	1	70.918			
			C	0.562	1.832		1	1	70.918			
T6	6.63	6.57	A	0.461	1.955	5	1	1	68.152	1.42	71.07	C
122.00-102.00			B	0.461	1.955		1	1	68.152			
			C	0.461	1.955		1	1	68.152			
T7	6.75	7.71	A	0.425	2.017	4	1	1	74.329	1.52	76.10	C
102.00-82.00			B	0.425	2.017		1	1	74.329			
			C	0.425	2.017		1	1	74.329			
T8	6.72	8.96	A	0.356	2.158	4	1	1	69.957	1.51	75.35	C
82.00-62.00			B	0.356	2.158		1	1	69.957			
			C	0.356	2.158		1	1	69.957			
T9	6.61	9.24	A	0.333	2.211	4	1	1	75.160	1.46	72.92	C
62.00-42.00			B	0.333	2.211		1	1	75.160			
			C	0.333	2.211		1	1	75.160			
T10	6.38	9.99	A	0.3	2.297	3	1	1	75.621	1.32	66.21	C
42.00-22.00			B	0.3	2.297		1	1	75.621			
			C	0.3	2.297		1	1	75.621			
T11	4.58	9.94	A	0.286	2.335	3	1	1	81.138	0.99	49.34	C
22.00-2.00			B	0.286	2.335		1	1	81.138			
			C	0.286	2.335		1	1	81.138			
Sum Weight:	51.30	68.46						OTM	994.09 kip-ft	11.36		

Tower Forces - With Ice - Wind 45 To Face

Section Elevation ft	Add Weight K	Self Weight K	Face	e	C_F	q_z psf	D_F	D_R	A_E ft²	F K	w plf	Ctrl. Face
T1	0.34	1.40	A	0.462	1.954	5	0.825	1	15.172	0.21	20.68	C
197.00-187.00			B	0.462	1.954		0.825	1	15.172			
			C	0.462	1.954		0.825	1	15.172			
T2	1.28	1.98	A	0.436	1.998	5	0.825	1	20.866	0.44	29.64	C

Section Elevation ft	Add Weight K	Self Weight K	Face	e	C_F	q_z psf	D_F	D_R	A_E ft²	F K	w plf	Ctrl. Face
187.00-172.00			B	0.436	1.998		0.825	1	20.866			
			C	0.436	1.998		0.825	1	20.866			
T3	2.95	3.05	A	0.43	2.008	5	0.825	1	28.832	0.77	38.39	C
172.00-152.00			B	0.43	2.008		0.825	1	28.832			
			C	0.43	2.008		0.825	1	28.832			
T4	2.65	2.37	A	0.663	1.778	5	0.825	1	35.398	0.48	48.30	C
152.00-142.00			B	0.663	1.778		0.825	1	35.398			
			C	0.663	1.778		0.825	1	35.398			
T5	6.40	5.79	A	0.562	1.832	5	0.825	1	68.523	1.22	60.79	C
142.00-122.00			B	0.562	1.832		0.825	1	68.523			
			C	0.562	1.832		0.825	1	68.523			
T6	6.63	6.57	A	0.461	1.955	5	0.825	1	65.495	1.40	70.08	C
122.00-102.00			B	0.461	1.955		0.825	1	65.495			
			C	0.461	1.955		0.825	1	65.495			
T7	6.75	7.71	A	0.425	2.017	4	0.825	1	71.005	1.50	74.86	C
102.00-82.00			B	0.425	2.017		0.825	1	71.005			
			C	0.425	2.017		0.825	1	71.005			
T8	6.72	8.96	A	0.356	2.158	4	0.825	1	66.743	1.48	74.14	C
82.00-62.00			B	0.356	2.158		0.825	1	66.743			
			C	0.356	2.158		0.825	1	66.743			
T9	6.61	9.24	A	0.333	2.211	4	0.825	1	71.160	1.43	71.48	C
62.00-42.00			B	0.333	2.211		0.825	1	71.160			
			C	0.333	2.211		0.825	1	71.160			
T10	6.38	9.99	A	0.3	2.297	3	0.825	1	71.267	1.29	64.74	C
42.00-22.00			B	0.3	2.297		0.825	1	71.267			
			C	0.3	2.297		0.825	1	71.267			
T11	4.58	9.94	A	0.286	2.335	3	0.825	1	75.828	0.96	47.78	C
22.00-2.00			B	0.286	2.335		0.825	1	75.828			
			C	0.286	2.335		0.825	1	75.828			
Sum Weight:	51.30	68.46						OTM	981.73 kip-ft	11.18		

Tower Forces - With Ice - Wind 60 To Face

Section Elevation ft	Add Weight K	Self Weight K	Face	e	C_F	q_z psf	D_F	D_R	A_E ft²	F K	w plf	Ctrl. Face
T1	0.34	1.40	A	0.462	1.954	5	0.8	1	15.145	0.21	20.66	C
197.00-187.00			B	0.462	1.954		0.8	1	15.145			
			C	0.462	1.954		0.8	1	15.145			
T2	1.28	1.98	A	0.436	1.998	5	0.8	1	20.866	0.44	29.64	C
187.00-172.00			B	0.436	1.998		0.8	1	20.866			
			C	0.436	1.998		0.8	1	20.866			
T3	2.95	3.05	A	0.43	2.008	5	0.8	1	28.832	0.77	38.39	C
172.00-152.00			B	0.43	2.008		0.8	1	28.832			
			C	0.43	2.008		0.8	1	28.832			
T4	2.65	2.37	A	0.663	1.778	5	0.8	1	35.257	0.48	48.19	C
152.00-142.00			B	0.663	1.778		0.8	1	35.257			
			C	0.663	1.778		0.8	1	35.257			
T5	6.40	5.79	A	0.562	1.832	5	0.8	1	68.180	1.21	60.66	C
142.00-122.00			B	0.562	1.832		0.8	1	68.180			
			C	0.562	1.832		0.8	1	68.180			
T6	6.63	6.57	A	0.461	1.955	5	0.8	1	65.116	1.40	69.94	C

Section Elevation ft	Add Weight K	Self Weight K	Face	e	C_F	q_z psf	D_F	D_R	A_E ft²	F K	w plf	Ctrl. Face
122.00-102.00			B	0.461	1.955		0.8	1	65.116			
			C	0.461	1.955		0.8	1	65.116			
T7	6.75	7.71	A	0.425	2.017	4	0.8	1	70.531	1.49	74.69	C
102.00-82.00			B	0.425	2.017		0.8	1	70.531			
			C	0.425	2.017		0.8	1	70.531			
T8	6.72	8.96	A	0.356	2.158	4	0.8	1	66.284	1.48	73.97	C
82.00-62.00			B	0.356	2.158		0.8	1	66.284			
			C	0.356	2.158		0.8	1	66.284			
T9	6.61	9.24	A	0.333	2.211	4	0.8	1	70.589	1.43	71.27	C
62.00-42.00			B	0.333	2.211		0.8	1	70.589			
			C	0.333	2.211		0.8	1	70.589			
T10	6.38	9.99	A	0.3	2.297	3	0.8	1	70.645	1.29	64.53	C
42.00-22.00			B	0.3	2.297		0.8	1	70.645			
			C	0.3	2.297		0.8	1	70.645			
T11	4.58	9.94	A	0.286	2.335	3	0.8	1	75.069	0.95	47.55	C
22.00-2.00			B	0.286	2.335		0.8	1	75.069			
			C	0.286	2.335		0.8	1	75.069			
Sum Weight:	51.30	68.46						OTM	979.97 kip-ft	11.15		

Tower Forces - With Ice - Wind 90 To Face

Section Elevation ft	Add Weight K	Self Weight K	Face	e	C_F	q_z psf	D_F	D_R	A_E ft²	F K	w plf	Ctrl. Face
T1	0.34	1.40	A	0.462	1.954	5	0.85	1	15.199	0.21	20.70	C
197.00-187.00			B	0.462	1.954		0.85	1	15.199			
			C	0.462	1.954		0.85	1	15.199			
T2	1.28	1.98	A	0.436	1.998	5	0.85	1	20.866	0.44	29.64	C
187.00-172.00			B	0.436	1.998		0.85	1	20.866			
			C	0.436	1.998		0.85	1	20.866			
T3	2.95	3.05	A	0.43	2.008	5	0.85	1	28.832	0.77	38.39	C
172.00-152.00			B	0.43	2.008		0.85	1	28.832			
			C	0.43	2.008		0.85	1	28.832			
T4	2.65	2.37	A	0.663	1.778	5	0.85	1	35.540	0.48	48.40	C
152.00-142.00			B	0.663	1.778		0.85	1	35.540			
			C	0.663	1.778		0.85	1	35.540			
T5	6.40	5.79	A	0.562	1.832	5	0.85	1	68.865	1.22	60.91	C
142.00-122.00			B	0.562	1.832		0.85	1	68.865			
			C	0.562	1.832		0.85	1	68.865			
T6	6.63	6.57	A	0.461	1.955	5	0.85	1	65.875	1.40	70.22	C
122.00-102.00			B	0.461	1.955		0.85	1	65.875			
			C	0.461	1.955		0.85	1	65.875			
T7	6.75	7.71	A	0.425	2.017	4	0.85	1	71.480	1.50	75.04	C
102.00-82.00			B	0.425	2.017		0.85	1	71.480			
			C	0.425	2.017		0.85	1	71.480			
T8	6.72	8.96	A	0.356	2.158	4	0.85	1	67.202	1.49	74.31	C
82.00-62.00			B	0.356	2.158		0.85	1	67.202			
			C	0.356	2.158		0.85	1	67.202			
T9	6.61	9.24	A	0.333	2.211	4	0.85	1	71.732	1.43	71.69	C
62.00-42.00			B	0.333	2.211		0.85	1	71.732			
			C	0.333	2.211		0.85	1	71.732			
T10	6.38	9.99	A	0.3	2.297	3	0.85	1	71.889	1.30	64.95	C

Section Elevation ft	Add Weight K	Self Weight K	Face	e	C_F	q_z psf	D_F	D_R	A_E ft²	F K	w plf	Ctrl. Face
42.00-22.00			B	0.3	2.297		0.85	1	71.889			
			C	0.3	2.297		0.85	1	71.889			
T11	4.58	9.94	A	0.286	2.335	3	0.85	1	76.586	0.96	48.00	C
22.00-2.00			B	0.286	2.335		0.85	1	76.586			
			C	0.286	2.335		0.85	1	76.586			
Sum Weight:	51.30	68.46						OTM	983.50 kip-ft	11.21		

Tower Forces - Service - Wind Normal To Face

Section Elevation ft	Add Weight K	Self Weight K	Face	e	C_F	q_z psf	D_F	D_R	A_E ft²	F K	w plf	Ctrl. Face
T1	0.04	0.61	A	0.154	2.758	11	1	1	4.526	0.17	17.09	C
197.00-187.00			B	0.154	2.758		1	1	4.526			
			C	0.154	2.758		1	1	4.526			
T2	0.16	0.94	A	0.142	2.799	11	1	1	5.652	0.35	23.13	C
187.00-172.00			B	0.142	2.799		1	1	5.652			
			C	0.142	2.799		1	1	5.652			
T3	0.41	1.60	A	0.152	2.763	11	1	1	8.542	0.69	34.27	C
172.00-152.00			B	0.152	2.763		1	1	8.542			
			C	0.152	2.763		1	1	8.542			
T4	0.47	1.24	A	0.276	2.361	11	1	1	13.156	0.68	67.53	C
152.00-142.00			B	0.276	2.361		1	1	13.156			
			C	0.276	2.361		1	1	13.156			
T5	1.09	2.33	A	0.251	2.434	11	1	1	29.580	1.59	79.42	C
142.00-122.00			B	0.251	2.434		1	1	29.580			
			C	0.251	2.434		1	1	29.580			
T6	1.13	3.00	A	0.213	2.552	10	1	1	31.407	1.65	82.39	C
122.00-102.00			B	0.213	2.552		1	1	31.407			
			C	0.213	2.552		1	1	31.407			
T7	1.15	3.99	A	0.206	2.576	10	1	1	36.946	1.74	86.76	C
102.00-82.00			B	0.206	2.576		1	1	36.946			
			C	0.206	2.576		1	1	36.946			
T8	1.16	5.31	A	0.179	2.668	9	1	1	36.902	1.68	84.23	C
82.00-62.00			B	0.179	2.668		1	1	36.902			
			C	0.179	2.668		1	1	36.902			
T9	1.17	5.37	A	0.173	2.69	9	1	1	41.734	1.68	83.98	C
62.00-42.00			B	0.173	2.69		1	1	41.734			
			C	0.173	2.69		1	1	41.734			
T10	1.17	6.16	A	0.16	2.735	8	1	1	43.848	1.57	78.37	C
42.00-22.00			B	0.16	2.735		1	1	43.848			
			C	0.16	2.735		1	1	43.848			
T11	0.93	6.18	A	0.159	2.738	7	1	1	49.689	1.27	63.34	C
22.00-2.00			B	0.159	2.738		1	1	49.689			
			C	0.159	2.738		1	1	49.689			
Sum Weight:	8.88	38.22						OTM	1107.13 kip-ft	13.05		

Tower Forces - Service - Wind 45 To Face

Section Elevation ft	Add Weight K	Self Weight K	Face	e	C_F	q_z psf	D_F	D_R	A_E ft²	F K	w plf	Ctrl. Face
T1 197.00-187.00	0.04	0.61	A	0.154	2.758	11	0.825	1	4.336	0.17	16.58	C
			B	0.154	2.758		0.825	1	4.336			
			C	0.154	2.758		0.825	1	4.336			
T2 187.00-172.00	0.16	0.94	A	0.142	2.799	11	0.825	1	5.652	0.35	23.13	C
			B	0.142	2.799		0.825	1	5.652			
			C	0.142	2.799		0.825	1	5.652			
T3 172.00-152.00	0.41	1.60	A	0.152	2.763	11	0.825	1	8.542	0.69	34.27	C
			B	0.152	2.763		0.825	1	8.542			
			C	0.152	2.763		0.825	1	8.542			
T4 152.00-142.00	0.47	1.24	A	0.276	2.361	11	0.825	1	12.163	0.65	65.39	C
			B	0.276	2.361		0.825	1	12.163			
			C	0.276	2.361		0.825	1	12.163			
T5 142.00-122.00	1.09	2.33	A	0.251	2.434	11	0.825	1	27.185	1.54	76.81	C
			B	0.251	2.434		0.825	1	27.185			
			C	0.251	2.434		0.825	1	27.185			
T6 122.00-102.00	1.13	3.00	A	0.213	2.552	10	0.825	1	28.749	1.59	79.47	C
			B	0.213	2.552		0.825	1	28.749			
			C	0.213	2.552		0.825	1	28.749			
T7 102.00-82.00	1.15	3.99	A	0.206	2.576	10	0.825	1	33.623	1.66	83.22	C
			B	0.206	2.576		0.825	1	33.623			
			C	0.206	2.576		0.825	1	33.623			
T8 82.00-62.00	1.16	5.31	A	0.179	2.668	9	0.825	1	33.688	1.62	80.86	C
			B	0.179	2.668		0.825	1	33.688			
			C	0.179	2.668		0.825	1	33.688			
T9 62.00-42.00	1.17	5.37	A	0.173	2.69	9	0.825	1	37.735	1.60	80.03	C
			B	0.173	2.69		0.825	1	37.735			
			C	0.173	2.69		0.825	1	37.735			
T10 42.00-22.00	1.17	6.16	A	0.16	2.735	8	0.825	1	39.494	1.49	74.42	C
			B	0.16	2.735		0.825	1	39.494			
			C	0.16	2.735		0.825	1	39.494			
T11 22.00-2.00	0.93	6.18	A	0.159	2.738	7	0.825	1	44.379	1.18	59.22	C
			B	0.159	2.738		0.825	1	44.379			
			C	0.159	2.738		0.825	1	44.379			
Sum Weight:	8.88	38.22						OTM	1071.61 kip-ft	12.53		

Tower Forces - Service - Wind 60 To Face

Section Elevation ft	Add Weight K	Self Weight K	Face	e	C_F	q_z psf	D_F	D_R	A_E ft²	F K	w plf	Ctrl. Face
T1 197.00-187.00	0.04	0.61	A	0.154	2.758	11	0.8	1	4.309	0.17	16.51	C
			B	0.154	2.758		0.8	1	4.309			
			C	0.154	2.758		0.8	1	4.309			
T2 187.00-172.00	0.16	0.94	A	0.142	2.799	11	0.8	1	5.652	0.35	23.13	C
			B	0.142	2.799		0.8	1	5.652			
			C	0.142	2.799		0.8	1	5.652			
T3 172.00-152.00	0.41	1.60	A	0.152	2.763	11	0.8	1	8.542	0.69	34.27	C
			B	0.152	2.763		0.8	1	8.542			
			C	0.152	2.763		0.8	1	8.542			

Section Elevation ft	Add Weight K	Self Weight K	Face	e	C_F	q_z psf	D_F	D_R	A_E ft²	F K	w plf	Ctrl. Face
T4 152.00-142.00	0.47	1.24	A	0.276	2.361	11	0.8	1	12.021	0.65	65.08	C
			B	0.276	2.361		0.8	1	12.021			
			C	0.276	2.361		0.8	1	12.021			
T5 142.00-122.00	1.09	2.33	A	0.251	2.434	11	0.8	1	26.843	1.53	76.44	C
			B	0.251	2.434		0.8	1	26.843			
			C	0.251	2.434		0.8	1	26.843			
T6 122.00-102.00	1.13	3.00	A	0.213	2.552	10	0.8	1	28.370	1.58	79.05	C
			B	0.213	2.552		0.8	1	28.370			
			C	0.213	2.552		0.8	1	28.370			
T7 102.00-82.00	1.15	3.99	A	0.206	2.576	10	0.8	1	33.148	1.65	82.71	C
			B	0.206	2.576		0.8	1	33.148			
			C	0.206	2.576		0.8	1	33.148			
T8 82.00-62.00	1.16	5.31	A	0.179	2.668	9	0.8	1	33.229	1.61	80.38	C
			B	0.179	2.668		0.8	1	33.229			
			C	0.179	2.668		0.8	1	33.229			
T9 62.00-42.00	1.17	5.37	A	0.173	2.69	9	0.8	1	37.163	1.59	79.46	C
			B	0.173	2.69		0.8	1	37.163			
			C	0.173	2.69		0.8	1	37.163			
T10 42.00-22.00	1.17	6.16	A	0.16	2.735	8	0.8	1	38.872	1.48	73.86	C
			B	0.16	2.735		0.8	1	38.872			
			C	0.16	2.735		0.8	1	38.872			
T11 22.00-2.00	0.93	6.18	A	0.159	2.738	7	0.8	1	43.620	1.17	58.63	C
			B	0.159	2.738		0.8	1	43.620			
			C	0.159	2.738		0.8	1	43.620			
Sum Weight:	8.88	38.22						OTM	1066.54 kip-ft	12.46		

Tower Forces - Service - Wind 90 To Face

Section Elevation ft	Add Weight K	Self Weight K	Face	e	C_F	q_z psf	D_F	D_R	A_E ft²	F K	w plf	Ctrl. Face
T1 197.00-187.00	0.04	0.61	A	0.154	2.758	11	0.85	1	4.363	0.17	16.65	C
			B	0.154	2.758		0.85	1	4.363			
			C	0.154	2.758		0.85	1	4.363			
T2 187.00-172.00	0.16	0.94	A	0.142	2.799	11	0.85	1	5.652	0.35	23.13	C
			B	0.142	2.799		0.85	1	5.652			
			C	0.142	2.799		0.85	1	5.652			
T3 172.00-152.00	0.41	1.60	A	0.152	2.763	11	0.85	1	8.542	0.69	34.27	C
			B	0.152	2.763		0.85	1	8.542			
			C	0.152	2.763		0.85	1	8.542			
T4 152.00-142.00	0.47	1.24	A	0.276	2.361	11	0.85	1	12.305	0.66	65.69	C
			B	0.276	2.361		0.85	1	12.305			
			C	0.276	2.361		0.85	1	12.305			
T5 142.00-122.00	1.09	2.33	A	0.251	2.434	11	0.85	1	27.527	1.54	77.19	C
			B	0.251	2.434		0.85	1	27.527			
			C	0.251	2.434		0.85	1	27.527			
T6 122.00-102.00	1.13	3.00	A	0.213	2.552	10	0.85	1	29.129	1.60	79.89	C
			B	0.213	2.552		0.85	1	29.129			
			C	0.213	2.552		0.85	1	29.129			
T7 102.00-82.00	1.15	3.99	A	0.206	2.576	10	0.85	1	34.098	1.67	83.72	C
			B	0.206	2.576		0.85	1	34.098			
			C	0.206	2.576		0.85	1	34.098			

Section Elevation ft	Add Weight K	Self Weight K	Face	e	C_F	q_z psf	D_F	D_R	A_E ft²	F K	w plf	Ctrl. Face
T8	1.16	5.31	A	0.179	2.668	9	0.85	1	34.147	1.63	81.34	C
82.00-62.00			B	0.179	2.668		0.85	1	34.147			
			C	0.179	2.668		0.85	1	34.147			
T9	1.17	5.37	A	0.173	2.69	9	0.85	1	38.306	1.61	80.59	C
62.00-42.00			B	0.173	2.69		0.85	1	38.306			
			C	0.173	2.69		0.85	1	38.306			
T10	1.17	6.16	A	0.16	2.735	8	0.85	1	40.116	1.50	74.98	C
42.00-22.00			B	0.16	2.735		0.85	1	40.116			
			C	0.16	2.735		0.85	1	40.116			
T11	0.93	6.18	A	0.159	2.738	7	0.85	1	45.137	1.20	59.81	C
22.00-2.00			B	0.159	2.738		0.85	1	45.137			
			C	0.159	2.738		0.85	1	45.137			
Sum Weight:	8.88	38.22						OTM	1076.68 kip-ft	12.61		

Force Totals

Load Case	Vertical Forces K	Sum of Forces X K	Sum of Forces Z K	Sum of Overturning Moments, M_x kip-ft	Sum of Overturning Moments, M_z kip-ft	Sum of Torques kip-ft
Leg Weight	26.37					
Bracing Weight	10.36					
Total Member Self-Weight	36.73			-5.00	16.62	
Gusset Weight	1.49					
Total Weight	59.10			-5.00	16.62	
Wind 0 deg - No Ice		-0.33	-77.52	-7915.53	73.63	-75.99
Wind 30 deg - No Ice		38.04	-65.22	-6662.17	-3974.49	-74.43
Wind 45 deg - No Ice		54.29	-52.86	-5370.42	-5712.73	-63.86
Wind 60 deg - No Ice		66.05	-36.72	-3703.14	-6927.68	-51.40
Wind 90 deg - No Ice		76.56	0.86	144.06	-7960.32	-18.71
Wind 120 deg - No Ice		68.12	39.00	4012.88	-7045.72	21.42
Wind 135 deg - No Ice		55.43	54.08	5563.07	-5781.64	41.10
Wind 150 deg - No Ice		39.41	65.23	6730.33	-4171.31	57.77
Wind 180 deg - No Ice		0.28	75.58	7843.52	-142.00	71.00
Wind 210 deg - No Ice		-39.02	65.01	6670.05	4049.72	73.74
Wind 225 deg - No Ice		-54.13	52.97	5445.06	5614.53	65.71
Wind 240 deg - No Ice		-67.77	38.83	3956.97	6951.86	52.38
Wind 270 deg - No Ice		-76.59	0.12	26.94	7930.32	16.53
Wind 300 deg - No Ice		-66.18	-37.24	-3854.90	6887.06	-28.17
Wind 315 deg - No Ice		-54.51	-53.10	-5493.88	5664.82	-47.51
Wind 330 deg - No Ice		-38.44	-65.37	-6744.27	3986.47	-60.76
Member Ice	30.24					
Gusset Ice	0.91					
Total Weight Ice	149.92			-29.66	117.01	
Wind 0 deg - Ice		-0.04	-14.87	-1541.82	123.69	-14.32
Wind 30 deg - Ice		7.39	-12.71	-1321.22	-645.29	-16.87
Wind 45 deg - Ice		10.51	-10.34	-1076.89	-971.01	-16.22
Wind 60 deg - Ice		12.83	-7.25	-759.86	-1208.32	-14.74
Wind 90 deg - Ice		14.83	0.09	-12.96	-1407.78	-9.11
Wind 120 deg - Ice		13.00	7.46	733.60	-1217.22	-0.76
Wind 135 deg - Ice		10.61	10.45	1038.45	-977.35	3.76
Wind 150 deg - Ice		7.54	12.71	1270.83	-667.52	8.00
Wind 180 deg - Ice		0.03	14.72	1480.80	99.23	13.79

Load Case	Vertical Forces K	Sum of Forces X K	Sum of Forces Z K	Sum of Overturning Moments, M_x kip-ft	Sum of Overturning Moments, M_z kip-ft	Sum of Torques kip-ft
Wind 210 deg - Ice		-7.50	12.69	1263.81	883.87	16.81
Wind 225 deg - Ice		-10.49	10.35	1026.77	1190.66	16.44
Wind 240 deg - Ice		-12.96	7.44	726.77	1436.90	14.86
Wind 270 deg - Ice		-14.84	0.01	-26.66	1634.89	8.90
Wind 300 deg - Ice		-12.85	-7.30	-777.22	1434.68	0.06
Wind 315 deg - Ice		-10.53	-10.37	-1090.99	1196.75	-4.43
Wind 330 deg - Ice		-7.43	-12.73	-1330.61	877.73	-8.31
Total Weight	59.10			-5.00	16.62	
Wind 0 deg - Service		-0.07	-17.88	-1827.99	8.12	-17.46
Wind 30 deg - Service		8.77	-15.04	-1538.82	-926.04	-17.11
Wind 45 deg - Service		12.52	-12.19	-1240.74	-1327.14	-14.68
Wind 60 deg - Service		15.23	-8.47	-855.99	-1607.53	-11.82
Wind 90 deg - Service		17.66	0.20	31.88	-1845.84	-4.31
Wind 120 deg - Service		15.71	9.00	924.72	-1634.72	4.91
Wind 135 deg - Service		12.78	12.47	1282.50	-1343.01	9.44
Wind 150 deg - Service		9.09	15.05	1551.90	-971.38	13.27
Wind 180 deg - Service		0.06	17.43	1808.78	-41.56	16.31
Wind 210 deg - Service		-9.00	14.99	1538.01	925.68	16.95
Wind 225 deg - Service		-12.49	12.22	1255.31	1286.82	15.11
Wind 240 deg - Service		-15.63	8.96	911.84	1595.41	12.05
Wind 270 deg - Service		-17.67	0.03	4.89	1821.24	3.81
Wind 300 deg - Service		-15.26	-8.59	-890.95	1580.48	-6.47
Wind 315 deg - Service		-12.57	-12.25	-1269.18	1298.41	-10.91
Wind 330 deg - Service		-8.87	-15.08	-1557.74	911.11	-13.96

Load Combinations

Comb. No.	Description
1	Dead Only
2	1.2 Dead+1.0 Wind 0 deg - No Ice
3	0.9 Dead+1.0 Wind 0 deg - No Ice
4	1.2 Dead+1.0 Wind 30 deg - No Ice
5	0.9 Dead+1.0 Wind 30 deg - No Ice
6	1.2 Dead+1.0 Wind 45 deg - No Ice
7	0.9 Dead+1.0 Wind 45 deg - No Ice
8	1.2 Dead+1.0 Wind 60 deg - No Ice
9	0.9 Dead+1.0 Wind 60 deg - No Ice
10	1.2 Dead+1.0 Wind 90 deg - No Ice
11	0.9 Dead+1.0 Wind 90 deg - No Ice
12	1.2 Dead+1.0 Wind 120 deg - No Ice
13	0.9 Dead+1.0 Wind 120 deg - No Ice
14	1.2 Dead+1.0 Wind 135 deg - No Ice
15	0.9 Dead+1.0 Wind 135 deg - No Ice
16	1.2 Dead+1.0 Wind 150 deg - No Ice
17	0.9 Dead+1.0 Wind 150 deg - No Ice
18	1.2 Dead+1.0 Wind 180 deg - No Ice
19	0.9 Dead+1.0 Wind 180 deg - No Ice
20	1.2 Dead+1.0 Wind 210 deg - No Ice
21	0.9 Dead+1.0 Wind 210 deg - No Ice
22	1.2 Dead+1.0 Wind 225 deg - No Ice
23	0.9 Dead+1.0 Wind 225 deg - No Ice
24	1.2 Dead+1.0 Wind 240 deg - No Ice
25	0.9 Dead+1.0 Wind 240 deg - No Ice
26	1.2 Dead+1.0 Wind 270 deg - No Ice
27	0.9 Dead+1.0 Wind 270 deg - No Ice

Comb. No.	Description
28	1.2 Dead+1.0 Wind 300 deg - No Ice
29	0.9 Dead+1.0 Wind 300 deg - No Ice
30	1.2 Dead+1.0 Wind 315 deg - No Ice
31	0.9 Dead+1.0 Wind 315 deg - No Ice
32	1.2 Dead+1.0 Wind 330 deg - No Ice
33	0.9 Dead+1.0 Wind 330 deg - No Ice
34	1.2 Dead+1.0 Ice+1.0 Temp
35	1.2 Dead+1.0 Wind 0 deg+1.0 Ice+1.0 Temp
36	1.2 Dead+1.0 Wind 30 deg+1.0 Ice+1.0 Temp
37	1.2 Dead+1.0 Wind 45 deg+1.0 Ice+1.0 Temp
38	1.2 Dead+1.0 Wind 60 deg+1.0 Ice+1.0 Temp
39	1.2 Dead+1.0 Wind 90 deg+1.0 Ice+1.0 Temp
40	1.2 Dead+1.0 Wind 120 deg+1.0 Ice+1.0 Temp
41	1.2 Dead+1.0 Wind 135 deg+1.0 Ice+1.0 Temp
42	1.2 Dead+1.0 Wind 150 deg+1.0 Ice+1.0 Temp
43	1.2 Dead+1.0 Wind 180 deg+1.0 Ice+1.0 Temp
44	1.2 Dead+1.0 Wind 210 deg+1.0 Ice+1.0 Temp
45	1.2 Dead+1.0 Wind 225 deg+1.0 Ice+1.0 Temp
46	1.2 Dead+1.0 Wind 240 deg+1.0 Ice+1.0 Temp
47	1.2 Dead+1.0 Wind 270 deg+1.0 Ice+1.0 Temp
48	1.2 Dead+1.0 Wind 300 deg+1.0 Ice+1.0 Temp
49	1.2 Dead+1.0 Wind 315 deg+1.0 Ice+1.0 Temp
50	1.2 Dead+1.0 Wind 330 deg+1.0 Ice+1.0 Temp
51	Dead+Wind 0 deg - Service
52	Dead+Wind 30 deg - Service
53	Dead+Wind 45 deg - Service
54	Dead+Wind 60 deg - Service
55	Dead+Wind 90 deg - Service
56	Dead+Wind 120 deg - Service
57	Dead+Wind 135 deg - Service
58	Dead+Wind 150 deg - Service
59	Dead+Wind 180 deg - Service
60	Dead+Wind 210 deg - Service
61	Dead+Wind 225 deg - Service
62	Dead+Wind 240 deg - Service
63	Dead+Wind 270 deg - Service
64	Dead+Wind 300 deg - Service
65	Dead+Wind 315 deg - Service
66	Dead+Wind 330 deg - Service

Maximum Member Forces

Section No.	Elevation ft	Component Type	Condition	Gov. Load Comb.	Axial K	Major Axis Moment kip-ft	Minor Axis Moment kip-ft
T1	197 - 187	Leg	Max Tension	7	4.39	0.43	-0.36
			Max. Compression	12	-5.51	-0.12	-0.08
			Max. Mx	6	-1.44	0.69	-0.14
			Max. My	2	0.56	-0.15	-0.56
			Max. Vy	6	1.29	-0.17	0.03
			Max. Vx	2	-1.04	0.04	0.13
		Diagonal	Max Tension	4	1.75	0.00	0.00
			Max. Compression	22	-1.77	0.00	0.00
			Max. Mx	39	0.19	-0.00	0.00
			Max. My	23	-1.76	-0.00	0.00
			Max. Vy	38	0.01	-0.00	-0.00
			Max. Vx	22	-0.00	-0.00	0.00
		Top Girt	Max Tension	7	0.20	0.00	0.00
			Max. Compression	8	-0.28	0.00	0.00

Section No.	Elevation ft	Component Type	Condition	Gov. Load Comb.	Axial K	Major Axis Moment kip-ft	Minor Axis Moment kip-ft
			Max. Mx	34	-0.02	-0.04	0.00
			Max. My	22	0.05	0.00	-0.00
			Max. Vy	34	-0.04	0.00	0.00
			Max. Vx	22	-0.00	0.00	0.00
		Bottom Girt	Max Tension	6	0.73	0.00	0.00
			Max. Compression	13	-0.82	0.00	0.00
			Max. Mx	34	0.03	0.02	0.00
			Max. My	22	0.23	0.00	0.00
			Max. Vy	34	-0.01	0.00	0.00
			Max. Vx	22	-0.00	0.00	0.00
T2	187 - 172	Leg	Max Tension	7	23.19	-0.32	0.38
			Max. Compression	12	-28.69	-0.42	-0.35
			Max. Mx	26	-2.60	-1.59	0.01
			Max. My	18	21.06	0.10	1.44
			Max. Vy	26	-3.08	0.46	0.01
			Max. Vx	18	2.88	0.01	-0.46
		Diagonal	Max Tension	6	4.42	0.00	0.00
			Max. Compression	22	-4.50	0.00	0.00
			Max. Mx	38	0.87	-0.00	-0.00
			Max. My	22	-4.49	-0.00	0.00
			Max. Vy	48	0.01	-0.00	0.00
			Max. Vx	22	-0.00	-0.00	0.00
		Top Girt	Max Tension	12	0.87	0.00	0.00
			Max. Compression	6	-0.78	0.00	0.00
			Max. Mx	34	-0.01	0.02	0.00
			Max. My	22	-0.23	0.00	0.00
			Max. Vy	34	-0.02	0.00	0.00
			Max. Vx	22	-0.00	0.00	0.00
		Bottom Girt	Max Tension	8	1.68	0.00	0.00
			Max. Compression	12	-1.84	0.00	0.00
			Max. Mx	34	0.02	0.02	0.00
			Max. My	22	0.57	0.00	0.00
			Max. Vy	34	-0.02	0.00	0.00
			Max. Vx	22	-0.00	0.00	0.00
T3	172 - 152	Leg	Max Tension	9	73.09	0.82	-0.10
			Max. Compression	12	-84.20	3.54	0.30
			Max. Mx	12	-84.20	3.54	0.30
			Max. My	26	-2.63	-0.01	-2.39
			Max. Vy	12	-7.07	3.54	0.30
			Max. Vx	26	3.75	0.02	-1.79
		Diagonal	Max Tension	4	6.45	0.00	0.00
			Max. Compression	22	-6.55	0.00	0.00
			Max. Mx	35	0.99	-0.01	0.00
			Max. My	22	-4.96	-0.00	0.01
			Max. Vy	35	0.01	-0.01	0.00
			Max. Vx	22	-0.00	-0.00	0.01
		Top Girt	Max Tension	12	1.94	0.00	0.00
			Max. Compression	8	-1.80	0.00	0.00
			Max. Mx	34	-0.01	0.02	0.00
			Max. My	4	0.04	0.00	0.00
			Max. Vy	34	0.02	0.00	0.00
			Max. Vx	4	0.00	0.00	0.00
		Bottom Girt	Max Tension	8	0.66	0.00	0.00
			Max. Compression	13	-0.68	0.00	0.00
			Max. Mx	34	0.07	0.02	0.00
			Max. My	4	-0.06	0.00	0.00
			Max. Vy	34	-0.02	0.00	0.00
			Max. Vx	4	0.00	0.00	0.00
T4	152 - 142	Leg	Max Tension	9	82.44	-3.25	0.29
			Max. Compression	12	-94.50	6.11	-0.15
			Max. Mx	8	80.41	-6.35	-0.70

Section No.	Elevation ft	Component Type	Condition	Gov. Load Comb.	Axial K	Major Axis Moment kip-ft	Minor Axis Moment kip-ft
			Max. My	10	1.05	-0.55	8.35
			Max. Vy	18	-1.07	-3.24	-0.03
			Max. Vx	16	1.23	-0.77	-8.08
		Diagonal	Max Tension	7	10.78	0.06	0.00
			Max. Compression	24	-11.47	0.00	0.00
			Max. Mx	8	6.08	0.06	0.00
			Max. My	24	-11.44	-0.04	-0.07
			Max. Vy	48	0.02	0.03	-0.01
			Max. Vx	24	0.01	0.00	0.00
T5	142 - 122	Leg	Max Tension	9	139.68	-5.44	-0.41
			Max. Compression	12	-158.21	7.73	0.06
			Max. Mx	12	-158.21	7.73	0.06
			Max. My	10	0.78	-0.55	8.35
			Max. Vy	8	-1.20	-6.35	-0.70
			Max. Vx	16	-1.42	-0.77	-8.08
		Diagonal	Max Tension	20	12.70	0.00	0.00
			Max. Compression	20	-13.18	0.00	0.00
			Max. Mx	12	8.69	0.14	-0.00
			Max. My	22	-12.74	-0.05	-0.05
			Max. Vy	35	-0.04	0.08	0.01
			Max. Vx	22	0.01	0.00	0.00
T6	122 - 102	Leg	Max Tension	29	193.30	-5.09	0.10
			Max. Compression	12	-216.91	8.75	-0.08
			Max. Mx	12	-216.91	8.75	-0.08
			Max. My	10	-1.89	-0.56	9.85
			Max. Vy	24	-1.08	8.30	-0.41
			Max. Vx	16	-1.11	-0.69	-9.81
		Diagonal	Max Tension	7	13.70	0.00	0.00
			Max. Compression	22	-14.39	0.00	0.00
			Max. Mx	12	7.79	0.15	-0.01
			Max. My	3	-9.23	-0.02	0.04
			Max. Vy	49	0.05	0.08	0.01
			Max. Vx	20	0.01	0.00	0.00
T7	102 - 82	Leg	Max Tension	29	246.77	-5.20	0.13
			Max. Compression	12	-275.72	8.10	-0.11
			Max. Mx	12	-245.92	8.75	-0.08
			Max. My	10	-3.36	-0.52	9.40
			Max. Vy	12	0.62	8.75	-0.08
			Max. Vx	16	1.13	-0.63	-9.36
		Diagonal	Max Tension	20	13.57	0.00	0.00
			Max. Compression	20	-13.89	0.00	0.00
			Max. Mx	12	9.63	0.11	-0.00
			Max. My	4	-13.20	-0.03	0.04
			Max. Vy	48	0.06	0.10	0.01
			Max. Vx	4	-0.01	0.00	0.00
		Top Girt	Max Tension	8	4.72	0.00	0.00
			Max. Compression	13	-4.34	0.00	0.00
			Max. Mx	34	0.89	-0.17	0.00
			Max. My	46	1.17	0.00	0.00
			Max. Vy	34	0.07	0.00	0.00
			Max. Vx	46	0.00	0.00	0.00
T8	82 - 62	Leg	Max Tension	29	296.27	-6.66	0.05
			Max. Compression	12	-330.41	6.54	-0.07
			Max. Mx	12	-302.80	8.10	-0.11
			Max. My	16	0.22	-0.24	-7.02
			Max. Vy	12	0.34	8.10	-0.11
			Max. Vx	2	0.39	-3.65	6.21
		Diagonal	Max Tension	20	14.24	0.00	0.00
			Max. Compression	20	-14.61	0.00	0.00
			Max. Mx	48	1.76	0.13	0.02
			Max. My	4	-14.40	-0.00	0.03

Section No.	Elevation ft	Component Type	Condition	Gov. Load Comb.	Axial K	Major Axis Moment kip-ft	Minor Axis Moment kip-ft
			Max. Vy	48	0.07	0.13	-0.02
			Max. Vx	4	-0.00	0.00	0.00
T9	62 - 42	Leg	Max Tension	29	343.00	-6.37	0.07
			Max. Compression	12	-382.56	7.92	-0.15
			Max. Mx	12	-382.56	7.92	-0.15
			Max. My	16	-4.04	-0.27	-7.87
			Max. Vy	8	0.31	-7.65	-0.01
			Max. Vx	2	-0.39	-3.79	6.96
		Diagonal	Max Tension	20	14.76	0.00	0.00
			Max. Compression	20	-15.22	0.00	0.00
			Max. Mx	48	1.80	0.16	-0.02
			Max. My	4	-14.75	-0.01	0.04
			Max. Vy	48	0.08	0.16	-0.02
			Max. Vx	4	-0.01	0.00	0.00
T10	42 - 22	Leg	Max Tension	29	387.58	-6.63	0.08
			Max. Compression	12	-433.35	6.89	-0.00
			Max. Mx	12	-407.38	7.92	-0.15
			Max. My	16	-4.33	-0.27	-7.87
			Max. Vy	38	0.80	-6.54	0.03
			Max. Vx	2	0.39	-3.79	6.96
		Diagonal	Max Tension	20	15.77	0.00	0.00
			Max. Compression	20	-16.21	0.00	0.00
			Max. Mx	48	2.66	0.20	0.02
			Max. My	4	-15.94	0.03	0.04
			Max. Vy	48	0.10	0.20	0.02
			Max. Vx	4	-0.01	0.00	0.00
T11	22 - 2	Leg	Max Tension	29	428.79	-6.83	0.07
			Max. Compression	12	-481.26	0.00	-0.00
			Max. Mx	46	-146.54	10.06	0.14
			Max. My	26	-20.63	-0.39	-11.47
			Max. Vy	37	-1.47	-6.50	0.28
			Max. Vx	16	-1.33	-0.64	-11.40
		Diagonal	Max Tension	5	16.85	0.00	0.00
			Max. Compression	20	-17.53	0.00	0.00
			Max. Mx	48	-0.33	0.26	0.03
			Max. My	4	-15.64	0.02	0.05
			Max. Vy	48	0.10	0.26	0.03
			Max. Vx	4	-0.01	0.00	0.00

Maximum Reactions

Location	Condition	Gov. Load Comb.	Vertical K	Horizontal, X K	Horizontal, Z K
Leg C	Max. Vert	24	488.13	42.23	-26.09
	Max. H_x	24	488.13	42.23	-26.09
	Max. H_z	7	-424.84	-36.85	24.77
	Min. Vert	9	-437.51	-38.68	24.20
	Min. H_x	9	-437.51	-38.68	24.20
	Min. H_z	24	488.13	42.23	-26.09
Leg B	Max. Vert	12	494.18	-43.54	-24.46
	Max. H_x	29	-439.70	40.14	22.17
	Max. H_z	29	-439.70	40.14	22.17
	Min. Vert	29	-439.70	40.14	22.17
	Min. H_x	12	494.18	-43.54	-24.46
	Min. H_z	12	494.18	-43.54	-24.46
Leg A	Max. Vert	2	483.22	-2.17	49.25

Location	Condition	Gov. Load Comb.	Vertical K	Horizontal, X K	Horizontal, Z K
	Max. H_x	25	-211.68	5.09	-22.68
	Max. H_z	2	483.22	-2.17	49.25
	Min. Vert	19	-437.03	2.23	-45.61
	Min. H_x	9	232.38	-4.52	23.78
	Min. H_z	19	-437.03	2.23	-45.61

Tower Mast Reaction Summary

Load Combination	Vertical K	$Shear_x$ K	$Shear_z$ K	Overturning Moment, M_x kip-ft	Overturning Moment, M_z kip-ft	Torque kip-ft
Dead Only	59.10	0.00	0.00	-5.00	16.63	0.00
1.2 Dead+1.0 Wind 0 deg - No Ice	70.92	-0.33	-77.52	-7960.12	77.97	-76.15
0.9 Dead+1.0 Wind 0 deg - No Ice	53.19	-0.33	-77.52	-7947.56	72.79	-76.11
1.2 Dead+1.0 Wind 30 deg - No Ice	70.92	38.04	-65.22	-6699.96	-3993.19	-74.56
0.9 Dead+1.0 Wind 30 deg - No Ice	53.19	38.04	-65.22	-6689.18	-3992.54	-74.51
1.2 Dead+1.0 Wind 45 deg - No Ice	70.92	54.29	-52.86	-5401.00	-5741.51	-63.99
0.9 Dead+1.0 Wind 45 deg - No Ice	53.19	54.29	-52.86	-5392.05	-5738.33	-63.95
1.2 Dead+1.0 Wind 60 deg - No Ice	70.92	66.05	-36.72	-3724.40	-6963.24	-51.55
0.9 Dead+1.0 Wind 60 deg - No Ice	53.19	66.05	-36.72	-3717.82	-6958.36	-51.50
1.2 Dead+1.0 Wind 90 deg - No Ice	70.92	76.56	0.86	144.04	-8001.44	-18.84
0.9 Dead+1.0 Wind 90 deg - No Ice	53.19	76.56	0.86	145.26	-7995.18	-18.82
1.2 Dead+1.0 Wind 120 deg - No Ice	70.92	68.12	39.00	4034.07	-7081.68	21.41
0.9 Dead+1.0 Wind 120 deg - No Ice	53.19	68.12	39.00	4029.96	-7076.73	21.41
1.2 Dead+1.0 Wind 135 deg - No Ice	70.92	55.43	54.08	5592.89	-5810.72	41.15
0.9 Dead+1.0 Wind 135 deg - No Ice	53.19	55.43	54.08	5586.61	-5807.49	41.15
1.2 Dead+1.0 Wind 150 deg - No Ice	70.92	39.41	65.23	6766.71	-4191.58	57.87
0.9 Dead+1.0 Wind 150 deg - No Ice	53.19	39.41	65.23	6758.78	-4190.57	57.85
1.2 Dead+1.0 Wind 180 deg - No Ice	70.92	0.28	75.58	7886.17	-140.09	71.14
0.9 Dead+1.0 Wind 180 deg - No Ice	53.19	0.28	75.58	7876.62	-144.66	71.10
1.2 Dead+1.0 Wind 210 deg - No Ice	70.92	-39.02	65.01	6705.56	4075.68	73.89
0.9 Dead+1.0 Wind 210 deg - No Ice	53.19	-39.02	65.01	6697.78	4065.01	73.84
1.2 Dead+1.0 Wind 225 deg - No Ice	70.92	-54.13	52.97	5473.82	5649.08	65.86
0.9 Dead+1.0 Wind 225 deg - No Ice	53.19	-54.13	52.97	5467.73	5636.22	65.82
1.2 Dead+1.0 Wind 240 deg -	70.92	-67.77	38.83	3977.42	6993.48	52.55

Load Combination	Vertical K	$Shear_x$ K	$Shear_z$ K	Overturning Moment, M_x kip-ft	Overturning Moment, M_z kip-ft	Torque kip-ft
No Ice						
0.9 Dead+1.0 Wind 240 deg - No Ice	53.19	-67.77	38.83	3973.43	6978.80	52.50
1.2 Dead+1.0 Wind 270 deg - No Ice	70.92	-76.59	0.12	25.80	7977.54	16.66
0.9 Dead+1.0 Wind 270 deg - No Ice	53.19	-76.59	0.12	27.31	7961.41	16.64
1.2 Dead+1.0 Wind 300 deg - No Ice	70.92	-66.18	-37.24	-3877.48	6928.62	-28.17
0.9 Dead+1.0 Wind 300 deg - No Ice	53.19	-66.18	-37.24	-3870.48	6913.93	-28.17
1.2 Dead+1.0 Wind 315 deg - No Ice	70.92	-54.51	-53.10	-5525.44	5699.62	-47.58
0.9 Dead+1.0 Wind 315 deg - No Ice	53.19	-54.51	-53.10	-5516.15	5686.66	-47.57
1.2 Dead+1.0 Wind 330 deg - No Ice	70.92	-38.44	-65.37	-6782.63	4012.04	-60.89
0.9 Dead+1.0 Wind 330 deg - No Ice	53.19	-38.44	-65.37	-6771.63	4001.45	-60.86
1.2 Dead+1.0 Ice+1.0 Temp	161.74	0.00	0.00	-31.22	121.54	0.00
1.2 Dead+1.0 Wind 0 deg+1.0 Ice+1.0 Temp	161.74	-0.04	-14.87	-1563.23	128.70	-14.48
1.2 Dead+1.0 Wind 30 deg+1.0 Ice+1.0 Temp	161.74	7.39	-12.71	-1339.73	-650.48	-17.05
1.2 Dead+1.0 Wind 45 deg+1.0 Ice+1.0 Temp	161.74	10.51	-10.34	-1092.18	-980.56	-16.38
1.2 Dead+1.0 Wind 60 deg+1.0 Ice+1.0 Temp	161.74	12.83	-7.25	-770.98	-1220.96	-14.88
1.2 Dead+1.0 Wind 90 deg+1.0 Ice+1.0 Temp	161.74	14.83	0.09	-14.34	-1422.98	-9.18
1.2 Dead+1.0 Wind 120 deg+1.0 Ice+1.0 Temp	161.74	13.00	7.46	741.93	-1229.92	-0.74
1.2 Dead+1.0 Wind 135 deg+1.0 Ice+1.0 Temp	161.74	10.61	10.45	1050.77	-986.94	3.82
1.2 Dead+1.0 Wind 150 deg+1.0 Ice+1.0 Temp	161.74	7.54	12.71	1286.21	-673.10	8.10
1.2 Dead+1.0 Wind 180 deg+1.0 Ice+1.0 Temp	161.74	0.03	14.72	1498.98	103.63	13.94
1.2 Dead+1.0 Wind 210 deg+1.0 Ice+1.0 Temp	161.74	-7.50	12.69	1279.04	898.77	16.98
1.2 Dead+1.0 Wind 225 deg+1.0 Ice+1.0 Temp	161.74	-10.49	10.35	1038.93	1209.56	16.60
1.2 Dead+1.0 Wind 240 deg+1.0 Ice+1.0 Temp	161.74	-12.96	7.44	734.99	1458.97	15.00
1.2 Dead+1.0 Wind 270 deg+1.0 Ice+1.0 Temp	161.74	-14.84	0.01	-28.29	1659.61	8.97
1.2 Dead+1.0 Wind 300 deg+1.0 Ice+1.0 Temp	161.74	-12.85	-7.30	-788.72	1456.78	0.04
1.2 Dead+1.0 Wind 315 deg+1.0 Ice+1.0 Temp	161.74	-10.53	-10.37	-1106.59	1215.72	-4.50
1.2 Dead+1.0 Wind 330 deg+1.0 Ice+1.0 Temp	161.74	-7.43	-12.73	-1349.33	892.52	-8.41
Dead+Wind 0 deg - Service	59.10	-0.07	-17.88	-1839.00	29.97	-17.49
Dead+Wind 30 deg - Service	59.10	8.77	-15.04	-1548.49	-908.64	-17.15
Dead+Wind 45 deg - Service	59.10	12.52	-12.19	-1248.99	-1311.68	-14.72
Dead+Wind 60 deg - Service	59.10	15.23	-8.47	-862.44	-1593.37	-11.85
Dead+Wind 90 deg - Service	59.10	17.66	0.20	29.52	-1832.75	-4.33
Dead+Wind 120 deg - Service	59.10	15.71	9.00	926.45	-1620.64	4.91
Dead+Wind 135 deg - Service	59.10	12.78	12.47	1285.88	-1327.61	9.44
Dead+Wind 150 deg - Service	59.10	9.09	15.05	1556.56	-954.28	13.28
Dead+Wind 180 deg - Service	59.10	0.06	17.43	1814.65	-20.18	16.34

Load Combination	Vertical K	$Shear_x$ K	$Shear_z$ K	Overturning Moment, M_x kip-ft	Overturning Moment, M_z kip-ft	Torque kip-ft
Dead+Wind 210 deg - Service	59.10	-9.00	14.99	1542.53	951.72	16.99
Dead+Wind 225 deg - Service	59.10	-12.49	12.22	1258.53	1314.53	15.15
Dead+Wind 240 deg - Service	59.10	-15.63	8.96	913.46	1624.50	12.08
Dead+Wind 270 deg - Service	59.10	-17.67	0.03	2.32	1851.44	3.82
Dead+Wind 300 deg - Service	59.10	-15.26	-8.59	-897.71	1609.57	-6.46
Dead+Wind 315 deg - Service	59.10	-12.57	-12.25	-1277.68	1326.18	-10.92
Dead+Wind 330 deg - Service	59.10	-8.87	-15.08	-1567.56	937.08	-13.97

Solution Summary

Load Comb.	Sum of Applied Forces PX K	PY K	PZ K	Sum of Reactions PX K	PY K	PZ K	% Error
1	0.00	-59.10	0.00	0.00	59.10	0.00	0.000%
2	-0.33	-70.92	-77.52	0.33	70.92	77.52	0.000%
3	-0.33	-53.19	-77.52	0.33	53.19	77.52	0.000%
4	38.04	-70.92	-65.22	-38.04	70.92	65.22	0.000%
5	38.04	-53.19	-65.22	-38.04	53.19	65.22	0.000%
6	54.29	-70.92	-52.86	-54.29	70.92	52.86	0.000%
7	54.29	-53.19	-52.86	-54.29	53.19	52.86	0.000%
8	66.05	-70.92	-36.72	-66.05	70.92	36.72	0.000%
9	66.05	-53.19	-36.72	-66.05	53.19	36.72	0.000%
10	76.56	-70.92	0.86	-76.56	70.92	-0.86	0.000%
11	76.56	-53.19	0.86	-76.56	53.19	-0.86	0.000%
12	68.12	-70.92	39.00	-68.12	70.92	-39.00	0.000%
13	68.12	-53.19	39.00	-68.12	53.19	-39.00	0.000%
14	55.43	-70.92	54.08	-55.43	70.92	-54.08	0.000%
15	55.43	-53.19	54.08	-55.43	53.19	-54.08	0.000%
16	39.41	-70.92	65.23	-39.41	70.92	-65.23	0.000%
17	39.41	-53.19	65.23	-39.41	53.19	-65.23	0.000%
18	0.28	-70.92	75.58	-0.28	70.92	-75.58	0.000%
19	0.28	-53.19	75.58	-0.28	53.19	-75.58	0.000%
20	-39.02	-70.92	65.01	39.02	70.92	-65.01	0.000%
21	-39.02	-53.19	65.01	39.02	53.19	-65.01	0.000%
22	-54.13	-70.92	52.97	54.13	70.92	-52.97	0.000%
23	-54.13	-53.19	52.97	54.13	53.19	-52.97	0.000%
24	-67.77	-70.92	38.83	67.77	70.92	-38.83	0.000%
25	-67.77	-53.19	38.83	67.77	53.19	-38.83	0.000%
26	-76.59	-70.92	0.12	76.59	70.92	-0.12	0.000%
27	-76.59	-53.19	0.12	76.59	53.19	-0.12	0.000%
28	-66.18	-70.92	-37.24	66.18	70.92	37.24	0.000%
29	-66.18	-53.19	-37.24	66.18	53.19	37.24	0.000%
30	-54.51	-70.92	-53.10	54.51	70.92	53.10	0.000%
31	-54.51	-53.19	-53.10	54.51	53.19	53.10	0.000%
32	-38.44	-70.92	-65.37	38.44	70.92	65.37	0.000%
33	-38.44	-53.19	-65.37	38.44	53.19	65.37	0.000%
34	0.00	-161.74	0.00	-0.00	161.74	-0.00	0.000%
35	-0.04	-161.74	-14.87	0.04	161.74	14.87	0.000%
36	7.39	-161.74	-12.71	-7.39	161.74	12.71	0.000%
37	10.51	-161.74	-10.34	-10.51	161.74	10.34	0.000%
38	12.83	-161.74	-7.25	-12.83	161.74	7.25	0.000%
39	14.83	-161.74	0.09	-14.83	161.74	-0.09	0.000%
40	13.00	-161.74	7.46	-13.00	161.74	-7.46	0.000%
41	10.61	-161.74	10.45	-10.61	161.74	-10.45	0.000%
42	7.54	-161.74	12.71	-7.54	161.74	-12.71	0.000%
43	0.03	-161.74	14.72	-0.03	161.74	-14.72	0.000%
44	-7.50	-161.74	12.69	7.50	161.74	-12.69	0.000%
45	-10.49	-161.74	10.35	10.49	161.74	-10.35	0.000%

Load Comb.	Sum of Applied Forces PX K	PY K	PZ K	Sum of Reactions PX K	PY K	PZ K	% Error
46	-12.96	-161.74	7.44	12.96	161.74	-7.44	0.000%
47	-14.84	-161.74	0.01	14.84	161.74	-0.01	0.000%
48	-12.85	-161.74	-7.30	12.85	161.74	7.30	0.000%
49	-10.53	-161.74	-10.37	10.53	161.74	10.37	0.000%
50	-7.43	-161.74	-12.73	7.43	161.74	12.73	0.000%
51	-0.07	-59.10	-17.88	0.07	59.10	17.88	0.000%
52	8.77	-59.10	-15.04	-8.77	59.10	15.04	0.000%
53	12.52	-59.10	-12.19	-12.52	59.10	12.19	0.000%
54	15.23	-59.10	-8.47	-15.23	59.10	8.47	0.000%
55	17.66	-59.10	0.20	-17.66	59.10	-0.20	0.000%
56	15.71	-59.10	9.00	-15.71	59.10	-9.00	0.000%
57	12.78	-59.10	12.47	-12.78	59.10	-12.47	0.000%
58	9.09	-59.10	15.05	-9.09	59.10	-15.05	0.000%
59	0.06	-59.10	17.43	-0.06	59.10	-17.43	0.000%
60	-9.00	-59.10	14.99	9.00	59.10	-14.99	0.000%
61	-12.49	-59.10	12.22	12.49	59.10	-12.22	0.000%
62	-15.63	-59.10	8.96	15.63	59.10	-8.96	0.000%
63	-17.67	-59.10	0.03	17.67	59.10	-0.03	0.000%
64	-15.26	-59.10	-8.59	15.26	59.10	8.59	0.000%
65	-12.57	-59.10	-12.25	12.57	59.10	12.25	0.000%
66	-8.87	-59.10	-15.08	8.87	59.10	15.08	0.000%

Non-Linear Convergence Results

Load Combination	Converged?	Number of Cycles	Displacement Tolerance	Force Tolerance
1	Yes	4	0.00000001	0.00000001
2	Yes	4	0.00000001	0.00000201
3	Yes	4	0.00000001	0.00000188
4	Yes	4	0.00000001	0.00000108
5	Yes	4	0.00000001	0.00000080
6	Yes	4	0.00000001	0.00000155
7	Yes	4	0.00000001	0.00000147
8	Yes	4	0.00000001	0.00000233
9	Yes	4	0.00000001	0.00000224
10	Yes	4	0.00000001	0.00000251
11	Yes	4	0.00000001	0.00000231
12	Yes	4	0.00000001	0.00000194
13	Yes	4	0.00000001	0.00000182
14	Yes	4	0.00000001	0.00000198
15	Yes	4	0.00000001	0.00000181
16	Yes	4	0.00000001	0.00000235
17	Yes	4	0.00000001	0.00000211
18	Yes	4	0.00000001	0.00000176
19	Yes	4	0.00000001	0.00000155
20	Yes	4	0.00000001	0.00000130
21	Yes	4	0.00000001	0.00000104
22	Yes	4	0.00000001	0.00000246
23	Yes	4	0.00000001	0.00000225
24	Yes	4	0.00000001	0.00000316
25	Yes	4	0.00000001	0.00000296
26	Yes	4	0.00000001	0.00000231
27	Yes	4	0.00000001	0.00000215
28	Yes	4	0.00000001	0.00000109
29	Yes	4	0.00000001	0.00000094
30	Yes	4	0.00000001	0.00000169

31	Yes	4	0.00000001	0.00000149
32	Yes	4	0.00000001	0.00000228
33	Yes	4	0.00000001	0.00000208
34	Yes	4	0.00000001	0.00000001
35	Yes	4	0.00000001	0.00000805
36	Yes	4	0.00000001	0.00000803
37	Yes	4	0.00000001	0.00000813
38	Yes	4	0.00000001	0.00000811
39	Yes	4	0.00000001	0.00000782
40	Yes	4	0.00000001	0.00000758
41	Yes	4	0.00000001	0.00000760
42	Yes	4	0.00000001	0.00000773
43	Yes	4	0.00000001	0.00000800
44	Yes	4	0.00000001	0.00000798
45	Yes	4	0.00000001	0.00000799
46	Yes	4	0.00000001	0.00000805
47	Yes	4	0.00000001	0.00000833
48	Yes	4	0.00000001	0.00000849
49	Yes	4	0.00000001	0.00000844
50	Yes	4	0.00000001	0.00000831
51	Yes	4	0.00000001	0.00000001
52	Yes	4	0.00000001	0.00000001
53	Yes	4	0.00000001	0.00000001
54	Yes	4	0.00000001	0.00000001
55	Yes	4	0.00000001	0.00000001
56	Yes	4	0.00000001	0.00000001
57	Yes	4	0.00000001	0.00000001
58	Yes	4	0.00000001	0.00000001
59	Yes	4	0.00000001	0.00000001
60	Yes	4	0.00000001	0.00000001
61	Yes	4	0.00000001	0.00000001
62	Yes	4	0.00000001	0.00000001
63	Yes	4	0.00000001	0.00000001
64	Yes	4	0.00000001	0.00000001
65	Yes	4	0.00000001	0.00000001
66	Yes	4	0.00000001	0.00000001

Maximum Tower Deflections - Service Wind

Section No.	Elevation ft	Horz. Deflection in	Gov. Load Comb.	Tilt °	Twist °
T1	197 - 187	6.469	56	0.3079	0.1622
T2	187 - 172	5.811	56	0.3073	0.1465
T3	172 - 152	4.819	56	0.2966	0.1105
T4	152 - 142	3.603	56	0.2562	0.0786
T5	142 - 122	3.067	56	0.2335	0.0637
T6	122 - 102	2.162	56	0.1791	0.0445
T7	102 - 82	1.481	56	0.1340	0.0318
T8	82 - 62	0.954	56	0.1025	0.0231
T9	62 - 42	0.554	56	0.0757	0.0167
T10	42 - 22	0.263	56	0.0486	0.0103
T11	22 - 2	0.082	56	0.0242	0.0051

Critical Deflections and Radius of Curvature - Service Wind

Elevation ft	Appurtenance	Gov. Load Comb.	Deflection in	Tilt °	Twist °	Radius of Curvature ft
196.26	Single Dipole	56	6.421	0.3080	0.1612	156874
196.00	PIROD 6'-8" Rigid Side Arm	56	6.404	0.3080	0.1609	156874
194.92	6'x4" Pipe Mount	56	6.333	0.3080	0.1594	156874
194.25	PA6-65AC	56	6.289	0.3080	0.1584	156874
192.75	9' x 3" Dia Omni	56	6.191	0.3079	0.1563	156874
190.25	OGT9-840	56	6.026	0.3078	0.1524	118166
186.50	Pirod 4' Side Mount Standoff (1)	56	5.778	0.3072	0.1455	111446
185.25	DB222-A	56	5.695	0.3068	0.1428	139870
184.00	SC479-HF1LDF	56	5.612	0.3064	0.1399	208085
183.00	Filter Box	56	5.545	0.3060	0.1376	352411
182.25	PD220	56	5.495	0.3057	0.1357	460631
181.50	BCD-87077	56	5.445	0.3053	0.1339	250938
181.25	PiROD 15' Rotatable Platform (Lattice)	56	5.429	0.3051	0.1333	217872
180.25	DB222-A	56	5.362	0.3046	0.1307	142671
175.25	12' x 3" Dia Omni	56	5.031	0.3005	0.1181	50122
174.25	10' x 3" Dia Omni	56	4.965	0.2994	0.1157	44405
173.75	ANT150D6-9	56	4.933	0.2988	0.1145	42153
172.25	Pirod 6' Side Mount Standoff (1)	56	4.835	0.2969	0.1111	37202
170.20	3' Sidearm	56	4.703	0.2939	0.1067	33499
162.00	LPA-80080-4CF	56	4.189	0.2786	0.0925	27832
150.00	7770.00	56	3.492	0.2517	0.0757	23171
140.00	AIR6419	56	2.966	0.2285	0.0611	21869
135.00	SRL110A	56	2.724	0.2152	0.0554	21130
134.00	PIROD 6' Rigid Side Arm w/ 3" STD mount pipe	56	2.677	0.2124	0.0544	20987
130.00	DB586-Y	56	2.496	0.2012	0.0507	20432
126.00	PIROD 6' Rigid Side Arm w/ 3" STD mount pipe	56	2.324	0.1900	0.0475	19910
125.00	DB586-Y	56	2.283	0.1872	0.0467	19810
120.67	DB212-1	56	2.110	0.1756	0.0435	20191
120.50	PIROD 6' Rigid Side Arm w/ 3" STD mount pipe	56	2.104	0.1752	0.0434	20244
117.50	DS2C03F36D-D	56	1.991	0.1676	0.0413	21557
109.25	DB205-L	56	1.706	0.1485	0.0360	27051
106.00	Ice Canopy	56	1.602	0.1418	0.0340	30064
102.25	PA6-65AC	56	1.488	0.1345	0.0319	33636
101.20	6'8"x4" Pipe Mount	56	1.457	0.1325	0.0314	34312
100.83	PIROD 6' Rigid Side Arm w/ 3" STD mount pipe	56	1.446	0.1319	0.0312	34497
94.00	DB224	56	1.254	0.1202	0.0279	35680
90.41	PD220	56	1.159	0.1146	0.0263	36061
85.00	2-ft Stand Off	56	1.025	0.1067	0.0242	36665
82.67	PIROD 6' Rigid Side Arm w/ 3" STD mount pipe	56	0.970	0.1035	0.0234	37054
79.50	PIROD 6' Rigid Side Arm w/ 3" STD mount pipe	56	0.898	0.0991	0.0223	37981
75.00	12' x 3" Dia Omni	56	0.801	0.0930	0.0208	39823
70.25	DB432-A	56	0.705	0.0867	0.0193	42009
17.00	1.2M	56	0.055	0.0182	0.0039	53280
15.00	2-ft Stand Off	56	0.046	0.0158	0.0034	61477

Maximum Tower Deflections - Design Wind

Section No.	Elevation ft	Horz. Deflection in	Gov. Load Comb.	Tilt °	Twist °
T1	197 - 187	28.339	12	1.3590	0.7057
T2	187 - 172	25.439	12	1.3535	0.6376
T3	172 - 152	21.075	12	1.3027	0.4815
T4	152 - 142	15.745	12	1.1229	0.3423
T5	142 - 122	13.399	12	1.0228	0.2774
T6	122 - 102	9.439	12	0.7839	0.1937
T7	102 - 82	6.461	12	0.5858	0.1385
T8	82 - 62	4.162	12	0.4481	0.1007
T9	62 - 42	2.416	12	0.3309	0.0725
T10	42 - 22	1.146	12	0.2125	0.0450
T11	22 - 2	0.358	12	0.1059	0.0224

Critical Deflections and Radius of Curvature - Design Wind

Elevation ft	Appurtenance	Gov. Load Comb.	Deflection in	Tilt °	Twist °	Radius of Curvature ft
196.26	Single Dipole	12	28.125	1.3588	0.7013	40199
196.00	PIROD 6'-8" Rigid Side Arm	12	28.050	1.3588	0.6998	40199
194.92	6'x4" Pipe Mount	12	27.737	1.3585	0.6934	40199
194.25	PA6-65AC	12	27.544	1.3584	0.6894	40199
192.75	9' x 3" Dia Omni	12	27.110	1.3579	0.6801	40199
190.25	OGT9-840	12	26.385	1.3566	0.6632	30238
186.50	Pirod 4' Side Mount Standoff (1)	12	25.293	1.3529	0.6332	27491
185.25	DB222-A	12	24.927	1.3511	0.6216	33209
184.00	SC479-HF1LDF	12	24.561	1.3489	0.6093	47757
183.00	Filter Box	12	24.268	1.3469	0.5990	81577
182.25	PD220	12	24.048	1.3452	0.5911	115737
181.50	BCD-87077	12	23.829	1.3433	0.5830	57048
181.25	PiROD 15' Rotatable Platform (Lattice)	12	23.755	1.3426	0.5803	48798
180.25	DB222-A	12	23.463	1.3398	0.5694	30915
175.25	12' x 3" Dia Omni	12	22.008	1.3206	0.5145	10953
174.25	10' x 3" Dia Omni	12	21.719	1.3155	0.5040	9780
173.75	ANT150D6-9	12	21.576	1.3129	0.4988	9313
172.25	Pirod 6' Side Mount Standoff (1)	12	21.146	1.3042	0.4839	8275
170.20	3' Sidearm	12	20.566	1.2908	0.4650	7483
162.00	LPA-80080-4CF	12	18.314	1.2220	0.4032	6245
150.00	7770.00	12	15.257	1.1033	0.3296	5234
140.00	AIR6419	12	12.959	1.0008	0.2659	4999
135.00	SRL110A	12	11.898	0.9423	0.2410	4825
134.00	PIROD 6' Rigid Side Arm w/ 3" STD mount pipe	12	11.694	0.9302	0.2366	4791
130.00	DB586-Y	12	10.901	0.8810	0.2206	4660
126.00	PIROD 6' Rigid Side Arm w/ 3" STD mount pipe	12	10.149	0.8318	0.2066	4536
125.00	DB586-Y	12	9.967	0.8196	0.2033	4512
120.67	DB212-1	12	9.212	0.7686	0.1896	4597
120.50	PIROD 6' Rigid Side Arm w/ 3" STD mount pipe	12	9.184	0.7667	0.1891	4609
117.50	DS2C03F36D-D	12	8.691	0.7333	0.1800	4908
109.25	DB205-L	12	7.446	0.6496	0.1566	6163
106.00	Ice Canopy	12	6.993	0.6199	0.1482	6851
102.25	PA6-65AC	12	6.494	0.5878	0.1391	7670
101.20	6'8"x4" Pipe Mount	12	6.358	0.5793	0.1367	7826
100.83	PIROD 6' Rigid Side Arm w/ 3" STD mount pipe	12	6.310	0.5763	0.1358	7869

Elevation ft	Appurtenance	Gov. Load Comb.	Deflection in	Tilt °	Twist °	Radius of Curvature ft
94.00	DB224	12	5.471	0.5254	0.1215	8153
90.41	PD220	12	5.058	0.5010	0.1148	8248
85.00	2-ft Stand Off	12	4.470	0.4664	0.1055	8399
82.67	PIROD 6' Rigid Side Arm w/ 3" STD mount pipe	12	4.229	0.4521	0.1018	8492
79.50	PIROD 6' Rigid Side Arm w/ 3" STD mount pipe	12	3.915	0.4331	0.0969	8705
75.00	12' x 3" Dia Omni	12	3.492	0.4066	0.0904	9120
70.25	DB432-A	12	3.075	0.3790	0.0838	9612
17.00	1.2M	12	0.240	0.0796	0.0169	12189
15.00	2-ft Stand Off	12	0.200	0.0691	0.0147	14064

Bolt Design Data

Section No.	Elevation ft	Component Type	Bolt Grade	Bolt Size in	Number Of Bolts	Maximum Load per Bolt K	Allowable Load per Bolt K	Ratio Load / Allowable	Allowable Ratio	Criteria
T1	197	Leg	A325N	0.6250	5	1.10	27.61	0.040 ✔	1	Bolt DS
T2	187	Leg	A325N	0.7500	5	5.74	39.76	0.144 ✔	1	Bolt DS
T3	172	Leg	A325N	1.0000	6	12.18	54.52	0.223 ✔	1	Bolt Tension
T4	152	Leg	A325N	1.0000	6	13.74	54.52	0.252 ✔	1	Bolt Tension
		Diagonal	A325N	1.0000	1	10.78	12.72	0.847 ✔	1	Member Bearing
T5	142	Leg	A325N	1.0000	6	23.28	54.52	0.427 ✔	1	Bolt Tension
		Diagonal	A325X	1.0000	1	12.70	14.26	0.891 ✔	1	Member Bearing
T6	122	Leg	A325N	1.0000	6	32.22	54.52	0.591 ✔	1	Bolt Tension
		Diagonal	A325N	1.0000	1	13.70	19.01	0.721 ✔	1	Member Bearing
T7	102	Leg	A325N	1.0000	6	41.13	54.52	0.754 ✔	1	Bolt Tension
		Diagonal	A325X	1.0000	1	13.57	19.01	0.714 ✔	1	Member Bearing
		Top Girt	A325N	1.0000	1	4.78	12.72	0.376 ✔	1	Member Bearing
T8	82	Leg	A325N	1.2500	6	49.38	87.22	0.566 ✔	1	Bolt Tension
		Diagonal	A325N	1.2500	1	14.24	26.64	0.535 ✔	1	Member Bearing
T9	62	Leg	A325N	1.2500	6	57.17	87.22	0.655 ✔	1	Bolt Tension
		Diagonal	A325X	1.2500	1	14.76	23.89	0.618 ✔	1	Member Bearing
T10	42	Leg	A325N	1.2500	6	64.60	87.22	0.741 ✔	1	Bolt Tension
		Diagonal	A325N	1.2500	1	15.77	26.64	0.592 ✔	1	Member Bearing
T11	22	Leg	A687	1.2500	6	71.46	109.03	0.655 ✔	1	Bolt Tension
		Diagonal	A325X	1.2500	1	16.85	23.89	0.705 ✔	1	Member Bearing

Compression Checks

Leg Design Data (Compression)

Section No.	Elevation ft	Size	L ft	L_u ft	Kl/r	A in^2	P_u K	ϕP_n K	Ratio $\frac{P_u}{\phi P_n}$
T1	197 - 187	1 3/4	10.00	2.17	59.4 K=1.00	2.4053	-1.74	83.62	0.021
T2	187 - 172	2	15.00	2.28	54.7 K=1.00	3.1416	-28.61	113.63	0.252
T3	172 - 152	2 1/4	20.00	2.34	50.0 K=1.00	3.9761	-84.20	149.02	0.565
T4	152 - 142	Pirod 105245	10.02	10.02	37.8 K=1.00	5.3014	-92.22	214.86	0.429
T5	142 - 122	Pirod 105217	20.03	10.02	37.8 K=1.00	5.3014	-158.21	214.86	0.736
T6	122 - 102	Pirod 105218	20.03	10.02	32.4 K=1.00	7.2158	-216.91	300.68	0.721
T7	102 - 82	Pirod 105218 reinf. w/1" dia. S.R.	20.03	10.02	26.4 K=1.00	10.8915	-275.73	465.78	0.592
T8	82 - 62	Pirod 105219 reinf. w/1" dia. S.R.	20.03	10.02	24.4 K=1.00	13.1787	-329.73	567.86	0.581
T9	62 - 42	Pirod 105219 reinf. w/1" dia. S.R.	20.03	10.02	24.4 K=1.00	13.1787	-382.56	567.86	0.674
T10	42 - 22	Pirod 105220 reinf. w/1" dia. S.R.	20.03	10.02	24.3 K=1.00	14.7262	-433.35	634.59	0.683
T11	22 - 2	Pirod 105220 reinf. w/1" dia. S.R.	20.03	10.02	24.3 K=1.00	14.7262	-480.87	634.59	0.758

Leg Bending Design Data (Compression)

Section No.	Elevation ft	Size	M_{ux} kip-ft	ϕM_{nx} kip-ft	Ratio $\frac{M_{ux}}{\phi M_{nx}}$	M_{uy} kip-ft	ϕM_{ny} kip-ft	Ratio $\frac{M_{uy}}{\phi M_{ny}}$
T1	197 - 187	1 3/4	0.71	3.35	0.211	0.00	3.35	0.000
T2	187 - 172	2	1.61	5.00	0.322	0.00	5.00	0.000
T3	172 - 152	2 1/4	3.55	7.12	0.499	0.00	7.12	0.000
T4	152 - 142	Pirod 105245	5.93	62.39	0.095	1.58	72.04	0.022
T5	142 - 122	Pirod 105217	7.73	62.39	0.124	0.06	72.04	0.001
T6	122 - 102	Pirod 105218	8.75	87.49	0.100	-0.08	101.03	0.001
T7	102 - 82	Pirod 105218 reinf. w/1" dia. S.R.	8.10	136.08	0.060	-0.11	157.13	0.001
T8	82 - 62	Pirod 105219 reinf. w/1" dia. S.R.	6.76	166.32	0.041	-0.07	192.04	0.000
T9	62 - 42	Pirod 105219 reinf. w/1" dia. S.R.	7.92	166.32	0.048	-0.15	192.04	0.001
T10	42 - 22	Pirod 105220 reinf. w/1" dia. S.R.	6.89	186.17	0.037	-0.00	214.97	0.000
T11	22 - 2	Pirod 105220 reinf. w/1" dia. S.R.	6.35	186.17	0.034	-0.07	214.97	0.000

Leg Interaction Design Data (Compression)

Section No.	Elevation ft	Size	Ratio $P_u / \phi P_n$	Ratio $M_{ux} / \phi M_{nx}$	Ratio $M_{uy} / \phi M_{ny}$	Comb. Stress Ratio	Allow. Stress Ratio	Criteria
T1	197 - 187	1 3/4	0.021	0.211	0.000	0.222 ✔	1.000	4.8.1 ✔
T2	187 - 172	2	0.252	0.322	0.000	0.510 ✔	1.000	4.8.1 ✔
T3	172 - 152	2 1/4	0.565	0.499	0.000	0.945 ✔	1.000	4.8.1 ✔
T4	152 - 142	Pirod 105245	0.429	0.095	0.022	0.546 ✔	1.000	4.8.1 ✔
T5	142 - 122	Pirod 105217	0.736	0.124	0.001	0.861 ✔	1.000	4.8.1 ✔
T6	122 - 102	Pirod 105218	0.721	0.100	0.001	0.822 ✔	1.000	4.8.1 ✔
T7	102 - 82	Pirod 105218 reinf. w/1" dia. S.R.	0.592	0.060	0.001	0.652 ✔	1.000	4.8.1 ✔
T8	82 - 62	Pirod 105219 reinf. w/1" dia. S.R.	0.581	0.041	0.000	0.622 ✔	1.000	4.8.1 ✔
T9	62 - 42	Pirod 105219 reinf. w/1" dia. S.R.	0.674	0.048	0.001	0.722 ✔	1.000	4.8.1 ✔
T10	42 - 22	Pirod 105220 reinf. w/1" dia. S.R.	0.683	0.037	0.000	0.720 ✔	1.000	4.8.1 ✔
T11	22 - 2	Pirod 105220 reinf. w/1" dia. S.R.	0.758	0.034	0.000	0.792 ✔	1.000	4.8.1 ✔

Truss-Leg Diagonal Data

Section No.	Elevation ft	Diagonal Size	L_d ft	Kl/r	ϕP_n K	A in^2	V_u K	ϕV_n K	Stress Ratio
T4	152 - 142	0.5	1.47	120.0	238.57	0.1963	1.23	3.45	0.359 ✔
T5	142 - 122	0.5	1.47	120.0	238.57	0.1963	1.44	3.34	0.433 ✔
T6	122 - 102	0.5	1.46	119.0	324.71	0.1963	1.29	3.38	0.384 ✔
T7	102 - 82	0.5	1.44	117.4	490.12	0.1963	1.13	3.44	0.329 ✔
T8	82 - 62	0.625	1.43	93.3	593.04	0.3068	0.43	7.04	0.062 ✔
T9	62 - 42	0.625	1.43	93.3	593.04	0.3068	0.43	7.04	0.062 ✔
T10	42 - 22	0.625	1.42	92.9	662.68	0.3068	0.80	7.06	0.114 ✔
T11	22 - 2	0.625	1.42	92.9	662.68	0.3068	1.47	7.06	0.209 ✔

Diagonal Design Data (Compression)

Section No.	Elevation ft	Size	L ft	L_u ft	Kl/r	A in^2	P_u K	ϕP_n K	Ratio $\frac{P_u}{\phi P_n}$
T1	197 - 187	7/8	4.99	2.42	119.3 K=0.90	0.6013	-1.77	9.55	0.185 [1] ✔
T2	187 - 172	7/8	5.04	2.43	119.9 K=0.90	0.6013	-4.50	9.45	0.476 [1] ✔
T3	172 - 152	1	5.48	2.65	114.6 K=0.90	0.7854	-6.55	13.51	0.485 [1] ✔
T4	152 - 142	L2 1/2x2 1/2x3/16	11.42	5.02	121.8 K=1.00	0.9020	-11.47	17.33	0.662 [1] ✔
T5	142 - 122	L3x3x3/16	12.50	5.67	115.6 K=1.01	1.0900	-13.18	23.33	0.565 [1] ✔
T6	122 - 102	L3x3x1/4	13.80	6.37	129.1 K=1.00	1.4400	-14.39	24.73	0.582 [1] ✔
T7	102 - 82	L3x3x1/4	15.24	7.12	144.4 K=1.00	1.4400	-13.89	19.77	0.703 [1] ✔
T8	82 - 62	L3x3x5/16	16.80	7.89	160.8 K=1.00	1.7800	-14.61	19.70	0.742 [1] ✔
T9	62 - 42	L3 1/2x3 1/2x1/4	18.45	8.73	150.9 K=1.00	1.6900	-15.22	21.23	0.717 [1] ✔
T10	42 - 22	L3 1/2x3 1/2x5/16	20.16	9.59	166.8 K=1.00	2.0900	-16.21	21.49	0.754 [1] ✔
T11	22 - 2	L4x4x1/4	21.92	10.48	158.2 K=1.00	1.9400	-17.53	22.19	0.790 [1] ✔

[1] P_u / ϕP_n controls

Top Girt Design Data (Compression)

Section No.	Elevation ft	Size	L ft	L_u ft	Kl/r	A in^2	P_u K	ϕP_n K	Ratio $\frac{P_u}{\phi P_n}$
T1	197 - 187	L3x3x5/16	4.50	4.35	88.7 K=1.00	1.7800	-0.28	48.22	0.006 [1] ✔
T2	187 - 172	1	4.50	4.33	85.3 K=0.41	0.7854	-0.78	20.77	0.038 [1] ✔
T3	172 - 152	1	4.52	4.33	85.3 K=0.41	0.7854	-1.80	20.77	0.087 [1] ✔
T7	102 - 82	L3x3x3/16	10.00	8.67	174.5 K=1.00	1.0900	-4.78	10.25	0.467 [1] ✔

[1] P_u / ϕP_n controls

Bottom Girt Design Data (Compression)

Section No.	Elevation ft	Size	L ft	L_u ft	Kl/r	A in^2	P_u K	ϕP_n K	Ratio $\frac{P_u}{\phi P_n}$
T1	197 - 187	7/8	4.50	4.35	167.2	0.6013	-0.82	4.86	0.168 [1]

Section No.	Elevation ft	Size	L ft	L_u ft	Kl/r	A in^2	P_u K	ϕP_n K	Ratio $\frac{P_u}{\phi P_n}$
T2	187 - 172	1	4.50	4.33	K=0.70 85.3	0.7854	-1.84	20.77	✔ 0.088 [1]
T3	172 - 152	1	4.98	4.80	K=0.41 84.8	0.7854	-1.46	20.89	✔ 0.070 [1]
					K=0.37				✔

[1] P_u / ϕP_n controls

Tension Checks

Leg Design Data (Tension)

Section No.	Elevation ft	Size	L ft	L_u ft	Kl/r	A in^2	P_u K	ϕP_n K	Ratio $\frac{P_u}{\phi P_n}$
T1	197 - 187	1 3/4	10.00	2.17	59.4	1.7942	1.27	87.47	0.014 #
T2	187 - 172	2	15.00	2.28	54.7	2.1885	23.18	106.69	0.217 #
T3	172 - 152	2 1/4	20.00	2.34	50.0	3.9761	73.09	178.92	0.408
T4	152 - 142	Pirod 105245	10.02	10.02	37.8	5.3014	81.90	238.57	0.343
T5	142 - 122	Pirod 105217	20.03	10.02	37.8	5.3014	136.20	238.57	0.571
T6	122 - 102	Pirod 105218	20.03	10.02	32.4	7.2158	193.00	324.71	0.594
T7	102 - 82	Pirod 105218 reinf. w/1" dia. S.R.	20.03	10.02	26.4	10.8915	246.50	490.12	0.503
T8	82 - 62	Pirod 105219 reinf. w/1" dia. S.R.	20.03	10.02	24.4	13.1787	296.27	593.04	0.500
T9	62 - 42	Pirod 105219 reinf. w/1" dia. S.R.	20.03	10.02	24.4	13.1787	342.52	593.04	0.578
T10	42 - 22	Pirod 105220 reinf. w/1" dia. S.R.	20.03	10.02	24.3	14.7262	387.58	662.68	0.585
T11	22 - 2	Pirod 105220 reinf. w/1" dia. S.R.	20.03	10.02	24.3	14.7262	428.79	662.68	0.647

Based on net area of leg in section below

Leg Bending Design Data (Tension)

Section No.	Elevation ft	Size	M_{ux} kip-ft	ϕM_{nx} kip-ft	Ratio $\frac{M_{ux}}{\phi M_{nx}}$	M_{uy} kip-ft	ϕM_{ny} kip-ft	Ratio $\frac{M_{uy}}{\phi M_{ny}}$
T1	197 - 187	1 3/4	0.65	3.35	0.195	0.00	3.35	0.000
T2	187 - 172	2	1.51	5.00	0.301	0.00	5.00	0.000
T3	172 - 152	2 1/4	3.26	7.12	0.458	0.00	7.12	0.000
T4	152 - 142	Pirod 105245	-6.28	69.27	0.091	-0.71	79.99	0.009
T5	142 - 122	Pirod 105217	-7.01	69.27	0.101	1.50	79.99	0.019
T6	122 - 102	Pirod 105218	-7.60	94.48	0.080	-0.67	109.10	0.006
T7	102 - 82	Pirod 105218 reinf. w/1" dia. S.R.	-7.66	143.19	0.054	0.19	165.34	0.001
T8	82 - 62	Pirod 105219 reinf. w/1" dia. S.R.	-6.66	173.69	0.038	0.05	200.56	0.000

Section No.	Elevation ft	Size	M_{ux} kip-ft	ϕM_{nx} kip-ft	Ratio $\frac{M_{ux}}{\phi M_{nx}}$	M_{uy} kip-ft	ϕM_{ny} kip-ft	Ratio $\frac{M_{uy}}{\phi M_{ny}}$
T9	62 - 42	Pirod 105219 reinf. w/1" dia. S.R.	-7.66	173.69	0.044	0.27	200.56	0.001
T10	42 - 22	Pirod 105220 reinf. w/1" dia. S.R.	-6.63	194.41	0.034	0.08	224.49	0.000
T11	22 - 2	Pirod 105220 reinf. w/1" dia. S.R.	-6.83	194.41	0.035	0.07	224.49	0.000

Leg Interaction Design Data (Tension)

Section No.	Elevation ft	Size	Ratio $\frac{P_u}{\phi P_n}$	Ratio $\frac{M_{ux}}{\phi M_{nx}}$	Ratio $\frac{M_{uy}}{\phi M_{ny}}$	Comb. Stress Ratio	Allow. Stress Ratio	Criteria
T1	197 - 187	1 3/4	0.014	0.195	0.000	0.202 # ✓	1.000	4.8.1 ✓
T2	187 - 172	2	0.217	0.301	0.000	0.461 # ✓	1.000	4.8.1 ✓
T3	172 - 152	2 1/4	0.408	0.458	0.000	0.770 ✓	1.000	4.8.1 ✓
T4	152 - 142	Pirod 105245	0.343	0.091	0.009	0.443 ✓	1.000	4.8.1 ✓
T5	142 - 122	Pirod 105217	0.571	0.101	0.019	0.691 ✓	1.000	4.8.1 ✓
T6	122 - 102	Pirod 105218	0.594	0.080	0.006	0.681 ✓	1.000	4.8.1 ✓
T7	102 - 82	Pirod 105218 reinf. w/1" dia. S.R.	0.503	0.054	0.001	0.558 ✓	1.000	4.8.1 ✓
T8	82 - 62	Pirod 105219 reinf. w/1" dia. S.R.	0.500	0.038	0.000	0.538 ✓	1.000	4.8.1 ✓
T9	62 - 42	Pirod 105219 reinf. w/1" dia. S.R.	0.578	0.044	0.001	0.623 ✓	1.000	4.8.1 ✓
T10	42 - 22	Pirod 105220 reinf. w/1" dia. S.R.	0.585	0.034	0.000	0.619 ✓	1.000	4.8.1 ✓
T11	22 - 2	Pirod 105220 reinf. w/1" dia. S.R.	0.647	0.035	0.000	0.682 ✓	1.000	4.8.1 ✓

Based on net area of leg in section below

Truss-Leg Diagonal Data

Section No.	Elevation ft	Diagonal Size	L_d ft	Kl/r	ϕP_n K	A in^2	V_u K	ϕV_n K	Stress Ratio
T4	152 - 142	0.5	1.47	120.0	238.57	0.1963	1.23	3.45	0.359 ✓
T5	142 - 122	0.5	1.47	120.0	238.57	0.1963	1.44	3.34	0.433 ✓
T6	122 - 102	0.5	1.46	119.0	324.71	0.1963	1.29	3.38	0.384 ✓
T7	102 - 82	0.5	1.44	117.4	490.12	0.1963	1.13	3.44	0.329 ✓

Section No.	Elevation ft	Diagonal Size	L_d ft	Kl/r	ϕP_n K	A in^2	V_u K	ϕV_n K	Stress Ratio
T8	82 - 62	0.625	1.43	93.3	593.04	0.3068	0.43	7.04	0.062 ✓
T9	62 - 42	0.625	1.43	93.3	593.04	0.3068	0.43	7.04	0.062 ✓
T10	42 - 22	0.625	1.42	92.9	662.68	0.3068	0.80	7.06	0.114 ✓
T11	22 - 2	0.625	1.42	92.9	662.68	0.3068	1.47	7.06	0.209 ✓

Diagonal Design Data (Tension)

Section No.	Elevation ft	Size	L ft	L_u ft	Kl/r	A in^2	P_u K	ϕP_n K	Ratio $\frac{P_u}{\phi P_n}$
T1	197 - 187	7/8	4.99	2.42	132.5	0.6013	1.75	27.06	0.065 [1] ✓
T2	187 - 172	7/8	5.04	2.43	133.2	0.6013	4.42	27.06	0.163 [1] ✓
T3	172 - 152	1	5.48	2.65	127.4	0.7854	6.45	35.34	0.183 [1] ✓
T4	152 - 142	L2 1/2x2 1/2x3/16	11.42	5.02	80.1	0.9020	10.78	29.22	0.369 [1] ✓
T5	142 - 122	L3x3x3/16	11.93	5.42	71.5	0.8791	12.70	42.85	0.296 [1] ✓
T6	122 - 102	L3x3x1/4	13.80	6.37	84.3	1.1588	13.70	56.49	0.243 [1] ✓
T7	102 - 82	L3x3x1/4	15.24	7.12	94.1	1.1588	13.57	56.49	0.240 [1] ✓
T8	82 - 62	L3x3x5/16	16.80	7.89	105.3	1.7800	14.24	57.67	0.247 [1] ✓
T9	62 - 42	L3 1/2x3 1/2x1/4	18.45	8.73	98.3	1.3463	14.76	65.63	0.225 [1] ✓
T10	42 - 22	L3 1/2x3 1/2x5/16	20.16	9.59	108.8	2.0900	15.77	67.72	0.233 [1] ✓
T11	22 - 2	L4x4x1/4	21.92	10.48	102.5	1.5963	16.85	77.82	0.217 [1] ✓

[1] P_u / ϕP_n controls

Top Girt Design Data (Tension)

Section No.	Elevation ft	Size	L ft	L_u ft	Kl/r	A in^2	P_u K	ϕP_n K	Ratio $\frac{P_u}{\phi P_n}$
T1	197 - 187	L3x3x5/16	4.50	4.35	56.7	1.7800	0.20	57.67	0.003 [1] ✓
T2	187 - 172	1	4.50	4.33	208.0	0.7854	0.87	35.34	0.025 [1] ✓

Section No.	Elevation ft	Size	L ft	L_u ft	Kl/r	A in^2	P_u K	ϕP_n K	Ratio $\frac{P_u}{\phi P_n}$
T3	172 - 152	1	4.52	4.33	207.7	0.7854	1.94	35.34	0.055 [1] ✔
T7	102 - 82	L3x3x3/16	10.00	8.67	115.0	1.0900	4.78	35.32	0.135 [1] ✔

[1] P_u / ϕP_n controls

Bottom Girt Design Data (Tension)

Section No.	Elevation ft	Size	L ft	L_u ft	Kl/r	A in^2	P_u K	ϕP_n K	Ratio $\frac{P_u}{\phi P_n}$
T1	197 - 187	7/8	4.50	4.35	238.9	0.6013	0.73	27.06	0.027 [1] ✔
T2	187 - 172	1	4.50	4.33	208.0	0.7854	1.68	35.34	0.048 [1] ✔
T3	172 - 152	1	4.98	4.80	230.3	0.7854	1.46	35.34	0.041 [1] ✔

[1] P_u / ϕP_n controls

Section Capacity Table

Section No.	Elevation ft	Component Type	Size	Critical Element	P K	ϕP_{allow} K	% Capacity	Pass Fail
T1	197 - 187	Leg	1 3/4	3	-1.74	83.62	22.2	Pass
T2	187 - 172	Leg	2	35	-28.61	113.63	51.0	Pass
T3	172 - 152	Leg	2 1/4	80	-84.20	149.02	94.5	Pass
T4	152 - 142	Leg	Pirod 105245	137	-92.22	214.86	54.6	Pass
T5	142 - 122	Leg	Pirod 105217	146	-158.21	214.86	86.1	Pass
T6	122 - 102	Leg	Pirod 105218	161	-216.91	300.68	82.2	Pass
T7	102 - 82	Leg	Pirod 105218 reinf. w/1" dia. S.R.	176	-275.73	465.78	65.2 75.4 (b)	Pass
T8	82 - 62	Leg	Pirod 105219 reinf. w/1" dia. S.R.	194	-329.73	567.86	62.2	Pass
T9	62 - 42	Leg	Pirod 105219 reinf. w/1" dia. S.R.	209	-382.56	567.86	72.2	Pass
T10	42 - 22	Leg	Pirod 105220 reinf. w/1" dia. S.R.	224	-433.35	634.59	72.0 74.1 (b)	Pass
T11	22 - 2	Leg	Pirod 105220 reinf. w/1" dia. S.R.	239	-480.87	634.59	79.2	Pass
T1	197 - 187	Diagonal	7/8	15	-1.77	9.55	18.5	Pass
T2	187 - 172	Diagonal	7/8	48	-4.50	9.45	47.6	Pass
T3	172 - 152	Diagonal	1	93	-6.55	13.51	48.5	Pass
T4	152 - 142	Diagonal	L2 1/2x2 1/2x3/16	144	-11.47	17.33	66.2 84.7 (b)	Pass
T5	142 - 122	Diagonal	L3x3x3/16	153	-13.18	23.33	56.5 89.1 (b)	Pass
T6	122 - 102	Diagonal	L3x3x1/4	168	-14.39	24.73	58.2 72.1 (b)	Pass

Section No.	Elevation ft	Component Type	Size	Critical Element	P K	ϕP_{allow} K	% Capacity	Pass Fail
T7	102 - 82	Diagonal	L3x3x1/4	186	-13.89	19.77	70.3 71.4 (b)	Pass
T8	82 - 62	Diagonal	L3x3x5/16	201	-14.61	19.70	74.2	Pass
T9	62 - 42	Diagonal	L3 1/2x3 1/2x1/4	216	-15.22	21.23	71.7	Pass
T10	42 - 22	Diagonal	L3 1/2x3 1/2x5/16	231	-16.21	21.49	75.4	Pass
T11	22 - 2	Diagonal	L4x4x1/4	246	-17.53	22.19	79.0	Pass
T1	197 - 187	Top Girt	L3x3x5/16	6	-0.28	48.22	0.6	Pass
T2	187 - 172	Top Girt	1	38	-0.78	20.77	3.8	Pass
T3	172 - 152	Top Girt	1	83	-1.80	20.77	8.7	Pass
T7	102 - 82	Top Girt	L3x3x3/16	178	-4.78	10.25	46.7	Pass
T1	197 - 187	Bottom Girt	7/8	9	-0.82	4.86	16.8	Pass
T2	187 - 172	Bottom Girt	1	42	-1.84	20.77	8.8	Pass
T3	172 - 152	Bottom Girt	1	85	-1.46	20.89	7.0	Pass
							Summary	
						Leg (T3)	94.5	Pass
						Diagonal (T5)	89.1	Pass
						Top Girt (T7)	46.7	Pass
						Bottom Girt (T1)	16.8	Pass
						Bolt Checks	89.1	Pass
						RATING =	**94.5**	**Pass**

Anchor Bolt Analysis:

Input Data:

Tower Reactions:

Tension Force =	Tension := 440·kips	(Input From tnxTower)
Compression Force =	Compression := 494·kips	(Input From tnxTower)
Shear Force =	Shear := 50·kips	(Input From tnxTower)

Anchor Bolt Data:

ASTM A687 Grade 105

Number of Anchor Bolts =	$N := 6$	(User Input)
Bolt Ultimate Strength =	$F_u := 150 \cdot ksi$	(User Input)
Bolt Yield Strength =	$F_y := 105 \cdot ksi$	(User Input)
Bolt Modulus =	$E := 29000 \cdot ksi$	(User Input)
Diameter of Anchor Bolts =	$D := 1.25 \cdot in$	(User Input)
Threads per Inch =	$n := 7$	(User Input)
Length from Top of Pier to Bottom of Leveling Nut =	$L_{ar} := 2.5 \cdot in$	(User Input)

Anchor Bolt Analysis:

Calculated Anchor Bolt Properties:

Gross Area of Bolt = $A_g := \frac{\pi}{4} \cdot D^2 = 1.227 \cdot in^2$

Net Area of Bolt = $A_n := \frac{\pi}{4} \cdot \left(D - \frac{0.9743 \cdot in}{n}\right)^2 = 0.969 \cdot in^2$

Net Diameter = $D_n := \frac{2 \cdot \sqrt{A_n}}{\sqrt{\pi}} = 1.111 \cdot in$

Radius of Gyration of Bolt = $r := \frac{D_n}{4} = 0.278 \cdot in$

Elastic Section Modulus of Bolt = $S_x := \frac{\pi \cdot D_n^3}{32} = 0.135 \cdot in^3$

Plastic Section Modulus of Bolt = $Z_x := \frac{D_n^3}{6} = 0.228 \cdot in^3$

Anchor Bolt Design Strength:

Resistance Factor for Flexure = $\phi_f := 0.9$

Resistance Factor for Compression = $\phi_c := 0.9$

Resistance Factor for Tension = $\phi_t := 0.75$

Resistance Factor for Shear = $\phi_v := 0.75$

Design Tensile Strength = $\Phi R_{nt} := \phi_t \cdot F_u \cdot A_n = 109 \cdot k$

Design Compression Strength = $\Phi R_{nc} := \phi_c \cdot F_y \cdot A_g = 116 \cdot k$

Design Shear Strength (Tension) = $\Phi R_{nv} := \phi_v \cdot 0.5 F_u \cdot A_g = 69 \cdot k$

Design Shear Strength (Compression) = $\Phi R_{nvc} := \phi_c \cdot 0.6 F_y \cdot A_g \cdot 0.75 = 52.2 \cdot k$

Check Anchor Bolt Tension Force:

Maximum Tensile Force = $P_{ut} := \frac{Tension}{N} = 73.3 \cdot kips$

Maximum Compressive Force = $P_{uc} := \frac{Compression}{N} = 82.3 \cdot kips$

Maximum Shear Force = $V_u := \frac{Shear}{N} = 8.3 \cdot kips$

Condition1 = $Condition1 := if\left[\left[\left(\frac{P_{ut}}{\Phi R_{nt}}\right)^2 + \left(\frac{V_u}{\Phi R_{nv}}\right)^2\right] \le 1.00, "OK", "Overstressed"\right]$

Condition1 = "OK"

Condition2 = $Condition2 := if\left[\left[\left(\frac{P_{uc}}{\Phi R_{nc}}\right) + \left(\frac{V_u}{\Phi R_{nvc}}\right)^2\right] \le 1.00, "OK", "Overstressed"\right]$

Condition2 = "OK"

Bolt % of Capacity = $\max\left[\left(\frac{P_{ut}}{\Phi R_{nt}}\right)^2 + \left(\frac{V_u}{\Phi R_{nv}}\right)^2, \left(\frac{P_{uc}}{\Phi R_{nc}}\right) + \left(\frac{V_u}{\Phi R_{nvc}}\right)^2\right] = 73.5 \cdot \%$

Rock Anchor Foundation Analysis:

Input Data:

Max Pier Reactions:

Uplift =	$Uplift := 440 \cdot kips$	*user input*	
Shear =	$Shear := 50 \cdot kips$	*user input*	
Compression =	$Axial := 494 \cdot kips$	*user input*	

Structure:

Footing Width =	$B_{ftg} := 10.0ft$	*user input*	
Footing Length =	$L_{ftg} := 10.0ft$	*user input*	
Footing Thickness =	$T_{ftg} := 3.25ft$	*user input*	
Pier Length/Width =	$L_{pier} := 4.0ft$	*user input*	
Pier Height =	$T_{pier} := 3.25ft$	*user input*	
Pier Projection Above Grade =	$P_p := 3.00 \cdot ft$	*user input*	

Depths:

Depth to Bottom of Footing =	$D_{ftg} := 3.5ft$	*user input*	(from grade line)
Depth to Suitable Rock =	$D_{rock} := 5.0ft$	*user input*	(from grade line)
Depth to Suitable Earth =	$D_{earth} := 1.0ft$	*user input*	(from grade line)
Anchor Length =	$L_{anchor} := 26.75ft$	*user input*	(from grade line)
Depth to Top of Submerged Anchor =	$D_{anchortop} := 2.50ft$	*user input*	(from grade line)
Anchor Depth =	$D_{anchor} := D_{anchortop} + L_{anchor}$		(from grade line)
	$D_{anchor} = 29.25\ ft$		

Subgrade Properties:

Internal Friction Angle =	$\phi := 35deg$	*user input*	
Unit Weight of Earth =	$\gamma_{earth} := 120 \frac{lb}{ft^3}$	*user input*	(Existing sub-grade conditions utilized in the analysis of the existing foundation system were obtained from a geo-technical soils study prepared by Clarence Welti & Assoc., P.E., P.C, dated March 3, 1998.
Unit Weight of Rock =	$\gamma_{rock} := 165 \frac{lb}{ft^3}$	*user input*	
Unit Weight of Conc =	$\gamma_{conc} := 150 \frac{lb}{ft^3}$	*user input*	
Ultimate Bearing =	$Bearing := 20000 \cdot psf$	*user input*	

RockAnchor Properties

Number of Anchors =	$N_{anchor} := 4$	*user input*	
Hole Diameter =	$hole_d := 3.00in$	*user input*	
Allowable Bond Stress Between Rock and Grout =	$\sigma_{bond} := 175 \cdot psi$	*user input*	Working bond Strength based on Weathered Rock/Sandstone
Grout Allowable Compressive Stress =	$fc_g := 5000 \cdot psi$	*user input*	
Anchor Spacing* (along length) =	$S_{anchor} := 5.50ft$	*user input*	
Required Factor of Safety =	$F_S := 1.0$	*user input*	
RockAnchor Ultimate Strength =	$Fu_{anchor} := 150.0ksi$	*user input*	Williams R71-11 1-3/8" dia. 150ksi
RockAnchor Yield Strength =	$Fy_{anchor} := 127.7ksi$	*user input*	Per Recommendation of PTI For Prestressed RockAnchors and Soil Anchors Section 6.6 Design Load Should not be more than 60% of Specified Minimum Tensile Strength.
RockAnchor Diameter =	$d_{ra} := 1.375in$	*user input*	
RockAnchor Area per Group =	$A_g := 1.58in^2$	*user input*	
RockAnchor Ultimate Tensile Load =	$T_u := 237kips$		
RockAnchor Allowable Tension =	$T_{all} := 0.60 \cdot T_u = 142.2 \cdot kips$		
RockAnchor Maximum Working Load to Yield =	$T_y := 0.80 \cdot T_u = 189.6 \cdot kips$		
RockAnchor Shear Capacity =	$Sh := 0.4 \cdot T_y = 75.84 \cdot kips$		
Total Volume of Concrete =	$V_{conc} := B_{ftg} \cdot L_{ftg} \cdot T_{ftg} + \frac{\pi \cdot L_{pier}^2}{4} \cdot T_{pier} = 365.8 \cdot ft^3$		
Weight of Pad =	$W_{pad} := (B_{ftg} \cdot L_{ftg} \cdot T_{ftg}) \cdot \gamma_{conc} = 48.75 \cdot kips$		
Weight of Pier =	$W_{pier} := (L_{pier}^2 \cdot T_{pier}) \cdot \gamma_{conc} = 7.8 \cdot kips$		
Total Weight of Concrete =	$W_{conc} := W_{pad} + W_{pier} = 56.5 \cdot kips$		

Rock Anchor Tension/Shear Check:

Actual Tension Force per Anchor = $T_a := \frac{Uplift - W_{conc}}{N_{anchor}} = 95.9 \cdot kips$

Design Shear Force per Anchor = $S_a := \frac{Shear}{N_{anchor}} = 12.5 \cdot kips$

Reduced Tension For Tension/Shear Combination = $T_{allr} := \left[1 - \left(\frac{S_a}{T_{all}}\right)^2\right] \cdot T_{all} = 141.1 \cdot kips$

Tension Check = $TensionCheck := if\left(T_{allr} \geq T_a, "OK", "IncreaseSize"\right) = "OK"$

Shear Check = $ShearCheck := if\left(Sh \geq S_a, "OK", "IncreaseSize"\right) = "OK"$

Provided Safety Factor = $\frac{T_{allr}}{T_a} = 1.47$

$SafetyFactor := if\left(\frac{T_{allr}}{T_a} \geq 1.0, "OK", "Overstressed"\right)$

$\boxed{SafetyFactor = "OK"}$

Rock Anchor Req'd Development Length in Rock:

Minimum Free Stress Length Required = $F_{stressreqd} := 10.0ft$ (Original Centek design free stress length)

Minimum Free Stress Length Provided = $F_{stressprov} := 10.0ft$

Controlling Free Stress Length: $L_f := if\left(F_{stressprov} > F_{stressreqd}, F_{stressprov}, F_{stressreqd}\right)$ $L_f = 10ft$

Required Rock Anchor Proof Load (1.33x Design Load) = $T_p := T_a \cdot 1.33 = 127.5 \cdot kips$

Provided Rock Anchor Proof Load (1.33x Design Load) = $T_{pp} := 40kips \cdot 1.33 \cdot F_S = 53.2 \cdot kips$ $T_{PLmax} := 0.80 \cdot T_u = 189.6 \cdot kips$

Required Release Lock Off Load (1.10x Design Load) = $T_L := T_a \cdot 1.10 = 105.4 \cdot kips$

Actual Release Lock Off Load (1.00x Design Load) = $T_{LL} := 40kips \cdot 1.00 \cdot F_S = 40 \cdot kips$ $T_{LLmax} := 0.70 \cdot T_u = 165.9 \cdot kips$

Rock Anchor/Grout Bond Length: $L_d := \frac{\left(\frac{0.04}{in} T_{LL}\right)}{\sqrt{fc_g \cdot psi}}$ $L_d = 1.89 \cdot ft$

Required Rock/Grout Bond Length: $L_b := \frac{T_{LL}}{\pi \cdot hole_d \cdot \sigma_{bond}} = 2.02ft$

Note:
Max Allowable Tensile Load = 60% of Ultimate Strength.
Max Lock Off Load = 70% of Ultimate Strength.
Max Proof Load = 80% of Ultimate Strength.

Controlling Length: $L_a := if\left(L_b < L_d, L_d, L_b\right)$ $L_a = 2.02ft$

$L_{bprov} := D_{anchor} - L_f - D_{anchortop} = 16.75ft$

$Bond\_Length\_Check := if\left(\frac{L_a}{L_{bprov}} \leq 1.00, "OK", "Increase\ Length"\right)$

$\boxed{Bond\_Length\_Check = "OK"}$

Calculated Uplift Resistance:

Intermediate Dimension:

Suitable Earth Height = $H := D_{rock} - D_{earth} = 4ft$

Suitable Rock Height = $Z := (D_{anchor} - D_{rock}) = 24.25\,ft$

Total Anchor Width = $W := S_{anchor} = 5.5\,ft$

Volumes:

Base Area 1 of Resisting Pyramid = $B_1 := W^2 = 30.25\,ft^2$

Base Area 2 of Resisting Pyramid = $B_2 := [\tan(\phi)\cdot(Z\cdot 0.5)\cdot 2 + W]^2 = 505.4\,ft^2$

Note: Rock Cone Taken At Half Suitable Rock Height - See Rock Volume Calculations

Base Area 3 of Resisting Pyramid = $B_3 := [\tan(\phi)\cdot(Z\cdot 0.5 + H)\cdot 2 + W]^2 = 788.6\,ft^2$

Total Volume of Resisting Material = $V_{tot} := \frac{[[H + (Z\cdot 0.5)]\cdot(B_1 + B_3 + \sqrt{B_1\cdot B_3})]}{3} = 5231.4\cdot ft^3$

Volume of Rock = $V_{rock} := \frac{[(Z\cdot 0.5)\cdot(B_1 + B_2 + \sqrt{B_1\cdot B_2})]}{3} = 2664.4\cdot ft^3$

Volume of Earth = $V_{earth} := V_{tot} - V_{rock} - V_{conc} = 2201.1\cdot ft^3$

Resisting Forces

Resisting Rock Force = $W_{rock} := V_{rock}\cdot\gamma_{rock} = 439.6\cdot kips$

Resisting Earth Force = $W_{earth} := V_{earth}\cdot\gamma_{earth} = 264.1\cdot kips$

Total Resisting Force = $W_{total} := 0.75W_{rock} + 0.75\cdot W_{earth} + 0.9W_{conc} = 578.7\cdot kips$

Foundation Uplift Check:

Factor of Safety = $\frac{W_{total}}{Uplift} = 1.32$

$Uplift\_Check := if\left(\frac{W_{total}}{Uplift} \geq F_S, "OK", "Overstressed"\right)$

$\boxed{Uplift\_Check = "OK"}$

Rock Bearing Capacity Check:

Bearing Force = $MaxBearing := \left[\frac{(Axial + W_{conc}) + (N_{anchor}T_{LL})}{B_{ftg}\cdot L_{ftg}}\right] = 7106\cdot psf$

$\frac{MaxBearing}{0.75Bearing} = 0.47$

$Rock\_Bearing\_Check := if\left(\frac{MaxBearing}{0.75Bearing} \leq 1.00, "OK", "Overstressed"\right)$

$\boxed{Rock\_Bearing\_Check = "OK"}$

Colliers Engineering & Design CT, PC
1055 Washington Boulevard
Stamford, CT 06901
203.324.0800
peter.albano@collierseng.com

Antenna Mount Analysis Report and PMI Requirements

Mount ReAnalysis

SMART Tool Project #: 10208975
Colliers Engineering & Design CT, PC Project #: 23777258

September 1, 2023

Site Information	*Site ID:*	*5000246694-VZW / CORNWALL 2 CT*
	Site Name:	*CORNWALL 2 CT*
	Carrier Name:	*Verizon Wireless*
	Address:	*7 Surdan Mountain Road* *Cornwall, Connecticut 06753* *Litchfield County*
	Latitude:	*41.862039°*
	Longitude:	*-73.399625°*
Structure Information	*Tower Type:*	*Self Support*
	Mount Type:	*15.00-Ft T-Frame*

FUZE ID # 17123723

Analysis Results

T-Frame: **70.9% Pass***

***Antennas and equipment to be installed in compliance with PMI Requirements of this mount analysis.**

******Contractor PMI Requirements:***
Included at the end of this MA report
Available & Submitted via portal at https://pmi.vzwsmart.com

For additional questions and support, please reach out to:
pmisupport@colliersengineering.com

Report Prepared By: Gilberto Martinez

STATE OF CONNECTICUT
DEJIAN XU
No. 33733
LICENSED
PROFESSIONAL ENGINEER
09/01/2023

Executive Summary:

The objective of this report is to determine the capacity of the antenna support mount at the subject facility for the final wireless telecommunications configuration, per the applicable codes and standards. Any modification listed under Sources of Information was assumed completed and was included in this analysis.

This analysis is inclusive of the mount structure only and does not address the structural capacity of the supporting structure. This mounting frame was not analyzed as an anchor attachment point for fall protection. All climbing activities are required to have a fall protection plan completed by a competent person.

Sources of Information:

Document Type	Remarks
Radio Frequency Data Sheet (RFDS)	*Verizon RFDS, Site ID: 323626, dated November 20, 2020*
Final Loading Configuration	*Filter Add Scope Provided by Verizon Wireless*
Mount Analysis Report	*Maser Consulting Connecticut, Project #: 21777229A, dated May 4, 2021*
Mount Modification Drawings	*Maser Consulting Connecticut, Project #: 21777229A, dated June 9, 2021*
Post Modification Inspection Report	*Colliers Engineering & Design, Project #: 21777229, dated June26, 2023*

Analysis Criteria:

Codes and Standards:	ANSI/TIA-222-H 2022 Connecticut State Building Code (CSBC), Effective October 1, 2022	
Wind Parameters:	Basic Wind Speed (Ultimate 3-sec. Gust), V_{ULT}:	115 mph
	Ice Wind Speed (3-sec. Gust):	40 mph
	Design Ice Thickness:	1.00 in
	Risk Category:	II
	Exposure Category:	C
	Topographic Category:	1
	Topographic Feature Considered:	N/A
	Topographic Method:	N/A
	Ground Elevation Factor, K_e:	0.952
Seismic Parameters:	S_S:	0.172 g
	S_1:	0.054 g
Maintenance Parameters:	Wind Speed (3-sec. Gust):	30 mph
	Maintenance Live Load, Lv:	250 lbs.
	Maintenance Live Load, Lm:	500 lbs.
Analysis Software:	RISA-3D (V17)	

Final Loading Configuration:

The following equipment has been considered for the analysis of the mounts:

Mount Elevation (ft)	Equipment Elevation (ft)	Quantity	Manufacturer	Model	Status
158.70	161.20	6	JMA Wireless	MX06FIT665-02	Retained
		3	Samsung	MT6407-77A	
		3	Samsung	B2/B66A RRH-BR049	
		3	Samsung	B5/B13 RRH-BR04C	
		1	Raycap	RVZDC-6627-PF-48	
		6	Antel	LPA-80080/4CF	
		6	Kaelus	KA-6030	Added

The recent mount mapping did not report existing OVP units. However, it is acceptable to install up to any three (3) of the OVP model numbers listed below as required at any location other than the mount face without affecting the structural capacity of the mount. If OVP units are installed on the mount face, a mount re-analysis may be required.

Model Number	Ports	AKA
DB-B1-6C-12AB-0Z	6	OVP-6
RVZDC-6627-PF-48	12	OVP-12

Standard Conditions:

1. All engineering services are performed on the basis that the information provided to Colliers Engineering & Design and used in this analysis is current and correct. The existing equipment loading has been applied at locations determined from the supplied documentation. Any deviation from the loading locations specified in this report shall be communicated to Colliers Engineering & Design to verify deviation will not adversely impact the analysis.

2. Mounts are assumed to have been properly fabricated, installed and maintained in good condition, twist free and plumb in accordance with its original design and manufacturer's specifications.

   Obvious safety and structural issues/deficiencies noticed at the time of the mount mapping and reported in the Mount Mapping Report are assumed to be corrected and documented as part of the PMI process and are not considered in the mount analysis.

   The mount analysis and the mount mapping are not a condition assessment of the mount. Proper maintenance and condition assessments are still required post analysis.

3. For mount analyses completed from other data sources (including new replacement mounts) and not specifically mapped in accordance with the NSTD-446 Standard, the mounts are assumed to have been properly fabricated, installed and maintained in good condition, twist free and plumb in accordance with its original design and manufacturer's specifications.

4. All member connections are assumed to have been designed to meet or exceed the load carrying capacity of the connected member unless otherwise specified in this report.

5. The mount was checked up to, and including, the bolts that fasten it to the mount collar/attachment and threaded rod connections in collar members if applicable. Local deformation and interaction between the mount collar/attachment and the supporting tower structure are outside the scope of this analysis.

6. All services are performed, results obtained, and recommendations made in accordance with generally accepted engineering principles and practices. Colliers Engineering & Design is not responsible for the conclusion, opinions, and recommendations made by others based on the information supplied.

7. Structural Steel Grades have been assumed as follows, if applicable, unless otherwise noted in this analysis:
   - Channel, Solid Round, Angle, Plate — ASTM A36 (Gr. 36)
   - HSS (Rectangular) — ASTM 500 (Gr. B-46)
   - Pipe — ASTM A53 (Gr. B-35)
   - Threaded Rod — F1554 (Gr. 36)
   - Bolts — ASTM A325

Discrepancies between in-field conditions and the assumptions listed above may render this analysis invalid unless explicitly approved by Colliers Engineering & Design.

Analysis Results:

Component	Utilization %	Pass/Fail
Standoff HSS	22.8 %	Pass
Mast Pipe	14.5 %	Pass
Standoff Pipe	12.7 %	Pass
Standoff/Face Bracing	26.6 %	Pass
Face Horizontal	54.5 %	Pass
Mount Pipe	51.5 %	Pass
Dual Antenna	26.2 %	Pass
Stabilizer	2.6 %	Pass
Connection Plate	70.9 %	Pass
Proposed Face Horizontal	40.4 %	Pass
Proposed V-Bracing	16.0 %	Pass
Mount Connection	27.6 %	Pass

Structure Rating – *(Controlling Utilization of all Components)*	**70.9%**

Mount Steel (EPA)a per ANSI/TIA-222-H Section 2.6.11.2:

Ice Thickness (In)	Mount Pipes Excluded		Mount Pipes Included	
	Front (EPA)a (Sq. Ft.)	Side (EPA)a (Sq. Ft.)	Front (EPA)a (Sq. Ft.)	Side (EPA)a (Sq. Ft.)
0	24.2	19.1	31.4	26.3
0.5	33.7	26.5	43.7	36.6
1	42.0	32.5	55.0	45.5

Notes:
- (EPA)a values listed above may be used in the absence of more precise information
- (EPA)a values in the table above include 1 sector(s).
- Ka factors included in (EPA)a calculations

Requirements:

The existing mounts are **SUFFICIENT** for the final loading configuration shown in attachment 2 and do not require modifications. Additional requirements are noted below.

Contractor shall install the proposed filter units on new Site Pro 1 Dual Swivel Mount Kit (Part #: RRUDSM or EOR approved equivalent) in the location shown in the placement diagrams.

If required, ANSI/ASSP rigging plan review services compliant with the requirements of ANSI/TIA 322 are available for a Construction Class IV site or other. Separate review fees will apply.

Attachments:

1. **Contractor Required Post Installation Inspection (PMI) Report Deliverables**
2. Antenna Placement Diagrams
3. Mount Photos
4. Mount Mapping Report (for reference only)
5. Analysis Calculations

Mount Desktop – Post Modification Inspection (PMI) Report Requirements

Documents & Photos Required from Contractor – Passing Mount Analysis

Passing Mount Analysis requires a PMI due to a modification in loading.
Electronic pdf version of this can be downloaded at https://pmi.vzwsmart.com.
For additional questions and support, please reach out to pmisupport@colliersengineering.com

MDG #: 5000246694 SMART Project #: 10208975 Fuze Project ID: 17123723

Purpose – to provide SMART Tool structural vendor the proper documentation in order to complete the required Mount Desktop review of the Post Modification Inspection Report.

- Contractor is responsible for making certain the photos provided as noted below provide confirmation that the installation was completed in accordance with this Passing Mount Analysis.
- Contractor shall relay any data that can impact the performance of the mount, this includes safety issues.

Base Requirements:

- If installation will cause damage to the structure, the climbing facility, or safety climb if present or any installed system, SMART Tool vendor to be notified prior to install. Any special photos outside of the standard requirements will be indicated on the drawings.
- Provide "as built mount drawings" showing contractor's name, contact information, preparer's signature, and date. Any deviations from the drawings (Proposed modification) shall be shown. NOTE: If loading is different than what is conveyed in the passing mount analysis (MA) contact the SMART Tool vendor immediately.
- Each photo should be time and date stamped
- Photos should be high resolution.
- Contractor shall ensure that the safety climb wire rope is supported and not adversely impacted by the install of the modification components. This may involve the install of wire rope guides, or other items to protect the wire rope. If there is conflict, contact the SMART Tool engineer for recommendations.
- The PMI can be accessed at the following portal: ***https://pmi.vzwsmart.com***

Photo Requirements:

- *Photos taken at ground level*
  - Photo of Gate Signs showing the tower owner, site name, and number.
  - Overall tower structure after installation.
  - Photos of the mount after installation; if the mounts are at different rad elevations, pictures must be provided for all elevations that equipment was installed.
- *Photos taken at Mount Elevation*
  - Photos showing the safety climb wire rope above and below the mount prior to installation.
  - Photos showing the climbing facility and safety climb if present.
  - Photos showing each individual sector after installation. Each entire sector shall be in one photo to show the interconnection of members.

        - These photos shall also certify that the placement and geometry of the equipment on the mount is as depicted in the antenna placement diagram in this form.
    - Photos that show the model number of each antenna and piece of equipment installed per sector.

Antenna & equipment placement and Geometry Confirmation:

- The contractor shall certify that the antenna & equipment placement and geometry is in accordance with the sketch and table as included in the mount analysis and noted below.

☐ The contractor certifies that the photos support and the equipment on the mount is as depicted on the sketch and table included in this form and with the mount analysis provided.

OR

☐ The contractor notes that the equipment on the mount is not in accordance with the sketch and has noted the differences below and provided photo documentation of any alterations.

Special Instructions / Validation as required from the MA or any other information the contractor deems necessary to share that was identified:

Issue:

Contractor shall install the proposed filter units on new Site Pro 1 Dual Swivel Mount Kit (Part #: RRUDSM or EOR approved equivalent) in the location shown in the placement diagrams.

Response:

Special Instruction Confirmation:

☐ The contractor has read and acknowledges the above special instructions.

☐ All hardware listed in the Special Instructions above (if applicable) has been properly installed, and the existing hardware was inspected.

☐ The material utilized was as specified in the SMART Tool engineering vendor Special Instructions above (if applicable) and included in the material certification folder is a packing list or invoice for these materials.

OR

☐ The material utilized was approved by a SMART Tool engineering vendor as an "equivalent" and this approval is included as part of the contractor submission.

Comments:

Contractor certifies that the climbing facility / safety climb was not damaged prior to starting work:

☐ Yes ☐ No

Contractor certifies no new damage created during the current installation:

☐ Yes ☐ No

Contractor to certify the condition of the safety climb and verify no damage when leaving the site:

☐ Safety Climb in Good Condition ☐ Safety Climb Damaged

Certifying Individual:

Company:	
Employee Name:	
Contact Phone:	
Email:	
Date:	

Structure: 5000246694-VZW - CORNWALL 2 CT

Sector: **A**

Structure Type: Self Support

Mount Elev: 158.70

10208975

9/1/2023

Page: 1

Colliers Engineering & Design

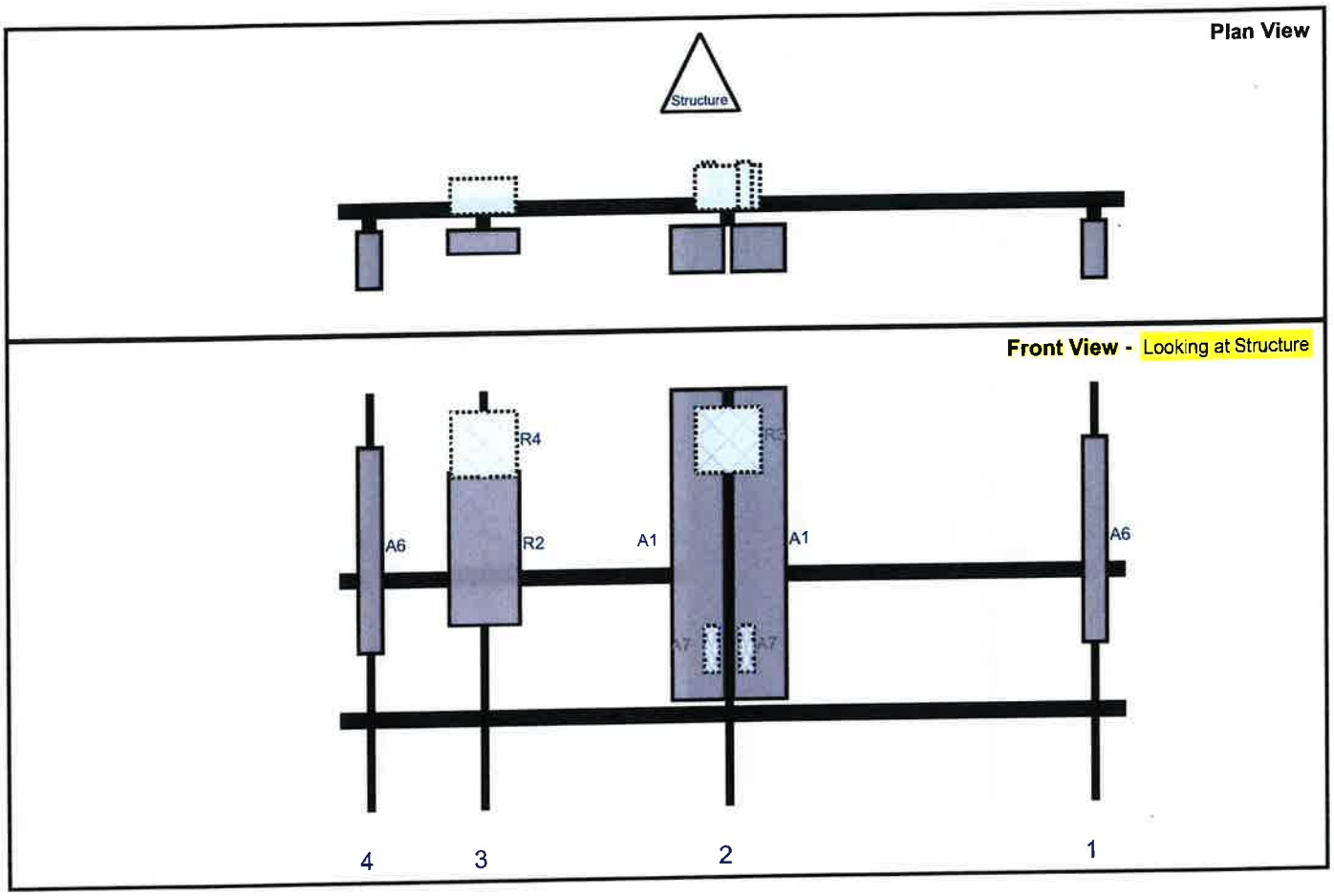

Ref#	Model	Height (in)	Width (in)	H Dist Frm L.	Pipe #	Pipe Pos V	Ant Pos	C. Ant Frm T.	Ant H Off	Status	Validation
A6	LPA-80080/4CF	47.2	5.5	173	1	a	Front	36	0	Retained	03/01/2023
A1	MX06FIT665-02	71.3	12.2	89	2	a	Front	36	7	Retained	03/01/2023
A1	MX06FIT665-02	71.3	12.2	89	2	b	Front	36	-7	Retained	03/01/2023
R3	B2/B66A RRH-BR049	15	15	89	2	a	Behind	12	0	Retained	03/01/2023
A7	KA-6030	10.6	3.2	89	2	a	Behind	60	4	Added	
A7	KA-6030	10.6	3.2	89	2	b	Behind	60	-4	Added	
R2	MT6407-77A	35.1	16.1	33	3	a	Front	36	0	Retained	03/01/2023
R4	B5/B13 RRH-BR04C	15	15	33	3	a	Behind	12	0	Retained	03/01/2023
A6	LPA-80080/4CF	47.2	5.5	7	4	a	Front	36	0	Retained	03/01/2023
M13	RVZDC-6627-PF-48	28.9	15.7		Member					Retained	03/01/2023

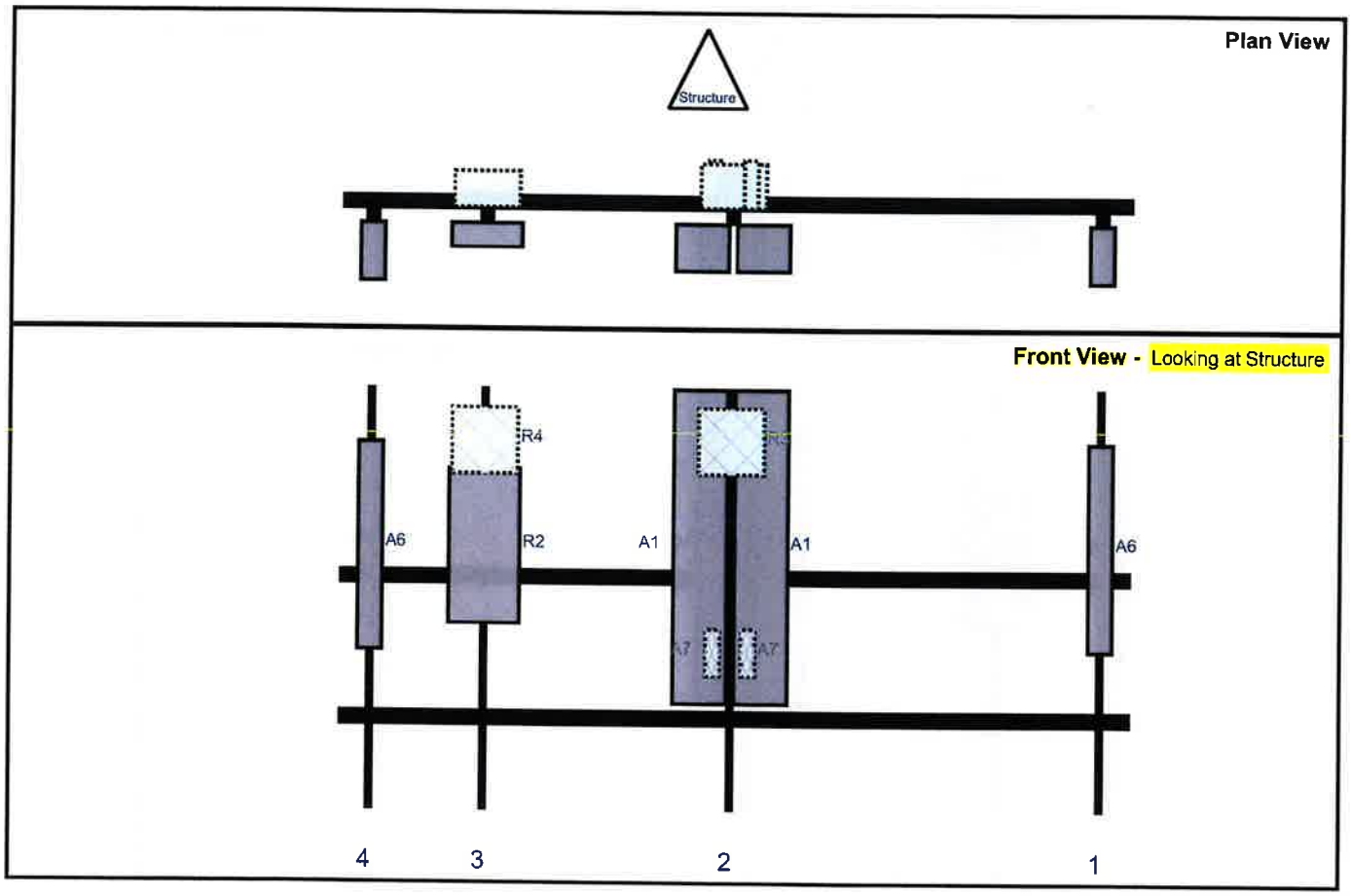

Ref#	Model	Height (in)	Width (in)	H Dist Frm L.	Pipe #	Pipe Pos V	Ant Pos	C. Ant Frm T.	Ant H Off	Status	Validation
A6	LPA-80080/4CF	47.2	5.5	173	1	a	Front	36	0	Retained	03/01/2023
A1	MX06FIT665-02	71.3	12.2	89	2	a	Front	36	7	Retained	03/01/2023
A1	MX06FIT665-02	71.3	12.2	89	2	b	Front	36	-7	Retained	03/01/2023
R3	B2/B66A RRH-BR049	15	15	89	2	a	Behind	12	0	Retained	03/01/2023
A7	KA-6030	10.6	3.2	89	2	a	Behind	60	4	Added	
A7	KA-6030	10.6	3.2	89	2	b	Behind	60	-4	Added	
R2	MT6407-77A	35.1	16.1	33	3	a	Front	36	0	Retained	03/01/2023
R4	B5/B13 RRH-BR04C	15	15	33	3	a	Behind	12	0	Retained	03/01/2023
A6	LPA-80080/4CF	47.2	5.5	7	4	a	Front	36	0	Retained	03/01/2023

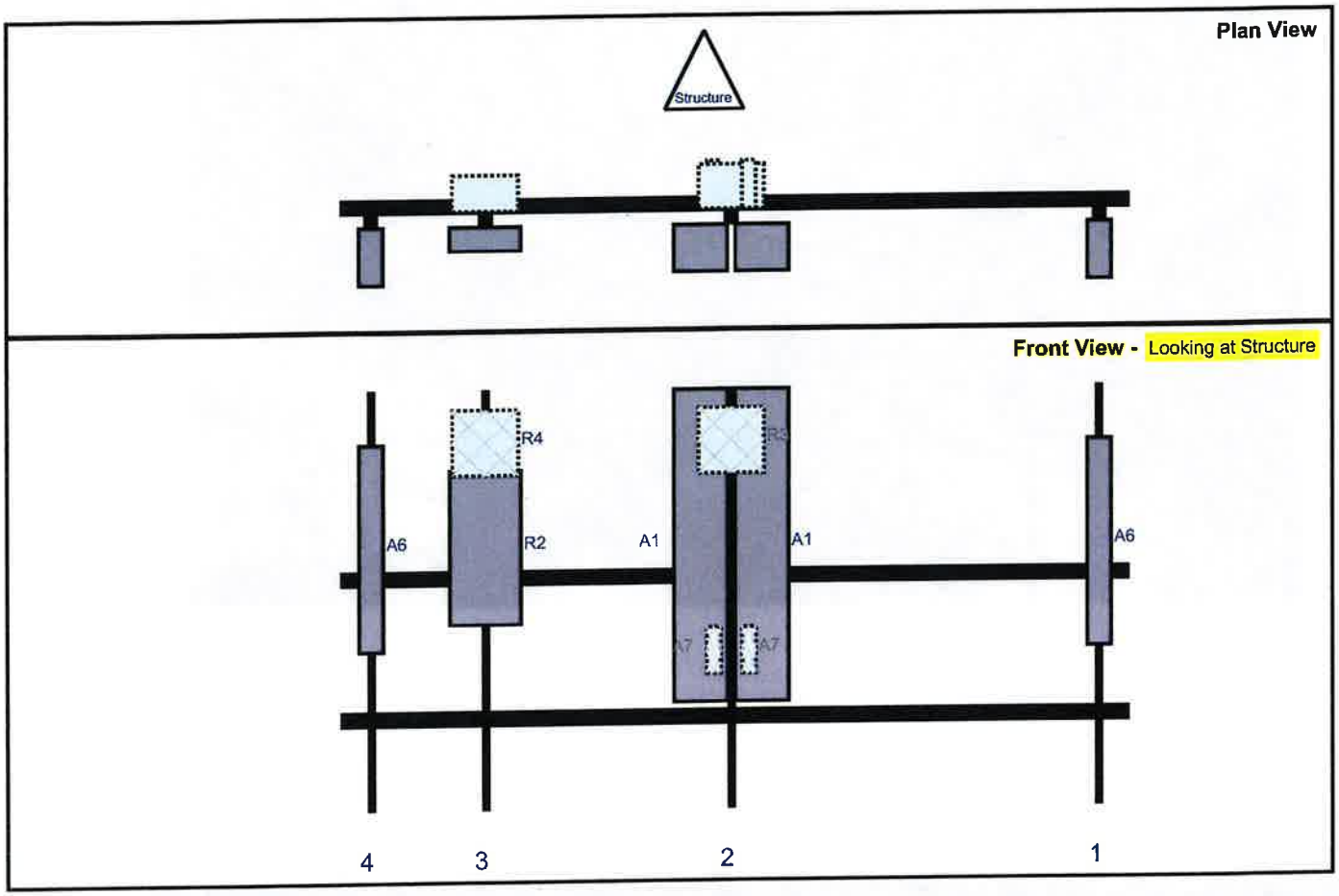

Ref#	Model	Height (in)	Width (in)	H Dist Frm L.	Pipe #	Pipe Pos V	Ant Pos	C. Ant Frm T.	Ant H Off	Status	Validation
A6	LPA-80080/4CF	47.2	5.5	173	1	a	Front	36	0	Retained	03/01/2023
A1	MX06FIT665-02	71.3	12.2	89	2	a	Front	36	7	Retained	03/01/2023
A1	MX06FIT665-02	71.3	12.2	89	2	b	Front	36	-7	Retained	03/01/2023
R3	B2/B66A RRH-BR049	15	15	89	2	a	Behind	12	0	Retained	03/01/2023
A7	KA-6030	10.6	3.2	89	2	a	Behind	60	4	Added	
A7	KA-6030	10.6	3.2	89	2	b	Behind	60	-4	Added	
R2	MT6407-77A	35.1	16.1	33	3	a	Front	36	0	Retained	03/01/2023
R4	B5/B13 RRH-BR04C	15	15	33	3	a	Behind	12	0	Retained	03/01/2023
A6	LPA-80080/4CF	47.2	5.5	7	4	a	Front	36	0	Retained	03/01/2023

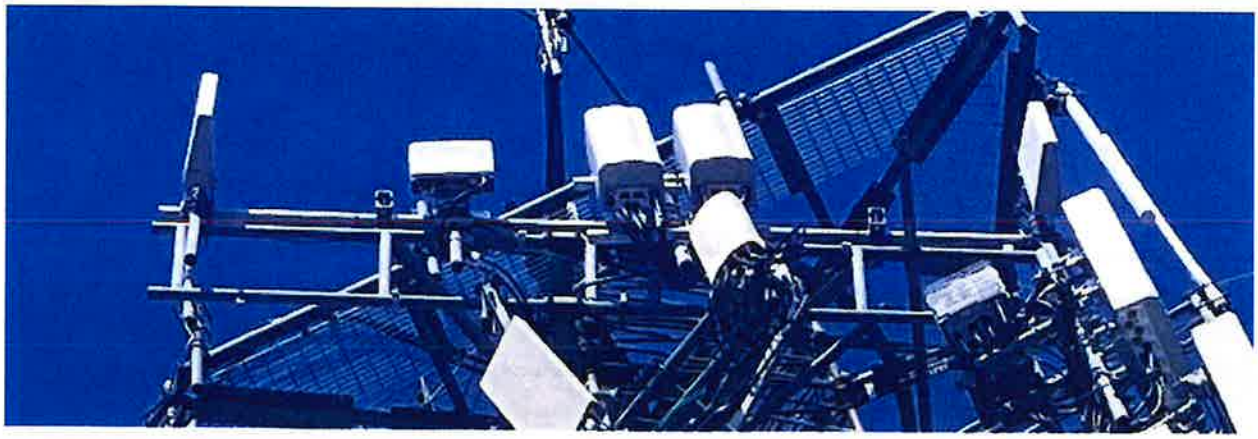

V3.0 Updated on 8-31-2020

PAUL J. FORD & COMPANY

Antenna Mount Mapping Form (PATENT PENDING)

FCC #	N/A		
Tower Owner:	OTHER	Mapping Date:	04.05.2021.
Site Name:	CORNWALL 2 CT	Tower Type:	Self Support
Site Number or ID:	468473	Tower Height (Ft.):	
Mapping Contractor:	Roaming Networks Inc.	Mount Elevation (Ft.):	156

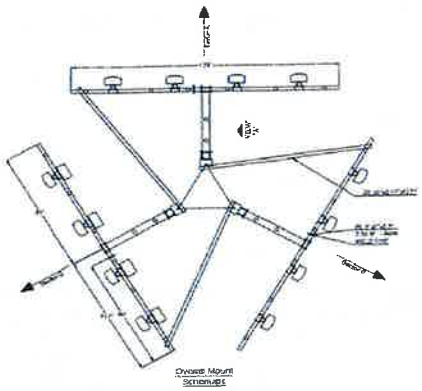

Overall Mount Schematic

Mount Pipe Configuration and Geometries [Unit = Inches]

Sector / Position	Mount Pipe Size & Length	Vertical Offset Dimension "d"	Horizontal Offset "C1, C2, C3, etc."	Sector / Position	Mount Pipe Size & Length	Vertical Offset Dimension "d"	Horizontal Offset "C1, C2, C3, etc."
A1	PIPE Ø 2.38" x 0.23" x96"	75.00	7.00	C1	PIPE Ø 2.38" x 0.23" x96"	75.00	7.00
A2	PIPE Ø 2.38" x 0.23" x96"	75.00	91.00	C2	PIPE Ø 2.38" x 0.23" x96"	75.00	91.00
A3	PIPE Ø 2.38" x 0.23" x96"	75.00	147.00	C3	PIPE Ø 2.38" x 0.23" x96"	75.00	147.00
A4	PIPE Ø 2.38" x 0.23" x96"	75.00	173.00	C4	PIPE Ø 2.38" x 0.23" x96"	75.00	173.00
A5				C5			
A6				C6			
B1	PIPE Ø 2.38" x 0.23" x96"	75.00	7.00	D1			
B2	PIPE Ø 2.38" x 0.23" x96"	75.00	91.00	D2			
B3	PIPE Ø 2.38" x 0.23" x96"	75.00	147.00	D3			
B4	PIPE Ø 2.38" x 0.23" x96"	75.00	173.00	D4			
B5				D5			
B6				D6			

Distance between bottom rail and mount CL elevation (dim d). Unit Is inches. See 'Mount Elev Ref' tab for details. :	0.00
Distance from top of bottom support rail to lowest tip of ant./eqpt. of Carrier above. (N/A if > 10 ft.) :	
Distance from top of bottom support rail to highest tip of ant./eqpt. of Carrier below. (N/A if > 10 ft.) :	

Please enter additional infomation or comments below.

Tower Face Width at Mount Elev. (ft.):	4.8	Tower Leg Size or Pole Shaft Diameter at Mount Elev. (in.):	2.29

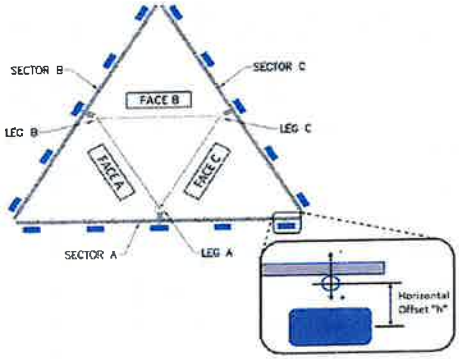

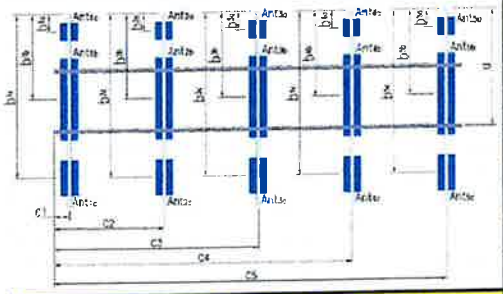

Antenna Layout (Looking Out From Tower)

Ants. Items	Enter antenna model. If not labeled, enter "Unknown".						Mounting Locations [Units are inches and degrees]			Photos of antennas
	Antenna Models if Known	Width (in.)	Depth (in.)	Height (in.)	Coax Size and Qty	Antenna Center-line (Ft.)	Vertical Distances "b_{1a}, b_{2a}, b_{3a}, b_{1b}..." (Inches)	Horiz. Offset "h" (Use "-" if Ant. Is behind)	Antenna Azimuth (Degrees)	Photo Numbers
Sector A										
Ant_{1a}	UNKNOWN					160.25	24.00	15.00	74.00	212
Ant_{1b}										
Ant_{1c}										
Ant_{2a}	BXA-80063/6CF	11.20	4.50	71.10		159.25	36.00	8.00	74.00	213
Ant_{2b}										
Ant_{2c}										
Ant_{3a}	BXA-80063/6CF	11.20	4.50	71.10		160.25	24.00	8.00	74.00	214
Ant_{3b}										
Ant_{3c}										
Ant_{4a}	UNKNOWN					160.25	24.00	15.00	74.00	214
Ant_{4b}										
Ant_{4c}										
Ant_{5a}										
Ant_{5b}										
Ant_{5c}										
Ant on Standoff										
Ant on Standoff										
Ant on Tower										
Ant on Tower										

Mount Azimuth (Degree) for Each Sector			Tower Leg Azimuth (Degree) for Each Sector	
Sector A:	74.00	Deg	Leg A:	22.00 Deg
Sector B:	266.00	Deg	Leg B:	142.00 Deg
Sector C:	342.00	Deg	Leg C:	262.00 Deg
Sector D:		Deg	Leg D:	Deg

Climbing Facility Information			
Location:	22.00	Deg	On Leg A
Climbing Facility	Corrosion Type:		Good condition.
	Access:		Climbing path was obstructed.
	Condition:		Good condition.

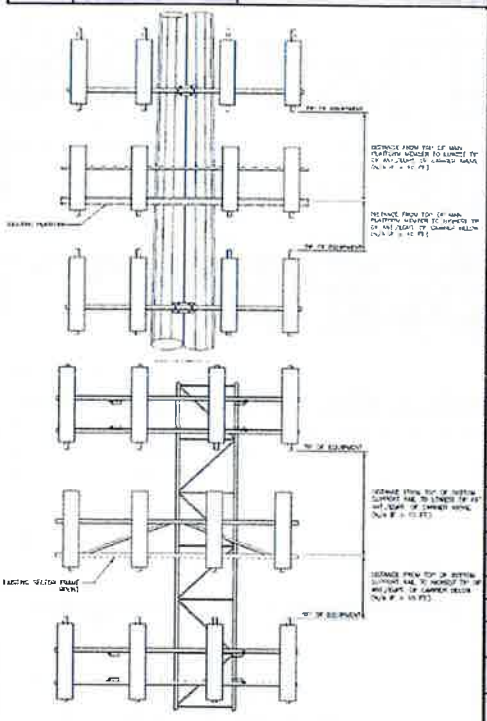

Sector B										
Ant_{1a}	UNKNOWN					160.25	24.00	15.00	266.00	255
Ant_{1b}										
Ant_{1c}										
Ant_{2a}	BXA-80063/6CF	11.20	4.50	71.10		159.25	36.00	8.00	266.00	256
Ant_{2b}										
Ant_{2c}										
Ant_{3a}	BXA-80063/6CF	11.20	4.50	71.10		160.25	24.00	8.00	266.00	256
Ant_{3b}										
Ant_{3c}										
Ant_{4a}	UNKNOWN					160.25	24.00	15.00	266.00	257
Ant_{4b}										
Ant_{4c}										
Ant_{5a}										
Ant_{5b}										
Ant_{5c}										
Ant on Standoff										
Ant on Standoff										
Ant on Tower										
Ant on Tower										
Sector C										
Ant_{1a}	UNKNOWN					160.25	24.00	15.00	342.00	268
Ant_{1b}										
Ant_{1c}										
Ant_{2a}	BXA-80063/6CF	11.20	4.50	71.10		159.25	36.00	8.00	342.00	269
Ant_{2b}										
Ant_{2c}										
Ant_{3a}	BXA-80063/6CF	11.20	4.50	71.10		160.25	24.00	8.00	342.00	269
Ant_{3b}										
Ant_{3c}										
Ant_{4a}	UNKNOWN					160.25	24.00	15.00	342.00	269
Ant_{4b}										
Ant_{4c}										
Ant_{5a}										
Ant_{5b}										
Ant_{5c}										
Ant on Standoff										
Ant on Standoff										
Ant on Tower										
Ant on Tower										
Sector D										
Ant_{1a}										
Ant_{1b}										
Ant_{1c}										
Ant_{2a}										
Ant_{2b}										
Ant_{2c}										
Ant_{3a}										
Ant_{3b}										
Ant_{3c}										
Ant_{4a}										
Ant_{4b}										
Ant_{4c}										
Ant_{5a}										
Ant_{5b}										
Ant_{5c}										
Ant on Standoff										
Ant on Standoff										
Ant on Tower										
Ant on Tower										

Observed Safety and Structural Issues During the Mount Mapping

Issue #	Description of Issue	Photo #

1		
2		
3		
4		
5		
6		
7		
8		

Mapping Notes
1. Please report any visible structural or safety issues observed on the antenna mounts (Damaged members, loose connections, tilting mounts, safety climb issues, etc.)
2. If the thickness of the existing pipes or tubing can't be obtained from a general tool (such as Caliper), please use an ultrasonic measurement tool (thickness gauge) to measure the thickness.
3. Please create all required detail sketches of the mounts and insert them into the "Sketches" tab.
4. Please measure and enter the bolt sizes and types under the Members Box in the spreadsheet of the mount type.
5. Take and label the photos of the tower, mounts, connections, antennas and all measurements. Minimum 50 photos are required.
6. Please measure and report the size and length of all existing antenna mounting pipes.
7. Please measure and report the antenna information for all sectors.
8. Don't delete or rearrange any sheet or contents of any sheet from this mapping form.

Standard Conditions
1. Obvious safety and structural issues/deficiencies noticed at the time of the mount mapping are to be reported in this mapping. However, this mount mapping is not a condition assessment of the mount.

V3.0 Updated on 8-31-2020

Antenna Mount Mapping Form (PATENT PENDING)

			FCC #
			N/A
Tower Owner:	OTHER	Mapping Date:	04.05.2021.
Site Name:	CORNWALL 2 CT	Tower Type:	Self Support
Site Number or ID:	468473	Tower Height (Ft.):	
Mapping Contractor:	Roaming Networks inc.	Mount Elevation (Ft.):	156

Please Insert Sketches of the Antenna Mount

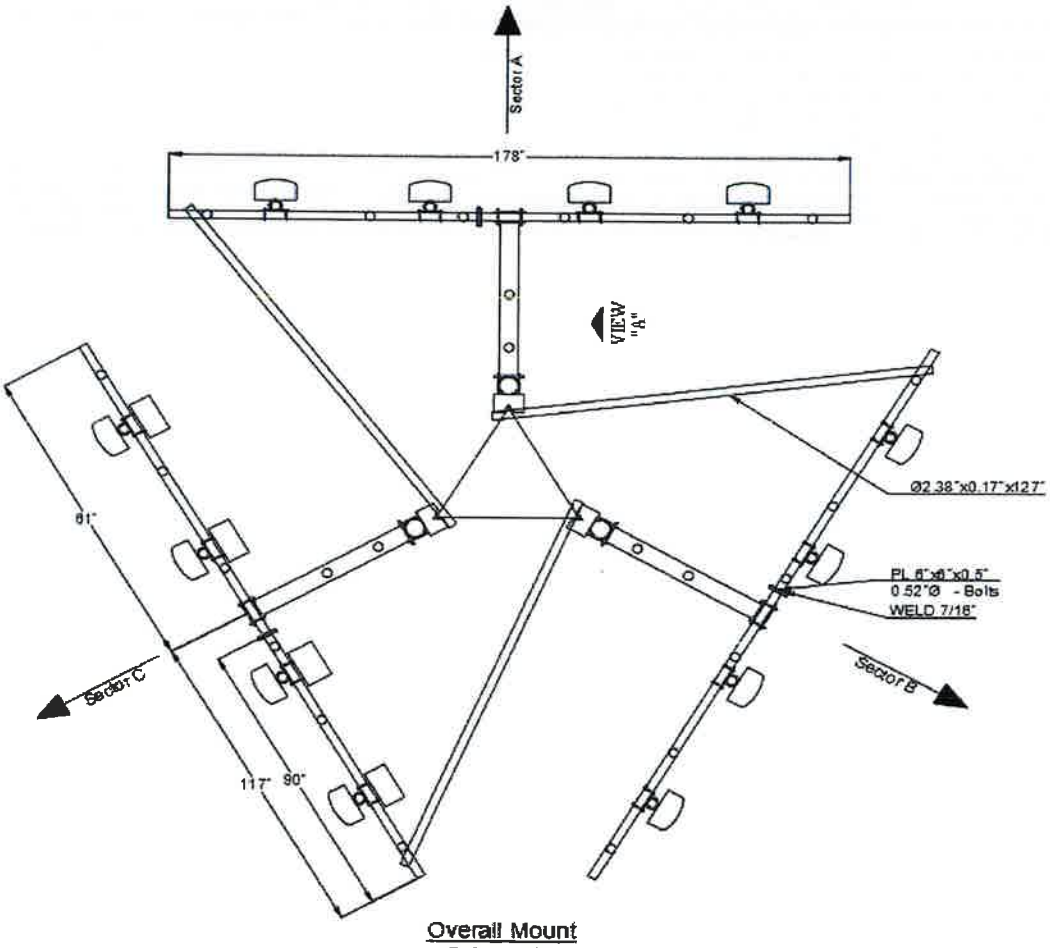

Overall Mount Schematic

Please Insert Sketches of the Antenna Mount, cont'd

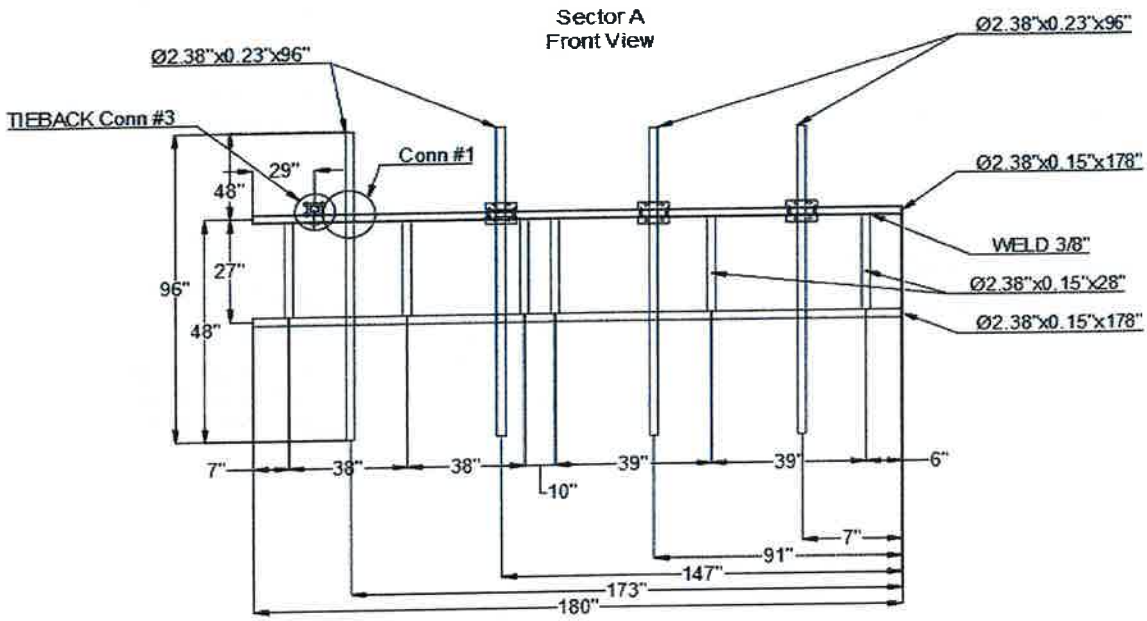

Please Insert Sketches of the Antenna Mount, cont'd

VIEW "A"

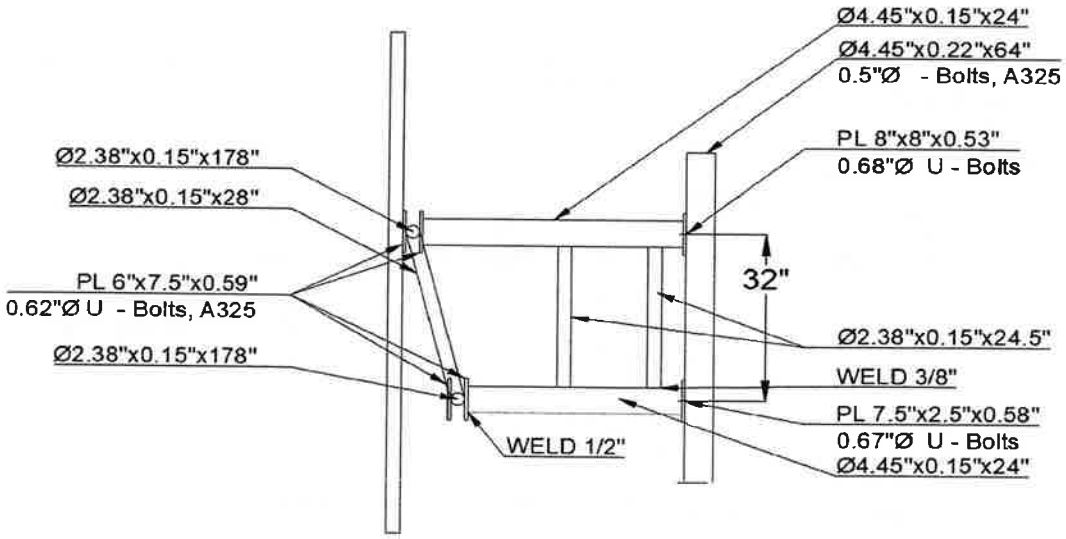

Please Insert Sketches of the Antenna Mount, cont'd

CONN. #3

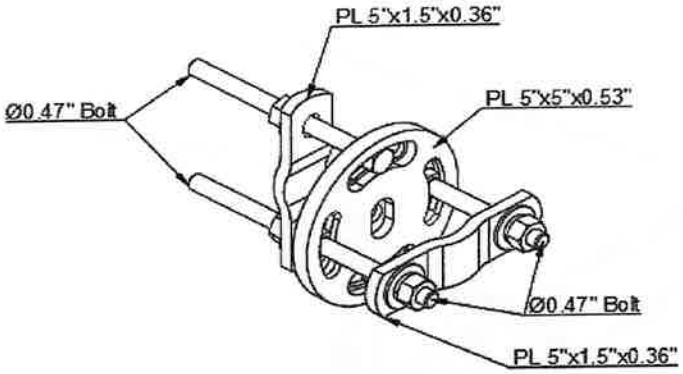

Envelope Only Solution

Colliers Engineering & Des...	5000246694-VZW_MT_LOT_SectorA_H	SK - 1
		Sept 1, 2023 at 11:42 AM
		5000246694-VZW_MT_LOT_A_H.r3d

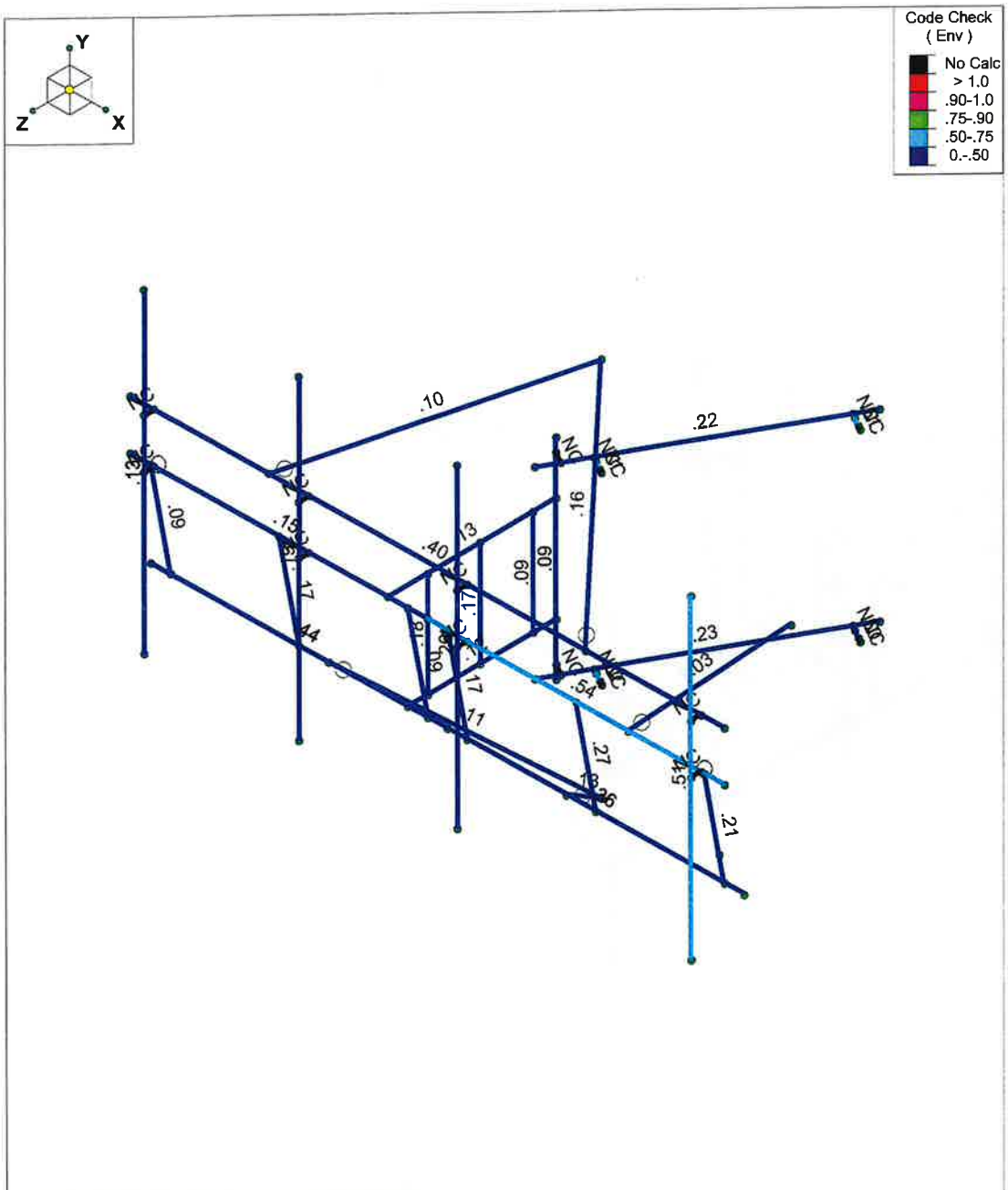

Member Code Checks Displayed (Enveloped)
Envelope Only Solution

Colliers Engineering & Des...	5000246694-VZW_MT_LOT_SectorA_H	SK - 2
		Sept 1, 2023 at 11:42 AM
		5000246694-VZW_MT_LOT_A_H.r3d

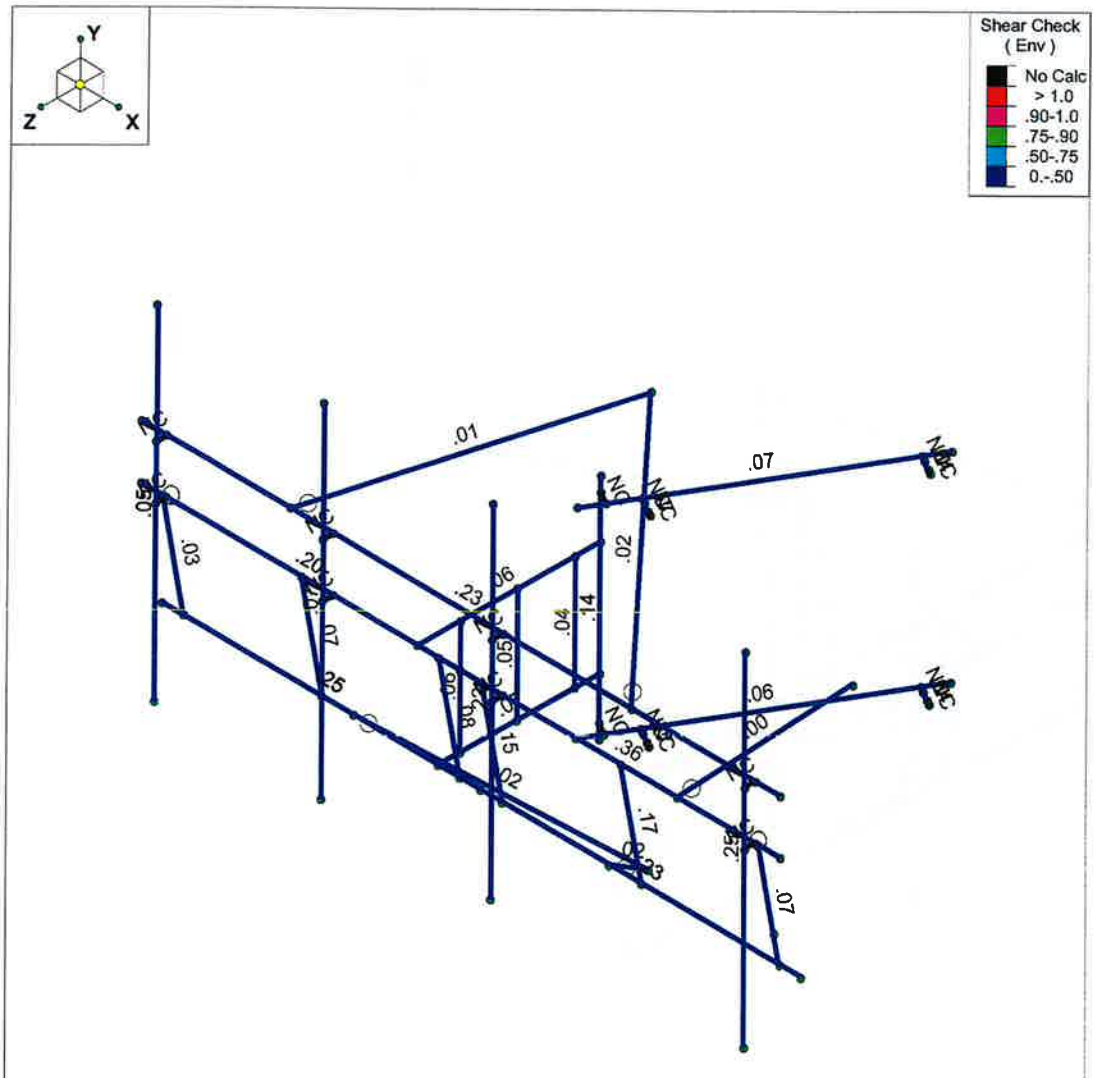

Member Shear Checks Displayed (Enveloped)
Envelope Only Solution

Colliers Engineering & Des...	5000246694-VZW_MT_LOT_SectorA_H	SK - 3
		Sept 1, 2023 at 11:42 AM
		5000246694-VZW_MT_LOT_A_H.r3d

Basic Load Cases

	BLC Description	Category	X Gravity	Y Gravity	Z Gravity	Joint	Point	Distributed	Area(Me...	Surface(...
1	Antenna D	None					45			
2	Antenna Di	None					45			
3	Antenna Wo (0 Deg)	None					45			
4	Antenna Wo (30 Deg)	None					45			
5	Antenna Wo (60 Deg)	None					45			
6	Antenna Wo (90 Deg)	None					45			
7	Antenna Wo (120 Deg)	None					45			
8	Antenna Wo (150 Deg)	None					45			
9	Antenna Wo (180 Deg)	None					45			
10	Antenna Wo (210 Deg)	None					45			
11	Antenna Wo (240 Deg)	None					45			
12	Antenna Wo (270 Deg)	None					45			
13	Antenna Wo (300 Deg)	None					45			
14	Antenna Wo (330 Deg)	None					45			
15	Antenna Wi (0 Deg)	None					45			
16	Antenna Wi (30 Deg)	None					45			
17	Antenna Wi (60 Deg)	None					45			
18	Antenna Wi (90 Deg)	None					45			
19	Antenna Wi (120 Deg)	None					45			
20	Antenna Wi (150 Deg)	None					45			
21	Antenna Wi (180 Deg)	None					45			
22	Antenna Wi (210 Deg)	None					45			
23	Antenna Wi (240 Deg)	None					45			
24	Antenna Wi (270 Deg)	None					45			
25	Antenna Wi (300 Deg)	None					45			
26	Antenna Wi (330 Deg)	None					45			
27	Antenna Wm (0 Deg)	None					45			
28	Antenna Wm (30 Deg)	None					45			
29	Antenna Wm (60 Deg)	None					45			
30	Antenna Wm (90 Deg)	None					45			
31	Antenna Wm (120 Deg)	None					45			
32	Antenna Wm (150 Deg)	None					45			
33	Antenna Wm (180 Deg)	None					45			
34	Antenna Wm (210 Deg)	None					45			
35	Antenna Wm (240 Deg)	None					45			
36	Antenna Wm (270 Deg)	None					45			
37	Antenna Wm (300 Deg)	None					45			
38	Antenna Wm (330 Deg)	None					45			
39	Structure D	None		-1						
40	Structure Di	None						32		
41	Structure Wo (0 Deg)	None						64		
42	Structure Wo (30 Deg)	None						64		
43	Structure Wo (60 Deg)	None						64		
44	Structure Wo (90 Deg)	None						64		
45	Structure Wo (120 Deg)	None						64		
46	Structure Wo (150 Deg)	None						64		
47	Structure Wo (180 Deg)	None						64		
48	Structure Wo (210 Deg)	None						64		
49	Structure Wo (240 Deg)	None						64		
50	Structure Wo (270 Deg)	None						64		
51	Structure Wo (300 Deg)	None						64		
52	Structure Wo (330 Deg)	None						64		
53	Structure Wi (0 Deg)	None						64		
54	Structure Wi (30 Deg)	None						64		
55	Structure Wi (60 Deg)	None						64		
56	Structure Wi (90 Deg)	None						64		
57	Structure Wi (120 Deg)	None						64		
58	Structure Wi (150 Deg)	None						64		

Basic Load Cases (Continued)

	BLC Description	Category	X Gravity	Y Gravity	Z Gravity	Joint	Point	Distributed	Area(Me...	Surface(...
59	Structure Wi (180 Deg)	None						64		
60	Structure Wi (210 Deg)	None						64		
61	Structure Wi (240 Deg)	None						64		
62	Structure Wi (270 Deg)	None						64		
63	Structure Wi (300 Deg)	None						64		
64	Structure Wi (330 Deg)	None						64		
65	Structure Wm (0 Deg)	None						64		
66	Structure Wm (30 Deg)	None						64		
67	Structure Wm (60 Deg)	None						64		
68	Structure Wm (90 Deg)	None						64		
69	Structure Wm (120 Deg)	None						64		
70	Structure Wm (150 Deg)	None						64		
71	Structure Wm (180 Deg)	None						64		
72	Structure Wm (210 Deg)	None						64		
73	Structure Wm (240 Deg)	None						64		
74	Structure Wm (270 Deg)	None						64		
75	Structure Wm (300 Deg)	None						64		
76	Structure Wm (330 Deg)	None						64		
77	Lm1	None					1			
78	Lm2	None					1			
79	Lv1	None					1			
80	Lv2	None					1			
81	Antenna Ev	None					45			
82	Antenna Eh (0 Deg)	None					30			
83	Antenna Eh (90 Deg)	None					30			
84	Structure Ev	ELY		-.037						
85	Structure Eh (0 Deg)	ELZ			-.092					
86	Structure Eh (90 Deg)	ELX	.092							

Load Combinations

	Description	S...	P...	S...	B...	Fa...	B...	Fa...	B...	Fa...	B...	Fa...	B...	Fa...	B...	Fa...	B...	Fa...	B...	Fa...	B...	Fa...	B...	Fa...
1	1.2D+1.0Wo (0 Deg)	Yes	Y		1	1.2	39	1.2	3	1	41	1												
2	1.2D+1.0Wo (30 Deg)	Yes	Y		1	1.2	39	1.2	4	1	42	1												
3	1.2D+1.0Wo (60 Deg)	Yes	Y		1	1.2	39	1.2	5	1	43	1												
4	1.2D+1.0Wo (90 Deg)	Yes	Y		1	1.2	39	1.2	6	1	44	1												
5	1.2D+1.0Wo (120 Deg)	Yes	Y		1	1.2	39	1.2	7	1	45	1												
6	1.2D+1.0Wo (150 Deg)	Yes	Y		1	1.2	39	1.2	8	1	46	1												
7	1.2D+1.0Wo (180 Deg)	Yes	Y		1	1.2	39	1.2	9	1	47	1												
8	1.2D+1.0Wo (210 Deg)	Yes	Y		1	1.2	39	1.2	10	1	48	1												
9	1.2D+1.0Wo (240 Deg)	Yes	Y		1	1.2	39	1.2	11	1	49	1												
10	1.2D+1.0Wo (270 Deg)	Yes	Y		1	1.2	39	1.2	12	1	50	1												
11	1.2D+1.0Wo (300 Deg)	Yes	Y		1	1.2	39	1.2	13	1	51	1												
12	1.2D+1.0Wo (330 Deg)	Yes	Y		1	1.2	39	1.2	14	1	52	1												
13	1.2D + 1.0Di + 1.0Wi (0 Deg)	Yes	Y		1	1.2	39	1.2	2	1	40	1	15	1	53	1								
14	1.2D + 1.0Di + 1.0Wi (30 D...	Yes	Y		1	1.2	39	1.2	2	1	40	1	16	1	54	1								
15	1.2D + 1.0Di + 1.0Wi (60 D...	Yes	Y		1	1.2	39	1.2	2	1	40	1	17	1	55	1								
16	1.2D + 1.0Di + 1.0Wi (90 D...	Yes	Y		1	1.2	39	1.2	2	1	40	1	18	1	56	1								
17	1.2D + 1.0Di + 1.0Wi (120 ...	Yes	Y		1	1.2	39	1.2	2	1	40	1	19	1	57	1								
18	1.2D + 1.0Di + 1.0Wi (150 ...	Yes	Y		1	1.2	39	1.2	2	1	40	1	20	1	58	1								
19	1.2D + 1.0Di + 1.0Wi (180 ...	Yes	Y		1	1.2	39	1.2	2	1	40	1	21	1	59	1								
20	1.2D + 1.0Di + 1.0Wi (210 ...	Yes	Y		1	1.2	39	1.2	2	1	40	1	22	1	60	1								
21	1.2D + 1.0Di + 1.0Wi (240 ...	Yes	Y		1	1.2	39	1.2	2	1	40	1	23	1	61	1								
22	1.2D + 1.0Di + 1.0Wi (270 ...	Yes	Y		1	1.2	39	1.2	2	1	40	1	24	1	62	1								
23	1.2D + 1.0Di + 1.0Wi (300 ...	Yes	Y		1	1.2	39	1.2	2	1	40	1	25	1	63	1								
24	1.2D + 1.0Di + 1.0Wi (330 ...	Yes	Y		1	1.2	39	1.2	2	1	40	1	26	1	64	1								
25	1.2D + 1.5Lm1 + 1.0Wm (0...	Yes	Y		1	1.2	39	1.2	77	1.5	27	1	65	1										
26	1.2D + 1.5Lm1 + 1.0Wm (3...	Yes	Y		1	1.2	39	1.2	77	1.5	28	1	66	1										

Load Combinations (Continued)

	Description	S...	P...	S...	B...	Fa...	B...	Fa...	B...	Fa...	B...	Fa...	B...	Fa...	B...	Fa...	B...	Fa...	B...	Fa...	B...	Fa...	B...	Fa...
27	1.2D + 1.5Lm1 + 1.0Wm (6...	Yes	Y		1	1.2	39	1.2	77	1.5	29	1	67	1										
28	1.2D + 1.5Lm1 + 1.0Wm (9...	Yes	Y		1	1.2	39	1.2	77	1.5	30	1	68	1										
29	1.2D + 1.5Lm1 + 1.0Wm (1...	Yes	Y		1	1.2	39	1.2	77	1.5	31	1	69	1										
30	1.2D + 1.5Lm1 + 1.0Wm (1...	Yes	Y		1	1.2	39	1.2	77	1.5	32	1	70	1										
31	1.2D + 1.5Lm1 + 1.0Wm (1...	Yes	Y		1	1.2	39	1.2	77	1.5	33	1	71	1										
32	1.2D + 1.5Lm1 + 1.0Wm (2...	Yes	Y		1	1.2	39	1.2	77	1.5	34	1	72	1										
33	1.2D + 1.5Lm1 + 1.0Wm (2...	Yes	Y		1	1.2	39	1.2	77	1.5	35	1	73	1										
34	1.2D + 1.5Lm1 + 1.0Wm (2...	Yes	Y		1	1.2	39	1.2	77	1.5	36	1	74	1										
35	1.2D + 1.5Lm1 + 1.0Wm (3...	Yes	Y		1	1.2	39	1.2	77	1.5	37	1	75	1										
36	1.2D + 1.5Lm1 + 1.0Wm (3...	Yes	Y		1	1.2	39	1.2	77	1.5	38	1	76	1										
37	1.2D + 1.5Lm2 + 1.0Wm (0...	Yes	Y		1	1.2	39	1.2	78	1.5	27	1	65	1										
38	1.2D + 1.5Lm2 + 1.0Wm (3...	Yes	Y		1	1.2	39	1.2	78	1.5	28	1	66	1										
39	1.2D + 1.5Lm2 + 1.0Wm (6...	Yes	Y		1	1.2	39	1.2	78	1.5	29	1	67	1										
40	1.2D + 1.5Lm2 + 1.0Wm (9...	Yes	Y		1	1.2	39	1.2	78	1.5	30	1	68	1										
41	1.2D + 1.5Lm2 + 1.0Wm (1...	Yes	Y		1	1.2	39	1.2	78	1.5	31	1	69	1										
42	1.2D + 1.5Lm2 + 1.0Wm (1...	Yes	Y		1	1.2	39	1.2	78	1.5	32	1	70	1										
43	1.2D + 1.5Lm2 + 1.0Wm (1...	Yes	Y		1	1.2	39	1.2	78	1.5	33	1	71	1										
44	1.2D + 1.5Lm2 + 1.0Wm (2...	Yes	Y		1	1.2	39	1.2	78	1.5	34	1	72	1										
45	1.2D + 1.5Lm2 + 1.0Wm (2...	Yes	Y		1	1.2	39	1.2	78	1.5	35	1	73	1										
46	1.2D + 1.5Lm2 + 1.0Wm (2...	Yes	Y		1	1.2	39	1.2	78	1.5	36	1	74	1										
47	1.2D + 1.5Lm2 + 1.0Wm (3...	Yes	Y		1	1.2	39	1.2	78	1.5	37	1	75	1										
48	1.2D + 1.5Lm2 + 1.0Wm (3...	Yes	Y		1	1.2	39	1.2	78	1.5	38	1	76	1										
49	1.2D + 1.5Lv1	Yes	Y		1	1.2	39	1.2	79	1.5														
50	1.2D + 1.5Lv2	Yes	Y		1	1.2	39	1.2	80	1.5														
51	1.4D	Yes	Y		1	1.4	39	1.4																
52	1.2D + 1.0Ev + 1.0Eh (0 De...	Yes	Y		1	1.2	39	1.2	81	1	E...	1	82	1	83		ELZ	1	E...					
53	1.2D + 1.0Ev + 1.0Eh (30 D...	Yes	Y		1	1.2	39	1.2	81	1	E...	1	82	.866	83	.5	ELZ	.866	E...	.5				
54	1.2D + 1.0Ev + 1.0Eh (60 D...	Yes	Y		1	1.2	39	1.2	81	1	E...	1	82	.5	83	.866	ELZ	.5	E...	.866				
55	1.2D + 1.0Ev + 1.0Eh (90 D...	Yes	Y		1	1.2	39	1.2	81	1	E...	1	82		83	1	ELZ		E...	1				
56	1.2D + 1.0Ev + 1.0Eh (120 ...	Yes	Y		1	1.2	39	1.2	81	1	E...	1	82	-.5	83	.866	ELZ	-.5	E...	.866				
57	1.2D + 1.0Ev + 1.0Eh (150 ...	Yes	Y		1	1.2	39	1.2	81	1	E...	1	82	-.866	83	.5	ELZ	-.866	E...	.5				
58	1.2D + 1.0Ev + 1.0Eh (180 ...	Yes	Y		1	1.2	39	1.2	81	1	E...	1	82	-1	83		ELZ	-1	E...					
59	1.2D + 1.0Ev + 1.0Eh (210 ...	Yes	Y		1	1.2	39	1.2	81	1	E...	1	82	-.866	83	-.5	ELZ	-.866	E...	-.5				
60	1.2D + 1.0Ev + 1.0Eh (240 ...	Yes	Y		1	1.2	39	1.2	81	1	E...	1	82	-.5	83	-.866	ELZ	-.5	E...	-.866				
61	1.2D + 1.0Ev + 1.0Eh (270 ...	Yes	Y		1	1.2	39	1.2	81	1	E...	1	82		83	-1	ELZ		E...	-1				
62	1.2D + 1.0Ev + 1.0Eh (300 ...	Yes	Y		1	1.2	39	1.2	81	1	E...	1	82	.5	83	-.866	ELZ	.5	E...	-.866				
63	1.2D + 1.0Ev + 1.0Eh (330 ...	Yes	Y		1	1.2	39	1.2	81	1	E...	1	82	.866	83	-.5	ELZ	.866	E...	-.5				
64	0.9D - 1.0Ev + 1.0Eh (0 Deg)	Yes	Y		1	.9	39	.9	81	-1	E...	-1	82	1	83		ELZ	1	E...					
65	0.9D - 1.0Ev + 1.0Eh (30 D...	Yes	Y		1	.9	39	.9	81	-1	E...	-1	82	.866	83	.5	ELZ	.866	E...	.5				
66	0.9D - 1.0Ev + 1.0Eh (60 D...	Yes	Y		1	.9	39	.9	81	-1	E...	-1	82	.5	83	.866	ELZ	.5	E...	.866				
67	0.9D - 1.0Ev + 1.0Eh (90 D...	Yes	Y		1	.9	39	.9	81	-1	E...	-1	82		83	1	ELZ		E...	1				
68	0.9D - 1.0Ev + 1.0Eh (120 ...	Yes	Y		1	.9	39	.9	81	-1	E...	-1	82	-.5	83	.866	ELZ	-.5	E...	.866				
69	0.9D - 1.0Ev + 1.0Eh (150 ...	Yes	Y		1	.9	39	.9	81	-1	E...	-1	82	-.866	83	.5	ELZ	-.866	E...	.5				
70	0.9D - 1.0Ev + 1.0Eh (180 ...	Yes	Y		1	.9	39	.9	81	-1	E...	-1	82	-1	83		ELZ	-1	E...					
71	0.9D - 1.0Ev + 1.0Eh (210 ...	Yes	Y		1	.9	39	.9	81	-1	E...	-1	82	-.866	83	-.5	ELZ	-.866	E...	-.5				
72	0.9D - 1.0Ev + 1.0Eh (240 ...	Yes	Y		1	.9	39	.9	81	-1	E...	-1	82	-.5	83	-.866	ELZ	-.5	E...	-.866				
73	0.9D - 1.0Ev + 1.0Eh (270 ...	Yes	Y		1	.9	39	.9	81	-1	E...	-1	82		83	-1	ELZ		E...	-1				
74	0.9D - 1.0Ev + 1.0Eh (300 ...	Yes	Y		1	.9	39	.9	81	-1	E...	-1	82	.5	83	-.866	ELZ	.5	E...	-.866				
75	0.9D - 1.0Ev + 1.0Eh (330 ...	Yes	Y		1	.9	39	.9	81	-1	E...	-1	82	.866	83	-.5	ELZ	.866	E...	-.5				

Joint Coordinates and Temperatures

	Label	X [ft]	Y [ft]	Z [ft]	Temp [F]	Detach From Diap...
1	N53	9.531397	4.583333	-6.836804	0	
2	N2	7.131397	4.583333	-2.679882	0	
3	N3	9.080359	4.583333	-7.097211	0	
4	N4	6.680527	4.583333	-2.940192	0	
5	N5	9.330342	4.583333	-7.530234	0	

Joint Coordinates and Temperatures (Continued)

	Label	X [ft]	Y [ft]	Z [ft]	Temp [F]	Detach From Diap...
6	N6	6.130806	4.583333	-1.987958	0	
7	N7	9.531397	-0.083333	-6.836804	0	
8	N8	7.131397	-0.083333	-2.679882	0	
9	N9	9.080359	-0.083333	-7.097211	0	
10	N10	6.680527	-0.083333	-2.940192	0	
11	N11	9.330342	-0.083333	-7.530234	0	
12	N12	6.130806	-0.083333	-1.987958	0	
13	N13	6.372215	4.583333	-2.406131	0	
14	N14	6.372215	-0.083333	-2.406131	0	
15	N15	6.083333	4.583333	-2.572917	0	
16	N16	6.083333	-0.083333	-2.572917	0	
17	N17	6.083333	4.916667	-2.572917	0	
18	N18	6.083333	-0.416667	-2.572917	0	
19	N19	6.083333	3.583333	-2.572917	0	
20	N20	6.083333	0.916667	-2.572917	0	
21	N21	6.083333	3.583333	-1.989583	0	
22	N22	6.083333	0.916667	-1.989583	0	
23	N23	6.083333	3.583333	-0.65625	0	
24	N24	6.083333	0.916667	-0.65625	0	
25	N25	6.083333	3.583333	0.677083	0	
26	N26	6.083333	0.916667	0.677083	0	
27	N27	6.083333	3.583333	1.677083	0	
28	N28	6.083333	0.916667	1.177083	0	
29	N29	7.083333	3.583333	1.677083	0	
30	N30	7.083333	0.916667	1.177083	0	
31	N31	-0.416667	3.583333	1.677083	0	
32	N32	-0.416667	0.916667	1.177083	0	
33	N33	14.583333	3.583333	1.677083	0	
34	N34	14.583333	0.916667	1.177083	0	
35	N35	7.583333	3.583333	1.677083	0	
36	N36	7.583333	0.916667	1.177083	0	
37	N37	10.833333	3.583333	1.677083	0	
38	N38	10.833333	0.916667	1.177083	0	
39	N39	14.083333	3.583333	1.677083	0	
40	N40	14.083333	0.916667	1.177083	0	
41	N42	6.583333	3.583333	1.677083	0	
42	N43	6.583333	0.916667	1.177083	0	
43	N44	3.333333	3.583333	1.677083	0	
44	N45	3.333333	0.916667	1.177083	0	
45	N46	0.083333	3.583333	1.677083	0	
46	N47	0.083333	0.916667	1.177083	0	
47	N47A	14	3.583333	1.677083	0	
48	N48	14	3.583333	1.927083	0	
49	N49	14	7.583333	1.927083	0	
50	N50	14	-0.416667	1.927083	0	
51	N51	8.0833	3.583333	1.677083	0	
52	N52	8.0833	3.583333	1.927083	0	
53	N53A	8.0833	7.583333	1.927083	0	
54	N54	8.0833	-0.416667	1.927083	0	
55	N55	4.083333	3.583333	1.677083	0	
56	N56	4.083333	3.583333	1.927083	0	
57	N57	4.083333	7.583333	1.927083	0	
58	N58	4.083333	-0.416667	1.927083	0	
59	N59	0.166667	3.583333	1.677083	0	
60	N60	0.166667	3.583333	1.927083	0	
61	N61	0.166667	7.583333	1.927083	0	
62	N62	0.166667	-0.416667	1.927083	0	
63	N65	12.166667	3.583333	1.677083	0	
64	N66	9.206637	4.583333	-7.024304	0	

Joint Coordinates and Temperatures (Continued)

	Label	X [ft]	Y [ft]	Z [ft]	Temp [F]	Detach From Diap...
65	N67A	6.806637	4.583333	-2.867382	0	
66	N68	9.206637	-0.083333	-7.024304	0	
67	N69	6.806637	-0.083333	-2.867382	0	
68	N70	9.423144	4.583333	-6.899304	0	
69	N71	7.023144	4.583333	-2.742382	0	
70	N72	9.423144	-0.083333	-6.899304	0	
71	N73	7.023144	-0.083333	-2.742382	0	
72	N73A	11.931397	3.583333	-2.679882	0	
73	N74	-0.416667	4.833333	1.677083	0	
74	N75	14.583333	4.833333	1.677083	0	
75	N76	14	4.833333	1.677083	0	
76	N77	14	4.833333	1.927083	0	
77	N78	8.0833	4.833333	1.677083	0	
78	N79	8.0833	4.833333	1.927083	0	
79	N80	4.083333	4.833333	1.677083	0	
80	N81	4.083333	4.833333	1.927083	0	
81	N82	0.166667	4.833333	1.677083	0	
82	N83	0.166667	4.833333	1.927083	0	
83	N84	7.131397	7.083333	-2.679882	0	
84	N85	11.083333	4.833333	1.677083	0	
85	N86	3.083333	4.833333	1.677083	0	
86	N97	7.131397	-2.583367	-2.679882	0	
87	N98	10.083333	0.916667	1.177083	0	
88	N99	4.083333	0.916667	1.177083	0	
89	N92	14.083333	1.617589	1.308506	0	

Hot Rolled Steel Section Sets

	Label	Shape	Type	Design List	Material	Design ...	A [in2]	Iyy [in4]	Izz [in4]	J [in4]
1	Standoff HSS	HSS2.5X2.5X4	Beam	Tube	A500 Gr. B 46	Typical	1.97	1.63	1.63	2.79
2	Mast Pipe	PIPE_4.0	Column	Pipe	A53 Gr. B	Typical	2.96	6.82	6.82	13.6
3	Standoff Pipe	PIPE_4.0	Beam	Pipe	A53 Gr. B	Typical	2.96	6.82	6.82	13.6
4	Standoff/Face Br...	PIPE_2.0	Column	Pipe	A53 Gr. B	Typical	1.02	.627	.627	1.25
5	Face Horizontal	PIPE_2.0	Beam	Pipe	A53 Gr. B	Typical	1.02	.627	.627	1.25
6	Mount Pipe	PIPE_2.0	Column	Pipe	A53 Gr. B	Typical	1.02	.627	.627	1.25
7	Dual Antenna	PIPE_2.5	Column	Pipe	A53 Gr. B	Typical	1.61	1.45	1.45	2.89
8	Stabilizer	PIPE_2.5	Beam	Pipe	A53 Gr. B	Typical	1.61	1.45	1.45	2.89
9	Connection Plate	PL1/2x2	Beam	RECT	A36 Gr.36	Typical	1	.021	.333	.07
10	Proposed Face ...	PIPE_2.5	Beam	RECT	A53 Gr. B	Typical	1.61	1.45	1.45	2.89
11	Proposed V-Bra...	L2.5x2.5x4	Beam	RECT	A36 Gr.36	Typical	1.19	.692	.692	.026

Hot Rolled Steel Properties

	Label	E [ksi]	G [ksi]	Nu	Therm (/1E...	Density[k/ft...	Yield[ksi]	Ry	Fu[ksi]	Rt
1	A36 Gr.36	29000	11154	.3	.65	.49	36	1.5	58	1.2
2	A53 Gr. B	29000	11154	.3	.65	.49	35	1.5	60	1.2
3	A572 Gr.50	29000	11154	.3	.65	.49	50	1.1	65	1.1
4	A992	29000	11154	.3	.65	.49	50	1.1	65	1.1
5	A500 Gr. B 42	29000	11154	.3	.65	.49	42	1.4	58	1.3
6	A500 Gr. B 46	29000	11154	.3	.65	.49	46	1.4	58	1.3

Member Primary Data

	Label	I Joint	J Joint	K Joint	Rotate(deg)	Section/Shape	Type	Design List	Material	Design Rules
1	M3	N5	N6			Standoff HSS	Beam	Tube	A500 Gr. ...	Typical
2	M6	N11	N12			Standoff HSS	Beam	Tube	A500 Gr. ...	Typical
3	M7	N13	N15			RIGID	None	None	RIGID	Typical

Member Primary Data (Continued)

	Label	I Joint	J Joint	K Joint	Rotate(deg)	Section/Shape	Type	Design List	Material	Design Rules
4	M8	N14	N16			RIGID	None	None	RIGID	Typical
5	M9	N17	N18			Mast Pipe	Column	Pipe	A53 Gr. B	Typical
6	M10	N19	N27			Standoff Pipe	Beam	Pipe	A53 Gr. B	Typical
7	M11	N20	N28			Standoff Pipe	Beam	Pipe	A53 Gr. B	Typical
8	M12	N21	N22			Standoff/Face ..	Column	Pipe	A53 Gr. B	Typical
9	M13	N23	N24			Standoff/Face ..	Column	Pipe	A53 Gr. B	Typical
10	M14	N25	N26			Standoff/Face ..	Column	Pipe	A53 Gr. B	Typical
11	M15	N31	N29			Face Horizontal	Beam	Pipe	A53 Gr. B	Typical
12	M16	N32	N30			Face Horizontal	Beam	Pipe	A53 Gr. B	Typical
13	M17	N30	N34			Face Horizontal	Beam	Pipe	A53 Gr. B	Typical
14	M18	N29	N33			Face Horizontal	Beam	Pipe	A53 Gr. B	Typical
15	M19	N35	N36			Standoff/Face ..	Column	Pipe	A53 Gr. B	Typical
16	M20	N37	N38			Standoff/Face ..	Column	Pipe	A53 Gr. B	Typical
17	M21	N39	N40			Standoff/Face ..	Column	Pipe	A53 Gr. B	Typical
18	M22	N42	N43			Standoff/Face ..	Column	Pipe	A53 Gr. B	Typical
19	M23	N44	N45			Standoff/Face ..	Column	Pipe	A53 Gr. B	Typical
20	M24	N46	N47			Standoff/Face ..	Column	Pipe	A53 Gr. B	Typical
21	M25	N47A	N48			RIGID	None	None	RIGID	Typical
22	MP1A	N49	N50			Mount Pipe	Column	Pipe	A53 Gr. B	Typical
23	M27	N51	N52			RIGID	None	None	RIGID	Typical
24	MP2A	N53A	N54			Dual Antenna	Column	Pipe	A53 Gr. B	Typical
25	M29	N55	N56			RIGID	None	None	RIGID	Typical
26	MP3A	N57	N58			Mount Pipe	Column	Pipe	A53 Gr. B	Typical
27	M31	N59	N60			RIGID	None	None	RIGID	Typical
28	MP4A	N61	N62			Mount Pipe	Column	Pipe	A53 Gr. B	Typical
29	M33	N73A	N65			Stabilizer	Beam	Pipe	A53 Gr. B	Typical
30	M30	N10	N69			RIGID	None	None	RIGID	Typical
31	M31A	N4	N67A			RIGID	None	None	RIGID	Typical
32	M32	N3	N66			RIGID	None	None	RIGID	Typical
33	M33A	N9	N68			RIGID	None	None	RIGID	Typical
34	M34	N67A	N71			Connection Pl...	Beam	RECT	A36 Gr.36	Typical
35	M35	N69	N73			Connection Pl...	Beam	RECT	A36 Gr.36	Typical
36	M36	N68	N72			Connection Pl...	Beam	RECT	A36 Gr.36	Typical
37	M37	N66	N70			Connection Pl...	Beam	RECT	A36 Gr.36	Typical
38	M38	N71	N2			RIGID	None	None	RIGID	Typical
39	M39	N70	N53			RIGID	None	None	RIGID	Typical
40	M40	N72	N7			RIGID	None	None	RIGID	Typical
41	M41	N73	N8			RIGID	None	None	RIGID	Typical
42	M42	N74	N75			Proposed Fac...	Beam	RECT	A53 Gr. B	Typical
43	M43	N76	N77			RIGID	None	None	RIGID	Typical
44	M44	N78	N79			RIGID	None	None	RIGID	Typical
45	M45	N80	N81			RIGID	None	None	RIGID	Typical
46	M46	N82	N83			RIGID	None	None	RIGID	Typical
47	M47	N86	N84			Proposed V-Br...	Beam	RECT	A36 Gr.36	Typical
48	M48	N85	N84		270	Proposed V-Br...	Beam	RECT	A36 Gr.36	Typical
49	M54	N99	N97			Proposed V-Br...	Beam	RECT	A36 Gr.36	Typical
50	M55	N98	N97		270	Proposed V-Br...	Beam	RECT	A36 Gr.36	Typical

Member Advanced Data

	Label	I Release	J Release	I Offset[in]	J Offset[in]	T/C Only	Physical	Defl Rat...	Analysis ...	Inactive	Seismic...
1	M3						Yes				None
2	M6						Yes				None
3	M7						Yes	** NA **			None
4	M8						Yes	** NA **			None
5	M9						Yes	** NA **			None
6	M10						Yes				None
7	M11						Yes				None

Member Advanced Data (Continued)

	Label	I Release	J Release	I Offset[in]	J Offset[in]	T/C Only	Physical	Defl Rat...	Analysis ...	Inactive	Seismic...
8	M12						Yes	** NA **			None
9	M13						Yes	** NA **			None
10	M14						Yes	** NA **			None
11	M15						Yes				None
12	M16						Yes	Default			None
13	M17						Yes				None
14	M18						Yes				None
15	M19						Yes	** NA **			None
16	M20						Yes	** NA **			None
17	M21						Yes	** NA **			None
18	M22						Yes	** NA **			None
19	M23						Yes	** NA **			None
20	M24						Yes	** NA **			None
21	M25		OOOXOO				Yes	** NA **			None
22	MP1A						Yes	** NA **			None
23	M27						Yes	** NA **			None
24	MP2A						Yes	** NA **			None
25	M29						Yes	** NA **			None
26	MP3A						Yes	** NA **			None
27	M31		OOOXOO				Yes	** NA **			None
28	MP4A						Yes	** NA **			None
29	M33		BenPIN				Yes	Default			None
30	M30						Yes	** NA **			None
31	M31A						Yes	** NA **			None
32	M32						Yes	** NA **			None
33	M33A						Yes	** NA **			None
34	M34						Yes				None
35	M35						Yes				None
36	M36						Yes				None
37	M37						Yes				None
38	M38						Yes	** NA **			None
39	M39						Yes	** NA **			None
40	M40						Yes	** NA **			None
41	M41						Yes	** NA **			None
42	M42						Yes	Default			None
43	M43						Yes	** NA **			None
44	M44						Yes	** NA **			None
45	M45						Yes	** NA **			None
46	M46						Yes	** NA **			None
47	M47	BenPIN					Yes				None
48	M48	BenPIN					Yes	Default			None
49	M54	BenPIN					Yes				None
50	M55	BenPIN					Yes				None

Member Point Loads (BLC 1 : Antenna D)

	Member Label	Direction	Magnitude[lb,k-ft]	Location[ft,%]
1	MP2A	Y	-34.5	.5
2	MP2A	My	-.017	.5
3	MP2A	Mz	.02	.5
4	MP2A	Y	-34.5	5.5
5	MP2A	My	-.017	5.5
6	MP2A	Mz	.02	5.5
7	MP2A	Y	-34.5	.5
8	MP2A	My	-.017	.5
9	MP2A	Mz	-.02	.5
10	MP2A	Y	-34.5	5.5
11	MP2A	My	-.017	5.5

Member Point Loads (BLC 1 : Antenna D) (Continued)

	Member Label	Direction	Magnitude[lb,k-ft]	Location[ft,%]
12	MP2A	Mz	-.02	5.5
13	MP3A	Y	-43.55	2
14	MP3A	My	-.019	2
15	MP3A	Mz	.011	2
16	MP3A	Y	-43.55	4
17	MP3A	My	-.019	4
18	MP3A	Mz	.011	4
19	MP2A	Y	-84.4	1
20	MP2A	My	.042	1
21	MP2A	Mz	0	1
22	MP3A	Y	-70.3	1
23	MP3A	My	.035	1
24	MP3A	Mz	0	1
25	M13	Y	-32	1.5
26	M13	My	0	1.5
27	M13	Mz	0	1.5
28	MP1A	Y	-6	1.5
29	MP1A	My	-.003	1.5
30	MP1A	Mz	0	1.5
31	MP1A	Y	-6	4.5
32	MP1A	My	-.003	4.5
33	MP1A	Mz	0	4.5
34	MP4A	Y	-6	1.5
35	MP4A	My	-.003	1.5
36	MP4A	Mz	0	1.5
37	MP4A	Y	-6	4.5
38	MP4A	My	-.003	4.5
39	MP4A	Mz	0	4.5
40	MP2A	Y	-17.6	5
41	MP2A	My	.018	5
42	MP2A	Mz	.006	5
43	MP2A	Y	-17.6	5
44	MP2A	My	.018	5
45	MP2A	Mz	-.006	5

Member Point Loads (BLC 2 : Antenna Di)

	Member Label	Direction	Magnitude[lb,k-ft]	Location[ft,%]
1	MP2A	Y	-73.536	.5
2	MP2A	My	-.037	.5
3	MP2A	Mz	.043	.5
4	MP2A	Y	-73.536	5.5
5	MP2A	My	-.037	5.5
6	MP2A	Mz	.043	5.5
7	MP2A	Y	-73.536	.5
8	MP2A	My	-.037	.5
9	MP2A	Mz	-.043	.5
10	MP2A	Y	-73.536	5.5
11	MP2A	My	-.037	5.5
12	MP2A	Mz	-.043	5.5
13	MP3A	Y	-36.166	2
14	MP3A	My	-.016	2
15	MP3A	Mz	.009	2
16	MP3A	Y	-36.166	4
17	MP3A	My	-.016	4
18	MP3A	Mz	.009	4
19	MP2A	Y	-45.607	1
20	MP2A	My	.023	1
21	MP2A	Mz	0	1

Member Point Loads (BLC 2 : Antenna Di) (Continued)

	Member Label	Direction	Magnitude[lb,k-ft]	Location[ft,%]
22	MP3A	Y	-41.02	1
23	MP3A	My	.021	1
24	MP3A	Mz	0	1
25	M13	Y	-77.117	1.5
26	M13	My	0	1.5
27	M13	Mz	0	1.5
28	MP1A	Y	-40.923	1.5
29	MP1A	My	-.02	1.5
30	MP1A	Mz	0	1.5
31	MP1A	Y	-40.923	4.5
32	MP1A	My	-.02	4.5
33	MP1A	Mz	0	4.5
34	MP4A	Y	-40.923	1.5
35	MP4A	My	-.02	1.5
36	MP4A	Mz	0	1.5
37	MP4A	Y	-40.923	4.5
38	MP4A	My	-.02	4.5
39	MP4A	Mz	0	4.5
40	MP2A	Y	-17.64	5
41	MP2A	My	.018	5
42	MP2A	Mz	.006	5
43	MP2A	Y	-17.64	5
44	MP2A	My	.018	5
45	MP2A	Mz	-.006	5

Member Point Loads (BLC 3 : Antenna Wo (0 Deg))

	Member Label	Direction	Magnitude[lb,k-ft]	Location[ft,%]
1	MP2A	X	0	.5
2	MP2A	Z	-49.008	.5
3	MP2A	Mx	-.029	.5
4	MP2A	X	0	5.5
5	MP2A	Z	-49.008	5.5
6	MP2A	Mx	-.029	5.5
7	MP2A	X	0	.5
8	MP2A	Z	-49.008	.5
9	MP2A	Mx	.029	.5
10	MP2A	X	0	5.5
11	MP2A	Z	-49.008	5.5
12	MP2A	Mx	.029	5.5
13	MP3A	X	0	2
14	MP3A	Z	-62.99	2
15	MP3A	Mx	-.016	2
16	MP3A	X	0	4
17	MP3A	Z	-62.99	4
18	MP3A	Mx	-.016	4
19	MP2A	X	0	1
20	MP2A	Z	-59.579	1
21	MP2A	Mx	0	1
22	MP3A	X	0	1
23	MP3A	Z	-59.579	1
24	MP3A	Mx	0	1
25	M13	X	0	1.5
26	M13	Z	-92.635	1.5
27	M13	Mx	0	1.5
28	MP1A	X	0	1.5
29	MP1A	Z	-50.161	1.5
30	MP1A	Mx	0	1.5
31	MP1A	X	0	4.5

Member Point Loads (BLC 3 : Antenna Wo (0 Deg)) (Continued)

	Member Label	Direction	Magnitude[lb,k-ft]	Location[ft,%]
32	MP1A	Z	-50.161	4.5
33	MP1A	Mx	0	4.5
34	MP4A	X	0	1.5
35	MP4A	Z	-50.161	1.5
36	MP4A	Mx	0	1.5
37	MP4A	X	0	4.5
38	MP4A	Z	-50.161	4.5
39	MP4A	Mx	0	4.5
40	MP2A	X	0	5
41	MP2A	Z	-36.9	5
42	MP2A	Mx	-.012	5
43	MP2A	X	0	5
44	MP2A	Z	-36.9	5
45	MP2A	Mx	.012	5

Member Point Loads (BLC 4 : Antenna Wo (30 Deg))

	Member Label	Direction	Magnitude[lb,k-ft]	Location[ft,%]
1	MP2A	X	26.09	.5
2	MP2A	Z	-45.189	.5
3	MP2A	Mx	-.039	.5
4	MP2A	X	26.09	5.5
5	MP2A	Z	-45.189	5.5
6	MP2A	Mx	-.039	5.5
7	MP2A	X	26.09	.5
8	MP2A	Z	-45.189	.5
9	MP2A	Mx	.013	.5
10	MP2A	X	26.09	5.5
11	MP2A	Z	-45.189	5.5
12	MP2A	Mx	.013	5.5
13	MP3A	X	19.147	2
14	MP3A	Z	-33.163	2
15	MP3A	Mx	-.017	2
16	MP3A	X	19.147	4
17	MP3A	Z	-33.163	4
18	MP3A	Mx	-.017	4
19	MP2A	X	27.339	1
20	MP2A	Z	-47.352	1
21	MP2A	Mx	.014	1
22	MP3A	X	26.426	1
23	MP3A	Z	-45.771	1
24	MP3A	Mx	.013	1
25	M13	X	49.969	1.5
26	M13	Z	-86.549	1.5
27	M13	Mx	0	1.5
28	MP1A	X	31.781	1.5
29	MP1A	Z	-55.046	1.5
30	MP1A	Mx	-.016	1.5
31	MP1A	X	31.781	4.5
32	MP1A	Z	-55.046	4.5
33	MP1A	Mx	-.016	4.5
34	MP4A	X	31.781	1.5
35	MP4A	Z	-55.046	1.5
36	MP4A	Mx	-.016	1.5
37	MP4A	X	31.781	4.5
38	MP4A	Z	-55.046	4.5
39	MP4A	Mx	-.016	4.5
40	MP2A	X	18.464	5
41	MP2A	Z	-31.98	5

Member Point Loads (BLC 4 : Antenna Wo (30 Deg)) (Continued)

	Member Label	Direction	Magnitude[lb,k-ft]	Location[ft,%]
42	MP2A	Mx	.008	5
43	MP2A	X	18.464	5
44	MP2A	Z	-31.98	5
45	MP2A	Mx	.029	5

Member Point Loads (BLC 5 : Antenna Wo (60 Deg))

	Member Label	Direction	Magnitude[lb,k-ft]	Location[ft,%]
1	MP2A	X	50.681	.5
2	MP2A	Z	-29.261	.5
3	MP2A	Mx	-.042	.5
4	MP2A	X	50.681	5.5
5	MP2A	Z	-29.261	5.5
6	MP2A	Mx	-.042	5.5
7	MP2A	X	50.681	.5
8	MP2A	Z	-29.261	.5
9	MP2A	Mx	-.008	.5
10	MP2A	X	50.681	5.5
11	MP2A	Z	-29.261	5.5
12	MP2A	Mx	-.008	5.5
13	MP3A	X	22.47	2
14	MP3A	Z	-12.973	2
15	MP3A	Mx	-.013	2
16	MP3A	X	22.47	4
17	MP3A	Z	-12.973	4
18	MP3A	Mx	-.013	4
19	MP2A	X	38.864	1
20	MP2A	Z	-22.438	1
21	MP2A	Mx	.019	1
22	MP3A	X	34.12	1
23	MP3A	Z	-19.699	1
24	MP3A	Mx	.017	1
25	M13	X	99.199	1.5
26	M13	Z	-57.272	1.5
27	M13	Mx	0	1.5
28	MP1A	X	78.255	1.5
29	MP1A	Z	-45.18	1.5
30	MP1A	Mx	-.039	1.5
31	MP1A	X	78.255	4.5
32	MP1A	Z	-45.18	4.5
33	MP1A	Mx	-.039	4.5
34	MP4A	X	78.255	1.5
35	MP4A	Z	-45.18	1.5
36	MP4A	Mx	-.039	1.5
37	MP4A	X	78.255	4.5
38	MP4A	Z	-45.18	4.5
39	MP4A	Mx	-.039	4.5
40	MP2A	X	32.027	5
41	MP2A	Z	-18.491	5
42	MP2A	Mx	.026	5
43	MP2A	X	32.027	5
44	MP2A	Z	-18.491	5
45	MP2A	Mx	.038	5

Member Point Loads (BLC 6 : Antenna Wo (90 Deg))

	Member Label	Direction	Magnitude[lb,k-ft]	Location[ft,%]
1	MP2A	X	61.693	.5
2	MP2A	Z	0	.5
3	MP2A	Mx	-.031	.5

Member Point Loads (BLC 6 : Antenna Wo (90 Deg)) (Continued)

	Member Label	Direction	Magnitude[lb,k-ft]	Location[ft,%]
4	MP2A	X	61.693	5.5
5	MP2A	Z	0	5.5
6	MP2A	Mx	-.031	5.5
7	MP2A	X	61.693	.5
8	MP2A	Z	0	.5
9	MP2A	Mx	-.031	.5
10	MP2A	X	61.693	5.5
11	MP2A	Z	0	5.5
12	MP2A	Mx	-.031	5.5
13	MP3A	X	38.294	2
14	MP3A	Z	0	2
15	MP3A	Mx	-.017	2
16	MP3A	X	38.294	4
17	MP3A	Z	0	4
18	MP3A	Mx	-.017	4
19	MP2A	X	39.975	1
20	MP2A	Z	0	1
21	MP2A	Mx	.02	1
22	MP3A	X	32.672	1
23	MP3A	Z	0	1
24	MP3A	Mx	.016	1
25	M13	X	121.848	1.5
26	M13	Z	0	1.5
27	M13	Mx	0	1.5
28	MP1A	X	103.76	1.5
29	MP1A	Z	0	1.5
30	MP1A	Mx	-.052	1.5
31	MP1A	X	103.76	4.5
32	MP1A	Z	0	4.5
33	MP1A	Mx	-.052	4.5
34	MP4A	X	103.76	1.5
35	MP4A	Z	0	1.5
36	MP4A	Mx	-.052	1.5
37	MP4A	X	103.76	4.5
38	MP4A	Z	0	4.5
39	MP4A	Mx	-.052	4.5
40	MP2A	X	37.009	5
41	MP2A	Z	0	5
42	MP2A	Mx	.037	5
43	MP2A	X	37.009	5
44	MP2A	Z	0	5
45	MP2A	Mx	.037	5

Member Point Loads (BLC 7 : Antenna Wo (120 Deg))

	Member Label	Direction	Magnitude[lb,k-ft]	Location[ft,%]
1	MP2A	X	50.681	.5
2	MP2A	Z	29.261	.5
3	MP2A	Mx	-.008	.5
4	MP2A	X	50.681	5.5
5	MP2A	Z	29.261	5.5
6	MP2A	Mx	-.008	5.5
7	MP2A	X	50.681	.5
8	MP2A	Z	29.261	.5
9	MP2A	Mx	-.042	.5
10	MP2A	X	50.681	5.5
11	MP2A	Z	29.261	5.5
12	MP2A	Mx	-.042	5.5
13	MP3A	X	54.551	2

Member Point Loads (BLC 7 : Antenna Wo (120 Deg)) (Continued)

	Member Label	Direction	Magnitude[lb,k-ft]	Location[ft,%]
14	MP3A	Z	31.495	2
15	MP3A	Mx	-.016	2
16	MP3A	X	54.551	4
17	MP3A	Z	31.495	4
18	MP3A	Mx	-.016	4
19	MP2A	X	38.864	1
20	MP2A	Z	22.438	1
21	MP2A	Mx	.019	1
22	MP3A	X	34.12	1
23	MP3A	Z	19.699	1
24	MP3A	Mx	.017	1
25	M13	X	99.199	1.5
26	M13	Z	57.272	1.5
27	M13	Mx	0	1.5
28	MP1A	X	78.255	1.5
29	MP1A	Z	45.18	1.5
30	MP1A	Mx	-.039	1.5
31	MP1A	X	78.255	4.5
32	MP1A	Z	45.18	4.5
33	MP1A	Mx	-.039	4.5
34	MP4A	X	78.255	1.5
35	MP4A	Z	45.18	1.5
36	MP4A	Mx	-.039	1.5
37	MP4A	X	78.255	4.5
38	MP4A	Z	45.18	4.5
39	MP4A	Mx	-.039	4.5
40	MP2A	X	32.027	5
41	MP2A	Z	18.491	5
42	MP2A	Mx	.038	5
43	MP2A	X	32.027	5
44	MP2A	Z	18.491	5
45	MP2A	Mx	.026	5

Member Point Loads (BLC 8 : Antenna Wo (150 Deg))

	Member Label	Direction	Magnitude[lb,k-ft]	Location[ft,%]
1	MP2A	X	26.09	.5
2	MP2A	Z	45.189	.5
3	MP2A	Mx	.013	.5
4	MP2A	X	26.09	5.5
5	MP2A	Z	45.189	5.5
6	MP2A	Mx	.013	5.5
7	MP2A	X	26.09	.5
8	MP2A	Z	45.189	.5
9	MP2A	Mx	-.039	.5
10	MP2A	X	26.09	5.5
11	MP2A	Z	45.189	5.5
12	MP2A	Mx	-.039	5.5
13	MP3A	X	37.669	2
14	MP3A	Z	65.245	2
15	MP3A	Mx	0	2
16	MP3A	X	37.669	4
17	MP3A	Z	65.245	4
18	MP3A	Mx	0	4
19	MP2A	X	27.339	1
20	MP2A	Z	47.352	1
21	MP2A	Mx	.014	1
22	MP3A	X	26.426	1
23	MP3A	Z	45.771	1

Member Point Loads (BLC 8 : Antenna Wo (150 Deg)) (Continued)

	Member Label	Direction	Magnitude[lb,k-ft]	Location[ft,%]
24	MP3A	Mx	.013	1
25	M13	X	49.969	1.5
26	M13	Z	86.549	1.5
27	M13	Mx	0	1.5
28	MP1A	X	31.781	1.5
29	MP1A	Z	55.046	1.5
30	MP1A	Mx	-.016	1.5
31	MP1A	X	31.781	4.5
32	MP1A	Z	55.046	4.5
33	MP1A	Mx	-.016	4.5
34	MP4A	X	31.781	1.5
35	MP4A	Z	55.046	1.5
36	MP4A	Mx	-.016	1.5
37	MP4A	X	31.781	4.5
38	MP4A	Z	55.046	4.5
39	MP4A	Mx	-.016	4.5
40	MP2A	X	18.464	5
41	MP2A	Z	31.98	5
42	MP2A	Mx	.029	5
43	MP2A	X	18.464	5
44	MP2A	Z	31.98	5
45	MP2A	Mx	.008	5

Member Point Loads (BLC 9 : Antenna Wo (180 Deg))

	Member Label	Direction	Magnitude[lb,k-ft]	Location[ft,%]
1	MP2A	X	0	.5
2	MP2A	Z	49.008	.5
3	MP2A	Mx	.029	.5
4	MP2A	X	0	5.5
5	MP2A	Z	49.008	5.5
6	MP2A	Mx	.029	5.5
7	MP2A	X	0	.5
8	MP2A	Z	49.008	.5
9	MP2A	Mx	-.029	.5
10	MP2A	X	0	5.5
11	MP2A	Z	49.008	5.5
12	MP2A	Mx	-.029	5.5
13	MP3A	X	0	2
14	MP3A	Z	62.99	2
15	MP3A	Mx	.016	2
16	MP3A	X	0	4
17	MP3A	Z	62.99	4
18	MP3A	Mx	.016	4
19	MP2A	X	0	1
20	MP2A	Z	59.579	1
21	MP2A	Mx	0	1
22	MP3A	X	0	1
23	MP3A	Z	59.579	1
24	MP3A	Mx	0	1
25	M13	X	0	1.5
26	M13	Z	92.635	1.5
27	M13	Mx	0	1.5
28	MP1A	X	0	1.5
29	MP1A	Z	50.161	1.5
30	MP1A	Mx	0	1.5
31	MP1A	X	0	4.5
32	MP1A	Z	50.161	4.5
33	MP1A	Mx	0	4.5

Member Point Loads (BLC 9 : Antenna Wo (180 Deg)) (Continued)

	Member Label	Direction	Magnitude[lb,k-ft]	Location[ft,%]
34	MP4A	X	0	1.5
35	MP4A	Z	50.161	1.5
36	MP4A	Mx	0	1.5
37	MP4A	X	0	4.5
38	MP4A	Z	50.161	4.5
39	MP4A	Mx	0	4.5
40	MP2A	X	0	5
41	MP2A	Z	36.9	5
42	MP2A	Mx	.012	5
43	MP2A	X	0	5
44	MP2A	Z	36.9	5
45	MP2A	Mx	-.012	5

Member Point Loads (BLC 10 : Antenna Wo (210 Deg))

	Member Label	Direction	Magnitude[lb,k-ft]	Location[ft,%]
1	MP2A	X	-26.09	.5
2	MP2A	Z	45.189	.5
3	MP2A	Mx	.039	.5
4	MP2A	X	-26.09	5.5
5	MP2A	Z	45.189	5.5
6	MP2A	Mx	.039	5.5
7	MP2A	X	-26.09	.5
8	MP2A	Z	45.189	.5
9	MP2A	Mx	-.013	.5
10	MP2A	X	-26.09	5.5
11	MP2A	Z	45.189	5.5
12	MP2A	Mx	-.013	5.5
13	MP3A	X	-19.147	2
14	MP3A	Z	33.163	2
15	MP3A	Mx	.017	2
16	MP3A	X	-19.147	4
17	MP3A	Z	33.163	4
18	MP3A	Mx	.017	4
19	MP2A	X	-27.339	1
20	MP2A	Z	47.352	1
21	MP2A	Mx	-.014	1
22	MP3A	X	-26.426	1
23	MP3A	Z	45.771	1
24	MP3A	Mx	-.013	1
25	M13	X	-49.969	1.5
26	M13	Z	86.549	1.5
27	M13	Mx	0	1.5
28	MP1A	X	-31.781	1.5
29	MP1A	Z	55.046	1.5
30	MP1A	Mx	.016	1.5
31	MP1A	X	-31.781	4.5
32	MP1A	Z	55.046	4.5
33	MP1A	Mx	.016	4.5
34	MP4A	X	-31.781	1.5
35	MP4A	Z	55.046	1.5
36	MP4A	Mx	.016	1.5
37	MP4A	X	-31.781	4.5
38	MP4A	Z	55.046	4.5
39	MP4A	Mx	.016	4.5
40	MP2A	X	-18.464	5
41	MP2A	Z	31.98	5
42	MP2A	Mx	-.008	5
43	MP2A	X	-18.464	5

Member Point Loads (BLC 10 : Antenna Wo (210 Deg)) (Continued)

	Member Label	Direction	Magnitude[lb,k-ft]	Location[ft,%]
44	MP2A	Z	31.98	5
45	MP2A	Mx	-.029	5

Member Point Loads (BLC 11 : Antenna Wo (240 Deg))

	Member Label	Direction	Magnitude[lb,k-ft]	Location[ft,%]
1	MP2A	X	-50.681	.5
2	MP2A	Z	29.261	.5
3	MP2A	Mx	.042	.5
4	MP2A	X	-50.681	5.5
5	MP2A	Z	29.261	5.5
6	MP2A	Mx	.042	5.5
7	MP2A	X	-50.681	.5
8	MP2A	Z	29.261	.5
9	MP2A	Mx	.008	.5
10	MP2A	X	-50.681	5.5
11	MP2A	Z	29.261	5.5
12	MP2A	Mx	.008	5.5
13	MP3A	X	-22.47	2
14	MP3A	Z	12.973	2
15	MP3A	Mx	.013	2
16	MP3A	X	-22.47	4
17	MP3A	Z	12.973	4
18	MP3A	Mx	.013	4
19	MP2A	X	-38.864	1
20	MP2A	Z	22.438	1
21	MP2A	Mx	-.019	1
22	MP3A	X	-34.12	1
23	MP3A	Z	19.699	1
24	MP3A	Mx	-.017	1
25	M13	X	-99.199	1.5
26	M13	Z	57.272	1.5
27	M13	Mx	0	1.5
28	MP1A	X	-78.255	1.5
29	MP1A	Z	45.18	1.5
30	MP1A	Mx	.039	1.5
31	MP1A	X	-78.255	4.5
32	MP1A	Z	45.18	4.5
33	MP1A	Mx	.039	4.5
34	MP4A	X	-78.255	1.5
35	MP4A	Z	45.18	1.5
36	MP4A	Mx	.039	1.5
37	MP4A	X	-78.255	4.5
38	MP4A	Z	45.18	4.5
39	MP4A	Mx	.039	4.5
40	MP2A	X	-32.027	5
41	MP2A	Z	18.491	5
42	MP2A	Mx	-.026	5
43	MP2A	X	-32.027	5
44	MP2A	Z	18.491	5
45	MP2A	Mx	-.038	5

Member Point Loads (BLC 12 : Antenna Wo (270 Deg))

	Member Label	Direction	Magnitude[lb,k-ft]	Location[ft,%]
1	MP2A	X	-61.693	.5
2	MP2A	Z	0	.5
3	MP2A	Mx	.031	.5
4	MP2A	X	-61.693	5.5
5	MP2A	Z	0	5.5

Member Point Loads (BLC 12 : Antenna Wo (270 Deg)) (Continued)

	Member Label	Direction	Magnitude[lb,k-ft]	Location[ft,%]
6	MP2A	Mx	.031	5.5
7	MP2A	X	-61.693	.5
8	MP2A	Z	0	.5
9	MP2A	Mx	.031	.5
10	MP2A	X	-61.693	5.5
11	MP2A	Z	0	5.5
12	MP2A	Mx	.031	5.5
13	MP3A	X	-38.294	2
14	MP3A	Z	0	2
15	MP3A	Mx	.017	2
16	MP3A	X	-38.294	4
17	MP3A	Z	0	4
18	MP3A	Mx	.017	4
19	MP2A	X	-39.975	1
20	MP2A	Z	0	1
21	MP2A	Mx	-.02	1
22	MP3A	X	-32.672	1
23	MP3A	Z	0	1
24	MP3A	Mx	-.016	1
25	M13	X	-121.848	1.5
26	M13	Z	0	1.5
27	M13	Mx	0	1.5
28	MP1A	X	-103.76	1.5
29	MP1A	Z	0	1.5
30	MP1A	Mx	.052	1.5
31	MP1A	X	-103.76	4.5
32	MP1A	Z	0	4.5
33	MP1A	Mx	.052	4.5
34	MP4A	X	-103.76	1.5
35	MP4A	Z	0	1.5
36	MP4A	Mx	.052	1.5
37	MP4A	X	-103.76	4.5
38	MP4A	Z	0	4.5
39	MP4A	Mx	.052	4.5
40	MP2A	X	-37.009	5
41	MP2A	Z	0	5
42	MP2A	Mx	-.037	5
43	MP2A	X	-37.009	5
44	MP2A	Z	0	5
45	MP2A	Mx	-.037	5

Member Point Loads (BLC 13 : Antenna Wo (300 Deg))

	Member Label	Direction	Magnitude[lb,k-ft]	Location[ft,%]
1	MP2A	X	-50.681	.5
2	MP2A	Z	-29.261	.5
3	MP2A	Mx	.008	.5
4	MP2A	X	-50.681	5.5
5	MP2A	Z	-29.261	5.5
6	MP2A	Mx	.008	5.5
7	MP2A	X	-50.681	.5
8	MP2A	Z	-29.261	.5
9	MP2A	Mx	.042	.5
10	MP2A	X	-50.681	5.5
11	MP2A	Z	-29.261	5.5
12	MP2A	Mx	.042	5.5
13	MP3A	X	-54.551	2
14	MP3A	Z	-31.495	2
15	MP3A	Mx	.016	2

Member Point Loads (BLC 13 : Antenna Wo (300 Deg)) (Continued)

	Member Label	Direction	Magnitude[lb,k-ft]	Location[ft,%]
16	MP3A	X	-54.551	4
17	MP3A	Z	-31.495	4
18	MP3A	Mx	.016	4
19	MP2A	X	-38.864	1
20	MP2A	Z	-22.438	1
21	MP2A	Mx	-.019	1
22	MP3A	X	-34.12	1
23	MP3A	Z	-19.699	1
24	MP3A	Mx	-.017	1
25	M13	X	-99.199	1.5
26	M13	Z	-57.272	1.5
27	M13	Mx	0	1.5
28	MP1A	X	-78.255	1.5
29	MP1A	Z	-45.18	1.5
30	MP1A	Mx	.039	1.5
31	MP1A	X	-78.255	4.5
32	MP1A	Z	-45.18	4.5
33	MP1A	Mx	.039	4.5
34	MP4A	X	-78.255	1.5
35	MP4A	Z	-45.18	1.5
36	MP4A	Mx	.039	1.5
37	MP4A	X	-78.255	4.5
38	MP4A	Z	-45.18	4.5
39	MP4A	Mx	.039	4.5
40	MP2A	X	-32.027	5
41	MP2A	Z	-18.491	5
42	MP2A	Mx	-.038	5
43	MP2A	X	-32.027	5
44	MP2A	Z	-18.491	5
45	MP2A	Mx	-.026	5

Member Point Loads (BLC 14 : Antenna Wo (330 Deg))

	Member Label	Direction	Magnitude[lb,k-ft]	Location[ft,%]
1	MP2A	X	-26.09	.5
2	MP2A	Z	-45.189	.5
3	MP2A	Mx	-.013	.5
4	MP2A	X	-26.09	5.5
5	MP2A	Z	-45.189	5.5
6	MP2A	Mx	-.013	5.5
7	MP2A	X	-26.09	.5
8	MP2A	Z	-45.189	.5
9	MP2A	Mx	.039	.5
10	MP2A	X	-26.09	5.5
11	MP2A	Z	-45.189	5.5
12	MP2A	Mx	.039	5.5
13	MP3A	X	-37.669	2
14	MP3A	Z	-65.245	2
15	MP3A	Mx	0	2
16	MP3A	X	-37.669	4
17	MP3A	Z	-65.245	4
18	MP3A	Mx	0	4
19	MP2A	X	-27.339	1
20	MP2A	Z	-47.352	1
21	MP2A	Mx	-.014	1
22	MP3A	X	-26.426	1
23	MP3A	Z	-45.771	1
24	MP3A	Mx	-.013	1
25	M13	X	-49.969	1.5

Member Point Loads (BLC 14 : Antenna Wo (330 Deg)) (Continued)

	Member Label	Direction	Magnitude[lb,k-ft]	Location[ft,%]
26	M13	Z	-86.549	1.5
27	M13	Mx	0	1.5
28	MP1A	X	-31.781	1.5
29	MP1A	Z	-55.046	1.5
30	MP1A	Mx	.016	1.5
31	MP1A	X	-31.781	4.5
32	MP1A	Z	-55.046	4.5
33	MP1A	Mx	.016	4.5
34	MP4A	X	-31.781	1.5
35	MP4A	Z	-55.046	1.5
36	MP4A	Mx	.016	1.5
37	MP4A	X	-31.781	4.5
38	MP4A	Z	-55.046	4.5
39	MP4A	Mx	.016	4.5
40	MP2A	X	-18.464	5
41	MP2A	Z	-31.98	5
42	MP2A	Mx	-.029	5
43	MP2A	X	-18.464	5
44	MP2A	Z	-31.98	5
45	MP2A	Mx	-.008	5

Member Point Loads (BLC 15 : Antenna Wi (0 Deg))

	Member Label	Direction	Magnitude[lb,k-ft]	Location[ft,%]
1	MP2A	X	0	.5
2	MP2A	Z	-20.911	.5
3	MP2A	Mx	-.012	.5
4	MP2A	X	0	5.5
5	MP2A	Z	-20.911	5.5
6	MP2A	Mx	-.012	5.5
7	MP2A	X	0	.5
8	MP2A	Z	-20.911	.5
9	MP2A	Mx	.012	.5
10	MP2A	X	0	5.5
11	MP2A	Z	-20.911	5.5
12	MP2A	Mx	.012	5.5
13	MP3A	X	0	2
14	MP3A	Z	-10.593	2
15	MP3A	Mx	-.003	2
16	MP3A	X	0	4
17	MP3A	Z	-10.593	4
18	MP3A	Mx	-.003	4
19	MP2A	X	0	1
20	MP2A	Z	-10.43	1
21	MP2A	Mx	0	1
22	MP3A	X	0	1
23	MP3A	Z	-10.43	1
24	MP3A	Mx	0	1
25	M13	X	0	1.5
26	M13	Z	-13.733	1.5
27	M13	Mx	0	1.5
28	MP1A	X	0	1.5
29	MP1A	Z	-7.374	1.5
30	MP1A	Mx	0	1.5
31	MP1A	X	0	4.5
32	MP1A	Z	-7.374	4.5
33	MP1A	Mx	0	4.5
34	MP4A	X	0	1.5
35	MP4A	Z	-7.374	1.5

Member Point Loads (BLC 15 : Antenna Wi (0 Deg)) (Continued)

	Member Label	Direction	Magnitude[lb,k-ft]	Location[ft,%]
36	MP4A	Mx	0	1.5
37	MP4A	X	0	4.5
38	MP4A	Z	-7.374	4.5
39	MP4A	Mx	0	4.5
40	MP2A	X	0	5
41	MP2A	Z	-2.168	5
42	MP2A	Mx	-.000723	5
43	MP2A	X	0	5
44	MP2A	Z	-2.168	5
45	MP2A	Mx	.000723	5

Member Point Loads (BLC 16 : Antenna Wi (30 Deg))

	Member Label	Direction	Magnitude[lb,k-ft]	Location[ft,%]
1	MP2A	X	10.212	.5
2	MP2A	Z	-17.687	.5
3	MP2A	Mx	-.015	.5
4	MP2A	X	10.212	5.5
5	MP2A	Z	-17.687	5.5
6	MP2A	Mx	-.015	5.5
7	MP2A	X	10.212	.5
8	MP2A	Z	-17.687	.5
9	MP2A	Mx	.005	.5
10	MP2A	X	10.212	5.5
11	MP2A	Z	-17.687	5.5
12	MP2A	Mx	.005	5.5
13	MP3A	X	3.523	2
14	MP3A	Z	-6.103	2
15	MP3A	Mx	-.003	2
16	MP3A	X	3.523	4
17	MP3A	Z	-6.103	4
18	MP3A	Mx	-.003	4
19	MP2A	X	4.819	1
20	MP2A	Z	-8.346	1
21	MP2A	Mx	.002	1
22	MP3A	X	4.668	1
23	MP3A	Z	-8.085	1
24	MP3A	Mx	.002	1
25	M13	X	7.658	1.5
26	M13	Z	-13.264	1.5
27	M13	Mx	0	1.5
28	MP1A	X	4.525	1.5
29	MP1A	Z	-7.837	1.5
30	MP1A	Mx	-.002	1.5
31	MP1A	X	4.525	4.5
32	MP1A	Z	-7.837	4.5
33	MP1A	Mx	-.002	4.5
34	MP4A	X	4.525	1.5
35	MP4A	Z	-7.837	1.5
36	MP4A	Mx	-.002	1.5
37	MP4A	X	4.525	4.5
38	MP4A	Z	-7.837	4.5
39	MP4A	Mx	-.002	4.5
40	MP2A	X	1.53	5
41	MP2A	Z	-2.651	5
42	MP2A	Mx	.000646	5
43	MP2A	X	1.53	5
44	MP2A	Z	-2.651	5
45	MP2A	Mx	.002	5

Member Point Loads (BLC 17 : Antenna Wi (60 Deg))

	Member Label	Direction	Magnitude[lb,k-ft]	Location[ft,%]
1	MP2A	X	16.842	.5
2	MP2A	Z	-9.724	.5
3	MP2A	Mx	-.014	.5
4	MP2A	X	16.842	5.5
5	MP2A	Z	-9.724	5.5
6	MP2A	Mx	-.014	5.5
7	MP2A	X	16.842	.5
8	MP2A	Z	-9.724	.5
9	MP2A	Mx	-.003	.5
10	MP2A	X	16.842	5.5
11	MP2A	Z	-9.724	5.5
12	MP2A	Mx	-.003	5.5
13	MP3A	X	4.567	2
14	MP3A	Z	-2.637	2
15	MP3A	Mx	-.003	2
16	MP3A	X	4.567	4
17	MP3A	Z	-2.637	4
18	MP3A	Mx	-.003	4
19	MP2A	X	6.973	1
20	MP2A	Z	-4.026	1
21	MP2A	Mx	.003	1
22	MP3A	X	6.191	1
23	MP3A	Z	-3.574	1
24	MP3A	Mx	.003	1
25	M13	X	16.007	1.5
26	M13	Z	-9.242	1.5
27	M13	Mx	0	1.5
28	MP1A	X	10.739	1.5
29	MP1A	Z	-6.2	1.5
30	MP1A	Mx	-.005	1.5
31	MP1A	X	10.739	4.5
32	MP1A	Z	-6.2	4.5
33	MP1A	Mx	-.005	4.5
34	MP4A	X	10.739	1.5
35	MP4A	Z	-6.2	1.5
36	MP4A	Mx	-.005	1.5
37	MP4A	X	10.739	4.5
38	MP4A	Z	-6.2	4.5
39	MP4A	Mx	-.005	4.5
40	MP2A	X	4.197	5
41	MP2A	Z	-2.423	5
42	MP2A	Mx	.003	5
43	MP2A	X	4.197	5
44	MP2A	Z	-2.423	5
45	MP2A	Mx	.005	5

Member Point Loads (BLC 18 : Antenna Wi (90 Deg))

	Member Label	Direction	Magnitude[lb,k-ft]	Location[ft,%]
1	MP2A	X	18.959	.5
2	MP2A	Z	0	.5
3	MP2A	Mx	-.009	.5
4	MP2A	X	18.959	5.5
5	MP2A	Z	0	5.5
6	MP2A	Mx	-.009	5.5
7	MP2A	X	18.959	.5
8	MP2A	Z	0	.5
9	MP2A	Mx	-.009	.5
10	MP2A	X	18.959	5.5

Member Point Loads (BLC 18 : Antenna Wi (90 Deg)) (Continued)

	Member Label	Direction	Magnitude[lb,k-ft]	Location[ft,%]
11	MP2A	Z	0	5.5
12	MP2A	Mx	-.009	5.5
13	MP3A	X	7.047	2
14	MP3A	Z	0	2
15	MP3A	Mx	-.003	2
16	MP3A	X	7.047	4
17	MP3A	Z	0	4
18	MP3A	Mx	-.003	4
19	MP2A	X	7.259	1
20	MP2A	Z	0	1
21	MP2A	Mx	.004	1
22	MP3A	X	6.054	1
23	MP3A	Z	0	1
24	MP3A	Mx	.003	1
25	M13	X	20.066	1.5
26	M13	Z	0	1.5
27	M13	Mx	0	1.5
28	MP1A	X	14.076	1.5
29	MP1A	Z	0	1.5
30	MP1A	Mx	-.007	1.5
31	MP1A	X	14.076	4.5
32	MP1A	Z	0	4.5
33	MP1A	Mx	-.007	4.5
34	MP4A	X	14.076	1.5
35	MP4A	Z	0	1.5
36	MP4A	Mx	-.007	1.5
37	MP4A	X	14.076	4.5
38	MP4A	Z	0	4.5
39	MP4A	Mx	-.007	4.5
40	MP2A	X	5.739	5
41	MP2A	Z	0	5
42	MP2A	Mx	.006	5
43	MP2A	X	5.739	5
44	MP2A	Z	0	5
45	MP2A	Mx	.006	5

Member Point Loads (BLC 19 : Antenna Wi (120 Deg))

	Member Label	Direction	Magnitude[lb,k-ft]	Location[ft,%]
1	MP2A	X	16.842	.5
2	MP2A	Z	9.724	.5
3	MP2A	Mx	-.003	.5
4	MP2A	X	16.842	5.5
5	MP2A	Z	9.724	5.5
6	MP2A	Mx	-.003	5.5
7	MP2A	X	16.842	.5
8	MP2A	Z	9.724	.5
9	MP2A	Mx	-.014	.5
10	MP2A	X	16.842	5.5
11	MP2A	Z	9.724	5.5
12	MP2A	Mx	-.014	5.5
13	MP3A	X	9.174	2
14	MP3A	Z	5.296	2
15	MP3A	Mx	-.003	2
16	MP3A	X	9.174	4
17	MP3A	Z	5.296	4
18	MP3A	Mx	-.003	4
19	MP2A	X	6.973	1
20	MP2A	Z	4.026	1

Member Point Loads (BLC 19 : Antenna Wi (120 Deg)) (Continued)

	Member Label	Direction	Magnitude[lb,k-ft]	Location[ft,%]
21	MP2A	Mx	.003	1
22	MP3A	X	6.191	1
23	MP3A	Z	3.574	1
24	MP3A	Mx	.003	1
25	M13	X	16.007	1.5
26	M13	Z	9.242	1.5
27	M13	Mx	0	1.5
28	MP1A	X	10.739	1.5
29	MP1A	Z	6.2	1.5
30	MP1A	Mx	-.005	1.5
31	MP1A	X	10.739	4.5
32	MP1A	Z	6.2	4.5
33	MP1A	Mx	-.005	4.5
34	MP4A	X	10.739	1.5
35	MP4A	Z	6.2	1.5
36	MP4A	Mx	-.005	1.5
37	MP4A	X	10.739	4.5
38	MP4A	Z	6.2	4.5
39	MP4A	Mx	-.005	4.5
40	MP2A	X	4.197	5
41	MP2A	Z	2.423	5
42	MP2A	Mx	.005	5
43	MP2A	X	4.197	5
44	MP2A	Z	2.423	5
45	MP2A	Mx	.003	5

Member Point Loads (BLC 20 : Antenna Wi (150 Deg))

	Member Label	Direction	Magnitude[lb,k-ft]	Location[ft,%]
1	MP2A	X	10.212	.5
2	MP2A	Z	17.687	.5
3	MP2A	Mx	.005	.5
4	MP2A	X	10.212	5.5
5	MP2A	Z	17.687	5.5
6	MP2A	Mx	.005	5.5
7	MP2A	X	10.212	.5
8	MP2A	Z	17.687	.5
9	MP2A	Mx	-.015	.5
10	MP2A	X	10.212	5.5
11	MP2A	Z	17.687	5.5
12	MP2A	Mx	-.015	5.5
13	MP3A	X	6.183	2
14	MP3A	Z	10.709	2
15	MP3A	Mx	0	2
16	MP3A	X	6.183	4
17	MP3A	Z	10.709	4
18	MP3A	Mx	0	4
19	MP2A	X	4.819	1
20	MP2A	Z	8.346	1
21	MP2A	Mx	.002	1
22	MP3A	X	4.668	1
23	MP3A	Z	8.085	1
24	MP3A	Mx	.002	1
25	M13	X	7.658	1.5
26	M13	Z	13.264	1.5
27	M13	Mx	0	1.5
28	MP1A	X	4.525	1.5
29	MP1A	Z	7.837	1.5
30	MP1A	Mx	-.002	1.5

Member Point Loads (BLC 20 : Antenna Wi (150 Deg)) (Continued)

	Member Label	Direction	Magnitude[lb,k-ft]	Location[ft,%]
31	MP1A	X	4.525	4.5
32	MP1A	Z	7.837	4.5
33	MP1A	Mx	-.002	4.5
34	MP4A	X	4.525	1.5
35	MP4A	Z	7.837	1.5
36	MP4A	Mx	-.002	1.5
37	MP4A	X	4.525	4.5
38	MP4A	Z	7.837	4.5
39	MP4A	Mx	-.002	4.5
40	MP2A	X	1.53	5
41	MP2A	Z	2.651	5
42	MP2A	Mx	.002	5
43	MP2A	X	1.53	5
44	MP2A	Z	2.651	5
45	MP2A	Mx	.000646	5

Member Point Loads (BLC 21 : Antenna Wi (180 Deg))

	Member Label	Direction	Magnitude[lb,k-ft]	Location[ft,%]
1	MP2A	X	0	.5
2	MP2A	Z	20.911	.5
3	MP2A	Mx	.012	.5
4	MP2A	X	0	5.5
5	MP2A	Z	20.911	5.5
6	MP2A	Mx	.012	5.5
7	MP2A	X	0	.5
8	MP2A	Z	20.911	.5
9	MP2A	Mx	-.012	.5
10	MP2A	X	0	5.5
11	MP2A	Z	20.911	5.5
12	MP2A	Mx	-.012	5.5
13	MP3A	X	0	2
14	MP3A	Z	10.593	2
15	MP3A	Mx	.003	2
16	MP3A	X	0	4
17	MP3A	Z	10.593	4
18	MP3A	Mx	.003	4
19	MP2A	X	0	1
20	MP2A	Z	10.43	1
21	MP2A	Mx	0	1
22	MP3A	X	0	1
23	MP3A	Z	10.43	1
24	MP3A	Mx	0	1
25	M13	X	0	1.5
26	M13	Z	13.733	1.5
27	M13	Mx	0	1.5
28	MP1A	X	0	1.5
29	MP1A	Z	7.374	1.5
30	MP1A	Mx	0	1.5
31	MP1A	X	0	4.5
32	MP1A	Z	7.374	4.5
33	MP1A	Mx	0	4.5
34	MP4A	X	0	1.5
35	MP4A	Z	7.374	1.5
36	MP4A	Mx	0	1.5
37	MP4A	X	0	4.5
38	MP4A	Z	7.374	4.5
39	MP4A	Mx	0	4.5
40	MP2A	X	0	5

Member Point Loads (BLC 21 : Antenna Wi (180 Deg)) (Continued)

	Member Label	Direction	Magnitude[lb,k-ft]	Location[ft,%]
41	MP2A	Z	2.168	5
42	MP2A	Mx	.000723	5
43	MP2A	X	0	5
44	MP2A	Z	2.168	5
45	MP2A	Mx	-.000723	5

Member Point Loads (BLC 22 : Antenna Wi (210 Deg))

	Member Label	Direction	Magnitude[lb,k-ft]	Location[ft,%]
1	MP2A	X	-10.212	.5
2	MP2A	Z	17.687	.5
3	MP2A	Mx	.015	.5
4	MP2A	X	-10.212	5.5
5	MP2A	Z	17.687	5.5
6	MP2A	Mx	.015	5.5
7	MP2A	X	-10.212	.5
8	MP2A	Z	17.687	.5
9	MP2A	Mx	-.005	.5
10	MP2A	X	-10.212	5.5
11	MP2A	Z	17.687	5.5
12	MP2A	Mx	-.005	5.5
13	MP3A	X	-3.523	2
14	MP3A	Z	6.103	2
15	MP3A	Mx	.003	2
16	MP3A	X	-3.523	4
17	MP3A	Z	6.103	4
18	MP3A	Mx	.003	4
19	MP2A	X	-4.819	1
20	MP2A	Z	8.346	1
21	MP2A	Mx	-.002	1
22	MP3A	X	-4.668	1
23	MP3A	Z	8.085	1
24	MP3A	Mx	-.002	1
25	M13	X	-7.658	1.5
26	M13	Z	13.264	1.5
27	M13	Mx	0	1.5
28	MP1A	X	-4.525	1.5
29	MP1A	Z	7.837	1.5
30	MP1A	Mx	.002	1.5
31	MP1A	X	-4.525	4.5
32	MP1A	Z	7.837	4.5
33	MP1A	Mx	.002	4.5
34	MP4A	X	-4.525	1.5
35	MP4A	Z	7.837	1.5
36	MP4A	Mx	.002	1.5
37	MP4A	X	-4.525	4.5
38	MP4A	Z	7.837	4.5
39	MP4A	Mx	.002	4.5
40	MP2A	X	-1.53	5
41	MP2A	Z	2.651	5
42	MP2A	Mx	-.000646	5
43	MP2A	X	-1.53	5
44	MP2A	Z	2.651	5
45	MP2A	Mx	-.002	5

Member Point Loads (BLC 23 : Antenna Wi (240 Deg))

	Member Label	Direction	Magnitude[lb,k-ft]	Location[ft,%]
1	MP2A	X	-16.842	.5
2	MP2A	Z	9.724	.5

Member Point Loads (BLC 23 : Antenna Wi (240 Deg)) (Continued)

	Member Label	Direction	Magnitude[lb,k-ft]	Location[ft,%]
3	MP2A	Mx	.014	.5
4	MP2A	X	-16.842	5.5
5	MP2A	Z	9.724	5.5
6	MP2A	Mx	.014	5.5
7	MP2A	X	-16.842	.5
8	MP2A	Z	9.724	.5
9	MP2A	Mx	.003	.5
10	MP2A	X	-16.842	5.5
11	MP2A	Z	9.724	5.5
12	MP2A	Mx	.003	5.5
13	MP3A	X	-4.567	2
14	MP3A	Z	2.637	2
15	MP3A	Mx	.003	2
16	MP3A	X	-4.567	4
17	MP3A	Z	2.637	4
18	MP3A	Mx	.003	4
19	MP2A	X	-6.973	1
20	MP2A	Z	4.026	1
21	MP2A	Mx	-.003	1
22	MP3A	X	-6.191	1
23	MP3A	Z	3.574	1
24	MP3A	Mx	-.003	1
25	M13	X	-16.007	1.5
26	M13	Z	9.242	1.5
27	M13	Mx	0	1.5
28	MP1A	X	-10.739	1.5
29	MP1A	Z	6.2	1.5
30	MP1A	Mx	.005	1.5
31	MP1A	X	-10.739	4.5
32	MP1A	Z	6.2	4.5
33	MP1A	Mx	.005	4.5
34	MP4A	X	-10.739	1.5
35	MP4A	Z	6.2	1.5
36	MP4A	Mx	.005	1.5
37	MP4A	X	-10.739	4.5
38	MP4A	Z	6.2	4.5
39	MP4A	Mx	.005	4.5
40	MP2A	X	-4.197	5
41	MP2A	Z	2.423	5
42	MP2A	Mx	-.003	5
43	MP2A	X	-4.197	5
44	MP2A	Z	2.423	5
45	MP2A	Mx	-.005	5

Member Point Loads (BLC 24 : Antenna Wi (270 Deg))

	Member Label	Direction	Magnitude[lb,k-ft]	Location[ft,%]
1	MP2A	X	-18.959	.5
2	MP2A	Z	0	.5
3	MP2A	Mx	.009	.5
4	MP2A	X	-18.959	5.5
5	MP2A	Z	0	5.5
6	MP2A	Mx	.009	5.5
7	MP2A	X	-18.959	.5
8	MP2A	Z	0	.5
9	MP2A	Mx	.009	.5
10	MP2A	X	-18.959	5.5
11	MP2A	Z	0	5.5
12	MP2A	Mx	.009	5.5

Member Point Loads (BLC 24 : Antenna Wi (270 Deg)) (Continued)

	Member Label	Direction	Magnitude[lb,k-ft]	Location[ft,%]
13	MP3A	X	-7.047	2
14	MP3A	Z	0	2
15	MP3A	Mx	.003	2
16	MP3A	X	-7.047	4
17	MP3A	Z	0	4
18	MP3A	Mx	.003	4
19	MP2A	X	-7.259	1
20	MP2A	Z	0	1
21	MP2A	Mx	-.004	1
22	MP3A	X	-6.054	1
23	MP3A	Z	0	1
24	MP3A	Mx	-.003	1
25	M13	X	-20.066	1.5
26	M13	Z	0	1.5
27	M13	Mx	0	1.5
28	MP1A	X	-14.076	1.5
29	MP1A	Z	0	1.5
30	MP1A	Mx	.007	1.5
31	MP1A	X	-14.076	4.5
32	MP1A	Z	0	4.5
33	MP1A	Mx	.007	4.5
34	MP4A	X	-14.076	1.5
35	MP4A	Z	0	1.5
36	MP4A	Mx	.007	1.5
37	MP4A	X	-14.076	4.5
38	MP4A	Z	0	4.5
39	MP4A	Mx	.007	4.5
40	MP2A	X	-5.739	5
41	MP2A	Z	0	5
42	MP2A	Mx	-.006	5
43	MP2A	X	-5.739	5
44	MP2A	Z	0	5
45	MP2A	Mx	-.006	5

Member Point Loads (BLC 25 : Antenna Wi (300 Deg))

	Member Label	Direction	Magnitude[lb,k-ft]	Location[ft,%]
1	MP2A	X	-16.842	.5
2	MP2A	Z	-9.724	.5
3	MP2A	Mx	.003	.5
4	MP2A	X	-16.842	5.5
5	MP2A	Z	-9.724	5.5
6	MP2A	Mx	.003	5.5
7	MP2A	X	-16.842	.5
8	MP2A	Z	-9.724	.5
9	MP2A	Mx	.014	.5
10	MP2A	X	-16.842	5.5
11	MP2A	Z	-9.724	5.5
12	MP2A	Mx	.014	5.5
13	MP3A	X	-9.174	2
14	MP3A	Z	-5.296	2
15	MP3A	Mx	.003	2
16	MP3A	X	-9.174	4
17	MP3A	Z	-5.296	4
18	MP3A	Mx	.003	4
19	MP2A	X	-6.973	1
20	MP2A	Z	-4.026	1
21	MP2A	Mx	-.003	1
22	MP3A	X	-6.191	1

Member Point Loads (BLC 25 : Antenna Wi (300 Deg)) (Continued)

	Member Label	Direction	Magnitude[lb,k-ft]	Location[ft,%]
23	MP3A	Z	-3.574	1
24	MP3A	Mx	-.003	1
25	M13	X	-16.007	1.5
26	M13	Z	-9.242	1.5
27	M13	Mx	0	1.5
28	MP1A	X	-10.739	1.5
29	MP1A	Z	-6.2	1.5
30	MP1A	Mx	.005	1.5
31	MP1A	X	-10.739	4.5
32	MP1A	Z	-6.2	4.5
33	MP1A	Mx	.005	4.5
34	MP4A	X	-10.739	1.5
35	MP4A	Z	-6.2	1.5
36	MP4A	Mx	.005	1.5
37	MP4A	X	-10.739	4.5
38	MP4A	Z	-6.2	4.5
39	MP4A	Mx	.005	4.5
40	MP2A	X	-4.197	5
41	MP2A	Z	-2.423	5
42	MP2A	Mx	-.005	5
43	MP2A	X	-4.197	5
44	MP2A	Z	-2.423	5
45	MP2A	Mx	-.003	5

Member Point Loads (BLC 26 : Antenna Wi (330 Deg))

	Member Label	Direction	Magnitude[lb,k-ft]	Location[ft,%]
1	MP2A	X	-10.212	.5
2	MP2A	Z	-17.687	.5
3	MP2A	Mx	-.005	.5
4	MP2A	X	-10.212	5.5
5	MP2A	Z	-17.687	5.5
6	MP2A	Mx	-.005	5.5
7	MP2A	X	-10.212	.5
8	MP2A	Z	-17.687	.5
9	MP2A	Mx	.015	.5
10	MP2A	X	-10.212	5.5
11	MP2A	Z	-17.687	5.5
12	MP2A	Mx	.015	5.5
13	MP3A	X	-6.183	2
14	MP3A	Z	-10.709	2
15	MP3A	Mx	0	2
16	MP3A	X	-6.183	4
17	MP3A	Z	-10.709	4
18	MP3A	Mx	0	4
19	MP2A	X	-4.819	1
20	MP2A	Z	-8.346	1
21	MP2A	Mx	-.002	1
22	MP3A	X	-4.668	1
23	MP3A	Z	-8.085	1
24	MP3A	Mx	-.002	1
25	M13	X	-7.658	1.5
26	M13	Z	-13.264	1.5
27	M13	Mx	0	1.5
28	MP1A	X	-4.525	1.5
29	MP1A	Z	-7.837	1.5
30	MP1A	Mx	.002	1.5
31	MP1A	X	-4.525	4.5
32	MP1A	Z	-7.837	4.5

Member Point Loads (BLC 26 : Antenna Wi (330 Deg)) (Continued)

	Member Label	Direction	Magnitude[lb,k-ft]	Location[ft,%]
33	MP1A	Mx	.002	4.5
34	MP4A	X	-4.525	1.5
35	MP4A	Z	-7.837	1.5
36	MP4A	Mx	.002	1.5
37	MP4A	X	-4.525	4.5
38	MP4A	Z	-7.837	4.5
39	MP4A	Mx	.002	4.5
40	MP2A	X	-1.53	5
41	MP2A	Z	-2.651	5
42	MP2A	Mx	-.002	5
43	MP2A	X	-1.53	5
44	MP2A	Z	-2.651	5
45	MP2A	Mx	-.000646	5

Member Point Loads (BLC 27 : Antenna Wm (0 Deg))

	Member Label	Direction	Magnitude[lb,k-ft]	Location[ft,%]
1	MP2A	X	0	.5
2	MP2A	Z	-3.335	.5
3	MP2A	Mx	-.002	.5
4	MP2A	X	0	5.5
5	MP2A	Z	-3.335	5.5
6	MP2A	Mx	-.002	5.5
7	MP2A	X	0	.5
8	MP2A	Z	-3.335	.5
9	MP2A	Mx	.002	.5
10	MP2A	X	0	5.5
11	MP2A	Z	-3.335	5.5
12	MP2A	Mx	.002	5.5
13	MP3A	X	0	2
14	MP3A	Z	-4.287	2
15	MP3A	Mx	-.001	2
16	MP3A	X	0	4
17	MP3A	Z	-4.287	4
18	MP3A	Mx	-.001	4
19	MP2A	X	0	1
20	MP2A	Z	-4.055	1
21	MP2A	Mx	0	1
22	MP3A	X	0	1
23	MP3A	Z	-4.055	1
24	MP3A	Mx	0	1
25	M13	X	0	1.5
26	M13	Z	-6.304	1.5
27	M13	Mx	0	1.5
28	MP1A	X	0	1.5
29	MP1A	Z	-3.414	1.5
30	MP1A	Mx	0	1.5
31	MP1A	X	0	4.5
32	MP1A	Z	-3.414	4.5
33	MP1A	Mx	0	4.5
34	MP4A	X	0	1.5
35	MP4A	Z	-3.414	1.5
36	MP4A	Mx	0	1.5
37	MP4A	X	0	4.5
38	MP4A	Z	-3.414	4.5
39	MP4A	Mx	0	4.5
40	MP2A	X	0	5
41	MP2A	Z	-2.511	5
42	MP2A	Mx	-.000837	5

Member Point Loads (BLC 27 : Antenna Wm (0 Deg)) (Continued)

	Member Label	Direction	Magnitude[lb,k-ft]	Location[ft,%]
43	MP2A	X	0	5
44	MP2A	Z	-2.511	5
45	MP2A	Mx	.000837	5

Member Point Loads (BLC 28 : Antenna Wm (30 Deg))

	Member Label	Direction	Magnitude[lb,k-ft]	Location[ft,%]
1	MP2A	X	1.775	.5
2	MP2A	Z	-3.075	.5
3	MP2A	Mx	-.003	.5
4	MP2A	X	1.775	5.5
5	MP2A	Z	-3.075	5.5
6	MP2A	Mx	-.003	5.5
7	MP2A	X	1.775	.5
8	MP2A	Z	-3.075	.5
9	MP2A	Mx	.000906	.5
10	MP2A	X	1.775	5.5
11	MP2A	Z	-3.075	5.5
12	MP2A	Mx	.000906	5.5
13	MP3A	X	1.303	2
14	MP3A	Z	-2.257	2
15	MP3A	Mx	-.001	2
16	MP3A	X	1.303	4
17	MP3A	Z	-2.257	4
18	MP3A	Mx	-.001	4
19	MP2A	X	1.86	1
20	MP2A	Z	-3.222	1
21	MP2A	Mx	.00093	1
22	MP3A	X	1.798	1
23	MP3A	Z	-3.115	1
24	MP3A	Mx	.000899	1
25	M13	X	3.401	1.5
26	M13	Z	-5.89	1.5
27	M13	Mx	0	1.5
28	MP1A	X	2.163	1.5
29	MP1A	Z	-3.746	1.5
30	MP1A	Mx	-.001	1.5
31	MP1A	X	2.163	4.5
32	MP1A	Z	-3.746	4.5
33	MP1A	Mx	-.001	4.5
34	MP4A	X	2.163	1.5
35	MP4A	Z	-3.746	1.5
36	MP4A	Mx	-.001	1.5
37	MP4A	X	2.163	4.5
38	MP4A	Z	-3.746	4.5
39	MP4A	Mx	-.001	4.5
40	MP2A	X	1.257	5
41	MP2A	Z	-2.176	5
42	MP2A	Mx	.000532	5
43	MP2A	X	1.257	5
44	MP2A	Z	-2.176	5
45	MP2A	Mx	.002	5

Member Point Loads (BLC 29 : Antenna Wm (60 Deg))

	Member Label	Direction	Magnitude[lb,k-ft]	Location[ft,%]
1	MP2A	X	3.449	.5
2	MP2A	Z	-1.991	.5
3	MP2A	Mx	-.003	.5
4	MP2A	X	3.449	5.5

Member Point Loads (BLC 29 : Antenna Wm (60 Deg)) (Continued)

	Member Label	Direction	Magnitude[lb,k-ft]	Location[ft,%]
5	MP2A	Z	-1.991	5.5
6	MP2A	Mx	-.003	5.5
7	MP2A	X	3.449	.5
8	MP2A	Z	-1.991	.5
9	MP2A	Mx	-.000563	.5
10	MP2A	X	3.449	5.5
11	MP2A	Z	-1.991	5.5
12	MP2A	Mx	-.000563	5.5
13	MP3A	X	1.529	2
14	MP3A	Z	-.883	2
15	MP3A	Mx	-.000883	2
16	MP3A	X	1.529	4
17	MP3A	Z	-.883	4
18	MP3A	Mx	-.000883	4
19	MP2A	X	2.645	1
20	MP2A	Z	-1.527	1
21	MP2A	Mx	.001	1
22	MP3A	X	2.322	1
23	MP3A	Z	-1.341	1
24	MP3A	Mx	.001	1
25	M13	X	6.751	1.5
26	M13	Z	-3.898	1.5
27	M13	Mx	0	1.5
28	MP1A	X	5.325	1.5
29	MP1A	Z	-3.075	1.5
30	MP1A	Mx	-.003	1.5
31	MP1A	X	5.325	4.5
32	MP1A	Z	-3.075	4.5
33	MP1A	Mx	-.003	4.5
34	MP4A	X	5.325	1.5
35	MP4A	Z	-3.075	1.5
36	MP4A	Mx	-.003	1.5
37	MP4A	X	5.325	4.5
38	MP4A	Z	-3.075	4.5
39	MP4A	Mx	-.003	4.5
40	MP2A	X	2.18	5
41	MP2A	Z	-1.258	5
42	MP2A	Mx	.002	5
43	MP2A	X	2.18	5
44	MP2A	Z	-1.258	5
45	MP2A	Mx	.003	5

Member Point Loads (BLC 30 : Antenna Wm (90 Deg))

	Member Label	Direction	Magnitude[lb,k-ft]	Location[ft,%]
1	MP2A	X	4.198	.5
2	MP2A	Z	0	.5
3	MP2A	Mx	-.002	.5
4	MP2A	X	4.198	5.5
5	MP2A	Z	0	5.5
6	MP2A	Mx	-.002	5.5
7	MP2A	X	4.198	.5
8	MP2A	Z	0	.5
9	MP2A	Mx	-.002	.5
10	MP2A	X	4.198	5.5
11	MP2A	Z	0	5.5
12	MP2A	Mx	-.002	5.5
13	MP3A	X	2.606	2
14	MP3A	Z	0	2

Member Point Loads (BLC 30 : Antenna Wm (90 Deg)) (Continued)

	Member Label	Direction	Magnitude[lb,k-ft]	Location[ft,%]
15	MP3A	Mx	-.001	2
16	MP3A	X	2.606	4
17	MP3A	Z	0	4
18	MP3A	Mx	-.001	4
19	MP2A	X	2.72	1
20	MP2A	Z	0	1
21	MP2A	Mx	.001	1
22	MP3A	X	2.223	1
23	MP3A	Z	0	1
24	MP3A	Mx	.001	1
25	M13	X	8.292	1.5
26	M13	Z	0	1.5
27	M13	Mx	0	1.5
28	MP1A	X	7.061	1.5
29	MP1A	Z	0	1.5
30	MP1A	Mx	-.004	1.5
31	MP1A	X	7.061	4.5
32	MP1A	Z	0	4.5
33	MP1A	Mx	-.004	4.5
34	MP4A	X	7.061	1.5
35	MP4A	Z	0	1.5
36	MP4A	Mx	-.004	1.5
37	MP4A	X	7.061	4.5
38	MP4A	Z	0	4.5
39	MP4A	Mx	-.004	4.5
40	MP2A	X	2.519	5
41	MP2A	Z	0	5
42	MP2A	Mx	.003	5
43	MP2A	X	2.519	5
44	MP2A	Z	0	5
45	MP2A	Mx	.003	5

Member Point Loads (BLC 31 : Antenna Wm (120 Deg))

	Member Label	Direction	Magnitude[lb,k-ft]	Location[ft,%]
1	MP2A	X	3.449	.5
2	MP2A	Z	1.991	.5
3	MP2A	Mx	-.000563	.5
4	MP2A	X	3.449	5.5
5	MP2A	Z	1.991	5.5
6	MP2A	Mx	-.000563	5.5
7	MP2A	X	3.449	.5
8	MP2A	Z	1.991	.5
9	MP2A	Mx	-.003	.5
10	MP2A	X	3.449	5.5
11	MP2A	Z	1.991	5.5
12	MP2A	Mx	-.003	5.5
13	MP3A	X	3.712	2
14	MP3A	Z	2.143	2
15	MP3A	Mx	-.001	2
16	MP3A	X	3.712	4
17	MP3A	Z	2.143	4
18	MP3A	Mx	-.001	4
19	MP2A	X	2.645	1
20	MP2A	Z	1.527	1
21	MP2A	Mx	.001	1
22	MP3A	X	2.322	1
23	MP3A	Z	1.341	1
24	MP3A	Mx	.001	1

Member Point Loads (BLC 31 : Antenna Wm (120 Deg)) (Continued)

	Member Label	Direction	Magnitude[lb,k-ft]	Location[ft,%]
25	M13	X	6.751	1.5
26	M13	Z	3.898	1.5
27	M13	Mx	0	1.5
28	MP1A	X	5.325	1.5
29	MP1A	Z	3.075	1.5
30	MP1A	Mx	-.003	1.5
31	MP1A	X	5.325	4.5
32	MP1A	Z	3.075	4.5
33	MP1A	Mx	-.003	4.5
34	MP4A	X	5.325	1.5
35	MP4A	Z	3.075	1.5
36	MP4A	Mx	-.003	1.5
37	MP4A	X	5.325	4.5
38	MP4A	Z	3.075	4.5
39	MP4A	Mx	-.003	4.5
40	MP2A	X	2.18	5
41	MP2A	Z	1.258	5
42	MP2A	Mx	.003	5
43	MP2A	X	2.18	5
44	MP2A	Z	1.258	5
45	MP2A	Mx	.002	5

Member Point Loads (BLC 32 : Antenna Wm (150 Deg))

	Member Label	Direction	Magnitude[lb,k-ft]	Location[ft,%]
1	MP2A	X	1.775	.5
2	MP2A	Z	3.075	.5
3	MP2A	Mx	.000906	.5
4	MP2A	X	1.775	5.5
5	MP2A	Z	3.075	5.5
6	MP2A	Mx	.000906	5.5
7	MP2A	X	1.775	.5
8	MP2A	Z	3.075	.5
9	MP2A	Mx	-.003	.5
10	MP2A	X	1.775	5.5
11	MP2A	Z	3.075	5.5
12	MP2A	Mx	-.003	5.5
13	MP3A	X	2.563	2
14	MP3A	Z	4.44	2
15	MP3A	Mx	0	2
16	MP3A	X	2.563	4
17	MP3A	Z	4.44	4
18	MP3A	Mx	0	4
19	MP2A	X	1.86	1
20	MP2A	Z	3.222	1
21	MP2A	Mx	.00093	1
22	MP3A	X	1.798	1
23	MP3A	Z	3.115	1
24	MP3A	Mx	.000899	1
25	M13	X	3.401	1.5
26	M13	Z	5.89	1.5
27	M13	Mx	0	1.5
28	MP1A	X	2.163	1.5
29	MP1A	Z	3.746	1.5
30	MP1A	Mx	-.001	1.5
31	MP1A	X	2.163	4.5
32	MP1A	Z	3.746	4.5
33	MP1A	Mx	-.001	4.5
34	MP4A	X	2.163	1.5

Member Point Loads (BLC 32 : Antenna Wm (150 Deg)) (Continued)

	Member Label	Direction	Magnitude[lb,k-ft]	Location[ft,%]
35	MP4A	Z	3.746	1.5
36	MP4A	Mx	-.001	1.5
37	MP4A	X	2.163	4.5
38	MP4A	Z	3.746	4.5
39	MP4A	Mx	-.001	4.5
40	MP2A	X	1.257	5
41	MP2A	Z	2.176	5
42	MP2A	Mx	.002	5
43	MP2A	X	1.257	5
44	MP2A	Z	2.176	5
45	MP2A	Mx	.000532	5

Member Point Loads (BLC 33 : Antenna Wm (180 Deg))

	Member Label	Direction	Magnitude[lb,k-ft]	Location[ft,%]
1	MP2A	X	0	.5
2	MP2A	Z	3.335	.5
3	MP2A	Mx	.002	.5
4	MP2A	X	0	5.5
5	MP2A	Z	3.335	5.5
6	MP2A	Mx	.002	5.5
7	MP2A	X	0	.5
8	MP2A	Z	3.335	.5
9	MP2A	Mx	-.002	.5
10	MP2A	X	0	5.5
11	MP2A	Z	3.335	5.5
12	MP2A	Mx	-.002	5.5
13	MP3A	X	0	2
14	MP3A	Z	4.287	2
15	MP3A	Mx	.001	2
16	MP3A	X	0	4
17	MP3A	Z	4.287	4
18	MP3A	Mx	.001	4
19	MP2A	X	0	1
20	MP2A	Z	4.055	1
21	MP2A	Mx	0	1
22	MP3A	X	0	1
23	MP3A	Z	4.055	1
24	MP3A	Mx	0	1
25	M13	X	0	1.5
26	M13	Z	6.304	1.5
27	M13	Mx	0	1.5
28	MP1A	X	0	1.5
29	MP1A	Z	3.414	1.5
30	MP1A	Mx	0	1.5
31	MP1A	X	0	4.5
32	MP1A	Z	3.414	4.5
33	MP1A	Mx	0	4.5
34	MP4A	X	0	1.5
35	MP4A	Z	3.414	1.5
36	MP4A	Mx	0	1.5
37	MP4A	X	0	4.5
38	MP4A	Z	3.414	4.5
39	MP4A	Mx	0	4.5
40	MP2A	X	0	5
41	MP2A	Z	2.511	5
42	MP2A	Mx	.000837	5
43	MP2A	X	0	5
44	MP2A	Z	2.511	5

Member Point Loads (BLC 33 : Antenna Wm (180 Deg)) (Continued)

	Member Label	Direction	Magnitude[lb,k-ft]	Location[ft,%]
45	MP2A	Mx	-.000837	5

Member Point Loads (BLC 34 : Antenna Wm (210 Deg))

	Member Label	Direction	Magnitude[lb,k-ft]	Location[ft,%]
1	MP2A	X	-1.775	.5
2	MP2A	Z	3.075	.5
3	MP2A	Mx	.003	.5
4	MP2A	X	-1.775	5.5
5	MP2A	Z	3.075	5.5
6	MP2A	Mx	.003	5.5
7	MP2A	X	-1.775	.5
8	MP2A	Z	3.075	.5
9	MP2A	Mx	-.000906	.5
10	MP2A	X	-1.775	5.5
11	MP2A	Z	3.075	5.5
12	MP2A	Mx	-.000906	5.5
13	MP3A	X	-1.303	2
14	MP3A	Z	2.257	2
15	MP3A	Mx	.001	2
16	MP3A	X	-1.303	4
17	MP3A	Z	2.257	4
18	MP3A	Mx	.001	4
19	MP2A	X	-1.86	1
20	MP2A	Z	3.222	1
21	MP2A	Mx	-.00093	1
22	MP3A	X	-1.798	1
23	MP3A	Z	3.115	1
24	MP3A	Mx	-.000899	1
25	M13	X	-3.401	1.5
26	M13	Z	5.89	1.5
27	M13	Mx	0	1.5
28	MP1A	X	-2.163	1.5
29	MP1A	Z	3.746	1.5
30	MP1A	Mx	.001	1.5
31	MP1A	X	-2.163	4.5
32	MP1A	Z	3.746	4.5
33	MP1A	Mx	.001	4.5
34	MP4A	X	-2.163	1.5
35	MP4A	Z	3.746	1.5
36	MP4A	Mx	.001	1.5
37	MP4A	X	-2.163	4.5
38	MP4A	Z	3.746	4.5
39	MP4A	Mx	.001	4.5
40	MP2A	X	-1.257	5
41	MP2A	Z	2.176	5
42	MP2A	Mx	-.000532	5
43	MP2A	X	-1.257	5
44	MP2A	Z	2.176	5
45	MP2A	Mx	-.002	5

Member Point Loads (BLC 35 : Antenna Wm (240 Deg))

	Member Label	Direction	Magnitude[lb,k-ft]	Location[ft,%]
1	MP2A	X	-3.449	.5
2	MP2A	Z	1.991	.5
3	MP2A	Mx	.003	.5
4	MP2A	X	-3.449	5.5
5	MP2A	Z	1.991	5.5
6	MP2A	Mx	.003	5.5

Member Point Loads (BLC 35 : Antenna Wm (240 Deg)) (Continued)

	Member Label	Direction	Magnitude[lb,k-ft]	Location[ft,%]
7	MP2A	X	-3.449	.5
8	MP2A	Z	1.991	.5
9	MP2A	Mx	.000563	.5
10	MP2A	X	-3.449	5.5
11	MP2A	Z	1.991	5.5
12	MP2A	Mx	.000563	5.5
13	MP3A	X	-1.529	2
14	MP3A	Z	.883	2
15	MP3A	Mx	.000883	2
16	MP3A	X	-1.529	4
17	MP3A	Z	.883	4
18	MP3A	Mx	.000883	4
19	MP2A	X	-2.645	1
20	MP2A	Z	1.527	1
21	MP2A	Mx	-.001	1
22	MP3A	X	-2.322	1
23	MP3A	Z	1.341	1
24	MP3A	Mx	-.001	1
25	M13	X	-6.751	1.5
26	M13	Z	3.898	1.5
27	M13	Mx	0	1.5
28	MP1A	X	-5.325	1.5
29	MP1A	Z	3.075	1.5
30	MP1A	Mx	.003	1.5
31	MP1A	X	-5.325	4.5
32	MP1A	Z	3.075	4.5
33	MP1A	Mx	.003	4.5
34	MP4A	X	-5.325	1.5
35	MP4A	Z	3.075	1.5
36	MP4A	Mx	.003	1.5
37	MP4A	X	-5.325	4.5
38	MP4A	Z	3.075	4.5
39	MP4A	Mx	.003	4.5
40	MP2A	X	-2.18	5
41	MP2A	Z	1.258	5
42	MP2A	Mx	-.002	5
43	MP2A	X	-2.18	5
44	MP2A	Z	1.258	5
45	MP2A	Mx	-.003	5

Member Point Loads (BLC 36 : Antenna Wm (270 Deg))

	Member Label	Direction	Magnitude[lb,k-ft]	Location[ft,%]
1	MP2A	X	-4.198	.5
2	MP2A	Z	0	.5
3	MP2A	Mx	.002	.5
4	MP2A	X	-4.198	5.5
5	MP2A	Z	0	5.5
6	MP2A	Mx	.002	5.5
7	MP2A	X	-4.198	.5
8	MP2A	Z	0	.5
9	MP2A	Mx	.002	.5
10	MP2A	X	-4.198	5.5
11	MP2A	Z	0	5.5
12	MP2A	Mx	.002	5.5
13	MP3A	X	-2.606	2
14	MP3A	Z	0	2
15	MP3A	Mx	.001	2
16	MP3A	X	-2.606	4

Member Point Loads (BLC 36 : Antenna Wm (270 Deg)) (Continued)

	Member Label	Direction	Magnitude[lb,k-ft]	Location[ft,%]
17	MP3A	Z	0	4
18	MP3A	Mx	.001	4
19	MP2A	X	-2.72	1
20	MP2A	Z	0	1
21	MP2A	Mx	-.001	1
22	MP3A	X	-2.223	1
23	MP3A	Z	0	1
24	MP3A	Mx	-.001	1
25	M13	X	-8.292	1.5
26	M13	Z	0	1.5
27	M13	Mx	0	1.5
28	MP1A	X	-7.061	1.5
29	MP1A	Z	0	1.5
30	MP1A	Mx	.004	1.5
31	MP1A	X	-7.061	4.5
32	MP1A	Z	0	4.5
33	MP1A	Mx	.004	4.5
34	MP4A	X	-7.061	1.5
35	MP4A	Z	0	1.5
36	MP4A	Mx	.004	1.5
37	MP4A	X	-7.061	4.5
38	MP4A	Z	0	4.5
39	MP4A	Mx	.004	4.5
40	MP2A	X	-2.519	5
41	MP2A	Z	0	5
42	MP2A	Mx	-.003	5
43	MP2A	X	-2.519	5
44	MP2A	Z	0	5
45	MP2A	Mx	-.003	5

Member Point Loads (BLC 37 : Antenna Wm (300 Deg))

	Member Label	Direction	Magnitude[lb,k-ft]	Location[ft,%]
1	MP2A	X	-3.449	.5
2	MP2A	Z	-1.991	.5
3	MP2A	Mx	.000563	.5
4	MP2A	X	-3.449	5.5
5	MP2A	Z	-1.991	5.5
6	MP2A	Mx	.000563	5.5
7	MP2A	X	-3.449	.5
8	MP2A	Z	-1.991	.5
9	MP2A	Mx	.003	.5
10	MP2A	X	-3.449	5.5
11	MP2A	Z	-1.991	5.5
12	MP2A	Mx	.003	5.5
13	MP3A	X	-3.712	2
14	MP3A	Z	-2.143	2
15	MP3A	Mx	.001	2
16	MP3A	X	-3.712	4
17	MP3A	Z	-2.143	4
18	MP3A	Mx	.001	4
19	MP2A	X	-2.645	1
20	MP2A	Z	-1.527	1
21	MP2A	Mx	-.001	1
22	MP3A	X	-2.322	1
23	MP3A	Z	-1.341	1
24	MP3A	Mx	-.001	1
25	M13	X	-6.751	1.5
26	M13	Z	-3.898	1.5

Member Point Loads (BLC 37 : Antenna Wm (300 Deg)) (Continued)

	Member Label	Direction	Magnitude[lb,k-ft]	Location[ft,%]
27	M13	Mx	0	1.5
28	MP1A	X	-5.325	1.5
29	MP1A	Z	-3.075	1.5
30	MP1A	Mx	.003	1.5
31	MP1A	X	-5.325	4.5
32	MP1A	Z	-3.075	4.5
33	MP1A	Mx	.003	4.5
34	MP4A	X	-5.325	1.5
35	MP4A	Z	-3.075	1.5
36	MP4A	Mx	.003	1.5
37	MP4A	X	-5.325	4.5
38	MP4A	Z	-3.075	4.5
39	MP4A	Mx	.003	4.5
40	MP2A	X	-2.18	5
41	MP2A	Z	-1.258	5
42	MP2A	Mx	-.003	5
43	MP2A	X	-2.18	5
44	MP2A	Z	-1.258	5
45	MP2A	Mx	-.002	5

Member Point Loads (BLC 38 : Antenna Wm (330 Deg))

	Member Label	Direction	Magnitude[lb,k-ft]	Location[ft,%]
1	MP2A	X	-1.775	.5
2	MP2A	Z	-3.075	.5
3	MP2A	Mx	-.000906	.5
4	MP2A	X	-1.775	5.5
5	MP2A	Z	-3.075	5.5
6	MP2A	Mx	-.000906	5.5
7	MP2A	X	-1.775	.5
8	MP2A	Z	-3.075	.5
9	MP2A	Mx	.003	.5
10	MP2A	X	-1.775	5.5
11	MP2A	Z	-3.075	5.5
12	MP2A	Mx	.003	5.5
13	MP3A	X	-2.563	2
14	MP3A	Z	-4.44	2
15	MP3A	Mx	0	2
16	MP3A	X	-2.563	4
17	MP3A	Z	-4.44	4
18	MP3A	Mx	0	4
19	MP2A	X	-1.86	1
20	MP2A	Z	-3.222	1
21	MP2A	Mx	-.00093	1
22	MP3A	X	-1.798	1
23	MP3A	Z	-3.115	1
24	MP3A	Mx	-.000899	1
25	M13	X	-3.401	1.5
26	M13	Z	-5.89	1.5
27	M13	Mx	0	1.5
28	MP1A	X	-2.163	1.5
29	MP1A	Z	-3.746	1.5
30	MP1A	Mx	.001	1.5
31	MP1A	X	-2.163	4.5
32	MP1A	Z	-3.746	4.5
33	MP1A	Mx	.001	4.5
34	MP4A	X	-2.163	1.5
35	MP4A	Z	-3.746	1.5
36	MP4A	Mx	.001	1.5

Member Point Loads (BLC 38 : Antenna Wm (330 Deg)) (Continued)

	Member Label	Direction	Magnitude[lb,k-ft]	Location[ft,%]
37	MP4A	X	-2.163	4.5
38	MP4A	Z	-3.746	4.5
39	MP4A	Mx	.001	4.5
40	MP2A	X	-1.257	5
41	MP2A	Z	-2.176	5
42	MP2A	Mx	-.002	5
43	MP2A	X	-1.257	5
44	MP2A	Z	-2.176	5
45	MP2A	Mx	-.000532	5

Member Point Loads (BLC 77 : Lm1)

	Member Label	Direction	Magnitude[lb,k-ft]	Location[ft,%]
1	M16	Y	-500	4.5

Member Point Loads (BLC 78 : Lm2)

	Member Label	Direction	Magnitude[lb,k-ft]	Location[ft,%]
1	M17	Y	-500	1

Member Point Loads (BLC 79 : Lv1)

	Member Label	Direction	Magnitude[lb,k-ft]	Location[ft,%]
1	M17	Y	-250	0

Member Point Loads (BLC 80 : Lv2)

	Member Label	Direction	Magnitude[lb,k-ft]	Location[ft,%]
1	M17	Y	-250	%100

Member Point Loads (BLC 81 : Antenna Ev)

	Member Label	Direction	Magnitude[lb,k-ft]	Location[ft,%]
1	MP2A	Y	-1.266	.5
2	MP2A	My	-.000633	.5
3	MP2A	Mz	.000738	.5
4	MP2A	Y	-1.266	5.5
5	MP2A	My	-.000633	5.5
6	MP2A	Mz	.000738	5.5
7	MP2A	Y	-1.266	.5
8	MP2A	My	-.000633	.5
9	MP2A	Mz	-.000738	.5
10	MP2A	Y	-1.266	5.5
11	MP2A	My	-.000633	5.5
12	MP2A	Mz	-.000738	5.5
13	MP3A	Y	-1.598	2
14	MP3A	My	-.000692	2
15	MP3A	Mz	.000399	2
16	MP3A	Y	-1.598	4
17	MP3A	My	-.000692	4
18	MP3A	Mz	.000399	4
19	MP2A	Y	-3.097	1
20	MP2A	My	.002	1
21	MP2A	Mz	0	1
22	MP3A	Y	-2.58	1
23	MP3A	My	.001	1
24	MP3A	Mz	0	1
25	M13	Y	-1.174	1.5
26	M13	My	0	1.5
27	M13	Mz	0	1.5
28	MP1A	Y	-.22	1.5

Member Point Loads (BLC 81 : Antenna Ev) (Continued)

	Member Label	Direction	Magnitude[lb,k-ft]	Location[ft,%]
29	MP1A	My	-.00011	1.5
30	MP1A	Mz	0	1.5
31	MP1A	Y	-.22	4.5
32	MP1A	My	-.00011	4.5
33	MP1A	Mz	0	4.5
34	MP4A	Y	-.22	1.5
35	MP4A	My	-.00011	1.5
36	MP4A	Mz	0	1.5
37	MP4A	Y	-.22	4.5
38	MP4A	My	-.00011	4.5
39	MP4A	Mz	0	4.5
40	MP2A	Y	-.646	5
41	MP2A	My	.000646	5
42	MP2A	Mz	.000215	5
43	MP2A	Y	-.646	5
44	MP2A	My	.000646	5
45	MP2A	Mz	-.000215	5

Member Point Loads (BLC 82 : Antenna Eh (0 Deg))

	Member Label	Direction	Magnitude[lb,k-ft]	Location[ft,%]
1	MP2A	Z	-3.165	.5
2	MP2A	Mx	-.002	.5
3	MP2A	Z	-3.165	5.5
4	MP2A	Mx	-.002	5.5
5	MP2A	Z	-3.165	.5
6	MP2A	Mx	.002	.5
7	MP2A	Z	-3.165	5.5
8	MP2A	Mx	.002	5.5
9	MP3A	Z	-3.995	2
10	MP3A	Mx	-.000999	2
11	MP3A	Z	-3.995	4
12	MP3A	Mx	-.000999	4
13	MP2A	Z	-7.742	1
14	MP2A	Mx	0	1
15	MP3A	Z	-6.449	1
16	MP3A	Mx	0	1
17	M13	Z	-2.935	1.5
18	M13	Mx	0	1.5
19	MP1A	Z	-.55	1.5
20	MP1A	Mx	0	1.5
21	MP1A	Z	-.55	4.5
22	MP1A	Mx	0	4.5
23	MP4A	Z	-.55	1.5
24	MP4A	Mx	0	1.5
25	MP4A	Z	-.55	4.5
26	MP4A	Mx	0	4.5
27	MP2A	Z	-1.615	5
28	MP2A	Mx	-.000538	5
29	MP2A	Z	-1.615	5
30	MP2A	Mx	.000538	5

Member Point Loads (BLC 83 : Antenna Eh (90 Deg))

	Member Label	Direction	Magnitude[lb,k-ft]	Location[ft,%]
1	MP2A	X	3.165	.5
2	MP2A	Mx	-.002	.5
3	MP2A	X	3.165	5.5
4	MP2A	Mx	-.002	5.5
5	MP2A	X	3.165	.5

Member Point Loads (BLC 83 : Antenna Eh (90 Deg)) (Continued)

	Member Label	Direction	Magnitude[lb,k-ft]	Location[ft,%]
6	MP2A	Mx	-.002	.5
7	MP2A	X	3.165	5.5
8	MP2A	Mx	-.002	5.5
9	MP3A	X	3.995	2
10	MP3A	Mx	-.002	2
11	MP3A	X	3.995	4
12	MP3A	Mx	-.002	4
13	MP2A	X	7.742	1
14	MP2A	Mx	.004	1
15	MP3A	X	6.449	1
16	MP3A	Mx	.003	1
17	M13	X	2.935	1.5
18	M13	Mx	0	1.5
19	MP1A	X	.55	1.5
20	MP1A	Mx	-.000275	1.5
21	MP1A	X	.55	4.5
22	MP1A	Mx	-.000275	4.5
23	MP4A	X	.55	1.5
24	MP4A	Mx	-.000275	1.5
25	MP4A	X	.55	4.5
26	MP4A	Mx	-.000275	4.5
27	MP2A	X	1.615	5
28	MP2A	Mx	.002	5
29	MP2A	X	1.615	5
30	MP2A	Mx	.002	5

Member Distributed Loads (BLC 40 : Structure Di)

	Member Label	Direction	Start Magnitude[lb/ft,...	End Magnitude[lb/ft,...	Start Location[ft,%]	End Location[ft,%]
1	M3	Y	-6.727	-6.727	0	%100
2	M6	Y	-6.727	-6.727	0	%100
3	M9	Y	-8.105	-8.105	0	%100
4	M10	Y	-8.105	-8.105	0	%100
5	M11	Y	-8.105	-8.105	0	%100
6	M12	Y	-5.068	-5.068	0	%100
7	M13	Y	-5.068	-5.068	0	%100
8	M14	Y	-5.068	-5.068	0	%100
9	M15	Y	-5.068	-5.068	0	%100
10	M16	Y	-5.068	-5.068	0	%100
11	M17	Y	-5.068	-5.068	0	%100
12	M18	Y	-5.068	-5.068	0	%100
13	M19	Y	-5.068	-5.068	0	%100
14	M20	Y	-5.068	-5.068	0	%100
15	M21	Y	-5.068	-5.068	0	%100
16	M22	Y	-5.068	-5.068	0	%100
17	M23	Y	-5.068	-5.068	0	%100
18	M24	Y	-5.068	-5.068	0	%100
19	MP1A	Y	-5.068	-5.068	0	%100
20	MP2A	Y	-5.782	-5.782	0	%100
21	MP3A	Y	-5.068	-5.068	0	%100
22	MP4A	Y	-5.068	-5.068	0	%100
23	M33	Y	-5.782	-5.782	0	%100
24	M34	Y	-4.62	-4.62	0	%100
25	M35	Y	-4.62	-4.62	0	%100
26	M36	Y	-4.62	-4.62	0	%100
27	M37	Y	-4.62	-4.62	0	%100
28	M42	Y	-5.782	-5.782	0	%100
29	M47	Y	-6.727	-6.727	0	%100

Member Distributed Loads (BLC 40 : Structure Di) (Continued)

	Member Label	Direction	Start Magnitude[lb/ft,...	End Magnitude[lb/ft,...	Start Location[ft,%]	End Location[ft,%]
30	M48	Y	-6.727	-6.727	0	%100
31	M54	Y	-6.727	-6.727	0	%100
32	M55	Y	-6.727	-6.727	0	%100

Member Distributed Loads (BLC 41 : Structure Wo (0 Deg))

	Member Label	Direction	Start Magnitude[lb/ft,...	End Magnitude[lb/ft,...	Start Location[ft,%]	End Location[ft,%]
1	M3	X	0	0	0	%100
2	M3	Z	-2.502	-2.502	0	%100
3	M6	X	0	0	0	%100
4	M6	Z	-2.502	-2.502	0	%100
5	M9	X	0	0	0	%100
6	M9	Z	-11.692	-11.692	0	%100
7	M10	X	0	0	0	%100
8	M10	Z	0	0	0	%100
9	M11	X	0	0	0	%100
10	M11	Z	0	0	0	%100
11	M12	X	0	0	0	%100
12	M12	Z	-7.18	-7.18	0	%100
13	M13	X	0	0	0	%100
14	M13	Z	-7.18	-7.18	0	%100
15	M14	X	0	0	0	%100
16	M14	Z	-7.18	-7.18	0	%100
17	M15	X	0	0	0	%100
18	M15	Z	-9.129	-9.129	0	%100
19	M16	X	0	0	0	%100
20	M16	Z	-9.129	-9.129	0	%100
21	M17	X	0	0	0	%100
22	M17	Z	-9.129	-9.129	0	%100
23	M18	X	0	0	0	%100
24	M18	Z	-9.129	-9.129	0	%100
25	M19	X	0	0	0	%100
26	M19	Z	-6.975	-6.975	0	%100
27	M20	X	0	0	0	%100
28	M20	Z	-6.975	-6.975	0	%100
29	M21	X	0	0	0	%100
30	M21	Z	-6.975	-6.975	0	%100
31	M22	X	0	0	0	%100
32	M22	Z	-6.975	-6.975	0	%100
33	M23	X	0	0	0	%100
34	M23	Z	-6.975	-6.975	0	%100
35	M24	X	0	0	0	%100
36	M24	Z	-6.975	-6.975	0	%100
37	MP1A	X	0	0	0	%100
38	MP1A	Z	-9.129	-9.129	0	%100
39	MP2A	X	0	0	0	%100
40	MP2A	Z	-11.051	-11.051	0	%100
41	MP3A	X	0	0	0	%100
42	MP3A	Z	-9.129	-9.129	0	%100
43	MP4A	X	0	0	0	%100
44	MP4A	Z	-9.129	-9.129	0	%100
45	M33	X	0	0	0	%100
46	M33	Z	-.028	-.028	0	%100
47	M34	X	0	0	0	%100
48	M34	Z	-5.766	-5.766	0	%100
49	M35	X	0	0	0	%100
50	M35	Z	-5.766	-5.766	0	%100
51	M36	X	0	0	0	%100
52	M36	Z	-5.766	-5.766	0	%100

Member Distributed Loads (BLC 41 : Structure Wo (0 Deg)) (Continued)

	Member Label	Direction	Start Magnitude[lb/ft,...	End Magnitude[lb/ft,...	Start Location[ft,%]	End Location[ft,%]
53	M37	X	0	0	0	%100
54	M37	Z	-5.766	-5.766	0	%100
55	M42	X	0	0	0	%100
56	M42	Z	-11.051	-11.051	0	%100
57	M47	X	0	0	0	%100
58	M47	Z	-8.496	-8.496	0	%100
59	M48	X	0	0	0	%100
60	M48	Z	-8.351	-8.351	0	%100
61	M54	X	0	0	0	%100
62	M54	Z	-9.473	-9.473	0	%100
63	M55	X	0	0	0	%100
64	M55	Z	-9.368	-9.368	0	%100

Member Distributed Loads (BLC 42 : Structure Wo (30 Deg))

	Member Label	Direction	Start Magnitude[lb/ft,...	End Magnitude[lb/ft,...	Start Location[ft,%]	End Location[ft,%]
1	M3	X	0	0	0	%100
2	M3	Z	0	0	0	%100
3	M6	X	0	0	0	%100
4	M6	Z	0	0	0	%100
5	M9	X	5.846	5.846	0	%100
6	M9	Z	-10.126	-10.126	0	%100
7	M10	X	1.398	1.398	0	%100
8	M10	Z	-2.422	-2.422	0	%100
9	M11	X	1.369	1.369	0	%100
10	M11	Z	-2.372	-2.372	0	%100
11	M12	X	3.59	3.59	0	%100
12	M12	Z	-6.218	-6.218	0	%100
13	M13	X	3.59	3.59	0	%100
14	M13	Z	-6.218	-6.218	0	%100
15	M14	X	3.59	3.59	0	%100
16	M14	Z	-6.218	-6.218	0	%100
17	M15	X	3.423	3.423	0	%100
18	M15	Z	-5.929	-5.929	0	%100
19	M16	X	3.423	3.423	0	%100
20	M16	Z	-5.929	-5.929	0	%100
21	M17	X	3.423	3.423	0	%100
22	M17	Z	-5.929	-5.929	0	%100
23	M18	X	3.423	3.423	0	%100
24	M18	Z	-5.929	-5.929	0	%100
25	M19	X	3.518	3.518	0	%100
26	M19	Z	-6.094	-6.094	0	%100
27	M20	X	3.518	3.518	0	%100
28	M20	Z	-6.094	-6.094	0	%100
29	M21	X	3.518	3.518	0	%100
30	M21	Z	-6.094	-6.094	0	%100
31	M22	X	3.518	3.518	0	%100
32	M22	Z	-6.094	-6.094	0	%100
33	M23	X	3.518	3.518	0	%100
34	M23	Z	-6.094	-6.094	0	%100
35	M24	X	3.518	3.518	0	%100
36	M24	Z	-6.094	-6.094	0	%100
37	MP1A	X	4.564	4.564	0	%100
38	MP1A	Z	-7.906	-7.906	0	%100
39	MP2A	X	5.525	5.525	0	%100
40	MP2A	Z	-9.57	-9.57	0	%100
41	MP3A	X	4.564	4.564	0	%100
42	MP3A	Z	-7.906	-7.906	0	%100
43	MP4A	X	4.564	4.564	0	%100

Member Distributed Loads (BLC 42 : Structure Wo (30 Deg)) (Continued)

	Member Label	Direction	Start Magnitude[lb/ft,...	End Magnitude[lb/ft,...	Start Location[ft,%]	End Location[ft,%]
44	MP4A	Z	-7.906	-7.906	0	%100
45	M33	X	1.44	1.44	0	%100
46	M33	Z	-2.494	-2.494	0	%100
47	M34	X	3.844	3.844	0	%100
48	M34	Z	-6.658	-6.658	0	%100
49	M35	X	3.844	3.844	0	%100
50	M35	Z	-6.658	-6.658	0	%100
51	M36	X	3.844	3.844	0	%100
52	M36	Z	-6.658	-6.658	0	%100
53	M37	X	3.844	3.844	0	%100
54	M37	Z	-6.658	-6.658	0	%100
55	M42	X	4.144	4.144	0	%100
56	M42	Z	-7.178	-7.178	0	%100
57	M47	X	1.352	1.352	0	%100
58	M47	Z	-2.341	-2.341	0	%100
59	M48	X	7.356	7.356	0	%100
60	M48	Z	-12.74	-12.74	0	%100
61	M54	X	2.805	2.805	0	%100
62	M54	Z	-4.858	-4.858	0	%100
63	M55	X	7.231	7.231	0	%100
64	M55	Z	-12.525	-12.525	0	%100

Member Distributed Loads (BLC 43 : Structure Wo (60 Deg))

	Member Label	Direction	Start Magnitude[lb/ft,...	End Magnitude[lb/ft,...	Start Location[ft,%]	End Location[ft,%]
1	M3	X	2.168	2.168	0	%100
2	M3	Z	-1.251	-1.251	0	%100
3	M6	X	2.168	2.168	0	%100
4	M6	Z	-1.251	-1.251	0	%100
5	M9	X	10.126	10.126	0	%100
6	M9	Z	-5.846	-5.846	0	%100
7	M10	X	7.266	7.266	0	%100
8	M10	Z	-4.195	-4.195	0	%100
9	M11	X	7.115	7.115	0	%100
10	M11	Z	-4.108	-4.108	0	%100
11	M12	X	6.218	6.218	0	%100
12	M12	Z	-3.59	-3.59	0	%100
13	M13	X	6.218	6.218	0	%100
14	M13	Z	-3.59	-3.59	0	%100
15	M14	X	6.218	6.218	0	%100
16	M14	Z	-3.59	-3.59	0	%100
17	M15	X	1.976	1.976	0	%100
18	M15	Z	-1.141	-1.141	0	%100
19	M16	X	1.976	1.976	0	%100
20	M16	Z	-1.141	-1.141	0	%100
21	M17	X	1.976	1.976	0	%100
22	M17	Z	-1.141	-1.141	0	%100
23	M18	X	1.976	1.976	0	%100
24	M18	Z	-1.141	-1.141	0	%100
25	M19	X	6.2	6.2	0	%100
26	M19	Z	-3.579	-3.579	0	%100
27	M20	X	6.2	6.2	0	%100
28	M20	Z	-3.579	-3.579	0	%100
29	M21	X	6.2	6.2	0	%100
30	M21	Z	-3.579	-3.579	0	%100
31	M22	X	6.2	6.2	0	%100
32	M22	Z	-3.579	-3.579	0	%100
33	M23	X	6.2	6.2	0	%100
34	M23	Z	-3.579	-3.579	0	%100

Member Distributed Loads (BLC 43 : Structure Wo (60 Deg)) (Continued)

	Member Label	Direction	Start Magnitude[lb/ft,...	End Magnitude[lb/ft,...	Start Location[ft,%]	End Location[ft,%]
35	M24	X	6.2	6.2	0	%100
36	M24	Z	-3.579	-3.579	0	%100
37	MP1A	X	7.906	7.906	0	%100
38	MP1A	Z	-4.564	-4.564	0	%100
39	MP2A	X	9.57	9.57	0	%100
40	MP2A	Z	-5.525	-5.525	0	%100
41	MP3A	X	7.906	7.906	0	%100
42	MP3A	Z	-4.564	-4.564	0	%100
43	MP4A	X	7.906	7.906	0	%100
44	MP4A	Z	-4.564	-4.564	0	%100
45	M33	X	6.653	6.653	0	%100
46	M33	Z	-3.841	-3.841	0	%100
47	M34	X	4.993	4.993	0	%100
48	M34	Z	-2.883	-2.883	0	%100
49	M35	X	4.993	4.993	0	%100
50	M35	Z	-2.883	-2.883	0	%100
51	M36	X	4.993	4.993	0	%100
52	M36	Z	-2.883	-2.883	0	%100
53	M37	X	4.993	4.993	0	%100
54	M37	Z	-2.883	-2.883	0	%100
55	M42	X	2.393	2.393	0	%100
56	M42	Z	-1.381	-1.381	0	%100
57	M47	X	2.786	2.786	0	%100
58	M47	Z	-1.609	-1.609	0	%100
59	M48	X	13.329	13.329	0	%100
60	M48	Z	-7.695	-7.695	0	%100
61	M54	X	5.922	5.922	0	%100
62	M54	Z	-3.419	-3.419	0	%100
63	M55	X	13.717	13.717	0	%100
64	M55	Z	-7.92	-7.92	0	%100

Member Distributed Loads (BLC 44 : Structure Wo (90 Deg))

	Member Label	Direction	Start Magnitude[lb/ft,...	End Magnitude[lb/ft,...	Start Location[ft,%]	End Location[ft,%]
1	M3	X	7.508	7.508	0	%100
2	M3	Z	0	0	0	%100
3	M6	X	7.508	7.508	0	%100
4	M6	Z	0	0	0	%100
5	M9	X	11.692	11.692	0	%100
6	M9	Z	0	0	0	%100
7	M10	X	11.187	11.187	0	%100
8	M10	Z	0	0	0	%100
9	M11	X	10.955	10.955	0	%100
10	M11	Z	0	0	0	%100
11	M12	X	7.18	7.18	0	%100
12	M12	Z	0	0	0	%100
13	M13	X	7.18	7.18	0	%100
14	M13	Z	0	0	0	%100
15	M14	X	7.18	7.18	0	%100
16	M14	Z	0	0	0	%100
17	M15	X	0	0	0	%100
18	M15	Z	0	0	0	%100
19	M16	X	0	0	0	%100
20	M16	Z	0	0	0	%100
21	M17	X	0	0	0	%100
22	M17	Z	0	0	0	%100
23	M18	X	0	0	0	%100
24	M18	Z	0	0	0	%100
25	M19	X	7.22	7.22	0	%100

Member Distributed Loads (BLC 44 : Structure Wo (90 Deg)) (Continued)

	Member Label	Direction	Start Magnitude[lb/ft,...	End Magnitude[lb/ft,...	Start Location[ft,%]	End Location[ft,%]
26	M19	Z	0	0	0	%100
27	M20	X	7.22	7.22	0	%100
28	M20	Z	0	0	0	%100
29	M21	X	7.22	7.22	0	%100
30	M21	Z	0	0	0	%100
31	M22	X	7.22	7.22	0	%100
32	M22	Z	0	0	0	%100
33	M23	X	7.22	7.22	0	%100
34	M23	Z	0	0	0	%100
35	M24	X	7.22	7.22	0	%100
36	M24	Z	0	0	0	%100
37	MP1A	X	9.129	9.129	0	%100
38	MP1A	Z	0	0	0	%100
39	MP2A	X	11.051	11.051	0	%100
40	MP2A	Z	0	0	0	%100
41	MP3A	X	9.129	9.129	0	%100
42	MP3A	Z	0	0	0	%100
43	MP4A	X	9.129	9.129	0	%100
44	MP4A	Z	0	0	0	%100
45	M33	X	9.634	9.634	0	%100
46	M33	Z	0	0	0	%100
47	M34	X	1.922	1.922	0	%100
48	M34	Z	0	0	0	%100
49	M35	X	1.922	1.922	0	%100
50	M35	Z	0	0	0	%100
51	M36	X	1.922	1.922	0	%100
52	M36	Z	0	0	0	%100
53	M37	X	1.922	1.922	0	%100
54	M37	Z	0	0	0	%100
55	M42	X	0	0	0	%100
56	M42	Z	0	0	0	%100
57	M47	X	9.525	9.525	0	%100
58	M47	Z	0	0	0	%100
59	M48	X	9.709	9.709	0	%100
60	M48	Z	0	0	0	%100
61	M54	X	11.93	11.93	0	%100
62	M54	Z	0	0	0	%100
63	M55	X	12.122	12.122	0	%100
64	M55	Z	0	0	0	%100

Member Distributed Loads (BLC 45 : Structure Wo (120 Deg))

	Member Label	Direction	Start Magnitude[lb/ft,...	End Magnitude[lb/ft,...	Start Location[ft,%]	End Location[ft,%]
1	M3	X	8.669	8.669	0	%100
2	M3	Z	5.005	5.005	0	%100
3	M6	X	8.669	8.669	0	%100
4	M6	Z	5.005	5.005	0	%100
5	M9	X	10.126	10.126	0	%100
6	M9	Z	5.846	5.846	0	%100
7	M10	X	7.266	7.266	0	%100
8	M10	Z	4.195	4.195	0	%100
9	M11	X	7.115	7.115	0	%100
10	M11	Z	4.108	4.108	0	%100
11	M12	X	6.218	6.218	0	%100
12	M12	Z	3.59	3.59	0	%100
13	M13	X	6.218	6.218	0	%100
14	M13	Z	3.59	3.59	0	%100
15	M14	X	6.218	6.218	0	%100
16	M14	Z	3.59	3.59	0	%100

Member Distributed Loads (BLC 45 : Structure Wo (120 Deg)) (Continued)

	Member Label	Direction	Start Magnitude[lb/ft,...	End Magnitude[lb/ft,...	Start Location[ft,%]	End Location[ft,%]
17	M15	X	1.976	1.976	0	%100
18	M15	Z	1.141	1.141	0	%100
19	M16	X	1.976	1.976	0	%100
20	M16	Z	1.141	1.141	0	%100
21	M17	X	1.976	1.976	0	%100
22	M17	Z	1.141	1.141	0	%100
23	M18	X	1.976	1.976	0	%100
24	M18	Z	1.141	1.141	0	%100
25	M19	X	6.2	6.2	0	%100
26	M19	Z	3.579	3.579	0	%100
27	M20	X	6.2	6.2	0	%100
28	M20	Z	3.579	3.579	0	%100
29	M21	X	6.2	6.2	0	%100
30	M21	Z	3.579	3.579	0	%100
31	M22	X	6.2	6.2	0	%100
32	M22	Z	3.579	3.579	0	%100
33	M23	X	6.2	6.2	0	%100
34	M23	Z	3.579	3.579	0	%100
35	M24	X	6.2	6.2	0	%100
36	M24	Z	3.579	3.579	0	%100
37	MP1A	X	7.906	7.906	0	%100
38	MP1A	Z	4.564	4.564	0	%100
39	MP2A	X	9.57	9.57	0	%100
40	MP2A	Z	5.525	5.525	0	%100
41	MP3A	X	7.906	7.906	0	%100
42	MP3A	Z	4.564	4.564	0	%100
43	MP4A	X	7.906	7.906	0	%100
44	MP4A	Z	4.564	4.564	0	%100
45	M33	X	5.873	5.873	0	%100
46	M33	Z	3.391	3.391	0	%100
47	M34	X	0	0	0	%100
48	M34	Z	0	0	0	%100
49	M35	X	0	0	0	%100
50	M35	Z	0	0	0	%100
51	M36	X	0	0	0	%100
52	M36	Z	0	0	0	%100
53	M37	X	0	0	0	%100
54	M37	Z	0	0	0	%100
55	M42	X	2.393	2.393	0	%100
56	M42	Z	1.381	1.381	0	%100
57	M47	X	13.266	13.266	0	%100
58	M47	Z	7.659	7.659	0	%100
59	M48	X	2.9	2.9	0	%100
60	M48	Z	1.674	1.674	0	%100
61	M54	X	13.677	13.677	0	%100
62	M54	Z	7.897	7.897	0	%100
63	M55	X	6.086	6.086	0	%100
64	M55	Z	3.514	3.514	0	%100

Member Distributed Loads (BLC 46 : Structure Wo (150 Deg))

	Member Label	Direction	Start Magnitude[lb/ft,...	End Magnitude[lb/ft,...	Start Location[ft,%]	End Location[ft,%]
1	M3	X	3.754	3.754	0	%100
2	M3	Z	6.501	6.501	0	%100
3	M6	X	3.754	3.754	0	%100
4	M6	Z	6.501	6.501	0	%100
5	M9	X	5.846	5.846	0	%100
6	M9	Z	10.126	10.126	0	%100
7	M10	X	1.398	1.398	0	%100

Member Distributed Loads (BLC 46 : Structure Wo (150 Deg)) (Continued)

	Member Label	Direction	Start Magnitude[lb/ft,...	End Magnitude[lb/ft,...	Start Location[ft,%]	End Location[ft,%]
8	M10	Z	2.422	2.422	0	%100
9	M11	X	1.369	1.369	0	%100
10	M11	Z	2.372	2.372	0	%100
11	M12	X	3.59	3.59	0	%100
12	M12	Z	6.218	6.218	0	%100
13	M13	X	3.59	3.59	0	%100
14	M13	Z	6.218	6.218	0	%100
15	M14	X	3.59	3.59	0	%100
16	M14	Z	6.218	6.218	0	%100
17	M15	X	3.423	3.423	0	%100
18	M15	Z	5.929	5.929	0	%100
19	M16	X	3.423	3.423	0	%100
20	M16	Z	5.929	5.929	0	%100
21	M17	X	3.423	3.423	0	%100
22	M17	Z	5.929	5.929	0	%100
23	M18	X	3.423	3.423	0	%100
24	M18	Z	5.929	5.929	0	%100
25	M19	X	3.518	3.518	0	%100
26	M19	Z	6.094	6.094	0	%100
27	M20	X	3.518	3.518	0	%100
28	M20	Z	6.094	6.094	0	%100
29	M21	X	3.518	3.518	0	%100
30	M21	Z	6.094	6.094	0	%100
31	M22	X	3.518	3.518	0	%100
32	M22	Z	6.094	6.094	0	%100
33	M23	X	3.518	3.518	0	%100
34	M23	Z	6.094	6.094	0	%100
35	M24	X	3.518	3.518	0	%100
36	M24	Z	6.094	6.094	0	%100
37	MP1A	X	4.564	4.564	0	%100
38	MP1A	Z	7.906	7.906	0	%100
39	MP2A	X	5.525	5.525	0	%100
40	MP2A	Z	9.57	9.57	0	%100
41	MP3A	X	4.564	4.564	0	%100
42	MP3A	Z	7.906	7.906	0	%100
43	MP4A	X	4.564	4.564	0	%100
44	MP4A	Z	7.906	7.906	0	%100
45	M33	X	.989	.989	0	%100
46	M33	Z	1.714	1.714	0	%100
47	M34	X	.961	.961	0	%100
48	M34	Z	1.664	1.664	0	%100
49	M35	X	.961	.961	0	%100
50	M35	Z	1.664	1.664	0	%100
51	M36	X	.961	.961	0	%100
52	M36	Z	1.664	1.664	0	%100
53	M37	X	.961	.961	0	%100
54	M37	Z	1.664	1.664	0	%100
55	M42	X	4.144	4.144	0	%100
56	M42	Z	7.178	7.178	0	%100
57	M47	X	7.402	7.402	0	%100
58	M47	Z	12.82	12.82	0	%100
59	M48	X	1.335	1.335	0	%100
60	M48	Z	2.311	2.311	0	%100
61	M54	X	7.283	7.283	0	%100
62	M54	Z	12.614	12.614	0	%100
63	M55	X	2.825	2.825	0	%100
64	M55	Z	4.893	4.893	0	%100

Member Distributed Loads (BLC 47 : Structure Wo (180 Deg))

	Member Label	Direction	Start Magnitude[lb/ft,...	End Magnitude[lb/ft,...	Start Location[ft,%]	End Location[ft,%]
1	M3	X	0	0	0	%100
2	M3	Z	2.502	2.502	0	%100
3	M6	X	0	0	0	%100
4	M6	Z	2.502	2.502	0	%100
5	M9	X	0	0	0	%100
6	M9	Z	11.692	11.692	0	%100
7	M10	X	0	0	0	%100
8	M10	Z	0	0	0	%100
9	M11	X	0	0	0	%100
10	M11	Z	0	0	0	%100
11	M12	X	0	0	0	%100
12	M12	Z	7.18	7.18	0	%100
13	M13	X	0	0	0	%100
14	M13	Z	7.18	7.18	0	%100
15	M14	X	0	0	0	%100
16	M14	Z	7.18	7.18	0	%100
17	M15	X	0	0	0	%100
18	M15	Z	9.129	9.129	0	%100
19	M16	X	0	0	0	%100
20	M16	Z	9.129	9.129	0	%100
21	M17	X	0	0	0	%100
22	M17	Z	9.129	9.129	0	%100
23	M18	X	0	0	0	%100
24	M18	Z	9.129	9.129	0	%100
25	M19	X	0	0	0	%100
26	M19	Z	6.975	6.975	0	%100
27	M20	X	0	0	0	%100
28	M20	Z	6.975	6.975	0	%100
29	M21	X	0	0	0	%100
30	M21	Z	6.975	6.975	0	%100
31	M22	X	0	0	0	%100
32	M22	Z	6.975	6.975	0	%100
33	M23	X	0	0	0	%100
34	M23	Z	6.975	6.975	0	%100
35	M24	X	0	0	0	%100
36	M24	Z	6.975	6.975	0	%100
37	MP1A	X	0	0	0	%100
38	MP1A	Z	9.129	9.129	0	%100
39	MP2A	X	0	0	0	%100
40	MP2A	Z	11.051	11.051	0	%100
41	MP3A	X	0	0	0	%100
42	MP3A	Z	9.129	9.129	0	%100
43	MP4A	X	0	0	0	%100
44	MP4A	Z	9.129	9.129	0	%100
45	M33	X	0	0	0	%100
46	M33	Z	.028	.028	0	%100
47	M34	X	0	0	0	%100
48	M34	Z	5.766	5.766	0	%100
49	M35	X	0	0	0	%100
50	M35	Z	5.766	5.766	0	%100
51	M36	X	0	0	0	%100
52	M36	Z	5.766	5.766	0	%100
53	M37	X	0	0	0	%100
54	M37	Z	5.766	5.766	0	%100
55	M42	X	0	0	0	%100
56	M42	Z	11.051	11.051	0	%100
57	M47	X	0	0	0	%100
58	M47	Z	8.496	8.496	0	%100
59	M48	X	0	0	0	%100

Member Distributed Loads (BLC 47 : Structure Wo (180 Deg)) (Continued)

	Member Label	Direction	Start Magnitude[lb/ft,...	End Magnitude[lb/ft,...	Start Location[ft,%]	End Location[ft,%]
60	M48	Z	8.351	8.351	0	%100
61	M54	X	0	0	0	%100
62	M54	Z	9.473	9.473	0	%100
63	M55	X	0	0	0	%100
64	M55	Z	9.368	9.368	0	%100

Member Distributed Loads (BLC 48 : Structure Wo (210 Deg))

	Member Label	Direction	Start Magnitude[lb/ft,...	End Magnitude[lb/ft,...	Start Location[ft,%]	End Location[ft,%]
1	M3	X	0	0	0	%100
2	M3	Z	0	0	0	%100
3	M6	X	0	0	0	%100
4	M6	Z	0	0	0	%100
5	M9	X	-5.846	-5.846	0	%100
6	M9	Z	10.126	10.126	0	%100
7	M10	X	-1.398	-1.398	0	%100
8	M10	Z	2.422	2.422	0	%100
9	M11	X	-1.369	-1.369	0	%100
10	M11	Z	2.372	2.372	0	%100
11	M12	X	-3.59	-3.59	0	%100
12	M12	Z	6.218	6.218	0	%100
13	M13	X	-3.59	-3.59	0	%100
14	M13	Z	6.218	6.218	0	%100
15	M14	X	-3.59	-3.59	0	%100
16	M14	Z	6.218	6.218	0	%100
17	M15	X	-3.423	-3.423	0	%100
18	M15	Z	5.929	5.929	0	%100
19	M16	X	-3.423	-3.423	0	%100
20	M16	Z	5.929	5.929	0	%100
21	M17	X	-3.423	-3.423	0	%100
22	M17	Z	5.929	5.929	0	%100
23	M18	X	-3.423	-3.423	0	%100
24	M18	Z	5.929	5.929	0	%100
25	M19	X	-3.518	-3.518	0	%100
26	M19	Z	6.094	6.094	0	%100
27	M20	X	-3.518	-3.518	0	%100
28	M20	Z	6.094	6.094	0	%100
29	M21	X	-3.518	-3.518	0	%100
30	M21	Z	6.094	6.094	0	%100
31	M22	X	-3.518	-3.518	0	%100
32	M22	Z	6.094	6.094	0	%100
33	M23	X	-3.518	-3.518	0	%100
34	M23	Z	6.094	6.094	0	%100
35	M24	X	-3.518	-3.518	0	%100
36	M24	Z	6.094	6.094	0	%100
37	MP1A	X	-4.564	-4.564	0	%100
38	MP1A	Z	7.906	7.906	0	%100
39	MP2A	X	-5.525	-5.525	0	%100
40	MP2A	Z	9.57	9.57	0	%100
41	MP3A	X	-4.564	-4.564	0	%100
42	MP3A	Z	7.906	7.906	0	%100
43	MP4A	X	-4.564	-4.564	0	%100
44	MP4A	Z	7.906	7.906	0	%100
45	M33	X	-1.44	-1.44	0	%100
46	M33	Z	2.494	2.494	0	%100
47	M34	X	-3.844	-3.844	0	%100
48	M34	Z	6.658	6.658	0	%100
49	M35	X	-3.844	-3.844	0	%100
50	M35	Z	6.658	6.658	0	%100

Member Distributed Loads (BLC 48 : Structure Wo (210 Deg)) (Continued)

	Member Label	Direction	Start Magnitude[lb/ft,...	End Magnitude[lb/ft,...	Start Location[ft,%]	End Location[ft,%]
51	M36	X	-3.844	-3.844	0	%100
52	M36	Z	6.658	6.658	0	%100
53	M37	X	-3.844	-3.844	0	%100
54	M37	Z	6.658	6.658	0	%100
55	M42	X	-4.144	-4.144	0	%100
56	M42	Z	7.178	7.178	0	%100
57	M47	X	-1.352	-1.352	0	%100
58	M47	Z	2.341	2.341	0	%100
59	M48	X	-7.356	-7.356	0	%100
60	M48	Z	12.74	12.74	0	%100
61	M54	X	-2.805	-2.805	0	%100
62	M54	Z	4.858	4.858	0	%100
63	M55	X	-7.231	-7.231	0	%100
64	M55	Z	12.525	12.525	0	%100

Member Distributed Loads (BLC 49 : Structure Wo (240 Deg))

	Member Label	Direction	Start Magnitude[lb/ft,...	End Magnitude[lb/ft,...	Start Location[ft,%]	End Location[ft,%]
1	M3	X	-2.168	-2.168	0	%100
2	M3	Z	1.251	1.251	0	%100
3	M6	X	-2.168	-2.168	0	%100
4	M6	Z	1.251	1.251	0	%100
5	M9	X	-10.126	-10.126	0	%100
6	M9	Z	5.846	5.846	0	%100
7	M10	X	-7.266	-7.266	0	%100
8	M10	Z	4.195	4.195	0	%100
9	M11	X	-7.115	-7.115	0	%100
10	M11	Z	4.108	4.108	0	%100
11	M12	X	-6.218	-6.218	0	%100
12	M12	Z	3.59	3.59	0	%100
13	M13	X	-6.218	-6.218	0	%100
14	M13	Z	3.59	3.59	0	%100
15	M14	X	-6.218	-6.218	0	%100
16	M14	Z	3.59	3.59	0	%100
17	M15	X	-1.976	-1.976	0	%100
18	M15	Z	1.141	1.141	0	%100
19	M16	X	-1.976	-1.976	0	%100
20	M16	Z	1.141	1.141	0	%100
21	M17	X	-1.976	-1.976	0	%100
22	M17	Z	1.141	1.141	0	%100
23	M18	X	-1.976	-1.976	0	%100
24	M18	Z	1.141	1.141	0	%100
25	M19	X	-6.2	-6.2	0	%100
26	M19	Z	3.579	3.579	0	%100
27	M20	X	-6.2	-6.2	0	%100
28	M20	Z	3.579	3.579	0	%100
29	M21	X	-6.2	-6.2	0	%100
30	M21	Z	3.579	3.579	0	%100
31	M22	X	-6.2	-6.2	0	%100
32	M22	Z	3.579	3.579	0	%100
33	M23	X	-6.2	-6.2	0	%100
34	M23	Z	3.579	3.579	0	%100
35	M24	X	-6.2	-6.2	0	%100
36	M24	Z	3.579	3.579	0	%100
37	MP1A	X	-7.906	-7.906	0	%100
38	MP1A	Z	4.564	4.564	0	%100
39	MP2A	X	-9.57	-9.57	0	%100
40	MP2A	Z	5.525	5.525	0	%100
41	MP3A	X	-7.906	-7.906	0	%100

Member Distributed Loads (BLC 49 : Structure Wo (240 Deg)) (Continued)

	Member Label	Direction	Start Magnitude[lb/ft,...	End Magnitude[lb/ft,...	Start Location[ft,%]	End Location[ft,%]
42	MP3A	Z	4.564	4.564	0	%100
43	MP4A	X	-7.906	-7.906	0	%100
44	MP4A	Z	4.564	4.564	0	%100
45	M33	X	-6.653	-6.653	0	%100
46	M33	Z	3.841	3.841	0	%100
47	M34	X	-4.993	-4.993	0	%100
48	M34	Z	2.883	2.883	0	%100
49	M35	X	-4.993	-4.993	0	%100
50	M35	Z	2.883	2.883	0	%100
51	M36	X	-4.993	-4.993	0	%100
52	M36	Z	2.883	2.883	0	%100
53	M37	X	-4.993	-4.993	0	%100
54	M37	Z	2.883	2.883	0	%100
55	M42	X	-2.393	-2.393	0	%100
56	M42	Z	1.381	1.381	0	%100
57	M47	X	-2.786	-2.786	0	%100
58	M47	Z	1.609	1.609	0	%100
59	M48	X	-13.329	-13.329	0	%100
60	M48	Z	7.695	7.695	0	%100
61	M54	X	-5.922	-5.922	0	%100
62	M54	Z	3.419	3.419	0	%100
63	M55	X	-13.717	-13.717	0	%100
64	M55	Z	7.92	7.92	0	%100

Member Distributed Loads (BLC 50 : Structure Wo (270 Deg))

	Member Label	Direction	Start Magnitude[lb/ft,...	End Magnitude[lb/ft,...	Start Location[ft,%]	End Location[ft,%]
1	M3	X	-7.508	-7.508	0	%100
2	M3	Z	0	0	0	%100
3	M6	X	-7.508	-7.508	0	%100
4	M6	Z	0	0	0	%100
5	M9	X	-11.692	-11.692	0	%100
6	M9	Z	0	0	0	%100
7	M10	X	-11.187	-11.187	0	%100
8	M10	Z	0	0	0	%100
9	M11	X	-10.955	-10.955	0	%100
10	M11	Z	0	0	0	%100
11	M12	X	-7.18	-7.18	0	%100
12	M12	Z	0	0	0	%100
13	M13	X	-7.18	-7.18	0	%100
14	M13	Z	0	0	0	%100
15	M14	X	-7.18	-7.18	0	%100
16	M14	Z	0	0	0	%100
17	M15	X	0	0	0	%100
18	M15	Z	0	0	0	%100
19	M16	X	0	0	0	%100
20	M16	Z	0	0	0	%100
21	M17	X	0	0	0	%100
22	M17	Z	0	0	0	%100
23	M18	X	0	0	0	%100
24	M18	Z	0	0	0	%100
25	M19	X	-7.22	-7.22	0	%100
26	M19	Z	0	0	0	%100
27	M20	X	-7.22	-7.22	0	%100
28	M20	Z	0	0	0	%100
29	M21	X	-7.22	-7.22	0	%100
30	M21	Z	0	0	0	%100
31	M22	X	-7.22	-7.22	0	%100
32	M22	Z	0	0	0	%100

Member Distributed Loads (BLC 50 : Structure Wo (270 Deg)) (Continued)

	Member Label	Direction	Start Magnitude[lb/ft,...	End Magnitude[lb/ft,...	Start Location[ft,%]	End Location[ft,%]
33	M23	X	-7.22	-7.22	0	%100
34	M23	Z	0	0	0	%100
35	M24	X	-7.22	-7.22	0	%100
36	M24	Z	0	0	0	%100
37	MP1A	X	-9.129	-9.129	0	%100
38	MP1A	Z	0	0	0	%100
39	MP2A	X	-11.051	-11.051	0	%100
40	MP2A	Z	0	0	0	%100
41	MP3A	X	-9.129	-9.129	0	%100
42	MP3A	Z	0	0	0	%100
43	MP4A	X	-9.129	-9.129	0	%100
44	MP4A	Z	0	0	0	%100
45	M33	X	-9.634	-9.634	0	%100
46	M33	Z	0	0	0	%100
47	M34	X	-1.922	-1.922	0	%100
48	M34	Z	0	0	0	%100
49	M35	X	-1.922	-1.922	0	%100
50	M35	Z	0	0	0	%100
51	M36	X	-1.922	-1.922	0	%100
52	M36	Z	0	0	0	%100
53	M37	X	-1.922	-1.922	0	%100
54	M37	Z	0	0	0	%100
55	M42	X	0	0	0	%100
56	M42	Z	0	0	0	%100
57	M47	X	-9.525	-9.525	0	%100
58	M47	Z	0	0	0	%100
59	M48	X	-9.709	-9.709	0	%100
60	M48	Z	0	0	0	%100
61	M54	X	-11.93	-11.93	0	%100
62	M54	Z	0	0	0	%100
63	M55	X	-12.122	-12.122	0	%100
64	M55	Z	0	0	0	%100

Member Distributed Loads (BLC 51 : Structure Wo (300 Deg))

	Member Label	Direction	Start Magnitude[lb/ft,...	End Magnitude[lb/ft,...	Start Location[ft,%]	End Location[ft,%]
1	M3	X	-8.669	-8.669	0	%100
2	M3	Z	-5.005	-5.005	0	%100
3	M6	X	-8.669	-8.669	0	%100
4	M6	Z	-5.005	-5.005	0	%100
5	M9	X	-10.126	-10.126	0	%100
6	M9	Z	-5.846	-5.846	0	%100
7	M10	X	-7.266	-7.266	0	%100
8	M10	Z	-4.195	-4.195	0	%100
9	M11	X	-7.115	-7.115	0	%100
10	M11	Z	-4.108	-4.108	0	%100
11	M12	X	-6.218	-6.218	0	%100
12	M12	Z	-3.59	-3.59	0	%100
13	M13	X	-6.218	-6.218	0	%100
14	M13	Z	-3.59	-3.59	0	%100
15	M14	X	-6.218	-6.218	0	%100
16	M14	Z	-3.59	-3.59	0	%100
17	M15	X	-1.976	-1.976	0	%100
18	M15	Z	-1.141	-1.141	0	%100
19	M16	X	-1.976	-1.976	0	%100
20	M16	Z	-1.141	-1.141	0	%100
21	M17	X	-1.976	-1.976	0	%100
22	M17	Z	-1.141	-1.141	0	%100
23	M18	X	-1.976	-1.976	0	%100

Member Distributed Loads (BLC 51 : Structure Wo (300 Deg)) (Continued)

	Member Label	Direction	Start Magnitude[lb/ft,...	End Magnitude[lb/ft,...	Start Location[ft,%]	End Location[ft,%]
24	M18	Z	-1.141	-1.141	0	%100
25	M19	X	-6.2	-6.2	0	%100
26	M19	Z	-3.579	-3.579	0	%100
27	M20	X	-6.2	-6.2	0	%100
28	M20	Z	-3.579	-3.579	0	%100
29	M21	X	-6.2	-6.2	0	%100
30	M21	Z	-3.579	-3.579	0	%100
31	M22	X	-6.2	-6.2	0	%100
32	M22	Z	-3.579	-3.579	0	%100
33	M23	X	-6.2	-6.2	0	%100
34	M23	Z	-3.579	-3.579	0	%100
35	M24	X	-6.2	-6.2	0	%100
36	M24	Z	-3.579	-3.579	0	%100
37	MP1A	X	-7.906	-7.906	0	%100
38	MP1A	Z	-4.564	-4.564	0	%100
39	MP2A	X	-9.57	-9.57	0	%100
40	MP2A	Z	-5.525	-5.525	0	%100
41	MP3A	X	-7.906	-7.906	0	%100
42	MP3A	Z	-4.564	-4.564	0	%100
43	MP4A	X	-7.906	-7.906	0	%100
44	MP4A	Z	-4.564	-4.564	0	%100
45	M33	X	-5.873	-5.873	0	%100
46	M33	Z	-3.391	-3.391	0	%100
47	M34	X	0	0	0	%100
48	M34	Z	0	0	0	%100
49	M35	X	0	0	0	%100
50	M35	Z	0	0	0	%100
51	M36	X	0	0	0	%100
52	M36	Z	0	0	0	%100
53	M37	X	0	0	0	%100
54	M37	Z	0	0	0	%100
55	M42	X	-2.393	-2.393	0	%100
56	M42	Z	-1.381	-1.381	0	%100
57	M47	X	-13.266	-13.266	0	%100
58	M47	Z	-7.659	-7.659	0	%100
59	M48	X	-2.9	-2.9	0	%100
60	M48	Z	-1.674	-1.674	0	%100
61	M54	X	-13.677	-13.677	0	%100
62	M54	Z	-7.897	-7.897	0	%100
63	M55	X	-6.086	-6.086	0	%100
64	M55	Z	-3.514	-3.514	0	%100

Member Distributed Loads (BLC 52 : Structure Wo (330 Deg))

	Member Label	Direction	Start Magnitude[lb/ft,...	End Magnitude[lb/ft,...	Start Location[ft,%]	End Location[ft,%]
1	M3	X	-3.754	-3.754	0	%100
2	M3	Z	-6.501	-6.501	0	%100
3	M6	X	-3.754	-3.754	0	%100
4	M6	Z	-6.501	-6.501	0	%100
5	M9	X	-5.846	-5.846	0	%100
6	M9	Z	-10.126	-10.126	0	%100
7	M10	X	-1.398	-1.398	0	%100
8	M10	Z	-2.422	-2.422	0	%100
9	M11	X	-1.369	-1.369	0	%100
10	M11	Z	-2.372	-2.372	0	%100
11	M12	X	-3.59	-3.59	0	%100
12	M12	Z	-6.218	-6.218	0	%100
13	M13	X	-3.59	-3.59	0	%100
14	M13	Z	-6.218	-6.218	0	%100

Member Distributed Loads (BLC 52 : Structure Wo (330 Deg)) (Continued)

	Member Label	Direction	Start Magnitude[lb/ft,...	End Magnitude[lb/ft,...	Start Location[ft,%]	End Location[ft,%]
15	M14	X	-3.59	-3.59	0	%100
16	M14	Z	-6.218	-6.218	0	%100
17	M15	X	-3.423	-3.423	0	%100
18	M15	Z	-5.929	-5.929	0	%100
19	M16	X	-3.423	-3.423	0	%100
20	M16	Z	-5.929	-5.929	0	%100
21	M17	X	-3.423	-3.423	0	%100
22	M17	Z	-5.929	-5.929	0	%100
23	M18	X	-3.423	-3.423	0	%100
24	M18	Z	-5.929	-5.929	0	%100
25	M19	X	-3.518	-3.518	0	%100
26	M19	Z	-6.094	-6.094	0	%100
27	M20	X	-3.518	-3.518	0	%100
28	M20	Z	-6.094	-6.094	0	%100
29	M21	X	-3.518	-3.518	0	%100
30	M21	Z	-6.094	-6.094	0	%100
31	M22	X	-3.518	-3.518	0	%100
32	M22	Z	-6.094	-6.094	0	%100
33	M23	X	-3.518	-3.518	0	%100
34	M23	Z	-6.094	-6.094	0	%100
35	M24	X	-3.518	-3.518	0	%100
36	M24	Z	-6.094	-6.094	0	%100
37	MP1A	X	-4.564	-4.564	0	%100
38	MP1A	Z	-7.906	-7.906	0	%100
39	MP2A	X	-5.525	-5.525	0	%100
40	MP2A	Z	-9.57	-9.57	0	%100
41	MP3A	X	-4.564	-4.564	0	%100
42	MP3A	Z	-7.906	-7.906	0	%100
43	MP4A	X	-4.564	-4.564	0	%100
44	MP4A	Z	-7.906	-7.906	0	%100
45	M33	X	-.989	-.989	0	%100
46	M33	Z	-1.714	-1.714	0	%100
47	M34	X	-.961	-.961	0	%100
48	M34	Z	-1.664	-1.664	0	%100
49	M35	X	-.961	-.961	0	%100
50	M35	Z	-1.664	-1.664	0	%100
51	M36	X	-.961	-.961	0	%100
52	M36	Z	-1.664	-1.664	0	%100
53	M37	X	-.961	-.961	0	%100
54	M37	Z	-1.664	-1.664	0	%100
55	M42	X	-4.144	-4.144	0	%100
56	M42	Z	-7.178	-7.178	0	%100
57	M47	X	-7.402	-7.402	0	%100
58	M47	Z	-12.82	-12.82	0	%100
59	M48	X	-1.335	-1.335	0	%100
60	M48	Z	-2.311	-2.311	0	%100
61	M54	X	-7.283	-7.283	0	%100
62	M54	Z	-12.614	-12.614	0	%100
63	M55	X	-2.825	-2.825	0	%100
64	M55	Z	-4.893	-4.893	0	%100

Member Distributed Loads (BLC 53 : Structure Wi (0 Deg))

	Member Label	Direction	Start Magnitude[lb/ft,...	End Magnitude[lb/ft,...	Start Location[ft,%]	End Location[ft,%]
1	M3	X	0	0	0	%100
2	M3	Z	-.575	-.575	0	%100
3	M6	X	0	0	0	%100
4	M6	Z	-.575	-.575	0	%100
5	M9	X	0	0	0	%100

Member Distributed Loads (BLC 53 : Structure Wi (0 Deg)) (Continued)

	Member Label	Direction	Start Magnitude[lb/ft,...	End Magnitude[lb/ft,...	Start Location[ft,%]	End Location[ft,%]
6	M9	Z	-2.763	-2.763	0	%100
7	M10	X	0	0	0	%100
8	M10	Z	0	0	0	%100
9	M11	X	0	0	0	%100
10	M11	Z	0	0	0	%100
11	M12	X	0	0	0	%100
12	M12	Z	-1.729	-1.729	0	%100
13	M13	X	0	0	0	%100
14	M13	Z	-1.729	-1.729	0	%100
15	M14	X	0	0	0	%100
16	M14	Z	-1.729	-1.729	0	%100
17	M15	X	0	0	0	%100
18	M15	Z	-2.193	-2.193	0	%100
19	M16	X	0	0	0	%100
20	M16	Z	-2.193	-2.193	0	%100
21	M17	X	0	0	0	%100
22	M17	Z	-2.193	-2.193	0	%100
23	M18	X	0	0	0	%100
24	M18	Z	-2.193	-2.193	0	%100
25	M19	X	0	0	0	%100
26	M19	Z	-1.679	-1.679	0	%100
27	M20	X	0	0	0	%100
28	M20	Z	-1.679	-1.679	0	%100
29	M21	X	0	0	0	%100
30	M21	Z	-1.679	-1.679	0	%100
31	M22	X	0	0	0	%100
32	M22	Z	-1.679	-1.679	0	%100
33	M23	X	0	0	0	%100
34	M23	Z	-1.679	-1.679	0	%100
35	M24	X	0	0	0	%100
36	M24	Z	-1.679	-1.679	0	%100
37	MP1A	X	0	0	0	%100
38	MP1A	Z	-2.193	-2.193	0	%100
39	MP2A	X	0	0	0	%100
40	MP2A	Z	-2.425	-2.425	0	%100
41	MP3A	X	0	0	0	%100
42	MP3A	Z	-2.193	-2.193	0	%100
43	MP4A	X	0	0	0	%100
44	MP4A	Z	-2.193	-2.193	0	%100
45	M33	X	0	0	0	%100
46	M33	Z	-.006	-.006	0	%100
47	M34	X	0	0	0	%100
48	M34	Z	-1.174	-1.174	0	%100
49	M35	X	0	0	0	%100
50	M35	Z	-1.174	-1.174	0	%100
51	M36	X	0	0	0	%100
52	M36	Z	-1.174	-1.174	0	%100
53	M37	X	0	0	0	%100
54	M37	Z	-1.174	-1.174	0	%100
55	M42	X	0	0	0	%100
56	M42	Z	-2.425	-2.425	0	%100
57	M47	X	0	0	0	%100
58	M47	Z	-1.605	-1.605	0	%100
59	M48	X	0	0	0	%100
60	M48	Z	-1.578	-1.578	0	%100
61	M54	X	0	0	0	%100
62	M54	Z	-1.79	-1.79	0	%100
63	M55	X	0	0	0	%100
64	M55	Z	-1.77	-1.77	0	%100

Member Distributed Loads (BLC 54 : Structure Wi (30 Deg))

	Member Label	Direction	Start Magnitude[lb/ft,...	End Magnitude[lb/ft,...	Start Location[ft,%]	End Location[ft,%]
1	M3	X	0	0	0	%100
2	M3	Z	0	0	0	%100
3	M6	X	0	0	0	%100
4	M6	Z	0	0	0	%100
5	M9	X	1.382	1.382	0	%100
6	M9	Z	-2.393	-2.393	0	%100
7	M10	X	.323	.323	0	%100
8	M10	Z	-.56	-.56	0	%100
9	M11	X	.31	.31	0	%100
10	M11	Z	-.538	-.538	0	%100
11	M12	X	.864	.864	0	%100
12	M12	Z	-1.497	-1.497	0	%100
13	M13	X	.864	.864	0	%100
14	M13	Z	-1.497	-1.497	0	%100
15	M14	X	.864	.864	0	%100
16	M14	Z	-1.497	-1.497	0	%100
17	M15	X	.822	.822	0	%100
18	M15	Z	-1.424	-1.424	0	%100
19	M16	X	.822	.822	0	%100
20	M16	Z	-1.424	-1.424	0	%100
21	M17	X	.822	.822	0	%100
22	M17	Z	-1.424	-1.424	0	%100
23	M18	X	.822	.822	0	%100
24	M18	Z	-1.424	-1.424	0	%100
25	M19	X	.847	.847	0	%100
26	M19	Z	-1.467	-1.467	0	%100
27	M20	X	.847	.847	0	%100
28	M20	Z	-1.467	-1.467	0	%100
29	M21	X	.847	.847	0	%100
30	M21	Z	-1.467	-1.467	0	%100
31	M22	X	.847	.847	0	%100
32	M22	Z	-1.467	-1.467	0	%100
33	M23	X	.847	.847	0	%100
34	M23	Z	-1.467	-1.467	0	%100
35	M24	X	.847	.847	0	%100
36	M24	Z	-1.467	-1.467	0	%100
37	MP1A	X	1.096	1.096	0	%100
38	MP1A	Z	-1.899	-1.899	0	%100
39	MP2A	X	1.213	1.213	0	%100
40	MP2A	Z	-2.1	-2.1	0	%100
41	MP3A	X	1.096	1.096	0	%100
42	MP3A	Z	-1.899	-1.899	0	%100
43	MP4A	X	1.096	1.096	0	%100
44	MP4A	Z	-1.899	-1.899	0	%100
45	M33	X	.329	.329	0	%100
46	M33	Z	-.569	-.569	0	%100
47	M34	X	.782	.782	0	%100
48	M34	Z	-1.355	-1.355	0	%100
49	M35	X	.782	.782	0	%100
50	M35	Z	-1.355	-1.355	0	%100
51	M36	X	.782	.782	0	%100
52	M36	Z	-1.355	-1.355	0	%100
53	M37	X	.782	.782	0	%100
54	M37	Z	-1.355	-1.355	0	%100
55	M42	X	.909	.909	0	%100
56	M42	Z	-1.575	-1.575	0	%100
57	M47	X	.255	.255	0	%100
58	M47	Z	-.442	-.442	0	%100
59	M48	X	1.39	1.39	0	%100

Member Distributed Loads (BLC 54 : Structure Wi (30 Deg)) (Continued)

	Member Label	Direction	Start Magnitude[lb/ft,...	End Magnitude[lb/ft,...	Start Location[ft,%]	End Location[ft,%]
60	M48	Z	-2.407	-2.407	0	%100
61	M54	X	.53	.53	0	%100
62	M54	Z	-.918	-.918	0	%100
63	M55	X	1.366	1.366	0	%100
64	M55	Z	-2.366	-2.366	0	%100

Member Distributed Loads (BLC 55 : Structure Wi (60 Deg))

	Member Label	Direction	Start Magnitude[lb/ft,...	End Magnitude[lb/ft,...	Start Location[ft,%]	End Location[ft,%]
1	M3	X	.498	.498	0	%100
2	M3	Z	-.287	-.287	0	%100
3	M6	X	.498	.498	0	%100
4	M6	Z	-.287	-.287	0	%100
5	M9	X	2.393	2.393	0	%100
6	M9	Z	-1.382	-1.382	0	%100
7	M10	X	1.68	1.68	0	%100
8	M10	Z	-.97	-.97	0	%100
9	M11	X	1.613	1.613	0	%100
10	M11	Z	-.931	-.931	0	%100
11	M12	X	1.497	1.497	0	%100
12	M12	Z	-.864	-.864	0	%100
13	M13	X	1.497	1.497	0	%100
14	M13	Z	-.864	-.864	0	%100
15	M14	X	1.497	1.497	0	%100
16	M14	Z	-.864	-.864	0	%100
17	M15	X	.475	.475	0	%100
18	M15	Z	-.274	-.274	0	%100
19	M16	X	.475	.475	0	%100
20	M16	Z	-.274	-.274	0	%100
21	M17	X	.475	.475	0	%100
22	M17	Z	-.274	-.274	0	%100
23	M18	X	.475	.475	0	%100
24	M18	Z	-.274	-.274	0	%100
25	M19	X	1.493	1.493	0	%100
26	M19	Z	-.862	-.862	0	%100
27	M20	X	1.493	1.493	0	%100
28	M20	Z	-.862	-.862	0	%100
29	M21	X	1.493	1.493	0	%100
30	M21	Z	-.862	-.862	0	%100
31	M22	X	1.493	1.493	0	%100
32	M22	Z	-.862	-.862	0	%100
33	M23	X	1.493	1.493	0	%100
34	M23	Z	-.862	-.862	0	%100
35	M24	X	1.493	1.493	0	%100
36	M24	Z	-.862	-.862	0	%100
37	MP1A	X	1.899	1.899	0	%100
38	MP1A	Z	-1.096	-1.096	0	%100
39	MP2A	X	2.1	2.1	0	%100
40	MP2A	Z	-1.213	-1.213	0	%100
41	MP3A	X	1.899	1.899	0	%100
42	MP3A	Z	-1.096	-1.096	0	%100
43	MP4A	X	1.899	1.899	0	%100
44	MP4A	Z	-1.096	-1.096	0	%100
45	M33	X	1.518	1.518	0	%100
46	M33	Z	-.876	-.876	0	%100
47	M34	X	1.016	1.016	0	%100
48	M34	Z	-.587	-.587	0	%100
49	M35	X	1.016	1.016	0	%100
50	M35	Z	-.587	-.587	0	%100

Member Distributed Loads (BLC 55 : Structure Wi (60 Deg)) (Continued)

	Member Label	Direction	Start Magnitude[lb/ft,...	End Magnitude[lb/ft,...	Start Location[ft,%]	End Location[ft,%]
51	M36	X	1.016	1.016	0	%100
52	M36	Z	-.587	-.587	0	%100
53	M37	X	1.016	1.016	0	%100
54	M37	Z	-.587	-.587	0	%100
55	M42	X	.525	.525	0	%100
56	M42	Z	-.303	-.303	0	%100
57	M47	X	.526	.526	0	%100
58	M47	Z	-.304	-.304	0	%100
59	M48	X	2.518	2.518	0	%100
60	M48	Z	-1.454	-1.454	0	%100
61	M54	X	1.119	1.119	0	%100
62	M54	Z	-.646	-.646	0	%100
63	M55	X	2.592	2.592	0	%100
64	M55	Z	-1.496	-1.496	0	%100

Member Distributed Loads (BLC 56 : Structure Wi (90 Deg))

	Member Label	Direction	Start Magnitude[lb/ft,...	End Magnitude[lb/ft,...	Start Location[ft,%]	End Location[ft,%]
1	M3	X	1.725	1.725	0	%100
2	M3	Z	0	0	0	%100
3	M6	X	1.725	1.725	0	%100
4	M6	Z	0	0	0	%100
5	M9	X	2.763	2.763	0	%100
6	M9	Z	0	0	0	%100
7	M10	X	2.587	2.587	0	%100
8	M10	Z	0	0	0	%100
9	M11	X	2.483	2.483	0	%100
10	M11	Z	0	0	0	%100
11	M12	X	1.729	1.729	0	%100
12	M12	Z	0	0	0	%100
13	M13	X	1.729	1.729	0	%100
14	M13	Z	0	0	0	%100
15	M14	X	1.729	1.729	0	%100
16	M14	Z	0	0	0	%100
17	M15	X	0	0	0	%100
18	M15	Z	0	0	0	%100
19	M16	X	0	0	0	%100
20	M16	Z	0	0	0	%100
21	M17	X	0	0	0	%100
22	M17	Z	0	0	0	%100
23	M18	X	0	0	0	%100
24	M18	Z	0	0	0	%100
25	M19	X	1.738	1.738	0	%100
26	M19	Z	0	0	0	%100
27	M20	X	1.738	1.738	0	%100
28	M20	Z	0	0	0	%100
29	M21	X	1.738	1.738	0	%100
30	M21	Z	0	0	0	%100
31	M22	X	1.738	1.738	0	%100
32	M22	Z	0	0	0	%100
33	M23	X	1.738	1.738	0	%100
34	M23	Z	0	0	0	%100
35	M24	X	1.738	1.738	0	%100
36	M24	Z	0	0	0	%100
37	MP1A	X	2.193	2.193	0	%100
38	MP1A	Z	0	0	0	%100
39	MP2A	X	2.425	2.425	0	%100
40	MP2A	Z	0	0	0	%100
41	MP3A	X	2.193	2.193	0	%100

Member Distributed Loads (BLC 56 : Structure Wi (90 Deg)) (Continued)

	Member Label	Direction	Start Magnitude[lb/ft,...	End Magnitude[lb/ft,...	Start Location[ft,%]	End Location[ft,%]
42	MP3A	Z	0	0	0	%100
43	MP4A	X	2.193	2.193	0	%100
44	MP4A	Z	0	0	0	%100
45	M33	X	2.198	2.198	0	%100
46	M33	Z	0	0	0	%100
47	M34	X	.391	.391	0	%100
48	M34	Z	0	0	0	%100
49	M35	X	.391	.391	0	%100
50	M35	Z	0	0	0	%100
51	M36	X	.391	.391	0	%100
52	M36	Z	0	0	0	%100
53	M37	X	.391	.391	0	%100
54	M37	Z	0	0	0	%100
55	M42	X	0	0	0	%100
56	M42	Z	0	0	0	%100
57	M47	X	1.8	1.8	0	%100
58	M47	Z	0	0	0	%100
59	M48	X	1.834	1.834	0	%100
60	M48	Z	0	0	0	%100
61	M54	X	2.254	2.254	0	%100
62	M54	Z	0	0	0	%100
63	M55	X	2.29	2.29	0	%100
64	M55	Z	0	0	0	%100

Member Distributed Loads (BLC 57 : Structure Wi (120 Deg))

	Member Label	Direction	Start Magnitude[lb/ft,...	End Magnitude[lb/ft,...	Start Location[ft,%]	End Location[ft,%]
1	M3	X	1.991	1.991	0	%100
2	M3	Z	1.15	1.15	0	%100
3	M6	X	1.991	1.991	0	%100
4	M6	Z	1.15	1.15	0	%100
5	M9	X	2.393	2.393	0	%100
6	M9	Z	1.382	1.382	0	%100
7	M10	X	1.68	1.68	0	%100
8	M10	Z	.97	.97	0	%100
9	M11	X	1.613	1.613	0	%100
10	M11	Z	.931	.931	0	%100
11	M12	X	1.497	1.497	0	%100
12	M12	Z	.864	.864	0	%100
13	M13	X	1.497	1.497	0	%100
14	M13	Z	.864	.864	0	%100
15	M14	X	1.497	1.497	0	%100
16	M14	Z	.864	.864	0	%100
17	M15	X	.475	.475	0	%100
18	M15	Z	.274	.274	0	%100
19	M16	X	.475	.475	0	%100
20	M16	Z	.274	.274	0	%100
21	M17	X	.475	.475	0	%100
22	M17	Z	.274	.274	0	%100
23	M18	X	.475	.475	0	%100
24	M18	Z	.274	.274	0	%100
25	M19	X	1.493	1.493	0	%100
26	M19	Z	.862	.862	0	%100
27	M20	X	1.493	1.493	0	%100
28	M20	Z	.862	.862	0	%100
29	M21	X	1.493	1.493	0	%100
30	M21	Z	.862	.862	0	%100
31	M22	X	1.493	1.493	0	%100
32	M22	Z	.862	.862	0	%100

Member Distributed Loads (BLC 57 : Structure Wi (120 Deg)) (Continued)

	Member Label	Direction	Start Magnitude[lb/ft,...	End Magnitude[lb/ft,...	Start Location[ft,%]	End Location[ft,%]
33	M23	X	1.493	1.493	0	%100
34	M23	Z	.862	.862	0	%100
35	M24	X	1.493	1.493	0	%100
36	M24	Z	.862	.862	0	%100
37	MP1A	X	1.899	1.899	0	%100
38	MP1A	Z	1.096	1.096	0	%100
39	MP2A	X	2.1	2.1	0	%100
40	MP2A	Z	1.213	1.213	0	%100
41	MP3A	X	1.899	1.899	0	%100
42	MP3A	Z	1.096	1.096	0	%100
43	MP4A	X	1.899	1.899	0	%100
44	MP4A	Z	1.096	1.096	0	%100
45	M33	X	1.34	1.34	0	%100
46	M33	Z	.774	.774	0	%100
47	M34	X	0	0	0	%100
48	M34	Z	0	0	0	%100
49	M35	X	0	0	0	%100
50	M35	Z	0	0	0	%100
51	M36	X	0	0	0	%100
52	M36	Z	0	0	0	%100
53	M37	X	0	0	0	%100
54	M37	Z	0	0	0	%100
55	M42	X	.525	.525	0	%100
56	M42	Z	.303	.303	0	%100
57	M47	X	2.506	2.506	0	%100
58	M47	Z	1.447	1.447	0	%100
59	M48	X	.548	.548	0	%100
60	M48	Z	.316	.316	0	%100
61	M54	X	2.584	2.584	0	%100
62	M54	Z	1.492	1.492	0	%100
63	M55	X	1.15	1.15	0	%100
64	M55	Z	.664	.664	0	%100

Member Distributed Loads (BLC 58 : Structure Wi (150 Deg))

	Member Label	Direction	Start Magnitude[lb/ft,...	End Magnitude[lb/ft,...	Start Location[ft,%]	End Location[ft,%]
1	M3	X	.862	.862	0	%100
2	M3	Z	1.493	1.493	0	%100
3	M6	X	.862	.862	0	%100
4	M6	Z	1.493	1.493	0	%100
5	M9	X	1.382	1.382	0	%100
6	M9	Z	2.393	2.393	0	%100
7	M10	X	.323	.323	0	%100
8	M10	Z	.56	.56	0	%100
9	M11	X	.31	.31	0	%100
10	M11	Z	.538	.538	0	%100
11	M12	X	.864	.864	0	%100
12	M12	Z	1.497	1.497	0	%100
13	M13	X	.864	.864	0	%100
14	M13	Z	1.497	1.497	0	%100
15	M14	X	.864	.864	0	%100
16	M14	Z	1.497	1.497	0	%100
17	M15	X	.822	.822	0	%100
18	M15	Z	1.424	1.424	0	%100
19	M16	X	.822	.822	0	%100
20	M16	Z	1.424	1.424	0	%100
21	M17	X	.822	.822	0	%100
22	M17	Z	1.424	1.424	0	%100
23	M18	X	.822	.822	0	%100

Member Distributed Loads (BLC 58 : Structure Wi (150 Deg)) (Continued)

	Member Label	Direction	Start Magnitude[lb/ft,...	End Magnitude[lb/ft,...	Start Location[ft,%]	End Location[ft,%]
24	M18	Z	1.424	1.424	0	%100
25	M19	X	.847	.847	0	%100
26	M19	Z	1.467	1.467	0	%100
27	M20	X	.847	.847	0	%100
28	M20	Z	1.467	1.467	0	%100
29	M21	X	.847	.847	0	%100
30	M21	Z	1.467	1.467	0	%100
31	M22	X	.847	.847	0	%100
32	M22	Z	1.467	1.467	0	%100
33	M23	X	.847	.847	0	%100
34	M23	Z	1.467	1.467	0	%100
35	M24	X	.847	.847	0	%100
36	M24	Z	1.467	1.467	0	%100
37	MP1A	X	1.096	1.096	0	%100
38	MP1A	Z	1.899	1.899	0	%100
39	MP2A	X	1.213	1.213	0	%100
40	MP2A	Z	2.1	2.1	0	%100
41	MP3A	X	1.096	1.096	0	%100
42	MP3A	Z	1.899	1.899	0	%100
43	MP4A	X	1.096	1.096	0	%100
44	MP4A	Z	1.899	1.899	0	%100
45	M33	X	.226	.226	0	%100
46	M33	Z	.391	.391	0	%100
47	M34	X	.196	.196	0	%100
48	M34	Z	.339	.339	0	%100
49	M35	X	.196	.196	0	%100
50	M35	Z	.339	.339	0	%100
51	M36	X	.196	.196	0	%100
52	M36	Z	.339	.339	0	%100
53	M37	X	.196	.196	0	%100
54	M37	Z	.339	.339	0	%100
55	M42	X	.909	.909	0	%100
56	M42	Z	1.575	1.575	0	%100
57	M47	X	1.398	1.398	0	%100
58	M47	Z	2.422	2.422	0	%100
59	M48	X	.252	.252	0	%100
60	M48	Z	.437	.437	0	%100
61	M54	X	1.376	1.376	0	%100
62	M54	Z	2.383	2.383	0	%100
63	M55	X	.534	.534	0	%100
64	M55	Z	.925	.925	0	%100

Member Distributed Loads (BLC 59 : Structure Wi (180 Deg))

	Member Label	Direction	Start Magnitude[lb/ft,...	End Magnitude[lb/ft,...	Start Location[ft,%]	End Location[ft,%]
1	M3	X	0	0	0	%100
2	M3	Z	.575	.575	0	%100
3	M6	X	0	0	0	%100
4	M6	Z	.575	.575	0	%100
5	M9	X	0	0	0	%100
6	M9	Z	2.763	2.763	0	%100
7	M10	X	0	0	0	%100
8	M10	Z	0	0	0	%100
9	M11	X	0	0	0	%100
10	M11	Z	0	0	0	%100
11	M12	X	0	0	0	%100
12	M12	Z	1.729	1.729	0	%100
13	M13	X	0	0	0	%100
14	M13	Z	1.729	1.729	0	%100

Member Distributed Loads (BLC 59 : Structure Wi (180 Deg)) (Continued)

	Member Label	Direction	Start Magnitude[lb/ft,...	End Magnitude[lb/ft,...	Start Location[ft,%]	End Location[ft,%]
15	M14	X	0	0	0	%100
16	M14	Z	1.729	1.729	0	%100
17	M15	X	0	0	0	%100
18	M15	Z	2.193	2.193	0	%100
19	M16	X	0	0	0	%100
20	M16	Z	2.193	2.193	0	%100
21	M17	X	0	0	0	%100
22	M17	Z	2.193	2.193	0	%100
23	M18	X	0	0	0	%100
24	M18	Z	2.193	2.193	0	%100
25	M19	X	0	0	0	%100
26	M19	Z	1.679	1.679	0	%100
27	M20	X	0	0	0	%100
28	M20	Z	1.679	1.679	0	%100
29	M21	X	0	0	0	%100
30	M21	Z	1.679	1.679	0	%100
31	M22	X	0	0	0	%100
32	M22	Z	1.679	1.679	0	%100
33	M23	X	0	0	0	%100
34	M23	Z	1.679	1.679	0	%100
35	M24	X	0	0	0	%100
36	M24	Z	1.679	1.679	0	%100
37	MP1A	X	0	0	0	%100
38	MP1A	Z	2.193	2.193	0	%100
39	MP2A	X	0	0	0	%100
40	MP2A	Z	2.425	2.425	0	%100
41	MP3A	X	0	0	0	%100
42	MP3A	Z	2.193	2.193	0	%100
43	MP4A	X	0	0	0	%100
44	MP4A	Z	2.193	2.193	0	%100
45	M33	X	0	0	0	%100
46	M33	Z	.006	.006	0	%100
47	M34	X	0	0	0	%100
48	M34	Z	1.174	1.174	0	%100
49	M35	X	0	0	0	%100
50	M35	Z	1.174	1.174	0	%100
51	M36	X	0	0	0	%100
52	M36	Z	1.174	1.174	0	%100
53	M37	X	0	0	0	%100
54	M37	Z	1.174	1.174	0	%100
55	M42	X	0	0	0	%100
56	M42	Z	2.425	2.425	0	%100
57	M47	X	0	0	0	%100
58	M47	Z	1.605	1.605	0	%100
59	M48	X	0	0	0	%100
60	M48	Z	1.578	1.578	0	%100
61	M54	X	0	0	0	%100
62	M54	Z	1.79	1.79	0	%100
63	M55	X	0	0	0	%100
64	M55	Z	1.77	1.77	0	%100

Member Distributed Loads (BLC 60 : Structure Wi (210 Deg))

	Member Label	Direction	Start Magnitude[lb/ft,...	End Magnitude[lb/ft,...	Start Location[ft,%]	End Location[ft,%]
1	M3	X	0	0	0	%100
2	M3	Z	0	0	0	%100
3	M6	X	0	0	0	%100
4	M6	Z	0	0	0	%100
5	M9	X	-1.382	-1.382	0	%100

Member Distributed Loads (BLC 60 : Structure Wi (210 Deg)) (Continued)

	Member Label	Direction	Start Magnitude[lb/ft,...	End Magnitude[lb/ft,...	Start Location[ft,%]	End Location[ft,%]
6	M9	Z	2.393	2.393	0	%100
7	M10	X	-.323	-.323	0	%100
8	M10	Z	.56	.56	0	%100
9	M11	X	-.31	-.31	0	%100
10	M11	Z	.538	.538	0	%100
11	M12	X	-.864	-.864	0	%100
12	M12	Z	1.497	1.497	0	%100
13	M13	X	-.864	-.864	0	%100
14	M13	Z	1.497	1.497	0	%100
15	M14	X	-.864	-.864	0	%100
16	M14	Z	1.497	1.497	0	%100
17	M15	X	-.822	-.822	0	%100
18	M15	Z	1.424	1.424	0	%100
19	M16	X	-.822	-.822	0	%100
20	M16	Z	1.424	1.424	0	%100
21	M17	X	-.822	-.822	0	%100
22	M17	Z	1.424	1.424	0	%100
23	M18	X	-.822	-.822	0	%100
24	M18	Z	1.424	1.424	0	%100
25	M19	X	-.847	-.847	0	%100
26	M19	Z	1.467	1.467	0	%100
27	M20	X	-.847	-.847	0	%100
28	M20	Z	1.467	1.467	0	%100
29	M21	X	-.847	-.847	0	%100
30	M21	Z	1.467	1.467	0	%100
31	M22	X	-.847	-.847	0	%100
32	M22	Z	1.467	1.467	0	%100
33	M23	X	-.847	-.847	0	%100
34	M23	Z	1.467	1.467	0	%100
35	M24	X	-.847	-.847	0	%100
36	M24	Z	1.467	1.467	0	%100
37	MP1A	X	-1.096	-1.096	0	%100
38	MP1A	Z	1.899	1.899	0	%100
39	MP2A	X	-1.213	-1.213	0	%100
40	MP2A	Z	2.1	2.1	0	%100
41	MP3A	X	-1.096	-1.096	0	%100
42	MP3A	Z	1.899	1.899	0	%100
43	MP4A	X	-1.096	-1.096	0	%100
44	MP4A	Z	1.899	1.899	0	%100
45	M33	X	-.329	-.329	0	%100
46	M33	Z	.569	.569	0	%100
47	M34	X	-.782	-.782	0	%100
48	M34	Z	1.355	1.355	0	%100
49	M35	X	-.782	-.782	0	%100
50	M35	Z	1.355	1.355	0	%100
51	M36	X	-.782	-.782	0	%100
52	M36	Z	1.355	1.355	0	%100
53	M37	X	-.782	-.782	0	%100
54	M37	Z	1.355	1.355	0	%100
55	M42	X	-.909	-.909	0	%100
56	M42	Z	1.575	1.575	0	%100
57	M47	X	-.255	-.255	0	%100
58	M47	Z	.442	.442	0	%100
59	M48	X	-1.39	-1.39	0	%100
60	M48	Z	2.407	2.407	0	%100
61	M54	X	-.53	-.53	0	%100
62	M54	Z	.918	.918	0	%100
63	M55	X	-1.366	-1.366	0	%100
64	M55	Z	2.366	2.366	0	%100

Member Distributed Loads (BLC 61 : Structure Wi (240 Deg))

	Member Label	Direction	Start Magnitude[lb/ft,...	End Magnitude[lb/ft,...	Start Location[ft,%]	End Location[ft,%]
1	M3	X	-.498	-.498	0	%100
2	M3	Z	.287	.287	0	%100
3	M6	X	-.498	-.498	0	%100
4	M6	Z	.287	.287	0	%100
5	M9	X	-2.393	-2.393	0	%100
6	M9	Z	1.382	1.382	0	%100
7	M10	X	-1.68	-1.68	0	%100
8	M10	Z	.97	.97	0	%100
9	M11	X	-1.613	-1.613	0	%100
10	M11	Z	.931	.931	0	%100
11	M12	X	-1.497	-1.497	0	%100
12	M12	Z	.864	.864	0	%100
13	M13	X	-1.497	-1.497	0	%100
14	M13	Z	.864	.864	0	%100
15	M14	X	-1.497	-1.497	0	%100
16	M14	Z	.864	.864	0	%100
17	M15	X	-.475	-.475	0	%100
18	M15	Z	.274	.274	0	%100
19	M16	X	-.475	-.475	0	%100
20	M16	Z	.274	.274	0	%100
21	M17	X	-.475	-.475	0	%100
22	M17	Z	.274	.274	0	%100
23	M18	X	-.475	-.475	0	%100
24	M18	Z	.274	.274	0	%100
25	M19	X	-1.493	-1.493	0	%100
26	M19	Z	.862	.862	0	%100
27	M20	X	-1.493	-1.493	0	%100
28	M20	Z	.862	.862	0	%100
29	M21	X	-1.493	-1.493	0	%100
30	M21	Z	.862	.862	0	%100
31	M22	X	-1.493	-1.493	0	%100
32	M22	Z	.862	.862	0	%100
33	M23	X	-1.493	-1.493	0	%100
34	M23	Z	.862	.862	0	%100
35	M24	X	-1.493	-1.493	0	%100
36	M24	Z	.862	.862	0	%100
37	MP1A	X	-1.899	-1.899	0	%100
38	MP1A	Z	1.096	1.096	0	%100
39	MP2A	X	-2.1	-2.1	0	%100
40	MP2A	Z	1.213	1.213	0	%100
41	MP3A	X	-1.899	-1.899	0	%100
42	MP3A	Z	1.096	1.096	0	%100
43	MP4A	X	-1.899	-1.899	0	%100
44	MP4A	Z	1.096	1.096	0	%100
45	M33	X	-1.518	-1.518	0	%100
46	M33	Z	.876	.876	0	%100
47	M34	X	-1.016	-1.016	0	%100
48	M34	Z	.587	.587	0	%100
49	M35	X	-1.016	-1.016	0	%100
50	M35	Z	.587	.587	0	%100
51	M36	X	-1.016	-1.016	0	%100
52	M36	Z	.587	.587	0	%100
53	M37	X	-1.016	-1.016	0	%100
54	M37	Z	.587	.587	0	%100
55	M42	X	-.525	-.525	0	%100
56	M42	Z	.303	.303	0	%100
57	M47	X	-.526	-.526	0	%100
58	M47	Z	.304	.304	0	%100
59	M48	X	-2.518	-2.518	0	%100

Member Distributed Loads (BLC 61 : Structure Wi (240 Deg)) (Continued)

	Member Label	Direction	Start Magnitude[lb/ft,...	End Magnitude[lb/ft,...	Start Location[ft,%]	End Location[ft,%]
60	M48	Z	1.454	1.454	0	%100
61	M54	X	-1.119	-1.119	0	%100
62	M54	Z	.646	.646	0	%100
63	M55	X	-2.592	-2.592	0	%100
64	M55	Z	1.496	1.496	0	%100

Member Distributed Loads (BLC 62 : Structure Wi (270 Deg))

	Member Label	Direction	Start Magnitude[lb/ft,...	End Magnitude[lb/ft,...	Start Location[ft,%]	End Location[ft,%]
1	M3	X	-1.725	-1.725	0	%100
2	M3	Z	0	0	0	%100
3	M6	X	-1.725	-1.725	0	%100
4	M6	Z	0	0	0	%100
5	M9	X	-2.763	-2.763	0	%100
6	M9	Z	0	0	0	%100
7	M10	X	-2.587	-2.587	0	%100
8	M10	Z	0	0	0	%100
9	M11	X	-2.483	-2.483	0	%100
10	M11	Z	0	0	0	%100
11	M12	X	1.729	-1.729	0	%100
12	M12	Z	0	0	0	%100
13	M13	X	-1.729	-1.729	0	%100
14	M13	Z	0	0	0	%100
15	M14	X	-1.729	-1.729	0	%100
16	M14	Z	0	0	0	%100
17	M15	X	0	0	0	%100
18	M15	Z	0	0	0	%100
19	M16	X	0	0	0	%100
20	M16	Z	0	0	0	%100
21	M17	X	0	0	0	%100
22	M17	Z	0	0	0	%100
23	M18	X	0	0	0	%100
24	M18	Z	0	0	0	%100
25	M19	X	-1.738	-1.738	0	%100
26	M19	Z	0	0	0	%100
27	M20	X	-1.738	-1.738	0	%100
28	M20	Z	0	0	0	%100
29	M21	X	-1.738	-1.738	0	%100
30	M21	Z	0	0	0	%100
31	M22	X	-1.738	-1.738	0	%100
32	M22	Z	0	0	0	%100
33	M23	X	-1.738	-1.738	0	%100
34	M23	Z	0	0	0	%100
35	M24	X	-1.738	-1.738	0	%100
36	M24	Z	0	0	0	%100
37	MP1A	X	-2.193	-2.193	0	%100
38	MP1A	Z	0	0	0	%100
39	MP2A	X	-2.425	-2.425	0	%100
40	MP2A	Z	0	0	0	%100
41	MP3A	X	-2.193	-2.193	0	%100
42	MP3A	Z	0	0	0	%100
43	MP4A	X	-2.193	-2.193	0	%100
44	MP4A	Z	0	0	0	%100
45	M33	X	-2.198	-2.198	0	%100
46	M33	Z	0	0	0	%100
47	M34	X	-.391	-.391	0	%100
48	M34	Z	0	0	0	%100
49	M35	X	-.391	-.391	0	%100
50	M35	Z	0	0	0	%100

Member Distributed Loads (BLC 62 : Structure Wi (270 Deg)) (Continued)

	Member Label	Direction	Start Magnitude[lb/ft,...	End Magnitude[lb/ft,...	Start Location[ft,%]	End Location[ft,%]
51	M36	X	-.391	-.391	0	%100
52	M36	Z	0	0	0	%100
53	M37	X	-.391	-.391	0	%100
54	M37	Z	0	0	0	%100
55	M42	X	0	0	0	%100
56	M42	Z	0	0	0	%100
57	M47	X	-1.8	-1.8	0	%100
58	M47	Z	0	0	0	%100
59	M48	X	-1.834	-1.834	0	%100
60	M48	Z	0	0	0	%100
61	M54	X	-2.254	-2.254	0	%100
62	M54	Z	0	0	0	%100
63	M55	X	-2.29	-2.29	0	%100
64	M55	Z	0	0	0	%100

Member Distributed Loads (BLC 63 : Structure Wi (300 Deg))

	Member Label	Direction	Start Magnitude[lb/ft,...	End Magnitude[lb/ft,...	Start Location[ft,%]	End Location[ft,%]
1	M3	X	-1.991	-1.991	0	%100
2	M3	Z	-1.15	-1.15	0	%100
3	M6	X	-1.991	-1.991	0	%100
4	M6	Z	-1.15	-1.15	0	%100
5	M9	X	-2.393	-2.393	0	%100
6	M9	Z	-1.382	-1.382	0	%100
7	M10	X	-1.68	-1.68	0	%100
8	M10	Z	-.97	-.97	0	%100
9	M11	X	-1.613	-1.613	0	%100
10	M11	Z	-.931	-.931	0	%100
11	M12	X	-1.497	-1.497	0	%100
12	M12	Z	-.864	-.864	0	%100
13	M13	X	-1.497	-1.497	0	%100
14	M13	Z	-.864	-.864	0	%100
15	M14	X	-1.497	-1.497	0	%100
16	M14	Z	-.864	-.864	0	%100
17	M15	X	-.475	-.475	0	%100
18	M15	Z	-.274	-.274	0	%100
19	M16	X	-.475	-.475	0	%100
20	M16	Z	-.274	-.274	0	%100
21	M17	X	-.475	-.475	0	%100
22	M17	Z	-.274	-.274	0	%100
23	M18	X	-.475	-.475	0	%100
24	M18	Z	-.274	-.274	0	%100
25	M19	X	-1.493	-1.493	0	%100
26	M19	Z	-.862	-.862	0	%100
27	M20	X	-1.493	-1.493	0	%100
28	M20	Z	-.862	-.862	0	%100
29	M21	X	-1.493	-1.493	0	%100
30	M21	Z	-.862	-.862	0	%100
31	M22	X	-1.493	-1.493	0	%100
32	M22	Z	-.862	-.862	0	%100
33	M23	X	-1.493	-1.493	0	%100
34	M23	Z	-.862	-.862	0	%100
35	M24	X	-1.493	-1.493	0	%100
36	M24	Z	-.862	-.862	0	%100
37	MP1A	X	-1.899	-1.899	0	%100
38	MP1A	Z	-1.096	-1.096	0	%100
39	MP2A	X	-2.1	-2.1	0	%100
40	MP2A	Z	-1.213	-1.213	0	%100
41	MP3A	X	-1.899	-1.899	0	%100

Member Distributed Loads (BLC 63 : Structure Wi (300 Deg)) (Continued)

	Member Label	Direction	Start Magnitude[lb/ft,...	End Magnitude[lb/ft,...	Start Location[ft,%]	End Location[ft,%]
42	MP3A	Z	-1.096	-1.096	0	%100
43	MP4A	X	-1.899	-1.899	0	%100
44	MP4A	Z	-1.096	-1.096	0	%100
45	M33	X	-1.34	-1.34	0	%100
46	M33	Z	-.774	-.774	0	%100
47	M34	X	0	0	0	%100
48	M34	Z	0	0	0	%100
49	M35	X	0	0	0	%100
50	M35	Z	0	0	0	%100
51	M36	X	0	0	0	%100
52	M36	Z	0	0	0	%100
53	M37	X	0	0	0	%100
54	M37	Z	0	0	0	%100
55	M42	X	-.525	-.525	0	%100
56	M42	Z	-.303	-.303	0	%100
57	M47	X	-2.506	-2.506	0	%100
58	M47	Z	-1.447	-1.447	0	%100
59	M48	X	-.548	-.548	0	%100
60	M48	Z	-.316	-.316	0	%100
61	M54	X	-2.584	-2.584	0	%100
62	M54	Z	-1.492	-1.492	0	%100
63	M55	X	-1.15	-1.15	0	%100
64	M55	Z	-.664	-.664	0	%100

Member Distributed Loads (BLC 64 : Structure Wi (330 Deg))

	Member Label	Direction	Start Magnitude[lb/ft,...	End Magnitude[lb/ft,...	Start Location[ft,%]	End Location[ft,%]
1	M3	X	-.862	-.862	0	%100
2	M3	Z	-1.493	-1.493	0	%100
3	M6	X	-.862	-.862	0	%100
4	M6	Z	-1.493	-1.493	0	%100
5	M9	X	-1.382	-1.382	0	%100
6	M9	Z	-2.393	-2.393	0	%100
7	M10	X	-.323	-.323	0	%100
8	M10	Z	-.56	-.56	0	%100
9	M11	X	-.31	-.31	0	%100
10	M11	Z	-.538	-.538	0	%100
11	M12	X	-.864	-.864	0	%100
12	M12	Z	-1.497	-1.497	0	%100
13	M13	X	-.864	-.864	0	%100
14	M13	Z	-1.497	-1.497	0	%100
15	M14	X	-.864	-.864	0	%100
16	M14	Z	-1.497	-1.497	0	%100
17	M15	X	-.822	-.822	0	%100
18	M15	Z	-1.424	-1.424	0	%100
19	M16	X	-.822	-.822	0	%100
20	M16	Z	-1.424	-1.424	0	%100
21	M17	X	-.822	-.822	0	%100
22	M17	Z	-1.424	-1.424	0	%100
23	M18	X	-.822	-.822	0	%100
24	M18	Z	-1.424	-1.424	0	%100
25	M19	X	-.847	-.847	0	%100
26	M19	Z	-1.467	-1.467	0	%100
27	M20	X	-.847	-.847	0	%100
28	M20	Z	-1.467	-1.467	0	%100
29	M21	X	-.847	-.847	0	%100
30	M21	Z	-1.467	-1.467	0	%100
31	M22	X	-.847	-.847	0	%100
32	M22	Z	-1.467	-1.467	0	%100

Member Distributed Loads (BLC 64 : Structure Wi (330 Deg)) (Continued)

	Member Label	Direction	Start Magnitude[lb/ft,...	End Magnitude[lb/ft,...	Start Location[ft,%]	End Location[ft,%]
33	M23	X	-.847	-.847	0	%100
34	M23	Z	-1.467	-1.467	0	%100
35	M24	X	-.847	-.847	0	%100
36	M24	Z	-1.467	-1.467	0	%100
37	MP1A	X	-1.096	-1.096	0	%100
38	MP1A	Z	-1.899	-1.899	0	%100
39	MP2A	X	-1.213	-1.213	0	%100
40	MP2A	Z	-2.1	-2.1	0	%100
41	MP3A	X	-1.096	-1.096	0	%100
42	MP3A	Z	-1.899	-1.899	0	%100
43	MP4A	X	-1.096	-1.096	0	%100
44	MP4A	Z	-1.899	-1.899	0	%100
45	M33	X	-.226	-.226	0	%100
46	M33	Z	-.391	-.391	0	%100
47	M34	X	-.196	-.196	0	%100
48	M34	Z	-.339	-.339	0	%100
49	M35	X	-.196	-.196	0	%100
50	M35	Z	-.339	-.339	0	%100
51	M36	X	-.196	-.196	0	%100
52	M36	Z	-.339	-.339	0	%100
53	M37	X	-.196	-.196	0	%100
54	M37	Z	-.339	-.339	0	%100
55	M42	X	-.909	-.909	0	%100
56	M42	Z	-1.575	-1.575	0	%100
57	M47	X	-1.398	-1.398	0	%100
58	M47	Z	-2.422	-2.422	0	%100
59	M48	X	-.252	-.252	0	%100
60	M48	Z	-.437	-.437	0	%100
61	M54	X	-1.376	-1.376	0	%100
62	M54	Z	-2.383	-2.383	0	%100
63	M55	X	-.534	-.534	0	%100
64	M55	Z	-.925	-.925	0	%100

Member Distributed Loads (BLC 65 : Structure Wm (0 Deg))

	Member Label	Direction	Start Magnitude[lb/ft,...	End Magnitude[lb/ft,...	Start Location[ft,%]	End Location[ft,%]
1	M3	X	0	0	0	%100
2	M3	Z	-.17	-.17	0	%100
3	M6	X	0	0	0	%100
4	M6	Z	-.17	-.17	0	%100
5	M9	X	0	0	0	%100
6	M9	Z	-.796	-.796	0	%100
7	M10	X	0	0	0	%100
8	M10	Z	0	0	0	%100
9	M11	X	0	0	0	%100
10	M11	Z	0	0	0	%100
11	M12	X	0	0	0	%100
12	M12	Z	-.489	-.489	0	%100
13	M13	X	0	0	0	%100
14	M13	Z	-.489	-.489	0	%100
15	M14	X	0	0	0	%100
16	M14	Z	-.489	-.489	0	%100
17	M15	X	0	0	0	%100
18	M15	Z	-.621	-.621	0	%100
19	M16	X	0	0	0	%100
20	M16	Z	-.621	-.621	0	%100
21	M17	X	0	0	0	%100
22	M17	Z	-.621	-.621	0	%100
23	M18	X	0	0	0	%100

Member Distributed Loads (BLC 65 : Structure Wm (0 Deg)) (Continued)

	Member Label	Direction	Start Magnitude[lb/ft,...	End Magnitude[lb/ft,...	Start Location[ft,%]	End Location[ft,%]
24	M18	Z	-.621	-.621	0	%100
25	M19	X	0	0	0	%100
26	M19	Z	-.475	-.475	0	%100
27	M20	X	0	0	0	%100
28	M20	Z	-.475	-.475	0	%100
29	M21	X	0	0	0	%100
30	M21	Z	-.475	-.475	0	%100
31	M22	X	0	0	0	%100
32	M22	Z	-.475	-.475	0	%100
33	M23	X	0	0	0	%100
34	M23	Z	-.475	-.475	0	%100
35	M24	X	0	0	0	%100
36	M24	Z	-.475	-.475	0	%100
37	MP1A	X	0	0	0	%100
38	MP1A	Z	-.621	-.621	0	%100
39	MP2A	X	0	0	0	%100
40	MP2A	Z	-.752	-.752	0	%100
41	MP3A	X	0	0	0	%100
42	MP3A	Z	-.621	-.621	0	%100
43	MP4A	X	0	0	0	%100
44	MP4A	Z	-.621	-.621	0	%100
45	M33	X	0	0	0	%100
46	M33	Z	-.002	-.002	0	%100
47	M34	X	0	0	0	%100
48	M34	Z	-.392	-.392	0	%100
49	M35	X	0	0	0	%100
50	M35	Z	-.392	-.392	0	%100
51	M36	X	0	0	0	%100
52	M36	Z	-.392	-.392	0	%100
53	M37	X	0	0	0	%100
54	M37	Z	-.392	-.392	0	%100
55	M42	X	0	0	0	%100
56	M42	Z	-.752	-.752	0	%100
57	M47	X	0	0	0	%100
58	M47	Z	-.578	-.578	0	%100
59	M48	X	0	0	0	%100
60	M48	Z	-.568	-.568	0	%100
61	M54	X	0	0	0	%100
62	M54	Z	-.645	-.645	0	%100
63	M55	X	0	0	0	%100
64	M55	Z	-.638	-.638	0	%100

Member Distributed Loads (BLC 66 : Structure Wm (30 Deg))

	Member Label	Direction	Start Magnitude[lb/ft,...	End Magnitude[lb/ft,...	Start Location[ft,%]	End Location[ft,%]
1	M3	X	0	0	0	%100
2	M3	Z	0	0	0	%100
3	M6	X	0	0	0	%100
4	M6	Z	0	0	0	%100
5	M9	X	.398	.398	0	%100
6	M9	Z	-.689	-.689	0	%100
7	M10	X	.095	.095	0	%100
8	M10	Z	-.165	-.165	0	%100
9	M11	X	.093	.093	0	%100
10	M11	Z	-.161	-.161	0	%100
11	M12	X	.244	.244	0	%100
12	M12	Z	-.423	-.423	0	%100
13	M13	X	.244	.244	0	%100
14	M13	Z	-.423	-.423	0	%100

Member Distributed Loads (BLC 66 : Structure Wm (30 Deg)) (Continued)

	Member Label	Direction	Start Magnitude[lb/ft,...	End Magnitude[lb/ft,...	Start Location[ft,%]	End Location[ft,%]
15	M14	X	.244	.244	0	%100
16	M14	Z	-.423	-.423	0	%100
17	M15	X	.233	.233	0	%100
18	M15	Z	-.404	-.404	0	%100
19	M16	X	.233	.233	0	%100
20	M16	Z	-.404	-.404	0	%100
21	M17	X	.233	.233	0	%100
22	M17	Z	-.404	-.404	0	%100
23	M18	X	.233	.233	0	%100
24	M18	Z	-.404	-.404	0	%100
25	M19	X	.239	.239	0	%100
26	M19	Z	-.415	-.415	0	%100
27	M20	X	.239	.239	0	%100
28	M20	Z	-.415	-.415	0	%100
29	M21	X	.239	.239	0	%100
30	M21	Z	-.415	-.415	0	%100
31	M22	X	.239	.239	0	%100
32	M22	Z	-.415	-.415	0	%100
33	M23	X	.239	.239	0	%100
34	M23	Z	-.415	-.415	0	%100
35	M24	X	.239	.239	0	%100
36	M24	Z	-.415	-.415	0	%100
37	MP1A	X	.311	.311	0	%100
38	MP1A	Z	-.538	-.538	0	%100
39	MP2A	X	.376	.376	0	%100
40	MP2A	Z	-.651	-.651	0	%100
41	MP3A	X	.311	.311	0	%100
42	MP3A	Z	-.538	-.538	0	%100
43	MP4A	X	.311	.311	0	%100
44	MP4A	Z	-.538	-.538	0	%100
45	M33	X	.098	.098	0	%100
46	M33	Z	-.17	-.17	0	%100
47	M34	X	.262	.262	0	%100
48	M34	Z	-.453	-.453	0	%100
49	M35	X	.262	.262	0	%100
50	M35	Z	-.453	-.453	0	%100
51	M36	X	.262	.262	0	%100
52	M36	Z	-.453	-.453	0	%100
53	M37	X	.262	.262	0	%100
54	M37	Z	-.453	-.453	0	%100
55	M42	X	.282	.282	0	%100
56	M42	Z	-.488	-.488	0	%100
57	M47	X	.092	.092	0	%100
58	M47	Z	-.159	-.159	0	%100
59	M48	X	.501	.501	0	%100
60	M48	Z	-.867	-.867	0	%100
61	M54	X	.191	.191	0	%100
62	M54	Z	-.331	-.331	0	%100
63	M55	X	.492	.492	0	%100
64	M55	Z	-.852	-.852	0	%100

Member Distributed Loads (BLC 67 : Structure Wm (60 Deg))

	Member Label	Direction	Start Magnitude[lb/ft,...	End Magnitude[lb/ft,...	Start Location[ft,%]	End Location[ft,%]
1	M3	X	.148	.148	0	%100
2	M3	Z	-.085	-.085	0	%100
3	M6	X	.148	.148	0	%100
4	M6	Z	-.085	-.085	0	%100
5	M9	X	.689	.689	0	%100

Member Distributed Loads (BLC 67 : Structure Wm (60 Deg)) (Continued)

	Member Label	Direction	Start Magnitude[lb/ft,...	End Magnitude[lb/ft,...	Start Location[ft,%]	End Location[ft,%]
6	M9	Z	-.398	-.398	0	%100
7	M10	X	.495	.495	0	%100
8	M10	Z	-.286	-.286	0	%100
9	M11	X	.484	.484	0	%100
10	M11	Z	-.28	-.28	0	%100
11	M12	X	.423	.423	0	%100
12	M12	Z	-.244	-.244	0	%100
13	M13	X	.423	.423	0	%100
14	M13	Z	-.244	-.244	0	%100
15	M14	X	.423	.423	0	%100
16	M14	Z	-.244	-.244	0	%100
17	M15	X	.135	.135	0	%100
18	M15	Z	-.078	-.078	0	%100
19	M16	X	.135	.135	0	%100
20	M16	Z	-.078	-.078	0	%100
21	M17	X	.135	.135	0	%100
22	M17	Z	-.078	-.078	0	%100
23	M18	X	.135	.135	0	%100
24	M18	Z	-.078	-.078	0	%100
25	M19	X	.422	.422	0	%100
26	M19	Z	-.244	-.244	0	%100
27	M20	X	.422	.422	0	%100
28	M20	Z	-.244	-.244	0	%100
29	M21	X	.422	.422	0	%100
30	M21	Z	-.244	-.244	0	%100
31	M22	X	.422	.422	0	%100
32	M22	Z	-.244	-.244	0	%100
33	M23	X	.422	.422	0	%100
34	M23	Z	-.244	-.244	0	%100
35	M24	X	.422	.422	0	%100
36	M24	Z	-.244	-.244	0	%100
37	MP1A	X	.538	.538	0	%100
38	MP1A	Z	-.311	-.311	0	%100
39	MP2A	X	.651	.651	0	%100
40	MP2A	Z	-.376	-.376	0	%100
41	MP3A	X	.538	.538	0	%100
42	MP3A	Z	-.311	-.311	0	%100
43	MP4A	X	.538	.538	0	%100
44	MP4A	Z	-.311	-.311	0	%100
45	M33	X	.453	.453	0	%100
46	M33	Z	-.261	-.261	0	%100
47	M34	X	.34	.34	0	%100
48	M34	Z	-.196	-.196	0	%100
49	M35	X	.34	.34	0	%100
50	M35	Z	-.196	-.196	0	%100
51	M36	X	.34	.34	0	%100
52	M36	Z	-.196	-.196	0	%100
53	M37	X	.34	.34	0	%100
54	M37	Z	-.196	-.196	0	%100
55	M42	X	.163	.163	0	%100
56	M42	Z	-.094	-.094	0	%100
57	M47	X	.19	.19	0	%100
58	M47	Z	-.109	-.109	0	%100
59	M48	X	.907	.907	0	%100
60	M48	Z	-.524	-.524	0	%100
61	M54	X	.403	.403	0	%100
62	M54	Z	-.233	-.233	0	%100
63	M55	X	.934	.934	0	%100
64	M55	Z	-.539	-.539	0	%100

Member Distributed Loads (BLC 68 : Structure Wm (90 Deg))

	Member Label	Direction	Start Magnitude[lb/ft,...	End Magnitude[lb/ft,...	Start Location[ft,%]	End Location[ft,%]
1	M3	X	.511	.511	0	%100
2	M3	Z	0	0	0	%100
3	M6	X	.511	.511	0	%100
4	M6	Z	0	0	0	%100
5	M9	X	.796	.796	0	%100
6	M9	Z	0	0	0	%100
7	M10	X	.761	.761	0	%100
8	M10	Z	0	0	0	%100
9	M11	X	.745	.745	0	%100
10	M11	Z	0	0	0	%100
11	M12	X	.489	.489	0	%100
12	M12	Z	0	0	0	%100
13	M13	X	.489	.489	0	%100
14	M13	Z	0	0	0	%100
15	M14	X	.489	.489	0	%100
16	M14	Z	0	0	0	%100
17	M15	X	0	0	0	%100
18	M15	Z	0	0	0	%100
19	M16	X	0	0	0	%100
20	M16	Z	0	0	0	%100
21	M17	X	0	0	0	%100
22	M17	Z	0	0	0	%100
23	M18	X	0	0	0	%100
24	M18	Z	0	0	0	%100
25	M19	X	.491	.491	0	%100
26	M19	Z	0	0	0	%100
27	M20	X	.491	.491	0	%100
28	M20	Z	0	0	0	%100
29	M21	X	.491	.491	0	%100
30	M21	Z	0	0	0	%100
31	M22	X	.491	.491	0	%100
32	M22	Z	0	0	0	%100
33	M23	X	.491	.491	0	%100
34	M23	Z	0	0	0	%100
35	M24	X	.491	.491	0	%100
36	M24	Z	0	0	0	%100
37	MP1A	X	.621	.621	0	%100
38	MP1A	Z	0	0	0	%100
39	MP2A	X	.752	.752	0	%100
40	MP2A	Z	0	0	0	%100
41	MP3A	X	.621	.621	0	%100
42	MP3A	Z	0	0	0	%100
43	MP4A	X	.621	.621	0	%100
44	MP4A	Z	0	0	0	%100
45	M33	X	.656	.656	0	%100
46	M33	Z	0	0	0	%100
47	M34	X	.131	.131	0	%100
48	M34	Z	0	0	0	%100
49	M35	X	.131	.131	0	%100
50	M35	Z	0	0	0	%100
51	M36	X	.131	.131	0	%100
52	M36	Z	0	0	0	%100
53	M37	X	.131	.131	0	%100
54	M37	Z	0	0	0	%100
55	M42	X	0	0	0	%100
56	M42	Z	0	0	0	%100
57	M47	X	.648	.648	0	%100
58	M47	Z	0	0	0	%100
59	M48	X	.661	.661	0	%100

Member Distributed Loads (BLC 68 : Structure Wm (90 Deg)) (Continued)

	Member Label	Direction	Start Magnitude[lb/ft,...	End Magnitude[lb/ft,...	Start Location[ft,%]	End Location[ft,%]
60	M48	Z	0	0	0	%100
61	M54	X	.812	.812	0	%100
62	M54	Z	0	0	0	%100
63	M55	X	.825	.825	0	%100
64	M55	Z	0	0	0	%100

Member Distributed Loads (BLC 69 : Structure Wm (120 Deg))

	Member Label	Direction	Start Magnitude[lb/ft,...	End Magnitude[lb/ft,...	Start Location[ft,%]	End Location[ft,%]
1	M3	X	.59	.59	0	%100
2	M3	Z	.341	.341	0	%100
3	M6	X	.59	.59	0	%100
4	M6	Z	.341	.341	0	%100
5	M9	X	.689	.689	0	%100
6	M9	Z	.398	.398	0	%100
7	M10	X	.495	.495	0	%100
8	M10	Z	.286	.286	0	%100
9	M11	X	.484	.484	0	%100
10	M11	Z	.28	.28	0	%100
11	M12	X	.423	.423	0	%100
12	M12	Z	.244	.244	0	%100
13	M13	X	.423	.423	0	%100
14	M13	Z	.244	.244	0	%100
15	M14	X	.423	.423	0	%100
16	M14	Z	.244	.244	0	%100
17	M15	X	.135	.135	0	%100
18	M15	Z	.078	.078	0	%100
19	M16	X	.135	.135	0	%100
20	M16	Z	.078	.078	0	%100
21	M17	X	.135	.135	0	%100
22	M17	Z	.078	.078	0	%100
23	M18	X	.135	.135	0	%100
24	M18	Z	.078	.078	0	%100
25	M19	X	.422	.422	0	%100
26	M19	Z	.244	.244	0	%100
27	M20	X	.422	.422	0	%100
28	M20	Z	.244	.244	0	%100
29	M21	X	.422	.422	0	%100
30	M21	Z	.244	.244	0	%100
31	M22	X	.422	.422	0	%100
32	M22	Z	.244	.244	0	%100
33	M23	X	.422	.422	0	%100
34	M23	Z	.244	.244	0	%100
35	M24	X	.422	.422	0	%100
36	M24	Z	.244	.244	0	%100
37	MP1A	X	.538	.538	0	%100
38	MP1A	Z	.311	.311	0	%100
39	MP2A	X	.651	.651	0	%100
40	MP2A	Z	.376	.376	0	%100
41	MP3A	X	.538	.538	0	%100
42	MP3A	Z	.311	.311	0	%100
43	MP4A	X	.538	.538	0	%100
44	MP4A	Z	.311	.311	0	%100
45	M33	X	.4	.4	0	%100
46	M33	Z	.231	.231	0	%100
47	M34	X	0	0	0	%100
48	M34	Z	0	0	0	%100
49	M35	X	0	0	0	%100
50	M35	Z	0	0	0	%100

Member Distributed Loads (BLC 69 : Structure Wm (120 Deg)) (Continued)

	Member Label	Direction	Start Magnitude[lb/ft,...	End Magnitude[lb/ft,...	Start Location[ft,%]	End Location[ft,%]
51	M36	X	0	0	0	%100
52	M36	Z	0	0	0	%100
53	M37	X	0	0	0	%100
54	M37	Z	0	0	0	%100
55	M42	X	.163	.163	0	%100
56	M42	Z	.094	.094	0	%100
57	M47	X	.903	.903	0	%100
58	M47	Z	.521	.521	0	%100
59	M48	X	.197	.197	0	%100
60	M48	Z	.114	.114	0	%100
61	M54	X	.931	.931	0	%100
62	M54	Z	.537	.537	0	%100
63	M55	X	.414	.414	0	%100
64	M55	Z	.239	.239	0	%100

Member Distributed Loads (BLC 70 : Structure Wm (150 Deg))

	Member Label	Direction	Start Magnitude[lb/ft,...	End Magnitude[lb/ft,...	Start Location[ft,%]	End Location[ft,%]
1	M3	X	.255	.255	0	%100
2	M3	Z	.442	.442	0	%100
3	M6	X	.255	.255	0	%100
4	M6	Z	.442	.442	0	%100
5	M9	X	.398	.398	0	%100
6	M9	Z	.689	.689	0	%100
7	M10	X	.095	.095	0	%100
8	M10	Z	.165	.165	0	%100
9	M11	X	.093	.093	0	%100
10	M11	Z	.161	.161	0	%100
11	M12	X	.244	.244	0	%100
12	M12	Z	.423	.423	0	%100
13	M13	X	.244	.244	0	%100
14	M13	Z	.423	.423	0	%100
15	M14	X	.244	.244	0	%100
16	M14	Z	.423	.423	0	%100
17	M15	X	.233	.233	0	%100
18	M15	Z	.404	.404	0	%100
19	M16	X	.233	.233	0	%100
20	M16	Z	.404	.404	0	%100
21	M17	X	.233	.233	0	%100
22	M17	Z	.404	.404	0	%100
23	M18	X	.233	.233	0	%100
24	M18	Z	.404	.404	0	%100
25	M19	X	.239	.239	0	%100
26	M19	Z	.415	.415	0	%100
27	M20	X	.239	.239	0	%100
28	M20	Z	.415	.415	0	%100
29	M21	X	.239	.239	0	%100
30	M21	Z	.415	.415	0	%100
31	M22	X	.239	.239	0	%100
32	M22	Z	.415	.415	0	%100
33	M23	X	.239	.239	0	%100
34	M23	Z	.415	.415	0	%100
35	M24	X	.239	.239	0	%100
36	M24	Z	.415	.415	0	%100
37	MP1A	X	.311	.311	0	%100
38	MP1A	Z	.538	.538	0	%100
39	MP2A	X	.376	.376	0	%100
40	MP2A	Z	.651	.651	0	%100
41	MP3A	X	.311	.311	0	%100

Member Distributed Loads (BLC 70 : Structure Wm (150 Deg)) (Continued)

	Member Label	Direction	Start Magnitude[lb/ft,...	End Magnitude[lb/ft,...	Start Location[ft,%]	End Location[ft,%]
42	MP3A	Z	.538	.538	0	%100
43	MP4A	X	.311	.311	0	%100
44	MP4A	Z	.538	.538	0	%100
45	M33	X	.067	.067	0	%100
46	M33	Z	.117	.117	0	%100
47	M34	X	.065	.065	0	%100
48	M34	Z	.113	.113	0	%100
49	M35	X	.065	.065	0	%100
50	M35	Z	.113	.113	0	%100
51	M36	X	.065	.065	0	%100
52	M36	Z	.113	.113	0	%100
53	M37	X	.065	.065	0	%100
54	M37	Z	.113	.113	0	%100
55	M42	X	.282	.282	0	%100
56	M42	Z	.488	.488	0	%100
57	M47	X	.504	.504	0	%100
58	M47	Z	.872	.872	0	%100
59	M48	X	.091	.091	0	%100
60	M48	Z	.157	.157	0	%100
61	M54	X	.496	.496	0	%100
62	M54	Z	.858	.858	0	%100
63	M55	X	.192	.192	0	%100
64	M55	Z	.333	.333	0	%100

Member Distributed Loads (BLC 71 : Structure Wm (180 Deg))

	Member Label	Direction	Start Magnitude[lb/ft,...	End Magnitude[lb/ft,...	Start Location[ft,%]	End Location[ft,%]
1	M3	X	0	0	0	%100
2	M3	Z	.17	.17	0	%100
3	M6	X	0	0	0	%100
4	M6	Z	.17	.17	0	%100
5	M9	X	0	0	0	%100
6	M9	Z	.796	.796	0	%100
7	M10	X	0	0	0	%100
8	M10	Z	0	0	0	%100
9	M11	X	0	0	0	%100
10	M11	Z	0	0	0	%100
11	M12	X	0	0	0	%100
12	M12	Z	.489	.489	0	%100
13	M13	X	0	0	0	%100
14	M13	Z	.489	.489	0	%100
15	M14	X	0	0	0	%100
16	M14	Z	.489	.489	0	%100
17	M15	X	0	0	0	%100
18	M15	Z	.621	.621	0	%100
19	M16	X	0	0	0	%100
20	M16	Z	.621	.621	0	%100
21	M17	X	0	0	0	%100
22	M17	Z	.621	.621	0	%100
23	M18	X	0	0	0	%100
24	M18	Z	.621	.621	0	%100
25	M19	X	0	0	0	%100
26	M19	Z	.475	.475	0	%100
27	M20	X	0	0	0	%100
28	M20	Z	.475	.475	0	%100
29	M21	X	0	0	0	%100
30	M21	Z	.475	.475	0	%100
31	M22	X	0	0	0	%100
32	M22	Z	.475	.475	0	%100

Member Distributed Loads (BLC 71 : Structure Wm (180 Deg)) (Continued)

	Member Label	Direction	Start Magnitude[lb/ft,...	End Magnitude[lb/ft,...	Start Location[ft,%]	End Location[ft,%]
33	M23	X	0	0	0	%100
34	M23	Z	.475	.475	0	%100
35	M24	X	0	0	0	%100
36	M24	Z	.475	.475	0	%100
37	MP1A	X	0	0	0	%100
38	MP1A	Z	.621	.621	0	%100
39	MP2A	X	0	0	0	%100
40	MP2A	Z	.752	.752	0	%100
41	MP3A	X	0	0	0	%100
42	MP3A	Z	.621	.621	0	%100
43	MP4A	X	0	0	0	%100
44	MP4A	Z	.621	.621	0	%100
45	M33	X	0	0	0	%100
46	M33	Z	.002	.002	0	%100
47	M34	X	0	0	0	%100
48	M34	Z	.392	.392	0	%100
49	M35	X	0	0	0	%100
50	M35	Z	.392	.392	0	%100
51	M36	X	0	0	0	%100
52	M36	Z	.392	.392	0	%100
53	M37	X	0	0	0	%100
54	M37	Z	.392	.392	0	%100
55	M42	X	0	0	0	%100
56	M42	Z	.752	.752	0	%100
57	M47	X	0	0	0	%100
58	M47	Z	.578	.578	0	%100
59	M48	X	0	0	0	%100
60	M48	Z	.568	.568	0	%100
61	M54	X	0	0	0	%100
62	M54	Z	.645	.645	0	%100
63	M55	X	0	0	0	%100
64	M55	Z	.638	.638	0	%100

Member Distributed Loads (BLC 72 : Structure Wm (210 Deg))

	Member Label	Direction	Start Magnitude[lb/ft,...	End Magnitude[lb/ft,...	Start Location[ft,%]	End Location[ft,%]
1	M3	X	0	0	0	%100
2	M3	Z	0	0	0	%100
3	M6	X	0	0	0	%100
4	M6	Z	0	0	0	%100
5	M9	X	-.398	-.398	0	%100
6	M9	Z	.689	.689	0	%100
7	M10	X	-.095	-.095	0	%100
8	M10	Z	.165	.165	0	%100
9	M11	X	-.093	-.093	0	%100
10	M11	Z	.161	.161	0	%100
11	M12	X	-.244	-.244	0	%100
12	M12	Z	.423	.423	0	%100
13	M13	X	-.244	-.244	0	%100
14	M13	Z	.423	.423	0	%100
15	M14	X	-.244	-.244	0	%100
16	M14	Z	.423	.423	0	%100
17	M15	X	-.233	-.233	0	%100
18	M15	Z	.404	.404	0	%100
19	M16	X	-.233	-.233	0	%100
20	M16	Z	.404	.404	0	%100
21	M17	X	-.233	-.233	0	%100
22	M17	Z	.404	.404	0	%100
23	M18	X	-.233	-.233	0	%100

Member Distributed Loads (BLC 72 : Structure Wm (210 Deg)) (Continued)

	Member Label	Direction	Start Magnitude[lb/ft,...	End Magnitude[lb/ft,...	Start Location[ft,%]	End Location[ft,%]
24	M18	Z	.404	.404	0	%100
25	M19	X	-.239	-.239	0	%100
26	M19	Z	.415	.415	0	%100
27	M20	X	-.239	-.239	0	%100
28	M20	Z	.415	.415	0	%100
29	M21	X	-.239	-.239	0	%100
30	M21	Z	.415	.415	0	%100
31	M22	X	-.239	-.239	0	%100
32	M22	Z	.415	.415	0	%100
33	M23	X	-.239	-.239	0	%100
34	M23	Z	.415	.415	0	%100
35	M24	X	-.239	-.239	0	%100
36	M24	Z	.415	.415	0	%100
37	MP1A	X	-.311	-.311	0	%100
38	MP1A	Z	.538	.538	0	%100
39	MP2A	X	-.376	-.376	0	%100
40	MP2A	Z	.651	.651	0	%100
41	MP3A	X	-.311	-.311	0	%100
42	MP3A	Z	.538	.538	0	%100
43	MP4A	X	-.311	-.311	0	%100
44	MP4A	Z	.538	.538	0	%100
45	M33	X	-.098	-.098	0	%100
46	M33	Z	.17	.17	0	%100
47	M34	X	-.262	-.262	0	%100
48	M34	Z	.453	.453	0	%100
49	M35	X	-.262	-.262	0	%100
50	M35	Z	.453	.453	0	%100
51	M36	X	-.262	-.262	0	%100
52	M36	Z	.453	.453	0	%100
53	M37	X	-.262	-.262	0	%100
54	M37	Z	.453	.453	0	%100
55	M42	X	-.282	-.282	0	%100
56	M42	Z	.488	.488	0	%100
57	M47	X	-.092	-.092	0	%100
58	M47	Z	.159	.159	0	%100
59	M48	X	-.501	-.501	0	%100
60	M48	Z	.867	.867	0	%100
61	M54	X	-.191	-.191	0	%100
62	M54	Z	.331	.331	0	%100
63	M55	X	-.492	-.492	0	%100
64	M55	Z	.852	.852	0	%100

Member Distributed Loads (BLC 73 : Structure Wm (240 Deg))

	Member Label	Direction	Start Magnitude[lb/ft,...	End Magnitude[lb/ft,...	Start Location[ft,%]	End Location[ft,%]
1	M3	X	-.148	-.148	0	%100
2	M3	Z	.085	.085	0	%100
3	M6	X	-.148	-.148	0	%100
4	M6	Z	.085	.085	0	%100
5	M9	X	-.689	-.689	0	%100
6	M9	Z	.398	.398	0	%100
7	M10	X	-.495	-.495	0	%100
8	M10	Z	.286	.286	0	%100
9	M11	X	-.484	-.484	0	%100
10	M11	Z	.28	.28	0	%100
11	M12	X	-.423	-.423	0	%100
12	M12	Z	.244	.244	0	%100
13	M13	X	-.423	-.423	0	%100
14	M13	Z	.244	.244	0	%100

Member Distributed Loads (BLC 73 : Structure Wm (240 Deg)) (Continued)

	Member Label	Direction	Start Magnitude[lb/ft,...	End Magnitude[lb/ft,...	Start Location[ft,%]	End Location[ft,%]
15	M14	X	-.423	-.423	0	%100
16	M14	Z	.244	.244	0	%100
17	M15	X	-.135	-.135	0	%100
18	M15	Z	.078	.078	0	%100
19	M16	X	-.135	-.135	0	%100
20	M16	Z	.078	.078	0	%100
21	M17	X	-.135	-.135	0	%100
22	M17	Z	.078	.078	0	%100
23	M18	X	-.135	-.135	0	%100
24	M18	Z	.078	.078	0	%100
25	M19	X	-.422	-.422	0	%100
26	M19	Z	.244	.244	0	%100
27	M20	X	-.422	-.422	0	%100
28	M20	Z	.244	.244	0	%100
29	M21	X	-.422	-.422	0	%100
30	M21	Z	.244	.244	0	%100
31	M22	X	-.422	-.422	0	%100
32	M22	Z	.244	.244	0	%100
33	M23	X	-.422	-.422	0	%100
34	M23	Z	.244	.244	0	%100
35	M24	X	-.422	-.422	0	%100
36	M24	Z	.244	.244	0	%100
37	MP1A	X	-.538	-.538	0	%100
38	MP1A	Z	.311	.311	0	%100
39	MP2A	X	-.651	-.651	0	%100
40	MP2A	Z	.376	.376	0	%100
41	MP3A	X	-.538	-.538	0	%100
42	MP3A	Z	.311	.311	0	%100
43	MP4A	X	-.538	-.538	0	%100
44	MP4A	Z	.311	.311	0	%100
45	M33	X	-.453	-.453	0	%100
46	M33	Z	.261	.261	0	%100
47	M34	X	-.34	-.34	0	%100
48	M34	Z	.196	.196	0	%100
49	M35	X	-.34	-.34	0	%100
50	M35	Z	.196	.196	0	%100
51	M36	X	-.34	-.34	0	%100
52	M36	Z	.196	.196	0	%100
53	M37	X	-.34	-.34	0	%100
54	M37	Z	.196	.196	0	%100
55	M42	X	-.163	-.163	0	%100
56	M42	Z	.094	.094	0	%100
57	M47	X	-.19	-.19	0	%100
58	M47	Z	.109	.109	0	%100
59	M48	X	-.907	-.907	0	%100
60	M48	Z	.524	.524	0	%100
61	M54	X	-.403	-.403	0	%100
62	M54	Z	.233	.233	0	%100
63	M55	X	-.934	-.934	0	%100
64	M55	Z	.539	.539	0	%100

Member Distributed Loads (BLC 74 : Structure Wm (270 Deg))

	Member Label	Direction	Start Magnitude[lb/ft,...	End Magnitude[lb/ft,...	Start Location[ft,%]	End Location[ft,%]
1	M3	X	-.511	-.511	0	%100
2	M3	Z	0	0	0	%100
3	M6	X	-.511	-.511	0	%100
4	M6	Z	0	0	0	%100
5	M9	X	-.796	-.796	0	%100

Member Distributed Loads (BLC 74 : Structure Wm (270 Deg)) (Continued)

	Member Label	Direction	Start Magnitude[lb/ft,...	End Magnitude[lb/ft,...	Start Location[ft,%]	End Location[ft,%]
6	M9	Z	0	0	0	%100
7	M10	X	-.761	-.761	0	%100
8	M10	Z	0	0	0	%100
9	M11	X	-.745	-.745	0	%100
10	M11	Z	0	0	0	%100
11	M12	X	-.489	-.489	0	%100
12	M12	Z	0	0	0	%100
13	M13	X	-.489	-.489	0	%100
14	M13	Z	0	0	0	%100
15	M14	X	-.489	-.489	0	%100
16	M14	Z	0	0	0	%100
17	M15	X	0	0	0	%100
18	M15	Z	0	0	0	%100
19	M16	X	0	0	0	%100
20	M16	Z	0	0	0	%100
21	M17	X	0	0	0	%100
22	M17	Z	0	0	0	%100
23	M18	X	0	0	0	%100
24	M18	Z	0	0	0	%100
25	M19	X	-.491	-.491	0	%100
26	M19	Z	0	0	0	%100
27	M20	X	-.491	-.491	0	%100
28	M20	Z	0	0	0	%100
29	M21	X	-.491	-.491	0	%100
30	M21	Z	0	0	0	%100
31	M22	X	-.491	-.491	0	%100
32	M22	Z	0	0	0	%100
33	M23	X	-.491	-.491	0	%100
34	M23	Z	0	0	0	%100
35	M24	X	-.491	-.491	0	%100
36	M24	Z	0	0	0	%100
37	MP1A	X	-.621	-.621	0	%100
38	MP1A	Z	0	0	0	%100
39	MP2A	X	-.752	-.752	0	%100
40	MP2A	Z	0	0	0	%100
41	MP3A	X	-.621	-.621	0	%100
42	MP3A	Z	0	0	0	%100
43	MP4A	X	-.621	-.621	0	%100
44	MP4A	Z	0	0	0	%100
45	M33	X	-.656	-.656	0	%100
46	M33	Z	0	0	0	%100
47	M34	X	-.131	-.131	0	%100
48	M34	Z	0	0	0	%100
49	M35	X	-.131	-.131	0	%100
50	M35	Z	0	0	0	%100
51	M36	X	-.131	-.131	0	%100
52	M36	Z	0	0	0	%100
53	M37	X	-.131	-.131	0	%100
54	M37	Z	0	0	0	%100
55	M42	X	0	0	0	%100
56	M42	Z	0	0	0	%100
57	M47	X	-.648	-.648	0	%100
58	M47	Z	0	0	0	%100
59	M48	X	-.661	-.661	0	%100
60	M48	Z	0	0	0	%100
61	M54	X	-.812	-.812	0	%100
62	M54	Z	0	0	0	%100
63	M55	X	-.825	-.825	0	%100
64	M55	Z	0	0	0	%100

Member Distributed Loads (BLC 75 : Structure Wm (300 Deg))

	Member Label	Direction	Start Magnitude[lb/ft,...	End Magnitude[lb/ft,...	Start Location[ft,%]	End Location[ft,%]
1	M3	X	-.59	-.59	0	%100
2	M3	Z	-.341	-.341	0	%100
3	M6	X	-.59	-.59	0	%100
4	M6	Z	-.341	-.341	0	%100
5	M9	X	-.689	-.689	0	%100
6	M9	Z	-.398	-.398	0	%100
7	M10	X	-.495	-.495	0	%100
8	M10	Z	-.286	-.286	0	%100
9	M11	X	-.484	-.484	0	%100
10	M11	Z	-.28	-.28	0	%100
11	M12	X	-.423	-.423	0	%100
12	M12	Z	-.244	-.244	0	%100
13	M13	X	-.423	-.423	0	%100
14	M13	Z	-.244	-.244	0	%100
15	M14	X	-.423	-.423	0	%100
16	M14	Z	-.244	-.244	0	%100
17	M15	X	-.135	-.135	0	%100
18	M15	Z	-.078	-.078	0	%100
19	M16	X	-.135	-.135	0	%100
20	M16	Z	-.078	-.078	0	%100
21	M17	X	-.135	-.135	0	%100
22	M17	Z	-.078	-.078	0	%100
23	M18	X	-.135	-.135	0	%100
24	M18	Z	-.078	-.078	0	%100
25	M19	X	-.422	-.422	0	%100
26	M19	Z	-.244	-.244	0	%100
27	M20	X	-.422	-.422	0	%100
28	M20	Z	-.244	-.244	0	%100
29	M21	X	-.422	-.422	0	%100
30	M21	Z	-.244	-.244	0	%100
31	M22	X	-.422	-.422	0	%100
32	M22	Z	-.244	-.244	0	%100
33	M23	X	-.422	-.422	0	%100
34	M23	Z	-.244	-.244	0	%100
35	M24	X	-.422	-.422	0	%100
36	M24	Z	-.244	-.244	0	%100
37	MP1A	X	-.538	-.538	0	%100
38	MP1A	Z	-.311	-.311	0	%100
39	MP2A	X	-.651	-.651	0	%100
40	MP2A	Z	-.376	-.376	0	%100
41	MP3A	X	-.538	-.538	0	%100
42	MP3A	Z	-.311	-.311	0	%100
43	MP4A	X	-.538	-.538	0	%100
44	MP4A	Z	-.311	-.311	0	%100
45	M33	X	-.4	-.4	0	%100
46	M33	Z	-.231	-.231	0	%100
47	M34	X	0	0	0	%100
48	M34	Z	0	0	0	%100
49	M35	X	0	0	0	%100
50	M35	Z	0	0	0	%100
51	M36	X	0	0	0	%100
52	M36	Z	0	0	0	%100
53	M37	X	0	0	0	%100
54	M37	Z	0	0	0	%100
55	M42	X	-.163	-.163	0	%100
56	M42	Z	-.094	-.094	0	%100
57	M47	X	-.903	-.903	0	%100
58	M47	Z	-.521	-.521	0	%100
59	M48	X	-.197	-.197	0	%100

Member Distributed Loads (BLC 75 : Structure Wm (300 Deg)) (Continued)

	Member Label	Direction	Start Magnitude[lb/ft,...	End Magnitude[lb/ft,...	Start Location[ft,%]	End Location[ft,%]
60	M48	Z	-.114	-.114	0	%100
61	M54	X	-.931	-.931	0	%100
62	M54	Z	-.537	-.537	0	%100
63	M55	X	-.414	-.414	0	%100
64	M55	Z	-.239	-.239	0	%100

Member Distributed Loads (BLC 76 : Structure Wm (330 Deg))

	Member Label	Direction	Start Magnitude[lb/ft,...	End Magnitude[lb/ft,...	Start Location[ft,%]	End Location[ft,%]
1	M3	X	-.255	-.255	0	%100
2	M3	Z	-.442	-.442	0	%100
3	M6	X	-.255	-.255	0	%100
4	M6	Z	-.442	-.442	0	%100
5	M9	X	-.398	-.398	0	%100
6	M9	Z	-.689	-.689	0	%100
7	M10	X	-.095	-.095	0	%100
8	M10	Z	-.165	-.165	0	%100
9	M11	X	-.093	-.093	0	%100
10	M11	Z	-.161	-.161	0	%100
11	M12	X	-.244	-.244	0	%100
12	M12	Z	-.423	-.423	0	%100
13	M13	X	-.244	-.244	0	%100
14	M13	Z	-.423	-.423	0	%100
15	M14	X	-.244	-.244	0	%100
16	M14	Z	-.423	-.423	0	%100
17	M15	X	-.233	-.233	0	%100
18	M15	Z	-.404	-.404	0	%100
19	M16	X	-.233	-.233	0	%100
20	M16	Z	-.404	-.404	0	%100
21	M17	X	-.233	-.233	0	%100
22	M17	Z	-.404	-.404	0	%100
23	M18	X	-.233	-.233	0	%100
24	M18	Z	-.404	-.404	0	%100
25	M19	X	-.239	-.239	0	%100
26	M19	Z	-.415	-.415	0	%100
27	M20	X	-.239	-.239	0	%100
28	M20	Z	-.415	-.415	0	%100
29	M21	X	-.239	-.239	0	%100
30	M21	Z	-.415	-.415	0	%100
31	M22	X	-.239	-.239	0	%100
32	M22	Z	-.415	-.415	0	%100
33	M23	X	-.239	-.239	0	%100
34	M23	Z	-.415	-.415	0	%100
35	M24	X	-.239	-.239	0	%100
36	M24	Z	-.415	-.415	0	%100
37	MP1A	X	-.311	-.311	0	%100
38	MP1A	Z	-.538	-.538	0	%100
39	MP2A	X	-.376	-.376	0	%100
40	MP2A	Z	-.651	-.651	0	%100
41	MP3A	X	-.311	-.311	0	%100
42	MP3A	Z	-.538	-.538	0	%100
43	MP4A	X	-.311	-.311	0	%100
44	MP4A	Z	-.538	-.538	0	%100
45	M33	X	-.067	-.067	0	%100
46	M33	Z	-.117	-.117	0	%100
47	M34	X	-.065	-.065	0	%100
48	M34	Z	-.113	-.113	0	%100
49	M35	X	-.065	-.065	0	%100
50	M35	Z	-.113	-.113	0	%100

Member Distributed Loads (BLC 76 : Structure Wm (330 Deg)) (Continued)

	Member Label	Direction	Start Magnitude[lb/ft,...	End Magnitude[lb/ft,...	Start Location[ft,%]	End Location[ft,%]
51	M36	X	-.065	-.065	0	%100
52	M36	Z	-.113	-.113	0	%100
53	M37	X	-.065	-.065	0	%100
54	M37	Z	-.113	-.113	0	%100
55	M42	X	-.282	-.282	0	%100
56	M42	Z	-.488	-.488	0	%100
57	M47	X	-.504	-.504	0	%100
58	M47	Z	-.872	-.872	0	%100
59	M48	X	-.091	-.091	0	%100
60	M48	Z	-.157	-.157	0	%100
61	M54	X	-.496	-.496	0	%100
62	M54	Z	-.858	-.858	0	%100
63	M55	X	-.192	-.192	0	%100
64	M55	Z	-.333	-.333	0	%100

Member Area Loads

Joint A	Joint B	Joint C	Joint D	Direction	Distribution	Magnitude[ksf]
No Data to Print ...						

Envelope Joint Reactions

	Joint		X [lb]	LC	Y [lb]	LC	Z [lb]	LC	MX [k-ft]	LC	MY [k-ft]	LC	MZ [k-ft]	LC
1	N53	max	424.541	5	9.886	5	3.298	12	.015	19	0	75	-.004	12
2		min	-172.868	11	-9.125	47	-321.44	18	.005	64	0	1	-.014	18
3	N7	max	256.376	5	3.194	9	263.643	11	.013	24	0	75	0	42
4		min	-422.232	11	-12.198	39	-108.917	5	.005	70	0	1	-.008	24
5	N2	max	594.757	11	911.953	23	-131.484	3	.147	22	0	75	-.09	5
6		min	-762.633	5	205.317	5	-574.377	20	.044	4	0	1	-.297	22
7	N8	max	763.568	11	854.688	15	322.126	14	.127	15	0	75	-.087	71
8		min	-549.612	5	239.381	10	39.553	9	.041	71	0	1	-.265	15
9	N73A	max	52.029	5	28.126	22	1120.567	4	0	75	0	75	0	75
10		min	-33.367	11	10.237	67	-1139.261	10	0	1	0	1	0	1
11	N84	max	919.431	10	881.992	6	1157.812	12	0	75	0	75	0	75
12		min	-970.73	4	-543.221	12	-1686.285	6	0	1	0	1	0	1
13	N97	max	398.864	10	1108.388	24	1192.721	12	0	75	0	75	0	75
14		min	-496.106	4	-165.278	6	-267.314	6	0	1	0	1	0	1
15	Totals:	max	2046.702	10	3108.128	15	2046.522	1						
16		min	-2046.703	4	1049.808	71	-2046.523	7						

Envelope AISC 15th(360-16): LRFD Steel Code Checks

	Member	Shape	Code ...	Loc[ft]	LC	Shear ...	Loc[ft]	Dir	LC	phi*Pnc ...	phi*Pnt [...	phi*Mn y...	phi*Mn z...	Cb	Eqn
1	M3	HSS2.5X2.5X4	.223	5.866	11	.065	5.333	y	23	50494.4...	81558	5.623	5.623	2...	H1-1b
2	M6	HSS2.5X2.5X4	.228	5.333	11	.065	5.333	y	16	50494.4...	81558	5.623	5.623	1...	H1-1b
3	M9	PIPE 4.0	.089	1.333	18	.145	.333		11	85130.7...	93240	10.631	10.631	1...	H1-1b
4	M10	PIPE 4.0	.127	0	22	.059	0		17	88005.4...	93240	10.631	10.631	2...	H1-1b
5	M11	PIPE 4.0	.115	0	11	.072	3.281		47	89138.7...	93240	10.631	10.631	2...	H1-1b
6	M12	PIPE 2.0	.094	2.667	24	.036	2.667		13	29504.0...	32130	1.872	1.872	2...	H1-1b
7	M13	PIPE 2.0	.171	2.667	24	.053	0		50	29504.0...	32130	1.872	1.872	2...	H1-1b
8	M14	PIPE 2.0	.181	0	24	.065	0		50	29504.0...	32130	1.872	1.872	2...	H1-1b
9	M15	PIPE 2.0	.154	6.484	11	.197	7.031		40	16368.5...	32130	1.872	1.872	1...	H1-1b
10	M16	PIPE 2.0	.438	6.484	28	.246	6.562		23	16368.5...	32130	1.872	1.872	2...	H1-1b
11	M17	PIPE 2.0	.362	3.047	11	.228	3.047		11	16368.5...	32130	1.872	1.872	1...	H1-1b
12	M18	PIPE 2.0	.545	1.016	10	.363	.547		5	16368.5...	32130	1.872	1.872	1...	H3-6
13	M19	PIPE 2.0	.170	0	5	.146	2.713		50	29415.7...	32130	1.872	1.872	1...	H1-1b
14	M20	PIPE 2.0	.266	0	11	.172	2.713		10	29415.7...	32130	1.872	1.872	2...	H1-1b

Envelope AISC 15th(360-16): LRFD Steel Code Checks (Continued)

	Member	Shape	Code ...	Loc[ft]	LC	Shear ...	Loc[ft]	Dir	LC	phi*Pnc ...	phi*Pnt [...	phi*Mn y...	phi*Mn z...	Cb	Eqn
15	M21	PIPE 2.0	.213	2.713	50	.069	0		50	29415.7...	32130	1.872	1.872	2....	H1-1b
16	M22	PIPE 2.0	.091	2.713	47	.083	0		50	29415.7...	32130	1.872	1.872	2....	H1-1b
17	M23	PIPE 2.0	.166	2.713	24	.067	0		35	29415.7...	32130	1.872	1.872	2....	H1-1b
18	M24	PIPE 2.0	.091	0	24	.025	0		11	29415.7...	32130	1.872	1.872	2....	H1-1b
19	MP1A	PIPE 2.0	.515	2.75	5	.248	2.75		5	14916.0...	32130	1.872	1.872	3....	H1-1b
20	MP2A	PIPE 2.5	.262	4	3	.217	2.75		5	30038.4...	50715	3.596	3.596	1....	H1-1b
21	MP3A	PIPE 2.0	.187	2.75	3	.069	2.75		7	14916.0...	32130	1.872	1.872	1....	H1-1b
22	MP4A	PIPE 2.0	.133	2.75	7	.046	4		4	14916.0...	32130	1.872	1.872	4....	H1-1b
23	M33	PIPE 2.5	.026	4.363	4	.002	4.363		22	43398.3...	50715	3.596	3.596	1....	H1-1b*
24	M34	PL1/2x2	.709	0	10	.165	.25	y	23	31677.1...	32400	.338	1.35	1....	H1-1b
25	M35	PL1/2x2	.523	0	4	.167	.25	y	15	31677.1...	32400	.338	1.35	2....	H1-1b
26	M36	PL1/2x2	.500	0	11	.036	0	z	23	31677.1...	32400	.338	1.35	1....	H1-1b
27	M37	PL1/2x2	.512	0	5	.039	0	z	17	31677.1...	32400	.338	1.35	1....	H1-1b
28	M42	PIPE 2.5	.404	11.406	5	.227	11.562		4	10110.2...	50715	3.596	3.596	1....	H1-1b
29	M47	L2.5x2.5x4	.102	3.179	1	.015	0	y	14	10727.2...	38556	1.114	2.276	1....	H2-1
30	M48	L2.5x2.5x4	.160	6.298	11	.020	6.298	y	3	10935.2...	38556	1.114	2.14	1....	H2-1
31	M54	L2.5x2.5x4	.112	6.035	14	.016	6.035	y	17	11910.0...	38556	1.114	2.143	1....	H2-1
32	M55	L2.5x2.5x4	.129	3.305	10	.015	5.987	z	50	12101.6...	38556	1.114	2.15	1....	H2-1

VzW SMART Tool© Vendor

Client:	Verizon Wireless	Date:	9/1/2023
Site Name:	CORNWALL 2 CT		
MDG #:	5000246694		
Fuze ID #:	17123723	Page:	1

Version 1.01

I. Mount-to-Tower Connection Check

Custom Orientation Required — **Yes**

Nodes (labeled per Risa)	Orientation (per graphic of typical platform)
N2	240
N8	240
N53	240
N7	240

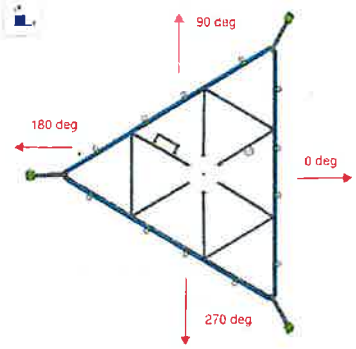

Tower Connection Bolt Checks — **Yes**

Bolt Orientation — **Parallel**

Bolt Quantity per Reaction:	4
d_x (in) *(Delta X of typ. bolt config. sketch)*:	4
d_y (in) *(Delta Y of typ. bolt config. sketch)*:	3
Bolt Type:	A325N
Bolt Diameter (in):	0.375
Required Tensile Strength / bolt (kips):	0.0
Required Shear Strength / bolt (kips):	0.5
Tensile Capacity / bolt (kips):	7.5
Shear Capacity / bolt (kips):	4.5
Bolt Overall Utilization:	10.9%

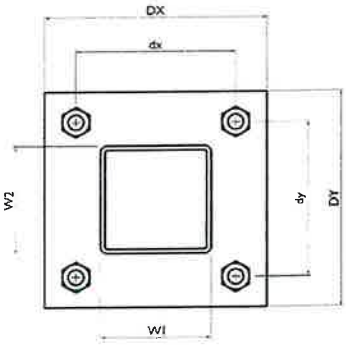

Tower Connection Baseplate Checks — **Yes**

Connecting Standoff Member Shape:	Rect Tube
Weld Stiffener Configuration:	No Stiffeners
Plate Width, D_x (in):	6
Plate Height, D_y (in):	4.5
W1(in):	0.5
W2 (in):	2
Member Thickness (in):	0.5
Stiffener location a_1 (in):	
Stiffener location b_1 (in):	
Stiffener location a_2 (in):	
Stiffener location b_2 (in):	
F_y (ksi, plate):	36
Plate Thickness (in):	0.39
Length of Yield Line, L_y (in):	2.94
Bolt Eccentricity, e (in):	0.60
M_u (kip-in):	0.41
Phi*M_n (kip-in):	3.62
Plate Bending Utilization:	11.4%

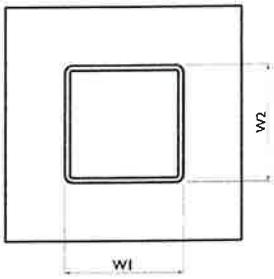

VzW SMART Tool© Vendor

Client:	Verizon Wireless	Date:	9/1/2023
Site Name:	CORNWALL 2 CT		
MDG #:	5000246694		
Fuze ID #:	17123723	Page:	1

Version 1.01

Tower Connection Weld Checks

	Yes
Weld Shape:	Rectangle
Weld Stiffener Configuration:	None
Stiffener Notch Length, n (in):	
Weld Size (1/16 in):	3
W1 (in):	0.5
W2 (in):	2
Weld Total Length (in):	5.00
Z_x (in^3/in):	2.33
Z_y (in^3/in):	1.08
J_p (in^4/in):	2.60
c_x (in)	0.75
c_y (in)	1.5
Required combined strength (kip/in):	1.15
Weld Capacity (kip/in):	4.18
Weld Utilization:	**27.6%**

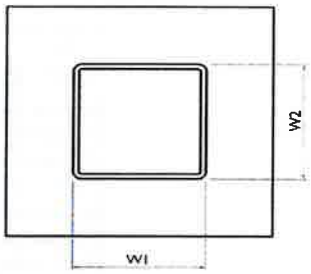

ATTACHMENT 4

qPublic.net™ Town of Sharon, CT

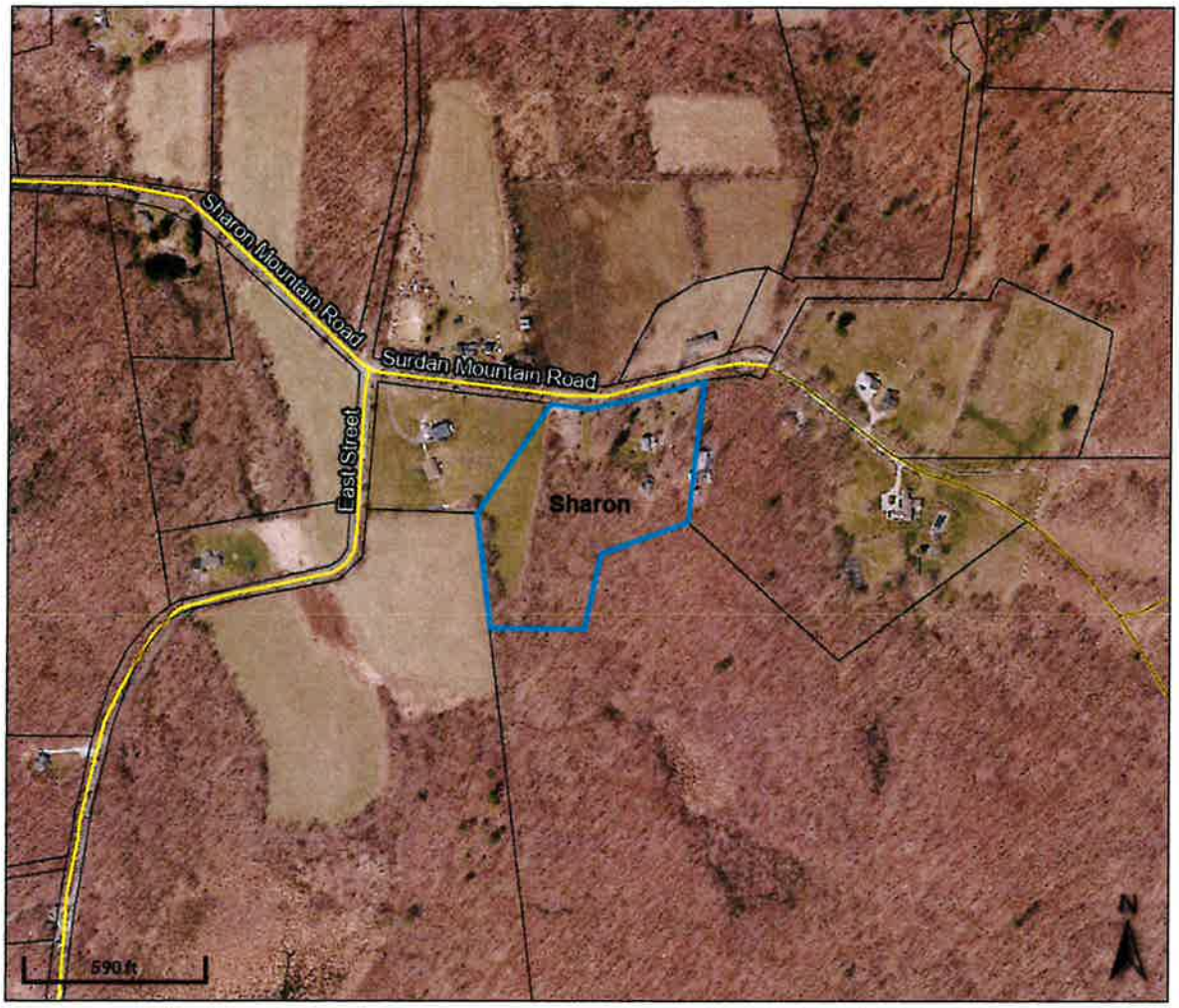

Overview

Legend

- Parcels
- Roads
- City Labels

Parcel ID	15-2	**Alternate ID**	00173200	**Owner Address**	PRINDLE ANN ADELE
Sec/Twp/Rng	15-2-	**Class**	R		7 SURDAN MOUNTAIN RD
Property Address	7 SURDAN MOUNTAIN RD	**Acreage**	9.6		SHARON CT 06069
	SHARON				
District	5A				
Brief Tax Description	n/a				
	(Note: Not to be used on legal documents)				

Date created: 11/30/2023
Last Data Uploaded: 11/29/2023 10:22:04 PM

Developed by Schneider GEOSPATIAL

Town of Sharon, CT

Summary

Account Number	00173200
Parcel ID	15-2
Property Address	7 SURDAN MOUNTAIN RD
Use Class/Description	101 Single Family
Map/Block/Lot/Unit	15/2//
Zoning	RR
NBHD Code	5A
Acres	9.6
Utilities	Septic,Well,
Is Homesteaded	False

View Map

Owner

PRINDLE ANN ADELE

Current Appraised Value

	2022	2021
Assessed Year		
Appraised Building Value	$154,000.00	$154,000.00
Appraised XF/OB Value	$249,200.00	$249,200.00
Appraised Land Value	$222,500.00	$222,500.00
Appraised Total Value	**$625,700.00**	**$625,700.00**
Assessed Building Value	$107,800.00	$107,800.00
Assessed XF/OB Value	$174,400.00	$174,400.00
Assessed Land Value	$155,800.00	$155,800.00
Assessed Total Value	**$438,000.00**	**$438,000.00**

Assessment History

	2022	2021
Assessed Year		
Appraised Building Value	$154,000.00	$154,000.00
Appraised XF/OB Value	$249,200.00	$249,200.00
Appraised Land Value	$222,500.00	$222,500.00
Appraised Total Value	**$625,700.00**	**$625,700.00**
Assessed Building Value	$107,800.00	$107,800.00
Assessed XF/OB Value	$174,400.00	$174,400.00
Assessed Land Value	$155,800.00	$155,800.00
Assessed Total Value	**$438,000.00**	**$438,000.00**

Land

Building Number	1	**Land Units**	2 AC
Land Use	101 - Single Family	**Value**	131,700

Building Number	1	**Land Units**	7.6 AC
Land Use	101 - Single Family	**Value**	90,800

Building Information

Building #	1	**Fireplaces**	
Style	Conventional	**Roof Cover**	Asphalt Shngl.
Occupancy	1	**Roof Structure**	Gable/Hip
Actual Year Built	1952	**Floor Type**	Hardwood Carpet
Effective Year Built	1998	**Heat Type**	Hot Water
Living Area	1,736	**Fuel Type**	Oil
Stories	2	**AC**	None
Grade	04 C+	**Bdrms/Full Bth/Hlf Bth/Ttl Rm**	03/2/0/7
Condition	G	**Basement Finished Area**	
Exterior Wall	Vinyl Siding	**Basement Sq. Ft.**	560
Interior Wall	Drywall		

Code	Description	Living Area	Gross Area	Effective Area
BAS	First Floor	1,136	1,136	1,136
FEP	Enclosed Porch	0	79	55
FOP	Open Porch	0	49	12
FUS	Upper Story, Finished	600	600	600
PTO	Patio	0	198	20
UBM	Basement, Unfinished	0	560	112
	Totals	**1,736**	**2,622**	**1,935**

Out Buildings\Extra Features

Description	Barn 1 St.	**Year Built**	1983
Sub Description		**Value**	$11,600
Area	860 S.F.		

Description	Shed	**Year Built**	1986
Sub Description		**Value**	$1,400
Area	100 S.F.		

Description	Garage w/Shop	**Year Built**	1999
Sub Description		**Value**	$31,000
Area	1254 S.F.		

Description	Cell Tower site	**Year Built**	2008
Sub Description		**Value**	$205,200
Area	1 UNITS		

Sales History

Sales Date	Instrument Type	Grantor	Grantee	Book/Page
4/19/2004		PRINDLE DARIEN R & ANN ADELE	PRINDLE ANN ADELE	0158-0453
9/23/1999	Transfer of Convienience	PRINDLE DARIEN R & ANN ADELE	PRINDLE DARIEN R & ANN ADELE	0136-0456
8/3/1998	Love and Affection	PRINDLE DARIEN	PRINDLE DARIEN R & ANN ADELE	0132-0861
10/19/1981	Family Sale		PRINDLE DARIEN	0098-0458

Recent Sales In Area

Sale date range:

From: 11/30/2013 **To:** 11/30/2023

Sales by Neighborhood

1500 Feet Sales by Distance

Sketch

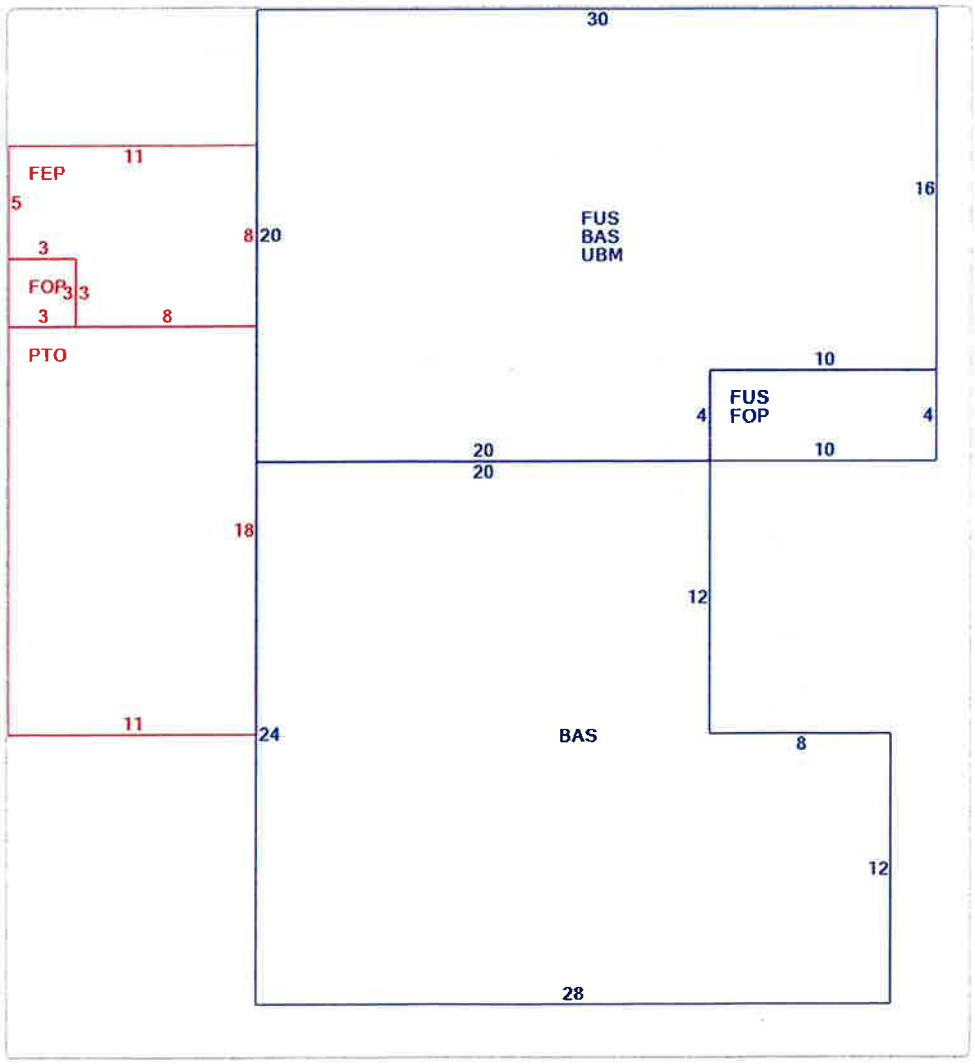

ATTACHMENT 5

Verizon/Cornwall 2

UNITED STATES POSTAL SERVICE®

Certificate of Mailing — Firm

Name and Address of Sender	TOTAL NO. of Pieces Listed by Sender	TOTAL NO. of Pieces Received at Post Office™	Affix Stamp Here *Postmark with Date of Receipt.*
Kenneth C. Baldwin, Esq. Robinson & Cole LLP 280 Trumbull Street Hartford, CT 06103	3	3	neopost 12/01/2023 US POSTAGE $003.19 ZIP 06103 041L12203937
	Postmaster, per *(name of receiving employee)*		

USPS® Tracking Number / Firm-specific Identifier	Address (Name, Street, City, State, and ZIP Code™)	Postage	Fee	Special Handling	Parcel Airlift
1.	Casey Flanagan, First Selectman Town of Sharon 63 Main Street Sharon, CT 06069				
2.	Jamie Casey, Land Use Administrator Town of Sharon 63 Main Street Sharon, CT 06069				
3.	Ann Adele Prindle 7 Surdan Mountain Road Sharon, CT 06069				
4.					
5.					
6.					

ANN STREET STATION DEC - 1 2023 06103 USPS

See Reverse for Instructions