June 2, 2021

Melanie A. Bachman
Executive Director
Connecticut Siting Council
10 Franklin Square
New Britain, CT 06051

RE: **Notice of Exempt Modification for T-Mobile**
Crown Site ID# 842872; T-Mobile Site ID# CT11427A
52 New Britain Avenue, Rocky Hill, CT 06067
Latitude: 41° 39' 36.89"/ Longitude: -72° 40' 50.58"

Dear Ms. Bachman:

T-Mobile currently maintains six (6) antennas at the 157-foot mount on the existing 181-foot Monopole Tower located at 52 New Britain Avenue in Rocky Hill. The property is owned by the Town of Rocky Hill and the Tower is owned by Crown Castle. T-Mobile now intends to replace six (6) existing antennas and add three (3) new antennas. This modification/proposal includes hardware that is both 4G(LTE) and 5G capable through remote software configuration and either or both services may be turned on or off at various times. T-Mobile is also proposing mount modifications as shown on the enclosed mount analysis.

Planned Modifications:
Tower:

Remove and Replace:
(3) Ericsson – AIR21 KRC118023-1_B2A_B4P Antennas **(REMOVE)** - (3) Ericsson – AIR32 B2A_B66A Antennas **(REPLACE)**

(3) Ericsson – AIR21 B4A/B12P Antennas **(REMOVE)** – (3) RFS – APXVAALL24_43-U-NA20 Antennas **(REPLACE)**

(3) RRUS11 B12 Radios **(REMOVE) –** (3) Ericsson – 4415 B66A Radios **(REPLACE)**

Install New:
(3) AIR6449 B41 Antennas
(3) Ericsson – 4449 B71+B85 Radios
(3) Hybrid 6/24 4AWG 60m cables
(1) SitePro 1 HRK12 handrail kit
(1) SitePro 1 PRK-SFS reinforcement kit
(1) SitePro 1 SCK43-K crossover plate kit

Remove:
(12) 1 5/8'' coax cables

Ground:

Install New:
(1) SSC 6160 cabinet
(1) B160 battery cabinet
(2) BB6648
(1) PSU 4813 voltage booster
(1) DUG20
(1) IXRe router

The Town of Rocky Hill approved construction of the tower on November 30th, 1998 via permit #13621.

Please accept this letter as notification pursuant to Regulations of Connecticut State Agencies §16-50j-73, for construction that constitutes an exempt modification pursuant to R.C.S.A. § 16-50j-72(b)(2). In accordance with R.C.S.A. § 16-50j-73, a copy of this letter is being sent to John Mehr, Town Manager for the Town of Rocky Hill, as both the municipality and property owner, and Kim Ricci, Town Planner for the Town of Rocky Hill.

1. The proposed modifications will not result in an increase in the height of the existing tower.

2. The proposed modifications will not require the extension of the site boundary.

3. The proposed modification will not increase noise levels at the facility by six decibels or more, or to levels that exceed state and local criteria.

4. The operation of the replacement antennas will not increase radio frequency emissions at the facility to a level at or above the Federal Communication Commission safety standard.

5. The proposed modifications will not cause a change or alteration in the physical or environmental characteristics of the site.

6. The existing structure and its foundation can support the proposed loading.

For the foregoing reasons, T-Mobile respectfully submits that the proposed modifications to the above-reference telecommunications facility constitutes an exempt modification under R.C.S.A. § 16-50j-72(b)(2).

Sincerely,

Richard Zajac
Site Acquisition Specialist
4545 East River Road, Suite 320
West Henrietta, NY
(585) 445-5896
Richard.zajac@crowncastle.com

cc:

John Mehr, Town Manager *(via email only to jmehr@rockyhillct.gov)*
Town of Rocky Hill
761 Old Main Street
Rocky Hill, CT 06067

Kim Ricci, Town Planner *(via email only to kricci@rockyhillct.gov)*
Town of Rocky Hill
761 Old Main Street
Rocky Hill, CT 06067

Zajac, Richard

From: Zajac, Richard
Sent: Wednesday, June 2, 2021 9:25 PM
To: jmehr@rockyhillct.gov
Subject: Connecticut Siting Council exempt modification application notification
Attachments: CSC Exempt Modification Application - 52 New Britain Ave.pdf

Good evening,
Please see the attached application to the Connecticut Siting Council regarding antenna work on the existing cell tower located at 52 New Britain Avenue in Rocky Hill.

Should you have any questions/comments/concerns regarding this application, please do not hesitate to contact me.

Thank you,
RICH ZAJAC
Site Acquisition Specialist
T: (585) 445-5896 M: (607) 346-7212
F: (724) 416-4461
CROWN CASTLE
4545 East River Road, Suite 320
West Henrietta, NY 14586

Zajac, Richard

From: Zajac, Richard
Sent: Wednesday, June 2, 2021 9:26 PM
To: kricci@rockyhillct.gov
Subject: Connecticut Siting Council exempt modification application notification
Attachments: CSC Exempt Modification Application - 52 New Britain Ave.pdf

Good evening,
Please see the attached application to the Connecticut Siting Council regarding antenna work on the existing cell tower located at 52 New Britain Avenue in Rocky Hill.

Should you have any questions/comments/concerns regarding this application, please do not hesitate to contact me.

Thank you,
RICH ZAJAC
Site Acquisition Specialist
T: (585) 445-5896 M: (607) 346-7212
F: (724) 416-4461
CROWN CASTLE
4545 East River Road, Suite 320
West Henrietta, NY 14586

Exhibit A

Original Facility Approval

№ 13621

TOWN OF ROCKY HILL, CONN.
BUILDING PERMIT

Estimated Cost (structural) $ 669,707.00

Fee $ waived

APPLICANTS PERMIT

November 30, 19 98.

PERMISSION IS HEREBY GRANTED TO Conn Strux Inc. 860-677-9255

to erect a addition

Location R.H. Fire Station #2 N.Britain Ave No. of families or units

Zoned Lot Area Frontage

Front yard setback Right side yard Left side yard

Rear yard Dimensions of building No. stories

Type of Const Owner Town of Rocky Hill

NOTICE

The recipient of this permit accepts this permit on the condition that he, as owner or as representing the owner, agrees to comply with all Building, Zoning Ordinances of the Town of Rocky Hill and the State Statutes of the State of Connecticut, regarding the use occupancy and type of building to be constructed.

Building Official

License No.

Permission must be obtained from the Office of the Town Engineer before Building Materials can be placed in the highway. Surface and roof water must not be connected with the Storm Sewer.

BD-20

Town of Rocky Hill

699 OLD MAIN STREET • PO BOX 657 • ROCKY HILL, CT 06067 • FAX (860) 258-7638

August 27, 2001

To: Jennifer Charland

From: J-P. Langlois, Building Official

Re: Communication Tower, 52 New Britain Avenue

Dear Jennifer;

This letter is in reference to a communication tower that was installed under building permit #13621 at 52 New Britain Avenue in Rocky Hill, Connecticut.

A final inspection was performed on January 25, 2001 and was approved.

Should you have any questions, please feel free to contact the Building Department At (860) 258-2745.

Exhibit B

Property Card

tyler clt division

COMMERCIAL PROPERTY RECORD CARD 2019

TOWN OF ROCKY HILL

Situs : 52 NEW BRITAIN AVENUE	PARCEL ID: 6855	Class: 907	Card: 1 of 1	Printed: March 5, 2020

CURRENT OWNER

ROCKY HILL TOWN OF
CO 2 FIREHOUSE
761 OLD MAIN STREET
ROCKY HILL CT 06067-1517
057/353 12/15/1957

GENERAL INFORMATION

Living Units	
Neighborhood	S
Alternate ID	007392
Vol / Pg	057/353
Map/Lot	08-354
Zoning	C
Class	EXEMPT

08-354-001 12/09/2012

Property Notes

Land Information

Type		Size	Influence Factors	Influence %	Value
Primary	AC	0.5700			314,000

Total Acres: .57
Spot: Location:

Assessment Information

	Assessed	Appraised	Cost	Income	Market
Land	219,800	314,000	314,000	0	0
Building	544,110	777,300	777,300	0	0
Total	763,910	1,091,300	1,091,300	0	0

Manual Override Reason
Base Date of Value
Value Flag
Effective Date of Value
Gross Building:

Entrance Information

Date	ID	Entry Code	Source
10/04/12	ST	Measured + 1visit	From Conversion

Permit Information

Date Issued	Number	Price	Purpose		% Complete
03/15/18	2018-352	25,000	CM	Remove And Replace (3) Antenna:	0
10/31/17	2018-198	20,000	CM	Sprint To Add Three (3) Antennas	0
09/10/16	2017-104	20,000	MS	At&T To Add Three (3) Antennas A	0
10/28/15	2016-135	28,000	EL	Retrofit Lights In Fire Station	0
06/18/15	2015-457	44,000	SN	Replace Existing Message Boards	0

Sales/Ownership History

Transfer Date	Price	Type	Validity	Deed Reference	Deed Type	Grantee
12/15/57		Vacant - Land Only Sale	No Consideration	057/353	No Consideration	ROCKY HILL TOWN OF

Inspection Witnessed By _____

tyler clt division

COMMERCIAL PROPERTY RECORD CARD 2019

TOWN OF ROCKY HILL

Situs : 52 NEW BRITAIN AVENUE	Parcel Id: 6855	Class: 907	Card: 1 of 1	Printed: March 5, 2020

Building Information

Year Built/Eff Year	1958 /
Building #	1
Structure Type	Police/Fire Station
Identical Units	1
Total Units	1
Grade	B
# Covered Parking	
# Uncovered Parking	
DBA	CO 2 FIREHOUSE

Building Other Features

Line	Type	+/-	Meas1	Meas2	# Stops	Ident Units	Line	Type	+/-	Meas1	Meas2	# Stops	Ident Units

Interior/Exterior Information

Line	Level From - To		Int Fin	Area	Perim	Use Type	Wall Height	Ext Walls	Construction	Partitions	Heating	Cooling	Plumbing	Physical	Functional
1	01	01		4,199	260	Municipal	12	Brick & Con	Fire Resistant	Normal	Hot Air	Central	Normal	5	3
2	02	02		3,074	222	Municipal	12	Brick & Con	Fire Resistant	Normal	Hot Air	Central	Normal	5	3

Interior/Exterior Valuation Detail

Line	Area	Use Type	% Good	% Complete	Use Value/RCNLD
1	4,199	Municipal	60		456,520
2	3,074	Municipal	60		299,700

Outbuilding Data

Line	Type	Yr Blt	Meas1	Meas2	Qty	Area	Grade	Phy Fun	Value
1	Asph Pav	1958			1	17,000	C	A	21,040

tyler clt division

COMMERCIAL PROPERTY RECORD CARD 2019

TOWN OF ROCKY HILL

Situs : 52 NEW BRITAIN AVENUE	Parcel Id: 6855	Class: 907	Card: 1 of 1	Printed: March 5, 2020

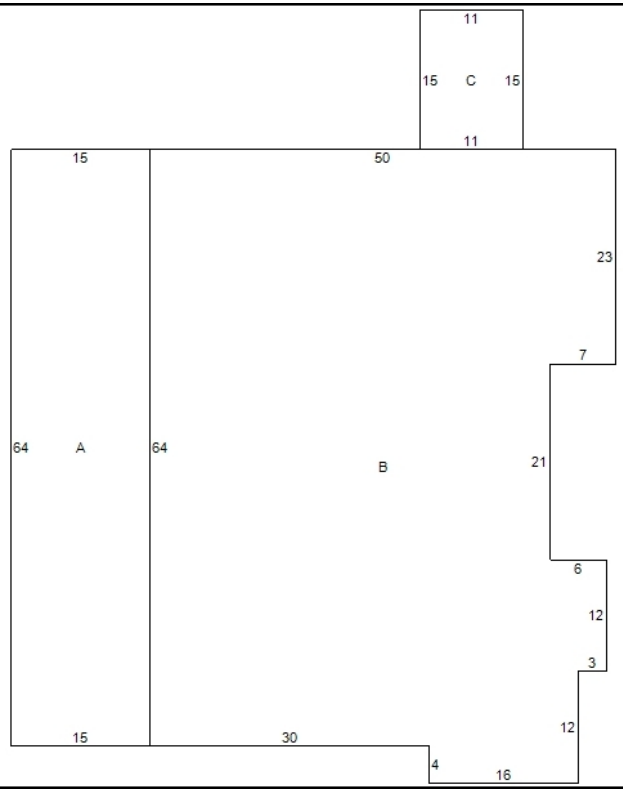

ID	Code	Description	Area
A	VS1	1S	960
B	VS2	2S	3073
C	VS1	1S	165
D	060	MUNICIPAL	4199*
E	060	MUNICIPAL	3074*
F	PA1	COMM PAVING ASPHALT PARKING	17000*

Addtional Property Photos

tyler clt division

COMMERCIAL PROPERTY RECORD CARD 2019

TOWN OF ROCKY HILL

Situs : 52 NEW BRITAIN AVENUE	Parcel Id: 6855	Class: 907	Card: 1 of 1	Printed: March 5, 2020

Income Detail (Includes all Buildings on Parcel)

Use Grp	Mod Type	Inc Mod	Model Description	Units	Net Area	Income Rate	Econ Adjust	Potential Gross Income	Vac Model	Vac Adj	Additional Income	Effective Gross Income	Expense Model %	Expense Adj %	Expense Adj	Other Expenses	Total Expenses	Net Operating Income
00	S	1	Shell Income Use Grou	0	7,273						0							

Apartment Detail - Building 1 of 1

Line	Use Type	Per Bldg	Beds	Baths	Units	Rent	Income

Building Cost Detail - Building 1 of 1

Total Gross Building Area	7,273
Replace, Cost New Less Depr	756,220
Percent Complete	100
Number of Identical Units	1
Economic Condition Factor	
Final Building Value	756,220
Value per SF	103.98

Notes - Building 1 of 1

Income Summary (Includes all Building on Parcel)

Total Net Income	
Capitalization Rate	0.090000
Sub total	
Residual Land Value	
Final Income Value	
Total Gross Rent Area	
Total Gross Building Area	7,273

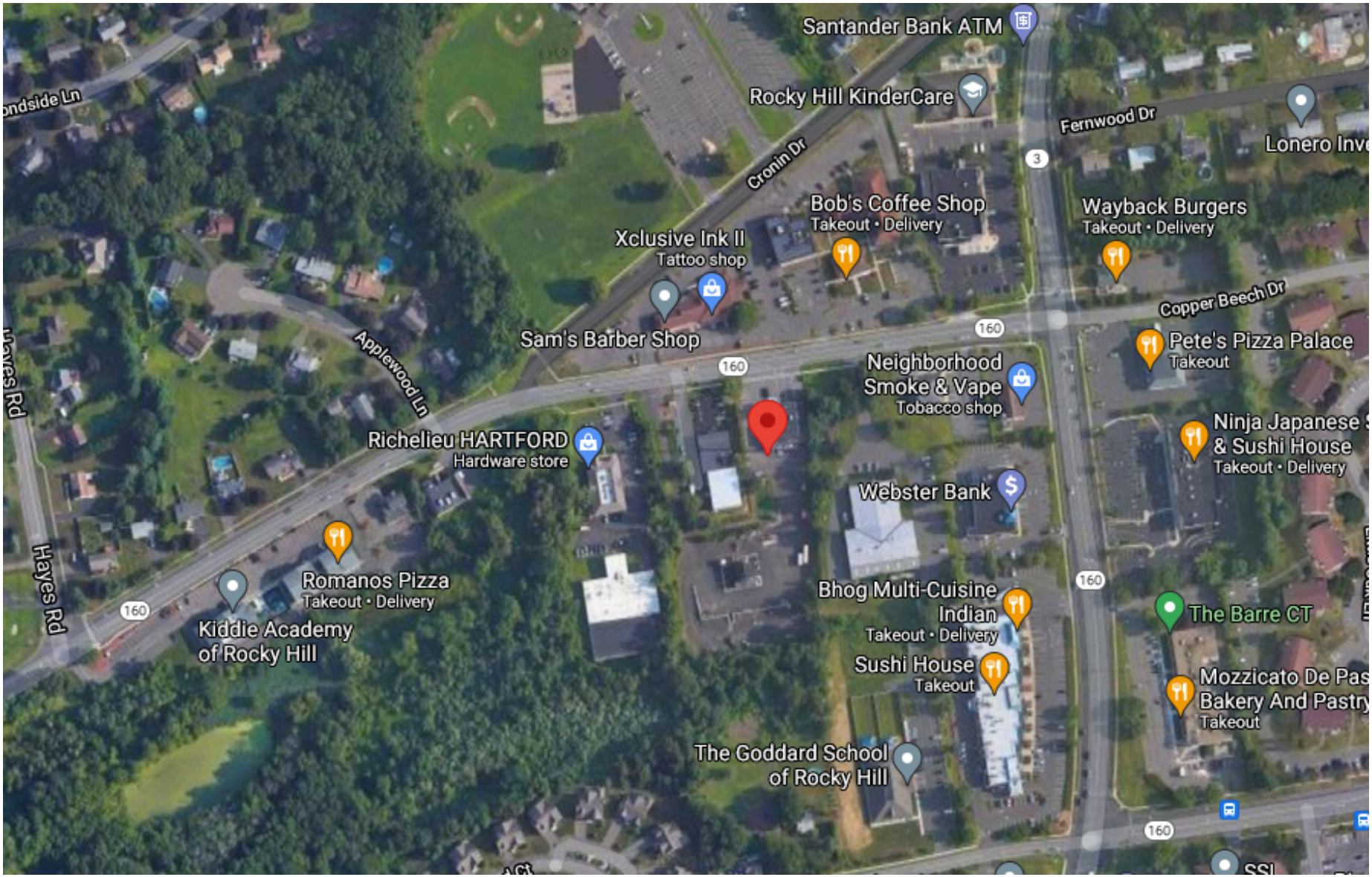
Santander Bank ATM
Rocky Hill KinderCare
Fernwood Dr
Lonero Inve
Cronin Dr
Bob's Coffee Shop
Takeout • Delivery
Wayback Burgers
Takeout • Delivery
Xclusive Ink II
Tattoo shop
Copper Beech Dr
Sam's Barber Shop
Pete's Pizza Palace
Takeout
Applewood Ln
Neighborhood
Smoke & Vape
Tobacco shop
Richelieu HARTFORD
Hardware store
Ninja Japanese
& Sushi House
Takeout • Delivery
Webster Bank
Hayes Rd
Romanos Pizza
Takeout • Delivery
Bhog Multi-Cuisine
Indian
Takeout • Delivery
The Barre CT
Kiddie Academy
of Rocky Hill
Sushi House
Takeout
Mozzicato De Pas
Bakery And Pastry
Takeout
The Goddard School
of Rocky Hill
160
3

Exhibit C

Construction Drawings

T-Mobile

CALL CONNECTICUT ONE CALL
(800) 922-4455 CBYD.COM
CALL 2 WORKING DAYS
BEFORE YOU DIG!

T-MOBILE SITE NUMBER: CT11427A
BUSINESS UNIT #: 842872
T-MOBILE SITE NAME: ROCKY HILL/RT 3/RT 160
SITE ADDRESS: 52 NEW BRITAIN AVENUE ROCKY HILL, CT 06067
SITE TYPE: MONOPOLE
COUNTY: HARTFORD
TOWER HEIGHT: 181'-10"
JURISDICTION: TOWN OF ROCKY HILL

T-MOBILE ANCHOR SITE CONFIGURATION: 67D5997DB_2xAIR+1OP (GSM ONLY)

T-Mobile
4 SYLVAN WAY
PARSIPPANY, NJ 07054

CROWN CASTLE
3 CORPORATE PARK DRIVE, SUTIE 101
CLIFTON PARK, NY 12065

TOWER ENGINEERING PROFESSIONALS
326 TRYON RD
RALEIGH, NC 27603
(919) 661-6351
53 STICKLE AVENUE
ROCKAWAY, NJ 07866
(984) 255-7011
TEP JOB #: 25659.522999

SITE INFORMATION

CROWN CASTLE USA INC. SITE NAME:	ROCKY HILL
SITE ADDRESS:	52 NEW BRITAIN AVENUE ROCKY HILL, CT 06067
COUNTY:	HARTFORD
PARCEL #:	08-354
AREA OF CONSTRUCTION:	EXISTING
LATITUDE:	41° 39' 36.89" (41.66023700°)
LONGITUDE:	-72° 40' 50.58" (-72.68070200°)
LAT/LONG TYPE:	NAD83
GROUND ELEVATION:	±191 FT
CURRENT ZONING:	C
JURISDICTION:	TOWN OF ROCKY HILL
TYPE OF CONSTRUCTION:	IIB
A.D.A. COMPLIANCE:	FACILITY IS UNMANNED AND NOT FOR HUMAN HABITATION
PROPERTY OWNER:	TOWN OF ROCKY HILL 761 OLD MAIN STREET ROCKY HILL, CT 06067
TOWER OWNER:	CROWN CASTLE USA INC. 2000 CORPORATE DRIVE CANONSBURG, PA 15317
CARRIER/APPLICANT:	T-MOBILE 4 SYLVAN WAY PARSIPPANY, NJ 07054
ELECTRIC PROVIDER:	NORTHEAST UTILITIES (800) 286-2000
TELCO PROVIDER:	AT&T (800) 483-2000

DRAWING INDEX

SHEET #	SHEET DESCRIPTION
T-1	TITLE SHEET
T-2	GENERAL NOTES
C-1.1	FINAL COMPOUND PLAN
C-1.2	EXISTING AND FINAL EQUIPMENT PLAN
C-2	FINAL ELEVATION & ANTENNA PLANS
C-3	ANTENNA & CABLE SCHEDULE
C-4	PLUMBING DIAGRAM
C-5	EQUIPMENT SPECS
C-6	CABINET SPECS
E-1	PPC PANEL SCHEDULES & ONE LINE DIAGRAM
G-1	ANTENNA GROUNDING DIAGRAM
G-2	GROUNDING DETAILS
G-3	GROUNDING DETAILS
ATTACHED	MOUNT MODIFICATION DRAWINGS (BY OTHERS)

ALL DRAWINGS CONTAINED HEREIN ARE FORMATTED FOR 22x34. CONTRACTOR SHALL VERIFY ALL PLANS AND EXISTING DIMENSIONS AND CONDITIONS ON THE JOB SITE AND SHALL IMMEDIATELY NOTIFY THE ENGINEER IN WRITING OF ANY DISCREPANCIES BEFORE PROCEEDING WITH THE WORK OR BE RESPONSIBLE FOR SAME.

LOCATION MAP

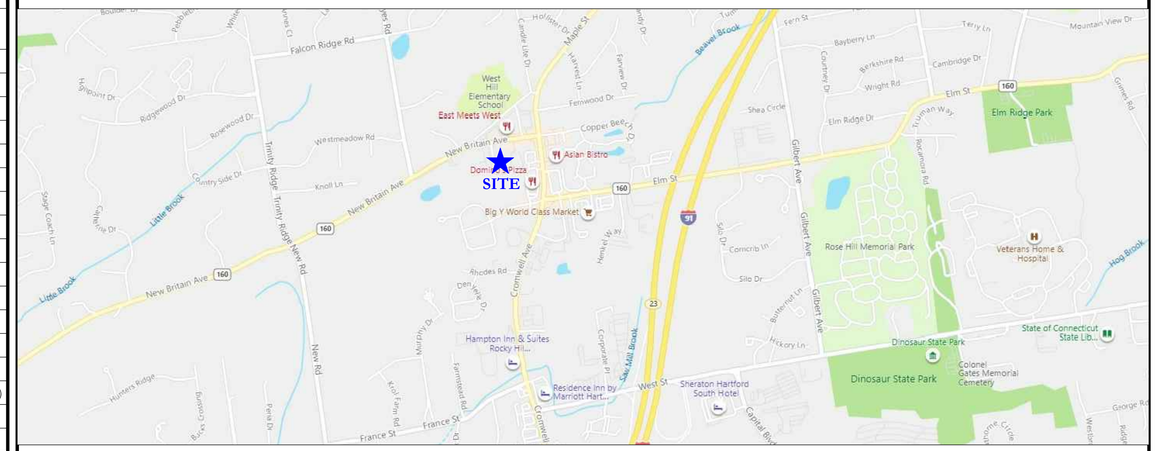

NO SCALE

APPLICABLE CODES/REFERENCE DOCUMENTS

ALL WORK SHALL BE PERFORMED AND MATERIALS INSTALLED IN ACCORDANCE WITH THE CURRENT EDITIONS OF THE FOLLOWING CODES AS ADOPTED BY THE LOCAL GOVERNING AUTHORITIES. NOTHING IN THESE PLANS IS TO BE CONSTRUED TO PERMIT WORK NOT CONFORMING TO THESE CODES:

CODE TYPE	CODE
BUILDING	2018 CONNECTICUT BUILDING CODE
MECHANICAL	2018 CONNECTICUT MECHANICAL CODE
ELECTRICAL	2017 NEC

REFERENCE DOCUMENTS:

STRUCTURAL ANALYSIS: BY OTHERS
DATED:

MOUNT ANALYSIS: INFINIGY ENGINEERING, PLLC
DATED: 4/12/2021

ORDER ID: 548366 RFDS VERSION: 6
REVISION: 0 DATED: 02/18/2021

ANALYSIS CRITERIA:
APPLICABLE CODES: TIA-222-H / ASCE 7-16
WIND SPEED: V = 125 MPH (ULTIMATE 3 SECOND GUST)
EXPOSURE CATEGORY: C
RISK CATEGORY: II
TOPOGRAPHIC CATEGORY: 1
SEISMIC Ss: 0.181
SEISMIC S1: 0.063
SERVICE WIND SPEED: 50 MPH

APPROVALS

APPROVAL	SIGNATURE	DATE
RF		
CONST.		
FAA		
OPS		
RE		
SR DEV MGR		
REG DIR		

THE PARTIES ABOVE HEREBY APPROVE AND ACCEPT THESE DOCUMENTS AND AUTHORIZE THE CONTRACTOR TO PROCEED WITH THE CONSTRUCTION DESCRIBED HEREIN. ALL CONSTRUCTION DOCUMENTS ARE SUBJECT TO REVIEW BY THE LOCAL BUILDING DEPARTMENT AND ANY CHANGES AND MODIFICATIONS THEY MAY IMPOSE.

PROJECT TEAM

A&E FIRM:	TOWER ENGINEERING PROFESSIONALS 326 TRYON ROAD RALEIGH, NC 27603
	JOSEPH T. CRESS - PROJECT MANAGER (919) 661-6351
	GRAHAM M. ANDRES - CIVIL ENGINEER (919) 661-6351
	GRAHAM M. ANDRES - ELECTRICAL ENGINEER (919) 661-6351
TOWER OWNER:	CROWN CASTLE USA INC. 2000 CORPORATE DRIVE CANONSBURG, PA 15317 CROWNAE.APPROVAL@CROWNCASTLE.COM
CROWN CASTLE USA INC. DISTRICT CONTACTS:	3 CORPORATE PARK DRIVE, SUTIE 101 CLIFTON PARK, NY 12065
	CHRIS SOFIELD - PROJECT MANAGER CHRIS.SOFIELD@CROWNCASTLE.COM
	JOSEPH CLARK - A&E SPECIALIST JOSEPH.CLARK@CROWNCASTLE.COM

NOTE:
PRIOR TO ACCESSING/ENTERING THE SITE YOU MUST CONTACT THE CROWN NOC AT (800) 788-7011 & CROWN CONSTRUCTION MANAGER.

PROJECT DESCRIPTION

THE PURPOSE OF THIS PROJECT IS TO ENHANCE BROADBAND CONNECTIVITY AND CAPACITY TO THE EXISTING ELIGIBLE WIRELESS FACILITY.

TOWER SCOPE OF WORK:
- REMOVE (6) ANTENNAS
- REMOVE (3) RRUs
- REMOVE (3) TMAs
- REMOVE (12) 1-5/8" COAX
- REMOVE (2) HYBRID CABLES
- INSTALL (9) ANTENNAS
- INSTALL (6) RRUs
- INSTALL (3) HYBRID 6/24 4AWG 60m CABLES
- INSTALL (3) BACK-TO-BACK RRH MOUNTS
- INSTALL MOUNT MODIFICATIONS

GROUND SCOPE OF WORK:
- REMOVE (1) EQUIPMENT CABINET
- REMOVE (6) RU22 & (2) DUW30 FROM EXISTING CABINET
- INSTALL (2) EQUIPMENT CABINETS
- INSTALL (1) BREAKER FOR NEW CABINET
- INSTALL (1) PSU 4813 VOLTAGE BOOSTER
- INSTALL (2) BB 6648 BASEBANDS & (1) CSR IXRe V2 ROUTER

T-MOBILE SITE NUMBER:
CT11427A
ROCKY HILL/RT 3/RT 160

BU #: **842872**
ROCKY HILL

52 NEW BRITAIN AVENUE
ROCKY HILL, CT 06067

EXISTING 181'-10"
MONOPOLE

ISSUED FOR:

REV	DATE	DRWN	DESCRIPTION	DES./QA
A	04/23/21	SPK	PRELIMINARY	JTC
0	05/24/21	SPK	CONSTRUCTION	JTC

SEAL:

05/24/21

IT IS A VIOLATION OF LAW FOR ANY PERSON, UNLESS THEY ARE ACTING UNDER THE DIRECTION OF A LICENSED PROFESSIONAL ENGINEER, TO ALTER THIS DOCUMENT.

SHEET NUMBER: T-1
REVISION: 0

CROWN CASTLE USA INC. SITE ACTIVITY REQUIREMENTS:

1. NOTICE TO PROCEED– NO WORK SHALL COMMENCE PRIOR TO CROWN CASTLE USA INC. WRITTEN NOTICE TO PROCEED (NTP) AND THE ISSUANCE OF A PURCHASE ORDER. PRIOR TO ACCESSING/ENTERING THE SITE YOU MUST CONTACT THE CROWN CASTLE USA INC. NOC AT 800–788–7011 & THE CROWN CASTLE USA INC. CONSTRUCTION MANAGER.
2. "LOOK UP" – CROWN CASTLE USA INC. SAFETY CLIMB REQUIREMENT:
THE INTEGRITY OF THE SAFETY CLIMB AND ALL COMPONENTS OF THE CLIMBING FACILITY SHALL BE CONSIDERED DURING ALL STAGES OF DESIGN, INSTALLATION, AND INSPECTION. TOWER MODIFICATION, MOUNT REINFORCEMENTS, AND/OR EQUIPMENT INSTALLATIONS SHALL NOT COMPROMISE THE INTEGRITY OR FUNCTIONAL USE OF THE SAFETY CLIMB OR ANY COMPONENTS OF THE CLIMBING FACILITY ON THE STRUCTURE. THIS SHALL INCLUDE, BUT NOT BE LIMITED TO: PINCHING OF THE WIRE ROPE, BENDING OF THE WIRE ROPE FROM ITS SUPPORTS, DIRECT CONTACT OR CLOSE PROXIMITY TO THE WIRE ROPE WHICH MAY CAUSE FRICTIONAL WEAR, IMPACT TO THE ANCHORAGE POINTS IN ANY WAY, OR TO IMPEDE/BLOCK ITS INTENDED USE. ANY COMPROMISED SAFETY CLIMB, INCLUDING EXISTING CONDITIONS MUST BE TAGGED OUT AND REPORTED TO YOUR CROWN CASTLE USA INC. POC OR CALL THE NOC TO GENERATE A SAFETY CLIMB MAINTENANCE AND CONTRACTOR NOTICE TICKET.
3. PRIOR TO THE START OF CONSTRUCTION, ALL REQUIRED JURISDICTIONAL PERMITS SHALL BE OBTAINED. THIS INCLUDES, BUT IS NOT LIMITED TO, BUILDING, ELECTRICAL, MECHANICAL, FIRE, FLOOD ZONE, ENVIRONMENTAL, AND ZONING. AFTER ONSITE ACTIVITIES AND CONSTRUCTION ARE COMPLETED, ALL REQUIRED PERMITS SHALL BE SATISFIED AND CLOSED OUT ACCORDING TO LOCAL JURISDICTIONAL REQUIREMENTS.
4. ALL CONSTRUCTION MEANS AND METHODS; INCLUDING BUT NOT LIMITED TO, ERECTION PLANS, RIGGING PLANS, CLIMBING PLANS, AND RESCUE PLANS SHALL BE THE RESPONSIBILITY OF THE GENERAL CONTRACTOR RESPONSIBLE FOR THE EXECUTION OF THE WORK CONTAINED HEREIN, AND SHALL MEET ANSI/ASSE A10.48 (LATEST EDITION); FEDERAL, STATE, AND LOCAL REGULATIONS; AND ANY APPLICABLE INDUSTRY CONSENSUS STANDARDS RELATED TO THE CONSTRUCTION ACTIVITIES BEING PERFORMED. ALL RIGGING PLANS SHALL ADHERE TO ANSI/ASSE A10.48 (LATEST EDITION) AND CROWN CASTLE USA INC. STANDARD CED–STD–10253, INCLUDING THE REQUIRED INVOLVEMENT OF A QUALIFIED ENGINEER FOR CLASS IV CONSTRUCTION, TO CERTIFY THE SUPPORTING STRUCTURE(S) IN ACCORDANCE WITH ANSI/TIA–322 (LATEST EDITION).
5. ALL SITE WORK TO COMPLY WITH QAS–STD–10068 "INSTALLATION STANDARDS FOR CONSTRUCTION ACTIVITIES ON CROWN CASTLE USA INC. TOWER SITE" AND LATEST VERSION OF ANSI/TIA–1019–A–2012 "STANDARD FOR INSTALLATION, ALTERATION, AND MAINTENANCE OF ANTENNA SUPPORTING STRUCTURES AND ANTENNAS."
6. IF THE SPECIFIED EQUIPMENT CAN NOT BE INSTALLED AS SHOWN ON THESE DRAWINGS, THE CONTRACTOR SHALL PROPOSE AN ALTERNATIVE INSTALLATION FOR APPROVAL BY CROWN CASTLE USA INC. PRIOR TO PROCEEDING WITH ANY SUCH CHANGE OF INSTALLATION.
7. ALL MATERIALS FURNISHED AND INSTALLED SHALL BE IN STRICT ACCORDANCE WITH ALL APPLICABLE CODES, REGULATIONS AND ORDINANCES. CONTRACTOR SHALL ISSUE ALL APPROPRIATE NOTICES AND COMPLY WITH ALL LAWS, ORDINANCES, RULES, REGULATIONS AND LAWFUL ORDERS OF ANY PUBLIC AUTHORITY REGARDING THE PERFORMANCE OF THE WORK. ALL WORK CARRIED OUT SHALL COMPLY WITH ALL APPLICABLE MUNICIPAL AND UTILITY COMPANY SPECIFICATIONS AND LOCAL JURISDICTIONAL CODES, ORDINANCES AND APPLICABLE REGULATIONS.
8. THE CONTRACTOR SHALL INSTALL ALL EQUIPMENT AND MATERIALS IN ACCORDANCE WITH MANUFACTURER'S RECOMMENDATIONS UNLESS SPECIFICALLY STATED OTHERWISE.
9. THE CONTRACTOR SHALL CONTACT UTILITY LOCATING SERVICES PRIOR TO THE START OF CONSTRUCTION.
10. ALL EXISTING ACTIVE SEWER, WATER, GAS, ELECTRIC AND OTHER UTILITIES WHERE ENCOUNTERED IN THE WORK, SHALL BE PROTECTED AT ALL TIMES AND WHERE REQUIRED FOR THE PROPER EXECUTION OF THE WORK, SHALL BE RELOCATED AS DIRECTED BY CONTRACTOR. EXTREME CAUTION SHOULD BE USED BY THE CONTRACTOR WHEN EXCAVATING OR DRILLING PIERS AROUND OR NEAR UTILITIES. CONTRACTOR SHALL PROVIDE SAFETY TRAINING FOR THE WORKING CREW. THIS WILL INCLUDE BUT NOT BE LIMITED TO A) FALL PROTECTION B) CONFINED SPACE C) ELECTRICAL SAFETY D) TRENCHING AND EXCAVATION E) CONSTRUCTION SAFETY PROCEDURES.
11. ALL SITE WORK SHALL BE AS INDICATED ON THE STAMPED CONSTRUCTION DRAWINGS AND PROJECT SPECIFICATIONS, LATEST APPROVED REVISION.
12. CONTRACTOR SHALL KEEP THE SITE FREE FROM ACCUMULATING WASTE MATERIAL, DEBRIS, AND TRASH AT THE COMPLETION OF THE WORK. IF NECESSARY, RUBBISH, STUMPS, DEBRIS, STICKS, STONES AND OTHER REFUSE SHALL BE REMOVED FROM THE SITE AND DISPOSED OF LEGALLY.
13. ALL EXISTING INACTIVE SEWER, WATER, GAS, ELECTRIC AND OTHER UTILITIES, WHICH INTERFERE WITH THE EXECUTION OF THE WORK, SHALL BE REMOVED AND/OR CAPPED, PLUGGED OR OTHERWISE DISCONTINUED AT POINTS WHICH WILL NOT INTERFERE WITH THE EXECUTION OF THE WORK, SUBJECT TO THE APPROVAL OF CONTRACTOR, TOWER OWNER, CROWN CASTLE USA INC., AND/OR LOCAL UTILITIES.
14. THE CONTRACTOR SHALL PROVIDE SITE SIGNAGE IN ACCORDANCE WITH THE TECHNICAL SPECIFICATION FOR SITE SIGNAGE REQUIRED BY LOCAL JURISDICTION AND SIGNAGE REQUIRED ON INDIVIDUAL PIECES OF EQUIPMENT, ROOMS, AND SHELTERS.
15. THE SITE SHALL BE GRADED TO CAUSE SURFACE WATER TO FLOW AWAY FROM THE CARRIER'S EQUIPMENT AND TOWER AREAS.
16. THE SUB GRADE SHALL BE COMPACTED AND BROUGHT TO A SMOOTH UNIFORM GRADE PRIOR TO FINISHED SURFACE APPLICATION.
17. THE AREAS OF THE OWNERS PROPERTY DISTURBED BY THE WORK AND NOT COVERED BY THE TOWER, EQUIPMENT OR DRIVEWAY, SHALL BE GRADED TO A UNIFORM SLOPE, AND STABILIZED TO PREVENT EROSION AS SPECIFIED ON THE CONSTRUCTION DRAWINGS AND/OR PROJECT SPECIFICATIONS.
18. CONTRACTOR SHALL MINIMIZE DISTURBANCE TO EXISTING SITE DURING CONSTRUCTION. EROSION CONTROL MEASURES, IF REQUIRED DURING CONSTRUCTION, SHALL BE IN CONFORMANCE WITH THE LOCAL GUIDELINES FOR EROSION AND SEDIMENT CONTROL.
19. THE CONTRACTOR SHALL PROTECT EXISTING IMPROVEMENTS, PAVEMENTS, CURBS, LANDSCAPING AND STRUCTURES. ANY DAMAGED PART SHALL BE REPAIRED AT CONTRACTOR'S EXPENSE TO THE SATISFACTION OF OWNER.
20. CONTRACTOR SHALL LEGALLY AND PROPERLY DISPOSE OF ALL SCRAP MATERIALS SUCH AS COAXIAL CABLES AND OTHER ITEMS REMOVED FROM THE EXISTING FACILITY. ANTENNAS REMOVED SHALL BE RETURNED TO THE OWNER'S DESIGNATED LOCATION.
21. CONTRACTOR SHALL LEAVE PREMISES IN CLEAN CONDITION. TRASH AND DEBRIS SHOULD BE REMOVED FROM SITE ON A DAILY BASIS.
22. NO FILL OR EMBANKMENT MATERIAL SHALL BE PLACED ON FROZEN GROUND. FROZEN MATERIALS, SNOW OR ICE SHALL NOT BE PLACED IN ANY FILL OR EMBANKMENT.

GENERAL NOTES:

1. FOR THE PURPOSE OF CONSTRUCTION DRAWING, THE FOLLOWING DEFINITIONS SHALL APPLY:
CONTRACTOR: GENERAL CONTRACTOR RESPONSIBLE FOR CONSTRUCTION
CARRIER: T–MOBILE
TOWER OWNER: CROWN CASTLE USA INC.
2. THESE DRAWINGS HAVE BEEN PREPARED USING STANDARDS OF PROFESSIONAL CARE AND COMPLETENESS NORMALLY EXERCISED UNDER SIMILAR CIRCUMSTANCES BY REPUTABLE ENGINEERS IN THIS OR SIMILAR LOCALITIES. IT IS ASSUMED THAT THE WORK DEPICTED WILL BE PERFORMED BY AN EXPERIENCED CONTRACTOR AND/OR WORKPEOPLE WHO HAVE A WORKING KNOWLEDGE OF THE APPLICABLE CODE STANDARDS AND REQUIREMENTS AND OF INDUSTRY ACCEPTED STANDARD GOOD PRACTICE. AS NOT EVERY CONDITION OR ELEMENT IS (OR CAN BE) EXPLICITLY SHOWN ON THESE DRAWINGS, THE CONTRACTOR SHALL USE INDUSTRY ACCEPTED STANDARD GOOD PRACTICE FOR MISCELLANEOUS WORK NOT EXPLICITLY SHOWN.
3. THESE DRAWINGS REPRESENT THE FINISHED STRUCTURE. THEY DO NOT INDICATE THE MEANS OR METHODS OF CONSTRUCTION. THE CONTRACTOR SHALL BE SOLELY RESPONSIBLE FOR THE CONSTRUCTION MEANS, METHODS, TECHNIQUES, SEQUENCES, AND PROCEDURES. THE CONTRACTOR SHALL PROVIDE ALL MEASURES NECESSARY FOR PROTECTION OF LIFE AND PROPERTY DURING CONSTRUCTION. SUCH MEASURES SHALL INCLUDE, BUT NOT BE LIMITED TO, BRACING, FORMWORK, SHORING, ETC. SITE VISITS BY THE ENGINEER OR HIS REPRESENTATIVE WILL NOT INCLUDE INSPECTION OF THESE ITEMS AND IS FOR STRUCTURAL OBSERVATION OF THE FINISHED STRUCTURE ONLY.
4. NOTES AND DETAILS IN THE CONSTRUCTION DRAWINGS SHALL TAKE PRECEDENCE OVER GENERAL NOTES AND TYPICAL DETAILS. WHERE NO DETAILS ARE SHOWN, CONSTRUCTION SHALL CONFORM TO SIMILAR WORK ON THE PROJECT, AND/OR AS PROVIDED FOR IN THE CONTRACT DOCUMENTS. WHERE DISCREPANCIES OCCUR BETWEEN PLANS, DETAILS, GENERAL NOTES, AND SPECIFICATIONS, THE GREATER, MORE STRICT REQUIREMENTS, SHALL GOVERN. IF FURTHER CLARIFICATION IS REQUIRED CONTACT THE ENGINEER OF RECORD.
5. SUBSTANTIAL EFFORT HAS BEEN MADE TO PROVIDE ACCURATE DIMENSIONS AND MEASUREMENTS ON THE DRAWINGS TO ASSIST IN THE FABRICATION AND/OR PLACEMENT OF CONSTRUCTION ELEMENTS BUT IT IS THE SOLE RESPONSIBILITY OF THE CONTRACTOR TO FIELD VERIFY THE DIMENSIONS, MEASUREMENTS, AND/OR CLEARANCES SHOWN IN THE CONSTRUCTION DRAWINGS PRIOR TO FABRICATION OR CUTTING OF ANY NEW OR EXISTING CONSTRUCTION ELEMENTS. IF IT IS DETERMINED THAT THERE ARE DISCREPANCIES AND/OR CONFLICTS WITH THE CONSTRUCTION DRAWINGS THE ENGINEER OF RECORD IS TO BE NOTIFIED AS SOON AS POSSIBLE.
6. PRIOR TO THE SUBMISSION OF BIDS, THE BIDDING CONTRACTOR SHALL VISIT THE CELL SITE TO FAMILIARIZE WITH THE EXISTING CONDITIONS AND TO CONFIRM THAT THE WORK CAN BE ACCOMPLISHED AS SHOWN ON THE CONSTRUCTION DRAWINGS. ANY DISCREPANCY FOUND SHALL BE BROUGHT TO THE ATTENTION OF CROWN CASTLE.
7. ALL MATERIALS FURNISHED AND INSTALLED SHALL BE IN STRICT ACCORDANCE WITH ALL APPLICABLE CODES, REGULATIONS AND ORDINANCES. CONTRACTOR SHALL ISSUE ALL APPROPRIATE NOTICES AND COMPLY WITH ALL LAWS, ORDINANCES, RULES, REGULATIONS AND LAWFUL ORDERS OF ANY PUBLIC AUTHORITY REGARDING THE PERFORMANCE OF THE WORK. ALL WORK CARRIED OUT SHALL COMPLY WITH ALL APPLICABLE MUNICIPAL AND UTILITY COMPANY SPECIFICATIONS AND LOCAL JURISDICTIONAL CODES, ORDINANCES AND APPLICABLE REGULATIONS.
8. UNLESS NOTED OTHERWISE, THE WORK SHALL INCLUDE FURNISHING MATERIALS, EQUIPMENT, APPURTENANCES AND LABOR NECESSARY TO COMPLETE ALL INSTALLATIONS AS INDICATED ON THE DRAWINGS.
9. THE CONTRACTOR SHALL INSTALL ALL EQUIPMENT AND MATERIALS IN ACCORDANCE WITH MANUFACTURER'S RECOMMENDATIONS UNLESS SPECIFICALLY STATED OTHERWISE.
10. IF THE SPECIFIED EQUIPMENT CAN NOT BE INSTALLED AS SHOWN ON THESE DRAWINGS, THE CONTRACTOR SHALL PROPOSE AN ALTERNATIVE INSTALLATION FOR APPROVAL BY THE CARRIER AND CROWN CASTLE PRIOR TO PROCEEDING WITH ANY SUCH CHANGE OF INSTALLATION.
11. CONTRACTOR IS TO PERFORM A SITE INVESTIGATION AND IS TO DETERMINE THE BEST ROUTING OF ALL CONDUITS FOR POWER, AND TELCO AND FOR GROUNDING CABLES AS SHOWN IN THE POWER, TELCO, AND GROUNDING PLAN DRAWINGS.
12. THE CONTRACTOR SHALL PROTECT EXISTING IMPROVEMENTS, PAVEMENTS, CURBS, LANDSCAPING AND STRUCTURES. ANY DAMAGED PART SHALL BE REPAIRED AT CONTRACTOR'S EXPENSE TO THE SATISFACTION OF CROWN CASTLE USA INC.
13. CONTRACTOR SHALL LEGALLY AND PROPERLY DISPOSE OF ALL SCRAP MATERIALS SUCH AS COAXIAL CABLES AND OTHER ITEMS REMOVED FROM THE EXISTING FACILITY. ANTENNAS REMOVED SHALL BE RETURNED TO THE OWNER'S DESIGNATED LOCATION.
14. CONTRACTOR SHALL LEAVE PREMISES IN CLEAN CONDITION. TRASH AND DEBRIS SHOULD BE REMOVED FROM SITE ON A DAILY BASIS.

CONCRETE, FOUNDATIONS, AND REINFORCING STEEL:

1. ALL CONCRETE WORK SHALL BE IN ACCORDANCE WITH THE ACI 301, ACI 318, ACI 336, ASTM A184, ASTM A185 AND THE DESIGN AND CONSTRUCTION SPECIFICATION FOR CAST–IN–PLACE CONCRETE.
2. UNLESS NOTED OTHERWISE, SOIL BEARING PRESSURE USED FOR DESIGN OF SLABS AND FOUNDATIONS IS ASSUMED TO BE 1000 psf.
3. ALL CONCRETE SHALL HAVE A MINIMUM COMPRESSIVE STRENGTH (f'c) OF 3000 psi AT 28 DAYS, UNLESS NOTED OTHERWISE. NO MORE THAN 90 MINUTES SHALL ELAPSE FROM BATCH TIME TO TIME OF PLACEMENT UNLESS APPROVED BY THE ENGINEER OF RECORD. TEMPERATURE OF CONCRETE SHALL NOT EXCEED 90°f AT TIME OF PLACEMENT.
4. CONCRETE EXPOSED TO FREEZE–THAW CYCLES SHALL CONTAIN AIR ENTRAINING ADMIXTURES. AMOUNT OF AIR ENTRAINMENT TO BE BASED ON SIZE OF AGGREGATE AND F3 CLASS EXPOSURE (VERY SEVERE). CEMENT USED TO BE TYPE II PORTLAND CEMENT WITH A MAXIMUM WATER–TO–CEMENT RATIO (W/C) OF 0.45.
5. ALL STEEL REINFORCING SHALL CONFORM TO ASTM A615. ALL WELDED WIRE FABRIC (WWF) SHALL CONFORM TO ASTM A185. ALL SPLICES SHALL BE CLASS "B" TENSION SPLICES, UNLESS NOTED OTHERWISE. ALL HOOKS SHALL BE STANDARD 90 DEGREE HOOKS, UNLESS NOTED OTHERWISE. YIELD STRENGTH (Fy) OF STANDARD DEFORMED BARS ARE AS FOLLOWS:
#4 BARS AND SMALLER 40 ksi
#5 BARS AND LARGER 60 ksi
6. THE FOLLOWING MINIMUM CONCRETE COVER SHALL BE PROVIDED FOR REINFORCING STEEL UNLESS SHOWN OTHERWISE ON DRAWINGS:
CONCRETE CAST AGAINST AND PERMANENTLY EXPOSED TO EARTH 3"
CONCRETE EXPOSED TO EARTH OR WEATHER:
#6 BARS AND LARGER 2"
#5 BARS AND SMALLER 1–1/2"
CONCRETE NOT EXPOSED TO EARTH OR WEATHER:
SLAB AND WALLS 3/4"
BEAMS AND COLUMNS 1–1/2"
7. A TOOLED EDGE OR A 3/4" CHAMFER SHALL BE PROVIDED AT ALL EXPOSED EDGES OF CONCRETE, UNLESS NOTED OTHERWISE, IN ACCORDANCE WITH ACI 301 SECTION 4.2.4.

GREENFIELD GROUNDING NOTES:

1. ALL GROUND ELECTRODE SYSTEMS (INCLUDING TELECOMMUNICATION, RADIO, LIGHTNING PROTECTION AND AC POWER GES'S) SHALL BE BONDED TOGETHER AT OR BELOW GRADE, BY TWO OR MORE COPPER BONDING CONDUCTORS IN ACCORDANCE WITH THE NEC.
2. THE CONTRACTOR SHALL PERFORM IEEE FALL–OF–POTENTAL RESISTANCE TO EARTH TESTING (PER IEEE 1100 AND 81) FOR GROUND ELECTRODE SYSTEMS, THE CONTRACTOR SHALL FURNISH AND INSTALL SUPPLEMENTAL GROUND ELECTRODES AS NEEDED TO ACHIEVE A TEST RESULT OF 5 OHMS OR LESS.
3. THE CONTRACTOR IS RESPONSIBLE FOR PROPERLY SEQUENCING GROUNDING AND UNDERGROUND CONDUIT INSTALLATION AS TO PREVENT ANY LOSS OF CONTINUITY IN THE GROUNDING SYSTEM OR DAMAGE TO THE CONDUIT AND PROVIDE TESTING RESULTS.
4. METAL CONDUIT AND TRAY SHALL BE GROUNDED AND MADE ELECTRICALLY CONTINUOUS WITH LISTED BONDING FITTINGS OR BY BONDING ACROSS THE DISCONTINUITY WITH #6 COPPER WIRE UL APPROVED GROUNDING TYPE CONDUIT CLAMPS.
5. METAL RACEWAY SHALL NOT BE USED AS THE NEC REQUIRED EQUIPMENT GROUND CONDUCTOR. STRANDED COPPER CONDUCTORS WITH GREEN INSULATION, SIZED IN ACCORDANCE WITH THE NEC, SHALL BE FURNISHED AND INSTALLED WITH THE POWER CIRCUITS TO BTS EQUIPMENT.
6. EACH CABINET FRAME SHALL BE DIRECTLY CONNECTED TO THE MASTER GROUND BAR WITH GREEN INSULATED SUPPLEMENTAL EQUIPMENT GROUND WIRES, #6 STRANDED COPPER OR LARGER FOR INDOOR BTS; #2 BARE SOLID TINNED COPPER FOR OUTDOOR BTS.
7. CONNECTIONS TO THE GROUND BUS SHALL NOT BE DOUBLED UP OR STACKED BACK TO BACK CONNECTIONS ON OPPOSITE SIDE OF THE GROUND BUS ARE PERMITTED.
8. ALL EXTERIOR GROUND CONDUCTORS BETWEEN EQUIPMENT/GROUND BARS AND THE GROUND RING SHALL BE #2 SOLID TINNED COPPER UNLESS OTHERWISE INDICATED.
9. ALUMINUM CONDUCTOR OR COPPER CLAD STEEL CONDUCTOR SHALL NOT BE USED FOR GROUNDING CONNECTIONS.
10. USE OF 90° BENDS IN THE PROTECTION GROUNDING CONDUCTORS SHALL BE AVOIDED WHEN 45° BENDS CAN BE ADEQUATELY SUPPORTED.
11. EXOTHERMIC WELDS SHALL BE USED FOR ALL GROUNDING CONNECTIONS BELOW GRADE.
12. ALL GROUND CONNECTIONS ABOVE GRADE (INTERIOR AND EXTERIOR) SHALL BE FORMED USING HIGH PRESS CRIMPS.
13. COMPRESSION GROUND CONNECTIONS MAY BE REPLACED BY EXOTHERMIC WELD CONNECTIONS.
14. ICE BRIDGE BONDING CONDUCTORS SHALL BE EXOTHERMICALLY BONDED OR BOLTED TO THE BRIDGE AND THE TOWER GROUND BAR.
15. APPROVED ANTIOXIDANT COATINGS (i.e. CONDUCTIVE GEL OR PASTE) SHALL BE USED ON ALL COMPRESSION AND BOLTED GROUND CONNECTIONS.
16. ALL EXTERIOR GROUND CONNECTIONS SHALL BE COATED WITH A CORROSION RESISTANT MATERIAL.
17. MISCELLANEOUS ELECTRICAL AND NON–ELECTRICAL METAL BOXES, FRAMES AND SUPPORTS SHALL BE BONDED TO THE GROUND RING, IN ACCORDANCE WITH THE NEC.
18. BOND ALL METALLIC OBJECTS WITHIN 6 ft OF MAIN GROUND RING WITH (1) #2 BARE SOLID TINNED COPPER GROUND CONDUCTOR.
19. GROUND CONDUCTORS USED FOR THE FACILITY GROUNDING AND LIGHTNING PROTECTION SYSTEMS SHALL NOT BE ROUTED THROUGH METALLIC OBJECTS THAT FORM A RING AROUND THE CONDUCTOR, SUCH AS METALLIC CONDUITS, METAL SUPPORT CLIPS OR SLEEVES THROUGH WALLS OR FLOORS. WHEN IT IS REQUIRED TO BE HOUSED IN CONDUIT TO MEET CODE REQUIREMENTS OR LOCAL CONDITIONS, NON–METALLIC MATERIAL SUCH AS PVC CONDUIT SHALL BE USED. WHERE USE OF METAL CONDUIT IS UNAVOIDABLE (i.e., NONMETALLIC CONDUIT PROHIBITED BY LOCAL CODE) THE GROUND CONDUCTOR SHALL BE BONDED TO EACH END OF THE METAL CONDUIT.
20. ALL GROUNDS THAT TRANSITION FROM BELOW GRADE TO ABOVE GRADE MUST BE #2 BARE SOLID TINNED COPPER IN 3/4" NON–METALLIC, FLEXIBLE CONDUIT FROM 24" BELOW GRADE TO WITHIN 3" TO 6" OF CAD–WELD TERMINATION POINT. THE EXPOSED END OF THE CONDUIT MUST BE SEALED WITH SILICONE CAULK. (ADD TRANSITIONING GROUND STANDARD DETAIL AS WELL).
21. BUILDINGS WHERE THE MAIN GROUNDING CONDUCTORS ARE REQUIRED TO BE ROUTED TO GRADE, THE CONTRACTOR SHALL ROUTE TWO GROUNDING CONDUCTORS FROM THE ROOFTOP, TOWERS, AND WATER TOWERS GROUNDING RING, TO THE EXISTING GROUNDING SYSTEM, THE GROUNDING CONDUCTORS SHALL NOT BE SMALLER THAN 2/0 COPPER. ROOFTOP GROUNDING RING SHALL BE BONDED TO THE EXISTING GROUNDING SYSTEM, THE BUILDING STEEL COLUMNS, LIGHTNING PROTECTION SYSTEM, AND BUILDING MAIN WATER LINE (FERROUS OR NONFERROUS METAL PIPING ONLY).

ELECTRICAL INSTALLATION NOTES:

1. ALL ELECTRICAL WORK SHALL BE PERFORMED IN ACCORDANCE WITH THE PROJECT SPECIFICATIONS, NEC AND ALL APPLICABLE FEDERAL, STATE, AND LOCAL CODES/ORDINANCES.
2. CONDUIT ROUTINGS ARE SCHEMATIC. CONTRACTOR SHALL INSTALL CONDUITS SO THAT ACCESS TO EQUIPMENT IS NOT BLOCKED AND TRIP HAZARDS ARE ELIMINATED.
3. WIRING, RACEWAY AND SUPPORT METHODS AND MATERIALS SHALL COMPLY WITH THE REQUIREMENTS OF THE NEC.
4. ALL CIRCUITS SHALL BE SEGREGATED AND MAINTAIN MINIMUM CABLE SEPARATION AS REQUIRED BY THE NEC.
4.1. ALL EQUIPMENT SHALL BEAR THE UNDERWRITERS LABORATORIES LABEL OF APPROVAL, AND SHALL CONFORM TO REQUIREMENT OF THE NATIONAL ELECTRICAL CODE.
4.2. ALL OVERCURRENT DEVICES SHALL HAVE AN INTERRUPTING CURRENT RATING THAT SHALL BE GREATER THAN THE SHORT CIRCUIT CURRENT TO WHICH THEY ARE SUBJECTED, 22,000 AIC MINIMUM. VERYIFY AVAILABLE SHORT CIRCUIT CURRENT DOES NOT EXCEED THE RATING OF ELECTRICAL EQUIPMENT IN ACCORDANCE WITH ARTICLE 110.24 NEC OR THE MOST CURRENT ADOPTED CODE PRE THE GOVERNING JURISDICTION.
5. EACH END OF EVERY POWER PHASE CONDUCTOR, GROUNDING CONDUCTOR, AND TELCO CONDUCTOR OR CABLE SHALL BE LABELED WITH COLOR–CODED INSULATION OR ELECTRICAL TAPE (3M BRAND, 1/2" PLASTIC ELECTRICAL TAPE WITH UV PROTECTION, OR EQUAL). THE IDENTIFICATION METHOD SHALL CONFORM WITH NEC AND OSHA.
6. ALL ELECTRICAL COMPONENTS SHALL BE CLEARLY LABELED WITH LAMICOID TAGS SHOWING THEIR RATED VOLTAGE, PHASE CONFIGURATION, WIRE CONFIGURATION, POWER OR AMPACITY RATING AND BRANCH CIRCUIT ID NUMBERS (i.e. PANEL BOARD AND CIRCUIT ID'S).
7. PANEL BOARDS (ID NUMBERS) SHALL BE CLEARLY LABELED WITH PLASTIC LABELS.
8. ALL TIE WRAPS SHALL BE CUT FLUSH WITH APPROVED CUTTING TOOL TO REMOVE SHARP EDGES.
9. ALL POWER AND EQUIPMENT GROUND WIRING IN TUBING OR CONDUIT SHALL BE SINGLE COPPER CONDUCTOR (#14 OR LARGER) WITH TYPE THHW, THWN, THWN–2, XHHW, XHHW–2, THW, THW–2, RHW, OR RHW–2 INSULATION UNLESS OTHERWISE SPECIFIED.
10. SUPPLEMENTAL EQUIPMENT GROUND WIRING LOCATED INDOORS SHALL BE SINGLE COPPER CONDUCTOR (#6 OR LARGER) WITH TYPE THHW, THWN, THWN–2, XHHW, XHHW–2, THW, THW–2, RHW, OR RHW–2 INSULATION UNLESS OTHERWISE SPECIFIED.
11. POWER AND CONTROL WIRING IN FLEXIBLE CORD SHALL BE MULTI–CONDUCTOR, TYPE SOOW CORD (#14 OR LARGER) UNLESS OTHERWISE SPECIFIED.
12. POWER AND CONTROL WIRING FOR USE IN CABLE TRAY SHALL BE MULTI–CONDUCTOR, TYPE TC CABLE (#14 OR LARGER), WITH TYPE THHW, THWN, THWN–2, XHHW, XHHW–2, THW, THW–2, RHW, OR RHW–2 INSULATION UNLESS OTHERWISE SPECIFIED.
13. ALL POWER AND GROUNDING CONNECTIONS SHALL BE CRIMP–STYLE, COMPRESSION WIRE LUGS AND WIRE NUTS BY THOMAS AND BETTS (OR EQUAL). LUGS AND WIRE NUTS SHALL BE RATED FOR OPERATION NOT LESS THAN 75° C (90° C IF AVAILABLE).
14. RACEWAY AND CABLE TRAY SHALL BE LISTED OR LABELED FOR ELECTRICAL USE IN ACCORDANCE WITH NEMA, UL, ANSI/IEEE AND NEC.
15. ELECTRICAL METALLIC TUBING (EMT), INTERMEDIATE METAL CONDUIT (IMC), OR RIGID METAL CONDUIT (RMC) SHALL BE USED FOR EXPOSED INDOOR LOCATIONS.
16. ELECTRICAL METALLIC TUBING (EMT) OR METAL–CLAD CABLE (MC) SHALL BE USED FOR CONCEALED INDOOR LOCATIONS.
17. SCHEDULE 40 PVC UNDERGROUND ON STRAIGHTS AND SCHEDULE 80 PVC FOR ALL ELBOWS/90s AND ALL APPROVED ABOVE GRADE PVC CONDUIT.
18. LIQUID–TIGHT FLEXIBLE METALLIC CONDUIT (LIQUID–TITE FLEX) SHALL BE USED INDOORS AND OUTDOORS, WHERE VIBRATION OCCURS OR FLEXIBILITY IS NEEDED.
19. CONDUIT AND TUBING FITTINGS SHALL BE THREADED OR COMPRESSION–TYPE AND APPROVED FOR THE LOCATION USED. SET SCREW FITTINGS ARE NOT ACCEPTABLE.
20. CABINETS, BOXES AND WIRE WAYS SHALL BE LABELED FOR ELECTRICAL USE IN ACCORDANCE WITH NEMA, UL, ANSI/IEEE AND THE NEC.
21. WIREWAYS SHALL BE METAL WITH AN ENAMEL FINISH AND INCLUDE A HINGED COVER, DESIGNED TO SWING OPEN DOWNWARDS (WIREMOLD SPECMATE WIREWAY).
22. SLOTTED WIRING DUCT SHALL BE PVC AND INCLUDE COVER (PANDUIT TYPE E OR EQUAL).
23. CONDUITS SHALL BE FASTENED SECURELY IN PLACE WITH APPROVED NON–PERFORATED STRAPS AND HANGERS. EXPLOSIVE DEVICES (i.e. POWDER–ACTUATED) FOR ATTACHING HANGERS TO STRUCTURE WILL NOT BE PERMITTED. CLOSELY FOLLOW THE LINES OF THE STRUCTURE, MAINTAIN CLOSE PROXIMITY TO THE STRUCTURE AND KEEP CONDUITS IN TIGHT ENVELOPES. CHANGES IN DIRECTION TO ROUTE AROUND OBSTACLES SHALL BE MADE WITH CONDUIT OUTLET BODIES. CONDUIT SHALL BE INSTALLED IN A NEAT AND WORKMANLIKE MANNER. PARALLEL AND PERPENDICULAR TO STRUCTURE WALL AND CEILING LINES. ALL CONDUIT SHALL BE FISHED TO CLEAR OBSTRUCTIONS. ENDS OF CONDUITS SHALL BE TEMPORARILY CAPPED FLUSH TO FINISH GRADE TO PREVENT CONCRETE, PLASTER OR DIRT FROM ENTERING. CONDUITS SHALL BE RIGIDLY CLAMPED TO BOXES BY GALVANIZED MALLEABLE IRON BUSHING ON INSIDE AND GALVANIZED MALLEABLE IRON LOCKNUT ON OUTSIDE AND INSIDE.
24. EQUIPMENT CABINETS, TERMINAL BOXES, JUNCTION BOXES AND PULL BOXES SHALL BE GALVANIZED OR EPOXY–COATED SHEET STEEL. SHALL MEET OR EXCEED UL 50 AND BE RATED NEMA 1 (OR BETTER) FOR INTERIOR LOCATIONS AND NEMA 3R (OR BETTER) FOR EXTERIOR LOCATIONS.
25. METAL RECEPTACLE, SWITCH AND DEVICE BOXES SHALL BE GALVANIZED, EPOXY–COATED OR NON–CORRODING; SHALL MEET OR EXCEED UL 514A AND NEMA OS 1 AND BE RATED NEMA 1 (OR BETTER) FOR INTERIOR LOCATIONS AND WEATHER PROTECTED (WP OR BETTER) FOR EXTERIOR LOCATIONS.
26. NONMETALLIC RECEPTACLE, SWITCH AND DEVICE BOXES SHALL MEET OR EXCEED NEMA OS 2 (NEWEST REVISION) AND BE RATED NEMA 1 (OR BETTER) FOR INTERIOR LOCATIONS AND WEATHER PROTECTED (WP OR BETTER) FOR EXTERIOR LOCATIONS.
27. THE CONTRACTOR SHALL NOTIFY AND OBTAIN NECESSARY AUTHORIZATION FROM THE CARRIER AND/OR CROWN CASTLE USA INC. BEFORE COMMENCING WORK ON THE AC POWER DISTRIBUTION PANELS.
28. THE CONTRACTOR SHALL PROVIDE NECESSARY TAGGING ON THE BREAKERS, CABLES AND DISTRIBUTION PANELS IN ACCORDANCE WITH THE APPLICABLE CODES AND STANDARDS TO SAFEGUARD LIFE AND PROPERTY.
29. INSTALL LAMICOID LABEL ON THE METER CENTER TO SHOW "T–MOBILE".
30. ALL EMPTY/SPARE CONDUITS THAT ARE INSTALLED ARE TO HAVE A METERED MULE TAPE PULL CORD INSTALLED.

CONDUCTOR COLOR CODE		
SYSTEM	CONDUCTOR	COLOR
120/240V, 1Ø	A PHASE	BLACK
	B PHASE	RED
	NEUTRAL	WHITE
	GROUND	GREEN
120/208V, 3Ø	A PHASE	BLACK
	B PHASE	RED
	C PHASE	BLUE
	NEUTRAL	WHITE
	GROUND	GREEN
277/480V, 3Ø	A PHASE	BROWN
	B PHASE	ORANGE OR PURPLE
	C PHASE	YELLOW
	NEUTRAL	GREY
	GROUND	GREEN
DC VOLTAGE	POS (+)	RED**
	NEG (–)	BLACK**

* SEE NEC 210.5(C)(1) AND (2)
** POLARITY MARKED AT TERMINATION

APWA UNIFORM COLOR CODE:

WHITE	PROPOSED EXCAVATION
PINK	TEMPORARY SURVEY MARKINGS
RED	ELECTRIC POWER LINES, CABLES, CONDUIT, AND LIGHTING CABLES
YELLOW	GAS, OIL, STEAM, PETROLEUM, OR GASEOUS MATERIALS
ORANGE	COMMUNICATION, ALARM OR SIGNAL LINES, CABLES, OR CONDUIT AND TRAFFIC LOOPS
BLUE	POTABLE WATER
PURPLE	RECLAIMED WATER, IRRIGATION, AND SLURRY LINES
GREEN	SEWERS AND DRAIN LINES

ABBREVIATIONS:

ANT	ANTENNA
(E)	EXISTING
FIF	FACILITY INTERFACE FRAME
GEN	GENERATOR
GPS	GLOBAL POSITIONING SYSTEM
GSM	GLOBAL SYSTEM FOR MOBILE
LTE	LONG TERM EVOLUTION
MGB	MASTER GROUND BAR
MW	MICROWAVE
(N)	NEW
NEC	NATIONAL ELECTRIC CODE
(P)	PROPOSED
PP	POWER PLANT
QTY	QUANTITY
RECT	RECTIFIER
RBS	RADIO BASE STATION
RET	REMOTE ELECTRIC TILT
RFDS	RADIO FREQUENCY DATA SHEET
RRH	REMOTE RADIO HEAD
RRU	REMOTE RADIO UNIT
SIAD	SMART INTEGRATED DEVICE
TMA	TOWER MOUNTED AMPLIFIER
TYP	TYPICAL
UMTS	UNIVERSAL MOBILE TELECOMMUNICATIONS SYSTEM
W.P.	WORK POINT

T-Mobile
4 SYLVAN WAY
PARSIPPANY, NJ 07054

CROWN CASTLE
3 CORPORATE PARK DRIVE, SUTIE 101
CLIFTON PARK, NY 12065

TOWER ENGINEERING PROFESSIONALS
326 TRYON RD
RALEIGH, NC 27603
(919) 661-6351
53 STICKLE AVENUE
ROCKAWAY, NJ 07866
(984) 255-7011
TEP JOB #: 25659.522999

T-MOBILE SITE NUMBER:
CT11427A
ROCKY HILL/RT 3/RT 160

BU #: **842872**
ROCKY HILL

52 NEW BRITAIN AVENUE
ROCKY HILL, CT 06067

EXISTING 181'-10"
MONOPOLE

ISSUED FOR:

REV	DATE	DRWN	DESCRIPTION	DES./QA
A	04/23/21	SPK	PRELIMINARY	JTC
0	05/24/21	SPK	CONSTRUCTION	JTC

SEAL:

05/24/21

IT IS A VIOLATION OF LAW FOR ANY PERSON, UNLESS THEY ARE ACTING UNDER THE DIRECTION OF A LICENSED PROFESSIONAL ENGINEER, TO ALTER THIS DOCUMENT.

SHEET NUMBER: T-2

REVISION: 0

NOTE:
COMPOUND SHOWN BELOW WAS REPRODUCED FROM INFORMATION PROVIDED BY CROWN CASTLE AND SITE WALK CONDUCTED BY TEP. CONTRACTOR TO VERIFY ALL EXISTING INFORMATION IS AS INDICATED ON SITE PLAN. CONTRACTOR IS TO ESTABLISH THE EXISTENCE AND LOCATION OF ALL EXISTING UNDERGROUND AND OVERHEAD UTILITIES. IMMEDIATELY NOTIFY THE CONSTRUCTION MANAGER OF ANY DISCREPANCIES.

FLOODPLAIN NOTE:
THE TOWER IS LOCATED IN ZONE "X" AREAS DETERMINED TO BE OUTSIDE THE 0.2% ANNUAL CHANCE FLOODPLAIN ACCORDING TO FEMA COMMUNITY PANEL #09003C0516F, 9/26/2008.

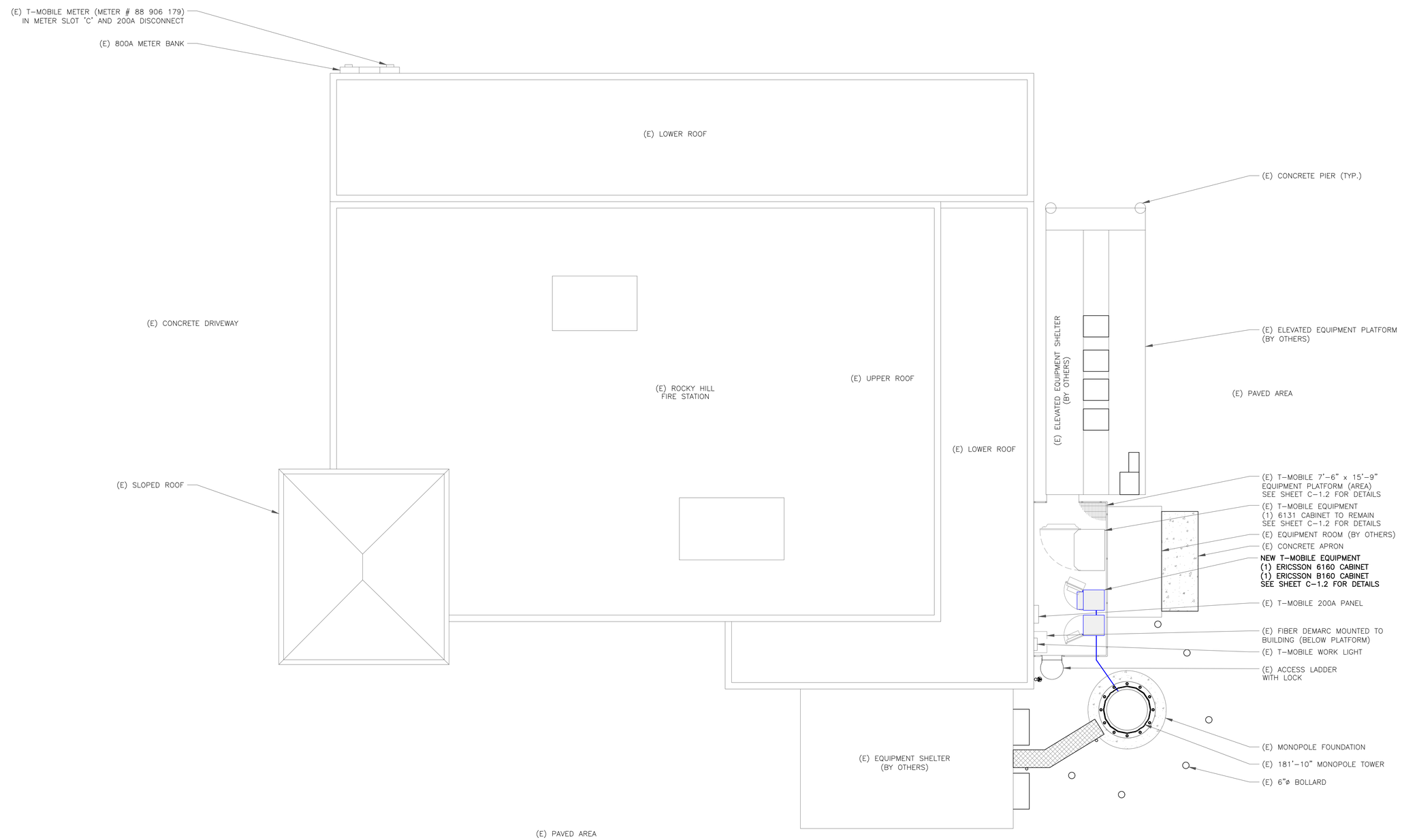

1 FINAL COMPOUND PLAN
SCALE: 1' 6" 0 1' 3/4"=1'-0" (FULL SIZE) 3/8"=1'-0" (11x17)

N

T-Mobile
4 SYLVAN WAY
PARSIPPANY, NJ 07054

CROWN CASTLE
3 CORPORATE PARK DRIVE, SUTIE 101
CLIFTON PARK, NY 12065

TOWER ENGINEERING PROFESSIONALS
326 TRYON RD
RALEIGH, NC 27603
(919) 661-6351
53 STICKLE AVENUE
ROCKAWAY, NJ 07866
(984) 255-7011

TEP JOB #: 25659.522999

T-MOBILE SITE NUMBER:
CT11427A
ROCKY HILL/RT 3/RT 160

BU #: **842872**
ROCKY HILL

52 NEW BRITAIN AVENUE
ROCKY HILL, CT 06067

EXISTING 181'-10"
MONOPOLE

ISSUED FOR:

REV	DATE	DRWN	DESCRIPTION	DES./QA
A	04/23/21	SPK	PRELIMINARY	JTC
0	05/24/21	SPK	CONSTRUCTION	JTC

SEAL:

05/24/21

IT IS A VIOLATION OF LAW FOR ANY PERSON, UNLESS THEY ARE ACTING UNDER THE DIRECTION OF A LICENSED PROFESSIONAL ENGINEER, TO ALTER THIS DOCUMENT.

SHEET NUMBER: C-1.1
REVISION: 0

FLOODPLAIN NOTE:
THE TOWER IS LOCATED IN ZONE "X" AREAS DETERMINED TO BE OUTSIDE THE 0.2% ANNUAL CHANCE FLOODPLAIN ACCORDING TO FEMA COMMUNITY PANEL #09003C0516F, 9/26/2008.

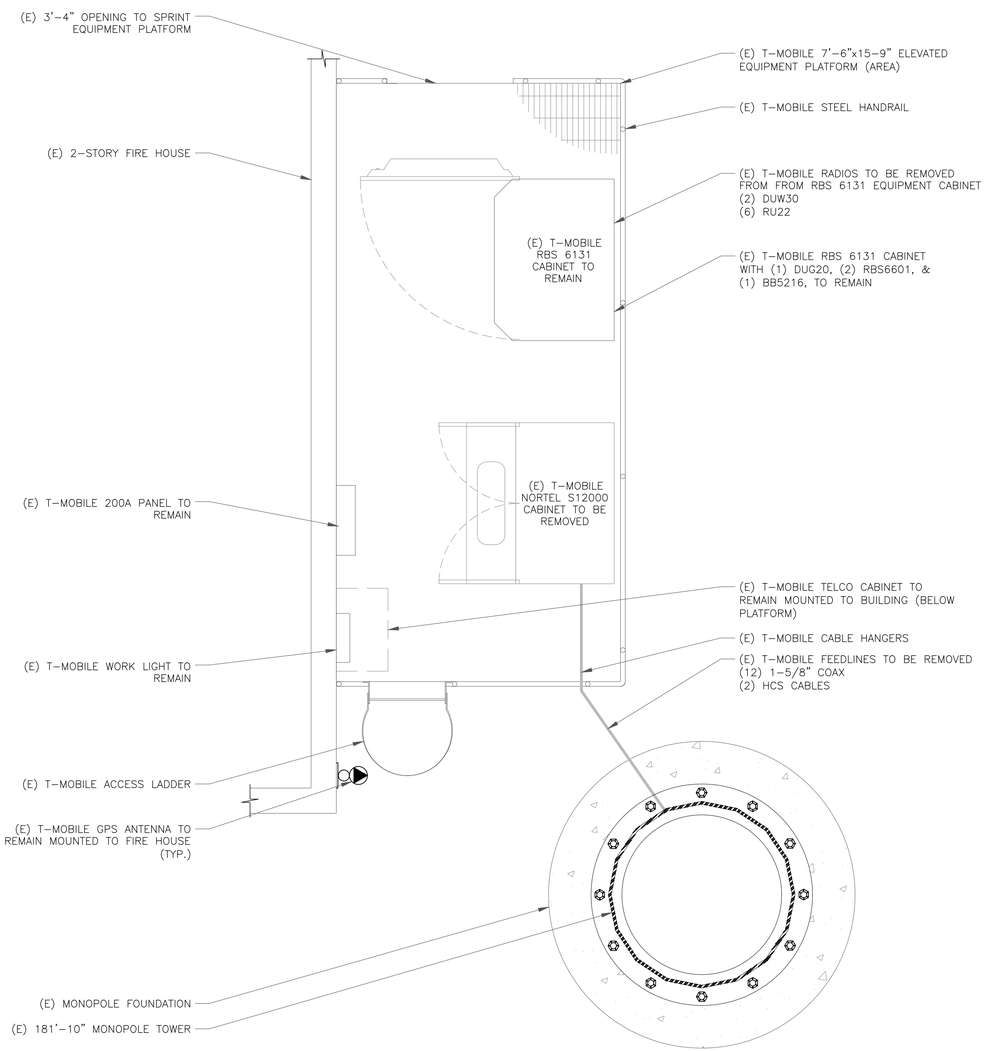

1 EXISTING EQUIPMENT PLAN
SCALE: 1' 6" 0 1' 3/4"=1'-0" (FULL SIZE) 3/8"=1'-0" (11x17)

N

CONDUIT NOTES:

- ALL CONDUIT TO BE SCH40 PVC OR LTFC, AS NOTED. INSTALL WEATHERPROOF FITTINGS.
- ABOVE GRADE CONDUIT RUNS TO BE MARKED WITH HAZARD TAPE TO PREVENT TRIPPING HAZARD.

1. (1) 2" CONDUIT BETWEEN 6160 AND B160 (ABOVE GRADE, LTFC or SCH40 PVC)
2. (2) 2" CONDUIT BETWEEN 6160 AND EXISTING CABINET (ABOVE GRADE, LTFC)
3. (1) 2" CONDUIT FROM PANEL TO 6160 FOR 100A & 20A BREAKER CONDUCTORS (ABOVE GRADE, SCH40 PVC)
4. (1) 1" CONDUIT FROM AAV/WESTELL CABINET TO 6160 CABINET (ABOVE GRADE, SCH40 PVC)
5. (1) 2" CONDUIT FROM PANEL TO EXISTING CABINET FOR 100A BREAKER CONDUCTORS, REUSE EXISTING CONDUIT AS NEEDED (ABOVE GRADE, SCH40 PVC)

NOTE:

ALL RACKS AND EQUIPMENT CABINETS ARE TO HAVE TWO GROUNDING LEADS. ALL EQUIPMENT INSTALLED IN RACKS MUST HAVE A CHASSIS GROUND ATTACHED TO A COMMON BUS BAR ON THE RACK. COMMON BUS BAR MUST BE GROUNDED TO MAIN GROUND BAR. SEE G-1 FOR GROUNDING NOTES.

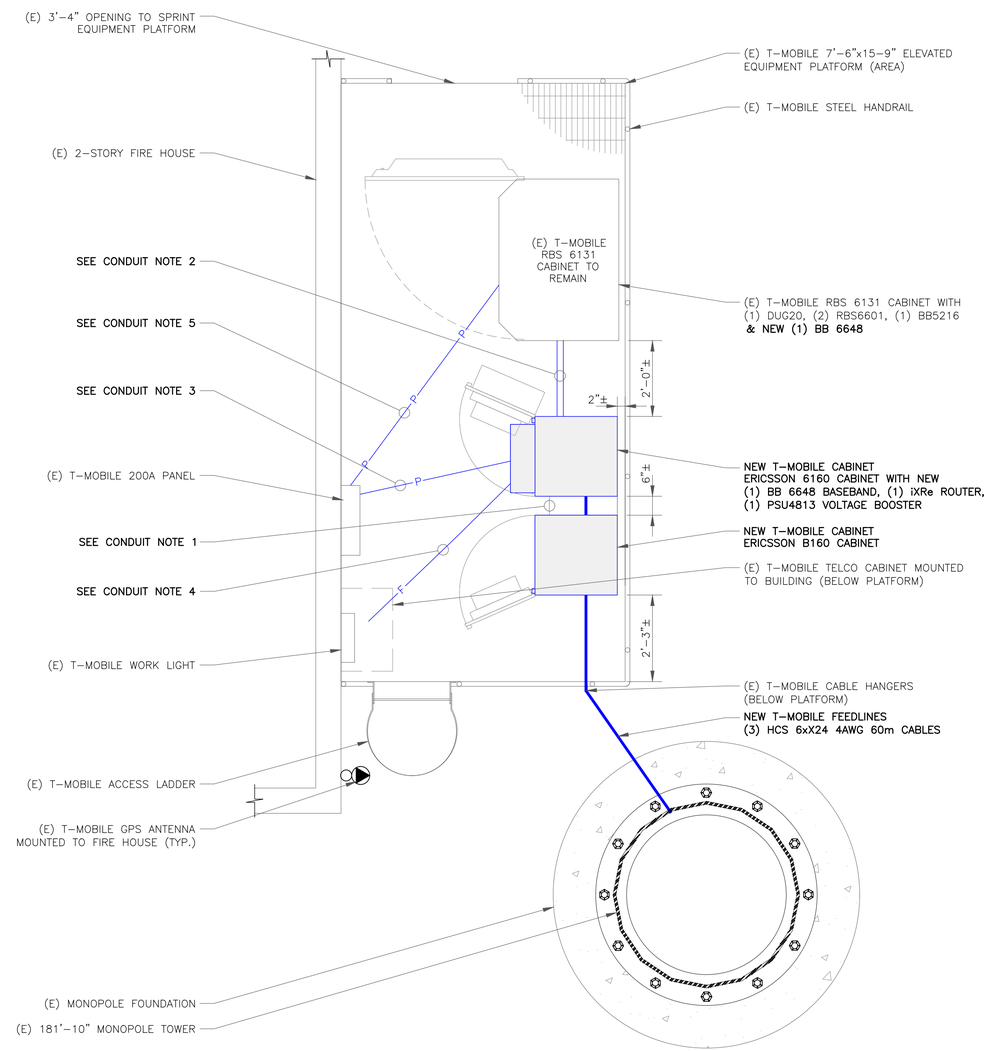

2 FINAL EQUIPMENT PLAN
SCALE: 1' 6" 0 1' 3/4"=1'-0" (FULL SIZE) 3/8"=1'-0" (11x17)

N

T-Mobile
4 SYLVAN WAY
PARSIPPANY, NJ 07054

CROWN CASTLE
3 CORPORATE PARK DRIVE, SUTIE 101
CLIFTON PARK, NY 12065

TOWER ENGINEERING PROFESSIONALS
326 TRYON RD
RALEIGH, NC 27603
(919) 661-6351
53 STICKLE AVENUE
ROCKAWAY, NJ 07866
(984) 255-7011
TEP JOB #: 25659.522999

T-MOBILE SITE NUMBER:
CT11427A
ROCKY HILL/RT 3/RT 160

BU #: **842872**
ROCKY HILL

52 NEW BRITAIN AVENUE
ROCKY HILL, CT 06067

EXISTING 181'-10"
MONOPOLE

ISSUED FOR:

REV	DATE	DRWN	DESCRIPTION	DES./QA
A	04/23/21	SPK	PRELIMINARY	JTC
0	05/24/21	SPK	CONSTRUCTION	JTC

SEAL:

05/24/21

IT IS A VIOLATION OF LAW FOR ANY PERSON, UNLESS THEY ARE ACTING UNDER THE DIRECTION OF A LICENSED PROFESSIONAL ENGINEER, TO ALTER THIS DOCUMENT.

SHEET NUMBER: C-1.2
REVISION: 0

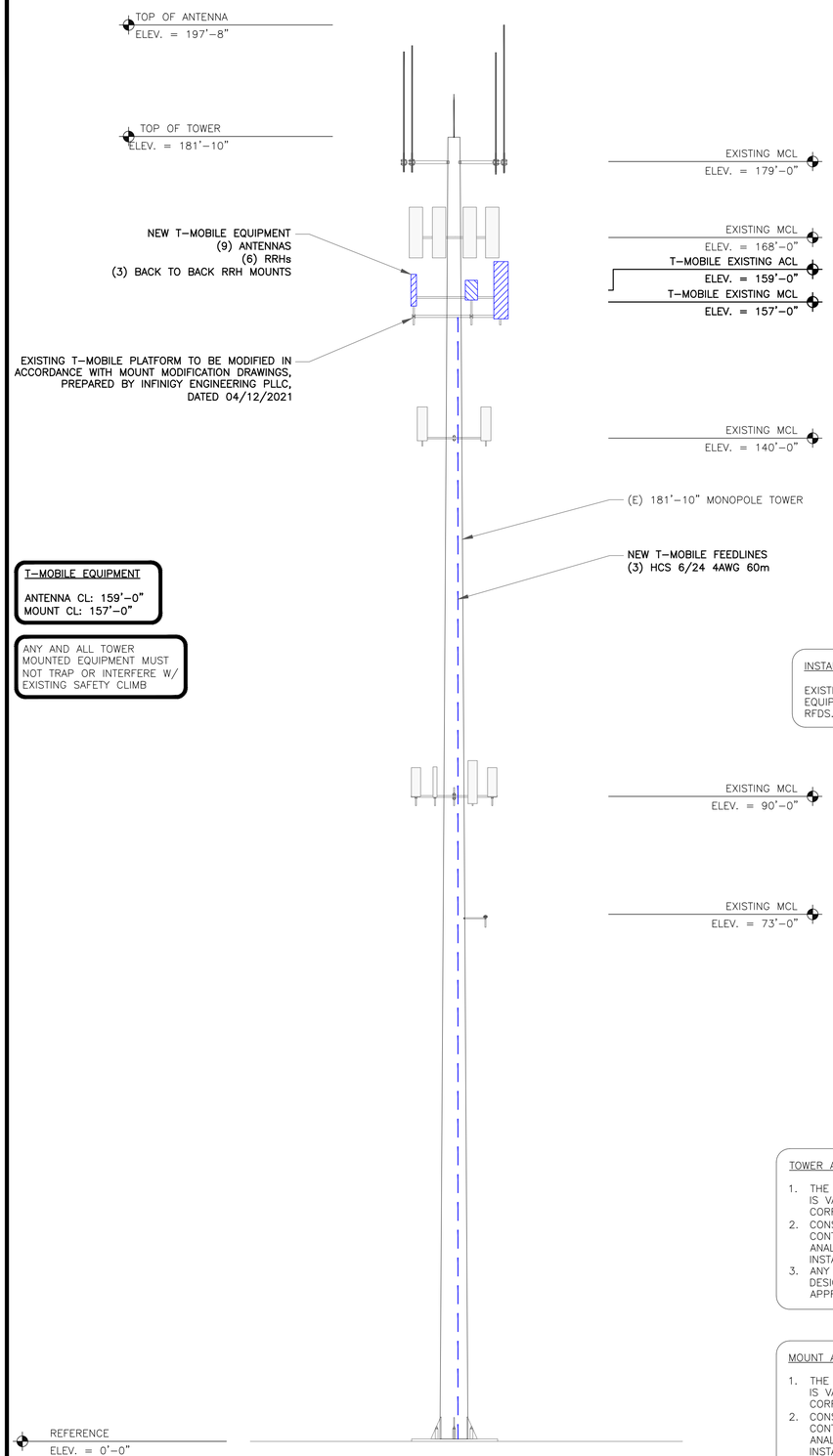

T-MOBILE EQUIPMENT

ANTENNA CL: 159'-0"
MOUNT CL: 157'-0"

ANY AND ALL TOWER MOUNTED EQUIPMENT MUST NOT TRAP OR INTERFERE W/ EXISTING SAFETY CLIMB

1 FINAL ELEVATION
SCALE: NOT TO SCALE

INSTALLER NOTE:

EXISTING AND PROPOSED ANTENNA/ EQUIPMENT POSITIONING SHOWN PER RFDS. FIELD CONDITIONS MAY VARY.

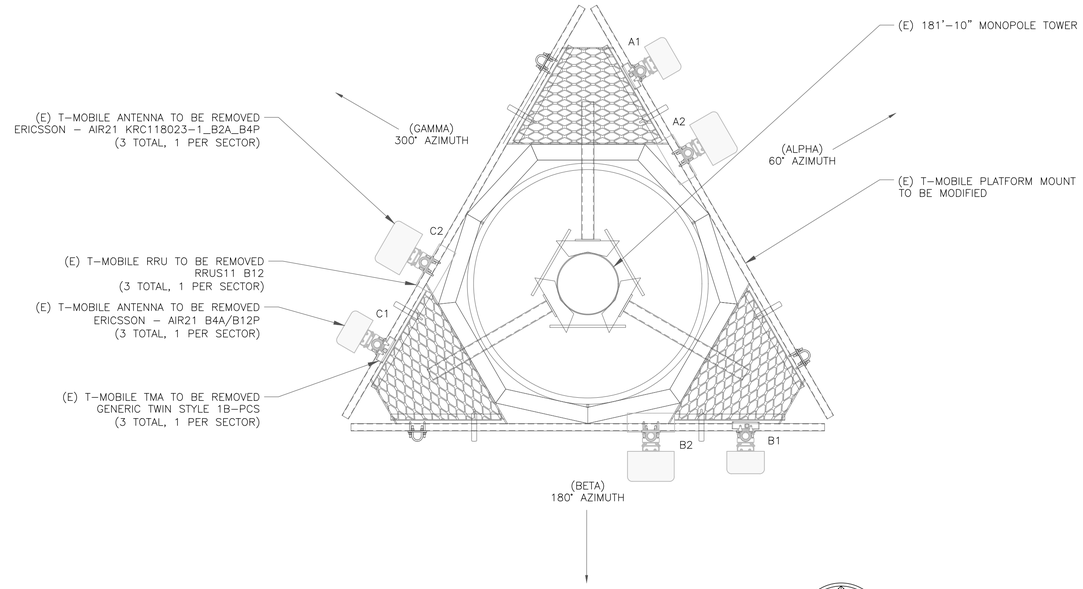

2 EXISTING ANTENNA LAYOUT
SCALE: NOT TO SCALE

RRH NOTE:

ENSURE RADIOS ARE INSTALLED MIN 8" FROM ANTENNAS

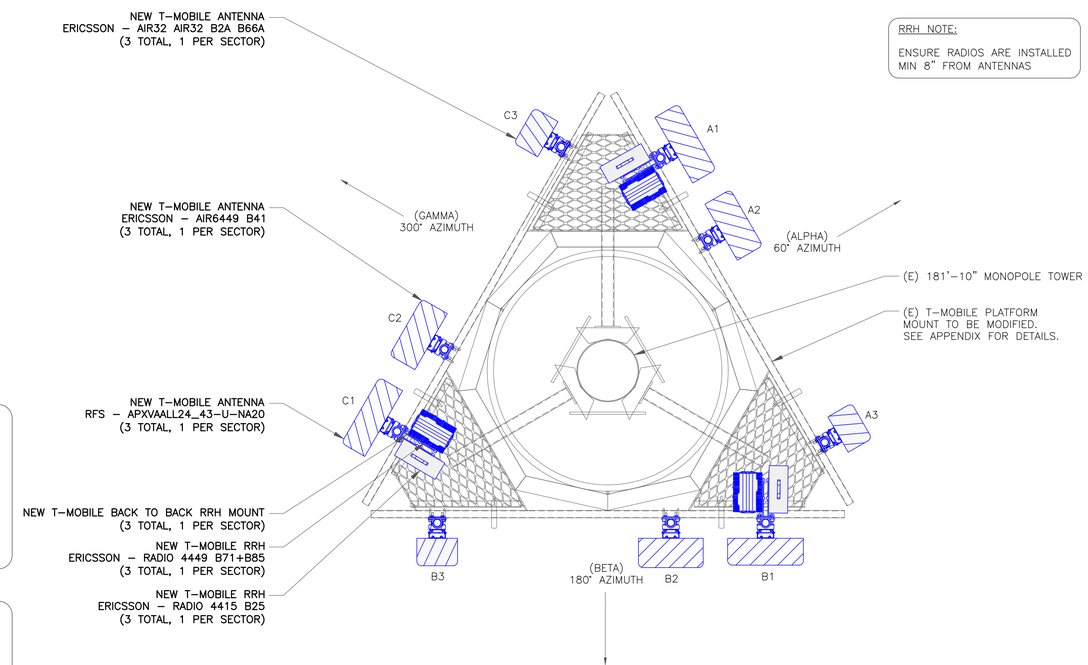

3 FINAL ANTENNA LAYOUT
SCALE: NOT TO SCALE

TOWER ANALYSIS NOTES:

1. THE DESIGN DEPICTED IN THESE DRAWINGS IS VALID WHEN ACCOMPANIED BY A CORRESPONDING PASSING TOWER ANALYSIS.
2. CONSTRUCTION MANAGER / GENERAL CONTRACTOR SHALL REVIEW THE TOWER ANALYSIS FOR ANY CONDITIONS PRIOR TO INSTALLATION.
3. ANY REQUIRED TOWER MODIFICATION DESIGN OR TOWER REPLACEMENT SHALL BE APPROVED BY EOR.

MOUNT ANALYSIS NOTES:

1. THE DESIGN DEPICTED IN THESE DRAWINGS IS VALID WHEN ACCOMPANIED BY A CORRESPONDING PASSING MOUNT ANALYSIS.
2. CONSTRUCTION MANAGER / GENERAL CONTRACTOR SHALL REVIEW THE MOUNT ANALYSIS FOR ANY CONDITIONS PRIOR TO INSTALLATION.
3. ANY REQUIRED MOUNT MODIFICATION DESIGN OR MOUNT REPLACEMENT SHALL BE APPROVED BY EOR.

T-Mobile
4 SYLVAN WAY
PARSIPPANY, NJ 07054

CROWN CASTLE
3 CORPORATE PARK DRIVE, SUTIE 101
CLIFTON PARK, NY 12065

TOWER ENGINEERING PROFESSIONALS
326 TRYON RD
RALEIGH, NC 27603
(919) 661-6351
53 STICKLE AVENUE
ROCKAWAY, NJ 07866
(984) 255-7011

TEP JOB #: 25659.522999

T-MOBILE SITE NUMBER:
CT11427A
ROCKY HILL/RT 3/RT 160

BU #: **842872**
ROCKY HILL

52 NEW BRITAIN AVENUE
ROCKY HILL, CT 06067

EXISTING 181'-10"
MONOPOLE

ISSUED FOR:

REV	DATE	DRWN	DESCRIPTION	DES./QA
A	04/23/21	SPK	PRELIMINARY	JTC
0	05/24/21	SPK	CONSTRUCTION	JTC

SEAL:

05/24/21

IT IS A VIOLATION OF LAW FOR ANY PERSON, UNLESS THEY ARE ACTING UNDER THE DIRECTION OF A LICENSED PROFESSIONAL ENGINEER, TO ALTER THIS DOCUMENT.

SHEET NUMBER:	REVISION:
C-2	0

EXISTING ANTENNA SCHEDULE

SECTOR	POS.	TECHNOLOGY	RAD CENTER	AZIMUTH	ANTENNA MANUFACTURER	ANTENNA MODEL	MECH. TILT	ELECT. TILT	TOWER MOUNTED EQUIPMENT	FEEDLINE TYPE
ALPHA	A1	L700, L2100	159'-0"	60°	ERICSSON	*AIR21 B4A/B12P 4ft (QUAD)	2°	4°	*(1) RRUS11 B12	*(1) 1-1/4" HCS
ALPHA	A2	U2100, L1900, G1900	159'-0"	60°	ERICSSON	*AIR21 KRC118023-1_B2A_B4P (QUAD)	2°	4°/4°	*(1) TMA-GENERIC TWIN STYLE 1B-AWS	*(4) 1-5/8" COAX
BETA	B1	L2100, L700	159'-0"	180°	ERICSSON	*AIR21 B4A/B12P 4ft (QUAD)	2°	4°	*(1) RRUS11 B12	*(1) 1-1/4" HCS
BETA	B2	L1900, G1900, U2100	159'-0"	180°	ERICSSON	*AIR21 KRC118023-1_B2A_B4P (QUAD)	2°	5°/5°	*(1) TMA-GENERIC TWIN STYLE 1B-AWS	*(4) 1-5/8" COAX
GAMMA	C1	L700, L2100	159'-0"	300°	ERICSSON	*AIR21 B4A/B12P 4ft (QUAD)	2°	4°	*(1) RRUS11 B12	HYBRID (SHARED)
GAMMA	C2	U2100, L1900, G1900	159'-0"	300°	ERICSSON	*AIR21 KRC118023-1_B2A_B4P (QUAD)	2°	5°/5°	*(1) TMA-GENERIC TWIN STYLE 1B-AWS	*(4) 1-5/8" COAX

*ANTENNA/EQUIPMENT TO BE REMOVED

EXISTING CABLE SCHEDULE

STATUS	CABLE TYPE	SIZE	QUANTITY
EXISTING	COAX	1-5/8"	*12
EXISTING	HCS	1-1/4"	*2
CABLE QUANTITY			14

* NOTE – (2) 1-1/4" HCS TO BE REMOVED
(12) 1-5/8" COAX TO BE REMOVED

1 EXISTING ANTENNA AND CABLE SCHEDULE
SCALE: NOT TO SCALE

FINAL ANTENNA SCHEDULE

SECTOR	POS.	TECHNOLOGY	RAD CENTER	AZIMUTH	ANTENNA MANUFACTURER	ANTENNA MODEL	MECH. TILT	ELECT. TILT	TOWER MOUNTED EQUIPMENT	FEEDLINE TYPE
ALPHA	A1	L700, L600, N600, L1900	159'-0"	60°	RFS	APXVAALL24_43-U-NA20 (OCTO)	2°	–	(1) ERICSSON – RADIO 4449 B71+B85 (1) ERICSSON – RADIO 4415 B25	(1) 6/24 HCS 4AWG 60m
ALPHA	A2	L2500, N2500	159'-0"	60°	ERICSSON	AIR6449 B41 (ACTIVE ANTENNA – MASSIVE MIMO)	2°	–	–	HYBRID (SHARED)
ALPHA	A3	L2100, G1900, L1900	159'-0"	60°	ERICSSON	AIR32 KRD901146-1_B66A_B2A (OCTO)	2°	–	–	HYBRID (SHARED)
BETA	B1	L2100, L1900, G1900	159'-0"	180°	RFS	APXVAALL24_43-U-NA20 (OCTO)	2°	–	(1) ERICSSON – RADIO 4449 B71+B85 (1) ERICSSON – RADIO 4415 B25	(1) 6/24 HCS 4AWG 60m
BETA	B2	L700, L600, N600, L1900, U1900	159'-0"	180°	ERICSSON	AIR6449 B41 (ACTIVE ANTENNA – MASSIVE MIMO)	2°	–	–	HYBRID (SHARED)
BETA	B3	L2500, N2500	159'-0"	180°	ERICSSON	AIR32 KRD901146-1_B66A_B2A (OCTO)	2°	–	–	HYBRID (SHARED)
GAMMA	C1	L2100, L1900, G1900	159'-0"	300°	RFS	APXVAALL24_43-U-NA20 (OCTO)	2°	–	(1) ERICSSON – RADIO 4449 B71+B85 (1) ERICSSON – RADIO 4415 B25	(1) 6/24 HCS 4AWG 60m
GAMMA	C2	L700, L600, N600, L1900, U1900	159'-0"	300°	ERICSSON	AIR6449 B41 (ACTIVE ANTENNA – MASSIVE MIMO)	2°	–	–	HYBRID (SHARED)
GAMMA	C3	L2500, N2500	159'-0"	300°	ERICSSON	AIR32 KRD901146-1_B66A_B2A (OCTO)	2°	–	–	HYBRID (SHARED)

PROPOSED ANTENNA/EQUIPMENT IN BOLD

FINAL CABLE SCHEDULE

STATUS	CABLE TYPE	SIZE	QUANTITY
NEW	HCS	6/24 4AWG 60m	3
CABLE QUANTITY			3

2 FINAL ANTENNA AND CABLE SCHEDULE
SCALE: NOT TO SCALE

T-Mobile

4 SYLVAN WAY
PARSIPPANY, NJ 07054

CROWN CASTLE

3 CORPORATE PARK DRIVE, SUTIE 101
CLIFTON PARK, NY 12065

TOWER ENGINEERING PROFESSIONALS

326 TRYON RD
RALEIGH, NC 27603
(919) 661-6351

53 STICKLE AVENUE
ROCKAWAY, NJ 07866
(984) 255-7011

TEP JOB #: 25659.522999

T-MOBILE SITE NUMBER:
CT11427A
ROCKY HILL/RT 3/RT 160

BU #: **842872**
ROCKY HILL

52 NEW BRITAIN AVENUE
ROCKY HILL, CT 06067

EXISTING 181'-10"
MONOPOLE

ISSUED FOR:

REV	DATE	DRWN	DESCRIPTION	DES./QA
A	04/23/21	SPK	PRELIMINARY	JTC
0	05/24/21	SPK	CONSTRUCTION	JTC

SEAL:

05/24/21

IT IS A VIOLATION OF LAW FOR ANY PERSON, UNLESS THEY ARE ACTING UNDER THE DIRECTION OF A LICENSED PROFESSIONAL ENGINEER, TO ALTER THIS DOCUMENT.

SHEET NUMBER: C-3

REVISION: 0

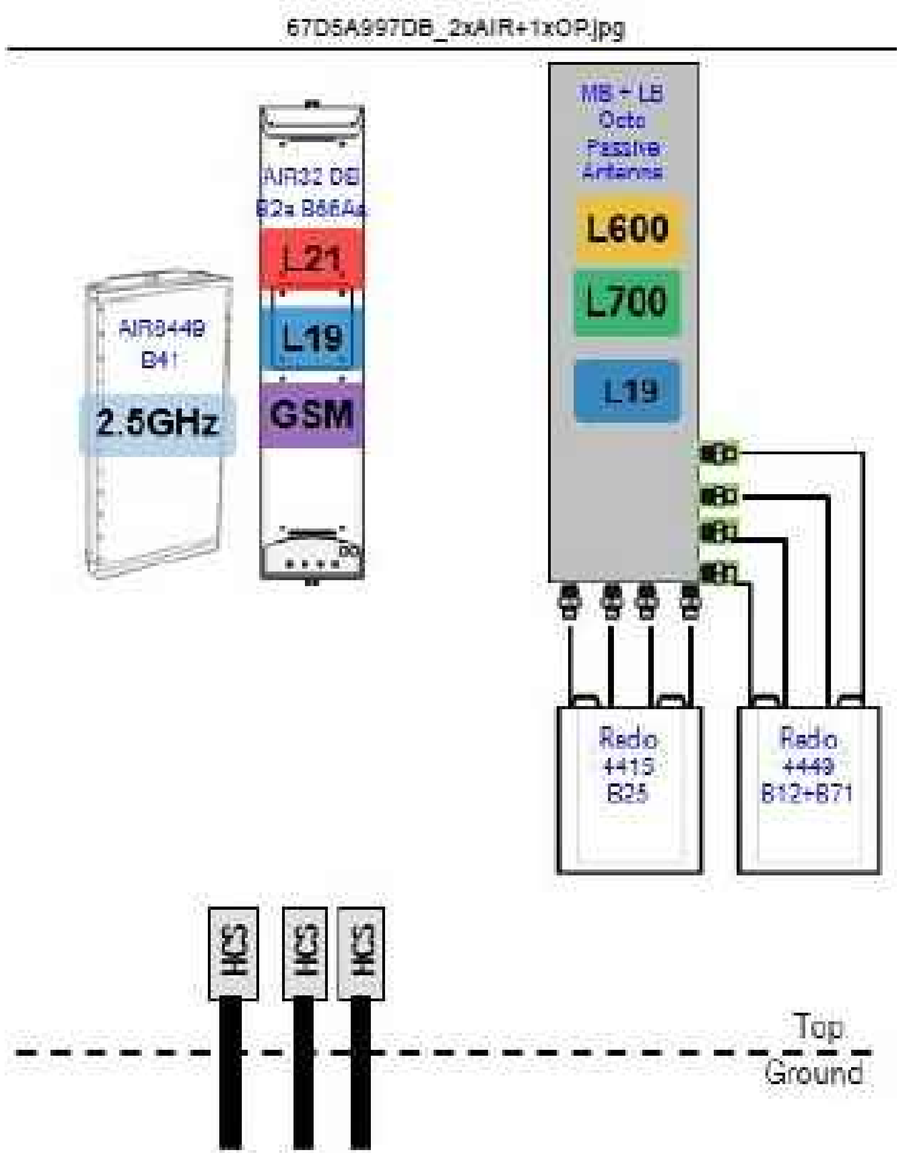

1 PLUMBING DIAGRAM
SCALE: NOT TO SCALE

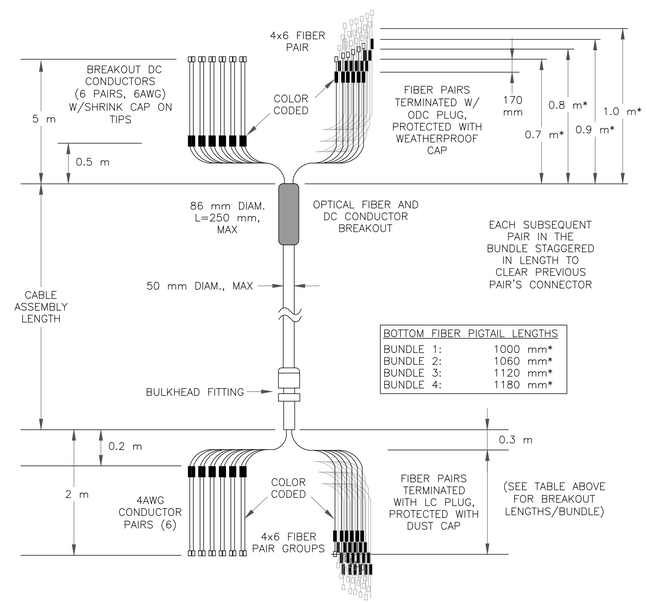

BOTTOM FIBER PIGTAIL LENGTHS	
BUNDLE 1:	1000 mm*
BUNDLE 2:	1060 mm*
BUNDLE 3:	1120 mm*
BUNDLE 4:	1180 mm*

2 HCS DETAIL
SCALE: NOT TO SCALE

T-Mobile

4 SYLVAN WAY
PARSIPPANY, NJ 07054

CROWN CASTLE

3 CORPORATE PARK DRIVE, SUTIE 101
CLIFTON PARK, NY 12065

TOWER ENGINEERING PROFESSIONALS

326 TRYON RD
RALEIGH, NC 27603
(919) 661-6351

53 STICKLE AVENUE
ROCKAWAY, NJ 07866
(984) 255-7011

TEP JOB #: 25659.522999

T-MOBILE SITE NUMBER:
CT11427A
ROCKY HILL/RT 3/RT 160

BU #: **842872**
ROCKY HILL

52 NEW BRITAIN AVENUE
ROCKY HILL, CT 06067

EXISTING 181'-10"
MONOPOLE

ISSUED FOR:

REV	DATE	DRWN	DESCRIPTION	DES./QA
A	04/23/21	SPK	PRELIMINARY	JTC
0	05/24/21	SPK	CONSTRUCTION	JTC

SEAL:

STATE OF CONNECTICUT
GRAHAM M. ANDRES
29538
LICENSED
PROFESSIONAL ENGINEER

05/24/21

IT IS A VIOLATION OF LAW FOR ANY PERSON, UNLESS THEY ARE ACTING UNDER THE DIRECTION OF A LICENSED PROFESSIONAL ENGINEER, TO ALTER THIS DOCUMENT.

SHEET NUMBER: C-4

REVISION: 0

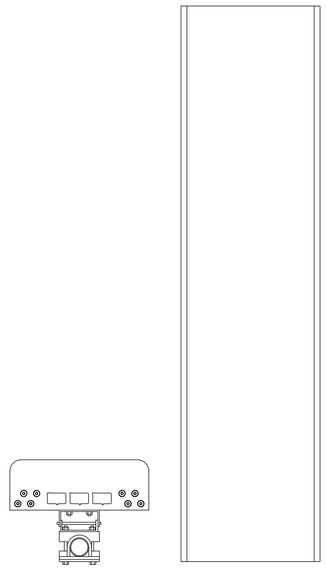

RFS – APXVAALL24_43-U-NA20
WEIGHT (WITHOUT MOUNTING HARDWARE): 149.9 LBS
SIZE (HxWxD): 95.9x24.0x8.5 IN.

1 RFS – APXVAALL24_43-U-NA20
SCALE: NOT TO SCALE

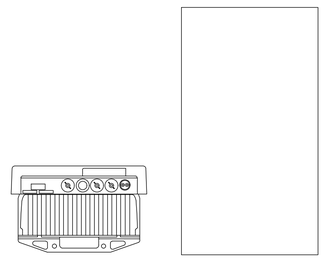

ERICSSON – AIR6449 B41
WEIGHT: 114.63 LBS
SIZE (HxWxD): 33.11x20.51x8.50 IN.

2 ERICSSON – AIR6449 B41
SCALE: NOT TO SCALE

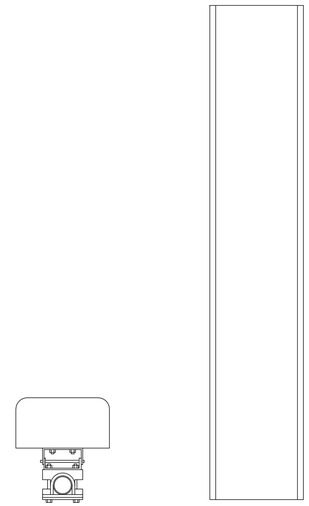

ERICSSON – AIR32 KRD901146-1_B66A_B2A
WEIGHT (WITHOUT MOUNTING HARDWARE): 171.96 LBS
SIZE (HxWxD): 59.25x12.87x8.7 IN.

3 ERICSSON – AIR32 KRD901146-1_B66A_B2A
SCALE: NOT TO SCALE

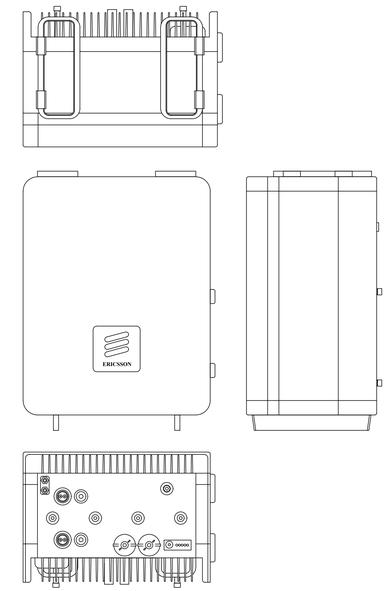

ERICSSON – RADIO 4415 B25
WEIGHT: 46.3 LBS
SIZE (HxWxD): 14.96x13.19x5.39 IN.

4 ERICSSON – RADIO 4415 B25
SCALE: NOT TO SCALE

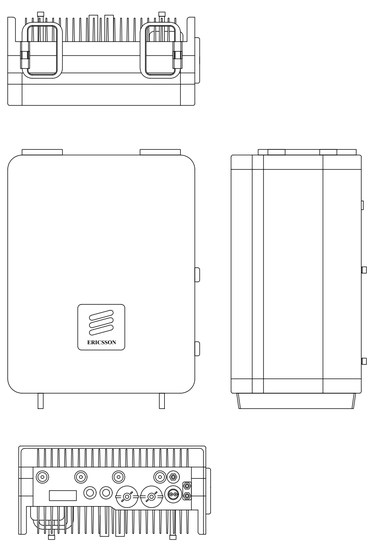

ERICSSON – RADIO 4449 B71+B85
WEIGHT: 70.0 LBS
SIZE (HxWxD): 18.0x13.2x9.4 IN.

5 ERICSSON – RADIO 4449 B71+B85
SCALE: NOT TO SCALE

INSTALLER NOTES:

1. COMPLY WITH MANUFACTURERS INSTRUCTIONS TO ENSURE THAT ALL RRHs RECEIVE ELECTRICAL POWER WITHIN 24 HOURS OF BEING REMOVED FROM THE MANUFACTURER'S PACKAGING.
2. DO NOT OPEN RRH PACKAGES IN THE RAIN.
3. ALL PIPES, BRACKETS, AND MISCELLANEOUS HARDWARE TO BE GALVANIZED UNLESS NOTED OTHERWISE.

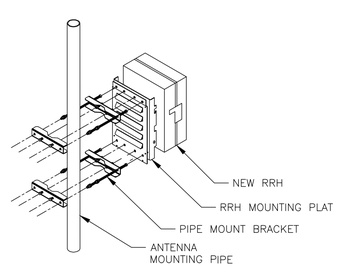

NOTE:
ANTENNA NOT SHOWN FOR CLARITY

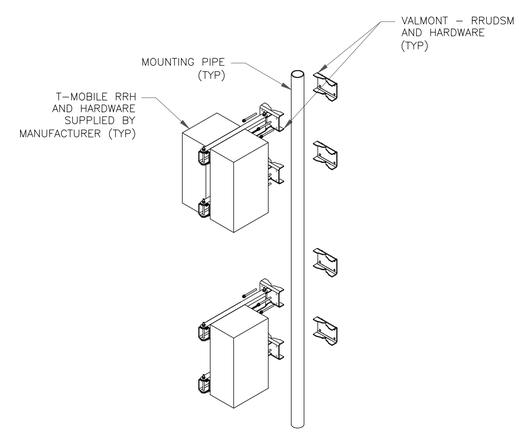

NOTE:
ANTENNA NOT SHOWN FOR CLARITY

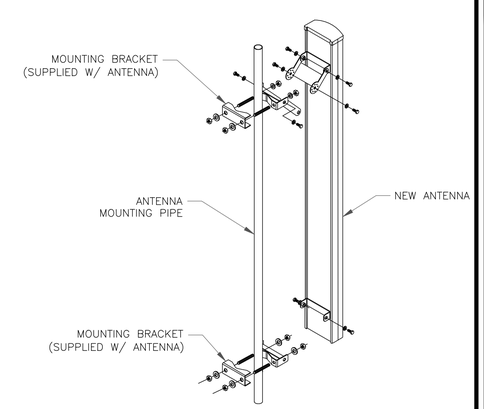

6 ANTENNA WITH RRHs MOUNTING DETAIL
SCALE: NOT TO SCALE

T-Mobile
4 SYLVAN WAY
PARSIPPANY, NJ 07054

CROWN CASTLE
3 CORPORATE PARK DRIVE, SUTIE 101
CLIFTON PARK, NY 12065

TOWER ENGINEERING PROFESSIONALS
326 TRYON RD
RALEIGH, NC 27603
(919) 661-6351
53 STICKLE AVENUE
ROCKAWAY, NJ 07866
(984) 255-7011

TEP JOB #: 25659.522999

T-MOBILE SITE NUMBER:
CT11427A
ROCKY HILL/RT 3/RT 160

BU #: **842872**
ROCKY HILL

52 NEW BRITAIN AVENUE
ROCKY HILL, CT 06067

EXISTING 181'-10"
MONOPOLE

ISSUED FOR:

REV	DATE	DRWN	DESCRIPTION	DES./QA
A	04/23/21	SPK	PRELIMINARY	JTC
0	05/24/21	SPK	CONSTRUCTION	JTC

SEAL:

05/24/21

IT IS A VIOLATION OF LAW FOR ANY PERSON, UNLESS THEY ARE ACTING UNDER THE DIRECTION OF A LICENSED PROFESSIONAL ENGINEER, TO ALTER THIS DOCUMENT.

SHEET NUMBER: C-5
REVISION: 0

INSTALLER NOTES:

1. INFORMATION SHOWN PROVIDED BY T–MOBILE. CONTRACTOR TO REFERENCE CABINET MANUFACTURER'S SPECIFICATIONS FOR FURTHER DETAILS.
2. CONTRACTOR TO FOLLOW THE LATEST VERSION OF T–MOBILE REGIONAL CONSTRUCTION STANDARDS. CONTACT T–MOBILE FOR DETAILS.

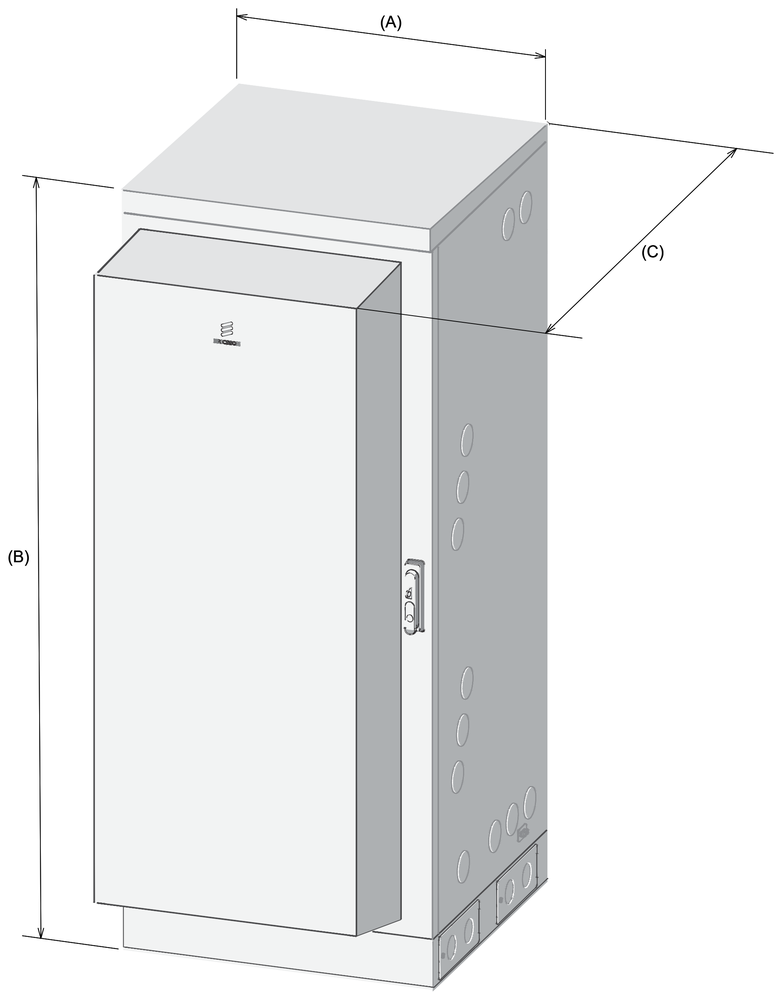

Dimensions	
Width (A)	650 mm / 25.5906 in
Height (B)	1450 mm / 57.08661 in (without base frame) 1600 mm / 62.99213 in (with base frame)
Depth (C)	850 mm / 33.4646 in
Weight	
Empty enclosure	176 kg / 388.014 lb

1 ERICSSON 6160 CABINET DETAILS
SCALE: NOT TO SCALE

Dimensions	
Width	26 in
Height	63 in (without base frame) 69 in (with base frame)
Depth	26 in
Weight	
Empty enclosure	388.014 lb

2 ERICSSON B160 CABINET DETAILS
SCALE: NOT TO SCALE

T-Mobile

4 SYLVAN WAY
PARSIPPANY, NJ 07054

CROWN CASTLE

3 CORPORATE PARK DRIVE, SUITE 101
CLIFTON PARK, NY 12065

TOWER ENGINEERING PROFESSIONALS

326 TRYON RD
RALEIGH, NC 27603
(919) 661-6351

53 STICKLE AVENUE
ROCKAWAY, NJ 07866
(984) 255-7011

TEP JOB #: 25659.522999

T-MOBILE SITE NUMBER:
CT11427A
ROCKY HILL/RT 3/RT 160

BU #: **842872**
ROCKY HILL

52 NEW BRITAIN AVENUE
ROCKY HILL, CT 06067

EXISTING 181'-10"
MONOPOLE

ISSUED FOR:

REV	DATE	DRWN	DESCRIPTION	DES./QA
A	04/23/21	SPK	PRELIMINARY	JTC
0	05/24/21	SPK	CONSTRUCTION	JTC

SEAL:

05/24/21

IT IS A VIOLATION OF LAW FOR ANY PERSON, UNLESS THEY ARE ACTING UNDER THE DIRECTION OF A LICENSED PROFESSIONAL ENGINEER, TO ALTER THIS DOCUMENT.

SHEET NUMBER: C-6

REVISION: 0

NOTE:
LOAD CALCULATIONS TAKEN FROM INFORMATION PROVIDED BY CROWN CASTLE AND POWER ANALYSIS TOOL, USING RFDS DATED 2/18/2021 V6. CONTRACTOR TO VERIFY LOADS WITH MANUFACTURER'S SPECIFICATIONS PRIOR TO CONSTRUCTION

NOTE:
CONTRACTOR TO VERIFY LOADS WITH MANUFACTURER'S SPECIFICATIONS PRIOR TO CONSTRUCTION

EXISTING 200A M.C.B, 240/120 VAC, 1ø, 3W PPC SCHEDULE

LOAD SERVED	VOLT AMPERES (WATTS) L1	VOLT AMPERES (WATTS) L2	TRIP	CKT #	PHASE		CKT #	TRIP	VOLT AMPERES (WATTS) L1	VOLT AMPERES (WATTS) L2	LOAD SERVED
*BTS CABINET	4800		*50	1	A		2	20	500		LIGHT
		4800		3	B		4	*60		3230	6131 CABINET
SPARE	–		–	5	A		6		3230		
SPARE		–	–	7	B		8	–		–	SPARE
SPARE	–		–	9	A		10	–	–		SPARE
SPARE		–	–	11	B		12	–		–	SPARE
SPARE	–		–	13	A		14	–	–		SPARE
SPARE		–	–	15	B		16	–		–	SPARE
SPARE	–		–	17	A		18	–	–		SPARE
SPARE		–	–	19	B		20	–		–	SPARE
VOLT AMPS	4800	4800							3730	3230	VOLT AMPS

L1 VOLT AMPERES	8530	8030	L2 VOLT AMPERES
	8530		MAX VOLT AMPERES
	71.1		MAX AMPS
	88.9		MAX AMPS x 125%

*NOTE – EXISTING BREAKER TO BE REMOVED.

PROPOSED 200A M.C.B, 240/120 VAC, 1ø, 3W PPC SCHEDULE

LOAD SERVED	VOLT AMPERES (WATTS) L1	VOLT AMPERES (WATTS) L2	TRIP	CKT #	PHASE		CKT #	TRIP	VOLT AMPERES (WATTS) L1	VOLT AMPERES (WATTS) L2	LOAD SERVED
6160 ENCLOSURE	3000		100	1	A		2	20	500		LIGHT
		3000		3	B		4	–		–	SPARE
GFCI INTERNAL TO 6160	180		20	5	A		6	100	4050		*6131 CABINET
SPARE		–	–	7	B		8			4050	
SPARE	–		–	9	A		10	–	–		SPARE
SPARE		–	–	11	B		12	–		–	SPARE
SPARE	–		–	13	A		14	–	–		SPARE
SPARE		–	–	15	B		16	–		–	SPARE
SPARE	–		–	17	A		18	–	–		SPARE
SPARE		–	–	19	B		20	–		–	SPARE
VOLT AMPS	3180	3000							4550	4050	VOLT AMPS

L1 VOLT AMPERES	7730	7050	L2 VOLT AMPERES
	7730		MAX VOLT AMPERES
	64.4		MAX AMPS
	80.5		MAX AMPS x 125%

PROPOSED BREAKER AND LOADING IN BOLD.

1 AC PANEL SCHEDULES
SCALE: NOT TO SCALE

GENERAL NOTES:

1. ALL NEW CONDUCTORS TO BE INSTALLED SHALL BE COPPER. ALL CONDUCTORS SHALL BE THHW, THWN, THWN–2, XHHW, XHHW–2, THW, THW–2, RHW, OR RHW–2 UNLESS NOTED OTHERWISE.
2. CONTRACTOR IS TO FIELD VERIFY ALL EXISTING ITEMS SHOWN ON THE ELECTRICAL ONE–LINE DIAGRAM AND NOTIFY THE ENGINEER OF ANY DISCREPANCIES.
3. ALL GROUNDING AND BONDING PER THE NEC.

UL NOTE:
ELECTRICAL MATERIALS, DEVICES, CONDUCTORS, APPLIANCES AND EQUIPMENT SHALL BE LABELED/LISTED BY UL OR ACCEPTED BY JURISDICTION (I.E.: LOCAL COUNTY OR STATE) APPROVED THIRD PARTY TESTING AGENCY

CONDUIT NOTES:

1. ALL CONDUIT TO BE SCH40 PVC OR LTFC, AS NOTED. INSTALL WEATHERPROOF FITTINGS.
2. ABOVE GRADE CONDUIT RUNS TO BE MARKED WITH HAZARD TAPE TO PREVENT TRIPPING HAZARD.

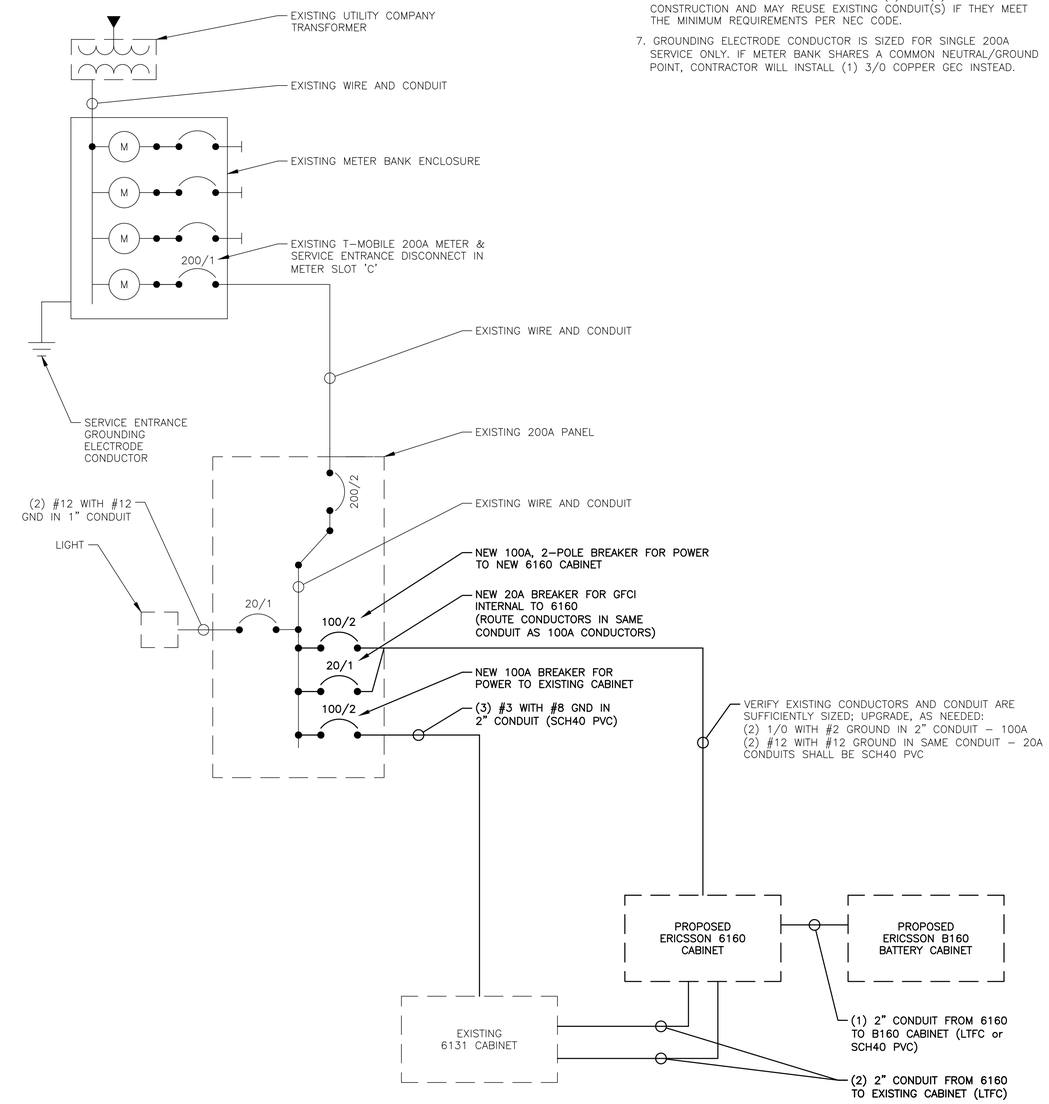

2 ONE LINE DIAGRAM
SCALE: NOT TO SCALE

ONE–LINE DIAGRAM NOTES:

1. ELECTRICAL SERVICE IS 200A, 120/240V, 1ø, 3W.
2. FOR COMPLETE INTERNAL WIRING AND ARRANGEMENT, REFER TO VENDOR PRINTS PROVIDED BY EQUIPMENT MANUFACTURER.

UTILITY NOTES:

1. CONTRACTOR SHALL VERIFY AVAILABLE FAULT CURRENT WITH POWER COMPANY AND ENSURE ALL ELECTRICAL EQUIPMENT IS SUITABLE FOR AVAILABLE FAULT CURRENT.
2. CONTRACTOR SHALL COORDINATE UTILITY SERVICES WITH LOCAL UTILITY COMPANIES. VERIFY ALL REQUIREMENTS WITH UTILITY COMPANY STANDARDS.
3. ONE–LINE DIAGRAM IS FOR SCHEMATIC PURPOSES ONLY AND IS NOT INDICATIVE OF THE ACTUAL EQUIPMENT LAYOUT.
4. ALL EQUIPMENT WILL HAVE A MINIMUM AIC OF 10 KA. CONTRACTOR TO DETERMINE AVAILABLE FAULT CURRENT BEFORE ENERGIZING EQUIPMENT. THE AMOUNT OF AVAILABLE FAULT CURRENT SHALL BE MARKED ON THE SERVICE EQUIPMENT PER NEC 110.24.
5. CONTRACTOR SHALL NOTIFY UTILITY COMPANY OF CHANGES IN ELECTRICAL LOAD.
6. CONTRACTOR TO VERIFY EXISTING CONDUIT(S) SIZE(S) PRIOR TO CONSTRUCTION AND MAY REUSE EXISTING CONDUIT(S) IF THEY MEET THE MINIMUM REQUIREMENTS PER NEC CODE.
7. GROUNDING ELECTRODE CONDUCTOR IS SIZED FOR SINGLE 200A SERVICE ONLY. IF METER BANK SHARES A COMMON NEUTRAL/GROUND POINT, CONTRACTOR WILL INSTALL (1) 3/0 COPPER GEC INSTEAD.

T·Mobile
4 SYLVAN WAY
PARSIPPANY, NJ 07054

CROWN CASTLE
3 CORPORATE PARK DRIVE, SUTIE 101
CLIFTON PARK, NY 12065

TOWER ENGINEERING PROFESSIONALS
326 TRYON RD
RALEIGH, NC 27603
(919) 661-6351
53 STICKLE AVENUE
ROCKAWAY, NJ 07866
(984) 255-7011
TEP JOB #: 25659.522999

T-MOBILE SITE NUMBER:
CT11427A
ROCKY HILL/RT 3/RT 160

BU #: **842872**
ROCKY HILL

52 NEW BRITAIN AVENUE
ROCKY HILL, CT 06067

EXISTING 181'-10"
MONOPOLE

ISSUED FOR:

REV	DATE	DRWN	DESCRIPTION	DES./QA
A	04/23/21	SPK	PRELIMINARY	JTC
0	05/24/21	SPK	CONSTRUCTION	JTC

SEAL:

05/24/21

IT IS A VIOLATION OF LAW FOR ANY PERSON, UNLESS THEY ARE ACTING UNDER THE DIRECTION OF A LICENSED PROFESSIONAL ENGINEER, TO ALTER THIS DOCUMENT.

SHEET NUMBER: E-1
REVISION: 0

T-MOBILE GROUNDING NOTES:

ALL GROUNDS MUST ROUTE DOWNHILL FOR ENTIRE DURATION OF ROUTE

1. PROVIDE LABOR, MATERIALS, INSPECTION, AND TESTING TO PROVIDE CODE COMPLIANCE FOR ELECTRIC, TELEPHONE, AND GROUNDING/LIGHTNING SYSTEMS.

ICE BRIDGE/ EQUIPMENT POST:

#2 SOLID COPPER TINNED, EXOTHERMICALLY WELDED TO GROUND RING (BOTH ENDS), FINAL WELD COLD GALVANIZED, IN ½" NON–METALLIC SEAL TIGHT CONDUIT, SEALED WITH SILICONE, ANCHORED TO PAD/PLATFORM TO AVOID TRIP HAZARD USING HAMMER SET ANCHORS.

PEDESTALS, PLINTHS, SSC CABINET, FCOA CABINETS:

1. #2 SOLID COPPER TINNED, 2 HOLE LUG WITH FLAT AND LOCK WASHER AT EQUIPMENT; EXOTHERMICALLY WELDED TO GROUND RING, FINAL WELD COLD GALVANIZED, IN ½" NON–METALLIC SEAL TIGHT CONDUIT, SEALED WITH SILICONE, ANCHORED TO PAD TO AVOID TRIP HAZARD USING HAMMER SET ANCHORS. EACH PART REQUIRES A SEPARATE DOWNLEAD, NO DAISY CHAINS.
2. ALL COMPONENTS INSIDE FCOA CABINETS REQUIRE A DEDICATED GROUND.

COVP's:

#6 THHN STRANDED (GREEN JACKET), CONNECTED AT EQUIPMENT SIDE USING OVP TERMINAL BLOCK CONNECTION; MECHANICALLY CONNECTED TO GROUND REFERENCE AT MASTER BUSS BAR USING 2 HOLE LUG WITH FLAT AND LOCK WASHER, IN ½" NON–METALLIC SEAL TIGHT CONDUIT, SEALED WITH SILICONE, AND ANCHORED TO PAD/PLATFORM TO AVOID TRIP HAZARD.

ANTENNA/ COVP/ RRU MAST PIPES:

1. ALL VERTICAL MAST PIPES: #2 SOLID COPPER TINNED, EXOTHERMICALLY WELDED TO TOP OF PIPE (PIPE, DOWN MOLD), FINAL WELD COLD GALVANIZED, BONDED TO TOP BUSS BAR WITH 2 HOLE COPPER COMPRESSION LUG, FLAT AND LOCK WASHER.
2. EXISTING/REUSED PIPES: #2 SOLID COPPER TINNED, BONDED WITH COLD WATER CLAMP TO TOP OF PIPE, BONDED TO TOP BUSS WITH 2 HOLE COPPER COMPRESSION LUG, FLAT AND LOCK WASHER

AIR TERMINALS:

TO BE INSTALLED, ONLY IF REQUIRED

TMA's, DIPLEXERS AND TRIPLEXERS:

1. #6 THHN, WITH PROPER COPPER COMPRESSION LUG, FLATS AND LOCK WASHERS
2. ALL GROUND LUGS ON TMA MUST BE GROUNDED WITH SEPARATE DOWNLEAD TO BUSS BAR (NO DAISY CHAINS)

ELEVATED STEEL PLATFORMS WITH LUNAR FEET:

#2 SOLID COPPER TINNED, EXOTHERMICALLY WELDED (FLAT PLATE MOLD) TO OUTSIDE PERIMETER BEAMS IN FOUR (4) PLACES, FINAL WELD COLD GALVANIZED, BONDED DIRECTLY TO SUBGRADE GROUND RING.

STEEL CANOPY (STEEL PLATFORM OR CONCRETE PAD):

1. #2 SOLID COPPER TINNED, EXOTHERMICALLY WELDED (PIPE, DOWN MOLD) TO BOTTOM OF ALL VERTICAL SUPPORT POSTS, TYPICALLY FOUR (4) PIPES, FINAL WELD COLD GALVANIZED, BONDED DIRECTLY TO SUBGRADE GROUND RING.
2. #2 SOLID COPPER TINNED, EXOTHERMICALLY WELDED (PIPE, UP MOLD) TO TOP OF ALL VERTICAL SUPPORT POSTS, TYPICALLY FOUR (4) PIPES, FINAL WELD COLD GALVANIZED, BONDED UP TO CANOPY GRIP–STRUT USING 2 HOLE COPPER COMPRESSION LUG, FLAT AND LOCK WASHER.

RRU:

#6 THHN, WITH PROPER COPPER COMPRESSION LUG, ANTI–OXIDANT TO SECTOR BUSS BAR

FSBE ALARM BOX:

#6 THHN WITH ONE HOLE LUG BONDED TO PREVIOUSLY GROUNDED FCOA, PLINTH OR BUSS BAR.

SURGE SUPPRESSORS:

#6 THHN TO PREVIOUSLY GROUNDED BUSS BAR USING PROPER LUGS

FYGA/FYGB BRACKET:

1. #6 THHN TO PREVIOUSLY GROUNDED BUSS BAR USING PROPER LUGS
2. THROUGH BOLTS WITH FLAT, LOCK ON BRACKET

BUSS BARS:

1. PLATFORM / PAD BUSS BAR SHOULD BE MINIMUM 12" TINNED COPPER WITH INSULATORS, AND SHOULD HAVE TWO (2) EXOTHERMICALLY WELDED DOWN LEADS DIRECTLY TO GROUND RING USING #2 SOLID COPPER TINNED WIRE.
2. SECTOR BUSS BAR SHOULD BE PROPERLY SIZED TO ACCOMMODATE NECESSARY GROUNDING FOR EQUIPMENT ON EACH MOUNT, AND MAY BE SOLID COPPER (TINNED NOT REQUIRED). DO NOT USE INSULATORS ON SECTOR BUSS BARS ATTACH DIRECTLY TO TOWER MOUNT STEEL.

GENERAL:

- NO GROUND KITS ON HYBRID TRUNKS (TOP OR BOTTOM)
- NO GROUND KITS ON MICROWAVE IF CABLES (TOP OR BOTTOM)
- MICROWAVE SURGE SUPPRESSORS ARE NOT TO BE INSTALLED UPSTAIRS ON TOWER, DOWNSTAIRS ONLY (BULKHEAD PREFERRED)
- MICROWAVE ODU MUST BE GROUNDED TO TOWER TOP SECTOR OR COLLECTOR BUSS BAR
- ALL TMA'S AND DIPLEXERS MUST BE GROUNDED TO BUSS BAR. NO DAISY CHAIN ON TWIN/DUAL TMA
- ALL LUGS SHOULD BE PROPERLY SIZED FOR CONDUCTOR, BURNDY TINNED COPPER COMPRESSION STYLE
  1. INDOOR (OR INSIDE CABINET) SHOULD HAVE WINDOW
  2. OUTDOOR SHOULD NOT HAVE WINDOW
- CONTRACTOR TO VERIFY EXISTENCE AND LOCATION OF EXISTING SITE GROUND SYSTEM.
- CONTRACTOR SHALL VERIFY THAT GROUNDING ELECTRODES SHALL BE CONNECTED IN A RING USING #2 AWG BARE TINNED COPPER WIRE. THE TOP OF THE GROUND RODS AND THE RING CONDUCTOR SHALL BE 30" BELOW FINISHED GRADE, OR TO FROST DEPTH, WHICHEVER IS GREATER. GROUNDING ELECTRODES SHALL BE DRIVEN ON 10'–0" CENTERS (PROVIDE AND INSTALL AS REQUIRED. REQUIRED PER PLAN BELOW).
- GROUNDING CONDUCTORS SHALL BE OF EQUAL LENGTH, MATERIAL, AND BONDING TECHNIQUE.
- CONTRACTOR SHALL ENSURE GROUND RING IS WITHIN 12 TO 36 INCHES OF THE EQUIPMENT PLATFORM. PROVIDE AND INSTALL GROUNDING CONNECTIONS SHOWN BELOW AS NEEDED PER EXISTING SITE GROUNDING SYSTEM. CONTRACTOR SHALL VERIFY ALL EXISTING SITE GROUNDING CONDITIONS BEFORE STARTING WORK OR PURCHASING EQUIPMENT.
- ALL DOWN CONDUCTORS MUST GO DOWN.

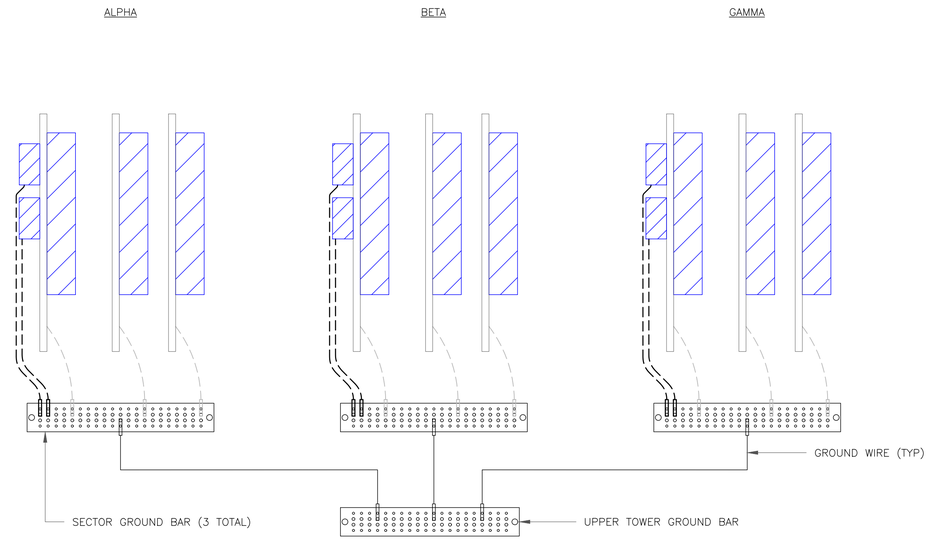

NOTE:

ALL NEW GROUNDS TO BE #6 STRANDED COPPER WITH GREEN INSULATION UNLESS NOTED OTHERWISE.

GROUNDING SHOWN TYPICAL PER SECTOR.

1 TYPICAL ANTENNA GROUNDING DIAGRAM
SCALE: NOT TO SCALE

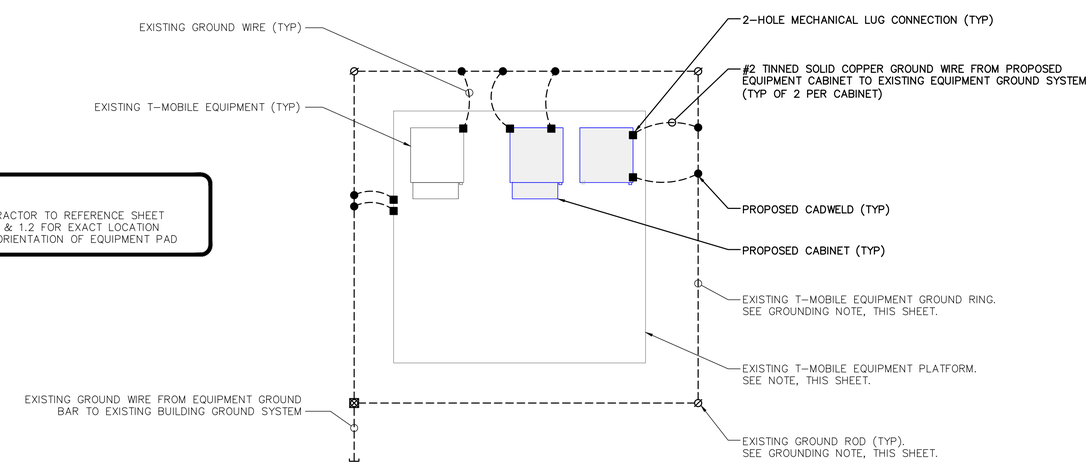

NOTE:

CONTRACTOR TO REFERENCE SHEET C–1.1 & 1.2 FOR EXACT LOCATION AND ORIENTATION OF EQUIPMENT PAD

2 TYPICAL CABINET GROUNDING DIAGRAM
SCALE: NOT TO SCALE

T-Mobile

4 SYLVAN WAY
PARSIPPANY, NJ 07054

CROWN CASTLE

3 CORPORATE PARK DRIVE, SUTIE 101
CLIFTON PARK, NY 12065

TOWER ENGINEERING PROFESSIONALS

326 TRYON RD
RALEIGH, NC 27603
(919) 661-6351

53 STICKLE AVENUE
ROCKAWAY, NJ 07866
(984) 255-7011

TEP JOB #: 25659.522999

T-MOBILE SITE NUMBER:
CT11427A
ROCKY HILL/RT 3/RT 160

BU #: **842872**
ROCKY HILL

52 NEW BRITAIN AVENUE
ROCKY HILL, CT 06067

EXISTING 181'-10"
MONOPOLE

ISSUED FOR:

REV	DATE	DRWN	DESCRIPTION	DES./QA
A	04/23/21	SPK	PRELIMINARY	JTC
0	05/24/21	SPK	CONSTRUCTION	JTC

SEAL:

05/24/21

IT IS A VIOLATION OF LAW FOR ANY PERSON, UNLESS THEY ARE ACTING UNDER THE DIRECTION OF A LICENSED PROFESSIONAL ENGINEER, TO ALTER THIS DOCUMENT.

SHEET NUMBER: G-1

REVISION: 0

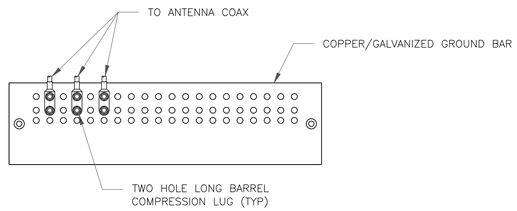

NOTES:

1. DOUBLING UP "OR STACKING" OF CONNECTIONS IS NOT PERMITTED.
2. EXTERIOR ANTIOXIDANT JOINT COMPOUND TO BE USED ON ALL EXTERIOR CONNECTIONS.
3. GROUND BAR SHALL NOT BE ISOLATED FROM TOWER. MOUNT DIRECTLY TO ANTENNA MOUNT STEEL.

1 ANTENNA SECTOR GROUND BAR DETAIL
SCALE: NOT TO SCALE

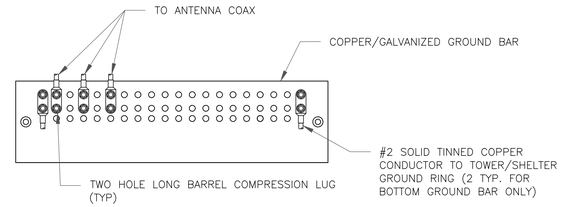

NOTES:

1. EXTERIOR ANTIOXIDANT JOINT COMPOUND TO BE USED ON ALL EXTERIOR CONNECTIONS.
2. GROUND BAR SHALL NOT BE ISOLATED FROM TOWER. MOUNT DIRECTLY TO TOWER STEEL (TOWER ONLY).
3. GROUND BAR SHALL BE ISOLATED FROM BUILDING OR SHELTER.

2 TOWER/SHELTER GROUND BAR DETAIL
SCALE: NOT TO SCALE

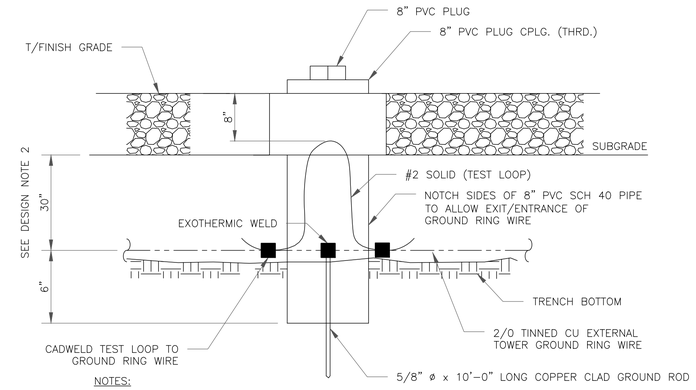

NOTES:

1. GROUND ROD SHALL BE DRIVEN VERTICALLY, NOT TO EXCEED 45 DEGREES FROM THE VERTICAL
2. GROUND WIRE SHALL BE MIN. 30" BELOW GRADE OR 6" BELOW FROST LINE. (WHICH EVER IS GREATER) AS PER N.E.C. ARTICLE 250-50(D)

3 INSPECTION WELL DETAIL
SCALE: NOT TO SCALE

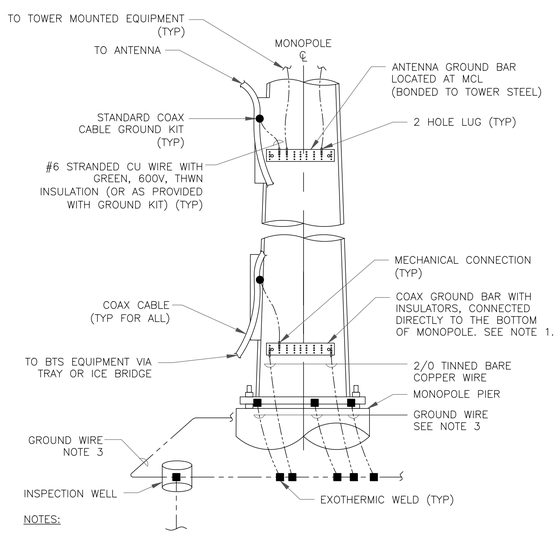

NOTES:

1. NUMBER OF GROUNDING BARS MAY VARY DEPENDING ON THE TYPE OF TOWER, ANTENNA LOCATIONS AND CONNECTION ORIENTATION. COAXIAL CABLES EXCEEDING 200 FEET ON THE TOWER SHALL HAVE GROUND KITS AT THE MIDPOINT. PROVIDE AS REQUIRED.
2. ONLY MECHANICAL CONNECTIONS ARE ALLOWED TO BE MADE TO CROWN CASTLE USA INC. TOWERS. ALL MECHANICAL CONNECTIONS SHALL BE TREATED WITH AN ANTI-OXIDANT COATING.
3. ALL TOWER GROUNDING SYSTEMS SHALL COMPLY WITH THE REQUIREMENTS OF THE RECOGNIZED EDITION OF ANSI/TIA 222 AND NFPA 780.

4 TYPICAL ANTENNA CABLE GROUNDING
SCALE: NOT TO SCALE

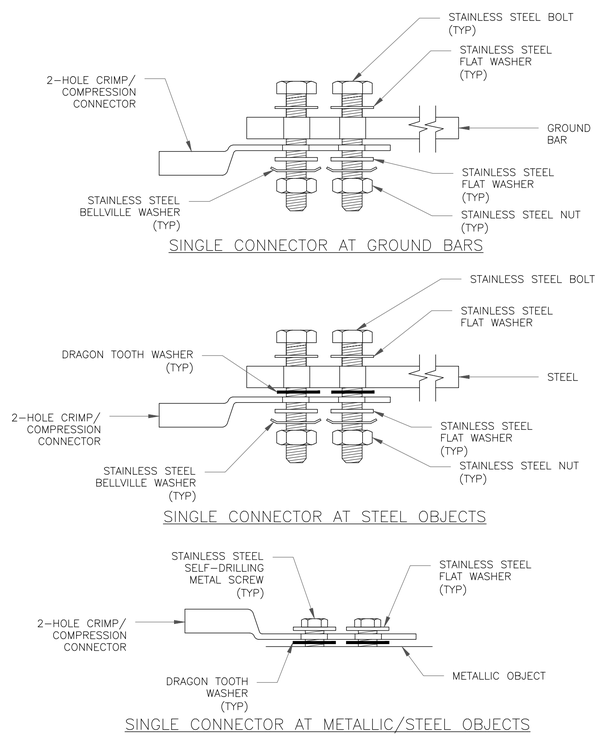

5 HARDWARE DETAIL FOR EXTERIOR CONNECTIONS
SCALE: NOT TO SCALE

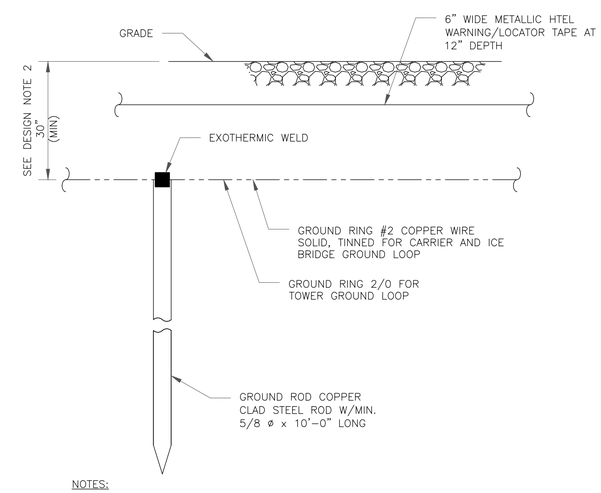

NOTES:

1. GROUND ROD SHALL BE DRIVEN VERTICALLY, NOT TO EXCEED 45 DEGREES FROM THE VERTICAL
2. GROUND WIRE SHALL BE MIN. 30" BELOW GRADE OR 6" BELOW FROST LINE. (WHICH EVER IS GREATER) AS PER N.E.C. ARTICLE 250-50(D)

6 GROUND ROD DETAIL
SCALE: NOT TO SCALE

T-Mobile

4 SYLVAN WAY
PARSIPPANY, NJ 07054

CROWN CASTLE

3 CORPORATE PARK DRIVE, SUTIE 101
CLIFTON PARK, NY 12065

TOWER ENGINEERING PROFESSIONALS

326 TRYON RD
RALEIGH, NC 27603
(919) 661-6351

53 STICKLE AVENUE
ROCKAWAY, NJ 07866
(984) 255-7011

TEP JOB #: 25659.522999

T-MOBILE SITE NUMBER:
CT11427A
ROCKY HILL/RT 3/RT 160

BU #: **842872**
ROCKY HILL

52 NEW BRITAIN AVENUE
ROCKY HILL, CT 06067

EXISTING 181'-10"
MONOPOLE

ISSUED FOR:

REV	DATE	DRWN	DESCRIPTION	DES./QA
A	04/23/21	SPK	PRELIMINARY	JTC
0	05/24/21	SPK	CONSTRUCTION	JTC

SEAL:

05/24/21

IT IS A VIOLATION OF LAW FOR ANY PERSON, UNLESS THEY ARE ACTING UNDER THE DIRECTION OF A LICENSED PROFESSIONAL ENGINEER, TO ALTER THIS DOCUMENT.

SHEET NUMBER: G-2

REVISION: 0

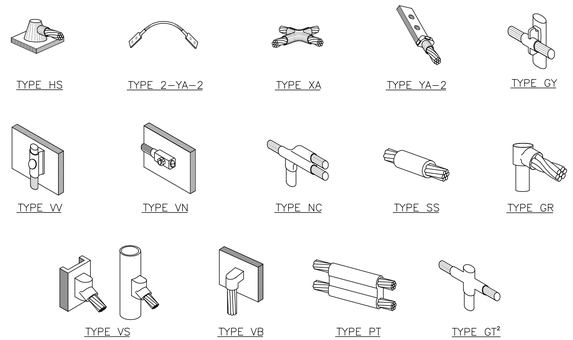

NOTE:

1. ERICO EXOTHERMIC "MOLD TYPES" SHOWN HERE ARE EXAMPLES. CONSULT WITH CONSTRUCTION MANAGER FOR SPECIFIC MOLDS TO BE USED FOR THIS PROJECT.
2. MOLD TYPE ONLY TO BE USED BELOW GRADE WHEN CONNECTING GROUND RING TO GROUND ROD.

1 CADWELD GROUNDING CONNECTIONS
SCALE: NOT TO SCALE

WIRE SIZE	BURNDY LUG	BOLT SIZE
#6 AWG GREEN INSULATED	YA6C-2TC38	3/8" - 16 NC S 2 BOLT
#2 AWG SOLID TINNED	YA3C-2TC38	3/8" - 16 NC S 2 BOLT
#2 AWG STRANDED	YA2C-2TC38	3/8" - 16 NC S 2 BOLT
#2/0 AWG STRANDED	YA26-2TC38	3/8" - 16 NC S 2 BOLT
#4/0 AWG STRANDED	YA28-2N	1/2" - 16 NC S 2 BOLT

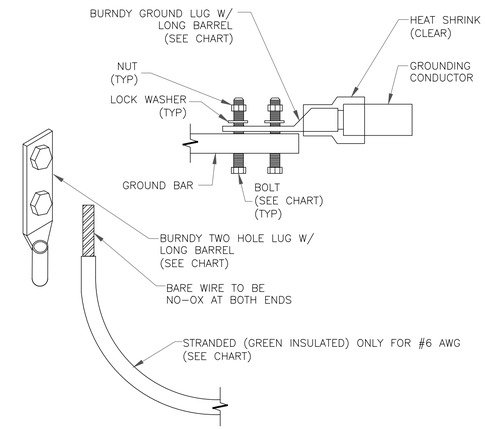

NOTES:

1. ALL GROUNDING LUGS ARE TO BE INSTALLED PER MANUFACTURER'S SPECIFICATIONS. ALL HARDWARE BOLTS, NUTS, LOCK WASHERS SHALL BE STAINLESS STEEL. ALL HARDWARE ARE TO BE AS FOLLOWS: BOLT, FLAT WASHER,GROUND BAR, GROUND LUG, FLAT WASHER AND NUT.

2 MECHANICAL LUG CONNECTION
SCALE: NOT TO SCALE

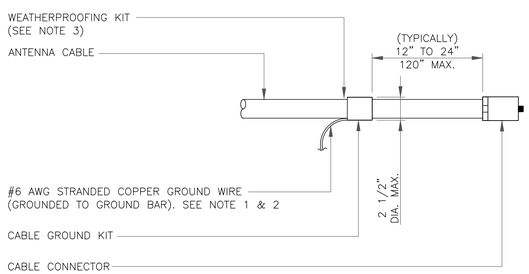

NOTES:

1. DO NOT INSTALL CABLE GROUND KIT AT A BEND AND ALWAYS DIRECT GROUND WIRE DOWN TO GROUND BAR.
2. GROUNDING KIT SHALL BE TYPE AND PART NUMBER AS SUPPLIED OR RECOMMENDED BY CABLE MANUFACTURER.
3. WEATHER PROOFING SHALL BE TWO-PART TAPE KIT, COLD SHRINK SHALL NOT BE USED.

3 CABLE GROUND KIT CONNECTION
SCALE: NOT TO SCALE

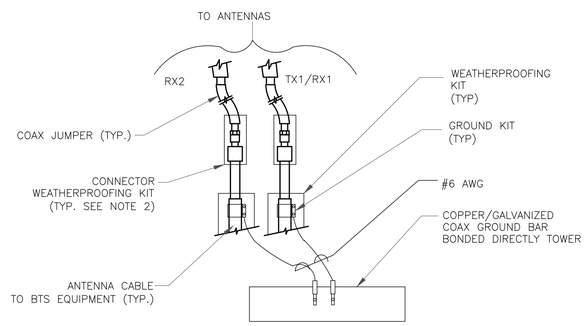

NOTES:

1. DO NOT INSTALL CABLE GROUND KIT AT A BEND AND ALWAYS DIRECT GROUND WIRE DOWN TO ANTENNA GROUND BAR.
2. WEATHER PROOFING SHALL BE TWO-PART TAPE KIT. COLD SHRINK SHALL NOT BE USED.

4 GROUND CABLE CONNECTION
SCALE: NOT TO SCALE

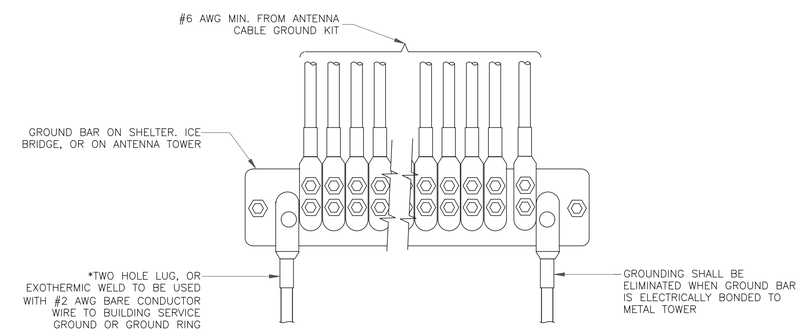

5 GROUNDWIRE INSTALLATION
SCALE: NOT TO SCALE

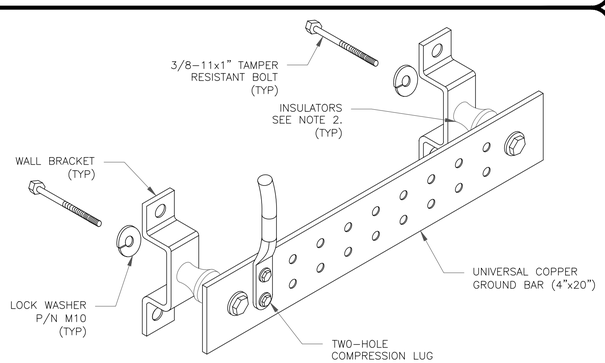

NOTES:

1. DOWN LEAD (HOME RUN) CONDUCTORS ARE NOT TO BE INSTALLED ON CROWN CASTLE USA INC. TOWER, PER THE GROUNDING DOWN CONDUCTOR POLICY QAS-STD-10091. NO MODIFICATION OR DRILLING TO TOWER STEEL IS ALLOWED IN ANY FORM OR FASHION, CAD-WELDING ON THE TOWER AND/OR IN THE AIR ARE NOT PERMITTED.
2. OMIT INSULATOR WHEN MOUNTING TO TOWER STEEL OR PLATFORM STEEL USE INSULATORS WHEN ATTACHING TO BUILDING OR SHELTERS.

6 GROUND BAR DETAIL
SCALE: NOT TO SCALE

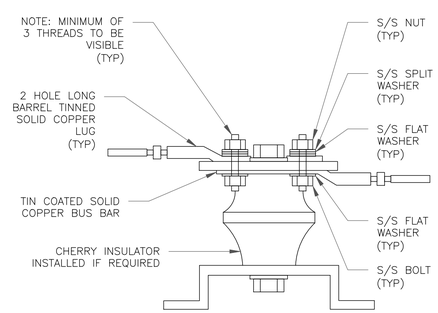

7 LUG DETAIL
SCALE: NOT TO SCALE

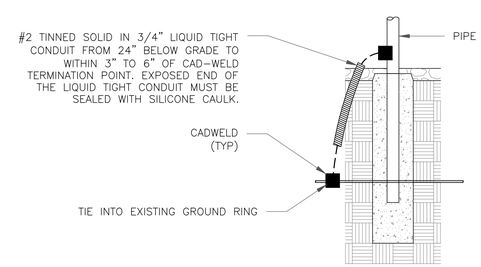

8 TRANSITIONING GROUND DETAIL
SCALE: NOT TO SCALE

T-Mobile
4 SYLVAN WAY
PARSIPPANY, NJ 07054

CROWN CASTLE
3 CORPORATE PARK DRIVE, SUTIE 101
CLIFTON PARK, NY 12065

TOWER ENGINEERING PROFESSIONALS
326 TRYON RD
RALEIGH, NC 27603
(919) 661-6351
53 STICKLE AVENUE
ROCKAWAY, NJ 07866
(984) 255-7011
TEP JOB #: 25659.522999

T-MOBILE SITE NUMBER:
CT11427A
ROCKY HILL/RT 3/RT 160

BU #: **842872**
ROCKY HILL

52 NEW BRITAIN AVENUE
ROCKY HILL, CT 06067

EXISTING 181'-10"
MONOPOLE

ISSUED FOR:

REV	DATE	DRWN	DESCRIPTION	DES./QA
A	04/23/21	SPK	PRELIMINARY	JTC
0	05/24/21	SPK	CONSTRUCTION	JTC

SEAL:

05/24/21

IT IS A VIOLATION OF LAW FOR ANY PERSON, UNLESS THEY ARE ACTING UNDER THE DIRECTION OF A LICENSED PROFESSIONAL ENGINEER, TO ALTER THIS DOCUMENT.

SHEET NUMBER: G-3
REVISION: 0

NOTES:

1. MODIFICATIONS SHOWN ARE FOR (1) SECTOR. (3) TOTAL SECTORS REQUIRE MODIFICATION
2. VARIOUS EXISTING CONDITIONS AND PROPOSED MODIFICATIONS NOT SHOWN FOR CLARITY.
3. ALL DESIGNATED PARTS ARE TO BE INSTALLED PER MANUFACTURER'S SPECIFICATIONS, UNLESS OTHERWISE NOTED.
4. CONTRACTOR TO FIELD VERIFY REQUIRED LENGTHS OF PROPOSED ANGLES & PIPES, AND CUT & DRILL ON SITE AS NECESSARY.
5. REMOVAL/REPLACEMENT OF STRUCTURAL MEMBERS SHALL BE DONE ONE MEMBER AT A TIME. CONTRACTOR IS RESPONSIBLE FOR ENSURING THE STRUCTURAL INTEGRITY OF THE STRUCTURE DURING ALL PHASES OF CONSTRUCTION.

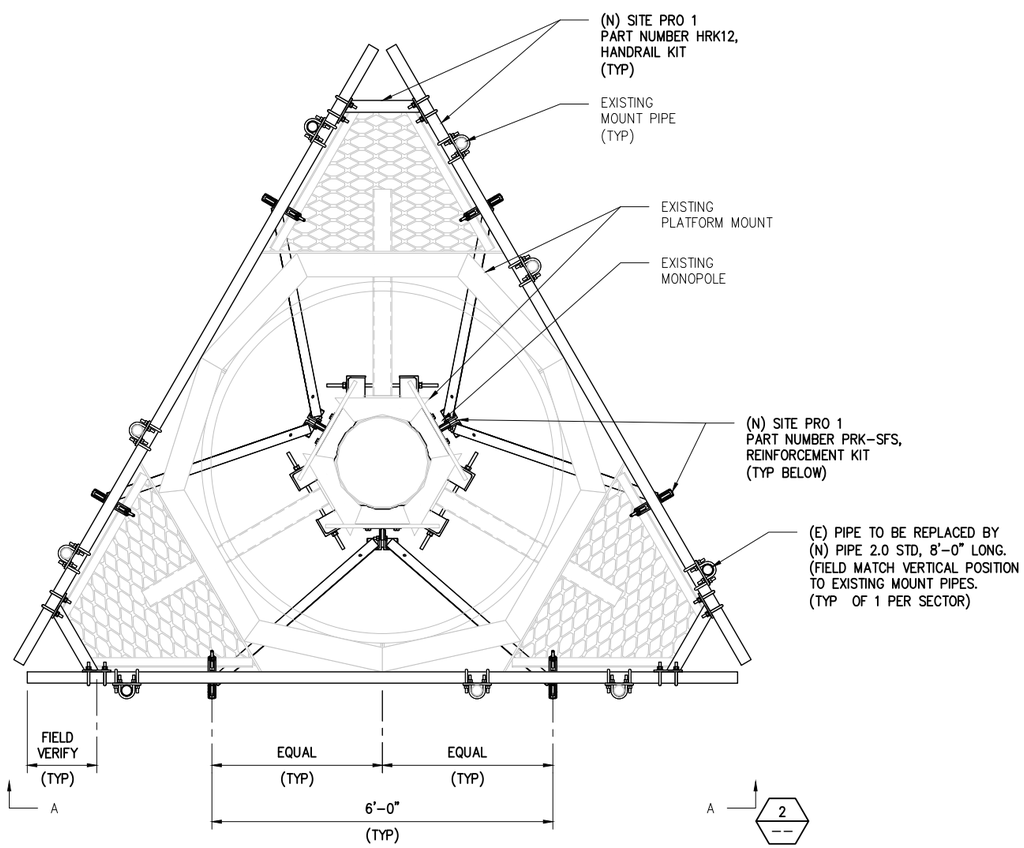

1 -- PLAN VIEW

SCALE: NOT TO SCALE

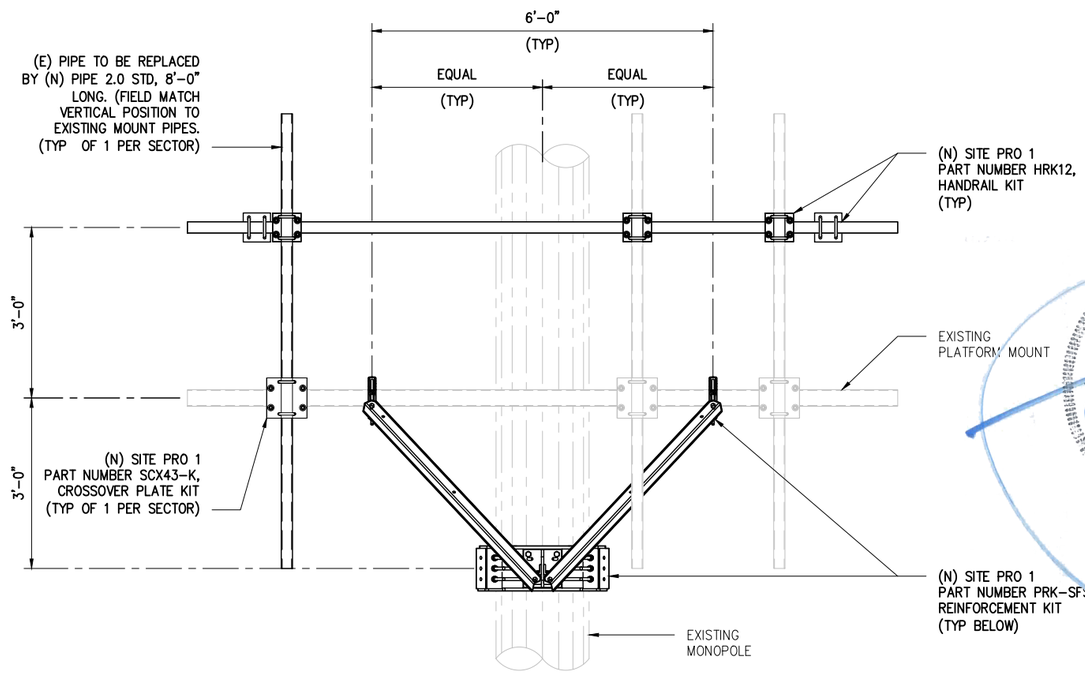

2 -- SECTION A–A

SCALE: NOT TO SCALE

CROWN CASTLE
CROWN CASTLE
1200 MACARTHUR BLVD. SUITE 200
MAHWAH, NJ 07430

INFINIGY ENGINEERING PLLC
1033 Watervliet Shaker Rd
Albany, NY 12205
Office # (518) 690-0790
Fax # (518) 690-0793

T-Mobile

SUBMITTALS

DATE	DESCRIPTION	REVISION
04/12/21	FOR CONSTRUCTION	0

DEPT.	DATE	APP'D	REVISIONS
RFE			
RF MAN.			
ZONING			
OPS			
CONSTR.			
SITE AC.			

PROJECT NO:	1039-Z0001-B
DRAWN BY:	WJD
CHECKED BY:	JSG

STATE OF CONNECTICUT
EMANUEL POULIS
No. 22947
LICENSED
PROFESSIONAL ENGINEER

4/12/21

PROFESSIONAL SEAL

THIS DOCUMENT IS THE CREATION, DESIGN, PROPERTY AND COPYRIGHTED WORK OF T-MOBILE. ANY DUPLICATION OR USE WITHOUT EXPRESS WRITTEN CONSENT IS STRICTLY PROHIBITED.

NOTE: IF DRAWINGS ARE 22"x34", USE GRAPHICAL SCALE AND/OR 1/2 TIMES OF THE NOTED SCALE.

SITE NUMBER
842872

SITE NAME
ROCKY HILL

52 NEW BRITAIN AVENUE
ROCKY HILL, CT 06067

SHEET TITLE

MOUNT MODIFICATION DETAILS

SHEET NUMBER

S-2

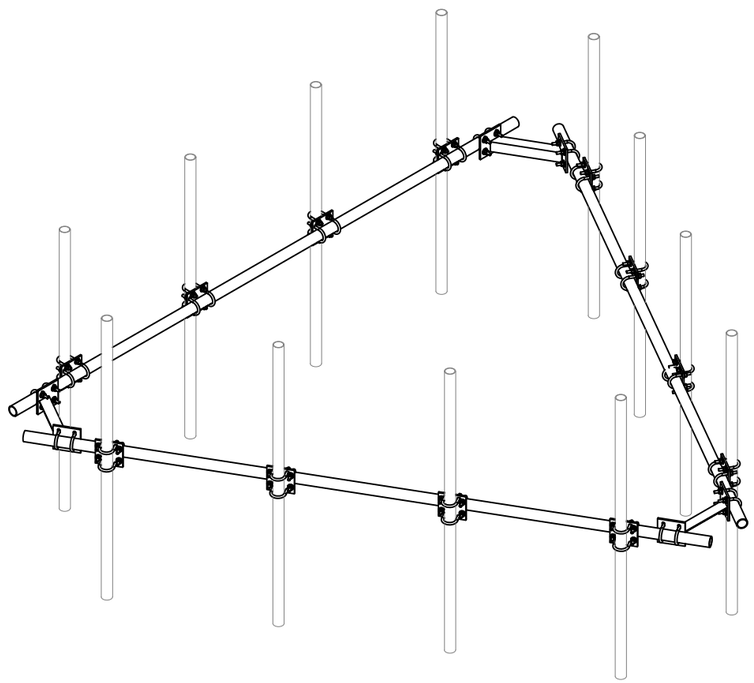

1 -- SITE PRO 1 P/N HRK12
SCALE: NOT TO SCALE

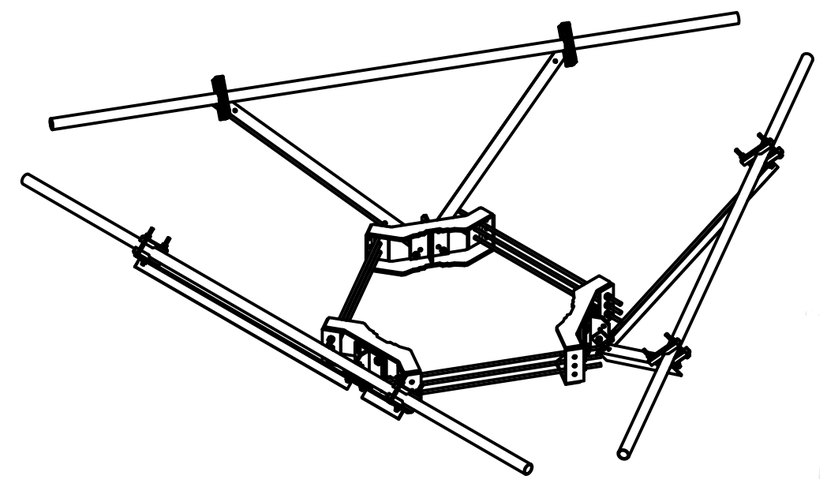

2 -- SITE PRO 1 P/N PRK-SFS
SCALE: NOT TO SCALE

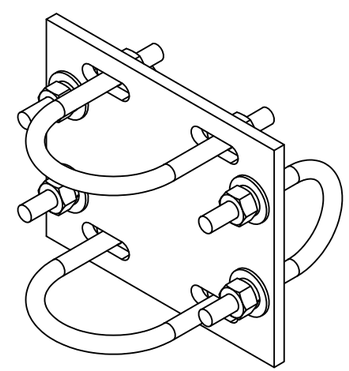

3 -- SITE PRO 1 P/N SCX43-K
SCALE: NOT TO SCALE

CROWN CASTLE
CROWN CASTLE
1200 MACARTHUR BLVD. SUITE 200
MAHWAH, NJ 07430

INFINIGY ENGINEERING PLLC
1033 Watervliet Shaker Rd
Albany, NY 12205
Office # (518) 690-0790
Fax # (518) 690-0793

T-Mobile

SUBMITTALS

DATE	DESCRIPTION	REVISION
04/12/21	FOR CONSTRUCTION	0

DEPT.	DATE	APP'D	REVISIONS
RFE			
RF MAN.			
ZONING			
OPS			
CONSTR.			
SITE AC.			

PROJECT NO: 1039-Z0001-B
DRAWN BY: WJD
CHECKED BY: JSG

STATE OF CONNECTICUT
MANUEL POULIOT
No. 22947
LICENSED
PROFESSIONAL ENGINEER
4/12/21
PROFESSIONAL SEAL

THIS DOCUMENT IS THE CREATION, DESIGN, PROPERTY AND COPYRIGHTED WORK OF T-MOBILE. ANY DUPLICATION OR USE WITHOUT EXPRESS WRITTEN CONSENT IS STRICTLY PROHIBITED.

NOTE: IF DRAWINGS ARE 22"x34", USE GRAPHICAL SCALE AND/OR 1/2 TIMES OF THE NOTED SCALE.

SITE NUMBER
842872

SITE NAME
ROCKY HILL

52 NEW BRITAIN AVENUE
ROCKY HILL, CT 06067

SHEET TITLE
REQUIRED PARTS

SHEET NUMBER
S-3

Exhibit D

Structural Analysis Report

Date: **April 26, 2021**

B+T Group
1717 S. Boulder, Suite 300
Tulsa, OK 74119
(918) 587-4630

Subject:	**Structural Analysis Report**	
Carrier Designation:	***T-Mobile* Co-Locate**	
	Site Number:	CT11427A
	Site Name:	Rocky Hill/Rt 3/ Rt 160
Crown Castle Designation:	**BU Number:**	842872
	Site Name:	Rocky Hill
	JDE Job Number:	639023
	Work Order Number:	1933433
	Order Number:	548366 Rev. 0
Engineering Firm Designation:	**B+T Group Project Number:**	95171.019.01
Site Data:	**52 New Britain Avenue, Rocky Hill, Hartford County, CT** **Latitude *41° 39' 36.89"*, Longitude *-72° 40' 50.58"*** **181.833 Foot - Monopole Tower**	

B+T Group is pleased to submit this **"Structural Analysis Report"** to determine the structural integrity of the above-mentioned tower.

The purpose of the analysis is to determine acceptability of the tower stress level. Based on our analysis we have determined the tower stress level for the structure and foundation, under the following load case, to be:

LC7: Proposed Equipment Configuration **Sufficient Capacity – 95.9%**

This analysis utilizes an ultimate 3-second gust wind speed of 125 mph as required by the 2015 International Building Code. Applicable Standard references and design criteria are listed in Section 2 - Analysis Criteria.

Structural analysis prepared by: Mahsa Abdeveis

Respectfully submitted by: B+T Engineering, Inc.
COA: PEC.0001564; Expires: 02/10/2022

STATE OF CONNECTICUT
CHAD TUTTLE
No. 23924
LICENSED
PROFESSIONAL ENGINEER

4/29/2021

Chad E. Tuttle, P.E.

TABLE OF CONTENTS

1) INTRODUCTION

2) ANALYSIS CRITERIA
Table 1 - Proposed Equipment Configuration
Table 2 - Other Considered Equipment

3) ANALYSIS PROCEDURE
Table 3 - Documents Provided
3.1) Analysis Method
3.2) Assumptions

4) ANALYSIS RESULTS
Table 4 - Section Capacity (Summary)
Table 5 – Tower Component Stresses vs. Capacity
4.1) Recommendations

5) APPENDIX A
tnxTower Output

6) APPENDIX B
Base Level Drawing

7) APPENDIX C
Additional Calculations

1) INTRODUCTION

This tower is a 181.833 ft Monopole tower designed by Engineered Endeavors, Inc.

The tower has been modified multiple times to accommodate additional loading.

2) ANALYSIS CRITERIA

TIA-222 Revision:	TIA-222-H
Risk Category:	II
Wind Speed:	125 mph
Exposure Category:	C
Topographic Factor:	1
Ice Thickness:	2 in
Wind Speed with Ice:	50 mph
Service Wind Speed:	60 mph

Table 1 - Proposed Equipment Configuration

Mounting Level (ft)	Center Line Elevation (ft)	Number of Antennas	Antenna Manufacturer	Antenna Model	Number of Feed Lines	Feed Line Size (in)
157.0	160.0	1	Site Pro 1	HRK12 Support Rail Kit	3	1-5/8
	159.0	3	Ericsson	AIR 32 B2A B66AA_T-MOBILE		
		3	Ericsson	AIR6449 B41_T-MOBILE		
		3	Ericsson	RADIO 4415 B25_TMO		
		3	Ericsson	RADIO 4449 B71 B85A_ T-MOBILE		
		3	Rfs Celwave	APXVAALL24_43-U-NA20_TMO		
	157.0	3	--	8'x2 STD Mount Pipes		
		1	--	Platform Mount [LP 305-1]		
	155.0	1	Site Pro 1	PRK-SFS Reinforcement Kit		

Table 2 - Other Considered Equipment

Mounting Level (ft)	Center Line Elevation (ft)	Number of Antennas	Antenna Manufacturer	Antenna Model	Number of Feed Lines	Feed Line Size (in)
178.0	188.0	2	Dbspectra	DS4C06F36D-D	12	7/8
	185.0	1	Austin Antenna Company	APC-1362		
		1	Austin Antenna Company	APC-2163		
	184.0	1	Austin Antenna Company	APC-301		
		1	Austin Antenna Company	APC-4065		
	178.0	1	--	Miscellaneous [NA 502-3]		
	177.0	2	Radiowaves	HPD2-4.7		
168.0	175.0	1	Telewave	ANT450D6-9	6	1-5/8
	168.0	3	CCI Antennas	DMP65R-BU6D	4	7/8
		3	CCI Antennas	HPA-65R-BUU-H6	4	3/4

Mounting Level (ft)	Center Line Elevation (ft)	Number of Antennas	Antenna Manufacturer	Antenna Model	Number of Feed Lines	Feed Line Size (in)
		4	CCI Antennas	TPX-070821	3	3/8
		3	Ericsson	RRUS 32 B2		
		3	Ericsson	RRUS 32 B2_CCIV2		
		3	Ericsson	RRUS 32 B66		
		3	Ericsson	RRUS 4449 B5/B12		
		3	Ericsson	RRUS 4478 B14_CCIV2		
		3	Ericsson	RRUS E2 B29		
		3	Ericsson	RRUS-32 B30		
		3	Powerwave Tech.	7770.00		
		6	Powerwave Tech.	LGP21401		
		3	Quintel Tech.	QS66512-2		
		1	Raycap	DC6-48-60-18-8C		
		2	Raycap	DC6-48-60-18-8C-EV		
		1	Raycap	DC6-48-60-18-8F		
		1	--	Platform Mount [LP 304-1_KCKR-HR-1]		
142.0	144.0	3	Alcatel Lucent	1900MHZ RRH (65MHZ)	--	--
	142.0	1	--	Pipe Mount [PM 601-3]		
	140.0	3	Alcatel Lucent	800 EXTERNAL NOTCH FILTER		
		3	Alcatel Lucent	800MHZ RRH		
140.0	142.0	3	Alcatel Lucent	TD-RRH8X20-25	3 1	1-1/4 7/8
		3	Rfs Celwave	APXVSPP18-C-A20		
		3	Rfs Celwave	APXVTM14-C-120		
	140.0	1	--	Platform Mount [LP 1201-1]		
90.0	95.0	3	Site Pro 1	PRK-SFS-L Reinforcement Kit		
	93.0	1	Site Pro 1	HRK12 Support Rail Kit		
	90.0	3	Andrew	HBXX-6517DS-A2M		
		3	Antel	BXA-70080-4BF-EDIN-0		
		6	Commscope	NHH-65B-R2B		
		1	Gps	GPS_A		
		1	Rfs Celwave	DB-T1-6Z-8AB-0Z		
		3	Samsung Telecom.	RFV01U-D1A		
		3	Samsung Telecom.	RFV01U-D2A		
		1	--	Platform Mount [LP 1201-1]		
73.0	75.0	1	Gps	GPS_A	1	1/2
	73.0	1	--	Side Arm Mount [SO 701-1]		

3) ANALYSIS PROCEDURE

Table 3 - Documents Provided

Document	Reference	Source
Tower Manufacturer Drawing	4844402	CCI Sites
Mount Modification Report	9712280	CCI Sites
Tower Modification Drawing	4740398	CCI Sites
Legacy Modification Inspection	6040534	CCI Sites
Tower Modification Drawing	4904956	CCI Sites
Post Modification Inspection	4904967	CCI Sites
Tower Modification Drawing	6525881	CCI Sites
Post Modification Inspection	6647989	CCI Sites
Foundation Drawing	4713252	CCI Sites
Geotech Report	4713251	CCI Sites
Crown CAD Package	Date: 03/02/2021	CCI Sites

3.1) Analysis Method

tnxTower (version 8.0.9.0), a commercially available analysis software package, was used to create a three-dimensional model of the tower and calculate member stresses for various loading cases. Selected output from the analysis is included in Appendix A. When applicable, Crown Castle has calculated and provided the effective area for panel antennas using approved methods following the intent of the TIA-222 standard.

tnxTower was used to determine the loads on the modified structure. Additional calculations were performed to determine the stresses in the pole and in the reinforcing elements. These calculations are presented in Appendix C.

3.2) Assumptions

1) The tower and structures were maintained in accordance with the - TIA-222 standard.
2) The configuration of antennas, transmission cables, mounts and other appurtenances are as specified in Tables 1 and 2 and the referenced drawings.

This analysis may be affected if any assumptions are not valid or have been made in error. B+T Group should be notified to determine the effect on the structural integrity of the tower.

4) ANALYSIS RESULTS

Table 4 - Section Capacity (Summary)

Section No.	Elevation (ft)	Component Type	Size	Critical Element	P (K)	SF*P_allow (K)	% Capacity	Pass / Fail
L1	182 - 177	Pole	TP15.678x14.5x0.25	1	-0.725	--	5.0%	Pass
L2	177 - 172	Pole	TP16.856x15.678x0.25	2	-0.912	--	8.7%	Pass
L3	172 - 167	Pole	TP18.033x16.856x0.25	3	-5.193	--	15.2%	Pass
L4	167 - 162	Pole	TP19.211x18.033x0.25	4	-5.568	--	27.8%	Pass
L5	162 - 157	Pole	TP20.389x19.211x0.25	5	-6.001	--	37.7%	Pass
L6	157 - 152	Pole	TP21.567x20.389x0.25	6	-9.802	--	51.9%	Pass
L7	152 - 147	Pole	TP22.745x21.567x0.25	7	-10.404	--	62.0%	Pass
L8	147 - 142	Pole	TP23.922x22.745x0.25	8	-11.046	--	70.2%	Pass

Section No.	Elevation (ft)	Component Type	Size	Critical Element	P (K)	SF*P_allow (K)	% Capacity	Pass / Fail
L9	142 - 137	Pole	TP25.1x23.922x0.25	9	-15.229	--	80.1%	Pass
L10	137 - 136.83	Pole	TP26.023x25.1x0.25	10	-15.274	--	80.4%	Pass
L11	136.83 - 131.83	Pole	TP25.806x24.639x0.375	11	-16.401	--	61.0%	Pass
L12	131.83 - 126.83	Pole	TP26.972x25.806x0.375	12	-17.343	--	65.2%	Pass
L13	126.83 - 121.83	Pole	TP28.139x26.972x0.375	13	-18.316	--	68.6%	Pass
L14	121.83 - 116.83	Pole	TP29.305x28.139x0.375	14	-19.324	--	71.4%	Pass
L15	116.83 - 111.83	Pole	TP30.472x29.305x0.375	15	-20.365	--	73.7%	Pass
L16	111.83 - 106.83	Pole	TP31.638x30.472x0.375	16	-21.439	--	75.6%	Pass
L17	106.83 - 101.83	Pole	TP32.805x31.638x0.375	17	-22.544	--	77.1%	Pass
L18	101.83 - 96.83	Pole	TP33.971x32.805x0.375	18	-23.680	--	78.4%	Pass
L19	96.83 - 92.47	Pole	TP36.161x33.971x0.375	19	-25.043	--	79.3%	Pass
L20	92.47 - 86.45	Pole	TP35.643x34.239x0.375	20	-31.048	--	84.8%	Pass
L21	86.45 - 85	Pole	TP35.98x35.643x0.375	21	-31.408	--	85.2%	Pass
L22	85 - 84.75	Pole	TP36.039x35.98x0.375	22	-31.502	--	85.3%	Pass
L23	84.75 - 79.75	Pole	TP37.204x36.039x0.375	23	-32.790	--	87.3%	Pass
L24	79.75 - 75	Pole	TP38.311x37.204x0.375	24	-34.055	--	89.0%	Pass
L25	75 - 74.75	Pole + Reinf.	TP38.369x38.311x0.7	25	-34.178	--	76.7%	Pass
L26	74.75 - 74	Pole + Reinf.	TP38.544x38.369x0.7	26	-34.463	--	77.0%	Pass
L27	74 - 73.75	Pole	TP38.602x38.544x0.375	27	-34.534	--	89.4%	Pass
L28	73.75 - 68.75	Pole	TP39.768x38.602x0.375	28	-35.964	--	91.0%	Pass
L29	68.75 - 63.75	Pole	TP40.933x39.768x0.375	29	-37.369	--	92.4%	Pass
L30	63.75 - 58.75	Pole	TP42.098x40.933x0.375	30	-38.803	--	93.7%	Pass
L31	58.75 - 53.75	Pole	TP43.264x42.098x0.375	31	-40.267	--	94.9%	Pass
L32	53.75 - 49.08	Pole	TP45.805x43.264x0.375	32	-41.657	--	95.9%	Pass
L33	49.08 - 41.85	Pole	TP45.282x43.602x0.438	33	-45.295	--	82.4%	Pass
L34	41.85 - 36.85	Pole	TP46.443x45.282x0.438	34	-46.998	--	83.0%	Pass
L35	36.85 - 31.85	Pole	TP47.604x46.443x0.438	35	-48.735	--	83.5%	Pass
L36	31.85 - 26.85	Pole	TP48.765x47.604x0.438	36	-50.505	--	84.0%	Pass
L37	26.85 - 21.85	Pole	TP49.926x48.765x0.438	37	-52.308	--	84.4%	Pass
L38	21.85 - 16.85	Pole	TP51.087x49.926x0.438	38	-54.144	--	84.8%	Pass
L39	16.85 - 11.85	Pole	TP52.249x51.087x0.438	39	-56.012	--	85.2%	Pass
L40	11.85 - 6.85	Pole	TP53.41x52.249x0.438	40	-57.913	--	85.5%	Pass
L41	6.85 - 1.85	Pole	TP54.571x53.41x0.438	41	-59.845	--	85.8%	Pass
L42	1.85 - 0	Pole	TP55x54.571x0.438	42	-60.552	--	85.9%	Pass
							Summary	
						Pole(L32)	95.9%	Pass
						Reinforcement	77.0%	Pass
						Overall	95.9%	Pass

Table 5 - Tower Component Stresses vs. Capacity – LC7

Notes	Component	Elevation (ft)	% Capacity	Pass / Fail
1,2	Anchor Rods	Base	93.5	Pass
1,2	Base Plate	Base	88.1	Pass
1,2	Base Foundation (Structure)	Base	91.1	Pass
1,2	Base Foundation (Soil Interaction)	Base	63.9	Pass

Structure Rating (max from all components) =	**95.9%**

Notes:
1) See additional documentation in "Appendix C – Additional Calculations" for calculations supporting the % capacity consumed.
2) Rating per TIA-222-H Section 15.5.

4.1) Recommendations

The tower and its foundation have sufficient capacity to carry the proposed load configuration. No modifications are required at this time.

APPENDIX A

TNXTOWER OUTPUT

Section	Length (ft)	Number of Sides	Thickness (in)	Socket Length (ft)	Top Dia (in)	Bot Dia (in)	Grade	Weight (K)
1	5.000	18	0.250		14.500	15.678		0.2
2	5.000	18	0.250		15.678	16.856		0.2
3	5.000	18	0.250		16.856	18.033		0.2
4	5.000	18	0.250		18.033	19.211		0.2
5	5.000	18	0.250		19.211	20.389		0.3
6	5.000	18	0.250		20.389	21.567		0.3
7	5.000	18	0.250		21.567	22.745		0.3
8	5.000	18	0.250		22.745	23.922		0.3
9	5.000	18	0.250		23.922	25.100		0.3
10	5.000	18	0.250	3.753	25.100	26.277		0.3
11	5.000	18	0.375		26.277	27.455		0.5
12	5.000	18	0.375		27.455	28.633		0.5
13	5.000	18	0.375		28.633	29.811		0.6
14	5.000	18	0.375		29.811	30.988		0.6
15	5.000	18	0.375		30.988	32.166		0.6
16	5.000	18	0.375		32.166	33.344		0.6
17	5.000	18	0.375		33.344	34.522		0.6
18	5.000	18	0.375		34.522	35.699		0.7
19	5.000	18	0.375	5.021	35.699	36.877	A572-65	1.3
20	5.000	18	0.375		36.877	38.055		0.8
21	5.000	18	0.375		38.055	39.233		0.8
22	5.000	18	0.375		39.233	40.410		0.8
23	5.000	18	0.375		40.410	41.588		0.7
24	5.000	18	0.375		41.588	42.766		0.7
25	5.000	18	0.375		42.766	43.944		0.7
26	5.000	18	0.375		43.944	45.121		0.7
27	5.000	18	0.375		45.121	46.299		0.7
28	5.000	18	0.375		46.299	47.477		0.8
29	5.000	18	0.375		47.477	48.655		0.8
30	5.000	18	0.375		48.655	49.832		0.8
31	5.000	18	0.375		49.832	51.010		0.9
32	7.232	18	0.375	6.232	51.010	52.188		1.9
33	5.000	18	0.438		52.188	53.365		1.5
34	5.000	18	0.438		53.365	54.543		1.1
35	5.000	18	0.438		54.543	55.721		1.1
36	5.000	18	0.438		55.721	56.898		1.1
37	5.000	18	0.438		56.898	58.076		1.2
38	5.000	18	0.438		58.076	59.254		1.2
39	5.000	18	0.438		59.254	60.432		1.2
40	5.000	18	0.438		60.432	61.609		1.2
41	5.000	18	0.438		61.609	62.787		1.3
42	1.845	18	0.438		62.787	63.965		0.5
								28.1

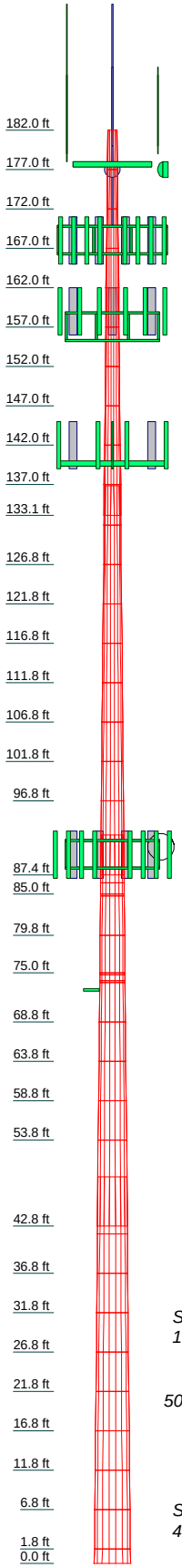

ALL REACTIONS ARE FACTORED

AXIAL 115 K

SHEAR 11 K — *MOMENT 1652 kip-ft*

TORQUE 1 kip-ft
50 mph WIND - 2.000 in ICE

AXIAL 61 K

SHEAR 40 K — *MOMENT 5187 kip-ft*

TORQUE 3 kip-ft
REACTIONS - 125 mph WIND

MATERIAL STRENGTH

GRADE	Fy	Fu	GRADE	Fy	Fu
A572-65	65 ksi	80 ksi			

TOWER DESIGN NOTES

1. Tower is located in Hartford County, Connecticut.
2. Tower designed for Exposure C to the TIA-222-H Standard.
3. Tower designed for a 125 mph basic wind in accordance with the TIA-222-H Standard.
4. Tower is also designed for a 50 mph basic wind with 2.00 in ice. Ice is considered to increase in thickness with height.
5. Deflections are based upon a 60 mph wind.
6. Tower Risk Category II.
7. Topographic Category 1 with Crest Height of 0.000 ft
8. TIA-222-H Annex S
9. TOWER RATING: 95.9%

B+T Group
1717 S. Boulder, Suite 300
Tulsa, OK 74119
Phone: (918) 587-4630
FAX: (918) 295-0265

Job: ***95171.019.01 - Rocky Hill, CT (BU# 842872)***		
Project:		
Client: Crown Castle	Drawn by: Sahana	App'd:
Code: TIA-222-H	Date: 04/26/21	Scale: NTS
Path: C:\Users\Sahana\Desktop\April 16--Q\95171_842872_Rocky Hill----Sahana---Ramesh--Q\95171_019_01_CCI Pole\MODIFIED.eri		Dwg No. E-1

TIA-222-H - 125 mph/50 mph 2.000 in Ice Exposure C

Vx Vz

Maximum Values

Mx Mz

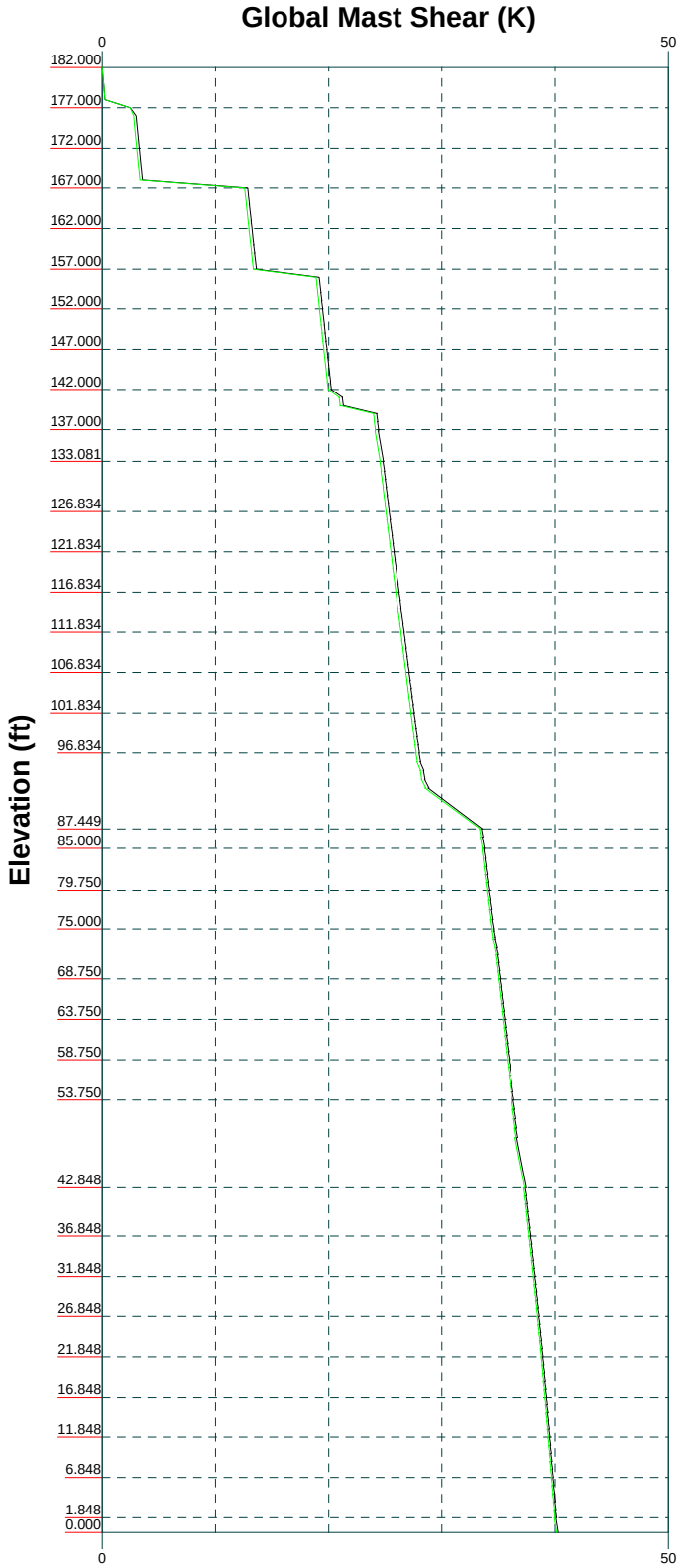

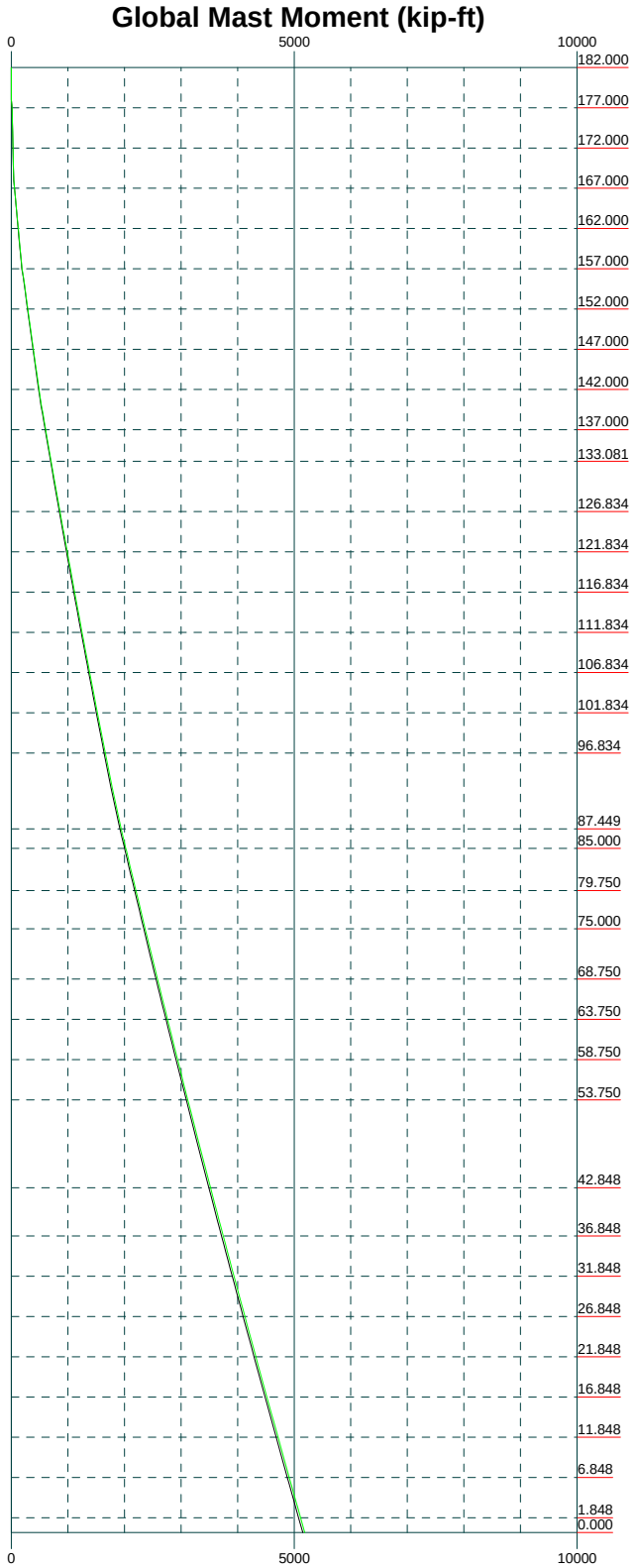

B+T GRP

B+T Group
1717 S. Boulder, Suite 300
Tulsa, OK 74119
Phone: (918) 587-4630
FAX: (918) 295-0265

Job: ***95171.019.01 - Rocky Hill, CT (BU# 842872)***		
Project:		
Client: Crown Castle	Drawn by: Sahana	App'd:
Code: TIA-222-H	Date: 04/26/21	Scale: NTS
Path: C:\Users\Sahana\Desktop\April 16--Q95171_842872_Rocky Hill-----Sahana---Ramesh--Q95171_019_01_CCI Pole\MODIFIED.eri		Dwg No. E-4

TIA-222-H - Service - 60 mph

Maximum Values

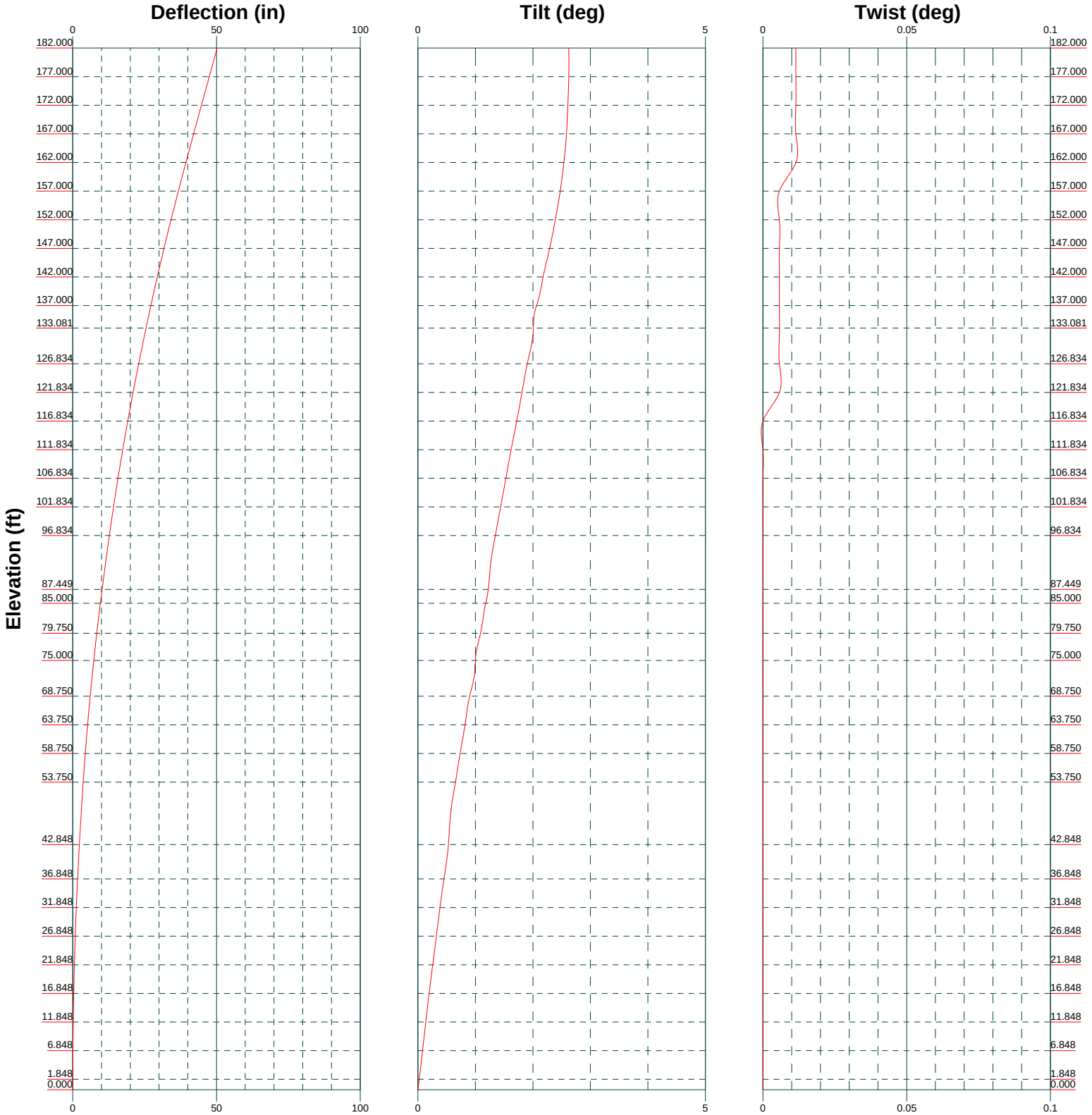

B+T Group 1717 S. Boulder, Suite 300 Tulsa, OK 74119 Phone: (918) 587-4630 FAX: (918) 295-0265	Job: ***95171.019.01 - Rocky Hill, CT (BU# 842872)***		
	Project:		
	Client: Crown Castle	Drawn by: Sahana	App'd:
	Code: TIA-222-H	Date: 04/26/21	Scale: NTS
	Path: C:\Users\Sahana\Desktop\April 16--Q\95171_842872_Rocky Hill-----Sahana---Ramesh--Q\95171_019_01_CCI Pole\MODIFIED\eri		Dwg No. E-5

Feed Line Distribution Chart
0' - 182'

Round | Flat | App In Face | App Out Face | Truss Leg

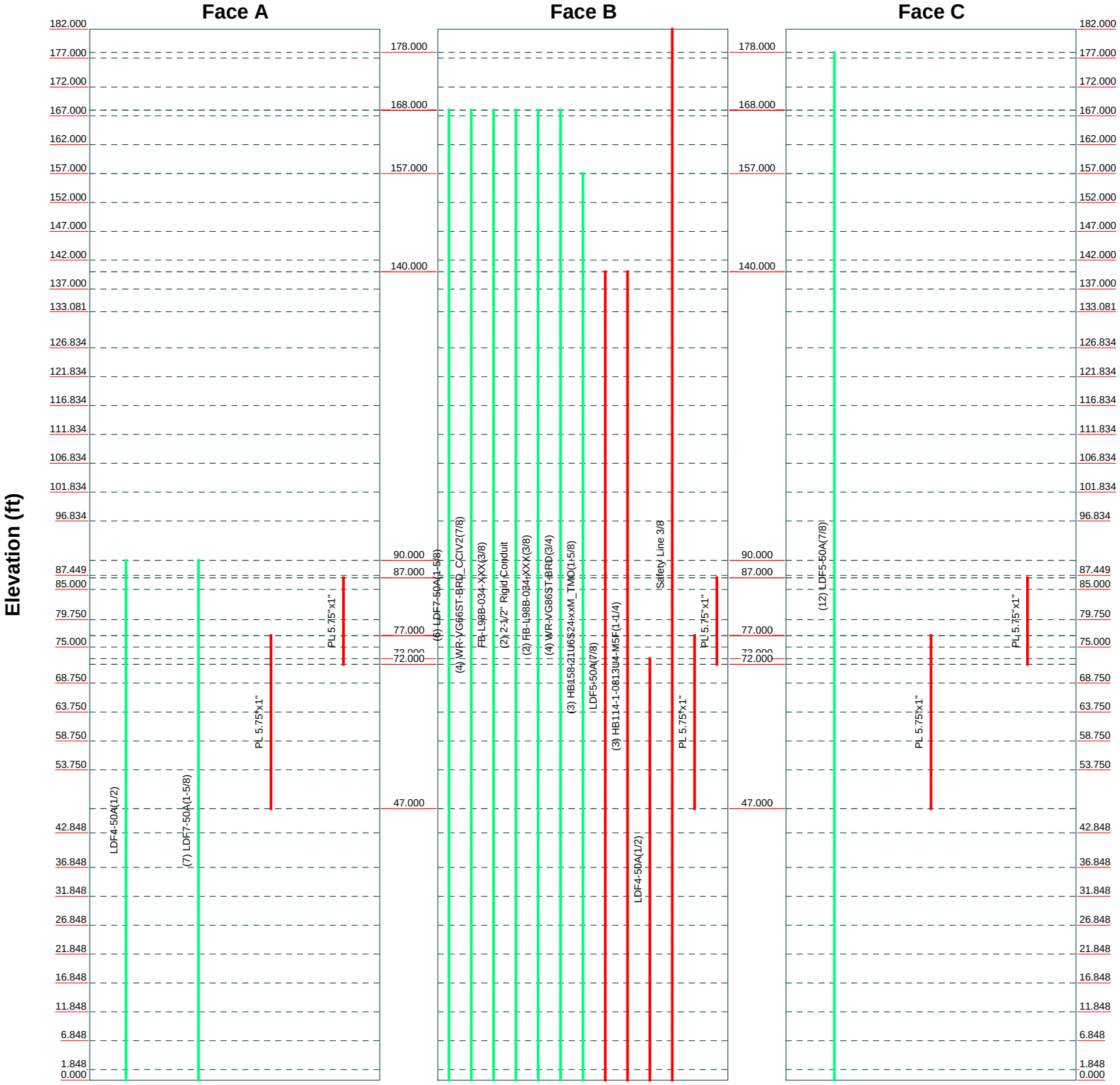

B+T GRP

B+T Group
1717 S. Boulder, Suite 300
Tulsa, OK 74119
Phone: (918) 587-4630
FAX: (918) 295-0265

Job: ***95171.019.01 - Rocky Hill, CT (BU# 842872)***		
Project:		
Client: Crown Castle	Drawn by: Sahana	App'd:
Code: TIA-222-H	Date: 04/26/21	Scale: NTS
Path: C:\Users\Sahana\Desktop\April 16--Q\95171_842872_Rocky Hill-----Sahana---Ramesh--Q\95171_019_01_CCI Pole\MODIFIED.eri		Dwg No. E-7

Tower Input Data

The tower is a monopole.
This tower is designed using the TIA-222-H standard.
The following design criteria apply:

Tower is located in Hartford County, Connecticut.
Tower base elevation above sea level: 199.000 ft.
Basic wind speed of 125 mph.
Risk Category II.
Exposure Category C.
Simplified Topographic Factor Procedure for wind speed-up calculations is used.
Topographic Category: 1.
Crest Height: 0.000 ft.
Nominal ice thickness of 2.000 in.
Ice thickness is considered to increase with height.
Ice density of 56.000 pcf.
A wind speed of 50 mph is used in combination with ice.
Temperature drop of 50.000 °F.
Deflections calculated using a wind speed of 60 mph.
TIA-222-H Annex S.
TOWER RATING: 95.9%.
A non-linear (P-delta) analysis was used.
Pressures are calculated at each section.
Stress ratio used in pole design is 1.
Tower analysis based on target reliabilities in accordance with Annex S.
Load Modification Factors used: $K_{es}(F_w) = 0.95$, $K_{es}(t_i) = 0.85$.
Maximum demand-capacity ratio is: 1.05.
Local bending stresses due to climbing loads, feed line supports, and appurtenance mounts are not considered.

Options

Consider Moments - Legs
Consider Moments - Horizontals
Consider Moments - Diagonals
Use Moment Magnification
√ Use Code Stress Ratios
√ Use Code Safety Factors - Guys
Escalate Ice
Always Use Max Kz
Use Special Wind Profile
Include Bolts In Member Capacity
Leg Bolts Are At Top Of Section
Secondary Horizontal Braces Leg
Use Diamond Inner Bracing (4 Sided)
SR Members Have Cut Ends
SR Members Are Concentric

Distribute Leg Loads As Uniform
Assume Legs Pinned
√ Assume Rigid Index Plate
√ Use Clear Spans For Wind Area
Use Clear Spans For KL/r
Retension Guys To Initial Tension
√ Bypass Mast Stability Checks
√ Use Azimuth Dish Coefficients
√ Project Wind Area of Appurt.
Autocalc Torque Arm Areas
Add IBC .6D+W Combination
Sort Capacity Reports By Component
Triangulate Diamond Inner Bracing
Treat Feed Line Bundles As Cylinder
Ignore KL/ry For 60 Deg. Angle Legs

Use ASCE 10 X-Brace Ly Rules
Calculate Redundant Bracing Forces
Ignore Redundant Members in FEA
SR Leg Bolts Resist Compression
All Leg Panels Have Same Allowable
Offset Girt At Foundation
√ Consider Feed Line Torque
Include Angle Block Shear Check
Use TIA-222-H Bracing Resist. Exemption
Use TIA-222-H Tension Splice Exemption

Poles

√ Include Shear-Torsion Interaction
Always Use Sub-Critical Flow
Use Top Mounted Sockets
Pole Without Linear Attachments
Pole With Shroud Or No Appurtenances
Outside and Inside Corner Radii Are Known

Tapered Pole Section Geometry

Section	Elevation ft	Section Length ft	Splice Length ft	Number of Sides	Top Diameter in	Bottom Diameter in	Wall Thickness in	Bend Radius in	Pole Grade
L1	182.000-177.000	5.000	0.000	18	14.500	15.678	0.250	1.000	A572-65 (65 ksi)
L2	177.000-172.000	5.000	0.000	18	15.678	16.856	0.250	1.000	A572-65 (65 ksi)
L3	172.000-167.000	5.000	0.000	18	16.856	18.033	0.250	1.000	A572-65 (65 ksi)
L4	167.000-162.000	5.000	0.000	18	18.033	19.211	0.250	1.000	A572-65 (65 ksi)
L5	162.000-157.000	5.000	0.000	18	19.211	20.389	0.250	1.000	A572-65 (65 ksi)
L6	157.000-152.000	5.000	0.000	18	20.389	21.567	0.250	1.000	A572-65 (65 ksi)
L7	152.000-147.000	5.000	0.000	18	21.567	22.745	0.250	1.000	A572-65 (65 ksi)
L8	147.000-142.000	5.000	0.000	18	22.745	23.922	0.250	1.000	A572-65 (65 ksi)
L9	142.000-137.000	5.000	0.000	18	23.922	25.100	0.250	1.000	A572-65 (65 ksi)
L10	137.000-133.081	3.919	3.753	18	25.100	26.023	0.250	1.000	A572-65 (65 ksi)
L11	133.081-131.834	5.000	0.000	18	24.639	25.806	0.375	1.500	A572-65 (65 ksi)
L12	131.834-126.834	5.000	0.000	18	25.806	26.972	0.375	1.500	A572-65 (65 ksi)
L13	126.834-121.834	5.000	0.000	18	26.972	28.139	0.375	1.500	A572-65 (65 ksi)
L14	121.834-116.834	5.000	0.000	18	28.139	29.305	0.375	1.500	A572-65 (65 ksi)
L15	116.834-111.834	5.000	0.000	18	29.305	30.472	0.375	1.500	A572-65 (65 ksi)
L16	111.834-106.834	5.000	0.000	18	30.472	31.638	0.375	1.500	A572-65 (65 ksi)
L17	106.834-101.834	5.000	0.000	18	31.638	32.805	0.375	1.500	A572-65 (65 ksi)
L18	101.834-96.834	5.000	0.000	18	32.805	33.971	0.375	1.500	A572-65 (65 ksi)
L19	96.834-87.449	9.385	5.021	18	33.971	36.161	0.375	1.500	A572-65 (65 ksi)
L20	87.449-86.449	6.021	0.000	18	34.239	35.643	0.375	1.500	A572-65 (65 ksi)
L21	86.449-85.000	1.449	0.000	18	35.643	35.980	0.375	1.500	A572-65 (65 ksi)
L22	85.000-84.750	0.250	0.000	18	35.980	36.039	0.375	1.500	A572-65 (65 ksi)
L23	84.750-79.750	5.000	0.000	18	36.039	37.204	0.375	1.500	A572-65 (65 ksi)
L24	79.750-75.000	4.750	0.000	18	37.204	38.311	0.375	1.500	A572-65 (65 ksi)
L25	75.000-74.750	0.250	0.000	18	38.311	38.369	0.700	2.800	A572-65 (65 ksi)
L26	74.750-74.000	0.750	0.000	18	38.369	38.544	0.700	2.800	A572-65 (65 ksi)
L27	74.000-73.750	0.250	0.000	18	38.544	38.602	0.375	1.500	A572-65 (65 ksi)
L28	73.750-68.750	5.000	0.000	18	38.602	39.768	0.375	1.500	A572-65 (65 ksi)

Section	Elevation ft	Section Length ft	Splice Length ft	Number of Sides	Top Diameter in	Bottom Diameter in	Wall Thickness in	Bend Radius in	Pole Grade
L29	68.750-63.750	5.000	0.000	18	39.768	40.933	0.375	1.500	A572-65 (65 ksi)
L30	63.750-58.750	5.000	0.000	18	40.933	42.098	0.375	1.500	A572-65 (65 ksi)
L31	58.750-53.750	5.000	0.000	18	42.098	43.264	0.375	1.500	A572-65 (65 ksi)
L32	53.750-42.848	10.902	6.232	18	43.264	45.805	0.375	1.500	A572-65 (65 ksi)
L33	42.848-41.848	7.232	0.000	18	43.602	45.282	0.438	1.750	A572-65 (65 ksi)
L34	41.848-36.848	5.000	0.000	18	45.282	46.443	0.438	1.750	A572-65 (65 ksi)
L35	36.848-31.848	5.000	0.000	18	46.443	47.604	0.438	1.750	A572-65 (65 ksi)
L36	31.848-26.848	5.000	0.000	18	47.604	48.765	0.438	1.750	A572-65 (65 ksi)
L37	26.848-21.848	5.000	0.000	18	48.765	49.926	0.438	1.750	A572-65 (65 ksi)
L38	21.848-16.848	5.000	0.000	18	49.926	51.087	0.438	1.750	A572-65 (65 ksi)
L39	16.848-11.848	5.000	0.000	18	51.087	52.249	0.438	1.750	A572-65 (65 ksi)
L40	11.848-6.848	5.000	0.000	18	52.249	53.410	0.438	1.750	A572-65 (65 ksi)
L41	6.848-1.848	5.000	0.000	18	53.410	54.571	0.438	1.750	A572-65 (65 ksi)
L42	1.848-0.000	1.848		18	54.571	55.000	0.438	1.750	A572-65 (65 ksi)

Tapered Pole Properties

Section	Tip Dia. in	Area in^2	I in^4	r in	C in	I/C in^3	J in^4	It/Q in^2	w in	w/t
L1	14.685	11.307	290.087	5.059	7.366	39.382	580.557	5.655	2.112	8.448
	15.881	12.242	368.125	5.477	7.964	46.222	736.735	6.122	2.319	9.277
L2	15.881	12.242	368.125	5.477	7.964	46.222	736.735	6.122	2.319	9.277
	17.077	13.177	459.036	5.895	8.563	53.609	918.677	6.590	2.527	10.106
L3	17.077	13.177	459.036	5.895	8.563	53.609	918.677	6.590	2.527	10.106
	18.273	14.111	563.803	6.313	9.161	61.544	1128.348	7.057	2.734	10.936
L4	18.273	14.111	563.803	6.313	9.161	61.544	1128.348	7.057	2.734	10.936
	19.469	15.046	683.408	6.731	9.759	70.027	1367.716	7.524	2.941	11.765
L5	19.469	15.046	683.408	6.731	9.759	70.027	1367.716	7.524	2.941	11.765
	20.665	15.980	818.835	7.149	10.358	79.056	1638.746	7.992	3.148	12.594
L6	20.665	15.980	818.835	7.149	10.358	79.056	1638.746	7.992	3.148	12.594
	21.861	16.915	971.065	7.567	10.956	88.634	1943.407	8.459	3.356	13.423
L7	21.861	16.915	971.065	7.567	10.956	88.634	1943.407	8.459	3.356	13.423
	23.057	17.849	1141.082	7.986	11.554	98.759	2283.665	8.926	3.563	14.252
L8	23.057	17.849	1141.082	7.986	11.554	98.759	2283.665	8.926	3.563	14.252
	24.253	18.784	1329.868	8.404	12.153	109.431	2661.486	9.394	3.770	15.081
L9	24.253	18.784	1329.868	8.404	12.153	109.431	2661.486	9.394	3.770	15.081
	25.449	19.719	1538.407	8.822	12.751	120.651	3078.838	9.861	3.978	15.911
L10	25.449	19.719	1538.407	8.822	12.751	120.651	3078.838	9.861	3.978	15.911
	26.386	20.451	1716.305	9.150	13.220	129.828	3434.868	10.227	4.140	16.56
L11	25.851	28.881	2148.207	8.614	12.517	171.627	4299.241	14.443	3.677	9.804
	26.146	30.269	2473.160	9.028	13.109	188.657	4949.574	15.137	3.882	10.351
L12	26.146	30.269	2473.160	9.028	13.109	188.657	4949.574	15.137	3.882	10.351

Section	Tip Dia. in	Area in^2	I in^4	r in	C in	I/C in^3	J in^4	It/Q in^2	w in	w/t
	27.330	31.657	2829.333	9.442	13.702	206.492	5662.389	15.832	4.087	10.899
L13	27.330	31.657	2829.333	9.442	13.702	206.492	5662.389	15.832	4.087	10.899
	28.515	33.046	3218.159	9.856	14.294	225.133	6440.553	16.526	4.292	11.446
L14	28.515	33.046	3218.159	9.856	14.294	225.133	6440.553	16.526	4.292	11.446
	29.699	34.434	3641.070	10.270	14.887	244.580	7286.931	17.220	4.498	11.994
L15	29.699	34.434	3641.070	10.270	14.887	244.580	7286.931	17.220	4.498	11.994
	30.884	35.823	4099.498	10.684	15.480	264.832	8204.390	17.915	4.703	12.541
L16	30.884	35.823	4099.498	10.684	15.480	264.832	8204.390	17.915	4.703	12.541
	32.068	37.211	4594.875	11.098	16.072	285.890	9195.796	18.609	4.908	13.089
L17	32.068	37.211	4594.875	11.098	16.072	285.890	9195.796	18.609	4.908	13.089
	33.253	38.599	5128.633	11.513	16.665	307.753	10264.013	19.303	5.114	13.636
L18	33.253	38.599	5128.633	11.513	16.665	307.753	10264.013	19.303	5.114	13.636
	34.437	39.988	5702.203	11.927	17.257	330.422	11411.909	19.998	5.319	14.184
L19	34.437	39.988	5702.203	11.927	17.257	330.422	11411.909	19.998	5.319	14.184
	36.661	42.594	6891.290	12.704	18.370	375.147	13791.648	21.301	5.704	15.211
L20	35.898	40.307	5839.811	12.022	17.394	335.746	11687.306	20.157	5.366	14.31
	36.135	41.977	6596.312	12.520	18.106	364.308	13201.304	20.993	5.613	14.968
L21	36.135	41.977	6596.312	12.520	18.106	364.308	13201.304	20.993	5.613	14.968
	36.477	42.379	6787.631	12.640	18.278	371.356	13584.194	21.194	5.673	15.127
L22	36.477	42.379	6787.631	12.640	18.278	371.356	13584.194	21.194	5.673	15.127
	36.537	42.449	6821.010	12.661	18.308	372.579	13650.994	21.228	5.683	15.154
L23	36.537	42.449	6821.010	12.661	18.308	372.579	13650.994	21.228	5.683	15.154
	37.720	43.836	7511.756	13.074	18.900	397.456	15033.397	21.922	5.888	15.701
L24	37.720	43.836	7511.756	13.074	18.900	397.456	15033.397	21.922	5.888	15.701
	38.844	45.153	8209.743	13.467	19.462	421.835	16430.289	22.581	6.083	16.221
L25	38.794	83.564	14934.351	13.352	19.462	767.360	29888.354	41.790	5.511	7.872
	38.853	83.694	15003.869	13.373	19.492	769.762	30027.480	41.855	5.521	7.887
L26	38.853	83.694	15003.869	13.373	19.492	769.762	30027.480	41.855	5.521	7.887
	39.031	84.082	15213.716	13.435	19.580	776.988	30447.451	42.049	5.552	7.931
L27	39.081	45.431	8361.992	13.550	19.580	427.060	16734.987	22.720	6.124	16.33
	39.140	45.500	8400.346	13.571	19.610	428.371	16811.745	22.754	6.134	16.357
L28	39.140	45.500	8400.346	13.571	19.610	428.371	16811.745	22.754	6.134	16.357
	40.323	46.887	9192.257	13.984	20.202	455.018	18396.609	23.448	6.339	16.904
L29	40.323	46.887	9192.257	13.984	20.202	455.018	18396.609	23.448	6.339	16.904
	41.507	48.274	10032.436	14.398	20.794	482.468	20078.073	24.142	6.544	17.451
L30	41.507	48.274	10032.436	14.398	20.794	482.468	20078.073	24.142	6.544	17.451
	42.690	49.661	10922.311	14.812	21.386	510.723	21858.993	24.835	6.749	17.998
L31	42.690	49.661	10922.311	14.812	21.386	510.723	21858.993	24.835	6.749	17.998
	43.873	51.048	11863.311	15.226	21.978	539.781	23742.231	25.529	6.954	18.545
L32	43.873	51.048	11863.311	15.226	21.978	539.781	23742.231	25.529	6.954	18.545
	46.453	54.073	14099.225	16.128	23.269	605.929	28217.003	27.041	7.402	19.738
L33	45.677	59.940	14109.399	15.323	22.150	636.996	28237.364	29.975	6.904	15.781
	45.913	62.272	15821.244	15.920	23.003	687.788	31663.306	31.142	7.200	16.456
L34	45.913	62.272	15821.244	15.920	23.003	687.788	31663.306	31.142	7.200	16.456
	47.092	63.884	17082.313	16.332	23.593	724.043	34187.104	31.948	7.404	16.923
L35	47.092	63.884	17082.313	16.332	23.593	724.043	34187.104	31.948	7.404	16.923
	48.271	65.497	18408.675	16.744	24.183	761.230	36841.572	32.754	7.608	17.39
L36	48.271	65.497	18408.675	16.744	24.183	761.230	36841.572	32.754	7.608	17.39
	49.450	67.109	19801.974	17.156	24.773	799.347	39630.004	33.561	7.813	17.858
L37	49.450	67.109	19801.974	17.156	24.773	799.347	39630.004	33.561	7.813	17.858
	50.629	68.721	21263.861	17.569	25.363	838.396	42555.701	34.367	8.017	18.325
L38	50.629	68.721	21263.861	17.569	25.363	838.396	42555.701	34.367	8.017	18.325
	51.808	70.334	22795.984	17.981	25.952	878.377	45621.963	35.174	8.221	18.792
L39	51.808	70.334	22795.984	17.981	25.952	878.377	45621.963	35.174	8.221	18.792
	52.987	71.946	24399.988	18.393	26.542	919.288	48832.082	35.980	8.426	19.259
L40	52.987	71.946	24399.988	18.393	26.542	919.288	48832.082	35.980	8.426	19.259
	54.166	73.559	26077.523	18.805	27.132	961.131	52189.359	36.786	8.630	19.726
L41	54.166	73.559	26077.523	18.805	27.132	961.131	52189.359	36.786	8.630	19.726
	55.345	75.171	27830.238	19.217	27.722	1003.905	55697.096	37.593	8.834	20.193
L42	55.345	75.171	27830.238	19.217	27.722	1003.905	55697.096	37.593	8.834	20.193
	55.781	75.767	28497.398	19.370	27.940	1019.950	57032.294	37.891	8.910	20.366

Tower Elevation ft	Gusset Area (per face) ft^2	Gusset Thickness in	Gusset Grade	Adjust. Factor A_f	Adjust. Factor A_r	Weight Mult.	Double Angle Stitch Bolt Spacing Diagonals in	Double Angle Stitch Bolt Spacing Horizontals in	Double Angle Stitch Bolt Spacing Redundants in
L1 182.000-177.000				1	1	1			
L2 177.000-172.000				1	1	1			
L3 172.000-167.000				1	1	1			
L4 167.000-162.000				1	1	1			
L5 162.000-157.000				1	1	1			
L6 157.000-152.000				1	1	1			
L7 152.000-147.000				1	1	1			
L8 147.000-142.000				1	1	1			
L9 142.000-137.000				1	1	1			
L10 137.000-133.081				1	1	1			
L11 133.081-131.834				1	1	1			
L12 131.834-126.834				1	1	1			
L13 126.834-121.834				1	1	1			
L14 121.834-116.834				1	1	1			
L15 116.834-111.834				1	1	1			
L16 111.834-106.834				1	1	1			
L17 106.834-101.834				1	1	1			
L18 101.834-96.834				1	1	1			
L19 96.834-87.449				1	1	1			
L20				1	1	1			

Tower Elevation ft	Gusset Area (per face) ft^2	Gusset Thickness in	Gusset Grade	Adjust. Factor A_f	Adjust. Factor A_r	Weight Mult.	Double Angle Stitch Bolt Spacing Diagonals in	Double Angle Stitch Bolt Spacing Horizontals in	Double Angle Stitch Bolt Spacing Redundants in
87.449-86.449									
L21				1	1	1			
86.449-85.000									
L22				1	1	1			
85.000-84.750									
L23				1	1	1			
84.750-79.750									
L24				1	1	1			
79.750-75.000									
L25				1	1	0.952569			
75.000-74.750									
L26				1	1	0.950644			
74.750-74.000									
L27				1	1	1			
74.000-73.750									
L28				1	1	1			
73.750-68.750									
L29				1	1	1			
68.750-63.750									
L30				1	1	1			
63.750-58.750									
L31				1	1	1			
58.750-53.750									
L32				1	1	1			
53.750-42.848									
L33				1	1	1			
42.848-41.848									
L34				1	1	1			
41.848-36.848									
L35				1	1	1			
36.848-31.848									
L36				1	1	1			
31.848-26.848									
L37				1	1	1			
26.848-21.848									
L38				1	1	1			
21.848-16.848									
L39				1	1	1			
16.848-11.848									
L40				1	1	1			
11.848-6.848									
L41				1	1	1			
6.848-1.848									
L42				1	1	1			
1.848-0.000									

Feed Line/Linear Appurtenances - Entered As Round Or Flat

Description	Sector	Exclude From Torque Calculation	Component Type	Placement ft	Total Number	Number Per Row	Start/End Position	Width or Diameter in	Perimeter in	Weight klf
*										
LDF5-50A(7/8)	B	No	Surface Ar (CaAa)	140.000 - 0.000	1	1	-0.150 -0.130	1.090		0.000

Description	Sector	Exclude From Torque Calculation	Component Type	Placement ft	Total Number	Number Per Row	Start/End Position	Width or Diameter in	Perimeter in	Weight klf
HB114-1-0813U4-M5F(1-1/4) *	B	No	Surface Ar (CaAa)	140.000 - 0.000	3	3	-0.100 0.000	1.540		0.001
LDF4-50A(1/2) *	B	No	Surface Ar (CaAa)	73.000 - 0.000	1	1	-0.180 -0.150	0.630		0.000
Safety Line 3/8 *	B	No	Surface Ar (CaAa)	182.000 - 0.000	1	1	0.250 0.250	0.375		0.000
PL 5.75"x1"	A	No	Surface Af (CaAa)	77.000 - 47.000	1	1	0.150 0.200	5.750	13.500	0.000
PL 5.75"x1"	B	No	Surface Af (CaAa)	77.000 - 47.000	1	1	0.150 0.200	5.750	13.500	0.000
PL 5.75"x1" *	C	No	Surface Af (CaAa)	77.000 - 47.000	1	1	0.150 0.200	5.750	13.500	0.000
PL 5.75"x1"	A	No	Surface Af (CaAa)	87.000 - 72.000	1	1	0.000 0.050	5.750	13.500	0.000
PL 5.75"x1"	B	No	Surface Af (CaAa)	87.000 - 72.000	1	1	0.000 0.050	5.750	13.500	0.000
PL 5.75"x1" *	C	No	Surface Af (CaAa)	87.000 - 72.000	1	1	0.000 0.050	5.750	13.500	0.000

Feed Line/Linear Appurtenances - Entered As Area

Description	Face or Leg	Allow Shield	Exclude From Torque Calculation	Component Type	Placement ft	Total Number		C_AA_A ft^2/ft	Weight klf
LDF5-50A(7/8) *	C	No	No	Inside Pole	178.000 - 0.000	12	No Ice	0.000	0.000
							1/2" Ice	0.000	0.000
							1" Ice	0.000	0.000
							2" Ice	0.000	0.000
LDF7-50A(1-5/8)	B	No	No	Inside Pole	168.000 - 0.000	6	No Ice	0.000	0.001
							1/2" Ice	0.000	0.001
							1" Ice	0.000	0.001
							2" Ice	0.000	0.001
WR-VG66ST-BRD_CCIV2(7/8)	B	No	No	Inside Pole	168.000 - 0.000	4	No Ice	0.000	0.001
							1/2" Ice	0.000	0.001
							1" Ice	0.000	0.001
							2" Ice	0.000	0.001
FB-L98B-034-XXX(3/8)	B	No	No	Inside Pole	168.000 - 0.000	1	No Ice	0.000	0.000
							1/2" Ice	0.000	0.000
							1" Ice	0.000	0.000
							2" Ice	0.000	0.000
2-1/2" Rigid Conduit	B	No	No	Inside Pole	168.000 - 0.000	2	No Ice	0.000	0.003
							1/2" Ice	0.000	0.003
							1" Ice	0.000	0.003
							2" Ice	0.000	0.003
FB-L98B-034-XXX(3/8)	B	No	No	Inside Pole	168.000 - 0.000	2	No Ice	0.000	0.000
							1/2" Ice	0.000	0.000
							1" Ice	0.000	0.000
							2" Ice	0.000	0.000
WR-VG86ST-BRD(3/4)	B	No	No	Inside Pole	168.000 - 0.000	4	No Ice	0.000	0.001
							1/2" Ice	0.000	0.001

Description	Face or Leg	Allow Shield	Exclude From Torque Calculation	Component Type	Placement ft	Total Number		C_AA_A ft^2/ft	Weight klf
							1" Ice	0.000	0.001
							2" Ice	0.000	0.001
*									
HB158-21U6S24-xx M_TMO(1-5/8)	B	No	No	Inside Pole	157.000 - 0.000	3	No Ice	0.000	0.003
							1/2" Ice	0.000	0.003
							1" Ice	0.000	0.003
							2" Ice	0.000	0.003
*									
LDF4-50A(1/2)	A	No	No	Inside Pole	90.000 - 0.000	1	No Ice	0.000	0.000
							1/2" Ice	0.000	0.000
							1" Ice	0.000	0.000
							2" Ice	0.000	0.000
LDF7-50A(1-5/8)	A	No	No	Inside Pole	90.000 - 0.000	7	No Ice	0.000	0.001
							1/2" Ice	0.000	0.001
							1" Ice	0.000	0.001
							2" Ice	0.000	0.001
*									

Feed Line/Linear Appurtenances Section Areas

Tower Section	Tower Elevation ft	Face	A_R ft^2	A_F ft^2	C_AA_A In Face ft^2	C_AA_A Out Face ft^2	Weight K
L1	182.000-177.000	A	0.000	0.000	0.000	0.000	0.000
		B	0.000	0.000	0.188	0.000	0.001
		C	0.000	0.000	0.000	0.000	0.004
L2	177.000-172.000	A	0.000	0.000	0.000	0.000	0.000
		B	0.000	0.000	0.188	0.000	0.001
		C	0.000	0.000	0.000	0.000	0.020
L3	172.000-167.000	A	0.000	0.000	0.000	0.000	0.000
		B	0.000	0.000	0.188	0.000	0.018
		C	0.000	0.000	0.000	0.000	0.020
L4	167.000-162.000	A	0.000	0.000	0.000	0.000	0.000
		B	0.000	0.000	0.188	0.000	0.086
		C	0.000	0.000	0.000	0.000	0.020
L5	162.000-157.000	A	0.000	0.000	0.000	0.000	0.000
		B	0.000	0.000	0.188	0.000	0.086
		C	0.000	0.000	0.000	0.000	0.020
L6	157.000-152.000	A	0.000	0.000	0.000	0.000	0.000
		B	0.000	0.000	0.188	0.000	0.123
		C	0.000	0.000	0.000	0.000	0.020
L7	152.000-147.000	A	0.000	0.000	0.000	0.000	0.000
		B	0.000	0.000	0.188	0.000	0.123
		C	0.000	0.000	0.000	0.000	0.020
L8	147.000-142.000	A	0.000	0.000	0.000	0.000	0.000
		B	0.000	0.000	0.188	0.000	0.123
		C	0.000	0.000	0.000	0.000	0.020
L9	142.000-137.000	A	0.000	0.000	0.000	0.000	0.000
		B	0.000	0.000	1.900	0.000	0.135
		C	0.000	0.000	0.000	0.000	0.020
L10	137.000-133.081	A	0.000	0.000	0.000	0.000	0.000
		B	0.000	0.000	2.385	0.000	0.112
		C	0.000	0.000	0.000	0.000	0.016
L11	133.081-131.834	A	0.000	0.000	0.000	0.000	0.000

Tower Section	Tower Elevation ft	Face	A_R ft^2	A_F ft^2	C_AA_A In Face ft^2	C_AA_A Out Face ft^2	Weight K
		B	0.000	0.000	0.759	0.000	0.036
		C	0.000	0.000	0.000	0.000	0.005
L12	131.834-126.834	A	0.000	0.000	0.000	0.000	0.000
		B	0.000	0.000	3.043	0.000	0.143
		C	0.000	0.000	0.000	0.000	0.020
L13	126.834-121.834	A	0.000	0.000	0.000	0.000	0.000
		B	0.000	0.000	3.043	0.000	0.143
		C	0.000	0.000	0.000	0.000	0.020
L14	121.834-116.834	A	0.000	0.000	0.000	0.000	0.000
		B	0.000	0.000	3.043	0.000	0.143
		C	0.000	0.000	0.000	0.000	0.020
L15	116.834-111.834	A	0.000	0.000	0.000	0.000	0.000
		B	0.000	0.000	3.043	0.000	0.143
		C	0.000	0.000	0.000	0.000	0.020
L16	111.834-106.834	A	0.000	0.000	0.000	0.000	0.000
		B	0.000	0.000	3.043	0.000	0.143
		C	0.000	0.000	0.000	0.000	0.020
L17	106.834-101.834	A	0.000	0.000	0.000	0.000	0.000
		B	0.000	0.000	3.043	0.000	0.143
		C	0.000	0.000	0.000	0.000	0.020
L18	101.834-96.834	A	0.000	0.000	0.000	0.000	0.000
		B	0.000	0.000	3.043	0.000	0.143
		C	0.000	0.000	0.000	0.000	0.020
L19	96.834-87.449	A	0.000	0.000	0.000	0.000	0.015
		B	0.000	0.000	5.711	0.000	0.268
		C	0.000	0.000	0.000	0.000	0.037
L20	87.449-86.449	A	0.000	0.000	0.528	0.000	0.006
		B	0.000	0.000	1.137	0.000	0.029
		C	0.000	0.000	0.528	0.000	0.004
L21	86.449-85.000	A	0.000	0.000	1.389	0.000	0.009
		B	0.000	0.000	2.270	0.000	0.041
		C	0.000	0.000	1.389	0.000	0.006
L22	85.000-84.750	A	0.000	0.000	0.240	0.000	0.001
		B	0.000	0.000	0.392	0.000	0.007
		C	0.000	0.000	0.240	0.000	0.001
L23	84.750-79.750	A	0.000	0.000	4.792	0.000	0.029
		B	0.000	0.000	7.834	0.000	0.143
		C	0.000	0.000	4.792	0.000	0.020
L24	79.750-75.000	A	0.000	0.000	6.469	0.000	0.028
		B	0.000	0.000	9.359	0.000	0.136
		C	0.000	0.000	6.469	0.000	0.019
L25	75.000-74.750	A	0.000	0.000	0.479	0.000	0.001
		B	0.000	0.000	0.631	0.000	0.007
		C	0.000	0.000	0.479	0.000	0.001
L26	74.750-74.000	A	0.000	0.000	1.438	0.000	0.004
		B	0.000	0.000	1.894	0.000	0.021
		C	0.000	0.000	1.438	0.000	0.003
L27	74.000-73.750	A	0.000	0.000	0.479	0.000	0.001
		B	0.000	0.000	0.631	0.000	0.007
		C	0.000	0.000	0.479	0.000	0.001
L28	73.750-68.750	A	0.000	0.000	6.469	0.000	0.029
		B	0.000	0.000	9.779	0.000	0.144
		C	0.000	0.000	6.469	0.000	0.020
L29	68.750-63.750	A	0.000	0.000	4.792	0.000	0.029
		B	0.000	0.000	8.149	0.000	0.144
		C	0.000	0.000	4.792	0.000	0.020
L30	63.750-58.750	A	0.000	0.000	4.792	0.000	0.029
		B	0.000	0.000	8.149	0.000	0.144
		C	0.000	0.000	4.792	0.000	0.020
L31	58.750-53.750	A	0.000	0.000	4.792	0.000	0.029
		B	0.000	0.000	8.149	0.000	0.144

Tower Section	Tower Elevation ft	Face	A_R ft^2	A_F ft^2	C_AA_A In Face ft^2	C_AA_A Out Face ft^2	Weight K
		C	0.000	0.000	4.792	0.000	0.020
L32	53.750-42.848	A	0.000	0.000	6.469	0.000	0.064
		B	0.000	0.000	13.789	0.000	0.313
		C	0.000	0.000	6.469	0.000	0.043
L33	42.848-41.848	A	0.000	0.000	0.000	0.000	0.006
		B	0.000	0.000	0.671	0.000	0.029
		C	0.000	0.000	0.000	0.000	0.004
L34	41.848-36.848	A	0.000	0.000	0.000	0.000	0.029
		B	0.000	0.000	3.357	0.000	0.144
		C	0.000	0.000	0.000	0.000	0.020
L35	36.848-31.848	A	0.000	0.000	0.000	0.000	0.029
		B	0.000	0.000	3.357	0.000	0.144
		C	0.000	0.000	0.000	0.000	0.020
L36	31.848-26.848	A	0.000	0.000	0.000	0.000	0.029
		B	0.000	0.000	3.357	0.000	0.144
		C	0.000	0.000	0.000	0.000	0.020
L37	26.848-21.848	A	0.000	0.000	0.000	0.000	0.029
		B	0.000	0.000	3.357	0.000	0.144
		C	0.000	0.000	0.000	0.000	0.020
L38	21.848-16.848	A	0.000	0.000	0.000	0.000	0.029
		B	0.000	0.000	3.357	0.000	0.144
		C	0.000	0.000	0.000	0.000	0.020
L39	16.848-11.848	A	0.000	0.000	0.000	0.000	0.029
		B	0.000	0.000	3.357	0.000	0.144
		C	0.000	0.000	0.000	0.000	0.020
L40	11.848-6.848	A	0.000	0.000	0.000	0.000	0.029
		B	0.000	0.000	3.357	0.000	0.144
		C	0.000	0.000	0.000	0.000	0.020
L41	6.848-1.848	A	0.000	0.000	0.000	0.000	0.029
		B	0.000	0.000	3.357	0.000	0.144
		C	0.000	0.000	0.000	0.000	0.020
L42	1.848-0.000	A	0.000	0.000	0.000	0.000	0.011
		B	0.000	0.000	1.241	0.000	0.053
		C	0.000	0.000	0.000	0.000	0.007

Feed Line/Linear Appurtenances Section Areas - With Ice

Tower Section	Tower Elevation ft	Face or Leg	Ice Thickness in	A_R ft^2	A_F ft^2	C_AA_A In Face ft^2	C_AA_A Out Face ft^2	Weight K
L1	182.000-177.000	A	2.014	0.000	0.000	0.000	0.000	0.000
		B		0.000	0.000	2.201	0.000	0.030
		C		0.000	0.000	0.000	0.000	0.004
L2	177.000-172.000	A	2.008	0.000	0.000	0.000	0.000	0.000
		B		0.000	0.000	2.196	0.000	0.030
		C		0.000	0.000	0.000	0.000	0.020
L3	172.000-167.000	A	2.002	0.000	0.000	0.000	0.000	0.000
		B		0.000	0.000	2.190	0.000	0.047
		C		0.000	0.000	0.000	0.000	0.020
L4	167.000-162.000	A	1.996	0.000	0.000	0.000	0.000	0.000
		B		0.000	0.000	2.184	0.000	0.115
		C		0.000	0.000	0.000	0.000	0.020
L5	162.000-157.000	A	1.990	0.000	0.000	0.000	0.000	0.000
		B		0.000	0.000	2.178	0.000	0.115
		C		0.000	0.000	0.000	0.000	0.020
L6	157.000-152.000	A	1.984	0.000	0.000	0.000	0.000	0.000
		B		0.000	0.000	2.171	0.000	0.152
		C		0.000	0.000	0.000	0.000	0.020

Tower Section	Tower Elevation ft	Face or Leg	Ice Thickness in	A_R ft^2	A_F ft^2	C_AA_A In Face ft^2	C_AA_A Out Face ft^2	Weight K
L7	152.000-147.000	A	1.977	0.000	0.000	0.000	0.000	0.000
		B		0.000	0.000	2.165	0.000	0.152
		C		0.000	0.000	0.000	0.000	0.020
L8	147.000-142.000	A	1.971	0.000	0.000	0.000	0.000	0.000
		B		0.000	0.000	2.158	0.000	0.152
		C		0.000	0.000	0.000	0.000	0.020
L9	142.000-137.000	A	1.964	0.000	0.000	0.000	0.000	0.000
		B		0.000	0.000	6.861	0.000	0.226
		C		0.000	0.000	0.000	0.000	0.020
L10	137.000-133.081	A	1.957	0.000	0.000	0.000	0.000	0.000
		B		0.000	0.000	7.823	0.000	0.215
		C		0.000	0.000	0.000	0.000	0.016
L11	133.081-131.834	A	1.953	0.000	0.000	0.000	0.000	0.000
		B		0.000	0.000	2.489	0.000	0.068
		C		0.000	0.000	0.000	0.000	0.005
L12	131.834-126.834	A	1.949	0.000	0.000	0.000	0.000	0.000
		B		0.000	0.000	9.954	0.000	0.274
		C		0.000	0.000	0.000	0.000	0.020
L13	126.834-121.834	A	1.941	0.000	0.000	0.000	0.000	0.000
		B		0.000	0.000	9.929	0.000	0.273
		C		0.000	0.000	0.000	0.000	0.020
L14	121.834-116.834	A	1.933	0.000	0.000	0.000	0.000	0.000
		B		0.000	0.000	9.903	0.000	0.272
		C		0.000	0.000	0.000	0.000	0.020
L15	116.834-111.834	A	1.925	0.000	0.000	0.000	0.000	0.000
		B		0.000	0.000	9.876	0.000	0.271
		C		0.000	0.000	0.000	0.000	0.020
L16	111.834-106.834	A	1.916	0.000	0.000	0.000	0.000	0.000
		B		0.000	0.000	9.848	0.000	0.270
		C		0.000	0.000	0.000	0.000	0.020
L17	106.834-101.834	A	1.907	0.000	0.000	0.000	0.000	0.000
		B		0.000	0.000	9.819	0.000	0.269
		C		0.000	0.000	0.000	0.000	0.020
L18	101.834-96.834	A	1.898	0.000	0.000	0.000	0.000	0.000
		B		0.000	0.000	9.789	0.000	0.269
		C		0.000	0.000	0.000	0.000	0.020
L19	96.834-87.449	A	1.884	0.000	0.000	0.000	0.000	0.015
		B		0.000	0.000	18.286	0.000	0.501
		C		0.000	0.000	0.000	0.000	0.037
L20	87.449-86.449	A	1.873	0.000	0.000	0.686	0.000	0.014
		B		0.000	0.000	2.634	0.000	0.062
		C		0.000	0.000	0.686	0.000	0.012
L21	86.449-85.000	A	1.870	0.000	0.000	1.801	0.000	0.030
		B		0.000	0.000	4.611	0.000	0.099
		C		0.000	0.000	1.801	0.000	0.027
L22	85.000-84.750	A	1.868	0.000	0.000	0.311	0.000	0.005
		B		0.000	0.000	0.795	0.000	0.017
		C		0.000	0.000	0.311	0.000	0.005
L23	84.750-79.750	A	1.863	0.000	0.000	6.210	0.000	0.104
		B		0.000	0.000	15.883	0.000	0.339
		C		0.000	0.000	6.210	0.000	0.094
L24	79.750-75.000	A	1.851	0.000	0.000	8.551	0.000	0.128
		B		0.000	0.000	17.706	0.000	0.350
		C		0.000	0.000	8.551	0.000	0.118
L25	75.000-74.750	A	1.845	0.000	0.000	0.642	0.000	0.009
		B		0.000	0.000	1.123	0.000	0.021
		C		0.000	0.000	0.642	0.000	0.008
L26	74.750-74.000	A	1.844	0.000	0.000	1.925	0.000	0.026
		B		0.000	0.000	3.367	0.000	0.062
		C		0.000	0.000	1.925	0.000	0.025
L27	74.000-73.750	A	1.843	0.000	0.000	0.642	0.000	0.009

Tower Section	Tower Elevation ft	Face or Leg	Ice Thickness in	A_R ft^2	A_F ft^2	C_AA_A In Face ft^2	C_AA_A Out Face ft^2	Weight K
		B		0.000	0.000	1.122	0.000	0.020
		C		0.000	0.000	0.642	0.000	0.008
L28	73.750-68.750	A	1.836	0.000	0.000	8.796	0.000	0.128
		B		0.000	0.000	20.212	0.000	0.385
		C		0.000	0.000	8.796	0.000	0.118
L29	68.750-63.750	A	1.823	0.000	0.000	6.614	0.000	0.102
		B		0.000	0.000	18.296	0.000	0.361
		C		0.000	0.000	6.614	0.000	0.092
L30	63.750-58.750	A	1.808	0.000	0.000	6.600	0.000	0.101
		B		0.000	0.000	18.221	0.000	0.359
		C		0.000	0.000	6.600	0.000	0.091
L31	58.750-53.750	A	1.793	0.000	0.000	6.585	0.000	0.100
		B		0.000	0.000	18.140	0.000	0.356
		C		0.000	0.000	6.585	0.000	0.091
L32	53.750-42.848	A	1.766	0.000	0.000	8.853	0.000	0.158
		B		0.000	0.000	33.796	0.000	0.709
		C		0.000	0.000	8.853	0.000	0.137
L33	42.848-41.848	A	1.743	0.000	0.000	0.000	0.000	0.006
		B		0.000	0.000	2.288	0.000	0.056
		C		0.000	0.000	0.000	0.000	0.004
L34	41.848-36.848	A	1.730	0.000	0.000	0.000	0.000	0.029
		B		0.000	0.000	11.288	0.000	0.278
		C		0.000	0.000	0.000	0.000	0.020
L35	36.848-31.848	A	1.707	0.000	0.000	0.000	0.000	0.029
		B		0.000	0.000	11.189	0.000	0.275
		C		0.000	0.000	0.000	0.000	0.020
L36	31.848-26.848	A	1.680	0.000	0.000	0.000	0.000	0.029
		B		0.000	0.000	11.076	0.000	0.272
		C		0.000	0.000	0.000	0.000	0.020
L37	26.848-21.848	A	1.649	0.000	0.000	0.000	0.000	0.029
		B		0.000	0.000	10.943	0.000	0.269
		C		0.000	0.000	0.000	0.000	0.020
L38	21.848-16.848	A	1.612	0.000	0.000	0.000	0.000	0.029
		B		0.000	0.000	10.784	0.000	0.264
		C		0.000	0.000	0.000	0.000	0.020
L39	16.848-11.848	A	1.564	0.000	0.000	0.000	0.000	0.029
		B		0.000	0.000	10.582	0.000	0.259
		C		0.000	0.000	0.000	0.000	0.020
L40	11.848-6.848	A	1.498	0.000	0.000	0.000	0.000	0.029
		B		0.000	0.000	10.303	0.000	0.252
		C		0.000	0.000	0.000	0.000	0.020
L41	6.848-1.848	A	1.388	0.000	0.000	0.000	0.000	0.029
		B		0.000	0.000	9.833	0.000	0.240
		C		0.000	0.000	0.000	0.000	0.020
L42	1.848-0.000	A	1.189	0.000	0.000	0.000	0.000	0.011
		B		0.000	0.000	3.322	0.000	0.082
		C		0.000	0.000	0.000	0.000	0.007

Feed Line Center of Pressure

Section	Elevation ft	CP_X in	CP_Z in	CP_X Ice in	CP_Z Ice in
L1	182.000-177.000	0.300	0.000	1.435	0.000
L2	177.000-172.000	0.300	0.000	1.468	0.000
L3	172.000-167.000	0.300	0.000	1.497	0.000
L4	167.000-162.000	0.300	0.000	1.523	0.000

Section	Elevation ft	CP_X in	CP_Z in	CP_X Ice in	CP_Z Ice in
L5	162.000-157.000	0.301	0.000	1.547	0.000
L6	157.000-152.000	0.301	0.000	1.568	0.000
L7	152.000-147.000	0.301	0.000	1.586	0.000
L8	147.000-142.000	0.301	0.000	1.603	0.000
L9	142.000-137.000	2.110	-1.458	3.183	-1.671
L10	137.000-133.081	2.995	-2.169	3.855	-2.360
L11	133.081-131.834	3.000	-2.172	3.864	-2.365
L12	131.834-126.834	3.018	-2.185	3.913	-2.395
L13	126.834-121.834	3.047	-2.206	3.992	-2.443
L14	121.834-116.834	3.074	-2.225	4.067	-2.489
L15	116.834-111.834	3.099	-2.243	4.138	-2.533
L16	111.834-106.834	3.123	-2.260	4.206	-2.574
L17	106.834-101.834	3.145	-2.276	4.270	-2.614
L18	101.834-96.834	3.167	-2.291	4.331	-2.651
L19	96.834-87.449	3.195	-2.312	4.413	-2.702
L20	87.449-86.449	2.045	-1.480	3.382	-2.071
L21	86.449-85.000	1.587	-1.149	2.839	-1.739
L22	85.000-84.750	1.592	-1.152	2.848	-1.744
L23	84.750-79.750	1.608	-1.163	2.874	-1.761
L24	79.750-75.000	1.354	-0.980	2.519	-1.543
L25	75.000-74.750	1.107	-0.801	2.139	-1.311
L26	74.750-74.000	1.109	-0.802	2.143	-1.313
L27	74.000-73.750	1.111	-0.804	2.146	-1.315
L28	73.750-68.750	1.515	-1.142	2.896	-1.989
L29	68.750-63.750	1.818	-1.379	3.336	-2.328
L30	63.750-58.750	1.847	-1.400	3.385	-2.363
L31	58.750-53.750	1.875	-1.422	3.432	-2.396
L32	53.750-42.848	2.322	-1.761	4.013	-2.802
L33	42.848-41.848	3.540	-2.684	5.301	-3.702
L34	41.848-36.848	3.549	-2.691	5.290	-3.696
L35	36.848-31.848	3.563	-2.702	5.315	-3.714
L36	31.848-26.848	3.577	-2.712	5.333	-3.728
L37	26.848-21.848	3.590	-2.722	5.342	-3.736
L38	21.848-16.848	3.603	-2.732	5.340	-3.737
L39	16.848-11.848	3.615	-2.741	5.322	-3.728
L40	11.848-6.848	3.627	-2.750	5.276	-3.699
L41	6.848-1.848	3.638	-2.759	5.160	-3.626
L42	1.848-0.000	3.646	-2.765	4.892	-3.453

Note: For pole sections, center of pressure calculations do not consider feed line shielding.

Shielding Factor Ka

Tower Section	Feed Line Record No.	Description	Feed Line Segment Elev.	K_a No Ice	K_a Ice
L1	24	Safety Line 3/8	177.00 - 182.00	1.0000	1.0000
L2	24	Safety Line 3/8	172.00 - 177.00	1.0000	1.0000
L3	24	Safety Line 3/8	167.00 - 172.00	1.0000	1.0000
L4	24	Safety Line 3/8	162.00 - 167.00	1.0000	1.0000
L5	24	Safety Line 3/8	157.00 -	1.0000	1.0000

Tower Section	Feed Line Record No.	Description	Feed Line Segment Elev.	K_a No Ice	K_a Ice
			162.00		
L6	24	Safety Line 3/8	152.00 - 157.00	1.0000	1.0000
L7	24	Safety Line 3/8	147.00 - 152.00	1.0000	1.0000
L8	24	Safety Line 3/8	142.00 - 147.00	1.0000	1.0000
L9	16	LDF5-50A(7/8)	137.00 - 140.00	1.0000	1.0000
L9	17	HB114-1-0813U4-M5F(1-1/4)	137.00 - 140.00	1.0000	1.0000
L9	24	Safety Line 3/8	137.00 - 142.00	1.0000	1.0000
L10	16	LDF5-50A(7/8)	133.08 - 137.00	1.0000	1.0000
L10	17	HB114-1-0813U4-M5F(1-1/4)	133.08 - 137.00	1.0000	1.0000
L10	24	Safety Line 3/8	133.08 - 137.00	1.0000	1.0000
L11	16	LDF5-50A(7/8)	131.83 - 133.08	1.0000	1.0000
L11	17	HB114-1-0813U4-M5F(1-1/4)	131.83 - 133.08	1.0000	1.0000
L11	24	Safety Line 3/8	131.83 - 133.08	1.0000	1.0000
L12	16	LDF5-50A(7/8)	126.83 - 131.83	1.0000	1.0000
L12	17	HB114-1-0813U4-M5F(1-1/4)	126.83 - 131.83	1.0000	1.0000
L12	24	Safety Line 3/8	126.83 - 131.83	1.0000	1.0000
L13	16	LDF5-50A(7/8)	121.83 - 126.83	1.0000	1.0000
L13	17	HB114-1-0813U4-M5F(1-1/4)	121.83 - 126.83	1.0000	1.0000
L13	24	Safety Line 3/8	121.83 - 126.83	1.0000	1.0000
L14	16	LDF5-50A(7/8)	116.83 - 121.83	1.0000	1.0000
L14	17	HB114-1-0813U4-M5F(1-1/4)	116.83 - 121.83	1.0000	1.0000
L14	24	Safety Line 3/8	116.83 - 121.83	1.0000	1.0000
L15	16	LDF5-50A(7/8)	111.83 - 116.83	1.0000	1.0000
L15	17	HB114-1-0813U4-M5F(1-1/4)	111.83 - 116.83	1.0000	1.0000
L15	24	Safety Line 3/8	111.83 - 116.83	1.0000	1.0000
L16	16	LDF5-50A(7/8)	106.83 - 111.83	1.0000	1.0000
L16	17	HB114-1-0813U4-M5F(1-1/4)	106.83 - 111.83	1.0000	1.0000
L16	24	Safety Line 3/8	106.83 - 111.83	1.0000	1.0000
L17	16	LDF5-50A(7/8)	101.83 - 106.83	1.0000	1.0000
L17	17	HB114-1-0813U4-M5F(1-1/4)	101.83 - 106.83	1.0000	1.0000
L17	24	Safety Line 3/8	101.83 - 106.83	1.0000	1.0000
L18	16	LDF5-50A(7/8)	96.83 - 101.83	1.0000	1.0000

Tower Section	Feed Line Record No.	Description	Feed Line Segment Elev.	K_a No Ice	K_a Ice
L18	17	HB114-1-0813U4-M5F(1-1/4)	96.83 - 101.83	1.0000	1.0000
L18	24	Safety Line 3/8	96.83 - 101.83	1.0000	1.0000
L19	16	LDF5-50A(7/8)	87.45 - 96.83	1.0000	1.0000
L19	17	HB114-1-0813U4-M5F(1-1/4)	87.45 - 96.83	1.0000	1.0000
L19	24	Safety Line 3/8	87.45 - 96.83	1.0000	1.0000
L20	16	LDF5-50A(7/8)	86.45 - 87.45	1.0000	1.0000
L20	17	HB114-1-0813U4-M5F(1-1/4)	86.45 - 87.45	1.0000	1.0000
L20	24	Safety Line 3/8	86.45 - 87.45	1.0000	1.0000
L20	30	PL 5.75"x1"	86.45 - 87.00	1.0000	1.0000
L20	31	PL 5.75"x1"	86.45 - 87.00	1.0000	1.0000
L20	32	PL 5.75"x1"	86.45 - 87.00	1.0000	1.0000
L21	16	LDF5-50A(7/8)	85.00 - 86.45	1.0000	1.0000
L21	17	HB114-1-0813U4-M5F(1-1/4)	85.00 - 86.45	1.0000	1.0000
L21	24	Safety Line 3/8	85.00 - 86.45	1.0000	1.0000
L21	30	PL 5.75"x1"	85.00 - 86.45	1.0000	1.0000
L21	31	PL 5.75"x1"	85.00 - 86.45	1.0000	1.0000
L21	32	PL 5.75"x1"	85.00 - 86.45	1.0000	1.0000
L22	16	LDF5-50A(7/8)	84.75 - 85.00	1.0000	1.0000
L22	17	HB114-1-0813U4-M5F(1-1/4)	84.75 - 85.00	1.0000	1.0000
L22	24	Safety Line 3/8	84.75 - 85.00	1.0000	1.0000
L22	30	PL 5.75"x1"	84.75 - 85.00	1.0000	1.0000
L22	31	PL 5.75"x1"	84.75 - 85.00	1.0000	1.0000
L22	32	PL 5.75"x1"	84.75 - 85.00	1.0000	1.0000
L23	16	LDF5-50A(7/8)	79.75 - 84.75	1.0000	1.0000
L23	17	HB114-1-0813U4-M5F(1-1/4)	79.75 - 84.75	1.0000	1.0000
L23	24	Safety Line 3/8	79.75 - 84.75	1.0000	1.0000
L23	30	PL 5.75"x1"	79.75 - 84.75	1.0000	1.0000
L23	31	PL 5.75"x1"	79.75 - 84.75	1.0000	1.0000
L23	32	PL 5.75"x1"	79.75 - 84.75	1.0000	1.0000
L24	16	LDF5-50A(7/8)	75.00 - 79.75	1.0000	1.0000
L24	17	HB114-1-0813U4-M5F(1-1/4)	75.00 - 79.75	1.0000	1.0000
L24	24	Safety Line 3/8	75.00 - 79.75	1.0000	1.0000
L24	26	PL 5.75"x1"	75.00 - 77.00	1.0000	1.0000
L24	27	PL 5.75"x1"	75.00 - 77.00	1.0000	1.0000
L24	28	PL 5.75"x1"	75.00 - 77.00	1.0000	1.0000
L24	30	PL 5.75"x1"	75.00 - 79.75	1.0000	1.0000
L24	31	PL 5.75"x1"	75.00 - 79.75	1.0000	1.0000
L24	32	PL 5.75"x1"	75.00 - 79.75	1.0000	1.0000
L25	16	LDF5-50A(7/8)	74.75 - 75.00	1.0000	1.0000
L25	17	HB114-1-0813U4-M5F(1-1/4)	74.75 - 75.00	1.0000	1.0000
L25	24	Safety Line 3/8	74.75 - 75.00	1.0000	1.0000
L25	26	PL 5.75"x1"	74.75 - 75.00	1.0000	1.0000
L25	27	PL 5.75"x1"	74.75 - 75.00	1.0000	1.0000
L25	28	PL 5.75"x1"	74.75 - 75.00	1.0000	1.0000
L25	30	PL 5.75"x1"	74.75 - 75.00	1.0000	1.0000
L25	31	PL 5.75"x1"	74.75 - 75.00	1.0000	1.0000
L25	32	PL 5.75"x1"	74.75 - 75.00	1.0000	1.0000
L26	16	LDF5-50A(7/8)	74.00 - 74.75	1.0000	1.0000
L26	17	HB114-1-0813U4-M5F(1-1/4)	74.00 - 74.75	1.0000	1.0000
L26	24	Safety Line 3/8	74.00 - 74.75	1.0000	1.0000
L26	26	PL 5.75"x1"	74.00 - 74.75	1.0000	1.0000
L26	27	PL 5.75"x1"	74.00 - 74.75	1.0000	1.0000
L26	28	PL 5.75"x1"	74.00 - 74.75	1.0000	1.0000

Tower Section	Feed Line Record No.	Description	Feed Line Segment Elev.	K_a No Ice	K_a Ice
L26	30	PL 5.75"x1"	74.00 - 74.75	1.0000	1.0000
L26	31	PL 5.75"x1"	74.00 - 74.75	1.0000	1.0000
L26	32	PL 5.75"x1"	74.00 - 74.75	1.0000	1.0000
L27	16	LDF5-50A(7/8)	73.75 - 74.00	1.0000	1.0000
L27	17	HB114-1-0813U4-M5F(1-1/4)	73.75 - 74.00	1.0000	1.0000
L27	24	Safety Line 3/8	73.75 - 74.00	1.0000	1.0000
L27	26	PL 5.75"x1"	73.75 - 74.00	1.0000	1.0000
L27	27	PL 5.75"x1"	73.75 - 74.00	1.0000	1.0000
L27	28	PL 5.75"x1"	73.75 - 74.00	1.0000	1.0000
L27	30	PL 5.75"x1"	73.75 - 74.00	1.0000	1.0000
L27	31	PL 5.75"x1"	73.75 - 74.00	1.0000	1.0000
L27	32	PL 5.75"x1"	73.75 - 74.00	1.0000	1.0000
L28	16	LDF5-50A(7/8)	68.75 - 73.75	1.0000	1.0000
L28	17	HB114-1-0813U4-M5F(1-1/4)	68.75 - 73.75	1.0000	1.0000
L28	22	LDF4-50A(1/2)	68.75 - 73.00	1.0000	1.0000
L28	24	Safety Line 3/8	68.75 - 73.75	1.0000	1.0000
L28	26	PL 5.75"x1"	68.75 - 73.75	1.0000	1.0000
L28	27	PL 5.75"x1"	68.75 - 73.75	1.0000	1.0000
L28	28	PL 5.75"x1"	68.75 - 73.75	1.0000	1.0000
L28	30	PL 5.75"x1"	72.00 - 73.75	1.0000	1.0000
L28	31	PL 5.75"x1"	72.00 - 73.75	1.0000	1.0000
L28	32	PL 5.75"x1"	72.00 - 73.75	1.0000	1.0000
L29	16	LDF5-50A(7/8)	63.75 - 68.75	1.0000	1.0000
L29	17	HB114-1-0813U4-M5F(1-1/4)	63.75 - 68.75	1.0000	1.0000
L29	22	LDF4-50A(1/2)	63.75 - 68.75	1.0000	1.0000
L29	24	Safety Line 3/8	63.75 - 68.75	1.0000	1.0000
L29	26	PL 5.75"x1"	63.75 - 68.75	1.0000	1.0000
L29	27	PL 5.75"x1"	63.75 - 68.75	1.0000	1.0000
L29	28	PL 5.75"x1"	63.75 - 68.75	1.0000	1.0000
L30	16	LDF5-50A(7/8)	58.75 - 63.75	1.0000	1.0000
L30	17	HB114-1-0813U4-M5F(1-1/4)	58.75 - 63.75	1.0000	1.0000
L30	22	LDF4-50A(1/2)	58.75 - 63.75	1.0000	1.0000
L30	24	Safety Line 3/8	58.75 - 63.75	1.0000	1.0000
L30	26	PL 5.75"x1"	58.75 - 63.75	1.0000	1.0000
L30	27	PL 5.75"x1"	58.75 - 63.75	1.0000	1.0000
L30	28	PL 5.75"x1"	58.75 - 63.75	1.0000	1.0000
L31	16	LDF5-50A(7/8)	53.75 - 58.75	1.0000	1.0000
L31	17	HB114-1-0813U4-M5F(1-1/4)	53.75 - 58.75	1.0000	1.0000
L31	22	LDF4-50A(1/2)	53.75 - 58.75	1.0000	1.0000
L31	24	Safety Line 3/8	53.75 - 58.75	1.0000	1.0000
L31	26	PL 5.75"x1"	53.75 - 58.75	1.0000	1.0000
L31	27	PL 5.75"x1"	53.75 - 58.75	1.0000	1.0000
L31	28	PL 5.75"x1"	53.75 - 58.75	1.0000	1.0000
L32	16	LDF5-50A(7/8)	42.85 - 53.75	1.0000	1.0000
L32	17	HB114-1-0813U4-M5F(1-1/4)	42.85 - 53.75	1.0000	1.0000
L32	22	LDF4-50A(1/2)	42.85 - 53.75	1.0000	1.0000
L32	24	Safety Line 3/8	42.85 - 53.75	1.0000	1.0000
L32	26	PL 5.75"x1"	47.00 - 53.75	1.0000	1.0000
L32	27	PL 5.75"x1"	47.00 - 53.75	1.0000	1.0000
L32	28	PL 5.75"x1"	47.00 - 53.75	1.0000	1.0000
L33	16	LDF5-50A(7/8)	41.85 - 42.85	1.0000	1.0000
L33	17	HB114-1-0813U4-M5F(1-1/4)	41.85 - 42.85	1.0000	1.0000
L33	22	LDF4-50A(1/2)	41.85 - 42.85	1.0000	1.0000
L33	24	Safety Line 3/8	41.85 - 42.85	1.0000	1.0000
L34	16	LDF5-50A(7/8)	36.85 - 41.85	1.0000	1.0000

Tower Section	Feed Line Record No.	Description	Feed Line Segment Elev.	K_a No Ice	K_a Ice
L34	17	HB114-1-0813U4-M5F(1-1/4)	36.85 - 41.85	1.0000	1.0000
L34	22	LDF4-50A(1/2)	36.85 - 41.85	1.0000	1.0000
L34	24	Safety Line 3/8	36.85 - 41.85	1.0000	1.0000
L35	16	LDF5-50A(7/8)	31.85 - 36.85	1.0000	1.0000
L35	17	HB114-1-0813U4-M5F(1-1/4)	31.85 - 36.85	1.0000	1.0000
L35	22	LDF4-50A(1/2)	31.85 - 36.85	1.0000	1.0000
L35	24	Safety Line 3/8	31.85 - 36.85	1.0000	1.0000
L36	16	LDF5-50A(7/8)	26.85 - 31.85	1.0000	1.0000
L36	17	HB114-1-0813U4-M5F(1-1/4)	26.85 - 31.85	1.0000	1.0000
L36	22	LDF4-50A(1/2)	26.85 - 31.85	1.0000	1.0000
L36	24	Safety Line 3/8	26.85 - 31.85	1.0000	1.0000
L37	16	LDF5-50A(7/8)	21.85 - 26.85	1.0000	1.0000
L37	17	HB114-1-0813U4-M5F(1-1/4)	21.85 - 26.85	1.0000	1.0000
L37	22	LDF4-50A(1/2)	21.85 - 26.85	1.0000	1.0000
L37	24	Safety Line 3/8	21.85 - 26.85	1.0000	1.0000
L38	16	LDF5-50A(7/8)	16.85 - 21.85	1.0000	1.0000
L38	17	HB114-1-0813U4-M5F(1-1/4)	16.85 - 21.85	1.0000	1.0000
L38	22	LDF4-50A(1/2)	16.85 - 21.85	1.0000	1.0000
L38	24	Safety Line 3/8	16.85 - 21.85	1.0000	1.0000
L39	16	LDF5-50A(7/8)	11.85 - 16.85	1.0000	1.0000
L39	17	HB114-1-0813U4-M5F(1-1/4)	11.85 - 16.85	1.0000	1.0000
L39	22	LDF4-50A(1/2)	11.85 - 16.85	1.0000	1.0000
L39	24	Safety Line 3/8	11.85 - 16.85	1.0000	1.0000
L40	16	LDF5-50A(7/8)	6.85 - 11.85	1.0000	1.0000
L40	17	HB114-1-0813U4-M5F(1-1/4)	6.85 - 11.85	1.0000	1.0000
L40	22	LDF4-50A(1/2)	6.85 - 11.85	1.0000	1.0000
L40	24	Safety Line 3/8	6.85 - 11.85	1.0000	1.0000
L41	16	LDF5-50A(7/8)	1.85 - 6.85	1.0000	1.0000
L41	17	HB114-1-0813U4-M5F(1-1/4)	1.85 - 6.85	1.0000	1.0000
L41	22	LDF4-50A(1/2)	1.85 - 6.85	1.0000	1.0000
L41	24	Safety Line 3/8	1.85 - 6.85	1.0000	1.0000
L42	16	LDF5-50A(7/8)	0.00 - 1.85	1.0000	1.0000
L42	17	HB114-1-0813U4-M5F(1-1/4)	0.00 - 1.85	1.0000	1.0000
L42	22	LDF4-50A(1/2)	0.00 - 1.85	1.0000	1.0000
L42	24	Safety Line 3/8	0.00 - 1.85	1.0000	1.0000

Effective Width of Flat Linear Attachments / Feed Lines

Tower Section	Attachment Record No.	Description	Attachment Segment Elev.	Ratio Calculation Method	Effective Width Ratio
L20	30	PL 5.75"x1"	86.45 - 87.00	Auto	0.0258
L20	31	PL 5.75"x1"	86.45 - 87.00	Auto	0.0258
L20	32	PL 5.75"x1"	86.45 - 87.00	Auto	0.0258
L21	30	PL 5.75"x1"	85.00 - 86.45	Auto	0.0186

Tower Section	Attachment Record No.	Description	Attachment Segment Elev.	Ratio Calculation Method	Effective Width Ratio
L21	31	PL 5.75"x1"	85.00 - 86.45	Auto	0.0186
L21	32	PL 5.75"x1"	85.00 - 86.45	Auto	0.0186
L22	30	PL 5.75"x1"	84.75 - 85.00	Auto	0.0126
L22	31	PL 5.75"x1"	84.75 - 85.00	Auto	0.0126
L22	32	PL 5.75"x1"	84.75 - 85.00	Auto	0.0126
L23	30	PL 5.75"x1"	79.75 - 84.75	Auto	0.0019
L23	31	PL 5.75"x1"	79.75 - 84.75	Auto	0.0019
L23	32	PL 5.75"x1"	79.75 - 84.75	Auto	0.0019
L24	26	PL 5.75"x1"	75.00 - 77.00	Auto	0.0000
L24	27	PL 5.75"x1"	75.00 - 77.00	Auto	0.0000
L24	28	PL 5.75"x1"	75.00 - 77.00	Auto	0.0000
L24	30	PL 5.75"x1"	75.00 - 79.75	Auto	0.0000
L24	31	PL 5.75"x1"	75.00 - 79.75	Auto	0.0000
L24	32	PL 5.75"x1"	75.00 - 79.75	Auto	0.0000
L25	26	PL 5.75"x1"	74.75 - 75.00	Auto	0.0407
L25	27	PL 5.75"x1"	74.75 - 75.00	Auto	0.0407
L25	28	PL 5.75"x1"	74.75 - 75.00	Auto	0.0407
L25	30	PL 5.75"x1"	74.75 - 75.00	Auto	0.0407
L25	31	PL 5.75"x1"	74.75 - 75.00	Auto	0.0407
L25	32	PL 5.75"x1"	74.75 - 75.00	Auto	0.0407
L26	26	PL 5.75"x1"	74.00 - 74.75	Auto	0.0372
L26	27	PL 5.75"x1"	74.00 - 74.75	Auto	0.0372
L26	28	PL 5.75"x1"	74.00 - 74.75	Auto	0.0372
L26	30	PL 5.75"x1"	74.00 - 74.75	Auto	0.0372
L26	31	PL 5.75"x1"	74.00 - 74.75	Auto	0.0372
L26	32	PL 5.75"x1"	74.00 - 74.75	Auto	0.0372
L27	26	PL 5.75"x1"	73.75 - 74.00	Auto	0.0000
L27	27	PL 5.75"x1"	73.75 - 74.00	Auto	0.0000
L27	28	PL 5.75"x1"	73.75 - 74.00	Auto	0.0000
L27	30	PL 5.75"x1"	73.75 - 74.00	Auto	0.0000
L27	31	PL 5.75"x1"	73.75 - 74.00	Auto	0.0000
L27	32	PL 5.75"x1"	73.75 - 74.00	Auto	0.0000
L28	26	PL 5.75"x1"	68.75 - 73.75	Auto	0.0000
L28	27	PL 5.75"x1"	68.75 - 73.75	Auto	0.0000
L28	28	PL 5.75"x1"	68.75 - 73.75	Auto	0.0000
L28	30	PL 5.75"x1"	72.00 - 73.75	Auto	0.0000
L28	31	PL 5.75"x1"	72.00 - 73.75	Auto	0.0000
L28	32	PL 5.75"x1"	72.00 - 73.75	Auto	0.0000
L29	26	PL 5.75"x1"	63.75 - 68.75	Auto	0.0000
L29	27	PL 5.75"x1"	63.75 - 68.75	Auto	0.0000
L29	28	PL 5.75"x1"	63.75 - 68.75	Auto	0.0000
L30	26	PL 5.75"x1"	58.75 - 63.75	Auto	0.0000
L30	27	PL 5.75"x1"	58.75 - 63.75	Auto	0.0000
L30	28	PL 5.75"x1"	58.75 - 63.75	Auto	0.0000
L31	26	PL 5.75"x1"	53.75 - 58.75	Auto	0.0000
L31	27	PL 5.75"x1"	53.75 - 58.75	Auto	0.0000
L31	28	PL 5.75"x1"	53.75 - 58.75	Auto	0.0000
L32	26	PL 5.75"x1"	47.00 - 53.75	Auto	0.0000
L32	27	PL 5.75"x1"	47.00 - 53.75	Auto	0.0000
L32	28	PL 5.75"x1"	47.00 - 53.75	Auto	0.0000

Discrete Tower Loads

Description	Face or Leg	Offset Type	Offsets: Horz Lateral Vert ft ft ft	Azimuth Adjustment °	Placement ft		C_AA_A Front ft^2	C_AA_A Side ft^2	Weight K
DS4C06F36D-D	A	From Leg	6.000	0.000	178.000	No Ice	5.820	5.820	0.050
			0.000			1/2" Ice	7.793	7.793	0.092
			10.000			1" Ice	9.783	9.783	0.146
						2" Ice	13.813	13.813	0.292
APC-2163	A	From Leg	6.000	0.000	178.000	No Ice	3.375	3.375	0.014
			0.000			1/2" Ice	4.754	4.754	0.039
			7.000			1" Ice	6.150	6.150	0.073
						2" Ice	8.992	8.992	0.167
APC-1362	B	From Leg	6.000	0.000	178.000	No Ice	3.500	3.500	0.015
			0.000			1/2" Ice	4.929	4.929	0.041
			7.000			1" Ice	6.375	6.375	0.076
						2" Ice	9.317	9.317	0.173
APC-4065	B	From Leg	6.000	0.000	178.000	No Ice	3.125	3.125	0.013
			0.000			1/2" Ice	4.404	4.404	0.036
			6.000			1" Ice	5.700	5.700	0.067
						2" Ice	8.140	8.140	0.155
APC-301	C	From Leg	6.000	0.000	178.000	No Ice	3.000	3.000	0.013
			0.000			1/2" Ice	4.229	4.229	0.035
			6.000			1" Ice	5.475	5.475	0.065
						2" Ice	7.685	7.685	0.149
DS4C06F36D-D	C	From Leg	6.000	0.000	178.000	No Ice	5.820	5.820	0.050
			0.000			1/2" Ice	7.793	7.793	0.092
			10.000			1" Ice	9.783	9.783	0.146
						2" Ice	13.813	13.813	0.292
Miscellaneous [NA 502-3]	C	None		0.000	178.000	No Ice	10.520	10.520	0.662
						1/2" Ice	13.680	13.680	0.807
						1" Ice	16.610	16.610	1.001
						2" Ice	23.060	23.060	1.551
*									
ANT450D6-9	A	From Leg	4.000	0.000	168.000	No Ice	2.862	2.862	0.176
			0.000			1/2" Ice	4.370	4.370	0.200
			7.000			1" Ice	5.878	5.878	0.224
						2" Ice	8.893	8.893	0.272
*									
7770.00 w/ Mount Pipe	A	From Leg	4.000	0.000	168.000	No Ice	5.746	4.254	0.055
			0.000			1/2" Ice	6.179	5.014	0.103
			0.000			1" Ice	6.607	5.711	0.157
						2" Ice	7.488	7.155	0.287
7770.00 w/ Mount Pipe	B	From Leg	4.000	0.000	168.000	No Ice	5.746	4.254	0.055
			0.000			1/2" Ice	6.179	5.014	0.103
			0.000			1" Ice	6.607	5.711	0.157
						2" Ice	7.488	7.155	0.287
7770.00 w/ Mount Pipe	C	From Leg	4.000	0.000	168.000	No Ice	5.746	4.254	0.055
			0.000			1/2" Ice	6.179	5.014	0.103
			0.000			1" Ice	6.607	5.711	0.157
						2" Ice	7.488	7.155	0.287
QS66512-2 w/ Mount Pipe	A	From Leg	4.000	0.000	168.000	No Ice	4.040	4.180	0.137
			0.000			1/2" Ice	4.420	4.570	0.206
			0.000			1" Ice	4.820	4.970	0.287
						2" Ice	5.630	5.790	0.482
QS66512-2 w/ Mount Pipe	B	From Leg	4.000	0.000	168.000	No Ice	4.040	4.180	0.137
			0.000			1/2" Ice	4.420	4.570	0.206
			0.000			1" Ice	4.820	4.970	0.287
						2" Ice	5.630	5.790	0.482
QS66512-2 w/ Mount Pipe	C	From Leg	4.000	0.000	168.000	No Ice	4.040	4.180	0.137
			0.000			1/2" Ice	4.420	4.570	0.206
			0.000			1" Ice	4.820	4.970	0.287

Description	Face or Leg	Offset Type	Offsets: Horz Lateral Vert ft ft ft	Azimuth Adjustment °	Placement ft		C_AA_A Front ft^2	C_AA_A Side ft^2	Weight K
						2" Ice	5.630	5.790	0.482
DMP65R-BU6D w/ Mount Pipe	A	From Leg	4.000 0.000 0.000	0.000	168.000	No Ice 1/2" Ice 1" Ice 2" Ice	11.960 12.700 13.460 15.020	5.970 6.630 7.300 8.690	0.115 0.201 0.298 0.529
DMP65R-BU6D w/ Mount Pipe	B	From Leg	4.000 0.000 0.000	0.000	168.000	No Ice 1/2" Ice 1" Ice 2" Ice	11.960 12.700 13.460 15.020	5.970 6.630 7.300 8.690	0.115 0.201 0.298 0.529
DMP65R-BU6D w/ Mount Pipe	C	From Leg	4.000 0.000 0.000	0.000	168.000	No Ice 1/2" Ice 1" Ice 2" Ice	11.960 12.700 13.460 15.020	5.970 6.630 7.300 8.690	0.115 0.201 0.298 0.529
HPA-65R-BUU-H6 w/ Mount Pipe	A	From Leg	4.000 0.000 0.000	0.000	168.000	No Ice 1/2" Ice 1" Ice 2" Ice	9.220 9.980 10.760 12.360	6.250 6.960 7.700 9.220	0.074 0.143 0.224 0.420
HPA-65R-BUU-H6 w/ Mount Pipe	B	From Leg	4.000 0.000 0.000	0.000	168.000	No Ice 1/2" Ice 1" Ice 2" Ice	9.220 9.980 10.760 12.360	6.250 6.960 7.700 9.220	0.074 0.143 0.224 0.420
HPA-65R-BUU-H6 w/ Mount Pipe	C	From Leg	4.000 0.000 0.000	0.000	168.000	No Ice 1/2" Ice 1" Ice 2" Ice	9.220 9.980 10.760 12.360	6.250 6.960 7.700 9.220	0.074 0.143 0.224 0.420
(2) LGP21401	A	From Leg	4.000 0.000 0.000	0.000	168.000	No Ice 1/2" Ice 1" Ice 2" Ice	1.104 1.239 1.381 1.688	0.207 0.274 0.348 0.521	0.014 0.021 0.030 0.055
(2) LGP21401	B	From Leg	4.000 0.000 0.000	0.000	168.000	No Ice 1/2" Ice 1" Ice 2" Ice	1.104 1.239 1.381 1.688	0.207 0.274 0.348 0.521	0.014 0.021 0.030 0.055
(2) LGP21401	C	From Leg	4.000 0.000 0.000	0.000	168.000	No Ice 1/2" Ice 1" Ice 2" Ice	1.104 1.239 1.381 1.688	0.207 0.274 0.348 0.521	0.014 0.021 0.030 0.055
RRUS 32 B2	A	From Leg	4.000 0.000 0.000	0.000	168.000	No Ice 1/2" Ice 1" Ice 2" Ice	2.731 2.953 3.182 3.663	1.668 1.855 2.049 2.458	0.053 0.074 0.098 0.157
RRUS 32 B2	B	From Leg	4.000 0.000 0.000	0.000	168.000	No Ice 1/2" Ice 1" Ice 2" Ice	2.731 2.953 3.182 3.663	1.668 1.855 2.049 2.458	0.053 0.074 0.098 0.157
RRUS 32 B2	C	From Leg	4.000 0.000 0.000	0.000	168.000	No Ice 1/2" Ice 1" Ice 2" Ice	2.731 2.953 3.182 3.663	1.668 1.855 2.049 2.458	0.053 0.074 0.098 0.157
RRUS E2 B29	A	From Leg	4.000 0.000 0.000	0.000	168.000	No Ice 1/2" Ice 1" Ice 2" Ice	3.145 3.365 3.592 4.069	1.285 1.438 1.600 1.954	0.060 0.083 0.110 0.173
RRUS E2 B29	B	From Leg	4.000 0.000 0.000	0.000	168.000	No Ice 1/2" Ice 1" Ice 2" Ice	3.145 3.365 3.592 4.069	1.285 1.438 1.600 1.954	0.060 0.083 0.110 0.173

Description	Face or Leg	Offset Type	Offsets: Horz Lateral Vert ft ft ft	Azimuth Adjustment °	Placement ft		C_AA_A Front ft^2	C_AA_A Side ft^2	Weight K
RRUS E2 B29	C	From Leg	4.000	0.000	168.000	No Ice	3.145	1.285	0.060
			0.000			1/2" Ice	3.365	1.438	0.083
			0.000			1" Ice	3.592	1.600	0.110
						2" Ice	4.069	1.954	0.173
RRUS 32 B2_CCIV2	A	From Leg	4.000	0.000	168.000	No Ice	2.864	1.782	0.055
			0.000			1/2" Ice	3.090	1.973	0.077
			0.000			1" Ice	3.323	2.171	0.103
						2" Ice	3.813	2.589	0.165
RRUS 32 B2_CCIV2	B	From Leg	4.000	0.000	168.000	No Ice	2.864	1.782	0.055
			0.000			1/2" Ice	3.090	1.973	0.077
			0.000			1" Ice	3.323	2.171	0.103
						2" Ice	3.813	2.589	0.165
RRUS 32 B2_CCIV2	C	From Leg	4.000	0.000	168.000	No Ice	2.864	1.782	0.055
			0.000			1/2" Ice	3.090	1.973	0.077
			0.000			1" Ice	3.323	2.171	0.103
						2" Ice	3.813	2.589	0.165
RRUS 4478 B14_CCIV2	A	From Leg	4.000	0.000	168.000	No Ice	2.021	1.246	0.059
			0.000			1/2" Ice	2.200	1.396	0.077
			0.000			1" Ice	2.386	1.554	0.097
						2" Ice	2.780	1.891	0.147
RRUS 4478 B14_CCIV2	B	From Leg	4.000	0.000	168.000	No Ice	2.021	1.246	0.059
			0.000			1/2" Ice	2.200	1.396	0.077
			0.000			1" Ice	2.386	1.554	0.097
						2" Ice	2.780	1.891	0.147
RRUS 4478 B14_CCIV2	C	From Leg	4.000	0.000	168.000	No Ice	2.021	1.246	0.059
			0.000			1/2" Ice	2.200	1.396	0.077
			0.000			1" Ice	2.386	1.554	0.097
						2" Ice	2.780	1.891	0.147
RRUS-32 B30	A	From Leg	4.000	0.000	168.000	No Ice	3.314	2.424	0.077
			0.000			1/2" Ice	3.558	2.638	0.105
			0.000			1" Ice	3.809	2.860	0.136
						2" Ice	4.333	3.324	0.211
RRUS-32 B30	B	From Leg	4.000	0.000	168.000	No Ice	3.314	2.424	0.077
			0.000			1/2" Ice	3.558	2.638	0.105
			0.000			1" Ice	3.809	2.860	0.136
						2" Ice	4.333	3.324	0.211
RRUS-32 B30	C	From Leg	4.000	0.000	168.000	No Ice	3.314	2.424	0.077
			0.000			1/2" Ice	3.558	2.638	0.105
			0.000			1" Ice	3.809	2.860	0.136
						2" Ice	4.333	3.324	0.211
RRUS 32 B66	A	From Leg	4.000	0.000	168.000	No Ice	2.743	1.668	0.053
			0.000			1/2" Ice	2.965	1.855	0.074
			0.000			1" Ice	3.194	2.049	0.098
						2" Ice	3.675	2.458	0.157
RRUS 32 B66	B	From Leg	4.000	0.000	168.000	No Ice	2.743	1.668	0.053
			0.000			1/2" Ice	2.965	1.855	0.074
			0.000			1" Ice	3.194	2.049	0.098
						2" Ice	3.675	2.458	0.157
RRUS 32 B66	C	From Leg	4.000	0.000	168.000	No Ice	2.743	1.668	0.053
			0.000			1/2" Ice	2.965	1.855	0.074
			0.000			1" Ice	3.194	2.049	0.098
						2" Ice	3.675	2.458	0.157
RRUS 4449 B5/B12	A	From Leg	4.000	0.000	168.000	No Ice	1.968	1.408	0.071
			0.000			1/2" Ice	2.144	1.564	0.090
			0.000			1" Ice	2.328	1.727	0.111
						2" Ice	2.718	2.075	0.163
RRUS 4449 B5/B12	B	From Leg	4.000	0.000	168.000	No Ice	1.968	1.408	0.071

Description	Face or Leg	Offset Type	Offsets: Horz Lateral Vert ft ft ft	Azimuth Adjustment °	Placement ft		C_AA_A Front ft^2	C_AA_A Side ft^2	Weight K
			0.000			1/2" Ice	2.144	1.564	0.090
			0.000			1" Ice	2.328	1.727	0.111
						2" Ice	2.718	2.075	0.163
RRUS 4449 B5/B12	C	From Leg	4.000	0.000	168.000	No Ice	1.968	1.408	0.071
			0.000			1/2" Ice	2.144	1.564	0.090
			0.000			1" Ice	2.328	1.727	0.111
						2" Ice	2.718	2.075	0.163
DC6-48-60-18-8C-EV	A	From Leg	4.000	0.000	168.000	No Ice	1.145	1.145	0.026
			0.000			1/2" Ice	1.792	1.792	0.047
			0.000			1" Ice	2.002	2.002	0.070
						2" Ice	2.450	2.450	0.125
DC6-48-60-18-8C-EV	C	From Leg	4.000	0.000	168.000	No Ice	1.145	1.145	0.026
			0.000			1/2" Ice	1.792	1.792	0.047
			0.000			1" Ice	2.002	2.002	0.070
						2" Ice	2.450	2.450	0.125
DC6-48-60-18-8F	A	From Leg	4.000	0.000	168.000	No Ice	1.212	1.212	0.033
			0.000			1/2" Ice	1.892	1.892	0.055
			0.000			1" Ice	2.105	2.105	0.080
						2" Ice	2.570	2.570	0.138
DC6-48-60-18-8C	B	From Leg	4.000	0.000	168.000	No Ice	1.145	1.145	0.026
			0.000			1/2" Ice	1.792	1.792	0.047
			0.000			1" Ice	2.002	2.002	0.070
						2" Ice	2.451	2.451	0.125
(2) TPX-070821	B	From Leg	4.000	0.000	168.000	No Ice	0.469	0.101	0.008
			0.000			1/2" Ice	0.559	0.147	0.011
			0.000			1" Ice	0.656	0.202	0.016
						2" Ice	0.872	0.334	0.030
(2) TPX-070821	C	From Leg	4.000	0.000	168.000	No Ice	0.469	0.101	0.008
			0.000			1/2" Ice	0.559	0.147	0.011
			0.000			1" Ice	0.656	0.202	0.016
						2" Ice	0.872	0.334	0.030
4' x 2" Pipe Mount	A	From Leg	4.000	0.000	168.000	No Ice	0.785	0.785	0.029
			0.000			1/2" Ice	1.028	1.028	0.035
			0.000			1" Ice	1.281	1.281	0.044
						2" Ice	1.814	1.814	0.072
4' x 2" Pipe Mount	B	From Leg	4.000	0.000	168.000	No Ice	0.785	0.785	0.029
			0.000			1/2" Ice	1.028	1.028	0.035
			0.000			1" Ice	1.281	1.281	0.044
						2" Ice	1.814	1.814	0.072
4' x 2" Pipe Mount	C	From Leg	4.000	0.000	168.000	No Ice	0.785	0.785	0.029
			0.000			1/2" Ice	1.028	1.028	0.035
			0.000			1" Ice	1.281	1.281	0.044
						2" Ice	1.814	1.814	0.072
6' x 2" Mount Pipe	A	From Leg	4.000	0.000	168.000	No Ice	1.425	1.425	0.022
			0.000			1/2" Ice	1.925	1.925	0.033
			0.000			1" Ice	2.294	2.294	0.048
						2" Ice	3.060	3.060	0.090
6' x 2" Mount Pipe	B	From Leg	4.000	0.000	168.000	No Ice	1.425	1.425	0.022
			0.000			1/2" Ice	1.925	1.925	0.033
			0.000			1" Ice	2.294	2.294	0.048
						2" Ice	3.060	3.060	0.090
6' x 2" Mount Pipe	C	From Leg	4.000	0.000	168.000	No Ice	1.425	1.425	0.022
			0.000			1/2" Ice	1.925	1.925	0.033
			0.000			1" Ice	2.294	2.294	0.048
						2" Ice	3.060	3.060	0.090
Platform Mount [LP 304-1_KCKR-HR-1]	C	None		0.000	168.000	No Ice	32.630	32.630	1.880
						1/2" Ice	40.840	40.840	2.472

Description	Face or Leg	Offset Type	Offsets: Horz Lateral Vert ft ft ft	Azimuth Adjustment °	Placement ft		C_AA_A Front ft^2	C_AA_A Side ft^2	Weight K
						1" Ice	49.050	49.050	3.195
						2" Ice	65.620	65.620	5.043
*									
AIR 32 B2A B66AA_T-MOBILE w/ Mount Pipe	A	From Leg	4.000 0.000 2.000	0.000	157.000	No Ice	3.760	3.150	0.194
						1/2" Ice	4.120	3.490	0.252
						1" Ice	4.480	3.840	0.320
						2" Ice	5.240	4.580	0.485
AIR 32 B2A B66AA_T-MOBILE w/ Mount Pipe	B	From Leg	4.000 0.000 2.000	0.000	157.000	No Ice	3.760	3.150	0.194
						1/2" Ice	4.120	3.490	0.252
						1" Ice	4.480	3.840	0.320
						2" Ice	5.240	4.580	0.485
AIR 32 B2A B66AA_T-MOBILE w/ Mount Pipe	C	From Leg	4.000 0.000 2.000	0.000	157.000	No Ice	3.760	3.150	0.194
						1/2" Ice	4.120	3.490	0.252
						1" Ice	4.480	3.840	0.320
						2" Ice	5.240	4.580	0.485
APXVAALL24_43-U-NA20 _TMO w/ Mount Pipe	A	From Leg	4.000 0.000 2.000	0.000	157.000	No Ice	14.690	6.870	0.183
						1/2" Ice	15.460	7.550	0.311
						1" Ice	16.230	8.250	0.453
						2" Ice	17.820	9.670	0.782
APXVAALL24_43-U-NA20 _TMO w/ Mount Pipe	B	From Leg	4.000 0.000 2.000	0.000	157.000	No Ice	14.690	6.870	0.183
						1/2" Ice	15.460	7.550	0.311
						1" Ice	16.230	8.250	0.453
						2" Ice	17.820	9.670	0.782
APXVAALL24_43-U-NA20 _TMO w/ Mount Pipe	C	From Leg	4.000 0.000 2.000	0.000	157.000	No Ice	14.690	6.870	0.183
						1/2" Ice	15.460	7.550	0.311
						1" Ice	16.230	8.250	0.453
						2" Ice	17.820	9.670	0.782
AIR6449 B41_T-MOBILE	A	From Leg	4.000 0.000 2.000	0.000	157.000	No Ice	5.270	2.030	0.115
						1/2" Ice	5.700	2.360	0.154
						1" Ice	6.140	2.700	0.197
						2" Ice	7.060	3.430	0.296
AIR6449 B41_T-MOBILE	B	From Leg	4.000 0.000 2.000	0.000	157.000	No Ice	5.270	2.030	0.115
						1/2" Ice	5.700	2.360	0.154
						1" Ice	6.140	2.700	0.197
						2" Ice	7.060	3.430	0.296
AIR6449 B41_T-MOBILE	C	From Leg	4.000 0.000 2.000	0.000	157.000	No Ice	5.270	2.030	0.115
						1/2" Ice	5.700	2.360	0.154
						1" Ice	6.140	2.700	0.197
						2" Ice	7.060	3.430	0.296
RADIO 4449 B71 B85A_T-MOBILE	A	From Leg	4.000 0.000 2.000	0.000	157.000	No Ice	1.970	1.587	0.073
						1/2" Ice	2.147	1.749	0.093
						1" Ice	2.331	1.918	0.116
						2" Ice	2.721	2.280	0.170
RADIO 4449 B71 B85A_T-MOBILE	B	From Leg	4.000 0.000 2.000	0.000	157.000	No Ice	1.970	1.587	0.073
						1/2" Ice	2.147	1.749	0.093
						1" Ice	2.331	1.918	0.116
						2" Ice	2.721	2.280	0.170
RADIO 4449 B71 B85A_T-MOBILE	C	From Leg	4.000 0.000 2.000	0.000	157.000	No Ice	1.970	1.587	0.073
						1/2" Ice	2.147	1.749	0.093
						1" Ice	2.331	1.918	0.116
						2" Ice	2.721	2.280	0.170
RADIO 4415 B25_TMO	A	From Leg	4.000 0.000 2.000	0.000	157.000	No Ice	1.856	0.870	0.047
						1/2" Ice	2.027	0.997	0.062
						1" Ice	2.204	1.134	0.079
						2" Ice	2.582	1.432	0.122
RADIO 4415 B25_TMO	B	From Leg	4.000 0.000	0.000	157.000	No Ice	1.856	0.870	0.047
						1/2" Ice	2.027	0.997	0.062

Description	Face or Leg	Offset Type	Offsets: Horz Lateral Vert ft ft ft	Azimuth Adjustment °	Placement ft		C_AA_A Front ft^2	C_AA_A Side ft^2	Weight K
			2.000			1" Ice	2.204	1.134	0.079
						2" Ice	2.582	1.432	0.122
RADIO 4415 B25_TMO	C	From Leg	4.000	0.000	157.000	No Ice	1.856	0.870	0.047
			0.000			1/2" Ice	2.027	0.997	0.062
			2.000			1" Ice	2.204	1.134	0.079
						2" Ice	2.582	1.432	0.122
8' x 2" Mount Pipe	A	From Leg	4.000	0.000	157.000	No Ice	1.900	1.900	0.029
			0.000			1/2" Ice	2.728	2.728	0.044
			0.000			1" Ice	3.401	3.401	0.063
						2" Ice	4.396	4.396	0.119
8' x 2" Mount Pipe	B	From Leg	4.000	0.000	157.000	No Ice	1.900	1.900	0.029
			0.000			1/2" Ice	2.728	2.728	0.044
			0.000			1" Ice	3.401	3.401	0.063
						2" Ice	4.396	4.396	0.119
8' x 2" Mount Pipe	C	From Leg	4.000	0.000	157.000	No Ice	1.900	1.900	0.029
			0.000			1/2" Ice	2.728	2.728	0.044
			0.000			1" Ice	3.401	3.401	0.063
						2" Ice	4.396	4.396	0.119
Platform Mount [LP 305-1_KCKR-HR-1]	C	None		0.000	157.000	No Ice	30.810	30.810	1.641
						1/2" Ice	38.700	38.700	2.199
						1" Ice	46.630	46.630	2.884
						2" Ice	62.740	62.740	4.647
*									
800MHZ RRH	A	From Leg	4.000	0.000	142.000	No Ice	2.134	1.773	0.053
			0.000			1/2" Ice	2.320	1.946	0.074
			-2.000			1" Ice	2.512	2.127	0.098
						2" Ice	2.920	2.510	0.157
800MHZ RRH	B	From Leg	4.000	0.000	142.000	No Ice	2.134	1.773	0.053
			0.000			1/2" Ice	2.320	1.946	0.074
			-2.000			1" Ice	2.512	2.127	0.098
						2" Ice	2.920	2.510	0.157
800MHZ RRH	C	From Leg	4.000	0.000	142.000	No Ice	2.134	1.773	0.053
			0.000			1/2" Ice	2.320	1.946	0.074
			-2.000			1" Ice	2.512	2.127	0.098
						2" Ice	2.920	2.510	0.157
800 EXTERNAL NOTCH FILTER	A	From Leg	4.000	0.000	142.000	No Ice	0.660	0.289	0.011
			0.000			1/2" Ice	0.763	0.364	0.017
			-2.000			1" Ice	0.873	0.446	0.024
						2" Ice	1.115	0.633	0.044
800 EXTERNAL NOTCH FILTER	B	From Leg	4.000	0.000	142.000	No Ice	0.660	0.289	0.011
			0.000			1/2" Ice	0.763	0.364	0.017
			-2.000			1" Ice	0.873	0.446	0.024
						2" Ice	1.115	0.633	0.044
800 EXTERNAL NOTCH FILTER	C	From Leg	4.000	0.000	142.000	No Ice	0.660	0.289	0.011
			0.000			1/2" Ice	0.763	0.364	0.017
			-2.000			1" Ice	0.873	0.446	0.024
						2" Ice	1.115	0.633	0.044
1900MHZ RRH (65MHZ)	A	From Leg	4.000	0.000	142.000	No Ice	2.313	2.375	0.060
			0.000			1/2" Ice	2.517	2.581	0.084
			2.000			1" Ice	2.728	2.794	0.111
						2" Ice	3.174	3.243	0.176
1900MHZ RRH (65MHZ)	B	From Leg	4.000	0.000	142.000	No Ice	2.313	2.375	0.060
			0.000			1/2" Ice	2.517	2.581	0.084
			2.000			1" Ice	2.728	2.794	0.111
						2" Ice	3.174	3.243	0.176
1900MHZ RRH (65MHZ)	C	From Leg	4.000	0.000	142.000	No Ice	2.313	2.375	0.060
			0.000			1/2" Ice	2.517	2.581	0.084

Description	Face or Leg	Offset Type	Offsets: Horz Lateral Vert ft ft ft	Azimuth Adjustment °	Placement ft		C_AA_A Front ft^2	C_AA_A Side ft^2	Weight K
			2.000			1" Ice	2.728	2.794	0.111
						2" Ice	3.174	3.243	0.176
Pipe Mount [PM 601-3]	C	None		0.000	142.000	No Ice	3.170	3.170	0.195
						1/2" Ice	3.790	3.790	0.232
						1" Ice	4.420	4.420	0.279
						2" Ice	5.760	5.760	0.401
*									
APXVSPP18-C-A20 w/ Mount Pipe	A	From Leg	4.000 0.000 2.000	0.000	140.000	No Ice	4.600	4.010	0.095
						1/2" Ice	5.050	4.450	0.160
						1" Ice	5.500	4.890	0.235
						2" Ice	6.440	5.820	0.419
APXVSPP18-C-A20 w/ Mount Pipe	B	From Leg	4.000 0.000 2.000	0.000	140.000	No Ice	4.600	4.010	0.095
						1/2" Ice	5.050	4.450	0.160
						1" Ice	5.500	4.890	0.235
						2" Ice	6.440	5.820	0.419
APXVSPP18-C-A20 w/ Mount Pipe	C	From Leg	4.000 0.000 2.000	0.000	140.000	No Ice	4.600	4.010	0.095
						1/2" Ice	5.050	4.450	0.160
						1" Ice	5.500	4.890	0.235
						2" Ice	6.440	5.820	0.419
APXVTM14-C-120 w/ Mount Pipe	A	From Leg	4.000 0.000 2.000	0.000	140.000	No Ice	4.090	2.860	0.077
						1/2" Ice	4.480	3.230	0.127
						1" Ice	4.880	3.610	0.185
						2" Ice	5.710	4.400	0.331
APXVTM14-C-120 w/ Mount Pipe	B	From Leg	4.000 0.000 2.000	0.000	140.000	No Ice	4.090	2.860	0.077
						1/2" Ice	4.480	3.230	0.127
						1" Ice	4.880	3.610	0.185
						2" Ice	5.710	4.400	0.331
APXVTM14-C-120 w/ Mount Pipe	C	From Leg	4.000 0.000 2.000	0.000	140.000	No Ice	4.090	2.860	0.077
						1/2" Ice	4.480	3.230	0.127
						1" Ice	4.880	3.610	0.185
						2" Ice	5.710	4.400	0.331
TD-RRH8X20-25	A	From Leg	4.000 0.000 2.000	0.000	140.000	No Ice	4.045	1.535	0.070
						1/2" Ice	4.298	1.714	0.097
						1" Ice	4.557	1.901	0.128
						2" Ice	5.098	2.295	0.201
TD-RRH8X20-25	B	From Leg	4.000 0.000 2.000	0.000	140.000	No Ice	4.045	1.535	0.070
						1/2" Ice	4.298	1.714	0.097
						1" Ice	4.557	1.901	0.128
						2" Ice	5.098	2.295	0.201
TD-RRH8X20-25	C	From Leg	4.000 0.000 2.000	0.000	140.000	No Ice	4.045	1.535	0.070
						1/2" Ice	4.298	1.714	0.097
						1" Ice	4.557	1.901	0.128
						2" Ice	5.098	2.295	0.201
Platform Mount [LP 1201-1]	C	None		0.000	140.000	No Ice	18.380	18.380	2.100
						1/2" Ice	22.110	22.110	2.652
						1" Ice	25.870	25.870	3.263
						2" Ice	33.470	33.470	4.662
*									
HBXX-6517DS-A2M w/ Mount Pipe	A	From Leg	4.000 0.000 0.000	0.000	90.000	No Ice	7.970	5.990	0.076
						1/2" Ice	8.730	6.720	0.139
						1" Ice	9.510	7.470	0.214
						2" Ice	11.110	9.020	0.397
HBXX-6517DS-A2M w/ Mount Pipe	B	From Leg	4.000 0.000 0.000	0.000	90.000	No Ice	7.970	5.990	0.076
						1/2" Ice	8.730	6.720	0.139
						1" Ice	9.510	7.470	0.214
						2" Ice	11.110	9.020	0.397
HBXX-6517DS-A2M w/	C	From Leg	4.000	0.000	90.000	No Ice	7.970	5.990	0.076

Description	Face or Leg	Offset Type	Offsets: Horz Lateral Vert ft ft ft	Azimuth Adjustment °	Placement ft		C_AA_A Front ft^2	C_AA_A Side ft^2	Weight K
Mount Pipe			0.000			1/2" Ice	8.730	6.720	0.139
			0.000			1" Ice	9.510	7.470	0.214
						2" Ice	11.110	9.020	0.397
BXA-70080-4BF-EDIN-0 w/ Mount Pipe	A	From Leg	4.000	0.000	90.000	No Ice	3.807	3.970	0.030
			0.000			1/2" Ice	4.171	4.578	0.068
			0.000			1" Ice	4.543	5.195	0.112
						2" Ice	5.314	6.460	0.219
BXA-70080-4BF-EDIN-0 w/ Mount Pipe	B	From Leg	4.000	0.000	90.000	No Ice	3.807	3.970	0.030
			0.000			1/2" Ice	4.171	4.578	0.068
			0.000			1" Ice	4.543	5.195	0.112
						2" Ice	5.314	6.460	0.219
BXA-70080-4BF-EDIN-0 w/ Mount Pipe	C	From Leg	4.000	0.000	90.000	No Ice	3.807	3.970	0.030
			0.000			1/2" Ice	4.171	4.578	0.068
			0.000			1" Ice	4.543	5.195	0.112
						2" Ice	5.314	6.460	0.219
GPS_A	A	From Leg	4.000	0.000	90.000	No Ice	0.255	0.255	0.001
			0.000			1/2" Ice	0.320	0.320	0.005
			0.000			1" Ice	0.393	0.393	0.010
						2" Ice	0.561	0.561	0.025
DB-T1-6Z-8AB-0Z	A	From Leg	4.000	0.000	90.000	No Ice	4.800	2.000	0.044
			0.000			1/2" Ice	5.070	2.193	0.080
			0.000			1" Ice	5.348	2.393	0.120
						2" Ice	5.926	2.815	0.213
(2) NHH-65B-R2B w/ Mount Pipe	A	From Leg	4.000	0.000	90.000	No Ice	4.090	3.290	0.069
			0.000			1/2" Ice	4.480	3.670	0.132
			0.000			1" Ice	4.880	4.060	0.205
						2" Ice	5.700	4.860	0.385
(2) NHH-65B-R2B w/ Mount Pipe	B	From Leg	4.000	0.000	90.000	No Ice	4.090	3.290	0.069
			0.000			1/2" Ice	4.480	3.670	0.132
			0.000			1" Ice	4.880	4.060	0.205
						2" Ice	5.700	4.860	0.385
(2) NHH-65B-R2B w/ Mount Pipe	C	From Leg	4.000	0.000	90.000	No Ice	4.090	3.290	0.069
			0.000			1/2" Ice	4.480	3.670	0.132
			0.000			1" Ice	4.880	4.060	0.205
						2" Ice	5.700	4.860	0.385
RFV01U-D1A	A	From Leg	4.000	0.000	90.000	No Ice	1.875	1.250	0.084
			0.000			1/2" Ice	2.045	1.393	0.103
			0.000			1" Ice	2.223	1.543	0.124
						2" Ice	2.601	1.865	0.175
RFV01U-D1A	B	From Leg	4.000	0.000	90.000	No Ice	1.875	1.250	0.084
			0.000			1/2" Ice	2.045	1.393	0.103
			0.000			1" Ice	2.223	1.543	0.124
						2" Ice	2.601	1.865	0.175
RFV01U-D1A	C	From Leg	4.000	0.000	90.000	No Ice	1.875	1.250	0.084
			0.000			1/2" Ice	2.045	1.393	0.103
			0.000			1" Ice	2.223	1.543	0.124
						2" Ice	2.601	1.865	0.175
RFV01U-D2A	A	From Leg	4.000	0.000	90.000	No Ice	1.875	1.013	0.070
			0.000			1/2" Ice	2.045	1.145	0.087
			0.000			1" Ice	2.223	1.284	0.106
						2" Ice	2.601	1.585	0.153
RFV01U-D2A	B	From Leg	4.000	0.000	90.000	No Ice	1.875	1.013	0.070
			0.000			1/2" Ice	2.045	1.145	0.087
			0.000			1" Ice	2.223	1.284	0.106
						2" Ice	2.601	1.585	0.153
RFV01U-D2A	C	From Leg	4.000	0.000	90.000	No Ice	1.875	1.013	0.070
			0.000			1/2" Ice	2.045	1.145	0.087

Description	Face or Leg	Offset Type	Offsets: Horz Lateral Vert ft ft ft	Azimuth Adjustment °	Placement ft		C_AA_A Front ft^2	C_AA_A Side ft^2	Weight K
			0.000			1" Ice	2.223	1.284	0.106
						2" Ice	2.601	1.585	0.153
Platform Mount [LP 1201-1]	C	None		0.000	90.000	No Ice	18.380	18.380	2.100
						1/2" Ice	22.110	22.110	2.652
						1" Ice	25.870	25.870	3.263
						2" Ice	33.470	33.470	4.662
Miscellaneous [NA 507-1]	C	None		0.000	93.000	No Ice	4.560	4.560	0.245
						1/2" Ice	6.390	6.390	0.311
						1" Ice	8.180	8.180	0.402
						2" Ice	11.660	11.660	0.657
(2) L 2.5x2.5x3/16x6'	A	From Leg	4.000	0.000	90.000	No Ice	1.500	0.005	0.025
			0.000			1/2" Ice	1.918	0.024	0.034
			5.000			1" Ice	2.343	0.049	0.048
						2" Ice	3.215	0.123	0.091
(2) L 2.5x2.5x3/16x6'	B	From Leg	4.000	0.000	90.000	No Ice	1.500	0.005	0.025
			0.000			1/2" Ice	1.918	0.024	0.034
			5.000			1" Ice	2.343	0.049	0.048
						2" Ice	3.215	0.123	0.091
(2) L 2.5x2.5x3/16x6'	C	From Leg	4.000	0.000	90.000	No Ice	1.500	0.005	0.025
			0.000			1/2" Ice	1.918	0.024	0.034
			5.000			1" Ice	2.343	0.049	0.048
						2" Ice	3.215	0.123	0.091
Side Arm Mount [SO 102-3]	A	None		0.000	95.000	No Ice	3.600	3.600	0.075
						1/2" Ice	4.180	4.180	0.105
						1" Ice	4.750	4.750	0.135
						2" Ice	5.900	5.900	0.195
*									
GPS_A	C	From Leg	3.000	0.000	73.000	No Ice	0.255	0.255	0.001
			0.000			1/2" Ice	0.320	0.320	0.005
			2.000			1" Ice	0.393	0.393	0.010
						2" Ice	0.561	0.561	0.025
Side Arm Mount [SO 701-1]	C	From Leg	1.500	0.000	73.000	No Ice	0.850	1.670	0.065
			0.000			1/2" Ice	1.140	2.340	0.079
			0.000			1" Ice	1.430	3.010	0.093
						2" Ice	2.010	4.350	0.121
*									

Dishes

Description	Face or Leg	Dish Type	Offset Type	Offsets: Horz Lateral Vert ft	Azimuth Adjustment °	3 dB Beam Width °	Elevation ft	Outside Diameter ft		Aperture Area ft^2	Weight K
Radiowaves HPD2-4.7	A	Paraboloid w/Shroud (HP)	From Leg	6.000	75.000		178.000	2.042	No Ice	3.270	0.027
				0.000					1/2" Ice	3.550	0.050
				-1.000					1" Ice	3.820	0.060
									2" Ice	4.360	0.100
Radiowaves HPD2-4.7	B	Paraboloid w/Shroud (HP)	From Leg	6.000	-24.000		178.000	2.042	No Ice	3.270	0.027
				0.000					1/2" Ice	3.550	0.050
				-1.000					1" Ice	3.820	0.060

Description	Face or Leg	Dish Type	Offset Type	Offsets: Horz Lateral Vert ft	Azimuth Adjustment °	3 dB Beam Width °	Elevation ft	Outside Diameter ft		Aperture Area ft^2	Weight K
									2" Ice	4.360	0.100
*											
*											

Load Combinations

Comb. No.	Description
1	Dead Only
2	1.2 Dead+1.0 Wind 0 deg - No Ice
3	0.9 Dead+1.0 Wind 0 deg - No Ice
4	1.2 Dead+1.0 Wind 30 deg - No Ice
5	0.9 Dead+1.0 Wind 30 deg - No Ice
6	1.2 Dead+1.0 Wind 60 deg - No Ice
7	0.9 Dead+1.0 Wind 60 deg - No Ice
8	1.2 Dead+1.0 Wind 90 deg - No Ice
9	0.9 Dead+1.0 Wind 90 deg - No Ice
10	1.2 Dead+1.0 Wind 120 deg - No Ice
11	0.9 Dead+1.0 Wind 120 deg - No Ice
12	1.2 Dead+1.0 Wind 150 deg - No Ice
13	0.9 Dead+1.0 Wind 150 deg - No Ice
14	1.2 Dead+1.0 Wind 180 deg - No Ice
15	0.9 Dead+1.0 Wind 180 deg - No Ice
16	1.2 Dead+1.0 Wind 210 deg - No Ice
17	0.9 Dead+1.0 Wind 210 deg - No Ice
18	1.2 Dead+1.0 Wind 240 deg - No Ice
19	0.9 Dead+1.0 Wind 240 deg - No Ice
20	1.2 Dead+1.0 Wind 270 deg - No Ice
21	0.9 Dead+1.0 Wind 270 deg - No Ice
22	1.2 Dead+1.0 Wind 300 deg - No Ice
23	0.9 Dead+1.0 Wind 300 deg - No Ice
24	1.2 Dead+1.0 Wind 330 deg - No Ice
25	0.9 Dead+1.0 Wind 330 deg - No Ice
26	1.2 Dead+1.0 Ice+1.0 Temp
27	1.2 Dead+1.0 Wind 0 deg+1.0 Ice+1.0 Temp
28	1.2 Dead+1.0 Wind 30 deg+1.0 Ice+1.0 Temp
29	1.2 Dead+1.0 Wind 60 deg+1.0 Ice+1.0 Temp
30	1.2 Dead+1.0 Wind 90 deg+1.0 Ice+1.0 Temp
31	1.2 Dead+1.0 Wind 120 deg+1.0 Ice+1.0 Temp
32	1.2 Dead+1.0 Wind 150 deg+1.0 Ice+1.0 Temp
33	1.2 Dead+1.0 Wind 180 deg+1.0 Ice+1.0 Temp
34	1.2 Dead+1.0 Wind 210 deg+1.0 Ice+1.0 Temp
35	1.2 Dead+1.0 Wind 240 deg+1.0 Ice+1.0 Temp
36	1.2 Dead+1.0 Wind 270 deg+1.0 Ice+1.0 Temp
37	1.2 Dead+1.0 Wind 300 deg+1.0 Ice+1.0 Temp
38	1.2 Dead+1.0 Wind 330 deg+1.0 Ice+1.0 Temp
39	Dead+Wind 0 deg - Service
40	Dead+Wind 30 deg - Service
41	Dead+Wind 60 deg - Service
42	Dead+Wind 90 deg - Service
43	Dead+Wind 120 deg - Service
44	Dead+Wind 150 deg - Service
45	Dead+Wind 180 deg - Service
46	Dead+Wind 210 deg - Service
47	Dead+Wind 240 deg - Service
48	Dead+Wind 270 deg - Service

Comb. No.	Description
49	Dead+Wind 300 deg - Service
50	Dead+Wind 330 deg - Service

Maximum Member Forces

Section No.	Elevation ft	Component Type	Condition	Gov. Load Comb.	Axial K	Major Axis Moment kip-ft	Minor Axis Moment kip-ft
L1	182 - 177	Pole	Max Tension	3	0.000	-0.000	-0.000
			Max. Compression	26	-3.464	0.685	0.542
			Max. Mx	20	-0.723	14.610	0.042
			Max. My	2	-0.730	0.087	14.514
			Max. Vy	20	-2.464	14.610	0.042
			Max. Vx	2	-2.462	0.087	14.514
			Max. Torque	4			0.968
L2	177 - 172	Pole	Max Tension	1	0.000	0.000	0.000
			Max. Compression	26	-4.215	0.053	0.926
			Max. Mx	20	-0.912	29.893	-0.122
			Max. My	2	-0.968	-0.231	28.967
			Max. Vy	20	-3.263	29.893	-0.122
			Max. Vx	2	-3.038	-0.231	28.967
			Max. Torque	18			-1.442
L3	172 - 167	Pole	Max Tension	1	0.000	0.000	0.000
			Max. Compression	26	-21.222	0.025	2.825
			Max. Mx	20	-5.174	57.442	0.662
			Max. My	2	-5.260	-0.440	56.445
			Max. Vy	20	-12.845	57.442	0.662
			Max. Vx	2	-12.577	-0.440	56.445
			Max. Torque	20			-2.594
L4	167 - 162	Pole	Max Tension	1	0.000	0.000	0.000
			Max. Compression	26	-21.929	-0.020	2.942
			Max. Mx	20	-5.568	122.605	0.597
			Max. My	2	-5.652	-0.655	120.266
			Max. Vy	20	-13.226	122.605	0.597
			Max. Vx	2	-12.957	-0.655	120.266
			Max. Torque	20			-2.593
L5	162 - 157	Pole	Max Tension	1	0.000	0.000	0.000
			Max. Compression	26	-22.669	-0.067	3.052
			Max. Mx	20	-6.001	189.687	0.524
			Max. My	2	-6.084	-0.871	186.004
			Max. Vy	20	-13.616	189.687	0.524
			Max. Vx	2	-13.346	-0.871	186.004
			Max. Torque	20			-2.592
L6	157 - 152	Pole	Max Tension	1	0.000	0.000	0.000
			Max. Compression	26	-34.720	-0.127	3.198
			Max. Mx	20	-9.802	291.620	0.461
			Max. My	2	-9.895	-1.095	286.551
			Max. Vy	20	-19.475	291.620	0.461
			Max. Vx	2	-19.197	-1.095	286.551
			Max. Torque	20			-2.590
L7	152 - 147	Pole	Max Tension	1	0.000	0.000	0.000
			Max. Compression	26	-35.570	-0.190	3.334
			Max. Mx	20	-10.404	389.911	0.387
			Max. My	2	-10.493	-1.320	383.454
			Max. Vy	20	-19.859	389.911	0.387
			Max. Vx	2	-19.581	-1.320	383.454
			Max. Torque	20			-2.586
L8	147 - 142	Pole	Max Tension	1	0.000	0.000	0.000
			Max. Compression	26	-36.451	-0.253	3.460

Section No.	Elevation ft	Component Type	Condition	Gov. Load Comb.	Axial K	Major Axis Moment kip-ft	Minor Axis Moment kip-ft
			Max. Mx	20	-11.046	490.120	0.307
			Max. My	2	-11.131	-1.545	482.274
			Max. Vy	20	-20.245	490.120	0.307
			Max. Vx	2	-19.967	-1.545	482.274
			Max. Torque	20			-2.582
L9	142 - 137	Pole	Max Tension	1	0.000	0.000	0.000
			Max. Compression	26	-47.056	-0.397	3.638
			Max. Mx	20	-15.229	608.077	0.233
			Max. My	2	-15.316	-1.788	598.843
			Max. Vy	20	-24.407	608.077	0.233
			Max. Vx	2	-24.122	-1.788	598.843
			Max. Torque	20			-2.577
L10	137 - 133.081	Pole	Max Tension	1	0.000	0.000	0.000
			Max. Compression	26	-47.091	-0.406	3.652
			Max. Mx	20	-15.274	612.126	0.233
			Max. My	2	-15.360	-1.797	602.846
			Max. Vy	20	-24.410	612.126	0.233
			Max. Vx	2	-24.125	-1.797	602.846
			Max. Torque	20			-2.572
L11	133.081 - 131.834	Pole	Max Tension	1	0.000	0.000	0.000
			Max. Compression	26	-48.912	-0.603	3.855
			Max. Mx	20	-16.401	735.467	0.161
			Max. My	2	-16.486	-2.051	724.800
			Max. Vy	20	-24.935	735.467	0.161
			Max. Vx	2	-24.649	-2.051	724.800
			Max. Torque	20			-2.570
L12	131.834 - 126.834	Pole	Max Tension	1	0.000	0.000	0.000
			Max. Compression	26	-50.211	-0.807	4.063
			Max. Mx	20	-17.343	861.105	0.088
			Max. My	2	-17.423	-2.307	849.051
			Max. Vy	20	-25.360	861.105	0.088
			Max. Vx	2	-25.075	-2.307	849.051
			Max. Torque	20			-2.569
L13	126.834 - 121.834	Pole	Max Tension	1	0.000	0.000	0.000
			Max. Compression	26	-51.550	-1.016	4.269
			Max. Mx	20	-18.316	988.889	0.013
			Max. My	2	-18.392	-2.564	975.449
			Max. Vy	20	-25.792	988.889	0.013
			Max. Vx	2	-25.507	-2.564	975.449
			Max. Torque	20			-2.565
L14	121.834 - 116.834	Pole	Max Tension	1	0.000	0.000	0.000
			Max. Compression	26	-52.929	-1.231	4.472
			Max. Mx	20	-19.324	1118.841	-0.065
			Max. My	2	-19.396	-2.822	1104.018
			Max. Vy	20	-26.229	1118.841	-0.065
			Max. Vx	2	-25.944	-2.822	1104.018
			Max. Torque	20			-2.560
L15	116.834 - 111.834	Pole	Max Tension	1	0.000	0.000	0.000
			Max. Compression	26	-54.348	-1.449	4.673
			Max. Mx	20	-20.365	1250.984	-0.144
			Max. My	2	-20.433	-3.080	1234.781
			Max. Vy	20	-26.671	1250.984	-0.144
			Max. Vx	2	-26.386	-3.080	1234.781
			Max. Torque	20			-2.556
L16	111.834 - 106.834	Pole	Max Tension	1	0.000	0.000	0.000

Section No.	Elevation ft	Component Type	Condition	Gov. Load Comb.	Axial K	Major Axis Moment kip-ft	Minor Axis Moment kip-ft
			Max. Compression	26	-55.807	-1.672	4.872
			Max. Mx	20	-21.439	1385.341	-0.224
			Max. My	2	-21.503	-3.339	1367.761
			Max. Vy	20	-27.117	1385.341	-0.224
			Max. Vx	2	-26.832	-3.339	1367.761
			Max. Torque	20			-2.551
L17	106.834 - 101.834	Pole	Max Tension	1	0.000	0.000	0.000
			Max. Compression	26	-57.304	-1.899	5.069
			Max. Mx	20	-22.544	1521.934	-0.305
			Max. My	2	-22.604	-3.599	1502.982
			Max. Vy	20	-27.567	1521.934	-0.305
			Max. Vx	2	-27.283	-3.599	1502.982
			Max. Torque	20			-2.547
L18	101.834 - 96.834	Pole	Max Tension	1	0.000	0.000	0.000
			Max. Compression	26	-58.841	-2.130	5.264
			Max. Mx	20	-23.680	1660.783	-0.387
			Max. My	2	-23.736	-3.859	1640.464
			Max. Vy	20	-28.021	1660.783	-0.387
			Max. Vx	2	-27.738	-3.859	1640.464
			Max. Torque	20			-2.543
L19	96.834 - 87.449	Pole	Max Tension	1	0.000	0.000	0.000
			Max. Compression	26	-61.106	-2.336	5.435
			Max. Mx	20	-25.043	1784.431	-0.459
			Max. My	2	-25.097	-4.086	1762.923
			Max. Vy	20	-28.859	1784.431	-0.459
			Max. Vx	2	-28.576	-4.086	1762.923
			Max. Torque	20			-2.539
L20	87.449 - 86.449	Pole	Max Tension	1	0.000	0.000	0.000
			Max. Compression	26	-75.163	-2.626	6.961
			Max. Mx	20	-31.048	1975.595	-0.308
			Max. My	2	-31.092	-4.402	1953.113
			Max. Vy	20	-33.630	1975.595	-0.308
			Max. Vx	2	-33.453	-4.402	1953.113
			Max. Torque	20			-2.999
L21	86.449 - 85	Pole	Max Tension	1	0.000	0.000	0.000
			Max. Compression	26	-75.706	-2.697	7.021
			Max. Mx	20	-31.408	2024.368	-0.332
			Max. My	2	-31.451	-4.479	2001.645
			Max. Vy	20	-33.759	2024.368	-0.332
			Max. Vx	2	-33.581	-4.479	2001.645
			Max. Torque	20			-2.998
L22	85 - 84.75	Pole	Max Tension	1	0.000	0.000	0.000
			Max. Compression	26	-75.800	-2.713	7.041
			Max. Mx	20	-31.502	2032.800	-0.336
			Max. My	2	-31.545	-4.492	2010.035
			Max. Vy	20	-33.755	2032.800	-0.336
			Max. Vx	2	-33.578	-4.492	2010.035
			Max. Torque	20			-2.998
L23	84.75 - 79.75	Pole	Max Tension	1	0.000	0.000	0.000
			Max. Compression	26	-77.699	-2.956	7.236
			Max. Mx	20	-32.790	2202.503	-0.420
			Max. My	2	-32.829	-4.756	2178.910
			Max. Vy	20	-34.174	2202.503	-0.420
			Max. Vx	2	-33.998	-4.756	2178.910
			Max. Torque	20			-2.997
L24	79.75 - 75	Pole	Max Tension	1	0.000	0.000	0.000
			Max. Compression	26	-79.625	-3.192	7.425

Section No.	Elevation ft	Component Type	Condition	Gov. Load Comb.	Axial K	Major Axis Moment kip-ft	Minor Axis Moment kip-ft
			Max. Mx	20	-34.055	2365.591	-0.500
			Max. My	2	-34.091	-5.007	2341.220
			Max. Vy	20	-34.563	2365.591	-0.500
			Max. Vx	2	-34.388	-5.007	2341.220
			Max. Torque	20			-2.993
L25	75 - 74.75	Pole	Max Tension	1	0.000	0.000	0.000
			Max. Compression	26	-79.769	-3.212	7.453
			Max. Mx	20	-34.178	2374.227	-0.503
			Max. My	2	-34.214	-5.020	2349.815
			Max. Vy	20	-34.569	2374.227	-0.503
			Max. Vx	2	-34.394	-5.020	2349.815
			Max. Torque	20			-2.990
L26	74.75 - 74	Pole	Max Tension	1	0.000	0.000	0.000
			Max. Compression	26	-80.201	-3.244	7.469
			Max. Mx	20	-34.463	2400.174	-0.517
			Max. My	2	-34.498	-5.060	2375.641
			Max. Vy	20	-34.658	2400.174	-0.517
			Max. Vx	2	-34.484	-5.060	2375.641
			Max. Torque	20			-2.990
L27	74 - 73.75	Pole	Max Tension	1	0.000	0.000	0.000
			Max. Compression	26	-80.310	-3.258	7.484
			Max. Mx	20	-34.534	2408.837	-0.521
			Max. My	2	-34.570	-5.073	2384.263
			Max. Vy	20	-34.677	2408.837	-0.521
			Max. Vx	2	-34.503	-5.073	2384.263
			Max. Torque	20			-2.990
L28	73.75 - 68.75	Pole	Max Tension	1	0.000	0.000	0.000
			Max. Compression	26	-82.540	-3.101	7.437
			Max. Mx	20	-35.964	2583.662	-0.647
			Max. My	2	-35.995	-5.073	2558.024
			Max. Vy	20	-35.161	2583.662	-0.647
			Max. Vx	2	-35.008	-5.073	2558.024
			Max. Torque	20			-2.990
L29	68.75 - 63.75	Pole	Max Tension	1	0.000	0.000	0.000
			Max. Compression	26	-84.580	-3.395	7.653
			Max. Mx	20	-37.369	2760.297	-0.649
			Max. My	2	-37.397	-5.255	2733.957
			Max. Vy	20	-35.560	2760.297	-0.649
			Max. Vx	2	-35.408	-5.255	2733.957
			Max. Torque	20			-2.839
L30	63.75 - 58.75	Pole	Max Tension	1	0.000	0.000	0.000
			Max. Compression	26	-86.653	-3.691	7.865
			Max. Mx	20	-38.803	2938.916	-0.650
			Max. My	2	-38.828	-5.436	2911.883
			Max. Vy	20	-35.956	2938.916	-0.650
			Max. Vx	2	-35.805	-5.436	2911.883
			Max. Torque	20			-2.837
L31	58.75 - 53.75	Pole	Max Tension	1	0.000	0.000	0.000
			Max. Compression	26	-88.759	-3.989	8.073
			Max. Mx	20	-40.267	3119.498	-0.652
			Max. My	2	-40.289	-5.617	3091.783
			Max. Vy	20	-36.347	3119.498	-0.652
			Max. Vx	2	-36.198	-5.617	3091.783
			Max. Torque	20			-2.834
L32	53.75 - 42.848	Pole	Max Tension	1	0.000	0.000	0.000
			Max. Compression	26	-90.682	-4.270	8.264
			Max. Mx	20	-41.657	3289.895	-0.654
			Max. My	2	-41.676	-5.786	3261.553
			Max. Vy	20	-36.704	3289.895	-0.654
			Max. Vx	2	-36.557	-5.786	3261.553
			Max. Torque	20			-2.832

Section No.	Elevation ft	Component Type	Condition	Gov. Load Comb.	Axial K	Major Axis Moment kip-ft	Minor Axis Moment kip-ft
L33	42.848 - 41.848	Pole	Max Tension	1	0.000	0.000	0.000
			Max. Compression	26	-95.895	-4.703	8.556
			Max. Mx	20	-45.295	3558.076	-0.654
			Max. My	2	-45.312	-6.046	3528.770
			Max. Vy	20	-37.500	3558.076	-0.654
			Max. Vx	2	-37.353	-6.046	3528.770
			Max. Torque	20			-2.829
L34	41.848 - 36.848	Pole	Max Tension	1	0.000	0.000	0.000
			Max. Compression	26	-98.056	-4.984	8.729
			Max. Mx	20	-46.998	3746.364	-0.656
			Max. My	2	-47.014	-6.226	3716.399
			Max. Vy	20	-37.885	3746.364	-0.656
			Max. Vx	2	-37.740	-6.226	3716.399
			Max. Torque	20			-2.829
L35	36.848 - 31.848	Pole	Max Tension	1	0.000	0.000	0.000
			Max. Compression	26	-100.254	-5.258	8.887
			Max. Mx	20	-48.735	3936.543	-0.657
			Max. My	2	-48.748	-6.406	3905.930
			Max. Vy	20	-38.258	3936.543	-0.657
			Max. Vx	2	-38.114	-6.406	3905.930
			Max. Torque	20			-2.827
L36	31.848 - 26.848	Pole	Max Tension	1	0.000	0.000	0.000
			Max. Compression	26	-102.484	-5.532	9.045
			Max. Mx	20	-50.505	4128.548	-0.659
			Max. My	2	-50.516	-6.585	4097.295
			Max. Vy	20	-38.616	4128.548	-0.659
			Max. Vx	2	-38.474	-6.585	4097.295
			Max. Torque	20			-2.826
L37	26.848 - 21.848	Pole	Max Tension	1	0.000	0.000	0.000
			Max. Compression	26	-104.746	-5.806	9.203
			Max. Mx	20	-52.308	4322.293	-0.660
			Max. My	2	-52.317	-6.764	4290.411
			Max. Vy	20	-38.955	4322.293	-0.660
			Max. Vx	2	-38.815	-6.764	4290.411
			Max. Torque	20			-2.825
L38	21.848 - 16.848	Pole	Max Tension	1	0.000	0.000	0.000
			Max. Compression	26	-107.036	-6.079	9.360
			Max. Mx	20	-54.144	4517.672	-0.661
			Max. My	2	-54.150	-6.942	4485.170
			Max. Vy	20	-39.270	4517.672	-0.661
			Max. Vx	2	-39.131	-6.942	4485.170
			Max. Torque	20			-2.824
L39	16.848 - 11.848	Pole	Max Tension	1	0.000	0.000	0.000
			Max. Compression	26	-109.349	-6.347	9.515
			Max. Mx	20	-56.012	4714.560	-0.662
			Max. My	2	-56.017	-7.119	4681.449
			Max. Vy	20	-39.559	4714.560	-0.662
			Max. Vx	2	-39.422	-7.119	4681.449
			Max. Torque	20			-2.824
L40	11.848 - 6.848	Pole	Max Tension	1	0.000	0.000	0.000
			Max. Compression	26	-111.677	-6.608	9.665
			Max. Mx	20	-57.913	4912.897	-0.663
			Max. My	2	-57.915	-7.296	4879.187
			Max. Vy	20	-39.850	4912.897	-0.663

Section No.	Elevation ft	Component Type	Condition	Gov. Load Comb.	Axial K	Major Axis Moment kip-ft	Minor Axis Moment kip-ft
			Max. Vx	2	-39.715	-7.296	4879.187
			Max. Torque	20			-2.823
L41	6.848 - 1.848	Pole	Max Tension	1	0.000	0.000	0.000
			Max. Compression	26	-113.998	-6.851	9.805
			Max. Mx	20	-59.845	5112.693	-0.664
			Max. My	2	-59.846	-7.472	5078.394
			Max. Vy	20	-40.144	5112.693	-0.664
			Max. Vx	2	-40.010	-7.472	5078.394
			Max. Torque	20			-2.823
L42	1.848 - 0	Pole	Max Tension	1	0.000	0.000	0.000
			Max. Compression	26	-114.833	-6.928	9.849
			Max. Mx	20	-60.552	5186.910	-0.664
			Max. My	2	-60.552	-7.537	5152.397
			Max. Vy	20	-40.276	5186.910	-0.664
			Max. Vx	2	-40.144	-7.537	5152.397
			Max. Torque	20			-2.823

Maximum Reactions

Location	Condition	Gov. Load Comb.	Vertical K	Horizontal, X K	Horizontal, Z K
Pole	Max. Vert	30	114.833	-11.191	-0.004
	Max. H_x	20	60.585	40.226	-0.005
	Max. H_z	3	45.439	-0.024	40.094
	Max. M_x	2	5152.397	-0.024	40.094
	Max. M_z	8	5170.234	-40.130	-0.000
	Max. Torsion	8	2.644	-40.130	-0.000
	Min. Vert	19	45.439	34.866	-20.025
	Min. H_x	8	60.585	-40.130	-0.000
	Min. H_z	14	60.585	0.008	-40.093
	Min. M_x	14	-5147.509	0.008	-40.093
	Min. M_z	20	-5186.910	40.226	-0.005
	Min. Torsion	20	-2.823	40.226	-0.005

Tower Mast Reaction Summary

Load Combination	Vertical K	$Shear_x$ K	$Shear_z$ K	Overturning Moment, M_x kip-ft	Overturning Moment, M_z kip-ft	Torque kip-ft
Dead Only	50.488	0.000	-0.000	-1.879	-0.667	-0.000
1.2 Dead+1.0 Wind 0 deg - No Ice	60.585	0.024	-40.094	-5152.397	-7.537	-0.635
0.9 Dead+1.0 Wind 0 deg - No Ice	45.439	0.024	-40.094	-5047.873	-7.129	-0.633
1.2 Dead+1.0 Wind 30 deg - No Ice	60.585	20.135	-34.681	-4455.317	-2600.945	-1.913
0.9 Dead+1.0 Wind 30 deg - No Ice	45.439	20.135	-34.681	-4364.895	-2548.083	-1.880
1.2 Dead+1.0 Wind 60 deg - No Ice	60.585	34.774	-20.004	-2570.664	-4482.747	-2.619
0.9 Dead+1.0 Wind 60 deg - No Ice	45.439	34.774	-20.004	-2518.252	-4391.926	-2.565

Load Combination	Vertical K	$Shear_x$ K	$Shear_z$ K	Overturning Moment, M_x kip-ft	Overturning Moment, M_z kip-ft	Torque kip-ft
1.2 Dead+1.0 Wind 90 deg - No Ice	60.585	40.130	0.000	-4.263	-5170.234	-2.644
0.9 Dead+1.0 Wind 90 deg - No Ice	45.439	40.130	0.000	-3.553	-5065.570	-2.582
1.2 Dead+1.0 Wind 120 deg - No Ice	60.585	34.791	19.998	2561.288	-4484.059	-2.113
0.9 Dead+1.0 Wind 120 deg - No Ice	45.439	34.791	19.998	2510.317	-4393.236	-2.061
1.2 Dead+1.0 Wind 150 deg - No Ice	60.585	20.141	34.689	4450.251	-2598.773	-0.919
0.9 Dead+1.0 Wind 150 deg - No Ice	45.439	20.141	34.689	4361.164	-2546.011	-0.889
1.2 Dead+1.0 Wind 180 deg - No Ice	60.585	-0.008	40.093	5147.509	2.684	0.733
0.9 Dead+1.0 Wind 180 deg - No Ice	45.439	-0.008	40.093	5044.314	2.804	0.732
1.2 Dead+1.0 Wind 210 deg - No Ice	60.585	-20.204	34.681	4450.502	2612.585	2.156
0.9 Dead+1.0 Wind 210 deg - No Ice	45.439	-20.204	34.681	4361.392	2559.858	2.125
1.2 Dead+1.0 Wind 240 deg - No Ice	60.585	-34.866	20.025	2569.870	4498.553	2.778
0.9 Dead+1.0 Wind 240 deg - No Ice	45.439	-34.866	20.025	2518.658	4407.768	2.724
1.2 Dead+1.0 Wind 270 deg - No Ice	60.585	-40.226	0.005	0.664	5186.910	2.823
0.9 Dead+1.0 Wind 270 deg - No Ice	45.439	-40.226	0.005	1.213	5082.246	2.761
1.2 Dead+1.0 Wind 300 deg - No Ice	60.585	-34.880	-20.003	-2566.972	4499.527	2.262
0.9 Dead+1.0 Wind 300 deg - No Ice	45.439	-34.880	-20.003	-2514.686	4408.715	2.209
1.2 Dead+1.0 Wind 330 deg - No Ice	60.585	-20.188	-34.680	-4453.132	2606.103	0.792
0.9 Dead+1.0 Wind 330 deg - No Ice	45.439	-20.188	-34.680	-4362.774	2553.548	0.761
1.2 Dead+1.0 Ice+1.0 Temp	114.833	0.000	-0.000	-9.849	-6.928	-0.001
1.2 Dead+1.0 Wind 0 deg+1.0 Ice+1.0 Temp	114.833	0.002	-11.183	-1647.030	-8.458	-0.250
1.2 Dead+1.0 Wind 30 deg+1.0 Ice+1.0 Temp	114.833	5.607	-9.674	-1425.818	-831.849	-0.728
1.2 Dead+1.0 Wind 60 deg+1.0 Ice+1.0 Temp	114.833	9.694	-5.579	-826.628	-1430.533	-0.999
1.2 Dead+1.0 Wind 90 deg+1.0 Ice+1.0 Temp	114.833	11.191	0.004	-10.199	-1649.441	-1.008
1.2 Dead+1.0 Wind 120 deg+1.0 Ice+1.0 Temp	114.833	9.702	5.584	805.938	-1431.109	-0.782
1.2 Dead+1.0 Wind 150 deg+1.0 Ice+1.0 Temp	114.833	5.615	9.679	1406.002	-831.749	-0.323
1.2 Dead+1.0 Wind 180 deg+1.0 Ice+1.0 Temp	114.833	0.002	11.183	1627.000	-6.427	0.272
1.2 Dead+1.0 Wind 210 deg+1.0 Ice+1.0 Temp	114.833	-5.622	9.674	1405.837	821.098	0.789
1.2 Dead+1.0 Wind 240 deg+1.0 Ice+1.0 Temp	114.833	-9.714	5.584	807.670	1420.871	1.039
1.2 Dead+1.0 Wind 270 deg+1.0 Ice+1.0 Temp	114.833	-11.211	-0.002	-9.492	1640.020	1.047
1.2 Dead+1.0 Wind 300 deg+1.0 Ice+1.0 Temp	114.833	-9.721	-5.585	-826.188	1421.372	0.809
1.2 Dead+1.0 Wind 330 deg+1.0 Ice+1.0 Temp	114.833	-5.625	-9.677	-1425.543	819.927	0.287

Load Combination	Vertical K	$Shear_x$ K	$Shear_z$ K	Overturning Moment, M_x kip-ft	Overturning Moment, M_z kip-ft	Torque kip-ft
Dead+Wind 0 deg - Service	50.488	0.005	-8.706	-1110.684	-2.127	-0.141
Dead+Wind 30 deg - Service	50.488	4.372	-7.530	-960.650	-560.434	-0.426
Dead+Wind 60 deg - Service	50.488	7.551	-4.344	-554.937	-965.591	-0.587
Dead+Wind 90 deg - Service	50.488	8.713	0.000	-2.409	-1113.619	-0.596
Dead+Wind 120 deg - Service	50.488	7.554	4.342	549.937	-965.877	-0.481
Dead+Wind 150 deg - Service	50.488	4.373	7.532	956.583	-559.974	-0.212
Dead+Wind 180 deg - Service	50.488	-0.002	8.705	1106.666	0.068	0.165
Dead+Wind 210 deg - Service	50.488	-4.387	7.530	956.655	561.937	0.492
Dead+Wind 240 deg - Service	50.488	-7.570	4.348	551.804	968.019	0.630
Dead+Wind 270 deg - Service	50.488	-8.734	0.001	-1.353	1116.232	0.636
Dead+Wind 300 deg - Service	50.488	-7.574	-4.343	-554.162	968.207	0.506
Dead+Wind 330 deg - Service	50.488	-4.383	-7.530	-960.177	560.525	0.173

Solution Summary

	Sum of Applied Forces			Sum of Reactions			
Load Comb.	PX K	PY K	PZ K	PX K	PY K	PZ K	% Error
1	0.000	-50.488	0.000	0.000	50.488	0.000	0.000%
2	0.024	-60.585	-40.094	-0.024	60.585	40.094	0.000%
3	0.024	-45.439	-40.094	-0.024	45.439	40.094	0.000%
4	20.135	-60.585	-34.681	-20.135	60.585	34.681	0.000%
5	20.135	-45.439	-34.681	-20.135	45.439	34.681	0.000%
6	34.774	-60.585	-20.004	-34.774	60.585	20.004	0.000%
7	34.774	-45.439	-20.004	-34.774	45.439	20.004	0.000%
8	40.130	-60.585	0.000	-40.130	60.585	-0.000	0.000%
9	40.130	-45.439	0.000	-40.130	45.439	-0.000	0.000%
10	34.791	-60.585	19.998	-34.791	60.585	-19.998	0.000%
11	34.791	-45.439	19.998	-34.791	45.439	-19.998	0.000%
12	20.141	-60.585	34.689	-20.141	60.585	-34.689	0.000%
13	20.141	-45.439	34.689	-20.141	45.439	-34.689	0.000%
14	-0.008	-60.585	40.093	0.008	60.585	-40.093	0.000%
15	-0.008	-45.439	40.093	0.008	45.439	-40.093	0.000%
16	-20.204	-60.585	34.681	20.204	60.585	-34.681	0.000%
17	-20.204	-45.439	34.681	20.204	45.439	-34.681	0.000%
18	-34.866	-60.585	20.025	34.866	60.585	-20.025	0.000%
19	-34.866	-45.439	20.025	34.866	45.439	-20.025	0.000%
20	-40.226	-60.585	0.005	40.226	60.585	-0.005	0.000%
21	-40.226	-45.439	0.005	40.226	45.439	-0.005	0.000%
22	-34.880	-60.585	-20.003	34.880	60.585	20.003	0.000%
23	-34.880	-45.439	-20.003	34.880	45.439	20.003	0.000%
24	-20.188	-60.585	-34.680	20.188	60.585	34.680	0.000%
25	-20.188	-45.439	-34.680	20.188	45.439	34.680	0.000%
26	0.000	-114.833	0.000	-0.000	114.833	0.000	0.000%
27	0.002	-114.833	-11.183	-0.002	114.833	11.183	0.000%
28	5.607	-114.833	-9.674	-5.607	114.833	9.674	0.000%
29	9.694	-114.833	-5.579	-9.694	114.833	5.579	0.000%
30	11.191	-114.833	0.004	-11.191	114.833	-0.004	0.000%
31	9.701	-114.833	5.584	-9.702	114.833	-5.584	0.000%
32	5.615	-114.833	9.679	-5.615	114.833	-9.679	0.000%
33	0.002	-114.833	11.183	-0.002	114.833	-11.183	0.000%
34	-5.622	-114.833	9.674	5.622	114.833	-9.674	0.000%
35	-9.714	-114.833	5.584	9.714	114.833	-5.584	0.000%
36	-11.211	-114.833	-0.002	11.211	114.833	0.002	0.000%
37	-9.721	-114.833	-5.585	9.721	114.833	5.585	0.000%
38	-5.625	-114.833	-9.677	5.625	114.833	9.677	0.000%
39	0.005	-50.488	-8.706	-0.005	50.488	8.706	0.000%
40	4.372	-50.488	-7.530	-4.372	50.488	7.530	0.000%

	Sum of Applied Forces			Sum of Reactions			
Load Comb.	PX K	PY K	PZ K	PX K	PY K	PZ K	% Error
41	7.551	-50.488	-4.344	-7.551	50.488	4.344	0.000%
42	8.713	-50.488	0.000	-8.713	50.488	-0.000	0.000%
43	7.554	-50.488	4.342	-7.554	50.488	-4.342	0.000%
44	4.373	-50.488	7.532	-4.373	50.488	-7.532	0.000%
45	-0.002	-50.488	8.705	0.002	50.488	-8.705	0.000%
46	-4.387	-50.488	7.530	4.387	50.488	-7.530	0.000%
47	-7.570	-50.488	4.348	7.570	50.488	-4.348	0.000%
48	-8.734	-50.488	0.001	8.734	50.488	-0.001	0.000%
49	-7.574	-50.488	-4.343	7.574	50.488	4.343	0.000%
50	-4.383	-50.488	-7.530	4.383	50.488	7.530	0.000%

Non-Linear Convergence Results

Load Combination	Converged?	Number of Cycles	Displacement Tolerance	Force Tolerance
1	Yes	4	0.00000001	0.00001141
2	Yes	6	0.00000001	0.00013464
3	Yes	5	0.00000001	0.00054372
4	Yes	8	0.00000001	0.00017507
5	Yes	7	0.00000001	0.00041241
6	Yes	8	0.00000001	0.00018462
7	Yes	7	0.00000001	0.00043810
8	Yes	6	0.00000001	0.00094424
9	Yes	6	0.00000001	0.00028385
10	Yes	8	0.00000001	0.00017488
11	Yes	7	0.00000001	0.00041263
12	Yes	8	0.00000001	0.00018054
13	Yes	7	0.00000001	0.00042731
14	Yes	6	0.00000001	0.00028904
15	Yes	6	0.00000001	0.00008687
16	Yes	8	0.00000001	0.00018220
17	Yes	7	0.00000001	0.00043148
18	Yes	8	0.00000001	0.00017348
19	Yes	7	0.00000001	0.00040841
20	Yes	6	0.00000001	0.00089429
21	Yes	6	0.00000001	0.00026943
22	Yes	8	0.00000001	0.00018423
23	Yes	7	0.00000001	0.00043685
24	Yes	8	0.00000001	0.00017678
25	Yes	7	0.00000001	0.00041700
26	Yes	5	0.00000001	0.00071854
27	Yes	9	0.00000001	0.00028548
28	Yes	9	0.00000001	0.00072556
29	Yes	9	0.00000001	0.00074960
30	Yes	9	0.00000001	0.00029036
31	Yes	9	0.00000001	0.00069661
32	Yes	9	0.00000001	0.00072005
33	Yes	9	0.00000001	0.00028048
34	Yes	9	0.00000001	0.00071981
35	Yes	9	0.00000001	0.00069255
36	Yes	9	0.00000001	0.00028944
37	Yes	9	0.00000001	0.00074213
38	Yes	9	0.00000001	0.00072067
39	Yes	5	0.00000001	0.00037368
40	Yes	6	0.00000001	0.00043134
41	Yes	6	0.00000001	0.00047216

42	Yes	5	0.00000001	0.00073643
43	Yes	6	0.00000001	0.00041751
44	Yes	6	0.00000001	0.00044928
45	Yes	5	0.00000001	0.00038780
46	Yes	6	0.00000001	0.00046340
47	Yes	6	0.00000001	0.00041858
48	Yes	5	0.00000001	0.00076258
49	Yes	6	0.00000001	0.00047167
50	Yes	6	0.00000001	0.00043875

Maximum Tower Deflections - Service Wind

Section No.	Elevation ft	Horz. Deflection in	Gov. Load Comb.	Tilt °	Twist °
L1	182 - 177	50.233	48	2.625	0.013
L2	177 - 172	47.487	48	2.622	0.013
L3	172 - 167	44.751	48	2.606	0.012
L4	167 - 162	42.036	48	2.582	0.011
L5	162 - 157	39.355	48	2.537	0.009
L6	157 - 152	36.731	48	2.473	0.008
L7	152 - 147	34.185	48	2.389	0.006
L8	147 - 142	31.735	48	2.290	0.006
L9	142 - 137	29.395	48	2.180	0.005
L10	137 - 133.081	27.173	48	2.063	0.004
L11	136.834 - 131.834	27.101	48	2.059	0.004
L12	131.834 - 126.834	24.974	48	1.997	0.004
L13	126.834 - 121.834	22.932	48	1.904	0.003
L14	121.834 - 116.834	20.987	48	1.811	0.003
L15	116.834 - 111.834	19.140	48	1.716	0.003
L16	111.834 - 106.834	17.392	48	1.623	0.002
L17	106.834 - 101.834	15.742	48	1.530	0.002
L18	101.834 - 96.834	14.188	48	1.438	0.002
L19	96.834 - 87.449	12.730	48	1.348	0.002
L20	92.47 - 86.449	11.533	48	1.271	0.002
L21	86.449 - 85	9.965	48	1.208	0.001
L22	85 - 84.75	9.602	48	1.182	0.001
L23	84.75 - 79.75	9.540	48	1.177	0.001
L24	79.75 - 75	8.355	48	1.087	0.001
L25	75 - 74.75	7.316	48	1.003	0.001
L26	74.75 - 74	7.263	48	1.000	0.001
L27	74 - 73.75	7.107	48	0.993	0.001
L28	73.75 - 68.75	7.055	48	0.989	0.001
L29	68.75 - 63.75	6.066	48	0.902	0.001
L30	63.75 - 58.75	5.166	48	0.817	0.001
L31	58.75 - 53.75	4.354	48	0.734	0.001
L32	53.75 - 42.848	3.629	48	0.652	0.001
L33	49.08 - 41.848	3.027	48	0.578	0.001
L34	41.848 - 36.848	2.192	48	0.519	0.000
L35	36.848 - 31.848	1.685	48	0.451	0.000
L36	31.848 - 26.848	1.247	48	0.384	0.000
L37	26.848 - 21.848	0.879	48	0.320	0.000
L38	21.848 - 16.848	0.577	48	0.257	0.000
L39	16.848 - 11.848	0.340	48	0.196	0.000
L40	11.848 - 6.848	0.167	48	0.136	0.000
L41	6.848 - 1.848	0.055	48	0.077	0.000
L42	1.848 - 0	0.004	48	0.020	0.000

Critical Deflections and Radius of Curvature - Service Wind

Elevation ft	Appurtenance	Gov. Load Comb.	Deflection in	Tilt °	Twist °	Radius of Curvature ft
178.000	DS4C06F36D-D	48	48.036	2.624	0.013	28809
177.000	Radiowaves HPD2-4.7	48	47.487	2.622	0.013	28809
168.000	ANT450D6-9	48	42.577	2.588	0.011	9550
157.000	AIR 32 B2A B66AA_T-MOBILE w/ Mount Pipe	48	36.731	2.473	0.008	3880
142.000	800MHZ RRH	48	29.395	2.180	0.005	2531
140.000	APXVSPP18-C-A20 w/ Mount Pipe	48	28.491	2.134	0.004	2581
95.000	Side Arm Mount [SO 102-3]	48	12.219	1.313	0.002	3656
93.000	Miscellaneous [NA 507-1]	48	11.675	1.279	0.002	4265
90.000	HBXX-6517DS-A2M w/ Mount Pipe	48	10.878	1.246	0.002	4663
73.000	GPS_A	48	6.901	0.975	0.001	3501

Maximum Tower Deflections - Design Wind

Section No.	Elevation ft	Horz. Deflection in	Gov. Load Comb.	Tilt °	Twist °
L1	182 - 177	232.581	20	12.180	0.060
L2	177 - 172	219.924	20	12.169	0.060
L3	172 - 167	207.312	20	12.093	0.053
L4	167 - 162	194.794	20	11.984	0.048
L5	162 - 157	182.431	20	11.780	0.040
L6	157 - 152	170.326	20	11.485	0.034
L7	152 - 147	158.570	20	11.099	0.029
L8	147 - 142	147.250	20	10.641	0.025
L9	142 - 137	136.429	20	10.134	0.021
L10	137 - 133.081	126.149	20	9.591	0.018
L11	136.834 - 131.834	125.817	20	9.572	0.018
L12	131.834 - 126.834	115.968	20	9.287	0.017
L13	126.834 - 121.834	106.506	20	8.858	0.015
L14	121.834 - 116.834	97.492	20	8.423	0.013
L15	116.834 - 111.834	88.930	20	7.985	0.012
L16	111.834 - 106.834	80.821	20	7.550	0.011
L17	106.834 - 101.834	73.162	20	7.118	0.010
L18	101.834 - 96.834	65.949	20	6.692	0.009
L19	96.834 - 87.449	59.175	20	6.274	0.008
L20	92.47 - 86.449	53.615	20	5.916	0.007
L21	86.449 - 85	46.329	20	5.621	0.007
L22	85 - 84.75	44.644	20	5.500	0.006
L23	84.75 - 79.75	44.357	20	5.479	0.006
L24	79.75 - 75	38.848	20	5.058	0.006
L25	75 - 74.75	34.018	20	4.665	0.005
L26	74.75 - 74	33.774	20	4.654	0.005
L27	74 - 73.75	33.047	20	4.621	0.005
L28	73.75 - 68.75	32.805	20	4.600	0.005
L29	68.75 - 63.75	28.205	20	4.196	0.004
L30	63.75 - 58.75	24.022	20	3.801	0.004
L31	58.75 - 53.75	20.247	20	3.414	0.003
L32	53.75 - 42.848	16.873	20	3.035	0.003
L33	49.08 - 41.848	14.075	20	2.690	0.002
L34	41.848 - 36.848	10.192	20	2.412	0.002

Section No.	Elevation ft	Horz. Deflection in	Gov. Load Comb.	Tilt °	Twist °
L35	36.848 - 31.848	7.832	20	2.096	0.002
L36	31.848 - 26.848	5.800	20	1.788	0.001
L37	26.848 - 21.848	4.085	20	1.488	0.001
L38	21.848 - 16.848	2.681	20	1.195	0.001
L39	16.848 - 11.848	1.580	20	0.909	0.001
L40	11.848 - 6.848	0.774	20	0.631	0.000
L41	6.848 - 1.848	0.256	20	0.360	0.000
L42	1.848 - 0	0.018	20	0.095	0.000

Critical Deflections and Radius of Curvature - Design Wind

Elevation ft	Appurtenance	Gov. Load Comb.	Deflection in	Tilt °	Twist °	Radius of Curvature ft
178.000	DS4C06F36D-D	20	222.453	12.175	0.060	7040
177.000	Radiowaves HPD2-4.7	20	219.924	12.169	0.060	7040
168.000	ANT450D6-9	20	197.288	12.011	0.049	2302
157.000	AIR 32 B2A B66AA_T-MOBILE w/ Mount Pipe	20	170.326	11.485	0.034	913
142.000	800MHZ RRH	20	136.429	10.134	0.021	580
140.000	APXVSPP18-C-A20 w/ Mount Pipe	20	132.250	9.922	0.020	590
95.000	Side Arm Mount [SO 102-3]	20	56.804	6.110	0.008	803
93.000	Miscellaneous [NA 507-1]	20	54.276	5.950	0.007	936
90.000	HBXX-6517DS-A2M w/ Mount Pipe	20	50.575	5.801	0.007	1022
73.000	GPS_A	20	32.088	4.536	0.005	761

Compression Checks

Pole Design Data

Section No.	Elevation ft	Size	L ft	L_u ft	Kl/r	A in^2	P_u K	ϕP_n K	Ratio $\frac{P_u}{\phi P_n}$
L1	182 - 177 (1)	TP15.678x14.5x0.25	5.000	0.000	0.0	12.242	-0.725	716.154	0.001
L2	177 - 172 (2)	TP16.856x15.678x0.25	5.000	0.000	0.0	13.177	-0.912	770.827	0.001
L3	172 - 167 (3)	TP18.033x16.856x0.25	5.000	0.000	0.0	14.111	-5.193	825.500	0.006
L4	167 - 162 (4)	TP19.211x18.033x0.25	5.000	0.000	0.0	15.046	-5.568	880.173	0.006
L5	162 - 157 (5)	TP20.389x19.211x0.25	5.000	0.000	0.0	15.980	-6.001	934.846	0.006
L6	157 - 152 (6)	TP21.567x20.389x0.25	5.000	0.000	0.0	16.915	-9.802	989.519	0.010
L7	152 - 147 (7)	TP22.745x21.567x0.25	5.000	0.000	0.0	17.849	-10.404	1044.190	0.010
L8	147 - 142 (8)	TP23.922x22.745x0.25	5.000	0.000	0.0	18.784	-11.046	1098.860	0.010
L9	142 - 137 (9)	TP25.1x23.922x0.25	5.000	0.000	0.0	19.719	-15.229	1153.540	0.013
L10	137 - 133.081 (10)	TP26.023x25.1x0.25	3.919	0.000	0.0	19.750	-15.274	1155.350	0.013
L11	133.081 - 131.834 (11)	TP25.806x24.639x0.375	5.000	0.000	0.0	30.269	-16.401	1770.730	0.009
L12	131.834 - 126.834 (12)	TP26.972x25.806x0.375	5.000	0.000	0.0	31.657	-17.343	1851.950	0.009
L13	126.834 -	TP28.139x26.972x0.375	5.000	0.000	0.0	33.046	-18.316	1933.180	0.009

Section No.	Elevation ft	Size	L ft	L_u ft	Kl/r	A in^2	P_u K	ϕP_n K	Ratio $\frac{P_u}{\phi P_n}$
L14	121.834 (13) 121.834 - 116.834 (14)	TP29.305x28.139x0.375	5.000	0.000	0.0	34.434	-19.324	2014.400	0.010
L15	116.834 - 111.834 (15)	TP30.472x29.305x0.375	5.000	0.000	0.0	35.823	-20.365	2095.620	0.010
L16	111.834 - 106.834 (16)	TP31.638x30.472x0.375	5.000	0.000	0.0	37.211	-21.439	2176.840	0.010
L17	106.834 - 101.834 (17)	TP32.805x31.638x0.375	5.000	0.000	0.0	38.599	-22.544	2258.060	0.010
L18	101.834 - 96.834 (18)	TP33.971x32.805x0.375	5.000	0.000	0.0	39.988	-23.680	2339.280	0.010
L19	96.834 - 87.449 (19)	TP36.161x33.971x0.375	9.385	0.000	0.0	41.200	-25.043	2410.180	0.010
L20	87.449 - 86.449 (20)	TP35.643x34.239x0.375	6.021	0.000	0.0	41.977	-31.048	2455.670	0.013
L21	86.449 - 85 (21)	TP35.98x35.643x0.375	1.449	0.000	0.0	42.379	-31.408	2479.180	0.013
L22	85 - 84.75 (22)	TP36.039x35.98x0.375	0.250	0.000	0.0	42.449	-31.502	2483.240	0.013
L23	84.75 - 79.75 (23)	TP37.204x36.039x0.375	5.000	0.000	0.0	43.836	-32.790	2564.380	0.013
L24	79.75 - 75 (24)	TP38.311x37.204x0.375	4.750	0.000	0.0	45.153	-34.055	2641.470	0.013
L25	75 - 74.75 (25)	TP38.369x38.311x0.7	0.250	0.000	0.0	83.693	-34.178	4896.070	0.007
L26	74.75 - 74 (26)	TP38.544x38.369x0.7	0.750	0.000	0.0	84.082	-34.463	4918.790	0.007
L27	74 - 73.75 (27)	TP38.602x38.544x0.375	0.250	0.000	0.0	45.500	-34.534	2661.750	0.013
L28	73.75 - 68.75 (28)	TP39.768x38.602x0.375	5.000	0.000	0.0	46.887	-35.964	2742.900	0.013
L29	68.75 - 63.75 (29)	TP40.933x39.768x0.375	5.000	0.000	0.0	48.274	-37.369	2824.040	0.013
L30	63.75 - 58.75 (30)	TP42.098x40.933x0.375	5.000	0.000	0.0	49.661	-38.803	2905.180	0.013
L31	58.75 - 53.75 (31)	TP43.264x42.098x0.375	5.000	0.000	0.0	51.048	-40.267	2986.330	0.013
L32	53.75 - 42.848 (32)	TP45.805x43.264x0.375	10.902	0.000	0.0	52.344	-41.657	3062.120	0.014
L33	42.848 - 41.848 (33)	TP45.282x43.602x0.438	7.232	0.000	0.0	62.272	-45.295	3642.900	0.012
L34	41.848 - 36.848 (34)	TP46.443x45.282x0.438	5.000	0.000	0.0	63.884	-46.998	3737.220	0.013
L35	36.848 - 31.848 (35)	TP47.604x46.443x0.438	5.000	0.000	0.0	65.496	-48.735	3831.550	0.013
L36	31.848 - 26.848 (36)	TP48.765x47.604x0.438	5.000	0.000	0.0	67.109	-50.505	3925.870	0.013
L37	26.848 - 21.848 (37)	TP49.926x48.765x0.438	5.000	0.000	0.0	68.721	-52.308	4020.200	0.013
L38	21.848 - 16.848 (38)	TP51.087x49.926x0.438	5.000	0.000	0.0	70.334	-54.144	4114.520	0.013
L39	16.848 - 11.848 (39)	TP52.249x51.087x0.438	5.000	0.000	0.0	71.946	-56.012	4208.850	0.013
L40	11.848 - 6.848 (40)	TP53.41x52.249x0.438	5.000	0.000	0.0	73.559	-57.913	4303.170	0.013
L41	6.848 - 1.848 (41)	TP54.571x53.41x0.438	5.000	0.000	0.0	75.171	-59.845	4397.500	0.014
L42	1.848 - 0 (42)	TP55x54.571x0.438	1.848	0.000	0.0	75.767	-60.552	4432.360	0.014

Pole Bending Design Data

Section No.	Elevation ft	Size	M_{ux} kip-ft	ϕM_{nx} kip-ft	Ratio $\frac{M_{ux}}{\phi M_{nx}}$	M_{uy} kip-ft	ϕM_{ny} kip-ft	Ratio $\frac{M_{uy}}{\phi M_{ny}}$
L1	182 - 177 (1)	TP15.678x14.5x0.25	14.650	286.171	0.051	0.000	286.171	0.000
L2	177 - 172 (2)	TP16.856x15.678x0.25	29.893	331.908	0.090	0.000	331.908	0.000
L3	172 - 167 (3)	TP18.033x16.856x0.25	57.561	381.035	0.151	0.000	381.035	0.000
L4	167 - 162 (4)	TP19.211x18.033x0.25	122.606	433.552	0.283	0.000	433.552	0.000
L5	162 - 157 (5)	TP20.389x19.211x0.25	189.688	489.458	0.388	0.000	489.458	0.000
L6	157 - 152 (6)	TP21.567x20.389x0.25	291.620	548.754	0.531	0.000	548.754	0.000
L7	152 - 147 (7)	TP22.745x21.567x0.25	389.911	611.440	0.638	0.000	611.440	0.000
L8	147 - 142 (8)	TP23.922x22.745x0.25	490.120	677.516	0.723	0.000	677.516	0.000
L9	142 - 137 (9)	TP25.1x23.922x0.25	608.077	738.854	0.823	0.000	738.854	0.000
L10	137 - 133.081 (10)	TP26.023x25.1x0.25	612.126	740.899	0.826	0.000	740.899	0.000
L11	133.081 - 131.834 (11)	TP25.806x24.639x0.375	735.467	1168.025	0.630	0.000	1168.025	0.000
L12	131.834 - 126.834 (12)	TP26.972x25.806x0.375	861.108	1278.442	0.674	0.000	1278.442	0.000
L13	126.834 - 121.834 (13)	TP28.139x26.972x0.375	988.892	1393.858	0.709	0.000	1393.858	0.000
L14	121.834 - 116.834 (14)	TP29.305x28.139x0.375	1118.842	1514.258	0.739	0.000	1514.258	0.000
L15	116.834 - 111.834 (15)	TP30.472x29.305x0.375	1250.983	1639.642	0.763	0.000	1639.642	0.000
L16	111.834 - 106.834 (16)	TP31.638x30.472x0.375	1385.342	1770.017	0.783	0.000	1770.017	0.000
L17	106.834 - 101.834 (17)	TP32.805x31.638x0.375	1521.933	1905.375	0.799	0.000	1905.375	0.000
L18	101.834 - 96.834 (18)	TP33.971x32.805x0.375	1660.783	2045.725	0.812	0.000	2045.725	0.000
L19	96.834 - 87.449 (19)	TP36.161x33.971x0.375	1784.433	2172.300	0.821	0.000	2172.300	0.000
L20	87.449 - 86.449 (20)	TP35.643x34.239x0.375	1975.592	2255.525	0.876	0.000	2255.525	0.000
L21	86.449 - 85 (21)	TP35.98x35.643x0.375	2024.367	2299.158	0.880	0.000	2299.158	0.000
L22	85 - 84.75 (22)	TP36.039x35.98x0.375	2032.800	2306.492	0.881	0.000	2306.492	0.000
L23	84.75 - 79.75 (23)	TP37.204x36.039x0.375	2202.500	2441.325	0.902	0.000	2441.325	0.000
L24	79.75 - 75 (24)	TP38.311x37.204x0.375	2365.592	2571.733	0.920	0.000	2571.733	0.000
L25	75 - 74.75 (25)	TP38.369x38.311x0.7	2374.225	4765.783	0.498	0.000	4765.783	0.000
L26	74.75 - 74 (26)	TP38.544x38.369x0.7	2400.175	4810.525	0.499	0.000	4810.525	0.000
L27	74 - 73.75 (27)	TP38.602x38.544x0.375	2408.833	2606.417	0.924	0.000	2606.417	0.000
L28	73.75 - 68.75 (28)	TP39.768x38.602x0.375	2583.658	2746.592	0.941	0.000	2746.592	0.000
L29	68.75 - 63.75 (29)	TP40.933x39.768x0.375	2760.300	2889.008	0.955	0.000	2889.008	0.000
L30	63.75 - 58.75 (30)	TP42.098x40.933x0.375	2938.917	3033.558	0.969	0.000	3033.558	0.000
L31	58.75 - 53.75 (31)	TP43.264x42.098x0.375	3119.500	3180.117	0.981	0.000	3180.117	0.000
L32	53.75 - 42.848 (32)	TP45.805x43.264x0.375	3289.892	3318.717	0.991	0.000	3318.717	0.000
L33	42.848 - 41.848 (33)	TP45.282x43.602x0.438	3558.075	4178.833	0.851	0.000	4178.833	0.000
L34	41.848 - 36.848 (34)	TP46.443x45.282x0.438	3746.367	4369.275	0.857	0.000	4369.275	0.000
L35	36.848 - 31.848 (35)	TP47.604x46.443x0.438	3936.542	4562.317	0.863	0.000	4562.317	0.000
L36	31.848 - 26.848 (36)	TP48.765x47.604x0.438	4128.550	4757.833	0.868	0.000	4757.833	0.000
L37	26.848 - 21.848 (37)	TP49.926x48.765x0.438	4322.292	4955.708	0.872	0.000	4955.708	0.000

Section No.	Elevation ft	Size	M_{ux} kip-ft	ϕM_{nx} kip-ft	Ratio $\frac{M_{ux}}{\phi M_{nx}}$	M_{uy} kip-ft	ϕM_{ny} kip-ft	Ratio $\frac{M_{uy}}{\phi M_{ny}}$
L38	21.848 - 16.848 (38)	TP51.087x49.926x0.438	4517.675	5155.842	0.876	0.000	5155.842	0.000
L39	16.848 - 11.848 (39)	TP52.249x51.087x0.438	4714.558	5358.100	0.880	0.000	5358.100	0.000
L40	11.848 - 6.848 (40)	TP53.41x52.249x0.438	4912.900	5562.375	0.883	0.000	5562.375	0.000
L41	6.848 - 1.848 (41)	TP54.571x53.41x0.438	5112.692	5768.558	0.886	0.000	5768.558	0.000
L42	1.848 - 0 (42)	TP55x54.571x0.438	5186.908	5845.225	0.887	0.000	5845.225	0.000

Pole Shear Design Data

Section No.	Elevation ft	Size	Actual V_u K	ϕV_n K	Ratio $\frac{V_u}{\phi V_n}$	Actual T_u kip-ft	ϕT_n kip-ft	Ratio $\frac{T_u}{\phi T_n}$
L1	182 - 177 (1)	TP15.678x14.5x0.25	2.464	214.846	0.011	0.147	290.277	0.001
L2	177 - 172 (2)	TP16.856x15.678x0.25	3.263	231.248	0.014	1.412	336.289	0.004
L3	172 - 167 (3)	TP18.033x16.856x0.25	12.782	247.650	0.052	2.183	385.685	0.006
L4	167 - 162 (4)	TP19.211x18.033x0.25	13.226	264.052	0.050	2.592	438.465	0.006
L5	162 - 157 (5)	TP20.389x19.211x0.25	13.616	280.454	0.049	2.590	494.628	0.005
L6	157 - 152 (6)	TP21.567x20.389x0.25	19.475	296.856	0.066	2.587	554.174	0.005
L7	152 - 147 (7)	TP22.745x21.567x0.25	19.859	313.258	0.063	2.583	617.105	0.004
L8	147 - 142 (8)	TP23.922x22.745x0.25	20.245	329.659	0.061	2.578	683.418	0.004
L9	142 - 137 (9)	TP25.1x23.922x0.25	24.407	346.061	0.071	2.573	753.116	0.003
L10	137 - 133.081 (10)	TP26.023x25.1x0.25	24.410	346.606	0.070	2.572	755.488	0.003
L11	133.081 - 131.834 (11)	TP25.806x24.639x0.375	24.935	531.220	0.047	2.570	1183.075	0.002
L12	131.834 - 126.834 (12)	TP26.972x25.806x0.375	25.360	555.586	0.046	2.566	1294.100	0.002
L13	126.834 - 121.834 (13)	TP28.139x26.972x0.375	25.793	579.953	0.044	2.561	1410.100	0.002
L14	121.834 - 116.834 (14)	TP29.305x28.139x0.375	26.229	604.319	0.043	2.557	1531.075	0.002
L15	116.834 - 111.834 (15)	TP30.472x29.305x0.375	26.671	628.686	0.042	2.552	1657.033	0.002
L16	111.834 - 106.834 (16)	TP31.638x30.472x0.375	27.117	653.052	0.042	2.548	1787.975	0.001
L17	106.834 - 101.834 (17)	TP32.805x31.638x0.375	27.567	677.419	0.041	2.544	1923.883	0.001
L18	101.834 - 96.834 (18)	TP33.971x32.805x0.375	28.021	701.785	0.040	2.540	2064.775	0.001
L19	96.834 - 87.449 (19)	TP36.161x33.971x0.375	28.859	723.053	0.040	2.537	2191.817	0.001
L20	87.449 - 86.449 (20)	TP35.643x34.239x0.375	33.630	736.700	0.046	2.999	2275.333	0.001
L21	86.449 - 85 (21)	TP35.98x35.643x0.375	33.759	743.754	0.045	2.998	2319.125	0.001
L22	85 - 84.75 (22)	TP36.039x35.98x0.375	33.755	744.972	0.045	2.998	2326.717	0.001
L23	84.75 - 79.75 (23)	TP37.204x36.039x0.375	34.174	769.315	0.044	2.994	2481.258	0.001
L24	79.75 - 75 (24)	TP38.311x37.204x0.375	34.563	792.440	0.044	2.991	2632.683	0.001
L25	75 - 74.75 (25)	TP38.369x38.311x0.7	34.569	1468.820	0.024	2.990	4845.475	0.001
L26	74.75 - 74 (26)	TP38.544x38.369x0.7	34.658	1475.640	0.023	2.990	4890.550	0.001
L27	74 - 73.75 (27)	TP38.602x38.544x0.375	34.677	798.526	0.043	2.990	2673.275	0.001
L28	73.75 - 68.75	TP39.768x38.602x0.375	35.161	822.869	0.043	2.840	2838.742	0.001

Section No.	Elevation ft	Size	Actual V_u K	ϕV_n K	Ratio $\frac{V_u}{\phi V_n}$	Actual T_u kip-ft	ϕT_n kip-ft	Ratio $\frac{T_u}{\phi T_n}$
	(28)							
L29	68.75 - 63.75 (29)	TP40.933x39.768x0.375	35.560	847.212	0.042	2.837	3009.183	0.001
L30	63.75 - 58.75 (30)	TP42.098x40.933x0.375	35.956	871.555	0.041	2.835	3184.600	0.001
L31	58.75 - 53.75 (31)	TP43.264x42.098x0.375	36.347	895.898	0.041	2.832	3364.975	0.001
L32	53.75 - 42.848 (32)	TP45.805x43.264x0.375	36.704	918.635	0.040	2.830	3537.942	0.001
L33	42.848 - 41.848 (33)	TP45.282x43.602x0.438	37.500	1092.870	0.034	2.829	4291.950	0.001
L34	41.848 - 36.848 (34)	TP46.443x45.282x0.438	37.885	1121.170	0.034	2.828	4517.083	0.001
L35	36.848 - 31.848 (35)	TP47.604x46.443x0.438	38.258	1149.460	0.033	2.826	4747.983	0.001
L36	31.848 - 26.848 (36)	TP48.765x47.604x0.438	38.616	1177.760	0.033	2.825	4984.625	0.001
L37	26.848 - 21.848 (37)	TP49.926x48.765x0.438	38.955	1206.060	0.032	2.825	5227.033	0.001
L38	21.848 - 16.848 (38)	TP51.087x49.926x0.438	39.270	1234.360	0.032	2.824	5475.192	0.001
L39	16.848 - 11.848 (39)	TP52.249x51.087x0.438	39.559	1262.650	0.031	2.823	5729.108	0.000
L40	11.848 - 6.848 (40)	TP53.41x52.249x0.438	39.850	1290.950	0.031	2.823	5988.775	0.000
L41	6.848 - 1.848 (41)	TP54.571x53.41x0.438	40.144	1319.250	0.030	2.823	6254.200	0.000
L42	1.848 - 0 (42)	TP55x54.571x0.438	40.276	1329.710	0.030	2.823	6353.758	0.000

Pole Interaction Design Data

Section No.	Elevation ft	Ratio $\frac{P_u}{\phi P_n}$	Ratio $\frac{M_{ux}}{\phi M_{nx}}$	Ratio $\frac{M_{uy}}{\phi M_{ny}}$	Ratio $\frac{V_u}{\phi V_n}$	Ratio $\frac{T_u}{\phi T_n}$	Comb. Stress Ratio	Allow. Stress Ratio	Criteria
L1	182 - 177 (1)	0.001	0.051	0.000	0.011	0.001	0.052 ✔	1.050	4.8.2 ✔
L2	177 - 172 (2)	0.001	0.090	0.000	0.014	0.004	0.092 ✔	1.050	4.8.2 ✔
L3	172 - 167 (3)	0.006	0.151	0.000	0.052	0.006	0.161 ✔	1.050	4.8.2 ✔
L4	167 - 162 (4)	0.006	0.283	0.000	0.050	0.006	0.292 ✔	1.050	4.8.2 ✔
L5	162 - 157 (5)	0.006	0.388	0.000	0.049	0.005	0.397 ✔	1.050	4.8.2 ✔
L6	157 - 152 (6)	0.010	0.531	0.000	0.066	0.005	0.546 ✔	1.050	4.8.2 ✔
L7	152 - 147 (7)	0.010	0.638	0.000	0.063	0.004	0.652 ✔	1.050	4.8.2 ✔
L8	147 - 142 (8)	0.010	0.723	0.000	0.061	0.004	0.738 ✔	1.050	4.8.2 ✔
L9	142 - 137 (9)	0.013	0.823	0.000	0.071	0.003	0.842 ✔	1.050	4.8.2 ✔

Section No.	Elevation ft	Ratio $P_u / \phi P_n$	Ratio $M_{ux} / \phi M_{nx}$	Ratio $M_{uy} / \phi M_{ny}$	Ratio $V_u / \phi V_n$	Ratio $T_u / \phi T_n$	Comb. Stress Ratio	Allow. Stress Ratio	Criteria
L10	137 - 133.081 (10)	0.013	0.826	0.000	0.070	0.003	0.845 ✔	1.050	4.8.2 ✔
L11	133.081 - 131.834 (11)	0.009	0.630	0.000	0.047	0.002	0.641 ✔	1.050	4.8.2 ✔
L12	131.834 - 126.834 (12)	0.009	0.674	0.000	0.046	0.002	0.685 ✔	1.050	4.8.2 ✔
L13	126.834 - 121.834 (13)	0.009	0.709	0.000	0.044	0.002	0.721 ✔	1.050	4.8.2 ✔
L14	121.834 - 116.834 (14)	0.010	0.739	0.000	0.043	0.002	0.750 ✔	1.050	4.8.2 ✔
L15	116.834 - 111.834 (15)	0.010	0.763	0.000	0.042	0.002	0.775 ✔	1.050	4.8.2 ✔
L16	111.834 - 106.834 (16)	0.010	0.783	0.000	0.042	0.001	0.794 ✔	1.050	4.8.2 ✔
L17	106.834 - 101.834 (17)	0.010	0.799	0.000	0.041	0.001	0.811 ✔	1.050	4.8.2 ✔
L18	101.834 - 96.834 (18)	0.010	0.812	0.000	0.040	0.001	0.824 ✔	1.050	4.8.2 ✔
L19	96.834 - 87.449 (19)	0.010	0.821	0.000	0.040	0.001	0.834 ✔	1.050	4.8.2 ✔
L20	87.449 - 86.449 (20)	0.013	0.876	0.000	0.046	0.001	0.891 ✔	1.050	4.8.2 ✔
L21	86.449 - 85 (21)	0.013	0.880	0.000	0.045	0.001	0.895 ✔	1.050	4.8.2 ✔
L22	85 - 84.75 (22)	0.013	0.881	0.000	0.045	0.001	0.896 ✔	1.050	4.8.2 ✔
L23	84.75 - 79.75 (23)	0.013	0.902	0.000	0.044	0.001	0.917 ✔	1.050	4.8.2 ✔
L24	79.75 - 75 (24)	0.013	0.920	0.000	0.044	0.001	0.935 ✔	1.050	4.8.2 ✔
L25	75 - 74.75 (25)	0.007	0.498	0.000	0.024	0.001	0.506 ✔	1.050	4.8.2 ✔
L26	74.75 - 74 (26)	0.007	0.499	0.000	0.023	0.001	0.507 ✔	1.050	4.8.2 ✔
L27	74 - 73.75 (27)	0.013	0.924	0.000	0.043	0.001	0.939 ✔	1.050	4.8.2 ✔
L28	73.75 - 68.75 (28)	0.013	0.941	0.000	0.043	0.001	0.956 ✔	1.050	4.8.2 ✔
L29	68.75 - 63.75 (29)	0.013	0.955	0.000	0.042	0.001	0.971 ✔	1.050	4.8.2 ✔
L30	63.75 - 58.75 (30)	0.013	0.969	0.000	0.041	0.001	0.984 ✔	1.050	4.8.2 ✔
L31	58.75 - 53.75 (31)	0.013	0.981	0.000	0.041	0.001	0.996 ✔	1.050	4.8.2 ✔
L32	53.75 - 42.848 (32)	0.014	0.991	0.000	0.040	0.001	1.007 ✔	1.050	4.8.2 ✔
L33	42.848 - 41.848 (33)	0.012	0.851	0.000	0.034	0.001	0.865 ✔	1.050	4.8.2 ✔
L34	41.848 - 36.848 (34)	0.013	0.857	0.000	0.034	0.001	0.871 ✔	1.050	4.8.2 ✔
L35	36.848 - 31.848 (35)	0.013	0.863	0.000	0.033	0.001	0.877 ✔	1.050	4.8.2 ✔

Section No.	Elevation ft	Ratio $\frac{P_u}{\phi P_n}$	Ratio $\frac{M_{ux}}{\phi M_{nx}}$	Ratio $\frac{M_{uy}}{\phi M_{ny}}$	Ratio $\frac{V_u}{\phi V_n}$	Ratio $\frac{T_u}{\phi T_n}$	Comb. Stress Ratio	Allow. Stress Ratio	Criteria
L36	31.848 - 26.848 (36)	0.013	0.868	0.000	0.033	0.001	0.882 ✔	1.050	4.8.2 ✔
L37	26.848 - 21.848 (37)	0.013	0.872	0.000	0.032	0.001	0.886 ✔	1.050	4.8.2 ✔
L38	21.848 - 16.848 (38)	0.013	0.876	0.000	0.032	0.001	0.890 ✔	1.050	4.8.2 ✔
L39	16.848 - 11.848 (39)	0.013	0.880	0.000	0.031	0.000	0.894 ✔	1.050	4.8.2 ✔
L40	11.848 - 6.848 (40)	0.013	0.883	0.000	0.031	0.000	0.898 ✔	1.050	4.8.2 ✔
L41	6.848 - 1.848 (41)	0.014	0.886	0.000	0.030	0.000	0.901 ✔	1.050	4.8.2 ✔
L42	1.848 - 0 (42)	0.014	0.887	0.000	0.030	0.000	0.902 ✔	1.050	4.8.2 ✔

Section Capacity Table

Section No.	Elevation ft	Component Type	Size	Critical Element	P K	ϕP_{allow} K	% Capacity	Pass Fail
L1	182 - 177	Pole	TP15.678x14.5x0.25	1	-0.725	751.962	5.0	Pass
L2	177 - 172	Pole	TP16.856x15.678x0.25	2	-0.912	809.368	8.7	Pass
L3	172 - 167	Pole	TP18.033x16.856x0.25	3	-5.193	866.775	15.3	Pass
L4	167 - 162	Pole	TP19.211x18.033x0.25	4	-5.568	924.182	27.8	Pass
L5	162 - 157	Pole	TP20.389x19.211x0.25	5	-6.001	981.588	37.8	Pass
L6	157 - 152	Pole	TP21.567x20.389x0.25	6	-9.802	1038.995	52.0	Pass
L7	152 - 147	Pole	TP22.745x21.567x0.25	7	-10.404	1096.399	62.1	Pass
L8	147 - 142	Pole	TP23.922x22.745x0.25	8	-11.046	1153.803	70.3	Pass
L9	142 - 137	Pole	TP25.1x23.922x0.25	9	-15.229	1211.217	80.2	Pass
L10	137 - 133.081	Pole	TP26.023x25.1x0.25	10	-15.274	1213.117	80.5	Pass
L11	133.081 - 131.834	Pole	TP25.806x24.639x0.375	11	-16.401	1859.266	61.1	Pass
L12	131.834 - 126.834	Pole	TP26.972x25.806x0.375	12	-17.343	1944.547	65.3	Pass
L13	126.834 - 121.834	Pole	TP28.139x26.972x0.375	13	-18.316	2029.839	68.7	Pass
L14	121.834 - 116.834	Pole	TP29.305x28.139x0.375	14	-19.324	2115.120	71.5	Pass
L15	116.834 - 111.834	Pole	TP30.472x29.305x0.375	15	-20.365	2200.401	73.8	Pass
L16	111.834 - 106.834	Pole	TP31.638x30.472x0.375	16	-21.439	2285.682	75.7	Pass
L17	106.834 - 101.834	Pole	TP32.805x31.638x0.375	17	-22.544	2370.963	77.2	Pass
L18	101.834 - 96.834	Pole	TP33.971x32.805x0.375	18	-23.680	2456.244	78.4	Pass
L19	96.834 - 87.449	Pole	TP36.161x33.971x0.375	19	-25.043	2530.689	79.4	Pass
L20	87.449 - 86.449	Pole	TP35.643x34.239x0.375	20	-31.048	2578.453	84.8	Pass
L21	86.449 - 85	Pole	TP35.98x35.643x0.375	21	-31.408	2603.139	85.3	Pass
L22	85 - 84.75	Pole	TP36.039x35.98x0.375	22	-31.502	2607.402	85.4	Pass
L23	84.75 - 79.75	Pole	TP37.204x36.039x0.375	23	-32.790	2692.599	87.3	Pass
L24	79.75 - 75	Pole	TP38.311x37.204x0.375	24	-34.055	2773.543	89.0	Pass
L25	75 - 74.75	Pole	TP38.369x38.311x0.7	25	-34.178	5140.873	48.2	Pass

Section No.	Elevation ft	Component Type	Size	Critical Element	P K	øP$_{allow}$ K	% Capacity	Pass Fail
L26	74.75 - 74	Pole	TP38.544x38.369x0.7	26	-34.463	5164.729	48.2	Pass
L27	74 - 73.75	Pole	TP38.602x38.544x0.375	27	-34.534	2794.837	89.4	Pass
L28	73.75 - 68.75	Pole	TP39.768x38.602x0.375	28	-35.964	2880.045	91.0	Pass
L29	68.75 - 63.75	Pole	TP40.933x39.768x0.375	29	-37.369	2965.242	92.4	Pass
L30	63.75 - 58.75	Pole	TP42.098x40.933x0.375	30	-38.803	3050.439	93.7	Pass
L31	58.75 - 53.75	Pole	TP43.264x42.098x0.375	31	-40.267	3135.646	94.9	Pass
L32	53.75 - 42.848	Pole	TP45.805x43.264x0.375	32	-41.657	3215.226	95.9	Pass
L33	42.848 - 41.848	Pole	TP45.282x43.602x0.438	33	-45.295	3825.045	82.4	Pass
L34	41.848 - 36.848	Pole	TP46.443x45.282x0.438	34	-46.998	3924.081	83.0	Pass
L35	36.848 - 31.848	Pole	TP47.604x46.443x0.438	35	-48.735	4023.127	83.5	Pass
L36	31.848 - 26.848	Pole	TP48.765x47.604x0.438	36	-50.505	4122.163	84.0	Pass
L37	26.848 - 21.848	Pole	TP49.926x48.765x0.438	37	-52.308	4221.210	84.4	Pass
L38	21.848 - 16.848	Pole	TP51.087x49.926x0.438	38	-54.144	4320.246	84.8	Pass
L39	16.848 - 11.848	Pole	TP52.249x51.087x0.438	39	-56.012	4419.292	85.2	Pass
L40	11.848 - 6.848	Pole	TP53.41x52.249x0.438	40	-57.913	4518.328	85.5	Pass
L41	6.848 - 1.848	Pole	TP54.571x53.41x0.438	41	-59.845	4617.375	85.8	Pass
L42	1.848 - 0	Pole	TP55x54.571x0.438	42	-60.552	4653.978	85.9	Pass
							Summary	
						Pole (L32)	95.9	Pass
						RATING =	**95.9**	**Pass**

***NOTE: Above stress ratios for reinforced sections are approximate. More exact calculations are presented in Appendix C.**

Program Version 8.0.9.0

APPENDIX B

BASE LEVEL DRAWING

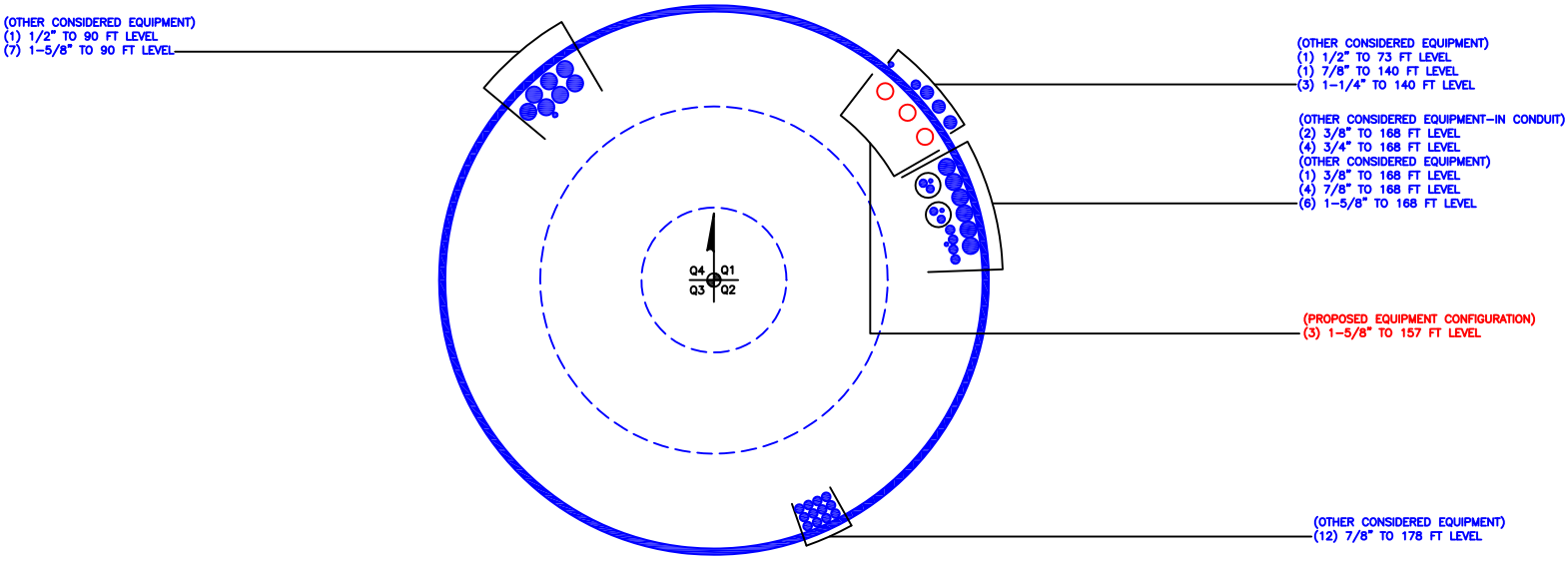

BUSINESS UNIT: 842872

APPENDIX C

ADDITIONAL CALCULATIONS

CCIpole

per TIA-222- H

Site BU: 842872

Work Order: 1933433

Copyright © 2019 Crown Castle

Pole Geometry

	Pole Height Above Base (ft)	Section Length (ft)	Lap Splice Length (ft)	Number of Sides	Top Diameter (in)	Bottom Diameter (in)	Wall Thickness (in)	Bend Radius (in)	Pole Material
1	182	48.919	3.753	18	14.5	26.0233	0.25	Auto	A572-65
2	136.834	49.385	5.021	18	24.64	36.1606	0.375	Auto	A572-65
3	92.47	49.622	6.232	18	34.24	45.8047	0.375	Auto	A572-65
4	49.08	49.08	0	18	43.60	55	0.4375	Auto	A572-65

Reinforcement Configuration

	Bottom Effective Elevation (ft)	Top Effective Elevation (ft)	Type	Model	Number	1	2	3	4	5	6	7	8	9	10	11	12	13	14	15	16	17	18
1	49	75	plate	PL 5.75" x 1"	3			E2						E2						E2			
2	74	85	plate	PL 5.75" x 1"	3				E2						E2						E2		
3																							
4																							
5																							
6																							
7																							
8																							
9																							
10																							

Reinforcement Details

	B (in)	H (in)	Gross Area (in^2)	Pole Face to Centroid (in)	Bottom Termination Type	Bottom Termination Length (in)	Top Termination Type	Top Termination Length (in)	Lu (in)	Net Area (in2)	Bolt Hole Size (in)	Reinforcement Material
1	5.75	1	5.75	0.5	PC 8.8 - M20 (100)	24	PC 8.8 - M20 (100)	24.000	14.000	4.500	1.1875	A572-65
2	5.75	1	5.75	0.5	PC 8.8 - M20 (100)	24	PC 8.8 - M20 (100)	24.000	14.000	4.500	1.1875	A572-65

Connection Details for Custom Reinforcements

Reinforcement	End	# Bolts	N or X	Bolt Spacing (in)	Edge Dist (in)	Weld Grade (ksi)	Transverse (Horiz.) Weld Type	Horiz. Weld Length (in)	Horiz. Groove Depth (in)	Horiz. Groove Angle (deg)	Horiz. Fillet Size (in)	Vertical Weld Length (in)	Vertical Fillet Size (in)	Rev H Connection Capacity (kip)
PL 5.75" x 1"	Top	8	N	3	3	-	-	-	-	-	-	-	-	-
	Bottom	8	N	3	3	-	-	-	-	-	-	-	-	-

TNX Geometry Input

Increment (ft): 5 Export to TNX

	Section Height (ft)	Section Length (ft)	Lap Splice Length (ft)	Number of Sides	Top Diameter (in)	Bottom Diameter (in)	Wall Thickness (in)	Tapered Pole Grade	Weight Multiplier
1	182 - 177	5		18	14.500	15.678	0.25	A572-65	1.000
2	177 - 172	5		18	15.678	16.856	0.25	A572-65	1.000
3	172 - 167	5		18	16.856	18.033	0.25	A572-65	1.000
4	167 - 162	5		18	18.033	19.211	0.25	A572-65	1.000
5	162 - 157	5		18	19.211	20.389	0.25	A572-65	1.000
6	157 - 152	5		18	20.389	21.567	0.25	A572-65	1.000
7	152 - 147	5		18	21.567	22.745	0.25	A572-65	1.000
8	147 - 142	5		18	22.745	23.922	0.25	A572-65	1.000
9	142 - 137	5		18	23.922	25.100	0.25	A572-65	1.000
10	137 - 136.834	3.919	3.753	18	25.100	26.023	0.25	A572-65	1.000
11	136.834 - 131.834	5		18	24.639	25.806	0.375	A572-65	1.000
12	131.834 - 126.834	5		18	25.806	26.972	0.375	A572-65	1.000
13	126.834 - 121.834	5		18	26.972	28.139	0.375	A572-65	1.000
14	121.834 - 116.834	5		18	28.139	29.305	0.375	A572-65	1.000
15	116.834 - 111.834	5		18	29.305	30.472	0.375	A572-65	1.000
16	111.834 - 106.834	5		18	30.472	31.638	0.375	A572-65	1.000
17	106.834 - 101.834	5		18	31.638	32.805	0.375	A572-65	1.000
18	101.834 - 96.834	5		18	32.805	33.971	0.375	A572-65	1.000
19	96.834 - 92.47	9.385	5.021	18	33.971	36.161	0.375	A572-65	1.000
20	92.47 - 86.449	6.021		18	34.239	35.643	0.375	A572-65	1.000
21	86.449 - 85	1.449		18	35.643	35.980	0.375	A572-65	1.000
22	85 - 84.75	0.25		18	35.980	36.039	0.375	A572-65	1.000
23	84.75 - 79.75	5		18	36.039	37.204	0.375	A572-65	1.000
24	79.75 - 75	4.75		18	37.204	38.311	0.375	A572-65	1.000
25	75 - 74.75	0.25		18	38.311	38.369	0.7	A572-65	0.953
26	74.75 - 74	0.75		18	38.369	38.544	0.7	A572-65	0.951
27	74 - 73.75	0.25		18	38.544	38.602	0.375	A572-65	1.000
28	73.75 - 68.75	5		18	38.602	39.768	0.375	A572-65	1.000
29	68.75 - 63.75	5		18	39.768	40.933	0.375	A572-65	1.000
30	63.75 - 58.75	5		18	40.933	42.098	0.375	A572-65	1.000
31	58.75 - 53.75	5		18	42.098	43.264	0.375	A572-65	1.000
32	53.75 - 49.08	10.902	6.232	18	43.264	45.805	0.375	A572-65	1.000
33	49.08 - 41.848	7.232		18	43.602	45.282	0.4375	A572-65	1.000
34	41.848 - 36.848	5		18	45.282	46.443	0.4375	A572-65	1.000
35	36.848 - 31.848	5		18	46.443	47.604	0.4375	A572-65	1.000
36	31.848 - 26.848	5		18	47.604	48.765	0.4375	A572-65	1.000
37	26.848 - 21.848	5		18	48.765	49.926	0.4375	A572-65	1.000
38	21.848 - 16.848	5		18	49.926	51.087	0.4375	A572-65	1.000
39	16.848 - 11.848	5		18	51.087	52.249	0.4375	A572-65	1.000
40	11.848 - 6.848	5		18	52.249	53.410	0.4375	A572-65	1.000
41	6.848 - 1.848	5		18	53.410	54.571	0.4375	A572-65	1.000
42	1.848 - 0	1.848		18	54.571	55.000	0.4375	A572-65	1.000

TNX Section Forces

Increment (ft): 5

	Section Height (ft)	TNX Output		
		P_u (K)	M_{ux} (kip-ft)	V_u (K)
1	182 - 177	0.72	14.65	2.46
2	177 - 172	0.91	29.89	3.26
3	172 - 167	5.19	57.56	12.78
4	167 - 162	5.57	122.61	13.23
5	162 - 157	6.00	189.69	13.62
6	157 - 152	9.80	291.62	19.47
7	152 - 147	10.40	389.91	19.86
8	147 - 142	11.05	490.12	20.25
9	142 - 137	15.23	608.08	24.41
10	137 - 136.834	15.27	612.13	24.41
11	136.834 - 131.834	16.40	735.47	24.93
12	131.834 - 126.834	17.34	861.11	25.36
13	126.834 - 121.834	18.32	988.89	25.79
14	121.834 - 116.834	19.32	1118.84	26.23
15	116.834 - 111.834	20.37	1250.98	26.67
16	111.834 - 106.834	21.44	1385.34	27.12
17	106.834 - 101.834	22.54	1521.93	27.57
18	101.834 - 96.834	23.68	1660.78	28.02
19	96.834 - 92.47	25.04	1784.43	28.86
20	92.47 - 86.449	31.05	1975.60	33.63
21	86.449 - 85	31.41	2024.37	33.76
22	85 - 84.75	31.50	2032.80	33.75
23	84.75 - 79.75	32.79	2202.50	34.17
24	79.75 - 75	34.05	2365.59	34.56
25	75 - 74.75	34.18	2374.23	34.57
26	74.75 - 74	34.46	2400.17	34.66
27	74 - 73.75	34.53	2408.84	34.68
28	73.75 - 68.75	35.96	2583.66	35.16
29	68.75 - 63.75	37.37	2760.30	35.56
30	63.75 - 58.75	38.80	2938.92	35.96
31	58.75 - 53.75	40.27	3119.50	36.35
32	53.75 - 49.08	41.66	3289.90	36.70
33	49.08 - 41.848	45.29	3558.08	37.50
34	41.848 - 36.848	47.00	3746.36	37.88
35	36.848 - 31.848	48.74	3936.54	38.26
36	31.848 - 26.848	50.51	4128.55	38.62
37	26.848 - 21.848	52.31	4322.29	38.95
38	21.848 - 16.848	54.14	4517.67	39.27
39	16.848 - 11.848	56.01	4714.56	39.56
40	11.848 - 6.848	57.91	4912.90	39.85
41	6.848 - 1.848	59.85	5112.69	40.14
42	1.848 - 0	60.55	5186.91	40.28

Analysis Results

Elevation (ft)	Component Type	Size	Critical Element	% Capacity	Pass / Fail
182 - 177	Pole	TP15.678x14.5x0.25	Pole	5.0%	Pass
177 - 172	Pole	TP16.856x15.678x0.25	Pole	8.7%	Pass
172 - 167	Pole	TP18.033x16.856x0.25	Pole	15.2%	Pass
167 - 162	Pole	TP19.211x18.033x0.25	Pole	27.8%	Pass
162 - 157	Pole	TP20.389x19.211x0.25	Pole	37.7%	Pass
157 - 152	Pole	TP21.567x20.389x0.25	Pole	51.9%	Pass
152 - 147	Pole	TP22.745x21.567x0.25	Pole	62.0%	Pass
147 - 142	Pole	TP23.922x22.745x0.25	Pole	70.2%	Pass
142 - 137	Pole	TP25.1x23.922x0.25	Pole	80.1%	Pass
137 - 136.83	Pole	TP26.023x25.1x0.25	Pole	80.4%	Pass
136.83 - 131.83	Pole	TP25.806x24.639x0.375	Pole	61.0%	Pass
131.83 - 126.83	Pole	TP26.972x25.806x0.375	Pole	65.2%	Pass
126.83 - 121.83	Pole	TP28.139x26.972x0.375	Pole	68.6%	Pass
121.83 - 116.83	Pole	TP29.305x28.139x0.375	Pole	71.4%	Pass
116.83 - 111.83	Pole	TP30.472x29.305x0.375	Pole	73.7%	Pass
111.83 - 106.83	Pole	TP31.638x30.472x0.375	Pole	75.6%	Pass
106.83 - 101.83	Pole	TP32.805x31.638x0.375	Pole	77.1%	Pass
101.83 - 96.83	Pole	TP33.971x32.805x0.375	Pole	78.4%	Pass
96.83 - 92.47	Pole	TP36.161x33.971x0.375	Pole	79.3%	Pass
92.47 - 86.45	Pole	TP35.643x34.239x0.375	Pole	84.8%	Pass
86.45 - 85	Pole	TP35.98x35.643x0.375	Pole	85.2%	Pass
85 - 84.75	Pole	TP36.039x35.98x0.375	Pole	85.3%	Pass
84.75 - 79.75	Pole	TP37.204x36.039x0.375	Pole	87.3%	Pass
79.75 - 75	Pole	TP38.311x37.204x0.375	Pole	89.0%	Pass
75 - 74.75	Pole + Reinf.	TP38.369x38.311x0.7	Reinf. 2 Tension Rupture	76.7%	Pass
74.75 - 74	Pole + Reinf.	TP38.544x38.369x0.7	Reinf. 2 Tension Rupture	77.0%	Pass
74 - 73.75	Pole	TP38.602x38.544x0.375	Pole	89.4%	Pass
73.75 - 68.75	Pole	TP39.768x38.602x0.375	Pole	91.0%	Pass
68.75 - 63.75	Pole	TP40.933x39.768x0.375	Pole	92.4%	Pass
63.75 - 58.75	Pole	TP42.098x40.933x0.375	Pole	93.7%	Pass
58.75 - 53.75	Pole	TP43.264x42.098x0.375	Pole	94.9%	Pass
53.75 - 49.08	Pole	TP45.805x43.264x0.375	Pole	95.9%	Pass
49.08 - 41.85	Pole	TP45.282x43.602x0.4375	Pole	82.4%	Pass
41.85 - 36.85	Pole	TP46.443x45.282x0.4375	Pole	83.0%	Pass
36.85 - 31.85	Pole	TP47.604x46.443x0.4375	Pole	83.5%	Pass
31.85 - 26.85	Pole	TP48.765x47.604x0.4375	Pole	84.0%	Pass
26.85 - 21.85	Pole	TP49.926x48.765x0.4375	Pole	84.4%	Pass
21.85 - 16.85	Pole	TP51.087x49.926x0.4375	Pole	84.8%	Pass
16.85 - 11.85	Pole	TP52.249x51.087x0.4375	Pole	85.2%	Pass
11.85 - 6.85	Pole	TP53.41x52.249x0.4375	Pole	85.5%	Pass
6.85 - 1.85	Pole	TP54.571x53.41x0.4375	Pole	85.8%	Pass
1.85 - 0	Pole	TP55x54.571x0.4375	Pole	85.9%	Pass
				Summary	
			Pole	95.9%	Pass
			Reinforcement	77.0%	Pass
			Overall	95.9%	Pass

Additional Calculations

Section Elevation (ft)	Moment of Inertia (in^4)			Area (in^2)			% Capacity*		
	Pole	Reinf.	Total	Pole	Reinf.	Total	Pole	R1	R2
182 - 177	368	n/a	368	12.24	n/a	12.24	5.0%		
177 - 172	459	n/a	459	13.18	n/a	13.18	8.7%		
172 - 167	564	n/a	564	14.11	n/a	14.11	15.2%		
167 - 162	683	n/a	683	15.05	n/a	15.05	27.8%		
162 - 157	819	n/a	819	15.98	n/a	15.98	37.7%		
157 - 152	971	n/a	971	16.91	n/a	16.91	51.9%		
152 - 147	1141	n/a	1141	17.85	n/a	17.85	62.0%		
147 - 142	1329	n/a	1329	18.78	n/a	18.78	70.2%		
142 - 137	1538	n/a	1538	19.72	n/a	19.72	80.1%		
137 - 136.83	1545	n/a	1545	19.75	n/a	19.75	80.4%		
136.83 - 131.83	2472	n/a	2472	30.27	n/a	30.27	61.0%		
131.83 - 126.83	2828	n/a	2828	31.66	n/a	31.66	65.2%		
126.83 - 121.83	3217	n/a	3217	33.04	n/a	33.04	68.6%		
121.83 - 116.83	3640	n/a	3640	34.43	n/a	34.43	71.4%		
116.83 - 111.83	4098	n/a	4098	35.82	n/a	35.82	73.7%		
111.83 - 106.83	4593	n/a	4593	37.21	n/a	37.21	75.6%		
106.83 - 101.83	5127	n/a	5127	38.60	n/a	38.60	77.1%		
101.83 - 96.83	5700	n/a	5700	39.99	n/a	39.99	78.4%		
96.83 - 92.47	6234	n/a	6234	41.20	n/a	41.20	79.3%		
92.47 - 86.45	6594	n/a	6594	41.98	n/a	41.98	84.8%		
86.45 - 85	6785	n/a	6785	42.38	n/a	42.38	85.2%		
85 - 84.75	6819	n/a	6819	42.45	n/a	42.45	85.3%		
84.75 - 79.75	7509	n/a	7509	43.83	n/a	43.83	87.3%		
79.75 - 75	8207	n/a	8207	45.15	n/a	45.15	89.0%		
75 - 74.75	8245	6733	14978	45.22	34.50	79.72	48.3%	76.7%	76.7%
74.75 - 74	8359	6793	15152	45.43	34.50	79.93	48.6%	77.0%	77.0%
74 - 73.75	8397	n/a	8397	45.50	n/a	45.50	89.4%		
73.75 - 68.75	9189	n/a	9189	46.89	n/a	46.89	91.0%		
68.75 - 63.75	10029	n/a	10029	48.27	n/a	48.27	92.4%		
63.75 - 58.75	10918	n/a	10918	49.66	n/a	49.66	93.7%		
58.75 - 53.75	11859	n/a	11859	51.05	n/a	51.05	94.9%		
53.75 - 49.08	12785	n/a	12785	52.34	n/a	52.34	95.9%		
49.08 - 41.85	15816	n/a	15816	62.27	n/a	62.27	82.4%		
41.85 - 36.85	17076	n/a	17076	63.88	n/a	63.88	83.0%		
36.85 - 31.85	18402	n/a	18402	65.49	n/a	65.49	83.5%		
31.85 - 26.85	19795	n/a	19795	67.11	n/a	67.11	84.0%		
26.85 - 21.85	21256	n/a	21256	68.72	n/a	68.72	84.4%		
21.85 - 16.85	22788	n/a	22788	70.33	n/a	70.33	84.8%		
16.85 - 11.85	24391	n/a	24391	71.94	n/a	71.94	85.2%		
11.85 - 6.85	26068	n/a	26068	73.56	n/a	73.56	85.5%		
6.85 - 1.85	27820	n/a	27820	75.17	n/a	75.17	85.8%		
1.85 - 0	28487	n/a	28487	75.76	n/a	75.76	85.9%		

Note: Section capacity checked using 5 degree increments.
Rating per TIA-222-H Section 15.5.

Monopole Base Plate Connection

Site Info	
BU #	842872
Site Name	Rocky Hill, CT
Order #	548366 Rev# 0

Analysis Considerations	
TIA-222 Revision	H
Grout Considered:	No
l_{ar} (in)	3.125

Applied Loads	
Moment (kip-ft)	5187.00
Axial Force (kips)	61.00
Shear Force (kips)	40.00

**TIA-222-H Section 15.5 Applied*

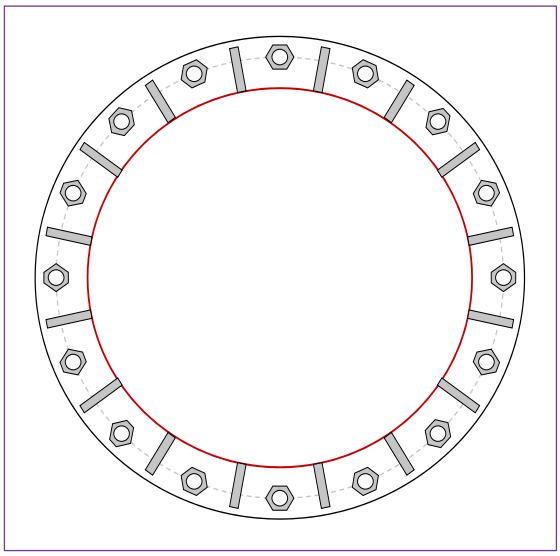

Connection Properties

Anchor Rod Data

(16) 2-1/4" ø bolts (A615-75 N; Fy=75 ksi, Fu=100 ksi) on 64" BC

Base Plate Data

70" OD x 2" Plate (A572-60; Fy=60 ksi, Fu=75 ksi)

Stiffener Data

(16) 36"H x 6.5"W x 1.25"T, Notch: 0.75"
plate: Fy= 65 ksi ; weld: Fy= 80 ksi
horiz. weld: 0.625" fillet
vert. weld: 0.375" fillet

Pole Data

55" x 0.4375" 18-sided pole (A572-65; Fy=65 ksi, Fu=80 ksi)

Analysis Results

Anchor Rod Summary *(units of kips, kip-in)*

Pu_t = 239.21	ϕPn_t = 243.75	**Stress Rating**
Vu = 2.5	ϕVn = 149.1	**93.5%**
Mu = n/a	ϕMn = n/a	Pass

Base Plate Summary

Max Stress (ksi):	40.99	(Roark's Flexural)
Allowable Stress (ksi):	54	
Stress Rating:	**72.3%**	Pass

Stiffener Summary

Horizontal Weld:	**88.1%**	Pass
Vertical Weld:	**24.7%**	Pass
Plate Flexure+Shear:	**2.7%**	Pass
Plate Tension+Shear:	**38.7%**	Pass
Plate Compression:	**32.5%**	Pass

Pole Summary

Punching Shear:	**3.9%**	Pass

Drilled Pier Foundation

BU # :	842872
Site Name:	Rocky Hill, CT
Order Number:	548366 Rev. 0

TIA-222 Revison:	H
Tower Type:	Monopole

Applied Loads	Comp.	Uplift
Moment (kip-ft)	5187	
Axial Force (kips)	61	
Shear Force (kips)	40	

Material Properties		
Concrete Strength, f'c:	3	ksi
Rebar Strength, Fy:	60	ksi
Tie Yield Strength, Fyt:	40	ksi

Pier Design Data		
Depth	17.667	ft
Ext. Above Grade	0.833	ft
Pier Section 1		
From 0.833' above grade to 15.167' below grade		
Pier Diameter	7	ft
Rebar Quantity	20	
Rebar Size	11	
Clear Cover to Ties	3	in
Tie Size	3	
Tie Spacing		in
Rebar Quantity	4	
Rebar Size	11	
Rebar Cage Diameter	71	in
Pier Section 2		
From 15.167' below grade to 17.617' below grade		
Pier Diameter	7	ft
Rebar Quantity	20	
Rebar Size	11	
Clear Cover to Ties	3	in
Tie Size	3	
Tie Spacing		in

Rebar & Pier Options

Embedded Pole Inputs

Belled Pier Inputs

Analysis Results		
Soil Lateral Check	*Compression*	*Uplift*
$D_{v=0}$ (ft from TOC)	4.65	-
Soil Safety Factor	1.98	-
Max Moment (kip-ft)	5368.85	-
Rating*	*63.9%*	-
Soil Vertical Check	*Compression*	*Uplift*
Skin Friction (kips)	439.84	-
End Bearing (kips)	659.53	-
Weight of Concrete (kips)	101.71	-
Total Capacity (kips)	1099.36	-
Axial (kips)	162.71	-
Rating*	*14.1%*	-
Reinforced Concrete Flexure	*Compression*	*Uplift*
Critical Depth (ft from TOC)	4.53	-
Critical Moment (kip-ft)	5368.27	-
Critical Moment Capacity	5861.41	-
Rating*	*87.2%*	-
Reinforced Concrete Shear	*Compression*	*Uplift*
Critical Depth (ft from TOC)	14.39	-
Critical Shear (kip)	562.03	-
Critical Shear Capacity	587.71	-
Rating*	*91.1%*	-

Shear-Friciton Methodology is Applied

Soil Interaction Rating*	**63.9%**
Structural Foundation Rating*	**91.1%**

*Rating per TIA-222-H Section 15.5

Check Limitation	
Apply TIA-222-H Section 15.5:	☑
N/A	☐
Shear Design Options	
Check Shear along Depth of Pier:	☑
Utilize Shear-Friction Methodology:	☑
Override Critical Depth:	☐

Go to Soil Calculations

Soil Profile

Groundwater Depth	8.5	# of Layers	6

Layer	Top (ft)	Bottom (ft)	Thickness (ft)	γ_{soil} (pcf)	$\gamma_{concrete}$ (pcf)	Cohesion (ksf)	Angle of Friction (degrees)	Calculated Ultimate Skin Friction Comp (ksf)	Calculated Ultimate Skin Friction Uplift (ksf)	Ultimate Skin Friction Comp Override (ksf)	Ultimate Skin Friction Uplift Override (ksf)	Ult. Gross Bearing Capacity (ksf)	SPT Blow Count	Soil Type
1	0	3.33	3.33	110	150	0	0	0.000	0.000	0.00	0.00			Cohesionless
2	3.33	5	1.67	120	150	3	0	1.650	1.650	0.00	0.00			Cohesive
3	5	7	2	110	150	1.75	0	0.963	0.963	0.96	0.96			Cohesive
4	7	8.5	1.5	135	150	5	0	2.321	2.321	2.32	2.32			Cohesive
5	8.5	12	3.5	73	87.6	5	0	2.321	2.321	2.32	2.32			Cohesive
6	12	17.667	5.667	73	87.6	5	0	2.321	2.321	2.32	2.32	22.85		Cohesive

ASCE 7 Hazards Report

Address:
No Address at This Location

Standard: ASCE/SEI 7-10
Risk Category: II
Soil Class: D - Stiff Soil

Elevation: 198.53 ft (NAVD 88)
Latitude: 41.660247
Longitude: -72.680717

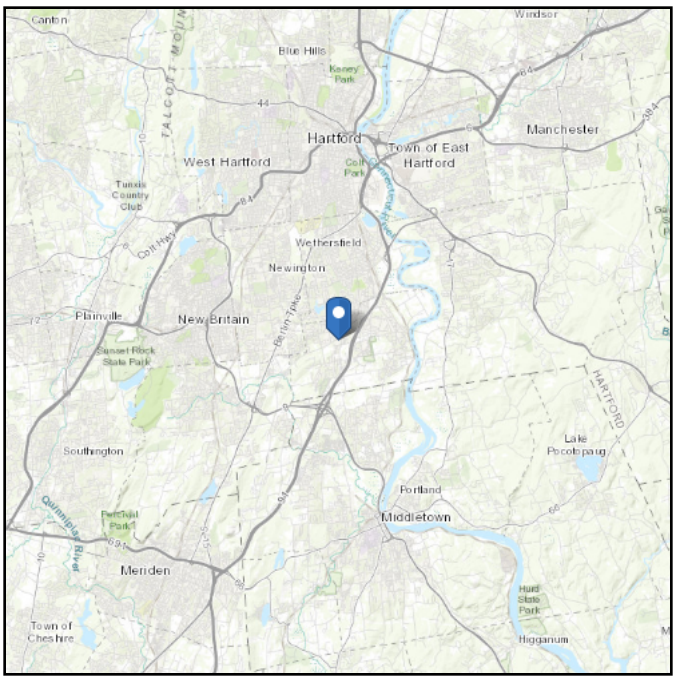

Seismic

Site Soil Class: D - Stiff Soil

Results:

S_S :	0.181	S_{DS} :	0.193
S_1 :	0.063	S_{D1} :	0.101
F_a :	1.6	T_L :	6
F_v :	2.4	PGA :	0.092
S_{MS} :	0.29	PGA_M :	0.147
S_{M1} :	0.152	F_{PGA} :	1.6
		I_e :	1

Seismic Design Category B

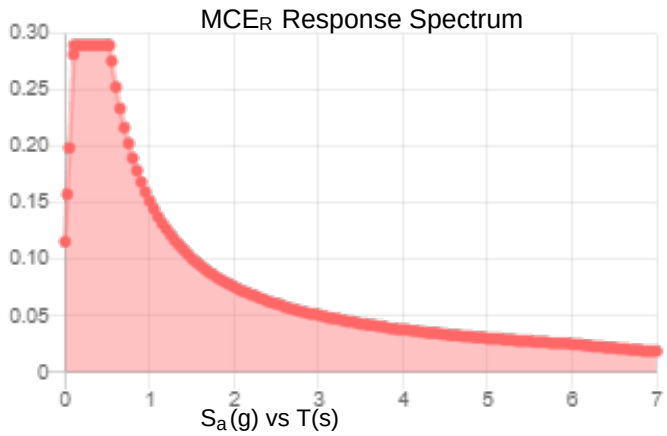

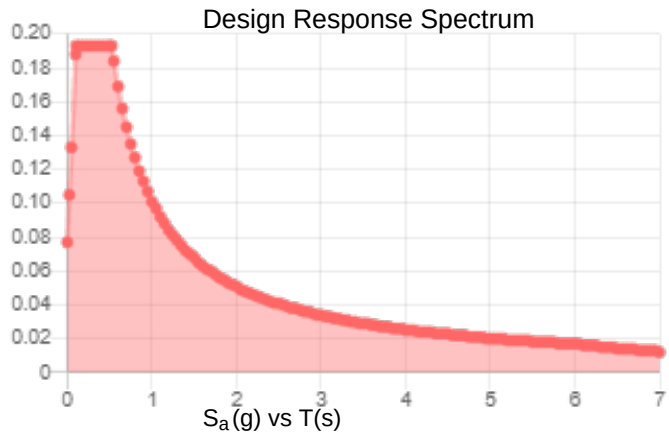

Data Accessed: Fri Apr 16 2021

Date Source: USGS Seismic Design Maps based on ASCE/SEI 7-10, incorporating Supplement 1 and errata of March 31, 2013, and ASCE/SEI 7-10 Table 1.5-2. Additional data for site-specific ground motion procedures in accordance with ASCE/SEI 7-10 Ch. 21 are available from USGS.

Ice

Results:

Ice Thickness:	1.00 in.
Concurrent Temperature:	5 F
Gust Speed:	50 mph
Data Source:	Standard ASCE/SEI 7-10, Figs. 10-2 through 10-8
Date Accessed:	Fri Apr 16 2021

Ice thicknesses on structures in exposed locations at elevations higher than the surrounding terrain and in valleys and gorges may exceed the mapped values.

Values provided are equivalent radial ice thicknesses due to freezing rain with concurrent 3-second gust speeds, for a 50-year mean recurrence interval, and temperatures concurrent with ice thicknesses due to freezing rain. Thicknesses for ice accretions caused by other sources shall be obtained from local meteorological studies. Ice thicknesses in exposed locations at elevations higher than the surrounding terrain and in valleys and gorges may exceed the mapped values.

The ASCE 7 Hazard Tool is provided for your convenience, for informational purposes only, and is provided “as is” and without warranties of any kind. The location data included herein has been obtained from information developed, produced, and maintained by third party providers; or has been extrapolated from maps incorporated in the ASCE 7 standard. While ASCE has made every effort to use data obtained from reliable sources or methodologies, ASCE does not make any representations or warranties as to the accuracy, completeness, reliability, currency, or quality of any data provided herein. Any third-party links provided by this Tool should not be construed as an endorsement, affiliation, relationship, or sponsorship of such third-party content by or from ASCE.

ASCE does not intend, nor should anyone interpret, the results provided by this Tool to replace the sound judgment of a competent professional, having knowledge and experience in the appropriate field(s) of practice, nor to substitute for the standard of care required of such professionals in interpreting and applying the contents of this Tool or the ASCE 7 standard.

In using this Tool, you expressly assume all risks associated with your use. Under no circumstances shall ASCE or its officers, directors, employees, members, affiliates, or agents be liable to you or any other person for any direct, indirect, special, incidental, or consequential damages arising from or related to your use of, or reliance on, the Tool or any information obtained therein. To the fullest extent permitted by law, you agree to release and hold harmless ASCE from any and all liability of any nature arising out of or resulting from any use of data provided by the ASCE 7 Hazard Tool.

Exhibit E

Mount Analysis

Date: **April 12, 2021**

INFINIGY
FROM ZERO TO INFINIGY
the solutions are endless
Infinigy Engineering, PLLC
1033 Watervliet Shaker Road
Albany, NY 12205
518-690-0790
structural@infinigy.com

Darcy Tarr
Crown Castle
3530 Toringdon Way, Suite 300
Charlotte, NC 28277
(704) 405-6589

Subject:	**Mount Modification Report**	
Carrier Designation:	**T-Mobile Anchor**	
	Carrier Site Number:	CT11427A
	Carrier Site Name:	Rocky Hill/Rt3/ Rt 160
Crown Castle Designation:	**Crown Castle BU Number:**	842872
	Crown Castle Site Name:	ROCKY HILL
	Crown Castle JDE Job Number:	639023
	Crown Castle Order Number:	548366 Rev.0
Engineering Firm Designation:	**Infinigy Engineering, PLLC Report Designation:**	1039-Z0001-B
Site Data:	**52 New Britain Avenue, Rocky Hill, Hartford County, CT, 06067** **Latitude 41°39'36.89" Longitude -72°40'50.58"**	
Structure Information:	**Tower Height & Type:**	**181.8 ft Monopole**
	Mount Elevation:	**157.0 ft**
	Mount Type:	**12.5 ft Platform**

Dear Darcy Tarr,

Infinigy Engineering, PLLC is pleased to submit this **"Mount Modification Report"** to determine the structural integrity of T-Mobile's antenna mounting system with the proposed appurtenance and equipment addition on the abovementioned supporting tower structure. Analysis of the existing supporting tower structure is to be completed by others and therefore is not part of this analysis. Analysis of the antenna mounting system as a tie-off point for fall protection or rigging is not part of this document.

The purpose of the analysis is to determine acceptability of the mount stress level. Based on our analysis we have determined the mount stress level to be:

Platform **Sufficient**
***Sufficient upon completion of the changes listed in the 'Recommendations' section of this report.**

This analysis utilizes an ultimate 3-second gust wind speed of 125 mph as required by the 2015 Connecticut State Building Code. Applicable Standard references and design criteria are listed in Section 2 - Analysis Criteria.

Mount analysis prepared by: Alex Mercado, E.I.T.

Respectfully Submitted by:
Emmanuel Poulin, P.E.
518-690-0790
structural@infinigy.com
CT PE License No. 22947

STATE OF CONNECTICUT
EMMANUEL POULIN
No. 22947
LICENSED
PROFESSIONAL ENGINEER

4/12/21

TABLE OF CONTENTS

1) INTRODUCTION

2) ANALYSIS CRITERIA
Table 1 - Proposed Equipment Configuration

3) ANALYSIS PROCEDURE
Table 2 - Documents Provided
3.1) Analysis Method
3.2) Assumptions

4) ANALYSIS RESULTS
Table 3 - Mount Component Stresses vs. Capacity
4.1) Recommendations

5) APPENDIX A
Wire Frame and Rendered Models

6) APPENDIX B
Software Input Calculations

7) APPENDIX C
Software Analysis Output

8) APPENDIX D
Additional Calculations

1) INTRODUCTION

This is an existing 3 sector 12.5 ft Platform, designed by Commscope.

Proposed modifications are being considered in the analysis per Engineering detail drawings provided in Appendix E – Mount Modification Design Drawings.

2) ANALYSIS CRITERIA

Building Code:	2015 IBC / 2018 Connecticut State Building Code
TIA-222 Revision:	TIA-222-H
Risk Category:	II
Ultimate Wind Speed:	125 mph
Exposure Category:	C
Topographic Factor at Base:	1.0
Topographic Factor at Mount:	1.0
Ice Thickness:	2.0 in
Wind Speed with Ice:	50 mph
Seismic S_s:	0.181
Seismic S_1:	0.063
Live Loading Wind Speed:	30 mph
Man Live Load at Mid/End-Points:	250 lb
Man Live Load at Mount Pipes:	500 lb

Table 1 - Proposed Equipment Configuration

Mount Centerline (ft)	Antenna Centerline (ft)	Number of Antennas	Antenna Manufacturer	Antenna Model	Mount / Modification Details
157.0	159.0	3	ERICSSON	AIR 32 B2A B66AA_T-MOBILE	12.5 ft Platform
		3	ERICSSON	AIR6449 B41_T-MOBILE	
		3	RFS/CELWAVE	APXVAALL24_43-U-NA20_TMO	
		3	ERICSSON	RADIO 4415 B25_TMO	
		3	ERICSSON	RADIO 4449 B71 B85A_ T-MOBILE	

3) ANALYSIS PROCEDURE

Table 2 - Documents Provided

Document	Remarks	Reference	Source
Crown Application	T-Mobile Application	548366 Rev.0	CCI Sites
Mount Manufacturer Drawings	Commscope	MCPA12S-12	Infinigy
Mount Modification Drawings	Infinigy Engineering, PLLC	Appendix E	Infinigy
Loading Documents	T-Mobile	RFDS Version 6	TSA

3.1) Analysis Method

RISA-3D (Version 17.0.4), a commercially available analysis software package, was used to create a three-dimensional model of the antenna mounting system and calculate member stresses for various loading cases.

Infinigy Mount Analysis Tool V2.1.4, a tool internally developed by Infinigy, was used to calculate wind loading on all appurtenances, dishes and mount members for various loading cases. Selected output from the analysis is included in Appendix B “Software Input Calculations”.

This analysis was performed in accordance with Crown Castle’s ENG-SOW-10208 *Tower Mount Analysis* (Revision B).

3.2) Assumptions

1) The antenna mounting system was properly fabricated, installed and maintained in good condition in accordance with its original design and manufacturer's specifications.
2) The configuration of antennas, mounts, and other appurtenances are as specified in Table 1 and the referenced drawings.
3) All member connections are assumed to have been designed to meet or exceed the load carrying capacity of the connected member unless otherwise specified in this report.
4) The analysis will be required to be revised if the existing conditions in the field differ from those shown in the above-referenced documents or assumed in this analysis. No allowance was made for any damaged, missing, or rusted members.
5) Prior structural modifications to the tower mounting system are assumed to be installed as shown per available data.
6) Steel grades have been assumed as follows, unless noted otherwise:

Channel, Solid Round, Angle, Plate	ASTM A36 (GR 36)
HSS (Rectangular)	ASTM A500 (GR B-46)
Pipe	ASTM A53 (GR 35)
Connection Bolts	ASTM A325

This analysis may be affected if any assumptions are not valid or have been made in error. Infinigy Engineering, PLLC should be notified to determine the effect on the structural integrity of the antenna mounting system.

4) ANALYSIS RESULTS

Table 3 - Mount Component Stresses vs. Capacity (Platform, All Sectors)

Notes	Component	Critical Member	Centerline (ft)	% Capacity	Pass / Fail
1,2,3	Mount Pipe(s)	MP2	157.0	64.0	Pass
	Horizontal(s)	HOR1		25.5	Pass
	Standoff(s)	SA2		20.9	Pass
	Handrail(s)	HR3		64.4	Pass
	Ring Plate(s)	CA3		46.8	Pass
	Corner Plate(s)	P3		38.9	Pass
	Kicker(s)	M110		34.0	Pass
	Mount Connection(s)			16.6	Pass

Structure Rating (max from all components) =	64.0%

Notes:
1) See additional documentation in "Appendix C - Software Analysis Output" for calculations supporting the % capacity consumed.
2) See additional documentation in “Appendix D – Additional Calculations” for detailed mount connection calculations.
3) All sectors are typical

4.1) Recommendations

The mount has sufficient capacity to carry the proposed loading configuration. In order for the results of the analysis to be considered valid, the structural modifications listed below must be completed.

1. Installation of (1) Site Pro 1 HRK12 Support Rail Kit.
2. Installation of (1) Site Pro 1 PRK-SFS Reinforcement Kit.
3. Remove existing mount pipe and replace with (1) 2.0 STD 8’ long mount with (1) Site Pro 1 SCX43-K Crossover Plate per sector.

Engineering detail drawings have been provided in Appendix E – Mount Modification Design Drawings. Connection from the mount to the tower and local stresses on the tower are sufficient.

APPENDIX A

WIRE FRAME AND RENDERED MODELS

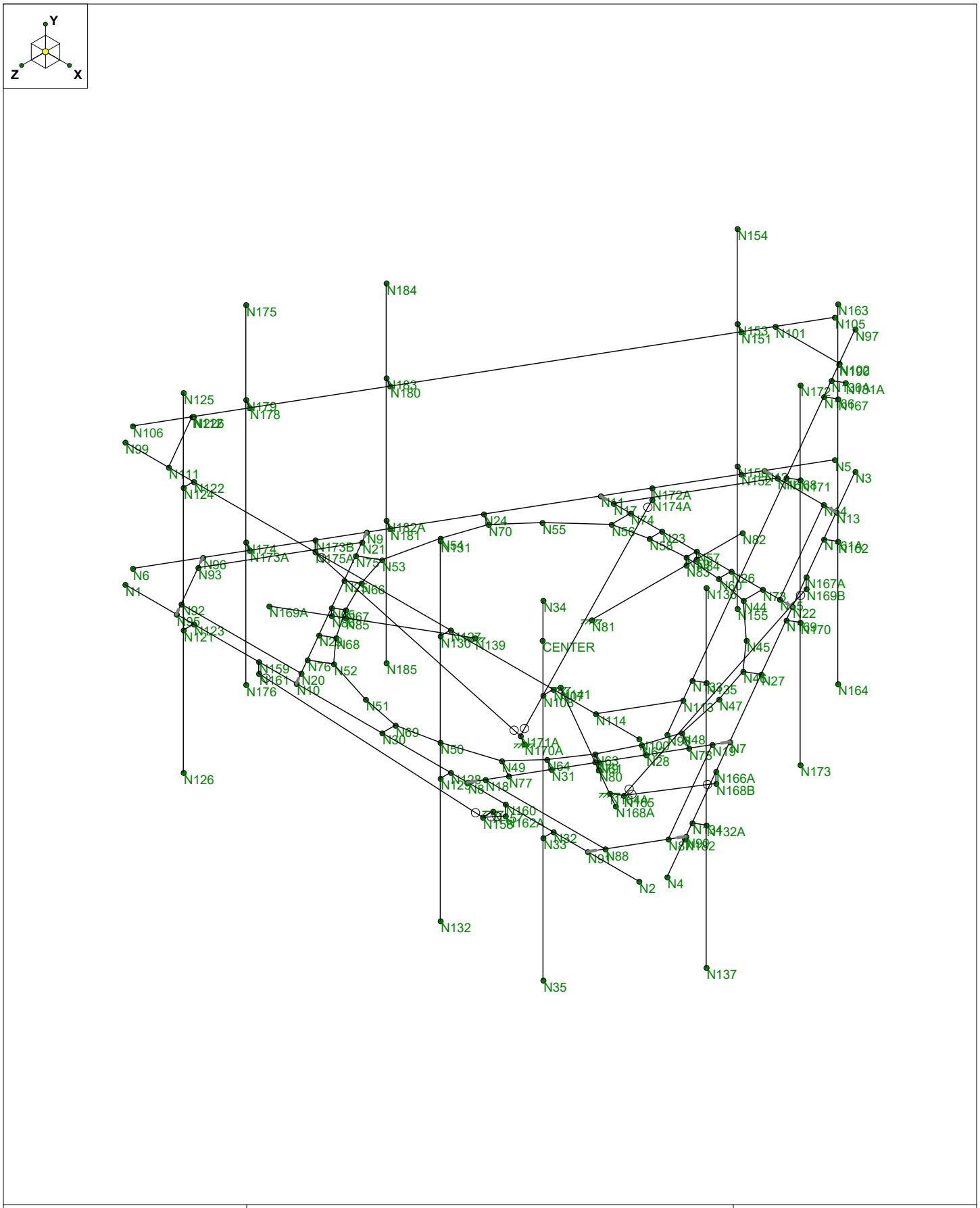

Infinigy Engineering, PLLC	842872	Wireframe
AM		Apr 9, 2021 at 4:54 PM
1039-Z0001-B		842872_MOD_loaded.r3d

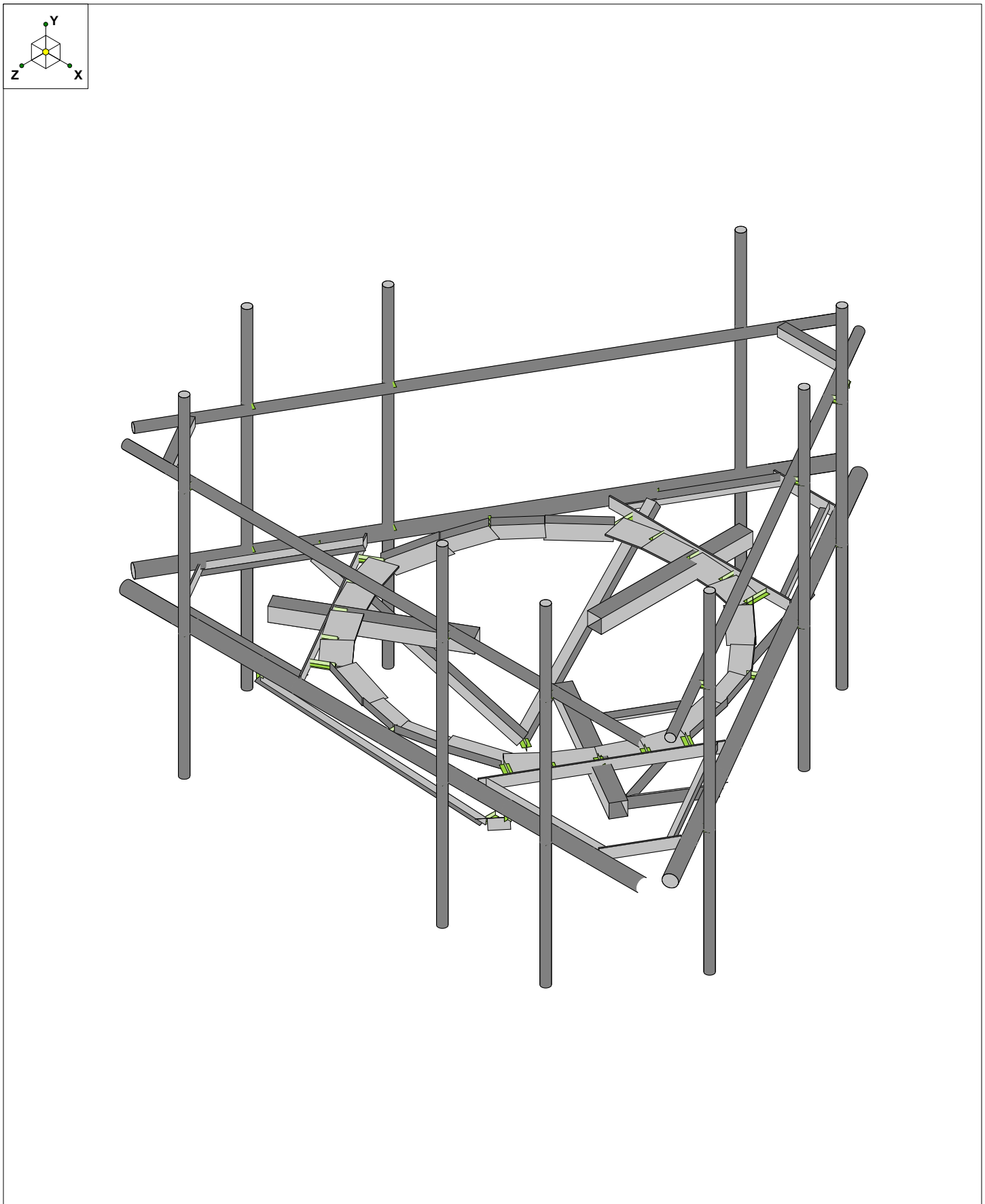

Infinigy Engineering, PLLC	842872	Rendered
AM		Apr 9, 2021 at 4:54 PM
1039-Z0001-B		842872_MOD_loaded.r3d

APPENDIX B

SOFTWARE INPUT CALCULATIONS

Program Inputs

PROJECT INFORMATION	
Client:	Crown Castle
Carrier:	T-Mobile
Engineer:	Alex Mercado

SITE INFORMATION		
Risk Category:	II	
Exposure Category:	C	
Topo Factor Procedure:	Method 1, Category 1	
Site Class:	D - Stiff Soil (Assumed)	
Ground Elevation:	198.53	ft *Rev H

MOUNT INFORMATION		
Mount Type:	Platform	
Num Sectors:	3	
Centerline AGL:	157.00	ft
Tower Height AGL:	181.83	ft

TOPOGRAPHIC DATA	
Topo Feature:	N/A

FACTORS		
Directionality Fact. (K_d):	0.950	
Ground Ele. Factor (K_e):	0.993	*Rev H Only
Rooftop Speed-Up (K_s):	1.000	*Rev H Only
Topographic Factor (K_{zt}):	1.000	
Gust Effect Factor (G_h):	1.000	

CODE STANDARDS		
Building Code:	2015 IBC	
TIA Standard:	TIA-222-H	
ASCE Standard:	ASCE 7-10	

WIND AND ICE DATA		
Ultimate Wind (V_{ult}):	125	mph
Design Wind (V):	N/A	mph
Ice Wind (V_{ice}):	50	mph
Base Ice Thickness (t_i):	2	in
Flat Pressure:	105.012	psf
Round Pressure:	63.007	psf
Ice Wind Pressure:	10.081	psf

SEISMIC DATA		
Short-Period Accel. (S_s):	0.181	g
1-Second Accel. (S_1):	0.063	g
Short-Period Design (S_{DS}):	0.193	
1-Second Design (S_{D1}):	0.101	
Short-Period Coeff. (F_a):	1.600	
1-Second Coeff. (F_v):	2.400	

INFINIGY
FROM ZERO TO INFINIGY
the solutions are endless

Infinigy Load Calculator V2.1.4

Program Inputs

ELEVATION VIEW

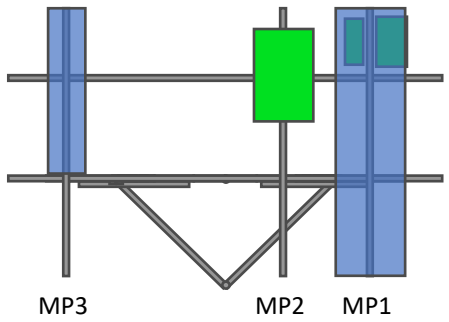

PLAN VIEW

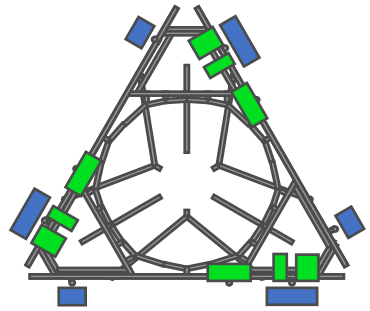

INFINIGY
FROM ZERO TO INFINIGY
the solutions are endless

Infinigy Load Calculator V2.1.4

APPURTENANCE INFORMATION

Appurtenance Name	Elevation	Qty.	K_a	q_z (psf)	EPA_N (ft^2)	EPA_T (ft^2)	Wind F_z (lbs)	Wind F_x (lbs)	Weight (lbs)	Seismic F (lbs)	Member (α sector)
ERICSSON AIR 32 B2A B66AA_T-MOBILE	159.0	3	0.90	52.65	6.85	4.98	324.55	236.02	171.96	49.80	MP3
ERICSSON AIR6449 B41_T-MOBILE	159.0	3	0.90	52.65	5.66	2.48	268.13	117.34	114.63	33.20	MP2
/CELWAVE APXVAALL24_43-U-NA20_TI	159.0	3	0.90	52.65	14.67	5.32	695.08	252.07	149.90	43.41	MP1
ERICSSON RADIO 4415 B25_TMO	159.0	3	0.90	52.65	1.86	0.87	87.95	41.23	47.40	13.73	MP1
ICSSON RADIO 4449 B71 B85A_T-MOBI	159.0	3	0.90	52.65	1.97	1.59	93.35	75.17	73.21	21.20	MP1

ASCE 7 Hazards Report

Address:
No Address at This Location

Standard: ASCE/SEI 7-10
Risk Category: II
Soil Class: D - Stiff Soil

Elevation: 198.53 ft (NAVD 88)
Latitude: 41.660247
Longitude: -72.680717

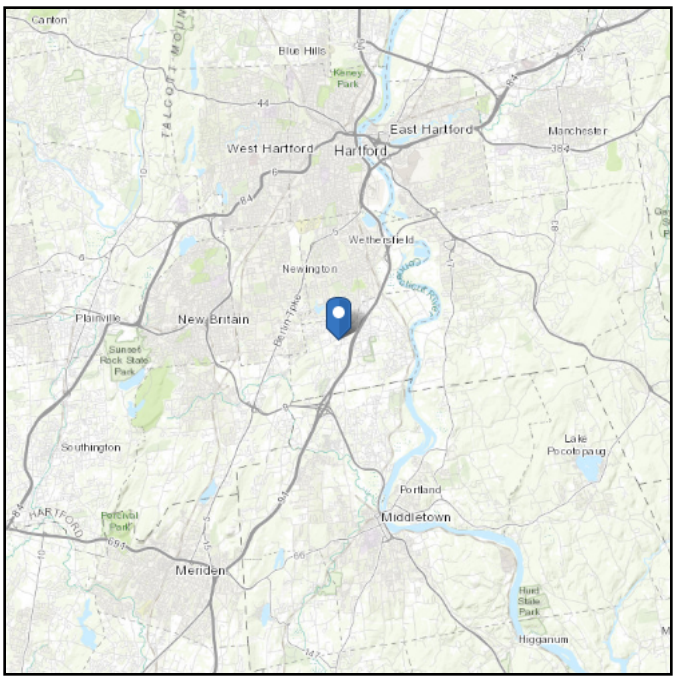

Wind

Results:

Wind Speed:	125 Vmph per Hartford County requirements
10-year MRI	77 Vmph
25-year MRI	87 Vmph
50-year MRI	93 Vmph
100-year MRI	101 Vmph

Data Source: ASCE/SEI 7-10, Fig. 26.5-1A and Figs. CC-1–CC-4, and Section 26.5.2, incorporating errata of March 12, 2014

Data Accessed: Fri Mar 05 2021

Value provided is 3-second gust wind speeds at 33 ft above ground for Exposure C Category, based on linear interpolation between contours. Wind speeds are interpolated in accordance with the 7-10 Standard. Wind speeds correspond to approximately a 7% probability of exceedance in 50 years (annual exceedance probability = 0.00143, MRI = 700 years).

Site is in a hurricane-prone region as defined in ASCE/SEI 7-10 Section 26.2. Glazed openings need not be protected against wind-borne debris.

Seismic

Site Soil Class: D - Stiff Soil

Results:

S_S :	0.181	S_{DS} :	0.193
S_1 :	0.063	S_{D1} :	0.101
F_a :	1.6	T_L :	6
F_v :	2.4	PGA :	0.092
S_{MS} :	0.29	PGA_M :	0.147
S_{M1} :	0.152	F_{PGA} :	1.6
		I_e :	1

Seismic Design Category B

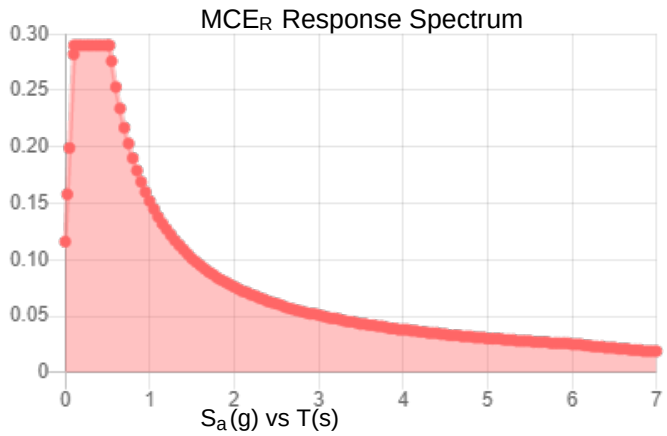

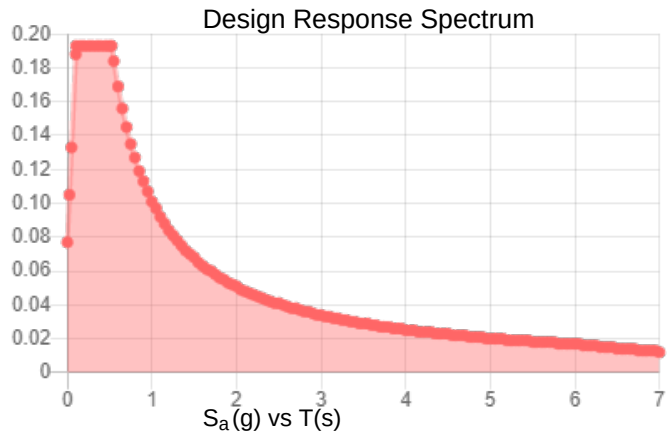

Data Accessed: Fri Mar 05 2021

Date Source: USGS Seismic Design Maps based on ASCE/SEI 7-10, incorporating Supplement 1 and errata of March 31, 2013, and ASCE/SEI 7-10 Table 1.5-2. Additional data for site-specific ground motion procedures in accordance with ASCE/SEI 7-10 Ch. 21 are available from USGS.

Ice

Results:

Ice Thickness:	1.00 in.
Concurrent Temperature:	5 F
Gust Speed:	50 mph
Data Source:	Standard ASCE/SEI 7-10, Figs. 10-2 through 10-8
Date Accessed:	Fri Mar 05 2021

Ice thicknesses on structures in exposed locations at elevations higher than the surrounding terrain and in valleys and gorges may exceed the mapped values.

Values provided are equivalent radial ice thicknesses due to freezing rain with concurrent 3-second gust speeds, for a 50-year mean recurrence interval, and temperatures concurrent with ice thicknesses due to freezing rain. Thicknesses for ice accretions caused by other sources shall be obtained from local meteorological studies. Ice thicknesses in exposed locations at elevations higher than the surrounding terrain and in valleys and gorges may exceed the mapped values.

The ASCE 7 Hazard Tool is provided for your convenience, for informational purposes only, and is provided “as is” and without warranties of any kind. The location data included herein has been obtained from information developed, produced, and maintained by third party providers; or has been extrapolated from maps incorporated in the ASCE 7 standard. While ASCE has made every effort to use data obtained from reliable sources or methodologies, ASCE does not make any representations or warranties as to the accuracy, completeness, reliability, currency, or quality of any data provided herein. Any third-party links provided by this Tool should not be construed as an endorsement, affiliation, relationship, or sponsorship of such third-party content by or from ASCE.

ASCE does not intend, nor should anyone interpret, the results provided by this Tool to replace the sound judgment of a competent professional, having knowledge and experience in the appropriate field(s) of practice, nor to substitute for the standard of care required of such professionals in interpreting and applying the contents of this Tool or the ASCE 7 standard.

In using this Tool, you expressly assume all risks associated with your use. Under no circumstances shall ASCE or its officers, directors, employees, members, affiliates, or agents be liable to you or any other person for any direct, indirect, special, incidental, or consequential damages arising from or related to your use of, or reliance on, the Tool or any information obtained therein. To the fullest extent permitted by law, you agree to release and hold harmless ASCE from any and all liability of any nature arising out of or resulting from any use of data provided by the ASCE 7 Hazard Tool.

APPENDIX C

SOFTWARE ANALYSIS OUTPUT

Member Primary Data

	Label	I Joint	J Joint	K Joint	Rotate(d...	Section/Shape	Type	Design List	Material	Design Ru...
1	HOR1	N1	N2			Horizontal	Beam	Pipe	A53 Gr.B	Typical
2	H3	N3	N4			Horizontal	Beam	Pipe	A53 Gr.B	Typical
3	H2	N5	N6			Horizontal	Beam	Pipe	A53 Gr.B	Typical
4	CA3	N7	N8			Corner Plate	Beam	RECT	A36 Gr.36	Typical
5	CA1	N9	N10			Corner Plate	Beam	RECT	A36 Gr.36	Typical
6	CA2	N22	N11			Corner Plate	Beam	RECT	A36 Gr.36	Typical
7	M7	N12	N13			Corner Plate	Beam	RECT	A36 Gr.36	Typical
8	A4	N14	N15			Grating Angle	Beam	Single Angle	A36 Gr.36	Typical
9	A3	N16	N17		270	Grating Angle	Beam	Single Angle	A36 Gr.36	Typical
10	M10	N58	N23			RIGID	None	None	RIGID	Typical
11	M11	N70	N24			RIGID	None	None	RIGID	Typical
12	M12	N66	N25			RIGID	None	None	RIGID	Typical
13	M13	N60	N26			RIGID	None	None	RIGID	Typical
14	M14	N46	N27			RIGID	None	None	RIGID	Typical
15	M15	N62	N28			RIGID	None	None	RIGID	Typical
16	M16	N68	N29			RIGID	None	None	RIGID	Typical
17	M17	N69	N30			RIGID	None	None	RIGID	Typical
18	M18	N64	N31			RIGID	None	None	RIGID	Typical
19	M19	N32	N33			RIGID	None	None	RIGID	Typical
20	MP1	N34	N35			Mount Pipe 2.0	Column	Pipe	A53 Gr.B	Typical
21	M25	N60	N44		270	Ring Plate	Beam	RECT	A36 Gr.36	Typical
22	M26	N45	N44		270	Ring Plate S	Beam	Single Angle	A36 Gr.36	Typical
23	M27	N46	N45		270	Ring Plate Middle	Beam	Single Angle	A36 Gr.36	Typical
24	M28	N47	N46		270	Ring Plate Middle	Beam	Single Angle	A36 Gr.36	Typical
25	M29	N48	N62		270	Ring Plate	Beam	RECT	A36 Gr.36	Typical
26	M30	N64	N49		270	Ring Plate	Beam	RECT	A36 Gr.36	Typical
27	M31	N50	N49		270	Ring Plate S	Beam	Single Angle	A36 Gr.36	Typical
28	M32	N69	N50		270	Ring Plate Middle	Beam	Single Angle	A36 Gr.36	Typical
29	M33	N51	N69		270	Ring Plate Middle	Beam	Single Angle	A36 Gr.36	Typical
30	M34	N52	N51		270	Ring Plate S	Beam	Single Angle	A36 Gr.36	Typical
31	M35	N52	N68		270	Ring Plate	Beam	RECT	A36 Gr.36	Typical
32	M36	N66	N53		270	Ring Plate	Beam	RECT	A36 Gr.36	Typical
33	M37	N54	N53		270	Ring Plate S	Beam	Single Angle	A36 Gr.36	Typical
34	M38	N70	N54		270	Ring Plate Middle	Beam	Single Angle	A36 Gr.36	Typical
35	M39	N55	N70		270	Ring Plate Middle	Beam	Single Angle	A36 Gr.36	Typical
36	M40	N56	N55		270	Ring Plate S	Beam	Single Angle	A36 Gr.36	Typical
37	M41	N56	N58		270	Ring Plate	Beam	RECT	A36 Gr.36	Typical
38	M42	N59	N57			RIGID	None	None	RIGID	Typical
39	M43	N58	N59		270	Ring Plate	Beam	RECT	A36 Gr.36	Typical
40	M44	N59	N60		270	Ring Plate	Beam	RECT	A36 Gr.36	Typical
41	M45	N63	N61			RIGID	None	None	RIGID	Typical
42	M46	N62	N63		270	Ring Plate	Beam	RECT	A36 Gr.36	Typical
43	M47	N63	N64		270	Ring Plate	Beam	RECT	A36 Gr.36	Typical
44	M48	N67	N65			RIGID	None	None	RIGID	Typical
45	M49	N66	N67		270	Ring Plate	Beam	RECT	A36 Gr.36	Typical
46	M50	N67	N68		270	Ring Plate	Beam	RECT	A36 Gr.36	Typical
47	M51	N44	N73			RIGID	None	None	RIGID	Typical
48	M52	N56	N74			RIGID	None	None	RIGID	Typical
49	M53	N53	N75			RIGID	None	None	RIGID	Typical
50	M54	N52	N76			RIGID	None	None	RIGID	Typical
51	M55	N49	N77			RIGID	None	None	RIGID	Typical
52	M56	N48	N78			RIGID	None	None	RIGID	Typical
53	M57	N48	N47		270	Ring Plate S	Beam	Single Angle	A36 Gr.36	Typical
54	M58	N63	N79			RIGID	None	None	RIGID	Typical
55	M59	N61	N80			RIGID	None	None	RIGID	Typical
56	SA2	N81	N82			Standoff	Beam	Tube	A500 Gr....	Typical

Member Primary Data (Continued)

	Label	I Joint	J Joint	K Joint	Rotate(d...	Section/Shape	Type	Design List	Material	Design Ru...
57	M61	N59	N83			RIGID	None	None	RIGID	Typical
58	M62	N57	N84			RIGID	None	None	RIGID	Typical
59	M63	N67	N85			RIGID	None	None	RIGID	Typical
60	M64	N65	N86			RIGID	None	None	RIGID	Typical
61	A6	N88	N18			Grating Angle	Beam	Single Angle	A36 Gr.36	Typical
62	A5	N87	N19		270	Grating Angle	Beam	Single Angle	A36 Gr.36	Typical
63	P3	N90	N91			Corner Plate	Beam	RECT	A36 Gr.36	Typical
64	A2	N93	N21			Grating Angle	Beam	Single Angle	A36 Gr.36	Typical
65	A1	N92	N20		270	Grating Angle	Beam	Single Angle	A36 Gr.36	Typical
66	P1	N95	N96			Corner Plate	Beam	RECT	A36 Gr.36	Typical
67	HR3	N97	N98			Handrail	Beam	Pipe	A53 Gr.B	Typical
68	HR1	N99	N100			Handrail	Beam	Pipe	A53 Gr.B	Typical
69	P5	N101	N102		180	Handrail Plate	Beam	Single Angle	A36 Gr.36	Typical
70	HR2	N105	N106			Handrail	Beam	Pipe	A53 Gr.B	Typical
71	M76	N107	N108			RIGID	None	None	RIGID	Typical
72	P4	N111	N112		180	Handrail Plate	Beam	Single Angle	A36 Gr.36	Typical
73	P6	N113	N114		180	Handrail Plate	Beam	Single Angle	A36 Gr.36	Typical
74	MP3	N125	N126			Mount Pipe 2.0	Column	Pipe	A53 Gr.B	Typical
75	M84	N123	N121			RIGID	None	None	RIGID	Typical
76	M85	N122	N124			RIGID	None	None	RIGID	Typical
77	M86	N128	N129			RIGID	None	None	RIGID	Typical
78	M87	N127	N130			RIGID	None	None	RIGID	Typical
79	MP2	N131	N132			Mount Pipe 2.0	Column	Pipe	A53 Gr.B	Typical
80	SA1	N139	N169A			Standoff	Beam	Tube	A500 Gr....	Typical
81	SA3	N141	N168A			Standoff	Beam	Tube	A500 Gr....	Typical
82	M87A	N130A	N131A			RIGID	None	None	RIGID	Typical
83	MP9	N136	N137			Mount Pipe 2.0	Column	Pipe	A53 Gr.B	Typical
84	M89	N134	N132A			RIGID	None	None	RIGID	Typical
85	M90	N133	N135			RIGID	None	None	RIGID	Typical
86	MP6	N154	N155			Mount Pipe 2.0	Column	Pipe	A53 Gr.B	Typical
87	M98	N152	N150			RIGID	None	None	RIGID	Typical
88	M99	N151	N153			RIGID	None	None	RIGID	Typical
89	M103	N161A	N162			RIGID	None	None	RIGID	Typical
90	MP7	N163	N164			Mount Pipe 2.0	Column	Pipe	A53 Gr.B	Typical
91	M105	N166	N167			RIGID	None	None	RIGID	Typical
92	M106	N169	N170			RIGID	None	None	RIGID	Typical
93	M107	N168	N171			RIGID	None	None	RIGID	Typical
94	MP8	N172	N173			Mount Pipe 2.0	Column	Pipe	A53 Gr.B	Typical
95	M109	N173A	N174			RIGID	None	None	RIGID	Typical
96	MP4	N175	N176			Mount Pipe 2.0	Column	Pipe	A53 Gr.B	Typical
97	M111	N178	N179			RIGID	None	None	RIGID	Typical
98	M112	N181	N182A			RIGID	None	None	RIGID	Typical
99	M113	N180	N183			RIGID	None	None	RIGID	Typical
100	MP5	N184	N185			Mount Pipe 2.0	Column	Pipe	A53 Gr.B	Typical
101	M101	N157	N158			RIGID	None	None	RIGID	Typical
102	M102	N159	N161			RIGID	None	None	RIGID	Typical
103	M103A	N160	N162A			RIGID	None	None	RIGID	Typical
104	M104	N161	N158		90	Kicker	Beam	Single Angle	A36 Gr.36	Typical
105	M105A	N162A	N158		180	Kicker	Beam	Single Angle	A36 Gr.36	Typical
106	M106A	N164A	N165			RIGID	None	None	RIGID	Typical
107	M107A	N166A	N168B			RIGID	None	None	RIGID	Typical
108	M108	N167A	N169B			RIGID	None	None	RIGID	Typical
109	M109A	N168B	N165		90	Kicker	Beam	Single Angle	A36 Gr.36	Typical
110	M110	N169B	N165		180	Kicker	Beam	Single Angle	A36 Gr.36	Typical
111	M111A	N170A	N171A			RIGID	None	None	RIGID	Typical
112	M112A	N172A	N174A			RIGID	None	None	RIGID	Typical
113	M113A	N173B	N175A			RIGID	None	None	RIGID	Typical

Member Primary Data (Continued)

	Label	I Joint	J Joint	K Joint	Rotate(d...	Section/Shape	Type	Design List	Material	Design Ru...
114	M114	N174A	N171A		90	Kicker	Beam	Single Angle	A36 Gr.36	Typical
115	M115	N175A	N171A		180	Kicker	Beam	Single Angle	A36 Gr.36	Typical

Material Takeoff

	Material	Size	Pieces	Length[in]	Weight[LB]
1	General				
2	RIGID		52	172.3	0
3	Total General		52	172.3	0
4					
5	Hot Rolled Steel				
6	A36 Gr.36	5x2x6_HRA	6	66.7	46.976
7	A36 Gr.36	6x2x6_HRA	6	85.7	69.472
8	A36 Gr.36	7x0.375	12	116.9	87.025
9	A36 Gr.36	L2.5x2.5x3	9	398	101.684
10	A36 Gr.36	L2x2x4	6	210	56.225
11	A36 Gr.36	3x0.375	6	210	66.985
12	A500 Gr.B Rect	HSS4X4X4	3	132	135.666
13	A53 Gr.B	PIPE_2.0	12	1314	380.056
14	A53 Gr.B	PIPE_3.0	3	450	264.141
15	Total HR Steel		63	2983.3	1208.231

Basic Load Cases

	BLC Description	Category	X Gravity	Y Gravity	Z Gravity	Joint	Point	Distribut...	Area(Me...	Surface(Plate/Wall)
1	Self Weight	DL		-1			21		3	
2	Wind Load AZI 0	WLZ					42			
3	Wind Load AZI 30	None					42			
4	Wind Load AZI 60	None					42			
5	Wind Load AZI 90	WLX					42			
6	Wind Load AZI 120	None					42			
7	Wind Load AZI 150	None					42			
8	Wind Load AZI 180	None					42			
9	Wind Load AZI 210	None					42			
10	Wind Load AZI 240	None					42			
11	Wind Load AZI 270	None					42			
12	Wind Load AZI 300	None					42			
13	Wind Load AZI 330	None					42			
14	Distr. Wind Load Z	WLZ						115		
15	Distr. Wind Load X	WLX						115		
16	Ice Weight	OL1					21	115	3	
17	Ice Wind Load AZI ...	OL2					42			
18	Ice Wind Load AZI ...	None					42			
19	Ice Wind Load AZI ...	None					42			
20	Ice Wind Load AZI ...	OL3					42			
21	Ice Wind Load AZI ...	None					42			
22	Ice Wind Load AZI ...	None					42			
23	Ice Wind Load AZI ...	None					42			
24	Ice Wind Load AZI ...	None					42			
25	Ice Wind Load AZI ...	None					42			
26	Ice Wind Load AZI ...	None					42			
27	Ice Wind Load AZI ...	None					42			
28	Ice Wind Load AZI ...	None					42			
29	Distr. Ice Wind Loa...	OL2						115		
30	Distr. Ice Wind Loa...	OL3						115		
31	Seismic Load Z	ELZ			-.29		21			

Basic Load Cases (Continued)

	BLC Description	Category	X Gravity	Y Gravity	Z Gravity	Joint	Point	Distribut...	Area(Me...	Surface(Plate/Wall)
32	Seismic Load X	ELX	-.29				21			
33	Service Live Loads	LL				1				
34	Maintenance Load 1	LL				2				
35	Maintenance Load 2	LL				2				
36	Maintenance Load 3	LL				2				
37	Maintenance Load 4	LL				2				
38	Maintenance Load 5	LL				2				
39	Maintenance Load 6	LL				2				
40	Maintenance Load 7	LL				2				
41	Maintenance Load 8	LL				2				
42	Maintenance Load 9	LL				2				
43	BLC 1 Transient Ar...	None						21		
44	BLC 16 Transient ...	None						21		

Load Combinations

	Description	Solve	PDelta	SRSS	BLC	Factor	BLC	Fa...	B...	Fa...	B...	Fa...	B...	Fa...	B...	Fa...	B...	Fa...	B...	Fa...	B...	Fa...	B...	Fa...
1	1.4DL	Yes	Y		1	1.4																		
2	1.2DL + 1WL AZI 0	Yes	Y		1	1.2	2	1	14	1	15													
3	1.2DL + 1WL AZI 30	Yes	Y		1	1.2	3	1	14	.866	15	.5												
4	1.2DL + 1WL AZI 60	Yes	Y		1	1.2	4	1	14	.5	15	.866												
5	1.2DL + 1WL AZI 90	Yes	Y		1	1.2	5	1	14		15	1												
6	1.2DL + 1WL AZI 120	Yes	Y		1	1.2	6	1	14	-.5	15	.866												
7	1.2DL + 1WL AZI 150	Yes	Y		1	1.2	7	1	14	-.8...	15	.5												
8	1.2DL + 1WL AZI 180	Yes	Y		1	1.2	8	1	14	-1	15													
9	1.2DL + 1WL AZI 210	Yes	Y		1	1.2	9	1	14	-.8...	15	-.5												
10	1.2DL + 1WL AZI 240	Yes	Y		1	1.2	10	1	14	-.5	15	-.8...												
11	1.2DL + 1WL AZI 270	Yes	Y		1	1.2	11	1	14		15	-1												
12	1.2DL + 1WL AZI 300	Yes	Y		1	1.2	12	1	14	.5	15	-.8...												
13	1.2DL + 1WL AZI 330	Yes	Y		1	1.2	13	1	14	.866	15	-.5												
14	0.9DL + 1WL AZI 0	Yes	Y		1	.9	2	1	14	1	15													
15	0.9DL + 1WL AZI 30	Yes	Y		1	.9	3	1	14	.866	15	.5												
16	0.9DL + 1WL AZI 60	Yes	Y		1	.9	4	1	14	.5	15	.866												
17	0.9DL + 1WL AZI 90	Yes	Y		1	.9	5	1	14		15	1												
18	0.9DL + 1WL AZI 120	Yes	Y		1	.9	6	1	14	-.5	15	.866												
19	0.9DL + 1WL AZI 150	Yes	Y		1	.9	7	1	14	-.8...	15	.5												
20	0.9DL + 1WL AZI 180	Yes	Y		1	.9	8	1	14	-1	15													
21	0.9DL + 1WL AZI 210	Yes	Y		1	.9	9	1	14	-.8...	15	-.5												
22	0.9DL + 1WL AZI 240	Yes	Y		1	.9	10	1	14	-.5	15	-.8...												
23	0.9DL + 1WL AZI 270	Yes	Y		1	.9	11	1	14		15	-1												
24	0.9DL + 1WL AZI 300	Yes	Y		1	.9	12	1	14	.5	15	-.8...												
25	0.9DL + 1WL AZI 330	Yes	Y		1	.9	13	1	14	.866	15	-.5												
26	1.2D + 1.0Di	Yes	Y		1	1.2	16	1																
27	1.2D + 1.0Di +1.0Wi A...	Yes	Y		1	1.2	16	1	17	1	29	1	30											
28	1.2D + 1.0Di +1.0Wi A...	Yes	Y		1	1.2	16	1	18	1	29	.866	30	.5										
29	1.2D + 1.0Di +1.0Wi A...	Yes	Y		1	1.2	16	1	19	1	29	.5	30	.866										
30	1.2D + 1.0Di +1.0Wi A...	Yes	Y		1	1.2	16	1	20	1	29		30	1										
31	1.2D + 1.0Di +1.0Wi A...	Yes	Y		1	1.2	16	1	21	1	29	-.5	30	.866										
32	1.2D + 1.0Di +1.0Wi A...	Yes	Y		1	1.2	16	1	22	1	29	-.8...	30	.5										
33	1.2D + 1.0Di +1.0Wi A...	Yes	Y		1	1.2	16	1	23	1	29	-1	30											
34	1.2D + 1.0Di +1.0Wi A...	Yes	Y		1	1.2	16	1	24	1	29	-.8...	30	-.5										
35	1.2D + 1.0Di +1.0Wi A...	Yes	Y		1	1.2	16	1	25	1	29	-.5	30	-.8...										
36	1.2D + 1.0Di +1.0Wi A...	Yes	Y		1	1.2	16	1	26	1	29		30	-1										
37	1.2D + 1.0Di +1.0Wi A...	Yes	Y		1	1.2	16	1	27	1	29	.5	30	-.8...										
38	1.2D + 1.0Di +1.0Wi A...	Yes	Y		1	1.2	16	1	28	1	29	.866	30	-.5										
39	(1.2 + 0.2Sds)DL + 1.0...	Yes	Y		1	1.239	31	1	32															

Load Combinations (Continued)

	Description	Solve	PDelta	SRSS	BLC	Factor	BLC	Fa...	B...	Fa...	B...	Fa...	B...	Fa...	B...	Fa...	B...	Fa...	B...	Fa...	B...	Fa...	B...	Fa...
40	(1.2 + 0.2Sds)DL + 1.0...	Yes	Y		1	1.239	31	.866	32	.5														
41	(1.2 + 0.2Sds)DL + 1.0...	Yes	Y		1	1.239	31	.5	32	.866														
42	(1.2 + 0.2Sds)DL + 1.0...	Yes	Y		1	1.239	31		32	1														
43	(1.2 + 0.2Sds)DL + 1.0...	Yes	Y		1	1.239	31	-.5	32	.866														
44	(1.2 + 0.2Sds)DL + 1.0...	Yes	Y		1	1.239	31	-.8...	32	.5														
45	(1.2 + 0.2Sds)DL + 1.0...	Yes	Y		1	1.239	31	-1	32															
46	(1.2 + 0.2Sds)DL + 1.0...	Yes	Y		1	1.239	31	-.8...	32	-.5														
47	(1.2 + 0.2Sds)DL + 1.0...	Yes	Y		1	1.239	31	-.5	32	-.8...														
48	(1.2 + 0.2Sds)DL + 1.0...	Yes	Y		1	1.239	31		32	-1														
49	(1.2 + 0.2Sds)DL + 1.0...	Yes	Y		1	1.239	31	.5	32	-.8...														
50	(1.2 + 0.2Sds)DL + 1.0...	Yes	Y		1	1.239	31	.866	32	-.5														
51	(0.9 - 0.2Sds)DL + 1.0...	Yes	Y		1	.861	31	1	32															
52	(0.9 - 0.2Sds)DL + 1.0...	Yes	Y		1	.861	31	.866	32	.5														
53	(0.9 - 0.2Sds)DL + 1.0...	Yes	Y		1	.861	31	.5	32	.866														
54	(0.9 - 0.2Sds)DL + 1.0...	Yes	Y		1	.861	31		32	1														
55	(0.9 - 0.2Sds)DL + 1.0...	Yes	Y		1	.861	31	-.5	32	.866														
56	(0.9 - 0.2Sds)DL + 1.0...	Yes	Y		1	.861	31	-.8...	32	.5														
57	(0.9 - 0.2Sds)DL + 1.0...	Yes	Y		1	.861	31	-1	32															
58	(0.9 - 0.2Sds)DL + 1.0...	Yes	Y		1	.861	31	-.8...	32	-.5														
59	(0.9 - 0.2Sds)DL + 1.0...	Yes	Y		1	.861	31	-.5	32	-.8...														
60	(0.9 - 0.2Sds)DL + 1.0...	Yes	Y		1	.861	31		32	-1														
61	(0.9 - 0.2Sds)DL + 1.0...	Yes	Y		1	.861	31	.5	32	-.8...														
62	(0.9 - 0.2Sds)DL + 1.0...	Yes	Y		1	.861	31	.866	32	-.5														
63	1.0DL + 1.5LL + 1.0SW...	Yes	Y		1	1	2	.23	14	.23	15		33	1.5										
64	1.0DL + 1.5LL + 1.0SW...	Yes	Y		1	1	3	.23	14	.2	15	.115	33	1.5										
65	1.0DL + 1.5LL + 1.0SW...	Yes	Y		1	1	4	.23	14	.115	15	.2	33	1.5										
66	1.0DL + 1.5LL + 1.0SW...	Yes	Y		1	1	5	.23	14		15	.23	33	1.5										
67	1.0DL + 1.5LL + 1.0SW...	Yes	Y		1	1	6	.23	14	-.1...	15	.2	33	1.5										
68	1.0DL + 1.5LL + 1.0SW...	Yes	Y		1	1	7	.23	14	-.2	15	.115	33	1.5										
69	1.0DL + 1.5LL + 1.0SW...	Yes	Y		1	1	8	.23	14	-.23	15		33	1.5										
70	1.0DL + 1.5LL + 1.0SW...	Yes	Y		1	1	9	.23	14	-.2	15	-.1...	33	1.5										
71	1.0DL + 1.5LL + 1.0SW...	Yes	Y		1	1	10	.23	14	-.1...	15	-.2	33	1.5										
72	1.0DL + 1.5LL + 1.0SW...	Yes	Y		1	1	11	.23	14		15	-.23	33	1.5										
73	1.0DL + 1.5LL + 1.0SW...	Yes	Y		1	1	12	.23	14	.115	15	-.2	33	1.5										
74	1.0DL + 1.5LL + 1.0SW...	Yes	Y		1	1	13	.23	14	.2	15	-.1...	33	1.5										
75	1.2DL + 1.5LL	Yes	Y		1	1.2	33	1.5																
76	1.2DL + 1.5LM-MP1 + ...	Yes	Y		1	1.2	34	1.5	2	.058	14	.058	15											
77	1.2DL + 1.5LM-MP1 + ...	Yes	Y		1	1.2	34	1.5	3	.058	14	.05	15	.029										
78	1.2DL + 1.5LM-MP1 + ...	Yes	Y		1	1.2	34	1.5	4	.058	14	.029	15	.05										
79	1.2DL + 1.5LM-MP1 + ...	Yes	Y		1	1.2	34	1.5	5	.058	14		15	.058										
80	1.2DL + 1.5LM-MP1 + ...	Yes	Y		1	1.2	34	1.5	6	.058	14	-.0...	15	.05										
81	1.2DL + 1.5LM-MP1 + ...	Yes	Y		1	1.2	34	1.5	7	.058	14	-.05	15	.029										
82	1.2DL + 1.5LM-MP1 + ...	Yes	Y		1	1.2	34	1.5	8	.058	14	-.0...	15											
83	1.2DL + 1.5LM-MP1 + ...	Yes	Y		1	1.2	34	1.5	9	.058	14	-.05	15	-.0...										
84	1.2DL + 1.5LM-MP1 + ...	Yes	Y		1	1.2	34	1.5	10	.058	14	-.0...	15	-.05										
85	1.2DL + 1.5LM-MP1 + ...	Yes	Y		1	1.2	34	1.5	11	.058	14		15	-.0...										
86	1.2DL + 1.5LM-MP1 + ...	Yes	Y		1	1.2	34	1.5	12	.058	14	.029	15	-.05										
87	1.2DL + 1.5LM-MP1 + ...	Yes	Y		1	1.2	34	1.5	13	.058	14	.05	15	-.0...										
88	1.2DL + 1.5LM-MP2 + ...	Yes	Y		1	1.2	35	1.5	2	.058	14	.058	15											
89	1.2DL + 1.5LM-MP2 + ...	Yes	Y		1	1.2	35	1.5	3	.058	14	.05	15	.029										
90	1.2DL + 1.5LM-MP2 + ...	Yes	Y		1	1.2	35	1.5	4	.058	14	.029	15	.05										
91	1.2DL + 1.5LM-MP2 + ...	Yes	Y		1	1.2	35	1.5	5	.058	14		15	.058										
92	1.2DL + 1.5LM-MP2 + ...	Yes	Y		1	1.2	35	1.5	6	.058	14	-.0...	15	.05										
93	1.2DL + 1.5LM-MP2 + ...	Yes	Y		1	1.2	35	1.5	7	.058	14	-.05	15	.029										
94	1.2DL + 1.5LM-MP2 + ...	Yes	Y		1	1.2	35	1.5	8	.058	14	-.0...	15											
95	1.2DL + 1.5LM-MP2 + ...	Yes	Y		1	1.2	35	1.5	9	.058	14	-.05	15	-.0...										
96	1.2DL + 1.5LM-MP2 + ...	Yes	Y		1	1.2	35	1.5	10	.058	14	-.0...	15	-.05										

Load Combinations (Continued)

	Description	Solve	PDelta	SRSS	BLC	Factor	BLC	Fa...	B...	Fa...	B...	Fa...	B...	Fa...	B...	Fa...	B...	Fa...	B...	Fa...	B...	Fa...	B...	Fa...
97	1.2DL + 1.5LM-MP2 + ...	Yes	Y		1	1.2	35	1.5	11	.058	14		15	-.0...										
98	1.2DL + 1.5LM-MP2 + ...	Yes	Y		1	1.2	35	1.5	12	.058	14	.029	15	-.05										
99	1.2DL + 1.5LM-MP2 + ...	Yes	Y		1	1.2	35	1.5	13	.058	14	.05	15	-.0...										
100	1.2DL + 1.5LM-MP3 + ...	Yes	Y		1	1.2	36	1.5	2	.058	14	.058	15											
101	1.2DL + 1.5LM-MP3 + ...	Yes	Y		1	1.2	36	1.5	3	.058	14	.05	15	.029										
102	1.2DL + 1.5LM-MP3 + ...	Yes	Y		1	1.2	36	1.5	4	.058	14	.029	15	.05										
103	1.2DL + 1.5LM-MP3 + ...	Yes	Y		1	1.2	36	1.5	5	.058	14		15	.058										
104	1.2DL + 1.5LM-MP3 + ...	Yes	Y		1	1.2	36	1.5	6	.058	14	-.0...	15	.05										
105	1.2DL + 1.5LM-MP3 + ...	Yes	Y		1	1.2	36	1.5	7	.058	14	-.05	15	.029										
106	1.2DL + 1.5LM-MP3 + ...	Yes	Y		1	1.2	36	1.5	8	.058	14	-.0...	15											
107	1.2DL + 1.5LM-MP3 + ...	Yes	Y		1	1.2	36	1.5	9	.058	14	-.05	15	-.0...										
108	1.2DL + 1.5LM-MP3 + ...	Yes	Y		1	1.2	36	1.5	10	.058	14	-.0...	15	-.05										
109	1.2DL + 1.5LM-MP3 + ...	Yes	Y		1	1.2	36	1.5	11	.058	14		15	-.0...										
110	1.2DL + 1.5LM-MP3 + ...	Yes	Y		1	1.2	36	1.5	12	.058	14	.029	15	-.05										
111	1.2DL + 1.5LM-MP3 + ...	Yes	Y		1	1.2	36	1.5	13	.058	14	.05	15	-.0...										
112	1.2DL + 1.5LM-MP4 + ...	Yes	Y		1	1.2	37	1.5	2	.058	14	.058	15											
113	1.2DL + 1.5LM-MP4 + ...	Yes	Y		1	1.2	37	1.5	3	.058	14	.05	15	.029										
114	1.2DL + 1.5LM-MP4 + ...	Yes	Y		1	1.2	37	1.5	4	.058	14	.029	15	.05										
115	1.2DL + 1.5LM-MP4 + ...	Yes	Y		1	1.2	37	1.5	5	.058	14		15	.058										
116	1.2DL + 1.5LM-MP4 + ...	Yes	Y		1	1.2	37	1.5	6	.058	14	-.0...	15	.05										
117	1.2DL + 1.5LM-MP4 + ...	Yes	Y		1	1.2	37	1.5	7	.058	14	-.05	15	.029										
118	1.2DL + 1.5LM-MP4 + ...	Yes	Y		1	1.2	37	1.5	8	.058	14	-.0...	15											
119	1.2DL + 1.5LM-MP4 + ...	Yes	Y		1	1.2	37	1.5	9	.058	14	-.05	15	-.0...										
120	1.2DL + 1.5LM-MP4 + ...	Yes	Y		1	1.2	37	1.5	10	.058	14	-.0...	15	-.05										
121	1.2DL + 1.5LM-MP4 + ...	Yes	Y		1	1.2	37	1.5	11	.058	14		15	-.0...										
122	1.2DL + 1.5LM-MP4 + ...	Yes	Y		1	1.2	37	1.5	12	.058	14	.029	15	-.05										
123	1.2DL + 1.5LM-MP4 + ...	Yes	Y		1	1.2	37	1.5	13	.058	14	.05	15	-.0...										
124	1.2DL + 1.5LM-MP5 + ...	Yes	Y		1	1.2	38	1.5	2	.058	14	.058	15											
125	1.2DL + 1.5LM-MP5 + ...	Yes	Y		1	1.2	38	1.5	3	.058	14	.05	15	.029										
126	1.2DL + 1.5LM-MP5 + ...	Yes	Y		1	1.2	38	1.5	4	.058	14	.029	15	.05										
127	1.2DL + 1.5LM-MP5 + ...	Yes	Y		1	1.2	38	1.5	5	.058	14		15	.058										
128	1.2DL + 1.5LM-MP5 + ...	Yes	Y		1	1.2	38	1.5	6	.058	14	-.0...	15	.05										
129	1.2DL + 1.5LM-MP5 + ...	Yes	Y		1	1.2	38	1.5	7	.058	14	-.05	15	.029										
130	1.2DL + 1.5LM-MP5 + ...	Yes	Y		1	1.2	38	1.5	8	.058	14	-.0...	15											
131	1.2DL + 1.5LM-MP5 + ...	Yes	Y		1	1.2	38	1.5	9	.058	14	-.05	15	-.0...										
132	1.2DL + 1.5LM-MP5 + ...	Yes	Y		1	1.2	38	1.5	10	.058	14	-.0...	15	-.05										
133	1.2DL + 1.5LM-MP5 + ...	Yes	Y		1	1.2	38	1.5	11	.058	14		15	-.0...										
134	1.2DL + 1.5LM-MP5 + ...	Yes	Y		1	1.2	38	1.5	12	.058	14	.029	15	-.05										
135	1.2DL + 1.5LM-MP5 + ...	Yes	Y		1	1.2	38	1.5	13	.058	14	.05	15	-.0...										
136	1.2DL + 1.5LM-MP6 + ...	Yes	Y		1	1.2	39	1.5	2	.058	14	.058	15											
137	1.2DL + 1.5LM-MP6 + ...	Yes	Y		1	1.2	39	1.5	3	.058	14	.05	15	.029										
138	1.2DL + 1.5LM-MP6 + ...	Yes	Y		1	1.2	39	1.5	4	.058	14	.029	15	.05										
139	1.2DL + 1.5LM-MP6 + ...	Yes	Y		1	1.2	39	1.5	5	.058	14		15	.058										
140	1.2DL + 1.5LM-MP6 + ...	Yes	Y		1	1.2	39	1.5	6	.058	14	-.0...	15	.05										
141	1.2DL + 1.5LM-MP6 + ...	Yes	Y		1	1.2	39	1.5	7	.058	14	-.05	15	.029										
142	1.2DL + 1.5LM-MP6 + ...	Yes	Y		1	1.2	39	1.5	8	.058	14	-.0...	15											
143	1.2DL + 1.5LM-MP6 + ...	Yes	Y		1	1.2	39	1.5	9	.058	14	-.05	15	-.0...										
144	1.2DL + 1.5LM-MP6 + ...	Yes	Y		1	1.2	39	1.5	10	.058	14	-.0...	15	-.05										
145	1.2DL + 1.5LM-MP6 + ...	Yes	Y		1	1.2	39	1.5	11	.058	14		15	-.0...										
146	1.2DL + 1.5LM-MP6 + ...	Yes	Y		1	1.2	39	1.5	12	.058	14	.029	15	-.05										
147	1.2DL + 1.5LM-MP6 + ...	Yes	Y		1	1.2	39	1.5	13	.058	14	.05	15	-.0...										
148	1.2DL + 1.5LM-MP7 + ...	Yes	Y		1	1.2	40	1.5	2	.058	14	.058	15											
149	1.2DL + 1.5LM-MP7 + ...	Yes	Y		1	1.2	40	1.5	3	.058	14	.05	15	.029										
150	1.2DL + 1.5LM-MP7 + ...	Yes	Y		1	1.2	40	1.5	4	.058	14	.029	15	.05										
151	1.2DL + 1.5LM-MP7 + ...	Yes	Y		1	1.2	40	1.5	5	.058	14		15	.058										
152	1.2DL + 1.5LM-MP7 + ...	Yes	Y		1	1.2	40	1.5	6	.058	14	-.0...	15	.05										
153	1.2DL + 1.5LM-MP7 + ...	Yes	Y		1	1.2	40	1.5	7	.058	14	-.05	15	.029										

Load Combinations (Continued)

	Description	Solve	PDelta	SRSS	BLC	Factor	BLC	Fa...	B...	Fa...	B...	Fa...	B...	Fa...	B...	Fa...	B...	Fa...	B...	Fa...	B...	Fa...	B...	Fa...
154	1.2DL + 1.5LM-MP7 + ...	Yes	Y		1	1.2	40	1.5	8	.058	14	-.0...	15											
155	1.2DL + 1.5LM-MP7 + ...	Yes	Y		1	1.2	40	1.5	9	.058	14	-.05	15	-.0...										
156	1.2DL + 1.5LM-MP7 + ...	Yes	Y		1	1.2	40	1.5	10	.058	14	-.0...	15	-.05										
157	1.2DL + 1.5LM-MP7 + ...	Yes	Y		1	1.2	40	1.5	11	.058	14		15	-.0...										
158	1.2DL + 1.5LM-MP7 + ...	Yes	Y		1	1.2	40	1.5	12	.058	14	.029	15	-.05										
159	1.2DL + 1.5LM-MP7 + ...	Yes	Y		1	1.2	40	1.5	13	.058	14	.05	15	-.0...										
160	1.2DL + 1.5LM-MP8 + ...	Yes	Y		1	1.2	41	1.5	2	.058	14	.058	15											
161	1.2DL + 1.5LM-MP8 + ...	Yes	Y		1	1.2	41	1.5	3	.058	14	.05	15	.029										
162	1.2DL + 1.5LM-MP8 + ...	Yes	Y		1	1.2	41	1.5	4	.058	14	.029	15	.05										
163	1.2DL + 1.5LM-MP8 + ...	Yes	Y		1	1.2	41	1.5	5	.058	14		15	.058										
164	1.2DL + 1.5LM-MP8 + ...	Yes	Y		1	1.2	41	1.5	6	.058	14	-.0...	15	.05										
165	1.2DL + 1.5LM-MP8 + ...	Yes	Y		1	1.2	41	1.5	7	.058	14	-.05	15	.029										
166	1.2DL + 1.5LM-MP8 + ...	Yes	Y		1	1.2	41	1.5	8	.058	14	-.0...	15											
167	1.2DL + 1.5LM-MP8 + ...	Yes	Y		1	1.2	41	1.5	9	.058	14	-.05	15	-.0...										
168	1.2DL + 1.5LM-MP8 + ...	Yes	Y		1	1.2	41	1.5	10	.058	14	-.0...	15	-.05										
169	1.2DL + 1.5LM-MP8 + ...	Yes	Y		1	1.2	41	1.5	11	.058	14		15	-.0...										
170	1.2DL + 1.5LM-MP8 + ...	Yes	Y		1	1.2	41	1.5	12	.058	14	.029	15	-.05										
171	1.2DL + 1.5LM-MP8 + ...	Yes	Y		1	1.2	41	1.5	13	.058	14	.05	15	-.0...										
172	1.2DL + 1.5LM-MP9 + ...	Yes	Y		1	1.2	42	1.5	2	.058	14	.058	15											
173	1.2DL + 1.5LM-MP9 + ...	Yes	Y		1	1.2	42	1.5	3	.058	14	.05	15	.029										
174	1.2DL + 1.5LM-MP9 + ...	Yes	Y		1	1.2	42	1.5	4	.058	14	.029	15	.05										
175	1.2DL + 1.5LM-MP9 + ...	Yes	Y		1	1.2	42	1.5	5	.058	14		15	.058										
176	1.2DL + 1.5LM-MP9 + ...	Yes	Y		1	1.2	42	1.5	6	.058	14	-.0...	15	.05										
177	1.2DL + 1.5LM-MP9 + ...	Yes	Y		1	1.2	42	1.5	7	.058	14	-.05	15	.029										
178	1.2DL + 1.5LM-MP9 + ...	Yes	Y		1	1.2	42	1.5	8	.058	14	-.0...	15											
179	1.2DL + 1.5LM-MP9 + ...	Yes	Y		1	1.2	42	1.5	9	.058	14	-.05	15	-.0...										
180	1.2DL + 1.5LM-MP9 + ...	Yes	Y		1	1.2	42	1.5	10	.058	14	-.0...	15	-.05										
181	1.2DL + 1.5LM-MP9 + ...	Yes	Y		1	1.2	42	1.5	11	.058	14		15	-.0...										
182	1.2DL + 1.5LM-MP9 + ...	Yes	Y		1	1.2	42	1.5	12	.058	14	.029	15	-.05										

Envelope Joint Reactions

	Joint		X [lb]	LC	Y [lb]	LC	Z [lb]	LC	MX [lb-ft]	LC	MY [lb-ft]	LC	MZ [lb-ft]	LC
1	N81	max	2572.636	5	484.414	33	3698.51	2	999.957	29	2849.956	23	186.907	154
2		min	-2436.18	23	-165.771	14	-3583.831	20	160.934	14	-3101.863	5	-113.248	14
3	N139	max	3184.579	5	487.339	37	2246.304	14	15.152	25	2621.98	15	-61.627	18
4		min	-3150.51	23	-169.006	18	-2423.981	8	-441.415	33	-2873.974	9	-923.393	37
5	N141	max	2991.02	16	485.699	29	2850.301	2	21.778	22	2617.069	19	830.872	37
6		min	-3158.35	10	-165.718	22	-2791.947	20	-605.992	30	-2869.259	13	116.866	18
7	N157	max	896.055	85	3828.872	33	3299.483	33	188.016	14	224.028	85	.092	24
8		min	-611.133	91	-751.504	14	-560.815	14	-956.795	33	-152.851	91	-.117	5
9	N164A	max	2502.784	37	3819.453	37	279.681	18	477.17	37	223.472	137	826.598	37
10		min	-489.419	18	-735.326	18	-2254.859	37	-92.019	18	-152.184	119	-159.302	18
11	N170A	max	440.084	22	3817.16	29	371.744	22	476.993	29	223.537	165	160.132	22
12		min	-3178.525	29	-739.039	22	-1310.031	126	-92.437	22	-152.367	135	-826.036	29
13	Totals:	max	6407.547	5	11911.99	38	6546.485	2						
14		min	-6407.547	23	2509.896	55	-6546.485	8						

Envelope AISC 15th(360-16): LRFD Steel Code Checks

	Member	Shape	Code Check	Loc[in]	LC	Shear Check	Loc[in]	Dir	LC	phi*...	phi*...	phi*...	phi*...	...	Eqn
1	MP2	PIPE_...	.640	60	2	.084	60		10	1491...	32130	1871...	1871...	...	H1-...
2	MP1	PIPE_...	.638	60	8	.217	24		2	1491...	32130	1871...	1871...	...	H1-...
3	MP8	PIPE_...	.632	60	6	.081	60		2	1491...	32130	1871...	1871...	...	H1-...
4	MP5	PIPE_...	.631	60	10	.084	60		6	1491...	32130	1871...	1871...	...	H1-...
5	MP4	PIPE_...	.628	60	4	.216	24		10	1491...	32130	1871...	1871...	...	H1-...

Envelope AISC 15th(360-16): LRFD Steel Code Checks (Continued)

	Member	Shape	Code Check	Loc[in]	LC	Shear Check	Loc[in]	Dir	LC	phi*...	phi*...	phi*...	phi*...	...	Eqn
6	HR3	PIPE_...	.624	25	11	.327	14.062		6	6295..	32130	1871..	1871..	....	H3-6
7	HR2	PIPE_...	.624	125	3	.323	135.937		10	6295..	32130	1871..	1871..	....	H3-6
8	HR1	PIPE_...	.623	125	7	.326	135.938		2	6295..	32130	1871..	1871..	....	H3-6
9	MP7	PIPE_...	.615	60	12	.213	24		6	1491..	32130	1871..	1871..	....	H1-...
10	P5	L2.5x2...	.525	18.683	6	.135	18.683	y	11	2695..	2919..	872....	1971..	....	H2-1
11	MP6	PIPE_...	.524	60	6	.196	60		5	1491..	32130	1871..	1871..	....	H1-...
12	P6	L2.5x2...	.524	18.683	2	.135	18.683	y	7	2695..	2919..	872....	1971..	....	H2-1
13	MP9	PIPE_...	.523	60	2	.195	60		13	1491..	32130	1871..	1871..	....	H1-...
14	P4	L2.5x2...	.512	18.683	10	.135	18.683	y	3	2695..	2919..	872....	1971..	....	H2-1
15	MP3	PIPE_...	.509	60	10	.198	60		9	1491..	32130	1871..	1871..	....	H1-...
16	CA3	3x0.375	.468	50.312	2	.169	0	y	34	3628..	36450	284....	2278..	1	H1-...
17	CA2	3x0.375	.464	2.188	6	.169	52.5	y	38	3628..	36450	284....	2278..	1	H1-...
18	CA1	3x0.375	.455	2.187	10	.165	52.5	y	30	3628..	36450	284....	2278..	1	H1-...
19	P3	3x0.375	.389	15.489	7	.108	0	y	12	9733..	36450	284....	2278..	....	H1-...
20	P1	3x0.375	.388	15.489	3	.113	0	y	8	9733..	36450	284....	2273..	....	H1-...
21	M7	3x0.375	.387	15.489	11	.112	0	y	4	9733..	36450	284....	2203..	....	H1-...
22	M110	L2.5x2...	.340	29.089	37	.009	0	z	5	1398..	2919..	872....	1640..	....	H2-1
23	M105A	L2.5x2...	.338	29.089	33	.007	0	z	12	1398..	2919..	872....	1640..	....	H2-1
24	M115	L2.5x2...	.333	29.089	29	.009	0	z	8	1398..	2919..	872....	1640..	....	H2-1
25	M114	L2.5x2...	.263	29.089	29	.009	0	y	11	1398..	2919..	872....	1640..	....	H2-1
26	M104	L2.5x2...	.262	28.495	32	.007	56.99	z	31	1398..	2919..	872....	1640..	....	H2-1
27	M109A	L2.5x2...	.257	29.089	37	.008	0	y	8	1398..	2919..	872....	1640..	....	H2-1
28	HOR1	PIPE_...	.255	100	8	.245	100		8	6514..	65205	5748..	5748..	....	H1-...
29	H3	PIPE_...	.253	50	12	.244	50		12	6491..	65205	5748..	5748..	....	H1-...
30	H2	PIPE_...	.249	100	4	.240	100		4	6514..	65205	5748..	5748..	....	H1-...
31	SA2	HSS4X...	.209	0	5	.070	0	z	11	1318..	1395..	1618..	1618..	....	H1-...
32	M47	7x0.375	.207	0	3	.094	0	y	3	5366..	85050	664....	1240..	....	H1-...
33	M44	7x0.375	.207	0	7	.093	0	y	7	5366..	85050	664....	1240..	....	H1-...
34	M49	7x0.375	.199	10.124	11	.093	10.124	y	11	5366..	85050	664....	1240..	....	H1-...
35	SA3	HSS4X...	.196	0	13	.067	0	z	7	1318..	1395..	1618..	1618..	....	H1-...
36	SA1	HSS4X...	.195	0	9	.067	0	z	3	1318..	1395..	1618..	1618..	....	H1-...
37	M32	5x2x6_...	.187	0	3	.031	11.114	z	3	7676..	8049..	1359..	8586..	....	H2-1
38	M27	5x2x6_...	.187	0	7	.031	11.114	z	7	7676..	8049..	1359..	8586..	....	H2-1
39	M38	5x2x6_...	.186	0	11	.031	0	y	5	7676..	8049..	1359..	8586..	....	H2-1
40	M43	7x0.375	.175	10.124	10	.083	10.124	y	10	5366..	85050	664....	1240..	....	H1-...
41	M50	7x0.375	.175	0	2	.084	0	y	2	5366..	85050	664....	1240..	....	H1-...
42	M46	7x0.375	.167	10.124	6	.083	10.124	y	6	5366..	85050	664....	1240..	....	H1-...
43	M33	5x2x6_...	.160	11.114	8	.032	11.114	z	8	7676..	8049..	1359..	7809..	....	H2-1
44	M39	5x2x6_...	.158	11.114	4	.032	11.114	z	4	7676..	8049..	1359..	7798..	....	H2-1
45	M28	5x2x6_...	.158	11.114	12	.032	11.114	z	12	7676..	8049..	1359..	7844..	....	H2-1
46	A5	L2x2x4	.153	0	7	.016	35.007	y	13	1988..	3058..	690....	1576..	....	H2-1
47	A3	L2x2x4	.152	0	11	.017	35.007	y	5	1988..	3058..	690....	1576..	....	H2-1
48	A1	L2x2x4	.149	0	3	.017	35.007	y	9	1988..	3058..	690....	1576..	....	H2-1
49	A2	L2x2x4	.147	0	9	.009	35.007	z	3	1988..	3058..	690....	1576..	....	H2-1
50	A4	L2x2x4	.145	0	5	.010	35.007	z	11	1988..	3058..	690....	1576..	....	H2-1
51	A6	L2x2x4	.142	0	13	.010	35.007	z	7	1988..	3058..	690....	1576..	....	H2-1
52	M26	6x2x6_...	.125	0	7	.012	14.28	y	5	7952..	9264..	1413..	1200..	....	H2-1
53	M31	6x2x6_...	.125	0	3	.012	0	y	6	7952..	9264..	1413..	1200..	....	H2-1
54	M37	6x2x6_...	.125	0	11	.012	14.28	z	13	7952..	9264..	1413..	1200..	....	H2-1
55	M30	7x0.375	.123	9.361	8	.079	0	y	9	5737..	85050	664....	1240..	....	H1-...
56	M36	7x0.375	.123	9.361	5	.077	0	y	5	5737..	85050	664....	1240..	....	H1-...
57	M25	7x0.375	.121	9.361	13	.078	0	y	13	5737..	85050	664....	1240..	....	H1-...
58	M34	6x2x6_...	.107	14.28	20	.011	14.28	z	8	7952..	9264..	1413..	1021..	....	H2-1
59	M57	6x2x6_...	.106	14.28	24	.011	14.28	z	12	7952..	9264..	1413..	1010..	....	H2-1
60	M40	6x2x6_...	.105	14.28	16	.011	14.28	z	4	7952..	9264..	1413..	1026..	....	H2-1
61	M35	7x0.375	.095	0	2	.070	9.361	y	2	5737..	85050	664....	1240..	....	H1-...
62	M29	7x0.375	.094	0	6	.068	9.361	y	6	5737..	85050	664....	1240..	....	H1-...

Envelope AISC 15th(360-16): LRFD Steel Code Checks (Continued)

	Member	Shape	Code Check	Loc[in]	LC	Shear Check	Loc[in]	Dir	LC	phi*...	phi*...	phi*...	phi*...	...	Eqn
63	M41	7x0.375	.093	0	10	.069	9.361	y	10	5737..	85050	664....	1240..	...	H1-...

APPENDIX D

ADDITIONAL CALCUATIONS

INFINIGY
FROM ZERO TO INFINIGY
the solutions are endless

Bolt Calculation Tool, V1.4

PROJECT DATA	
Site Name:	ROCKY HILL
Site Number:	842872
Job Code:	1039-Z0001-B
Connection Description:	Kicker to Tower

APPLIED LOADS		
Bolt Tension:	300.94	lbs
Bolt Shear:	972.08	lbs

BOLT PROPERTIES		
Bolt Type:	Bolt	-
Bolt Diameter:	0.625	in
Bolt Grade:	A325	-
# of Bolts:	4	-
Threads Excluded?	No	-

BOLT CHECK		
Tensile Strength	20340.15	
Shear Strength	13805.83	
Tensile Usage	1.5%	
Shear Usage	7.0%	
Interaction Check	0.01	***≤1.05***
Result	Pass	

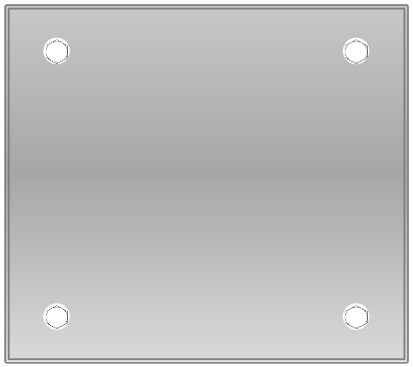

INFINIGY
FROM ZERO TO INFINIGY
the solutions are endless

Bolt Calculation Tool, V1.4

PROJECT DATA	
Site Name:	ROCKY HILL
Site Number:	842872
Job Code:	1039-Z0001-B
Connection Description:	Standoff to Collar Plate

APPLIED LOADS		
Bolt Tension:	3370.68	lbs
Bolt Shear:	662.95	lbs

BOLT PROPERTIES		
Bolt Type:	Bolt	-
Bolt Diameter:	0.625	in
Bolt Grade:	A325	-
# of Bolts:	4	-
Threads Excluded?	No	-

BOLT CHECK		
Tensile Strength	20340.15	
Shear Strength	13805.83	
Tensile Usage	16.6%	
Shear Usage	4.8%	
Interaction Check	0.03	***≤1.05***
Result	Pass	

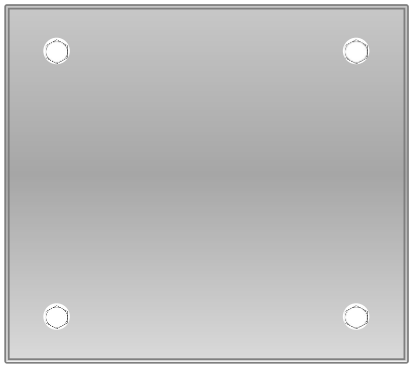

APPENDIX E

MOUNT MODIFICATION DESIGN DRAWINGS (MDD) / SUPPLEMENTAL DRAWINGS

GENERAL NOTES:

1. THESE DOCUMENTS WERE DESIGNED IN ACCORDANCE WITH THE LATEST VERSION OF APPLICABLE LOCAL/STATE/COUNTY/CITY BUILDING CODES, AS WELL AS ANSI/TIA-222 STANDARD, AWWA-D100 STANDARD, NDS, NEC, MSJC, AND/OR THE LATEST VERSION OF THE INTERNATIONAL BUILDING CODE, UNLESS NOTED OTHERWISE IN THE CORRESPONDING STRUCTURAL REPORT.
2. ALL CONSTRUCTION METHODS SHOULD FOLLOW STANDARDS OF GOOD CONSTRUCTION PRACTICE.
3. ALL WORK INDICATED ON THESE DRAWINGS SHALL BE PERFORMED BY QUALIFIED CONTRACTORS EXPERIENCED IN SIMILAR CONSTRUCTION.
4. ALL NEW WORK SHALL ACCOMMODATE EXISTING CONDITIONS. IF OBSTRUCTIONS ARE FOUND, CONTRACTOR SHALL NOTIFY ENGINEER OF RECORD PRIOR TO CONTINUING WORK.
5. ANY CHANGES OR ADDITIONS MUST CONFORM TO THE REQUIREMENTS OF THESE NOTES AND SPECIFICATIONS, AND SHOULD BE SIMILAR TO THOSE SHOWN. ALL CHANGES OR ADDITIONS SHALL BE SUBMITTED TO THE ENGINEER OF RECORD FOR REVIEW AND APPROVAL PRIOR TO FABRICATION AND/OR CONSTRUCTION.
6. THE CONTRACTOR IS RESPONSIBLE FOR THE DESIGN AND EXECUTION OF ALL MISCELLANEOUS SHORING, BRACING, TEMPORARY SUPPORTS, ETC. NECESSARY TO PROVIDE A COMPLETE AND STABLE STRUCTURE DURING CONSTRUCTION. TIA-1019-A-2011 IS AN APPROPRIATE REFERENCE FOR THOSE DESIGNS MEETING TIA STANDARDS. THE ENGINEER OF RECORD MAY PROVIDE FORMAL RIGGING PLANS AT THE REQUEST AND EXPENSE OF THE CONTRACTOR.
7. INSTALLATION SHALL NOT INTERFERE NOR DENY ADEQUATE ACCESS TO OR FROM ANY EXISTING OR PROPOSED OPERATIONAL AND SAFETY EQUIPMENT.
8. CONTRACTOR SHALL FIELD VERIFY ALL DIMENSIONS PRIOR TO ANY FABRICATION. CONTACT INFINIGY ENGINEERING IF ANY DISCREPANCIES EXIST.

STEEL CONSTRUCTION NOTES:

1. STRUCTURAL STEEL SHALL CONFORM TO THE AISC MANUAL OF STEEL CONSTRUCTION 14TH EDITION, FOR THE DESIGN AND FABRICATION OF STEEL COMPONENTS.
2. ALL FIELD CUT SURFACES, FIELD DRILLED HOLES, AND GROUND SURFACES WHERE EXISTING PAINT OR GALVANIZATION REMOVAL WAS REQUIRED SHALL BE REPAIRED WITH (2) BRUSHED COATS OF ZRC GALVILITE COLD GALVANIZING COMPOUND PER ASTM A780 AND MANUFACTURERS' RECOMMENDATIONS.
3. ALL FIELD DRILLED HOLES TO BE USED FOR FIELD BOLTING INSTALLATION SHALL BE STANDARD HOLES, AS DEFINED BY AISC, UNLESS NOTED OTHERWISE.
4. ALL EXTERIOR STEEL WORK SHALL BE GALVANIZED IN ACCORDANCE WITH ASTM A123.
5. ALL STEEL MEMBERS AND CONNECTIONS SHALL MEET THE FOLLOWING GRADES:
   - ANGLES, CHANNELS, PLATES AND BARS TO BE A36. Fy=36 KSI, U.N.O.
   - W SHAPES TO BE A992. Fy=50 KSI, U.N.O.
   - RECTANGULAR HSS TO BE A500, GRADE B. FY=46 KSI, U.N.O.
   - ROUND HSS TO BE A500, GRADE B. FY=42 KSI, U.N.O.
   - STEEL PIPE TO BE A53, GRADE B. Fy=35 KSI, U.N.O.
   - BOLTS TO BE A325-X. Fu=120 KSI, U.N.O.
   - U-BOLTS AND LAG SCREWS TO BE A307 GR A. Fu=60 KSI, U.N.O.
6. ALL WELDING SHALL BE DONE USING E70XX ELECTRODES, U.N.O.
7. ALL WELDING SHALL CONFORM TO AISC AND AWS D1.1 LATEST EDITION.
8. ALL HILTI ANCHORS TO BE CARBON STEEL, U.N.O.
   - MECHANICAL ANCHORS: KWIK BOLT-TZ, U.N.O.
   - CMU BLOCK ANCHORS: ADHESIVE – HY120, U.N.O.
   - CONCRETE ANCHORS: ADHESIVE – HY150, U.N.O.
   - CONCRETE REBAR: ADHESIVE – RE500, U.N.O.
9. ALL STUDS TO BE NELSON CAPACITOR DISCHARGE 1/4"-20 LOW CARBON STEEL COPPER-FLASH AT 55 KSI ULT/50 KSI YIELD, U.N.O.
10. BOLTS SHALL BE TIGHTENED TO A "SNUG TIGHT" CONDITION AS DEFINED BY AISC.
11. MINIMUM EDGE DISTANCES SHALL CONFORM TO AISC TABLE J3.4.
12. REMOVAL/REPLACEMENT OF STRUCTURAL MEMBERS SHALL BE DONE ONE MEMBER AT A TIME. CONTRACTOR IS RESPONSIBLE FOR ENSURING THE STRUCTURAL INTEGRITY OF THE STRUCTURE DURING ALL PHASES OF CONSTRUCTION.

CONCRETE CONSTRUCTION NOTES:

1. CONCRETE TO BE 4000 PSI @ 28 DAYS. REINFORCING BAR TO CONFORM TO ASTM A615 GRADE 60 SPECIFICATIONS. CONCRETE INSTALLATION TO CONFORM TO ACI-318 BUILDING REQUIREMENTS FOR REINFORCED CONCRETE. ALL CONCRETE TO BE PLACED AGAINST UNDISTURBED EARTH FREE OF WATER AND ALL FOREIGN OBJECTS AND MATERIALS. A MINIMUM OF THREE INCHES OF CONCRETE SHALL COVER ALL REINFORCEMENT. WELDING OF REBAR IS NOT PERMITTED.
2. EXISTING CONCRETE SURFACES THAT ARE TO BE IN CONTACT WITH NEW PROPOSED CONCRETE SHOULD BE WIRE BRUSHED CLEAN AND TREATED WITH APPROPRIATE MECHANICAL SCRATCH COAT AND REPAIR MATERIALS OR APPROPRIATE CHEMICAL METHODS SUCH AS THE APPLICATION OF A BONDING AGENT, EX. SAKRETE OR EQUIVALENT, TO ENSURE A QUALITY BOND BETWEEN EXISTING AND PROPOSED CONCRETE SURFACES.

FIBER REINFORCED POLYMER (FRP) NOTES:

1. FRP PLATES, SHAPES, BOLTS AND NUTS (STUD/NUT ASSEMBLIES) SHALL CONFORM TO ASTM D638, 695, 790. PLATES AND SHAPES TO BE FY = 5.35 KSI LW (SAFETY FACTOR OF 8), .945 KSI CW (SAFETY FACTOR OF 8) MIN.
2. IF FIELD FABRICATION IS REQUIRED, ALL CUT EDGES AND DRILLED HOLES TO BE SEALED USING VINYL ESTER SEALING KIT SUPPLIED BY THE MANUFACTURER.
3. ALL FASTENERS TO BE 1/2" DIA FRP THREADED ROD WITH FIBER REINFORCED THERMOPLASTIC NUT, SPACED AT 12 INCHES ON CENTER MAXIMUM, U.N.O., FOR PANELS AND AS DESIGNED FOR STRUCTURAL MEMBERS.
4. THE COLOR AND SURFACE PATTERN OF EXPOSED FRP PANELS SHALL MATCH THE EXTERIOR OF THE EXISTING BUILDING, U.N.O.
5. STUD/NUT ASSEMBLIES SHOULD BE LUBRICATED FOR INSTALLATION
6. ENSURE BEARING SURFACES OF THE NUTS ARE PARALLEL TO THE SURFACES BEING FASTENED.
7. TORQUE BOLTS ACCORDING TO THE FOLLOWING TABLE:

INSTALLATION TORQUE TABLE

SIZE	ULTIMATE TORQUE STRENGTH	RECOMMENDED MAXIMUM INSTALLATION TORQUE
3/8-16 UNC	8 FT-LBS	4 FT-LBS
1/2-13 UNC	18 FT-LBS	8 FT-LBS
5/8-11 UNC	35 FT-LBS	16 FT-LBS
3/4-10 UNC	50 FT-LBS	24 FT-LBS
1-8 UNC	110 FT-LBS	50 FT-LBS

8. WHEN TIGHTENING FRP STUD/NUT ASSEMBLIES, WRENCHES MUST MAKE FULL CONTACT WITH ALL NUT EDGES. A STANDARD SIX POINT SOCKET IS RECOMMENDED.
9. STUD/NUT ASSEMBLIES SHOULD BE BONDED BY APPLYING BONDING AGENT TO ENTIRE NUT AND EXPOSED STUD.
10. ALL FRP MATERIALS TO BE PROVIDED BY FIBERGRATE COMPOSITE STRUCTURES, DALLAS TX, OR APPROVED EQUAL.
11. ALL FRP SHAPES TO BE DYNAFORM PULTRUDED STRUCTURAL SHAPES.
12. ALL FRP PLATES TO BE FIBERPLATE MOLDED FRP PLATE.
13. ALL FRP PANELS TO BE FIBERPLATE CLADDING PANEL.
14. EACH FRP PANEL TO BE IDENTIFIED WITH LARR#25536 AND FIBERGRATE COMPOSITE STRUCTURAL LABEL.
15. FRP MATERIAL TO BE CLASSIFIED AS CC1 OR BETTER, AND HAVE MAXIMUM FLAME SPREAD OF 50.
16. ALL DESIGN AND CONSTRUCTION TO BE COMPLETED IN ACCORDANCE WITH LOS ANGELES RESEARCH REPORT RR25536, DATED FEBRUARY 1, 2016.
17. SPECIAL INSPECTIONS MUST BE PROVIDED FOR ALL FRP INSTALLMENTS. SEE SPECIAL INSPECTION SECTION, THIS SHEET.

RATIO OF EDGE DISTANCE TO FRP FASTENER DIAMETER

	RANGE	RECOMMENDED
EDGE DISTANCE – CL* BOLT TO END	2.0-4.0	3.0
EDGE DISTANCE – CL* BOLT TO SIDE	1.5-3.5	2.5
BOLT PITCH – CL* TO CL*	4.0-5.0	5.0

WOOD CONSTRUCTION NOTES:

1. ALL EXISTING WOOD SHAPES ARE ASSUMED TO BE DOUGLAS FIR-LARCH WITH A REFERENCE DESIGN BENDING VALUE OF 1000 PSI MIN.
2. ALL PROPOSED WOOD SHAPES ARE TO BE DOUGLAS FIR-LARCH WITH A REFERENCE DESIGN BENDING VALUE OF 1000 PSI MIN. U.N.O.
3. ALL EXISTING AND PROPOSED GLUED LAMINATED TIMBERS ARE TO BE 24F-1.8C DOUGLAS FIR BALANCED WITH A REFERENCE DESIGN BENDING VALUE OF 2400 PSI MIN. U.N.O.

MASONRY CONSTRUCTION NOTES:

1. ALL BRICK TO BE 1500 PSI MIN. REINFORCING BAR (IF APPLICABLE) TO CONFORM TO ASTM A615 GRADE 60 SPECIFICATIONS. ALL MORTAR TO BE 2000 PSI MIN.
   - FOR INTERIOR/ABOVE GRADE APPLICATIONS TYPE N MORTAR HAVING MINIMUM MODULUS OF RUPTURE OF 100 PSI SHALL BE USED. FOR EXTERIOR/BELOW GRADE APPLICATIONS TYPE M OR S MORTAR HAVING A MINIMUM MODULUS OF RUPTURE OF 133 PSI.
   - BRICK AND MORTAR INSTALLATION TO CONFORM TO MSJC BUILDING CODE REQUIREMENTS FOR MASONRY STRUCTURES.
2. ALL CMU TO BE 1500 PSI MIN. REINFORCING BAR (IF APPLICABLE) TO CONFORM TO ASTM A615 GRADE 60 SPECIFICATIONS. ALL MORTAR TO BE 2000 PSI MIN.
   - FOR INTERIOR/ABOVE GRADE APPLICATIONS, TYPE N MORTAR HAVING MINIMUM MODULUS OF RUPTURE OF 64 PSI SHALL BE USED FOR UNGROUTED BLOCKS, AND 158 PSI FOR FULLY GROUTED BLOCKS.
   - FOR EXTERIOR/BELOW GRADE APPLICATIONS TYPE M OR S MORTAR HAVING A MINIMUM MODULUS OF RUPTURE OF 84 PSI SHALL BE USED FOR UNGROUTED BLOCKS, AND 163 PSI FOR FULLY GROUTED BLOCKS.
   - BRICK AND MORTAR INSTALLATION TO CONFORM TO MSJC BUILDING CODE REQUIREMENTS FOR MASONRY STRUCTURES.

TOWER PLUMB & TENSION NOTES:

1. PLUMB AND TENSION TOWER UPON COMPLETION OF STRUCTURAL MODIFICATIONS DETAILED IN THESE DRAWINGS.
2. RETENSIONING OF EXISTING GUY WIRES SHALL BE PERFORMED AT A TIME WHEN THE WIND VELOCITY IS LESS THAN 10 MPH AT GROUND LEVEL AND WITH NO ICE ON THE STRUCTURE AND GUY WIRES.
3. PLUMB THE TOWER WHILE RETENSIONING THE EXISTING GUY WIRES. THE HORIZONTAL DISTANCE BETWEEN THE VERTICAL CENTERLINES AT ANY TWO ELEVATIONS SHALL NOT EXCEED 0.25% OF THE VERTICAL DISTANCE BETWEEN TWO ELEVATIONS FOR LATTICED STRUCTURES.
4. THE TWIST BETWEEN ANY TWO ELEVATIONS THROUGHOUT THE HEIGHT OF A LATTICE STRUCTURE SHALL NOT EXCEED 0.5 DEGREES IN 10 FEET. THE MAXIMUM TWIST OVER THE LATTICE STRUCTURE HEIGHT SHALL NOT EXCEED 5 DEGREES.

SPECIAL INSPECTIONS NOTES:

1. A QUALIFIED INDEPENDENT TESTING LABORATORY, EMPLOYED BY THE OWNER AND APPROVED BY THE JURISDICTION, SHALL PERFORM INSPECTION AND TESTING IN ACCORDANCE WITH THE THE GOVERNING BUILDING CODE, APPLICABLE SECTION(S) AS REQUIRED BY PROJECT SPECIFICATIONS FOR THE FOLLOWING CONSTRUCTION WORK:
   a. STRUCTURAL WELDING (CONTINUOUS INSPECTION OF FIELD WELDS ONLY).
   b. HIGH STRENGTH BOLTS (PERIODIC INSPECTION OF A325 AND/OR A490 BOLTS) TO BE TIGHTENED PER "TURN-OF-THE-NUT" METHOD.
   c. MECHANICAL AND EPOXIED ANCHORAGES.
   d. FIBER REINFORCED POLYMER.
      - THE SPECIAL INSPECTOR MUST VERIFY THAT THE FRP MATERIAL SPECIFIED ON THE APPROVED DESIGN DOCUMENTS IS BEING INSTALLED.
      - THE SPECIAL INSPECTOR MUST VERIFY THAT ALL CUT EDGES AND DRILLED HOLES ARE PROPERLY SEALED USING A VINYL ESTER SEALING KIT SUPPLIED BY THE MANUFACTURER.
      - THE SPECIAL INSPECTOR MUST VERIFY THAT THE STRUCTURE IS BUILT IN ACCORDANCE WITH THE APPROVED DESIGN DOCUMENTS.
2. THE INSPECTION AGENCY SHALL SUBMIT INSPECTION AND TEST REPORTS TO THE BUILDING DEPARTMENT, THE ENGINEER OF RECORD, AND THE OWNER UNLESS THE FABRICATOR IS APPROVED BY THE BUILDING OFFICIAL TO PERFORM WORK WITHOUT THE SPECIAL INSPECTIONS.

MAXIMUM ALLOWABLE ANGLE CLIP

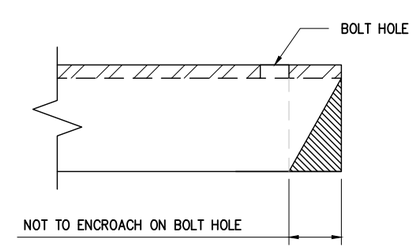

CROWN CASTLE
CROWN CASTLE
1200 MACARTHUR BLVD. SUITE 200
MAHWAH, NJ 07430

INFINIGY ENGINEERING PLLC
1033 Watervliet Shaker Rd
Albany, NY 12205
Office # (518) 690-0790
Fax # (518) 690-0793

T-Mobile

SUBMITTALS

DATE	DESCRIPTION	REVISION
04/12/21	FOR CONSTRUCTION	0

DEPT.	DATE	APP'D	REVISIONS
RFE			
RF MAN.			
ZONING			
OPS			
CONSTR.			
SITE AC.			

PROJECT NO:	1039-Z0001-B
DRAWN BY:	WJD
CHECKED BY:	JSG

STATE OF CONNECTICUT ★ EMANUEL POULIN ★ No. 22947 LICENSED PROFESSIONAL ENGINEER
4/12/21
PROFESSIONAL SEAL

THIS DOCUMENT IS THE CREATION, DESIGN, PROPERTY AND COPYRIGHTED WORK OF T-MOBILE. ANY DUPLICATION OR USE WITHOUT EXPRESS WRITTEN CONSENT IS STRICTLY PROHIBITED.

NOTE: IF DRAWINGS ARE 22"x34", USE GRAPHICAL SCALE AND/OR 1/2 TIMES OF THE NOTED SCALE.

SITE NUMBER
842872
SITE NAME
ROCKY HILL
52 NEW BRITAIN AVENUE
ROCKY HILL, CT 06067

SHEET TITLE
GENERAL NOTES

SHEET NUMBER
S-1

NOTES:

1. MODIFICATIONS SHOWN ARE FOR (1) SECTOR. (3) TOTAL SECTORS REQUIRE MODIFICATION
2. VARIOUS EXISTING CONDITIONS AND PROPOSED MODIFICATIONS NOT SHOWN FOR CLARITY.
3. ALL DESIGNATED PARTS ARE TO BE INSTALLED PER MANUFACTURER'S SPECIFICATIONS, UNLESS OTHERWISE NOTED.
4. CONTRACTOR TO FIELD VERIFY REQUIRED LENGTHS OF PROPOSED ANGLES & PIPES, AND CUT & DRILL ON SITE AS NECESSARY.
5. REMOVAL/REPLACEMENT OF STRUCTURAL MEMBERS SHALL BE DONE ONE MEMBER AT A TIME. CONTRACTOR IS RESPONSIBLE FOR ENSURING THE STRUCTURAL INTEGRITY OF THE STRUCTURE DURING ALL PHASES OF CONSTRUCTION.

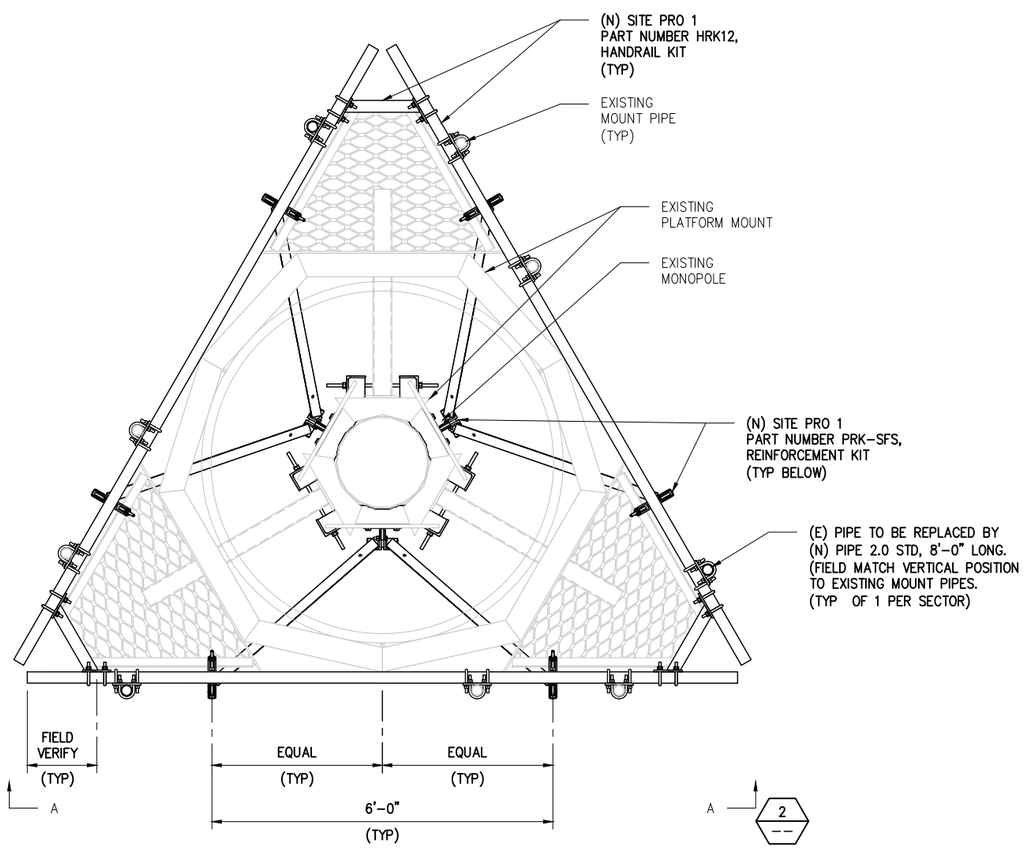

1 -- PLAN VIEW

SCALE: NOT TO SCALE

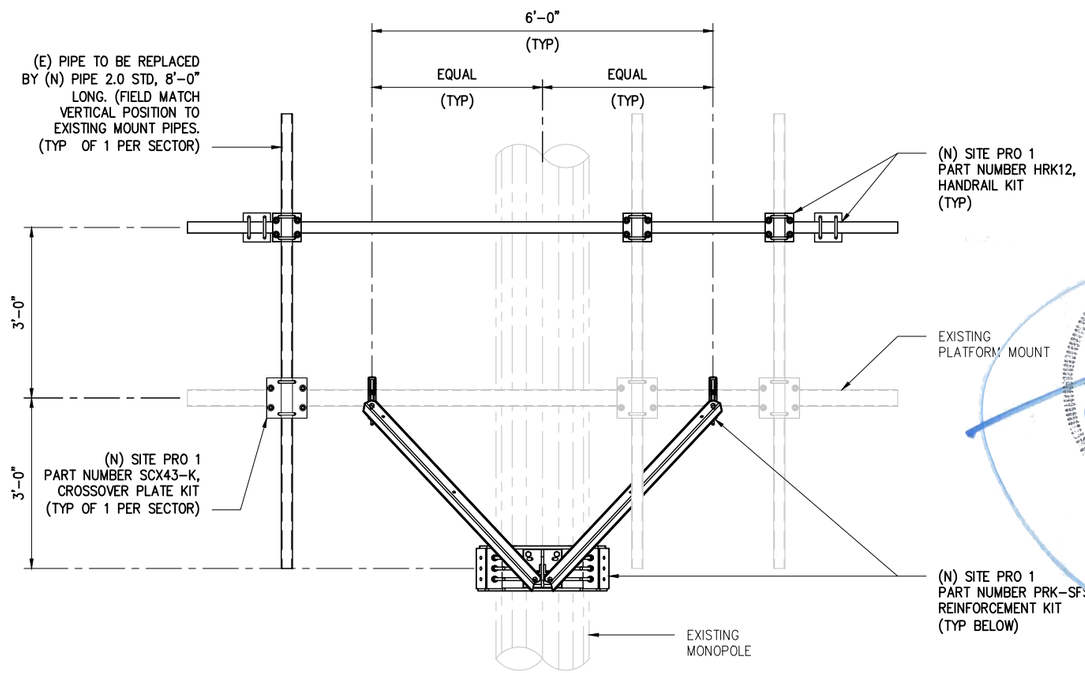

2 -- SECTION A–A

SCALE: NOT TO SCALE

CROWN CASTLE
CROWN CASTLE
1200 MACARTHUR BLVD. SUITE 200
MAHWAH, NJ 07430

INFINIGY ENGINEERING PLLC
1033 Watervliet Shaker Rd
Albany, NY 12205
Office # (518) 690-0790
Fax # (518) 690-0793

T-Mobile

SUBMITTALS

DATE	DESCRIPTION	REVISION
04/12/21	FOR CONSTRUCTION	0

DEPT.	DATE	APP'D	REVISIONS
RFE			
RF MAN.			
ZONING			
OPS			
CONSTR.			
SITE AC.			

PROJECT NO:	1039-Z0001-B
DRAWN BY:	WJD
CHECKED BY:	JSG

STATE OF CONNECTICUT
EMANUEL POULIS
No. 22947
LICENSED
PROFESSIONAL ENGINEER

4/12/21

PROFESSIONAL SEAL

THIS DOCUMENT IS THE CREATION, DESIGN, PROPERTY AND COPYRIGHTED WORK OF T-MOBILE. ANY DUPLICATION OR USE WITHOUT EXPRESS WRITTEN CONSENT IS STRICTLY PROHIBITED.

NOTE: IF DRAWINGS ARE 22"x34", USE GRAPHICAL SCALE AND/OR 1/2 TIMES OF THE NOTED SCALE.

SITE NUMBER
842872

SITE NAME
ROCKY HILL

52 NEW BRITAIN AVENUE
ROCKY HILL, CT 06067

SHEET TITLE

MOUNT MODIFICATION DETAILS

SHEET NUMBER

S-2

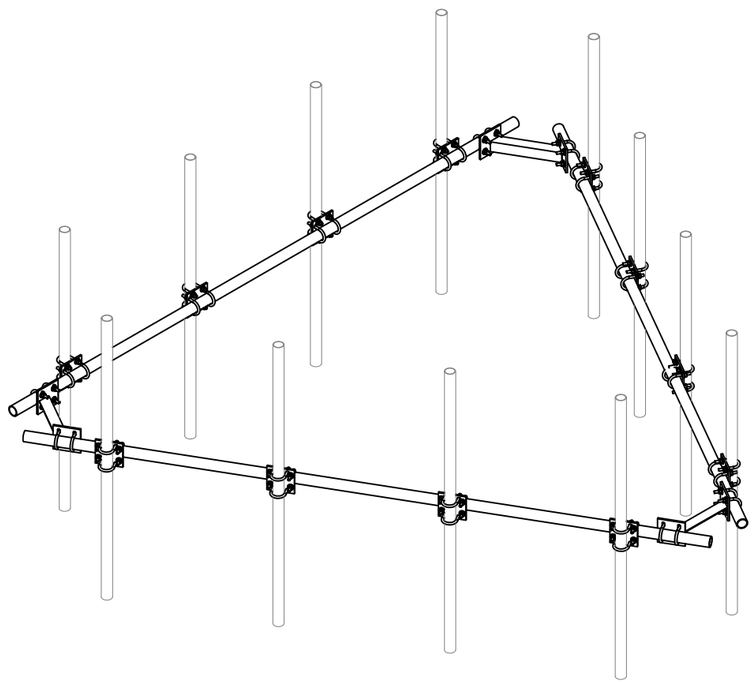

1 -- SITE PRO 1 P/N HRK12
SCALE: NOT TO SCALE

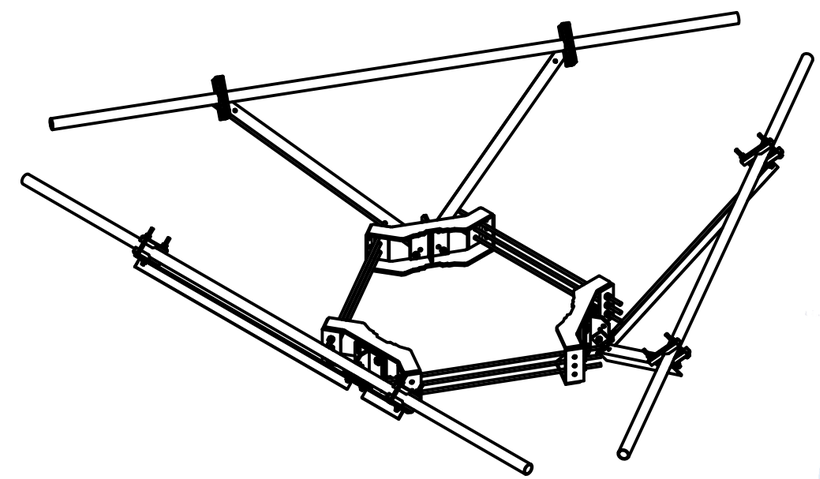

2 -- SITE PRO 1 P/N PRK-SFS
SCALE: NOT TO SCALE

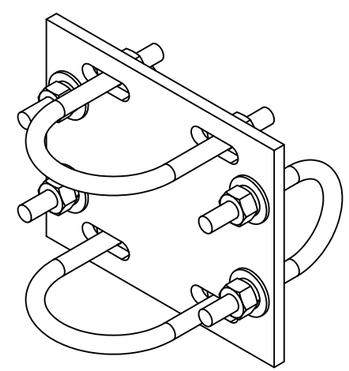

3 -- SITE PRO 1 P/N SCX43-K
SCALE: NOT TO SCALE

CROWN CASTLE
CROWN CASTLE
1200 MACARTHUR BLVD. SUITE 200
MAHWAH, NJ 07430

INFINIGY ENGINEERING PLLC
1033 Watervliet Shaker Rd
Albany, NY 12205
Office # (518) 690-0790
Fax # (518) 690-0793

T-Mobile

SUBMITTALS

DATE	DESCRIPTION	REVISION
04/12/21	FOR CONSTRUCTION	0

DEPT.	DATE	APP'D	REVISIONS
RFE			
RF MAN.			
ZONING			
OPS			
CONSTR.			
SITE AC.			

PROJECT NO: 1039-Z0001-B
DRAWN BY: WJD
CHECKED BY: JSG

STATE OF CONNECTICUT
MANUEL POULIOT
No. 22947
LICENSED
PROFESSIONAL ENGINEER
4/12/21
PROFESSIONAL SEAL

THIS DOCUMENT IS THE CREATION, DESIGN, PROPERTY AND COPYRIGHTED WORK OF T-MOBILE. ANY DUPLICATION OR USE WITHOUT EXPRESS WRITTEN CONSENT IS STRICTLY PROHIBITED.

NOTE: IF DRAWINGS ARE 22"x34", USE GRAPHICAL SCALE AND/OR 1/2 TIMES OF THE NOTED SCALE.

SITE NUMBER
842872

SITE NAME
ROCKY HILL

52 NEW BRITAIN AVENUE
ROCKY HILL, CT 06067

SHEET TITLE
REQUIRED PARTS

SHEET NUMBER
S-3

Exhibit F

Power Density/RF Emissions Report

EBI Consulting

environmental | engineering | due diligence

RADIO FREQUENCY EMISSIONS ANALYSIS REPORT
EVALUATION OF HUMAN EXPOSURE POTENTIAL TO NON-IONIZING EMISSIONS

T-Mobile Existing Facility

Site ID: CT11427A

Rocky Hill/RT 3/RT 160
52 New Britain Avenue
Rocky Hill, Connecticut 06067

May 21, 2021

EBI Project Number: 6221002576

Site Compliance Summary	
Compliance Status:	**COMPLIANT**
Site total MPE% of FCC general population allowable limit:	**31.22%**

21 B Street, Burlington, MA 01803 · Tel: (781) 273.2500 · Fax: (781) 273.3311

May 21, 2021

T-Mobile
Attn: Jason Overbey, RF Manager
35 Griffin Road South
Bloomfield, Connecticut 06002

Emissions Analysis for Site: CT11427A - Rocky Hill/RT 3/RT 160

EBI Consulting was directed to analyze the proposed T-Mobile facility located at **52 New Britain Avenue** in **Rocky Hill, Connecticut** for the purpose of determining whether the emissions from the Proposed T-Mobile Antenna Installation located on this property are within specified federal limits.

All information used in this report was analyzed as a percentage of current Maximum Permissible Exposure (% MPE) as listed in the FCC OET Bulletin 65 Edition 97-01and ANSI/IEEE Std C95.1. The FCC regulates Maximum Permissible Exposure in units of microwatts per square centimeter ($\mu W/cm^2$). The number of $\mu W/cm^2$ calculated at each sample point is called the power density. The exposure limit for power density varies depending upon the frequencies being utilized. Wireless Carriers and Paging Services use different frequency bands each with different exposure limits; therefore, it is necessary to report results and limits in terms of percent MPE rather than power density.

All results were compared to the FCC (Federal Communications Commission) radio frequency exposure rules, 47 CFR 1.1307(b)(1) – (b)(3), to determine compliance with the Maximum Permissible Exposure (MPE) limits for General Population/Uncontrolled environments as defined below.

General population/uncontrolled exposure limits apply to situations in which the general population may be exposed or in which persons who are exposed as a consequence of their employment may not be made fully aware of the potential for exposure or cannot exercise control over their exposure. Therefore, members of the general population would always be considered under this category when exposure is not employment related, for example, in the case of a telecommunications tower that exposes persons in a nearby residential area.

Public exposure to radio frequencies is regulated and enforced in units of microwatts per square centimeter ($\mu W/cm^2$). The general population exposure limits for the 600 MHz and 700 MHz frequency bands are approximately 400 $\mu W/cm^2$ and 467 $\mu W/cm^2$, respectively. The general population exposure limit for the 1900 MHz (PCS), 2100 MHz (AWS) and 11 GHz frequency bands is 1000 $\mu W/cm^2$. Because each carrier will be using different frequency bands, and each frequency band has different exposure limits, it is necessary to report percent of MPE rather than power density.

Occupational/controlled exposure limits apply to situations in which persons are exposed as a consequence of their employment and in which those persons who are exposed have been made fully aware of the potential for exposure and can exercise control over their exposure. Occupational/controlled exposure limits also apply where exposure is of a transient nature as a result of incidental passage through a location where exposure levels may be above general population/uncontrolled limits (see below), as long as the exposed person has been made fully aware of the potential for exposure and can exercise control over his or her exposure by leaving the area or by some other appropriate means.

Additional details can be found in FCC OET 65.

CALCULATIONS

Calculations were done for the proposed T-Mobile Wireless antenna facility located at 52 New Britain Avenue in Rocky Hill, Connecticut using the equipment information listed below. All calculations were performed per the specifications under FCC OET 65. Since T-Mobile is proposing highly focused directional panel antennas, which project most of the emitted energy out toward the horizon, all calculations were performed assuming a lobe representing the maximum gain of the antenna per the antenna manufacturer's supplied specifications, minus 10 dB for directional panel antennas and 20 dB for highly focused parabolic microwave dishes, was focused at the base of the tower. For this report, the sample point is the top of a 6-foot person standing at the base of the tower. For power density calculations, the broadcast footprint of the AIR6449 antenna has been considered. Due to the beamforming nature of this antenna, the actual beam locations vary depending on demand and are narrow in nature. Using the broadcast footprint accounts for the potential location of beams at any given time.

For all calculations, all equipment was calculated using the following assumptions:

1) 2 LTE channels (600 MHz Band) were considered for each sector of the proposed installation. These Channels have a transmit power of 30 Watts per Channel.

2) 1 NR channel (600 MHz Band) was considered for each sector of the proposed installation. This Channel has a transmit power of 80 Watts.

3) 2 LTE channels (700 MHz Band) were considered for each sector of the proposed installation. These Channels have a transmit power of 30 Watts per Channel.

4) 4 GSM channels (PCS Band - 1900 MHz) were considered for each sector of the proposed installation. These Channels have a transmit power of 30 Watts per Channel.

5) 4 LTE channels (PCS Band - 1900 MHz) were considered for each sector of the proposed installation. These Channels have a transmit power of 60 Watts per Channel.

6) 2 LTE channels (AWS Band – 2100 MHz) were considered for each sector of the proposed installation. These Channels have a transmit power of 60 Watts per Channel.

7) 1 LTE Traffic channel (LTE 1C and 2C BRS Band - 2500 MHz) was considered for each sector of the proposed installation. This Channel has a transmit power of 60 Watts.

8) 1 LTE Broadcast channel (LTE 1C and 2C BRS Band - 2500 MHz) was considered for each sector of the proposed installation. This Channel has a transmit power of 20 Watts.

9) 1 NR Traffic channel (BRS Band - 2500 MHz) was considered for each sector of the proposed installation. This Channel has a transmit power of 120 Watts.

10) 1 NR Broadcast channel (BRS Band - 2500 MHz) was considered for each sector of the proposed installation. This Channel has a transmit power of 40 Watts.

11) All radios at the proposed installation were considered to be running at full power and were uncombined in their RF transmissions paths per carrier prescribed configuration. Per FCC OET Bulletin No. 65 - Edition 97-01 recommendations to achieve the maximum anticipated value at each sample point, all power levels emitting from the proposed antenna installation are increased by a factor of 2.56 to account for possible in-phase reflections from the surrounding environment. This is rarely the case, and if so, is never continuous.

12) For the following calculations, the sample point was the top of a 6-foot person standing at the base of the tower. The maximum gain of the antenna per the antenna manufacturer's supplied specifications, minus 10 dB for directional panel antennas and 20 dB for highly focused parabolic microwave dishes, was used in this direction. This value is a very conservative estimate as gain reductions for these particular antennas are typically much higher in this direction.

13) The antennas used in this modeling are the RFS APXVAALL24_43-U-NA20 for the 600 MHz / 600 MHz / 700 MHz / 1900 MHz channel(s), the Ericsson AIR 6449 for the 2500 MHz / 2500 MHz / 2500 MHz / 2500 MHz channel(s), the Ericsson AIR 32 for the 1900 MHz / 1900 MHz / 2100 MHz channel(s) in Sector A, the RFS APXVAALL24_43-U-NA20 for the 600 MHz / 600 MHz / 700 MHz / 1900 MHz channel(s), the Ericsson AIR 6449 for the 2500 MHz / 2500 MHz / 2500 MHz / 2500 MHz channel(s), the Ericsson AIR 32 for the 1900 MHz / 1900 MHz / 2100 MHz channel(s) in Sector B, the RFS APXVAALL24_43-U-NA20 for the 600 MHz / 600 MHz / 700 MHz / 1900 MHz channel(s), the Ericsson AIR 6449 for the 2500 MHz / 2500 MHz / 2500 MHz / 2500 MHz channel(s), the Ericsson AIR 32 for the 1900 MHz / 1900 MHz / 2100 MHz channel(s) in Sector C. This is based on feedback from the carrier with regard to anticipated antenna selection. All Antenna gain values and associated transmit power levels

are shown in the Site Inventory and Power Data table below. The maximum gain of the antenna per the antenna manufacturer's supplied specifications, minus 10 dB for directional panel antennas and 20 dB for highly focused parabolic microwave dishes, was used for all calculations. This value is a very conservative estimate as gain reductions for these particular antennas are typically much higher in this direction.

14) The antenna mounting height centerline of the proposed antennas is 159 feet above ground level (AGL).

15) Emissions values for additional carriers were taken from the Connecticut Siting Council active database. Values in this database are provided by the individual carriers themselves.

16) All calculations were done with respect to uncontrolled / general population threshold limits.

T-Mobile Site Inventory and Power Data

Sector:	A	Sector:	B	Sector:	C
Antenna #:	**1**	Antenna #:	**1**	Antenna #:	**1**
Make / Model:	RFS APXVAALL24_43-U-NA20	Make / Model:	RFS APXVAALL24_43-U-NA20	Make / Model:	RFS APXVAALL24_43-U-NA20
Frequency Bands:	600 MHz / 600 MHz / 700 MHz / 1900 MHz	Frequency Bands:	600 MHz / 600 MHz / 700 MHz / 1900 MHz	Frequency Bands:	600 MHz / 600 MHz / 700 MHz / 1900 MHz
Gain:	12.95 dBd / 12.95 dBd / 13.65 dBd / 15.45 dBd	Gain:	12.95 dBd / 12.95 dBd / 13.65 dBd / 15.45 dBd	Gain:	12.95 dBd / 12.95 dBd / 13.65 dBd / 15.45 dBd
Height (AGL):	159 feet	Height (AGL):	159 feet	Height (AGL):	159 feet
Channel Count:	7	Channel Count:	7	Channel Count:	7
Total TX Power (W):	320 Watts	Total TX Power (W):	320 Watts	Total TX Power (W):	320 Watts
ERP (W):	8,360.85	ERP (W):	8,360.85	ERP (W):	8,360.85
Antenna A1 MPE %:	**2.16%**	Antenna B1 MPE %:	**2.16%**	Antenna C1 MPE %:	**2.16%**
Antenna #:	**2**	Antenna #:	**2**	Antenna #:	**2**
Make / Model:	Ericsson AIR 6449	Make / Model:	Ericsson AIR 6449	Make / Model:	Ericsson AIR 6449
Frequency Bands:	2500 MHz / 2500 MHz / 2500 MHz / 2500 MHz	Frequency Bands:	2500 MHz / 2500 MHz / 2500 MHz / 2500 MHz	Frequency Bands:	2500 MHz / 2500 MHz / 2500 MHz / 2500 MHz
Gain:	22.65 dBd / 17.3 dBd / 22.65 dBd / 17.3 dBd	Gain:	22.65 dBd / 17.3 dBd / 22.65 dBd / 17.3 dBd	Gain:	22.65 dBd / 17.3 dBd / 22.65 dBd / 17.3 dBd
Height (AGL):	159 feet	Height (AGL):	159 feet	Height (AGL):	159 feet
Channel Count:	4	Channel Count:	4	Channel Count:	4
Total TX Power (W):	240 Watts	Total TX Power (W):	240 Watts	Total TX Power (W):	240 Watts
ERP (W):	36,356.09	ERP (W):	36,356.09	ERP (W):	36,356.09
Antenna A2 MPE %:	**5.58%**	Antenna B2 MPE %:	**5.58%**	Antenna C2 MPE %:	**5.58%**
Antenna #:	**3**	Antenna #:	**3**	Antenna #:	**3**
Make / Model:	Ericsson AIR 32	Make / Model:	Ericsson AIR 32	Make / Model:	Ericsson AIR 32
Frequency Bands:	1900 MHz / 1900 MHz / 2100 MHz	Frequency Bands:	1900 MHz / 1900 MHz / 2100 MHz	Frequency Bands:	1900 MHz / 1900 MHz / 2100 MHz
Gain:	15.35 dBd / 15.35 dBd / 15.85 dBd	Gain:	15.35 dBd / 15.35 dBd / 15.85 dBd	Gain:	15.35 dBd / 15.35 dBd / 15.85 dBd
Height (AGL):	159 feet	Height (AGL):	159 feet	Height (AGL):	159 feet
Channel Count:	8	Channel Count:	8	Channel Count:	8
Total TX Power (W):	360 Watts	Total TX Power (W):	360 Watts	Total TX Power (W):	360 Watts
ERP (W):	12,841.53	ERP (W):	12,841.53	ERP (W):	12,841.53
Antenna A3 MPE %:	**1.97%**	Antenna B3 MPE %:	**1.97%**	Antenna C3 MPE %:	**1.97%**

Site Composite MPE %	
Carrier	MPE %
T-Mobile (Max at Sector A):	9.72%
Verizon	12%
AT&T	4.44%
Sprint	2.96%
Police	1%
Fire	1%
Clearwire	0.1%
Site Total MPE % :	31.22%

T-Mobile MPE % Per Sector	
T-Mobile Sector A Total:	9.72%
T-Mobile Sector B Total:	9.72%
T-Mobile Sector C Total:	9.72%
Site Total MPE % :	31.22%

T-Mobile Maximum MPE Power Values (Sector A)

T-Mobile Frequency Band / Technology (Sector A)	# Channels	Watts ERP (Per Channel)	Height (feet)	Total Power Density (μW/cm²)	Frequency (MHz)	Allowable MPE (μW/cm²)	Calculated % MPE
T-Mobile 600 MHz LTE	2	591.73	159.0	1.82	600 MHz LTE	400	0.45%
T-Mobile 600 MHz NR	1	1577.94	159.0	2.42	600 MHz NR	400	0.61%
T-Mobile 700 MHz LTE	2	695.22	159.0	2.14	700 MHz LTE	467	0.46%
T-Mobile 1900 MHz LTE	2	2104.51	159.0	6.46	1900 MHz LTE	1000	0.65%
T-Mobile 2500 MHz LTE 1C & 2C Traffic	1	11044.63	159.0	16.96	2500 MHz LTE 1C & 2C Traffic	1000	1.70%
T-Mobile 2500 MHz LTE 1C & 2C Broadcast	1	1074.06	159.0	1.65	2500 MHz LTE 1C & 2C Broadcast	1000	0.16%
T-Mobile 2500 MHz NR Traffic	1	22089.26	159.0	33.92	2500 MHz NR Traffic	1000	3.39%
T-Mobile 2500 MHz NR Broadcast	1	2148.13	159.0	3.30	2500 MHz NR Broadcast	1000	0.33%
T-Mobile 1900 MHz GSM	4	1028.30	159.0	6.32	1900 MHz GSM	1000	0.63%
T-Mobile 1900 MHz LTE	2	2056.61	159.0	6.32	1900 MHz LTE	1000	0.63%
T-Mobile 2100 MHz LTE	2	2307.55	159.0	7.09	2100 MHz LTE	1000	0.71%
						Total:	**9.72%**

• NOTE: Totals may vary by approximately 0.01% due to summation of remainders in calculations.

Summary

All calculations performed for this analysis yielded results that were **within** the allowable limits for general population exposure to RF Emissions.

The anticipated maximum composite contributions from the T-Mobile facility as well as the site composite emissions value with regards to compliance with FCC's allowable limits for general population exposure to RF Emissions are shown here:

T-Mobile Sector	Power Density Value (%)
Sector A:	9.72%
Sector B:	9.72%
Sector C:	9.72%
T-Mobile Maximum MPE % (Sector A):	9.72%
Site Total:	31.22%
Site Compliance Status:	**COMPLIANT**

The anticipated composite MPE value for this site assuming all carriers present is **31.22%** of the allowable FCC established general population limit sampled at the ground level. This is based upon values listed in the Connecticut Siting Council database for existing carrier emissions.

FCC guidelines state that if a site is found to be out of compliance (over allowable thresholds), that carriers over a 5% contribution to the composite value will require measures to bring the site into compliance. For this facility, the composite values calculated were well within the allowable 100% threshold standard per the federal government.