Robinson+Cole

KENNETH C. BALDWIN

280 Trumbull Street
Hartford, CT 06103-3597
Main (860) 275-8200
Fax (860) 275-8299
kbaldwin@rc.com
Direct (860) 275-8345

Also admitted in Massachusetts
and New York

May 24, 2021

Via Electronic Mail

Melanie A. Bachman, Esq.
Executive Director/Staff Attorney
Connecticut Siting Council
10 Franklin Square
New Britain, CT 06051

Re: **Notice of Exempt Modification – Facility Modification**
33 Keegan Road (a/k/a 55 Keegan Road), Plymouth, Connecticut

Dear Attorney Bachman:

Cellco Partnership d/b/a Verizon Wireless ("Cellco") currently maintains an existing wireless telecommunications facility at the above-referenced address (the "Property"). The facility consists of antennas and remote radio heads attached to a tower and related equipment on the ground, near the base of the tower. The tower and Cellco's use of the tower were approved by Council, on July 9, 2015, in Docket No 456. A copy of the Council's Docket No. 456 Decision and Order is included in Attachment 1.

Cellco now intends to modify its facility by removing nine (9) existing antennas and installing six (6) JAHH-65B-R3B antennas and three (3) Samsung 64T64RMMU antennas; and removing nine (9) remote radio heads ("RRHs") and installing six (6) new RRHs on Cellco's existing antenna platform. Modifications to the existing antenna platform will be required. A set of project plans showing Cellco's proposed facility modifications and new antennas and RRHs specifications are included in Attachment 2.

Please accept this letter as notification pursuant to R.C.S.A. § 16-50j-73, for construction that constitutes an exempt modification pursuant to R.C.S.A. § 16-50j-72(b)(2). In accordance with R.C.S.A. § 16-50j-73, a copy of this letter is being sent to Plymouth's Chief Elected Official and Land Use Officer.

The planned modifications to the facility fall squarely within those activities explicitly provided for in R.C.S.A. § 16-50j-72(b)(2).

1. The proposed modifications will not result in an increase in the height of the existing tower. Cellco's replacement antennas will be installed on Cellco's existing antenna platform.

2. The proposed modifications will not involve any change to ground-mounted equipment and, therefore, will not require the extension of the site boundary.

3. The proposed modifications will not increase noise levels at the facility by six decibels or more, or to levels that exceed state and local criteria.

4. The installation of Cellco's new antennas will not increase radio frequency (RF) emissions at the facility to a level at or above the Federal Communications Commission (FCC) safety standard. A Cumulative Power Density table for the modified facility is included in Attachment 3. The modified facility will be capable of providing Cellco's 5G wireless service.

5. The proposed modifications will not cause a change or alteration in the physical or environmental characteristics of the site.

6. According to the attached Structural Analysis ("SA") and Mount Analysis ("MA"), the existing tower, tower foundation, tower base plate can support Cellco's proposed modifications. Copies of the SA and MA are included in Attachment 4. Also included in Attachment 4 is a separate letter prepared by the consulting engineer responsible for the preparation of the SA and MA, verifying that the antenna model described in the SA and MA, respectively, as a nL-Sub6 Antenna or VZS01 Antenna, is the Samsung 64T64R model antenna that will be installed on the tower.

A copy of the parcel map and Property owner information is included in Attachment 5. A Certificate of Mailing verifying that this filing was sent to municipal officials is included in Attachment 6.

For the foregoing reasons, Cellco respectfully submits that the proposed modifications to the above-referenced telecommunications facility constitutes an exempt modification under R.C.S.A. § 16-50j-72(b)(2).

Sincerely,

Kenneth C. Baldwin

Enclosures
Copy to:
David V. Merchant, Plymouth Mayor
Margus T. Laan, Plymouth Director of Planning and Economic Development
Aleksey Tyurin

ATTACHMENT 1

DOCKET NO. 456 – Cellco Partnership d/b/a Verizon Wireless application for a Certificate of Environmental Compatibility and Public Need for the construction, maintenance, and operation of a telecommunications facility located at Plymouth Tax Assessor Map 054/065/016A-1, 33 Keegan Road, Plymouth, Connecticut.	}	Connecticut
	}	Siting
	}	Council

July 9, 2015

Decision and Order

Pursuant to Connecticut General Statutes §16-50p and the foregoing Findings of Fact and Opinion, the Connecticut Siting Council (Council) finds that the effects associated with the construction, maintenance, and operation of a telecommunications facility, including effects on the natural environment; ecological integrity and balance; public health and safety; scenic, historic, and recreational values; forests and parks; air and water purity; and fish and wildlife are not disproportionate, either alone or cumulatively with other effects, when compared to need, are not in conflict with the policies of the State concerning such effects, and are not sufficient reason to deny the application, and therefore directs that a Certificate of Environmental Compatibility and Public Need, as provided by General Statutes § 16-50k, be issued to Cellco Partnership d/b/a Verizon Wireless, hereinafter referred to as the Certificate Holder, for a telecommunications facility located at 33 Keegan Road, Plymouth, Connecticut.

Unless otherwise approved by the Council, the facility shall be constructed, operated, and maintained substantially as specified in the Council's record in this matter, and subject to the following conditions:

1. The tower shall be constructed as a monopole at a height of 140 feet above ground level to provide the proposed wireless services, sufficient to accommodate the antennas of Cellco Partnership and other entities, both public and private. The height of the tower may be extended after the date of this Decision and Order pursuant to regulations of the Federal Communications Commission.

2. The Certificate Holder shall prepare a Development and Management (D&M) Plan for this site in compliance with Sections 16-50j-75 through 16-50j-77 of the Regulations of Connecticut State Agencies. The D&M Plan shall be served on the Town of Plymouth for comment, and all parties and intervenors as listed in the service list, and submitted to and approved by the Council prior to the commencement of facility construction and shall include:
    a) final site plan(s) for development of the facility to include specifications for the tower, tower foundation, antennas, equipment compound including, but not limited to, fence with less than two inch mesh, radio equipment, utility line, emergency backup generator. Specifications for the tower shall employ the governing standard in the State of Connecticut for tower design in accordance with the currently adopted International Building Code;
    b) site plan details depicting the alternative access drive, associated retaining walls, and permanent stormwater control features;
    c) construction plans for site clearing, grading, landscaping, water drainage, and erosion and sedimentation controls consistent with the 2002 Connecticut Guidelines for Soil Erosion and Sediment Control, as amended;
    d) provisions for a Turtle Protection Program that includes Department of Energy and Environmental Protection recommended construction practices to reduce impact to box and wood turtle populations during construction; and
    e) provisions to avoid construction activities during the whip-poor-will nesting period of May 1 to July 31, in accordance with Department of Energy and Environmental Protection recommendations.

3. Removal of the 42 South Street facility within six months of the commencement of site operation of the 33 Keegan Road facility. The Certificate Holder may submit a written request to the Council for an extension of time to complete decommissioning, if necessary.

4. Prior to the commencement of operation, the Certificate Holder shall provide the Council worst-case modeling of the electromagnetic radio frequency power density of all proposed entities' antennas at the closest point of uncontrolled access to the tower base, consistent with Federal Communications Commission, Office of Engineering and Technology, Bulletin No. 65, August 1997. The Certificate Holder shall ensure a recalculated report of the electromagnetic radio frequency power density be submitted to the Council if and when circumstances in operation cause a change in power density above the levels calculated and provided pursuant to this Decision and Order.

4. Upon the establishment of any new federal radio frequency standards applicable to frequencies of this facility, the facility granted herein shall be brought into compliance with such standards.

5. The Certificate Holder shall permit public or private entities to share space on the proposed tower for fair consideration, or shall provide any requesting entity with specific legal, technical, environmental, or economic reasons precluding such tower sharing.

6. Unless otherwise approved by the Council, if the facility authorized herein is not fully constructed with at least one fully operational wireless telecommunications carrier providing wireless service within eighteen months from the date of the mailing of the Council's Findings of Fact, Opinion, and Decision and Order (collectively called "Final Decision"), this Decision and Order shall be void, and the Certificate Holder shall dismantle the tower and remove all associated equipment or reapply for any continued or new use to the Council before any such use is made. The time between the filing and resolution of any appeals of the Council's Final Decision shall not be counted in calculating this deadline. Authority to monitor and modify this schedule, as necessary, is delegated to the Executive Director. The Certificate Holder shall provide written notice to the Executive Director of any schedule changes as soon as is practicable.

7. Any request for extension of the time period referred to in Condition 6 shall be filed with the Council not later than 60 days prior to the expiration date of this Certificate and shall be served on all parties and intervenors, as listed in the service list, and the Town of Plymouth.

8. If the facility ceases to provide wireless services for a period of one year, this Decision and Order shall be void, and the Certificate Holder shall dismantle the tower and remove all associated equipment or reapply for any continued or new use to the Council within 90 days from the one year period of cessation of service. The Certificate Holder may submit a written request to the Council for an extension of the 90 day period not later than 60 days prior to the expiration of the 90 day period.

9. Any nonfunctioning antenna, and associated antenna mounting equipment, on this facility shall be removed within 60 days of the date the antenna ceased to function.

10. In accordance with Section 16-50j-77 of the Regulations of Connecticut State Agencies, the Certificate Holder shall provide the Council with written notice two weeks prior to the commencement of site construction activities. In addition, the Certificate Holder shall provide the Council with written notice of the completion of site construction, and the commencement of site operation.

11. The Certificate Holder shall remit timely payments associated with annual assessments and invoices submitted by the Council for expenses attributable to the facility under Conn. Gen. Stat. §16-50v.

12. This Certificate may be transferred in accordance with Conn. Gen. Stat. §16-50k(b), provided both the Certificate Holder/transferor and the transferee are current with payments to the Council for their respective annual assessments and invoices under Conn. Gen. Stat. §16-50v. In addition, both the Certificate Holder/transferor and the transferee shall provide the Council a written agreement as to the entity responsible for any quarterly assessment charges under Conn. Gen. Stat. §16-50v(b)(2) that may be associated with this facility.

13. The Certificate Holder shall maintain the facility and associated equipment, including but not limited to, the tower, tower foundation, antennas, equipment compound, radio equipment, access road, utility line and landscaping in a reasonable physical and operational condition that is consistent with this Decision and Order and a Development and Management Plan to be approved by the Council.

14. If the Certificate Holder is a wholly-owned subsidiary of a corporation or other entity and is sold/transferred to another corporation or other entity, the Council shall be notified of such sale and/or transfer and of any change in contact information for the individual or representative responsible for management and operations of the Certificate Holder within 30 days of the sale and/or transfer.

15. This Certificate may be surrendered by the Certificate Holder upon written notification and approval by the Council.

We hereby direct that a copy of the Findings of Fact, Opinion, and Decision and Order be served on each person listed in the Service List, dated February 17, 2015, and notice of issuance published in The Bristol Press.

By this Decision and Order, the Council disposes of the legal rights, duties, and privileges of each party named or admitted to the proceeding in accordance with Section 16-50j-17 of the Regulations of Connecticut State Agencies.

ATTACHMENT 2

verizon

WIRELESS COMMUNICATIONS FACILITY UPGRADE

PLYMOUTH W CT RELO

33 KEEGAN ROAD

PLYMOUTH, CT 06782

GENERAL NOTES

1. ALL WORK SHALL BE IN ACCORDANCE WITH THE 2015 INTERNATIONAL BUILDING CODE AS MODIFIED BY THE 2018 CONNECTICUT SUPPLEMENT, INCLUDING THE TIA/EIA–222 REVISION "G" STRUCTURAL STANDARDS FOR STEEL ANTENNA TOWERS AND SUPPORTING STRUCTURES, 2017 CONNECTICUT FIRE SAFETY CODE, NATIONAL ELECTRICAL CODE, AND LOCAL CODES.
2. SHOULD ANY FIELD CONDITIONS PRECLUDE COMPLIANCE WITH THE DRAWINGS, THE CONTRACTOR SHALL IMMEDIATELY NOTIFY THE ENGINEER AND SHALL NOT PROCEED WITH ANY AFFECTED WORK.
3. CONTRACTOR SHALL REVIEW ALL DRAWINGS AND SPECIFICATIONS IN THE CONTRACT DOCUMENT SET. CONTRACTOR SHALL COORDINATE ALL WORK SHOWN IN THE SET OF DRAWINGS. THE CONTRACTOR SHALL PROVIDE A COMPLETE SET OF DRAWINGS TO ALL SUBCONTRACTORS AND ALL RELATED PARTIES. THE SUBCONTRACTORS SHALL EXAMINE ALL THE DRAWINGS AND SPECIFICATIONS FOR THE INFORMATION THAT AFFECTS THEIR WORK.
4. CONTRACTOR SHALL PROVIDE A COMPLETE BUILD–OUT WITH ALL FINISHES, STRUCTURAL, MECHANICAL, AND ELECTRICAL COMPONENTS AND PROVIDE ALL ITEMS AS SHOWN OR INDICATED ON THE DRAWINGS OR IN THE WRITTEN SPECIFICATIONS.
5. CONTRACTOR SHALL FURNISH ALL MATERIAL, LABOR AND EQUIPMENT TO COMPLETE THE WORK AND FURNISH A COMPLETED JOB ALL IN ACCORDANCE WITH LOCAL AND STATE GOVERNING AUTHORITIES AND OTHER AUTHORITIES HAVING LAWFUL JURISDICTION OVER THE WORK.
6. CONTRACTOR SHALL SECURE AND PAY FOR ALL PERMITS AND ALL INSPECTIONS REQUIRED AND SHALL ALSO PAY FEES REQUIRED FOR THE GENERAL CONSTRUCTION, AND ALL TRADES AS APPLICABLE PERMITS SHALL BE PAID FOR BY THE RESPECTIVE SUBCONTRACTORS.
7. CONTRACTOR SHALL MAINTAIN A CURRENT SET OF DRAWINGS AND SPECIFICATIONS ON SITE AT ALL TIMES AND INSURE DISTRIBUTION OF NEW DRAWINGS TO SUBCONTRACTORS AND OTHER RELEVANT PARTIES AS SOON AS THEY ARE MADE AVAILABLE. ALL OLD DRAWINGS SHALL BE MARKED VOID AND REMOVED FROM THE CONTRACT AREA. THE CONTRACTOR SHALL FURNISH AN 'AS–BUILT' SET OF DRAWINGS TO OWNER UPON COMPLETION OF PROJECT.
8. LOCATION OF EQUIPMENT, AND WORK SUPPLIED BY OTHERS THAT IS DIAGRAMMATICALLY INDICATED ON THE DRAWINGS SHALL BE DETERMINED BY THE CONTRACTOR. THE CONTRACTOR SHALL DETERMINE LOCATIONS AND DIMENSIONS SUBJECT TO STRUCTURAL CONDITIONS AND WORK OF THE SUBCONTRACTORS.
9. THE CONTRACTOR IS SOLELY RESPONSIBLE TO DETERMINE CONSTRUCTION PROCEDURE AND SEQUENCE, AND TO ENSURE THE SAFETY OF THE EXISTING STRUCTURES AND ITS COMPONENT PARTS DURING CONSTRUCTION. THIS INCLUDES THE ADDITION OF WHATEVER SHORING, BRACING, UNDERPINNING, ETC. THAT MAY BE NECESSARY. MAINTAIN EXISTING BUILDING'S/PROPERTY'S OPERATIONS, COORDINATE WORK WITH BUILDING/PROPERTY OWNER.
10. DRAWINGS INDICATE THE MINIMUM STANDARDS, BUT IF ANY WORK SHOULD BE INDICATED TO BE SUBSTANDARD TO ANY ORDINANCES, LAWS, CODES, RULES, OR REGULATIONS BEARING ON THE WORK, THE CONTRACTOR SHALL INCLUDE IN HIS WORK AND SHALL EXECUTE THE WORK CORRECTLY IN ACCORDANCE WITH SUCH ORDINANCES, LAWS, CODES, RULES OR REGULATIONS WITH NO INCREASE IN COSTS.
11. ALL UTILITY WORK SHALL BE IN ACCORDANCE WITH LOCAL UTILITY COMPANY REQUIREMENTS AND SPECIFICATIONS.
12. ALL EQUIPMENT AND PRODUCTS PURCHASED ARE TO BE REVIEWED BY CONTRACTOR AND ALL APPLICABLE SUBCONTRACTORS FOR ANY CONDITION PER MFR.'S RECOMMENDATIONS. CONTRACTOR TO SUPPLY THESE ITEMS AT NO COST TO OWNER OR CONSTRUCTION MANAGER.
13. ANY AND ALL ERRORS, DISCREPANCIES, AND 'MISSED" ITEMS ARE TO BE BROUGHT TO THE ATTENTION OF THE VERIZON WIRELESS CONSTRUCTION MANAGER DURING THE BIDDING PROCESS BY THE CONTRACTOR. ALL THESE ITEMS ARE TO BE INCLUDED IN THE BID. NO 'EXTRA' WILL BE ALLOWED FOR MISSED ITEMS.
14. CONTRACTOR SHALL BE RESPONSIBLE FOR ALL ON–SITE SAFETY FROM THE TIME THE JOB IS AWARDED UNTIL ALL WORK IS COMPLETE AND ACCEPTED BY THE OWNER.
15. CONTRACTOR TO REVIEW ALL SHOP DRAWINGS AND SUBMIT COPY TO ENGINEER FOR APPROVAL. DRAWINGS MUST BEAR THE CHECKER'S INITIALS BEFORE SUBMITTING TO THE CONSTRUCTION MANAGER FOR REVIEW.
16. THE CONTRACTOR SHALL FIELD VERIFY ALL DIMENSIONS, ELEVATIONS, ANGLES, AND EXISTING CONDITIONS AT THE SITE, PRIOR TO FABRICATION AND/OR INSTALLATION OF ANY WORK IN THE CONTRACT AREA.
17. COORDINATION, LAYOUT, FURNISHING AND INSTALLATION OF CONDUIT AND ALL APPURTENANCES REQUIRED FOR PROPER INSTALLATION OF ELECTRICAL AND TELECOMMUNICATION SERVICE SHALL BE THE SOLE RESPONSIBILITY OF THE CONTRACTOR.
18. ALL EQUIPMENT AND PRODUCTS PURCHASED ARE TO BE REVIEWED BY CONTRACTOR AND ALL APPLICABLE SUB– CONTRACTORS FOR ANY CONDITION PER THE MANUFACTURER'S RECOMMENDATIONS. CONTRACTOR TO SUPPLY THESE ITEMS AT NO COST TO OWNER OR CONSTRUCTION MANAGER.
19. ALL DAMAGE CAUSED TO ANY EXISTING STRUCTURE SHALL BE THE SOLE RESPONSIBILITY OF THE CONTRACTOR. THE CONTRACTOR WILL BE HELD LIABLE FOR ALL REPAIRS REQUIRED FOR EXISTING STRUCTURES IF DAMAGED DURING CONSTRUCTION ACTIVITIES.
20. THE CONTRACTOR SHALL CONTACT "CALL BEFORE YOU DIG" AT LEAST 48 HOURS PRIOR TO ANY EXCAVATIONS AT 1–800–922–4455. ALL UTILITIES SHALL BE IDENTIFIED AND CLEARLY MARKED PRIOR TO ANY EXCAVATION WORK. CONTRACTOR SHALL MAINTAIN AND PROTECT MARKED UTILITIES THROUGHOUT PROJECT COMPLETION.

SITE DIRECTIONS

FROM: 20 ALEXANDER DRIVE, WALLINGFORD, CONNECTICUT **TO:** 33 KEEGAN ROAD, PLYMOUTH, CT

1.	HEAD NORTH ON ALEXANDER DR. TOWARDS BARNES INDUSTRIAL RD;	0.18 MI
2.	TURN RIGHT ONTO BARNES INDUSTRIAL RD;	0.11 MI
3.	TAKE FIRST LEFT ONTO CT–68;	0.35 MI
4.	TURN RIGHT ONTO RAMP;	0.17 MI
5.	TURN RIGHT ONTO N COLONY RD/ US–5 N;	0.30 MI
6.	MERGE ONTO CT–15 N TOWARD HARTFORD;	3.89 MI
7.	MERGE ONTO I–91 W VIA EXIT 68W TOWARD MERIDEN/WATERBURY;	7.79 MI
8.	MERGE ONTO I–84 W VIA EXIT 1 ON THE LEFT TOWARD DANBURY/WATERBURY;	8.70 MI
9.	MERGE ONTO CT–8 N VIA EXIT 20 TOWARD TORRINGTON;	9.37 MI
10.	TAKE THE US–6 E/CT–222 EXIT, EXIT 39 TOWARD BRISTOL/THOMASTON;	0.25 MI
11.	TURN RIGHT ONTO E MAIN STREET/US–6 E;	0.67 MI
12.	TURN RIGHT ONTO SOUTH STREET/CT–262;	0.63 MI
13.	TURN SLIGHT LEFT ONTO KEEGAN ROAD;	0.16 MI
14.	33 KEEGAN ROAD IS ON THE LEFT.	

VICINITY MAP

SCALE: 1" = 1000'

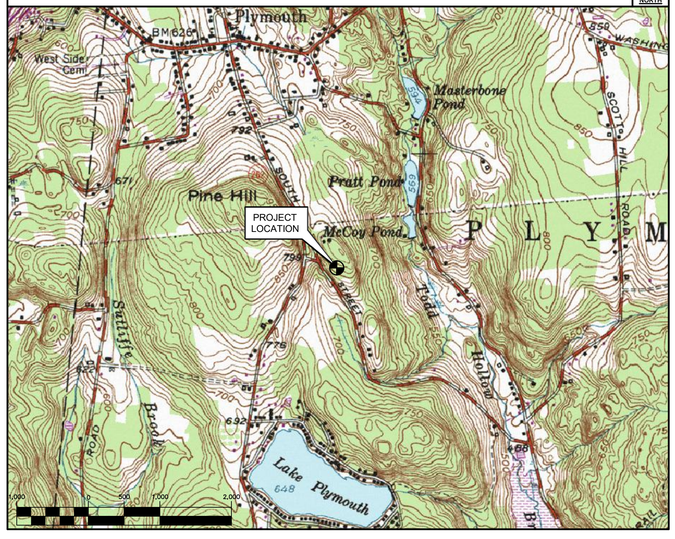

PROJECT SUMMARY

1. THE PROPOSED UPGRADE SCOPE OF WORK AT THE EXISTING UNMANNED TELECOMMUNICATIONS FACILITY GENERALLY INCLUDES THE FOLLOWING:
   A. AT THE EXISTING TOWER MOUNTED ANTENNA SECTORS:
      - REMOVE (3) EXISTING ANTENNAS PER SECTOR (TOTAL OF 9)
      - REMOVE (3) EXISTING REMOTE RADIO HEADS PER SECTOR (TOTAL OF 9).
      - INSTALL (3) ANTENNAS PER SECTOR (TOTAL OF 9).
      - INSTALL (3) REMOTE RADIO HEADS PER SECTOR (TOTAL OF 9).
      - INSTALL (1) DIPLEXER PER SECTOR (TOTAL OF 3)
      - INSTALL (1) SIDE–BY–SIDE ANTENNA MOUNT PER SECTORM (TOTAL OF 3)

PROJECT INFORMATION

SITE NAME:	PLYMOUTH W CT RELO
SITE ADDRESS:	33 KEEGAN ROAD PLYMOUTH, CT 06782
LESSEE/TENANT:	CELLCO PARTNERSHIP d.b.a. VERIZON WIRELESS 20 ALEXANDER DRIVE WALLINGFORD, CT 06492
CONTACT PERSON:	WALTER CHARCZNSKI (CONSTRUCTION MANAGER) VERIZON WIRELESS (860) 306–1806
ENGINEER:	CENTEK ENGINEERING, INC. 63–2 NORTH BRANFORD RD. BRANFORD, CT. 06405 (203) 488–0580
PROJECT COORDINATES:	LATITUDE: 41°–39'–42.334"N LONGITUDE: 73°–02'–44.321"W GROUND ELEVATION: 833.9'± AMSL (COORDINATES AND GROUND ELEVATION REFERENCED FROM FAA 1–A CERTIFICATION PREPARED FOR VERIZON WIRELESS BY MARTINEZ COUCH ANS ASSOCIATES LLC DATED JUNE 5, 2014, LAST REVISED APRIL 17, 2015)

SHEET INDEX

SHT. NO.	DESCRIPTION	REV.
T–1	TITLE SHEET	0
N–1	NOTES AND SPECIFICATIONS	0
B–1	RF BILL OF MATERIALS	0
C–1	PARTIAL SITE PLAN AND ELEVATION	0
C–2	ANTENNA CONFIGURATION DETAILS	0
C–3	RF DETAILS	0
E–1	ELECTRICAL DETAILS AND SPECIFICATIONS	0

REV.	DATE	DRAWN BY	CHK'D BY	DESCRIPTION
0	02/19/21	DMD	TJL	FINAL CONSTRUCTION DRAWINGS
B	01/21/21	ASC	DMD	PRELIMINARY CONSTRUCTION DRAWINGS – REVISED PER CLIENT COMMENTS
A	12/30/20	ASC	DMD	PRELIMINARY CONSTRUCTION DRAWINGS – ISSUED FOR CLIENT REVIEW

PROFESSIONAL ENGINEER SEAL

verizon

CENTEK engineering
Centered on Solutions℠
(203) 488-0580
(203) 488-8587 Fax
63-2 North Branford Road
Branford, CT 06405
www.CentekEng.com

Cellco Partnership d/b/a Verizon Wireless

PLYMOUTH W CT RELO

33 KEEGAN ROAD
PLYMOUTH, CT 06782

DATE: 11/20/20
SCALE: AS NOTED
JOB NO. 20150.04

TITLE SHEET

T–1

Sheet No. 1 of 7

NOTES AND SPECIFICATIONS

DESIGN BASIS:

GOVERNING CODE: 2015 INTERNATIONAL BUILDING (IBC) AS MODIFIED BY THE CONNECTICUT STATE BUILDING CODE.

1. DESIGN CRITERIA:

- RISK CATEGORY II (BASED ON IBC TABLE 1604.5)
- ULTIMATE DESIGN SPEED : 93 MPH (Vasd) (EXPOSURE C/ IMPORTANCE FACTOR 1.0 BASED ON ASCE 7-10).

GENERAL NOTES:

1. ALL CONSTRUCTION SHALL BE IN COMPLIANCE WITH THE GOVERNING BUILDING CODE.
2. DRAWINGS INDICATE THE MINIMUM STANDARDS, BUT IF ANY WORK SHOULD BE INDICATED TO BE SUBSTANDARD TO ANY ORDINANCES, LAWS, CODES, RULES, OR REGULATIONS BEARING ON THE WORK, THE CONTRACTOR SHALL INCLUDE IN HIS WORK AND SHALL EXECUTE THE WORK CORRECTLY IN ACCORDANCE WITH SUCH ORDINANCES, LAWS, CODES, RULES OR REGULATIONS WITH NO INCREASE IN COSTS.
3. BEFORE BEGINNING THE WORK, THE CONTRACTOR IS RESPONSIBLE FOR MAKING SUCH INVESTIGATIONS CONCERNING PHYSICAL CONDITIONS (SURFACE AND SUBSURFACE) AT OR CONTIGUOUS TO THE SITE WHICH MAY AFFECT PERFORMANCE AND COST OF THE WORK.
4. DIMENSIONS AND DETAILS SHALL BE CHECKED AGAINST EXISTING FIELD CONDITIONS.
5. THE CONTRACTOR SHALL VERIFY AND COORDINATE THE SIZE AND LOCATION OF ALL OPENINGS, SLEEVES AND ANCHOR BOLTS AS REQUIRED BY ALL TRADES.
6. ALL DIMENSIONS, ELEVATIONS, AND OTHER REFERENCES TO EXISTING STRUCTURES, SURFACE, AND SUBSURFACE CONDITIONS ARE APPROXIMATE. NO GUARANTEE IS MADE FOR THE ACCURACY OR COMPLETENESS OF THE INFORMATION SHOWN. THE CONTRACTOR SHALL VERIFY AND COORDINATE ALL DIMENSIONS, ELEVATIONS, ANGLES WITH EXISTING CONDITIONS AND WITH ARCHITECTURAL AND SITE DRAWINGS BEFORE PROCEEDING WITH ANY WORK.
7. AS THE WORK PROGRESSES, THE CONTRACTOR SHALL NOTIFY THE OWNER OF ANY CONDITIONS WHICH ARE IN CONFLICT OR OTHERWISE NOT CONSISTENT WITH THE CONSTRUCTION DOCUMENTS AND SHALL NOT PROCEED WITH SUCH WORK UNTIL THE CONFLICT IS SATISFACTORILY RESOLVED.
8. THE CONTRACTOR SHALL COMPLY WITH ALL APPLICABLE SAFETY CODES AND REGULATIONS DURING ALL PHASES OF CONSTRUCTION. THE CONTRACTOR IS SOLELY RESPONSIBLE FOR PROVIDING AND MAINTAINING ADEQUATE SHORING, BRACING, AND BARRICADES AS MAY BE REQUIRED FOR THE PROTECTION OF EXISTING PROPERTY, CONSTRUCTION WORKERS, AND FOR PUBLIC SAFETY.
9. THE CONTRACTOR IS SOLELY RESPONSIBLE TO DETERMINE CONSTRUCTION PROCEDURE AND SEQUENCE, AND TO ENSURE THE SAFETY OF THE EXISTING STRUCTURES AND ITS COMPONENT PARTS DURING CONSTRUCTION. THIS INCLUDES THE ADDITION OF WHATEVER SHORING, BRACING, UNDERPINNING, ETC. THAT MAY BE NECESSARY. MAINTAIN EXISTING SITE OPERATIONS, COORDINATE WORK WITH NORTHEAST UTILITIES
10. ALL DAMAGE CAUSED TO ANY EXISTING STRUCTURE SHALL BE THE SOLE RESPONSIBILITY OF THE CONTRACTOR. THE CONTRACTOR WILL BE HELD LIABLE FOR ALL REPAIRS REQUIRED FOR EXISTING STRUCTURES IF DAMAGED DURING CONSTRUCTION ACTIVITIES.
11. REFER TO DRAWING T1 FOR ADDITIONAL NOTES AND REQUIREMENTS.

REV.	DATE	DRAWN BY	CHK'D BY	DESCRIPTION
A	12/30/20	ASC	DMD	PRELIMINARY CONSTRUCTION DRAWINGS – ISSUED FOR CLIENT REVIEW
B	01/21/21	ASC	DMD	PRELIMINARY CONSTRUCTION DRAWINGS – REVISED PER CLIENT COMMENTS
0	02/19/21	DMD	TJL	FINAL CONSTRUCTION DRAWINGS

PROFESSIONAL ENGINEER SEAL

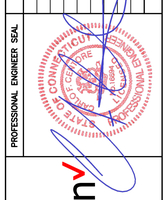

verizon

CENTEK engineering
Centered on Solutions℠
(203) 488-0580
(203) 488-8587 Fax
63-2 North Branford Road
Branford, CT 06405
www.CentekEng.com

Cellco Partnership d/b/a Verizon Wireless

PLYMOUTH W CT RELO

33 KEEGAN ROAD
PLYMOUTH, CT 06782

DATE: 11/20/20
SCALE: AS NOTED
JOB NO. 20150.04

NOTES AND SPECIFICATIONS

N-1

PLUMBING DIAGRAM NOTES:

1. PORTS 1 & 2 ARE FOR LOW BAND (698–896 MHz).
2. PORTS 3, 4, 5 & 5 ARE FOR HIGH BAND (1695–2360 MHz).
3. SMART BIAS TEE (SBT) IS THROUGH ANTENNA PORTS 1 & 3 (1 FOR LOW BAND AND 3 FOR HIGH BAND).
4. AISG CABLE IS ONLY NEEDED WHEN DRAWN IN THE DIAGRAMS ABOVE. IF IT IS NOT DRAWN THEN SBT IS ENOUGH TO CONTROL ALL RET MOTORS.
5. NOT ALL SBT PORTS ARE NEEDED TO CONTROL RET. ONLY GREEN PORT CONNECTION TO GREEN PORT WILL CONTROL RET.

RET DC SIGNAL PASS FOR RET
(PORT THAT WILL CONTROL RET)

PLUMBING DIAGRAM COMMENTS:

A. DIAGRAMS SHOW ANTENNA PORT CONFIGURATIONS AS VIEWED FROM BELOW ANTENNAS.

B. ANTENNA POSITIONS ARE INDICATED AS VIEWED FROM IN FRONT OF ANTENNAS.

C. CAP AND WEATHERPROOF UNUSED ANTENNA PORTS.

D. ALL PLUMBING DIAGRAM COLORS ARE IRRELEVANT EXCEPT FOR AISG AND HYBRIFLEX CABLE. (FOR THE COAX COLORS, FOLLOW COAX COLORS GUIDE ABOVE)

DC SIGNAL CAPABLE PORT

AISG CABLE

RET DC SIGNAL PASS FOR RET (PORT THAT WILL CONTROL RET)

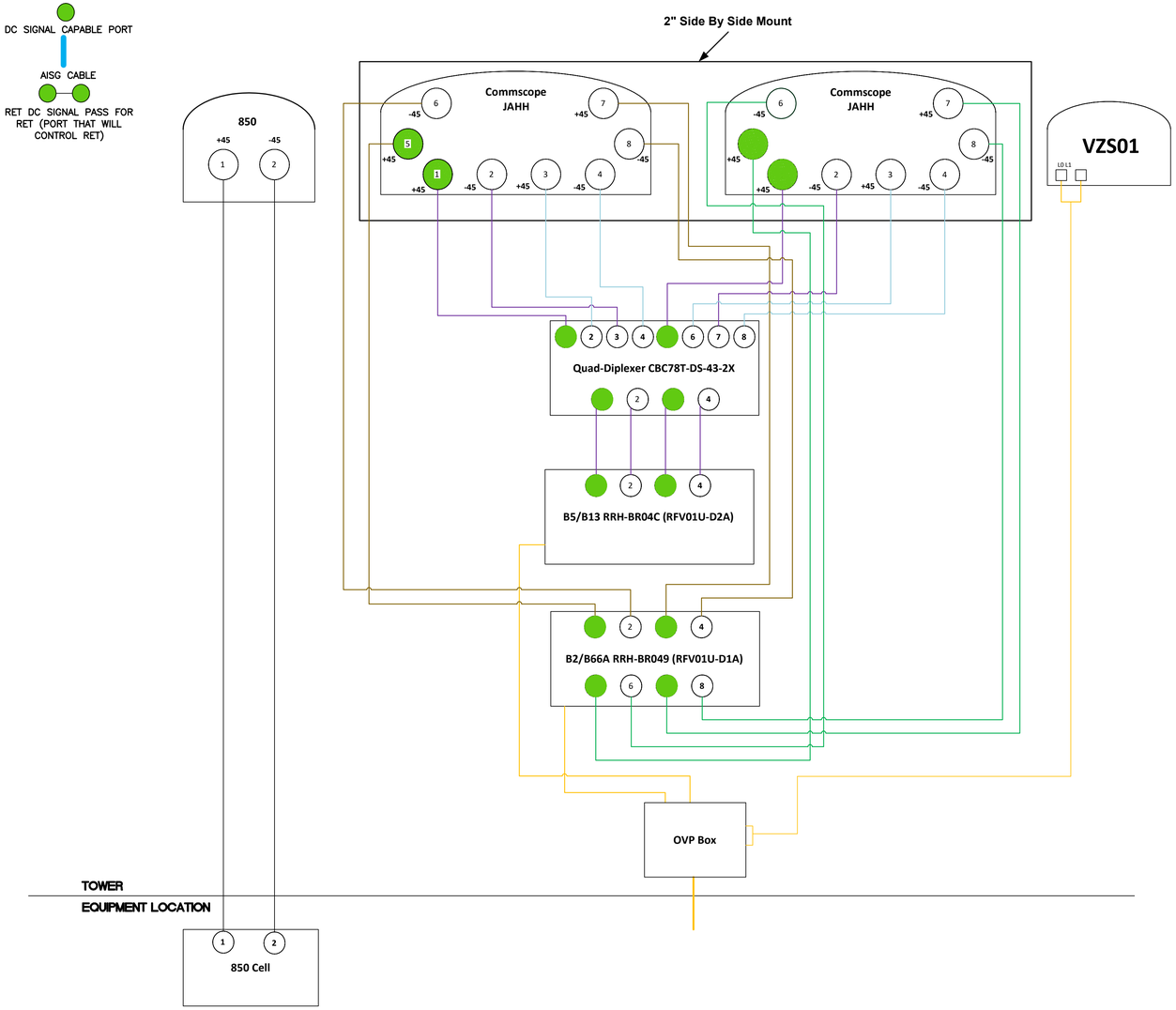

NOTES:

1. INFORMATION SHOWN HEREIN IS FOR USE BY VERIZON WIRELESS EQUIPMENT OPERATIONS.
2. THIS B.O.M. DRAWING IS BASED ON FACILITY UPGRADE DESIGN DRAWINGS PREPARED BY CENTEK ENGINEERING (REV.0 DATED: 02.19.21), & VERIZON WIRELESS RF ANTENNA EQUIPMENT RECOMMENDATION (DATED 11.03.20).

BILL OF MATERIALS		
TECHNOLOGY	QUANTITY	ANTENNA
LTE 700 ANTENNA LTE 850 5G ANTENNA LTE PCS 1900 LTE AWS 2100	6	ANDREW ANTENNA MODEL: JAHH-65B-R3B
5G	3	SAMSUNG ANTENNA MODEL: VZS01 ANTENNA

CABLES	QUANTITY	LENGTH	COMMENTS
1 5/8" HYBRID CABLE	0	–	–

RADIOS	QUANTITY	COMMENTS
LTE 700 ANTENNA LTE 850 5G ANTENNA	3	SAMSUNG MODEL: B5/B13 RRH-BR04C
LTE PCS 1900 LTE AWS 2100	3	SAMSUNG MODEL: B2/B66A RRH-BR049
5G	3	INTEGRATED INTO VZS01 ANTENNA

DIPLEXERS	QUANTITY	COMMENTS
FOR LTE 700 ANTENNA FOR LTE 850 ANTENNA	3 TOTAL	MODEL: CBC78T-DS-43-2X

OVP BOXES	QUANTITY	COMMENTS
UPPER OVP	0	–
LOWER OVP	0	–

ANTENNA MOUNT	QUANTITY	COMMENTS
SIDE-BY-SIDE MOUNTING KIT	3	ANDREW MODEL: BSAMNT-SBS-2-2

ANTENNA MOUNT MODIFICATION NOTE:
REFER TO VERIZON WIRELESS MOUNT MODIFICATION DESIGN DRAWINGS PREPARED BY MASER CONSULTING CONNECTICUT DATED 12/30/2020 FOR REQUIRED ANTENNA MOUNT MODIFICATIONS AND ASSOCIATED BILL OF MATERIALS.

REV.	DATE	DRAWN BY	CHK'D BY	DESCRIPTION
A	12/30/20	ASC	DMD	PRELIMINARY CONSTRUCTION DRAWINGS – ISSUED FOR CLIENT REVIEW
0	01/21/21	ASC	DMD	PRELIMINARY CONSTRUCTION DRAWINGS – REVISED PER CLIENT COMMENTS
	02/19/21	DMD	TJL	FINAL CONSTRUCTION DRAWINGS

PROFESSIONAL ENGINEER SEAL

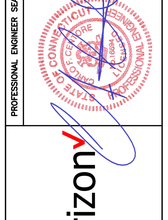

verizon

CENTEK engineering
Centered on Solutions℠
(203) 488-0580
(203) 488-8587 Fax
63-2 North Branford Road
Branford, CT 06405
www.CentekEng.com

Cellco Partnership d/b/a Verizon Wireless

PLYMOUTH W CT RELO

33 KEEGAN ROAD
PLYMOUTH, CT 06782

DATE: 11/20/20
SCALE: AS NOTED
JOB NO. 20150.04

RF BILL OF MATERIALS

B-1

Sheet No. 3 of 7

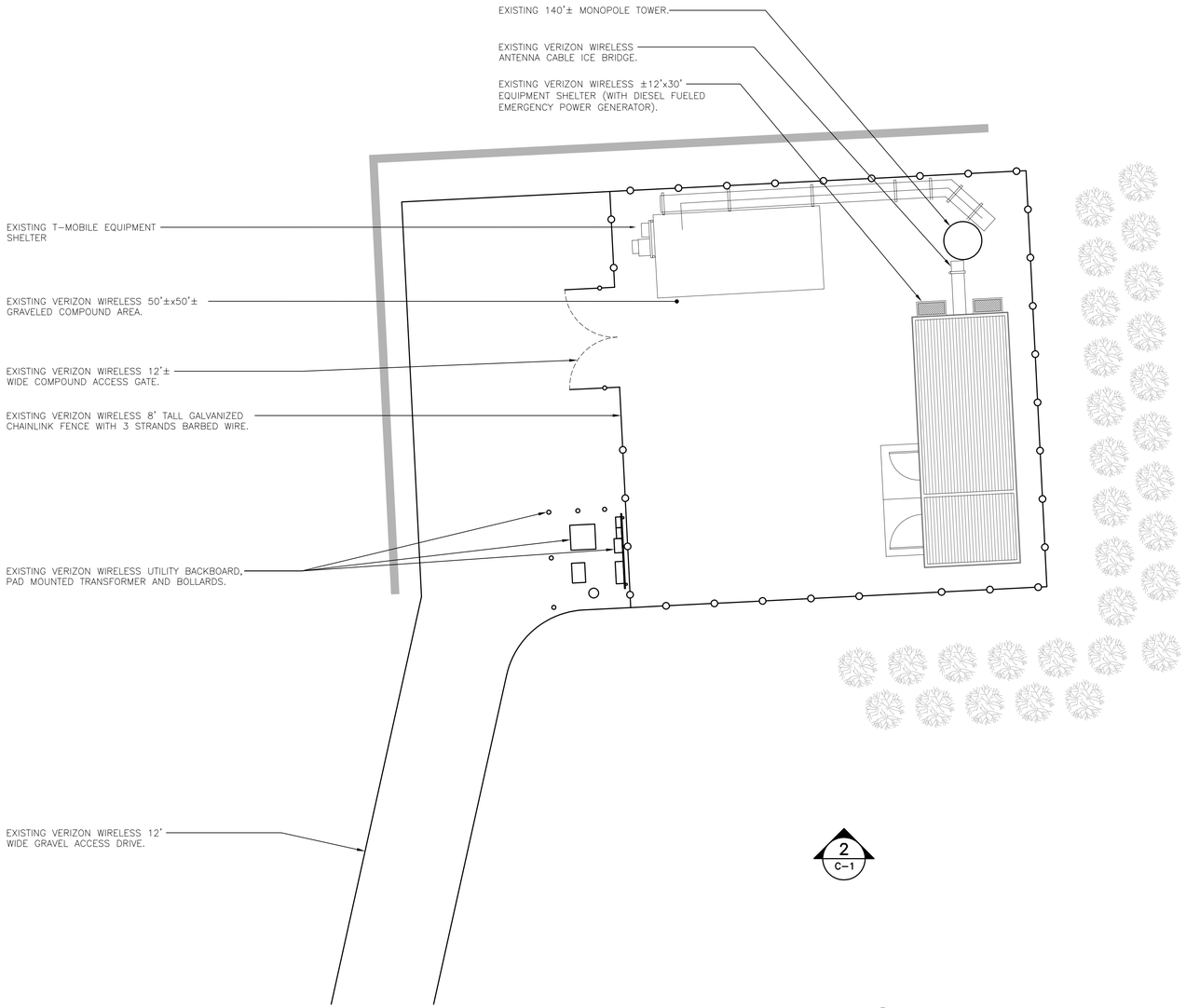

1 / C-1 **COMPOUND/PARTIAL SITE PLAN - PROPOSED**
SCALE: 1/8" = 1'- 0"

APPROXIMATE NORTH

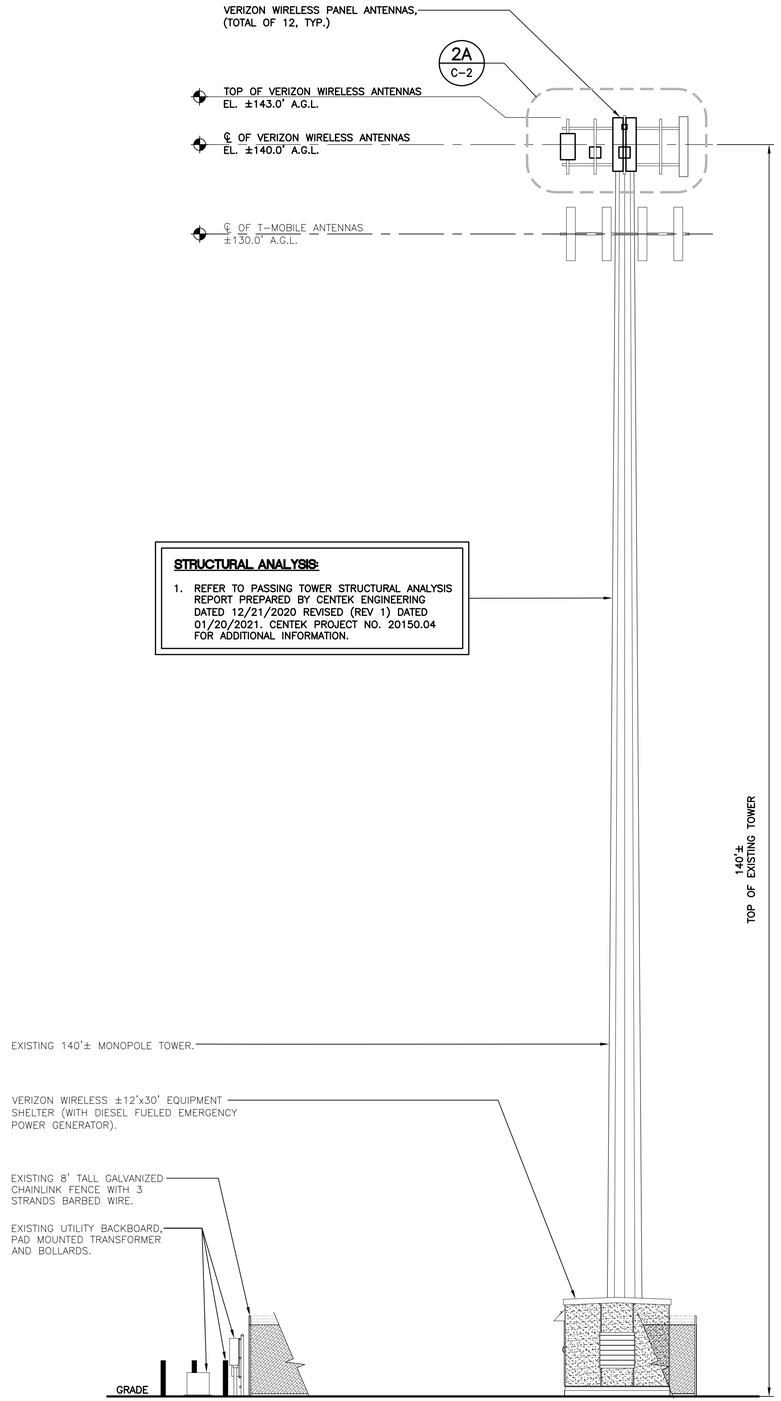

STRUCTURAL ANALYSIS:

1. REFER TO PASSING TOWER STRUCTURAL ANALYSIS REPORT PREPARED BY CENTEK ENGINEERING DATED 12/21/2020 REVISED (REV 1) DATED 01/20/2021. CENTEK PROJECT NO. 20150.04 FOR ADDITIONAL INFORMATION.

2 / C-1 **SOUTHWEST ELEVATION - PROPOSED**
SCALE: 1/8" = 1'- 0"

REV.	DATE	DRAWN BY	CHK'D BY	DESCRIPTION
A	12/30/20	ASC	DMD	PRELIMINARY CONSTRUCTION DRAWINGS - ISSUED FOR CLIENT REVIEW
B	01/21/21	ASC	DMD	PRELIMINARY CONSTRUCTION DRAWINGS - REVISED PER CLIENT COMMENTS
0	02/19/21	DMD	TJL	FINAL CONSTRUCTION DRAWINGS

PROFESSIONAL ENGINEER SEAL

verizon

CENTEK engineering
Centered on Solutions℠
(203) 488-0580
(203) 488-8587 Fax
63-2 North Branford Road
Branford, CT 06405
www.CentekEng.com

Cellco Partnership d/b/a Verizon Wireless

PLYMOUTH W CT RELO

33 KEEGAN ROAD
PLYMOUTH, CT 06782

DATE: 11/20/20
SCALE: AS NOTED
JOB NO. 20150.04

PARTIAL SITE PLAN AND ELEVATION

C-1

Sheet No. 4 of 7

EXISTING ANTENNA CONFIGURATIONS

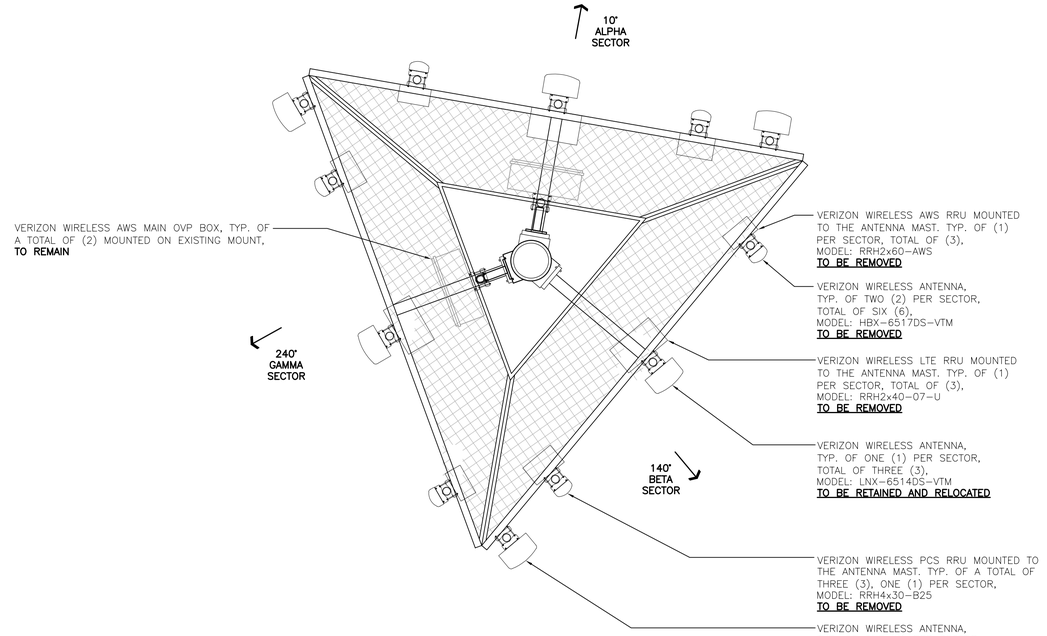

1 C-2 **EXISTING SECTOR CONFIGURATION PLAN**
SCALE: 1/2" = 1'-0"

PROPOSED ANTENNA CONFIGURATIONS

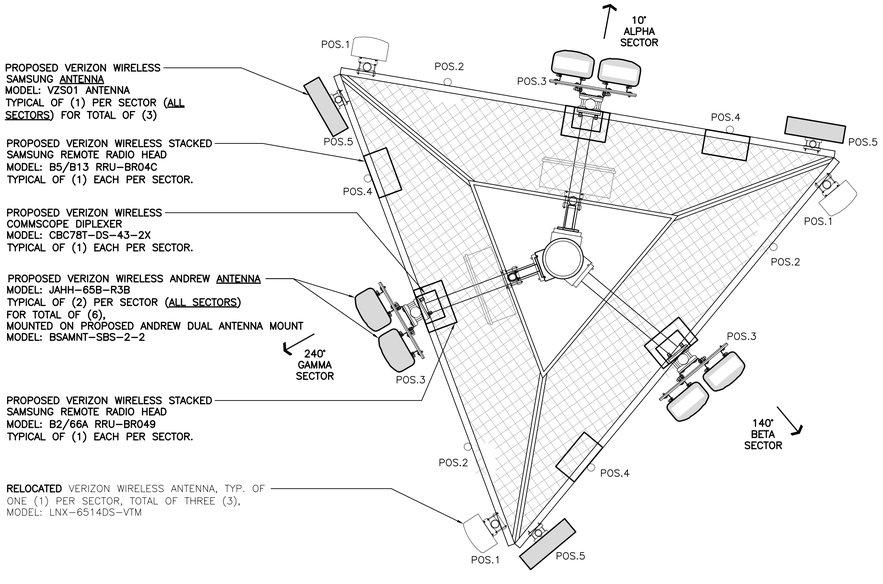

2 C-2 **PROPOSED SECTOR CONFIGURATION PLAN**
SCALE: 1/2" = 1'-0"

ANTENNA MOUNT ANALYSIS AND MOD. NOTES:

1. REFER TO POST-MOD VERIZON WIRELESS ANTENNA MOUNT ANALYSIS REPORT AND PMI REQUIREMENTS PREPARED BY MASER CONSULTING CONNECTICUT DATED 12/30/2020 FOR ADDITIONAL INFORMATION. SMART TOOL PROJECT# 10027146, MASER CONSULTING CONNECTICUT PROJECT# 20777381A.
2. REFER TO VERIZON WIRELESS MOUNT MODIFICATION DESIGN DRAWINGS PREPARED BY MASER CONSULTING CONNECTICUT DATED 12/30/2020 FOR REQUIRED ANTENNA MOUNT MODIFICATIONS.

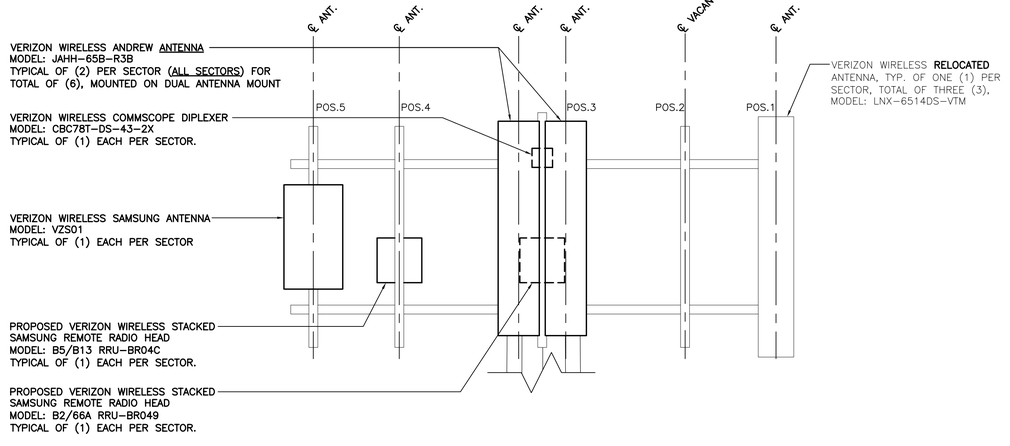

TYPICAL SECTOR SHOWN

2A C-2 **PROPOSED SECTOR CONFIGURATION ELEVATION**
SCALE: 1/2" = 1'-0"

REV.	DATE	DRAWN BY	CHK'D BY	DESCRIPTION
A	12/30/20	ASC	DMD	PRELIMINARY CONSTRUCTION DRAWINGS – ISSUED FOR CLIENT REVIEW
B	01/21/21	ASC	DMD	PRELIMINARY CONSTRUCTION DRAWINGS – REVISED PER CLIENT COMMENTS
0	02/19/21	DMD	TJL	FINAL CONSTRUCTION DRAWINGS

PROFESSIONAL ENGINEER SEAL

verizon

CENTEK engineering
Centered on Solutions℠
(203) 488-0580
(203) 488-8587 Fax
63-2 North Branford Road
Branford, CT 06405
www.CentekEng.com

Cellco Partnership d/b/a Verizon Wireless

PLYMOUTH W CT RELO

33 KEEGAN ROAD
PLYMOUTH, CT 06782

DATE: 11/20/20
SCALE: AS NOTED
JOB NO. 20150.04

ANTENNA CONFIGURATION DETAILS

C-2

Sheet No. 5 of 7

ANTENNA FRONT

SECTOR ANTENNA		
EQUIPMENT	DIMENSIONS	WEIGHT
MAKE: SAMSUNG MODEL: VZS01	35"h x 20"W x 6"D (NOT TO EXCEED)	97 LBS. (NOT TO EXCEED)
CLEARANCES AND SERVICE AREA		
TOP: 31.5" FRONT, SIDES & BOTTOM: 15.7"	HORIZONTAL DISTANCE: 31.5" (ANT. TO ANT.) VERTICAL DISTANCE: 63.0" (ANT. TO ANT.)	
NOTES: 1. THIS ANTENNA HAS ITS OWN BUILT-IN RRH (VZS01).		

1 / C-3 **SECTOR ANTENNA DETAIL**
NOT TO SCALE

ELEVATION - ISOMETRIC

BOTTOM

8-PORT SECTOR ANTENNA		
EQUIPMENT	DIMENSIONS	WEIGHT
MAKE: COMMSCOPE MODEL: JAHH-65B-R3B	72.0"L x 13.8"W x 8.2"D	64.4 LBS. (W/OUT MOUNT KIT)

2 / C-3 **SECTOR ANTENNA DETAIL**
NOT TO SCALE

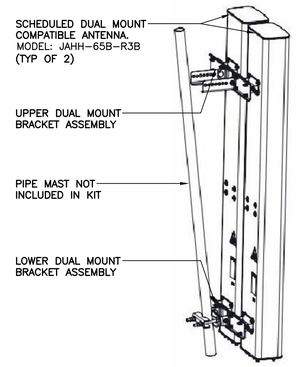

ANTENNA MOUNT ISOMETRIC

ANTENNA MOUNT PROFILE

DUAL ANTENNA MOUNTING KIT	
EQUIPMENT	DESCRIPTION
MOUNT MAKE: COMMSCOPE MODEL: BSAMNT-SBS-2-2	• SIDE-BY-SIDE MOUNTING KIT, ACCOMMODATES (2) COMPATABLE ANTENNAS • ACCOMMODATES MAST DIAMETERS FROM 2.375" TO 4.5" (O.D.)

3 / C-3 **DUAL ANTENNA MOUNT DETAIL**
NOT TO SCALE

RRH - ISOMETRIC

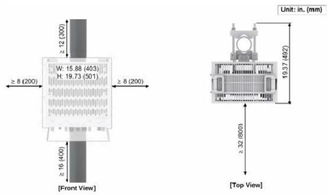

RRH CLEARANCES

DUAL BAND RRU (REMOTE RADIO UNIT)			
EQUIPMENT	BANDS	DIMENSIONS	WEIGHT
MAKE: SAMSUNG MODEL: B2/B66A RRH-BR049 (RFV01U-D1A)	B2: PCS (1900 MHz) B66: AWS (2100 MHz)	15.0"H x 15.0"W x 10.0"D	84.4 LBS.
NOTES: 1. CONTRACTOR TO COORDINATE FINAL EQUIPMENT MODEL SELECTION WITH VERIZON WIRELESS CONSTRUCTION MANAGER PRIOR TO ORDERING.			

4 / C-3 **DUAL-BAND AWS/PCS RADIO UNIT DETAIL**
NOT TO SCALE

RRH - ISOMETRIC

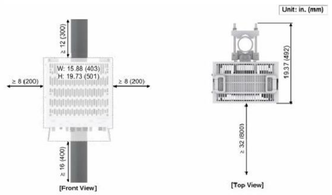

RRH CLEARANCES

DUAL BAND RRU (REMOTE RADIO UNIT)			
EQUIPMENT	BANDS	DIMENSIONS	WEIGHT
MAKE: SAMSUNG MODEL: B5/B13 RRH-BR04C (RFV01U-D2A)	B5: 850 MHz B13: 700 MHz	15.0"H x 15.0"W x 8.1"D	70.3 LBS.
NOTES: 1. CONTRACTOR TO COORDINATE FINAL EQUIPMENT MODEL SELECTION WITH VERIZON WIRELESS CONSTRUCTION MANAGER PRIOR TO ORDERING.			

5 / C-3 **DUAL-BAND 700/850 MHZ RADIO UNIT DETAIL**
NOT TO SCALE

DIPLEXER			
EQUIPMENT	DESCRIPTION	DIMENSIONS	WEIGHT
MAKE: COMMSCOPE MODEL: CBC78T-DS-43-2X	4 PACK DIPLEXER 700MHz/850MHz	6.4"H x 6.9"W x 9.6"D	21.8 LBS. (W/MNTG HDWR)
NOTES: 1. CONTRACTOR TO COORDINATE FINAL EQUIPMENT MODEL SELECTION WITH VERIZON WIRELESS CONSTRUCTION MANAGER PRIOR TO ORDERING.			

6 / C-3 **DIPLEXER DETAIL**
NOT TO SCALE

REV.	DATE	DRAWN BY	CHK'D BY	DESCRIPTION
0	02/19/21	DMD	TJL	FINAL CONSTRUCTION DRAWINGS
B	01/21/21	ASC	DMD	PRELIMINARY CONSTRUCTION DRAWINGS – REVISED PER CLIENT COMMENTS
A	12/30/20	ASC	DMD	PRELIMINARY CONSTRUCTION DRAWINGS – ISSUED FOR CLIENT REVIEW

PROFESSIONAL ENGINEER SEAL

verizon

CENTEK engineering
Centered on Solutions℠
(203) 488-0580
(203) 488-8587 Fax
63-2 North Branford Road
Branford, CT 06405
www.CentekEng.com

Cellco Partnership d/b/a Verizon Wireless

PLYMOUTH W CT RELO

33 KEEGAN ROAD
PLYMOUTH, CT 06782

DATE: 11/20/20
SCALE: AS NOTED
JOB NO. 20150.04

RF DETAILS

C-3

Sheet No. 6 of 7

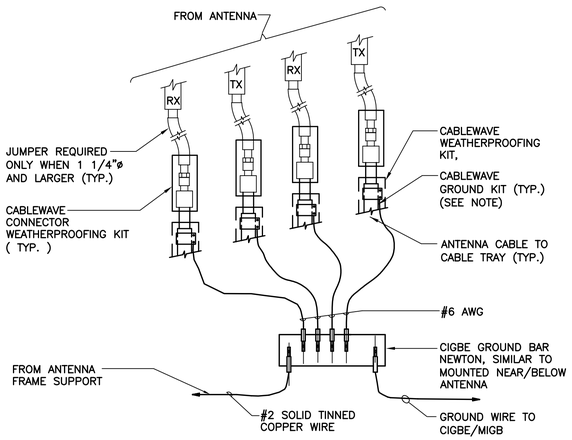

NOTES:

1. DO NOT INSTALL CABLE GROUND KIT AT A BEND AND ALWAYS DIRECT GROUND WIRE DOWN TO CIGBE

1 / E-1 CONNECTION OF GROUND WIRES TO GROUND BAR

NOT TO SCALE

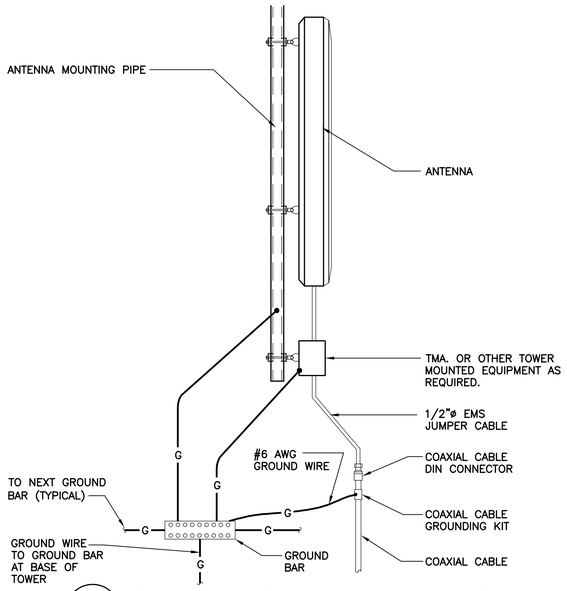

4 / E-1 TYPICAL ANTENNA GROUNDING DETAIL

NOT TO SCALE

EACH RRH CABINET SHALL BE GROUNDED IN THE FOLLOWING MANNER:

1. AT TOP OF THE CABINET
2. AT RIGHT SIDE OF THE CABINET.

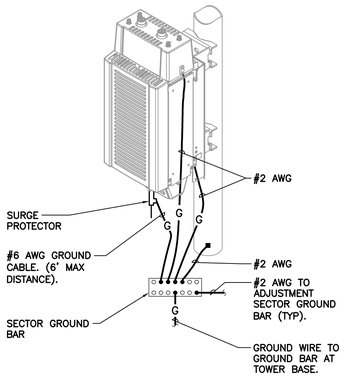

2 / E-1 RRH POLE MOUNT GROUNDING

NOT TO SCALE

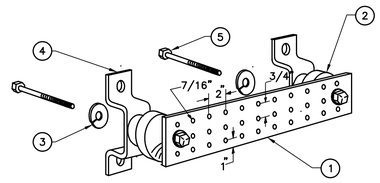

NOTES

1. TINNED COPPER GROUND BAR, 1/4" x 4" x 20", NEWTON INSTRUMENT CO. HOLE CENTERS TO MATCH NEMA DOUBLE LUG CONFIGURATION.
2. INSULATORS, NEWTON INSTRUMENT CAT. NO. 3061-4.
3. 5/8" LOCK WASHERS, NEWTON INSTRUMENT CO. CAT. NO. 3015-8.
4. WALL MOUNTING BRACKET, NEWTON INSTRUMENT CO. CAT NO. A-6056.
5. 5/8-11 x 1" STAINLESS STEEL TRUSS SPANNER MACHINE SCREWS.

5 / E-1 GROUND BAR DETAIL

NOT TO SCALE

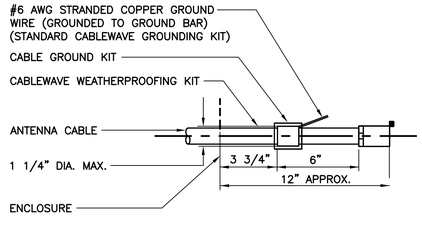

NOTES:

1. DO NOT INSTALL CABLE GROUND KIT AT A BEND AND ALWAYS DIRECT GROUND WIRE DOWN TO GROUND BAR.

3 / E-1 ANTENNA CABLE GROUNDING DETAIL

NOT TO SCALE

ELECTRICAL SPECIFICATIONS

SECTION 16010

1.01. SCOPE OF WORK

A. WORK SHALL INCLUDE ALL LABOR, EQUIPMENT AND SERVICES REQUIRED TO COMPLETE (MAKE READY FOR OPERATION) ALL THE ELECTRICAL WORK INCLUDING, BUT NOT LIMITED TO, THE FOLLOWING:

1. CELLULAR GROUNDING SYSTEMS CONSISTING OF ANTENNA GROUNDING, GROUND BARS, ETC.

1.02. GENERAL REQUIREMENTS

A. THE ENTIRE ELECTRICAL INSTALLATION SHALL BE MADE IN STRICT ACCORDANCE WITH ALL LOCAL, STATE AND NATIONAL CODES AND REGULATIONS WHICH MAY APPLY AND NOTHING IN THE DRAWINGS OR SPECIFICATIONS SHALL BE INTERPRETED AS AN INFRINGEMENT OF SUCH CODES OR REGULATIONS.

B. THE ELECTRICAL CONTRACTOR IS TO BE RESPONSIBLE FOR THE COMPLETE INSTALLATION AND COORDINATION OF THE ENTIRE ELECTRICAL SERVICE. ALL ACTIVITIES TO BE COORDINATED THROUGH OWNERS REPRESENTATIVE, DESIGN ENGINEER AND OTHER AUTHORITIES HAVING JURISDICTION OF TRADES.

C. THE CONTRACTOR SHALL BE RESPONSIBLE FOR OBTAINING ALL PERMITS AND PAY ALL FEES THAT MAY BE REQUIRED FOR THE ELECTRICAL WORK AND FOR SCHEDULING OF ALL INSPECTIONS THAT MAY BE REQUIRED BY THE LOCAL AUTHORITY.

D. THE CONTRACTOR SHALL BE RESPONSIBLE FOR COORDINATION WITH THE BUILDING OWNER FOR NEW AND/OR DEMOLITION WORK INVOLVED.

E. NO MATERIAL OTHER THAN THAT CONTAINED IN THE "LATEST LIST OF ELECTRICAL FITTINGS" APPROVED BY THE UNDERWRITERS' LABORATORIES, SHALL BE USED IN ANY PART OF THE WORK. ALL MATERIAL FOR WHICH LABEL SERVICE HAS BEEN ESTABLISHED SHALL BEAR THE U.L. LABEL.

F. THE CONTRACTOR SHALL GUARANTEE ALL NEW WORK FOR A PERIOD OF ONE YEAR FROM THE ACCEPTANCE DATE BY THE OWNER. THE CONTRACTOR SHALL BE RESPONSIBLE FOR OBTAINING WARRANTIES FROM ALL EQUIPMENT MANUFACTURERS FOR SUBMISSION TO THE OWNER.

G. DRAWINGS INDICATE GENERAL ARRANGEMENT OF WORK INCLUDED IN CONTRACT. CONTRACTOR SHALL, WITHOUT EXTRA CHARGE, MAKE MODIFICATIONS TO THE LAYOUT OF THE WORK TO PREVENT CONFLICT WITH WORK OF OTHER TRADES AND FOR THE PROPER INSTALLATION OF WORK. CHECK ALL DRAWINGS AND VISIT JOB SITE TO VERIFY SPACE AND TYPE OF EXISTING CONDITIONS IN WHICH WORK WILL BE DONE, PRIOR TO SUBMITTAL OF BID.

H. THE ELECTRICAL CONTRACTOR SHALL SUPPLY THREE (3) COMPLETE SETS OF APPROVED DRAWINGS, ENGINEERING DATA SHEETS, MAINTENANCE AND OPERATING INSTRUCTION MANUALS FOR ALL SYSTEMS AND THEIR RESPECTIVE EQUIPMENT. THESE MANUALS SHALL BE INSERTED IN VINYL COVERED 3-RING BINDERS AND TURNED OVER TO OWNER'S REPRESENTATIVE ONE (1) WEEK PRIOR TO FINAL PUNCH LIST.

I. ALL WORK SHALL BE INSTALLED IN A NEAT AND WORKMAN LIKE MANNER AND WILL BE SUBJECT TO THE APPROVAL OF THE OWNER'S REPRESENTATIVE.

J. ALL EQUIPMENT AND MATERIALS TO BE INSTALLED SHALL BE NEW, UNLESS OTHERWISE NOTED.

K. BEFORE FINAL PAYMENT, THE CONTRACTOR SHALL PROVIDE A COMPLETE SET OF PRINTS (AS-BUILTS), LEGIBLY MARKED IN RED PENCIL TO SHOW ALL CHANGES FROM THE ORIGINAL PLANS.

L. ENTIRE ELECTRICAL INSTALLATION SHALL BE IN ACCORDANCE WITH OWNER'S SPECIFICATIONS, AND REQUIREMENTS OF ALL LOCAL AUTHORITIES HAVING JURISDICTION. IT IS THE CONTRACTOR'S RESPONSIBILITY TO COORDINATE WITH APPROPRIATE INDIVIDUALS TO OBTAIN ALL SUCH SPECIFICATIONS AND REQUIREMENTS. NOTHING CONTAINED IN, OR OMITTED FROM, THESE DOCUMENTS SHALL RELIEVE CONTRACTOR FROM THIS OBLIGATION.

SECTION 16450

1.01. GROUNDING

A. ALL NON-CURRENT CARRYING PARTS OF THE ELECTRICAL AND TELEPHONE CONDUIT SYSTEMS SHALL BE MECHANICALLY AND ELECTRICALLY CONNECTED TO PROVIDE AN INDEPENDENT RETURN PATH TO THE EQUIPMENT GROUNDING SOURCES.

B. GROUNDING SYSTEM WILL BE IN ACCORDANCE WITH THE LATEST ACCEPTABLE EDITION OF THE NATIONAL ELECTRICAL CODE AND REQUIREMENTS PER LOCAL INSPECTOR HAVING JURISDICTION.

C. EQUIPMENT GROUNDING CONDUCTOR:

1. EACH EQUIPMENT GROUND CONDUCTOR SHALL BE SIZED IN ACCORDANCE WITH THE N.E.C. ARTICLE 250-122.

2. THE MINIMUM SIZE OF EQUIPMENT GROUND CONDUCTOR SHALL BE #12 AWG COPPER.

D. CELLULAR GROUNDING SYSTEM:

PROVIDE THE CELLULAR GROUNDING SYSTEM AS SPECIFIED ON DRAWINGS, INCLUDING, BUT NOT LIMITED TO:

1. GROUND BARS
2. ANTENNA GROUND CONNECTIONS AND PLATES.

E. ALL EQUIPMENT SHALL BE BONDED TO GROUND AS REQUIRED BY N.E.C., MFG. SPECIFICATIONS, AND OWNER'S SPECIFICATIONS.

REV.	DATE	DRAWN BY	CHK'D BY	DESCRIPTION
0	02/19/21	DMD	TJL	FINAL CONSTRUCTION DRAWINGS
B	01/21/21	ASC	DMD	PRELIMINARY CONSTRUCTION DRAWINGS – REVISED PER CLIENT COMMENTS
A	12/30/20	ASC	DMD	PRELIMINARY CONSTRUCTION DRAWINGS – ISSUED FOR CLIENT REVIEW

PROFESSIONAL ENGINEER SEAL

verizon

CENTEK engineering
Centered on Solutions℠
(203) 488-0580
(203) 488-8587 Fax
63-2 North Branford Road
Branford, CT 06405
www.CentekEng.com

Cellco Partnership d/b/a Verizon Wireless

PLYMOUTH W CT RELO

33 KEEGAN ROAD
PLYMOUTH, CT 06782

DATE: 11/20/20
SCALE: AS NOTED
JOB NO. 20150.04

ELECTRICAL DETAILS AND SPECIFICATIONS

E-1

Sheet No. 7 of 7

JAHH-65B-R3B

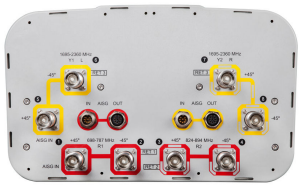

8-port sector antenna, 2x 698–787, 2x 824-894 and 4x 1695–2360 MHz, 65° HPBW, 3x RET and low bands have diplexers. Internal SBT's on first LB(Port 1) and first HB(Port 5).

- Internal SBT on low and high band allow remote RET control from the radio over the RF jumper cable
- One RET for 700MHz, one RET for 850MHz, and one RET for both high bands to ensure same tilt level for 4x Rx or 4x MIMO
- Internal filter on low band and interleaved dipole technology providing for attractive, low wind load mechanical package
- Separate RS-485 RET input/output for low and high band

General Specifications

Antenna Type	Sector
Band	Multiband
Color	Light gray
Effective Projective Area (EPA), frontal	0.28 m^2 | 3.014 ft^2
Effective Projective Area (EPA), lateral	0.24 m^2 | 2.583 ft^2
Grounding Type	RF connector body grounded to reflector and mounting bracket
Performance Note	Outdoor usage | Wind loading figures are validated by wind tunnel measurements described in white paper WP-112534-EN
Radome Material	Fiberglass, UV resistant
Radiator Material	Aluminum | Low loss circuit board
Reflector Material	Aluminum
RF Connector Interface	4.3-10 Female
RF Connector Location	Bottom
RF Connector Quantity, high band	4
RF Connector Quantity, low band	4
RF Connector Quantity, total	8

Remote Electrical Tilt (RET) Information, General

RET Interface	8-pin DIN Female | 8-pin DIN Male
RET Interface, quantity	2 female | 2 male

Dimensions

Width	350 mm | 13.78 in

©2020 CommScope, Inc. All rights reserved. All trademarks identified by ® or ™ are registered trademarks, respectively, of CommScope. All specifications are subject to change without notice. See www.commscope.com for the most current information. Revised: April 30, 2020

JAHH-65B-R3B

Length	1828 mm | 71.969 in
Depth	208 mm | 8.189 in

Array Layout

JAHH-65A-R3B JAHH-65B-R3B JAHH-65C-R3B

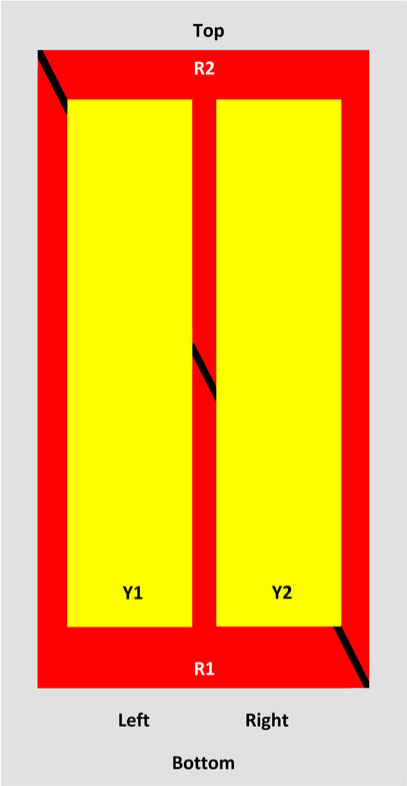

Array	Freq (MHz)	Conns	RET (SRET)	AISG RET UID
R1	698-798	1-2	1	ANxxxxxxxxxxxxxxx1
R2	824-894	3-4	2	ANxxxxxxxxxxxxxxx2
Y1	1695-2360	5-6	3	ANxxxxxxxxxxxxxxx3
Y2	1695-2360	7-8		

View from the front of the antenna

(Sizes of colored boxes are not true depictions of array sizes)

Electrical Specifications

Impedance	50 ohm
Operating Frequency Band	1695 – 2360 MHz | 698 – 787 MHz | 824 – 894 MHz
Polarization	±45°

Remote Electrical Tilt (RET) Information, Electrical

Protocol	3GPP/AISG 2.0 (Single RET)
Power Consumption, idle state, maximum	2 W

©2020 CommScope, Inc. All rights reserved. All trademarks identified by ® or ™ are registered trademarks, respectively, of CommScope. All specifications are subject to change without notice. See www.commscope.com for the most current information. Revised: April 30, 2020

JAHH-65B-R3B

Power Consumption, normal conditions, maximum	13 W
Input Voltage	10–30 Vdc
Internal Bias Tee	Port 1 | Port 5
Internal RET	High band (1) | Low band (2)

Electrical Specifications

Frequency Band, MHz	**698–787**	**824–894**	**1695–1880**	**1850–1990**	**1920–2200**	**2300–2360**
Gain, dBi	14.5	15.8	18	18.4	18.5	18.8
Beamwidth, Horizontal, degrees	67	65	63	63	65	68
Beamwidth, Vertical, degrees	12.4	10.5	5.7	5.2	4.9	4.4
Beam Tilt, degrees	2–14	2–14	0–10	0–10	0–10	0–10
USLS (First Lobe), dB	18	18	20	20	21	23
Front-to-Back Ratio at 180°, dB	32	34	31	35	36	38
Isolation, Cross Polarization, dB	25	25	25	25	25	25
Isolation, Inter-band, dB	30	30	30	30	30	30
VSWR | Return loss, dB	1.5 | 14.0	1.5 | 14.0	1.5 | 14.0	1.5 | 14.0	1.5 | 14.0	1.5 | 14.0
PIM, 3rd Order, 2 x 20 W, dBc	-153	-153	-153	-153	-153	-153
Input Power per Port at 50° C, maximum, watts	200	200	300	300	300	250

Electrical Specifications, BASTA

Frequency Band, MHz	**698–787**	**824–894**	**1695–1880**	**1850–1990**	**1920–2200**	**2300–2360**
Gain by all Beam Tilts, average, dBi	14.3	14.9	17.6	18.1	18.2	18.5
Gain by all Beam Tilts Tolerance, dB	±0.3	±0.5	±0.6	±0.4	±0.5	±0.6
Gain by Beam Tilt, average, dBi	2 ° | 14.3 8 ° | 14.3 14 ° | 14.3	2 ° | 15.0 8 ° | 14.9 14 ° | 15.4	0 ° | 17.2 5 ° | 17.6 10 ° | 17.6	0 ° | 17.6 5 ° | 18.2 10 ° | 18.2	0 ° | 17.7 5 ° | 18.3 10 ° | 18.3	0 ° | 17.9 5 ° | 18.7 10 ° | 18.7
Beamwidth, Horizontal Tolerance, degrees	±1.2	±1.4	±4	±2.4	±2.9	±2.7
Beamwidth, Vertical Tolerance, degrees	±0.9	±0.5	±0.3	±0.2	±0.3	±0.1
USLS, beampeak to 20° above beampeak, dB	18	17	17	18	19	18
Front-to-Back Total Power at 180° ± 30°, dB	25	24	26	29	27	29
CPR at Boresight, dB	22	23	20	21	21	24

©2020 CommScope, Inc. All rights reserved. All trademarks identified by ® or ™ are registered trademarks, respectively, of CommScope. All specifications are subject to change without notice. See www.commscope.com for the most current information. Revised: April 30, 2020

JAHH-65B-R3B

CPR at Sector, dB	11	12	11	11	11	8

Mechanical Specifications

Wind Loading at Velocity, frontal	301.0 N @ 150 km/h | 67.7 lbf @ 150 km/h
Wind Loading at Velocity, lateral	254.0 N @ 150 km/h | 57.1 lbf @ 150 km/h
Wind Loading at Velocity, maximum	143.4 lbf @ 150 km/h | 638.0 N @ 150 km/h
Wind Speed, maximum	241 km/h | 149.75 mph

Packaging and Weights

Width, packed	456 mm | 17.953 in
Depth, packed	357 mm | 14.055 in
Length, packed	1975 mm | 77.756 in
Net Weight, without mounting kit	29.2 kg | 64.375 lb
Weight, gross	42.5 kg | 93.696 lb

Regulatory Compliance/Certifications

Agency	Classification
CHINA-ROHS	Above maximum concentration value
ISO 9001:2015	Designed, manufactured and/or distributed under this quality management system
ROHS	Compliant/Exempted

Included Products

BSAMNT-3	Wide Profile Antenna Downtilt Mounting Kit for 2.4 - 4.5 in (60 - 115 mm) OD round members. Kit contains one scissor top bracket set and one bottom bracket set.

* Footnotes

Performance Note	Severe environmental conditions may degrade optimum performance

©2020 CommScope, Inc. All rights reserved. All trademarks identified by ® or ™ are registered trademarks, respectively, of CommScope. All specifications are subject to change without notice. See www.commscope.com for the most current information. Revised: April 30, 2020

SAMSUNG

SAMSUNG C-Band 64T64R Massive MIMO Radio

for High Capacity and Wide Coverage

Samsung C-Band 64T64R Massive MIMO Radio enables mobile operators to increase coverage range, boost data speeds and ultimately offer enriched 5G experiences to users in the U.S..

Model Code : MT6407-77A

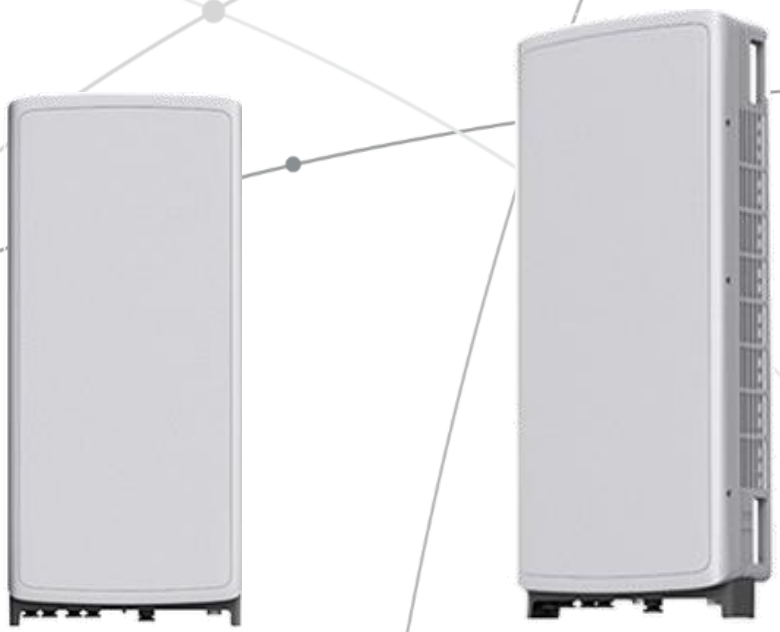

Points of Differentiation

Wide Bandwidth

With capability to support up to 2 CC carrier configuration, Samsung C-Band massive MIMO Radio supports 200 MHz bandwidth in the C-Band spectrum.

Samsung C-Band massive MIMO Radio covers the entire C-Band 280 MHz spectrum, so it can meet the operator's needs in current A block and future B/C blocks

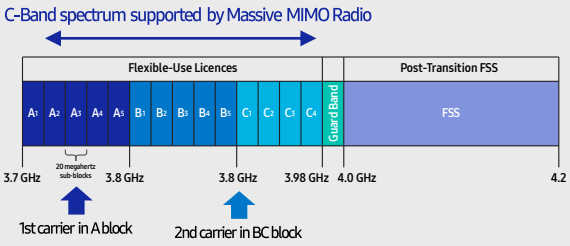

Future Proof Product

Samsung C-Band 64T64R Massive MIMO radio supports not only CPRI but also eCPRI as front-haul interface.
It enables operators can cut down on OPEX/CAPEX by reducing front-haul bandwidth through low layer split and using ethernet based higher efficient line.

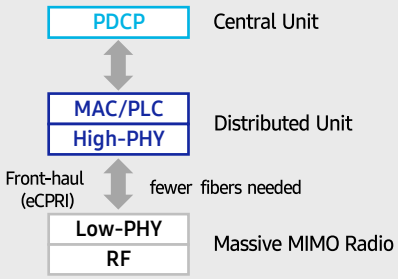

Enhanced Performance

C-Band massive MIMO Radio creates sharp beams and extends networks' coverage on the critical mid-band spectrum using a large number of antenna elements and high output power to boost data speeds.

This helps operators reduce their CAPEX as they now need less products to cover the same area than before.

Furthermore, as C-Band massive MIMO Radio supports MU-MIMO(Multi-user MIMO) , it enables to increase user throughput by minimizing interference.

Well Matched Design

Samsung C-Band Massive MIMO radio utilizes 64 antennas, supports up to 280MHz bandwidth, and delivers a 200W output power. despite the above advanced performance, the Radio has a compact size of 50.9L and 79.4lbs. This makes it easy to install the Radio.

It is designed to look solid and compact, with a low profile appearance so that, when installed, harmonizes well with the surrounding environment..

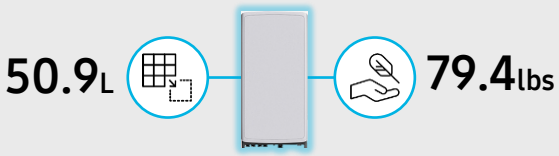

Technical Specifications

Item	Specification
Tech	NR
Band	n77
Frequency Band	3700 - 3980 MHz
EIRP	78.5dBm (53.0 dBm+25.5 dBi)
IBW/OBW	280 MHz / 200 MHz
Installation	Pole/Wall
Size/ Weight	16.06 x 35.06 x 5.51 inch (50.86L)/ 79.4 lbs

SAMSUNG

About Samsung Electronics Co., Ltd.

Samsung inspires the world and shapes the future with transformative ideas and technologies. The company is redefining the worlds of TVs, smartphones, wearable devices, tablets, digital appliances, network systems, and memory, system LSI, foundry and LED solutions.

129 Samsung-ro, Yeongtong-gu, Suwon-si Gyeonggi-do, Korea

ⓒ 2021 Samsung Electronics Co., Ltd.

All rights reserved. Information in this leaflet is proprietary to Samsung Electronics Co., Ltd. and is subject to change without notice. No information contained here may be copied, translated, transcribed or duplicated by any form without the prior written consent of Samsung Electronics.

SAMSUNG

Dual-Band Radio Unit
AWS/PCS (B66/B2)
RFV01U-D1A

Samsung's RFV01U-D1A is a compact remote Radio Unit (RU) designed for deployments that require flexibility in installation and rapid onlining, without compromising on coverage, capacity or operational expenses.

The RFV01U-D1A RU targets dual-band support across Band 66 (AWS) and Band 2 (PCS), making it an ideal product for broad coverage footprints across multiple common mid-range frequencies.

The RU handles all Radio Frequency (RF) processing in a single, compact unit, and is designed to interface via CPRI with Samsung's CDU baseband offerings, in both distributed- and central-RAN configurations.

In addition to its minimal footprint and ease of installation, the RU is also designed to reduce cost of ownership through its integrated spectrum analyzer, which allows for remote RF monitoring, greatly reducing the need for on-site maintenance visits.

Features and Benefits

- Dual-band support for broad frequency coverage
- Minimal footprint reduces site costs
- Rapid, easy installation
- Flexibly deployable in any location
- Remote RF monitoring capability
- Convection cooled, silent operation
- Built-in Broadcast Auxiliary Services (BAS) filter ensures compliant AWS operation without impacting footprint

Key Technical Specifications

Duplex Type: FDD
Operating Frequencies:
    B66: DL(2,110-2,180MHz)/UL(1,710-1,780MHz)
    B2: DL(1,930-1,990MHz)/UL(1,850-1,910MHz)
Instantaneous Bandwidth:
    70MHz(B66) + 60MHz(B2)
RF Chain: 4T4R/2T4R/2T2R
Output Power: Total 320W
DU-RU Interface: CPRI (10Gbps)
Dimensions: 380 x 380 x 255mm (36.8L)
Weight: 38.3kg
Input Power: -48V DC
Operating Temp.: -40 - 55°(w/o solar load)
Cooling: Natural convection

SAMSUNG

Dual-Band Radio Unit
700/850MHz (B13/B5)
RFV01U-D2A

Samsung's RFV01U-D2A is a compact remote Radio Unit (RU) designed for deployments that require flexibility in installation and rapid onlining, without compromising on coverage, capacity or operational expenses.

The RFV01U-D2A RU targets dual-band support across Band 13 (700MHz) and Band 5 (850MHz), making it an ideal product for broad coverage footprints across multiple common low-end, long-range frequencies.

The RU handles all Radio Frequency (RF) processing in a single, compact unit, and is designed to interface via CPRI with Samsung's CDU baseband offerings, in both distributed- and central-RAN configurations.

In addition to its minimal footprint and ease of installation, the RU is also designed to reduce cost of ownership through its integrated spectrum analyzer, which allows for remote RF monitoring, greatly reducing the need for on-site maintenance visits.

Features and Benefits

- Dual-band support for broad frequency coverage
- Minimal footprint reduces site costs
- Rapid, easy installation
- Flexibly deployable in any location
- Remote RF monitoring capability
- Convection cooled, silent operation

Key Technical Specifications

Duplex Type: FDD
Operating Frequencies:
B13: DL(746-756MHz)/UL(777-787MHz)
B5: DL(869-894MHz)/UL(824-849MHz)
Instantaneous Bandwidth: 10MHz(B13) + 25MHz(B5)
RF Chain: 4T4R/2T4R/2T2R
Output Power: Total 320W
DU-RU Interface: CPRI (10Gbps)
Dimensions: 380 x 380 x 207mm (29.9L)
Weight: 31.9kg
Input Power: -48V DC
Operating Temp.: -40 - 55°(w/o solar load)
Cooling: Natural convection

ATTACHMENT 3

	General	Power	Density					
Site Name: Vernon 2								
Tower Height: 175ft								
CARRIER	**# OF CHAN.**	**WATTS ERP**	**HEIGHT**	**Operating Freq.**	**Calculated Power Density**	**MAX. PERMISS. EXP.**	**FRACTION MPE**	**Total**
*AT&T	3	431	120	1900	0.0358	1.0000	0.36%	
*AT&T	5	518	120	850	0.0717	0.5667	1.26%	
*AT&T	2	462	120	2100	0.0256	1.0000	0.26%	
*AT&T	2	441	120	750	0.0244	0.5000	0.49%	
*T-Mobile	2	2334	130	2100	0.1092	1.0000	1.09%	
*T-Mobile	2	2334	130	1900	0.1092	1.0000	1.09%	
*T-Mobile	2	1167	130	1950	0.0546	1.0000	0.55%	
*T-Mobile	1	713	130	700	0.0167	0.4667	0.36%	
VZW 700	**4**	**634**	**140**	**751**	**0.0018**	**0.5007**	**0.36%**	
VZW Cellular	**4**	**725**	**140**	**874**	**0.0021**	**0.5827**	**0.36%**	
VZW PCS	**4**	**1457**	**140**	**1975**	**0.0042**	**1.0000**	**0.42%**	
VZW AWS	**4**	**1481**	**140**	**2132.5**	**0.0042**	**1.0000**	**0.42%**	
VZW CBAND	**1**	**26002**	**140**	**3730.005**	**0.0186**	**1.0000**	**1.86%**	
								8.88%
* Source: Siting Council								

ATTACHMENT 4

CENTEK engineering

Centered on Solutions℠

Structural Analysis Report

140-ft Existing Valmont Monopole

Proposed Verizon Wireless
Antenna Upgrade

Verizon Site Ref: Plymouth West Relo

33 Keegan Road
Plymouth, CT

Centek Project No. 20150.04

Date: December 21, 2020

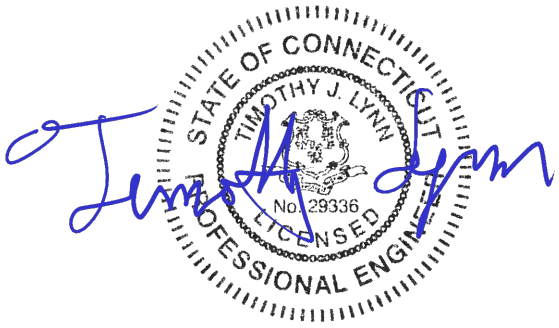

Prepared for:
Verizon Wireless
99 East River Road, 9th Floor
East Hartford, CT 06108

Table of Contents

SECTION 1 - REPORT

- INTRODUCTION
- ANTENNA AND APPURTENANCE SUMMARY
- PRIMARY ASSUMPTIONS USED IN THE ANALYSIS
- ANALYSIS
- TOWER LOADING
- TOWER CAPACITY
- FOUNDATION AND ANCHORS
- CONCLUSION

SECTION 2 – CONDITIONS & SOFTWARE

- STANDARD ENGINEERING CONDITIONS
- GENERAL DESCRIPTION OF STRUCTURAL ANALYSIS PROGRAM

SECTION 3 – CALCULATIONS

- tnxTower INPUT/OUTPUT SUMMARY
- tnxTower DETAILED OUTPUT
- ANCHOR BOLT AND BASE PLATE ANALYSIS
- FOUNDATION ANALYSIS

SECTION 4 – REFERENCE MATERIAL

- RF DATA SHEET

Introduction

The purpose of this report is to summarize the results of the non-linear, P-Δ structural analysis of the antenna upgrade proposed by Verizon Wireless on the existing monopole (tower) located in in Plymouth, CT.

The host tower is a 140-ft, three-section, eighteen sided, tapered monopole, originally designed and manufactured by Valmont job no: 301371, dated September 10, 2015. The tower geometry, structure member sizes and foundation system information were obtained from the aforementioned design documents.

Antenna and appurtenance information were obtained from a previous structural analysis report prepared by Centek job no. 16141.00 dated September 28, 2016 and a Verizon RF data sheet.

The tower is made up of three (3) tapered vertical sections consisting of A572-65 pole sections. The vertical tower sections are slip joint connected. The diameter of the pole (flat-flat) is 23.49-in at the top and 60.00-in at the base.

Antenna and Appurtenance Summary

The existing, proposed and future loads considered in this analysis consist of the following:

- T-MOBILE (Existing):
  Antennas: Three (3) Andrew LNX-6515DS panel antennas, three (3) Ericsson AIR21 B2A/B4P panel antennas, three (3) Ericsson AIR32 panel antennas and three (3) Ericsson RRUS-11 remote radio heads mounted to one (1) low profile platform with a RAD center elevation of 130-ft above grade level.
  Coax Cables: Six (6) 1-5/8" ∅ coax cables and two (2) 1-5/8" ∅ fiber cables running on the interior of monopole.
- VERIZON (Existing to Remain):
  Antennas: Three (3) Andrew LNX-6514DS panel antennas mounted to one (1) platform with a RAD center elevation of 140-ft above grade level.
  Coax Cables: Six (6) 1-5/8" ∅ coax cables running on the interior of monopole.
- VERIZON (Existing to Remove):
  Antennas: Six (6) Andrew HBXX-6517DS panel antennas, three (3) Andrew LNX-6514DS panel antennas, three (3) B13-RRH-4x30 remote radio heads, three (3) B25-RRH-4x30 remote radio heads, three (3) B4-RRH-2x60 remote radio heads and one (1) main distribution box mounted to one (1) platform with a RAD center elevation of 140-ft above grade level.
  Coax Cables: One (1) hybrid cable running on the interior of monopole.
- **VERIZON (PROPOSED):**
  Antennas: Six (6) Commscope JAHH-65B-R3B panel antennas, three (3) Sub6 panel antennas, three (3) B2/B66A remote radio heads, three (3) B5/B13 remote radio heads, three (3) VZS01 remote radio heads, three (3) Commscope CBC78T-DS-43 diplexers and one (1) main distribution box mounted to one (1) platform with a RAD center elevation of 140-ft above grade level.
  Mount Modifications: Mount modifications per Maser consulting report.
  Coax Cables: One (1) hybrid cable running on the interior of monopole.

Primary Assumptions Used in the Analysis

- The tower structure's theoretical capacity not including any assessment of the condition of the tower.
- The tower carries the horizontal and vertical loads due to the weight of antennas, ice load and wind.
- Tower is properly installed and maintained.
- Tower is in plumb condition.
- Tower loading for antennas and mounts as listed in this report.
- All bolts are appropriately tightened providing the necessary connection continuity.
- All welds are fabricated with ER-70S-6 electrodes.
- All members are assumed to be as specified in the original tower design documents.
- All members are "hot dipped" galvanized in accordance with ASTM A123 and ASTM A153 Standards.
- All member protective coatings are in good condition.
- All tower members were properly designed, detailed, fabricated, installed and have been properly maintained since erection.
- Any deviation from the analyzed antenna loading will require a new analysis for verification of structural adequacy.
- All coax cables are routed as specified in this report.

Analysis

The existing tower was analyzed using a comprehensive computer program entitled tnxTower. The program analyzes the tower, considering the worst case loading condition. The tower is considered as loaded by concentric forces along the tower, and the model assumes that the tower members are subjected to bending, axial, and shear forces.

The existing tower was analyzed for the controlling basic wind speed (3-second gust) with no ice and the applicable wind and ice combination to determine stresses in members as per guidelines of TIA-222-G-2005 entitled "Structural Standard for Antenna Support Structures and Antennas", the American Institute of Steel Construction (AISC) and the Manual of Steel Construction; Load and Resistance Factor Design (LRFD).

The controlling wind speed is determined by evaluating the local available wind speed data as provided in Appendix N of the CSBC[1] and the wind speed data available in the TIA-222-G-2005 Standard.

Tower Loading

Tower loading was determined by the basic wind speed as applied to projected surface areas with modification factors per TIA-222-G-2005, gravity loads of the tower structure and its components, and the application of 1.0" radial ice on the tower structure and its components.

Basic Wind Speed:	Plymouth; v = 93 mph (Vasd)	*[Appendix N of the 2018 CT Building Code]*
Load Cases:	Load Case 1; 93 mph wind speed w/ no ice plus gravity load – used in calculation of tower stresses and rotation.	*[Appendix N of the 2018 CT Building Code]*
	Load Case 2; 40 mph wind speed w/ 1.0" radial ice plus gravity load – used in calculation of tower stresses.	*[Annex B of TIA-222-G-2005]*

[1] The 2015 International Building Code as amended by the 2018 Connecticut State Building Code (CSBC).

Tower Capacity

Tower stresses were calculated utilizing the structural analysis software tnxTower. Design flexural strength was determined based on section 4.7 and Table 4-8 of the TIA-222-G.

- Calculated stresses were found to be within allowable limits. In Load Case 1, per tnxTower "Section Capacity Table", this tower was found to be at **32.0%** of its total capacity.

Tower Section	Elevation	Stress Ratio (percentage of capacity)	Result
Pole Shaft (L3)	1.00'-46.42'	32.0%	**PASS**

Foundation and Anchors

The existing foundation consists of a 7.5-ft square x 4.0-ft long reinforced concrete pier on a 26.5-ft square x 2.5-ft thick reinforce concrete pad. The sub-grade conditions used in the analysis of the existing foundation were obtained from the aforementioned tower design documents. The base of the tower is connected to the foundation by means of (20) 2.25"∅, ASTM A615-75 anchor bolts embedded approximately 6-ft into the concrete foundation structure.

- The tower base reactions developed from the governing Load Case 1 were used in the verification of the foundation and its anchors:

Location	Vector	Proposed Reactions
Base	Shear	22 kips
	Compression	45 kips
	Moment	2137 kip-ft

- The foundation was found to be within allowable limits.

Foundation	Design Limit	TIA-222-G Section 9.4 FS[(1)]	Proposed Loading (FS)[(1)]	Result
Reinforced Concrete Pad and Pier	OTM[(2)]	1.0	3.09	**PASS**

Note 1: FS denotes Factor of Safety.
Note 2: OTM denotes Overturning Moment.

- The anchor bolts and base plate were found to be within allowable limits.

Tower Component	Design Limit	Stress Ratio (percentage of capacity)	Result
Anchor Bolts	Combined Axial and Shear	24.7%	**PASS**
Base Plate	Bending	41.5%	**PASS**

Conclusion

This analysis shows that the subject tower **is adequate** to support the proposed antenna configuration.

The analysis is based, in part, on the information provided to this office by Verizon. If the existing conditions are different than the information in this report, Centek Engineering, Inc. must be contacted for resolution of any potential issues.

Please feel free to call with any questions or comments.

Respectfully Submitted by:

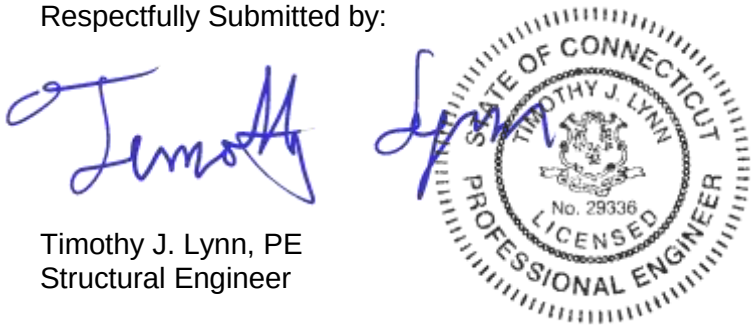

Timothy J. Lynn, PE
Structural Engineer

Standard Conditions for Furnishing of Professional Engineering Services on Existing Structures

All engineering services are performed on the basis that the information used is current and correct. This information may consist of, but is not necessarily limited to:

- Information supplied by the client regarding the structure itself, its foundations, the soil conditions, the antenna and feed line loading on the structure and its components, or other relevant information.
- Information from the field and/or drawings in the possession of Centek Engineering, Inc. or generated by field inspections or measurements of the structure.
- It is the responsibility of the client to ensure that the information provided to Centek Engineering, Inc. and used in the performance of our engineering services is correct and complete. In the absence of information to the contrary, we assume that all structures were constructed in accordance with the drawings and specifications and are in an un-corroded condition and have not deteriorated. It is therefore assumed that its capacity has not significantly changed from the “as new” condition.
- All services will be performed to the codes specified by the client, and we do not imply to meet any other codes or requirements unless explicitly agreed in writing. If wind and ice loads or other relevant parameters are to be different from the minimum values recommended by the codes, the client shall specify the exact requirement. In the absence of information to the contrary, all work will be performed in accordance with the latest revision of ANSI/ASCE10 & ANSI/EIA-222
- All services performed, results obtained, and recommendations made are in accordance with generally accepted engineering principles and practices. Centek Engineering, Inc. is not responsible for the conclusions, opinions and recommendations made by others based on the information we supply.

GENERAL DESCRIPTION OF STRUCTURAL ANALYSIS PROGRAM

tnxTower, is an integrated structural analysis and design software package for Designed specifically for the telecommunications industry, tnxTower, formerly ERITower, automates much of the tower analysis and design required by the TIA/EIA 222 Standard.

tnxTower Features:

- tnxTower can analyze and design 3- and 4-sided guyed towers, 3- and 4-sided self-supporting towers and either round or tapered ground mounted poles with or without guys.
- The program analyzes towers using the TIA-222-G (2005) standard or any of the previous TIA/EIA standards back to RS-222 (1959). Steel design is checked using the AISC ASD 9th Edition or the AISC LRFD specifications.
- Linear and non-linear (P-delta) analyses can be used in determining displacements and forces in the structure. Wind pressures and forces are automatically calculated.
- Extensive graphics plots include material take-off, shear-moment, leg compression, displacement, twist, feed line, guy anchor and stress plots.
- tnxTower contains unique features such as True Cable behavior, hog rod take-up, foundation stiffness and much more.

Section	Length (ft)	Number of Sides	Thickness (in)	Socket Length (ft)	Top Dia (in)	Bot Dia (in)	Grade	Weight (K)
1	46.250	18	0.375	5.250	23.490	36.180		5.5
2	52.583	18	0.438	6.583	33.990	48.410	A572-65	10.1
3	52.000	18	0.438		45.730	60.000		12.9
								28.5

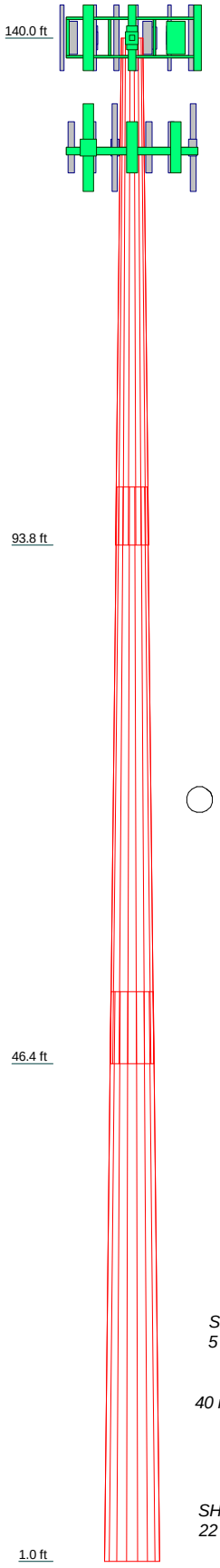

ALL REACTIONS ARE FACTORED

AXIAL 75 K

SHEAR 5 K

MOMENT 459 kip-ft

TORQUE 0 kip-ft
40 mph WIND - 1.000 in ICE

AXIAL 45 K

SHEAR 22 K

MOMENT 2137 kip-ft

TORQUE 0 kip-ft
REACTIONS - 93 mph WIND

DESIGNED APPURTENANCE LOADING

TYPE	ELEVATION	TYPE	ELEVATION
JAHH-65B-R3B (Verizon - Proposed)	140	CBC78T-DS-43 (Verizon - Proposed)	140
Sub6 (Verizon - Proposed)	140	CBC78T-DS-43 (Verizon - Proposed)	140
JAHH-65B-R3B (Verizon - Proposed)	140	CBC78T-DS-43 (Verizon - Proposed)	140
LNX-6514DS (Verizon - Existing)	140	DB-T1-6Z-8AB-0Z (Verizon - Existing)	140
JAHH-65B-R3B (Verizon - Proposed)	140	13' Platform w/rails (Verizon - Existing)	140
Sub6 (Verizon - Proposed)	140	Mount Mods (Verizon - Proposed)	140
JAHH-65B-R3B (Verizon - Proposed)	140	LNX-6515DS (T-Mobile - Existing)	130
LNX-6514DS (Verizon - Existing)	140	AIR21 B2A/B4P (T-Mobile - Existing)	130
JAHH-65B-R3B (Verizon - Proposed)	140	AIR32 (T-Mobile - Existing)	130
Sub6 (Verizon - Proposed)	140	LNX-6515DS (T-Mobile - Existing)	130
JAHH-65B-R3B (Verizon - Proposed)	140	AIR21 B2A/B4P (T-Mobile - Existing)	130
LNX-6514DS (Verizon - Existing)	140	AIR32 (T-Mobile - Existing)	130
B2/B66A RRH (Verizon - Proposed)	140	LNX-6515DS (T-Mobile - Existing)	130
B2/B66A RRH (Verizon - Proposed)	140	AIR21 B2A/B4P (T-Mobile - Existing)	130
B2/B66A RRH (Verizon - Proposed)	140	AIR32 (T-Mobile - Existing)	130
B5/B13 RRH (Verizon - Proposed)	140	RRUS-11 (T-Mobile - Existing)	130
B5/B13 RRH (Verizon - Proposed)	140	RRUS-11 (T-Mobile - Existing)	130
B5/B13 RRH (Verizon - Proposed)	140	RRUS-11 (T-Mobile - Existing)	130
RRU (Verizon - Proposed)	140	Andrew 12'-6" Low Profile Platform (T-Mobile - Existing)	130
RRU (Verizon - Proposed)	140		
RRU (Verizon - Proposed)	140		

MATERIAL STRENGTH

GRADE	Fy	Fu	GRADE	Fy	Fu
A572-65	65 ksi	80 ksi			

TOWER DESIGN NOTES

1. Tower designed for Exposure C to the TIA-222-G Standard.
2. Tower designed for a 93 mph basic wind in accordance with the TIA-222-G Standard.
3. Tower is also designed for a 40 mph basic wind with 1.00 in ice. Ice is considered to increase in thickness with height.
4. Deflections are based upon a 60 mph wind.
5. Tower Structure Class II.
6. Topographic Category 1 with Crest Height of 0.000 ft
7. TOWER RATING: 32%

Centek Engineering
63-2 N Branford Rd
Branford, CT 06405
Phone: (203) 488-0580
FAX: (203) 488-8587

Job: **20150.04 - Plymouth West Relo**		
Project: **160' Valmont Monopole - 33 Keegan Road, Plymouth, CT**		
Client: Verizon Wireless	Drawn by: FJP	App'd:
Code: TIA-222-G	Date: 12/30/20	Scale: NTS
Path: J:\Jobs\20150\00.WI\04 Plymouth West Relo\05 Structural\Tower Analysis\Backup Documentation\ER\139' Monopole Plymouth.er		Dwg No. E-1

Tower Input Data

The tower is a monopole.
This tower is designed using the TIA-222-G standard.
The following design criteria apply:

Basic wind speed of 93 mph.
Structure Class II.
Exposure Category C.
Topographic Category 1.
Crest Height 0.000 ft.
Nominal ice thickness of 1.000 in.
Ice thickness is considered to increase with height.
Ice density of 56 pcf.
A wind speed of 40 mph is used in combination with ice.
Temperature drop of 50 °F.
Deflections calculated using a wind speed of 60 mph.
A non-linear (P-delta) analysis was used.
Pressures are calculated at each section.
Stress ratio used in pole design is 1.
Local bending stresses due to climbing loads, feed line supports, and appurtenance mounts are not considered.

Options

	Consider Moments - Legs		Distribute Leg Loads As Uniform		Use ASCE 10 X-Brace Ly Rules
	Consider Moments - Horizontals		Assume Legs Pinned		Calculate Redundant Bracing Forces
	Consider Moments - Diagonals	√	Assume Rigid Index Plate		Ignore Redundant Members in FEA
	Use Moment Magnification		Use Clear Spans For Wind Area		SR Leg Bolts Resist Compression
√	Use Code Stress Ratios		Use Clear Spans For KL/r		All Leg Panels Have Same Allowable
√	Use Code Safety Factors - Guys		Retension Guys To Initial Tension		Offset Girt At Foundation
	Escalate Ice	√	Bypass Mast Stability Checks		Consider Feed Line Torque
	Always Use Max Kz		Use Azimuth Dish Coefficients		Include Angle Block Shear Check
	Use Special Wind Profile	√	Project Wind Area of Appurt.		Use TIA-222-G Bracing Resist. Exemption
	Include Bolts In Member Capacity		Autocalc Torque Arm Areas		Use TIA-222-G Tension Splice Exemption
	Leg Bolts Are At Top Of Section		Add IBC .6D+W Combination		Poles
	Secondary Horizontal Braces Leg	√	Sort Capacity Reports By Component	√	Include Shear-Torsion Interaction
	Use Diamond Inner Bracing (4 Sided)		Triangulate Diamond Inner Bracing		Always Use Sub-Critical Flow
	SR Members Have Cut Ends		Treat Feed Line Bundles As Cylinder		Use Top Mounted Sockets
	SR Members Are Concentric		Ignore KL/ry For 60 Deg. Angle Legs		Pole Without Linear Attachments
					Pole With Shroud Or No Appurtenances
					Outside and Inside Corner Radii Are Known

Tapered Pole Section Geometry

Section	*Elevation* *ft*	*Section Length* *ft*	*Splice Length* *ft*	*Number of Sides*	*Top Diameter* *in*	*Bottom Diameter* *in*	*Wall Thickness* *in*	*Bend Radius* *in*	*Pole Grade*
L1	140.000-93.750	46.250	5.250	18	23.490	36.180	0.375	1.500	A572-65 (65 ksi)

Section	Elevation ft	Section Length ft	Splice Length ft	Number of Sides	Top Diameter in	Bottom Diameter in	Wall Thickness in	Bend Radius in	Pole Grade
L2	93.750-46.417	52.583	6.583	18	33.990	48.410	0.438	1.750	A572-65 (65 ksi)
L3	46.417-1.000	52.000		18	45.730	60.000	0.438	1.750	A572-65 (65 ksi)

Tapered Pole Properties

Section	Tip Dia. in	Area in^2	I in^4	r in	C in	I/C in^3	J in^4	It/Q in^2	w in	w/t
L1	23.795	27.513	1857.194	8.206	11.933	155.636	3716.832	13.759	3.474	9.265
	36.680	42.617	6902.504	12.711	18.379	375.556	13814.091	21.313	5.708	15.22
L2	35.908	46.591	6626.409	11.911	17.267	383.769	13261.536	23.300	5.212	11.913
	49.089	66.616	19368.656	17.030	24.592	787.591	38762.798	33.314	7.750	17.715
L3	48.202	62.894	16300.151	16.079	23.231	701.665	32621.749	31.453	7.278	16.636
	60.858	82.710	37071.587	21.145	30.480	1216.259	74191.955	41.363	9.790	22.377

Tower Elevation ft	Gusset Area (per face) ft^2	Gusset Thickness in	Gusset Grade	Adjust. Factor A_f	Adjust. Factor A_r	Weight Mult.	Double Angle Stitch Bolt Spacing Diagonals in	Double Angle Stitch Bolt Spacing Horizontals in	Double Angle Stitch Bolt Spacing Redundants in
L1 140.000-93.750				1	1	1			
L2 93.750-46.417				1	1	1			
L3 46.417-1.000				1	1	1			

Feed Line/Linear Appurtenances - Entered As Area

Description	Face or Leg	Allow Shield	Exclude From Torque Calculation	Component Type	Placement ft	Total Number		C_AA_A ft^2/ft	Weight klf
HYBRIFLEX 1-5/8" (Verizon - Proposed)	C	No	Yes	Inside Pole	140.000 - 1.000	1	No Ice	0.000	0.002
							1/2" Ice	0.000	0.002
							1" Ice	0.000	0.002
1 5/8 (T-Mobile - Existing)	C	No	Yes	Inside Pole	140.000 - 1.000	6	No Ice	0.000	0.001
							1/2" Ice	0.000	0.001
							1" Ice	0.000	0.001
HYBRIFLEX 1-5/8" (T-Mobile - Existing)	C	No	Yes	Inside Pole	140.000 - 1.000	2	No Ice	0.000	0.002
							1/2" Ice	0.000	0.002
							1" Ice	0.000	0.002
1 5/8 (Verizon - Existing)	C	No	Yes	Inside Pole	140.000 - 1.000	6	No Ice	0.000	0.001
							1/2" Ice	0.000	0.001
							1" Ice	0.000	0.001

Feed Line/Linear Appurtenances Section Areas

Tower Section	Tower Elevation ft	Face	A_R ft^2	A_F ft^2	C_AA_A In Face ft^2	C_AA_A Out Face ft^2	Weight K
L1	140.000-93.750	A	0.000	0.000	0.000	0.000	0.000
		B	0.000	0.000	0.000	0.000	0.000
		C	0.000	0.000	0.000	0.000	0.841
L2	93.750-46.417	A	0.000	0.000	0.000	0.000	0.000
		B	0.000	0.000	0.000	0.000	0.000
		C	0.000	0.000	0.000	0.000	0.861
L3	46.417-1.000	A	0.000	0.000	0.000	0.000	0.000
		B	0.000	0.000	0.000	0.000	0.000
		C	0.000	0.000	0.000	0.000	0.826

Feed Line/Linear Appurtenances Section Areas - With Ice

Tower Section	Tower Elevation ft	Face or Leg	Ice Thickness in	A_R ft^2	A_F ft^2	C_AA_A In Face ft^2	C_AA_A Out Face ft^2	Weight K
L1	140.000-93.750	A	2.267	0.000	0.000	0.000	0.000	0.000
		B		0.000	0.000	0.000	0.000	0.000
		C		0.000	0.000	0.000	0.000	0.841
L2	93.750-46.417	A	2.154	0.000	0.000	0.000	0.000	0.000
		B		0.000	0.000	0.000	0.000	0.000
		C		0.000	0.000	0.000	0.000	0.861
L3	46.417-1.000	A	1.936	0.000	0.000	0.000	0.000	0.000
		B		0.000	0.000	0.000	0.000	0.000
		C		0.000	0.000	0.000	0.000	0.826

Shielding Factor Ka

Tower Section	Feed Line Record No.	Description	Feed Line Segment Elev.	K_a No Ice	K_a Ice

Discrete Tower Loads

Description	Face or Leg	Offset Type	Offsets: Horz Lateral ft / Vert ft / ft	Azimuth Adjustment °	Placement ft		C_AA_A Front ft^2	C_AA_A Side ft^2	Weight K
JAHH-65B-R3B	A	From Face	3.000	0.000	140.000	No Ice	5.983	9.113	0.094
(Verizon - Proposed)			-6.000			1/2" Ice	6.442	9.579	0.152
			0.000			1" Ice	6.909	10.052	0.216
Sub6	A	From Face	3.000	0.000	140.000	No Ice	5.762	1.920	0.097
(Verizon - Proposed)			-4.000			1/2" Ice	6.070	2.144	0.132
			0.000			1" Ice	6.386	2.375	0.171
JAHH-65B-R3B	A	From Face	3.000	0.000	140.000	No Ice	5.983	9.113	0.094
(Verizon - Proposed)			0.000			1/2" Ice	6.442	9.579	0.152

Description	Face or Leg	Offset Type	Offsets: Horz Lateral ft / Vert ft / ft	Azimuth Adjustment °	Placement ft		C_AA_A Front ft^2	C_AA_A Side ft^2	Weight K
			0.000			1" Ice	6.909	10.052	0.216
LNX-6514DS	A	From Face	3.000	0.000	140.000	No Ice	8.173	5.405	0.038
(Verizon - Existing)			4.000			1/2" Ice	8.633	5.863	0.089
			0.000			1" Ice	9.100	6.327	0.145
JAHH-65B-R3B	B	From Face	3.000	0.000	140.000	No Ice	5.983	9.113	0.094
(Verizon - Proposed)			-6.000			1/2" Ice	6.442	9.579	0.152
			0.000			1" Ice	6.909	10.052	0.216
Sub6	B	From Face	3.000	0.000	140.000	No Ice	5.762	1.920	0.097
(Verizon - Proposed)			-4.000			1/2" Ice	6.070	2.144	0.132
			0.000			1" Ice	6.386	2.375	0.171
JAHH-65B-R3B	B	From Face	3.000	0.000	140.000	No Ice	5.983	9.113	0.094
(Verizon - Proposed)			0.000			1/2" Ice	6.442	9.579	0.152
			0.000			1" Ice	6.909	10.052	0.216
LNX-6514DS	B	From Face	3.000	0.000	140.000	No Ice	8.173	5.405	0.038
(Verizon - Existing)			4.000			1/2" Ice	8.633	5.863	0.089
			0.000			1" Ice	9.100	6.327	0.145
JAHH-65B-R3B	C	From Face	3.000	0.000	140.000	No Ice	5.983	9.113	0.094
(Verizon - Proposed)			-6.000			1/2" Ice	6.442	9.579	0.152
			0.000			1" Ice	6.909	10.052	0.216
Sub6	C	From Face	3.000	0.000	140.000	No Ice	5.762	1.920	0.097
(Verizon - Proposed)			-4.000			1/2" Ice	6.070	2.144	0.132
			0.000			1" Ice	6.386	2.375	0.171
JAHH-65B-R3B	C	From Face	3.000	0.000	140.000	No Ice	5.983	9.113	0.094
(Verizon - Proposed)			0.000			1/2" Ice	6.442	9.579	0.152
			0.000			1" Ice	6.909	10.052	0.216
LNX-6514DS	C	From Face	3.000	0.000	140.000	No Ice	8.173	5.405	0.038
(Verizon - Existing)			4.000			1/2" Ice	8.633	5.863	0.089
			0.000			1" Ice	9.100	6.327	0.145
B2/B66A RRH	A	From Face	3.000	0.000	140.000	No Ice	2.537	1.610	0.060
(Verizon - Proposed)			0.000			1/2" Ice	2.750	1.791	0.080
			0.000			1" Ice	2.970	1.978	0.103
B2/B66A RRH	B	From Face	3.000	0.000	140.000	No Ice	2.537	1.610	0.060
(Verizon - Proposed)			0.000			1/2" Ice	2.750	1.791	0.080
			0.000			1" Ice	2.970	1.978	0.103
B2/B66A RRH	C	From Face	3.000	0.000	140.000	No Ice	2.537	1.610	0.060
(Verizon - Proposed)			0.000			1/2" Ice	2.750	1.791	0.080
			0.000			1" Ice	2.970	1.978	0.103
B5/B13 RRH	A	From Face	3.000	0.000	140.000	No Ice	1.865	1.016	0.070
(Verizon - Proposed)			0.000			1/2" Ice	2.035	1.148	0.086
			0.000			1" Ice	2.212	1.288	0.106
B5/B13 RRH	B	From Face	3.000	0.000	140.000	No Ice	1.865	1.016	0.070
(Verizon - Proposed)			0.000			1/2" Ice	2.035	1.148	0.086
			0.000			1" Ice	2.212	1.288	0.106
B5/B13 RRH	C	From Face	3.000	0.000	140.000	No Ice	1.865	1.016	0.070
(Verizon - Proposed)			0.000			1/2" Ice	2.035	1.148	0.086
			0.000			1" Ice	2.212	1.288	0.106
RRU	A	From Face	3.000	0.000	140.000	No Ice	1.804	0.778	0.033
(Verizon - Proposed)			0.000			1/2" Ice	2.000	0.920	0.045
			0.000			1" Ice	2.196	1.062	0.057
RRU	B	From Face	3.000	0.000	140.000	No Ice	1.804	0.778	0.033
(Verizon - Proposed)			0.000			1/2" Ice	2.000	0.920	0.045
			0.000			1" Ice	2.196	1.062	0.057
RRU	C	From Face	3.000	0.000	140.000	No Ice	1.804	0.778	0.033
(Verizon - Proposed)			0.000			1/2" Ice	2.000	0.920	0.045
			0.000			1" Ice	2.196	1.062	0.057
CBC78T-DS-43	A	From Face	3.000	0.000	140.000	No Ice	0.368	0.256	0.011
(Verizon - Proposed)			0.000			1/2" Ice	0.446	0.322	0.015

Description	Face or Leg	Offset Type	Offsets: Horz Lateral ft / Vert ft / ft	Azimuth Adjustment °	Placement ft		C_AA_A Front ft^2	C_AA_A Side ft^2	Weight K
			0.000			1" Ice	0.531	0.395	0.021
CBC78T-DS-43	B	From Face	3.000	0.000	140.000	No Ice	0.368	0.256	0.011
(Verizon - Proposed)			0.000			1/2" Ice	0.446	0.322	0.015
			0.000			1" Ice	0.531	0.395	0.021
CBC78T-DS-43	C	From Face	3.000	0.000	140.000	No Ice	0.368	0.256	0.011
(Verizon - Proposed)			0.000			1/2" Ice	0.446	0.322	0.015
			0.000			1" Ice	0.531	0.395	0.021
DB-T1-6Z-8AB-0Z	B	From Face	1.000	0.000	140.000	No Ice	4.800	2.000	0.044
(Verizon - Existing)			0.000			1/2" Ice	5.070	2.193	0.080
			0.000			1" Ice	5.348	2.393	0.120
13' Platform w/rails	C	None		0.000	140.000	No Ice	31.300	31.300	1.822
(Verizon - Existing)						1/2" Ice	40.200	40.200	2.452
						1" Ice	49.100	49.100	3.082
Mount Mods	C	None		0.000	140.000	No Ice	7.000	7.000	0.500
(Verizon - Proposed)						1/2" Ice	9.000	9.000	0.750
						1" Ice	11.000	11.000	1.000
LNX-6515DS	A	From Face	3.000	0.000	130.000	No Ice	11.445	7.696	0.055
(T-Mobile - Existing)			4.000			1/2" Ice	12.064	8.289	0.121
			0.000			1" Ice	12.689	8.889	0.194
AIR21 B2A/B4P	A	From Face	3.000	0.000	130.000	No Ice	6.049	4.356	0.083
(T-Mobile - Existing)			0.000			1/2" Ice	6.419	4.705	0.125
			0.000			1" Ice	6.795	5.061	0.172
AIR32	A	From Face	3.000	0.000	130.000	No Ice	6.510	4.712	0.133
(T-Mobile - Existing)			-4.000			1/2" Ice	6.887	5.068	0.179
			0.000			1" Ice	7.271	5.431	0.230
LNX-6515DS	B	From Face	3.000	0.000	130.000	No Ice	11.445	7.696	0.055
(T-Mobile - Existing)			4.000			1/2" Ice	12.064	8.289	0.121
			0.000			1" Ice	12.689	8.889	0.194
AIR21 B2A/B4P	B	From Face	3.000	0.000	130.000	No Ice	6.049	4.356	0.083
(T-Mobile - Existing)			0.000			1/2" Ice	6.419	4.705	0.125
			0.000			1" Ice	6.795	5.061	0.172
AIR32	B	From Face	3.000	0.000	130.000	No Ice	6.510	4.712	0.133
(T-Mobile - Existing)			-4.000			1/2" Ice	6.887	5.068	0.179
			0.000			1" Ice	7.271	5.431	0.230
LNX-6515DS	C	From Face	3.000	0.000	130.000	No Ice	11.445	7.696	0.055
(T-Mobile - Existing)			4.000			1/2" Ice	12.064	8.289	0.121
			0.000			1" Ice	12.689	8.889	0.194
AIR21 B2A/B4P	C	From Face	3.000	0.000	130.000	No Ice	6.049	4.356	0.083
(T-Mobile - Existing)			0.000			1/2" Ice	6.419	4.705	0.125
			0.000			1" Ice	6.795	5.061	0.172
AIR32	C	From Face	3.000	0.000	130.000	No Ice	6.510	4.712	0.133
(T-Mobile - Existing)			-4.000			1/2" Ice	6.887	5.068	0.179
			0.000			1" Ice	7.271	5.431	0.230
RRUS-11	A	From Face	3.000	0.000	130.000	No Ice	2.566	1.068	0.050
(T-Mobile - Existing)			4.000			1/2" Ice	2.765	1.211	0.070
			0.000			1" Ice	2.971	1.361	0.092
RRUS-11	B	From Face	3.000	0.000	130.000	No Ice	2.566	1.068	0.050
(T-Mobile - Existing)			4.000			1/2" Ice	2.765	1.211	0.070
			0.000			1" Ice	2.971	1.361	0.092
RRUS-11	C	From Face	3.000	0.000	130.000	No Ice	2.566	1.068	0.050
(T-Mobile - Existing)			4.000			1/2" Ice	2.765	1.211	0.070
			0.000			1" Ice	2.971	1.361	0.092
Andrew 12'-6" Low Profile Platform	C	None		0.000	130.000	No Ice	14.450	14.450	1.300
						1/2" Ice	19.000	19.000	1.690
(T-Mobile - Existing)						1" Ice	23.550	23.550	2.080

Tower Pressures - No Ice

G_H = 1.100

Section Elevation ft	z ft	K_Z	q_z ksf	A_G ft²	Face	A_F ft²	A_R ft²	A_{leg} ft²	Leg %	C_AA_A In Face ft²	C_AA_A Out Face ft²
L1	115.471	1.305	0.027	116.540	A	0.000	116.540	116.540	100.00	0.000	0.000
140.000-93.75					B	0.000	116.540		100.00	0.000	0.000
0					C	0.000	116.540		100.00	0.000	0.000
L2	69.283	1.172	0.025	167.633	A	0.000	167.633	167.633	100.00	0.000	0.000
93.750-46.417					B	0.000	167.633		100.00	0.000	0.000
					C	0.000	167.633		100.00	0.000	0.000
L3	23.828	0.936	0.020	206.383	A	0.000	206.383	206.383	100.00	0.000	0.000
46.417-1.000					B	0.000	206.383		100.00	0.000	0.000
					C	0.000	206.383		100.00	0.000	0.000

Tower Pressure - With Ice

G_H = 1.100

Section Elevation ft	z ft	K_Z	q_z ksf	t_Z in	A_G ft²	Face	A_F ft²	A_R ft²	A_{leg} ft²	Leg %	C_AA_A In Face ft²	C_AA_A Out Face ft²
L1	115.471	1.305	0.005	2.267	134.014	A	0.000	134.014	134.014	100.00	0.000	0.000
140.000-93.750						B	0.000	134.014		100.00	0.000	0.000
						C	0.000	134.014		100.00	0.000	0.000
L2	69.283	1.172	0.005	2.154	185.516	A	0.000	185.516	185.516	100.00	0.000	0.000
93.750-46.417						B	0.000	185.516		100.00	0.000	0.000
						C	0.000	185.516		100.00	0.000	0.000
L3 46.417-1.000	23.828	0.936	0.004	1.936	222.687	A	0.000	222.687	222.687	100.00	0.000	0.000
						B	0.000	222.687		100.00	0.000	0.000
						C	0.000	222.687		100.00	0.000	0.000

Tower Pressure - Service

G_H = 1.100

Section Elevation ft	z ft	K_Z	q_z ksf	A_G ft²	Face	A_F ft²	A_R ft²	A_{leg} ft²	Leg %	C_AA_A In Face ft²	C_AA_A Out Face ft²
L1	115.471	1.305	0.010	116.540	A	0.000	116.540	116.540	100.00	0.000	0.000
140.000-93.75					B	0.000	116.540		100.00	0.000	0.000
0					C	0.000	116.540		100.00	0.000	0.000
L2	69.283	1.172	0.009	167.633	A	0.000	167.633	167.633	100.00	0.000	0.000
93.750-46.417					B	0.000	167.633		100.00	0.000	0.000
					C	0.000	167.633		100.00	0.000	0.000

Section Elevation ft	z ft	K_Z	q_z ksf	A_G ft²	Face	A_F ft²	A_R ft²	A_{leg} ft²	Leg %	C_AA_A In Face ft²	C_AA_A Out Face ft²
L3	23.828	0.936	0.007	206.383	A	0.000	206.383	206.383	100.00	0.000	0.000
46.417-1.000					B	0.000	206.383		100.00	0.000	0.000
					C	0.000	206.383		100.00	0.000	0.000

Tower Forces - No Ice - Wind Normal To Face

Section Elevation ft	Add Weight K	Self Weight K	Face	e	C_F	q_z ksf	D_F	D_R	A_E ft²	F K	w klf	Ctrl. Face
L1	0.841	5.518	A	1	0.65	0.027	1	1	116.540	2.284	0.049	C
140.000-93.75			B	1	0.65		1	1	116.540			
0			C	1	0.65		1	1	116.540			
L2	0.861	10.128	A	1	0.65	0.025	1	1	167.633	2.943	0.062	C
93.750-46.417			B	1	0.65		1	1	167.633			
			C	1	0.65		1	1	167.633			
L3	0.826	12.882	A	1	0.65	0.020	1	1	206.383	2.878	0.063	C
46.417-1.000			B	1	0.65		1	1	206.383			
			C	1	0.65		1	1	206.383			
Sum Weight:	2.527	28.528						OTM	528.026 kip-ft	8.104		

Tower Forces - No Ice - Wind 45 To Face

Section Elevation ft	Add Weight K	Self Weight K	Face	e	C_F	q_z ksf	D_F	D_R	A_E ft²	F K	w klf	Ctrl. Face
L1	0.841	5.518	A	1	0.65	0.027	1	1	116.540	2.284	0.049	C
140.000-93.75			B	1	0.65		1	1	116.540			
0			C	1	0.65		1	1	116.540			
L2	0.861	10.128	A	1	0.65	0.025	1	1	167.633	2.943	0.062	C
93.750-46.417			B	1	0.65		1	1	167.633			
			C	1	0.65		1	1	167.633			
L3	0.826	12.882	A	1	0.65	0.020	1	1	206.383	2.878	0.063	C
46.417-1.000			B	1	0.65		1	1	206.383			
			C	1	0.65		1	1	206.383			
Sum Weight:	2.527	28.528						OTM	528.026 kip-ft	8.104		

Tower Forces - No Ice - Wind 60 To Face

Section Elevation ft	Add Weight K	Self Weight K	Face	e	C_F	q_z ksf	D_F	D_R	A_E ft²	F K	w klf	Ctrl. Face

Section Elevation ft	Add Weight K	Self Weight K	Face	e	C_F	q_z ksf	D_F	D_R	A_E ft^2	F K	w klf	Ctrl. Face
L1	0.841	5.518	A	1	0.65	0.027	1	1	116.540	2.284	0.049	C
140.000-93.75			B	1	0.65		1	1	116.540			
0			C	1	0.65		1	1	116.540			
L2	0.861	10.128	A	1	0.65	0.025	1	1	167.633	2.943	0.062	C
93.750-46.417			B	1	0.65		1	1	167.633			
			C	1	0.65		1	1	167.633			
L3	0.826	12.882	A	1	0.65	0.020	1	1	206.383	2.878	0.063	C
46.417-1.000			B	1	0.65		1	1	206.383			
			C	1	0.65		1	1	206.383			
Sum Weight:	2.527	28.528						OTM	528.026 kip-ft	8.104		

Tower Forces - No Ice - Wind 90 To Face

Section Elevation ft	Add Weight K	Self Weight K	Face	e	C_F	q_z ksf	D_F	D_R	A_E ft^2	F K	w klf	Ctrl. Face
L1	0.841	5.518	A	1	0.65	0.027	1	1	116.540	2.284	0.049	C
140.000-93.75			B	1	0.65		1	1	116.540			
0			C	1	0.65		1	1	116.540			
L2	0.861	10.128	A	1	0.65	0.025	1	1	167.633	2.943	0.062	C
93.750-46.417			B	1	0.65		1	1	167.633			
			C	1	0.65		1	1	167.633			
L3	0.826	12.882	A	1	0.65	0.020	1	1	206.383	2.878	0.063	C
46.417-1.000			B	1	0.65		1	1	206.383			
			C	1	0.65		1	1	206.383			
Sum Weight:	2.527	28.528						OTM	528.026 kip-ft	8.104		

Tower Forces - With Ice - Wind Normal To Face

Section Elevation ft	Add Weight K	Self Weight K	Face	e	C_F	q_z ksf	D_F	D_R	A_E ft^2	F K	w klf	Ctrl. Face
L1	0.841	9.673	A	1	1.2	0.005	1	1	134.014	0.897	0.019	C
140.000-93.75			B	1	1.2		1	1	134.014			
0			C	1	1.2		1	1	134.014			
L2	0.861	15.674	A	1	1.2	0.005	1	1	185.516	1.112	0.023	C
93.750-46.417			B	1	1.2		1	1	185.516			
			C	1	1.2		1	1	185.516			
L3	0.826	18.927	A	1	1.2	0.004	1	1	222.687	1.060	0.023	C
46.417-1.000			B	1	1.2		1	1	222.687			
			C	1	1.2		1	1	222.687			
Sum Weight:	2.527	44.275						OTM	202.813 kip-ft	3.069		

Tower Forces - With Ice - Wind 45 To Face

Section Elevation ft	Add Weight K	Self Weight K	Face	e	C_F	q_z ksf	D_F	D_R	A_E ft^2	F K	w klf	Ctrl. Face
L1	0.841	9.673	A	1	1.2	0.005	1	1	134.014	0.897	0.019	C
140.000-93.75			B	1	1.2		1	1	134.014			
0			C	1	1.2		1	1	134.014			
L2	0.861	15.674	A	1	1.2	0.005	1	1	185.516	1.112	0.023	C
93.750-46.417			B	1	1.2		1	1	185.516			
			C	1	1.2		1	1	185.516			
L3	0.826	18.927	A	1	1.2	0.004	1	1	222.687	1.060	0.023	C
46.417-1.000			B	1	1.2		1	1	222.687			
			C	1	1.2		1	1	222.687			
Sum Weight:	2.527	44.275						OTM	202.813 kip-ft	3.069		

Tower Forces - With Ice - Wind 60 To Face

Section Elevation ft	Add Weight K	Self Weight K	Face	e	C_F	q_z ksf	D_F	D_R	A_E ft^2	F K	w klf	Ctrl. Face
L1	0.841	9.673	A	1	1.2	0.005	1	1	134.014	0.897	0.019	C
140.000-93.75			B	1	1.2		1	1	134.014			
0			C	1	1.2		1	1	134.014			
L2	0.861	15.674	A	1	1.2	0.005	1	1	185.516	1.112	0.023	C
93.750-46.417			B	1	1.2		1	1	185.516			
			C	1	1.2		1	1	185.516			
L3	0.826	18.927	A	1	1.2	0.004	1	1	222.687	1.060	0.023	C
46.417-1.000			B	1	1.2		1	1	222.687			
			C	1	1.2		1	1	222.687			
Sum Weight:	2.527	44.275						OTM	202.813 kip-ft	3.069		

Tower Forces - With Ice - Wind 90 To Face

Section Elevation ft	Add Weight K	Self Weight K	Face	e	C_F	q_z ksf	D_F	D_R	A_E ft^2	F K	w klf	Ctrl. Face
L1	0.841	9.673	A	1	1.2	0.005	1	1	134.014	0.897	0.019	C
140.000-93.75			B	1	1.2		1	1	134.014			
0			C	1	1.2		1	1	134.014			
L2	0.861	15.674	A	1	1.2	0.005	1	1	185.516	1.112	0.023	C
93.750-46.417			B	1	1.2		1	1	185.516			
			C	1	1.2		1	1	185.516			

Section Elevation ft	Add Weight K	Self Weight K	Face	e	C_F	q_z ksf	D_F	D_R	A_E ft^2	F K	w klf	Ctrl. Face
L3	0.826	18.927	A	1	1.2	0.004	1	1	222.687	1.060	0.023	C
46.417-1.000			B	1	1.2		1	1	222.687			
			C	1	1.2		1	1	222.687			
Sum Weight:	2.527	44.275						OTM	202.813 kip-ft	3.069		

Tower Forces - Service - Wind Normal To Face

Section Elevation ft	Add Weight K	Self Weight K	Face	e	C_F	q_z ksf	D_F	D_R	A_E ft^2	F K	w klf	Ctrl. Face
L1	0.841	5.518	A	1	0.65	0.010	1	1	116.540	0.850	0.018	C
140.000-93.75			B	1	0.65		1	1	116.540			
0			C	1	0.65		1	1	116.540			
L2	0.861	10.128	A	1	0.65	0.009	1	1	167.633	1.096	0.023	C
93.750-46.417			B	1	0.65		1	1	167.633			
			C	1	0.65		1	1	167.633			
L3	0.826	12.882	A	1	0.65	0.007	1	1	206.383	1.072	0.024	C
46.417-1.000			B	1	0.65		1	1	206.383			
			C	1	0.65		1	1	206.383			
Sum Weight:	2.527	28.528						OTM	196.647 kip-ft	3.018		

Tower Forces - Service - Wind 45 To Face

Section Elevation ft	Add Weight K	Self Weight K	Face	e	C_F	q_z ksf	D_F	D_R	A_E ft^2	F K	w klf	Ctrl. Face
L1	0.841	5.518	A	1	0.65	0.010	1	1	116.540	0.850	0.018	C
140.000-93.75			B	1	0.65		1	1	116.540			
0			C	1	0.65		1	1	116.540			
L2	0.861	10.128	A	1	0.65	0.009	1	1	167.633	1.096	0.023	C
93.750-46.417			B	1	0.65		1	1	167.633			
			C	1	0.65		1	1	167.633			
L3	0.826	12.882	A	1	0.65	0.007	1	1	206.383	1.072	0.024	C
46.417-1.000			B	1	0.65		1	1	206.383			
			C	1	0.65		1	1	206.383			
Sum Weight:	2.527	28.528						OTM	196.647 kip-ft	3.018		

Tower Forces - Service - Wind 60 To Face

Section Elevation ft	Add Weight K	Self Weight K	Face	e	C_F	q_z ksf	D_F	D_R	A_E ft^2	F K	w klf	Ctrl. Face
L1	0.841	5.518	A	1	0.65	0.010	1	1	116.540	0.850	0.018	C
140.000-93.75			B	1	0.65		1	1	116.540			
0			C	1	0.65		1	1	116.540			
L2	0.861	10.128	A	1	0.65	0.009	1	1	167.633	1.096	0.023	C
93.750-46.417			B	1	0.65		1	1	167.633			
			C	1	0.65		1	1	167.633			
L3	0.826	12.882	A	1	0.65	0.007	1	1	206.383	1.072	0.024	C
46.417-1.000			B	1	0.65		1	1	206.383			
			C	1	0.65		1	1	206.383			
Sum Weight:	2.527	28.528						OTM	196.647 kip-ft	3.018		

Tower Forces - Service - Wind 90 To Face

Section Elevation ft	Add Weight K	Self Weight K	Face	e	C_F	q_z ksf	D_F	D_R	A_E ft^2	F K	w klf	Ctrl. Face
L1	0.841	5.518	A	1	0.65	0.010	1	1	116.540	0.850	0.018	C
140.000-93.75			B	1	0.65		1	1	116.540			
0			C	1	0.65		1	1	116.540			
L2	0.861	10.128	A	1	0.65	0.009	1	1	167.633	1.096	0.023	C
93.750-46.417			B	1	0.65		1	1	167.633			
			C	1	0.65		1	1	167.633			
L3	0.826	12.882	A	1	0.65	0.007	1	1	206.383	1.072	0.024	C
46.417-1.000			B	1	0.65		1	1	206.383			
			C	1	0.65		1	1	206.383			
Sum Weight:	2.527	28.528						OTM	196.647 kip-ft	3.018		

Force Totals

Load Case	Vertical Forces K	Sum of Forces X K	Sum of Forces Z K	Sum of Overturning Moments, M_x kip-ft	Sum of Overturning Moments, M_z kip-ft	Sum of Torques kip-ft
Leg Weight	28.528					
Bracing Weight	0.000					
Total Member Self-Weight	28.528			-0.044	-0.075	
Total Weight	37.175			-0.044	-0.075	
Wind 0 deg - No Ice		0.030	-13.799	-1298.681	-4.313	0.086
Wind 30 deg - No Ice		6.943	-11.965	-1126.816	-655.511	0.050
Wind 45 deg - No Ice		9.803	-9.779	-921.316	-924.808	0.026
Wind 60 deg - No Ice		11.996	-6.926	-653.033	-1131.086	0.000
Wind 90 deg - No Ice		13.834	-0.030	-4.281	-1303.607	-0.050
Wind 120 deg - No Ice		11.965	6.873	645.605	-1126.848	-0.086
Wind 135 deg - No Ice		9.760	9.735	915.235	-918.815	-0.096
Wind 150 deg - No Ice		6.890	11.935	1122.491	-648.171	-0.100
Wind 180 deg - No Ice		-0.030	13.799	1298.594	4.163	-0.086

Load Case	Vertical Forces K	Sum of Forces X K	Sum of Forces Z K	Sum of Overturning Moments, M_x kip-ft	Sum of Overturning Moments, M_z kip-ft	Sum of Torques kip-ft
Wind 210 deg - No Ice		-6.943	11.965	1126.729	655.360	-0.050
Wind 225 deg - No Ice		-9.803	9.779	921.229	924.657	-0.026
Wind 240 deg - No Ice		-11.996	6.926	652.945	1130.935	0.000
Wind 270 deg - No Ice		-13.834	0.030	4.194	1303.456	0.050
Wind 300 deg - No Ice		-11.965	-6.873	-645.692	1126.697	0.086
Wind 315 deg - No Ice		-9.760	-9.735	-915.322	918.664	0.096
Wind 330 deg - No Ice		-6.890	-11.935	-1122.578	648.020	0.100
Member Ice	15.746					
Total Weight Ice	66.395			-0.248	-0.429	
Wind 0 deg - Ice		0.006	-4.789	-436.020	-1.314	0.024
Wind 30 deg - Ice		2.404	-4.151	-378.080	-219.593	0.014
Wind 45 deg - Ice		3.396	-3.391	-309.011	-309.915	0.007
Wind 60 deg - Ice		4.157	-2.400	-218.900	-379.146	0.000
Wind 90 deg - Ice		4.796	-0.006	-1.133	-437.223	-0.014
Wind 120 deg - Ice		4.151	2.389	216.872	-378.262	-0.024
Wind 135 deg - Ice		3.387	3.382	307.264	-308.664	-0.026
Wind 150 deg - Ice		2.393	4.144	376.700	-218.060	-0.027
Wind 180 deg - Ice		-0.006	4.789	435.524	0.455	-0.024
Wind 210 deg - Ice		-2.404	4.151	377.584	218.734	-0.014
Wind 225 deg - Ice		-3.396	3.391	308.515	309.056	-0.007
Wind 240 deg - Ice		-4.157	2.400	218.404	378.287	0.000
Wind 270 deg - Ice		-4.796	0.006	0.637	436.364	0.014
Wind 300 deg - Ice		-4.151	-2.389	-217.368	377.403	0.024
Wind 315 deg - Ice		-3.387	-3.382	-307.760	307.805	0.026
Wind 330 deg - Ice		-2.393	-4.144	-377.196	217.201	0.027
Total Weight	37.175			-0.044	-0.075	
Wind 0 deg - Service		0.011	-5.139	-483.681	-1.654	0.032
Wind 30 deg - Service		2.586	-4.456	-419.675	-244.172	0.019
Wind 45 deg - Service		3.651	-3.642	-343.143	-344.463	0.010
Wind 60 deg - Service		4.467	-2.579	-243.229	-421.285	0.000
Wind 90 deg - Service		5.152	-0.011	-1.622	-485.535	-0.019
Wind 120 deg - Service		4.456	2.560	240.408	-419.707	-0.032
Wind 135 deg - Service		3.635	3.626	340.824	-342.231	-0.036
Wind 150 deg - Service		2.566	4.445	418.010	-241.439	-0.037
Wind 180 deg - Service		-0.011	5.139	483.594	1.503	-0.032
Wind 210 deg - Service		-2.586	4.456	419.588	244.021	-0.019
Wind 225 deg - Service		-3.651	3.642	343.056	344.313	-0.010
Wind 240 deg - Service		-4.467	2.579	243.142	421.134	0.000
Wind 270 deg - Service		-5.152	0.011	1.535	485.385	0.019
Wind 300 deg - Service		-4.456	-2.560	-240.495	419.556	0.032
Wind 315 deg - Service		-3.635	-3.626	-340.911	342.081	0.036
Wind 330 deg - Service		-2.566	-4.445	-418.097	241.288	0.037

Load Combinations

Comb. No.	Description
1	Dead Only
2	1.2 Dead+1.6 Wind 0 deg - No Ice
3	0.9 Dead+1.6 Wind 0 deg - No Ice
4	1.2 Dead+1.6 Wind 30 deg - No Ice
5	0.9 Dead+1.6 Wind 30 deg - No Ice
6	1.2 Dead+1.6 Wind 45 deg - No Ice
7	0.9 Dead+1.6 Wind 45 deg - No Ice
8	1.2 Dead+1.6 Wind 60 deg - No Ice
9	0.9 Dead+1.6 Wind 60 deg - No Ice

Comb. No.	Description
10	1.2 Dead+1.6 Wind 90 deg - No Ice
11	0.9 Dead+1.6 Wind 90 deg - No Ice
12	1.2 Dead+1.6 Wind 120 deg - No Ice
13	0.9 Dead+1.6 Wind 120 deg - No Ice
14	1.2 Dead+1.6 Wind 135 deg - No Ice
15	0.9 Dead+1.6 Wind 135 deg - No Ice
16	1.2 Dead+1.6 Wind 150 deg - No Ice
17	0.9 Dead+1.6 Wind 150 deg - No Ice
18	1.2 Dead+1.6 Wind 180 deg - No Ice
19	0.9 Dead+1.6 Wind 180 deg - No Ice
20	1.2 Dead+1.6 Wind 210 deg - No Ice
21	0.9 Dead+1.6 Wind 210 deg - No Ice
22	1.2 Dead+1.6 Wind 225 deg - No Ice
23	0.9 Dead+1.6 Wind 225 deg - No Ice
24	1.2 Dead+1.6 Wind 240 deg - No Ice
25	0.9 Dead+1.6 Wind 240 deg - No Ice
26	1.2 Dead+1.6 Wind 270 deg - No Ice
27	0.9 Dead+1.6 Wind 270 deg - No Ice
28	1.2 Dead+1.6 Wind 300 deg - No Ice
29	0.9 Dead+1.6 Wind 300 deg - No Ice
30	1.2 Dead+1.6 Wind 315 deg - No Ice
31	0.9 Dead+1.6 Wind 315 deg - No Ice
32	1.2 Dead+1.6 Wind 330 deg - No Ice
33	0.9 Dead+1.6 Wind 330 deg - No Ice
34	1.2 Dead+1.0 Ice+1.0 Temp
35	1.2 Dead+1.0 Wind 0 deg+1.0 Ice+1.0 Temp
36	1.2 Dead+1.0 Wind 30 deg+1.0 Ice+1.0 Temp
37	1.2 Dead+1.0 Wind 45 deg+1.0 Ice+1.0 Temp
38	1.2 Dead+1.0 Wind 60 deg+1.0 Ice+1.0 Temp
39	1.2 Dead+1.0 Wind 90 deg+1.0 Ice+1.0 Temp
40	1.2 Dead+1.0 Wind 120 deg+1.0 Ice+1.0 Temp
41	1.2 Dead+1.0 Wind 135 deg+1.0 Ice+1.0 Temp
42	1.2 Dead+1.0 Wind 150 deg+1.0 Ice+1.0 Temp
43	1.2 Dead+1.0 Wind 180 deg+1.0 Ice+1.0 Temp
44	1.2 Dead+1.0 Wind 210 deg+1.0 Ice+1.0 Temp
45	1.2 Dead+1.0 Wind 225 deg+1.0 Ice+1.0 Temp
46	1.2 Dead+1.0 Wind 240 deg+1.0 Ice+1.0 Temp
47	1.2 Dead+1.0 Wind 270 deg+1.0 Ice+1.0 Temp
48	1.2 Dead+1.0 Wind 300 deg+1.0 Ice+1.0 Temp
49	1.2 Dead+1.0 Wind 315 deg+1.0 Ice+1.0 Temp
50	1.2 Dead+1.0 Wind 330 deg+1.0 Ice+1.0 Temp
51	Dead+Wind 0 deg - Service
52	Dead+Wind 30 deg - Service
53	Dead+Wind 45 deg - Service
54	Dead+Wind 60 deg - Service
55	Dead+Wind 90 deg - Service
56	Dead+Wind 120 deg - Service
57	Dead+Wind 135 deg - Service
58	Dead+Wind 150 deg - Service
59	Dead+Wind 180 deg - Service
60	Dead+Wind 210 deg - Service
61	Dead+Wind 225 deg - Service
62	Dead+Wind 240 deg - Service
63	Dead+Wind 270 deg - Service
64	Dead+Wind 300 deg - Service
65	Dead+Wind 315 deg - Service
66	Dead+Wind 330 deg - Service

Maximum Member Forces

Section No.	Elevation ft	Component Type	Condition	Gov. Load Comb.	Axial K	Major Axis Moment kip-ft	Minor Axis Moment kip-ft
L1	140 - 93.75	Pole	Max Tension	1	0.000	0.000	0.000
			Max. Compression	34	-31.122	-0.445	0.257
			Max. Mx	10	-13.595	-417.343	2.108
			Max. My	2	-13.598	-2.146	414.932
			Max. Vy	10	12.747	-417.343	2.108
			Max. Vx	2	-12.689	-2.146	414.932
			Max. Torque	16			0.163
L2	93.75 - 46.417	Pole	Max Tension	1	0.000	0.000	0.000
			Max. Compression	34	-49.279	-0.445	0.257
			Max. Mx	10	-25.998	-1104.998	4.430
			Max. My	2	-26.000	-4.469	1099.909
			Max. Vy	10	17.221	-1104.998	4.430
			Max. Vx	2	-17.163	-4.469	1099.909
			Max. Torque	16			0.163
L3	46.417 - 1	Pole	Max Tension	1	0.000	0.000	0.000
			Max. Compression	34	-75.322	-0.445	0.257
			Max. Mx	10	-44.603	-2132.643	7.013
			Max. My	2	-44.603	-7.053	2124.573
			Max. Vy	10	22.149	-2132.643	7.013
			Max. Vx	2	-22.093	-7.053	2124.573
			Max. Torque	16			0.163

Maximum Reactions

Location	Condition	Gov. Load Comb.	Vertical K	Horizontal, X K	Horizontal, Z K
Pole	Max. Vert	34	75.322	0.000	0.000
	Max. H_x	26	44.611	22.134	-0.049
	Max. H_z	2	44.611	-0.049	22.078
	Max. M_x	2	2124.573	-0.049	22.078
	Max. M_z	10	2132.643	-22.134	0.049
	Max. Torsion	16	0.163	-11.025	-19.095
	Min. Vert	31	33.458	15.617	15.577
	Min. H_x	10	44.611	-22.134	0.049
	Min. H_z	18	44.611	0.049	-22.078
	Min. M_x	18	-2124.464	0.049	-22.078
	Min. M_z	26	-2132.455	22.134	-0.049
	Min. Torsion	32	-0.163	11.025	19.095

Tower Mast Reaction Summary

Load Combination	Vertical K	$Shear_x$ K	$Shear_z$ K	Overturning Moment, M_x kip-ft	Overturning Moment, M_z kip-ft	Torque kip-ft
Dead Only	37.175	0.000	0.000	-0.044	-0.075	0.000
1.2 Dead+1.6 Wind 0 deg - No Ice	44.611	0.049	-22.078	-2124.573	-7.053	0.141
0.9 Dead+1.6 Wind 0 deg - No Ice	33.458	0.049	-22.078	-2112.527	-6.983	0.140
1.2 Dead+1.6 Wind 30 deg - No Ice	44.611	11.109	-19.144	-1843.417	-1072.395	0.081

Load Combination	Vertical	$Shear_x$	$Shear_z$	Overturning Moment, M_x	Overturning Moment, M_z	Torque
	K	K	K	kip-ft	kip-ft	kip-ft
0.9 Dead+1.6 Wind 30 deg - No Ice	33.458	11.109	-19.144	-1832.961	-1066.289	0.081
1.2 Dead+1.6 Wind 45 deg - No Ice	44.611	15.686	-15.646	-1507.232	-1512.954	0.042
0.9 Dead+1.6 Wind 45 deg - No Ice	33.458	15.686	-15.646	-1498.678	-1504.352	0.042
1.2 Dead+1.6 Wind 60 deg - No Ice	44.611	19.193	-11.081	-1068.337	-1850.414	-0.000
0.9 Dead+1.6 Wind 60 deg - No Ice	33.458	19.193	-11.081	-1062.267	-1839.901	-0.000
1.2 Dead+1.6 Wind 90 deg - No Ice	44.611	22.134	-0.049	-7.013	-2132.643	-0.081
0.9 Dead+1.6 Wind 90 deg - No Ice	33.458	22.134	-0.049	-6.953	-2120.535	-0.081
1.2 Dead+1.6 Wind 120 deg - No Ice	44.611	19.144	10.997	1056.178	-1843.460	-0.141
0.9 Dead+1.6 Wind 120 deg - No Ice	33.458	19.144	10.997	1050.217	-1832.994	-0.140
1.2 Dead+1.6 Wind 135 deg - No Ice	44.611	15.617	15.577	1497.287	-1503.118	-0.157
0.9 Dead+1.6 Wind 135 deg - No Ice	33.458	15.617	15.577	1488.827	-1494.581	-0.156
1.2 Dead+1.6 Wind 150 deg - No Ice	44.611	11.025	19.095	1836.355	-1060.346	-0.163
0.9 Dead+1.6 Wind 150 deg - No Ice	33.458	11.025	19.095	1825.972	-1054.319	-0.162
1.2 Dead+1.6 Wind 180 deg - No Ice	44.611	-0.049	22.078	2124.464	6.864	-0.141
0.9 Dead+1.6 Wind 180 deg - No Ice	33.458	-0.049	22.078	2112.447	6.843	-0.140
1.2 Dead+1.6 Wind 210 deg - No Ice	44.611	-11.109	19.144	1843.308	1072.207	-0.081
0.9 Dead+1.6 Wind 210 deg - No Ice	33.458	-11.109	19.144	1832.880	1066.149	-0.081
1.2 Dead+1.6 Wind 225 deg - No Ice	44.611	-15.686	15.646	1507.123	1512.765	-0.042
0.9 Dead+1.6 Wind 225 deg - No Ice	33.458	-15.686	15.646	1498.597	1504.212	-0.042
1.2 Dead+1.6 Wind 240 deg - No Ice	44.611	-19.193	11.081	1068.228	1850.225	-0.000
0.9 Dead+1.6 Wind 240 deg - No Ice	33.458	-19.193	11.081	1062.186	1839.761	-0.000
1.2 Dead+1.6 Wind 270 deg - No Ice	44.611	-22.134	0.049	6.904	2132.455	0.081
0.9 Dead+1.6 Wind 270 deg - No Ice	33.458	-22.134	0.049	6.872	2120.395	0.081
1.2 Dead+1.6 Wind 300 deg - No Ice	44.611	-19.144	-10.997	-1056.287	1843.272	0.141
0.9 Dead+1.6 Wind 300 deg - No Ice	33.458	-19.144	-10.997	-1050.297	1832.854	0.140
1.2 Dead+1.6 Wind 315 deg - No Ice	44.611	-15.617	-15.577	-1497.396	1502.929	0.157
0.9 Dead+1.6 Wind 315 deg - No Ice	33.458	-15.617	-15.577	-1488.907	1494.441	0.156
1.2 Dead+1.6 Wind 330 deg - No Ice	44.611	-11.025	-19.095	-1836.464	1060.157	0.163
0.9 Dead+1.6 Wind 330 deg - No Ice	33.458	-11.025	-19.095	-1826.053	1054.179	0.162
1.2 Dead+1.0 Ice+1.0 Temp	75.322	0.000	0.000	-0.257	-0.445	0.000
1.2 Dead+1.0 Wind 0 deg+1.0 Ice+1.0 Temp	75.322	0.006	-4.789	-456.937	-1.426	0.027

Load Combination	Vertical	$Shear_x$	$Shear_z$	Overturning Moment, M_x	Overturning Moment, M_z	Torque
	K	K	K	kip-ft	kip-ft	kip-ft
1.2 Dead+1.0 Wind 30 deg+1.0 Ice+1.0 Temp	75.322	2.404	-4.151	-396.225	-230.168	0.016
1.2 Dead+1.0 Wind 45 deg+1.0 Ice+1.0 Temp	75.322	3.396	-3.391	-323.848	-324.820	0.008
1.2 Dead+1.0 Wind 60 deg+1.0 Ice+1.0 Temp	75.322	4.157	-2.400	-229.421	-397.368	-0.000
1.2 Dead+1.0 Wind 90 deg+1.0 Ice+1.0 Temp	75.322	4.796	-0.006	-1.219	-458.225	-0.016
1.2 Dead+1.0 Wind 120 deg+1.0 Ice+1.0 Temp	75.322	4.151	2.389	227.233	-396.433	-0.027
1.2 Dead+1.0 Wind 135 deg+1.0 Ice+1.0 Temp	75.322	3.387	3.382	321.958	-323.496	-0.030
1.2 Dead+1.0 Wind 150 deg+1.0 Ice+1.0 Temp	75.322	2.393	4.144	394.723	-228.548	-0.031
1.2 Dead+1.0 Wind 180 deg+1.0 Ice+1.0 Temp	75.322	-0.006	4.789	456.371	0.445	-0.027
1.2 Dead+1.0 Wind 210 deg+1.0 Ice+1.0 Temp	75.322	-2.404	4.151	395.659	229.187	-0.016
1.2 Dead+1.0 Wind 225 deg+1.0 Ice+1.0 Temp	75.322	-3.396	3.391	323.282	323.838	-0.008
1.2 Dead+1.0 Wind 240 deg+1.0 Ice+1.0 Temp	75.322	-4.157	2.400	228.854	396.387	-0.000
1.2 Dead+1.0 Wind 270 deg+1.0 Ice+1.0 Temp	75.322	-4.796	0.006	0.652	457.244	0.016
1.2 Dead+1.0 Wind 300 deg+1.0 Ice+1.0 Temp	75.322	-4.151	-2.389	-227.800	395.451	0.027
1.2 Dead+1.0 Wind 315 deg+1.0 Ice+1.0 Temp	75.322	-3.387	-3.382	-322.525	322.515	0.030
1.2 Dead+1.0 Wind 330 deg+1.0 Ice+1.0 Temp	75.322	-2.393	-4.144	-395.290	227.566	0.031
Dead+Wind 0 deg - Service	37.175	0.011	-5.139	-492.773	-1.691	0.033
Dead+Wind 30 deg - Service	37.175	2.586	-4.456	-427.567	-248.770	0.019
Dead+Wind 45 deg - Service	37.175	3.651	-3.642	-349.597	-350.947	0.010
Dead+Wind 60 deg - Service	37.175	4.467	-2.579	-247.806	-429.213	-0.000
Dead+Wind 90 deg - Service	37.175	5.152	-0.011	-1.658	-494.669	-0.019
Dead+Wind 120 deg - Service	37.175	4.456	2.560	244.922	-427.600	-0.033
Dead+Wind 135 deg - Service	37.175	3.635	3.626	347.226	-348.666	-0.037
Dead+Wind 150 deg - Service	37.175	2.566	4.445	425.863	-245.977	-0.038
Dead+Wind 180 deg - Service	37.175	-0.011	5.139	492.683	1.535	-0.033
Dead+Wind 210 deg - Service	37.175	-2.586	4.456	427.476	248.614	-0.019
Dead+Wind 225 deg - Service	37.175	-3.651	3.642	349.507	350.791	-0.010
Dead+Wind 240 deg - Service	37.175	-4.467	2.579	247.716	429.056	-0.000
Dead+Wind 270 deg - Service	37.175	-5.152	0.011	1.568	494.512	0.019
Dead+Wind 300 deg - Service	37.175	-4.456	-2.560	-245.012	427.443	0.033
Dead+Wind 315 deg - Service	37.175	-3.635	-3.626	-347.316	348.510	0.037
Dead+Wind 330 deg - Service	37.175	-2.566	-4.445	-425.954	245.820	0.038

Solution Summary

	Sum of Applied Forces			Sum of Reactions			
Load Comb.	PX	PY	PZ	PX	PY	PZ	% Error
	K	K	K	K	K	K	
1	0.000	-37.175	0.000	0.000	37.175	0.000	0.000%
2	0.049	-44.611	-22.078	-0.049	44.611	22.078	0.000%
3	0.049	-33.458	-22.078	-0.049	33.458	22.078	0.000%
4	11.109	-44.611	-19.144	-11.109	44.611	19.144	0.000%
5	11.109	-33.458	-19.144	-11.109	33.458	19.144	0.000%
6	15.686	-44.611	-15.646	-15.686	44.611	15.646	0.000%

	Sum of Applied Forces			Sum of Reactions			
Load Comb.	PX K	PY K	PZ K	PX K	PY K	PZ K	% Error
7	15.686	-33.458	-15.646	-15.686	33.458	15.646	0.000%
8	19.193	-44.611	-11.081	-19.193	44.611	11.081	0.000%
9	19.193	-33.458	-11.081	-19.193	33.458	11.081	0.000%
10	22.134	-44.611	-0.049	-22.134	44.611	0.049	0.000%
11	22.134	-33.458	-0.049	-22.134	33.458	0.049	0.000%
12	19.144	-44.611	10.997	-19.144	44.611	-10.997	0.000%
13	19.144	-33.458	10.997	-19.144	33.458	-10.997	0.000%
14	15.617	-44.611	15.577	-15.617	44.611	-15.577	0.000%
15	15.617	-33.458	15.577	-15.617	33.458	-15.577	0.000%
16	11.025	-44.611	19.095	-11.025	44.611	-19.095	0.000%
17	11.025	-33.458	19.095	-11.025	33.458	-19.095	0.000%
18	-0.049	-44.611	22.078	0.049	44.611	-22.078	0.000%
19	-0.049	-33.458	22.078	0.049	33.458	-22.078	0.000%
20	-11.109	-44.611	19.144	11.109	44.611	-19.144	0.000%
21	-11.109	-33.458	19.144	11.109	33.458	-19.144	0.000%
22	-15.686	-44.611	15.646	15.686	44.611	-15.646	0.000%
23	-15.686	-33.458	15.646	15.686	33.458	-15.646	0.000%
24	-19.193	-44.611	11.081	19.193	44.611	-11.081	0.000%
25	-19.193	-33.458	11.081	19.193	33.458	-11.081	0.000%
26	-22.134	-44.611	0.049	22.134	44.611	-0.049	0.000%
27	-22.134	-33.458	0.049	22.134	33.458	-0.049	0.000%
28	-19.144	-44.611	-10.997	19.144	44.611	10.997	0.000%
29	-19.144	-33.458	-10.997	19.144	33.458	10.997	0.000%
30	-15.617	-44.611	-15.577	15.617	44.611	15.577	0.000%
31	-15.617	-33.458	-15.577	15.617	33.458	15.577	0.000%
32	-11.025	-44.611	-19.095	11.025	44.611	19.095	0.000%
33	-11.025	-33.458	-19.095	11.025	33.458	19.095	0.000%
34	0.000	-75.322	0.000	0.000	75.322	0.000	0.000%
35	0.006	-75.322	-4.789	-0.006	75.322	4.789	0.000%
36	2.404	-75.322	-4.151	-2.404	75.322	4.151	0.000%
37	3.396	-75.322	-3.391	-3.396	75.322	3.391	0.000%
38	4.157	-75.322	-2.400	-4.157	75.322	2.400	0.000%
39	4.796	-75.322	-0.006	-4.796	75.322	0.006	0.000%
40	4.151	-75.322	2.389	-4.151	75.322	-2.389	0.000%
41	3.387	-75.322	3.382	-3.387	75.322	-3.382	0.000%
42	2.393	-75.322	4.144	-2.393	75.322	-4.144	0.000%
43	-0.006	-75.322	4.789	0.006	75.322	-4.789	0.000%
44	-2.404	-75.322	4.151	2.404	75.322	-4.151	0.000%
45	-3.396	-75.322	3.391	3.396	75.322	-3.391	0.000%
46	-4.157	-75.322	2.400	4.157	75.322	-2.400	0.000%
47	-4.796	-75.322	0.006	4.796	75.322	-0.006	0.000%
48	-4.151	-75.322	-2.389	4.151	75.322	2.389	0.000%
49	-3.387	-75.322	-3.382	3.387	75.322	3.382	0.000%
50	-2.393	-75.322	-4.144	2.393	75.322	4.144	0.000%
51	0.011	-37.175	-5.139	-0.011	37.175	5.139	0.000%
52	2.586	-37.175	-4.456	-2.586	37.175	4.456	0.000%
53	3.651	-37.175	-3.642	-3.651	37.175	3.642	0.000%
54	4.467	-37.175	-2.579	-4.467	37.175	2.579	0.000%
55	5.152	-37.175	-0.011	-5.152	37.175	0.011	0.000%
56	4.456	-37.175	2.560	-4.456	37.175	-2.560	0.000%
57	3.635	-37.175	3.626	-3.635	37.175	-3.626	0.000%
58	2.566	-37.175	4.445	-2.566	37.175	-4.445	0.000%
59	-0.011	-37.175	5.139	0.011	37.175	-5.139	0.000%
60	-2.586	-37.175	4.456	2.586	37.175	-4.456	0.000%
61	-3.651	-37.175	3.642	3.651	37.175	-3.642	0.000%
62	-4.467	-37.175	2.579	4.467	37.175	-2.579	0.000%
63	-5.152	-37.175	0.011	5.152	37.175	-0.011	0.000%
64	-4.456	-37.175	-2.560	4.456	37.175	2.560	0.000%
65	-3.635	-37.175	-3.626	3.635	37.175	3.626	0.000%
66	-2.566	-37.175	-4.445	2.566	37.175	4.445	0.000%

Non-Linear Convergence Results

Load Combination	Converged?	Number of Cycles	Displacement Tolerance	Force Tolerance
1	Yes	4	0.00000001	0.00000001
2	Yes	4	0.00000001	0.00002602
3	Yes	4	0.00000001	0.00001514
4	Yes	4	0.00000001	0.00064084
5	Yes	4	0.00000001	0.00042555
6	Yes	4	0.00000001	0.00073291
7	Yes	4	0.00000001	0.00048567
8	Yes	4	0.00000001	0.00063908
9	Yes	4	0.00000001	0.00042423
10	Yes	4	0.00000001	0.00002352
11	Yes	4	0.00000001	0.00001313
12	Yes	4	0.00000001	0.00061926
13	Yes	4	0.00000001	0.00041137
14	Yes	4	0.00000001	0.00071732
15	Yes	4	0.00000001	0.00047585
16	Yes	4	0.00000001	0.00062951
17	Yes	4	0.00000001	0.00041849
18	Yes	4	0.00000001	0.00002106
19	Yes	4	0.00000001	0.00001113
20	Yes	4	0.00000001	0.00063432
21	Yes	4	0.00000001	0.00042119
22	Yes	4	0.00000001	0.00073242
23	Yes	4	0.00000001	0.00048544
24	Yes	4	0.00000001	0.00063860
25	Yes	4	0.00000001	0.00042399
26	Yes	4	0.00000001	0.00002041
27	Yes	4	0.00000001	0.00001052
28	Yes	4	0.00000001	0.00062988
29	Yes	4	0.00000001	0.00041865
30	Yes	4	0.00000001	0.00071730
31	Yes	4	0.00000001	0.00047587
32	Yes	4	0.00000001	0.00061717
33	Yes	4	0.00000001	0.00041008
34	Yes	4	0.00000001	0.00000001
35	Yes	4	0.00000001	0.00045853
36	Yes	4	0.00000001	0.00047363
37	Yes	4	0.00000001	0.00047849
38	Yes	4	0.00000001	0.00047442
39	Yes	4	0.00000001	0.00046036
40	Yes	4	0.00000001	0.00047133
41	Yes	4	0.00000001	0.00047484
42	Yes	4	0.00000001	0.00047014
43	Yes	4	0.00000001	0.00045715
44	Yes	4	0.00000001	0.00047094
45	Yes	4	0.00000001	0.00047554
46	Yes	4	0.00000001	0.00047144
47	Yes	4	0.00000001	0.00045798
48	Yes	4	0.00000001	0.00047004
49	Yes	4	0.00000001	0.00047404
50	Yes	4	0.00000001	0.00046992
51	Yes	4	0.00000001	0.00000001
52	Yes	4	0.00000001	0.00001066
53	Yes	4	0.00000001	0.00001196
54	Yes	4	0.00000001	0.00001056
55	Yes	4	0.00000001	0.00000001

56	Yes	4	0.00000001	0.00001013
57	Yes	4	0.00000001	0.00001173
58	Yes	4	0.00000001	0.00001058
59	Yes	4	0.00000001	0.00000001
60	Yes	4	0.00000001	0.00001040
61	Yes	4	0.00000001	0.00001193
62	Yes	4	0.00000001	0.00001053
63	Yes	4	0.00000001	0.00000001
64	Yes	4	0.00000001	0.00001056
65	Yes	4	0.00000001	0.00001173
66	Yes	4	0.00000001	0.00001008

Maximum Tower Deflections - Service Wind

Section No.	Elevation ft	Horz. Deflection in	Gov. Load Comb.	Tilt °	Twist °
L1	140 - 93.75	7.991	54	0.506	0.000
L2	99 - 46.417	4.016	54	0.389	0.000
L3	53 - 1	1.132	54	0.201	0.000

Critical Deflections and Radius of Curvature - Service Wind

Elevation ft	Appurtenance	Gov. Load Comb.	Deflection in	Tilt °	Twist °	Radius of Curvature ft
140.000	JAHH-65B-R3B	54	7.991	0.506	0.000	108502
130.000	LNX-6515DS	54	6.963	0.481	0.000	54251

Maximum Tower Deflections - Design Wind

Section No.	Elevation ft	Horz. Deflection in	Gov. Load Comb.	Tilt °	Twist °
L1	140 - 93.75	34.472	8	2.184	0.001
L2	99 - 46.417	17.324	8	1.677	0.000
L3	53 - 1	4.882	8	0.865	0.000

Critical Deflections and Radius of Curvature - Design Wind

Elevation ft	Appurtenance	Gov. Load Comb.	Deflection in	Tilt °	Twist °	Radius of Curvature ft
140.000	JAHH-65B-R3B	8	34.472	2.184	0.001	25221
130.000	LNX-6515DS	8	30.038	2.073	0.001	12610

Compression Checks

Pole Design Data

Section No.	Elevation ft	Size	L ft	L_u ft	Kl/r	A in^2	P_u K	ϕP_n K	Ratio $\frac{P_u}{\phi P_n}$
L1	140 - 93.75 (1)	TP36.18x23.49x0.375	46.250	0.000	0.0	40.902	-13.593	3038.840	0.004
L2	93.75 - 46.417 (2)	TP48.41x33.99x0.438	52.583	0.000	0.0	64.109	-25.997	4697.720	0.006
L3	46.417 - 1 (3)	TP60x45.73x0.438	52.000	0.000	0.0	82.710	-44.603	5588.970	0.008

Pole Bending Design Data

Section No.	Elevation ft	Size	M_{ux} kip-ft	ϕM_{nx} kip-ft	Ratio $\frac{M_{ux}}{\phi M_{nx}}$	M_{uy} kip-ft	ϕM_{ny} kip-ft	Ratio $\frac{M_{uy}}{\phi M_{ny}}$
L1	140 - 93.75 (1)	TP36.18x23.49x0.375	418.543	2140.900	0.195	0.000	2140.900	0.000
L2	93.75 - 46.417 (2)	TP48.41x33.99x0.438	1107.533	4452.633	0.249	0.000	4452.633	0.000
L3	46.417 - 1 (3)	TP60x45.73x0.438	2136.675	6848.867	0.312	0.000	6848.867	0.000

Pole Shear Design Data

Section No.	Elevation ft	Size	Actual V_u K	ϕV_n K	Ratio $\frac{V_u}{\phi V_n}$	Actual T_u kip-ft	ϕT_n kip-ft	Ratio $\frac{T_u}{\phi T_n}$
L1	140 - 93.75 (1)	TP36.18x23.49x0.375	12.777	1519.420	0.008	0.000	4294.083	0.000
L2	93.75 - 46.417 (2)	TP48.41x33.99x0.438	17.250	2348.860	0.007	0.000	8928.917	0.000
L3	46.417 - 1 (3)	TP60x45.73x0.438	22.177	2794.480	0.008	0.000	13729.667	0.000

Pole Interaction Design Data

Section No.	Elevation ft	Ratio $\frac{P_u}{\phi P_n}$	Ratio $\frac{M_{ux}}{\phi M_{nx}}$	Ratio $\frac{M_{uy}}{\phi M_{ny}}$	Ratio $\frac{V_u}{\phi V_n}$	Ratio $\frac{T_u}{\phi T_n}$	Comb. Stress Ratio	Allow. Stress Ratio	Criteria
L1	140 - 93.75 (1)	0.004	0.195	0.000	0.008	0.000	0.200 ✔	1.000	4.8.2 ✔
L2	93.75 - 46.417 (2)	0.006	0.249	0.000	0.007	0.000	0.254 ✔	1.000	4.8.2 ✔
L3	46.417 - 1 (3)	0.008	0.312	0.000	0.008	0.000	0.320 ✔	1.000	4.8.2 ✔

Section No.	Elevation ft	Ratio $\frac{P_u}{\phi P_n}$	Ratio $\frac{M_{ux}}{\phi M_{nx}}$	Ratio $\frac{M_{uy}}{\phi M_{ny}}$	Ratio $\frac{V_u}{\phi V_n}$	Ratio $\frac{T_u}{\phi T_n}$	Comb. Stress Ratio	Allow. Stress Ratio	Criteria

Section Capacity Table

Section No.	Elevation ft	Component Type	Size	Critical Element	P K	ϕP_{allow} K	% Capacity	Pass Fail
L1	140 - 93.75	Pole	TP36.18x23.49x0.375	1	-13.593	3038.840	20.0	Pass
L2	93.75 - 46.417	Pole	TP48.41x33.99x0.438	2	-25.997	4697.720	25.4	Pass
L3	46.417 - 1	Pole	TP60x45.73x0.438	3	-44.603	5588.970	32.0	Pass
							Summary	
						Pole (L3)	32.0	Pass
						RATING =	**32.0**	**Pass**

CENTEK engineering
Centered on Solutions℠ www.centekeng.com
63-2 North Branford Road P: (203) 488-0580
Branford, CT 06405 F: (203) 488-8587

Subject:	Anchor Bolt and Baseplate Analysis
Location:	140-FT Valmont Monopole Plymouth, CT
Rev. 0: 12/21/20	Prepared by: T.J.L. Checked by: C.F.C. Job No. 20150.04

Anchor Bolt and Base Plate Analysis:

Input Data:

Tower Reactions:

Overturning Moment =	$M_u := 2137 \cdot ft \cdot kips$	(Input From tnxTower)
Shear Force =	$Shear := 22 \cdot kips$	(Input From tnxTower)
Axial Force =	$R_u := 45 \cdot kips$	(Input From tnxTower)

Anchor Bolt Data:

ASTMA615 Grade 75

Number of Anchor Bolts =	$N := 20$	(User Input)
Diameter of Bolt Circle =	$D_{BC} := 67.43 \cdot in$	(User Input)
Bolt "Column" Distance =	$l := 3.0 \cdot in$	(User Input)
Bolt Ultimate Strength =	$F_u := 100 \cdot ksi$	(User Input)
Bolt Yield Strength =	$F_y := 75 \cdot ksi$	(User Input)
Bolt Modulus =	$E := 29000 \cdot ksi$	(User Input)
Diameter of Anchor Bolts =	$D := 2.25 \cdot in$	(User Input)
Threads per Inch =	$n := 4.5$	(User Input)
Top of Concrete to Bot Leveling Nut =	$l_{ar} := 2 \cdot in$	(User Input)
Anchor Rod Force Correction Factor =	$n_c = 1$	Table 2-1 Addendum 3

Base Plate Data:

Use AST MA572 Grade 50

Plate Yield Strength =	$F_{yf} := 50 \cdot ksi$	(User Input)
Base Plate Thickness =	$t_{TP} := 3.0 \cdot in$	(User Input)
Base Plate Diameter =	$D_{OD} := 74.56 \cdot in$	(User Input)
Outer Pole Diameter =	$D_T := 60.0 \cdot in$	(User Input)
Pole Wall Thickness =	$t_T := 0.4375 \cdot in$	(User Input)
Pole Design Yield Strength =	$F_{yp} := 65 \cdot ksi$	(User Input)
	$\eta := 0.5$	For Ungrouted Base Plate per TIA-222-G Section 4.9.9

Anchor Bolt Analysis:

Gross Area of Bolt = $A_g := \frac{\pi}{4} \cdot D^2 = 3.976 \cdot in^2$

Net Area of Bolt = $A_n := \frac{\pi}{4} \cdot \left(D - \frac{0.9743 \cdot in}{n} \right)^2 = 3.248 \cdot in^2$

Tensile Root Diameter = $d_{rt} := D - \frac{0.9743 \cdot in}{n} = 2.033 \cdot in$

Plastic Section Modulus = $Z := \frac{d_{rt}^3}{6} = 1.401 \cdot in^3$

Maximum Anchor Rod Force = $P_u := \frac{n_c \cdot \pi \cdot M_u}{N \cdot D_{BC}} + \frac{R_u}{N} = 62 \cdot kips$

Maximum Shear Force = $V_u := \frac{Shear}{N} = 1.1 \cdot kips$

Design Tensile Strength = $\Phi R_{nt} := 0.8 \cdot F_u \cdot A_n = 259.815 \cdot k$

Bolt % of Capacity = $\frac{\left(P_u + \frac{V_u}{\eta} \right)}{\Phi R_{nt}} \cdot 100 = 24.7$

Condition1 = $Condition1 := if\left[\frac{\left(P_u + \frac{V_u}{\eta} \right)}{\Phi R_{nt}} \le 1.00, "OK", "Overstressed" \right]$

Condition1 = "OK"

Design Shear Strength = $\Phi R_{nv} := 0.75 \cdot 0.45 \cdot F_u \cdot A_g = 134.193 \cdot k$

Design Flexural Strength = $\Phi R_{nm} := 0.9 \cdot F_y \cdot Z = 94.597 \cdot in \cdot k$

$$M_u := \begin{cases} 0 & \text{if } l_{ar} < D \\ 0.65 \cdot l_{ar} \cdot V_u & \text{otherwise} \end{cases} = 0 \cdot in \cdot k$$

Bolt % of Capacity = $\left[\left(\frac{V_u}{\Phi R_{nv}} \right)^2 + \left(\frac{P_u}{\Phi R_{nt}} + \frac{M_u}{\Phi R_{nm}} \right)^2 \right] \cdot 100 = 5.7$

Condition2 = $Condition2 := if\left[\left(\frac{V_u}{\Phi R_{nv}} \right)^2 + \left(\frac{P_u}{\Phi R_{nt}} + \frac{M_u}{\Phi R_{nm}} \right)^2 \le 1.00, "OK", "Overstressed" \right]$

Condition2 = "OK"

Base Plate Analysis:

Strength Resistance Factor for Yielding due to Bending = $\phi_b := 0.9$

Strength Resistance Factor for Yielding due to Shear = $\phi_v := 1.0$

Outside Fillet Horizontal Leg Dimension = $w_1 := 0.25 \cdot in$

Effective Pole Outside Diameter = $D_e := D_T + w_1 = 60.25 \cdot in$

Effective Base Plate Outside Diameter = $D_{oe} := \begin{cases} D_{OD} & \text{if } D_{OD} \le \left(D_{BC} + 6 \cdot t_{TP}\right) \\ \left(D_{BC} + 6 \cdot t_{TP}\right) & \text{otherwise} \end{cases} = 74.56 \cdot in$

Half-Angle Between Radial Lines Extending from Pole Centerline Through Midpoints Between Adjacent Anchor Rods = $\theta_1 := \frac{\pi}{N} = 0.157$

Angle Defining Limiting Effective Base Plate Width Based on Plate Thickness = $\theta_2 := \operatorname{asin}\left(\frac{12 \cdot t_{TP}}{D_{BC}}\right) = 0.563$

Angle Defining Limiting Effective Base Plate Width Based on Distance Between Anchor Rod Bolt Circle and Effective Pole Outside Diameter = $\theta_3 := \operatorname{acos}\left(\frac{D_{BC} + D_e}{2 \cdot D_{BC}}\right) = 0.328$

Governing Angle Defining Effective Base Plate Width Resisting Bending = $\theta := \min\left(\theta_1, \theta_2, \theta_3\right) = 0.157$

Effective Moment Arm of Anchor Rod Force = $x := 0.5 \cdot \left(D_{BC} - D_e\right) = 3.59 \cdot in$

Effective Base Plate Width Resisting Bending from Transverse Bend Line = $B_{et} := D_{BC} \cdot \sin(\theta) = 10.548 \cdot in$

Effective Base Plate Width Resisting Bending from Radial Bend Lines = $B_{er} := \left(D_{oe} - D_e\right) \cdot \sin(\theta) = 2.239 \cdot in$

Total Effective Base Plate Width Resisting Bending = $B_{eff} := B_{et} + B_{er} = 12.787 \cdot in$

Required Base Plate Thickness = $t_{TP.Req} := \sqrt{\frac{4 \cdot P_u \cdot x}{\phi_b \cdot F_{yf} \cdot B_{eff}}} = 1.244 \cdot in$

Plate Bending Stress % of Capacity = $\frac{t_{TP.Req}}{t_{TP}} = 41.5 \cdot \%$

Condition2 = $Condition3 := \text{if}\left(\frac{t_{TP.Req}}{t_{TP}} < 1.00, \text{"Ok"}, \text{"Overstressed"}\right)$

Condition3 = "Ok"

Required Base Plate Thickness = $t_{TP.Req} := \frac{\phi_b \cdot t_T \cdot F_{yp}}{\phi_v \cdot 0.6 \cdot F_{yf}} = 0.853 \cdot in$

Plate Bending Stress % of Capacity = $\frac{t_{TP.Req}}{t_{TP}} = 28.4 \cdot \%$

Condition2 = $Condition4 := \text{if}\left(\frac{t_{TP.Req}}{t_{TP}} < 1.00, \text{"Ok"}, \text{"Overstressed"}\right)$

Condition4 = "Ok"

CENTEK engineering
Centered on Solutions℠ www.centekeng.com
63-2 North Branford Road P: (203) 488-0580
Branford, CT 06405 F: (203) 488-8587

Subject:	FOUNDATION ANALYSIS
Location:	140-ft Valmont Monopole Plymouth, CT
Rev. 0: 12/21/20	Prepared by: T.J.L Checked by: C.F.C. Job no. 20150.04

Standard Monopole Foundation:

Input Data:

Tower Data

Overturning Moment =	$OM := 2137 \cdot ft \cdot kips$	(User Input)	
Shear Force =	$Shear := 22 \cdot kip$	(User Input)	
Axial Force =	$Axial := 45 \cdot kip$	(User Input)	
Tower Height =	$H_t := 140 \cdot ft$	(User Input)	

Footing Data:

Overall Depth of Footing =	$D_f := 6 \cdot ft$	(User Input)	
Length of Pier =	$L_p := 4.0 \cdot ft$	(User Input)	
Extension of Pier Above Grade =	$L_{pag} := 0.5 \cdot ft$	(User Input)	
Diameter of Pier =	$d_p := 7.5 \cdot ft$	(User Input)	
Thickness of Footing =	$T_f := 2.5 \cdot ft$	(User Input)	
Width of Footing =	$W_f := 26.5 \cdot ft$	(User Input)	

Anchor Bolt Data:

Length of Anchor Bolts=	$L_{st} := 72 \cdot in$	(User Input)	
Projection of Anchor Bolts Above Pier =	$A_{BP} := 12.0 \cdot in$	(User Input)	
Anchor Bolt Diameter =	$d_{anchor} := 2.25 \cdot in$	(User Input)	
Base Plate Bolt Circle =	$MP := 67.43 \cdot in$	(User Input)	

Material Properties:

Concrete Compressive Strength =	$f_c := 4000 \cdot psi$	(User Input)	
Steel Reinforcment Yield Strength =	$f_y := 60000 \cdot psi$	(User Input)	
Anchor Bolt Yield Strength =	$f_{ya} := 75000 \cdot psi$	(User Input)	
Internal Friction Angle of Soil =	$\Phi_s := 30 \cdot deg$	(User Input)	
Ultimate Soil Bearing Capacity =	$q_u := 48000 \cdot psf$	(User Input)	
Allowable Soil Bearing Capacity =	$q_a := \frac{q_u}{2} = 24000 \cdot psf$	(User Input)	
Unit Weight of Soil =	$\gamma_{soil} := 100 \cdot pcf$	(User Input)	
Unit Weight of Concrete =	$\gamma_{conc} := 150 \cdot pcf$	(User Input)	
Foundation Bouyancy =	$Bouyancy := 0$	(User Input)	(Yes=1 / No=0)
Depth to Neglect =	$n := 0 \cdot ft$	(User Input)	
Cohesion of Clay Type Soil =	$c := 0 \cdot ksf$	(User Input)	(Use 0 for Sandy Soil)
Seismic Zone Factor =	$Z := 2$	(User Input)	(UBC-1997 Fig 23-2)
Coefficient of Friction Between Concrete =	$\mu := 0.45$	(User Input)	

Pier Reinforcement:

Bar Size =	$BS_{pier} := 11$	(User Input)	
Bar Diameter =	$d_{bpier} := 1.41 \cdot in$	(User Input)	
Number of Bars =	$NB_{pier} := 46$	(User Input)	
Clear Cover of Reinforcement =	$Cvr_{pier} := 3 \cdot in$	(User Input)	
Reinforcement Location Factor =	$\alpha_{pier} := 1.0$	(User Input)	(ACI-2008 12.2.4)
Coating Factor =	$\beta_{pier} := 1.0$	(User Input)	(ACI-2008 12.2.4)
Concrete Strength Factor =	$\lambda_{pier} := 1.0$	(User Input)	(ACI-2008 12.2.4)
Reinforcement Size Factor =	$\gamma_{pier} := 1.0$	(User Input)	(ACI-2008 12.2.4)
Diameter of Tie =	$d_{Tie} := 3 \cdot in$	(User Input)	

Pad Reinforcement:

Bar Size =	$BS_{top} := 7$	(User Input)	(Top of Pad)
Bar Diameter =	$d_{btop} := 0.875 \cdot in$	(User Input)	(Top of Pad)
Number of Bars =	$NB_{top} := 32$	(User Input)	(Top of Pad)
Bar Size =	$BS_{bot} := 9$	(User Input)	(Bottom of Pad)
Bar Diameter =	$d_{bbot} := 1.128 \cdot in$	(User Input)	(Bottom of Pad)
Number of Bars =	$NB_{bot} := 31$	(User Input)	(Bottom of Pad)
Clear Cover of Reinforcement =	$Cvr_{pad} := 3.0 \cdot in$	(User Input)	
Reinforcement Location Factor =	$\alpha_{pad} := 1.0$	(User Input)	(ACI-2008 12.2.4)
Coating Factor =	$\beta_{pad} := 1.0$	(User Input)	(ACI-2008 12.2.4)
Concrete Strength Factor =	$\lambda_{pad} := 1.0$	(User Input)	(ACI-2008 12.2.4)
Reinforcement Size Factor =	$\gamma_{pad} := 1.0$	(User Input)	(ACI-2008 12.2.4)

Calculated Factors:

Pier Reinforcement Bar Area = $A_{bpier} := \frac{\pi \cdot d_{bpier}^2}{4} = 1.561 \cdot in^2$

Pad Top Reinforcement Bar Area = $A_{btop} := \frac{\pi \cdot d_{btop}^2}{4} = 0.601 \cdot in^2$

Pad Bottom Reinforcement Bar Area = $A_{bbot} := \frac{\pi \cdot d_{bbot}^2}{4} = 0.999 \cdot in^2$

Coefficient of Lateral Soil Pressure = $K_p := \frac{1 + \sin(\Phi_s)}{1 - \sin(\Phi_s)} = 3$

Stability of Footing:

Adjusted Concrete Unit Weight = $\gamma_c := if(Bouyancy = 1, \gamma_{conc} - 62.4pcf, \gamma_{conc}) = 150 \cdot pcf$

Adjusted Soil Unit Weight = $\gamma_s := if(Bouyancy = 1, \gamma_{soil} - 62.4pcf, \gamma_{soil}) = 100 \cdot pcf$

Passive Pressure = $P_{pn} := K_p \cdot \gamma_s \cdot n + c \cdot 2 \cdot \sqrt{K_p} = 0 \cdot ksf$

$P_{pt} := K_p \cdot \gamma_s \cdot (D_f - T_f) + c \cdot 2 \cdot \sqrt{K_p} = 1.05 \cdot ksf$

$P_{top} := if[n < (D_f - T_f), P_{pt}, P_{pn}] = 1.05 \cdot ksf$

$P_{bot} := K_p \cdot \gamma_s \cdot D_f + c \cdot 2 \cdot \sqrt{K_p} = 1.8 \cdot ksf$

$P_{ave} := \frac{P_{top} + P_{bot}}{2} = 1.425 \cdot ksf$

$T_p := if[n < (D_f - T_f), T_f, (D_f - n)] = 2.5$

$A_p := W_f \cdot T_p = 66.25$

Ultimate Shear = $S_u := P_{ave} \cdot A_p = 94.406 \cdot kip$

Weight of Concrete Pad = $WT_c := \left[\left(W_f^2 \cdot T_f\right) + d_p^2 L_p\right] \cdot \gamma_c = 297.094 \cdot kip$

Weight of Soil Above Footing = $WT_{s1} := \left[\left(W_f^2 - d_p^2\right) \cdot \left(\left|L_p - L_{pag} - n\right|\right)\right] \cdot \gamma_s = 226.1 \cdot kip$

Weight of Soil Wedge at Back Face = $WT_{s2} := \left(\frac{D_f^2 \cdot \tan(\Phi_s)}{2} \cdot W_f\right) \cdot \gamma_s = 27.54 \cdot kip$

Weight of Soil Wedge at back face Corners = $WT_{s3} := 2 \cdot \left[(D_f)^3 \cdot \frac{\tan(\Phi_s)}{3}\right] \cdot \gamma_s = 8.314 \cdot kips$

Total Weight = $WT_{tot} := WT_c + WT_{s1} + Axial = 568.194 \cdot kip$

Resisting Weight = $WT_R := 0.9 \cdot WT_c + 0.75 \cdot WT_{s1} + 0.75 \cdot Axial = 470.709 \cdot kip$

Resisting Moment = $M_r := (WT_R) \cdot \frac{W_f}{2} + 0.75 \cdot S_u \cdot \frac{T_f}{3} + 0.75 \cdot \left[\left(WT_{s2} + WT_{s3}\right) \cdot \left(W_f + \frac{D_f \cdot \tan(\Phi_s)}{3}\right)\right] = 7040 \cdot kip \cdot ft$

Overturning Moment = $M_{ot} := OM + Shear \cdot (L_p + T_f) = 2280 \cdot kip \cdot ft$

Factor of Safety Actual = $FS := \frac{M_r}{M_{ot}} = 3.09$

Factor of Safety Required = $FS_{req} := 1$

$OverTurning\_Moment\_Check := if(FS \geq FS_{req}, "Okay", "No Good")$

$OverTurning\_Moment\_Check = "Okay"$

Shear Capacity in Pier:

Shear Resistance of Pier = $S_p := \frac{P_{ave} \cdot A_p + \mu \cdot WT_{tot}}{FS_{req}} = 350.093 \cdot kips$

$Shear\_Check := if(S_p > Shear, "Okay", "No Good")$

Shear_Check = "Okay"

Bearing Pressure Caused by Footing:

Area of the Mat = $A_{mat} := W_f^2 = 702.25$

Section Modulus of Mat = $S := \frac{W_f^3}{6} = 3101.6 \cdot ft^3$

Maximum Pressure in Mat = $P_{max} := \frac{WT_{tot}}{A_{mat}} + \frac{M_{ot}}{S} = 1.544 \cdot ksf$

$Max\_Pressure\_Check := if(P_{max} < .75 \cdot q_u, "Okay", "No Good")$

Max_Pressure_Check = "Okay"

Minimum Pressure in Mat = $P_{min} := \frac{WT_{tot}}{A_{mat}} - \frac{M_{ot}}{S} = 0.074 \cdot ksf$

$Min\_Pressure\_Check := if\left[(P_{min} \geq 0) \cdot (P_{min} < .75 \cdot q_u), "Okay", "No Good"\right]$

Min_Pressure_Check = "Okay"

Distance to Resultant of Pressure Distribution = $X_p := \frac{P_{max}}{\frac{P_{max} - P_{min}}{W_f}} \cdot \frac{1}{3} = 9.278$

Distance to Kern = $X_k := \frac{W_f}{6} = 4.417$

Since Resultant Force is Not in Kern, Area to which Pressure is Applied Must be Reduced.

Eccentricity = $e := \frac{M_{ot}}{WT_{tot}} = 4.013$

Adjusted Soil Pressure = $P_a := \frac{2 \cdot WT_{tot}}{3 \cdot W_f \cdot \left(\frac{W_f}{2} - e\right)} = 1.547 \cdot ksf$

$q_{adj} := if(P_{min} < 0, P_a, P_{max}) = 1.544 \cdot ksf$

$Pressure\_Check := if(q_{adj} < .75 \cdot q_u, "Okay", "No Good")$

Pressure_Check = "Okay"

Concrete Bearing Capacity:

Strength Reduction Factor = $\Phi_c := 0.65$ (ACI-2008 9.3.2.2)

Bearing Strength Between Pier and Pad = $P_b := \Phi_c \cdot 0.85 \cdot f_c \cdot \frac{\pi \cdot d_p^2}{4} = 1.406 \times 10^4 \cdot kips$ (ACI-2008 10.14)

$Bearing\_Check := if\left(P_b > Axial, "Okay", "No Good"\right)$

Bearing_Check = "Okay"

Shear Strength of Concrete:

Beam Shear: (Critical section located at a distance d from the face of Pier) (ACI 11.3.1.1)

$\phi_c := 0.85$ (ACI 9.3.2.5)

$d := T_f - Cvr_{pad} - d_{bbot} = 2.156$

$d_1 := \frac{W_f}{2} - \frac{d_p}{2}$

$d_2 := d_1 - d$

$L := \left(\frac{W_f}{2} - e\right) \cdot 3$

$Slope := if\left(L > W_f, \frac{P_{max} - P_{min}}{W_f}, \frac{q_{adj}}{L}\right)$

$V_{req} := \left[\left(q_{adj} - Slope \cdot d_1\right) + \left(\frac{Slope \cdot d_1}{2}\right)\right] \cdot W_f \cdot d_1$

$V_{Avail} := \phi_c \cdot 2 \cdot \sqrt{f_c \cdot psi} \cdot W_f \cdot d$ (ACI-2008 11.2.1.1)

$Beam\_Shear\_Check := if\left(V_{req} < V_{Avail}, "Okay", "No Good"\right)$

Beam_Shear_Check = "Okay"

Punching Shear: (Critical Section Located at a distance of d/2 from the face of pier) (ACI 11.11.1.2)

Critical Perimeter of Punching Shear = $b_o := \left(d_p + d\right) \cdot \pi = 30.3$

Area Included Inside Perimeter = $A_{bo} := \frac{\pi \cdot \left(d_p + d\right)^2}{4} = 73.2$

Area Outside of Perimeter = $A_{out} := A_{mat} - A_{bo} = 629$

Guess Value = $v_u := 1ksf$

(From "Foundation Analysis and design", By Joseph Bowles, Eq. 8-9)

Given $d^2 + d_p \cdot d = \frac{WT_{tot}}{\pi \cdot v_u}$

$v_u := Find(v_u) = 8.7 \cdot ksf$

$V_u := v_u \cdot d \cdot W_f = 496.4 \cdot kips$

Required Shear Strength = $V_{req} := V_u = 496.4 \cdot kips$

Available Shear Strength = $V_{Avail} := \phi_c \cdot 4 \cdot \sqrt{f_c \cdot psi} \cdot b_o \cdot d = 2025.2 \cdot kip$ (ACI-2008 11.11.2.1)

$Punching\_Shear\_Check := if(V_{req} < V_{Avail}, "Okay", "No Good")$

Punching_Shear_Check = "Okay"

Steel Reinforcement in Pad:

Required Reinforcement for Bending:

Strength Reduction Factor = $\phi_m := .90$ (ACI-2008 9.3.2.1)

$q_b := q_{adj} - d_1 \cdot Slope = 1.017 \cdot ksf$

Maximum Bending at Face of Pier = $M_n := \frac{1}{\phi_m} \cdot \left[(q_{adj} - q_b) \cdot \frac{d_1^2}{3} + q_b \cdot \frac{d_1^2}{2} \right] \cdot W_f = 1818.3 \cdot kip \cdot ft$

$$\beta := \begin{cases} 0.85 & \text{if } 2500 \cdot psi \le f_c \le 4000 \cdot psi \\ 0.65 & \text{if } f_c > 8000 \cdot psi \\ \left[0.85 - \left[\frac{\left(\frac{f_c}{psi} - 4000 \right)}{1000} \right] \cdot 0.5 \right] & \text{otherwise} \end{cases} = 0.85$$

(ACI-200810.2.7.3)

$R_n := \frac{M_n}{W_f \cdot d^2} = 102.5 \cdot psi$

$\rho := \frac{0.85 \cdot f_c}{f_y} \left(1 - \sqrt{1 - \frac{2 \cdot R_n}{0.85 \cdot f_c}} \right) = 0.0017$

$\rho_{min} := \rho = 0.00174$

Required Reinforcement for Temperature and Shrinkage:

$$\rho_{sh} := \begin{cases} .0018 & \text{if } f_y \geq 60000 \cdot psi \\ .0020 & \text{otherwise} \end{cases}$$ (ACI-2008 7.12.2.1)

Check Bottom Bars:

$$As := \begin{cases} \rho_{min} \cdot W_f \cdot d & \text{if } \rho_{min} > \frac{\rho_{sh}}{2} \\ \rho_{sh} \cdot W_f \cdot \frac{d}{2} & \text{otherwise} \end{cases} = 14.275 \cdot in^2$$

$As_{prov} := A_{bbot} \cdot NB_{bot} = 31 \cdot in^2$

$Pad\_Reinforcement\_Bot := if(As_{prov} > As, "Okay", "No Good")$

Pad_Reinforcement_Bot = "Okay"

Check top Bars:

$As := \rho_{sh} \cdot \left(W_f \cdot \frac{d}{2}\right) = 7.4 \cdot in^2$

$As_{prov} := A_{btop} \cdot NB_{top} = 19.2 \cdot in^2$

$Pad\_Reinforcement\_Top := if(As_{prov} > As, "Okay", "No Good")$

Pad_Reinforcement_Top = "Okay"

Developement Length Pad Reinforcement:

Bar Spacing =

$$B_{sPad} := \frac{W_f - 2 \cdot Cvr_{pad} - NB_{bot} \cdot d_{bbot}}{NB_{bot} - 1} = 9.23 \cdot in$$

Spacing or Cover Dimension =

$$c := if\left(Cvr_{pad} < \frac{B_{sPad}}{2}, Cvr_{pad}, \frac{B_{sPad}}{2}\right) = 3 \cdot in$$

Transverse Reinforcement Index =

$k_{tr} := 0$ (ACI-2008 12.2.3)

$$L_{dbt} := \frac{3 \cdot f_y \alpha_{pad} \cdot \beta_{pad} \cdot \gamma_{pad} \cdot \lambda_{pad}}{40 \cdot \sqrt{f_c \cdot psi} \cdot \frac{c + k_{tr}}{d_{bbot}}} \cdot d_{bbot} = 30.2 \cdot in$$

Minimum Development Length =

$L_{dbmin} := 12 \cdot in$ (ACI-2008 12.2.1)

$L_{dbtCheck} := if(L_{dbt} \geq L_{dbmin}, "Use L.dbt", "Use L.dbmin")$

Available Length in Pad =

$$L_{Pad} := \frac{W_f}{2} - \frac{d_p}{2} - Cvr_{pad} = 111 \cdot in$$

$Lpad\_Check := if(L_{Pad} > L_{dbt}, "Okay", "No Good")$

Lpad_Check = "Okay"

Steel Reinforcement in Pier:

Area of Pier =

$A_p := d_p^2 = 8100 \cdot in^2$

$A_{smin} := 0.01 \cdot 0.5 \cdot A_p = 40.5 \cdot in^2$ (ACI-2008 10.8.4 & 10.9.1)

$A_{sprov} := NB_{pier} \cdot A_{bpier} = 71.83 \cdot in^2$

Steel_Area_Check := if($A_{sprov} > A_{smin}$, "Okay", "No Good")

Steel_Area_Check = "Okay"

NOTE: Anchor Bolts are not accounted for in reinforcement calculation and will provide additional reinforcement to satisfy minimum requirement of steel.

Bar Spacing In Pier =

$B_{sPier} := \frac{d_p \cdot \pi}{NB_{pier}} - d_{bpier} = 4.737 \cdot in$

Diameter of Reinforcement Cage =

$Diam_{cage} := d_p - 2 \cdot Cvr_{pier} = 84 \cdot in$

Maximum Moment in Pier =

$M_p := \left[OM + Shear \cdot \left(L_p + \frac{A_{BP}}{2} \right) \right] = 26832 \cdot in \cdot kips$

Pier Check evaluated from outside program and results are listed below;

$(D \; N \; n \; P_u \; M_{xu}) := \left(d_p \cdot 12 \;\; NB_{pier} \;\; BS_{pier} \;\; \frac{Axial \cdot 1.333}{kips} \;\; \frac{M_p}{in \cdot kips} \right)$

$(D \; N \; n \; P_u \; M_{xu}) = (90 \;\; 46 \;\; 11 \;\; 60 \;\; 26832)$

$(\phi P_n \;\; \phi M_{xn} \;\; f_{sp} \;\; \rho) := (0 \;\; 0 \;\; 0 \;\; 0)$

$(\phi P_n \;\; \phi M_{xn} \;\; f_{sp} \;\; \rho) := \phi P'_n(D, N, n, P_u, M_{xu})^T$

$(\phi P_n \;\; \phi M_{xn} \;\; f_{sp} \;\; \rho) = (316.4 \;\; 1.4 \times 10^5 \;\; -60 \;\; 0)$

Axial_Load_Check := if($\phi P_n \geq P_u$, "Okay", "No Good")

Axial_Load_Check = "Okay"

Bending_Check := if($\phi M_{xn} \geq M_{xu}$, "Okay", "No Good")

Bending_Check = "Okay"

Development Length Pier Reinforcement:

Available Length in Foundation:

$L_{pier} := L_p - Cvr_{pier} = 45 \cdot in$

$L_{pad} := T_f - Cvr_{pad} = 27 \cdot in$

Tension: (ACI-2008 12.2.3)

Spacing or Cover Dimension =

$c := if\left(Cvr_{pier} < \frac{B_{sPier}}{2}, Cvr_{pier}, \frac{B_{sPier}}{2}\right) = 2.368 \cdot in$

Transverse Reinforcement = $k_{tr} := 0$ (ACI-2008 12.2.3)

$L_{dbt} := \frac{3 \cdot f_y \cdot \alpha_{pier} \cdot \beta_{pier} \cdot \gamma_{pier} \cdot \lambda_{pier}}{40 \cdot \sqrt{f_c \cdot psi} \cdot \left(\frac{c + k_{tr}}{d_{bpier}}\right)} \cdot d_{bpier} = 59.73 \cdot in$

Minimum Development Length = $L_{dh} := \frac{1200 \cdot d_{bpier}}{\sqrt{\frac{f_c}{psi}}} \cdot .7 = 18.727 \cdot in$ (ACI 12.2.1)

Pier reinforcement bars are standard 90 degree hooks and therefore developement in the pad is computed as follows:

$L_{db} := \max\left(L_{dbt}, L_{dbmin}\right)$

$L_{tension\_Check} := if\left(L_{pier} + L_{pad} > L_{dbt}, "Okay", "No Good"\right)$

$L_{tension\_Check} = "Okay"$

Compression: (ACI-2008 12.3.2)

$L_{dbc1} := \frac{.02 \cdot d_{bpier} \cdot f_y}{\sqrt{f_c \cdot psi}} = 26.753 \cdot in$

$L_{dbmin} := 0.0003 \cdot \frac{in^2}{lb} \cdot \left(d_{bpier} \cdot f_y\right) = 25.38 \cdot in$

$L_{dbc} := if\left(L_{dbc1} \geq L_{dbmin}, L_{dbc1}, L_{dbmin}\right) = 26.753 \cdot in$

$L_{compression\_Check} := if\left(L_{pier} + L_{pad} > L_{dbc}, "Okay", "No Good"\right)$

$L_{compression\_Check} = "Okay"$

verizon fuze | RFDS

NORTH EAST > North East > New England > New England West > PLYMOUTH W CT RELO - Westall

Gadasu, Shiva - shiva.gadasu@verizonwireless.com - 10/27/2020 15:32:48

Project Details

Carrier Aggregation:	false
MPT Id:	
eCIP-0:	false
Project Name:	850 ADD
FUZE Project ID:	16244613
Designed Sector Carrier 4G:	17
Designed Sector Carrier 5G:	N/A
Additional Sector Carrier 4G:	N/A
Additional Sector Carrier 5G:	N/A
SiteTraker Project Id:	
FP Solution Type & Tech Type:	MODIFICATION;4G_850,5G_L-Sub6-Prep
RFDS Project Scope:	Ant, RRH upgrade LSub6, 850LTE, AWS2 add Mount Octoports using SBS mounting brackets Remove any unused coax Rev0_10.27.2020 : Initial Design
Suffix:	Rev0_10.27.2020

Location Information

Site ID:	2073514
E-NodeB ID:	064451
PSLC:	467737
Switch Name:	Wallingford 1
Tower Owner:	
Tower Type:	Monopole
Site Type:	MACRO
Street Address:	33 Keegan Rd
City:	Plymouth
State:	CT
Zip Code:	06782
County:	Litchfield
Latitude:	41.66175944 / 41° 39' 42.334" N
Longitude:	-73.04564472 / 73° 2' 44.321" W

Antenna Summary

Added

700	850	1900	AWS	AWS3	28 GHz	31 GHz	39 GHz	CBRS	LAA	L-Sub6	Make	Model	Centerline	Tip Height	Azimuth	RET	4xRx	Inst. Type	Quantity
LTE	LTE	LTE	LTE								ANDREW	JAHH-65B-R3B	140	143	10(01) 140(02) 240(03)	false	false	PHYSICAL	6
											TBD	nL-Sub6 Antenna	140	142.1	10(0001) 140(0002) 240(0003)	false	false	PHYSICAL	3

Removed

700	850	1900	AWS	AWS3	28 GHz	31 GHz	39 GHz	CBRS	LAA	L-Sub6	Make	Model	Centerline	Tip Height	Azimuth	RET	4xRx	Inst. Type	Quantity
		LTE	LTE								ANDREW	HBXX-6517DS-A2M	140	143.1	10(D1) 140(D2) 240(D3)	false	false	PHYSICAL	6
LTE											ANDREW	LNX-6514DS-A1M	140		10(D1) 140(D2) 240(D3)	false	false	PHYSICAL	3

Retained

700	850	1900	AWS	AWS3	28 GHz	31 GHz	39 GHz	CBRS	LAA	L-Sub6	Make	Model	Centerline	Tip Height	Azimuth	RET	4xRx	Inst. Type	Quantity
	CDMA										ANDREW	LNX-6514DS-A1M	140	143	10(D1) 140(D2) 240(D3)	false	false	PHYSICAL	3

Added: 9 **Removed:** 9 **Retained:** 3

Equipment Summary

Added

Equipment Type	Location	700	850	1900	AWS	AWS3	28 GHz	31 GHz	39 GHz	CBRS	LAA	L-Sub6	Make	Model	Cable Length	Cable Size	Install Type	Quantity
Mount	Tower												ANDREW	2" SBS Mounting Bracket			PHYSICAL	3
Diplexer	Tower	LTE	LTE										Commscope	CBC78T-DS-43-2X			PHYSICAL	3
OVP Box	Tower												RFS	DB-C1-12C-24AB-0Z			PHYSICAL	1
Hybrid Cable	Tower												RFS	HB158-13U12S24		1-5/8"	PHYSICAL	1
RRU	Tower			LTE	LTE								Samsung	B2/B66A RRH-BR049 (RFV01U-D1A)			PHYSICAL	3
RRU	Tower	LTE	LTE										Samsung	B5/B13 RRH-BR04C (RFV01U-D2A)			PHYSICAL	3
RRU	Tower												Samsung	VZS01			PHYSICAL	3

Removed

Equipment Type	Location	700	850	1900	AWS	AWS3	28 GHz	31 GHz	39 GHz	CBRS	LAA	L-Sub6	Make	Model	Cable Length	Cable Size	Install Type	Quantity
RRU	Tower	LTE											Nokia	UHBA B13 RRH 4x30			PHYSICAL	3
RRU	Tower			LTE									Nokia	UHFA B25 RRH 4x30			PHYSICAL	3
RRU	Tower				LTE								Nokia	UHIC B4 RRH 2x60-4R			PHYSICAL	3
Hybrid Cable	Tower													old			PHYSICAL	1
OVP Box	Tower													old			PHYSICAL	1

Retained

Equipment Type	Location	700	850	1900	AWS	AWS3	28 GHz	31 GHz	39 GHz	CBRS	LAA	L-Sub6	Make	Model	Cable Length	Cable Size	Install Type	Quantity
Coaxial Cables	Tower		CDMA													1-5/8"	PHYSICAL	6

Service Info

1900 MHZ LTE		0000		5GLS		
Sector	**D1**	**D2**	**D3**	**01**	**02**	**03**
Azimuth	10	140	240	10	140	240
Cell / ENode B ID	064451	064451	064451	064451	064451	064451
Antenna Model	HBXX-6517DS-A2M	HBXX-6517DS-A2M	HBXX-6517DS-A2M	JAHH-65B-R3B	JAHH-65B-R3B	JAHH-65B-R3B
Antenna Make	ANDREW	ANDREW	ANDREW	ANDREW	ANDREW	ANDREW
Antenna Centerline(Ft)	140	140	140	140	140	140
Mechanical Down-Tilt(Deg.)	0	0	0	0	0	0
Electrical Down-Tilt	2	5	0	5	2	4
Tip Height	143.1	143.1	143.1	143	143	143
Regulatory Power	426.64	434.17	395.6	265.68	256.48	263.12
TMA Make						
TMA Model						
RRU Make	Nokia	Nokia	Nokia	Samsung	Samsung	Samsung
RRU Model	UHFA B25 RRH 4x30	UHFA B25 RRH 4x30	UHFA B25 RRH 4x30	B2/B66A RRH-BR049 (RFV01U-D1A)	B2/B66A RRH-BR049 (RFV01U-D1A)	B2/B66A RRH-BR049 (RFV01U-D1A)
Number of Tx, Rx Lines	2,2	2,2	2,2	4,4	4,4	4,4
Position						
Transmitter Id	4757986	4757987	4757988	7842345	7842346	7842347
Source	ATOLL_API	ATOLL_API	ATOLL_API	ATOLL_API	ATOLL_API	ATOLL_API

2100 MHZ LTE		0000		5GLS		
Sector	**D1**	**D2**	**D3**	**01**	**01**	**02**
Azimuth	10	140	240	10	10	140
Cell / ENode B ID	064451	064451	064451	064451	064451	064451
Antenna Model	HBXX-6517DS-A2M	HBXX-6517DS-A2M	HBXX-6517DS-A2M	JAHH-65B-R3B	JAHH-65B-R3B	JAHH-65B-R3B
Antenna Make	ANDREW	ANDREW	ANDREW	ANDREW	ANDREW	ANDREW
Antenna Centerline(Ft)	140	140	140	140	140	140
Mechanical Down-Tilt(Deg.)	0	0	0	0	0	0
Electrical Down-Tilt	5	2	4	5	5	2
Tip Height	143.1	143.1	143.1	143	143	143
Regulatory Power	232.93	244.53	241.84	539.99	135	502.21
TMA Make						
TMA Model						
RRU Make	Nokia	Nokia	Nokia	Samsung	Samsung	Samsung
RRU Model	UHIC B4 RRH 2x60-4R	UHIC B4 RRH 2x60-4R	UHIC B4 RRH 2x60-4R	B2/B66A RRH-BR049 (RFV01U-D1A)	B2/B66A RRH-BR049 (RFV01U-D1A)	B2/B66A RRH-BR049 (RFV01U-D1A)
Number of Tx, Rx Lines	2,2	2,2	2,2	4,4	4,4	4,4
Position						
Transmitter Id	4757981	4757983	4757985	9271487	7842340	9271488
Source	ATOLL_API	ATOLL_API	ATOLL_API	ATOLL_API	ATOLL_API	ATOLL_API

02	**03**	**03**
140	240	240
064451	064451	064451
JAHH-65B-R3B	JAHH-65B-R3B	JAHH-65B-R3B
ANDREW	ANDREW	ANDREW
140	140	140
0	0	0
2	4	4
143	143	143
125.55	531.97	132.99
Samsung	Samsung	Samsung
B2/B66A RRH-BR049 (RFV01U-D1A)	B2/B66A RRH-BR049 (RFV01U-D1A)	B2/B66A RRH-BR049 (RFV01U-D1A)
4,4	4,4	4,4
7842342	9271489	7842344
ATOLL_API	ATOLL_API	ATOLL_API

850 MHZ CDMA		0000			5GLS	
Sector	**D1**	**D2**	**D3**	**D1**	**D2**	**D3**
Azimuth	10	140	240	10	140	240
Cell / ENode B ID						
Antenna Model	LNX-6514DS-A1M	LNX-6514DS-A1M	LNX-6514DS-A1M	LNX-6514DS-A1M	LNX-6514DS-A1M	LNX-6514DS-A1M
Antenna Make	ANDREW	ANDREW	ANDREW	ANDREW	ANDREW	ANDREW
Antenna Centerline(Ft)	140	140	140	140	140	140
Mechanical Down-Tilt(Deg.)	0	0	0	0	0	0
Electrical Down-Tilt	2	4	0	2	4	0
Tip Height	143	143	143	143	143	143
Regulatory Power	470.22	460.57	464.41	470.22	460.57	464.41
TMA Make						
TMA Model						
RRU Make						
RRU Model						
Number of Tx, Rx Lines						
Position						
Transmitter Id						
Source	ATOLL_API	ATOLL_API	ATOLL_API	ATOLL_API	ATOLL_API	ATOLL_API

700 MHZ LTE

	0000			5GLS		
Sector	**D1**	**D2**	**D3**	**01**	**02**	**03**
Azimuth	10	140	240	10	140	240
Cell / ENode B ID	064451	064451	064451	064451	064451	064451
Antenna Model	LNX-6514DS-A1M	LNX-6514DS-A1M	LNX-6514DS-A1M	JAHH-65B-R3B	JAHH-65B-R3B	JAHH-65B-R3B
Antenna Make	ANDREW	ANDREW	ANDREW	ANDREW	ANDREW	ANDREW
Antenna Centerline(Ft)	140	140	140	140	140	140
Mechanical Down-Tilt(Deg.)	0	0	0	0	0	0
Electrical Down-Tilt	2	4	1	2	4	2
Tip Height	143	143	143	143	143	143
Regulatory Power	99.28	98.21	98.35	69.75	70.4	69.75
TMA Make						
TMA Model						
RRU Make	Nokia	Nokia	Nokia	Samsung	Samsung	Samsung
RRU Model	UHBA B13 RRH 4x30	UHBA B13 RRH 4x30	UHBA B13 RRH 4x30	B5/B13 RRH-BR04C (RFV01U-D2A)	B5/B13 RRH-BR04C (RFV01U-D2A)	B5/B13 RRH-BR04C (RFV01U-D2A)
Number of Tx, Rx Lines	2,2	2,2	2,2	4,4	4,4	4,4
Position						
Transmitter Id	4757980	4757982	4757984	7842339	7842341	7842343
Source	ATOLL_API	ATOLL_API	ATOLL_API	ATOLL_API	ATOLL_API	ATOLL_API

nL-Sub6

	5GLS		
Sector	**0001**	**0002**	**0003**
Azimuth	10	140	240
Cell / ENode B ID	0649451	0649451	0649451
Antenna Model	nL-Sub6 Antenna	nL-Sub6 Antenna	nL-Sub6 Antenna
Antenna Make	TBD	TBD	TBD
Antenna Centerline(Ft)	140	140	140
Mechanical Down-Tilt(Deg.)	0	0	0
Electrical Down-Tilt	3	3	3
Tip Height	142.1	142.1	142.1
Regulatory Power	2861.66	2861.66	2861.66
TMA Make			
TMA Model			
RRU Make	Samsung	Samsung	Samsung
RRU Model	VZS01	VZS01	VZS01
Number of Tx, Rx Lines	4,4	4,4	4,4
Position			
Transmitter Id	7842354	7842355	7842356
Source	ATOLL_API	ATOLL_API	ATOLL_API

850 MHZ LTE

	5GLS		
Sector	**01**	**02**	**03**
Azimuth	10	140	240
Cell / ENode B ID	064451	064451	064451
Antenna Model	JAHH-65B-R3B	JAHH-65B-R3B	JAHH-65B-R3B
Antenna Make	ANDREW	ANDREW	ANDREW
Antenna Centerline(Ft)	140	140	140
Mechanical Down-Tilt(Deg.)	0	0	0
Electrical Down-Tilt	2	4	2
Tip Height	143	143	143
Regulatory Power	322.42	322.42	322.42
TMA Make			
TMA Model			
RRU Make	Samsung	Samsung	Samsung
RRU Model	B5/B13 RRH-BR04C (RFV01U-D2A)	B5/B13 RRH-BR04C (RFV01U-D2A)	B5/B13 RRH-BR04C (RFV01U-D2A)
Number of Tx, Rx Lines	4,4	4,4	4,4
Position			
Transmitter Id	9271508	9271509	9271510
Source	ATOLL_API	ATOLL_API	ATOLL_API

Service Comments

Callsigns Per Antenna

Sector	Antenna Make	Antenna Mode	Ant CL Height AGL	Tip Height	Azimuth (TN)	Electrical Tilt	Mechanical Tilt	Gain	Beamwidth	Regulatory Power	Callsigns						
											700	850	1900	2100	28 GHz	31 GHz	39 GHz
No data available.																	

Callsigns

Callsign	Market	Radio Code	Market Number	Block	State	County	Licensee Name	Wholly Owned	Total MHZ	Freq Range 1	Freq Range 2	Freq Range 3	Freq Range 4	Regulatory Power	Threshold (W)	POPs/Sq Mi	Status	Action	Approved for Insvc
WQJQ689	*Northeast*	*WU*	*REA001*	*C*	*CT*	*Litchfield*	*Cellco Partnership*	*Yes*	*22.000*	*746.000-757.000*	*776.000-787.000*	*.000-.000*	*.000-.000*	*70.4*	*1000*	*206.32*	*Active*	*added*	*Yes*
KNKN833	*Connecticut 1 - Litchfield*	*CL*	*CMA357*	*A*	*CT*	*Litchfield*	*Cellco Partnership*	*Yes*	*25.000*	*824.000-835.000*	*869.000-880.000*	*845.000-846.500*	*890.000-891.500*	*470.22*	*500*	*206.32*	*Active*	*added*	*Yes*
WQEM953	*New Haven-Waterbury-Meriden, CT*	*CW*	*BTA318*	*C*	*CT*	*Litchfield*	*Cellco Partnership*	*Yes*	*10.000*	*1895.000-1900.000*	*1975.000-1980.000*	*.000-.000*	*.000-.000*	*265.68*	*1640*	*206.32*	*Active*	*added*	*Yes*
KNLH262	*New Haven-Waterbury-Meriden, CT*	*CW*	*BTA318*	*F*	*CT*	*Litchfield*	*Cellco Partnership*	*Yes*	*10.000*	*1890.000-1895.000*	*1970.000-1975.000*	*.000-.000*	*.000-.000*	*265.68*	*1640*	*206.32*	*Active*	*added*	*Yes*
WQGD528	*Connecticut 1 - Litchfield*	*AW*	*CMA357*	*A*	*CT*	*Litchfield*	*Cellco Partnership*	*Yes*	*20.000*	*1710.000-1720.000*	*2110.000-2120.000*	*.000-.000*	*.000-.000*	*539.99*	*1640*	*206.32*	*Active*	*added*	*Yes*
WQVQ458	*New York-No. New Jer.-Long Island, NY-NJ-CT-PA-MA-*	*AW*	*BEA010*	*B*	*CT*	*Litchfield*	*Cellco Partnership*	*Yes*	*20.000*	*1720.000-1730.000*	*2120.000-2130.000*	*.000-.000*	*.000-.000*	*539.99*	*1640*	*206.32*	*Active*	*added*	*Yes*
WQVQ457	*New York-No. New Jer.-Long Island, NY-NJ-CT-PA-MA-*	*AW*	*BEA010*	*C*	*CT*	*Litchfield*	*Cellco Partnership*	*Yes*	*10.000*	*1730.000-1735.000*	*2130.000-2135.000*	*.000-.000*	*.000-.000*	*539.99*	*1640*	*206.32*	*Active*	*added*	*Yes*
WQCS396	New Haven-Waterbury-Meriden, CT	CW	BTA318	C	CT	Litchfield	Cellco Partnership	Yes	10.000	1905.000-1910.000	1985.000-1990.000	.000-.000	.000-.000		1640	206.32	Active		Yes
WPOH945	New Haven-Waterbury-Meriden, CT	LD	BTA318	A	CT	Litchfield	Cellco Partnership	Yes	300.000	29100.000-29250.000	31075.000-31225.000	.000-.000	.000-.000			206.32	Active		No
WPLM399	New Haven-Waterbury-Meriden, CT	LD	BTA318	B	CT	Litchfield	Cellco Partnership	Yes	150.000	31000.000-31075.000	31225.000-31300.000	.000-.000	.000-.000			206.32	Active		No
WRBA736	New Haven-Waterbury-Meriden, CT	UU	BTA318	L1	CT	Litchfield	Cellco Partnership	Yes	325.000	27600.000-27925.000	.000-.000	.000-.000	.000-.000			206.32	Active		Yes
WRBA737	New Haven-Waterbury-Meriden, CT	UU	BTA318	L2	CT	Litchfield	Cellco Partnership	Yes	325.000	27925.000-27950.000	28050.000-28350.000	.000-.000	.000-.000			206.32	Active		Yes
WRHD609	New York, NY	UU	PEA001	M1	CT	Litchfield	Straight Path Spectrum, LLC	Yes	100.000	37600.000-37700.000	.000-.000	.000-.000	.000-.000			206.32	Active		Yes
WRHD610	New York, NY	UU	PEA001	M10	CT	Litchfield	Straight Path Spectrum, LLC	Yes	100.000	38500.000-38600.000	.000-.000	.000-.000	.000-.000			206.32	Active		Yes
WRHD611	New York, NY	UU	PEA001	M2	CT	Litchfield	Straight Path Spectrum, LLC	Yes	100.000	37700.000-37800.000	.000-.000	.000-.000	.000-.000			206.32	Active		Yes

WRHD612	New York, NY	UU	PEA001	M3	CT	Litchfield	Straight Path Spectrum, LLC	Yes	100.000	37800.000-37900.000	.000-.000	.000-.000	.000-.000			206.32	Active		Yes
WRHD613	New York, NY	UU	PEA001	M4	CT	Litchfield	Straight Path Spectrum, LLC	Yes	100.000	37900.000-38000.000	.000-.000	.000-.000	.000-.000			206.32	Active		Yes
WRHD614	New York, NY	UU	PEA001	M5	CT	Litchfield	Straight Path Spectrum, LLC	Yes	100.000	38000.000-38100.000	.000-.000	.000-.000	.000-.000			206.32	Active		Yes
WRHD615	New York, NY	UU	PEA001	M6	CT	Litchfield	Straight Path Spectrum, LLC	Yes	100.000	38100.000-38200.000	.000-.000	.000-.000	.000-.000			206.32	Active		Yes
WRHD616	New York, NY	UU	PEA001	M7	CT	Litchfield	Straight Path Spectrum, LLC	Yes	100.000	38200.000-38300.000	.000-.000	.000-.000	.000-.000			206.32	Active		Yes
WRHD617	New York, NY	UU	PEA001	M8	CT	Litchfield	Straight Path Spectrum, LLC	Yes	100.000	38300.000-38400.000	.000-.000	.000-.000	.000-.000			206.32	Active		Yes
WRHD618	New York, NY	UU	PEA001	M9	CT	Litchfield	Straight Path Spectrum, LLC	Yes	100.000	38400.000-38500.000	.000-.000	.000-.000	.000-.000			206.32	Active		Yes
WRHD619	New York, NY	UU	PEA001	N1	CT	Litchfield	Straight Path Spectrum, LLC	Yes	100.000	38600.000-38700.000	.000-.000	.000-.000	.000-.000			206.32	Active		No
WRDG500	New York, NY	UU	PEA001	S2	CT	Litchfield	Cellco Partnership	Yes	400.000	37800.000-38200.000	.000-.000	.000-.000	.000-.000			206.32	Active		Yes

- Port 1 & 2 are for low band (698-787 MHz).
- Port 3 & 4 are for low band (824-894 MHz).
- Port 3,4,5, & 6 are for high band (1695-2360 MHz).
- Antenna Smart Bias Tee (SBT) is through port 1 for low band and port 5 for high band.
- AISG cable is only needed when drawn in the diagrams below, if it is not drawn then SBT is enough to control all RET motors.
- Not all SBT ports are needed to control RET, only green port connection to green port will control RET.

RET DC signal pass for RET
(Port that will control RET)

Comments:

Diagram shows configuration as viewed from standing behind the antennas.

Antennas will be installed in that order from left to right.

Cap and weatherproof unused antenna ports.

All plumbing diagram colors are irrelevant except for AISG & Hybriflex cable. (For the coax colors follow Coax Colors guide above)

2" Side By Side Mount

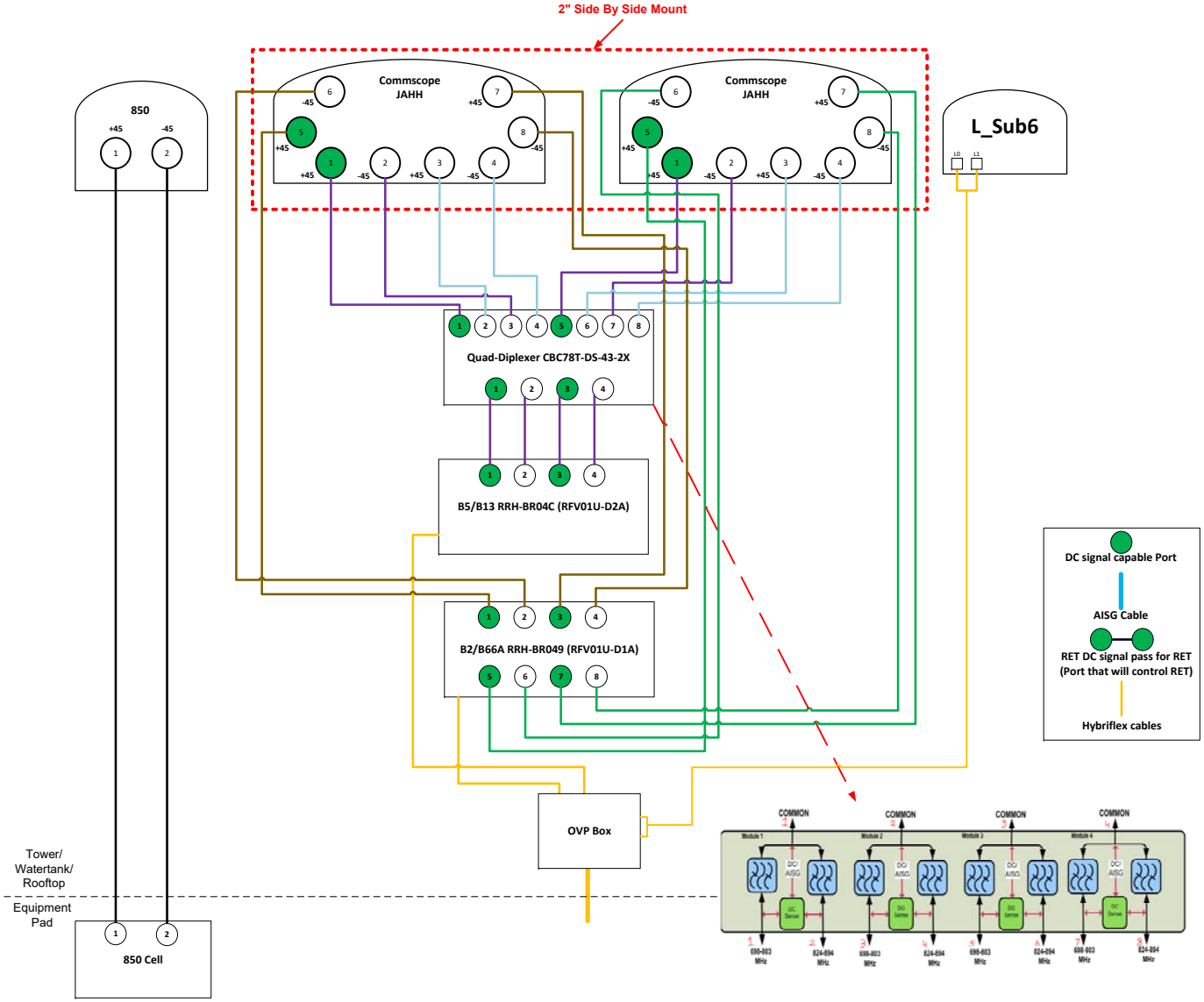

CENTEK engineering

Centered on Solutions℠

April 26, 2021

Mr. Andrew Leone
Verizon Wireless
20 Alexander Drive
Wallingford, CT 06492

Re: Letter ~ Antenna Model Clarification
Site Ref: Plymouth West Relo
33 Keegan Road
Plymouth, CT 06782

Centek Project No. 20150.04

Dear Mr. Leone,

This letter is intended to clarify the equipment depicted in the structural analysis and CDs for the proposed Verizon Wireless equipment upgrade at the above referenced site. One of the proposed antennas is referenced by multiple interchangeable names "Licensed Sub-6", "L-Sub6", "VZS01" and "MT6407-77A" per RF information provided by Verizon.

For the purpose of the analysis a worst case design loading was used based on the following dimensions and weight per direction from Verizon.

Dimensions: 35.1" x 16.1" x 5.5"

Weight: ± 87 lbs

If the dimensions of weight of the final antenna exceed the above the analysis will need to be re-run.

Respectfully Submitted by:

Timothy J. Lynn, PE
Structural Engineer

STATE OF CONNECTICUT
TIMOTHY J. LYNN
No. 29336
LICENSED
PROFESSIONAL ENGINEER

Maser Consulting Connecticut
2000 Midlantic Drive, Suite 100
Mt. Laurel, NJ 08054
856.797.0412
GDulnik@maserconsulting.com

Antenna Mount Analysis Report

Mount Analysis

SMART Tool Project #: 10019482
Maser Consulting Connecticut Project #: 20777381A

December 3, 2020

Site Information	*Site ID:*	*467737-VZW / Plymouth West Relo CT*
	Site Name:	*Plymouth West Relo CT*
	Carrier Name:	*Verizon Wireless*
	Address:	*33 Keegan RD* *Plymouth, Connecticut 06782* *Litchfield County*
	Latitude:	*41.66175944°*
	Longitude:	*-73.04564472°*
Structure Information	*Tower Type:*	*140-Ft Monopole*
	Mount Type:	*14.50-Ft Platform*

FUZE ID # 16244613

Analysis Results

Platform: **>200.0% Fail**

Report Prepared By: Morgan Chatmon

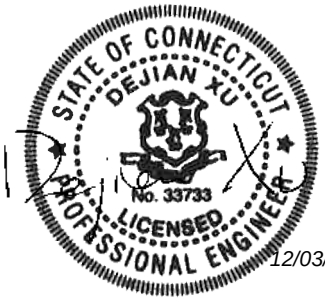

12/03/2020

Executive Summary:

The objective of this report is to determine the capacity of the antenna support mount at the subject facility for the final wireless telecommunications configuration, per the applicable codes and standards. Any modification listed under Sources of Information was assumed completed and was included in this analysis.

This analysis is inclusive of the mount structure only, and does not address the structural capacity of the supporting structure. This mounting frame was not analyzed as an anchor attachment point for fall protection. All climbing activities are required to have a fall protection plan completed by a competent person.

Sources of Information:

Document Type	Remarks
Radio Frequency Data Sheet (RFDS)	*Verizon RFDS Site ID: 2073514, dated October 27, 2020*
Mount Mapping Report	*Tower Engineering Professionals, Site ID: 467737, dated November 19, 2020*

Analysis Criteria:

Codes and Standards:	ANSI/TIA-222-H	
Wind Parameters:	Basic Wind Speed (Ultimate 3-sec. Gust), V_{ULT}:	116 mph
	Ice Wind Speed (3-sec. Gust):	50 mph
	Design Ice Thickness:	1.00 in
	Risk Category:	II
	Exposure Category:	B
	Topographic Category:	1
	Topographic Feature Considered:	N/A
	Topographic Method:	N/A
	Ground Elevation Factor, K_e:	0.971
Seismic Parameters:	S_S:	0.186
	S_1:	0.054
Maintenance Parameters:	Wind Speed (3-sec. Gust):	30 mph
	Maintenance Live Load, Lv:	250 lbs.
	Maintenance Live Load, Lm:	500 lbs.
Analysis Software:	RISA-3D (V17)	

Final Loading Configuration:

The following equipment has been considered for the analysis of the mount:

Mount Elevation (ft)	Equipment Elevation (ft)	Quantity	Manufacturer	Model	Status
138.00	140.00	3	-	nL-Sub6 Antenna	Added
		3	Commscope	CBC78T-DS-43-2X	
		1	RFS	DB-C1-12C-24AB-0Z	
		3	Samsung	B2/B66A RRH-BR049	
		3	Samsung	B5/B13 RRH-BR04C	
		6	Commscope	JAHH-65B-R3B	
		3	Andrew	LNX-6514DS-A1M	Retained

Standard Conditions:

1. All engineering services are performed on the basis that the information provided to Maser Consulting Connecticut and used in this analysis is current and correct. The existing equipment loading has been applied at locations determined from the supplied documentation. Any deviation from the loading locations specified in this report shall be communicated to Maser Consulting Connecticut to verify deviation will not adversely impact the analysis.

2. Mounts are assumed to have been properly fabricated, installed and maintained in good condition, twist free and plumb in accordance with its original design and manufacturer's specifications.

   Obvious safety and structural issues/deficiencies noticed at the time of the mount mapping and reported in the Mount Mapping Report are assumed to be corrected and documented as part of the PMI process and are not considered in the mount analysis.

   The mount analysis and the mount mapping are not a condition assessment of the mount. Proper maintenance and condition assessments are still required post analysis.

3. For mount analyses completed from other data sources (including new replacement mounts) and not specifically mapped by Maser Consulting Connecticut, the mounts are assumed to have been properly fabricated, installed and maintained in good condition, twist free and plumb in accordance with its original design and manufacturer's specifications.

4. All member connections are assumed to have been designed to meet or exceed the load carrying capacity of the connected member unless otherwise specified in this report.

5. The mount was checked up to, and including, the bolts that fasten it to the mount collar/attachment and threaded rod connections in collar members if applicable. Local deformation and interaction between the mount collar/attachment and the supporting tower structure are outside the scope of this analysis.

6. All services are performed, results obtained, and recommendations made in accordance with generally accepted engineering principles and practices. Maser Consulting Connecticut is not responsible for the conclusion, opinions, and recommendations made by others based on the information supplied.

7. Structural Steel Grades have been assumed as follows, if applicable, unless otherwise noted in this analysis:
    - o Channel, Solid Round, Angle, Plate — ASTM A36 (Gr. 36)
    - o HSS (Rectangular) — ASTM 500 (Gr. B-46)
    - o Pipe — ASTM A53 (Gr. B-35)
    - o Threaded Rod — F1554 (Gr. 36)
    - o Bolts — ASTM A325

Discrepancies between in-field conditions and the assumptions listed above may render this analysis invalid unless explicitly approved by Maser Consulting Connecticut.

Analysis Results:

Component	Utilization %	Pass/Fail
Cross Plate	***185.9%***	***Fail***
Mount Pipe	*40.4%*	*Pass*
Bottom Corner Plate	***123.5%***	***Fail***
Support Rail Plate	*12.6%*	*Pass*
Support Rail	*51.3%*	*Pass*
Standoff Horizontal	*77.4%*	*Pass*
Face Plate	*87.9%*	*Pass*
Face Horizontal	***155.3%***	***Fail***
Cross Arm	***183.9%***	***Fail***
Mount Connection	***>200.0%***	***Fail***

Structure Rating – *(Controlling Utilization of all Components)*	**185.9%**

Recommendation:

The existing mount is **INSUFFICIENT** for the final loading. The following modification will be required prior to any installation:

- Install new kicker kit
- Install new support rail plan bracing
- Install new standoff bracing members

If the modifications listed above are installed, the maximum structure rating will be 50.3**%**. Please note that this modification and structure rating are based on preliminary calculations and are for reference only. A final modification packet (including design drawings) can be provided under a separate scope of work. Separate modification design fees will apply.

ANSI/ASSP rigging plan review services compliant with the requirements of ANSI/TIA 322 are available for a Construction Class IV site or other, if required. Separate review fees will apply.

Attachments:

1. Mount Photos
2. Cost Estimate
3. Mount Mapping Report (for reference only)
4. Analysis Calculations
5. Antenna Placement Diagrams
6. TIA Adoption and Wind Speed Usage Letter

11/19/2020 13:57

11/19/2020 14:25

MASER CONSULTING P.A.	Antenna Mount Modification Cost Estimate			RECOMMENDATION		MODIFICATION	Mount Capacity - Pre Mod	>200%	M/A Project Number:	20777381A
							Mount Capacity - Post Mod - Passing	50.3%	Offer 2 Mods	No
	Client Name:	Verizon Wireless					Mount Capacity - Post Mod - Extra Capacity	49.7%	Wind Speed (mph):	116
	Site Name:	Plymoth West Relo CT					Structure Type:	Monopole	Design ANSI/TIA Standard:	TIA-222-H
	Site Number or ID:	467737		Select State		Connecticut	RAD Elevation (ft.):	140	M/A Completed Date:	12/3/2020

Cost Estimates

Mount Kit Provider	Description	Quantity	Sub-Totals	Item Cost*	VENDOR	COMMENTS
MOUNT MODIFICATION - PASSING						PASSING FIX - NOTES
VZWSMART						•Install new kicker kit •Install new support rail plan bracing •Install new standoff bracing members
VZWSMART-PLK2	Plan bracing kit for 3-sided support rails. Fits onto 2.375" - 2.875" OD pipes. Mat'l for 3 sectors included in kit.	1	444.74	444.74		
VZWSMART-PLK5	Kicker kit. Includes 3 sectors. Fits up to 6" wide round or rectangular standoff member. Collar mount not included.	1	579.79	579.79		
VZWSMART-PLK7	3-sided collar mount. Fits 12" to 45" diameter pole.	1	480.87	480.87		
Custom - Passing	ADD NONSTANDARD PARTS & LABOR	3	339.30	1,017.90		
	TOTAL MATERIAL COSTS - EXCLUDES SHIPPING & TAXES			2,523.30	VZWSMART	ADDITIONAL COMMENTS
	INSTALLATION ESTIMATED DAYS	1	$3,000.00	$3,000.00	GC ON INSTALL	ESTIMATES ASSUME THE GC COMPLETES MODIFICATION AS PART OF SITE WORK
	TOTAL ESTIMATED COSTS:		50%	$5,523		NO ADDITIONAL MOBILIZATION CONSIDERED OR SPECIFIC LIFTING EQUIPMENT
NOT APPROVED FOR CONSTRUCTION – SEE FORMAL MODIFICATION DRAWINGS DO NOT ORDER MATERIALS BASED ON COST ESTIMATE SINCE FINAL DESIGN MAY VARY						ESTIMATES EXCLUDE SHIPPING & TAXES IF APPLICABLE

V3.0 Updated on 8-31-2020

Antenna Mount Mapping Form (PATENT PENDING)

FCC # Not Posted

Tower Owner:	Unknown	**Mapping Date:**	11/19/2020
Site Name:	Plymouth West Relo CT	**Tower Type:**	Monopole
Site Number or ID:	467737	**Tower Height (Ft.):**	140
Mapping Contractor:	TEP	**Mount Elevation (Ft.):**	138

This antenna mapping form is the property of TES and under **PATENT PENDING**. The formation contained herein is considered confidential in nature and is to be used only for the specific customer it was intended for. Reproduction, transmission, publication, modification or disclosure by any method is prohibited except by express written permission of TES. All means and methods are the responsibility of the contractor and the work shall be compliant with ANSI/ASSE A 10.48, OSHA, FCC, FAA and other safety requirements that may apply. TES is not warrantying the usability of the safety climb as it must be assessed prior to each use in compliance with OSHA requirements.

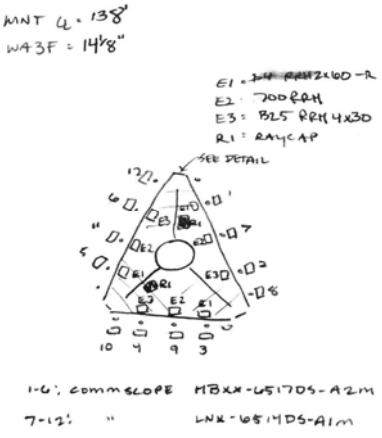

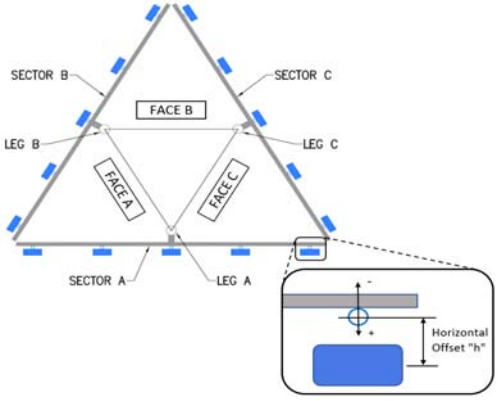

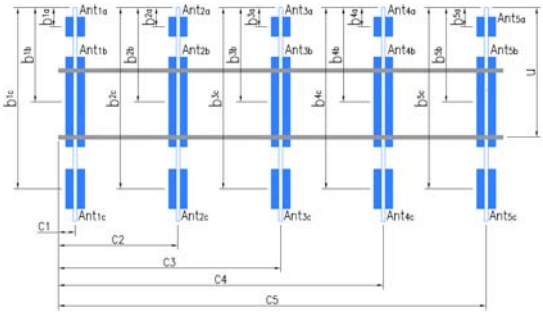

Antenna Layout (Looking Out From Tower)

Mount Pipe Configuration and Geometries [Unit = Inches]

Sector / Position	Mount Pipe Size & Length	Vertical Offset Dimension "u"	Horizontal Offset "C1, C2, C3, etc."	Sector / Position	Mount Pipe Size & Length	Vertical Offset Dimension "u"	Horizontal Offset "C1, C2, C3, etc."
A1	2.4"Ø x 1/8" x 8'-0"	62.50	3.50	C1	2.4"Ø x 1/8" x 8'-0"	62.50	3.50
A2	2.4"Ø x 1/8" x 8'-0"	62.50	31.50	C2	2.4"Ø x 1/8" x 8'-0"	62.50	31.50
A3	2.4"Ø x 1/8" x 8'-0"	62.50	87.50	C3	2.4"Ø x 1/8" x 8'-0"	62.50	87.50
A4	2.4"Ø x 1/8" x 8'-0"	62.50	143.50	C4	2.4"Ø x 1/8" x 8'-0"	62.50	143.50
A5	2.4"Ø x 1/8" x 8'-0"	62.50	172.25	C5	2.4"Ø x 1/8" x 8'-0"	62.50	172.25
A6				C6			
B1	2.4"Ø x 1/8" x 8'-0"	62.50	3.50	D1			
B2	2.4"Ø x 1/8" x 8'-0"	62.50	31.50	D2			
B3	2.4"Ø x 1/8" x 8'-0"	62.50	87.50	D3			
B4	2.4"Ø x 1/8" x 8'-0"	62.50	143.50	D4			
B5	2.4"Ø x 1/8" x 8'-0"	62.50	172.25	D5			
B6				D6			

Distance between bottom rail and mount CL elevation (dim d). Unit is inches. See 'Mount Elev Ref' tab for details. :	0.00
Distance from top of bottom support rail to lowest tip of ant./eqpt. of Carrier above. (N/A if > 10 ft.) :	
Distance from top of bottom support rail to highest tip of ant./eqpt. of Carrier below. (N/A if > 10 ft.) :	
Please enter additional infomation or comments below.	

Tower Face Width at Mount Elev. (ft.):		Tower Leg Size or Pole Shaft Diameter at Mount Elev. (in.):	26.71

	Enter antenna model. If not labeled, enter "Unknown".						Mounting Locations [Units are inches and degrees]			Photos of antennas
Ants. Items	Antenna Models if Known	Width (in.)	Depth (in.)	Height (in.)	Coax Size and Qty	Antenna Center-line (Ft.)	Vertical Distances"b_{1a}, b_{2a}, b_{3a}, b_{1b}...." (Inches)	Horiz. Offset "h" (Use "-" if Ant. is behind)	Antenna Azimuth (Degrees)	Photo Numbers
Sector A										
Ant_{1a}										
Ant_{1b}										
Ant_{1c}										
Ant_{2a}	HBXX-6517DS-A2M	12.00	6.50	75.00	Raycap	141.042	26.00	7.50	30.00	50-51
Ant_{2b}	B4 RRH 2x60-4R	10.63	5.75	36.60		140.875	28.00	-6.50		52-53
Ant_{2c}										
Ant_{3a}	LNX-6514DS-A1M	11.90	7.10	72.70	Raycap	140.25	35.50	7.00	30.00	54-56
Ant_{3b}	KS24822L1	15.00	7.90	15.70		140.708	30.00	-6.50		57-58
Ant_{3c}										
Ant_{4a}	HBXX-6517DS-A2M	12.00	6.50	75.00	Raycap	141.042	26.00	7.50	30.00	59-60
Ant_{4b}	B25 RRH 4x30	12.00	7.20	21.20		140.75	29.50	-7.50		61-62
Ant_{4c}										
Ant_{5a}	LNX-6514DS-A1M	11.90	7.10	72.70	(2) 1.625	140.25	35.50	7.00	30.00	63-64
Ant_{5b}										
Ant_{5c}										
Ant on Standoff	RRFDC-3315-PF-48	15.73	10.25	25.66	(1) 1.25 Hybrid					94-95
Ant on Standoff										
Ant on Tower										
Ant on Tower										

Mount Azimuth (Degree) for Each Sector			Tower Leg Azimuth (Degree) for Each Sector		
Sector A:	30.00	Deg	Leg A:		Deg
Sector B:	150.00	Deg	Leg B:		Deg
Sector C:	270.00	Deg	Leg C:		Deg
Sector D:		Deg	Leg D:		Deg

Climbing Facility Information			
Location:	150.00	Deg	Sector B
Climbing Facility	Corrosion Type:		Good condition.
	Access:		Climbing path was unobstructed.
	Condition:		Good condition.

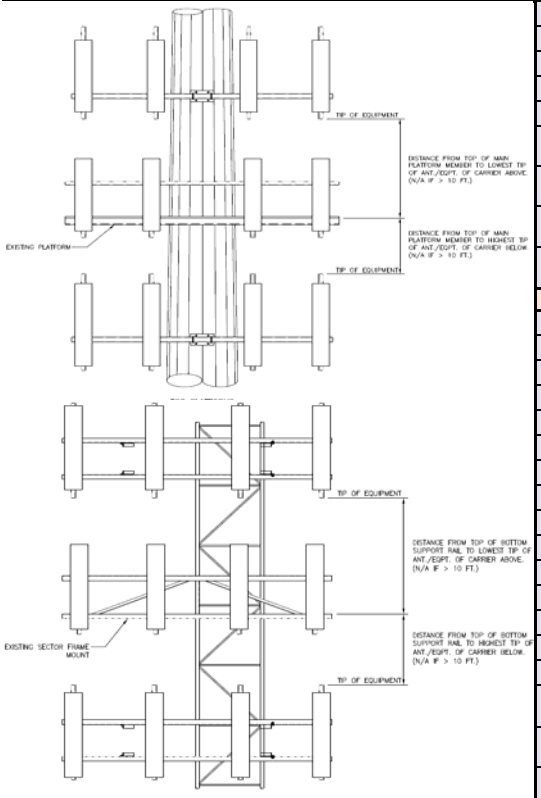

Sector B										
Ant_{1a}										
Ant_{1b}										
Ant_{1c}										
Ant_{2a}	HBXX-6517DS-A2M	12.00	6.50	75.00	Raycap	141.042	26.00	7.50	150.00	65-67
Ant_{2b}	B4 RRH 2x60-4R	10.63	5.75	36.60		140.875	28.00	-6.50		68-69
Ant_{2c}										
Ant_{3a}	LNX-6514DS-A1M	11.90	7.10	72.70	Raycap	140.25	35.50	7.00	150.00	70-71
Ant_{3b}	KS24822L1	15.00	7.90	15.70		140.708	30.00	-6.50		72-73
Ant_{3c}										
Ant_{4a}	HBXX-6517DS-A2M	12.00	6.50	75.00	Raycap	141.042	26.00	7.50	150.00	74-75
Ant_{4b}	B25 RRH 4x30	12.00	7.20	21.20		140.75	29.50	-7.50		76-77
Ant_{4c}										
Ant_{5a}	LNX-6514DS-A1M	11.90	7.10	72.70	(2) 1.625	140.25	35.50	7.00	150.00	78-79
Ant_{5b}										
Ant_{5c}										
Ant on Standoff										
Ant on Standoff										
Ant on Tower										
Ant on Tower										
Sector C										
Ant_{1a}										
Ant_{1b}										
Ant_{1c}										
Ant_{2a}	HBXX-6517DS-A2M	12.00	6.50	75.00	Raycap	141.042	26.00	7.50	270.00	80-81
Ant_{2b}	B4 RRH 2x60-4R	10.63	5.75	36.60		140.875	28.00	-6.50		82-83
Ant_{2c}										
Ant_{3a}	LNX-6514DS-A1M	11.90	7.10	72.70	Raycap	140.25	35.50	7.00	270.00	84-85
Ant_{3b}	KS24822L1	15.00	7.90	15.70		140.708	30.00	-6.50		86-87
Ant_{3c}										
Ant_{4a}	HBXX-6517DS-A2M	12.00	6.50	75.00	Raycap	141.042	26.00	7.50	270.00	88-89
Ant_{4b}	B25 RRH 4x30	12.00	7.20	21.20		140.75	29.50	-7.50		90-91
Ant_{4c}										
Ant_{5a}	LNX-6514DS-A1M	11.90	7.10	72.70	(2) 1.625	140.25	35.50	7.00	270.00	92-93
Ant_{5b}										
Ant_{5c}										
Ant on Standoff	RRFDC-3315-PF-48	15.73	10.25	25.66	(1) 1.25 Hybrid					96-97
Ant on Standoff										
Ant on Tower										
Ant on Tower										
Sector D										
Ant_{1a}										
Ant_{1b}										
Ant_{1c}										
Ant_{2a}										
Ant_{2b}										
Ant_{2c}										
Ant_{3a}										
Ant_{3b}										
Ant_{3c}										
Ant_{4a}										
Ant_{4b}										
Ant_{4c}										
Ant_{5a}										
Ant_{5b}										
Ant_{5c}										
Ant on Standoff										
Ant on Standoff										
Ant on Tower										
Ant on Tower										

Observed Safety and Structural Issues During the Mount Mapping		
Issue #	Description of Issue	Photo #

1		
2		
3		
4		
5		
6		
7		
8		

Mapping Notes
1. Please report any visible structural or safety issues observed on the antenna mounts (Damaged members, loose connections, tilting mounts, safety climb issues, etc.)
2. If the thickness of the existing pipes or tubing can't be obtained from a general tool (such as Caliper), please use an ultrasonic measurement tool (thickness gauge) to measure the thickness.
3. Please create all required detail sketches of the mounts and insert them into the "Sketches" tab.
4. Please measure and enter the bolt sizes and types under the Members Box in the spreadsheet of the mount type.
5. Take and label the photos of the tower, mounts, connections, antennas and all measurements. Minimum 50 photos are required.
6. Please measure and report the size and length of all existing antenna mounting pipes.
7. Please measure and report the antenna information for all sectors.
8. Don't delete or rearrange any sheet or contents of any sheet from this mapping form.

Standard Conditions
1. Obvious safety and structural issues/deficiencies noticed at the time of the mount mapping are to be reported in this mapping. However, this mount mapping is not a condition assessment of the mount.

Antenna Mount Mapping Form (PATENT PENDING)

FCC # Not Posted

Tower Owner:	Unknown	**Mapping Date:**	11/19/2020
Site Name:	Plymouth West Relo CT	**Tower Type:**	Monopole
Site Number or ID:	467737	**Tower Height (Ft.):**	140
Mapping Contractor:	TEP	**Mount Elevation (Ft.):**	138

This antenna mapping form is the property of TES and under **PATENT PENDING.** The formation contained herein is considered confidential in nature and is to be used only for the specific customer it was intended for. Reproduction, transmission, publication, modification or disclosure by any method is prohibited except by express written permission of TES. All means and methods are the responsibility of the contractor and the work shall be compliant with ANSI/ASSE A 10.48, OSHA, FCC, FAA and other safety requirements that may apply. TES is not warrantying the usability of the safety climb as it must be assessed prior to each use in compliance with OSHA requirements.

Please Insert Sketches of the Antenna Mount

PLYMOUTH

MNT @ 138'

WA3F = 14⅛"

E1 = [redacted] RR12x60 -R

E2 = 700 RRH

E3 = B25 RRH 4x30

R1 = RAYCAP

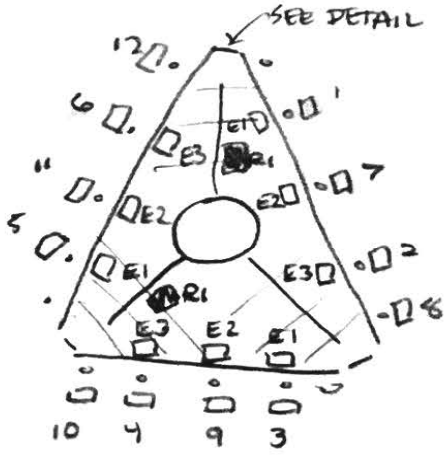

1-6: COMMSCOPE MBXX-65170S-A2M

7-12: " LNX-6514DS-A1M

	B	U	H
1-6	26	62½	7½
7-12	35½		7
E1	28		6½
E2	30		6½
E3	29½		7½

Please Insert Sketches of the Antenna Mount, cont'd

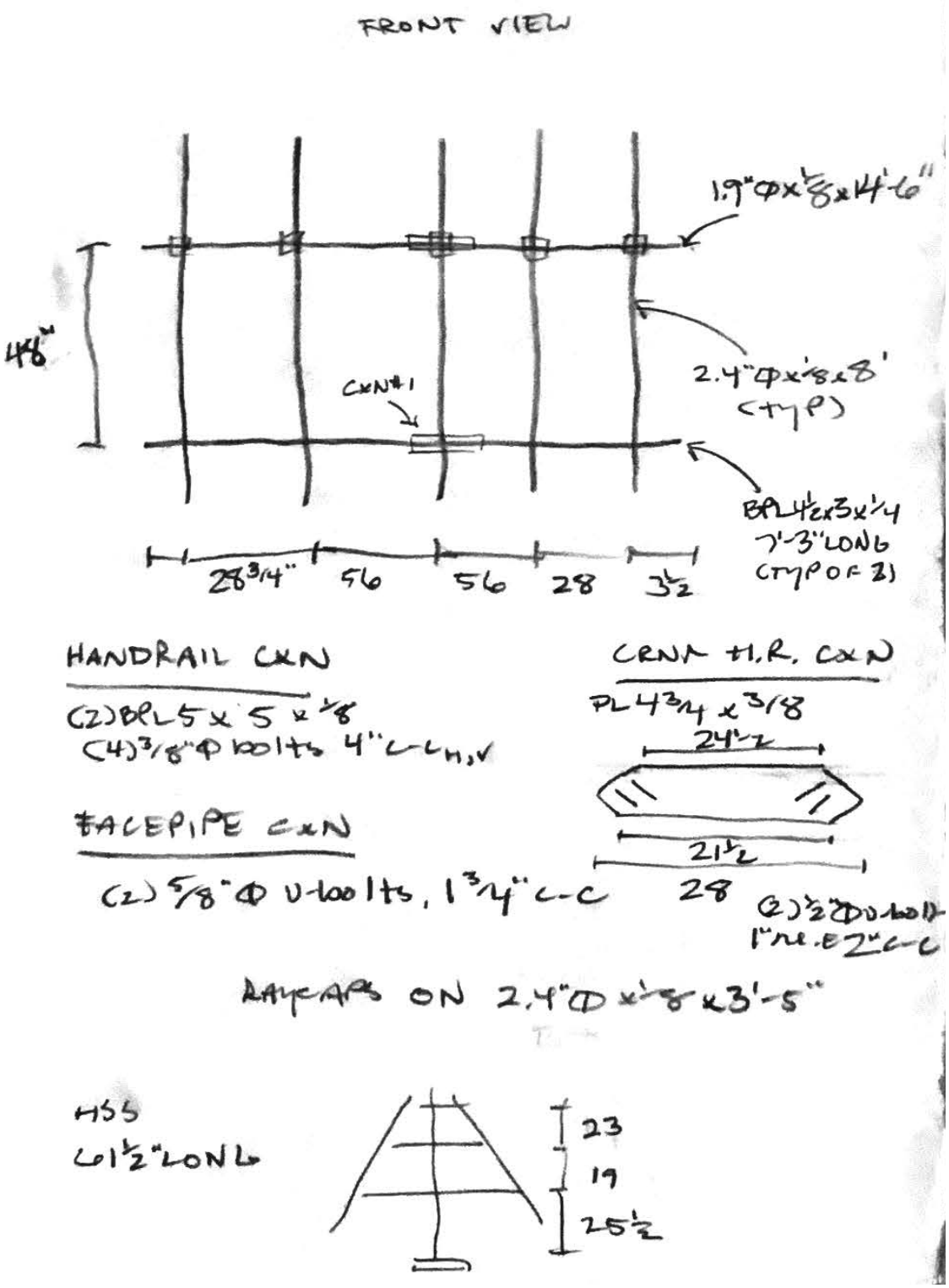

Please Insert Sketches of the Antenna Mount, cont'd

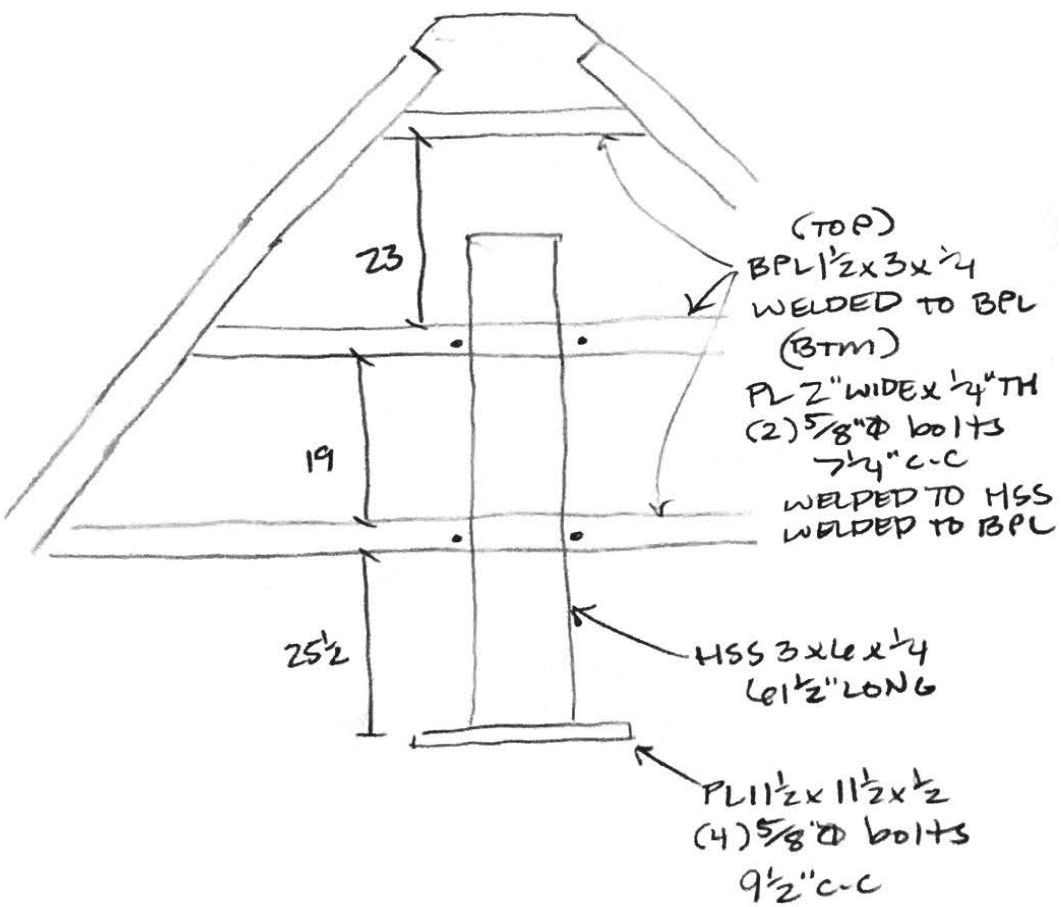

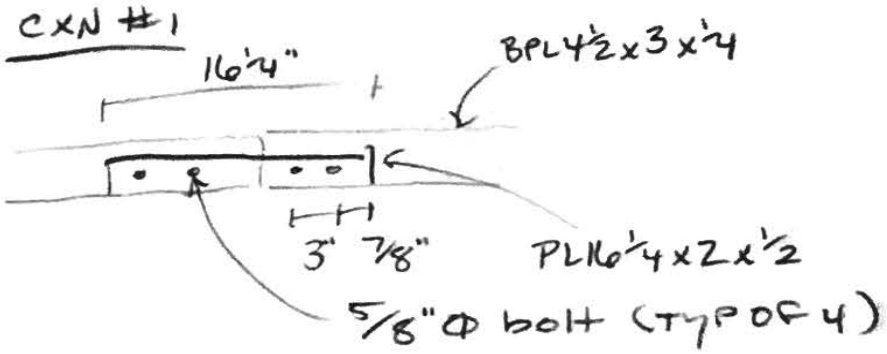

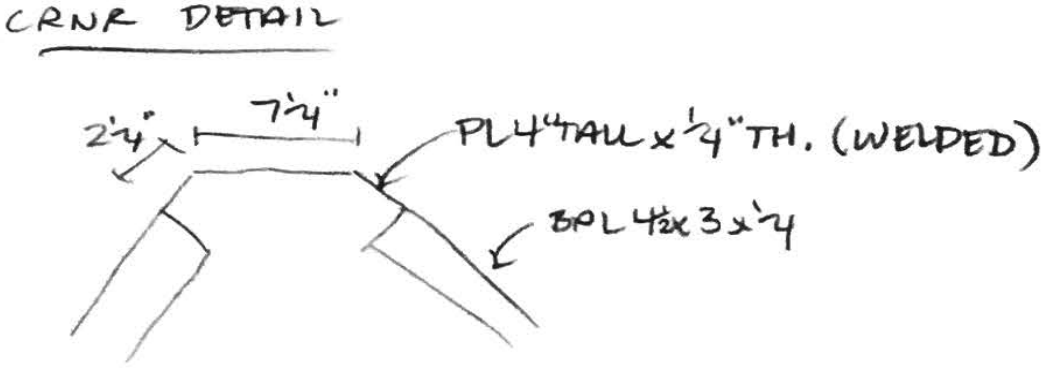

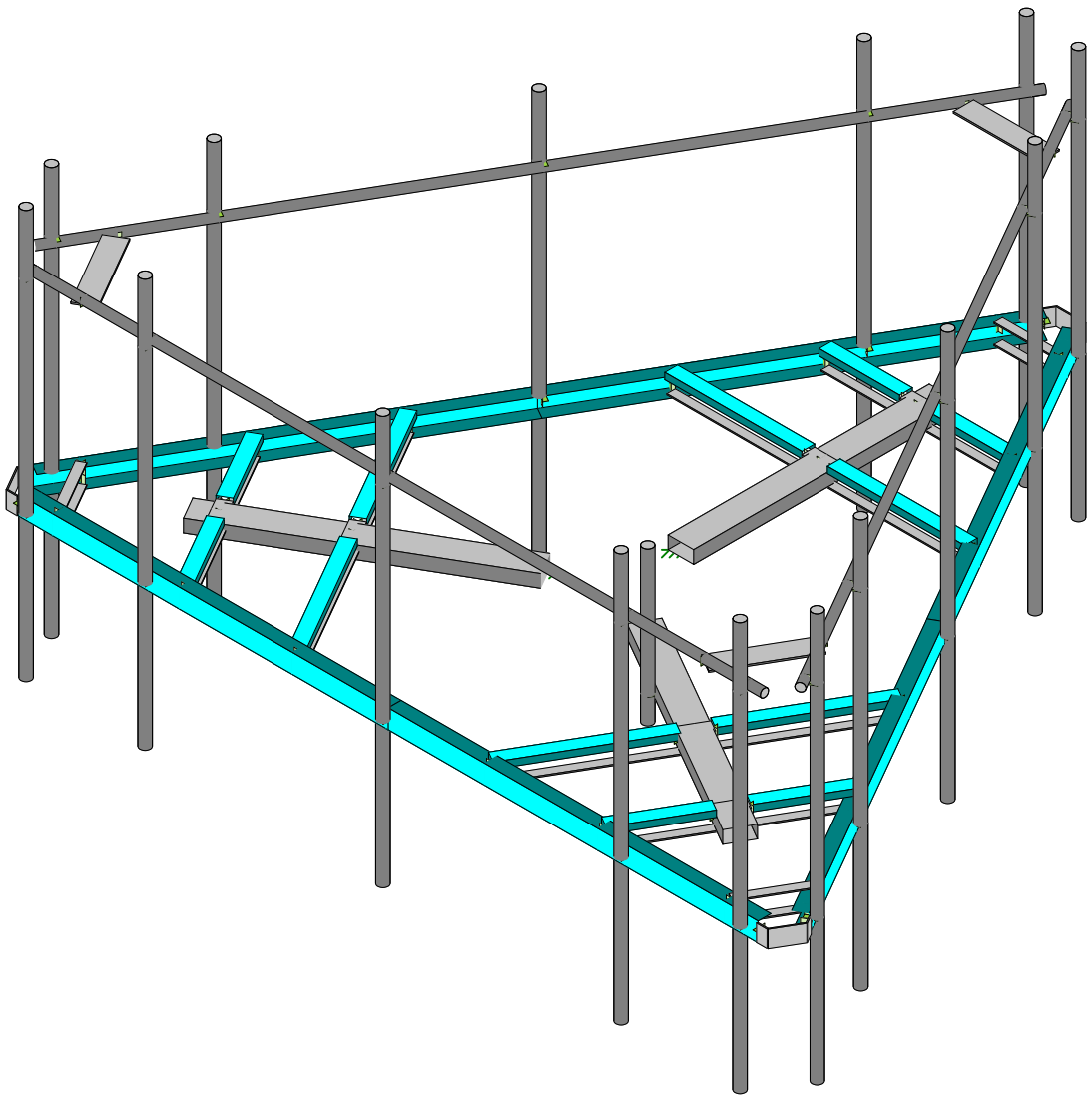

Envelope Only Solution

Maser Consulting	467737-VZW_MT_LO_H	SK - 1
MNC		Dec 3, 2020 at 8:31 AM
Project No. 20777381A		467737-VZW_MT_LO_H.r3d

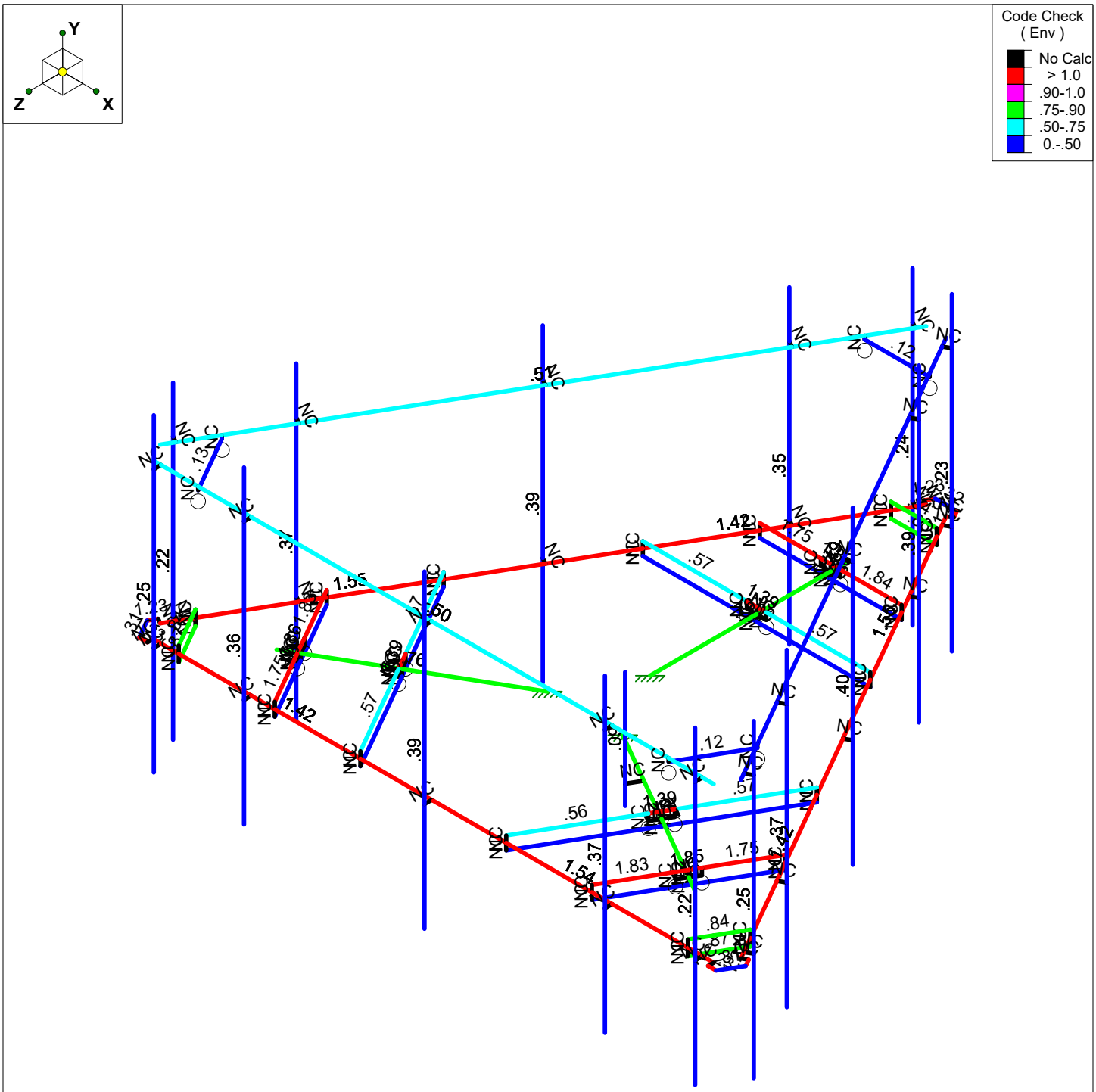

Member Code Checks Displayed (Enveloped)
Envelope Only Solution

Maser Consulting	467737-VZW_MT_LO_H	SK - 2
MNC		Dec 3, 2020 at 8:31 AM
Project No. 20777381A		467737-VZW_MT_LO_H.r3d

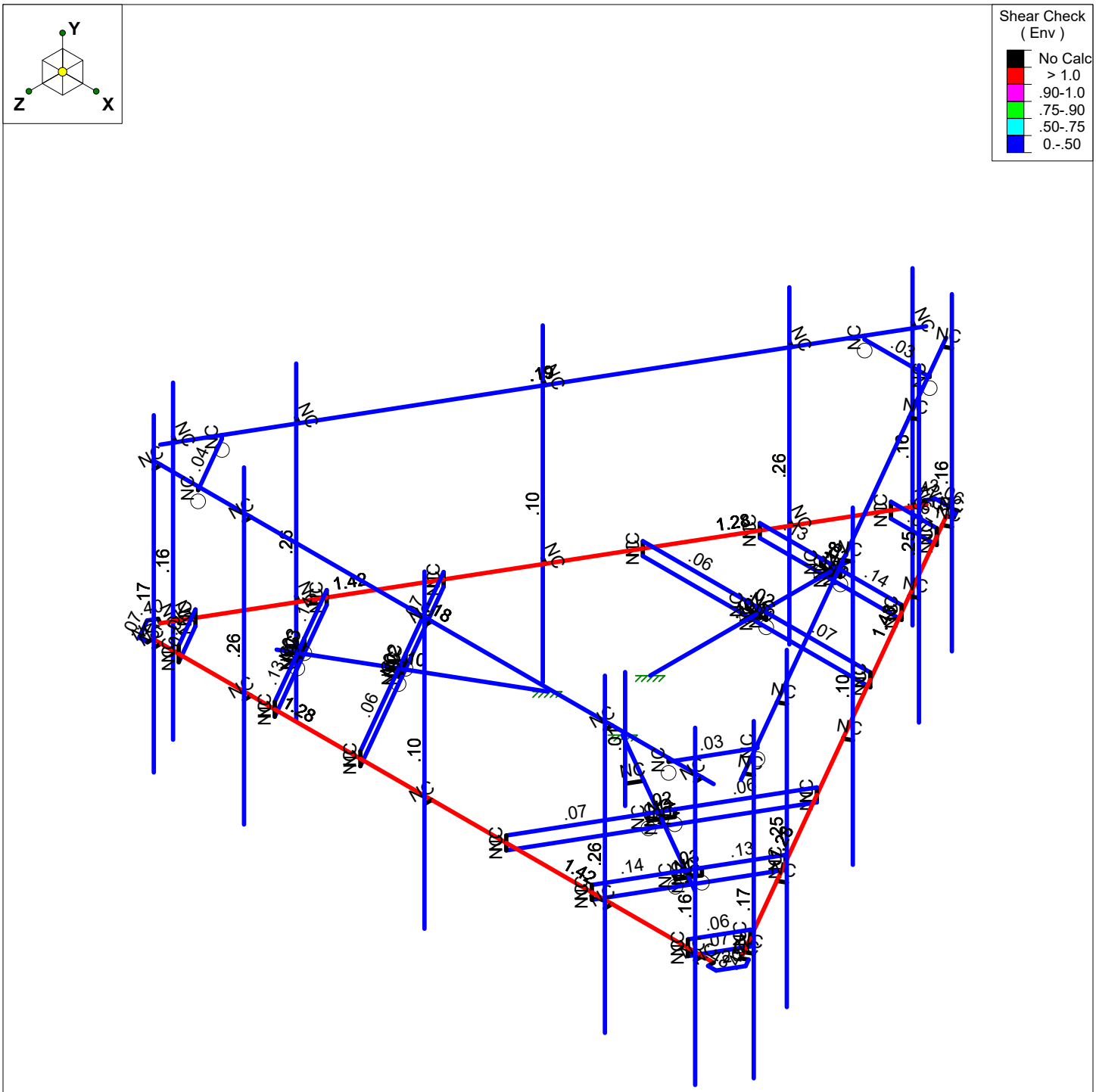

Member Shear Checks Displayed (Enveloped)
Envelope Only Solution

Maser Consulting	467737-VZW_MT_LO_H	SK - 3
MNC		Dec 3, 2020 at 8:32 AM
Project No. 20777381A		467737-VZW_MT_LO_H.r3d

Basic Load Cases

	BLC Description	Category	X Gravity	Y Gravity	Z Gravity	Joint	Point	Distributed	Area(Me...	Surface(P...
1	Antenna D	None					102			
2	Antenna Di	None					102			
3	Antenna Wo (0 Deg)	None					102			
4	Antenna Wo (30 Deg)	None					102			
5	Antenna Wo (60 Deg)	None					102			
6	Antenna Wo (90 Deg)	None					102			
7	Antenna Wo (120 Deg)	None					102			
8	Antenna Wo (150 Deg)	None					102			
9	Antenna Wo (180 Deg)	None					102			
10	Antenna Wo (210 Deg)	None					102			
11	Antenna Wo (240 Deg)	None					102			
12	Antenna Wo (270 Deg)	None					102			
13	Antenna Wo (300 Deg)	None					102			
14	Antenna Wo (330 Deg)	None					102			
15	Antenna Wi (0 Deg)	None					102			
16	Antenna Wi (30 Deg)	None					102			
17	Antenna Wi (60 Deg)	None					102			
18	Antenna Wi (90 Deg)	None					102			
19	Antenna Wi (120 Deg)	None					102			
20	Antenna Wi (150 Deg)	None					102			
21	Antenna Wi (180 Deg)	None					102			
22	Antenna Wi (210 Deg)	None					102			
23	Antenna Wi (240 Deg)	None					102			
24	Antenna Wi (270 Deg)	None					102			
25	Antenna Wi (300 Deg)	None					102			
26	Antenna Wi (330 Deg)	None					102			
27	Antenna Wm (0 Deg)	None					102			
28	Antenna Wm (30 Deg)	None					102			
29	Antenna Wm (60 Deg)	None					102			
30	Antenna Wm (90 Deg)	None					102			
31	Antenna Wm (120 De...	None					102			
32	Antenna Wm (150 De...	None					102			
33	Antenna Wm (180 De...	None					102			
34	Antenna Wm (210 De...	None					102			
35	Antenna Wm (240 De...	None					102			
36	Antenna Wm (270 De...	None					102			
37	Antenna Wm (300 De...	None					102			
38	Antenna Wm (330 De...	None					102			
39	Structure D	None		-1					7	
40	Structure Di	None						70	3	
41	Structure Wo (0 Deg)	None						140		
42	Structure Wo (30 Deg)	None						140		
43	Structure Wo (60 Deg)	None						140		
44	Structure Wo (90 Deg)	None						140		
45	Structure Wo (120 D...	None						140		
46	Structure Wo (150 D...	None						140		
47	Structure Wo (180 D...	None						140		
48	Structure Wo (210 D...	None						140		
49	Structure Wo (240 D...	None						140		
50	Structure Wo (270 D...	None						140		
51	Structure Wo (300 D...	None						140		
52	Structure Wo (330 D...	None						140		
53	Structure Wi (0 Deg)	None						140		
54	Structure Wi (30 Deg)	None						140		
55	Structure Wi (60 Deg)	None						140		
56	Structure Wi (90 Deg)	None						140		

Basic Load Cases (Continued)

	BLC Description	Category	X Gravity	Y Gravity	Z Gravity	Joint	Point	Distributed	Area(Me...	Surface(P...
57	Structure Wi (120 De...	None						140		
58	Structure Wi (150 De...	None						140		
59	Structure Wi (180 De...	None						140		
60	Structure Wi (210 De...	None						140		
61	Structure Wi (240 De...	None						140		
62	Structure Wi (270 De...	None						140		
63	Structure Wi (300 De...	None						140		
64	Structure Wi (330 De...	None						140		
65	Structure Wm (0 Deg)	None						140		
66	Structure Wm (30 De...	None						140		
67	Structure Wm (60 De...	None						140		
68	Structure Wm (90 De...	None						140		
69	Structure Wm (120 D...	None						140		
70	Structure Wm (150 D...	None						140		
71	Structure Wm (180 D...	None						140		
72	Structure Wm (210 D...	None						140		
73	Structure Wm (240 D...	None						140		
74	Structure Wm (270 D...	None						140		
75	Structure Wm (300 D...	None						140		
76	Structure Wm (330 D...	None						140		
77	Lm1	None					1			
78	Lm2	None					1			
79	Lv1	None					1			
80	Lv2	None					1			
81	BLC 39 Transient Are...	None						48		
82	BLC 40 Transient Are...	None						48		

Load Combinations

	Description	So..	P...	S...	BLC	Fac..	BLC	Fac..	BLC	Fac..	BLC	Fac..	BLC	Fac..	BLC	Fac..	BLC	Fac..	BLC	Fac..	BLC	Fac..	BLC	Fac...
1	1.2D+1.0Wo (0 Deg)	Yes	Y		1	1.2	39	1.2	3	1	41	1												
2	1.2D+1.0Wo (30 Deg)	Yes	Y		1	1.2	39	1.2	4	1	42	1												
3	1.2D+1.0Wo (60 Deg)	Yes	Y		1	1.2	39	1.2	5	1	43	1												
4	1.2D+1.0Wo (90 Deg)	Yes	Y		1	1.2	39	1.2	6	1	44	1												
5	1.2D+1.0Wo (120 D...	Yes	Y		1	1.2	39	1.2	7	1	45	1												
6	1.2D+1.0Wo (150 D...	Yes	Y		1	1.2	39	1.2	8	1	46	1												
7	1.2D+1.0Wo (180 D...	Yes	Y		1	1.2	39	1.2	9	1	47	1												
8	1.2D+1.0Wo (210 D...	Yes	Y		1	1.2	39	1.2	10	1	48	1												
9	1.2D+1.0Wo (240 D...	Yes	Y		1	1.2	39	1.2	11	1	49	1												
10	1.2D+1.0Wo (270 D...	Yes	Y		1	1.2	39	1.2	12	1	50	1												
11	1.2D+1.0Wo (300 D...	Yes	Y		1	1.2	39	1.2	13	1	51	1												
12	1.2D+1.0Wo (330 D...	Yes	Y		1	1.2	39	1.2	14	1	52	1												
13	1.2D + 1.0Di + 1.0Wi...	Yes	Y		1	1.2	39	1.2	2	1	40	1	15	1	53	1								
14	1.2D + 1.0Di + 1.0Wi...	Yes	Y		1	1.2	39	1.2	2	1	40	1	16	1	54	1								
15	1.2D + 1.0Di + 1.0Wi...	Yes	Y		1	1.2	39	1.2	2	1	40	1	17	1	55	1								
16	1.2D + 1.0Di + 1.0Wi...	Yes	Y		1	1.2	39	1.2	2	1	40	1	18	1	56	1								
17	1.2D + 1.0Di + 1.0Wi...	Yes	Y		1	1.2	39	1.2	2	1	40	1	19	1	57	1								
18	1.2D + 1.0Di + 1.0Wi...	Yes	Y		1	1.2	39	1.2	2	1	40	1	20	1	58	1								
19	1.2D + 1.0Di + 1.0Wi...	Yes	Y		1	1.2	39	1.2	2	1	40	1	21	1	59	1								
20	1.2D + 1.0Di + 1.0Wi...	Yes	Y		1	1.2	39	1.2	2	1	40	1	22	1	60	1								
21	1.2D + 1.0Di + 1.0Wi...	Yes	Y		1	1.2	39	1.2	2	1	40	1	23	1	61	1								
22	1.2D + 1.0Di + 1.0Wi...	Yes	Y		1	1.2	39	1.2	2	1	40	1	24	1	62	1								
23	1.2D + 1.0Di + 1.0Wi...	Yes	Y		1	1.2	39	1.2	2	1	40	1	25	1	63	1								
24	1.2D + 1.0Di + 1.0Wi...	Yes	Y		1	1.2	39	1.2	2	1	40	1	26	1	64	1								
25	1.2D + 1.5Lm1 + 1.0...	Yes	Y		1	1.2	39	1.2	77	1.5	27	1	65	1										
26	1.2D + 1.5Lm1 + 1.0...	Yes	Y		1	1.2	39	1.2	77	1.5	28	1	66	1										

Load Combinations (Continued)

	Description	So..	P...	S...	BLC	Fac..	BLC	Fac..	BLC	Fac..	BLC	Fac..	BLC	Fac..	BLC	Fac..	BLC	Fac..	BLC	Fac..	BLC	Fac..	BLC	Fac..	BLC	Fac...
27	1.2D + 1.5Lm1 + 1.0...	Yes	Y		1	1.2	39	1.2	77	1.5	29	1	67	1												
28	1.2D + 1.5Lm1 + 1.0...	Yes	Y		1	1.2	39	1.2	77	1.5	30	1	68	1												
29	1.2D + 1.5Lm1 + 1.0...	Yes	Y		1	1.2	39	1.2	77	1.5	31	1	69	1												
30	1.2D + 1.5Lm1 + 1.0...	Yes	Y		1	1.2	39	1.2	77	1.5	32	1	70	1												
31	1.2D + 1.5Lm1 + 1.0...	Yes	Y		1	1.2	39	1.2	77	1.5	33	1	71	1												
32	1.2D + 1.5Lm1 + 1.0...	Yes	Y		1	1.2	39	1.2	77	1.5	34	1	72	1												
33	1.2D + 1.5Lm1 + 1.0...	Yes	Y		1	1.2	39	1.2	77	1.5	35	1	73	1												
34	1.2D + 1.5Lm1 + 1.0...	Yes	Y		1	1.2	39	1.2	77	1.5	36	1	74	1												
35	1.2D + 1.5Lm1 + 1.0...	Yes	Y		1	1.2	39	1.2	77	1.5	37	1	75	1												
36	1.2D + 1.5Lm1 + 1.0...	Yes	Y		1	1.2	39	1.2	77	1.5	38	1	76	1												
37	1.2D + 1.5Lm2 + 1.0...	Yes	Y		1	1.2	39	1.2	78	1.5	27	1	65	1												
38	1.2D + 1.5Lm2 + 1.0...	Yes	Y		1	1.2	39	1.2	78	1.5	28	1	66	1												
39	1.2D + 1.5Lm2 + 1.0...	Yes	Y		1	1.2	39	1.2	78	1.5	29	1	67	1												
40	1.2D + 1.5Lm2 + 1.0...	Yes	Y		1	1.2	39	1.2	78	1.5	30	1	68	1												
41	1.2D + 1.5Lm2 + 1.0...	Yes	Y		1	1.2	39	1.2	78	1.5	31	1	69	1												
42	1.2D + 1.5Lm2 + 1.0...	Yes	Y		1	1.2	39	1.2	78	1.5	32	1	70	1												
43	1.2D + 1.5Lm2 + 1.0...	Yes	Y		1	1.2	39	1.2	78	1.5	33	1	71	1												
44	1.2D + 1.5Lm2 + 1.0...	Yes	Y		1	1.2	39	1.2	78	1.5	34	1	72	1												
45	1.2D + 1.5Lm2 + 1.0...	Yes	Y		1	1.2	39	1.2	78	1.5	35	1	73	1												
46	1.2D + 1.5Lm2 + 1.0...	Yes	Y		1	1.2	39	1.2	78	1.5	36	1	74	1												
47	1.2D + 1.5Lm2 + 1.0...	Yes	Y		1	1.2	39	1.2	78	1.5	37	1	75	1												
48	1.2D + 1.5Lm2 + 1.0...	Yes	Y		1	1.2	39	1.2	78	1.5	38	1	76	1												
49	1.2D + 1.5Lv1	Yes	Y		1	1.2	39	1.2	79	1.5																
50	1.2D + 1.5Lv2	Yes	Y		1	1.2	39	1.2	80	1.5																
51	1.4D	Yes	Y		1	1.4	39	1.4																		
52	Seismic Mass	Yes	Y		1	1	39	1																		

Joint Coordinates and Temperatures

	Label	X [ft]	Y [ft]	Z [ft]	Temp [F]	Detach From Diap...
1	CP	0	0	0	0	
2	N23	-0.974279	0	0.5625	0	
3	N24	-5.412659	0	3.125	0	
4	N47A	0.974279	0	0.5625	0	
5	N48A	5.412659	0	3.125	0	
6	N65	-0.	0	-1.125	0	
7	N66	-0.	0	-6.25	0	
8	N75	0.25	0.166667	-3.874997	0	
9	N76	-0.25	0.166667	-3.874997	0	
10	N77	0.25	0.166667	-5.791667	0	
11	N78	-0.25	0.166667	-5.791667	0	
12	N182	0.25	0	-3.874997	0	
13	N183	-.25	0	-3.874997	0	
14	N184	0.25	0	-5.791667	0	
15	N185	-0.25	0	-5.791667	0	
16	N186	-0.	0	-5.791667	0	
17	N187	-0.	0	-3.874997	0	
18	N188	-0.	0.166667	-5.791667	0	
19	N189	-0.	0.166667	-3.874997	0	
20	N113	-2.939925	0	-3.874997	0	
21	N114	2.939925	0	-3.874997	0	
22	N117	-2.939925	0.166667	-3.874997	0	
23	N118	2.939925	0.166667	-3.874997	0	
24	N113A	-1.833335	0	-5.791667	0	
25	N114A	1.833335	0	-5.791667	0	
26	N115	-1.833335	0.166667	-5.791667	0	

Joint Coordinates and Temperatures (Continued)

	Label	X [ft]	Y [ft]	Z [ft]	Temp [F]	Detach From Diap...
27	N114B	1.833335	0.166667	-5.791667	0	
28	N68	-3.480846	0.166667	1.720992	0	
29	N69	-3.230846	0.166667	2.154005	0	
30	N70	-5.140731	0.166667	2.679327	0	
31	N71	-4.890731	0.166667	3.11234	0	
32	N72	-3.480846	0	1.720992	0	
33	N73	-3.230846	0	2.154005	0	
34	N74	-5.140731	0	2.679327	0	
35	N75A	-4.890731	0	3.11234	0	
36	N76A	-5.015731	0	2.895833	0	
37	N77A	-3.355846	0	1.937498	0	
38	N78A	-5.015731	0.166667	2.895833	0	
39	N79	-3.355846	0.166667	1.937498	0	
40	N80	-1.885883	0	4.483548	0	
41	N81	-4.825808	0	-0.608551	0	
42	N82	-1.885883	0.166667	4.483548	0	
43	N83	-4.825808	0.166667	-0.608551	0	
44	N84	-4.099063	0	4.483548	0	
45	N85	-5.932398	0	1.308119	0	
46	N86	-4.099063	0.166667	4.483548	0	
47	N87	-5.932398	0.166667	1.308119	0	
48	N89	3.230846	0.166667	2.154005	0	
49	N90	3.480846	0.166667	1.720992	0	
50	N91	4.890731	0.166667	3.11234	0	
51	N92	5.140731	0.166667	2.679327	0	
52	N93	3.230846	0	2.154005	0	
53	N94	3.480846	0	1.720992	0	
54	N95	4.890731	0	3.11234	0	
55	N96	5.140731	0	2.679327	0	
56	N97	5.015731	0	2.895833	0	
57	N98	3.355846	0	1.937498	0	
58	N99	5.015731	0.166667	2.895833	0	
59	N100	3.355846	0.166667	1.937498	0	
60	N101	4.825808	0	-0.608551	0	
61	N102	1.885883	0	4.483548	0	
62	N103	4.825808	0.166667	-0.608551	0	
63	N104	1.885883	0.166667	4.483548	0	
64	N105	5.932398	0	1.308119	0	
65	N106	4.099063	0	4.483548	0	
66	N107	5.932398	0.166667	1.308119	0	
67	N108	4.099063	0.166667	4.483548	0	
68	N107A	0.	0	4.483548	0	
69	N108A	7.25	0	4.483548	0	
70	N109	-7.25	0	4.483548	0	
71	N107B	3.882867	0	-2.241774	0	
72	N108B	0.257867	0	-8.520458	0	
73	N109A	7.507867	0	4.03691	0	
74	N110	-3.882867	0	-2.241774	0	
75	N111	-7.507867	0	4.03691	0	
76	N112	-0.257867	0	-8.520458	0	
77	N126	7.458333	0	4.629381	0	
78	N127	7.25	0	4.629381	0	
79	N112A	-7.458333	0	4.629381	0	
80	N113B	-7.25	0	4.629381	0	
81	N115A	0.279995	0	-8.773797	0	
82	N116	0.384162	0	-8.593375	0	
83	N117A	7.738329	0	4.144415	0	

Joint Coordinates and Temperatures (Continued)

	Label	X [ft]	Y [ft]	Z [ft]	Temp [F]	Detach From Diap...
84	N118A	7.634162	0	3.963993	0	
85	N121	-7.738329	0	4.144415	0	
86	N122	-7.634162	0	3.963993	0	
87	N123	-0.279995	0	-8.773797	0	
88	N124	-0.384162	0	-8.593375	0	
89	N115B	-7.25	4	4.483548	0	
90	N116A	7.25	4	4.483548	0	
91	N113C	7.507867	4	4.03691	0	
92	N114C	0.257867	4	-8.520458	0	
93	N115C	-0.257867	4	-8.520458	0	
94	N116B	-7.507867	4	4.03691	0	
95	N115D	-6.083333	4	4.483548	0	
96	N116C	6.083333	4	4.483548	0	
97	N117B	6.924533	4	3.026547	0	
98	N118C	0.8412	4	-7.510095	0	
99	N119A	-0.8412	4	-7.510095	0	
100	N120	-6.924533	4	3.026547	0	
101	N119	6.583333	0	4.483548	0	
102	N123A	7.174533	0	3.45956	0	
103	N126B	6.583333	-0.1875	4.483548	0	
104	N127A	6.583333	0.1875	4.483548	0	
105	N127B	7.174533	-0.1875	3.45956	0	
106	N128	7.174533	0.1875	3.45956	0	
107	N107C	0.5912	0	-7.943108	0	
108	N108C	-0.5912	0	-7.943108	0	
109	N109B	0.5912	-0.1875	-7.943108	0	
110	N110A	0.5912	0.1875	-7.943108	0	
111	N111A	-0.5912	-0.1875	-7.943108	0	
112	N112B	-0.5912	0.1875	-7.943108	0	
113	N113D	-7.174533	0	3.45956	0	
114	N114D	-6.583333	0	4.483548	0	
115	N115E	-7.174533	-0.1875	3.45956	0	
116	N116D	-7.174533	0.1875	3.45956	0	
117	N117C	-6.583333	-0.1875	4.483548	0	
118	N118B	-6.583333	0.1875	4.483548	0	
119	N135	1.833333	5.333333	4.671048	0	
120	N137	6.958333	0	4.483548	0	
121	N138	6.958333	0	4.671048	0	
122	N139	6.958333	4	4.483548	0	
123	N140	6.958333	4	4.671048	0	
124	N141	6.958333	5.208333	4.671048	0	
125	N142	6.958333	-2.791667	4.671048	0	
126	N191	2.273317	0	1.3125	0	
127	N194	2.096233	0	1.619217	0	
128	N193	2.096233	-.5	1.619217	0	
129	N194A	2.096233	2.5	1.619217	0	
130	N198	-2.939925	-0.166667	-3.874997	0	
131	N199	2.939925	-0.166667	-3.874997	0	
132	N198A	-0.	-0.166667	-3.874997	0	
133	N199A	-1.885883	-0.166667	4.483548	0	
134	N200	-4.825808	-0.166667	-0.608551	0	
135	N203	4.825808	-0.166667	-0.608551	0	
136	N204	1.885883	-0.166667	4.483548	0	
137	N202	-1.833335	-0.166667	-5.791667	0	
138	N203A	1.833335	-0.166667	-5.791667	0	
139	N203B	-0.	-0.166667	-5.791667	0	
140	N207	-4.099063	-0.166667	4.483548	0	

Joint Coordinates and Temperatures (Continued)

	Label	X [ft]	Y [ft]	Z [ft]	Temp [F]	Detach From Diap...
141	N208	-5.932398	-0.166667	1.308119	0	
142	N209	-5.015731	-0.166667	2.895833	0	
143	N213	5.932398	-0.166667	1.308119	0	
144	N214	4.099063	-0.166667	4.483548	0	
145	N215	5.015731	-0.166667	2.895833	0	
146	N211	-3.355846	-0.166667	1.937498	0	
147	N213A	3.355846	-0.166667	1.937498	0	
148	N212	-6.083333	3.916667	4.483548	0	
149	N213B	6.083333	3.916667	4.483548	0	
150	N214A	6.924533	3.916667	3.026547	0	
151	N215A	0.8412	3.916667	-7.510095	0	
152	N216	-0.8412	3.916667	-7.510095	0	
153	N217	-6.924533	3.916667	3.026547	0	
154	N171	4.625	0	4.483548	0	
155	N172	4.625	0	4.671048	0	
156	N173	4.625	4	4.483548	0	
157	N174	4.625	4	4.671048	0	
158	N175	4.625	5.208333	4.671048	0	
159	N176	4.625	-2.791667	4.671048	0	
160	N163	0.	4	4.671048	0	
161	N164	0.	5.208333	4.671048	0	
162	N166	-4.708333	0	4.483548	0	
163	N167	-4.708333	0	4.671048	0	
164	N168	-4.708333	4	4.483548	0	
165	N169	-4.708333	4	4.671048	0	
166	N170	-4.708333	5.208333	4.671048	0	
167	N171A	-4.708333	-2.791667	4.671048	0	
168	N172A	-7.041667	0	4.483548	0	
169	N173A	-7.041667	0	4.671048	0	
170	N174A	-7.041667	4	4.483548	0	
171	N175A	-7.041667	4	4.671048	0	
172	N176A	-7.041667	5.208333	4.671048	0	
173	N177	-7.041667	-2.791667	4.671048	0	
174	N177A	-0.041667	0	4.483548	0	
175	N178	-0.041667	0	4.671048	0	
176	N179	-0.041667	4	4.483548	0	
177	N180	-0.041667	4	4.671048	0	
178	N181	-0.041667	5.208333	4.671048	0	
179	N182A	-0.041667	-2.791667	4.671048	0	
180	N181A	0.4037	0	-8.267867	0	
181	N182B	0.56608	0	-8.361617	0	
182	N183A	0.4037	4	-8.267867	0	
183	N184A	0.56608	4	-8.361617	0	
184	N185A	0.56608	5.208333	-8.361617	0	
185	N186A	0.56608	-2.791667	-8.361617	0	
186	N187A	1.570367	0	-6.247142	0	
187	N188A	1.732746	0	-6.340892	0	
188	N189A	1.570367	4	-6.247142	0	
189	N190	1.732746	4	-6.340892	0	
190	N191A	1.732746	5.208333	-6.340892	0	
191	N192	1.732746	-2.791667	-6.340892	0	
192	N193A	6.237033	0	1.835762	0	
193	N194B	6.399413	0	1.742012	0	
194	N195	6.237033	4	1.835762	0	
195	N196	6.399413	4	1.742012	0	
196	N197	6.399413	5.208333	1.742012	0	
197	N198B	6.399413	-2.791667	1.742012	0	

Joint Coordinates and Temperatures (Continued)

	Label	X [ft]	Y [ft]	Z [ft]	Temp [F]	Detach From Diap...
198	N199B	7.4037	0	3.856488	0	
199	N200A	7.56608	0	3.762738	0	
200	N201	7.4037	4	3.856488	0	
201	N202A	7.56608	4	3.762738	0	
202	N203C	7.56608	5.208333	3.762738	0	
203	N204A	7.56608	-2.791667	3.762738	0	
204	N205	3.9037	0	-2.20569	0	
205	N206	4.06608	0	-2.29944	0	
206	N207A	3.9037	4	-2.20569	0	
207	N208A	4.06608	4	-2.29944	0	
208	N209A	4.06608	5.208333	-2.29944	0	
209	N210	4.06608	-2.791667	-2.29944	0	
210	N212A	-7.362033	0	3.784319	0	
211	N213C	-7.524413	0	3.690569	0	
212	N214B	-7.362033	4	3.784319	0	
213	N215B	-7.524413	4	3.690569	0	
214	N216A	-7.524413	5.208333	3.690569	0	
215	N217A	-7.524413	-2.791667	3.690569	0	
216	N218	-6.195367	0	1.763593	0	
217	N219	-6.357746	0	1.669843	0	
218	N220	-6.195367	4	1.763593	0	
219	N221	-6.357746	4	1.669843	0	
220	N222	-6.357746	5.208333	1.669843	0	
221	N223	-6.357746	-2.791667	1.669843	0	
222	N224	-1.5287	0	-6.31931	0	
223	N225	-1.69108	0	-6.41306	0	
224	N226	-1.5287	4	-6.31931	0	
225	N227	-1.69108	4	-6.41306	0	
226	N228	-1.69108	5.208333	-6.41306	0	
227	N229	-1.69108	-2.791667	-6.41306	0	
228	N230	-0.362033	0	-8.340036	0	
229	N231	-0.524413	0	-8.433786	0	
230	N232	-0.362033	4	-8.340036	0	
231	N233	-0.524413	4	-8.433786	0	
232	N234	-0.524413	5.208333	-8.433786	0	
233	N235	-0.524413	-2.791667	-8.433786	0	
234	N236	-3.862033	0	-2.277858	0	
235	N237	-4.024413	0	-2.371608	0	
236	N238	-3.862033	4	-2.277858	0	
237	N239	-4.024413	4	-2.371608	0	
238	N240	-4.024413	5.208333	-2.371608	0	
239	N241	-4.024413	-2.791667	-2.371608	0	

Hot Rolled Steel Section Sets

	Label	Shape	Type	Design List	Material	Design Rules	A [in2]	Iyy [in4]	Izz [in4]	J [in4]
1	Mount Pipe	PIPE 2.0	Column	Pipe	A53 Gr. B	Typical	1.02	.627	.627	1.25
2	TES Face Horiz...	C5X9	Beam	Channel	A36 Gr.36	Typical	2.64	.624	8.89	.109
3	Support Rail	PIPE 1.5	Beam	Pipe	A53 Gr. B	Typical	.749	.293	.293	.586
4	Standoff Horizo...	HSS6X3X4	Beam	SquareTube	A500 Gr. B 46	Typical	3.84	5.7	17	14.2
5	TES Cross Brace	C3X5	Beam	Channel	A36 Gr.36	Typical	1.47	.241	1.85	.043
6	Support Rail Co...	PL3/8X4.75	Beam	RECT	A36 Gr.36	Typical	1.781	.021	3.349	.079
7	Bottom Corner ...	PL1/4x4	Beam	RECT	A36 Gr.36	Typical	1	.005	1.333	.02
8	Face Plate	PL1/4x2	Beam	RECT	A36 Gr.36	Typical	.5	.003	.167	.01
9	Cross Brace Plate	PL1/4x2	Beam	RECT	A36 Gr.36	Typical	.5	.003	.167	.01
10	Connector Plate	PL1/4x3	Beam	RECT	A36 Gr.36	Typical	.75	.004	.563	.015

Hot Rolled Steel Properties

	Label	E [ksi]	G [ksi]	Nu	Therm (/1E..	Density[k/ft...	Yield[ksi]	Ry	Fu[ksi]	Rt
1	A36 Gr.36	29000	11154	.3	.65	.49	36	1.5	58	1.2
2	A53 Gr. B	29000	11154	.3	.65	.49	35	1.5	60	1.2
3	A572 Gr.50	29000	11154	.3	.65	.49	50	1.1	65	1.1
4	A992	29000	11154	.3	.65	.49	50	1.1	65	1.1
5	A500 Gr. B 42	29000	11154	.3	.65	.49	42	1.4	58	1.3
6	A500 Gr. B 46	29000	11154	.3	.65	.49	46	1.4	58	1.3

Cold Formed Steel Section Sets

	Label	Shape	Type	Design List	Material	Design Rules	A [in2]	Iyy [in4]	Izz [in4]	J [in4]
1	Face Horizo...	4.5CU3X025...	Beam	CU	A570 Gr. 36	Typical	2.344	2.111	7.314	.049
2	Cross Brace	3CU1.5X025	Beam	CU	A570 Gr. 36	Typical	1.284	.255	1.544	.027

Cold Formed Steel Properties

	Label	E [ksi]	G [ksi]	Nu	Therm (/1E5 F)	Density[k/ft^3]	Yield[ksi]	Fu[ksi]
1	A570 Gr.33	29500	11346	.3	.65	.49	33	52
2	A607 C1 Gr.55	29500	11346	.3	.65	.49	55	70
3	A570 Gr. 36	29500	11346	.3	.65	.49	36	58

Member Primary Data

	Label	I Joint	J Joint	K Joint	Rotate(deg)	Section/Shape	Type	Design List	Material	Design Rules
1	M19	N24	N23		90	Standoff Horiz...	Beam	SquareTube	A500 Gr. ...	Typical
2	M19A	N117A	N126			Bottom Corner...	Beam	RECT	A36 Gr.36	Typical
3	M38C	N48A	N47A		90	Standoff Horiz...	Beam	SquareTube	A500 Gr. ...	Typical
4	M51	N66	N65		90	Standoff Horiz...	Beam	SquareTube	A500 Gr. ...	Typical
5	M104A	N75	N76		90	Connector Plate	Beam	RECT	A36 Gr.36	Typical
6	M105A	N77	N78		90	Connector Plate	Beam	RECT	A36 Gr.36	Typical
7	M122	N76	N183			RIGID	None	None	RIGID	Typical
8	M123	N75	N182			RIGID	None	None	RIGID	Typical
9	M124	N78	N185			RIGID	None	None	RIGID	Typical
10	M125	N77	N184			RIGID	None	None	RIGID	Typical
11	M126	N184	N185			RIGID	None	None	RIGID	Typical
12	M127	N182	N183			RIGID	None	None	RIGID	Typical
13	M128	N189	N187			RIGID	None	None	RIGID	Typical
14	M129	N188	N186			RIGID	None	None	RIGID	Typical
15	M134	N127A	N128		90	Face Plate	Beam	RECT	A36 Gr.36	Typical
16	M135	N127B	N126B		90	Face Plate	Beam	RECT	A36 Gr.36	Typical
17	M93A	N117	N76		90	Cross Brace	Beam	CU	A570 Gr. 36	Typical
18	M94A	N75	N118		90	Cross Brace	Beam	CU	A570 Gr. 36	Typical
19	M95	N117	N113			RIGID	None	None	RIGID	Typical
20	M94B	N118	N114			RIGID	None	None	RIGID	Typical
21	M95A	N115	N113A			RIGID	None	None	RIGID	Typical
22	M94C	N114B	N114A			RIGID	None	None	RIGID	Typical
23	M93B	N115	N78		90	Cross Brace	Beam	CU	A570 Gr. 36	Typical
24	M94D	N77	N114B		90	Cross Brace	Beam	CU	A570 Gr. 36	Typical
25	M53	N68	N69		90	Connector Plate	Beam	RECT	A36 Gr.36	Typical
26	M54	N70	N71		90	Connector Plate	Beam	RECT	A36 Gr.36	Typical
27	M55	N69	N73			RIGID	None	None	RIGID	Typical
28	M56	N68	N72			RIGID	None	None	RIGID	Typical
29	M57	N71	N75A			RIGID	None	None	RIGID	Typical
30	M58	N70	N74			RIGID	None	None	RIGID	Typical
31	M59	N74	N75A			RIGID	None	None	RIGID	Typical

Member Primary Data (Continued)

	Label	I Joint	J Joint	K Joint	Rotate(deg)	Section/Shape	Type	Design List	Material	Design Rules
32	M60	N72	N73			RIGID	None	None	RIGID	Typical
33	M61	N79	N77A			RIGID	None	None	RIGID	Typical
34	M62	N78A	N76A			RIGID	None	None	RIGID	Typical
35	M63	N82	N69		90	Cross Brace	Beam	CU	A570 Gr. 36	Typical
36	M64	N68	N83		90	Cross Brace	Beam	CU	A570 Gr. 36	Typical
37	M65	N82	N80			RIGID	None	None	RIGID	Typical
38	M66	N83	N81			RIGID	None	None	RIGID	Typical
39	M67	N86	N84			RIGID	None	None	RIGID	Typical
40	M68	N87	N85			RIGID	None	None	RIGID	Typical
41	M69	N86	N71		90	Cross Brace	Beam	CU	A570 Gr. 36	Typical
42	M70	N70	N87		90	Cross Brace	Beam	CU	A570 Gr. 36	Typical
43	M71	N89	N90		90	Connector Plate	Beam	RECT	A36 Gr.36	Typical
44	M72	N91	N92		90	Connector Plate	Beam	RECT	A36 Gr.36	Typical
45	M73	N90	N94			RIGID	None	None	RIGID	Typical
46	M74	N89	N93			RIGID	None	None	RIGID	Typical
47	M75	N92	N96			RIGID	None	None	RIGID	Typical
48	M76	N91	N95			RIGID	None	None	RIGID	Typical
49	M77	N95	N96			RIGID	None	None	RIGID	Typical
50	M78	N93	N94			RIGID	None	None	RIGID	Typical
51	M79	N100	N98			RIGID	None	None	RIGID	Typical
52	M80	N99	N97			RIGID	None	None	RIGID	Typical
53	M81	N103	N90		90	Cross Brace	Beam	CU	A570 Gr. 36	Typical
54	M82	N89	N104		90	Cross Brace	Beam	CU	A570 Gr. 36	Typical
55	M83	N103	N101			RIGID	None	None	RIGID	Typical
56	M84	N104	N102			RIGID	None	None	RIGID	Typical
57	M85	N107	N105			RIGID	None	None	RIGID	Typical
58	M86	N108	N106			RIGID	None	None	RIGID	Typical
59	M87	N107	N92		90	Cross Brace	Beam	CU	A570 Gr. 36	Typical
60	M88	N91	N108		90	Cross Brace	Beam	CU	A570 Gr. 36	Typical
61	M89	N109	N107A		180	Face Horizontal	Beam	CU	A570 Gr. 36	Typical
62	M90	N108A	N107A			Face Horizontal	Beam	CU	A570 Gr. 36	Typical
63	M89A	N109A	N107B		180	Face Horizontal	Beam	CU	A570 Gr. 36	Typical
64	M90A	N108B	N107B			Face Horizontal	Beam	CU	A570 Gr. 36	Typical
65	M91	N112	N110		180	Face Horizontal	Beam	CU	A570 Gr. 36	Typical
66	M92	N111	N110			Face Horizontal	Beam	CU	A570 Gr. 36	Typical
67	M101	N126	N127			Bottom Corner...	Beam	RECT	A36 Gr.36	Typical
68	M102	N108A	N127			RIGID	None	None	RIGID	Typical
69	M91A	N112A	N113B			Bottom Corner...	Beam	RECT	A36 Gr.36	Typical
70	M92A	N109	N113B			RIGID	None	None	RIGID	Typical
71	M93	N115A	N116			Bottom Corner...	Beam	RECT	A36 Gr.36	Typical
72	M94	N108B	N116			RIGID	None	None	RIGID	Typical
73	M95B	N117A	N118A			Bottom Corner...	Beam	RECT	A36 Gr.36	Typical
74	M96	N109A	N118A			RIGID	None	None	RIGID	Typical
75	M97	N121	N122			Bottom Corner...	Beam	RECT	A36 Gr.36	Typical
76	M98	N111	N122			RIGID	None	None	RIGID	Typical
77	M99	N123	N124			Bottom Corner...	Beam	RECT	A36 Gr.36	Typical
78	M100	N112	N124			RIGID	None	None	RIGID	Typical
79	M101A	N123	N115A			Bottom Corner...	Beam	RECT	A36 Gr.36	Typical
80	M104	N112A	N121			Bottom Corner...	Beam	RECT	A36 Gr.36	Typical
81	M105B	N115B	N116A			Support Rail	Beam	Pipe	A53 Gr. B	Typical
82	M104B	N113C	N114C			Support Rail	Beam	Pipe	A53 Gr. B	Typical
83	M105C	N115C	N116B			Support Rail	Beam	Pipe	A53 Gr. B	Typical
84	M107	N127A	N119			RIGID	None	None	RIGID	Typical
85	M108	N126B	N119			RIGID	None	None	RIGID	Typical
86	M107A	N128	N123A			RIGID	None	None	RIGID	Typical
87	M108A	N127B	N123A			RIGID	None	None	RIGID	Typical
88	M95C	N110A	N112B		90	Face Plate	Beam	RECT	A36 Gr.36	Typical

Member Primary Data (Continued)

	Label	I Joint	J Joint	K Joint	Rotate(deg)	Section/Shape	Type	Design List	Material	Design Rules
89	M96A	N111A	N109B		90	Face Plate	Beam	RECT	A36 Gr.36	Typical
90	M97A	N110A	N107C			RIGID	None	None	RIGID	Typical
91	M98A	N109B	N107C			RIGID	None	None	RIGID	Typical
92	M99A	N112B	N108C			RIGID	None	None	RIGID	Typical
93	M100A	N111A	N108C			RIGID	None	None	RIGID	Typical
94	M101B	N116D	N118B		90	Face Plate	Beam	RECT	A36 Gr.36	Typical
95	M102B	N117C	N115E		90	Face Plate	Beam	RECT	A36 Gr.36	Typical
96	M103A	N116D	N113D			RIGID	None	None	RIGID	Typical
97	M104C	N115E	N113D			RIGID	None	None	RIGID	Typical
98	M105E	N118B	N114D			RIGID	None	None	RIGID	Typical
99	M106C	N117C	N114D			RIGID	None	None	RIGID	Typical
100	M116	N138	N137			RIGID	None	None	RIGID	Typical
101	M117	N140	N139			RIGID	None	None	RIGID	Typical
102	MP1A	N141	N142			Mount Pipe	Column	Pipe	A53 Gr. B	Typical
103	M143	N194	N191			RIGID	None	None	RIGID	Typical
104	M144	N194A	N193			Mount Pipe	Column	Pipe	A53 Gr. B	Typical
105	M147	N198	N199		90	Cross Brace P...	Beam	RECT	A36 Gr.36	Typical
106	M148	N113	N198			RIGID	None	None	RIGID	Typical
107	M149	N114	N199			RIGID	None	None	RIGID	Typical
108	M149A	N199A	N200		90	Cross Brace P...	Beam	RECT	A36 Gr.36	Typical
109	M150A	N80	N199A			RIGID	None	None	RIGID	Typical
110	M151	N81	N200			RIGID	None	None	RIGID	Typical
111	M152	N203	N204		90	Cross Brace P...	Beam	RECT	A36 Gr.36	Typical
112	M153	N101	N203			RIGID	None	None	RIGID	Typical
113	M154	N102	N204			RIGID	None	None	RIGID	Typical
114	M155	N202	N203A		90	Cross Brace P...	Beam	RECT	A36 Gr.36	Typical
115	M157	N113A	N202			RIGID	None	None	RIGID	Typical
116	M158	N114A	N203A			RIGID	None	None	RIGID	Typical
117	M159	N207	N208		90	Cross Brace P...	Beam	RECT	A36 Gr.36	Typical
118	M161	N84	N207			RIGID	None	None	RIGID	Typical
119	M162	N85	N208			RIGID	None	None	RIGID	Typical
120	M163	N213	N214		90	Cross Brace P...	Beam	RECT	A36 Gr.36	Typical
121	M165	N105	N213			RIGID	None	None	RIGID	Typical
122	M166	N106	N214			RIGID	None	None	RIGID	Typical
123	M159A	N76A	N209			RIGID	None	None	RIGID	Typical
124	M160	N77A	N211			RIGID	None	None	RIGID	Typical
125	M161A	N97	N215			RIGID	None	None	RIGID	Typical
126	M162A	N98	N213A			RIGID	None	None	RIGID	Typical
127	M163A	N186	N203B			RIGID	None	None	RIGID	Typical
128	M164	N187	N198A			RIGID	None	None	RIGID	Typical
129	M165A	N212	N115D			RIGID	None	None	RIGID	Typical
130	M166A	N217	N212		90	Support Rail C...	Beam	RECT	A36 Gr.36	Typical
131	M167	N213B	N214A		90	Support Rail C...	Beam	RECT	A36 Gr.36	Typical
132	M168	N215A	N216		90	Support Rail C...	Beam	RECT	A36 Gr.36	Typical
133	M166B	N213B	N116C			RIGID	None	None	RIGID	Typical
134	M167A	N214A	N117B		120	RIGID	None	None	RIGID	Typical
135	M168A	N215A	N118C		120	RIGID	None	None	RIGID	Typical
136	M169	N216	N119A		240	RIGID	None	None	RIGID	Typical
137	M170	N217	N120		240	RIGID	None	None	RIGID	Typical
138	M147A	N172	N171			RIGID	None	None	RIGID	Typical
139	M148A	N174	N173			RIGID	None	None	RIGID	Typical
140	MP2A	N175	N176			Mount Pipe	Column	Pipe	A53 Gr. B	Typical
141	M144A	N167	N166			RIGID	None	None	RIGID	Typical
142	M145	N169	N168			RIGID	None	None	RIGID	Typical
143	MP4A	N170	N171A			Mount Pipe	Column	Pipe	A53 Gr. B	Typical
144	M147B	N173A	N172A			RIGID	None	None	RIGID	Typical
145	M148B	N175A	N174A			RIGID	None	None	RIGID	Typical

Member Primary Data (Continued)

	Label	I Joint	J Joint	K Joint	Rotate(deg)	Section/Shape	Type	Design List	Material	Design Rules
146	MP5A	N176A	N177			Mount Pipe	Column	Pipe	A53 Gr. B	Typical
147	M150	N178	N177A			RIGID	None	None	RIGID	Typical
148	M151A	N180	N179			RIGID	None	None	RIGID	Typical
149	MP3A	N181	N182A			Mount Pipe	Column	Pipe	A53 Gr. B	Typical
150	M150B	N182B	N181A			RIGID	None	None	RIGID	Typical
151	M151B	N184A	N183A			RIGID	None	None	RIGID	Typical
152	MP1C	N185A	N186A			Mount Pipe	Column	Pipe	A53 Gr. B	Typical
153	M153A	N188A	N187A			RIGID	None	None	RIGID	Typical
154	M154A	N190	N189A			RIGID	None	None	RIGID	Typical
155	MP2C	N191A	N192			Mount Pipe	Column	Pipe	A53 Gr. B	Typical
156	M156	N194B	N193A			RIGID	None	None	RIGID	Typical
157	M157A	N196	N195			RIGID	None	None	RIGID	Typical
158	MP4C	N197	N198B			Mount Pipe	Column	Pipe	A53 Gr. B	Typical
159	M159B	N200A	N199B			RIGID	None	None	RIGID	Typical
160	M160A	N202A	N201			RIGID	None	None	RIGID	Typical
161	MP5C	N203C	N204A			Mount Pipe	Column	Pipe	A53 Gr. B	Typical
162	M162B	N206	N205			RIGID	None	None	RIGID	Typical
163	M163B	N208A	N207A			RIGID	None	None	RIGID	Typical
164	MP3C	N209A	N210			Mount Pipe	Column	Pipe	A53 Gr. B	Typical
165	M165B	N213C	N212A			RIGID	None	None	RIGID	Typical
166	M166C	N215B	N214B			RIGID	None	None	RIGID	Typical
167	MP1B	N216A	N217A			Mount Pipe	Column	Pipe	A53 Gr. B	Typical
168	M168B	N219	N218			RIGID	None	None	RIGID	Typical
169	M169A	N221	N220			RIGID	None	None	RIGID	Typical
170	MP2B	N222	N223			Mount Pipe	Column	Pipe	A53 Gr. B	Typical
171	M171	N225	N224			RIGID	None	None	RIGID	Typical
172	M172	N227	N226			RIGID	None	None	RIGID	Typical
173	MP4B	N228	N229			Mount Pipe	Column	Pipe	A53 Gr. B	Typical
174	M174	N231	N230			RIGID	None	None	RIGID	Typical
175	M175	N233	N232			RIGID	None	None	RIGID	Typical
176	MP5B	N234	N235			Mount Pipe	Column	Pipe	A53 Gr. B	Typical
177	M177	N237	N236			RIGID	None	None	RIGID	Typical
178	M178	N239	N238			RIGID	None	None	RIGID	Typical
179	MP3B	N240	N241			Mount Pipe	Column	Pipe	A53 Gr. B	Typical

Member Point Loads (BLC 1 : Antenna D)

	Member Label	Direction	Magnitude[lb,k-ft]	Location[ft,%]
1	MP5A	Y	-40.8	2.21
2	MP5A	My	-.019	2.21
3	MP5A	Mz	.007	2.21
4	MP5A	Y	-40.8	4.21
5	MP5A	My	-.019	4.21
6	MP5A	Mz	.007	4.21
7	MP5B	Y	-40.8	2.21
8	MP5B	My	.007	2.21
9	MP5B	Mz	-.019	2.21
10	MP5B	Y	-40.8	4.21
11	MP5B	My	.007	4.21
12	MP5B	Mz	-.019	4.21
13	MP5C	Y	-40.8	2.21
14	MP5C	My	.018	2.21
15	MP5C	Mz	.01	2.21
16	MP5C	Y	-40.8	4.21
17	MP5C	My	.018	4.21
18	MP5C	Mz	.01	4.21

Member Point Loads (BLC 1 : Antenna D) (Continued)

	Member Label	Direction	Magnitude[lb,k-ft]	Location[ft,%]
19	MP3A	Y	-10.4	1
20	MP3A	My	.006	1
21	MP3A	Mz	-.002	1
22	MP3B	Y	-10.4	1
23	MP3B	My	-.002	1
24	MP3B	Mz	.006	1
25	MP3C	Y	-10.4	1
26	MP3C	My	-.006	1
27	MP3C	Mz	-.003	1
28	M144	Y	-32	1.25
29	M144	My	0	1.25
30	M144	Mz	0	1.25
31	MP3A	Y	-84.4	2
32	MP3A	My	.05	2
33	MP3A	Mz	-.018	2
34	MP3B	Y	-84.4	2
35	MP3B	My	-.018	2
36	MP3B	Mz	.05	2
37	MP3C	Y	-84.4	2
38	MP3C	My	-.046	2
39	MP3C	Mz	-.026	2
40	MP3A	Y	-70.3	4
41	MP3A	My	.041	4
42	MP3A	Mz	-.015	4
43	MP3B	Y	-70.3	4
44	MP3B	My	-.015	4
45	MP3B	Mz	.041	4
46	MP3C	Y	-70.3	4
47	MP3C	My	-.038	4
48	MP3C	Mz	-.022	4
49	MP3A	Y	-31.65	.71
50	MP3A	My	-.009	.71
51	MP3A	Mz	.023	.71
52	MP3A	Y	-31.65	5.71
53	MP3A	My	-.009	5.71
54	MP3A	Mz	.023	5.71
55	MP3B	Y	-31.65	.71
56	MP3B	My	-.012	.71
57	MP3B	Mz	-.021	.71
58	MP3B	Y	-31.65	5.71
59	MP3B	My	-.012	5.71
60	MP3B	Mz	-.021	5.71
61	MP3C	Y	-31.65	.71
62	MP3C	My	.023	.71
63	MP3C	Mz	-.008	.71
64	MP3C	Y	-31.65	5.71
65	MP3C	My	.023	5.71
66	MP3C	Mz	-.008	5.71
67	MP3A	Y	-31.65	.71
68	MP3A	My	-.021	.71
69	MP3A	Mz	-.012	.71
70	MP3A	Y	-31.65	5.71
71	MP3A	My	-.021	5.71
72	MP3A	Mz	-.012	5.71
73	MP3B	Y	-31.65	.71
74	MP3B	My	.023	.71
75	MP3B	Mz	-.009	.71

Member Point Loads (BLC 1 : Antenna D) (Continued)

	Member Label	Direction	Magnitude[lb,k-ft]	Location[ft,%]
76	MP3B	Y	-31.65	5.71
77	MP3B	My	.023	5.71
78	MP3B	Mz	-.009	5.71
79	MP3C	Y	-31.65	.71
80	MP3C	My	.004	.71
81	MP3C	Mz	.024	.71
82	MP3C	Y	-31.65	5.71
83	MP3C	My	.004	5.71
84	MP3C	Mz	.024	5.71
85	MP1A	Y	-19.2	.71
86	MP1A	My	-.011	.71
87	MP1A	Mz	.004	.71
88	MP1A	Y	-19.2	5.71
89	MP1A	My	-.011	5.71
90	MP1A	Mz	.004	5.71
91	MP1B	Y	-19.2	.71
92	MP1B	My	.004	.71
93	MP1B	Mz	-.011	.71
94	MP1B	Y	-19.2	5.71
95	MP1B	My	.004	5.71
96	MP1B	Mz	-.011	5.71
97	MP1C	Y	-19.2	.71
98	MP1C	My	.01	.71
99	MP1C	Mz	.006	.71
100	MP1C	Y	-19.2	5.71
101	MP1C	My	.01	5.71
102	MP1C	Mz	.006	5.71

Member Point Loads (BLC 2 : Antenna Di)

	Member Label	Direction	Magnitude[lb,k-ft]	Location[ft,%]
1	MP5A	Y	-35.888	2.21
2	MP5A	My	-.017	2.21
3	MP5A	Mz	.006	2.21
4	MP5A	Y	-35.888	4.21
5	MP5A	My	-.017	4.21
6	MP5A	Mz	.006	4.21
7	MP5B	Y	-35.888	2.21
8	MP5B	My	.006	2.21
9	MP5B	Mz	-.017	2.21
10	MP5B	Y	-35.888	4.21
11	MP5B	My	.006	4.21
12	MP5B	Mz	-.017	4.21
13	MP5C	Y	-35.888	2.21
14	MP5C	My	.016	2.21
15	MP5C	Mz	.009	2.21
16	MP5C	Y	-35.888	4.21
17	MP5C	My	.016	4.21
18	MP5C	Mz	.009	4.21
19	MP3A	Y	-10.739	1
20	MP3A	My	.006	1
21	MP3A	Mz	-.002	1
22	MP3B	Y	-10.739	1
23	MP3B	My	-.002	1
24	MP3B	Mz	.006	1
25	MP3C	Y	-10.739	1
26	MP3C	My	-.006	1

Member Point Loads (BLC 2 : Antenna Di) (Continued)

	Member Label	Direction	Magnitude[lb,k-ft]	Location[ft,%]
27	MP3C	Mz	-.003	1
28	M144	Y	-87.897	1.25
29	M144	My	0	1.25
30	M144	Mz	0	1.25
31	MP3A	Y	-44.892	2
32	MP3A	My	.026	2
33	MP3A	Mz	-.01	2
34	MP3B	Y	-44.892	2
35	MP3B	My	-.01	2
36	MP3B	Mz	.026	2
37	MP3C	Y	-44.892	2
38	MP3C	My	-.024	2
39	MP3C	Mz	-.014	2
40	MP3A	Y	-40.372	4
41	MP3A	My	.024	4
42	MP3A	Mz	-.009	4
43	MP3B	Y	-40.372	4
44	MP3B	My	-.009	4
45	MP3B	Mz	.024	4
46	MP3C	Y	-40.372	4
47	MP3C	My	-.022	4
48	MP3C	Mz	-.013	4
49	MP3A	Y	-69.935	.71
50	MP3A	My	-.019	.71
51	MP3A	Mz	.05	.71
52	MP3A	Y	-69.935	5.71
53	MP3A	My	-.019	5.71
54	MP3A	Mz	.05	5.71
55	MP3B	Y	-69.935	.71
56	MP3B	My	-.026	.71
57	MP3B	Mz	-.047	.71
58	MP3B	Y	-69.935	5.71
59	MP3B	My	-.026	5.71
60	MP3B	Mz	-.047	5.71
61	MP3C	Y	-69.935	.71
62	MP3C	My	.051	.71
63	MP3C	Mz	-.018	.71
64	MP3C	Y	-69.935	5.71
65	MP3C	My	.051	5.71
66	MP3C	Mz	-.018	5.71
67	MP3A	Y	-69.935	.71
68	MP3A	My	-.047	.71
69	MP3A	Mz	-.026	.71
70	MP3A	Y	-69.935	5.71
71	MP3A	My	-.047	5.71
72	MP3A	Mz	-.026	5.71
73	MP3B	Y	-69.935	.71
74	MP3B	My	.05	.71
75	MP3B	Mz	-.019	.71
76	MP3B	Y	-69.935	5.71
77	MP3B	My	.05	5.71
78	MP3B	Mz	-.019	5.71
79	MP3C	Y	-69.935	.71
80	MP3C	My	.01	.71
81	MP3C	Mz	.053	.71
82	MP3C	Y	-69.935	5.71
83	MP3C	My	.01	5.71

Member Point Loads (BLC 2 : Antenna Di) (Continued)

	Member Label	Direction	Magnitude[lb,k-ft]	Location[ft,%]
84	MP3C	Mz	.053	5.71
85	MP1A	Y	-61.128	.71
86	MP1A	My	-.034	.71
87	MP1A	Mz	.012	.71
88	MP1A	Y	-61.128	5.71
89	MP1A	My	-.034	5.71
90	MP1A	Mz	.012	5.71
91	MP1B	Y	-61.128	.71
92	MP1B	My	.012	.71
93	MP1B	Mz	-.034	.71
94	MP1B	Y	-61.128	5.71
95	MP1B	My	.012	5.71
96	MP1B	Mz	-.034	5.71
97	MP1C	Y	-61.128	.71
98	MP1C	My	.031	.71
99	MP1C	Mz	.018	.71
100	MP1C	Y	-61.128	5.71
101	MP1C	My	.031	5.71
102	MP1C	Mz	.018	5.71

Member Point Loads (BLC 3 : Antenna Wo (0 Deg))

	Member Label	Direction	Magnitude[lb,k-ft]	Location[ft,%]
1	MP5A	X	0	2.21
2	MP5A	Z	-58.999	2.21
3	MP5A	Mx	-.01	2.21
4	MP5A	X	0	4.21
5	MP5A	Z	-58.999	4.21
6	MP5A	Mx	-.01	4.21
7	MP5B	X	0	2.21
8	MP5B	Z	-36.664	2.21
9	MP5B	Mx	.017	2.21
10	MP5B	X	0	4.21
11	MP5B	Z	-36.664	4.21
12	MP5B	Mx	.017	4.21
13	MP5C	X	0	2.21
14	MP5C	Z	-55.121	2.21
15	MP5C	Mx	-.014	2.21
16	MP5C	X	0	4.21
17	MP5C	Z	-55.121	4.21
18	MP5C	Mx	-.014	4.21
19	MP3A	X	0	1
20	MP3A	Z	-11.047	1
21	MP3A	Mx	.002	1
22	MP3B	X	0	1
23	MP3B	Z	-8.342	1
24	MP3B	Mx	-.005	1
25	MP3C	X	0	1
26	MP3C	Z	-10.577	1
27	MP3C	Mx	.003	1
28	M144	X	0	1.25
29	M144	Z	-118.297	1.25
30	M144	Mx	0	1.25
31	MP3A	X	0	2
32	MP3A	Z	-55.673	2
33	MP3A	Mx	.012	2
34	MP3B	X	0	2

Member Point Loads (BLC 3 : Antenna Wo (0 Deg)) (Continued)

	Member Label	Direction	Magnitude[lb,k-ft]	Location[ft,%]
35	MP3B	Z	-40.962	2
36	MP3B	Mx	-.024	2
37	MP3C	X	0	2
38	MP3C	Z	-53.118	2
39	MP3C	Mx	.017	2
40	MP3A	X	0	4
41	MP3A	Z	-54.812	4
42	MP3A	Mx	.012	4
43	MP3B	X	0	4
44	MP3B	Z	-34.467	4
45	MP3B	Mx	-.02	4
46	MP3C	X	0	4
47	MP3C	Z	-51.279	4
48	MP3C	Mx	.016	4
49	MP3A	X	0	.71
50	MP3A	Z	-135.417	.71
51	MP3A	Mx	-.097	.71
52	MP3A	X	0	5.71
53	MP3A	Z	-135.417	5.71
54	MP3A	Mx	-.097	5.71
55	MP3B	X	0	.71
56	MP3B	Z	-98.324	.71
57	MP3B	Mx	.066	.71
58	MP3B	X	0	5.71
59	MP3B	Z	-98.324	5.71
60	MP3B	Mx	.066	5.71
61	MP3C	X	0	.71
62	MP3C	Z	-128.976	.71
63	MP3C	Mx	.033	.71
64	MP3C	X	0	5.71
65	MP3C	Z	-128.976	5.71
66	MP3C	Mx	.033	5.71
67	MP3A	X	0	.71
68	MP3A	Z	-135.417	.71
69	MP3A	Mx	.051	.71
70	MP3A	X	0	5.71
71	MP3A	Z	-135.417	5.71
72	MP3A	Mx	.051	5.71
73	MP3B	X	0	.71
74	MP3B	Z	-98.324	.71
75	MP3B	Mx	.027	.71
76	MP3B	X	0	5.71
77	MP3B	Z	-98.324	5.71
78	MP3B	Mx	.027	5.71
79	MP3C	X	0	.71
80	MP3C	Z	-128.976	.71
81	MP3C	Mx	-.097	.71
82	MP3C	X	0	5.71
83	MP3C	Z	-128.976	5.71
84	MP3C	Mx	-.097	5.71
85	MP1A	X	0	.71
86	MP1A	Z	-121.516	.71
87	MP1A	Mx	-.024	.71
88	MP1A	X	0	5.71
89	MP1A	Z	-121.516	5.71
90	MP1A	Mx	-.024	5.71
91	MP1B	X	0	.71

Member Point Loads (BLC 3 : Antenna Wo (0 Deg)) (Continued)

	Member Label	Direction	Magnitude[lb,k-ft]	Location[ft,%]
92	MP1B	Z	-88.718	.71
93	MP1B	Mx	.049	.71
94	MP1B	X	0	5.71
95	MP1B	Z	-88.718	5.71
96	MP1B	Mx	.049	5.71
97	MP1C	X	0	.71
98	MP1C	Z	-115.82	.71
99	MP1C	Mx	-.034	.71
100	MP1C	X	0	5.71
101	MP1C	Z	-115.82	5.71
102	MP1C	Mx	-.034	5.71

Member Point Loads (BLC 4 : Antenna Wo (30 Deg))

	Member Label	Direction	Magnitude[lb,k-ft]	Location[ft,%]
1	MP5A	X	22.65	2.21
2	MP5A	Z	-39.231	2.21
3	MP5A	Mx	-.017	2.21
4	MP5A	X	22.65	4.21
5	MP5A	Z	-39.231	4.21
6	MP5A	Mx	-.017	4.21
7	MP5B	X	17.066	2.21
8	MP5B	Z	-29.559	2.21
9	MP5B	Mx	.017	2.21
10	MP5B	X	17.066	4.21
11	MP5B	Z	-29.559	4.21
12	MP5B	Mx	.017	4.21
13	MP5C	X	31.205	2.21
14	MP5C	Z	-54.049	2.21
15	MP5C	Mx	0	2.21
16	MP5C	X	31.205	4.21
17	MP5C	Z	-54.049	4.21
18	MP5C	Mx	0	4.21
19	MP3A	X	4.694	1
20	MP3A	Z	-8.13	1
21	MP3A	Mx	.004	1
22	MP3B	X	4.018	1
23	MP3B	Z	-6.959	1
24	MP3B	Mx	-.005	1
25	MP3C	X	5.73	1
26	MP3C	Z	-9.925	1
27	MP3C	Mx	0	1
28	M144	X	51.696	1.25
29	M144	Z	-89.539	1.25
30	M144	Mx	0	1.25
31	MP3A	X	23.325	2
32	MP3A	Z	-40.4	2
33	MP3A	Mx	.022	2
34	MP3B	X	19.648	2
35	MP3B	Z	-34.031	2
36	MP3B	Mx	-.024	2
37	MP3C	X	28.96	2
38	MP3C	Z	-50.159	2
39	MP3C	Mx	0	2
40	MP3A	X	21.167	4
41	MP3A	Z	-36.662	4
42	MP3A	Mx	.02	4

Member Point Loads (BLC 4 : Antenna Wo (30 Deg)) (Continued)

	Member Label	Direction	Magnitude[lb,k-ft]	Location[ft,%]
43	MP3B	X	16.08	4
44	MP3B	Z	-27.852	4
45	MP3B	Mx	-.02	4
46	MP3C	X	28.96	4
47	MP3C	Z	-50.159	4
48	MP3C	Mx	0	4
49	MP3A	X	56.333	.71
50	MP3A	Z	-97.572	.71
51	MP3A	Mx	-.085	.71
52	MP3A	X	56.333	5.71
53	MP3A	Z	-97.572	5.71
54	MP3A	Mx	-.085	5.71
55	MP3B	X	47.06	.71
56	MP3B	Z	-81.511	.71
57	MP3B	Mx	.037	.71
58	MP3B	X	47.06	5.71
59	MP3B	Z	-81.511	5.71
60	MP3B	Mx	.037	5.71
61	MP3C	X	70.541	.71
62	MP3C	Z	-122.18	.71
63	MP3C	Mx	.082	.71
64	MP3C	X	70.541	5.71
65	MP3C	Z	-122.18	5.71
66	MP3C	Mx	.082	5.71
67	MP3A	X	56.333	.71
68	MP3A	Z	-97.572	.71
69	MP3A	Mx	-.000908	.71
70	MP3A	X	56.333	5.71
71	MP3A	Z	-97.572	5.71
72	MP3A	Mx	-.000908	5.71
73	MP3B	X	47.06	.71
74	MP3B	Z	-81.511	.71
75	MP3B	Mx	.056	.71
76	MP3B	X	47.06	5.71
77	MP3B	Z	-81.511	5.71
78	MP3B	Mx	.056	5.71
79	MP3C	X	70.541	.71
80	MP3C	Z	-122.18	.71
81	MP3C	Mx	-.082	.71
82	MP3C	X	70.541	5.71
83	MP3C	Z	-122.18	5.71
84	MP3C	Mx	-.082	5.71
85	MP1A	X	50.7	.71
86	MP1A	Z	-87.815	.71
87	MP1A	Mx	-.045	.71
88	MP1A	X	50.7	5.71
89	MP1A	Z	-87.815	5.71
90	MP1A	Mx	-.045	5.71
91	MP1B	X	42.5	.71
92	MP1B	Z	-73.613	.71
93	MP1B	Mx	.049	.71
94	MP1B	X	42.5	5.71
95	MP1B	Z	-73.613	5.71
96	MP1B	Mx	.049	5.71
97	MP1C	X	63.262	.71
98	MP1C	Z	-109.573	.71
99	MP1C	Mx	0	.71

Member Point Loads (BLC 4 : Antenna Wo (30 Deg)) (Continued)

	Member Label	Direction	Magnitude[lb,k-ft]	Location[ft,%]
100	MP1C	X	63.262	5.71
101	MP1C	Z	-109.573	5.71
102	MP1C	Mx	0	5.71

Member Point Loads (BLC 5 : Antenna Wo (60 Deg))

	Member Label	Direction	Magnitude[lb,k-ft]	Location[ft,%]
1	MP5A	X	29.559	2.21
2	MP5A	Z	-17.066	2.21
3	MP5A	Mx	-.017	2.21
4	MP5A	X	29.559	4.21
5	MP5A	Z	-17.066	4.21
6	MP5A	Mx	-.017	4.21
7	MP5B	X	39.231	2.21
8	MP5B	Z	-22.65	2.21
9	MP5B	Mx	.017	2.21
10	MP5B	X	39.231	4.21
11	MP5B	Z	-22.65	4.21
12	MP5B	Mx	.017	4.21
13	MP5C	X	47.736	2.21
14	MP5C	Z	-27.56	2.21
15	MP5C	Mx	.014	2.21
16	MP5C	X	47.736	4.21
17	MP5C	Z	-27.56	4.21
18	MP5C	Mx	.014	4.21
19	MP3A	X	6.959	1
20	MP3A	Z	-4.018	1
21	MP3A	Mx	.005	1
22	MP3B	X	8.13	1
23	MP3B	Z	-4.694	1
24	MP3B	Mx	-.004	1
25	MP3C	X	9.16	1
26	MP3C	Z	-5.289	1
27	MP3C	Mx	-.003	1
28	M144	X	83.085	1.25
29	M144	Z	-47.969	1.25
30	M144	Mx	0	1.25
31	MP3A	X	34.031	2
32	MP3A	Z	-19.648	2
33	MP3A	Mx	.024	2
34	MP3B	X	40.4	2
35	MP3B	Z	-23.325	2
36	MP3B	Mx	-.022	2
37	MP3C	X	46.002	2
38	MP3C	Z	-26.559	2
39	MP3C	Mx	-.017	2
40	MP3A	X	27.852	4
41	MP3A	Z	-16.08	4
42	MP3A	Mx	.02	4
43	MP3B	X	36.662	4
44	MP3B	Z	-21.167	4
45	MP3B	Mx	-.02	4
46	MP3C	X	44.409	4
47	MP3C	Z	-25.64	4
48	MP3C	Mx	-.016	4
49	MP3A	X	81.511	.71
50	MP3A	Z	-47.06	.71

Member Point Loads (BLC 5 : Antenna Wo (60 Deg)) (Continued)

	Member Label	Direction	Magnitude[lb,k-ft]	Location[ft,%]
51	MP3A	Mx	-.056	.71
52	MP3A	X	81.511	5.71
53	MP3A	Z	-47.06	5.71
54	MP3A	Mx	-.056	5.71
55	MP3B	X	97.572	.71
56	MP3B	Z	-56.333	.71
57	MP3B	Mx	.000908	.71
58	MP3B	X	97.572	5.71
59	MP3B	Z	-56.333	5.71
60	MP3B	Mx	.000908	5.71
61	MP3C	X	111.696	.71
62	MP3C	Z	-64.488	.71
63	MP3C	Mx	.097	.71
64	MP3C	X	111.696	5.71
65	MP3C	Z	-64.488	5.71
66	MP3C	Mx	.097	5.71
67	MP3A	X	81.511	.71
68	MP3A	Z	-47.06	.71
69	MP3A	Mx	-.037	.71
70	MP3A	X	81.511	5.71
71	MP3A	Z	-47.06	5.71
72	MP3A	Mx	-.037	5.71
73	MP3B	X	97.572	.71
74	MP3B	Z	-56.333	.71
75	MP3B	Mx	.085	.71
76	MP3B	X	97.572	5.71
77	MP3B	Z	-56.333	5.71
78	MP3B	Mx	.085	5.71
79	MP3C	X	111.696	.71
80	MP3C	Z	-64.488	.71
81	MP3C	Mx	-.033	.71
82	MP3C	X	111.696	5.71
83	MP3C	Z	-64.488	5.71
84	MP3C	Mx	-.033	5.71
85	MP1A	X	73.613	.71
86	MP1A	Z	-42.5	.71
87	MP1A	Mx	-.049	.71
88	MP1A	X	73.613	5.71
89	MP1A	Z	-42.5	5.71
90	MP1A	Mx	-.049	5.71
91	MP1B	X	87.815	.71
92	MP1B	Z	-50.7	.71
93	MP1B	Mx	.045	.71
94	MP1B	X	87.815	5.71
95	MP1B	Z	-50.7	5.71
96	MP1B	Mx	.045	5.71
97	MP1C	X	100.303	.71
98	MP1C	Z	-57.91	.71
99	MP1C	Mx	.034	.71
100	MP1C	X	100.303	5.71
101	MP1C	Z	-57.91	5.71
102	MP1C	Mx	.034	5.71

Member Point Loads (BLC 6 : Antenna Wo (90 Deg))

	Member Label	Direction	Magnitude[lb,k-ft]	Location[ft,%]
1	MP5A	X	36.664	2.21

Member Point Loads (BLC 6 : Antenna Wo (90 Deg)) (Continued)

	Member Label	Direction	Magnitude[lb,k-ft]	Location[ft,%]
2	MP5A	Z	0	2.21
3	MP5A	Mx	-.017	2.21
4	MP5A	X	36.664	4.21
5	MP5A	Z	0	4.21
6	MP5A	Mx	-.017	4.21
7	MP5B	X	58.999	2.21
8	MP5B	Z	0	2.21
9	MP5B	Mx	.01	2.21
10	MP5B	X	58.999	4.21
11	MP5B	Z	0	4.21
12	MP5B	Mx	.01	4.21
13	MP5C	X	40.542	2.21
14	MP5C	Z	0	2.21
15	MP5C	Mx	.018	2.21
16	MP5C	X	40.542	4.21
17	MP5C	Z	0	4.21
18	MP5C	Mx	.018	4.21
19	MP3A	X	8.342	1
20	MP3A	Z	0	1
21	MP3A	Mx	.005	1
22	MP3B	X	11.047	1
23	MP3B	Z	0	1
24	MP3B	Mx	-.002	1
25	MP3C	X	8.812	1
26	MP3C	Z	0	1
27	MP3C	Mx	-.005	1
28	M144	X	103.391	1.25
29	M144	Z	0	1.25
30	M144	Mx	0	1.25
31	MP3A	X	40.962	2
32	MP3A	Z	0	2
33	MP3A	Mx	.024	2
34	MP3B	X	55.673	2
35	MP3B	Z	0	2
36	MP3B	Mx	-.012	2
37	MP3C	X	43.517	2
38	MP3C	Z	0	2
39	MP3C	Mx	-.024	2
40	MP3A	X	34.467	4
41	MP3A	Z	0	4
42	MP3A	Mx	.02	4
43	MP3B	X	54.812	4
44	MP3B	Z	0	4
45	MP3B	Mx	-.012	4
46	MP3C	X	38	4
47	MP3C	Z	0	4
48	MP3C	Mx	-.021	4
49	MP3A	X	98.324	.71
50	MP3A	Z	0	.71
51	MP3A	Mx	-.027	.71
52	MP3A	X	98.324	5.71
53	MP3A	Z	0	5.71
54	MP3A	Mx	-.027	5.71
55	MP3B	X	135.417	.71
56	MP3B	Z	0	.71
57	MP3B	Mx	-.051	.71
58	MP3B	X	135.417	5.71

Member Point Loads (BLC 6 : Antenna Wo (90 Deg)) (Continued)

	Member Label	Direction	Magnitude[lb,k-ft]	Location[ft,%]
59	MP3B	Z	0	5.71
60	MP3B	Mx	-.051	5.71
61	MP3C	X	104.766	.71
62	MP3C	Z	0	.71
63	MP3C	Mx	.076	.71
64	MP3C	X	104.766	5.71
65	MP3C	Z	0	5.71
66	MP3C	Mx	.076	5.71
67	MP3A	X	98.324	.71
68	MP3A	Z	0	.71
69	MP3A	Mx	-.066	.71
70	MP3A	X	98.324	5.71
71	MP3A	Z	0	5.71
72	MP3A	Mx	-.066	5.71
73	MP3B	X	135.417	.71
74	MP3B	Z	0	.71
75	MP3B	Mx	.097	.71
76	MP3B	X	135.417	5.71
77	MP3B	Z	0	5.71
78	MP3B	Mx	.097	5.71
79	MP3C	X	104.766	.71
80	MP3C	Z	0	.71
81	MP3C	Mx	.015	.71
82	MP3C	X	104.766	5.71
83	MP3C	Z	0	5.71
84	MP3C	Mx	.015	5.71
85	MP1A	X	88.718	.71
86	MP1A	Z	0	.71
87	MP1A	Mx	-.049	.71
88	MP1A	X	88.718	5.71
89	MP1A	Z	0	5.71
90	MP1A	Mx	-.049	5.71
91	MP1B	X	121.516	.71
92	MP1B	Z	0	.71
93	MP1B	Mx	.024	.71
94	MP1B	X	121.516	5.71
95	MP1B	Z	0	5.71
96	MP1B	Mx	.024	5.71
97	MP1C	X	94.413	.71
98	MP1C	Z	0	.71
99	MP1C	Mx	.048	.71
100	MP1C	X	94.413	5.71
101	MP1C	Z	0	5.71
102	MP1C	Mx	.048	5.71

Member Point Loads (BLC 7 : Antenna Wo (120 Deg))

	Member Label	Direction	Magnitude[lb,k-ft]	Location[ft,%]
1	MP5A	X	43.616	2.21
2	MP5A	Z	25.182	2.21
3	MP5A	Mx	-.016	2.21
4	MP5A	X	43.616	4.21
5	MP5A	Z	25.182	4.21
6	MP5A	Mx	-.016	4.21
7	MP5B	X	53.287	2.21
8	MP5B	Z	30.766	2.21
9	MP5B	Mx	-.005	2.21

Member Point Loads (BLC 7 : Antenna Wo (120 Deg)) (Continued)

	Member Label	Direction	Magnitude[lb,k-ft]	Location[ft,%]
10	MP5B	X	53.287	4.21
11	MP5B	Z	30.766	4.21
12	MP5B	Mx	-.005	4.21
13	MP5C	X	28.798	2.21
14	MP5C	Z	16.626	2.21
15	MP5C	Mx	.017	2.21
16	MP5C	X	28.798	4.21
17	MP5C	Z	16.626	4.21
18	MP5C	Mx	.017	4.21
19	MP3A	X	8.661	1
20	MP3A	Z	5.001	1
21	MP3A	Mx	.004	1
22	MP3B	X	9.832	1
23	MP3B	Z	5.677	1
24	MP3B	Mx	.001	1
25	MP3C	X	6.867	1
26	MP3C	Z	3.965	1
27	MP3C	Mx	-.005	1
28	M144	X	102.448	1.25
29	M144	Z	59.148	1.25
30	M144	Mx	0	1.25
31	MP3A	X	43.288	2
32	MP3A	Z	24.992	2
33	MP3A	Mx	.02	2
34	MP3B	X	49.658	2
35	MP3B	Z	28.67	2
36	MP3B	Mx	.006	2
37	MP3C	X	33.529	2
38	MP3C	Z	19.358	2
39	MP3C	Mx	-.024	2
40	MP3A	X	40.656	4
41	MP3A	Z	23.473	4
42	MP3A	Mx	.019	4
43	MP3B	X	49.466	4
44	MP3B	Z	28.559	4
45	MP3B	Mx	.006	4
46	MP3C	X	27.159	4
47	MP3C	Z	15.68	4
48	MP3C	Mx	-.02	4
49	MP3A	X	104.854	.71
50	MP3A	Z	60.537	.71
51	MP3A	Mx	.015	.71
52	MP3A	X	104.854	5.71
53	MP3A	Z	60.537	5.71
54	MP3A	Mx	.015	5.71
55	MP3B	X	120.915	.71
56	MP3B	Z	69.811	.71
57	MP3B	Mx	-.092	.71
58	MP3B	X	120.915	5.71
59	MP3B	Z	69.811	5.71
60	MP3B	Mx	-.092	5.71
61	MP3C	X	80.246	.71
62	MP3C	Z	46.33	.71
63	MP3C	Mx	.046	.71
64	MP3C	X	80.246	5.71
65	MP3C	Z	46.33	5.71
66	MP3C	Mx	.046	5.71

Member Point Loads (BLC 7 : Antenna Wo (120 Deg)) (Continued)

	Member Label	Direction	Magnitude[lb,k-ft]	Location[ft,%]
67	MP3A	X	104.854	.71
68	MP3A	Z	60.537	.71
69	MP3A	Mx	-.093	.71
70	MP3A	X	104.854	5.71
71	MP3A	Z	60.537	5.71
72	MP3A	Mx	-.093	5.71
73	MP3B	X	120.915	.71
74	MP3B	Z	69.811	.71
75	MP3B	Mx	.068	.71
76	MP3B	X	120.915	5.71
77	MP3B	Z	69.811	5.71
78	MP3B	Mx	.068	5.71
79	MP3C	X	80.246	.71
80	MP3C	Z	46.33	.71
81	MP3C	Mx	.046	.71
82	MP3C	X	80.246	5.71
83	MP3C	Z	46.33	5.71
84	MP3C	Mx	.046	5.71
85	MP1A	X	94.253	.71
86	MP1A	Z	54.417	.71
87	MP1A	Mx	-.041	.71
88	MP1A	X	94.253	5.71
89	MP1A	Z	54.417	5.71
90	MP1A	Mx	-.041	5.71
91	MP1B	X	108.455	.71
92	MP1B	Z	62.616	.71
93	MP1B	Mx	-.013	.71
94	MP1B	X	108.455	5.71
95	MP1B	Z	62.616	5.71
96	MP1B	Mx	-.013	5.71
97	MP1C	X	72.495	.71
98	MP1C	Z	41.855	.71
99	MP1C	Mx	.049	.71
100	MP1C	X	72.495	5.71
101	MP1C	Z	41.855	5.71
102	MP1C	Mx	.049	5.71

Member Point Loads (BLC 8 : Antenna Wo (150 Deg))

	Member Label	Direction	Magnitude[lb,k-ft]	Location[ft,%]
1	MP5A	X	30.766	2.21
2	MP5A	Z	53.287	2.21
3	MP5A	Mx	-.005	2.21
4	MP5A	X	30.766	4.21
5	MP5A	Z	53.287	4.21
6	MP5A	Mx	-.005	4.21
7	MP5B	X	25.182	2.21
8	MP5B	Z	43.616	2.21
9	MP5B	Mx	-.016	2.21
10	MP5B	X	25.182	4.21
11	MP5B	Z	43.616	4.21
12	MP5B	Mx	-.016	4.21
13	MP5C	X	20.271	2.21
14	MP5C	Z	35.111	2.21
15	MP5C	Mx	.018	2.21
16	MP5C	X	20.271	4.21
17	MP5C	Z	35.111	4.21

Member Point Loads (BLC 8 : Antenna Wo (150 Deg)) (Continued)

	Member Label	Direction	Magnitude[lb,k-ft]	Location[ft,%]
18	MP5C	Mx	.018	4.21
19	MP3A	X	5.677	1
20	MP3A	Z	9.832	1
21	MP3A	Mx	.001	1
22	MP3B	X	5.001	1
23	MP3B	Z	8.661	1
24	MP3B	Mx	.004	1
25	MP3C	X	4.406	1
26	MP3C	Z	7.631	1
27	MP3C	Mx	-.005	1
28	M144	X	62.875	1.25
29	M144	Z	108.902	1.25
30	M144	Mx	0	1.25
31	MP3A	X	28.67	2
32	MP3A	Z	49.658	2
33	MP3A	Mx	.006	2
34	MP3B	X	24.992	2
35	MP3B	Z	43.288	2
36	MP3B	Mx	.02	2
37	MP3C	X	21.758	2
38	MP3C	Z	37.687	2
39	MP3C	Mx	-.024	2
40	MP3A	X	28.559	4
41	MP3A	Z	49.466	4
42	MP3A	Mx	.006	4
43	MP3B	X	23.473	4
44	MP3B	Z	40.656	4
45	MP3B	Mx	.019	4
46	MP3C	X	19	4
47	MP3C	Z	32.909	4
48	MP3C	Mx	-.021	4
49	MP3A	X	69.811	.71
50	MP3A	Z	120.915	.71
51	MP3A	Mx	.068	.71
52	MP3A	X	69.811	5.71
53	MP3A	Z	120.915	5.71
54	MP3A	Mx	.068	5.71
55	MP3B	X	60.537	.71
56	MP3B	Z	104.854	.71
57	MP3B	Mx	-.093	.71
58	MP3B	X	60.537	5.71
59	MP3B	Z	104.854	5.71
60	MP3B	Mx	-.093	5.71
61	MP3C	X	52.383	.71
62	MP3C	Z	90.73	.71
63	MP3C	Mx	.015	.71
64	MP3C	X	52.383	5.71
65	MP3C	Z	90.73	5.71
66	MP3C	Mx	.015	5.71
67	MP3A	X	69.811	.71
68	MP3A	Z	120.915	.71
69	MP3A	Mx	-.092	.71
70	MP3A	X	69.811	5.71
71	MP3A	Z	120.915	5.71
72	MP3A	Mx	-.092	5.71
73	MP3B	X	60.537	.71
74	MP3B	Z	104.854	.71

Member Point Loads (BLC 8 : Antenna Wo (150 Deg)) (Continued)

	Member Label	Direction	Magnitude[lb,k-ft]	Location[ft,%]
75	MP3B	Mx	.015	.71
76	MP3B	X	60.537	5.71
77	MP3B	Z	104.854	5.71
78	MP3B	Mx	.015	5.71
79	MP3C	X	52.383	.71
80	MP3C	Z	90.73	.71
81	MP3C	Mx	.076	.71
82	MP3C	X	52.383	5.71
83	MP3C	Z	90.73	5.71
84	MP3C	Mx	.076	5.71
85	MP1A	X	62.616	.71
86	MP1A	Z	108.455	.71
87	MP1A	Mx	-.013	.71
88	MP1A	X	62.616	5.71
89	MP1A	Z	108.455	5.71
90	MP1A	Mx	-.013	5.71
91	MP1B	X	54.417	.71
92	MP1B	Z	94.253	.71
93	MP1B	Mx	-.041	.71
94	MP1B	X	54.417	5.71
95	MP1B	Z	94.253	5.71
96	MP1B	Mx	-.041	5.71
97	MP1C	X	47.207	.71
98	MP1C	Z	81.764	.71
99	MP1C	Mx	.048	.71
100	MP1C	X	47.207	5.71
101	MP1C	Z	81.764	5.71
102	MP1C	Mx	.048	5.71

Member Point Loads (BLC 9 : Antenna Wo (180 Deg))

	Member Label	Direction	Magnitude[lb,k-ft]	Location[ft,%]
1	MP5A	X	0	2.21
2	MP5A	Z	58.999	2.21
3	MP5A	Mx	.01	2.21
4	MP5A	X	0	4.21
5	MP5A	Z	58.999	4.21
6	MP5A	Mx	.01	4.21
7	MP5B	X	0	2.21
8	MP5B	Z	36.664	2.21
9	MP5B	Mx	-.017	2.21
10	MP5B	X	0	4.21
11	MP5B	Z	36.664	4.21
12	MP5B	Mx	-.017	4.21
13	MP5C	X	0	2.21
14	MP5C	Z	55.121	2.21
15	MP5C	Mx	.014	2.21
16	MP5C	X	0	4.21
17	MP5C	Z	55.121	4.21
18	MP5C	Mx	.014	4.21
19	MP3A	X	0	1
20	MP3A	Z	11.047	1
21	MP3A	Mx	-.002	1
22	MP3B	X	0	1
23	MP3B	Z	8.342	1
24	MP3B	Mx	.005	1
25	MP3C	X	0	1

Member Point Loads (BLC 9 : Antenna Wo (180 Deg)) (Continued)

	Member Label	Direction	Magnitude[lb,k-ft]	Location[ft,%]
26	MP3C	Z	10.577	1
27	MP3C	Mx	-.003	1
28	M144	X	0	1.25
29	M144	Z	118.297	1.25
30	M144	Mx	0	1.25
31	MP3A	X	0	2
32	MP3A	Z	55.673	2
33	MP3A	Mx	-.012	2
34	MP3B	X	0	2
35	MP3B	Z	40.962	2
36	MP3B	Mx	.024	2
37	MP3C	X	0	2
38	MP3C	Z	53.118	2
39	MP3C	Mx	-.017	2
40	MP3A	X	0	4
41	MP3A	Z	54.812	4
42	MP3A	Mx	-.012	4
43	MP3B	X	0	4
44	MP3B	Z	34.467	4
45	MP3B	Mx	.02	4
46	MP3C	X	0	4
47	MP3C	Z	51.279	4
48	MP3C	Mx	-.016	4
49	MP3A	X	0	.71
50	MP3A	Z	135.417	.71
51	MP3A	Mx	.097	.71
52	MP3A	X	0	5.71
53	MP3A	Z	135.417	5.71
54	MP3A	Mx	.097	5.71
55	MP3B	X	0	.71
56	MP3B	Z	98.324	.71
57	MP3B	Mx	-.066	.71
58	MP3B	X	0	5.71
59	MP3B	Z	98.324	5.71
60	MP3B	Mx	-.066	5.71
61	MP3C	X	0	.71
62	MP3C	Z	128.976	.71
63	MP3C	Mx	-.033	.71
64	MP3C	X	0	5.71
65	MP3C	Z	128.976	5.71
66	MP3C	Mx	-.033	5.71
67	MP3A	X	0	.71
68	MP3A	Z	135.417	.71
69	MP3A	Mx	-.051	.71
70	MP3A	X	0	5.71
71	MP3A	Z	135.417	5.71
72	MP3A	Mx	-.051	5.71
73	MP3B	X	0	.71
74	MP3B	Z	98.324	.71
75	MP3B	Mx	-.027	.71
76	MP3B	X	0	5.71
77	MP3B	Z	98.324	5.71
78	MP3B	Mx	-.027	5.71
79	MP3C	X	0	.71
80	MP3C	Z	128.976	.71
81	MP3C	Mx	.097	.71
82	MP3C	X	0	5.71

Member Point Loads (BLC 9 : Antenna Wo (180 Deg)) (Continued)

	Member Label	Direction	Magnitude[lb,k-ft]	Location[ft,%]
83	MP3C	Z	128.976	5.71
84	MP3C	Mx	.097	5.71
85	MP1A	X	0	.71
86	MP1A	Z	121.516	.71
87	MP1A	Mx	.024	.71
88	MP1A	X	0	5.71
89	MP1A	Z	121.516	5.71
90	MP1A	Mx	.024	5.71
91	MP1B	X	0	.71
92	MP1B	Z	88.718	.71
93	MP1B	Mx	-.049	.71
94	MP1B	X	0	5.71
95	MP1B	Z	88.718	5.71
96	MP1B	Mx	-.049	5.71
97	MP1C	X	0	.71
98	MP1C	Z	115.82	.71
99	MP1C	Mx	.034	.71
100	MP1C	X	0	5.71
101	MP1C	Z	115.82	5.71
102	MP1C	Mx	.034	5.71

Member Point Loads (BLC 10 : Antenna Wo (210 Deg))

	Member Label	Direction	Magnitude[lb,k-ft]	Location[ft,%]
1	MP5A	X	-22.65	2.21
2	MP5A	Z	39.231	2.21
3	MP5A	Mx	.017	2.21
4	MP5A	X	-22.65	4.21
5	MP5A	Z	39.231	4.21
6	MP5A	Mx	.017	4.21
7	MP5B	X	-17.066	2.21
8	MP5B	Z	29.559	2.21
9	MP5B	Mx	-.017	2.21
10	MP5B	X	-17.066	4.21
11	MP5B	Z	29.559	4.21
12	MP5B	Mx	-.017	4.21
13	MP5C	X	-31.205	2.21
14	MP5C	Z	54.049	2.21
15	MP5C	Mx	0	2.21
16	MP5C	X	-31.205	4.21
17	MP5C	Z	54.049	4.21
18	MP5C	Mx	0	4.21
19	MP3A	X	-4.694	1
20	MP3A	Z	8.13	1
21	MP3A	Mx	-.004	1
22	MP3B	X	-4.018	1
23	MP3B	Z	6.959	1
24	MP3B	Mx	.005	1
25	MP3C	X	-5.73	1
26	MP3C	Z	9.925	1
27	MP3C	Mx	0	1
28	M144	X	-51.696	1.25
29	M144	Z	89.539	1.25
30	M144	Mx	0	1.25
31	MP3A	X	-23.325	2
32	MP3A	Z	40.4	2
33	MP3A	Mx	-.022	2

Member Point Loads (BLC 10 : Antenna Wo (210 Deg)) (Continued)

	Member Label	Direction	Magnitude[lb,k-ft]	Location[ft,%]
34	MP3B	X	-19.648	2
35	MP3B	Z	34.031	2
36	MP3B	Mx	.024	2
37	MP3C	X	-28.96	2
38	MP3C	Z	50.159	2
39	MP3C	Mx	0	2
40	MP3A	X	-21.167	4
41	MP3A	Z	36.662	4
42	MP3A	Mx	-.02	4
43	MP3B	X	-16.08	4
44	MP3B	Z	27.852	4
45	MP3B	Mx	.02	4
46	MP3C	X	-28.96	4
47	MP3C	Z	50.159	4
48	MP3C	Mx	0	4
49	MP3A	X	-56.333	.71
50	MP3A	Z	97.572	.71
51	MP3A	Mx	.085	.71
52	MP3A	X	-56.333	5.71
53	MP3A	Z	97.572	5.71
54	MP3A	Mx	.085	5.71
55	MP3B	X	-47.06	.71
56	MP3B	Z	81.511	.71
57	MP3B	Mx	-.037	.71
58	MP3B	X	-47.06	5.71
59	MP3B	Z	81.511	5.71
60	MP3B	Mx	-.037	5.71
61	MP3C	X	-70.541	.71
62	MP3C	Z	122.18	.71
63	MP3C	Mx	-.082	.71
64	MP3C	X	-70.541	5.71
65	MP3C	Z	122.18	5.71
66	MP3C	Mx	-.082	5.71
67	MP3A	X	-56.333	.71
68	MP3A	Z	97.572	.71
69	MP3A	Mx	.000908	.71
70	MP3A	X	-56.333	5.71
71	MP3A	Z	97.572	5.71
72	MP3A	Mx	.000908	5.71
73	MP3B	X	-47.06	.71
74	MP3B	Z	81.511	.71
75	MP3B	Mx	-.056	.71
76	MP3B	X	-47.06	5.71
77	MP3B	Z	81.511	5.71
78	MP3B	Mx	-.056	5.71
79	MP3C	X	-70.541	.71
80	MP3C	Z	122.18	.71
81	MP3C	Mx	.082	.71
82	MP3C	X	-70.541	5.71
83	MP3C	Z	122.18	5.71
84	MP3C	Mx	.082	5.71
85	MP1A	X	-50.7	.71
86	MP1A	Z	87.815	.71
87	MP1A	Mx	.045	.71
88	MP1A	X	-50.7	5.71
89	MP1A	Z	87.815	5.71
90	MP1A	Mx	.045	5.71

Member Point Loads (BLC 10 : Antenna Wo (210 Deg)) (Continued)

	Member Label	Direction	Magnitude[lb,k-ft]	Location[ft,%]
91	MP1B	X	-42.5	.71
92	MP1B	Z	73.613	.71
93	MP1B	Mx	-.049	.71
94	MP1B	X	-42.5	5.71
95	MP1B	Z	73.613	5.71
96	MP1B	Mx	-.049	5.71
97	MP1C	X	-63.262	.71
98	MP1C	Z	109.573	.71
99	MP1C	Mx	0	.71
100	MP1C	X	-63.262	5.71
101	MP1C	Z	109.573	5.71
102	MP1C	Mx	0	5.71

Member Point Loads (BLC 11 : Antenna Wo (240 Deg))

	Member Label	Direction	Magnitude[lb,k-ft]	Location[ft,%]
1	MP5A	X	-29.559	2.21
2	MP5A	Z	17.066	2.21
3	MP5A	Mx	.017	2.21
4	MP5A	X	-29.559	4.21
5	MP5A	Z	17.066	4.21
6	MP5A	Mx	.017	4.21
7	MP5B	X	-39.231	2.21
8	MP5B	Z	22.65	2.21
9	MP5B	Mx	-.017	2.21
10	MP5B	X	-39.231	4.21
11	MP5B	Z	22.65	4.21
12	MP5B	Mx	-.017	4.21
13	MP5C	X	-47.736	2.21
14	MP5C	Z	27.56	2.21
15	MP5C	Mx	-.014	2.21
16	MP5C	X	-47.736	4.21
17	MP5C	Z	27.56	4.21
18	MP5C	Mx	-.014	4.21
19	MP3A	X	-6.959	1
20	MP3A	Z	4.018	1
21	MP3A	Mx	-.005	1
22	MP3B	X	-8.13	1
23	MP3B	Z	4.694	1
24	MP3B	Mx	.004	1
25	MP3C	X	-9.16	1
26	MP3C	Z	5.289	1
27	MP3C	Mx	.003	1
28	M144	X	-83.085	1.25
29	M144	Z	47.969	1.25
30	M144	Mx	0	1.25
31	MP3A	X	-34.031	2
32	MP3A	Z	19.648	2
33	MP3A	Mx	-.024	2
34	MP3B	X	-40.4	2
35	MP3B	Z	23.325	2
36	MP3B	Mx	.022	2
37	MP3C	X	-46.002	2
38	MP3C	Z	26.559	2
39	MP3C	Mx	.017	2
40	MP3A	X	-27.852	4
41	MP3A	Z	16.08	4

Member Point Loads (BLC 11 : Antenna Wo (240 Deg)) (Continued)

	Member Label	Direction	Magnitude[lb,k-ft]	Location[ft,%]
42	MP3A	Mx	-.02	4
43	MP3B	X	-36.662	4
44	MP3B	Z	21.167	4
45	MP3B	Mx	.02	4
46	MP3C	X	-44.409	4
47	MP3C	Z	25.64	4
48	MP3C	Mx	.016	4
49	MP3A	X	-81.511	.71
50	MP3A	Z	47.06	.71
51	MP3A	Mx	.056	.71
52	MP3A	X	-81.511	5.71
53	MP3A	Z	47.06	5.71
54	MP3A	Mx	.056	5.71
55	MP3B	X	-97.572	.71
56	MP3B	Z	56.333	.71
57	MP3B	Mx	-.000908	.71
58	MP3B	X	-97.572	5.71
59	MP3B	Z	56.333	5.71
60	MP3B	Mx	-.000908	5.71
61	MP3C	X	-111.696	.71
62	MP3C	Z	64.488	.71
63	MP3C	Mx	-.097	.71
64	MP3C	X	-111.696	5.71
65	MP3C	Z	64.488	5.71
66	MP3C	Mx	-.097	5.71
67	MP3A	X	-81.511	.71
68	MP3A	Z	47.06	.71
69	MP3A	Mx	.037	.71
70	MP3A	X	-81.511	5.71
71	MP3A	Z	47.06	5.71
72	MP3A	Mx	.037	5.71
73	MP3B	X	-97.572	.71
74	MP3B	Z	56.333	.71
75	MP3B	Mx	-.085	.71
76	MP3B	X	-97.572	5.71
77	MP3B	Z	56.333	5.71
78	MP3B	Mx	-.085	5.71
79	MP3C	X	-111.696	.71
80	MP3C	Z	64.488	.71
81	MP3C	Mx	.033	.71
82	MP3C	X	-111.696	5.71
83	MP3C	Z	64.488	5.71
84	MP3C	Mx	.033	5.71
85	MP1A	X	-73.613	.71
86	MP1A	Z	42.5	.71
87	MP1A	Mx	.049	.71
88	MP1A	X	-73.613	5.71
89	MP1A	Z	42.5	5.71
90	MP1A	Mx	.049	5.71
91	MP1B	X	-87.815	.71
92	MP1B	Z	50.7	.71
93	MP1B	Mx	-.045	.71
94	MP1B	X	-87.815	5.71
95	MP1B	Z	50.7	5.71
96	MP1B	Mx	-.045	5.71
97	MP1C	X	-100.303	.71
98	MP1C	Z	57.91	.71

Member Point Loads (BLC 11 : Antenna Wo (240 Deg)) (Continued)

	Member Label	Direction	Magnitude[lb,k-ft]	Location[ft,%]
99	MP1C	Mx	-.034	.71
100	MP1C	X	-100.303	5.71
101	MP1C	Z	57.91	5.71
102	MP1C	Mx	-.034	5.71

Member Point Loads (BLC 12 : Antenna Wo (270 Deg))

	Member Label	Direction	Magnitude[lb,k-ft]	Location[ft,%]
1	MP5A	X	-36.664	2.21
2	MP5A	Z	0	2.21
3	MP5A	Mx	.017	2.21
4	MP5A	X	-36.664	4.21
5	MP5A	Z	0	4.21
6	MP5A	Mx	.017	4.21
7	MP5B	X	-58.999	2.21
8	MP5B	Z	0	2.21
9	MP5B	Mx	-.01	2.21
10	MP5B	X	-58.999	4.21
11	MP5B	Z	0	4.21
12	MP5B	Mx	-.01	4.21
13	MP5C	X	-40.542	2.21
14	MP5C	Z	0	2.21
15	MP5C	Mx	-.018	2.21
16	MP5C	X	-40.542	4.21
17	MP5C	Z	0	4.21
18	MP5C	Mx	-.018	4.21
19	MP3A	X	-8.342	1
20	MP3A	Z	0	1
21	MP3A	Mx	-.005	1
22	MP3B	X	-11.047	1
23	MP3B	Z	0	1
24	MP3B	Mx	.002	1
25	MP3C	X	-8.812	1
26	MP3C	Z	0	1
27	MP3C	Mx	.005	1
28	M144	X	-103.391	1.25
29	M144	Z	0	1.25
30	M144	Mx	0	1.25
31	MP3A	X	-40.962	2
32	MP3A	Z	0	2
33	MP3A	Mx	-.024	2
34	MP3B	X	-55.673	2
35	MP3B	Z	0	2
36	MP3B	Mx	.012	2
37	MP3C	X	-43.517	2
38	MP3C	Z	0	2
39	MP3C	Mx	.024	2
40	MP3A	X	-34.467	4
41	MP3A	Z	0	4
42	MP3A	Mx	-.02	4
43	MP3B	X	-54.812	4
44	MP3B	Z	0	4
45	MP3B	Mx	.012	4
46	MP3C	X	-38	4
47	MP3C	Z	0	4
48	MP3C	Mx	.021	4
49	MP3A	X	-98.324	.71

Member Point Loads (BLC 12 : Antenna Wo (270 Deg)) (Continued)

	Member Label	Direction	Magnitude[lb,k-ft]	Location[ft,%]
50	MP3A	Z	0	.71
51	MP3A	Mx	.027	.71
52	MP3A	X	-98.324	5.71
53	MP3A	Z	0	5.71
54	MP3A	Mx	.027	5.71
55	MP3B	X	-135.417	.71
56	MP3B	Z	0	.71
57	MP3B	Mx	.051	.71
58	MP3B	X	-135.417	5.71
59	MP3B	Z	0	5.71
60	MP3B	Mx	.051	5.71
61	MP3C	X	-104.766	.71
62	MP3C	Z	0	.71
63	MP3C	Mx	-.076	.71
64	MP3C	X	-104.766	5.71
65	MP3C	Z	0	5.71
66	MP3C	Mx	-.076	5.71
67	MP3A	X	-98.324	.71
68	MP3A	Z	0	.71
69	MP3A	Mx	.066	.71
70	MP3A	X	-98.324	5.71
71	MP3A	Z	0	5.71
72	MP3A	Mx	.066	5.71
73	MP3B	X	-135.417	.71
74	MP3B	Z	0	.71
75	MP3B	Mx	-.097	.71
76	MP3B	X	-135.417	5.71
77	MP3B	Z	0	5.71
78	MP3B	Mx	-.097	5.71
79	MP3C	X	-104.766	.71
80	MP3C	Z	0	.71
81	MP3C	Mx	-.015	.71
82	MP3C	X	-104.766	5.71
83	MP3C	Z	0	5.71
84	MP3C	Mx	-.015	5.71
85	MP1A	X	-88.718	.71
86	MP1A	Z	0	.71
87	MP1A	Mx	.049	.71
88	MP1A	X	-88.718	5.71
89	MP1A	Z	0	5.71
90	MP1A	Mx	.049	5.71
91	MP1B	X	-121.516	.71
92	MP1B	Z	0	.71
93	MP1B	Mx	-.024	.71
94	MP1B	X	-121.516	5.71
95	MP1B	Z	0	5.71
96	MP1B	Mx	-.024	5.71
97	MP1C	X	-94.413	.71
98	MP1C	Z	0	.71
99	MP1C	Mx	-.048	.71
100	MP1C	X	-94.413	5.71
101	MP1C	Z	0	5.71
102	MP1C	Mx	-.048	5.71

Member Point Loads (BLC 13 : Antenna Wo (300 Deg))

	Member Label	Direction	Magnitude[lb,k-ft]	Location[ft,%]

Member Point Loads (BLC 13 : Antenna Wo (300 Deg)) (Continued)

	Member Label	Direction	Magnitude[lb,k-ft]	Location[ft,%]
1	MP5A	X	-43.616	2.21
2	MP5A	Z	-25.182	2.21
3	MP5A	Mx	.016	2.21
4	MP5A	X	-43.616	4.21
5	MP5A	Z	-25.182	4.21
6	MP5A	Mx	.016	4.21
7	MP5B	X	-53.287	2.21
8	MP5B	Z	-30.766	2.21
9	MP5B	Mx	.005	2.21
10	MP5B	X	-53.287	4.21
11	MP5B	Z	-30.766	4.21
12	MP5B	Mx	.005	4.21
13	MP5C	X	-28.798	2.21
14	MP5C	Z	-16.626	2.21
15	MP5C	Mx	-.017	2.21
16	MP5C	X	-28.798	4.21
17	MP5C	Z	-16.626	4.21
18	MP5C	Mx	-.017	4.21
19	MP3A	X	-8.661	1
20	MP3A	Z	-5.001	1
21	MP3A	Mx	-.004	1
22	MP3B	X	-9.832	1
23	MP3B	Z	-5.677	1
24	MP3B	Mx	-.001	1
25	MP3C	X	-6.867	1
26	MP3C	Z	-3.965	1
27	MP3C	Mx	.005	1
28	M144	X	-102.448	1.25
29	M144	Z	-59.148	1.25
30	M144	Mx	0	1.25
31	MP3A	X	-43.288	2
32	MP3A	Z	-24.992	2
33	MP3A	Mx	-.02	2
34	MP3B	X	-49.658	2
35	MP3B	Z	-28.67	2
36	MP3B	Mx	-.006	2
37	MP3C	X	-33.529	2
38	MP3C	Z	-19.358	2
39	MP3C	Mx	.024	2
40	MP3A	X	-40.656	4
41	MP3A	Z	-23.473	4
42	MP3A	Mx	-.019	4
43	MP3B	X	-49.466	4
44	MP3B	Z	-28.559	4
45	MP3B	Mx	-.006	4
46	MP3C	X	-27.159	4
47	MP3C	Z	-15.68	4
48	MP3C	Mx	.02	4
49	MP3A	X	-104.854	.71
50	MP3A	Z	-60.537	.71
51	MP3A	Mx	-.015	.71
52	MP3A	X	-104.854	5.71
53	MP3A	Z	-60.537	5.71
54	MP3A	Mx	-.015	5.71
55	MP3B	X	-120.915	.71
56	MP3B	Z	-69.811	.71
57	MP3B	Mx	.092	.71

Member Point Loads (BLC 13 : Antenna Wo (300 Deg)) (Continued)

	Member Label	Direction	Magnitude[lb,k-ft]	Location[ft,%]
58	MP3B	X	-120.915	5.71
59	MP3B	Z	-69.811	5.71
60	MP3B	Mx	.092	5.71
61	MP3C	X	-80.246	.71
62	MP3C	Z	-46.33	.71
63	MP3C	Mx	-.046	.71
64	MP3C	X	-80.246	5.71
65	MP3C	Z	-46.33	5.71
66	MP3C	Mx	-.046	5.71
67	MP3A	X	-104.854	.71
68	MP3A	Z	-60.537	.71
69	MP3A	Mx	.093	.71
70	MP3A	X	-104.854	5.71
71	MP3A	Z	-60.537	5.71
72	MP3A	Mx	.093	5.71
73	MP3B	X	-120.915	.71
74	MP3B	Z	-69.811	.71
75	MP3B	Mx	-.068	.71
76	MP3B	X	-120.915	5.71
77	MP3B	Z	-69.811	5.71
78	MP3B	Mx	-.068	5.71
79	MP3C	X	-80.246	.71
80	MP3C	Z	-46.33	.71
81	MP3C	Mx	-.046	.71
82	MP3C	X	-80.246	5.71
83	MP3C	Z	-46.33	5.71
84	MP3C	Mx	-.046	5.71
85	MP1A	X	-94.253	.71
86	MP1A	Z	-54.417	.71
87	MP1A	Mx	.041	.71
88	MP1A	X	-94.253	5.71
89	MP1A	Z	-54.417	5.71
90	MP1A	Mx	.041	5.71
91	MP1B	X	-108.455	.71
92	MP1B	Z	-62.616	.71
93	MP1B	Mx	.013	.71
94	MP1B	X	-108.455	5.71
95	MP1B	Z	-62.616	5.71
96	MP1B	Mx	.013	5.71
97	MP1C	X	-72.495	.71
98	MP1C	Z	-41.855	.71
99	MP1C	Mx	-.049	.71
100	MP1C	X	-72.495	5.71
101	MP1C	Z	-41.855	5.71
102	MP1C	Mx	-.049	5.71

Member Point Loads (BLC 14 : Antenna Wo (330 Deg))

	Member Label	Direction	Magnitude[lb,k-ft]	Location[ft,%]
1	MP5A	X	-30.766	2.21
2	MP5A	Z	-53.287	2.21
3	MP5A	Mx	.005	2.21
4	MP5A	X	-30.766	4.21
5	MP5A	Z	-53.287	4.21
6	MP5A	Mx	.005	4.21
7	MP5B	X	-25.182	2.21
8	MP5B	Z	-43.616	2.21

Member Point Loads (BLC 14 : Antenna Wo (330 Deg)) (Continued)

	Member Label	Direction	Magnitude[lb,k-ft]	Location[ft,%]
9	MP5B	Mx	.016	2.21
10	MP5B	X	-25.182	4.21
11	MP5B	Z	-43.616	4.21
12	MP5B	Mx	.016	4.21
13	MP5C	X	-20.271	2.21
14	MP5C	Z	-35.111	2.21
15	MP5C	Mx	-.018	2.21
16	MP5C	X	-20.271	4.21
17	MP5C	Z	-35.111	4.21
18	MP5C	Mx	-.018	4.21
19	MP3A	X	-5.677	1
20	MP3A	Z	-9.832	1
21	MP3A	Mx	-.001	1
22	MP3B	X	-5.001	1
23	MP3B	Z	-8.661	1
24	MP3B	Mx	-.004	1
25	MP3C	X	-4.406	1
26	MP3C	Z	-7.631	1
27	MP3C	Mx	.005	1
28	M144	X	-62.875	1.25
29	M144	Z	-108.902	1.25
30	M144	Mx	0	1.25
31	MP3A	X	-28.67	2
32	MP3A	Z	-49.658	2
33	MP3A	Mx	-.006	2
34	MP3B	X	-24.992	2
35	MP3B	Z	-43.288	2
36	MP3B	Mx	-.02	2
37	MP3C	X	-21.758	2
38	MP3C	Z	-37.687	2
39	MP3C	Mx	.024	2
40	MP3A	X	-28.559	4
41	MP3A	Z	-49.466	4
42	MP3A	Mx	-.006	4
43	MP3B	X	-23.473	4
44	MP3B	Z	-40.656	4
45	MP3B	Mx	-.019	4
46	MP3C	X	-19	4
47	MP3C	Z	-32.909	4
48	MP3C	Mx	.021	4
49	MP3A	X	-69.811	.71
50	MP3A	Z	-120.915	.71
51	MP3A	Mx	-.068	.71
52	MP3A	X	-69.811	5.71
53	MP3A	Z	-120.915	5.71
54	MP3A	Mx	-.068	5.71
55	MP3B	X	-60.537	.71
56	MP3B	Z	-104.854	.71
57	MP3B	Mx	.093	.71
58	MP3B	X	-60.537	5.71
59	MP3B	Z	-104.854	5.71
60	MP3B	Mx	.093	5.71
61	MP3C	X	-52.383	.71
62	MP3C	Z	-90.73	.71
63	MP3C	Mx	-.015	.71
64	MP3C	X	-52.383	5.71
65	MP3C	Z	-90.73	5.71

Member Point Loads (BLC 14 : Antenna Wo (330 Deg)) (Continued)

	Member Label	Direction	Magnitude[lb,k-ft]	Location[ft,%]
66	MP3C	Mx	-.015	5.71
67	MP3A	X	-69.811	.71
68	MP3A	Z	-120.915	.71
69	MP3A	Mx	.092	.71
70	MP3A	X	-69.811	5.71
71	MP3A	Z	-120.915	5.71
72	MP3A	Mx	.092	5.71
73	MP3B	X	-60.537	.71
74	MP3B	Z	-104.854	.71
75	MP3B	Mx	-.015	.71
76	MP3B	X	-60.537	5.71
77	MP3B	Z	-104.854	5.71
78	MP3B	Mx	-.015	5.71
79	MP3C	X	-52.383	.71
80	MP3C	Z	-90.73	.71
81	MP3C	Mx	-.076	.71
82	MP3C	X	-52.383	5.71
83	MP3C	Z	-90.73	5.71
84	MP3C	Mx	-.076	5.71
85	MP1A	X	-62.616	.71
86	MP1A	Z	-108.455	.71
87	MP1A	Mx	.013	.71
88	MP1A	X	-62.616	5.71
89	MP1A	Z	-108.455	5.71
90	MP1A	Mx	.013	5.71
91	MP1B	X	-54.417	.71
92	MP1B	Z	-94.253	.71
93	MP1B	Mx	.041	.71
94	MP1B	X	-54.417	5.71
95	MP1B	Z	-94.253	5.71
96	MP1B	Mx	.041	5.71
97	MP1C	X	-47.207	.71
98	MP1C	Z	-81.764	.71
99	MP1C	Mx	-.048	.71
100	MP1C	X	-47.207	5.71
101	MP1C	Z	-81.764	5.71
102	MP1C	Mx	-.048	5.71

Member Point Loads (BLC 15 : Antenna Wi (0 Deg))

	Member Label	Direction	Magnitude[lb,k-ft]	Location[ft,%]
1	MP5A	X	0	2.21
2	MP5A	Z	-12.483	2.21
3	MP5A	Mx	-.002	2.21
4	MP5A	X	0	4.21
5	MP5A	Z	-12.483	4.21
6	MP5A	Mx	-.002	4.21
7	MP5B	X	0	2.21
8	MP5B	Z	-8.064	2.21
9	MP5B	Mx	.004	2.21
10	MP5B	X	0	4.21
11	MP5B	Z	-8.064	4.21
12	MP5B	Mx	.004	4.21
13	MP5C	X	0	2.21
14	MP5C	Z	-11.716	2.21
15	MP5C	Mx	-.003	2.21
16	MP5C	X	0	4.21

Member Point Loads (BLC 15 : Antenna Wi (0 Deg)) (Continued)

	Member Label	Direction	Magnitude[lb,k-ft]	Location[ft,%]
17	MP5C	Z	-11.716	4.21
18	MP5C	Mx	-.003	4.21
19	MP3A	X	0	1
20	MP3A	Z	-3.034	1
21	MP3A	Mx	.000649	1
22	MP3B	X	0	1
23	MP3B	Z	-2.436	1
24	MP3B	Mx	-.001	1
25	MP3C	X	0	1
26	MP3C	Z	-2.93	1
27	MP3C	Mx	.000916	1
28	M144	X	0	1.25
29	M144	Z	-25.018	1.25
30	M144	Mx	0	1.25
31	MP3A	X	0	2
32	MP3A	Z	-12.417	2
33	MP3A	Mx	.003	2
34	MP3B	X	0	2
35	MP3B	Z	-9.414	2
36	MP3B	Mx	-.006	2
37	MP3C	X	0	2
38	MP3C	Z	-11.895	2
39	MP3C	Mx	.004	2
40	MP3A	X	0	4
41	MP3A	Z	-12.242	4
42	MP3A	Mx	.003	4
43	MP3B	X	0	4
44	MP3B	Z	-8.099	4
45	MP3B	Mx	-.005	4
46	MP3C	X	0	4
47	MP3C	Z	-11.523	4
48	MP3C	Mx	.004	4
49	MP3A	X	0	.71
50	MP3A	Z	-27.655	.71
51	MP3A	Mx	-.02	.71
52	MP3A	X	0	5.71
53	MP3A	Z	-27.655	5.71
54	MP3A	Mx	-.02	5.71
55	MP3B	X	0	.71
56	MP3B	Z	-20.661	.71
57	MP3B	Mx	.014	.71
58	MP3B	X	0	5.71
59	MP3B	Z	-20.661	5.71
60	MP3B	Mx	.014	5.71
61	MP3C	X	0	.71
62	MP3C	Z	-26.44	.71
63	MP3C	Mx	.007	.71
64	MP3C	X	0	5.71
65	MP3C	Z	-26.44	5.71
66	MP3C	Mx	.007	5.71
67	MP3A	X	0	.71
68	MP3A	Z	-27.655	.71
69	MP3A	Mx	.01	.71
70	MP3A	X	0	5.71
71	MP3A	Z	-27.655	5.71
72	MP3A	Mx	.01	5.71
73	MP3B	X	0	.71

Member Point Loads (BLC 15 : Antenna Wi (0 Deg)) (Continued)

	Member Label	Direction	Magnitude[lb,k-ft]	Location[ft,%]
74	MP3B	Z	-20.661	.71
75	MP3B	Mx	.006	.71
76	MP3B	X	0	5.71
77	MP3B	Z	-20.661	5.71
78	MP3B	Mx	.006	5.71
79	MP3C	X	0	.71
80	MP3C	Z	-26.44	.71
81	MP3C	Mx	-.02	.71
82	MP3C	X	0	5.71
83	MP3C	Z	-26.44	5.71
84	MP3C	Mx	-.02	5.71
85	MP1A	X	0	.71
86	MP1A	Z	-24.99	.71
87	MP1A	Mx	-.005	.71
88	MP1A	X	0	5.71
89	MP1A	Z	-24.99	5.71
90	MP1A	Mx	-.005	5.71
91	MP1B	X	0	.71
92	MP1B	Z	-18.825	.71
93	MP1B	Mx	.01	.71
94	MP1B	X	0	5.71
95	MP1B	Z	-18.825	5.71
96	MP1B	Mx	.01	5.71
97	MP1C	X	0	.71
98	MP1C	Z	-23.919	.71
99	MP1C	Mx	-.007	.71
100	MP1C	X	0	5.71
101	MP1C	Z	-23.919	5.71
102	MP1C	Mx	-.007	5.71

Member Point Loads (BLC 16 : Antenna Wi (30 Deg))

	Member Label	Direction	Magnitude[lb,k-ft]	Location[ft,%]
1	MP5A	X	4.886	2.21
2	MP5A	Z	-8.463	2.21
3	MP5A	Mx	-.004	2.21
4	MP5A	X	4.886	4.21
5	MP5A	Z	-8.463	4.21
6	MP5A	Mx	-.004	4.21
7	MP5B	X	3.781	2.21
8	MP5B	Z	-6.549	2.21
9	MP5B	Mx	.004	2.21
10	MP5B	X	3.781	4.21
11	MP5B	Z	-6.549	4.21
12	MP5B	Mx	.004	4.21
13	MP5C	X	6.579	2.21
14	MP5C	Z	-11.395	2.21
15	MP5C	Mx	0	2.21
16	MP5C	X	6.579	4.21
17	MP5C	Z	-11.395	4.21
18	MP5C	Mx	0	4.21
19	MP3A	X	1.334	1
20	MP3A	Z	-2.31	1
21	MP3A	Mx	.001	1
22	MP3B	X	1.184	1
23	MP3B	Z	-2.051	1
24	MP3B	Mx	-.001	1

Member Point Loads (BLC 16 : Antenna Wi (30 Deg)) (Continued)

	Member Label	Direction	Magnitude[lb,k-ft]	Location[ft,%]
25	MP3C	X	1.563	1
26	MP3C	Z	-2.706	1
27	MP3C	Mx	0	1
28	M144	X	11.067	1.25
29	M144	Z	-19.168	1.25
30	M144	Mx	0	1.25
31	MP3A	X	5.288	2
32	MP3A	Z	-9.158	2
33	MP3A	Mx	.005	2
34	MP3B	X	4.537	2
35	MP3B	Z	-7.858	2
36	MP3B	Mx	-.006	2
37	MP3C	X	6.438	2
38	MP3C	Z	-11.15	2
39	MP3C	Mx	0	2
40	MP3A	X	4.851	4
41	MP3A	Z	-8.401	4
42	MP3A	Mx	.005	4
43	MP3B	X	3.815	4
44	MP3B	Z	-6.607	4
45	MP3B	Mx	-.005	4
46	MP3C	X	6.438	4
47	MP3C	Z	-11.15	4
48	MP3C	Mx	0	4
49	MP3A	X	11.683	.71
50	MP3A	Z	-20.235	.71
51	MP3A	Mx	-.018	.71
52	MP3A	X	11.683	5.71
53	MP3A	Z	-20.235	5.71
54	MP3A	Mx	-.018	5.71
55	MP3B	X	9.934	.71
56	MP3B	Z	-17.206	.71
57	MP3B	Mx	.008	.71
58	MP3B	X	9.934	5.71
59	MP3B	Z	-17.206	5.71
60	MP3B	Mx	.008	5.71
61	MP3C	X	14.361	.71
62	MP3C	Z	-24.874	.71
63	MP3C	Mx	.017	.71
64	MP3C	X	14.361	5.71
65	MP3C	Z	-24.874	5.71
66	MP3C	Mx	.017	5.71
67	MP3A	X	11.683	.71
68	MP3A	Z	-20.235	.71
69	MP3A	Mx	-.000189	.71
70	MP3A	X	11.683	5.71
71	MP3A	Z	-20.235	5.71
72	MP3A	Mx	-.000189	5.71
73	MP3B	X	9.934	.71
74	MP3B	Z	-17.206	.71
75	MP3B	Mx	.012	.71
76	MP3B	X	9.934	5.71
77	MP3B	Z	-17.206	5.71
78	MP3B	Mx	.012	5.71
79	MP3C	X	14.361	.71
80	MP3C	Z	-24.874	.71
81	MP3C	Mx	-.017	.71

Member Point Loads (BLC 16 : Antenna Wi (30 Deg)) (Continued)

	Member Label	Direction	Magnitude[lb,k-ft]	Location[ft,%]
82	MP3C	X	14.361	5.71
83	MP3C	Z	-24.874	5.71
84	MP3C	Mx	-.017	5.71
85	MP1A	X	10.604	.71
86	MP1A	Z	-18.367	.71
87	MP1A	Mx	-.009	.71
88	MP1A	X	10.604	5.71
89	MP1A	Z	-18.367	5.71
90	MP1A	Mx	-.009	5.71
91	MP1B	X	9.063	.71
92	MP1B	Z	-15.698	.71
93	MP1B	Mx	.01	.71
94	MP1B	X	9.063	5.71
95	MP1B	Z	-15.698	5.71
96	MP1B	Mx	.01	5.71
97	MP1C	X	12.965	.71
98	MP1C	Z	-22.457	.71
99	MP1C	Mx	0	.71
100	MP1C	X	12.965	5.71
101	MP1C	Z	-22.457	5.71
102	MP1C	Mx	0	5.71

Member Point Loads (BLC 17 : Antenna Wi (60 Deg))

	Member Label	Direction	Magnitude[lb,k-ft]	Location[ft,%]
1	MP5A	X	6.549	2.21
2	MP5A	Z	-3.781	2.21
3	MP5A	Mx	-.004	2.21
4	MP5A	X	6.549	4.21
5	MP5A	Z	-3.781	4.21
6	MP5A	Mx	-.004	4.21
7	MP5B	X	8.463	2.21
8	MP5B	Z	-4.886	2.21
9	MP5B	Mx	.004	2.21
10	MP5B	X	8.463	4.21
11	MP5B	Z	-4.886	4.21
12	MP5B	Mx	.004	4.21
13	MP5C	X	10.146	2.21
14	MP5C	Z	-5.858	2.21
15	MP5C	Mx	.003	2.21
16	MP5C	X	10.146	4.21
17	MP5C	Z	-5.858	4.21
18	MP5C	Mx	.003	4.21
19	MP3A	X	2.051	1
20	MP3A	Z	-1.184	1
21	MP3A	Mx	.001	1
22	MP3B	X	2.31	1
23	MP3B	Z	-1.334	1
24	MP3B	Mx	-.001	1
25	MP3C	X	2.538	1
26	MP3C	Z	-1.465	1
27	MP3C	Mx	-.000916	1
28	M144	X	17.919	1.25
29	M144	Z	-10.346	1.25
30	M144	Mx	0	1.25
31	MP3A	X	7.858	2
32	MP3A	Z	-4.537	2

Member Point Loads (BLC 17 : Antenna Wi (60 Deg)) (Continued)

	Member Label	Direction	Magnitude[lb,k-ft]	Location[ft,%]
33	MP3A	Mx	.006	2
34	MP3B	X	9.158	2
35	MP3B	Z	-5.288	2
36	MP3B	Mx	-.005	2
37	MP3C	X	10.302	2
38	MP3C	Z	-5.948	2
39	MP3C	Mx	-.004	2
40	MP3A	X	6.607	4
41	MP3A	Z	-3.815	4
42	MP3A	Mx	.005	4
43	MP3B	X	8.401	4
44	MP3B	Z	-4.851	4
45	MP3B	Mx	-.005	4
46	MP3C	X	9.979	4
47	MP3C	Z	-5.761	4
48	MP3C	Mx	-.004	4
49	MP3A	X	17.206	.71
50	MP3A	Z	-9.934	.71
51	MP3A	Mx	-.012	.71
52	MP3A	X	17.206	5.71
53	MP3A	Z	-9.934	5.71
54	MP3A	Mx	-.012	5.71
55	MP3B	X	20.235	.71
56	MP3B	Z	-11.683	.71
57	MP3B	Mx	.000189	.71
58	MP3B	X	20.235	5.71
59	MP3B	Z	-11.683	5.71
60	MP3B	Mx	.000189	5.71
61	MP3C	X	22.898	.71
62	MP3C	Z	-13.22	.71
63	MP3C	Mx	.02	.71
64	MP3C	X	22.898	5.71
65	MP3C	Z	-13.22	5.71
66	MP3C	Mx	.02	5.71
67	MP3A	X	17.206	.71
68	MP3A	Z	-9.934	.71
69	MP3A	Mx	-.008	.71
70	MP3A	X	17.206	5.71
71	MP3A	Z	-9.934	5.71
72	MP3A	Mx	-.008	5.71
73	MP3B	X	20.235	.71
74	MP3B	Z	-11.683	.71
75	MP3B	Mx	.018	.71
76	MP3B	X	20.235	5.71
77	MP3B	Z	-11.683	5.71
78	MP3B	Mx	.018	5.71
79	MP3C	X	22.898	.71
80	MP3C	Z	-13.22	.71
81	MP3C	Mx	-.007	.71
82	MP3C	X	22.898	5.71
83	MP3C	Z	-13.22	5.71
84	MP3C	Mx	-.007	5.71
85	MP1A	X	15.698	.71
86	MP1A	Z	-9.063	.71
87	MP1A	Mx	-.01	.71
88	MP1A	X	15.698	5.71
89	MP1A	Z	-9.063	5.71

Member Point Loads (BLC 17 : Antenna Wi (60 Deg)) (Continued)

	Member Label	Direction	Magnitude[lb,k-ft]	Location[ft,%]
90	MP1A	Mx	-.01	5.71
91	MP1B	X	18.367	.71
92	MP1B	Z	-10.604	.71
93	MP1B	Mx	.009	.71
94	MP1B	X	18.367	5.71
95	MP1B	Z	-10.604	5.71
96	MP1B	Mx	.009	5.71
97	MP1C	X	20.715	.71
98	MP1C	Z	-11.96	.71
99	MP1C	Mx	.007	.71
100	MP1C	X	20.715	5.71
101	MP1C	Z	-11.96	5.71
102	MP1C	Mx	.007	5.71

Member Point Loads (BLC 18 : Antenna Wi (90 Deg))

	Member Label	Direction	Magnitude[lb,k-ft]	Location[ft,%]
1	MP5A	X	8.064	2.21
2	MP5A	Z	0	2.21
3	MP5A	Mx	-.004	2.21
4	MP5A	X	8.064	4.21
5	MP5A	Z	0	4.21
6	MP5A	Mx	-.004	4.21
7	MP5B	X	12.483	2.21
8	MP5B	Z	0	2.21
9	MP5B	Mx	.002	2.21
10	MP5B	X	12.483	4.21
11	MP5B	Z	0	4.21
12	MP5B	Mx	.002	4.21
13	MP5C	X	8.831	2.21
14	MP5C	Z	0	2.21
15	MP5C	Mx	.004	2.21
16	MP5C	X	8.831	4.21
17	MP5C	Z	0	4.21
18	MP5C	Mx	.004	4.21
19	MP3A	X	2.436	1
20	MP3A	Z	0	1
21	MP3A	Mx	.001	1
22	MP3B	X	3.034	1
23	MP3B	Z	0	1
24	MP3B	Mx	-.000649	1
25	MP3C	X	2.54	1
26	MP3C	Z	0	1
27	MP3C	Mx	-.001	1
28	M144	X	22.133	1.25
29	M144	Z	0	1.25
30	M144	Mx	0	1.25
31	MP3A	X	9.414	2
32	MP3A	Z	0	2
33	MP3A	Mx	.006	2
34	MP3B	X	12.417	2
35	MP3B	Z	0	2
36	MP3B	Mx	-.003	2
37	MP3C	X	9.936	2
38	MP3C	Z	0	2
39	MP3C	Mx	-.005	2
40	MP3A	X	8.099	4

Member Point Loads (BLC 18 : Antenna Wi (90 Deg)) (Continued)

	Member Label	Direction	Magnitude[lb,k-ft]	Location[ft,%]
41	MP3A	Z	0	4
42	MP3A	Mx	.005	4
43	MP3B	X	12.242	4
44	MP3B	Z	0	4
45	MP3B	Mx	-.003	4
46	MP3C	X	8.819	4
47	MP3C	Z	0	4
48	MP3C	Mx	-.005	4
49	MP3A	X	20.661	.71
50	MP3A	Z	0	.71
51	MP3A	Mx	-.006	.71
52	MP3A	X	20.661	5.71
53	MP3A	Z	0	5.71
54	MP3A	Mx	-.006	5.71
55	MP3B	X	27.655	.71
56	MP3B	Z	0	.71
57	MP3B	Mx	-.01	.71
58	MP3B	X	27.655	5.71
59	MP3B	Z	0	5.71
60	MP3B	Mx	-.01	5.71
61	MP3C	X	21.875	.71
62	MP3C	Z	0	.71
63	MP3C	Mx	.016	.71
64	MP3C	X	21.875	5.71
65	MP3C	Z	0	5.71
66	MP3C	Mx	.016	5.71
67	MP3A	X	20.661	.71
68	MP3A	Z	0	.71
69	MP3A	Mx	-.014	.71
70	MP3A	X	20.661	5.71
71	MP3A	Z	0	5.71
72	MP3A	Mx	-.014	5.71
73	MP3B	X	27.655	.71
74	MP3B	Z	0	.71
75	MP3B	Mx	.02	.71
76	MP3B	X	27.655	5.71
77	MP3B	Z	0	5.71
78	MP3B	Mx	.02	5.71
79	MP3C	X	21.875	.71
80	MP3C	Z	0	.71
81	MP3C	Mx	.003	.71
82	MP3C	X	21.875	5.71
83	MP3C	Z	0	5.71
84	MP3C	Mx	.003	5.71
85	MP1A	X	18.825	.71
86	MP1A	Z	0	.71
87	MP1A	Mx	-.01	.71
88	MP1A	X	18.825	5.71
89	MP1A	Z	0	5.71
90	MP1A	Mx	-.01	5.71
91	MP1B	X	24.99	.71
92	MP1B	Z	0	.71
93	MP1B	Mx	.005	.71
94	MP1B	X	24.99	5.71
95	MP1B	Z	0	5.71
96	MP1B	Mx	.005	5.71
97	MP1C	X	19.896	.71

Member Point Loads (BLC 18 : Antenna Wi (90 Deg)) (Continued)

	Member Label	Direction	Magnitude[lb,k-ft]	Location[ft,%]
98	MP1C	Z	0	.71
99	MP1C	Mx	.01	.71
100	MP1C	X	19.896	5.71
101	MP1C	Z	0	5.71
102	MP1C	Mx	.01	5.71

Member Point Loads (BLC 19 : Antenna Wi (120 Deg))

	Member Label	Direction	Magnitude[lb,k-ft]	Location[ft,%]
1	MP5A	X	9.331	2.21
2	MP5A	Z	5.387	2.21
3	MP5A	Mx	-.003	2.21
4	MP5A	X	9.331	4.21
5	MP5A	Z	5.387	4.21
6	MP5A	Mx	-.003	4.21
7	MP5B	X	11.245	2.21
8	MP5B	Z	6.492	2.21
9	MP5B	Mx	-.001	2.21
10	MP5B	X	11.245	4.21
11	MP5B	Z	6.492	4.21
12	MP5B	Mx	-.001	4.21
13	MP5C	X	6.399	2.21
14	MP5C	Z	3.694	2.21
15	MP5C	Mx	.004	2.21
16	MP5C	X	6.399	4.21
17	MP5C	Z	3.694	4.21
18	MP5C	Mx	.004	4.21
19	MP3A	X	2.427	1
20	MP3A	Z	1.401	1
21	MP3A	Mx	.001	1
22	MP3B	X	2.686	1
23	MP3B	Z	1.551	1
24	MP3B	Mx	.000337	1
25	MP3C	X	2.031	1
26	MP3C	Z	1.173	1
27	MP3C	Mx	-.001	1
28	M144	X	21.666	1.25
29	M144	Z	12.509	1.25
30	M144	Mx	0	1.25
31	MP3A	X	9.748	2
32	MP3A	Z	5.628	2
33	MP3A	Mx	.005	2
34	MP3B	X	11.048	2
35	MP3B	Z	6.378	2
36	MP3B	Mx	.001	2
37	MP3C	X	7.756	2
38	MP3C	Z	4.478	2
39	MP3C	Mx	-.006	2
40	MP3A	X	9.215	4
41	MP3A	Z	5.32	4
42	MP3A	Mx	.004	4
43	MP3B	X	11.009	4
44	MP3B	Z	6.356	4
45	MP3B	Mx	.001	4
46	MP3C	X	6.466	4
47	MP3C	Z	3.733	4
48	MP3C	Mx	-.005	4

Member Point Loads (BLC 19 : Antenna Wi (120 Deg)) (Continued)

	Member Label	Direction	Magnitude[lb,k-ft]	Location[ft,%]
49	MP3A	X	21.608	.71
50	MP3A	Z	12.475	.71
51	MP3A	Mx	.003	.71
52	MP3A	X	21.608	5.71
53	MP3A	Z	12.475	5.71
54	MP3A	Mx	.003	5.71
55	MP3B	X	24.636	.71
56	MP3B	Z	14.224	.71
57	MP3B	Mx	-.019	.71
58	MP3B	X	24.636	5.71
59	MP3B	Z	14.224	5.71
60	MP3B	Mx	-.019	5.71
61	MP3C	X	16.968	.71
62	MP3C	Z	9.797	.71
63	MP3C	Mx	.01	.71
64	MP3C	X	16.968	5.71
65	MP3C	Z	9.797	5.71
66	MP3C	Mx	.01	5.71
67	MP3A	X	21.608	.71
68	MP3A	Z	12.475	.71
69	MP3A	Mx	-.019	.71
70	MP3A	X	21.608	5.71
71	MP3A	Z	12.475	5.71
72	MP3A	Mx	-.019	5.71
73	MP3B	X	24.636	.71
74	MP3B	Z	14.224	.71
75	MP3B	Mx	.014	.71
76	MP3B	X	24.636	5.71
77	MP3B	Z	14.224	5.71
78	MP3B	Mx	.014	5.71
79	MP3C	X	16.968	.71
80	MP3C	Z	9.797	.71
81	MP3C	Mx	.01	.71
82	MP3C	X	16.968	5.71
83	MP3C	Z	9.797	5.71
84	MP3C	Mx	.01	5.71
85	MP1A	X	19.577	.71
86	MP1A	Z	11.303	.71
87	MP1A	Mx	-.008	.71
88	MP1A	X	19.577	5.71
89	MP1A	Z	11.303	5.71
90	MP1A	Mx	-.008	5.71
91	MP1B	X	22.247	.71
92	MP1B	Z	12.844	.71
93	MP1B	Mx	-.003	.71
94	MP1B	X	22.247	5.71
95	MP1B	Z	12.844	5.71
96	MP1B	Mx	-.003	5.71
97	MP1C	X	15.488	.71
98	MP1C	Z	8.942	.71
99	MP1C	Mx	.01	.71
100	MP1C	X	15.488	5.71
101	MP1C	Z	8.942	5.71
102	MP1C	Mx	.01	5.71

Member Point Loads (BLC 20 : Antenna Wi (150 Deg))

Member Label	Direction	Magnitude[lb,k-ft]	Location[ft,%]

Member Point Loads (BLC 20 : Antenna Wi (150 Deg)) (Continued)

	Member Label	Direction	Magnitude[lb,k-ft]	Location[ft,%]
1	MP5A	X	6.492	2.21
2	MP5A	Z	11.245	2.21
3	MP5A	Mx	-.001	2.21
4	MP5A	X	6.492	4.21
5	MP5A	Z	11.245	4.21
6	MP5A	Mx	-.001	4.21
7	MP5B	X	5.387	2.21
8	MP5B	Z	9.331	2.21
9	MP5B	Mx	-.003	2.21
10	MP5B	X	5.387	4.21
11	MP5B	Z	9.331	4.21
12	MP5B	Mx	-.003	4.21
13	MP5C	X	4.416	2.21
14	MP5C	Z	7.648	2.21
15	MP5C	Mx	.004	2.21
16	MP5C	X	4.416	4.21
17	MP5C	Z	7.648	4.21
18	MP5C	Mx	.004	4.21
19	MP3A	X	1.551	1
20	MP3A	Z	2.686	1
21	MP3A	Mx	.000337	1
22	MP3B	X	1.401	1
23	MP3B	Z	2.427	1
24	MP3B	Mx	.001	1
25	MP3C	X	1.27	1
26	MP3C	Z	2.2	1
27	MP3C	Mx	-.001	1
28	M144	X	13.23	1.25
29	M144	Z	22.915	1.25
30	M144	Mx	0	1.25
31	MP3A	X	6.378	2
32	MP3A	Z	11.048	2
33	MP3A	Mx	.001	2
34	MP3B	X	5.628	2
35	MP3B	Z	9.748	2
36	MP3B	Mx	.005	2
37	MP3C	X	4.968	2
38	MP3C	Z	8.605	2
39	MP3C	Mx	-.005	2
40	MP3A	X	6.356	4
41	MP3A	Z	11.009	4
42	MP3A	Mx	.001	4
43	MP3B	X	5.32	4
44	MP3B	Z	9.215	4
45	MP3B	Mx	.004	4
46	MP3C	X	4.409	4
47	MP3C	Z	7.637	4
48	MP3C	Mx	-.005	4
49	MP3A	X	14.224	.71
50	MP3A	Z	24.636	.71
51	MP3A	Mx	.014	.71
52	MP3A	X	14.224	5.71
53	MP3A	Z	24.636	5.71
54	MP3A	Mx	.014	5.71
55	MP3B	X	12.475	.71
56	MP3B	Z	21.608	.71
57	MP3B	Mx	-.019	.71

Member Point Loads (BLC 20 : Antenna Wi (150 Deg)) (Continued)

	Member Label	Direction	Magnitude[lb,k-ft]	Location[ft,%]
58	MP3B	X	12.475	5.71
59	MP3B	Z	21.608	5.71
60	MP3B	Mx	-.019	5.71
61	MP3C	X	10.938	.71
62	MP3C	Z	18.945	.71
63	MP3C	Mx	.003	.71
64	MP3C	X	10.938	5.71
65	MP3C	Z	18.945	5.71
66	MP3C	Mx	.003	5.71
67	MP3A	X	14.224	.71
68	MP3A	Z	24.636	.71
69	MP3A	Mx	-.019	.71
70	MP3A	X	14.224	5.71
71	MP3A	Z	24.636	5.71
72	MP3A	Mx	-.019	5.71
73	MP3B	X	12.475	.71
74	MP3B	Z	21.608	.71
75	MP3B	Mx	.003	.71
76	MP3B	X	12.475	5.71
77	MP3B	Z	21.608	5.71
78	MP3B	Mx	.003	5.71
79	MP3C	X	10.938	.71
80	MP3C	Z	18.945	.71
81	MP3C	Mx	.016	.71
82	MP3C	X	10.938	5.71
83	MP3C	Z	18.945	5.71
84	MP3C	Mx	.016	5.71
85	MP1A	X	12.844	.71
86	MP1A	Z	22.247	.71
87	MP1A	Mx	-.003	.71
88	MP1A	X	12.844	5.71
89	MP1A	Z	22.247	5.71
90	MP1A	Mx	-.003	5.71
91	MP1B	X	11.303	.71
92	MP1B	Z	19.577	.71
93	MP1B	Mx	-.008	.71
94	MP1B	X	11.303	5.71
95	MP1B	Z	19.577	5.71
96	MP1B	Mx	-.008	5.71
97	MP1C	X	9.948	.71
98	MP1C	Z	17.23	.71
99	MP1C	Mx	.01	.71
100	MP1C	X	9.948	5.71
101	MP1C	Z	17.23	5.71
102	MP1C	Mx	.01	5.71

Member Point Loads (BLC 21 : Antenna Wi (180 Deg))

	Member Label	Direction	Magnitude[lb,k-ft]	Location[ft,%]
1	MP5A	X	0	2.21
2	MP5A	Z	12.483	2.21
3	MP5A	Mx	.002	2.21
4	MP5A	X	0	4.21
5	MP5A	Z	12.483	4.21
6	MP5A	Mx	.002	4.21
7	MP5B	X	0	2.21
8	MP5B	Z	8.064	2.21

Member Point Loads (BLC 21 : Antenna Wi (180 Deg)) (Continued)

	Member Label	Direction	Magnitude[lb,k-ft]	Location[ft,%]
9	MP5B	Mx	-.004	2.21
10	MP5B	X	0	4.21
11	MP5B	Z	8.064	4.21
12	MP5B	Mx	-.004	4.21
13	MP5C	X	0	2.21
14	MP5C	Z	11.716	2.21
15	MP5C	Mx	.003	2.21
16	MP5C	X	0	4.21
17	MP5C	Z	11.716	4.21
18	MP5C	Mx	.003	4.21
19	MP3A	X	0	1
20	MP3A	Z	3.034	1
21	MP3A	Mx	-.000649	1
22	MP3B	X	0	1
23	MP3B	Z	2.436	1
24	MP3B	Mx	.001	1
25	MP3C	X	0	1
26	MP3C	Z	2.93	1
27	MP3C	Mx	-.000916	1
28	M144	X	0	1.25
29	M144	Z	25.018	1.25
30	M144	Mx	0	1.25
31	MP3A	X	0	2
32	MP3A	Z	12.417	2
33	MP3A	Mx	-.003	2
34	MP3B	X	0	2
35	MP3B	Z	9.414	2
36	MP3B	Mx	.006	2
37	MP3C	X	0	2
38	MP3C	Z	11.895	2
39	MP3C	Mx	-.004	2
40	MP3A	X	0	4
41	MP3A	Z	12.242	4
42	MP3A	Mx	-.003	4
43	MP3B	X	0	4
44	MP3B	Z	8.099	4
45	MP3B	Mx	.005	4
46	MP3C	X	0	4
47	MP3C	Z	11.523	4
48	MP3C	Mx	-.004	4
49	MP3A	X	0	.71
50	MP3A	Z	27.655	.71
51	MP3A	Mx	.02	.71
52	MP3A	X	0	5.71
53	MP3A	Z	27.655	5.71
54	MP3A	Mx	.02	5.71
55	MP3B	X	0	.71
56	MP3B	Z	20.661	.71
57	MP3B	Mx	-.014	.71
58	MP3B	X	0	5.71
59	MP3B	Z	20.661	5.71
60	MP3B	Mx	-.014	5.71
61	MP3C	X	0	.71
62	MP3C	Z	26.44	.71
63	MP3C	Mx	-.007	.71
64	MP3C	X	0	5.71
65	MP3C	Z	26.44	5.71

Member Point Loads (BLC 21 : Antenna Wi (180 Deg)) (Continued)

	Member Label	Direction	Magnitude[lb,k-ft]	Location[ft,%]
66	MP3C	Mx	-.007	5.71
67	MP3A	X	0	.71
68	MP3A	Z	27.655	.71
69	MP3A	Mx	-.01	.71
70	MP3A	X	0	5.71
71	MP3A	Z	27.655	5.71
72	MP3A	Mx	-.01	5.71
73	MP3B	X	0	.71
74	MP3B	Z	20.661	.71
75	MP3B	Mx	-.006	.71
76	MP3B	X	0	5.71
77	MP3B	Z	20.661	5.71
78	MP3B	Mx	-.006	5.71
79	MP3C	X	0	.71
80	MP3C	Z	26.44	.71
81	MP3C	Mx	.02	.71
82	MP3C	X	0	5.71
83	MP3C	Z	26.44	5.71
84	MP3C	Mx	.02	5.71
85	MP1A	X	0	.71
86	MP1A	Z	24.99	.71
87	MP1A	Mx	.005	.71
88	MP1A	X	0	5.71
89	MP1A	Z	24.99	5.71
90	MP1A	Mx	.005	5.71
91	MP1B	X	0	.71
92	MP1B	Z	18.825	.71
93	MP1B	Mx	-.01	.71
94	MP1B	X	0	5.71
95	MP1B	Z	18.825	5.71
96	MP1B	Mx	-.01	5.71
97	MP1C	X	0	.71
98	MP1C	Z	23.919	.71
99	MP1C	Mx	.007	.71
100	MP1C	X	0	5.71
101	MP1C	Z	23.919	5.71
102	MP1C	Mx	.007	5.71

Member Point Loads (BLC 22 : Antenna Wi (210 Deg))

	Member Label	Direction	Magnitude[lb,k-ft]	Location[ft,%]
1	MP5A	X	-4.886	2.21
2	MP5A	Z	8.463	2.21
3	MP5A	Mx	.004	2.21
4	MP5A	X	-4.886	4.21
5	MP5A	Z	8.463	4.21
6	MP5A	Mx	.004	4.21
7	MP5B	X	-3.781	2.21
8	MP5B	Z	6.549	2.21
9	MP5B	Mx	-.004	2.21
10	MP5B	X	-3.781	4.21
11	MP5B	Z	6.549	4.21
12	MP5B	Mx	-.004	4.21
13	MP5C	X	-6.579	2.21
14	MP5C	Z	11.395	2.21
15	MP5C	Mx	0	2.21
16	MP5C	X	-6.579	4.21

Member Point Loads (BLC 22 : Antenna Wi (210 Deg)) (Continued)

	Member Label	Direction	Magnitude[lb,k-ft]	Location[ft,%]
17	MP5C	Z	11.395	4.21
18	MP5C	Mx	0	4.21
19	MP3A	X	-1.334	1
20	MP3A	Z	2.31	1
21	MP3A	Mx	-.001	1
22	MP3B	X	-1.184	1
23	MP3B	Z	2.051	1
24	MP3B	Mx	.001	1
25	MP3C	X	-1.563	1
26	MP3C	Z	2.706	1
27	MP3C	Mx	0	1
28	M144	X	-11.067	1.25
29	M144	Z	19.168	1.25
30	M144	Mx	0	1.25
31	MP3A	X	-5.288	2
32	MP3A	Z	9.158	2
33	MP3A	Mx	-.005	2
34	MP3B	X	-4.537	2
35	MP3B	Z	7.858	2
36	MP3B	Mx	.006	2
37	MP3C	X	-6.438	2
38	MP3C	Z	11.15	2
39	MP3C	Mx	0	2
40	MP3A	X	-4.851	4
41	MP3A	Z	8.401	4
42	MP3A	Mx	-.005	4
43	MP3B	X	-3.815	4
44	MP3B	Z	6.607	4
45	MP3B	Mx	.005	4
46	MP3C	X	-6.438	4
47	MP3C	Z	11.15	4
48	MP3C	Mx	0	4
49	MP3A	X	-11.683	.71
50	MP3A	Z	20.235	.71
51	MP3A	Mx	.018	.71
52	MP3A	X	-11.683	5.71
53	MP3A	Z	20.235	5.71
54	MP3A	Mx	.018	5.71
55	MP3B	X	-9.934	.71
56	MP3B	Z	17.206	.71
57	MP3B	Mx	-.008	.71
58	MP3B	X	-9.934	5.71
59	MP3B	Z	17.206	5.71
60	MP3B	Mx	-.008	5.71
61	MP3C	X	-14.361	.71
62	MP3C	Z	24.874	.71
63	MP3C	Mx	-.017	.71
64	MP3C	X	-14.361	5.71
65	MP3C	Z	24.874	5.71
66	MP3C	Mx	-.017	5.71
67	MP3A	X	-11.683	.71
68	MP3A	Z	20.235	.71
69	MP3A	Mx	.000189	.71
70	MP3A	X	-11.683	5.71
71	MP3A	Z	20.235	5.71
72	MP3A	Mx	.000189	5.71
73	MP3B	X	-9.934	.71

Member Point Loads (BLC 22 : Antenna Wi (210 Deg)) (Continued)

	Member Label	Direction	Magnitude[lb,k-ft]	Location[ft,%]
74	MP3B	Z	17.206	.71
75	MP3B	Mx	-.012	.71
76	MP3B	X	-9.934	5.71
77	MP3B	Z	17.206	5.71
78	MP3B	Mx	-.012	5.71
79	MP3C	X	-14.361	.71
80	MP3C	Z	24.874	.71
81	MP3C	Mx	.017	.71
82	MP3C	X	-14.361	5.71
83	MP3C	Z	24.874	5.71
84	MP3C	Mx	.017	5.71
85	MP1A	X	-10.604	.71
86	MP1A	Z	18.367	.71
87	MP1A	Mx	.009	.71
88	MP1A	X	-10.604	5.71
89	MP1A	Z	18.367	5.71
90	MP1A	Mx	.009	5.71
91	MP1B	X	-9.063	.71
92	MP1B	Z	15.698	.71
93	MP1B	Mx	-.01	.71
94	MP1B	X	-9.063	5.71
95	MP1B	Z	15.698	5.71
96	MP1B	Mx	-.01	5.71
97	MP1C	X	-12.965	.71
98	MP1C	Z	22.457	.71
99	MP1C	Mx	0	.71
100	MP1C	X	-12.965	5.71
101	MP1C	Z	22.457	5.71
102	MP1C	Mx	0	5.71

Member Point Loads (BLC 23 : Antenna Wi (240 Deg))

	Member Label	Direction	Magnitude[lb,k-ft]	Location[ft,%]
1	MP5A	X	-6.549	2.21
2	MP5A	Z	3.781	2.21
3	MP5A	Mx	.004	2.21
4	MP5A	X	-6.549	4.21
5	MP5A	Z	3.781	4.21
6	MP5A	Mx	.004	4.21
7	MP5B	X	-8.463	2.21
8	MP5B	Z	4.886	2.21
9	MP5B	Mx	-.004	2.21
10	MP5B	X	-8.463	4.21
11	MP5B	Z	4.886	4.21
12	MP5B	Mx	-.004	4.21
13	MP5C	X	-10.146	2.21
14	MP5C	Z	5.858	2.21
15	MP5C	Mx	-.003	2.21
16	MP5C	X	-10.146	4.21
17	MP5C	Z	5.858	4.21
18	MP5C	Mx	-.003	4.21
19	MP3A	X	-2.051	1
20	MP3A	Z	1.184	1
21	MP3A	Mx	-.001	1
22	MP3B	X	-2.31	1
23	MP3B	Z	1.334	1
24	MP3B	Mx	.001	1

Member Point Loads (BLC 23 : Antenna Wi (240 Deg)) (Continued)

	Member Label	Direction	Magnitude[lb,k-ft]	Location[ft,%]
25	MP3C	X	-2.538	1
26	MP3C	Z	1.465	1
27	MP3C	Mx	.000916	1
28	M144	X	-17.919	1.25
29	M144	Z	10.346	1.25
30	M144	Mx	0	1.25
31	MP3A	X	-7.858	2
32	MP3A	Z	4.537	2
33	MP3A	Mx	-.006	2
34	MP3B	X	-9.158	2
35	MP3B	Z	5.288	2
36	MP3B	Mx	.005	2
37	MP3C	X	-10.302	2
38	MP3C	Z	5.948	2
39	MP3C	Mx	.004	2
40	MP3A	X	-6.607	4
41	MP3A	Z	3.815	4
42	MP3A	Mx	-.005	4
43	MP3B	X	-8.401	4
44	MP3B	Z	4.851	4
45	MP3B	Mx	.005	4
46	MP3C	X	-9.979	4
47	MP3C	Z	5.761	4
48	MP3C	Mx	.004	4
49	MP3A	X	-17.206	.71
50	MP3A	Z	9.934	.71
51	MP3A	Mx	.012	.71
52	MP3A	X	-17.206	5.71
53	MP3A	Z	9.934	5.71
54	MP3A	Mx	.012	5.71
55	MP3B	X	-20.235	.71
56	MP3B	Z	11.683	.71
57	MP3B	Mx	-.000189	.71
58	MP3B	X	-20.235	5.71
59	MP3B	Z	11.683	5.71
60	MP3B	Mx	-.000189	5.71
61	MP3C	X	-22.898	.71
62	MP3C	Z	13.22	.71
63	MP3C	Mx	-.02	.71
64	MP3C	X	-22.898	5.71
65	MP3C	Z	13.22	5.71
66	MP3C	Mx	-.02	5.71
67	MP3A	X	-17.206	.71
68	MP3A	Z	9.934	.71
69	MP3A	Mx	.008	.71
70	MP3A	X	-17.206	5.71
71	MP3A	Z	9.934	5.71
72	MP3A	Mx	.008	5.71
73	MP3B	X	-20.235	.71
74	MP3B	Z	11.683	.71
75	MP3B	Mx	-.018	.71
76	MP3B	X	-20.235	5.71
77	MP3B	Z	11.683	5.71
78	MP3B	Mx	-.018	5.71
79	MP3C	X	-22.898	.71
80	MP3C	Z	13.22	.71
81	MP3C	Mx	.007	.71

Member Point Loads (BLC 23 : Antenna Wi (240 Deg)) (Continued)

	Member Label	Direction	Magnitude[lb,k-ft]	Location[ft,%]
82	MP3C	X	-22.898	5.71
83	MP3C	Z	13.22	5.71
84	MP3C	Mx	.007	5.71
85	MP1A	X	-15.698	.71
86	MP1A	Z	9.063	.71
87	MP1A	Mx	.01	.71
88	MP1A	X	-15.698	5.71
89	MP1A	Z	9.063	5.71
90	MP1A	Mx	.01	5.71
91	MP1B	X	-18.367	.71
92	MP1B	Z	10.604	.71
93	MP1B	Mx	-.009	.71
94	MP1B	X	-18.367	5.71
95	MP1B	Z	10.604	5.71
96	MP1B	Mx	-.009	5.71
97	MP1C	X	-20.715	.71
98	MP1C	Z	11.96	.71
99	MP1C	Mx	-.007	.71
100	MP1C	X	-20.715	5.71
101	MP1C	Z	11.96	5.71
102	MP1C	Mx	-.007	5.71

Member Point Loads (BLC 24 : Antenna Wi (270 Deg))

	Member Label	Direction	Magnitude[lb,k-ft]	Location[ft,%]
1	MP5A	X	-8.064	2.21
2	MP5A	Z	0	2.21
3	MP5A	Mx	.004	2.21
4	MP5A	X	-8.064	4.21
5	MP5A	Z	0	4.21
6	MP5A	Mx	.004	4.21
7	MP5B	X	-12.483	2.21
8	MP5B	Z	0	2.21
9	MP5B	Mx	-.002	2.21
10	MP5B	X	-12.483	4.21
11	MP5B	Z	0	4.21
12	MP5B	Mx	-.002	4.21
13	MP5C	X	-8.831	2.21
14	MP5C	Z	0	2.21
15	MP5C	Mx	-.004	2.21
16	MP5C	X	-8.831	4.21
17	MP5C	Z	0	4.21
18	MP5C	Mx	-.004	4.21
19	MP3A	X	-2.436	1
20	MP3A	Z	0	1
21	MP3A	Mx	-.001	1
22	MP3B	X	-3.034	1
23	MP3B	Z	0	1
24	MP3B	Mx	.000649	1
25	MP3C	X	-2.54	1
26	MP3C	Z	0	1
27	MP3C	Mx	.001	1
28	M144	X	-22.133	1.25
29	M144	Z	0	1.25
30	M144	Mx	0	1.25
31	MP3A	X	-9.414	2
32	MP3A	Z	0	2

Member Point Loads (BLC 24 : Antenna Wi (270 Deg)) (Continued)

	Member Label	Direction	Magnitude[lb,k-ft]	Location[ft,%]
33	MP3A	Mx	-.006	2
34	MP3B	X	-12.417	2
35	MP3B	Z	0	2
36	MP3B	Mx	.003	2
37	MP3C	X	-9.936	2
38	MP3C	Z	0	2
39	MP3C	Mx	.005	2
40	MP3A	X	-8.099	4
41	MP3A	Z	0	4
42	MP3A	Mx	-.005	4
43	MP3B	X	-12.242	4
44	MP3B	Z	0	4
45	MP3B	Mx	.003	4
46	MP3C	X	-8.819	4
47	MP3C	Z	0	4
48	MP3C	Mx	.005	4
49	MP3A	X	-20.661	.71
50	MP3A	Z	0	.71
51	MP3A	Mx	.006	.71
52	MP3A	X	-20.661	5.71
53	MP3A	Z	0	5.71
54	MP3A	Mx	.006	5.71
55	MP3B	X	-27.655	.71
56	MP3B	Z	0	.71
57	MP3B	Mx	.01	.71
58	MP3B	X	-27.655	5.71
59	MP3B	Z	0	5.71
60	MP3B	Mx	.01	5.71
61	MP3C	X	-21.875	.71
62	MP3C	Z	0	.71
63	MP3C	Mx	-.016	.71
64	MP3C	X	-21.875	5.71
65	MP3C	Z	0	5.71
66	MP3C	Mx	-.016	5.71
67	MP3A	X	-20.661	.71
68	MP3A	Z	0	.71
69	MP3A	Mx	.014	.71
70	MP3A	X	-20.661	5.71
71	MP3A	Z	0	5.71
72	MP3A	Mx	.014	5.71
73	MP3B	X	-27.655	.71
74	MP3B	Z	0	.71
75	MP3B	Mx	-.02	.71
76	MP3B	X	-27.655	5.71
77	MP3B	Z	0	5.71
78	MP3B	Mx	-.02	5.71
79	MP3C	X	-21.875	.71
80	MP3C	Z	0	.71
81	MP3C	Mx	-.003	.71
82	MP3C	X	-21.875	5.71
83	MP3C	Z	0	5.71
84	MP3C	Mx	-.003	5.71
85	MP1A	X	-18.825	.71
86	MP1A	Z	0	.71
87	MP1A	Mx	.01	.71
88	MP1A	X	-18.825	5.71
89	MP1A	Z	0	5.71

Member Point Loads (BLC 24 : Antenna Wi (270 Deg)) (Continued)

	Member Label	Direction	Magnitude[lb,k-ft]	Location[ft,%]
90	MP1A	Mx	.01	5.71
91	MP1B	X	-24.99	.71
92	MP1B	Z	0	.71
93	MP1B	Mx	-.005	.71
94	MP1B	X	-24.99	5.71
95	MP1B	Z	0	5.71
96	MP1B	Mx	-.005	5.71
97	MP1C	X	-19.896	.71
98	MP1C	Z	0	.71
99	MP1C	Mx	-.01	.71
100	MP1C	X	-19.896	5.71
101	MP1C	Z	0	5.71
102	MP1C	Mx	-.01	5.71

Member Point Loads (BLC 25 : Antenna Wi (300 Deg))

	Member Label	Direction	Magnitude[lb,k-ft]	Location[ft,%]
1	MP5A	X	-9.331	2.21
2	MP5A	Z	-5.387	2.21
3	MP5A	Mx	.003	2.21
4	MP5A	X	-9.331	4.21
5	MP5A	Z	-5.387	4.21
6	MP5A	Mx	.003	4.21
7	MP5B	X	-11.245	2.21
8	MP5B	Z	-6.492	2.21
9	MP5B	Mx	.001	2.21
10	MP5B	X	-11.245	4.21
11	MP5B	Z	-6.492	4.21
12	MP5B	Mx	.001	4.21
13	MP5C	X	-6.399	2.21
14	MP5C	Z	-3.694	2.21
15	MP5C	Mx	-.004	2.21
16	MP5C	X	-6.399	4.21
17	MP5C	Z	-3.694	4.21
18	MP5C	Mx	-.004	4.21
19	MP3A	X	-2.427	1
20	MP3A	Z	-1.401	1
21	MP3A	Mx	-.001	1
22	MP3B	X	-2.686	1
23	MP3B	Z	-1.551	1
24	MP3B	Mx	-.000337	1
25	MP3C	X	-2.031	1
26	MP3C	Z	-1.173	1
27	MP3C	Mx	.001	1
28	M144	X	-21.666	1.25
29	M144	Z	-12.509	1.25
30	M144	Mx	0	1.25
31	MP3A	X	-9.748	2
32	MP3A	Z	-5.628	2
33	MP3A	Mx	-.005	2
34	MP3B	X	-11.048	2
35	MP3B	Z	-6.378	2
36	MP3B	Mx	-.001	2
37	MP3C	X	-7.756	2
38	MP3C	Z	-4.478	2
39	MP3C	Mx	.006	2
40	MP3A	X	-9.215	4

Member Point Loads (BLC 25 : Antenna Wi (300 Deg)) (Continued)

	Member Label	Direction	Magnitude[lb,k-ft]	Location[ft,%]
41	MP3A	Z	-5.32	4
42	MP3A	Mx	-.004	4
43	MP3B	X	-11.009	4
44	MP3B	Z	-6.356	4
45	MP3B	Mx	-.001	4
46	MP3C	X	-6.466	4
47	MP3C	Z	-3.733	4
48	MP3C	Mx	.005	4
49	MP3A	X	-21.608	.71
50	MP3A	Z	-12.475	.71
51	MP3A	Mx	-.003	.71
52	MP3A	X	-21.608	5.71
53	MP3A	Z	-12.475	5.71
54	MP3A	Mx	-.003	5.71
55	MP3B	X	-24.636	.71
56	MP3B	Z	-14.224	.71
57	MP3B	Mx	.019	.71
58	MP3B	X	-24.636	5.71
59	MP3B	Z	-14.224	5.71
60	MP3B	Mx	.019	5.71
61	MP3C	X	-16.968	.71
62	MP3C	Z	-9.797	.71
63	MP3C	Mx	-.01	.71
64	MP3C	X	-16.968	5.71
65	MP3C	Z	-9.797	5.71
66	MP3C	Mx	-.01	5.71
67	MP3A	X	-21.608	.71
68	MP3A	Z	-12.475	.71
69	MP3A	Mx	.019	.71
70	MP3A	X	-21.608	5.71
71	MP3A	Z	-12.475	5.71
72	MP3A	Mx	.019	5.71
73	MP3B	X	-24.636	.71
74	MP3B	Z	-14.224	.71
75	MP3B	Mx	-.014	.71
76	MP3B	X	-24.636	5.71
77	MP3B	Z	-14.224	5.71
78	MP3B	Mx	-.014	5.71
79	MP3C	X	-16.968	.71
80	MP3C	Z	-9.797	.71
81	MP3C	Mx	-.01	.71
82	MP3C	X	-16.968	5.71
83	MP3C	Z	-9.797	5.71
84	MP3C	Mx	-.01	5.71
85	MP1A	X	-19.577	.71
86	MP1A	Z	-11.303	.71
87	MP1A	Mx	.008	.71
88	MP1A	X	-19.577	5.71
89	MP1A	Z	-11.303	5.71
90	MP1A	Mx	.008	5.71
91	MP1B	X	-22.247	.71
92	MP1B	Z	-12.844	.71
93	MP1B	Mx	.003	.71
94	MP1B	X	-22.247	5.71
95	MP1B	Z	-12.844	5.71
96	MP1B	Mx	.003	5.71
97	MP1C	X	-15.488	.71

Member Point Loads (BLC 25 : Antenna Wi (300 Deg)) (Continued)

	Member Label	Direction	Magnitude[lb,k-ft]	Location[ft,%]
98	MP1C	Z	-8.942	.71
99	MP1C	Mx	-.01	.71
100	MP1C	X	-15.488	5.71
101	MP1C	Z	-8.942	5.71
102	MP1C	Mx	-.01	5.71

Member Point Loads (BLC 26 : Antenna Wi (330 Deg))

	Member Label	Direction	Magnitude[lb,k-ft]	Location[ft,%]
1	MP5A	X	-6.492	2.21
2	MP5A	Z	-11.245	2.21
3	MP5A	Mx	.001	2.21
4	MP5A	X	-6.492	4.21
5	MP5A	Z	-11.245	4.21
6	MP5A	Mx	.001	4.21
7	MP5B	X	-5.387	2.21
8	MP5B	Z	-9.331	2.21
9	MP5B	Mx	.003	2.21
10	MP5B	X	-5.387	4.21
11	MP5B	Z	-9.331	4.21
12	MP5B	Mx	.003	4.21
13	MP5C	X	-4.416	2.21
14	MP5C	Z	-7.648	2.21
15	MP5C	Mx	-.004	2.21
16	MP5C	X	-4.416	4.21
17	MP5C	Z	-7.648	4.21
18	MP5C	Mx	-.004	4.21
19	MP3A	X	-1.551	1
20	MP3A	Z	-2.686	1
21	MP3A	Mx	-.000337	1
22	MP3B	X	-1.401	1
23	MP3B	Z	-2.427	1
24	MP3B	Mx	-.001	1
25	MP3C	X	-1.27	1
26	MP3C	Z	-2.2	1
27	MP3C	Mx	.001	1
28	M144	X	-13.23	1.25
29	M144	Z	-22.915	1.25
30	M144	Mx	0	1.25
31	MP3A	X	-6.378	2
32	MP3A	Z	-11.048	2
33	MP3A	Mx	-.001	2
34	MP3B	X	-5.628	2
35	MP3B	Z	-9.748	2
36	MP3B	Mx	-.005	2
37	MP3C	X	-4.968	2
38	MP3C	Z	-8.605	2
39	MP3C	Mx	.005	2
40	MP3A	X	-6.356	4
41	MP3A	Z	-11.009	4
42	MP3A	Mx	-.001	4
43	MP3B	X	-5.32	4
44	MP3B	Z	-9.215	4
45	MP3B	Mx	-.004	4
46	MP3C	X	-4.409	4
47	MP3C	Z	-7.637	4
48	MP3C	Mx	.005	4

Member Point Loads (BLC 26 : Antenna Wi (330 Deg)) (Continued)

	Member Label	Direction	Magnitude[lb,k-ft]	Location[ft,%]
49	MP3A	X	-14.224	.71
50	MP3A	Z	-24.636	.71
51	MP3A	Mx	-.014	.71
52	MP3A	X	-14.224	5.71
53	MP3A	Z	-24.636	5.71
54	MP3A	Mx	-.014	5.71
55	MP3B	X	-12.475	.71
56	MP3B	Z	-21.608	.71
57	MP3B	Mx	.019	.71
58	MP3B	X	-12.475	5.71
59	MP3B	Z	-21.608	5.71
60	MP3B	Mx	.019	5.71
61	MP3C	X	-10.938	.71
62	MP3C	Z	-18.945	.71
63	MP3C	Mx	-.003	.71
64	MP3C	X	-10.938	5.71
65	MP3C	Z	-18.945	5.71
66	MP3C	Mx	-.003	5.71
67	MP3A	X	-14.224	.71
68	MP3A	Z	-24.636	.71
69	MP3A	Mx	.019	.71
70	MP3A	X	-14.224	5.71
71	MP3A	Z	-24.636	5.71
72	MP3A	Mx	.019	5.71
73	MP3B	X	-12.475	.71
74	MP3B	Z	-21.608	.71
75	MP3B	Mx	-.003	.71
76	MP3B	X	-12.475	5.71
77	MP3B	Z	-21.608	5.71
78	MP3B	Mx	-.003	5.71
79	MP3C	X	-10.938	.71
80	MP3C	Z	-18.945	.71
81	MP3C	Mx	-.016	.71
82	MP3C	X	-10.938	5.71
83	MP3C	Z	-18.945	5.71
84	MP3C	Mx	-.016	5.71
85	MP1A	X	-12.844	.71
86	MP1A	Z	-22.247	.71
87	MP1A	Mx	.003	.71
88	MP1A	X	-12.844	5.71
89	MP1A	Z	-22.247	5.71
90	MP1A	Mx	.003	5.71
91	MP1B	X	-11.303	.71
92	MP1B	Z	-19.577	.71
93	MP1B	Mx	.008	.71
94	MP1B	X	-11.303	5.71
95	MP1B	Z	-19.577	5.71
96	MP1B	Mx	.008	5.71
97	MP1C	X	-9.948	.71
98	MP1C	Z	-17.23	.71
99	MP1C	Mx	-.01	.71
100	MP1C	X	-9.948	5.71
101	MP1C	Z	-17.23	5.71
102	MP1C	Mx	-.01	5.71

Member Point Loads (BLC 27 : Antenna Wm (0 Deg))

Member Label	Direction	Magnitude[lb,k-ft]	Location[ft,%]

Member Point Loads (BLC 27 : Antenna Wm (0 Deg)) (Continued)

	Member Label	Direction	Magnitude[lb,k-ft]	Location[ft,%]
1	MP5A	X	0	2.21
2	MP5A	Z	-3.946	2.21
3	MP5A	Mx	-.000675	2.21
4	MP5A	X	0	4.21
5	MP5A	Z	-3.946	4.21
6	MP5A	Mx	-.000675	4.21
7	MP5B	X	0	2.21
8	MP5B	Z	-2.452	2.21
9	MP5B	Mx	.001	2.21
10	MP5B	X	0	4.21
11	MP5B	Z	-2.452	4.21
12	MP5B	Mx	.001	4.21
13	MP5C	X	0	2.21
14	MP5C	Z	-3.687	2.21
15	MP5C	Mx	-.000922	2.21
16	MP5C	X	0	4.21
17	MP5C	Z	-3.687	4.21
18	MP5C	Mx	-.000922	4.21
19	MP3A	X	0	1
20	MP3A	Z	-.739	1
21	MP3A	Mx	.000158	1
22	MP3B	X	0	1
23	MP3B	Z	-.558	1
24	MP3B	Mx	-.000328	1
25	MP3C	X	0	1
26	MP3C	Z	-.707	1
27	MP3C	Mx	.000221	1
28	M144	X	0	1.25
29	M144	Z	-7.912	1.25
30	M144	Mx	0	1.25
31	MP3A	X	0	2
32	MP3A	Z	-3.724	2
33	MP3A	Mx	.000796	2
34	MP3B	X	0	2
35	MP3B	Z	-2.74	2
36	MP3B	Mx	-.002	2
37	MP3C	X	0	2
38	MP3C	Z	-3.553	2
39	MP3C	Mx	.001	2
40	MP3A	X	0	4
41	MP3A	Z	-3.666	4
42	MP3A	Mx	.000784	4
43	MP3B	X	0	4
44	MP3B	Z	-2.305	4
45	MP3B	Mx	-.001	4
46	MP3C	X	0	4
47	MP3C	Z	-3.43	4
48	MP3C	Mx	.001	4
49	MP3A	X	0	.71
50	MP3A	Z	-9.057	.71
51	MP3A	Mx	-.007	.71
52	MP3A	X	0	5.71
53	MP3A	Z	-9.057	5.71
54	MP3A	Mx	-.007	5.71
55	MP3B	X	0	.71
56	MP3B	Z	-6.576	.71
57	MP3B	Mx	.004	.71

Member Point Loads (BLC 27 : Antenna Wm (0 Deg)) (Continued)

	Member Label	Direction	Magnitude[lb,k-ft]	Location[ft,%]
58	MP3B	X	0	5.71
59	MP3B	Z	-6.576	5.71
60	MP3B	Mx	.004	5.71
61	MP3C	X	0	.71
62	MP3C	Z	-8.627	.71
63	MP3C	Mx	.002	.71
64	MP3C	X	0	5.71
65	MP3C	Z	-8.627	5.71
66	MP3C	Mx	.002	5.71
67	MP3A	X	0	.71
68	MP3A	Z	-9.057	.71
69	MP3A	Mx	.003	.71
70	MP3A	X	0	5.71
71	MP3A	Z	-9.057	5.71
72	MP3A	Mx	.003	5.71
73	MP3B	X	0	.71
74	MP3B	Z	-6.576	.71
75	MP3B	Mx	.002	.71
76	MP3B	X	0	5.71
77	MP3B	Z	-6.576	5.71
78	MP3B	Mx	.002	5.71
79	MP3C	X	0	.71
80	MP3C	Z	-8.627	.71
81	MP3C	Mx	-.007	.71
82	MP3C	X	0	5.71
83	MP3C	Z	-8.627	5.71
84	MP3C	Mx	-.007	5.71
85	MP1A	X	0	.71
86	MP1A	Z	-8.128	.71
87	MP1A	Mx	-.002	.71
88	MP1A	X	0	5.71
89	MP1A	Z	-8.128	5.71
90	MP1A	Mx	-.002	5.71
91	MP1B	X	0	.71
92	MP1B	Z	-5.934	.71
93	MP1B	Mx	.003	.71
94	MP1B	X	0	5.71
95	MP1B	Z	-5.934	5.71
96	MP1B	Mx	.003	5.71
97	MP1C	X	0	.71
98	MP1C	Z	-7.747	.71
99	MP1C	Mx	-.002	.71
100	MP1C	X	0	5.71
101	MP1C	Z	-7.747	5.71
102	MP1C	Mx	-.002	5.71

Member Point Loads (BLC 28 : Antenna Wm (30 Deg))

	Member Label	Direction	Magnitude[lb,k-ft]	Location[ft,%]
1	MP5A	X	1.515	2.21
2	MP5A	Z	-2.624	2.21
3	MP5A	Mx	-.001	2.21
4	MP5A	X	1.515	4.21
5	MP5A	Z	-2.624	4.21
6	MP5A	Mx	-.001	4.21
7	MP5B	X	1.141	2.21
8	MP5B	Z	-1.977	2.21

Member Point Loads (BLC 28 : Antenna Wm (30 Deg)) (Continued)

	Member Label	Direction	Magnitude[lb,k-ft]	Location[ft,%]
9	MP5B	Mx	.001	2.21
10	MP5B	X	1.141	4.21
11	MP5B	Z	-1.977	4.21
12	MP5B	Mx	.001	4.21
13	MP5C	X	2.087	2.21
14	MP5C	Z	-3.615	2.21
15	MP5C	Mx	0	2.21
16	MP5C	X	2.087	4.21
17	MP5C	Z	-3.615	4.21
18	MP5C	Mx	0	4.21
19	MP3A	X	.314	1
20	MP3A	Z	-.544	1
21	MP3A	Mx	.000301	1
22	MP3B	X	.269	1
23	MP3B	Z	-.465	1
24	MP3B	Mx	-.000331	1
25	MP3C	X	.383	1
26	MP3C	Z	-.664	1
27	MP3C	Mx	0	1
28	M144	X	3.458	1.25
29	M144	Z	-5.989	1.25
30	M144	Mx	0	1.25
31	MP3A	X	1.56	2
32	MP3A	Z	-2.702	2
33	MP3A	Mx	.001	2
34	MP3B	X	1.314	2
35	MP3B	Z	-2.276	2
36	MP3B	Mx	-.002	2
37	MP3C	X	1.937	2
38	MP3C	Z	-3.355	2
39	MP3C	Mx	0	2
40	MP3A	X	1.416	4
41	MP3A	Z	-2.452	4
42	MP3A	Mx	.001	4
43	MP3B	X	1.076	4
44	MP3B	Z	-1.863	4
45	MP3B	Mx	-.001	4
46	MP3C	X	1.937	4
47	MP3C	Z	-3.355	4
48	MP3C	Mx	0	4
49	MP3A	X	3.768	.71
50	MP3A	Z	-6.526	.71
51	MP3A	Mx	-.006	.71
52	MP3A	X	3.768	5.71
53	MP3A	Z	-6.526	5.71
54	MP3A	Mx	-.006	5.71
55	MP3B	X	3.148	.71
56	MP3B	Z	-5.452	.71
57	MP3B	Mx	.002	.71
58	MP3B	X	3.148	5.71
59	MP3B	Z	-5.452	5.71
60	MP3B	Mx	.002	5.71
61	MP3C	X	4.718	.71
62	MP3C	Z	-8.172	.71
63	MP3C	Mx	.006	.71
64	MP3C	X	4.718	5.71
65	MP3C	Z	-8.172	5.71

Member Point Loads (BLC 28 : Antenna Wm (30 Deg)) (Continued)

	Member Label	Direction	Magnitude[lb,k-ft]	Location[ft,%]
66	MP3C	Mx	.006	5.71
67	MP3A	X	3.768	.71
68	MP3A	Z	-6.526	.71
69	MP3A	Mx	-6.1e-5	.71
70	MP3A	X	3.768	5.71
71	MP3A	Z	-6.526	5.71
72	MP3A	Mx	-6.1e-5	5.71
73	MP3B	X	3.148	.71
74	MP3B	Z	-5.452	.71
75	MP3B	Mx	.004	.71
76	MP3B	X	3.148	5.71
77	MP3B	Z	-5.452	5.71
78	MP3B	Mx	.004	5.71
79	MP3C	X	4.718	.71
80	MP3C	Z	-8.172	.71
81	MP3C	Mx	-.006	.71
82	MP3C	X	4.718	5.71
83	MP3C	Z	-8.172	5.71
84	MP3C	Mx	-.006	5.71
85	MP1A	X	3.391	.71
86	MP1A	Z	-5.873	.71
87	MP1A	Mx	-.003	.71
88	MP1A	X	3.391	5.71
89	MP1A	Z	-5.873	5.71
90	MP1A	Mx	-.003	5.71
91	MP1B	X	2.843	.71
92	MP1B	Z	-4.924	.71
93	MP1B	Mx	.003	.71
94	MP1B	X	2.843	5.71
95	MP1B	Z	-4.924	5.71
96	MP1B	Mx	.003	5.71
97	MP1C	X	4.231	.71
98	MP1C	Z	-7.329	.71
99	MP1C	Mx	0	.71
100	MP1C	X	4.231	5.71
101	MP1C	Z	-7.329	5.71
102	MP1C	Mx	0	5.71

Member Point Loads (BLC 29 : Antenna Wm (60 Deg))

	Member Label	Direction	Magnitude[lb,k-ft]	Location[ft,%]
1	MP5A	X	1.977	2.21
2	MP5A	Z	-1.141	2.21
3	MP5A	Mx	-.001	2.21
4	MP5A	X	1.977	4.21
5	MP5A	Z	-1.141	4.21
6	MP5A	Mx	-.001	4.21
7	MP5B	X	2.624	2.21
8	MP5B	Z	-1.515	2.21
9	MP5B	Mx	.001	2.21
10	MP5B	X	2.624	4.21
11	MP5B	Z	-1.515	4.21
12	MP5B	Mx	.001	4.21
13	MP5C	X	3.193	2.21
14	MP5C	Z	-1.843	2.21
15	MP5C	Mx	.000922	2.21
16	MP5C	X	3.193	4.21

Member Point Loads (BLC 29 : Antenna Wm (60 Deg)) (Continued)

	Member Label	Direction	Magnitude[lb,k-ft]	Location[ft,%]
17	MP5C	Z	-1.843	4.21
18	MP5C	Mx	.000922	4.21
19	MP3A	X	.465	1
20	MP3A	Z	-.269	1
21	MP3A	Mx	.000331	1
22	MP3B	X	.544	1
23	MP3B	Z	-.314	1
24	MP3B	Mx	-.000301	1
25	MP3C	X	.613	1
26	MP3C	Z	-.354	1
27	MP3C	Mx	-.000221	1
28	M144	X	5.557	1.25
29	M144	Z	-3.208	1.25
30	M144	Mx	0	1.25
31	MP3A	X	2.276	2
32	MP3A	Z	-1.314	2
33	MP3A	Mx	.002	2
34	MP3B	X	2.702	2
35	MP3B	Z	-1.56	2
36	MP3B	Mx	-.001	2
37	MP3C	X	3.077	2
38	MP3C	Z	-1.776	2
39	MP3C	Mx	-.001	2
40	MP3A	X	1.863	4
41	MP3A	Z	-1.076	4
42	MP3A	Mx	.001	4
43	MP3B	X	2.452	4
44	MP3B	Z	-1.416	4
45	MP3B	Mx	-.001	4
46	MP3C	X	2.97	4
47	MP3C	Z	-1.715	4
48	MP3C	Mx	-.001	4
49	MP3A	X	5.452	.71
50	MP3A	Z	-3.148	.71
51	MP3A	Mx	-.004	.71
52	MP3A	X	5.452	5.71
53	MP3A	Z	-3.148	5.71
54	MP3A	Mx	-.004	5.71
55	MP3B	X	6.526	.71
56	MP3B	Z	-3.768	.71
57	MP3B	Mx	6.1e-5	.71
58	MP3B	X	6.526	5.71
59	MP3B	Z	-3.768	5.71
60	MP3B	Mx	6.1e-5	5.71
61	MP3C	X	7.471	.71
62	MP3C	Z	-4.313	.71
63	MP3C	Mx	.007	.71
64	MP3C	X	7.471	5.71
65	MP3C	Z	-4.313	5.71
66	MP3C	Mx	.007	5.71
67	MP3A	X	5.452	.71
68	MP3A	Z	-3.148	.71
69	MP3A	Mx	-.002	.71
70	MP3A	X	5.452	5.71
71	MP3A	Z	-3.148	5.71
72	MP3A	Mx	-.002	5.71
73	MP3B	X	6.526	.71

Member Point Loads (BLC 29 : Antenna Wm (60 Deg)) (Continued)

	Member Label	Direction	Magnitude[lb,k-ft]	Location[ft,%]
74	MP3B	Z	-3.768	.71
75	MP3B	Mx	.006	.71
76	MP3B	X	6.526	5.71
77	MP3B	Z	-3.768	5.71
78	MP3B	Mx	.006	5.71
79	MP3C	X	7.471	.71
80	MP3C	Z	-4.313	.71
81	MP3C	Mx	-.002	.71
82	MP3C	X	7.471	5.71
83	MP3C	Z	-4.313	5.71
84	MP3C	Mx	-.002	5.71
85	MP1A	X	4.924	.71
86	MP1A	Z	-2.843	.71
87	MP1A	Mx	-.003	.71
88	MP1A	X	4.924	5.71
89	MP1A	Z	-2.843	5.71
90	MP1A	Mx	-.003	5.71
91	MP1B	X	5.873	.71
92	MP1B	Z	-3.391	.71
93	MP1B	Mx	.003	.71
94	MP1B	X	5.873	5.71
95	MP1B	Z	-3.391	5.71
96	MP1B	Mx	.003	5.71
97	MP1C	X	6.709	.71
98	MP1C	Z	-3.873	.71
99	MP1C	Mx	.002	.71
100	MP1C	X	6.709	5.71
101	MP1C	Z	-3.873	5.71
102	MP1C	Mx	.002	5.71

Member Point Loads (BLC 30 : Antenna Wm (90 Deg))

	Member Label	Direction	Magnitude[lb,k-ft]	Location[ft,%]
1	MP5A	X	2.452	2.21
2	MP5A	Z	0	2.21
3	MP5A	Mx	-.001	2.21
4	MP5A	X	2.452	4.21
5	MP5A	Z	0	4.21
6	MP5A	Mx	-.001	4.21
7	MP5B	X	3.946	2.21
8	MP5B	Z	0	2.21
9	MP5B	Mx	.000675	2.21
10	MP5B	X	3.946	4.21
11	MP5B	Z	0	4.21
12	MP5B	Mx	.000675	4.21
13	MP5C	X	2.712	2.21
14	MP5C	Z	0	2.21
15	MP5C	Mx	.001	2.21
16	MP5C	X	2.712	4.21
17	MP5C	Z	0	4.21
18	MP5C	Mx	.001	4.21
19	MP3A	X	.558	1
20	MP3A	Z	0	1
21	MP3A	Mx	.000328	1
22	MP3B	X	.739	1
23	MP3B	Z	0	1
24	MP3B	Mx	-.000158	1

Member Point Loads (BLC 30 : Antenna Wm (90 Deg)) (Continued)

	Member Label	Direction	Magnitude[lb,k-ft]	Location[ft,%]
25	MP3C	X	.589	1
26	MP3C	Z	0	1
27	MP3C	Mx	-.000319	1
28	M144	X	6.915	1.25
29	M144	Z	0	1.25
30	M144	Mx	0	1.25
31	MP3A	X	2.74	2
32	MP3A	Z	0	2
33	MP3A	Mx	.002	2
34	MP3B	X	3.724	2
35	MP3B	Z	0	2
36	MP3B	Mx	-.000796	2
37	MP3C	X	2.911	2
38	MP3C	Z	0	2
39	MP3C	Mx	-.002	2
40	MP3A	X	2.305	4
41	MP3A	Z	0	4
42	MP3A	Mx	.001	4
43	MP3B	X	3.666	4
44	MP3B	Z	0	4
45	MP3B	Mx	-.000784	4
46	MP3C	X	2.542	4
47	MP3C	Z	0	4
48	MP3C	Mx	-.001	4
49	MP3A	X	6.576	.71
50	MP3A	Z	0	.71
51	MP3A	Mx	-.002	.71
52	MP3A	X	6.576	5.71
53	MP3A	Z	0	5.71
54	MP3A	Mx	-.002	5.71
55	MP3B	X	9.057	.71
56	MP3B	Z	0	.71
57	MP3B	Mx	-.003	.71
58	MP3B	X	9.057	5.71
59	MP3B	Z	0	5.71
60	MP3B	Mx	-.003	5.71
61	MP3C	X	7.007	.71
62	MP3C	Z	0	.71
63	MP3C	Mx	.005	.71
64	MP3C	X	7.007	5.71
65	MP3C	Z	0	5.71
66	MP3C	Mx	.005	5.71
67	MP3A	X	6.576	.71
68	MP3A	Z	0	.71
69	MP3A	Mx	-.004	.71
70	MP3A	X	6.576	5.71
71	MP3A	Z	0	5.71
72	MP3A	Mx	-.004	5.71
73	MP3B	X	9.057	.71
74	MP3B	Z	0	.71
75	MP3B	Mx	.007	.71
76	MP3B	X	9.057	5.71
77	MP3B	Z	0	5.71
78	MP3B	Mx	.007	5.71
79	MP3C	X	7.007	.71
80	MP3C	Z	0	.71
81	MP3C	Mx	.00099	.71

Member Point Loads (BLC 30 : Antenna Wm (90 Deg)) (Continued)

	Member Label	Direction	Magnitude[lb,k-ft]	Location[ft,%]
82	MP3C	X	7.007	5.71
83	MP3C	Z	0	5.71
84	MP3C	Mx	.00099	5.71
85	MP1A	X	5.934	.71
86	MP1A	Z	0	.71
87	MP1A	Mx	-.003	.71
88	MP1A	X	5.934	5.71
89	MP1A	Z	0	5.71
90	MP1A	Mx	-.003	5.71
91	MP1B	X	8.128	.71
92	MP1B	Z	0	.71
93	MP1B	Mx	.002	.71
94	MP1B	X	8.128	5.71
95	MP1B	Z	0	5.71
96	MP1B	Mx	.002	5.71
97	MP1C	X	6.315	.71
98	MP1C	Z	0	.71
99	MP1C	Mx	.003	.71
100	MP1C	X	6.315	5.71
101	MP1C	Z	0	5.71
102	MP1C	Mx	.003	5.71

Member Point Loads (BLC 31 : Antenna Wm (120 Deg))

	Member Label	Direction	Magnitude[lb,k-ft]	Location[ft,%]
1	MP5A	X	2.917	2.21
2	MP5A	Z	1.684	2.21
3	MP5A	Mx	-.001	2.21
4	MP5A	X	2.917	4.21
5	MP5A	Z	1.684	4.21
6	MP5A	Mx	-.001	4.21
7	MP5B	X	3.564	2.21
8	MP5B	Z	2.058	2.21
9	MP5B	Mx	-.000357	2.21
10	MP5B	X	3.564	4.21
11	MP5B	Z	2.058	4.21
12	MP5B	Mx	-.000357	4.21
13	MP5C	X	1.926	2.21
14	MP5C	Z	1.112	2.21
15	MP5C	Mx	.001	2.21
16	MP5C	X	1.926	4.21
17	MP5C	Z	1.112	4.21
18	MP5C	Mx	.001	4.21
19	MP3A	X	.579	1
20	MP3A	Z	.334	1
21	MP3A	Mx	.000269	1
22	MP3B	X	.658	1
23	MP3B	Z	.38	1
24	MP3B	Mx	8.3e-5	1
25	MP3C	X	.459	1
26	MP3C	Z	.265	1
27	MP3C	Mx	-.000331	1
28	M144	X	6.852	1.25
29	M144	Z	3.956	1.25
30	M144	Mx	0	1.25
31	MP3A	X	2.895	2
32	MP3A	Z	1.672	2

Member Point Loads (BLC 31 : Antenna Wm (120 Deg)) (Continued)

	Member Label	Direction	Magnitude[lb,k-ft]	Location[ft,%]
33	MP3A	Mx	.001	2
34	MP3B	X	3.321	2
35	MP3B	Z	1.918	2
36	MP3B	Mx	.000417	2
37	MP3C	X	2.243	2
38	MP3C	Z	1.295	2
39	MP3C	Mx	-.002	2
40	MP3A	X	2.719	4
41	MP3A	Z	1.57	4
42	MP3A	Mx	.001	4
43	MP3B	X	3.309	4
44	MP3B	Z	1.91	4
45	MP3B	Mx	.000414	4
46	MP3C	X	1.816	4
47	MP3C	Z	1.049	4
48	MP3C	Mx	-.001	4
49	MP3A	X	7.013	.71
50	MP3A	Z	4.049	.71
51	MP3A	Mx	.001	.71
52	MP3A	X	7.013	5.71
53	MP3A	Z	4.049	5.71
54	MP3A	Mx	.001	5.71
55	MP3B	X	8.087	.71
56	MP3B	Z	4.669	.71
57	MP3B	Mx	-.006	.71
58	MP3B	X	8.087	5.71
59	MP3B	Z	4.669	5.71
60	MP3B	Mx	-.006	5.71
61	MP3C	X	5.367	.71
62	MP3C	Z	3.099	.71
63	MP3C	Mx	.003	.71
64	MP3C	X	5.367	5.71
65	MP3C	Z	3.099	5.71
66	MP3C	Mx	.003	5.71
67	MP3A	X	7.013	.71
68	MP3A	Z	4.049	.71
69	MP3A	Mx	-.006	.71
70	MP3A	X	7.013	5.71
71	MP3A	Z	4.049	5.71
72	MP3A	Mx	-.006	5.71
73	MP3B	X	8.087	.71
74	MP3B	Z	4.669	.71
75	MP3B	Mx	.005	.71
76	MP3B	X	8.087	5.71
77	MP3B	Z	4.669	5.71
78	MP3B	Mx	.005	5.71
79	MP3C	X	5.367	.71
80	MP3C	Z	3.099	.71
81	MP3C	Mx	.003	.71
82	MP3C	X	5.367	5.71
83	MP3C	Z	3.099	5.71
84	MP3C	Mx	.003	5.71
85	MP1A	X	6.304	.71
86	MP1A	Z	3.64	.71
87	MP1A	Mx	-.003	.71
88	MP1A	X	6.304	5.71
89	MP1A	Z	3.64	5.71

Member Point Loads (BLC 31 : Antenna Wm (120 Deg)) (Continued)

	Member Label	Direction	Magnitude[lb,k-ft]	Location[ft,%]
90	MP1A	Mx	-.003	5.71
91	MP1B	X	7.254	.71
92	MP1B	Z	4.188	.71
93	MP1B	Mx	-.000848	.71
94	MP1B	X	7.254	5.71
95	MP1B	Z	4.188	5.71
96	MP1B	Mx	-.000848	5.71
97	MP1C	X	4.849	.71
98	MP1C	Z	2.799	.71
99	MP1C	Mx	.003	.71
100	MP1C	X	4.849	5.71
101	MP1C	Z	2.799	5.71
102	MP1C	Mx	.003	5.71

Member Point Loads (BLC 32 : Antenna Wm (150 Deg))

	Member Label	Direction	Magnitude[lb,k-ft]	Location[ft,%]
1	MP5A	X	2.058	2.21
2	MP5A	Z	3.564	2.21
3	MP5A	Mx	-.000357	2.21
4	MP5A	X	2.058	4.21
5	MP5A	Z	3.564	4.21
6	MP5A	Mx	-.000357	4.21
7	MP5B	X	1.684	2.21
8	MP5B	Z	2.917	2.21
9	MP5B	Mx	-.001	2.21
10	MP5B	X	1.684	4.21
11	MP5B	Z	2.917	4.21
12	MP5B	Mx	-.001	4.21
13	MP5C	X	1.356	2.21
14	MP5C	Z	2.348	2.21
15	MP5C	Mx	.001	2.21
16	MP5C	X	1.356	4.21
17	MP5C	Z	2.348	4.21
18	MP5C	Mx	.001	4.21
19	MP3A	X	.38	1
20	MP3A	Z	.658	1
21	MP3A	Mx	8.3e-5	1
22	MP3B	X	.334	1
23	MP3B	Z	.579	1
24	MP3B	Mx	.000269	1
25	MP3C	X	.295	1
26	MP3C	Z	.51	1
27	MP3C	Mx	-.000319	1
28	M144	X	4.205	1.25
29	M144	Z	7.284	1.25
30	M144	Mx	0	1.25
31	MP3A	X	1.918	2
32	MP3A	Z	3.321	2
33	MP3A	Mx	.000417	2
34	MP3B	X	1.672	2
35	MP3B	Z	2.895	2
36	MP3B	Mx	.001	2
37	MP3C	X	1.455	2
38	MP3C	Z	2.521	2
39	MP3C	Mx	-.002	2
40	MP3A	X	1.91	4

Member Point Loads (BLC 32 : Antenna Wm (150 Deg)) (Continued)

	Member Label	Direction	Magnitude[lb,k-ft]	Location[ft,%]
41	MP3A	Z	3.309	4
42	MP3A	Mx	.000414	4
43	MP3B	X	1.57	4
44	MP3B	Z	2.719	4
45	MP3B	Mx	.001	4
46	MP3C	X	1.271	4
47	MP3C	Z	2.201	4
48	MP3C	Mx	-.001	4
49	MP3A	X	4.669	.71
50	MP3A	Z	8.087	.71
51	MP3A	Mx	.005	.71
52	MP3A	X	4.669	5.71
53	MP3A	Z	8.087	5.71
54	MP3A	Mx	.005	5.71
55	MP3B	X	4.049	.71
56	MP3B	Z	7.013	.71
57	MP3B	Mx	-.006	.71
58	MP3B	X	4.049	5.71
59	MP3B	Z	7.013	5.71
60	MP3B	Mx	-.006	5.71
61	MP3C	X	3.504	.71
62	MP3C	Z	6.068	.71
63	MP3C	Mx	.000991	.71
64	MP3C	X	3.504	5.71
65	MP3C	Z	6.068	5.71
66	MP3C	Mx	.000991	5.71
67	MP3A	X	4.669	.71
68	MP3A	Z	8.087	.71
69	MP3A	Mx	-.006	.71
70	MP3A	X	4.669	5.71
71	MP3A	Z	8.087	5.71
72	MP3A	Mx	-.006	5.71
73	MP3B	X	4.049	.71
74	MP3B	Z	7.013	.71
75	MP3B	Mx	.001	.71
76	MP3B	X	4.049	5.71
77	MP3B	Z	7.013	5.71
78	MP3B	Mx	.001	5.71
79	MP3C	X	3.504	.71
80	MP3C	Z	6.068	.71
81	MP3C	Mx	.005	.71
82	MP3C	X	3.504	5.71
83	MP3C	Z	6.068	5.71
84	MP3C	Mx	.005	5.71
85	MP1A	X	4.188	.71
86	MP1A	Z	7.254	.71
87	MP1A	Mx	-.000848	.71
88	MP1A	X	4.188	5.71
89	MP1A	Z	7.254	5.71
90	MP1A	Mx	-.000848	5.71
91	MP1B	X	3.64	.71
92	MP1B	Z	6.304	.71
93	MP1B	Mx	-.003	.71
94	MP1B	X	3.64	5.71
95	MP1B	Z	6.304	5.71
96	MP1B	Mx	-.003	5.71
97	MP1C	X	3.157	.71

Member Point Loads (BLC 32 : Antenna Wm (150 Deg)) (Continued)

	Member Label	Direction	Magnitude[lb,k-ft]	Location[ft,%]
98	MP1C	Z	5.469	.71
99	MP1C	Mx	.003	.71
100	MP1C	X	3.157	5.71
101	MP1C	Z	5.469	5.71
102	MP1C	Mx	.003	5.71

Member Point Loads (BLC 33 : Antenna Wm (180 Deg))

	Member Label	Direction	Magnitude[lb,k-ft]	Location[ft,%]
1	MP5A	X	0	2.21
2	MP5A	Z	3.946	2.21
3	MP5A	Mx	.000675	2.21
4	MP5A	X	0	4.21
5	MP5A	Z	3.946	4.21
6	MP5A	Mx	.000675	4.21
7	MP5B	X	0	2.21
8	MP5B	Z	2.452	2.21
9	MP5B	Mx	-.001	2.21
10	MP5B	X	0	4.21
11	MP5B	Z	2.452	4.21
12	MP5B	Mx	-.001	4.21
13	MP5C	X	0	2.21
14	MP5C	Z	3.687	2.21
15	MP5C	Mx	.000922	2.21
16	MP5C	X	0	4.21
17	MP5C	Z	3.687	4.21
18	MP5C	Mx	.000922	4.21
19	MP3A	X	0	1
20	MP3A	Z	.739	1
21	MP3A	Mx	-.000158	1
22	MP3B	X	0	1
23	MP3B	Z	.558	1
24	MP3B	Mx	.000328	1
25	MP3C	X	0	1
26	MP3C	Z	.707	1
27	MP3C	Mx	-.000221	1
28	M144	X	0	1.25
29	M144	Z	7.912	1.25
30	M144	Mx	0	1.25
31	MP3A	X	0	2
32	MP3A	Z	3.724	2
33	MP3A	Mx	-.000796	2
34	MP3B	X	0	2
35	MP3B	Z	2.74	2
36	MP3B	Mx	.002	2
37	MP3C	X	0	2
38	MP3C	Z	3.553	2
39	MP3C	Mx	-.001	2
40	MP3A	X	0	4
41	MP3A	Z	3.666	4
42	MP3A	Mx	-.000784	4
43	MP3B	X	0	4
44	MP3B	Z	2.305	4
45	MP3B	Mx	.001	4
46	MP3C	X	0	4
47	MP3C	Z	3.43	4
48	MP3C	Mx	-.001	4

Member Point Loads (BLC 33 : Antenna Wm (180 Deg)) (Continued)

	Member Label	Direction	Magnitude[lb,k-ft]	Location[ft,%]
49	MP3A	X	0	.71
50	MP3A	Z	9.057	.71
51	MP3A	Mx	.007	.71
52	MP3A	X	0	5.71
53	MP3A	Z	9.057	5.71
54	MP3A	Mx	.007	5.71
55	MP3B	X	0	.71
56	MP3B	Z	6.576	.71
57	MP3B	Mx	-.004	.71
58	MP3B	X	0	5.71
59	MP3B	Z	6.576	5.71
60	MP3B	Mx	-.004	5.71
61	MP3C	X	0	.71
62	MP3C	Z	8.627	.71
63	MP3C	Mx	-.002	.71
64	MP3C	X	0	5.71
65	MP3C	Z	8.627	5.71
66	MP3C	Mx	-.002	5.71
67	MP3A	X	0	.71
68	MP3A	Z	9.057	.71
69	MP3A	Mx	-.003	.71
70	MP3A	X	0	5.71
71	MP3A	Z	9.057	5.71
72	MP3A	Mx	-.003	5.71
73	MP3B	X	0	.71
74	MP3B	Z	6.576	.71
75	MP3B	Mx	-.002	.71
76	MP3B	X	0	5.71
77	MP3B	Z	6.576	5.71
78	MP3B	Mx	-.002	5.71
79	MP3C	X	0	.71
80	MP3C	Z	8.627	.71
81	MP3C	Mx	.007	.71
82	MP3C	X	0	5.71
83	MP3C	Z	8.627	5.71
84	MP3C	Mx	.007	5.71
85	MP1A	X	0	.71
86	MP1A	Z	8.128	.71
87	MP1A	Mx	.002	.71
88	MP1A	X	0	5.71
89	MP1A	Z	8.128	5.71
90	MP1A	Mx	.002	5.71
91	MP1B	X	0	.71
92	MP1B	Z	5.934	.71
93	MP1B	Mx	-.003	.71
94	MP1B	X	0	5.71
95	MP1B	Z	5.934	5.71
96	MP1B	Mx	-.003	5.71
97	MP1C	X	0	.71
98	MP1C	Z	7.747	.71
99	MP1C	Mx	.002	.71
100	MP1C	X	0	5.71
101	MP1C	Z	7.747	5.71
102	MP1C	Mx	.002	5.71

Member Point Loads (BLC 34 : Antenna Wm (210 Deg))

Member Label	Direction	Magnitude[lb,k-ft]	Location[ft,%]

Member Point Loads (BLC 34 : Antenna Wm (210 Deg)) (Continued)

	Member Label	Direction	Magnitude[lb,k-ft]	Location[ft,%]
1	MP5A	X	-1.515	2.21
2	MP5A	Z	2.624	2.21
3	MP5A	Mx	.001	2.21
4	MP5A	X	-1.515	4.21
5	MP5A	Z	2.624	4.21
6	MP5A	Mx	.001	4.21
7	MP5B	X	-1.141	2.21
8	MP5B	Z	1.977	2.21
9	MP5B	Mx	-.001	2.21
10	MP5B	X	-1.141	4.21
11	MP5B	Z	1.977	4.21
12	MP5B	Mx	-.001	4.21
13	MP5C	X	-2.087	2.21
14	MP5C	Z	3.615	2.21
15	MP5C	Mx	0	2.21
16	MP5C	X	-2.087	4.21
17	MP5C	Z	3.615	4.21
18	MP5C	Mx	0	4.21
19	MP3A	X	-.314	1
20	MP3A	Z	.544	1
21	MP3A	Mx	-.000301	1
22	MP3B	X	-.269	1
23	MP3B	Z	.465	1
24	MP3B	Mx	.000331	1
25	MP3C	X	-.383	1
26	MP3C	Z	.664	1
27	MP3C	Mx	0	1
28	M144	X	-3.458	1.25
29	M144	Z	5.989	1.25
30	M144	Mx	0	1.25
31	MP3A	X	-1.56	2
32	MP3A	Z	2.702	2
33	MP3A	Mx	-.001	2
34	MP3B	X	-1.314	2
35	MP3B	Z	2.276	2
36	MP3B	Mx	.002	2
37	MP3C	X	-1.937	2
38	MP3C	Z	3.355	2
39	MP3C	Mx	0	2
40	MP3A	X	-1.416	4
41	MP3A	Z	2.452	4
42	MP3A	Mx	-.001	4
43	MP3B	X	-1.076	4
44	MP3B	Z	1.863	4
45	MP3B	Mx	.001	4
46	MP3C	X	-1.937	4
47	MP3C	Z	3.355	4
48	MP3C	Mx	0	4
49	MP3A	X	-3.768	.71
50	MP3A	Z	6.526	.71
51	MP3A	Mx	.006	.71
52	MP3A	X	-3.768	5.71
53	MP3A	Z	6.526	5.71
54	MP3A	Mx	.006	5.71
55	MP3B	X	-3.148	.71
56	MP3B	Z	5.452	.71
57	MP3B	Mx	-.002	.71

Member Point Loads (BLC 34 : Antenna Wm (210 Deg)) (Continued)

	Member Label	Direction	Magnitude[lb,k-ft]	Location[ft,%]
58	MP3B	X	-3.148	5.71
59	MP3B	Z	5.452	5.71
60	MP3B	Mx	-.002	5.71
61	MP3C	X	-4.718	.71
62	MP3C	Z	8.172	.71
63	MP3C	Mx	-.006	.71
64	MP3C	X	-4.718	5.71
65	MP3C	Z	8.172	5.71
66	MP3C	Mx	-.006	5.71
67	MP3A	X	-3.768	.71
68	MP3A	Z	6.526	.71
69	MP3A	Mx	6.1e-5	.71
70	MP3A	X	-3.768	5.71
71	MP3A	Z	6.526	5.71
72	MP3A	Mx	6.1e-5	5.71
73	MP3B	X	-3.148	.71
74	MP3B	Z	5.452	.71
75	MP3B	Mx	-.004	.71
76	MP3B	X	-3.148	5.71
77	MP3B	Z	5.452	5.71
78	MP3B	Mx	-.004	5.71
79	MP3C	X	-4.718	.71
80	MP3C	Z	8.172	.71
81	MP3C	Mx	.006	.71
82	MP3C	X	-4.718	5.71
83	MP3C	Z	8.172	5.71
84	MP3C	Mx	.006	5.71
85	MP1A	X	-3.391	.71
86	MP1A	Z	5.873	.71
87	MP1A	Mx	.003	.71
88	MP1A	X	-3.391	5.71
89	MP1A	Z	5.873	5.71
90	MP1A	Mx	.003	5.71
91	MP1B	X	-2.843	.71
92	MP1B	Z	4.924	.71
93	MP1B	Mx	-.003	.71
94	MP1B	X	-2.843	5.71
95	MP1B	Z	4.924	5.71
96	MP1B	Mx	-.003	5.71
97	MP1C	X	-4.231	.71
98	MP1C	Z	7.329	.71
99	MP1C	Mx	0	.71
100	MP1C	X	-4.231	5.71
101	MP1C	Z	7.329	5.71
102	MP1C	Mx	0	5.71

Member Point Loads (BLC 35 : Antenna Wm (240 Deg))

	Member Label	Direction	Magnitude[lb,k-ft]	Location[ft,%]
1	MP5A	X	-1.977	2.21
2	MP5A	Z	1.141	2.21
3	MP5A	Mx	.001	2.21
4	MP5A	X	-1.977	4.21
5	MP5A	Z	1.141	4.21
6	MP5A	Mx	.001	4.21
7	MP5B	X	-2.624	2.21
8	MP5B	Z	1.515	2.21

Member Point Loads (BLC 35 : Antenna Wm (240 Deg)) (Continued)

	Member Label	Direction	Magnitude[lb,k-ft]	Location[ft,%]
9	MP5B	Mx	-.001	2.21
10	MP5B	X	-2.624	4.21
11	MP5B	Z	1.515	4.21
12	MP5B	Mx	-.001	4.21
13	MP5C	X	-3.193	2.21
14	MP5C	Z	1.843	2.21
15	MP5C	Mx	-.000922	2.21
16	MP5C	X	-3.193	4.21
17	MP5C	Z	1.843	4.21
18	MP5C	Mx	-.000922	4.21
19	MP3A	X	-.465	1
20	MP3A	Z	.269	1
21	MP3A	Mx	-.000331	1
22	MP3B	X	-.544	1
23	MP3B	Z	.314	1
24	MP3B	Mx	.000301	1
25	MP3C	X	-.613	1
26	MP3C	Z	.354	1
27	MP3C	Mx	.000221	1
28	M144	X	-5.557	1.25
29	M144	Z	3.208	1.25
30	M144	Mx	0	1.25
31	MP3A	X	-2.276	2
32	MP3A	Z	1.314	2
33	MP3A	Mx	-.002	2
34	MP3B	X	-2.702	2
35	MP3B	Z	1.56	2
36	MP3B	Mx	.001	2
37	MP3C	X	-3.077	2
38	MP3C	Z	1.776	2
39	MP3C	Mx	.001	2
40	MP3A	X	-1.863	4
41	MP3A	Z	1.076	4
42	MP3A	Mx	-.001	4
43	MP3B	X	-2.452	4
44	MP3B	Z	1.416	4
45	MP3B	Mx	.001	4
46	MP3C	X	-2.97	4
47	MP3C	Z	1.715	4
48	MP3C	Mx	.001	4
49	MP3A	X	-5.452	.71
50	MP3A	Z	3.148	.71
51	MP3A	Mx	.004	.71
52	MP3A	X	-5.452	5.71
53	MP3A	Z	3.148	5.71
54	MP3A	Mx	.004	5.71
55	MP3B	X	-6.526	.71
56	MP3B	Z	3.768	.71
57	MP3B	Mx	-6.1e-5	.71
58	MP3B	X	-6.526	5.71
59	MP3B	Z	3.768	5.71
60	MP3B	Mx	-6.1e-5	5.71
61	MP3C	X	-7.471	.71
62	MP3C	Z	4.313	.71
63	MP3C	Mx	-.007	.71
64	MP3C	X	-7.471	5.71
65	MP3C	Z	4.313	5.71

Member Point Loads (BLC 35 : Antenna Wm (240 Deg)) (Continued)

	Member Label	Direction	Magnitude[lb,k-ft]	Location[ft,%]
66	MP3C	Mx	-.007	5.71
67	MP3A	X	-5.452	.71
68	MP3A	Z	3.148	.71
69	MP3A	Mx	.002	.71
70	MP3A	X	-5.452	5.71
71	MP3A	Z	3.148	5.71
72	MP3A	Mx	.002	5.71
73	MP3B	X	-6.526	.71
74	MP3B	Z	3.768	.71
75	MP3B	Mx	-.006	.71
76	MP3B	X	-6.526	5.71
77	MP3B	Z	3.768	5.71
78	MP3B	Mx	-.006	5.71
79	MP3C	X	-7.471	.71
80	MP3C	Z	4.313	.71
81	MP3C	Mx	.002	.71
82	MP3C	X	-7.471	5.71
83	MP3C	Z	4.313	5.71
84	MP3C	Mx	.002	5.71
85	MP1A	X	-4.924	.71
86	MP1A	Z	2.843	.71
87	MP1A	Mx	.003	.71
88	MP1A	X	-4.924	5.71
89	MP1A	Z	2.843	5.71
90	MP1A	Mx	.003	5.71
91	MP1B	X	-5.873	.71
92	MP1B	Z	3.391	.71
93	MP1B	Mx	-.003	.71
94	MP1B	X	-5.873	5.71
95	MP1B	Z	3.391	5.71
96	MP1B	Mx	-.003	5.71
97	MP1C	X	-6.709	.71
98	MP1C	Z	3.873	.71
99	MP1C	Mx	-.002	.71
100	MP1C	X	-6.709	5.71
101	MP1C	Z	3.873	5.71
102	MP1C	Mx	-.002	5.71

Member Point Loads (BLC 36 : Antenna Wm (270 Deg))

	Member Label	Direction	Magnitude[lb,k-ft]	Location[ft,%]
1	MP5A	X	-2.452	2.21
2	MP5A	Z	0	2.21
3	MP5A	Mx	.001	2.21
4	MP5A	X	-2.452	4.21
5	MP5A	Z	0	4.21
6	MP5A	Mx	.001	4.21
7	MP5B	X	-3.946	2.21
8	MP5B	Z	0	2.21
9	MP5B	Mx	-.000675	2.21
10	MP5B	X	-3.946	4.21
11	MP5B	Z	0	4.21
12	MP5B	Mx	-.000675	4.21
13	MP5C	X	-2.712	2.21
14	MP5C	Z	0	2.21
15	MP5C	Mx	-.001	2.21
16	MP5C	X	-2.712	4.21

Member Point Loads (BLC 36 : Antenna Wm (270 Deg)) (Continued)

	Member Label	Direction	Magnitude[lb,k-ft]	Location[ft,%]
17	MP5C	Z	0	4.21
18	MP5C	Mx	-.001	4.21
19	MP3A	X	-.558	1
20	MP3A	Z	0	1
21	MP3A	Mx	-.000328	1
22	MP3B	X	-.739	1
23	MP3B	Z	0	1
24	MP3B	Mx	.000158	1
25	MP3C	X	-.589	1
26	MP3C	Z	0	1
27	MP3C	Mx	.000319	1
28	M144	X	-6.915	1.25
29	M144	Z	0	1.25
30	M144	Mx	0	1.25
31	MP3A	X	-2.74	2
32	MP3A	Z	0	2
33	MP3A	Mx	-.002	2
34	MP3B	X	-3.724	2
35	MP3B	Z	0	2
36	MP3B	Mx	.000796	2
37	MP3C	X	-2.911	2
38	MP3C	Z	0	2
39	MP3C	Mx	.002	2
40	MP3A	X	-2.305	4
41	MP3A	Z	0	4
42	MP3A	Mx	-.001	4
43	MP3B	X	-3.666	4
44	MP3B	Z	0	4
45	MP3B	Mx	.000784	4
46	MP3C	X	-2.542	4
47	MP3C	Z	0	4
48	MP3C	Mx	.001	4
49	MP3A	X	-6.576	.71
50	MP3A	Z	0	.71
51	MP3A	Mx	.002	.71
52	MP3A	X	-6.576	5.71
53	MP3A	Z	0	5.71
54	MP3A	Mx	.002	5.71
55	MP3B	X	-9.057	.71
56	MP3B	Z	0	.71
57	MP3B	Mx	.003	.71
58	MP3B	X	-9.057	5.71
59	MP3B	Z	0	5.71
60	MP3B	Mx	.003	5.71
61	MP3C	X	-7.007	.71
62	MP3C	Z	0	.71
63	MP3C	Mx	-.005	.71
64	MP3C	X	-7.007	5.71
65	MP3C	Z	0	5.71
66	MP3C	Mx	-.005	5.71
67	MP3A	X	-6.576	.71
68	MP3A	Z	0	.71
69	MP3A	Mx	.004	.71
70	MP3A	X	-6.576	5.71
71	MP3A	Z	0	5.71
72	MP3A	Mx	.004	5.71
73	MP3B	X	-9.057	.71

Member Point Loads (BLC 36 : Antenna Wm (270 Deg)) (Continued)

	Member Label	Direction	Magnitude[lb,k-ft]	Location[ft,%]
74	MP3B	Z	0	.71
75	MP3B	Mx	-.007	.71
76	MP3B	X	-9.057	5.71
77	MP3B	Z	0	5.71
78	MP3B	Mx	-.007	5.71
79	MP3C	X	-7.007	.71
80	MP3C	Z	0	.71
81	MP3C	Mx	-.00099	.71
82	MP3C	X	-7.007	5.71
83	MP3C	Z	0	5.71
84	MP3C	Mx	-.00099	5.71
85	MP1A	X	-5.934	.71
86	MP1A	Z	0	.71
87	MP1A	Mx	.003	.71
88	MP1A	X	-5.934	5.71
89	MP1A	Z	0	5.71
90	MP1A	Mx	.003	5.71
91	MP1B	X	-8.128	.71
92	MP1B	Z	0	.71
93	MP1B	Mx	-.002	.71
94	MP1B	X	-8.128	5.71
95	MP1B	Z	0	5.71
96	MP1B	Mx	-.002	5.71
97	MP1C	X	-6.315	.71
98	MP1C	Z	0	.71
99	MP1C	Mx	-.003	.71
100	MP1C	X	-6.315	5.71
101	MP1C	Z	0	5.71
102	MP1C	Mx	-.003	5.71

Member Point Loads (BLC 37 : Antenna Wm (300 Deg))

	Member Label	Direction	Magnitude[lb,k-ft]	Location[ft,%]
1	MP5A	X	-2.917	2.21
2	MP5A	Z	-1.684	2.21
3	MP5A	Mx	.001	2.21
4	MP5A	X	-2.917	4.21
5	MP5A	Z	-1.684	4.21
6	MP5A	Mx	.001	4.21
7	MP5B	X	-3.564	2.21
8	MP5B	Z	-2.058	2.21
9	MP5B	Mx	.000357	2.21
10	MP5B	X	-3.564	4.21
11	MP5B	Z	-2.058	4.21
12	MP5B	Mx	.000357	4.21
13	MP5C	X	-1.926	2.21
14	MP5C	Z	-1.112	2.21
15	MP5C	Mx	-.001	2.21
16	MP5C	X	-1.926	4.21
17	MP5C	Z	-1.112	4.21
18	MP5C	Mx	-.001	4.21
19	MP3A	X	-.579	1
20	MP3A	Z	-.334	1
21	MP3A	Mx	-.000269	1
22	MP3B	X	-.658	1
23	MP3B	Z	-.38	1
24	MP3B	Mx	-8.3e-5	1

Member Point Loads (BLC 37 : Antenna Wm (300 Deg)) (Continued)

	Member Label	Direction	Magnitude[lb,k-ft]	Location[ft,%]
25	MP3C	X	-.459	1
26	MP3C	Z	-.265	1
27	MP3C	Mx	.000331	1
28	M144	X	-6.852	1.25
29	M144	Z	-3.956	1.25
30	M144	Mx	0	1.25
31	MP3A	X	-2.895	2
32	MP3A	Z	-1.672	2
33	MP3A	Mx	-.001	2
34	MP3B	X	-3.321	2
35	MP3B	Z	-1.918	2
36	MP3B	Mx	-.000417	2
37	MP3C	X	-2.243	2
38	MP3C	Z	-1.295	2
39	MP3C	Mx	.002	2
40	MP3A	X	-2.719	4
41	MP3A	Z	-1.57	4
42	MP3A	Mx	-.001	4
43	MP3B	X	-3.309	4
44	MP3B	Z	-1.91	4
45	MP3B	Mx	-.000414	4
46	MP3C	X	-1.816	4
47	MP3C	Z	-1.049	4
48	MP3C	Mx	.001	4
49	MP3A	X	-7.013	.71
50	MP3A	Z	-4.049	.71
51	MP3A	Mx	-.001	.71
52	MP3A	X	-7.013	5.71
53	MP3A	Z	-4.049	5.71
54	MP3A	Mx	-.001	5.71
55	MP3B	X	-8.087	.71
56	MP3B	Z	-4.669	.71
57	MP3B	Mx	.006	.71
58	MP3B	X	-8.087	5.71
59	MP3B	Z	-4.669	5.71
60	MP3B	Mx	.006	5.71
61	MP3C	X	-5.367	.71
62	MP3C	Z	-3.099	.71
63	MP3C	Mx	-.003	.71
64	MP3C	X	-5.367	5.71
65	MP3C	Z	-3.099	5.71
66	MP3C	Mx	-.003	5.71
67	MP3A	X	-7.013	.71
68	MP3A	Z	-4.049	.71
69	MP3A	Mx	.006	.71
70	MP3A	X	-7.013	5.71
71	MP3A	Z	-4.049	5.71
72	MP3A	Mx	.006	5.71
73	MP3B	X	-8.087	.71
74	MP3B	Z	-4.669	.71
75	MP3B	Mx	-.005	.71
76	MP3B	X	-8.087	5.71
77	MP3B	Z	-4.669	5.71
78	MP3B	Mx	-.005	5.71
79	MP3C	X	-5.367	.71
80	MP3C	Z	-3.099	.71
81	MP3C	Mx	-.003	.71

Member Point Loads (BLC 37 : Antenna Wm (300 Deg)) (Continued)

	Member Label	Direction	Magnitude[lb,k-ft]	Location[ft,%]
82	MP3C	X	-5.367	5.71
83	MP3C	Z	-3.099	5.71
84	MP3C	Mx	-.003	5.71
85	MP1A	X	-6.304	.71
86	MP1A	Z	-3.64	.71
87	MP1A	Mx	.003	.71
88	MP1A	X	-6.304	5.71
89	MP1A	Z	-3.64	5.71
90	MP1A	Mx	.003	5.71
91	MP1B	X	-7.254	.71
92	MP1B	Z	-4.188	.71
93	MP1B	Mx	.000848	.71
94	MP1B	X	-7.254	5.71
95	MP1B	Z	-4.188	5.71
96	MP1B	Mx	.000848	5.71
97	MP1C	X	-4.849	.71
98	MP1C	Z	-2.799	.71
99	MP1C	Mx	-.003	.71
100	MP1C	X	-4.849	5.71
101	MP1C	Z	-2.799	5.71
102	MP1C	Mx	-.003	5.71

Member Point Loads (BLC 38 : Antenna Wm (330 Deg))

	Member Label	Direction	Magnitude[lb,k-ft]	Location[ft,%]
1	MP5A	X	-2.058	2.21
2	MP5A	Z	-3.564	2.21
3	MP5A	Mx	.000357	2.21
4	MP5A	X	-2.058	4.21
5	MP5A	Z	-3.564	4.21
6	MP5A	Mx	.000357	4.21
7	MP5B	X	-1.684	2.21
8	MP5B	Z	-2.917	2.21
9	MP5B	Mx	.001	2.21
10	MP5B	X	-1.684	4.21
11	MP5B	Z	-2.917	4.21
12	MP5B	Mx	.001	4.21
13	MP5C	X	-1.356	2.21
14	MP5C	Z	-2.348	2.21
15	MP5C	Mx	-.001	2.21
16	MP5C	X	-1.356	4.21
17	MP5C	Z	-2.348	4.21
18	MP5C	Mx	-.001	4.21
19	MP3A	X	-.38	1
20	MP3A	Z	-.658	1
21	MP3A	Mx	-8.3e-5	1
22	MP3B	X	-.334	1
23	MP3B	Z	-.579	1
24	MP3B	Mx	-.000269	1
25	MP3C	X	-.295	1
26	MP3C	Z	-.51	1
27	MP3C	Mx	.000319	1
28	M144	X	-4.205	1.25
29	M144	Z	-7.284	1.25
30	M144	Mx	0	1.25
31	MP3A	X	-1.918	2
32	MP3A	Z	-3.321	2

Member Point Loads (BLC 38 : Antenna Wm (330 Deg)) (Continued)

	Member Label	Direction	Magnitude[lb,k-ft]	Location[ft,%]
33	MP3A	Mx	-.000417	2
34	MP3B	X	-1.672	2
35	MP3B	Z	-2.895	2
36	MP3B	Mx	-.001	2
37	MP3C	X	-1.455	2
38	MP3C	Z	-2.521	2
39	MP3C	Mx	.002	2
40	MP3A	X	-1.91	4
41	MP3A	Z	-3.309	4
42	MP3A	Mx	-.000414	4
43	MP3B	X	-1.57	4
44	MP3B	Z	-2.719	4
45	MP3B	Mx	-.001	4
46	MP3C	X	-1.271	4
47	MP3C	Z	-2.201	4
48	MP3C	Mx	.001	4
49	MP3A	X	-4.669	.71
50	MP3A	Z	-8.087	.71
51	MP3A	Mx	-.005	.71
52	MP3A	X	-4.669	5.71
53	MP3A	Z	-8.087	5.71
54	MP3A	Mx	-.005	5.71
55	MP3B	X	-4.049	.71
56	MP3B	Z	-7.013	.71
57	MP3B	Mx	.006	.71
58	MP3B	X	-4.049	5.71
59	MP3B	Z	-7.013	5.71
60	MP3B	Mx	.006	5.71
61	MP3C	X	-3.504	.71
62	MP3C	Z	-6.068	.71
63	MP3C	Mx	-.000991	.71
64	MP3C	X	-3.504	5.71
65	MP3C	Z	-6.068	5.71
66	MP3C	Mx	-.000991	5.71
67	MP3A	X	-4.669	.71
68	MP3A	Z	-8.087	.71
69	MP3A	Mx	.006	.71
70	MP3A	X	-4.669	5.71
71	MP3A	Z	-8.087	5.71
72	MP3A	Mx	.006	5.71
73	MP3B	X	-4.049	.71
74	MP3B	Z	-7.013	.71
75	MP3B	Mx	-.001	.71
76	MP3B	X	-4.049	5.71
77	MP3B	Z	-7.013	5.71
78	MP3B	Mx	-.001	5.71
79	MP3C	X	-3.504	.71
80	MP3C	Z	-6.068	.71
81	MP3C	Mx	-.005	.71
82	MP3C	X	-3.504	5.71
83	MP3C	Z	-6.068	5.71
84	MP3C	Mx	-.005	5.71
85	MP1A	X	-4.188	.71
86	MP1A	Z	-7.254	.71
87	MP1A	Mx	.000848	.71
88	MP1A	X	-4.188	5.71
89	MP1A	Z	-7.254	5.71

Member Point Loads (BLC 38 : Antenna Wm (330 Deg)) (Continued)

	Member Label	Direction	Magnitude[lb,k-ft]	Location[ft,%]
90	MP1A	Mx	.000848	5.71
91	MP1B	X	-3.64	.71
92	MP1B	Z	-6.304	.71
93	MP1B	Mx	.003	.71
94	MP1B	X	-3.64	5.71
95	MP1B	Z	-6.304	5.71
96	MP1B	Mx	.003	5.71
97	MP1C	X	-3.157	.71
98	MP1C	Z	-5.469	.71
99	MP1C	Mx	-.003	.71
100	MP1C	X	-3.157	5.71
101	MP1C	Z	-5.469	5.71
102	MP1C	Mx	-.003	5.71

Member Point Loads (BLC 77 : Lm1)

	Member Label	Direction	Magnitude[lb,k-ft]	Location[ft,%]
1	M89	Y	-500	%99

Member Point Loads (BLC 78 : Lm2)

	Member Label	Direction	Magnitude[lb,k-ft]	Location[ft,%]
1	M90	Y	-500	%4

Member Point Loads (BLC 79 : Lv1)

	Member Label	Direction	Magnitude[lb,k-ft]	Location[ft,%]
1	M90	Y	-250	0

Member Point Loads (BLC 80 : Lv2)

	Member Label	Direction	Magnitude[lb,k-ft]	Location[ft,%]
1	M90	Y	-250	%100

Member Distributed Loads (BLC 40 : Structure Di)

	Member Label	Direction	Start Magnitude[lb/ft,...	End Magnitude[lb/ft,...	Start Location[ft,%]	End Location[ft,%]
1	M19	Y	-11.083	-11.083	0	%100
2	M19A	Y	-7.276	-7.276	0	%100
3	M38C	Y	-11.083	-11.083	0	%100
4	M51	Y	-11.083	-11.083	0	%100
5	M104A	Y	-5.87	-5.87	0	%100
6	M105A	Y	-5.87	-5.87	0	%100
7	M134	Y	-4.468	-4.468	0	%100
8	M135	Y	-4.468	-4.468	0	%100
9	M93A	Y	-6.353	-6.353	0	%100
10	M94A	Y	-6.353	-6.353	0	%100
11	M93B	Y	-6.353	-6.353	0	%100
12	M94D	Y	-6.353	-6.353	0	%100
13	M53	Y	-5.87	-5.87	0	%100
14	M54	Y	-5.87	-5.87	0	%100
15	M63	Y	-6.353	-6.353	0	%100
16	M64	Y	-6.353	-6.353	0	%100
17	M69	Y	-6.353	-6.353	0	%100
18	M70	Y	-6.353	-6.353	0	%100
19	M71	Y	-5.87	-5.87	0	%100
20	M72	Y	-5.87	-5.87	0	%100
21	M81	Y	-6.353	-6.353	0	%100

Member Distributed Loads (BLC 40 : Structure Di) (Continued)

	Member Label	Direction	Start Magnitude[lb/ft,...	End Magnitude[lb/ft,...	Start Location[ft,%]	End Location[ft,%]
22	M82	Y	-6.353	-6.353	0	%100
23	M87	Y	-6.353	-6.353	0	%100
24	M88	Y	-6.353	-6.353	0	%100
25	M89	Y	-9.159	-9.159	0	%100
26	M90	Y	-9.159	-9.159	0	%100
27	M89A	Y	-9.159	-9.159	0	%100
28	M90A	Y	-9.159	-9.159	0	%100
29	M91	Y	-9.159	-9.159	0	%100
30	M92	Y	-9.159	-9.159	0	%100
31	M101	Y	-7.276	-7.276	0	%100
32	M91A	Y	-7.276	-7.276	0	%100
33	M93	Y	-7.276	-7.276	0	%100
34	M95B	Y	-7.276	-7.276	0	%100
35	M97	Y	-7.276	-7.276	0	%100
36	M99	Y	-7.276	-7.276	0	%100
37	M101A	Y	-7.276	-7.276	0	%100
38	M104	Y	-7.276	-7.276	0	%100
39	M105B	Y	-4.305	-4.305	0	%100
40	M104B	Y	-4.305	-4.305	0	%100
41	M105C	Y	-4.305	-4.305	0	%100
42	M95C	Y	-4.468	-4.468	0	%100
43	M96A	Y	-4.468	-4.468	0	%100
44	M101B	Y	-4.468	-4.468	0	%100
45	M102B	Y	-4.468	-4.468	0	%100
46	MP1A	Y	-4.974	-4.974	0	%100
47	M144	Y	-4.974	-4.974	0	%100
48	M147	Y	-4.468	-4.468	0	%100
49	M149A	Y	-4.468	-4.468	0	%100
50	M152	Y	-4.468	-4.468	0	%100
51	M155	Y	-4.468	-4.468	0	%100
52	M159	Y	-4.468	-4.468	0	%100
53	M163	Y	-4.468	-4.468	0	%100
54	M166A	Y	-8.343	-8.343	0	%100
55	M167	Y	-8.343	-8.343	0	%100
56	M168	Y	-8.343	-8.343	0	%100
57	MP2A	Y	-4.974	-4.974	0	%100
58	MP4A	Y	-4.974	-4.974	0	%100
59	MP5A	Y	-4.974	-4.974	0	%100
60	MP3A	Y	-4.974	-4.974	0	%100
61	MP1C	Y	-4.974	-4.974	0	%100
62	MP2C	Y	-4.974	-4.974	0	%100
63	MP4C	Y	-4.974	-4.974	0	%100
64	MP5C	Y	-4.974	-4.974	0	%100
65	MP3C	Y	-4.974	-4.974	0	%100
66	MP1B	Y	-4.974	-4.974	0	%100
67	MP2B	Y	-4.974	-4.974	0	%100
68	MP4B	Y	-4.974	-4.974	0	%100
69	MP5B	Y	-4.974	-4.974	0	%100
70	MP3B	Y	-4.974	-4.974	0	%100

Member Distributed Loads (BLC 41 : Structure Wo (0 Deg))

	Member Label	Direction	Start Magnitude[lb/ft,...	End Magnitude[lb/ft,...	Start Location[ft,%]	End Location[ft,%]
1	M19	X	0	0	0	%100
2	M19	Z	-5.594	-5.594	0	%100
3	M19A	X	0	0	0	%100
4	M19A	Z	-3.097	-3.097	0	%100

Member Distributed Loads (BLC 41 : Structure Wo (0 Deg)) (Continued)

	Member Label	Direction	Start Magnitude[lb/ft,...	End Magnitude[lb/ft,...	Start Location[ft,%]	End Location[ft,%]
5	M38C	X	0	0	0	%100
6	M38C	Z	-5.594	-5.594	0	%100
7	M51	X	0	0	0	%100
8	M51	Z	0	0	0	%100
9	M104A	X	0	0	0	%100
10	M104A	Z	-.774	-.774	0	%100
11	M105A	X	0	0	0	%100
12	M105A	Z	-.774	-.774	0	%100
13	M134	X	0	0	0	%100
14	M134	Z	-.226	-.226	0	%100
15	M135	X	0	0	0	%100
16	M135	Z	-.226	-.226	0	%100
17	M93A	X	0	0	0	%100
18	M93A	Z	-5.898	-5.898	0	%100
19	M94A	X	0	0	0	%100
20	M94A	Z	-5.898	-5.898	0	%100
21	M93B	X	0	0	0	%100
22	M93B	Z	-5.298	-5.298	0	%100
23	M94D	X	0	0	0	%100
24	M94D	Z	-5.298	-5.298	0	%100
25	M53	X	0	0	0	%100
26	M53	Z	-.194	-.194	0	%100
27	M54	X	0	0	0	%100
28	M54	Z	-.194	-.194	0	%100
29	M63	X	0	0	0	%100
30	M63	Z	-1.474	-1.474	0	%100
31	M64	X	0	0	0	%100
32	M64	Z	-1.474	-1.474	0	%100
33	M69	X	0	0	0	%100
34	M69	Z	-1.325	-1.325	0	%100
35	M70	X	0	0	0	%100
36	M70	Z	-1.325	-1.325	0	%100
37	M71	X	0	0	0	%100
38	M71	Z	-.194	-.194	0	%100
39	M72	X	0	0	0	%100
40	M72	Z	-.194	-.194	0	%100
41	M81	X	0	0	0	%100
42	M81	Z	-1.474	-1.474	0	%100
43	M82	X	0	0	0	%100
44	M82	Z	-1.474	-1.474	0	%100
45	M87	X	0	0	0	%100
46	M87	Z	-1.325	-1.325	0	%100
47	M88	X	0	0	0	%100
48	M88	Z	-1.325	-1.325	0	%100
49	M89	X	0	0	0	%100
50	M89	Z	-22.541	-22.541	0	%100
51	M90	X	0	0	0	%100
52	M90	Z	-22.541	-22.541	0	%100
53	M89A	X	0	0	0	%100
54	M89A	Z	-5.635	-5.635	0	%100
55	M90A	X	0	0	0	%100
56	M90A	Z	-5.635	-5.635	0	%100
57	M91	X	0	0	0	%100
58	M91	Z	-5.635	-5.635	0	%100
59	M92	X	0	0	0	%100
60	M92	Z	-5.635	-5.635	0	%100
61	M101	X	0	0	0	%100

Member Distributed Loads (BLC 41 : Structure Wo (0 Deg)) (Continued)

	Member Label	Direction	Start Magnitude[lb/ft,...	End Magnitude[lb/ft,...	Start Location[ft,%]	End Location[ft,%]
62	M101	Z	-12.389	-12.389	0	%100
63	M91A	X	0	0	0	%100
64	M91A	Z	-12.389	-12.389	0	%100
65	M93	X	0	0	0	%100
66	M93	Z	-3.097	-3.097	0	%100
67	M95B	X	0	0	0	%100
68	M95B	Z	-3.097	-3.097	0	%100
69	M97	X	0	0	0	%100
70	M97	Z	-3.097	-3.097	0	%100
71	M99	X	0	0	0	%100
72	M99	Z	-3.097	-3.097	0	%100
73	M101A	X	0	0	0	%100
74	M101A	Z	-12.389	-12.389	0	%100
75	M104	X	0	0	0	%100
76	M104	Z	-3.097	-3.097	0	%100
77	M105B	X	0	0	0	%100
78	M105B	Z	-5.885	-5.885	0	%100
79	M104B	X	0	0	0	%100
80	M104B	Z	-1.471	-1.471	0	%100
81	M105C	X	0	0	0	%100
82	M105C	Z	-1.471	-1.471	0	%100
83	M95C	X	0	0	0	%100
84	M95C	Z	-.905	-.905	0	%100
85	M96A	X	0	0	0	%100
86	M96A	Z	-.905	-.905	0	%100
87	M101B	X	0	0	0	%100
88	M101B	Z	-.226	-.226	0	%100
89	M102B	X	0	0	0	%100
90	M102B	Z	-.226	-.226	0	%100
91	MP1A	X	0	0	0	%100
92	MP1A	Z	-6.402	-6.402	0	%100
93	M144	X	0	0	0	%100
94	M144	Z	-5.503	-5.503	0	%100
95	M147	X	0	0	0	%100
96	M147	Z	-1.291	-1.291	0	%100
97	M149A	X	0	0	0	%100
98	M149A	Z	-.323	-.323	0	%100
99	M152	X	0	0	0	%100
100	M152	Z	-.323	-.323	0	%100
101	M155	X	0	0	0	%100
102	M155	Z	-1.226	-1.226	0	%100
103	M159	X	0	0	0	%100
104	M159	Z	-.307	-.307	0	%100
105	M163	X	0	0	0	%100
106	M163	Z	-.307	-.307	0	%100
107	M166A	X	0	0	0	%100
108	M166A	Z	-.309	-.309	0	%100
109	M167	X	0	0	0	%100
110	M167	Z	-.309	-.309	0	%100
111	M168	X	0	0	0	%100
112	M168	Z	-1.237	-1.237	0	%100
113	MP2A	X	0	0	0	%100
114	MP2A	Z	-6.402	-6.402	0	%100
115	MP4A	X	0	0	0	%100
116	MP4A	Z	-6.402	-6.402	0	%100
117	MP5A	X	0	0	0	%100
118	MP5A	Z	-6.402	-6.402	0	%100

Member Distributed Loads (BLC 41 : Structure Wo (0 Deg)) (Continued)

	Member Label	Direction	Start Magnitude[lb/ft,...	End Magnitude[lb/ft,...	Start Location[ft,%]	End Location[ft,%]
119	MP3A	X	0	0	0	%100
120	MP3A	Z	-6.402	-6.402	0	%100
121	MP1C	X	0	0	0	%100
122	MP1C	Z	-6.402	-6.402	0	%100
123	MP2C	X	0	0	0	%100
124	MP2C	Z	-6.402	-6.402	0	%100
125	MP4C	X	0	0	0	%100
126	MP4C	Z	-6.402	-6.402	0	%100
127	MP5C	X	0	0	0	%100
128	MP5C	Z	-6.402	-6.402	0	%100
129	MP3C	X	0	0	0	%100
130	MP3C	Z	-6.402	-6.402	0	%100
131	MP1B	X	0	0	0	%100
132	MP1B	Z	-6.402	-6.402	0	%100
133	MP2B	X	0	0	0	%100
134	MP2B	Z	-6.402	-6.402	0	%100
135	MP4B	X	0	0	0	%100
136	MP4B	Z	-6.402	-6.402	0	%100
137	MP5B	X	0	0	0	%100
138	MP5B	Z	-6.402	-6.402	0	%100
139	MP3B	X	0	0	0	%100
140	MP3B	Z	-6.402	-6.402	0	%100

Member Distributed Loads (BLC 42 : Structure Wo (30 Deg))

	Member Label	Direction	Start Magnitude[lb/ft,...	End Magnitude[lb/ft,...	Start Location[ft,%]	End Location[ft,%]
1	M19	X	.932	.932	0	%100
2	M19	Z	-1.615	-1.615	0	%100
3	M19A	X	0	0	0	%100
4	M19A	Z	0	0	0	%100
5	M38C	X	3.729	3.729	0	%100
6	M38C	Z	-6.459	-6.459	0	%100
7	M51	X	.932	.932	0	%100
8	M51	Z	-1.615	-1.615	0	%100
9	M104A	X	.29	.29	0	%100
10	M104A	Z	-.503	-.503	0	%100
11	M105A	X	.29	.29	0	%100
12	M105A	Z	-.503	-.503	0	%100
13	M134	X	0	0	0	%100
14	M134	Z	0	0	0	%100
15	M135	X	0	0	0	%100
16	M135	Z	0	0	0	%100
17	M93A	X	2.212	2.212	0	%100
18	M93A	Z	-3.831	-3.831	0	%100
19	M94A	X	2.212	2.212	0	%100
20	M94A	Z	-3.831	-3.831	0	%100
21	M93B	X	1.987	1.987	0	%100
22	M93B	Z	-3.441	-3.441	0	%100
23	M94D	X	1.987	1.987	0	%100
24	M94D	Z	-3.441	-3.441	0	%100
25	M53	X	.29	.29	0	%100
26	M53	Z	-.503	-.503	0	%100
27	M54	X	.29	.29	0	%100
28	M54	Z	-.503	-.503	0	%100
29	M63	X	2.212	2.212	0	%100
30	M63	Z	-3.831	-3.831	0	%100
31	M64	X	2.212	2.212	0	%100

Member Distributed Loads (BLC 42 : Structure Wo (30 Deg)) (Continued)

	Member Label	Direction	Start Magnitude[lb/ft,...	End Magnitude[lb/ft,...	Start Location[ft,%]	End Location[ft,%]
32	M64	Z	-3.831	-3.831	0	%100
33	M69	X	1.987	1.987	0	%100
34	M69	Z	-3.441	-3.441	0	%100
35	M70	X	1.987	1.987	0	%100
36	M70	Z	-3.441	-3.441	0	%100
37	M71	X	0	0	0	%100
38	M71	Z	0	0	0	%100
39	M72	X	0	0	0	%100
40	M72	Z	0	0	0	%100
41	M81	X	0	0	0	%100
42	M81	Z	0	0	0	%100
43	M82	X	0	0	0	%100
44	M82	Z	0	0	0	%100
45	M87	X	0	0	0	%100
46	M87	Z	0	0	0	%100
47	M88	X	0	0	0	%100
48	M88	Z	0	0	0	%100
49	M89	X	8.453	8.453	0	%100
50	M89	Z	-14.641	-14.641	0	%100
51	M90	X	8.453	8.453	0	%100
52	M90	Z	-14.641	-14.641	0	%100
53	M89A	X	8.453	8.453	0	%100
54	M89A	Z	-14.641	-14.641	0	%100
55	M90A	X	8.453	8.453	0	%100
56	M90A	Z	-14.641	-14.641	0	%100
57	M91	X	0	0	0	%100
58	M91	Z	0	0	0	%100
59	M92	X	0	0	0	%100
60	M92	Z	0	0	0	%100
61	M101	X	4.646	4.646	0	%100
62	M101	Z	-8.047	-8.047	0	%100
63	M91A	X	4.646	4.646	0	%100
64	M91A	Z	-8.047	-8.047	0	%100
65	M93	X	4.646	4.646	0	%100
66	M93	Z	-8.047	-8.047	0	%100
67	M95B	X	4.646	4.646	0	%100
68	M95B	Z	-8.047	-8.047	0	%100
69	M97	X	0	0	0	%100
70	M97	Z	0	0	0	%100
71	M99	X	0	0	0	%100
72	M99	Z	0	0	0	%100
73	M101A	X	4.646	4.646	0	%100
74	M101A	Z	-8.047	-8.047	0	%100
75	M104	X	4.646	4.646	0	%100
76	M104	Z	-8.047	-8.047	0	%100
77	M105B	X	2.207	2.207	0	%100
78	M105B	Z	-3.822	-3.822	0	%100
79	M104B	X	2.207	2.207	0	%100
80	M104B	Z	-3.822	-3.822	0	%100
81	M105C	X	0	0	0	%100
82	M105C	Z	0	0	0	%100
83	M95C	X	.34	.34	0	%100
84	M95C	Z	-.588	-.588	0	%100
85	M96A	X	.34	.34	0	%100
86	M96A	Z	-.588	-.588	0	%100
87	M101B	X	.34	.34	0	%100
88	M101B	Z	-.588	-.588	0	%100

Member Distributed Loads (BLC 42 : Structure Wo (30 Deg)) (Continued)

	Member Label	Direction	Start Magnitude[lb/ft,...	End Magnitude[lb/ft,...	Start Location[ft,%]	End Location[ft,%]
89	M102B	X	.34	.34	0	%100
90	M102B	Z	-.588	-.588	0	%100
91	MP1A	X	3.32	3.32	0	%100
92	MP1A	Z	-5.751	-5.751	0	%100
93	M144	X	2.816	2.816	0	%100
94	M144	Z	-4.877	-4.877	0	%100
95	M147	X	.484	.484	0	%100
96	M147	Z	-.838	-.838	0	%100
97	M149A	X	.484	.484	0	%100
98	M149A	Z	-.838	-.838	0	%100
99	M152	X	0	0	0	%100
100	M152	Z	0	0	0	%100
101	M155	X	.46	.46	0	%100
102	M155	Z	-.796	-.796	0	%100
103	M159	X	.46	.46	0	%100
104	M159	Z	-.796	-.796	0	%100
105	M163	X	0	0	0	%100
106	M163	Z	0	0	0	%100
107	M166A	X	.464	.464	0	%100
108	M166A	Z	-.803	-.803	0	%100
109	M167	X	0	0	0	%100
110	M167	Z	0	0	0	%100
111	M168	X	.464	.464	0	%100
112	M168	Z	-.803	-.803	0	%100
113	MP2A	X	3.32	3.32	0	%100
114	MP2A	Z	-5.751	-5.751	0	%100
115	MP4A	X	3.32	3.32	0	%100
116	MP4A	Z	-5.751	-5.751	0	%100
117	MP5A	X	3.32	3.32	0	%100
118	MP5A	Z	-5.751	-5.751	0	%100
119	MP3A	X	3.32	3.32	0	%100
120	MP3A	Z	-5.751	-5.751	0	%100
121	MP1C	X	3.32	3.32	0	%100
122	MP1C	Z	-5.751	-5.751	0	%100
123	MP2C	X	3.32	3.32	0	%100
124	MP2C	Z	-5.751	-5.751	0	%100
125	MP4C	X	3.32	3.32	0	%100
126	MP4C	Z	-5.751	-5.751	0	%100
127	MP5C	X	3.32	3.32	0	%100
128	MP5C	Z	-5.751	-5.751	0	%100
129	MP3C	X	3.32	3.32	0	%100
130	MP3C	Z	-5.751	-5.751	0	%100
131	MP1B	X	3.32	3.32	0	%100
132	MP1B	Z	-5.751	-5.751	0	%100
133	MP2B	X	3.32	3.32	0	%100
134	MP2B	Z	-5.751	-5.751	0	%100
135	MP4B	X	3.32	3.32	0	%100
136	MP4B	Z	-5.751	-5.751	0	%100
137	MP5B	X	3.32	3.32	0	%100
138	MP5B	Z	-5.751	-5.751	0	%100
139	MP3B	X	3.32	3.32	0	%100
140	MP3B	Z	-5.751	-5.751	0	%100

Member Distributed Loads (BLC 43 : Structure Wo (60 Deg))

	Member Label	Direction	Start Magnitude[lb/ft,...	End Magnitude[lb/ft,...	Start Location[ft,%]	End Location[ft,%]
1	M19	X	0	0	0	%100

Member Distributed Loads (BLC 43 : Structure Wo (60 Deg)) (Continued)

	Member Label	Direction	Start Magnitude[lb/ft,...	End Magnitude[lb/ft,...	Start Location[ft,%]	End Location[ft,%]
2	M19	Z	0	0	0	%100
3	M19A	X	2.682	2.682	0	%100
4	M19A	Z	-1.549	-1.549	0	%100
5	M38C	X	4.844	4.844	0	%100
6	M38C	Z	-2.797	-2.797	0	%100
7	M51	X	4.844	4.844	0	%100
8	M51	Z	-2.797	-2.797	0	%100
9	M104A	X	.168	.168	0	%100
10	M104A	Z	-.097	-.097	0	%100
11	M105A	X	.168	.168	0	%100
12	M105A	Z	-.097	-.097	0	%100
13	M134	X	.196	.196	0	%100
14	M134	Z	-.113	-.113	0	%100
15	M135	X	.196	.196	0	%100
16	M135	Z	-.113	-.113	0	%100
17	M93A	X	1.277	1.277	0	%100
18	M93A	Z	-.737	-.737	0	%100
19	M94A	X	1.277	1.277	0	%100
20	M94A	Z	-.737	-.737	0	%100
21	M93B	X	1.147	1.147	0	%100
22	M93B	Z	-.662	-.662	0	%100
23	M94D	X	1.147	1.147	0	%100
24	M94D	Z	-.662	-.662	0	%100
25	M53	X	.671	.671	0	%100
26	M53	Z	-.387	-.387	0	%100
27	M54	X	.671	.671	0	%100
28	M54	Z	-.387	-.387	0	%100
29	M63	X	5.107	5.107	0	%100
30	M63	Z	-2.949	-2.949	0	%100
31	M64	X	5.107	5.107	0	%100
32	M64	Z	-2.949	-2.949	0	%100
33	M69	X	4.589	4.589	0	%100
34	M69	Z	-2.649	-2.649	0	%100
35	M70	X	4.589	4.589	0	%100
36	M70	Z	-2.649	-2.649	0	%100
37	M71	X	.168	.168	0	%100
38	M71	Z	-.097	-.097	0	%100
39	M72	X	.168	.168	0	%100
40	M72	Z	-.097	-.097	0	%100
41	M81	X	1.277	1.277	0	%100
42	M81	Z	-.737	-.737	0	%100
43	M82	X	1.277	1.277	0	%100
44	M82	Z	-.737	-.737	0	%100
45	M87	X	1.147	1.147	0	%100
46	M87	Z	-.662	-.662	0	%100
47	M88	X	1.147	1.147	0	%100
48	M88	Z	-.662	-.662	0	%100
49	M89	X	4.88	4.88	0	%100
50	M89	Z	-2.818	-2.818	0	%100
51	M90	X	4.88	4.88	0	%100
52	M90	Z	-2.818	-2.818	0	%100
53	M89A	X	19.521	19.521	0	%100
54	M89A	Z	-11.271	-11.271	0	%100
55	M90A	X	19.521	19.521	0	%100
56	M90A	Z	-11.271	-11.271	0	%100
57	M91	X	4.88	4.88	0	%100
58	M91	Z	-2.818	-2.818	0	%100

Member Distributed Loads (BLC 43 : Structure Wo (60 Deg)) (Continued)

	Member Label	Direction	Start Magnitude[lb/ft,...	End Magnitude[lb/ft,...	Start Location[ft,%]	End Location[ft,%]
59	M92	X	4.88	4.88	0	%100
60	M92	Z	-2.818	-2.818	0	%100
61	M101	X	2.682	2.682	0	%100
62	M101	Z	-1.549	-1.549	0	%100
63	M91A	X	2.682	2.682	0	%100
64	M91A	Z	-1.549	-1.549	0	%100
65	M93	X	10.729	10.729	0	%100
66	M93	Z	-6.195	-6.195	0	%100
67	M95B	X	10.729	10.729	0	%100
68	M95B	Z	-6.195	-6.195	0	%100
69	M97	X	2.682	2.682	0	%100
70	M97	Z	-1.549	-1.549	0	%100
71	M99	X	2.682	2.682	0	%100
72	M99	Z	-1.549	-1.549	0	%100
73	M101A	X	2.682	2.682	0	%100
74	M101A	Z	-1.549	-1.549	0	%100
75	M104	X	10.729	10.729	0	%100
76	M104	Z	-6.195	-6.195	0	%100
77	M105B	X	1.274	1.274	0	%100
78	M105B	Z	-.736	-.736	0	%100
79	M104B	X	5.096	5.096	0	%100
80	M104B	Z	-2.942	-2.942	0	%100
81	M105C	X	1.274	1.274	0	%100
82	M105C	Z	-.736	-.736	0	%100
83	M95C	X	.196	.196	0	%100
84	M95C	Z	-.113	-.113	0	%100
85	M96A	X	.196	.196	0	%100
86	M96A	Z	-.113	-.113	0	%100
87	M101B	X	.784	.784	0	%100
88	M101B	Z	-.453	-.453	0	%100
89	M102B	X	.784	.784	0	%100
90	M102B	Z	-.453	-.453	0	%100
91	MP1A	X	6.164	6.164	0	%100
92	MP1A	Z	-3.559	-3.559	0	%100
93	M144	X	5.099	5.099	0	%100
94	M144	Z	-2.944	-2.944	0	%100
95	M147	X	.279	.279	0	%100
96	M147	Z	-.161	-.161	0	%100
97	M149A	X	1.118	1.118	0	%100
98	M149A	Z	-.645	-.645	0	%100
99	M152	X	.279	.279	0	%100
100	M152	Z	-.161	-.161	0	%100
101	M155	X	.265	.265	0	%100
102	M155	Z	-.153	-.153	0	%100
103	M159	X	1.062	1.062	0	%100
104	M159	Z	-.613	-.613	0	%100
105	M163	X	.265	.265	0	%100
106	M163	Z	-.153	-.153	0	%100
107	M166A	X	1.071	1.071	0	%100
108	M166A	Z	-.618	-.618	0	%100
109	M167	X	.268	.268	0	%100
110	M167	Z	-.155	-.155	0	%100
111	M168	X	.268	.268	0	%100
112	M168	Z	-.155	-.155	0	%100
113	MP2A	X	6.164	6.164	0	%100
114	MP2A	Z	-3.559	-3.559	0	%100
115	MP4A	X	6.164	6.164	0	%100

Member Distributed Loads (BLC 43 : Structure Wo (60 Deg)) (Continued)

	Member Label	Direction	Start Magnitude[lb/ft,...	End Magnitude[lb/ft,...	Start Location[ft,%]	End Location[ft,%]
116	MP4A	Z	-3.559	-3.559	0	%100
117	MP5A	X	6.164	6.164	0	%100
118	MP5A	Z	-3.559	-3.559	0	%100
119	MP3A	X	6.164	6.164	0	%100
120	MP3A	Z	-3.559	-3.559	0	%100
121	MP1C	X	6.164	6.164	0	%100
122	MP1C	Z	-3.559	-3.559	0	%100
123	MP2C	X	6.164	6.164	0	%100
124	MP2C	Z	-3.559	-3.559	0	%100
125	MP4C	X	6.164	6.164	0	%100
126	MP4C	Z	-3.559	-3.559	0	%100
127	MP5C	X	6.164	6.164	0	%100
128	MP5C	Z	-3.559	-3.559	0	%100
129	MP3C	X	6.164	6.164	0	%100
130	MP3C	Z	-3.559	-3.559	0	%100
131	MP1B	X	6.164	6.164	0	%100
132	MP1B	Z	-3.559	-3.559	0	%100
133	MP2B	X	6.164	6.164	0	%100
134	MP2B	Z	-3.559	-3.559	0	%100
135	MP4B	X	6.164	6.164	0	%100
136	MP4B	Z	-3.559	-3.559	0	%100
137	MP5B	X	6.164	6.164	0	%100
138	MP5B	Z	-3.559	-3.559	0	%100
139	MP3B	X	6.164	6.164	0	%100
140	MP3B	Z	-3.559	-3.559	0	%100

Member Distributed Loads (BLC 44 : Structure Wo (90 Deg))

	Member Label	Direction	Start Magnitude[lb/ft,...	End Magnitude[lb/ft,...	Start Location[ft,%]	End Location[ft,%]
1	M19	X	1.865	1.865	0	%100
2	M19	Z	0	0	0	%100
3	M19A	X	9.292	9.292	0	%100
4	M19A	Z	0	0	0	%100
5	M38C	X	1.865	1.865	0	%100
6	M38C	Z	0	0	0	%100
7	M51	X	7.458	7.458	0	%100
8	M51	Z	0	0	0	%100
9	M104A	X	0	0	0	%100
10	M104A	Z	0	0	0	%100
11	M105A	X	0	0	0	%100
12	M105A	Z	0	0	0	%100
13	M134	X	.679	.679	0	%100
14	M134	Z	0	0	0	%100
15	M135	X	.679	.679	0	%100
16	M135	Z	0	0	0	%100
17	M93A	X	0	0	0	%100
18	M93A	Z	0	0	0	%100
19	M94A	X	0	0	0	%100
20	M94A	Z	0	0	0	%100
21	M93B	X	0	0	0	%100
22	M93B	Z	0	0	0	%100
23	M94D	X	0	0	0	%100
24	M94D	Z	0	0	0	%100
25	M53	X	.581	.581	0	%100
26	M53	Z	0	0	0	%100
27	M54	X	.581	.581	0	%100
28	M54	Z	0	0	0	%100

Member Distributed Loads (BLC 44 : Structure Wo (90 Deg)) (Continued)

	Member Label	Direction	Start Magnitude[lb/ft,...	End Magnitude[lb/ft,...	Start Location[ft,%]	End Location[ft,%]
29	M63	X	4.423	4.423	0	%100
30	M63	Z	0	0	0	%100
31	M64	X	4.423	4.423	0	%100
32	M64	Z	0	0	0	%100
33	M69	X	3.974	3.974	0	%100
34	M69	Z	0	0	0	%100
35	M70	X	3.974	3.974	0	%100
36	M70	Z	0	0	0	%100
37	M71	X	.581	.581	0	%100
38	M71	Z	0	0	0	%100
39	M72	X	.581	.581	0	%100
40	M72	Z	0	0	0	%100
41	M81	X	4.423	4.423	0	%100
42	M81	Z	0	0	0	%100
43	M82	X	4.423	4.423	0	%100
44	M82	Z	0	0	0	%100
45	M87	X	3.974	3.974	0	%100
46	M87	Z	0	0	0	%100
47	M88	X	3.974	3.974	0	%100
48	M88	Z	0	0	0	%100
49	M89	X	0	0	0	%100
50	M89	Z	0	0	0	%100
51	M90	X	0	0	0	%100
52	M90	Z	0	0	0	%100
53	M89A	X	16.906	16.906	0	%100
54	M89A	Z	0	0	0	%100
55	M90A	X	16.906	16.906	0	%100
56	M90A	Z	0	0	0	%100
57	M91	X	16.906	16.906	0	%100
58	M91	Z	0	0	0	%100
59	M92	X	16.906	16.906	0	%100
60	M92	Z	0	0	0	%100
61	M101	X	0	0	0	%100
62	M101	Z	0	0	0	%100
63	M91A	X	0	0	0	%100
64	M91A	Z	0	0	0	%100
65	M93	X	9.292	9.292	0	%100
66	M93	Z	0	0	0	%100
67	M95B	X	9.292	9.292	0	%100
68	M95B	Z	0	0	0	%100
69	M97	X	9.292	9.292	0	%100
70	M97	Z	0	0	0	%100
71	M99	X	9.292	9.292	0	%100
72	M99	Z	0	0	0	%100
73	M101A	X	0	0	0	%100
74	M101A	Z	0	0	0	%100
75	M104	X	9.292	9.292	0	%100
76	M104	Z	0	0	0	%100
77	M105B	X	0	0	0	%100
78	M105B	Z	0	0	0	%100
79	M104B	X	4.414	4.414	0	%100
80	M104B	Z	0	0	0	%100
81	M105C	X	4.414	4.414	0	%100
82	M105C	Z	0	0	0	%100
83	M95C	X	0	0	0	%100
84	M95C	Z	0	0	0	%100
85	M96A	X	0	0	0	%100

Member Distributed Loads (BLC 44 : Structure Wo (90 Deg)) (Continued)

	Member Label	Direction	Start Magnitude[lb/ft,...	End Magnitude[lb/ft,...	Start Location[ft,%]	End Location[ft,%]
86	M96A	Z	0	0	0	%100
87	M101B	X	.679	.679	0	%100
88	M101B	Z	0	0	0	%100
89	M102B	X	.679	.679	0	%100
90	M102B	Z	0	0	0	%100
91	MP1A	X	7.356	7.356	0	%100
92	MP1A	Z	0	0	0	%100
93	M144	X	6.015	6.015	0	%100
94	M144	Z	0	0	0	%100
95	M147	X	0	0	0	%100
96	M147	Z	0	0	0	%100
97	M149A	X	.968	.968	0	%100
98	M149A	Z	0	0	0	%100
99	M152	X	.968	.968	0	%100
100	M152	Z	0	0	0	%100
101	M155	X	0	0	0	%100
102	M155	Z	0	0	0	%100
103	M159	X	.92	.92	0	%100
104	M159	Z	0	0	0	%100
105	M163	X	.92	.92	0	%100
106	M163	Z	0	0	0	%100
107	M166A	X	.928	.928	0	%100
108	M166A	Z	0	0	0	%100
109	M167	X	.928	.928	0	%100
110	M167	Z	0	0	0	%100
111	M168	X	0	0	0	%100
112	M168	Z	0	0	0	%100
113	MP2A	X	7.356	7.356	0	%100
114	MP2A	Z	0	0	0	%100
115	MP4A	X	7.356	7.356	0	%100
116	MP4A	Z	0	0	0	%100
117	MP5A	X	7.356	7.356	0	%100
118	MP5A	Z	0	0	0	%100
119	MP3A	X	7.356	7.356	0	%100
120	MP3A	Z	0	0	0	%100
121	MP1C	X	7.356	7.356	0	%100
122	MP1C	Z	0	0	0	%100
123	MP2C	X	7.356	7.356	0	%100
124	MP2C	Z	0	0	0	%100
125	MP4C	X	7.356	7.356	0	%100
126	MP4C	Z	0	0	0	%100
127	MP5C	X	7.356	7.356	0	%100
128	MP5C	Z	0	0	0	%100
129	MP3C	X	7.356	7.356	0	%100
130	MP3C	Z	0	0	0	%100
131	MP1B	X	7.356	7.356	0	%100
132	MP1B	Z	0	0	0	%100
133	MP2B	X	7.356	7.356	0	%100
134	MP2B	Z	0	0	0	%100
135	MP4B	X	7.356	7.356	0	%100
136	MP4B	Z	0	0	0	%100
137	MP5B	X	7.356	7.356	0	%100
138	MP5B	Z	0	0	0	%100
139	MP3B	X	7.356	7.356	0	%100
140	MP3B	Z	0	0	0	%100

Member Distributed Loads (BLC 45 : Structure Wo (120 Deg))

	Member Label	Direction	Start Magnitude[lb/ft,...	End Magnitude[lb/ft,...	Start Location[ft,%]	End Location[ft,%]
1	M19	X	4.844	4.844	0	%100
2	M19	Z	2.797	2.797	0	%100
3	M19A	X	10.729	10.729	0	%100
4	M19A	Z	6.195	6.195	0	%100
5	M38C	X	0	0	0	%100
6	M38C	Z	0	0	0	%100
7	M51	X	4.844	4.844	0	%100
8	M51	Z	2.797	2.797	0	%100
9	M104A	X	.168	.168	0	%100
10	M104A	Z	.097	.097	0	%100
11	M105A	X	.168	.168	0	%100
12	M105A	Z	.097	.097	0	%100
13	M134	X	.784	.784	0	%100
14	M134	Z	.453	.453	0	%100
15	M135	X	.784	.784	0	%100
16	M135	Z	.453	.453	0	%100
17	M93A	X	1.277	1.277	0	%100
18	M93A	Z	.737	.737	0	%100
19	M94A	X	1.277	1.277	0	%100
20	M94A	Z	.737	.737	0	%100
21	M93B	X	1.147	1.147	0	%100
22	M93B	Z	.662	.662	0	%100
23	M94D	X	1.147	1.147	0	%100
24	M94D	Z	.662	.662	0	%100
25	M53	X	.168	.168	0	%100
26	M53	Z	.097	.097	0	%100
27	M54	X	.168	.168	0	%100
28	M54	Z	.097	.097	0	%100
29	M63	X	1.277	1.277	0	%100
30	M63	Z	.737	.737	0	%100
31	M64	X	1.277	1.277	0	%100
32	M64	Z	.737	.737	0	%100
33	M69	X	1.147	1.147	0	%100
34	M69	Z	.662	.662	0	%100
35	M70	X	1.147	1.147	0	%100
36	M70	Z	.662	.662	0	%100
37	M71	X	.671	.671	0	%100
38	M71	Z	.387	.387	0	%100
39	M72	X	.671	.671	0	%100
40	M72	Z	.387	.387	0	%100
41	M81	X	5.107	5.107	0	%100
42	M81	Z	2.949	2.949	0	%100
43	M82	X	5.107	5.107	0	%100
44	M82	Z	2.949	2.949	0	%100
45	M87	X	4.589	4.589	0	%100
46	M87	Z	2.649	2.649	0	%100
47	M88	X	4.589	4.589	0	%100
48	M88	Z	2.649	2.649	0	%100
49	M89	X	4.88	4.88	0	%100
50	M89	Z	2.818	2.818	0	%100
51	M90	X	4.88	4.88	0	%100
52	M90	Z	2.818	2.818	0	%100
53	M89A	X	4.88	4.88	0	%100
54	M89A	Z	2.818	2.818	0	%100
55	M90A	X	4.88	4.88	0	%100
56	M90A	Z	2.818	2.818	0	%100
57	M91	X	19.521	19.521	0	%100

Member Distributed Loads (BLC 45 : Structure Wo (120 Deg)) (Continued)

	Member Label	Direction	Start Magnitude[lb/ft,...	End Magnitude[lb/ft,...	Start Location[ft,%]	End Location[ft,%]
58	M91	Z	11.271	11.271	0	%100
59	M92	X	19.521	19.521	0	%100
60	M92	Z	11.271	11.271	0	%100
61	M101	X	2.682	2.682	0	%100
62	M101	Z	1.549	1.549	0	%100
63	M91A	X	2.682	2.682	0	%100
64	M91A	Z	1.549	1.549	0	%100
65	M93	X	2.682	2.682	0	%100
66	M93	Z	1.549	1.549	0	%100
67	M95B	X	2.682	2.682	0	%100
68	M95B	Z	1.549	1.549	0	%100
69	M97	X	10.729	10.729	0	%100
70	M97	Z	6.195	6.195	0	%100
71	M99	X	10.729	10.729	0	%100
72	M99	Z	6.195	6.195	0	%100
73	M101A	X	2.682	2.682	0	%100
74	M101A	Z	1.549	1.549	0	%100
75	M104	X	2.682	2.682	0	%100
76	M104	Z	1.549	1.549	0	%100
77	M105B	X	1.274	1.274	0	%100
78	M105B	Z	.736	.736	0	%100
79	M104B	X	1.274	1.274	0	%100
80	M104B	Z	.736	.736	0	%100
81	M105C	X	5.096	5.096	0	%100
82	M105C	Z	2.942	2.942	0	%100
83	M95C	X	.196	.196	0	%100
84	M95C	Z	.113	.113	0	%100
85	M96A	X	.196	.196	0	%100
86	M96A	Z	.113	.113	0	%100
87	M101B	X	.196	.196	0	%100
88	M101B	Z	.113	.113	0	%100
89	M102B	X	.196	.196	0	%100
90	M102B	Z	.113	.113	0	%100
91	MP1A	X	6.164	6.164	0	%100
92	MP1A	Z	3.559	3.559	0	%100
93	M144	X	5.099	5.099	0	%100
94	M144	Z	2.944	2.944	0	%100
95	M147	X	.279	.279	0	%100
96	M147	Z	.161	.161	0	%100
97	M149A	X	.279	.279	0	%100
98	M149A	Z	.161	.161	0	%100
99	M152	X	1.118	1.118	0	%100
100	M152	Z	.645	.645	0	%100
101	M155	X	.265	.265	0	%100
102	M155	Z	.153	.153	0	%100
103	M159	X	.265	.265	0	%100
104	M159	Z	.153	.153	0	%100
105	M163	X	1.062	1.062	0	%100
106	M163	Z	.613	.613	0	%100
107	M166A	X	.268	.268	0	%100
108	M166A	Z	.155	.155	0	%100
109	M167	X	1.071	1.071	0	%100
110	M167	Z	.618	.618	0	%100
111	M168	X	.268	.268	0	%100
112	M168	Z	.155	.155	0	%100
113	MP2A	X	6.164	6.164	0	%100
114	MP2A	Z	3.559	3.559	0	%100

Member Distributed Loads (BLC 45 : Structure Wo (120 Deg)) (Continued)

	Member Label	Direction	Start Magnitude[lb/ft,...	End Magnitude[lb/ft,...	Start Location[ft,%]	End Location[ft,%]
115	MP4A	X	6.164	6.164	0	%100
116	MP4A	Z	3.559	3.559	0	%100
117	MP5A	X	6.164	6.164	0	%100
118	MP5A	Z	3.559	3.559	0	%100
119	MP3A	X	6.164	6.164	0	%100
120	MP3A	Z	3.559	3.559	0	%100
121	MP1C	X	6.164	6.164	0	%100
122	MP1C	Z	3.559	3.559	0	%100
123	MP2C	X	6.164	6.164	0	%100
124	MP2C	Z	3.559	3.559	0	%100
125	MP4C	X	6.164	6.164	0	%100
126	MP4C	Z	3.559	3.559	0	%100
127	MP5C	X	6.164	6.164	0	%100
128	MP5C	Z	3.559	3.559	0	%100
129	MP3C	X	6.164	6.164	0	%100
130	MP3C	Z	3.559	3.559	0	%100
131	MP1B	X	6.164	6.164	0	%100
132	MP1B	Z	3.559	3.559	0	%100
133	MP2B	X	6.164	6.164	0	%100
134	MP2B	Z	3.559	3.559	0	%100
135	MP4B	X	6.164	6.164	0	%100
136	MP4B	Z	3.559	3.559	0	%100
137	MP5B	X	6.164	6.164	0	%100
138	MP5B	Z	3.559	3.559	0	%100
139	MP3B	X	6.164	6.164	0	%100
140	MP3B	Z	3.559	3.559	0	%100

Member Distributed Loads (BLC 46 : Structure Wo (150 Deg))

	Member Label	Direction	Start Magnitude[lb/ft,...	End Magnitude[lb/ft,...	Start Location[ft,%]	End Location[ft,%]
1	M19	X	3.729	3.729	0	%100
2	M19	Z	6.459	6.459	0	%100
3	M19A	X	4.646	4.646	0	%100
4	M19A	Z	8.047	8.047	0	%100
5	M38C	X	.932	.932	0	%100
6	M38C	Z	1.615	1.615	0	%100
7	M51	X	.932	.932	0	%100
8	M51	Z	1.615	1.615	0	%100
9	M104A	X	.29	.29	0	%100
10	M104A	Z	.503	.503	0	%100
11	M105A	X	.29	.29	0	%100
12	M105A	Z	.503	.503	0	%100
13	M134	X	.34	.34	0	%100
14	M134	Z	.588	.588	0	%100
15	M135	X	.34	.34	0	%100
16	M135	Z	.588	.588	0	%100
17	M93A	X	2.212	2.212	0	%100
18	M93A	Z	3.831	3.831	0	%100
19	M94A	X	2.212	2.212	0	%100
20	M94A	Z	3.831	3.831	0	%100
21	M93B	X	1.987	1.987	0	%100
22	M93B	Z	3.441	3.441	0	%100
23	M94D	X	1.987	1.987	0	%100
24	M94D	Z	3.441	3.441	0	%100
25	M53	X	0	0	0	%100
26	M53	Z	0	0	0	%100
27	M54	X	0	0	0	%100

Member Distributed Loads (BLC 46 : Structure Wo (150 Deg)) (Continued)

	Member Label	Direction	Start Magnitude[lb/ft,...	End Magnitude[lb/ft,...	Start Location[ft,%]	End Location[ft,%]
28	M54	Z	0	0	0	%100
29	M63	X	0	0	0	%100
30	M63	Z	0	0	0	%100
31	M64	X	0	0	0	%100
32	M64	Z	0	0	0	%100
33	M69	X	0	0	0	%100
34	M69	Z	0	0	0	%100
35	M70	X	0	0	0	%100
36	M70	Z	0	0	0	%100
37	M71	X	.29	.29	0	%100
38	M71	Z	.503	.503	0	%100
39	M72	X	.29	.29	0	%100
40	M72	Z	.503	.503	0	%100
41	M81	X	2.212	2.212	0	%100
42	M81	Z	3.831	3.831	0	%100
43	M82	X	2.212	2.212	0	%100
44	M82	Z	3.831	3.831	0	%100
45	M87	X	1.987	1.987	0	%100
46	M87	Z	3.441	3.441	0	%100
47	M88	X	1.987	1.987	0	%100
48	M88	Z	3.441	3.441	0	%100
49	M89	X	8.453	8.453	0	%100
50	M89	Z	14.641	14.641	0	%100
51	M90	X	8.453	8.453	0	%100
52	M90	Z	14.641	14.641	0	%100
53	M89A	X	0	0	0	%100
54	M89A	Z	0	0	0	%100
55	M90A	X	0	0	0	%100
56	M90A	Z	0	0	0	%100
57	M91	X	8.453	8.453	0	%100
58	M91	Z	14.641	14.641	0	%100
59	M92	X	8.453	8.453	0	%100
60	M92	Z	14.641	14.641	0	%100
61	M101	X	4.646	4.646	0	%100
62	M101	Z	8.047	8.047	0	%100
63	M91A	X	4.646	4.646	0	%100
64	M91A	Z	8.047	8.047	0	%100
65	M93	X	0	0	0	%100
66	M93	Z	0	0	0	%100
67	M95B	X	0	0	0	%100
68	M95B	Z	0	0	0	%100
69	M97	X	4.646	4.646	0	%100
70	M97	Z	8.047	8.047	0	%100
71	M99	X	4.646	4.646	0	%100
72	M99	Z	8.047	8.047	0	%100
73	M101A	X	4.646	4.646	0	%100
74	M101A	Z	8.047	8.047	0	%100
75	M104	X	0	0	0	%100
76	M104	Z	0	0	0	%100
77	M105B	X	2.207	2.207	0	%100
78	M105B	Z	3.822	3.822	0	%100
79	M104B	X	0	0	0	%100
80	M104B	Z	0	0	0	%100
81	M105C	X	2.207	2.207	0	%100
82	M105C	Z	3.822	3.822	0	%100
83	M95C	X	.34	.34	0	%100
84	M95C	Z	.588	.588	0	%100

Member Distributed Loads (BLC 46 : Structure Wo (150 Deg)) (Continued)

	Member Label	Direction	Start Magnitude[lb/ft,...	End Magnitude[lb/ft,...	Start Location[ft,%]	End Location[ft,%]
85	M96A	X	.34	.34	0	%100
86	M96A	Z	.588	.588	0	%100
87	M101B	X	0	0	0	%100
88	M101B	Z	0	0	0	%100
89	M102B	X	0	0	0	%100
90	M102B	Z	0	0	0	%100
91	MP1A	X	3.32	3.32	0	%100
92	MP1A	Z	5.751	5.751	0	%100
93	M144	X	2.816	2.816	0	%100
94	M144	Z	4.877	4.877	0	%100
95	M147	X	.484	.484	0	%100
96	M147	Z	.838	.838	0	%100
97	M149A	X	0	0	0	%100
98	M149A	Z	0	0	0	%100
99	M152	X	.484	.484	0	%100
100	M152	Z	.838	.838	0	%100
101	M155	X	.46	.46	0	%100
102	M155	Z	.796	.796	0	%100
103	M159	X	0	0	0	%100
104	M159	Z	0	0	0	%100
105	M163	X	.46	.46	0	%100
106	M163	Z	.796	.796	0	%100
107	M166A	X	0	0	0	%100
108	M166A	Z	0	0	0	%100
109	M167	X	.464	.464	0	%100
110	M167	Z	.803	.803	0	%100
111	M168	X	.464	.464	0	%100
112	M168	Z	.803	.803	0	%100
113	MP2A	X	3.32	3.32	0	%100
114	MP2A	Z	5.751	5.751	0	%100
115	MP4A	X	3.32	3.32	0	%100
116	MP4A	Z	5.751	5.751	0	%100
117	MP5A	X	3.32	3.32	0	%100
118	MP5A	Z	5.751	5.751	0	%100
119	MP3A	X	3.32	3.32	0	%100
120	MP3A	Z	5.751	5.751	0	%100
121	MP1C	X	3.32	3.32	0	%100
122	MP1C	Z	5.751	5.751	0	%100
123	MP2C	X	3.32	3.32	0	%100
124	MP2C	Z	5.751	5.751	0	%100
125	MP4C	X	3.32	3.32	0	%100
126	MP4C	Z	5.751	5.751	0	%100
127	MP5C	X	3.32	3.32	0	%100
128	MP5C	Z	5.751	5.751	0	%100
129	MP3C	X	3.32	3.32	0	%100
130	MP3C	Z	5.751	5.751	0	%100
131	MP1B	X	3.32	3.32	0	%100
132	MP1B	Z	5.751	5.751	0	%100
133	MP2B	X	3.32	3.32	0	%100
134	MP2B	Z	5.751	5.751	0	%100
135	MP4B	X	3.32	3.32	0	%100
136	MP4B	Z	5.751	5.751	0	%100
137	MP5B	X	3.32	3.32	0	%100
138	MP5B	Z	5.751	5.751	0	%100
139	MP3B	X	3.32	3.32	0	%100
140	MP3B	Z	5.751	5.751	0	%100

Member Distributed Loads (BLC 47 : Structure Wo (180 Deg))

	Member Label	Direction	Start Magnitude[lb/ft,...	End Magnitude[lb/ft,...	Start Location[ft,%]	End Location[ft,%]
1	M19	X	0	0	0	%100
2	M19	Z	5.594	5.594	0	%100
3	M19A	X	0	0	0	%100
4	M19A	Z	3.097	3.097	0	%100
5	M38C	X	0	0	0	%100
6	M38C	Z	5.594	5.594	0	%100
7	M51	X	0	0	0	%100
8	M51	Z	0	0	0	%100
9	M104A	X	0	0	0	%100
10	M104A	Z	.774	.774	0	%100
11	M105A	X	0	0	0	%100
12	M105A	Z	.774	.774	0	%100
13	M134	X	0	0	0	%100
14	M134	Z	.226	.226	0	%100
15	M135	X	0	0	0	%100
16	M135	Z	.226	.226	0	%100
17	M93A	X	0	0	0	%100
18	M93A	Z	5.898	5.898	0	%100
19	M94A	X	0	0	0	%100
20	M94A	Z	5.898	5.898	0	%100
21	M93B	X	0	0	0	%100
22	M93B	Z	5.298	5.298	0	%100
23	M94D	X	0	0	0	%100
24	M94D	Z	5.298	5.298	0	%100
25	M53	X	0	0	0	%100
26	M53	Z	.194	.194	0	%100
27	M54	X	0	0	0	%100
28	M54	Z	.194	.194	0	%100
29	M63	X	0	0	0	%100
30	M63	Z	1.474	1.474	0	%100
31	M64	X	0	0	0	%100
32	M64	Z	1.474	1.474	0	%100
33	M69	X	0	0	0	%100
34	M69	Z	1.325	1.325	0	%100
35	M70	X	0	0	0	%100
36	M70	Z	1.325	1.325	0	%100
37	M71	X	0	0	0	%100
38	M71	Z	.194	.194	0	%100
39	M72	X	0	0	0	%100
40	M72	Z	.194	.194	0	%100
41	M81	X	0	0	0	%100
42	M81	Z	1.474	1.474	0	%100
43	M82	X	0	0	0	%100
44	M82	Z	1.474	1.474	0	%100
45	M87	X	0	0	0	%100
46	M87	Z	1.325	1.325	0	%100
47	M88	X	0	0	0	%100
48	M88	Z	1.325	1.325	0	%100
49	M89	X	0	0	0	%100
50	M89	Z	22.541	22.541	0	%100
51	M90	X	0	0	0	%100
52	M90	Z	22.541	22.541	0	%100
53	M89A	X	0	0	0	%100
54	M89A	Z	5.635	5.635	0	%100
55	M90A	X	0	0	0	%100
56	M90A	Z	5.635	5.635	0	%100
57	M91	X	0	0	0	%100

Member Distributed Loads (BLC 47 : Structure Wo (180 Deg)) (Continued)

	Member Label	Direction	Start Magnitude[lb/ft,...	End Magnitude[lb/ft,...	Start Location[ft,%]	End Location[ft,%]
58	M91	Z	5.635	5.635	0	%100
59	M92	X	0	0	0	%100
60	M92	Z	5.635	5.635	0	%100
61	M101	X	0	0	0	%100
62	M101	Z	12.389	12.389	0	%100
63	M91A	X	0	0	0	%100
64	M91A	Z	12.389	12.389	0	%100
65	M93	X	0	0	0	%100
66	M93	Z	3.097	3.097	0	%100
67	M95B	X	0	0	0	%100
68	M95B	Z	3.097	3.097	0	%100
69	M97	X	0	0	0	%100
70	M97	Z	3.097	3.097	0	%100
71	M99	X	0	0	0	%100
72	M99	Z	3.097	3.097	0	%100
73	M101A	X	0	0	0	%100
74	M101A	Z	12.389	12.389	0	%100
75	M104	X	0	0	0	%100
76	M104	Z	3.097	3.097	0	%100
77	M105B	X	0	0	0	%100
78	M105B	Z	5.885	5.885	0	%100
79	M104B	X	0	0	0	%100
80	M104B	Z	1.471	1.471	0	%100
81	M105C	X	0	0	0	%100
82	M105C	Z	1.471	1.471	0	%100
83	M95C	X	0	0	0	%100
84	M95C	Z	.905	.905	0	%100
85	M96A	X	0	0	0	%100
86	M96A	Z	.905	.905	0	%100
87	M101B	X	0	0	0	%100
88	M101B	Z	.226	.226	0	%100
89	M102B	X	0	0	0	%100
90	M102B	Z	.226	.226	0	%100
91	MP1A	X	0	0	0	%100
92	MP1A	Z	6.402	6.402	0	%100
93	M144	X	0	0	0	%100
94	M144	Z	5.503	5.503	0	%100
95	M147	X	0	0	0	%100
96	M147	Z	1.291	1.291	0	%100
97	M149A	X	0	0	0	%100
98	M149A	Z	.323	.323	0	%100
99	M152	X	0	0	0	%100
100	M152	Z	.323	.323	0	%100
101	M155	X	0	0	0	%100
102	M155	Z	1.226	1.226	0	%100
103	M159	X	0	0	0	%100
104	M159	Z	.307	.307	0	%100
105	M163	X	0	0	0	%100
106	M163	Z	.307	.307	0	%100
107	M166A	X	0	0	0	%100
108	M166A	Z	.309	.309	0	%100
109	M167	X	0	0	0	%100
110	M167	Z	.309	.309	0	%100
111	M168	X	0	0	0	%100
112	M168	Z	1.237	1.237	0	%100
113	MP2A	X	0	0	0	%100
114	MP2A	Z	6.402	6.402	0	%100

Member Distributed Loads (BLC 47 : Structure Wo (180 Deg)) (Continued)

	Member Label	Direction	Start Magnitude[lb/ft,...	End Magnitude[lb/ft,...	Start Location[ft,%]	End Location[ft,%]
115	MP4A	X	0	0	0	%100
116	MP4A	Z	6.402	6.402	0	%100
117	MP5A	X	0	0	0	%100
118	MP5A	Z	6.402	6.402	0	%100
119	MP3A	X	0	0	0	%100
120	MP3A	Z	6.402	6.402	0	%100
121	MP1C	X	0	0	0	%100
122	MP1C	Z	6.402	6.402	0	%100
123	MP2C	X	0	0	0	%100
124	MP2C	Z	6.402	6.402	0	%100
125	MP4C	X	0	0	0	%100
126	MP4C	Z	6.402	6.402	0	%100
127	MP5C	X	0	0	0	%100
128	MP5C	Z	6.402	6.402	0	%100
129	MP3C	X	0	0	0	%100
130	MP3C	Z	6.402	6.402	0	%100
131	MP1B	X	0	0	0	%100
132	MP1B	Z	6.402	6.402	0	%100
133	MP2B	X	0	0	0	%100
134	MP2B	Z	6.402	6.402	0	%100
135	MP4B	X	0	0	0	%100
136	MP4B	Z	6.402	6.402	0	%100
137	MP5B	X	0	0	0	%100
138	MP5B	Z	6.402	6.402	0	%100
139	MP3B	X	0	0	0	%100
140	MP3B	Z	6.402	6.402	0	%100

Member Distributed Loads (BLC 48 : Structure Wo (210 Deg))

	Member Label	Direction	Start Magnitude[lb/ft,...	End Magnitude[lb/ft,...	Start Location[ft,%]	End Location[ft,%]
1	M19	X	-.932	-.932	0	%100
2	M19	Z	1.615	1.615	0	%100
3	M19A	X	0	0	0	%100
4	M19A	Z	0	0	0	%100
5	M38C	X	-3.729	-3.729	0	%100
6	M38C	Z	6.459	6.459	0	%100
7	M51	X	-.932	-.932	0	%100
8	M51	Z	1.615	1.615	0	%100
9	M104A	X	-.29	-.29	0	%100
10	M104A	Z	.503	.503	0	%100
11	M105A	X	-.29	-.29	0	%100
12	M105A	Z	.503	.503	0	%100
13	M134	X	0	0	0	%100
14	M134	Z	0	0	0	%100
15	M135	X	0	0	0	%100
16	M135	Z	0	0	0	%100
17	M93A	X	-2.212	-2.212	0	%100
18	M93A	Z	3.831	3.831	0	%100
19	M94A	X	-2.212	-2.212	0	%100
20	M94A	Z	3.831	3.831	0	%100
21	M93B	X	-1.987	-1.987	0	%100
22	M93B	Z	3.441	3.441	0	%100
23	M94D	X	-1.987	-1.987	0	%100
24	M94D	Z	3.441	3.441	0	%100
25	M53	X	-.29	-.29	0	%100
26	M53	Z	.503	.503	0	%100
27	M54	X	-.29	-.29	0	%100

Member Distributed Loads (BLC 48 : Structure Wo (210 Deg)) (Continued)

	Member Label	Direction	Start Magnitude[lb/ft,...	End Magnitude[lb/ft,...	Start Location[ft,%]	End Location[ft,%]
28	M54	Z	.503	.503	0	%100
29	M63	X	-2.212	-2.212	0	%100
30	M63	Z	3.831	3.831	0	%100
31	M64	X	-2.212	-2.212	0	%100
32	M64	Z	3.831	3.831	0	%100
33	M69	X	-1.987	-1.987	0	%100
34	M69	Z	3.441	3.441	0	%100
35	M70	X	-1.987	-1.987	0	%100
36	M70	Z	3.441	3.441	0	%100
37	M71	X	0	0	0	%100
38	M71	Z	0	0	0	%100
39	M72	X	0	0	0	%100
40	M72	Z	0	0	0	%100
41	M81	X	0	0	0	%100
42	M81	Z	0	0	0	%100
43	M82	X	0	0	0	%100
44	M82	Z	0	0	0	%100
45	M87	X	0	0	0	%100
46	M87	Z	0	0	0	%100
47	M88	X	0	0	0	%100
48	M88	Z	0	0	0	%100
49	M89	X	-8.453	-8.453	0	%100
50	M89	Z	14.641	14.641	0	%100
51	M90	X	-8.453	-8.453	0	%100
52	M90	Z	14.641	14.641	0	%100
53	M89A	X	-8.453	-8.453	0	%100
54	M89A	Z	14.641	14.641	0	%100
55	M90A	X	-8.453	-8.453	0	%100
56	M90A	Z	14.641	14.641	0	%100
57	M91	X	0	0	0	%100
58	M91	Z	0	0	0	%100
59	M92	X	0	0	0	%100
60	M92	Z	0	0	0	%100
61	M101	X	-4.646	-4.646	0	%100
62	M101	Z	8.047	8.047	0	%100
63	M91A	X	-4.646	-4.646	0	%100
64	M91A	Z	8.047	8.047	0	%100
65	M93	X	-4.646	-4.646	0	%100
66	M93	Z	8.047	8.047	0	%100
67	M95B	X	-4.646	-4.646	0	%100
68	M95B	Z	8.047	8.047	0	%100
69	M97	X	0	0	0	%100
70	M97	Z	0	0	0	%100
71	M99	X	0	0	0	%100
72	M99	Z	0	0	0	%100
73	M101A	X	-4.646	-4.646	0	%100
74	M101A	Z	8.047	8.047	0	%100
75	M104	X	-4.646	-4.646	0	%100
76	M104	Z	8.047	8.047	0	%100
77	M105B	X	-2.207	-2.207	0	%100
78	M105B	Z	3.822	3.822	0	%100
79	M104B	X	-2.207	-2.207	0	%100
80	M104B	Z	3.822	3.822	0	%100
81	M105C	X	0	0	0	%100
82	M105C	Z	0	0	0	%100
83	M95C	X	-.34	-.34	0	%100
84	M95C	Z	.588	.588	0	%100

Member Distributed Loads (BLC 48 : Structure Wo (210 Deg)) (Continued)

	Member Label	Direction	Start Magnitude[lb/ft,...	End Magnitude[lb/ft,...	Start Location[ft,%]	End Location[ft,%]
85	M96A	X	-.34	-.34	0	%100
86	M96A	Z	.588	.588	0	%100
87	M101B	X	-.34	-.34	0	%100
88	M101B	Z	.588	.588	0	%100
89	M102B	X	-.34	-.34	0	%100
90	M102B	Z	.588	.588	0	%100
91	MP1A	X	-3.32	-3.32	0	%100
92	MP1A	Z	5.751	5.751	0	%100
93	M144	X	-2.816	-2.816	0	%100
94	M144	Z	4.877	4.877	0	%100
95	M147	X	-.484	-.484	0	%100
96	M147	Z	.838	.838	0	%100
97	M149A	X	-.484	-.484	0	%100
98	M149A	Z	.838	.838	0	%100
99	M152	X	0	0	0	%100
100	M152	Z	0	0	0	%100
101	M155	X	-.46	-.46	0	%100
102	M155	Z	.796	.796	0	%100
103	M159	X	-.46	-.46	0	%100
104	M159	Z	.796	.796	0	%100
105	M163	X	0	0	0	%100
106	M163	Z	0	0	0	%100
107	M166A	X	-.464	-.464	0	%100
108	M166A	Z	.803	.803	0	%100
109	M167	X	0	0	0	%100
110	M167	Z	0	0	0	%100
111	M168	X	-.464	-.464	0	%100
112	M168	Z	.803	.803	0	%100
113	MP2A	X	-3.32	-3.32	0	%100
114	MP2A	Z	5.751	5.751	0	%100
115	MP4A	X	-3.32	-3.32	0	%100
116	MP4A	Z	5.751	5.751	0	%100
117	MP5A	X	-3.32	-3.32	0	%100
118	MP5A	Z	5.751	5.751	0	%100
119	MP3A	X	-3.32	-3.32	0	%100
120	MP3A	Z	5.751	5.751	0	%100
121	MP1C	X	-3.32	-3.32	0	%100
122	MP1C	Z	5.751	5.751	0	%100
123	MP2C	X	-3.32	-3.32	0	%100
124	MP2C	Z	5.751	5.751	0	%100
125	MP4C	X	-3.32	-3.32	0	%100
126	MP4C	Z	5.751	5.751	0	%100
127	MP5C	X	-3.32	-3.32	0	%100
128	MP5C	Z	5.751	5.751	0	%100
129	MP3C	X	-3.32	-3.32	0	%100
130	MP3C	Z	5.751	5.751	0	%100
131	MP1B	X	-3.32	-3.32	0	%100
132	MP1B	Z	5.751	5.751	0	%100
133	MP2B	X	-3.32	-3.32	0	%100
134	MP2B	Z	5.751	5.751	0	%100
135	MP4B	X	-3.32	-3.32	0	%100
136	MP4B	Z	5.751	5.751	0	%100
137	MP5B	X	-3.32	-3.32	0	%100
138	MP5B	Z	5.751	5.751	0	%100
139	MP3B	X	-3.32	-3.32	0	%100
140	MP3B	Z	5.751	5.751	0	%100

Member Distributed Loads (BLC 49 : Structure Wo (240 Deg))

	Member Label	Direction	Start Magnitude[lb/ft,...	End Magnitude[lb/ft,...	Start Location[ft,%]	End Location[ft,%]
1	M19	X	0	0	0	%100
2	M19	Z	0	0	0	%100
3	M19A	X	-2.682	-2.682	0	%100
4	M19A	Z	1.549	1.549	0	%100
5	M38C	X	-4.844	-4.844	0	%100
6	M38C	Z	2.797	2.797	0	%100
7	M51	X	-4.844	-4.844	0	%100
8	M51	Z	2.797	2.797	0	%100
9	M104A	X	-.168	-.168	0	%100
10	M104A	Z	.097	.097	0	%100
11	M105A	X	-.168	-.168	0	%100
12	M105A	Z	.097	.097	0	%100
13	M134	X	-.196	-.196	0	%100
14	M134	Z	.113	.113	0	%100
15	M135	X	-.196	-.196	0	%100
16	M135	Z	.113	.113	0	%100
17	M93A	X	-1.277	-1.277	0	%100
18	M93A	Z	.737	.737	0	%100
19	M94A	X	-1.277	-1.277	0	%100
20	M94A	Z	.737	.737	0	%100
21	M93B	X	-1.147	-1.147	0	%100
22	M93B	Z	.662	.662	0	%100
23	M94D	X	-1.147	-1.147	0	%100
24	M94D	Z	.662	.662	0	%100
25	M53	X	-.671	-.671	0	%100
26	M53	Z	.387	.387	0	%100
27	M54	X	-.671	-.671	0	%100
28	M54	Z	.387	.387	0	%100
29	M63	X	-5.107	-5.107	0	%100
30	M63	Z	2.949	2.949	0	%100
31	M64	X	-5.107	-5.107	0	%100
32	M64	Z	2.949	2.949	0	%100
33	M69	X	-4.589	-4.589	0	%100
34	M69	Z	2.649	2.649	0	%100
35	M70	X	-4.589	-4.589	0	%100
36	M70	Z	2.649	2.649	0	%100
37	M71	X	-.168	-.168	0	%100
38	M71	Z	.097	.097	0	%100
39	M72	X	-.168	-.168	0	%100
40	M72	Z	.097	.097	0	%100
41	M81	X	-1.277	-1.277	0	%100
42	M81	Z	.737	.737	0	%100
43	M82	X	-1.277	-1.277	0	%100
44	M82	Z	.737	.737	0	%100
45	M87	X	-1.147	-1.147	0	%100
46	M87	Z	.662	.662	0	%100
47	M88	X	-1.147	-1.147	0	%100
48	M88	Z	.662	.662	0	%100
49	M89	X	-4.88	-4.88	0	%100
50	M89	Z	2.818	2.818	0	%100
51	M90	X	-4.88	-4.88	0	%100
52	M90	Z	2.818	2.818	0	%100
53	M89A	X	-19.521	-19.521	0	%100
54	M89A	Z	11.271	11.271	0	%100
55	M90A	X	-19.521	-19.521	0	%100
56	M90A	Z	11.271	11.271	0	%100
57	M91	X	-4.88	-4.88	0	%100

Member Distributed Loads (BLC 49 : Structure Wo (240 Deg)) (Continued)

	Member Label	Direction	Start Magnitude[lb/ft,...	End Magnitude[lb/ft,...	Start Location[ft,%]	End Location[ft,%]
58	M91	Z	2.818	2.818	0	%100
59	M92	X	-4.88	-4.88	0	%100
60	M92	Z	2.818	2.818	0	%100
61	M101	X	-2.682	-2.682	0	%100
62	M101	Z	1.549	1.549	0	%100
63	M91A	X	-2.682	-2.682	0	%100
64	M91A	Z	1.549	1.549	0	%100
65	M93	X	-10.729	-10.729	0	%100
66	M93	Z	6.195	6.195	0	%100
67	M95B	X	-10.729	-10.729	0	%100
68	M95B	Z	6.195	6.195	0	%100
69	M97	X	-2.682	-2.682	0	%100
70	M97	Z	1.549	1.549	0	%100
71	M99	X	-2.682	-2.682	0	%100
72	M99	Z	1.549	1.549	0	%100
73	M101A	X	-2.682	-2.682	0	%100
74	M101A	Z	1.549	1.549	0	%100
75	M104	X	-10.729	-10.729	0	%100
76	M104	Z	6.195	6.195	0	%100
77	M105B	X	-1.274	-1.274	0	%100
78	M105B	Z	.736	.736	0	%100
79	M104B	X	-5.096	-5.096	0	%100
80	M104B	Z	2.942	2.942	0	%100
81	M105C	X	-1.274	-1.274	0	%100
82	M105C	Z	.736	.736	0	%100
83	M95C	X	-.196	-.196	0	%100
84	M95C	Z	.113	.113	0	%100
85	M96A	X	-.196	-.196	0	%100
86	M96A	Z	.113	.113	0	%100
87	M101B	X	-.784	-.784	0	%100
88	M101B	Z	.453	.453	0	%100
89	M102B	X	-.784	-.784	0	%100
90	M102B	Z	.453	.453	0	%100
91	MP1A	X	-6.164	-6.164	0	%100
92	MP1A	Z	3.559	3.559	0	%100
93	M144	X	-5.099	-5.099	0	%100
94	M144	Z	2.944	2.944	0	%100
95	M147	X	-.279	-.279	0	%100
96	M147	Z	.161	.161	0	%100
97	M149A	X	-1.118	-1.118	0	%100
98	M149A	Z	.645	.645	0	%100
99	M152	X	-.279	-.279	0	%100
100	M152	Z	.161	.161	0	%100
101	M155	X	-.265	-.265	0	%100
102	M155	Z	.153	.153	0	%100
103	M159	X	-1.062	-1.062	0	%100
104	M159	Z	.613	.613	0	%100
105	M163	X	-.265	-.265	0	%100
106	M163	Z	.153	.153	0	%100
107	M166A	X	-1.071	-1.071	0	%100
108	M166A	Z	.618	.618	0	%100
109	M167	X	-.268	-.268	0	%100
110	M167	Z	.155	.155	0	%100
111	M168	X	-.268	-.268	0	%100
112	M168	Z	.155	.155	0	%100
113	MP2A	X	-6.164	-6.164	0	%100
114	MP2A	Z	3.559	3.559	0	%100

Member Distributed Loads (BLC 49 : Structure Wo (240 Deg)) (Continued)

	Member Label	Direction	Start Magnitude[lb/ft,...	End Magnitude[lb/ft,...	Start Location[ft,%]	End Location[ft,%]
115	MP4A	X	-6.164	-6.164	0	%100
116	MP4A	Z	3.559	3.559	0	%100
117	MP5A	X	-6.164	-6.164	0	%100
118	MP5A	Z	3.559	3.559	0	%100
119	MP3A	X	-6.164	-6.164	0	%100
120	MP3A	Z	3.559	3.559	0	%100
121	MP1C	X	-6.164	-6.164	0	%100
122	MP1C	Z	3.559	3.559	0	%100
123	MP2C	X	-6.164	-6.164	0	%100
124	MP2C	Z	3.559	3.559	0	%100
125	MP4C	X	-6.164	-6.164	0	%100
126	MP4C	Z	3.559	3.559	0	%100
127	MP5C	X	-6.164	-6.164	0	%100
128	MP5C	Z	3.559	3.559	0	%100
129	MP3C	X	-6.164	-6.164	0	%100
130	MP3C	Z	3.559	3.559	0	%100
131	MP1B	X	-6.164	-6.164	0	%100
132	MP1B	Z	3.559	3.559	0	%100
133	MP2B	X	-6.164	-6.164	0	%100
134	MP2B	Z	3.559	3.559	0	%100
135	MP4B	X	-6.164	-6.164	0	%100
136	MP4B	Z	3.559	3.559	0	%100
137	MP5B	X	-6.164	-6.164	0	%100
138	MP5B	Z	3.559	3.559	0	%100
139	MP3B	X	-6.164	-6.164	0	%100
140	MP3B	Z	3.559	3.559	0	%100

Member Distributed Loads (BLC 50 : Structure Wo (270 Deg))

	Member Label	Direction	Start Magnitude[lb/ft,...	End Magnitude[lb/ft,...	Start Location[ft,%]	End Location[ft,%]
1	M19	X	-1.865	-1.865	0	%100
2	M19	Z	0	0	0	%100
3	M19A	X	-9.292	-9.292	0	%100
4	M19A	Z	0	0	0	%100
5	M38C	X	-1.865	-1.865	0	%100
6	M38C	Z	0	0	0	%100
7	M51	X	-7.458	-7.458	0	%100
8	M51	Z	0	0	0	%100
9	M104A	X	0	0	0	%100
10	M104A	Z	0	0	0	%100
11	M105A	X	0	0	0	%100
12	M105A	Z	0	0	0	%100
13	M134	X	-.679	-.679	0	%100
14	M134	Z	0	0	0	%100
15	M135	X	-.679	-.679	0	%100
16	M135	Z	0	0	0	%100
17	M93A	X	0	0	0	%100
18	M93A	Z	0	0	0	%100
19	M94A	X	0	0	0	%100
20	M94A	Z	0	0	0	%100
21	M93B	X	0	0	0	%100
22	M93B	Z	0	0	0	%100
23	M94D	X	0	0	0	%100
24	M94D	Z	0	0	0	%100
25	M53	X	-.581	-.581	0	%100
26	M53	Z	0	0	0	%100
27	M54	X	-.581	-.581	0	%100

Member Distributed Loads (BLC 50 : Structure Wo (270 Deg)) (Continued)

	Member Label	Direction	Start Magnitude[lb/ft,...	End Magnitude[lb/ft,...	Start Location[ft,%]	End Location[ft,%]
28	M54	Z	0	0	0	%100
29	M63	X	-4.423	-4.423	0	%100
30	M63	Z	0	0	0	%100
31	M64	X	-4.423	-4.423	0	%100
32	M64	Z	0	0	0	%100
33	M69	X	-3.974	-3.974	0	%100
34	M69	Z	0	0	0	%100
35	M70	X	-3.974	-3.974	0	%100
36	M70	Z	0	0	0	%100
37	M71	X	-.581	-.581	0	%100
38	M71	Z	0	0	0	%100
39	M72	X	-.581	-.581	0	%100
40	M72	Z	0	0	0	%100
41	M81	X	-4.423	-4.423	0	%100
42	M81	Z	0	0	0	%100
43	M82	X	-4.423	-4.423	0	%100
44	M82	Z	0	0	0	%100
45	M87	X	-3.974	-3.974	0	%100
46	M87	Z	0	0	0	%100
47	M88	X	-3.974	-3.974	0	%100
48	M88	Z	0	0	0	%100
49	M89	X	0	0	0	%100
50	M89	Z	0	0	0	%100
51	M90	X	0	0	0	%100
52	M90	Z	0	0	0	%100
53	M89A	X	-16.906	-16.906	0	%100
54	M89A	Z	0	0	0	%100
55	M90A	X	-16.906	-16.906	0	%100
56	M90A	Z	0	0	0	%100
57	M91	X	-16.906	-16.906	0	%100
58	M91	Z	0	0	0	%100
59	M92	X	-16.906	-16.906	0	%100
60	M92	Z	0	0	0	%100
61	M101	X	0	0	0	%100
62	M101	Z	0	0	0	%100
63	M91A	X	0	0	0	%100
64	M91A	Z	0	0	0	%100
65	M93	X	-9.292	-9.292	0	%100
66	M93	Z	0	0	0	%100
67	M95B	X	-9.292	-9.292	0	%100
68	M95B	Z	0	0	0	%100
69	M97	X	-9.292	-9.292	0	%100
70	M97	Z	0	0	0	%100
71	M99	X	-9.292	-9.292	0	%100
72	M99	Z	0	0	0	%100
73	M101A	X	0	0	0	%100
74	M101A	Z	0	0	0	%100
75	M104	X	-9.292	-9.292	0	%100
76	M104	Z	0	0	0	%100
77	M105B	X	0	0	0	%100
78	M105B	Z	0	0	0	%100
79	M104B	X	-4.414	-4.414	0	%100
80	M104B	Z	0	0	0	%100
81	M105C	X	-4.414	-4.414	0	%100
82	M105C	Z	0	0	0	%100
83	M95C	X	0	0	0	%100
84	M95C	Z	0	0	0	%100

Member Distributed Loads (BLC 50 : Structure Wo (270 Deg)) (Continued)

	Member Label	Direction	Start Magnitude[lb/ft,...	End Magnitude[lb/ft,...	Start Location[ft,%]	End Location[ft,%]
85	M96A	X	0	0	0	%100
86	M96A	Z	0	0	0	%100
87	M101B	X	-.679	-.679	0	%100
88	M101B	Z	0	0	0	%100
89	M102B	X	-.679	-.679	0	%100
90	M102B	Z	0	0	0	%100
91	MP1A	X	-7.356	-7.356	0	%100
92	MP1A	Z	0	0	0	%100
93	M144	X	-6.015	-6.015	0	%100
94	M144	Z	0	0	0	%100
95	M147	X	0	0	0	%100
96	M147	Z	0	0	0	%100
97	M149A	X	-.968	-.968	0	%100
98	M149A	Z	0	0	0	%100
99	M152	X	-.968	-.968	0	%100
100	M152	Z	0	0	0	%100
101	M155	X	0	0	0	%100
102	M155	Z	0	0	0	%100
103	M159	X	-.92	-.92	0	%100
104	M159	Z	0	0	0	%100
105	M163	X	-.92	-.92	0	%100
106	M163	Z	0	0	0	%100
107	M166A	X	-.928	-.928	0	%100
108	M166A	Z	0	0	0	%100
109	M167	X	-.928	-.928	0	%100
110	M167	Z	0	0	0	%100
111	M168	X	0	0	0	%100
112	M168	Z	0	0	0	%100
113	MP2A	X	-7.356	-7.356	0	%100
114	MP2A	Z	0	0	0	%100
115	MP4A	X	-7.356	-7.356	0	%100
116	MP4A	Z	0	0	0	%100
117	MP5A	X	-7.356	-7.356	0	%100
118	MP5A	Z	0	0	0	%100
119	MP3A	X	-7.356	-7.356	0	%100
120	MP3A	Z	0	0	0	%100
121	MP1C	X	-7.356	-7.356	0	%100
122	MP1C	Z	0	0	0	%100
123	MP2C	X	-7.356	-7.356	0	%100
124	MP2C	Z	0	0	0	%100
125	MP4C	X	-7.356	-7.356	0	%100
126	MP4C	Z	0	0	0	%100
127	MP5C	X	-7.356	-7.356	0	%100
128	MP5C	Z	0	0	0	%100
129	MP3C	X	-7.356	-7.356	0	%100
130	MP3C	Z	0	0	0	%100
131	MP1B	X	-7.356	-7.356	0	%100
132	MP1B	Z	0	0	0	%100
133	MP2B	X	-7.356	-7.356	0	%100
134	MP2B	Z	0	0	0	%100
135	MP4B	X	-7.356	-7.356	0	%100
136	MP4B	Z	0	0	0	%100
137	MP5B	X	-7.356	-7.356	0	%100
138	MP5B	Z	0	0	0	%100
139	MP3B	X	-7.356	-7.356	0	%100
140	MP3B	Z	0	0	0	%100

Member Distributed Loads (BLC 51 : Structure Wo (300 Deg))

	Member Label	Direction	Start Magnitude[lb/ft,...	End Magnitude[lb/ft,...	Start Location[ft,%]	End Location[ft,%]
1	M19	X	-4.844	-4.844	0	%100
2	M19	Z	-2.797	-2.797	0	%100
3	M19A	X	-10.729	-10.729	0	%100
4	M19A	Z	-6.195	-6.195	0	%100
5	M38C	X	0	0	0	%100
6	M38C	Z	0	0	0	%100
7	M51	X	-4.844	-4.844	0	%100
8	M51	Z	-2.797	-2.797	0	%100
9	M104A	X	-.168	-.168	0	%100
10	M104A	Z	-.097	-.097	0	%100
11	M105A	X	-.168	-.168	0	%100
12	M105A	Z	-.097	-.097	0	%100
13	M134	X	-.784	-.784	0	%100
14	M134	Z	-.453	-.453	0	%100
15	M135	X	-.784	-.784	0	%100
16	M135	Z	-.453	-.453	0	%100
17	M93A	X	-1.277	-1.277	0	%100
18	M93A	Z	-.737	-.737	0	%100
19	M94A	X	-1.277	-1.277	0	%100
20	M94A	Z	-.737	-.737	0	%100
21	M93B	X	-1.147	-1.147	0	%100
22	M93B	Z	-.662	-.662	0	%100
23	M94D	X	-1.147	-1.147	0	%100
24	M94D	Z	-.662	-.662	0	%100
25	M53	X	-.168	-.168	0	%100
26	M53	Z	-.097	-.097	0	%100
27	M54	X	-.168	-.168	0	%100
28	M54	Z	-.097	-.097	0	%100
29	M63	X	-1.277	-1.277	0	%100
30	M63	Z	-.737	-.737	0	%100
31	M64	X	-1.277	-1.277	0	%100
32	M64	Z	-.737	-.737	0	%100
33	M69	X	-1.147	-1.147	0	%100
34	M69	Z	-.662	-.662	0	%100
35	M70	X	-1.147	-1.147	0	%100
36	M70	Z	-.662	-.662	0	%100
37	M71	X	-.671	-.671	0	%100
38	M71	Z	-.387	-.387	0	%100
39	M72	X	-.671	-.671	0	%100
40	M72	Z	-.387	-.387	0	%100
41	M81	X	-5.107	-5.107	0	%100
42	M81	Z	-2.949	-2.949	0	%100
43	M82	X	-5.107	-5.107	0	%100
44	M82	Z	-2.949	-2.949	0	%100
45	M87	X	-4.589	-4.589	0	%100
46	M87	Z	-2.649	-2.649	0	%100
47	M88	X	-4.589	-4.589	0	%100
48	M88	Z	-2.649	-2.649	0	%100
49	M89	X	-4.88	-4.88	0	%100
50	M89	Z	-2.818	-2.818	0	%100
51	M90	X	-4.88	-4.88	0	%100
52	M90	Z	-2.818	-2.818	0	%100
53	M89A	X	-4.88	-4.88	0	%100
54	M89A	Z	-2.818	-2.818	0	%100
55	M90A	X	-4.88	-4.88	0	%100
56	M90A	Z	-2.818	-2.818	0	%100
57	M91	X	-19.521	-19.521	0	%100

Member Distributed Loads (BLC 51 : Structure Wo (300 Deg)) (Continued)

	Member Label	Direction	Start Magnitude[lb/ft,...	End Magnitude[lb/ft,...	Start Location[ft,%]	End Location[ft,%]
58	M91	Z	-11.271	-11.271	0	%100
59	M92	X	-19.521	-19.521	0	%100
60	M92	Z	-11.271	-11.271	0	%100
61	M101	X	-2.682	-2.682	0	%100
62	M101	Z	-1.549	-1.549	0	%100
63	M91A	X	-2.682	-2.682	0	%100
64	M91A	Z	-1.549	-1.549	0	%100
65	M93	X	-2.682	-2.682	0	%100
66	M93	Z	-1.549	-1.549	0	%100
67	M95B	X	-2.682	-2.682	0	%100
68	M95B	Z	-1.549	-1.549	0	%100
69	M97	X	-10.729	-10.729	0	%100
70	M97	Z	-6.195	-6.195	0	%100
71	M99	X	-10.729	-10.729	0	%100
72	M99	Z	-6.195	-6.195	0	%100
73	M101A	X	-2.682	-2.682	0	%100
74	M101A	Z	-1.549	-1.549	0	%100
75	M104	X	-2.682	-2.682	0	%100
76	M104	Z	-1.549	-1.549	0	%100
77	M105B	X	-1.274	-1.274	0	%100
78	M105B	Z	-.736	-.736	0	%100
79	M104B	X	-1.274	-1.274	0	%100
80	M104B	Z	-.736	-.736	0	%100
81	M105C	X	-5.096	-5.096	0	%100
82	M105C	Z	-2.942	-2.942	0	%100
83	M95C	X	-.196	-.196	0	%100
84	M95C	Z	-.113	-.113	0	%100
85	M96A	X	-.196	-.196	0	%100
86	M96A	Z	-.113	-.113	0	%100
87	M101B	X	-.196	-.196	0	%100
88	M101B	Z	-.113	-.113	0	%100
89	M102B	X	-.196	-.196	0	%100
90	M102B	Z	-.113	-.113	0	%100
91	MP1A	X	-6.164	-6.164	0	%100
92	MP1A	Z	-3.559	-3.559	0	%100
93	M144	X	-5.099	-5.099	0	%100
94	M144	Z	-2.944	-2.944	0	%100
95	M147	X	-.279	-.279	0	%100
96	M147	Z	-.161	-.161	0	%100
97	M149A	X	-.279	-.279	0	%100
98	M149A	Z	-.161	-.161	0	%100
99	M152	X	-1.118	-1.118	0	%100
100	M152	Z	-.645	-.645	0	%100
101	M155	X	-.265	-.265	0	%100
102	M155	Z	-.153	-.153	0	%100
103	M159	X	-.265	-.265	0	%100
104	M159	Z	-.153	-.153	0	%100
105	M163	X	-1.062	-1.062	0	%100
106	M163	Z	-.613	-.613	0	%100
107	M166A	X	-.268	-.268	0	%100
108	M166A	Z	-.155	-.155	0	%100
109	M167	X	-1.071	-1.071	0	%100
110	M167	Z	-.618	-.618	0	%100
111	M168	X	-.268	-.268	0	%100
112	M168	Z	-.155	-.155	0	%100
113	MP2A	X	-6.164	-6.164	0	%100
114	MP2A	Z	-3.559	-3.559	0	%100

Member Distributed Loads (BLC 51 : Structure Wo (300 Deg)) (Continued)

	Member Label	Direction	Start Magnitude[lb/ft,...	End Magnitude[lb/ft,...	Start Location[ft,%]	End Location[ft,%]
115	MP4A	X	-6.164	-6.164	0	%100
116	MP4A	Z	-3.559	-3.559	0	%100
117	MP5A	X	-6.164	-6.164	0	%100
118	MP5A	Z	-3.559	-3.559	0	%100
119	MP3A	X	-6.164	-6.164	0	%100
120	MP3A	Z	-3.559	-3.559	0	%100
121	MP1C	X	-6.164	-6.164	0	%100
122	MP1C	Z	-3.559	-3.559	0	%100
123	MP2C	X	-6.164	-6.164	0	%100
124	MP2C	Z	-3.559	-3.559	0	%100
125	MP4C	X	-6.164	-6.164	0	%100
126	MP4C	Z	-3.559	-3.559	0	%100
127	MP5C	X	-6.164	-6.164	0	%100
128	MP5C	Z	-3.559	-3.559	0	%100
129	MP3C	X	-6.164	-6.164	0	%100
130	MP3C	Z	-3.559	-3.559	0	%100
131	MP1B	X	-6.164	-6.164	0	%100
132	MP1B	Z	-3.559	-3.559	0	%100
133	MP2B	X	-6.164	-6.164	0	%100
134	MP2B	Z	-3.559	-3.559	0	%100
135	MP4B	X	-6.164	-6.164	0	%100
136	MP4B	Z	-3.559	-3.559	0	%100
137	MP5B	X	-6.164	-6.164	0	%100
138	MP5B	Z	-3.559	-3.559	0	%100
139	MP3B	X	-6.164	-6.164	0	%100
140	MP3B	Z	-3.559	-3.559	0	%100

Member Distributed Loads (BLC 52 : Structure Wo (330 Deg))

	Member Label	Direction	Start Magnitude[lb/ft,...	End Magnitude[lb/ft,...	Start Location[ft,%]	End Location[ft,%]
1	M19	X	-3.729	-3.729	0	%100
2	M19	Z	-6.459	-6.459	0	%100
3	M19A	X	-4.646	-4.646	0	%100
4	M19A	Z	-8.047	-8.047	0	%100
5	M38C	X	-.932	-.932	0	%100
6	M38C	Z	-1.615	-1.615	0	%100
7	M51	X	-.932	-.932	0	%100
8	M51	Z	-1.615	-1.615	0	%100
9	M104A	X	-.29	-.29	0	%100
10	M104A	Z	-.503	-.503	0	%100
11	M105A	X	-.29	-.29	0	%100
12	M105A	Z	-.503	-.503	0	%100
13	M134	X	-.34	-.34	0	%100
14	M134	Z	-.588	-.588	0	%100
15	M135	X	-.34	-.34	0	%100
16	M135	Z	-.588	-.588	0	%100
17	M93A	X	-2.212	-2.212	0	%100
18	M93A	Z	-3.831	-3.831	0	%100
19	M94A	X	-2.212	-2.212	0	%100
20	M94A	Z	-3.831	-3.831	0	%100
21	M93B	X	-1.987	-1.987	0	%100
22	M93B	Z	-3.441	-3.441	0	%100
23	M94D	X	-1.987	-1.987	0	%100
24	M94D	Z	-3.441	-3.441	0	%100
25	M53	X	0	0	0	%100
26	M53	Z	0	0	0	%100
27	M54	X	0	0	0	%100

Member Distributed Loads (BLC 52 : Structure Wo (330 Deg)) (Continued)

	Member Label	Direction	Start Magnitude[lb/ft,...	End Magnitude[lb/ft,...	Start Location[ft,%]	End Location[ft,%]
28	M54	Z	0	0	0	%100
29	M63	X	0	0	0	%100
30	M63	Z	0	0	0	%100
31	M64	X	0	0	0	%100
32	M64	Z	0	0	0	%100
33	M69	X	0	0	0	%100
34	M69	Z	0	0	0	%100
35	M70	X	0	0	0	%100
36	M70	Z	0	0	0	%100
37	M71	X	-.29	-.29	0	%100
38	M71	Z	-.503	-.503	0	%100
39	M72	X	-.29	-.29	0	%100
40	M72	Z	-.503	-.503	0	%100
41	M81	X	-2.212	-2.212	0	%100
42	M81	Z	-3.831	-3.831	0	%100
43	M82	X	-2.212	-2.212	0	%100
44	M82	Z	-3.831	-3.831	0	%100
45	M87	X	-1.987	-1.987	0	%100
46	M87	Z	-3.441	-3.441	0	%100
47	M88	X	-1.987	-1.987	0	%100
48	M88	Z	-3.441	-3.441	0	%100
49	M89	X	-8.453	-8.453	0	%100
50	M89	Z	-14.641	-14.641	0	%100
51	M90	X	-8.453	-8.453	0	%100
52	M90	Z	-14.641	-14.641	0	%100
53	M89A	X	0	0	0	%100
54	M89A	Z	0	0	0	%100
55	M90A	X	0	0	0	%100
56	M90A	Z	0	0	0	%100
57	M91	X	-8.453	-8.453	0	%100
58	M91	Z	-14.641	-14.641	0	%100
59	M92	X	-8.453	-8.453	0	%100
60	M92	Z	-14.641	-14.641	0	%100
61	M101	X	-4.646	-4.646	0	%100
62	M101	Z	-8.047	-8.047	0	%100
63	M91A	X	-4.646	-4.646	0	%100
64	M91A	Z	-8.047	-8.047	0	%100
65	M93	X	0	0	0	%100
66	M93	Z	0	0	0	%100
67	M95B	X	0	0	0	%100
68	M95B	Z	0	0	0	%100
69	M97	X	-4.646	-4.646	0	%100
70	M97	Z	-8.047	-8.047	0	%100
71	M99	X	-4.646	-4.646	0	%100
72	M99	Z	-8.047	-8.047	0	%100
73	M101A	X	-4.646	-4.646	0	%100
74	M101A	Z	-8.047	-8.047	0	%100
75	M104	X	0	0	0	%100
76	M104	Z	0	0	0	%100
77	M105B	X	-2.207	-2.207	0	%100
78	M105B	Z	-3.822	-3.822	0	%100
79	M104B	X	0	0	0	%100
80	M104B	Z	0	0	0	%100
81	M105C	X	-2.207	-2.207	0	%100
82	M105C	Z	-3.822	-3.822	0	%100
83	M95C	X	-.34	-.34	0	%100
84	M95C	Z	-.588	-.588	0	%100

Member Distributed Loads (BLC 52 : Structure Wo (330 Deg)) (Continued)

	Member Label	Direction	Start Magnitude[lb/ft,...	End Magnitude[lb/ft,...	Start Location[ft,%]	End Location[ft,%]
85	M96A	X	-.34	-.34	0	%100
86	M96A	Z	-.588	-.588	0	%100
87	M101B	X	0	0	0	%100
88	M101B	Z	0	0	0	%100
89	M102B	X	0	0	0	%100
90	M102B	Z	0	0	0	%100
91	MP1A	X	-3.32	-3.32	0	%100
92	MP1A	Z	-5.751	-5.751	0	%100
93	M144	X	-2.816	-2.816	0	%100
94	M144	Z	-4.877	-4.877	0	%100
95	M147	X	-.484	-.484	0	%100
96	M147	Z	-.838	-.838	0	%100
97	M149A	X	0	0	0	%100
98	M149A	Z	0	0	0	%100
99	M152	X	-.484	-.484	0	%100
100	M152	Z	-.838	-.838	0	%100
101	M155	X	-.46	-.46	0	%100
102	M155	Z	-.796	-.796	0	%100
103	M159	X	0	0	0	%100
104	M159	Z	0	0	0	%100
105	M163	X	-.46	-.46	0	%100
106	M163	Z	-.796	-.796	0	%100
107	M166A	X	0	0	0	%100
108	M166A	Z	0	0	0	%100
109	M167	X	-.464	-.464	0	%100
110	M167	Z	-.803	-.803	0	%100
111	M168	X	-.464	-.464	0	%100
112	M168	Z	-.803	-.803	0	%100
113	MP2A	X	-3.32	-3.32	0	%100
114	MP2A	Z	-5.751	-5.751	0	%100
115	MP4A	X	-3.32	-3.32	0	%100
116	MP4A	Z	-5.751	-5.751	0	%100
117	MP5A	X	-3.32	-3.32	0	%100
118	MP5A	Z	-5.751	-5.751	0	%100
119	MP3A	X	-3.32	-3.32	0	%100
120	MP3A	Z	-5.751	-5.751	0	%100
121	MP1C	X	-3.32	-3.32	0	%100
122	MP1C	Z	-5.751	-5.751	0	%100
123	MP2C	X	-3.32	-3.32	0	%100
124	MP2C	Z	-5.751	-5.751	0	%100
125	MP4C	X	-3.32	-3.32	0	%100
126	MP4C	Z	-5.751	-5.751	0	%100
127	MP5C	X	-3.32	-3.32	0	%100
128	MP5C	Z	-5.751	-5.751	0	%100
129	MP3C	X	-3.32	-3.32	0	%100
130	MP3C	Z	-5.751	-5.751	0	%100
131	MP1B	X	-3.32	-3.32	0	%100
132	MP1B	Z	-5.751	-5.751	0	%100
133	MP2B	X	-3.32	-3.32	0	%100
134	MP2B	Z	-5.751	-5.751	0	%100
135	MP4B	X	-3.32	-3.32	0	%100
136	MP4B	Z	-5.751	-5.751	0	%100
137	MP5B	X	-3.32	-3.32	0	%100
138	MP5B	Z	-5.751	-5.751	0	%100
139	MP3B	X	-3.32	-3.32	0	%100
140	MP3B	Z	-5.751	-5.751	0	%100

Member Distributed Loads (BLC 53 : Structure Wi (0 Deg))

	Member Label	Direction	Start Magnitude[lb/ft,...	End Magnitude[lb/ft,...	Start Location[ft,%]	End Location[ft,%]
1	M19	X	0	0	0	%100
2	M19	Z	-2.035	-2.035	0	%100
3	M19A	X	0	0	0	%100
4	M19A	Z	-.772	-.772	0	%100
5	M38C	X	0	0	0	%100
6	M38C	Z	-2.035	-2.035	0	%100
7	M51	X	0	0	0	%100
8	M51	Z	0	0	0	%100
9	M104A	X	0	0	0	%100
10	M104A	Z	-.921	-.921	0	%100
11	M105A	X	0	0	0	%100
12	M105A	Z	-.921	-.921	0	%100
13	M134	X	0	0	0	%100
14	M134	Z	-.258	-.258	0	%100
15	M135	X	0	0	0	%100
16	M135	Z	-.258	-.258	0	%100
17	M93A	X	0	0	0	%100
18	M93A	Z	-2.153	-2.153	0	%100
19	M94A	X	0	0	0	%100
20	M94A	Z	-2.153	-2.153	0	%100
21	M93B	X	0	0	0	%100
22	M93B	Z	-1.9	-1.9	0	%100
23	M94D	X	0	0	0	%100
24	M94D	Z	-1.9	-1.9	0	%100
25	M53	X	0	0	0	%100
26	M53	Z	-.23	-.23	0	%100
27	M54	X	0	0	0	%100
28	M54	Z	-.23	-.23	0	%100
29	M63	X	0	0	0	%100
30	M63	Z	-.538	-.538	0	%100
31	M64	X	0	0	0	%100
32	M64	Z	-.538	-.538	0	%100
33	M69	X	0	0	0	%100
34	M69	Z	-.475	-.475	0	%100
35	M70	X	0	0	0	%100
36	M70	Z	-.475	-.475	0	%100
37	M71	X	0	0	0	%100
38	M71	Z	-.23	-.23	0	%100
39	M72	X	0	0	0	%100
40	M72	Z	-.23	-.23	0	%100
41	M81	X	0	0	0	%100
42	M81	Z	-.538	-.538	0	%100
43	M82	X	0	0	0	%100
44	M82	Z	-.538	-.538	0	%100
45	M87	X	0	0	0	%100
46	M87	Z	-.475	-.475	0	%100
47	M88	X	0	0	0	%100
48	M88	Z	-.475	-.475	0	%100
49	M89	X	0	0	0	%100
50	M89	Z	-5.516	-5.516	0	%100
51	M90	X	0	0	0	%100
52	M90	Z	-5.516	-5.516	0	%100
53	M89A	X	0	0	0	%100
54	M89A	Z	-1.379	-1.379	0	%100
55	M90A	X	0	0	0	%100
56	M90A	Z	-1.379	-1.379	0	%100
57	M91	X	0	0	0	%100

Member Distributed Loads (BLC 53 : Structure Wi (0 Deg)) (Continued)

	Member Label	Direction	Start Magnitude[lb/ft,...	End Magnitude[lb/ft,...	Start Location[ft,%]	End Location[ft,%]
58	M91	Z	-1.379	-1.379	0	%100
59	M92	X	0	0	0	%100
60	M92	Z	-1.379	-1.379	0	%100
61	M101	X	0	0	0	%100
62	M101	Z	-3.076	-3.076	0	%100
63	M91A	X	0	0	0	%100
64	M91A	Z	-3.076	-3.076	0	%100
65	M93	X	0	0	0	%100
66	M93	Z	-.769	-.769	0	%100
67	M95B	X	0	0	0	%100
68	M95B	Z	-.769	-.769	0	%100
69	M97	X	0	0	0	%100
70	M97	Z	-.769	-.769	0	%100
71	M99	X	0	0	0	%100
72	M99	Z	-.769	-.769	0	%100
73	M101A	X	0	0	0	%100
74	M101A	Z	-3.087	-3.087	0	%100
75	M104	X	0	0	0	%100
76	M104	Z	-.772	-.772	0	%100
77	M105B	X	0	0	0	%100
78	M105B	Z	-2.421	-2.421	0	%100
79	M104B	X	0	0	0	%100
80	M104B	Z	-.605	-.605	0	%100
81	M105C	X	0	0	0	%100
82	M105C	Z	-.605	-.605	0	%100
83	M95C	X	0	0	0	%100
84	M95C	Z	-1.033	-1.033	0	%100
85	M96A	X	0	0	0	%100
86	M96A	Z	-1.033	-1.033	0	%100
87	M101B	X	0	0	0	%100
88	M101B	Z	-.258	-.258	0	%100
89	M102B	X	0	0	0	%100
90	M102B	Z	-.258	-.258	0	%100
91	MP1A	X	0	0	0	%100
92	MP1A	Z	-2.517	-2.517	0	%100
93	M144	X	0	0	0	%100
94	M144	Z	-2.119	-2.119	0	%100
95	M147	X	0	0	0	%100
96	M147	Z	-1.568	-1.568	0	%100
97	M149A	X	0	0	0	%100
98	M149A	Z	-.392	-.392	0	%100
99	M152	X	0	0	0	%100
100	M152	Z	-.392	-.392	0	%100
101	M155	X	0	0	0	%100
102	M155	Z	-1.41	-1.41	0	%100
103	M159	X	0	0	0	%100
104	M159	Z	-.352	-.352	0	%100
105	M163	X	0	0	0	%100
106	M163	Z	-.352	-.352	0	%100
107	M166A	X	0	0	0	%100
108	M166A	Z	-.29	-.29	0	%100
109	M167	X	0	0	0	%100
110	M167	Z	-.29	-.29	0	%100
111	M168	X	0	0	0	%100
112	M168	Z	-1.158	-1.158	0	%100
113	MP2A	X	0	0	0	%100
114	MP2A	Z	-2.517	-2.517	0	%100

Member Distributed Loads (BLC 53 : Structure Wi (0 Deg)) (Continued)

	Member Label	Direction	Start Magnitude[lb/ft,...	End Magnitude[lb/ft,...	Start Location[ft,%]	End Location[ft,%]
115	MP4A	X	0	0	0	%100
116	MP4A	Z	-2.517	-2.517	0	%100
117	MP5A	X	0	0	0	%100
118	MP5A	Z	-2.517	-2.517	0	%100
119	MP3A	X	0	0	0	%100
120	MP3A	Z	-2.517	-2.517	0	%100
121	MP1C	X	0	0	0	%100
122	MP1C	Z	-2.517	-2.517	0	%100
123	MP2C	X	0	0	0	%100
124	MP2C	Z	-2.517	-2.517	0	%100
125	MP4C	X	0	0	0	%100
126	MP4C	Z	-2.517	-2.517	0	%100
127	MP5C	X	0	0	0	%100
128	MP5C	Z	-2.517	-2.517	0	%100
129	MP3C	X	0	0	0	%100
130	MP3C	Z	-2.517	-2.517	0	%100
131	MP1B	X	0	0	0	%100
132	MP1B	Z	-2.517	-2.517	0	%100
133	MP2B	X	0	0	0	%100
134	MP2B	Z	-2.517	-2.517	0	%100
135	MP4B	X	0	0	0	%100
136	MP4B	Z	-2.517	-2.517	0	%100
137	MP5B	X	0	0	0	%100
138	MP5B	Z	-2.517	-2.517	0	%100
139	MP3B	X	0	0	0	%100
140	MP3B	Z	-2.517	-2.517	0	%100

Member Distributed Loads (BLC 54 : Structure Wi (30 Deg))

	Member Label	Direction	Start Magnitude[lb/ft,...	End Magnitude[lb/ft,...	Start Location[ft,%]	End Location[ft,%]
1	M19	X	.339	.339	0	%100
2	M19	Z	-.588	-.588	0	%100
3	M19A	X	0	0	0	%100
4	M19A	Z	0	0	0	%100
5	M38C	X	1.357	1.357	0	%100
6	M38C	Z	-2.35	-2.35	0	%100
7	M51	X	.339	.339	0	%100
8	M51	Z	-.588	-.588	0	%100
9	M104A	X	.345	.345	0	%100
10	M104A	Z	-.598	-.598	0	%100
11	M105A	X	.345	.345	0	%100
12	M105A	Z	-.598	-.598	0	%100
13	M134	X	0	0	0	%100
14	M134	Z	0	0	0	%100
15	M135	X	0	0	0	%100
16	M135	Z	0	0	0	%100
17	M93A	X	.807	.807	0	%100
18	M93A	Z	-1.398	-1.398	0	%100
19	M94A	X	.807	.807	0	%100
20	M94A	Z	-1.398	-1.398	0	%100
21	M93B	X	.713	.713	0	%100
22	M93B	Z	-1.234	-1.234	0	%100
23	M94D	X	.713	.713	0	%100
24	M94D	Z	-1.234	-1.234	0	%100
25	M53	X	.345	.345	0	%100
26	M53	Z	-.598	-.598	0	%100
27	M54	X	.345	.345	0	%100

Member Distributed Loads (BLC 54 : Structure Wi (30 Deg)) (Continued)

	Member Label	Direction	Start Magnitude[lb/ft,...	End Magnitude[lb/ft,...	Start Location[ft,%]	End Location[ft,%]
28	M54	Z	-.598	-.598	0	%100
29	M63	X	.807	.807	0	%100
30	M63	Z	-1.398	-1.398	0	%100
31	M64	X	.807	.807	0	%100
32	M64	Z	-1.398	-1.398	0	%100
33	M69	X	.713	.713	0	%100
34	M69	Z	-1.234	-1.234	0	%100
35	M70	X	.713	.713	0	%100
36	M70	Z	-1.234	-1.234	0	%100
37	M71	X	0	0	0	%100
38	M71	Z	0	0	0	%100
39	M72	X	0	0	0	%100
40	M72	Z	0	0	0	%100
41	M81	X	0	0	0	%100
42	M81	Z	0	0	0	%100
43	M82	X	0	0	0	%100
44	M82	Z	0	0	0	%100
45	M87	X	0	0	0	%100
46	M87	Z	0	0	0	%100
47	M88	X	0	0	0	%100
48	M88	Z	0	0	0	%100
49	M89	X	2.068	2.068	0	%100
50	M89	Z	-3.583	-3.583	0	%100
51	M90	X	2.068	2.068	0	%100
52	M90	Z	-3.583	-3.583	0	%100
53	M89A	X	2.068	2.068	0	%100
54	M89A	Z	-3.583	-3.583	0	%100
55	M90A	X	2.068	2.068	0	%100
56	M90A	Z	-3.583	-3.583	0	%100
57	M91	X	0	0	0	%100
58	M91	Z	0	0	0	%100
59	M92	X	0	0	0	%100
60	M92	Z	0	0	0	%100
61	M101	X	1.154	1.154	0	%100
62	M101	Z	-1.998	-1.998	0	%100
63	M91A	X	1.154	1.154	0	%100
64	M91A	Z	-1.998	-1.998	0	%100
65	M93	X	1.154	1.154	0	%100
66	M93	Z	-1.998	-1.998	0	%100
67	M95B	X	1.154	1.154	0	%100
68	M95B	Z	-1.998	-1.998	0	%100
69	M97	X	0	0	0	%100
70	M97	Z	0	0	0	%100
71	M99	X	0	0	0	%100
72	M99	Z	0	0	0	%100
73	M101A	X	1.157	1.157	0	%100
74	M101A	Z	-2.005	-2.005	0	%100
75	M104	X	1.157	1.157	0	%100
76	M104	Z	-2.005	-2.005	0	%100
77	M105B	X	.908	.908	0	%100
78	M105B	Z	-1.573	-1.573	0	%100
79	M104B	X	.908	.908	0	%100
80	M104B	Z	-1.573	-1.573	0	%100
81	M105C	X	0	0	0	%100
82	M105C	Z	0	0	0	%100
83	M95C	X	.387	.387	0	%100
84	M95C	Z	-.671	-.671	0	%100

Member Distributed Loads (BLC 54 : Structure Wi (30 Deg)) (Continued)

	Member Label	Direction	Start Magnitude[lb/ft,...	End Magnitude[lb/ft,...	Start Location[ft,%]	End Location[ft,%]
85	M96A	X	.387	.387	0	%100
86	M96A	Z	-.671	-.671	0	%100
87	M101B	X	.387	.387	0	%100
88	M101B	Z	-.671	-.671	0	%100
89	M102B	X	.387	.387	0	%100
90	M102B	Z	-.671	-.671	0	%100
91	MP1A	X	1.281	1.281	0	%100
92	MP1A	Z	-2.218	-2.218	0	%100
93	M144	X	1.071	1.071	0	%100
94	M144	Z	-1.856	-1.856	0	%100
95	M147	X	.588	.588	0	%100
96	M147	Z	-1.018	-1.018	0	%100
97	M149A	X	.588	.588	0	%100
98	M149A	Z	-1.018	-1.018	0	%100
99	M152	X	0	0	0	%100
100	M152	Z	0	0	0	%100
101	M155	X	.529	.529	0	%100
102	M155	Z	-.916	-.916	0	%100
103	M159	X	.529	.529	0	%100
104	M159	Z	-.916	-.916	0	%100
105	M163	X	0	0	0	%100
106	M163	Z	0	0	0	%100
107	M166A	X	.434	.434	0	%100
108	M166A	Z	-.752	-.752	0	%100
109	M167	X	0	0	0	%100
110	M167	Z	0	0	0	%100
111	M168	X	.434	.434	0	%100
112	M168	Z	-.752	-.752	0	%100
113	MP2A	X	1.281	1.281	0	%100
114	MP2A	Z	-2.218	-2.218	0	%100
115	MP4A	X	1.281	1.281	0	%100
116	MP4A	Z	-2.218	-2.218	0	%100
117	MP5A	X	1.281	1.281	0	%100
118	MP5A	Z	-2.218	-2.218	0	%100
119	MP3A	X	1.281	1.281	0	%100
120	MP3A	Z	-2.218	-2.218	0	%100
121	MP1C	X	1.281	1.281	0	%100
122	MP1C	Z	-2.218	-2.218	0	%100
123	MP2C	X	1.281	1.281	0	%100
124	MP2C	Z	-2.218	-2.218	0	%100
125	MP4C	X	1.281	1.281	0	%100
126	MP4C	Z	-2.218	-2.218	0	%100
127	MP5C	X	1.281	1.281	0	%100
128	MP5C	Z	-2.218	-2.218	0	%100
129	MP3C	X	1.281	1.281	0	%100
130	MP3C	Z	-2.218	-2.218	0	%100
131	MP1B	X	1.281	1.281	0	%100
132	MP1B	Z	-2.218	-2.218	0	%100
133	MP2B	X	1.281	1.281	0	%100
134	MP2B	Z	-2.218	-2.218	0	%100
135	MP4B	X	1.281	1.281	0	%100
136	MP4B	Z	-2.218	-2.218	0	%100
137	MP5B	X	1.281	1.281	0	%100
138	MP5B	Z	-2.218	-2.218	0	%100
139	MP3B	X	1.281	1.281	0	%100
140	MP3B	Z	-2.218	-2.218	0	%100

Member Distributed Loads (BLC 55 : Structure Wi (60 Deg))

	Member Label	Direction	Start Magnitude[lb/ft,...	End Magnitude[lb/ft,...	Start Location[ft,%]	End Location[ft,%]
1	M19	X	0	0	0	%100
2	M19	Z	0	0	0	%100
3	M19A	X	.668	.668	0	%100
4	M19A	Z	-.386	-.386	0	%100
5	M38C	X	1.763	1.763	0	%100
6	M38C	Z	-1.018	-1.018	0	%100
7	M51	X	1.763	1.763	0	%100
8	M51	Z	-1.018	-1.018	0	%100
9	M104A	X	.199	.199	0	%100
10	M104A	Z	-.115	-.115	0	%100
11	M105A	X	.199	.199	0	%100
12	M105A	Z	-.115	-.115	0	%100
13	M134	X	.224	.224	0	%100
14	M134	Z	-.129	-.129	0	%100
15	M135	X	.224	.224	0	%100
16	M135	Z	-.129	-.129	0	%100
17	M93A	X	.466	.466	0	%100
18	M93A	Z	-.269	-.269	0	%100
19	M94A	X	.466	.466	0	%100
20	M94A	Z	-.269	-.269	0	%100
21	M93B	X	.411	.411	0	%100
22	M93B	Z	-.238	-.238	0	%100
23	M94D	X	.411	.411	0	%100
24	M94D	Z	-.238	-.238	0	%100
25	M53	X	.798	.798	0	%100
26	M53	Z	-.46	-.46	0	%100
27	M54	X	.798	.798	0	%100
28	M54	Z	-.46	-.46	0	%100
29	M63	X	1.864	1.864	0	%100
30	M63	Z	-1.076	-1.076	0	%100
31	M64	X	1.864	1.864	0	%100
32	M64	Z	-1.076	-1.076	0	%100
33	M69	X	1.645	1.645	0	%100
34	M69	Z	-.95	-.95	0	%100
35	M70	X	1.645	1.645	0	%100
36	M70	Z	-.95	-.95	0	%100
37	M71	X	.199	.199	0	%100
38	M71	Z	-.115	-.115	0	%100
39	M72	X	.199	.199	0	%100
40	M72	Z	-.115	-.115	0	%100
41	M81	X	.466	.466	0	%100
42	M81	Z	-.269	-.269	0	%100
43	M82	X	.466	.466	0	%100
44	M82	Z	-.269	-.269	0	%100
45	M87	X	.411	.411	0	%100
46	M87	Z	-.238	-.238	0	%100
47	M88	X	.411	.411	0	%100
48	M88	Z	-.238	-.238	0	%100
49	M89	X	1.194	1.194	0	%100
50	M89	Z	-.689	-.689	0	%100
51	M90	X	1.194	1.194	0	%100
52	M90	Z	-.689	-.689	0	%100
53	M89A	X	4.777	4.777	0	%100
54	M89A	Z	-2.758	-2.758	0	%100
55	M90A	X	4.777	4.777	0	%100
56	M90A	Z	-2.758	-2.758	0	%100
57	M91	X	1.194	1.194	0	%100

Member Distributed Loads (BLC 55 : Structure Wi (60 Deg)) (Continued)

	Member Label	Direction	Start Magnitude[lb/ft,...	End Magnitude[lb/ft,...	Start Location[ft,%]	End Location[ft,%]
58	M91	Z	-.689	-.689	0	%100
59	M92	X	1.194	1.194	0	%100
60	M92	Z	-.689	-.689	0	%100
61	M101	X	.666	.666	0	%100
62	M101	Z	-.385	-.385	0	%100
63	M91A	X	.666	.666	0	%100
64	M91A	Z	-.385	-.385	0	%100
65	M93	X	2.664	2.664	0	%100
66	M93	Z	-1.538	-1.538	0	%100
67	M95B	X	2.664	2.664	0	%100
68	M95B	Z	-1.538	-1.538	0	%100
69	M97	X	.666	.666	0	%100
70	M97	Z	-.385	-.385	0	%100
71	M99	X	.666	.666	0	%100
72	M99	Z	-.385	-.385	0	%100
73	M101A	X	.668	.668	0	%100
74	M101A	Z	-.386	-.386	0	%100
75	M104	X	2.673	2.673	0	%100
76	M104	Z	-1.543	-1.543	0	%100
77	M105B	X	.524	.524	0	%100
78	M105B	Z	-.303	-.303	0	%100
79	M104B	X	2.097	2.097	0	%100
80	M104B	Z	-1.211	-1.211	0	%100
81	M105C	X	.524	.524	0	%100
82	M105C	Z	-.303	-.303	0	%100
83	M95C	X	.224	.224	0	%100
84	M95C	Z	-.129	-.129	0	%100
85	M96A	X	.224	.224	0	%100
86	M96A	Z	-.129	-.129	0	%100
87	M101B	X	.894	.894	0	%100
88	M101B	Z	-.516	-.516	0	%100
89	M102B	X	.894	.894	0	%100
90	M102B	Z	-.516	-.516	0	%100
91	MP1A	X	2.295	2.295	0	%100
92	MP1A	Z	-1.325	-1.325	0	%100
93	M144	X	1.897	1.897	0	%100
94	M144	Z	-1.095	-1.095	0	%100
95	M147	X	.339	.339	0	%100
96	M147	Z	-.196	-.196	0	%100
97	M149A	X	1.358	1.358	0	%100
98	M149A	Z	-.784	-.784	0	%100
99	M152	X	.339	.339	0	%100
100	M152	Z	-.196	-.196	0	%100
101	M155	X	.305	.305	0	%100
102	M155	Z	-.176	-.176	0	%100
103	M159	X	1.221	1.221	0	%100
104	M159	Z	-.705	-.705	0	%100
105	M163	X	.305	.305	0	%100
106	M163	Z	-.176	-.176	0	%100
107	M166A	X	1.003	1.003	0	%100
108	M166A	Z	-.579	-.579	0	%100
109	M167	X	.251	.251	0	%100
110	M167	Z	-.145	-.145	0	%100
111	M168	X	.251	.251	0	%100
112	M168	Z	-.145	-.145	0	%100
113	MP2A	X	2.295	2.295	0	%100
114	MP2A	Z	-1.325	-1.325	0	%100

Member Distributed Loads (BLC 55 : Structure Wi (60 Deg)) (Continued)

	Member Label	Direction	Start Magnitude[lb/ft,...	End Magnitude[lb/ft,...	Start Location[ft,%]	End Location[ft,%]
115	MP4A	X	2.295	2.295	0	%100
116	MP4A	Z	-1.325	-1.325	0	%100
117	MP5A	X	2.295	2.295	0	%100
118	MP5A	Z	-1.325	-1.325	0	%100
119	MP3A	X	2.295	2.295	0	%100
120	MP3A	Z	-1.325	-1.325	0	%100
121	MP1C	X	2.295	2.295	0	%100
122	MP1C	Z	-1.325	-1.325	0	%100
123	MP2C	X	2.295	2.295	0	%100
124	MP2C	Z	-1.325	-1.325	0	%100
125	MP4C	X	2.295	2.295	0	%100
126	MP4C	Z	-1.325	-1.325	0	%100
127	MP5C	X	2.295	2.295	0	%100
128	MP5C	Z	-1.325	-1.325	0	%100
129	MP3C	X	2.295	2.295	0	%100
130	MP3C	Z	-1.325	-1.325	0	%100
131	MP1B	X	2.295	2.295	0	%100
132	MP1B	Z	-1.325	-1.325	0	%100
133	MP2B	X	2.295	2.295	0	%100
134	MP2B	Z	-1.325	-1.325	0	%100
135	MP4B	X	2.295	2.295	0	%100
136	MP4B	Z	-1.325	-1.325	0	%100
137	MP5B	X	2.295	2.295	0	%100
138	MP5B	Z	-1.325	-1.325	0	%100
139	MP3B	X	2.295	2.295	0	%100
140	MP3B	Z	-1.325	-1.325	0	%100

Member Distributed Loads (BLC 56 : Structure Wi (90 Deg))

	Member Label	Direction	Start Magnitude[lb/ft,...	End Magnitude[lb/ft,...	Start Location[ft,%]	End Location[ft,%]
1	M19	X	.678	.678	0	%100
2	M19	Z	0	0	0	%100
3	M19A	X	2.315	2.315	0	%100
4	M19A	Z	0	0	0	%100
5	M38C	X	.678	.678	0	%100
6	M38C	Z	0	0	0	%100
7	M51	X	2.714	2.714	0	%100
8	M51	Z	0	0	0	%100
9	M104A	X	0	0	0	%100
10	M104A	Z	0	0	0	%100
11	M105A	X	0	0	0	%100
12	M105A	Z	0	0	0	%100
13	M134	X	.774	.774	0	%100
14	M134	Z	0	0	0	%100
15	M135	X	.774	.774	0	%100
16	M135	Z	0	0	0	%100
17	M93A	X	0	0	0	%100
18	M93A	Z	0	0	0	%100
19	M94A	X	0	0	0	%100
20	M94A	Z	0	0	0	%100
21	M93B	X	0	0	0	%100
22	M93B	Z	0	0	0	%100
23	M94D	X	0	0	0	%100
24	M94D	Z	0	0	0	%100
25	M53	X	.691	.691	0	%100
26	M53	Z	0	0	0	%100
27	M54	X	.691	.691	0	%100

Member Distributed Loads (BLC 56 : Structure Wi (90 Deg)) (Continued)

	Member Label	Direction	Start Magnitude[lb/ft,...	End Magnitude[lb/ft,...	Start Location[ft,%]	End Location[ft,%]
28	M54	Z	0	0	0	%100
29	M63	X	1.615	1.615	0	%100
30	M63	Z	0	0	0	%100
31	M64	X	1.615	1.615	0	%100
32	M64	Z	0	0	0	%100
33	M69	X	1.425	1.425	0	%100
34	M69	Z	0	0	0	%100
35	M70	X	1.425	1.425	0	%100
36	M70	Z	0	0	0	%100
37	M71	X	.691	.691	0	%100
38	M71	Z	0	0	0	%100
39	M72	X	.691	.691	0	%100
40	M72	Z	0	0	0	%100
41	M81	X	1.615	1.615	0	%100
42	M81	Z	0	0	0	%100
43	M82	X	1.615	1.615	0	%100
44	M82	Z	0	0	0	%100
45	M87	X	1.425	1.425	0	%100
46	M87	Z	0	0	0	%100
47	M88	X	1.425	1.425	0	%100
48	M88	Z	0	0	0	%100
49	M89	X	0	0	0	%100
50	M89	Z	0	0	0	%100
51	M90	X	0	0	0	%100
52	M90	Z	0	0	0	%100
53	M89A	X	4.137	4.137	0	%100
54	M89A	Z	0	0	0	%100
55	M90A	X	4.137	4.137	0	%100
56	M90A	Z	0	0	0	%100
57	M91	X	4.137	4.137	0	%100
58	M91	Z	0	0	0	%100
59	M92	X	4.137	4.137	0	%100
60	M92	Z	0	0	0	%100
61	M101	X	0	0	0	%100
62	M101	Z	0	0	0	%100
63	M91A	X	0	0	0	%100
64	M91A	Z	0	0	0	%100
65	M93	X	2.307	2.307	0	%100
66	M93	Z	0	0	0	%100
67	M95B	X	2.307	2.307	0	%100
68	M95B	Z	0	0	0	%100
69	M97	X	2.307	2.307	0	%100
70	M97	Z	0	0	0	%100
71	M99	X	2.307	2.307	0	%100
72	M99	Z	0	0	0	%100
73	M101A	X	0	0	0	%100
74	M101A	Z	0	0	0	%100
75	M104	X	2.315	2.315	0	%100
76	M104	Z	0	0	0	%100
77	M105B	X	0	0	0	%100
78	M105B	Z	0	0	0	%100
79	M104B	X	1.816	1.816	0	%100
80	M104B	Z	0	0	0	%100
81	M105C	X	1.816	1.816	0	%100
82	M105C	Z	0	0	0	%100
83	M95C	X	0	0	0	%100
84	M95C	Z	0	0	0	%100

Member Distributed Loads (BLC 56 : Structure Wi (90 Deg)) (Continued)

	Member Label	Direction	Start Magnitude[lb/ft,...	End Magnitude[lb/ft,...	Start Location[ft,%]	End Location[ft,%]
85	M96A	X	0	0	0	%100
86	M96A	Z	0	0	0	%100
87	M101B	X	.774	.774	0	%100
88	M101B	Z	0	0	0	%100
89	M102B	X	.774	.774	0	%100
90	M102B	Z	0	0	0	%100
91	MP1A	X	2.695	2.695	0	%100
92	MP1A	Z	0	0	0	%100
93	M144	X	2.214	2.214	0	%100
94	M144	Z	0	0	0	%100
95	M147	X	0	0	0	%100
96	M147	Z	0	0	0	%100
97	M149A	X	1.176	1.176	0	%100
98	M149A	Z	0	0	0	%100
99	M152	X	1.176	1.176	0	%100
100	M152	Z	0	0	0	%100
101	M155	X	0	0	0	%100
102	M155	Z	0	0	0	%100
103	M159	X	1.057	1.057	0	%100
104	M159	Z	0	0	0	%100
105	M163	X	1.057	1.057	0	%100
106	M163	Z	0	0	0	%100
107	M166A	X	.869	.869	0	%100
108	M166A	Z	0	0	0	%100
109	M167	X	.869	.869	0	%100
110	M167	Z	0	0	0	%100
111	M168	X	0	0	0	%100
112	M168	Z	0	0	0	%100
113	MP2A	X	2.695	2.695	0	%100
114	MP2A	Z	0	0	0	%100
115	MP4A	X	2.695	2.695	0	%100
116	MP4A	Z	0	0	0	%100
117	MP5A	X	2.695	2.695	0	%100
118	MP5A	Z	0	0	0	%100
119	MP3A	X	2.695	2.695	0	%100
120	MP3A	Z	0	0	0	%100
121	MP1C	X	2.695	2.695	0	%100
122	MP1C	Z	0	0	0	%100
123	MP2C	X	2.695	2.695	0	%100
124	MP2C	Z	0	0	0	%100
125	MP4C	X	2.695	2.695	0	%100
126	MP4C	Z	0	0	0	%100
127	MP5C	X	2.695	2.695	0	%100
128	MP5C	Z	0	0	0	%100
129	MP3C	X	2.695	2.695	0	%100
130	MP3C	Z	0	0	0	%100
131	MP1B	X	2.695	2.695	0	%100
132	MP1B	Z	0	0	0	%100
133	MP2B	X	2.695	2.695	0	%100
134	MP2B	Z	0	0	0	%100
135	MP4B	X	2.695	2.695	0	%100
136	MP4B	Z	0	0	0	%100
137	MP5B	X	2.695	2.695	0	%100
138	MP5B	Z	0	0	0	%100
139	MP3B	X	2.695	2.695	0	%100
140	MP3B	Z	0	0	0	%100

Member Distributed Loads (BLC 57 : Structure Wi (120 Deg))

	Member Label	Direction	Start Magnitude[lb/ft,...	End Magnitude[lb/ft,...	Start Location[ft,%]	End Location[ft,%]
1	M19	X	1.763	1.763	0	%100
2	M19	Z	1.018	1.018	0	%100
3	M19A	X	2.673	2.673	0	%100
4	M19A	Z	1.543	1.543	0	%100
5	M38C	X	0	0	0	%100
6	M38C	Z	0	0	0	%100
7	M51	X	1.763	1.763	0	%100
8	M51	Z	1.018	1.018	0	%100
9	M104A	X	.199	.199	0	%100
10	M104A	Z	.115	.115	0	%100
11	M105A	X	.199	.199	0	%100
12	M105A	Z	.115	.115	0	%100
13	M134	X	.894	.894	0	%100
14	M134	Z	.516	.516	0	%100
15	M135	X	.894	.894	0	%100
16	M135	Z	.516	.516	0	%100
17	M93A	X	.466	.466	0	%100
18	M93A	Z	.269	.269	0	%100
19	M94A	X	.466	.466	0	%100
20	M94A	Z	.269	.269	0	%100
21	M93B	X	.411	.411	0	%100
22	M93B	Z	.238	.238	0	%100
23	M94D	X	.411	.411	0	%100
24	M94D	Z	.238	.238	0	%100
25	M53	X	.199	.199	0	%100
26	M53	Z	.115	.115	0	%100
27	M54	X	.199	.199	0	%100
28	M54	Z	.115	.115	0	%100
29	M63	X	.466	.466	0	%100
30	M63	Z	.269	.269	0	%100
31	M64	X	.466	.466	0	%100
32	M64	Z	.269	.269	0	%100
33	M69	X	.411	.411	0	%100
34	M69	Z	.238	.238	0	%100
35	M70	X	.411	.411	0	%100
36	M70	Z	.238	.238	0	%100
37	M71	X	.798	.798	0	%100
38	M71	Z	.46	.46	0	%100
39	M72	X	.798	.798	0	%100
40	M72	Z	.46	.46	0	%100
41	M81	X	1.864	1.864	0	%100
42	M81	Z	1.076	1.076	0	%100
43	M82	X	1.864	1.864	0	%100
44	M82	Z	1.076	1.076	0	%100
45	M87	X	1.645	1.645	0	%100
46	M87	Z	.95	.95	0	%100
47	M88	X	1.645	1.645	0	%100
48	M88	Z	.95	.95	0	%100
49	M89	X	1.194	1.194	0	%100
50	M89	Z	.689	.689	0	%100
51	M90	X	1.194	1.194	0	%100
52	M90	Z	.689	.689	0	%100
53	M89A	X	1.194	1.194	0	%100
54	M89A	Z	.689	.689	0	%100
55	M90A	X	1.194	1.194	0	%100
56	M90A	Z	.689	.689	0	%100
57	M91	X	4.777	4.777	0	%100

Member Distributed Loads (BLC 57 : Structure Wi (120 Deg)) (Continued)

	Member Label	Direction	Start Magnitude[lb/ft,...	End Magnitude[lb/ft,...	Start Location[ft,%]	End Location[ft,%]
58	M91	Z	2.758	2.758	0	%100
59	M92	X	4.777	4.777	0	%100
60	M92	Z	2.758	2.758	0	%100
61	M101	X	.666	.666	0	%100
62	M101	Z	.385	.385	0	%100
63	M91A	X	.666	.666	0	%100
64	M91A	Z	.385	.385	0	%100
65	M93	X	.666	.666	0	%100
66	M93	Z	.385	.385	0	%100
67	M95B	X	.666	.666	0	%100
68	M95B	Z	.385	.385	0	%100
69	M97	X	2.664	2.664	0	%100
70	M97	Z	1.538	1.538	0	%100
71	M99	X	2.664	2.664	0	%100
72	M99	Z	1.538	1.538	0	%100
73	M101A	X	.668	.668	0	%100
74	M101A	Z	.386	.386	0	%100
75	M104	X	.668	.668	0	%100
76	M104	Z	.386	.386	0	%100
77	M105B	X	.524	.524	0	%100
78	M105B	Z	.303	.303	0	%100
79	M104B	X	.524	.524	0	%100
80	M104B	Z	.303	.303	0	%100
81	M105C	X	2.097	2.097	0	%100
82	M105C	Z	1.211	1.211	0	%100
83	M95C	X	.224	.224	0	%100
84	M95C	Z	.129	.129	0	%100
85	M96A	X	.224	.224	0	%100
86	M96A	Z	.129	.129	0	%100
87	M101B	X	.224	.224	0	%100
88	M101B	Z	.129	.129	0	%100
89	M102B	X	.224	.224	0	%100
90	M102B	Z	.129	.129	0	%100
91	MP1A	X	2.295	2.295	0	%100
92	MP1A	Z	1.325	1.325	0	%100
93	M144	X	1.897	1.897	0	%100
94	M144	Z	1.095	1.095	0	%100
95	M147	X	.339	.339	0	%100
96	M147	Z	.196	.196	0	%100
97	M149A	X	.339	.339	0	%100
98	M149A	Z	.196	.196	0	%100
99	M152	X	1.358	1.358	0	%100
100	M152	Z	.784	.784	0	%100
101	M155	X	.305	.305	0	%100
102	M155	Z	.176	.176	0	%100
103	M159	X	.305	.305	0	%100
104	M159	Z	.176	.176	0	%100
105	M163	X	1.221	1.221	0	%100
106	M163	Z	.705	.705	0	%100
107	M166A	X	.251	.251	0	%100
108	M166A	Z	.145	.145	0	%100
109	M167	X	1.003	1.003	0	%100
110	M167	Z	.579	.579	0	%100
111	M168	X	.251	.251	0	%100
112	M168	Z	.145	.145	0	%100
113	MP2A	X	2.295	2.295	0	%100
114	MP2A	Z	1.325	1.325	0	%100

Member Distributed Loads (BLC 57 : Structure Wi (120 Deg)) (Continued)

	Member Label	Direction	Start Magnitude[lb/ft,...	End Magnitude[lb/ft,...	Start Location[ft,%]	End Location[ft,%]
115	MP4A	X	2.295	2.295	0	%100
116	MP4A	Z	1.325	1.325	0	%100
117	MP5A	X	2.295	2.295	0	%100
118	MP5A	Z	1.325	1.325	0	%100
119	MP3A	X	2.295	2.295	0	%100
120	MP3A	Z	1.325	1.325	0	%100
121	MP1C	X	2.295	2.295	0	%100
122	MP1C	Z	1.325	1.325	0	%100
123	MP2C	X	2.295	2.295	0	%100
124	MP2C	Z	1.325	1.325	0	%100
125	MP4C	X	2.295	2.295	0	%100
126	MP4C	Z	1.325	1.325	0	%100
127	MP5C	X	2.295	2.295	0	%100
128	MP5C	Z	1.325	1.325	0	%100
129	MP3C	X	2.295	2.295	0	%100
130	MP3C	Z	1.325	1.325	0	%100
131	MP1B	X	2.295	2.295	0	%100
132	MP1B	Z	1.325	1.325	0	%100
133	MP2B	X	2.295	2.295	0	%100
134	MP2B	Z	1.325	1.325	0	%100
135	MP4B	X	2.295	2.295	0	%100
136	MP4B	Z	1.325	1.325	0	%100
137	MP5B	X	2.295	2.295	0	%100
138	MP5B	Z	1.325	1.325	0	%100
139	MP3B	X	2.295	2.295	0	%100
140	MP3B	Z	1.325	1.325	0	%100

Member Distributed Loads (BLC 58 : Structure Wi (150 Deg))

	Member Label	Direction	Start Magnitude[lb/ft,...	End Magnitude[lb/ft,...	Start Location[ft,%]	End Location[ft,%]
1	M19	X	1.357	1.357	0	%100
2	M19	Z	2.35	2.35	0	%100
3	M19A	X	1.157	1.157	0	%100
4	M19A	Z	2.005	2.005	0	%100
5	M38C	X	.339	.339	0	%100
6	M38C	Z	.588	.588	0	%100
7	M51	X	.339	.339	0	%100
8	M51	Z	.588	.588	0	%100
9	M104A	X	.345	.345	0	%100
10	M104A	Z	.598	.598	0	%100
11	M105A	X	.345	.345	0	%100
12	M105A	Z	.598	.598	0	%100
13	M134	X	.387	.387	0	%100
14	M134	Z	.671	.671	0	%100
15	M135	X	.387	.387	0	%100
16	M135	Z	.671	.671	0	%100
17	M93A	X	.807	.807	0	%100
18	M93A	Z	1.398	1.398	0	%100
19	M94A	X	.807	.807	0	%100
20	M94A	Z	1.398	1.398	0	%100
21	M93B	X	.713	.713	0	%100
22	M93B	Z	1.234	1.234	0	%100
23	M94D	X	.713	.713	0	%100
24	M94D	Z	1.234	1.234	0	%100
25	M53	X	0	0	0	%100
26	M53	Z	0	0	0	%100
27	M54	X	0	0	0	%100

Member Distributed Loads (BLC 58 : Structure Wi (150 Deg)) (Continued)

	Member Label	Direction	Start Magnitude[lb/ft,...	End Magnitude[lb/ft,...	Start Location[ft,%]	End Location[ft,%]
28	M54	Z	0	0	0	%100
29	M63	X	0	0	0	%100
30	M63	Z	0	0	0	%100
31	M64	X	0	0	0	%100
32	M64	Z	0	0	0	%100
33	M69	X	0	0	0	%100
34	M69	Z	0	0	0	%100
35	M70	X	0	0	0	%100
36	M70	Z	0	0	0	%100
37	M71	X	.345	.345	0	%100
38	M71	Z	.598	.598	0	%100
39	M72	X	.345	.345	0	%100
40	M72	Z	.598	.598	0	%100
41	M81	X	.807	.807	0	%100
42	M81	Z	1.398	1.398	0	%100
43	M82	X	.807	.807	0	%100
44	M82	Z	1.398	1.398	0	%100
45	M87	X	.713	.713	0	%100
46	M87	Z	1.234	1.234	0	%100
47	M88	X	.713	.713	0	%100
48	M88	Z	1.234	1.234	0	%100
49	M89	X	2.068	2.068	0	%100
50	M89	Z	3.583	3.583	0	%100
51	M90	X	2.068	2.068	0	%100
52	M90	Z	3.583	3.583	0	%100
53	M89A	X	0	0	0	%100
54	M89A	Z	0	0	0	%100
55	M90A	X	0	0	0	%100
56	M90A	Z	0	0	0	%100
57	M91	X	2.068	2.068	0	%100
58	M91	Z	3.583	3.583	0	%100
59	M92	X	2.068	2.068	0	%100
60	M92	Z	3.583	3.583	0	%100
61	M101	X	1.154	1.154	0	%100
62	M101	Z	1.998	1.998	0	%100
63	M91A	X	1.154	1.154	0	%100
64	M91A	Z	1.998	1.998	0	%100
65	M93	X	0	0	0	%100
66	M93	Z	0	0	0	%100
67	M95B	X	0	0	0	%100
68	M95B	Z	0	0	0	%100
69	M97	X	1.154	1.154	0	%100
70	M97	Z	1.998	1.998	0	%100
71	M99	X	1.154	1.154	0	%100
72	M99	Z	1.998	1.998	0	%100
73	M101A	X	1.157	1.157	0	%100
74	M101A	Z	2.005	2.005	0	%100
75	M104	X	0	0	0	%100
76	M104	Z	0	0	0	%100
77	M105B	X	.908	.908	0	%100
78	M105B	Z	1.573	1.573	0	%100
79	M104B	X	0	0	0	%100
80	M104B	Z	0	0	0	%100
81	M105C	X	.908	.908	0	%100
82	M105C	Z	1.573	1.573	0	%100
83	M95C	X	.387	.387	0	%100
84	M95C	Z	.671	.671	0	%100

Member Distributed Loads (BLC 58 : Structure Wi (150 Deg)) (Continued)

	Member Label	Direction	Start Magnitude[lb/ft,...	End Magnitude[lb/ft,...	Start Location[ft,%]	End Location[ft,%]
85	M96A	X	.387	.387	0	%100
86	M96A	Z	.671	.671	0	%100
87	M101B	X	0	0	0	%100
88	M101B	Z	0	0	0	%100
89	M102B	X	0	0	0	%100
90	M102B	Z	0	0	0	%100
91	MP1A	X	1.281	1.281	0	%100
92	MP1A	Z	2.218	2.218	0	%100
93	M144	X	1.071	1.071	0	%100
94	M144	Z	1.856	1.856	0	%100
95	M147	X	.588	.588	0	%100
96	M147	Z	1.018	1.018	0	%100
97	M149A	X	0	0	0	%100
98	M149A	Z	0	0	0	%100
99	M152	X	.588	.588	0	%100
100	M152	Z	1.018	1.018	0	%100
101	M155	X	.529	.529	0	%100
102	M155	Z	.916	.916	0	%100
103	M159	X	0	0	0	%100
104	M159	Z	0	0	0	%100
105	M163	X	.529	.529	0	%100
106	M163	Z	.916	.916	0	%100
107	M166A	X	0	0	0	%100
108	M166A	Z	0	0	0	%100
109	M167	X	.434	.434	0	%100
110	M167	Z	.752	.752	0	%100
111	M168	X	.434	.434	0	%100
112	M168	Z	.752	.752	0	%100
113	MP2A	X	1.281	1.281	0	%100
114	MP2A	Z	2.218	2.218	0	%100
115	MP4A	X	1.281	1.281	0	%100
116	MP4A	Z	2.218	2.218	0	%100
117	MP5A	X	1.281	1.281	0	%100
118	MP5A	Z	2.218	2.218	0	%100
119	MP3A	X	1.281	1.281	0	%100
120	MP3A	Z	2.218	2.218	0	%100
121	MP1C	X	1.281	1.281	0	%100
122	MP1C	Z	2.218	2.218	0	%100
123	MP2C	X	1.281	1.281	0	%100
124	MP2C	Z	2.218	2.218	0	%100
125	MP4C	X	1.281	1.281	0	%100
126	MP4C	Z	2.218	2.218	0	%100
127	MP5C	X	1.281	1.281	0	%100
128	MP5C	Z	2.218	2.218	0	%100
129	MP3C	X	1.281	1.281	0	%100
130	MP3C	Z	2.218	2.218	0	%100
131	MP1B	X	1.281	1.281	0	%100
132	MP1B	Z	2.218	2.218	0	%100
133	MP2B	X	1.281	1.281	0	%100
134	MP2B	Z	2.218	2.218	0	%100
135	MP4B	X	1.281	1.281	0	%100
136	MP4B	Z	2.218	2.218	0	%100
137	MP5B	X	1.281	1.281	0	%100
138	MP5B	Z	2.218	2.218	0	%100
139	MP3B	X	1.281	1.281	0	%100
140	MP3B	Z	2.218	2.218	0	%100

Member Distributed Loads (BLC 59 : Structure Wi (180 Deg))

	Member Label	Direction	Start Magnitude[lb/ft,...	End Magnitude[lb/ft,...	Start Location[ft,%]	End Location[ft,%]
1	M19	X	0	0	0	%100
2	M19	Z	2.035	2.035	0	%100
3	M19A	X	0	0	0	%100
4	M19A	Z	.772	.772	0	%100
5	M38C	X	0	0	0	%100
6	M38C	Z	2.035	2.035	0	%100
7	M51	X	0	0	0	%100
8	M51	Z	0	0	0	%100
9	M104A	X	0	0	0	%100
10	M104A	Z	.921	.921	0	%100
11	M105A	X	0	0	0	%100
12	M105A	Z	.921	.921	0	%100
13	M134	X	0	0	0	%100
14	M134	Z	.258	.258	0	%100
15	M135	X	0	0	0	%100
16	M135	Z	.258	.258	0	%100
17	M93A	X	0	0	0	%100
18	M93A	Z	2.153	2.153	0	%100
19	M94A	X	0	0	0	%100
20	M94A	Z	2.153	2.153	0	%100
21	M93B	X	0	0	0	%100
22	M93B	Z	1.9	1.9	0	%100
23	M94D	X	0	0	0	%100
24	M94D	Z	1.9	1.9	0	%100
25	M53	X	0	0	0	%100
26	M53	Z	.23	.23	0	%100
27	M54	X	0	0	0	%100
28	M54	Z	.23	.23	0	%100
29	M63	X	0	0	0	%100
30	M63	Z	.538	.538	0	%100
31	M64	X	0	0	0	%100
32	M64	Z	.538	.538	0	%100
33	M69	X	0	0	0	%100
34	M69	Z	.475	.475	0	%100
35	M70	X	0	0	0	%100
36	M70	Z	.475	.475	0	%100
37	M71	X	0	0	0	%100
38	M71	Z	.23	.23	0	%100
39	M72	X	0	0	0	%100
40	M72	Z	.23	.23	0	%100
41	M81	X	0	0	0	%100
42	M81	Z	.538	.538	0	%100
43	M82	X	0	0	0	%100
44	M82	Z	.538	.538	0	%100
45	M87	X	0	0	0	%100
46	M87	Z	.475	.475	0	%100
47	M88	X	0	0	0	%100
48	M88	Z	.475	.475	0	%100
49	M89	X	0	0	0	%100
50	M89	Z	5.516	5.516	0	%100
51	M90	X	0	0	0	%100
52	M90	Z	5.516	5.516	0	%100
53	M89A	X	0	0	0	%100
54	M89A	Z	1.379	1.379	0	%100
55	M90A	X	0	0	0	%100
56	M90A	Z	1.379	1.379	0	%100
57	M91	X	0	0	0	%100

Member Distributed Loads (BLC 59 : Structure Wi (180 Deg)) (Continued)

	Member Label	Direction	Start Magnitude[lb/ft,...	End Magnitude[lb/ft,...	Start Location[ft,%]	End Location[ft,%]
58	M91	Z	1.379	1.379	0	%100
59	M92	X	0	0	0	%100
60	M92	Z	1.379	1.379	0	%100
61	M101	X	0	0	0	%100
62	M101	Z	3.076	3.076	0	%100
63	M91A	X	0	0	0	%100
64	M91A	Z	3.076	3.076	0	%100
65	M93	X	0	0	0	%100
66	M93	Z	.769	.769	0	%100
67	M95B	X	0	0	0	%100
68	M95B	Z	.769	.769	0	%100
69	M97	X	0	0	0	%100
70	M97	Z	.769	.769	0	%100
71	M99	X	0	0	0	%100
72	M99	Z	.769	.769	0	%100
73	M101A	X	0	0	0	%100
74	M101A	Z	3.087	3.087	0	%100
75	M104	X	0	0	0	%100
76	M104	Z	.772	.772	0	%100
77	M105B	X	0	0	0	%100
78	M105B	Z	2.421	2.421	0	%100
79	M104B	X	0	0	0	%100
80	M104B	Z	.605	.605	0	%100
81	M105C	X	0	0	0	%100
82	M105C	Z	.605	.605	0	%100
83	M95C	X	0	0	0	%100
84	M95C	Z	1.033	1.033	0	%100
85	M96A	X	0	0	0	%100
86	M96A	Z	1.033	1.033	0	%100
87	M101B	X	0	0	0	%100
88	M101B	Z	.258	.258	0	%100
89	M102B	X	0	0	0	%100
90	M102B	Z	.258	.258	0	%100
91	MP1A	X	0	0	0	%100
92	MP1A	Z	2.517	2.517	0	%100
93	M144	X	0	0	0	%100
94	M144	Z	2.119	2.119	0	%100
95	M147	X	0	0	0	%100
96	M147	Z	1.568	1.568	0	%100
97	M149A	X	0	0	0	%100
98	M149A	Z	.392	.392	0	%100
99	M152	X	0	0	0	%100
100	M152	Z	.392	.392	0	%100
101	M155	X	0	0	0	%100
102	M155	Z	1.41	1.41	0	%100
103	M159	X	0	0	0	%100
104	M159	Z	.352	.352	0	%100
105	M163	X	0	0	0	%100
106	M163	Z	.352	.352	0	%100
107	M166A	X	0	0	0	%100
108	M166A	Z	.29	.29	0	%100
109	M167	X	0	0	0	%100
110	M167	Z	.29	.29	0	%100
111	M168	X	0	0	0	%100
112	M168	Z	1.158	1.158	0	%100
113	MP2A	X	0	0	0	%100
114	MP2A	Z	2.517	2.517	0	%100

Member Distributed Loads (BLC 59 : Structure Wi (180 Deg)) (Continued)

	Member Label	Direction	Start Magnitude[lb/ft,...	End Magnitude[lb/ft,...	Start Location[ft,%]	End Location[ft,%]
115	MP4A	X	0	0	0	%100
116	MP4A	Z	2.517	2.517	0	%100
117	MP5A	X	0	0	0	%100
118	MP5A	Z	2.517	2.517	0	%100
119	MP3A	X	0	0	0	%100
120	MP3A	Z	2.517	2.517	0	%100
121	MP1C	X	0	0	0	%100
122	MP1C	Z	2.517	2.517	0	%100
123	MP2C	X	0	0	0	%100
124	MP2C	Z	2.517	2.517	0	%100
125	MP4C	X	0	0	0	%100
126	MP4C	Z	2.517	2.517	0	%100
127	MP5C	X	0	0	0	%100
128	MP5C	Z	2.517	2.517	0	%100
129	MP3C	X	0	0	0	%100
130	MP3C	Z	2.517	2.517	0	%100
131	MP1B	X	0	0	0	%100
132	MP1B	Z	2.517	2.517	0	%100
133	MP2B	X	0	0	0	%100
134	MP2B	Z	2.517	2.517	0	%100
135	MP4B	X	0	0	0	%100
136	MP4B	Z	2.517	2.517	0	%100
137	MP5B	X	0	0	0	%100
138	MP5B	Z	2.517	2.517	0	%100
139	MP3B	X	0	0	0	%100
140	MP3B	Z	2.517	2.517	0	%100

Member Distributed Loads (BLC 60 : Structure Wi (210 Deg))

	Member Label	Direction	Start Magnitude[lb/ft,...	End Magnitude[lb/ft,...	Start Location[ft,%]	End Location[ft,%]
1	M19	X	-.339	-.339	0	%100
2	M19	Z	.588	.588	0	%100
3	M19A	X	0	0	0	%100
4	M19A	Z	0	0	0	%100
5	M38C	X	-1.357	-1.357	0	%100
6	M38C	Z	2.35	2.35	0	%100
7	M51	X	-.339	-.339	0	%100
8	M51	Z	.588	.588	0	%100
9	M104A	X	-.345	-.345	0	%100
10	M104A	Z	.598	.598	0	%100
11	M105A	X	-.345	-.345	0	%100
12	M105A	Z	.598	.598	0	%100
13	M134	X	0	0	0	%100
14	M134	Z	0	0	0	%100
15	M135	X	0	0	0	%100
16	M135	Z	0	0	0	%100
17	M93A	X	-.807	-.807	0	%100
18	M93A	Z	1.398	1.398	0	%100
19	M94A	X	-.807	-.807	0	%100
20	M94A	Z	1.398	1.398	0	%100
21	M93B	X	-.713	-.713	0	%100
22	M93B	Z	1.234	1.234	0	%100
23	M94D	X	-.713	-.713	0	%100
24	M94D	Z	1.234	1.234	0	%100
25	M53	X	-.345	-.345	0	%100
26	M53	Z	.598	.598	0	%100
27	M54	X	-.345	-.345	0	%100

Member Distributed Loads (BLC 60 : Structure Wi (210 Deg)) (Continued)

	Member Label	Direction	Start Magnitude[lb/ft,...	End Magnitude[lb/ft,...	Start Location[ft,%]	End Location[ft,%]
28	M54	Z	.598	.598	0	%100
29	M63	X	-.807	-.807	0	%100
30	M63	Z	1.398	1.398	0	%100
31	M64	X	-.807	-.807	0	%100
32	M64	Z	1.398	1.398	0	%100
33	M69	X	-.713	-.713	0	%100
34	M69	Z	1.234	1.234	0	%100
35	M70	X	-.713	-.713	0	%100
36	M70	Z	1.234	1.234	0	%100
37	M71	X	0	0	0	%100
38	M71	Z	0	0	0	%100
39	M72	X	0	0	0	%100
40	M72	Z	0	0	0	%100
41	M81	X	0	0	0	%100
42	M81	Z	0	0	0	%100
43	M82	X	0	0	0	%100
44	M82	Z	0	0	0	%100
45	M87	X	0	0	0	%100
46	M87	Z	0	0	0	%100
47	M88	X	0	0	0	%100
48	M88	Z	0	0	0	%100
49	M89	X	-2.068	-2.068	0	%100
50	M89	Z	3.583	3.583	0	%100
51	M90	X	-2.068	-2.068	0	%100
52	M90	Z	3.583	3.583	0	%100
53	M89A	X	-2.068	-2.068	0	%100
54	M89A	Z	3.583	3.583	0	%100
55	M90A	X	-2.068	-2.068	0	%100
56	M90A	Z	3.583	3.583	0	%100
57	M91	X	0	0	0	%100
58	M91	Z	0	0	0	%100
59	M92	X	0	0	0	%100
60	M92	Z	0	0	0	%100
61	M101	X	-1.154	-1.154	0	%100
62	M101	Z	1.998	1.998	0	%100
63	M91A	X	-1.154	-1.154	0	%100
64	M91A	Z	1.998	1.998	0	%100
65	M93	X	-1.154	-1.154	0	%100
66	M93	Z	1.998	1.998	0	%100
67	M95B	X	-1.154	-1.154	0	%100
68	M95B	Z	1.998	1.998	0	%100
69	M97	X	0	0	0	%100
70	M97	Z	0	0	0	%100
71	M99	X	0	0	0	%100
72	M99	Z	0	0	0	%100
73	M101A	X	-1.157	-1.157	0	%100
74	M101A	Z	2.005	2.005	0	%100
75	M104	X	-1.157	-1.157	0	%100
76	M104	Z	2.005	2.005	0	%100
77	M105B	X	-.908	-.908	0	%100
78	M105B	Z	1.573	1.573	0	%100
79	M104B	X	-.908	-.908	0	%100
80	M104B	Z	1.573	1.573	0	%100
81	M105C	X	0	0	0	%100
82	M105C	Z	0	0	0	%100
83	M95C	X	-.387	-.387	0	%100
84	M95C	Z	.671	.671	0	%100

Member Distributed Loads (BLC 60 : Structure Wi (210 Deg)) (Continued)

	Member Label	Direction	Start Magnitude[lb/ft,...	End Magnitude[lb/ft,...	Start Location[ft,%]	End Location[ft,%]
85	M96A	X	-.387	-.387	0	%100
86	M96A	Z	.671	.671	0	%100
87	M101B	X	-.387	-.387	0	%100
88	M101B	Z	.671	.671	0	%100
89	M102B	X	-.387	-.387	0	%100
90	M102B	Z	.671	.671	0	%100
91	MP1A	X	-1.281	-1.281	0	%100
92	MP1A	Z	2.218	2.218	0	%100
93	M144	X	-1.071	-1.071	0	%100
94	M144	Z	1.856	1.856	0	%100
95	M147	X	-.588	-.588	0	%100
96	M147	Z	1.018	1.018	0	%100
97	M149A	X	-.588	-.588	0	%100
98	M149A	Z	1.018	1.018	0	%100
99	M152	X	0	0	0	%100
100	M152	Z	0	0	0	%100
101	M155	X	-.529	-.529	0	%100
102	M155	Z	.916	.916	0	%100
103	M159	X	-.529	-.529	0	%100
104	M159	Z	.916	.916	0	%100
105	M163	X	0	0	0	%100
106	M163	Z	0	0	0	%100
107	M166A	X	-.434	-.434	0	%100
108	M166A	Z	.752	.752	0	%100
109	M167	X	0	0	0	%100
110	M167	Z	0	0	0	%100
111	M168	X	-.434	-.434	0	%100
112	M168	Z	.752	.752	0	%100
113	MP2A	X	-1.281	-1.281	0	%100
114	MP2A	Z	2.218	2.218	0	%100
115	MP4A	X	-1.281	-1.281	0	%100
116	MP4A	Z	2.218	2.218	0	%100
117	MP5A	X	-1.281	-1.281	0	%100
118	MP5A	Z	2.218	2.218	0	%100
119	MP3A	X	-1.281	-1.281	0	%100
120	MP3A	Z	2.218	2.218	0	%100
121	MP1C	X	-1.281	-1.281	0	%100
122	MP1C	Z	2.218	2.218	0	%100
123	MP2C	X	-1.281	-1.281	0	%100
124	MP2C	Z	2.218	2.218	0	%100
125	MP4C	X	-1.281	-1.281	0	%100
126	MP4C	Z	2.218	2.218	0	%100
127	MP5C	X	-1.281	-1.281	0	%100
128	MP5C	Z	2.218	2.218	0	%100
129	MP3C	X	-1.281	-1.281	0	%100
130	MP3C	Z	2.218	2.218	0	%100
131	MP1B	X	-1.281	-1.281	0	%100
132	MP1B	Z	2.218	2.218	0	%100
133	MP2B	X	-1.281	-1.281	0	%100
134	MP2B	Z	2.218	2.218	0	%100
135	MP4B	X	-1.281	-1.281	0	%100
136	MP4B	Z	2.218	2.218	0	%100
137	MP5B	X	-1.281	-1.281	0	%100
138	MP5B	Z	2.218	2.218	0	%100
139	MP3B	X	-1.281	-1.281	0	%100
140	MP3B	Z	2.218	2.218	0	%100

Member Distributed Loads (BLC 61 : Structure Wi (240 Deg))

	Member Label	Direction	Start Magnitude[lb/ft,...	End Magnitude[lb/ft,...	Start Location[ft,%]	End Location[ft,%]
1	M19	X	0	0	0	%100
2	M19	Z	0	0	0	%100
3	M19A	X	-.668	-.668	0	%100
4	M19A	Z	.386	.386	0	%100
5	M38C	X	-1.763	-1.763	0	%100
6	M38C	Z	1.018	1.018	0	%100
7	M51	X	-1.763	-1.763	0	%100
8	M51	Z	1.018	1.018	0	%100
9	M104A	X	-.199	-.199	0	%100
10	M104A	Z	.115	.115	0	%100
11	M105A	X	-.199	-.199	0	%100
12	M105A	Z	.115	.115	0	%100
13	M134	X	-.224	-.224	0	%100
14	M134	Z	.129	.129	0	%100
15	M135	X	-.224	-.224	0	%100
16	M135	Z	.129	.129	0	%100
17	M93A	X	-.466	-.466	0	%100
18	M93A	Z	.269	.269	0	%100
19	M94A	X	-.466	-.466	0	%100
20	M94A	Z	.269	.269	0	%100
21	M93B	X	-.411	-.411	0	%100
22	M93B	Z	.238	.238	0	%100
23	M94D	X	-.411	-.411	0	%100
24	M94D	Z	.238	.238	0	%100
25	M53	X	-.798	-.798	0	%100
26	M53	Z	.46	.46	0	%100
27	M54	X	-.798	-.798	0	%100
28	M54	Z	.46	.46	0	%100
29	M63	X	-1.864	-1.864	0	%100
30	M63	Z	1.076	1.076	0	%100
31	M64	X	-1.864	-1.864	0	%100
32	M64	Z	1.076	1.076	0	%100
33	M69	X	-1.645	-1.645	0	%100
34	M69	Z	.95	.95	0	%100
35	M70	X	-1.645	-1.645	0	%100
36	M70	Z	.95	.95	0	%100
37	M71	X	-.199	-.199	0	%100
38	M71	Z	.115	.115	0	%100
39	M72	X	-.199	-.199	0	%100
40	M72	Z	.115	.115	0	%100
41	M81	X	-.466	-.466	0	%100
42	M81	Z	.269	.269	0	%100
43	M82	X	-.466	-.466	0	%100
44	M82	Z	.269	.269	0	%100
45	M87	X	-.411	-.411	0	%100
46	M87	Z	.238	.238	0	%100
47	M88	X	-.411	-.411	0	%100
48	M88	Z	.238	.238	0	%100
49	M89	X	-1.194	-1.194	0	%100
50	M89	Z	.689	.689	0	%100
51	M90	X	-1.194	-1.194	0	%100
52	M90	Z	.689	.689	0	%100
53	M89A	X	-4.777	-4.777	0	%100
54	M89A	Z	2.758	2.758	0	%100
55	M90A	X	-4.777	-4.777	0	%100
56	M90A	Z	2.758	2.758	0	%100
57	M91	X	-1.194	-1.194	0	%100

Member Distributed Loads (BLC 61 : Structure Wi (240 Deg)) (Continued)

	Member Label	Direction	Start Magnitude[lb/ft,...	End Magnitude[lb/ft,...	Start Location[ft,%]	End Location[ft,%]
58	M91	Z	.689	.689	0	%100
59	M92	X	-1.194	-1.194	0	%100
60	M92	Z	.689	.689	0	%100
61	M101	X	-.666	-.666	0	%100
62	M101	Z	.385	.385	0	%100
63	M91A	X	-.666	-.666	0	%100
64	M91A	Z	.385	.385	0	%100
65	M93	X	-2.664	-2.664	0	%100
66	M93	Z	1.538	1.538	0	%100
67	M95B	X	-2.664	-2.664	0	%100
68	M95B	Z	1.538	1.538	0	%100
69	M97	X	-.666	-.666	0	%100
70	M97	Z	.385	.385	0	%100
71	M99	X	-.666	-.666	0	%100
72	M99	Z	.385	.385	0	%100
73	M101A	X	-.668	-.668	0	%100
74	M101A	Z	.386	.386	0	%100
75	M104	X	-2.673	-2.673	0	%100
76	M104	Z	1.543	1.543	0	%100
77	M105B	X	-.524	-.524	0	%100
78	M105B	Z	.303	.303	0	%100
79	M104B	X	-2.097	-2.097	0	%100
80	M104B	Z	1.211	1.211	0	%100
81	M105C	X	-.524	-.524	0	%100
82	M105C	Z	.303	.303	0	%100
83	M95C	X	-.224	-.224	0	%100
84	M95C	Z	.129	.129	0	%100
85	M96A	X	-.224	-.224	0	%100
86	M96A	Z	.129	.129	0	%100
87	M101B	X	-.894	-.894	0	%100
88	M101B	Z	.516	.516	0	%100
89	M102B	X	-.894	-.894	0	%100
90	M102B	Z	.516	.516	0	%100
91	MP1A	X	-2.295	-2.295	0	%100
92	MP1A	Z	1.325	1.325	0	%100
93	M144	X	-1.897	-1.897	0	%100
94	M144	Z	1.095	1.095	0	%100
95	M147	X	-.339	-.339	0	%100
96	M147	Z	.196	.196	0	%100
97	M149A	X	-1.358	-1.358	0	%100
98	M149A	Z	.784	.784	0	%100
99	M152	X	-.339	-.339	0	%100
100	M152	Z	.196	.196	0	%100
101	M155	X	-.305	-.305	0	%100
102	M155	Z	.176	.176	0	%100
103	M159	X	-1.221	-1.221	0	%100
104	M159	Z	.705	.705	0	%100
105	M163	X	-.305	-.305	0	%100
106	M163	Z	.176	.176	0	%100
107	M166A	X	-1.003	-1.003	0	%100
108	M166A	Z	.579	.579	0	%100
109	M167	X	-.251	-.251	0	%100
110	M167	Z	.145	.145	0	%100
111	M168	X	-.251	-.251	0	%100
112	M168	Z	.145	.145	0	%100
113	MP2A	X	-2.295	-2.295	0	%100
114	MP2A	Z	1.325	1.325	0	%100

Member Distributed Loads (BLC 61 : Structure Wi (240 Deg)) (Continued)

	Member Label	Direction	Start Magnitude[lb/ft,...	End Magnitude[lb/ft,...	Start Location[ft,%]	End Location[ft,%]
115	MP4A	X	-2.295	-2.295	0	%100
116	MP4A	Z	1.325	1.325	0	%100
117	MP5A	X	-2.295	-2.295	0	%100
118	MP5A	Z	1.325	1.325	0	%100
119	MP3A	X	-2.295	-2.295	0	%100
120	MP3A	Z	1.325	1.325	0	%100
121	MP1C	X	-2.295	-2.295	0	%100
122	MP1C	Z	1.325	1.325	0	%100
123	MP2C	X	-2.295	-2.295	0	%100
124	MP2C	Z	1.325	1.325	0	%100
125	MP4C	X	-2.295	-2.295	0	%100
126	MP4C	Z	1.325	1.325	0	%100
127	MP5C	X	-2.295	-2.295	0	%100
128	MP5C	Z	1.325	1.325	0	%100
129	MP3C	X	-2.295	-2.295	0	%100
130	MP3C	Z	1.325	1.325	0	%100
131	MP1B	X	-2.295	-2.295	0	%100
132	MP1B	Z	1.325	1.325	0	%100
133	MP2B	X	-2.295	-2.295	0	%100
134	MP2B	Z	1.325	1.325	0	%100
135	MP4B	X	-2.295	-2.295	0	%100
136	MP4B	Z	1.325	1.325	0	%100
137	MP5B	X	-2.295	-2.295	0	%100
138	MP5B	Z	1.325	1.325	0	%100
139	MP3B	X	-2.295	-2.295	0	%100
140	MP3B	Z	1.325	1.325	0	%100

Member Distributed Loads (BLC 62 : Structure Wi (270 Deg))

	Member Label	Direction	Start Magnitude[lb/ft,...	End Magnitude[lb/ft,...	Start Location[ft,%]	End Location[ft,%]
1	M19	X	-.678	-.678	0	%100
2	M19	Z	0	0	0	%100
3	M19A	X	-2.315	-2.315	0	%100
4	M19A	Z	0	0	0	%100
5	M38C	X	-.678	-.678	0	%100
6	M38C	Z	0	0	0	%100
7	M51	X	-2.714	-2.714	0	%100
8	M51	Z	0	0	0	%100
9	M104A	X	0	0	0	%100
10	M104A	Z	0	0	0	%100
11	M105A	X	0	0	0	%100
12	M105A	Z	0	0	0	%100
13	M134	X	-.774	-.774	0	%100
14	M134	Z	0	0	0	%100
15	M135	X	-.774	-.774	0	%100
16	M135	Z	0	0	0	%100
17	M93A	X	0	0	0	%100
18	M93A	Z	0	0	0	%100
19	M94A	X	0	0	0	%100
20	M94A	Z	0	0	0	%100
21	M93B	X	0	0	0	%100
22	M93B	Z	0	0	0	%100
23	M94D	X	0	0	0	%100
24	M94D	Z	0	0	0	%100
25	M53	X	-.691	-.691	0	%100
26	M53	Z	0	0	0	%100
27	M54	X	-.691	-.691	0	%100

Member Distributed Loads (BLC 62 : Structure Wi (270 Deg)) (Continued)

	Member Label	Direction	Start Magnitude[lb/ft,...	End Magnitude[lb/ft,...	Start Location[ft,%]	End Location[ft,%]
28	M54	Z	0	0	0	%100
29	M63	X	-1.615	-1.615	0	%100
30	M63	Z	0	0	0	%100
31	M64	X	-1.615	-1.615	0	%100
32	M64	Z	0	0	0	%100
33	M69	X	-1.425	-1.425	0	%100
34	M69	Z	0	0	0	%100
35	M70	X	-1.425	-1.425	0	%100
36	M70	Z	0	0	0	%100
37	M71	X	-.691	-.691	0	%100
38	M71	Z	0	0	0	%100
39	M72	X	-.691	-.691	0	%100
40	M72	Z	0	0	0	%100
41	M81	X	-1.615	-1.615	0	%100
42	M81	Z	0	0	0	%100
43	M82	X	-1.615	-1.615	0	%100
44	M82	Z	0	0	0	%100
45	M87	X	-1.425	-1.425	0	%100
46	M87	Z	0	0	0	%100
47	M88	X	-1.425	-1.425	0	%100
48	M88	Z	0	0	0	%100
49	M89	X	0	0	0	%100
50	M89	Z	0	0	0	%100
51	M90	X	0	0	0	%100
52	M90	Z	0	0	0	%100
53	M89A	X	-4.137	-4.137	0	%100
54	M89A	Z	0	0	0	%100
55	M90A	X	-4.137	-4.137	0	%100
56	M90A	Z	0	0	0	%100
57	M91	X	-4.137	-4.137	0	%100
58	M91	Z	0	0	0	%100
59	M92	X	-4.137	-4.137	0	%100
60	M92	Z	0	0	0	%100
61	M101	X	0	0	0	%100
62	M101	Z	0	0	0	%100
63	M91A	X	0	0	0	%100
64	M91A	Z	0	0	0	%100
65	M93	X	-2.307	-2.307	0	%100
66	M93	Z	0	0	0	%100
67	M95B	X	-2.307	-2.307	0	%100
68	M95B	Z	0	0	0	%100
69	M97	X	-2.307	-2.307	0	%100
70	M97	Z	0	0	0	%100
71	M99	X	-2.307	-2.307	0	%100
72	M99	Z	0	0	0	%100
73	M101A	X	0	0	0	%100
74	M101A	Z	0	0	0	%100
75	M104	X	-2.315	-2.315	0	%100
76	M104	Z	0	0	0	%100
77	M105B	X	0	0	0	%100
78	M105B	Z	0	0	0	%100
79	M104B	X	-1.816	-1.816	0	%100
80	M104B	Z	0	0	0	%100
81	M105C	X	-1.816	-1.816	0	%100
82	M105C	Z	0	0	0	%100
83	M95C	X	0	0	0	%100
84	M95C	Z	0	0	0	%100

Member Distributed Loads (BLC 62 : Structure Wi (270 Deg)) (Continued)

	Member Label	Direction	Start Magnitude[lb/ft,...	End Magnitude[lb/ft,...	Start Location[ft,%]	End Location[ft,%]
85	M96A	X	0	0	0	%100
86	M96A	Z	0	0	0	%100
87	M101B	X	-.774	-.774	0	%100
88	M101B	Z	0	0	0	%100
89	M102B	X	-.774	-.774	0	%100
90	M102B	Z	0	0	0	%100
91	MP1A	X	-2.695	-2.695	0	%100
92	MP1A	Z	0	0	0	%100
93	M144	X	-2.214	-2.214	0	%100
94	M144	Z	0	0	0	%100
95	M147	X	0	0	0	%100
96	M147	Z	0	0	0	%100
97	M149A	X	-1.176	-1.176	0	%100
98	M149A	Z	0	0	0	%100
99	M152	X	-1.176	-1.176	0	%100
100	M152	Z	0	0	0	%100
101	M155	X	0	0	0	%100
102	M155	Z	0	0	0	%100
103	M159	X	-1.057	-1.057	0	%100
104	M159	Z	0	0	0	%100
105	M163	X	-1.057	-1.057	0	%100
106	M163	Z	0	0	0	%100
107	M166A	X	-.869	-.869	0	%100
108	M166A	Z	0	0	0	%100
109	M167	X	-.869	-.869	0	%100
110	M167	Z	0	0	0	%100
111	M168	X	0	0	0	%100
112	M168	Z	0	0	0	%100
113	MP2A	X	-2.695	-2.695	0	%100
114	MP2A	Z	0	0	0	%100
115	MP4A	X	-2.695	-2.695	0	%100
116	MP4A	Z	0	0	0	%100
117	MP5A	X	-2.695	-2.695	0	%100
118	MP5A	Z	0	0	0	%100
119	MP3A	X	-2.695	-2.695	0	%100
120	MP3A	Z	0	0	0	%100
121	MP1C	X	-2.695	-2.695	0	%100
122	MP1C	Z	0	0	0	%100
123	MP2C	X	-2.695	-2.695	0	%100
124	MP2C	Z	0	0	0	%100
125	MP4C	X	-2.695	-2.695	0	%100
126	MP4C	Z	0	0	0	%100
127	MP5C	X	-2.695	-2.695	0	%100
128	MP5C	Z	0	0	0	%100
129	MP3C	X	-2.695	-2.695	0	%100
130	MP3C	Z	0	0	0	%100
131	MP1B	X	-2.695	-2.695	0	%100
132	MP1B	Z	0	0	0	%100
133	MP2B	X	-2.695	-2.695	0	%100
134	MP2B	Z	0	0	0	%100
135	MP4B	X	-2.695	-2.695	0	%100
136	MP4B	Z	0	0	0	%100
137	MP5B	X	-2.695	-2.695	0	%100
138	MP5B	Z	0	0	0	%100
139	MP3B	X	-2.695	-2.695	0	%100
140	MP3B	Z	0	0	0	%100

Member Distributed Loads (BLC 63 : Structure Wi (300 Deg))

	Member Label	Direction	Start Magnitude[lb/ft,...	End Magnitude[lb/ft,...	Start Location[ft,%]	End Location[ft,%]
1	M19	X	-1.763	-1.763	0	%100
2	M19	Z	-1.018	-1.018	0	%100
3	M19A	X	-2.673	-2.673	0	%100
4	M19A	Z	-1.543	-1.543	0	%100
5	M38C	X	0	0	0	%100
6	M38C	Z	0	0	0	%100
7	M51	X	-1.763	-1.763	0	%100
8	M51	Z	-1.018	-1.018	0	%100
9	M104A	X	-.199	-.199	0	%100
10	M104A	Z	-.115	-.115	0	%100
11	M105A	X	-.199	-.199	0	%100
12	M105A	Z	-.115	-.115	0	%100
13	M134	X	-.894	-.894	0	%100
14	M134	Z	-.516	-.516	0	%100
15	M135	X	-.894	-.894	0	%100
16	M135	Z	-.516	-.516	0	%100
17	M93A	X	-.466	-.466	0	%100
18	M93A	Z	-.269	-.269	0	%100
19	M94A	X	-.466	-.466	0	%100
20	M94A	Z	-.269	-.269	0	%100
21	M93B	X	-.411	-.411	0	%100
22	M93B	Z	-.238	-.238	0	%100
23	M94D	X	-.411	-.411	0	%100
24	M94D	Z	-.238	-.238	0	%100
25	M53	X	-.199	-.199	0	%100
26	M53	Z	-.115	-.115	0	%100
27	M54	X	-.199	-.199	0	%100
28	M54	Z	-.115	-.115	0	%100
29	M63	X	-.466	-.466	0	%100
30	M63	Z	-.269	-.269	0	%100
31	M64	X	-.466	-.466	0	%100
32	M64	Z	-.269	-.269	0	%100
33	M69	X	-.411	-.411	0	%100
34	M69	Z	-.238	-.238	0	%100
35	M70	X	-.411	-.411	0	%100
36	M70	Z	-.238	-.238	0	%100
37	M71	X	-.798	-.798	0	%100
38	M71	Z	-.46	-.46	0	%100
39	M72	X	-.798	-.798	0	%100
40	M72	Z	-.46	-.46	0	%100
41	M81	X	-1.864	-1.864	0	%100
42	M81	Z	-1.076	-1.076	0	%100
43	M82	X	-1.864	-1.864	0	%100
44	M82	Z	-1.076	-1.076	0	%100
45	M87	X	-1.645	-1.645	0	%100
46	M87	Z	-.95	-.95	0	%100
47	M88	X	-1.645	-1.645	0	%100
48	M88	Z	-.95	-.95	0	%100
49	M89	X	-1.194	-1.194	0	%100
50	M89	Z	-.689	-.689	0	%100
51	M90	X	-1.194	-1.194	0	%100
52	M90	Z	-.689	-.689	0	%100
53	M89A	X	-1.194	-1.194	0	%100
54	M89A	Z	-.689	-.689	0	%100
55	M90A	X	-1.194	-1.194	0	%100
56	M90A	Z	-.689	-.689	0	%100
57	M91	X	-4.777	-4.777	0	%100

Member Distributed Loads (BLC 63 : Structure Wi (300 Deg)) (Continued)

	Member Label	Direction	Start Magnitude[lb/ft,...	End Magnitude[lb/ft,...	Start Location[ft,%]	End Location[ft,%]
58	M91	Z	-2.758	-2.758	0	%100
59	M92	X	-4.777	-4.777	0	%100
60	M92	Z	-2.758	-2.758	0	%100
61	M101	X	-.666	-.666	0	%100
62	M101	Z	-.385	-.385	0	%100
63	M91A	X	-.666	-.666	0	%100
64	M91A	Z	-.385	-.385	0	%100
65	M93	X	-.666	-.666	0	%100
66	M93	Z	-.385	-.385	0	%100
67	M95B	X	-.666	-.666	0	%100
68	M95B	Z	-.385	-.385	0	%100
69	M97	X	-2.664	-2.664	0	%100
70	M97	Z	-1.538	-1.538	0	%100
71	M99	X	-2.664	-2.664	0	%100
72	M99	Z	-1.538	-1.538	0	%100
73	M101A	X	-.668	-.668	0	%100
74	M101A	Z	-.386	-.386	0	%100
75	M104	X	-.668	-.668	0	%100
76	M104	Z	-.386	-.386	0	%100
77	M105B	X	-.524	-.524	0	%100
78	M105B	Z	-.303	-.303	0	%100
79	M104B	X	-.524	-.524	0	%100
80	M104B	Z	-.303	-.303	0	%100
81	M105C	X	-2.097	-2.097	0	%100
82	M105C	Z	-1.211	-1.211	0	%100
83	M95C	X	-.224	-.224	0	%100
84	M95C	Z	-.129	-.129	0	%100
85	M96A	X	-.224	-.224	0	%100
86	M96A	Z	-.129	-.129	0	%100
87	M101B	X	-.224	-.224	0	%100
88	M101B	Z	-.129	-.129	0	%100
89	M102B	X	-.224	-.224	0	%100
90	M102B	Z	-.129	-.129	0	%100
91	MP1A	X	-2.295	-2.295	0	%100
92	MP1A	Z	-1.325	-1.325	0	%100
93	M144	X	-1.897	-1.897	0	%100
94	M144	Z	-1.095	-1.095	0	%100
95	M147	X	-.339	-.339	0	%100
96	M147	Z	-.196	-.196	0	%100
97	M149A	X	-.339	-.339	0	%100
98	M149A	Z	-.196	-.196	0	%100
99	M152	X	-1.358	-1.358	0	%100
100	M152	Z	-.784	-.784	0	%100
101	M155	X	-.305	-.305	0	%100
102	M155	Z	-.176	-.176	0	%100
103	M159	X	-.305	-.305	0	%100
104	M159	Z	-.176	-.176	0	%100
105	M163	X	-1.221	-1.221	0	%100
106	M163	Z	-.705	-.705	0	%100
107	M166A	X	-.251	-.251	0	%100
108	M166A	Z	-.145	-.145	0	%100
109	M167	X	-1.003	-1.003	0	%100
110	M167	Z	-.579	-.579	0	%100
111	M168	X	-.251	-.251	0	%100
112	M168	Z	-.145	-.145	0	%100
113	MP2A	X	-2.295	-2.295	0	%100
114	MP2A	Z	-1.325	-1.325	0	%100

Member Distributed Loads (BLC 63 : Structure Wi (300 Deg)) (Continued)

	Member Label	Direction	Start Magnitude[lb/ft,...	End Magnitude[lb/ft,...	Start Location[ft,%]	End Location[ft,%]
115	MP4A	X	-2.295	-2.295	0	%100
116	MP4A	Z	-1.325	-1.325	0	%100
117	MP5A	X	-2.295	-2.295	0	%100
118	MP5A	Z	-1.325	-1.325	0	%100
119	MP3A	X	-2.295	-2.295	0	%100
120	MP3A	Z	-1.325	-1.325	0	%100
121	MP1C	X	-2.295	-2.295	0	%100
122	MP1C	Z	-1.325	-1.325	0	%100
123	MP2C	X	-2.295	-2.295	0	%100
124	MP2C	Z	-1.325	-1.325	0	%100
125	MP4C	X	-2.295	-2.295	0	%100
126	MP4C	Z	-1.325	-1.325	0	%100
127	MP5C	X	-2.295	-2.295	0	%100
128	MP5C	Z	-1.325	-1.325	0	%100
129	MP3C	X	-2.295	-2.295	0	%100
130	MP3C	Z	-1.325	-1.325	0	%100
131	MP1B	X	-2.295	-2.295	0	%100
132	MP1B	Z	-1.325	-1.325	0	%100
133	MP2B	X	-2.295	-2.295	0	%100
134	MP2B	Z	-1.325	-1.325	0	%100
135	MP4B	X	-2.295	-2.295	0	%100
136	MP4B	Z	-1.325	-1.325	0	%100
137	MP5B	X	-2.295	-2.295	0	%100
138	MP5B	Z	-1.325	-1.325	0	%100
139	MP3B	X	-2.295	-2.295	0	%100
140	MP3B	Z	-1.325	-1.325	0	%100

Member Distributed Loads (BLC 64 : Structure Wi (330 Deg))

	Member Label	Direction	Start Magnitude[lb/ft,...	End Magnitude[lb/ft,...	Start Location[ft,%]	End Location[ft,%]
1	M19	X	-1.357	-1.357	0	%100
2	M19	Z	-2.35	-2.35	0	%100
3	M19A	X	-1.157	-1.157	0	%100
4	M19A	Z	-2.005	-2.005	0	%100
5	M38C	X	-.339	-.339	0	%100
6	M38C	Z	-.588	-.588	0	%100
7	M51	X	-.339	-.339	0	%100
8	M51	Z	-.588	-.588	0	%100
9	M104A	X	-.345	-.345	0	%100
10	M104A	Z	-.598	-.598	0	%100
11	M105A	X	-.345	-.345	0	%100
12	M105A	Z	-.598	-.598	0	%100
13	M134	X	-.387	-.387	0	%100
14	M134	Z	-.671	-.671	0	%100
15	M135	X	-.387	-.387	0	%100
16	M135	Z	-.671	-.671	0	%100
17	M93A	X	-.807	-.807	0	%100
18	M93A	Z	-1.398	-1.398	0	%100
19	M94A	X	-.807	-.807	0	%100
20	M94A	Z	-1.398	-1.398	0	%100
21	M93B	X	-.713	-.713	0	%100
22	M93B	Z	-1.234	-1.234	0	%100
23	M94D	X	-.713	-.713	0	%100
24	M94D	Z	-1.234	-1.234	0	%100
25	M53	X	0	0	0	%100
26	M53	Z	0	0	0	%100
27	M54	X	0	0	0	%100

Member Distributed Loads (BLC 64 : Structure Wi (330 Deg)) (Continued)

	Member Label	Direction	Start Magnitude[lb/ft,...	End Magnitude[lb/ft,...	Start Location[ft,%]	End Location[ft,%]
28	M54	Z	0	0	0	%100
29	M63	X	0	0	0	%100
30	M63	Z	0	0	0	%100
31	M64	X	0	0	0	%100
32	M64	Z	0	0	0	%100
33	M69	X	0	0	0	%100
34	M69	Z	0	0	0	%100
35	M70	X	0	0	0	%100
36	M70	Z	0	0	0	%100
37	M71	X	-.345	-.345	0	%100
38	M71	Z	-.598	-.598	0	%100
39	M72	X	-.345	-.345	0	%100
40	M72	Z	-.598	-.598	0	%100
41	M81	X	-.807	-.807	0	%100
42	M81	Z	-1.398	-1.398	0	%100
43	M82	X	-.807	-.807	0	%100
44	M82	Z	-1.398	-1.398	0	%100
45	M87	X	-.713	-.713	0	%100
46	M87	Z	-1.234	-1.234	0	%100
47	M88	X	-.713	-.713	0	%100
48	M88	Z	-1.234	-1.234	0	%100
49	M89	X	-2.068	-2.068	0	%100
50	M89	Z	-3.583	-3.583	0	%100
51	M90	X	-2.068	-2.068	0	%100
52	M90	Z	-3.583	-3.583	0	%100
53	M89A	X	0	0	0	%100
54	M89A	Z	0	0	0	%100
55	M90A	X	0	0	0	%100
56	M90A	Z	0	0	0	%100
57	M91	X	-2.068	-2.068	0	%100
58	M91	Z	-3.583	-3.583	0	%100
59	M92	X	-2.068	-2.068	0	%100
60	M92	Z	-3.583	-3.583	0	%100
61	M101	X	-1.154	-1.154	0	%100
62	M101	Z	-1.998	-1.998	0	%100
63	M91A	X	-1.154	-1.154	0	%100
64	M91A	Z	-1.998	-1.998	0	%100
65	M93	X	0	0	0	%100
66	M93	Z	0	0	0	%100
67	M95B	X	0	0	0	%100
68	M95B	Z	0	0	0	%100
69	M97	X	-1.154	-1.154	0	%100
70	M97	Z	-1.998	-1.998	0	%100
71	M99	X	-1.154	-1.154	0	%100
72	M99	Z	-1.998	-1.998	0	%100
73	M101A	X	-1.157	-1.157	0	%100
74	M101A	Z	-2.005	-2.005	0	%100
75	M104	X	0	0	0	%100
76	M104	Z	0	0	0	%100
77	M105B	X	-.908	-.908	0	%100
78	M105B	Z	-1.573	-1.573	0	%100
79	M104B	X	0	0	0	%100
80	M104B	Z	0	0	0	%100
81	M105C	X	-.908	-.908	0	%100
82	M105C	Z	-1.573	-1.573	0	%100
83	M95C	X	-.387	-.387	0	%100
84	M95C	Z	-.671	-.671	0	%100

Member Distributed Loads (BLC 64 : Structure Wi (330 Deg)) (Continued)

	Member Label	Direction	Start Magnitude[lb/ft,...	End Magnitude[lb/ft,...	Start Location[ft,%]	End Location[ft,%]
85	M96A	X	-.387	-.387	0	%100
86	M96A	Z	-.671	-.671	0	%100
87	M101B	X	0	0	0	%100
88	M101B	Z	0	0	0	%100
89	M102B	X	0	0	0	%100
90	M102B	Z	0	0	0	%100
91	MP1A	X	-1.281	-1.281	0	%100
92	MP1A	Z	-2.218	-2.218	0	%100
93	M144	X	-1.071	-1.071	0	%100
94	M144	Z	-1.856	-1.856	0	%100
95	M147	X	-.588	-.588	0	%100
96	M147	Z	-1.018	-1.018	0	%100
97	M149A	X	0	0	0	%100
98	M149A	Z	0	0	0	%100
99	M152	X	-.588	-.588	0	%100
100	M152	Z	-1.018	-1.018	0	%100
101	M155	X	-.529	-.529	0	%100
102	M155	Z	-.916	-.916	0	%100
103	M159	X	0	0	0	%100
104	M159	Z	0	0	0	%100
105	M163	X	-.529	-.529	0	%100
106	M163	Z	-.916	-.916	0	%100
107	M166A	X	0	0	0	%100
108	M166A	Z	0	0	0	%100
109	M167	X	-.434	-.434	0	%100
110	M167	Z	-.752	-.752	0	%100
111	M168	X	-.434	-.434	0	%100
112	M168	Z	-.752	-.752	0	%100
113	MP2A	X	-1.281	-1.281	0	%100
114	MP2A	Z	-2.218	-2.218	0	%100
115	MP4A	X	-1.281	-1.281	0	%100
116	MP4A	Z	-2.218	-2.218	0	%100
117	MP5A	X	-1.281	-1.281	0	%100
118	MP5A	Z	-2.218	-2.218	0	%100
119	MP3A	X	-1.281	-1.281	0	%100
120	MP3A	Z	-2.218	-2.218	0	%100
121	MP1C	X	-1.281	-1.281	0	%100
122	MP1C	Z	-2.218	-2.218	0	%100
123	MP2C	X	-1.281	-1.281	0	%100
124	MP2C	Z	-2.218	-2.218	0	%100
125	MP4C	X	-1.281	-1.281	0	%100
126	MP4C	Z	-2.218	-2.218	0	%100
127	MP5C	X	-1.281	-1.281	0	%100
128	MP5C	Z	-2.218	-2.218	0	%100
129	MP3C	X	-1.281	-1.281	0	%100
130	MP3C	Z	-2.218	-2.218	0	%100
131	MP1B	X	-1.281	-1.281	0	%100
132	MP1B	Z	-2.218	-2.218	0	%100
133	MP2B	X	-1.281	-1.281	0	%100
134	MP2B	Z	-2.218	-2.218	0	%100
135	MP4B	X	-1.281	-1.281	0	%100
136	MP4B	Z	-2.218	-2.218	0	%100
137	MP5B	X	-1.281	-1.281	0	%100
138	MP5B	Z	-2.218	-2.218	0	%100
139	MP3B	X	-1.281	-1.281	0	%100
140	MP3B	Z	-2.218	-2.218	0	%100

Member Distributed Loads (BLC 65 : Structure Wm (0 Deg))

	Member Label	Direction	Start Magnitude[lb/ft,...	End Magnitude[lb/ft,...	Start Location[ft,%]	End Location[ft,%]
1	M19	X	0	0	0	%100
2	M19	Z	-.374	-.374	0	%100
3	M19A	X	0	0	0	%100
4	M19A	Z	-.207	-.207	0	%100
5	M38C	X	0	0	0	%100
6	M38C	Z	-.374	-.374	0	%100
7	M51	X	0	0	0	%100
8	M51	Z	0	0	0	%100
9	M104A	X	0	0	0	%100
10	M104A	Z	-.052	-.052	0	%100
11	M105A	X	0	0	0	%100
12	M105A	Z	-.052	-.052	0	%100
13	M134	X	0	0	0	%100
14	M134	Z	-.015	-.015	0	%100
15	M135	X	0	0	0	%100
16	M135	Z	-.015	-.015	0	%100
17	M93A	X	0	0	0	%100
18	M93A	Z	-.394	-.394	0	%100
19	M94A	X	0	0	0	%100
20	M94A	Z	-.394	-.394	0	%100
21	M93B	X	0	0	0	%100
22	M93B	Z	-.354	-.354	0	%100
23	M94D	X	0	0	0	%100
24	M94D	Z	-.354	-.354	0	%100
25	M53	X	0	0	0	%100
26	M53	Z	-.013	-.013	0	%100
27	M54	X	0	0	0	%100
28	M54	Z	-.013	-.013	0	%100
29	M63	X	0	0	0	%100
30	M63	Z	-.099	-.099	0	%100
31	M64	X	0	0	0	%100
32	M64	Z	-.099	-.099	0	%100
33	M69	X	0	0	0	%100
34	M69	Z	-.089	-.089	0	%100
35	M70	X	0	0	0	%100
36	M70	Z	-.089	-.089	0	%100
37	M71	X	0	0	0	%100
38	M71	Z	-.013	-.013	0	%100
39	M72	X	0	0	0	%100
40	M72	Z	-.013	-.013	0	%100
41	M81	X	0	0	0	%100
42	M81	Z	-.099	-.099	0	%100
43	M82	X	0	0	0	%100
44	M82	Z	-.099	-.099	0	%100
45	M87	X	0	0	0	%100
46	M87	Z	-.089	-.089	0	%100
47	M88	X	0	0	0	%100
48	M88	Z	-.089	-.089	0	%100
49	M89	X	0	0	0	%100
50	M89	Z	-1.508	-1.508	0	%100
51	M90	X	0	0	0	%100
52	M90	Z	-1.508	-1.508	0	%100
53	M89A	X	0	0	0	%100
54	M89A	Z	-.377	-.377	0	%100
55	M90A	X	0	0	0	%100
56	M90A	Z	-.377	-.377	0	%100
57	M91	X	0	0	0	%100

Member Distributed Loads (BLC 65 : Structure Wm (0 Deg)) (Continued)

	Member Label	Direction	Start Magnitude[lb/ft,...	End Magnitude[lb/ft,...	Start Location[ft,%]	End Location[ft,%]
58	M91	Z	-.377	-.377	0	%100
59	M92	X	0	0	0	%100
60	M92	Z	-.377	-.377	0	%100
61	M101	X	0	0	0	%100
62	M101	Z	-.829	-.829	0	%100
63	M91A	X	0	0	0	%100
64	M91A	Z	-.829	-.829	0	%100
65	M93	X	0	0	0	%100
66	M93	Z	-.207	-.207	0	%100
67	M95B	X	0	0	0	%100
68	M95B	Z	-.207	-.207	0	%100
69	M97	X	0	0	0	%100
70	M97	Z	-.207	-.207	0	%100
71	M99	X	0	0	0	%100
72	M99	Z	-.207	-.207	0	%100
73	M101A	X	0	0	0	%100
74	M101A	Z	-.829	-.829	0	%100
75	M104	X	0	0	0	%100
76	M104	Z	-.207	-.207	0	%100
77	M105B	X	0	0	0	%100
78	M105B	Z	-.394	-.394	0	%100
79	M104B	X	0	0	0	%100
80	M104B	Z	-.098	-.098	0	%100
81	M105C	X	0	0	0	%100
82	M105C	Z	-.098	-.098	0	%100
83	M95C	X	0	0	0	%100
84	M95C	Z	-.061	-.061	0	%100
85	M96A	X	0	0	0	%100
86	M96A	Z	-.061	-.061	0	%100
87	M101B	X	0	0	0	%100
88	M101B	Z	-.015	-.015	0	%100
89	M102B	X	0	0	0	%100
90	M102B	Z	-.015	-.015	0	%100
91	MP1A	X	0	0	0	%100
92	MP1A	Z	-.428	-.428	0	%100
93	M144	X	0	0	0	%100
94	M144	Z	-.368	-.368	0	%100
95	M147	X	0	0	0	%100
96	M147	Z	-.086	-.086	0	%100
97	M149A	X	0	0	0	%100
98	M149A	Z	-.022	-.022	0	%100
99	M152	X	0	0	0	%100
100	M152	Z	-.022	-.022	0	%100
101	M155	X	0	0	0	%100
102	M155	Z	-.082	-.082	0	%100
103	M159	X	0	0	0	%100
104	M159	Z	-.021	-.021	0	%100
105	M163	X	0	0	0	%100
106	M163	Z	-.021	-.021	0	%100
107	M166A	X	0	0	0	%100
108	M166A	Z	-.021	-.021	0	%100
109	M167	X	0	0	0	%100
110	M167	Z	-.021	-.021	0	%100
111	M168	X	0	0	0	%100
112	M168	Z	-.083	-.083	0	%100
113	MP2A	X	0	0	0	%100
114	MP2A	Z	-.428	-.428	0	%100

Member Distributed Loads (BLC 65 : Structure Wm (0 Deg)) (Continued)

	Member Label	Direction	Start Magnitude[lb/ft,...	End Magnitude[lb/ft,...	Start Location[ft,%]	End Location[ft,%]
115	MP4A	X	0	0	0	%100
116	MP4A	Z	-.428	-.428	0	%100
117	MP5A	X	0	0	0	%100
118	MP5A	Z	-.428	-.428	0	%100
119	MP3A	X	0	0	0	%100
120	MP3A	Z	-.428	-.428	0	%100
121	MP1C	X	0	0	0	%100
122	MP1C	Z	-.428	-.428	0	%100
123	MP2C	X	0	0	0	%100
124	MP2C	Z	-.428	-.428	0	%100
125	MP4C	X	0	0	0	%100
126	MP4C	Z	-.428	-.428	0	%100
127	MP5C	X	0	0	0	%100
128	MP5C	Z	-.428	-.428	0	%100
129	MP3C	X	0	0	0	%100
130	MP3C	Z	-.428	-.428	0	%100
131	MP1B	X	0	0	0	%100
132	MP1B	Z	-.428	-.428	0	%100
133	MP2B	X	0	0	0	%100
134	MP2B	Z	-.428	-.428	0	%100
135	MP4B	X	0	0	0	%100
136	MP4B	Z	-.428	-.428	0	%100
137	MP5B	X	0	0	0	%100
138	MP5B	Z	-.428	-.428	0	%100
139	MP3B	X	0	0	0	%100
140	MP3B	Z	-.428	-.428	0	%100

Member Distributed Loads (BLC 66 : Structure Wm (30 Deg))

	Member Label	Direction	Start Magnitude[lb/ft,...	End Magnitude[lb/ft,...	Start Location[ft,%]	End Location[ft,%]
1	M19	X	.062	.062	0	%100
2	M19	Z	-.108	-.108	0	%100
3	M19A	X	0	0	0	%100
4	M19A	Z	0	0	0	%100
5	M38C	X	.249	.249	0	%100
6	M38C	Z	-.432	-.432	0	%100
7	M51	X	.062	.062	0	%100
8	M51	Z	-.108	-.108	0	%100
9	M104A	X	.019	.019	0	%100
10	M104A	Z	-.034	-.034	0	%100
11	M105A	X	.019	.019	0	%100
12	M105A	Z	-.034	-.034	0	%100
13	M134	X	0	0	0	%100
14	M134	Z	0	0	0	%100
15	M135	X	0	0	0	%100
16	M135	Z	0	0	0	%100
17	M93A	X	.148	.148	0	%100
18	M93A	Z	-.256	-.256	0	%100
19	M94A	X	.148	.148	0	%100
20	M94A	Z	-.256	-.256	0	%100
21	M93B	X	.133	.133	0	%100
22	M93B	Z	-.23	-.23	0	%100
23	M94D	X	.133	.133	0	%100
24	M94D	Z	-.23	-.23	0	%100
25	M53	X	.019	.019	0	%100
26	M53	Z	-.034	-.034	0	%100
27	M54	X	.019	.019	0	%100

Member Distributed Loads (BLC 66 : Structure Wm (30 Deg)) (Continued)

	Member Label	Direction	Start Magnitude[lb/ft,...	End Magnitude[lb/ft,...	Start Location[ft,%]	End Location[ft,%]
28	M54	Z	-.034	-.034	0	%100
29	M63	X	.148	.148	0	%100
30	M63	Z	-.256	-.256	0	%100
31	M64	X	.148	.148	0	%100
32	M64	Z	-.256	-.256	0	%100
33	M69	X	.133	.133	0	%100
34	M69	Z	-.23	-.23	0	%100
35	M70	X	.133	.133	0	%100
36	M70	Z	-.23	-.23	0	%100
37	M71	X	0	0	0	%100
38	M71	Z	0	0	0	%100
39	M72	X	0	0	0	%100
40	M72	Z	0	0	0	%100
41	M81	X	0	0	0	%100
42	M81	Z	0	0	0	%100
43	M82	X	0	0	0	%100
44	M82	Z	0	0	0	%100
45	M87	X	0	0	0	%100
46	M87	Z	0	0	0	%100
47	M88	X	0	0	0	%100
48	M88	Z	0	0	0	%100
49	M89	X	.565	.565	0	%100
50	M89	Z	-.979	-.979	0	%100
51	M90	X	.565	.565	0	%100
52	M90	Z	-.979	-.979	0	%100
53	M89A	X	.565	.565	0	%100
54	M89A	Z	-.979	-.979	0	%100
55	M90A	X	.565	.565	0	%100
56	M90A	Z	-.979	-.979	0	%100
57	M91	X	0	0	0	%100
58	M91	Z	0	0	0	%100
59	M92	X	0	0	0	%100
60	M92	Z	0	0	0	%100
61	M101	X	.311	.311	0	%100
62	M101	Z	-.538	-.538	0	%100
63	M91A	X	.311	.311	0	%100
64	M91A	Z	-.538	-.538	0	%100
65	M93	X	.311	.311	0	%100
66	M93	Z	-.538	-.538	0	%100
67	M95B	X	.311	.311	0	%100
68	M95B	Z	-.538	-.538	0	%100
69	M97	X	0	0	0	%100
70	M97	Z	0	0	0	%100
71	M99	X	0	0	0	%100
72	M99	Z	0	0	0	%100
73	M101A	X	.311	.311	0	%100
74	M101A	Z	-.538	-.538	0	%100
75	M104	X	.311	.311	0	%100
76	M104	Z	-.538	-.538	0	%100
77	M105B	X	.148	.148	0	%100
78	M105B	Z	-.256	-.256	0	%100
79	M104B	X	.148	.148	0	%100
80	M104B	Z	-.256	-.256	0	%100
81	M105C	X	0	0	0	%100
82	M105C	Z	0	0	0	%100
83	M95C	X	.023	.023	0	%100
84	M95C	Z	-.039	-.039	0	%100

Member Distributed Loads (BLC 66 : Structure Wm (30 Deg)) (Continued)

	Member Label	Direction	Start Magnitude[lb/ft,...	End Magnitude[lb/ft,...	Start Location[ft,%]	End Location[ft,%]
85	M96A	X	.023	.023	0	%100
86	M96A	Z	-.039	-.039	0	%100
87	M101B	X	.023	.023	0	%100
88	M101B	Z	-.039	-.039	0	%100
89	M102B	X	.023	.023	0	%100
90	M102B	Z	-.039	-.039	0	%100
91	MP1A	X	.222	.222	0	%100
92	MP1A	Z	-.385	-.385	0	%100
93	M144	X	.188	.188	0	%100
94	M144	Z	-.326	-.326	0	%100
95	M147	X	.032	.032	0	%100
96	M147	Z	-.056	-.056	0	%100
97	M149A	X	.032	.032	0	%100
98	M149A	Z	-.056	-.056	0	%100
99	M152	X	0	0	0	%100
100	M152	Z	0	0	0	%100
101	M155	X	.031	.031	0	%100
102	M155	Z	-.053	-.053	0	%100
103	M159	X	.031	.031	0	%100
104	M159	Z	-.053	-.053	0	%100
105	M163	X	0	0	0	%100
106	M163	Z	0	0	0	%100
107	M166A	X	.031	.031	0	%100
108	M166A	Z	-.054	-.054	0	%100
109	M167	X	0	0	0	%100
110	M167	Z	0	0	0	%100
111	M168	X	.031	.031	0	%100
112	M168	Z	-.054	-.054	0	%100
113	MP2A	X	.222	.222	0	%100
114	MP2A	Z	-.385	-.385	0	%100
115	MP4A	X	.222	.222	0	%100
116	MP4A	Z	-.385	-.385	0	%100
117	MP5A	X	.222	.222	0	%100
118	MP5A	Z	-.385	-.385	0	%100
119	MP3A	X	.222	.222	0	%100
120	MP3A	Z	-.385	-.385	0	%100
121	MP1C	X	.222	.222	0	%100
122	MP1C	Z	-.385	-.385	0	%100
123	MP2C	X	.222	.222	0	%100
124	MP2C	Z	-.385	-.385	0	%100
125	MP4C	X	.222	.222	0	%100
126	MP4C	Z	-.385	-.385	0	%100
127	MP5C	X	.222	.222	0	%100
128	MP5C	Z	-.385	-.385	0	%100
129	MP3C	X	.222	.222	0	%100
130	MP3C	Z	-.385	-.385	0	%100
131	MP1B	X	.222	.222	0	%100
132	MP1B	Z	-.385	-.385	0	%100
133	MP2B	X	.222	.222	0	%100
134	MP2B	Z	-.385	-.385	0	%100
135	MP4B	X	.222	.222	0	%100
136	MP4B	Z	-.385	-.385	0	%100
137	MP5B	X	.222	.222	0	%100
138	MP5B	Z	-.385	-.385	0	%100
139	MP3B	X	.222	.222	0	%100
140	MP3B	Z	-.385	-.385	0	%100

Member Distributed Loads (BLC 67 : Structure Wm (60 Deg))

	Member Label	Direction	Start Magnitude[lb/ft,...	End Magnitude[lb/ft,...	Start Location[ft,%]	End Location[ft,%]
1	M19	X	0	0	0	%100
2	M19	Z	0	0	0	%100
3	M19A	X	.179	.179	0	%100
4	M19A	Z	-.104	-.104	0	%100
5	M38C	X	.324	.324	0	%100
6	M38C	Z	-.187	-.187	0	%100
7	M51	X	.324	.324	0	%100
8	M51	Z	-.187	-.187	0	%100
9	M104A	X	.011	.011	0	%100
10	M104A	Z	-.006	-.006	0	%100
11	M105A	X	.011	.011	0	%100
12	M105A	Z	-.006	-.006	0	%100
13	M134	X	.013	.013	0	%100
14	M134	Z	-.008	-.008	0	%100
15	M135	X	.013	.013	0	%100
16	M135	Z	-.008	-.008	0	%100
17	M93A	X	.085	.085	0	%100
18	M93A	Z	-.049	-.049	0	%100
19	M94A	X	.085	.085	0	%100
20	M94A	Z	-.049	-.049	0	%100
21	M93B	X	.077	.077	0	%100
22	M93B	Z	-.044	-.044	0	%100
23	M94D	X	.077	.077	0	%100
24	M94D	Z	-.044	-.044	0	%100
25	M53	X	.045	.045	0	%100
26	M53	Z	-.026	-.026	0	%100
27	M54	X	.045	.045	0	%100
28	M54	Z	-.026	-.026	0	%100
29	M63	X	.342	.342	0	%100
30	M63	Z	-.197	-.197	0	%100
31	M64	X	.342	.342	0	%100
32	M64	Z	-.197	-.197	0	%100
33	M69	X	.307	.307	0	%100
34	M69	Z	-.177	-.177	0	%100
35	M70	X	.307	.307	0	%100
36	M70	Z	-.177	-.177	0	%100
37	M71	X	.011	.011	0	%100
38	M71	Z	-.006	-.006	0	%100
39	M72	X	.011	.011	0	%100
40	M72	Z	-.006	-.006	0	%100
41	M81	X	.085	.085	0	%100
42	M81	Z	-.049	-.049	0	%100
43	M82	X	.085	.085	0	%100
44	M82	Z	-.049	-.049	0	%100
45	M87	X	.077	.077	0	%100
46	M87	Z	-.044	-.044	0	%100
47	M88	X	.077	.077	0	%100
48	M88	Z	-.044	-.044	0	%100
49	M89	X	.326	.326	0	%100
50	M89	Z	-.188	-.188	0	%100
51	M90	X	.326	.326	0	%100
52	M90	Z	-.188	-.188	0	%100
53	M89A	X	1.306	1.306	0	%100
54	M89A	Z	-.754	-.754	0	%100
55	M90A	X	1.306	1.306	0	%100
56	M90A	Z	-.754	-.754	0	%100
57	M91	X	.326	.326	0	%100

Member Distributed Loads (BLC 67 : Structure Wm (60 Deg)) (Continued)

	Member Label	Direction	Start Magnitude[lb/ft,...	End Magnitude[lb/ft,...	Start Location[ft,%]	End Location[ft,%]
58	M91	Z	-.188	-.188	0	%100
59	M92	X	.326	.326	0	%100
60	M92	Z	-.188	-.188	0	%100
61	M101	X	.179	.179	0	%100
62	M101	Z	-.104	-.104	0	%100
63	M91A	X	.179	.179	0	%100
64	M91A	Z	-.104	-.104	0	%100
65	M93	X	.718	.718	0	%100
66	M93	Z	-.414	-.414	0	%100
67	M95B	X	.718	.718	0	%100
68	M95B	Z	-.414	-.414	0	%100
69	M97	X	.179	.179	0	%100
70	M97	Z	-.104	-.104	0	%100
71	M99	X	.179	.179	0	%100
72	M99	Z	-.104	-.104	0	%100
73	M101A	X	.179	.179	0	%100
74	M101A	Z	-.104	-.104	0	%100
75	M104	X	.718	.718	0	%100
76	M104	Z	-.414	-.414	0	%100
77	M105B	X	.085	.085	0	%100
78	M105B	Z	-.049	-.049	0	%100
79	M104B	X	.341	.341	0	%100
80	M104B	Z	-.197	-.197	0	%100
81	M105C	X	.085	.085	0	%100
82	M105C	Z	-.049	-.049	0	%100
83	M95C	X	.013	.013	0	%100
84	M95C	Z	-.008	-.008	0	%100
85	M96A	X	.013	.013	0	%100
86	M96A	Z	-.008	-.008	0	%100
87	M101B	X	.052	.052	0	%100
88	M101B	Z	-.03	-.03	0	%100
89	M102B	X	.052	.052	0	%100
90	M102B	Z	-.03	-.03	0	%100
91	MP1A	X	.412	.412	0	%100
92	MP1A	Z	-.238	-.238	0	%100
93	M144	X	.341	.341	0	%100
94	M144	Z	-.197	-.197	0	%100
95	M147	X	.019	.019	0	%100
96	M147	Z	-.011	-.011	0	%100
97	M149A	X	.075	.075	0	%100
98	M149A	Z	-.043	-.043	0	%100
99	M152	X	.019	.019	0	%100
100	M152	Z	-.011	-.011	0	%100
101	M155	X	.018	.018	0	%100
102	M155	Z	-.01	-.01	0	%100
103	M159	X	.071	.071	0	%100
104	M159	Z	-.041	-.041	0	%100
105	M163	X	.018	.018	0	%100
106	M163	Z	-.01	-.01	0	%100
107	M166A	X	.072	.072	0	%100
108	M166A	Z	-.041	-.041	0	%100
109	M167	X	.018	.018	0	%100
110	M167	Z	-.01	-.01	0	%100
111	M168	X	.018	.018	0	%100
112	M168	Z	-.01	-.01	0	%100
113	MP2A	X	.412	.412	0	%100
114	MP2A	Z	-.238	-.238	0	%100

Member Distributed Loads (BLC 67 : Structure Wm (60 Deg)) (Continued)

	Member Label	Direction	Start Magnitude[lb/ft,...	End Magnitude[lb/ft,...	Start Location[ft,%]	End Location[ft,%]
115	MP4A	X	.412	.412	0	%100
116	MP4A	Z	-.238	-.238	0	%100
117	MP5A	X	.412	.412	0	%100
118	MP5A	Z	-.238	-.238	0	%100
119	MP3A	X	.412	.412	0	%100
120	MP3A	Z	-.238	-.238	0	%100
121	MP1C	X	.412	.412	0	%100
122	MP1C	Z	-.238	-.238	0	%100
123	MP2C	X	.412	.412	0	%100
124	MP2C	Z	-.238	-.238	0	%100
125	MP4C	X	.412	.412	0	%100
126	MP4C	Z	-.238	-.238	0	%100
127	MP5C	X	.412	.412	0	%100
128	MP5C	Z	-.238	-.238	0	%100
129	MP3C	X	.412	.412	0	%100
130	MP3C	Z	-.238	-.238	0	%100
131	MP1B	X	.412	.412	0	%100
132	MP1B	Z	-.238	-.238	0	%100
133	MP2B	X	.412	.412	0	%100
134	MP2B	Z	-.238	-.238	0	%100
135	MP4B	X	.412	.412	0	%100
136	MP4B	Z	-.238	-.238	0	%100
137	MP5B	X	.412	.412	0	%100
138	MP5B	Z	-.238	-.238	0	%100
139	MP3B	X	.412	.412	0	%100
140	MP3B	Z	-.238	-.238	0	%100

Member Distributed Loads (BLC 68 : Structure Wm (90 Deg))

	Member Label	Direction	Start Magnitude[lb/ft,...	End Magnitude[lb/ft,...	Start Location[ft,%]	End Location[ft,%]
1	M19	X	.125	.125	0	%100
2	M19	Z	0	0	0	%100
3	M19A	X	.621	.621	0	%100
4	M19A	Z	0	0	0	%100
5	M38C	X	.125	.125	0	%100
6	M38C	Z	0	0	0	%100
7	M51	X	.499	.499	0	%100
8	M51	Z	0	0	0	%100
9	M104A	X	0	0	0	%100
10	M104A	Z	0	0	0	%100
11	M105A	X	0	0	0	%100
12	M105A	Z	0	0	0	%100
13	M134	X	.045	.045	0	%100
14	M134	Z	0	0	0	%100
15	M135	X	.045	.045	0	%100
16	M135	Z	0	0	0	%100
17	M93A	X	0	0	0	%100
18	M93A	Z	0	0	0	%100
19	M94A	X	0	0	0	%100
20	M94A	Z	0	0	0	%100
21	M93B	X	0	0	0	%100
22	M93B	Z	0	0	0	%100
23	M94D	X	0	0	0	%100
24	M94D	Z	0	0	0	%100
25	M53	X	.039	.039	0	%100
26	M53	Z	0	0	0	%100
27	M54	X	.039	.039	0	%100

Member Distributed Loads (BLC 68 : Structure Wm (90 Deg)) (Continued)

	Member Label	Direction	Start Magnitude[lb/ft,...	End Magnitude[lb/ft,...	Start Location[ft,%]	End Location[ft,%]
28	M54	Z	0	0	0	%100
29	M63	X	.296	.296	0	%100
30	M63	Z	0	0	0	%100
31	M64	X	.296	.296	0	%100
32	M64	Z	0	0	0	%100
33	M69	X	.266	.266	0	%100
34	M69	Z	0	0	0	%100
35	M70	X	.266	.266	0	%100
36	M70	Z	0	0	0	%100
37	M71	X	.039	.039	0	%100
38	M71	Z	0	0	0	%100
39	M72	X	.039	.039	0	%100
40	M72	Z	0	0	0	%100
41	M81	X	.296	.296	0	%100
42	M81	Z	0	0	0	%100
43	M82	X	.296	.296	0	%100
44	M82	Z	0	0	0	%100
45	M87	X	.266	.266	0	%100
46	M87	Z	0	0	0	%100
47	M88	X	.266	.266	0	%100
48	M88	Z	0	0	0	%100
49	M89	X	0	0	0	%100
50	M89	Z	0	0	0	%100
51	M90	X	0	0	0	%100
52	M90	Z	0	0	0	%100
53	M89A	X	1.131	1.131	0	%100
54	M89A	Z	0	0	0	%100
55	M90A	X	1.131	1.131	0	%100
56	M90A	Z	0	0	0	%100
57	M91	X	1.131	1.131	0	%100
58	M91	Z	0	0	0	%100
59	M92	X	1.131	1.131	0	%100
60	M92	Z	0	0	0	%100
61	M101	X	0	0	0	%100
62	M101	Z	0	0	0	%100
63	M91A	X	0	0	0	%100
64	M91A	Z	0	0	0	%100
65	M93	X	.621	.621	0	%100
66	M93	Z	0	0	0	%100
67	M95B	X	.621	.621	0	%100
68	M95B	Z	0	0	0	%100
69	M97	X	.621	.621	0	%100
70	M97	Z	0	0	0	%100
71	M99	X	.621	.621	0	%100
72	M99	Z	0	0	0	%100
73	M101A	X	0	0	0	%100
74	M101A	Z	0	0	0	%100
75	M104	X	.621	.621	0	%100
76	M104	Z	0	0	0	%100
77	M105B	X	0	0	0	%100
78	M105B	Z	0	0	0	%100
79	M104B	X	.295	.295	0	%100
80	M104B	Z	0	0	0	%100
81	M105C	X	.295	.295	0	%100
82	M105C	Z	0	0	0	%100
83	M95C	X	0	0	0	%100
84	M95C	Z	0	0	0	%100

Member Distributed Loads (BLC 68 : Structure Wm (90 Deg)) (Continued)

	Member Label	Direction	Start Magnitude[lb/ft,...	End Magnitude[lb/ft,...	Start Location[ft,%]	End Location[ft,%]
85	M96A	X	0	0	0	%100
86	M96A	Z	0	0	0	%100
87	M101B	X	.045	.045	0	%100
88	M101B	Z	0	0	0	%100
89	M102B	X	.045	.045	0	%100
90	M102B	Z	0	0	0	%100
91	MP1A	X	.492	.492	0	%100
92	MP1A	Z	0	0	0	%100
93	M144	X	.402	.402	0	%100
94	M144	Z	0	0	0	%100
95	M147	X	0	0	0	%100
96	M147	Z	0	0	0	%100
97	M149A	X	.065	.065	0	%100
98	M149A	Z	0	0	0	%100
99	M152	X	.065	.065	0	%100
100	M152	Z	0	0	0	%100
101	M155	X	0	0	0	%100
102	M155	Z	0	0	0	%100
103	M159	X	.062	.062	0	%100
104	M159	Z	0	0	0	%100
105	M163	X	.062	.062	0	%100
106	M163	Z	0	0	0	%100
107	M166A	X	.062	.062	0	%100
108	M166A	Z	0	0	0	%100
109	M167	X	.062	.062	0	%100
110	M167	Z	0	0	0	%100
111	M168	X	0	0	0	%100
112	M168	Z	0	0	0	%100
113	MP2A	X	.492	.492	0	%100
114	MP2A	Z	0	0	0	%100
115	MP4A	X	.492	.492	0	%100
116	MP4A	Z	0	0	0	%100
117	MP5A	X	.492	.492	0	%100
118	MP5A	Z	0	0	0	%100
119	MP3A	X	.492	.492	0	%100
120	MP3A	Z	0	0	0	%100
121	MP1C	X	.492	.492	0	%100
122	MP1C	Z	0	0	0	%100
123	MP2C	X	.492	.492	0	%100
124	MP2C	Z	0	0	0	%100
125	MP4C	X	.492	.492	0	%100
126	MP4C	Z	0	0	0	%100
127	MP5C	X	.492	.492	0	%100
128	MP5C	Z	0	0	0	%100
129	MP3C	X	.492	.492	0	%100
130	MP3C	Z	0	0	0	%100
131	MP1B	X	.492	.492	0	%100
132	MP1B	Z	0	0	0	%100
133	MP2B	X	.492	.492	0	%100
134	MP2B	Z	0	0	0	%100
135	MP4B	X	.492	.492	0	%100
136	MP4B	Z	0	0	0	%100
137	MP5B	X	.492	.492	0	%100
138	MP5B	Z	0	0	0	%100
139	MP3B	X	.492	.492	0	%100
140	MP3B	Z	0	0	0	%100

Member Distributed Loads (BLC 69 : Structure Wm (120 Deg))

	Member Label	Direction	Start Magnitude[lb/ft,...	End Magnitude[lb/ft,...	Start Location[ft,%]	End Location[ft,%]
1	M19	X	.324	.324	0	%100
2	M19	Z	.187	.187	0	%100
3	M19A	X	.718	.718	0	%100
4	M19A	Z	.414	.414	0	%100
5	M38C	X	0	0	0	%100
6	M38C	Z	0	0	0	%100
7	M51	X	.324	.324	0	%100
8	M51	Z	.187	.187	0	%100
9	M104A	X	.011	.011	0	%100
10	M104A	Z	.006	.006	0	%100
11	M105A	X	.011	.011	0	%100
12	M105A	Z	.006	.006	0	%100
13	M134	X	.052	.052	0	%100
14	M134	Z	.03	.03	0	%100
15	M135	X	.052	.052	0	%100
16	M135	Z	.03	.03	0	%100
17	M93A	X	.085	.085	0	%100
18	M93A	Z	.049	.049	0	%100
19	M94A	X	.085	.085	0	%100
20	M94A	Z	.049	.049	0	%100
21	M93B	X	.077	.077	0	%100
22	M93B	Z	.044	.044	0	%100
23	M94D	X	.077	.077	0	%100
24	M94D	Z	.044	.044	0	%100
25	M53	X	.011	.011	0	%100
26	M53	Z	.006	.006	0	%100
27	M54	X	.011	.011	0	%100
28	M54	Z	.006	.006	0	%100
29	M63	X	.085	.085	0	%100
30	M63	Z	.049	.049	0	%100
31	M64	X	.085	.085	0	%100
32	M64	Z	.049	.049	0	%100
33	M69	X	.077	.077	0	%100
34	M69	Z	.044	.044	0	%100
35	M70	X	.077	.077	0	%100
36	M70	Z	.044	.044	0	%100
37	M71	X	.045	.045	0	%100
38	M71	Z	.026	.026	0	%100
39	M72	X	.045	.045	0	%100
40	M72	Z	.026	.026	0	%100
41	M81	X	.342	.342	0	%100
42	M81	Z	.197	.197	0	%100
43	M82	X	.342	.342	0	%100
44	M82	Z	.197	.197	0	%100
45	M87	X	.307	.307	0	%100
46	M87	Z	.177	.177	0	%100
47	M88	X	.307	.307	0	%100
48	M88	Z	.177	.177	0	%100
49	M89	X	.326	.326	0	%100
50	M89	Z	.188	.188	0	%100
51	M90	X	.326	.326	0	%100
52	M90	Z	.188	.188	0	%100
53	M89A	X	.326	.326	0	%100
54	M89A	Z	.188	.188	0	%100
55	M90A	X	.326	.326	0	%100
56	M90A	Z	.188	.188	0	%100
57	M91	X	1.306	1.306	0	%100

Member Distributed Loads (BLC 69 : Structure Wm (120 Deg)) (Continued)

	Member Label	Direction	Start Magnitude[lb/ft,...	End Magnitude[lb/ft,...	Start Location[ft,%]	End Location[ft,%]
58	M91	Z	.754	.754	0	%100
59	M92	X	1.306	1.306	0	%100
60	M92	Z	.754	.754	0	%100
61	M101	X	.179	.179	0	%100
62	M101	Z	.104	.104	0	%100
63	M91A	X	.179	.179	0	%100
64	M91A	Z	.104	.104	0	%100
65	M93	X	.179	.179	0	%100
66	M93	Z	.104	.104	0	%100
67	M95B	X	.179	.179	0	%100
68	M95B	Z	.104	.104	0	%100
69	M97	X	.718	.718	0	%100
70	M97	Z	.414	.414	0	%100
71	M99	X	.718	.718	0	%100
72	M99	Z	.414	.414	0	%100
73	M101A	X	.179	.179	0	%100
74	M101A	Z	.104	.104	0	%100
75	M104	X	.179	.179	0	%100
76	M104	Z	.104	.104	0	%100
77	M105B	X	.085	.085	0	%100
78	M105B	Z	.049	.049	0	%100
79	M104B	X	.085	.085	0	%100
80	M104B	Z	.049	.049	0	%100
81	M105C	X	.341	.341	0	%100
82	M105C	Z	.197	.197	0	%100
83	M95C	X	.013	.013	0	%100
84	M95C	Z	.008	.008	0	%100
85	M96A	X	.013	.013	0	%100
86	M96A	Z	.008	.008	0	%100
87	M101B	X	.013	.013	0	%100
88	M101B	Z	.008	.008	0	%100
89	M102B	X	.013	.013	0	%100
90	M102B	Z	.008	.008	0	%100
91	MP1A	X	.412	.412	0	%100
92	MP1A	Z	.238	.238	0	%100
93	M144	X	.341	.341	0	%100
94	M144	Z	.197	.197	0	%100
95	M147	X	.019	.019	0	%100
96	M147	Z	.011	.011	0	%100
97	M149A	X	.019	.019	0	%100
98	M149A	Z	.011	.011	0	%100
99	M152	X	.075	.075	0	%100
100	M152	Z	.043	.043	0	%100
101	M155	X	.018	.018	0	%100
102	M155	Z	.01	.01	0	%100
103	M159	X	.018	.018	0	%100
104	M159	Z	.01	.01	0	%100
105	M163	X	.071	.071	0	%100
106	M163	Z	.041	.041	0	%100
107	M166A	X	.018	.018	0	%100
108	M166A	Z	.01	.01	0	%100
109	M167	X	.072	.072	0	%100
110	M167	Z	.041	.041	0	%100
111	M168	X	.018	.018	0	%100
112	M168	Z	.01	.01	0	%100
113	MP2A	X	.412	.412	0	%100
114	MP2A	Z	.238	.238	0	%100

Member Distributed Loads (BLC 69 : Structure Wm (120 Deg)) (Continued)

	Member Label	Direction	Start Magnitude[lb/ft,...	End Magnitude[lb/ft,...	Start Location[ft,%]	End Location[ft,%]
115	MP4A	X	.412	.412	0	%100
116	MP4A	Z	.238	.238	0	%100
117	MP5A	X	.412	.412	0	%100
118	MP5A	Z	.238	.238	0	%100
119	MP3A	X	.412	.412	0	%100
120	MP3A	Z	.238	.238	0	%100
121	MP1C	X	.412	.412	0	%100
122	MP1C	Z	.238	.238	0	%100
123	MP2C	X	.412	.412	0	%100
124	MP2C	Z	.238	.238	0	%100
125	MP4C	X	.412	.412	0	%100
126	MP4C	Z	.238	.238	0	%100
127	MP5C	X	.412	.412	0	%100
128	MP5C	Z	.238	.238	0	%100
129	MP3C	X	.412	.412	0	%100
130	MP3C	Z	.238	.238	0	%100
131	MP1B	X	.412	.412	0	%100
132	MP1B	Z	.238	.238	0	%100
133	MP2B	X	.412	.412	0	%100
134	MP2B	Z	.238	.238	0	%100
135	MP4B	X	.412	.412	0	%100
136	MP4B	Z	.238	.238	0	%100
137	MP5B	X	.412	.412	0	%100
138	MP5B	Z	.238	.238	0	%100
139	MP3B	X	.412	.412	0	%100
140	MP3B	Z	.238	.238	0	%100

Member Distributed Loads (BLC 70 : Structure Wm (150 Deg))

	Member Label	Direction	Start Magnitude[lb/ft,...	End Magnitude[lb/ft,...	Start Location[ft,%]	End Location[ft,%]
1	M19	X	.249	.249	0	%100
2	M19	Z	.432	.432	0	%100
3	M19A	X	.311	.311	0	%100
4	M19A	Z	.538	.538	0	%100
5	M38C	X	.062	.062	0	%100
6	M38C	Z	.108	.108	0	%100
7	M51	X	.062	.062	0	%100
8	M51	Z	.108	.108	0	%100
9	M104A	X	.019	.019	0	%100
10	M104A	Z	.034	.034	0	%100
11	M105A	X	.019	.019	0	%100
12	M105A	Z	.034	.034	0	%100
13	M134	X	.023	.023	0	%100
14	M134	Z	.039	.039	0	%100
15	M135	X	.023	.023	0	%100
16	M135	Z	.039	.039	0	%100
17	M93A	X	.148	.148	0	%100
18	M93A	Z	.256	.256	0	%100
19	M94A	X	.148	.148	0	%100
20	M94A	Z	.256	.256	0	%100
21	M93B	X	.133	.133	0	%100
22	M93B	Z	.23	.23	0	%100
23	M94D	X	.133	.133	0	%100
24	M94D	Z	.23	.23	0	%100
25	M53	X	0	0	0	%100
26	M53	Z	0	0	0	%100
27	M54	X	0	0	0	%100

Member Distributed Loads (BLC 70 : Structure Wm (150 Deg)) (Continued)

	Member Label	Direction	Start Magnitude[lb/ft,...	End Magnitude[lb/ft,...	Start Location[ft,%]	End Location[ft,%]
28	M54	Z	0	0	0	%100
29	M63	X	0	0	0	%100
30	M63	Z	0	0	0	%100
31	M64	X	0	0	0	%100
32	M64	Z	0	0	0	%100
33	M69	X	0	0	0	%100
34	M69	Z	0	0	0	%100
35	M70	X	0	0	0	%100
36	M70	Z	0	0	0	%100
37	M71	X	.019	.019	0	%100
38	M71	Z	.034	.034	0	%100
39	M72	X	.019	.019	0	%100
40	M72	Z	.034	.034	0	%100
41	M81	X	.148	.148	0	%100
42	M81	Z	.256	.256	0	%100
43	M82	X	.148	.148	0	%100
44	M82	Z	.256	.256	0	%100
45	M87	X	.133	.133	0	%100
46	M87	Z	.23	.23	0	%100
47	M88	X	.133	.133	0	%100
48	M88	Z	.23	.23	0	%100
49	M89	X	.565	.565	0	%100
50	M89	Z	.979	.979	0	%100
51	M90	X	.565	.565	0	%100
52	M90	Z	.979	.979	0	%100
53	M89A	X	0	0	0	%100
54	M89A	Z	0	0	0	%100
55	M90A	X	0	0	0	%100
56	M90A	Z	0	0	0	%100
57	M91	X	.565	.565	0	%100
58	M91	Z	.979	.979	0	%100
59	M92	X	.565	.565	0	%100
60	M92	Z	.979	.979	0	%100
61	M101	X	.311	.311	0	%100
62	M101	Z	.538	.538	0	%100
63	M91A	X	.311	.311	0	%100
64	M91A	Z	.538	.538	0	%100
65	M93	X	0	0	0	%100
66	M93	Z	0	0	0	%100
67	M95B	X	0	0	0	%100
68	M95B	Z	0	0	0	%100
69	M97	X	.311	.311	0	%100
70	M97	Z	.538	.538	0	%100
71	M99	X	.311	.311	0	%100
72	M99	Z	.538	.538	0	%100
73	M101A	X	.311	.311	0	%100
74	M101A	Z	.538	.538	0	%100
75	M104	X	0	0	0	%100
76	M104	Z	0	0	0	%100
77	M105B	X	.148	.148	0	%100
78	M105B	Z	.256	.256	0	%100
79	M104B	X	0	0	0	%100
80	M104B	Z	0	0	0	%100
81	M105C	X	.148	.148	0	%100
82	M105C	Z	.256	.256	0	%100
83	M95C	X	.023	.023	0	%100
84	M95C	Z	.039	.039	0	%100

Member Distributed Loads (BLC 70 : Structure Wm (150 Deg)) (Continued)

	Member Label	Direction	Start Magnitude[lb/ft,...	End Magnitude[lb/ft,...	Start Location[ft,%]	End Location[ft,%]
85	M96A	X	.023	.023	0	%100
86	M96A	Z	.039	.039	0	%100
87	M101B	X	0	0	0	%100
88	M101B	Z	0	0	0	%100
89	M102B	X	0	0	0	%100
90	M102B	Z	0	0	0	%100
91	MP1A	X	.222	.222	0	%100
92	MP1A	Z	.385	.385	0	%100
93	M144	X	.188	.188	0	%100
94	M144	Z	.326	.326	0	%100
95	M147	X	.032	.032	0	%100
96	M147	Z	.056	.056	0	%100
97	M149A	X	0	0	0	%100
98	M149A	Z	0	0	0	%100
99	M152	X	.032	.032	0	%100
100	M152	Z	.056	.056	0	%100
101	M155	X	.031	.031	0	%100
102	M155	Z	.053	.053	0	%100
103	M159	X	0	0	0	%100
104	M159	Z	0	0	0	%100
105	M163	X	.031	.031	0	%100
106	M163	Z	.053	.053	0	%100
107	M166A	X	0	0	0	%100
108	M166A	Z	0	0	0	%100
109	M167	X	.031	.031	0	%100
110	M167	Z	.054	.054	0	%100
111	M168	X	.031	.031	0	%100
112	M168	Z	.054	.054	0	%100
113	MP2A	X	.222	.222	0	%100
114	MP2A	Z	.385	.385	0	%100
115	MP4A	X	.222	.222	0	%100
116	MP4A	Z	.385	.385	0	%100
117	MP5A	X	.222	.222	0	%100
118	MP5A	Z	.385	.385	0	%100
119	MP3A	X	.222	.222	0	%100
120	MP3A	Z	.385	.385	0	%100
121	MP1C	X	.222	.222	0	%100
122	MP1C	Z	.385	.385	0	%100
123	MP2C	X	.222	.222	0	%100
124	MP2C	Z	.385	.385	0	%100
125	MP4C	X	.222	.222	0	%100
126	MP4C	Z	.385	.385	0	%100
127	MP5C	X	.222	.222	0	%100
128	MP5C	Z	.385	.385	0	%100
129	MP3C	X	.222	.222	0	%100
130	MP3C	Z	.385	.385	0	%100
131	MP1B	X	.222	.222	0	%100
132	MP1B	Z	.385	.385	0	%100
133	MP2B	X	.222	.222	0	%100
134	MP2B	Z	.385	.385	0	%100
135	MP4B	X	.222	.222	0	%100
136	MP4B	Z	.385	.385	0	%100
137	MP5B	X	.222	.222	0	%100
138	MP5B	Z	.385	.385	0	%100
139	MP3B	X	.222	.222	0	%100
140	MP3B	Z	.385	.385	0	%100

Member Distributed Loads (BLC 71 : Structure Wm (180 Deg))

	Member Label	Direction	Start Magnitude[lb/ft,...	End Magnitude[lb/ft,...	Start Location[ft,%]	End Location[ft,%]
1	M19	X	0	0	0	%100
2	M19	Z	.374	.374	0	%100
3	M19A	X	0	0	0	%100
4	M19A	Z	.207	.207	0	%100
5	M38C	X	0	0	0	%100
6	M38C	Z	.374	.374	0	%100
7	M51	X	0	0	0	%100
8	M51	Z	0	0	0	%100
9	M104A	X	0	0	0	%100
10	M104A	Z	.052	.052	0	%100
11	M105A	X	0	0	0	%100
12	M105A	Z	.052	.052	0	%100
13	M134	X	0	0	0	%100
14	M134	Z	.015	.015	0	%100
15	M135	X	0	0	0	%100
16	M135	Z	.015	.015	0	%100
17	M93A	X	0	0	0	%100
18	M93A	Z	.394	.394	0	%100
19	M94A	X	0	0	0	%100
20	M94A	Z	.394	.394	0	%100
21	M93B	X	0	0	0	%100
22	M93B	Z	.354	.354	0	%100
23	M94D	X	0	0	0	%100
24	M94D	Z	.354	.354	0	%100
25	M53	X	0	0	0	%100
26	M53	Z	.013	.013	0	%100
27	M54	X	0	0	0	%100
28	M54	Z	.013	.013	0	%100
29	M63	X	0	0	0	%100
30	M63	Z	.099	.099	0	%100
31	M64	X	0	0	0	%100
32	M64	Z	.099	.099	0	%100
33	M69	X	0	0	0	%100
34	M69	Z	.089	.089	0	%100
35	M70	X	0	0	0	%100
36	M70	Z	.089	.089	0	%100
37	M71	X	0	0	0	%100
38	M71	Z	.013	.013	0	%100
39	M72	X	0	0	0	%100
40	M72	Z	.013	.013	0	%100
41	M81	X	0	0	0	%100
42	M81	Z	.099	.099	0	%100
43	M82	X	0	0	0	%100
44	M82	Z	.099	.099	0	%100
45	M87	X	0	0	0	%100
46	M87	Z	.089	.089	0	%100
47	M88	X	0	0	0	%100
48	M88	Z	.089	.089	0	%100
49	M89	X	0	0	0	%100
50	M89	Z	1.508	1.508	0	%100
51	M90	X	0	0	0	%100
52	M90	Z	1.508	1.508	0	%100
53	M89A	X	0	0	0	%100
54	M89A	Z	.377	.377	0	%100
55	M90A	X	0	0	0	%100
56	M90A	Z	.377	.377	0	%100
57	M91	X	0	0	0	%100

Member Distributed Loads (BLC 71 : Structure Wm (180 Deg)) (Continued)

	Member Label	Direction	Start Magnitude[lb/ft,...	End Magnitude[lb/ft,...	Start Location[ft,%]	End Location[ft,%]
58	M91	Z	.377	.377	0	%100
59	M92	X	0	0	0	%100
60	M92	Z	.377	.377	0	%100
61	M101	X	0	0	0	%100
62	M101	Z	.829	.829	0	%100
63	M91A	X	0	0	0	%100
64	M91A	Z	.829	.829	0	%100
65	M93	X	0	0	0	%100
66	M93	Z	.207	.207	0	%100
67	M95B	X	0	0	0	%100
68	M95B	Z	.207	.207	0	%100
69	M97	X	0	0	0	%100
70	M97	Z	.207	.207	0	%100
71	M99	X	0	0	0	%100
72	M99	Z	.207	.207	0	%100
73	M101A	X	0	0	0	%100
74	M101A	Z	.829	.829	0	%100
75	M104	X	0	0	0	%100
76	M104	Z	.207	.207	0	%100
77	M105B	X	0	0	0	%100
78	M105B	Z	.394	.394	0	%100
79	M104B	X	0	0	0	%100
80	M104B	Z	.098	.098	0	%100
81	M105C	X	0	0	0	%100
82	M105C	Z	.098	.098	0	%100
83	M95C	X	0	0	0	%100
84	M95C	Z	.061	.061	0	%100
85	M96A	X	0	0	0	%100
86	M96A	Z	.061	.061	0	%100
87	M101B	X	0	0	0	%100
88	M101B	Z	.015	.015	0	%100
89	M102B	X	0	0	0	%100
90	M102B	Z	.015	.015	0	%100
91	MP1A	X	0	0	0	%100
92	MP1A	Z	.428	.428	0	%100
93	M144	X	0	0	0	%100
94	M144	Z	.368	.368	0	%100
95	M147	X	0	0	0	%100
96	M147	Z	.086	.086	0	%100
97	M149A	X	0	0	0	%100
98	M149A	Z	.022	.022	0	%100
99	M152	X	0	0	0	%100
100	M152	Z	.022	.022	0	%100
101	M155	X	0	0	0	%100
102	M155	Z	.082	.082	0	%100
103	M159	X	0	0	0	%100
104	M159	Z	.021	.021	0	%100
105	M163	X	0	0	0	%100
106	M163	Z	.021	.021	0	%100
107	M166A	X	0	0	0	%100
108	M166A	Z	.021	.021	0	%100
109	M167	X	0	0	0	%100
110	M167	Z	.021	.021	0	%100
111	M168	X	0	0	0	%100
112	M168	Z	.083	.083	0	%100
113	MP2A	X	0	0	0	%100
114	MP2A	Z	.428	.428	0	%100

Member Distributed Loads (BLC 71 : Structure Wm (180 Deg)) (Continued)

	Member Label	Direction	Start Magnitude[lb/ft,...	End Magnitude[lb/ft,...	Start Location[ft,%]	End Location[ft,%]
115	MP4A	X	0	0	0	%100
116	MP4A	Z	.428	.428	0	%100
117	MP5A	X	0	0	0	%100
118	MP5A	Z	.428	.428	0	%100
119	MP3A	X	0	0	0	%100
120	MP3A	Z	.428	.428	0	%100
121	MP1C	X	0	0	0	%100
122	MP1C	Z	.428	.428	0	%100
123	MP2C	X	0	0	0	%100
124	MP2C	Z	.428	.428	0	%100
125	MP4C	X	0	0	0	%100
126	MP4C	Z	.428	.428	0	%100
127	MP5C	X	0	0	0	%100
128	MP5C	Z	.428	.428	0	%100
129	MP3C	X	0	0	0	%100
130	MP3C	Z	.428	.428	0	%100
131	MP1B	X	0	0	0	%100
132	MP1B	Z	.428	.428	0	%100
133	MP2B	X	0	0	0	%100
134	MP2B	Z	.428	.428	0	%100
135	MP4B	X	0	0	0	%100
136	MP4B	Z	.428	.428	0	%100
137	MP5B	X	0	0	0	%100
138	MP5B	Z	.428	.428	0	%100
139	MP3B	X	0	0	0	%100
140	MP3B	Z	.428	.428	0	%100

Member Distributed Loads (BLC 72 : Structure Wm (210 Deg))

	Member Label	Direction	Start Magnitude[lb/ft,...	End Magnitude[lb/ft,...	Start Location[ft,%]	End Location[ft,%]
1	M19	X	-.062	-.062	0	%100
2	M19	Z	.108	.108	0	%100
3	M19A	X	0	0	0	%100
4	M19A	Z	0	0	0	%100
5	M38C	X	-.249	-.249	0	%100
6	M38C	Z	.432	.432	0	%100
7	M51	X	-.062	-.062	0	%100
8	M51	Z	.108	.108	0	%100
9	M104A	X	-.019	-.019	0	%100
10	M104A	Z	.034	.034	0	%100
11	M105A	X	-.019	-.019	0	%100
12	M105A	Z	.034	.034	0	%100
13	M134	X	0	0	0	%100
14	M134	Z	0	0	0	%100
15	M135	X	0	0	0	%100
16	M135	Z	0	0	0	%100
17	M93A	X	-.148	-.148	0	%100
18	M93A	Z	.256	.256	0	%100
19	M94A	X	-.148	-.148	0	%100
20	M94A	Z	.256	.256	0	%100
21	M93B	X	-.133	-.133	0	%100
22	M93B	Z	.23	.23	0	%100
23	M94D	X	-.133	-.133	0	%100
24	M94D	Z	.23	.23	0	%100
25	M53	X	-.019	-.019	0	%100
26	M53	Z	.034	.034	0	%100
27	M54	X	-.019	-.019	0	%100

Member Distributed Loads (BLC 72 : Structure Wm (210 Deg)) (Continued)

	Member Label	Direction	Start Magnitude[lb/ft,...	End Magnitude[lb/ft,...	Start Location[ft,%]	End Location[ft,%]
28	M54	Z	.034	.034	0	%100
29	M63	X	-.148	-.148	0	%100
30	M63	Z	.256	.256	0	%100
31	M64	X	-.148	-.148	0	%100
32	M64	Z	.256	.256	0	%100
33	M69	X	-.133	-.133	0	%100
34	M69	Z	.23	.23	0	%100
35	M70	X	-.133	-.133	0	%100
36	M70	Z	.23	.23	0	%100
37	M71	X	0	0	0	%100
38	M71	Z	0	0	0	%100
39	M72	X	0	0	0	%100
40	M72	Z	0	0	0	%100
41	M81	X	0	0	0	%100
42	M81	Z	0	0	0	%100
43	M82	X	0	0	0	%100
44	M82	Z	0	0	0	%100
45	M87	X	0	0	0	%100
46	M87	Z	0	0	0	%100
47	M88	X	0	0	0	%100
48	M88	Z	0	0	0	%100
49	M89	X	-.565	-.565	0	%100
50	M89	Z	.979	.979	0	%100
51	M90	X	-.565	-.565	0	%100
52	M90	Z	.979	.979	0	%100
53	M89A	X	-.565	-.565	0	%100
54	M89A	Z	.979	.979	0	%100
55	M90A	X	-.565	-.565	0	%100
56	M90A	Z	.979	.979	0	%100
57	M91	X	0	0	0	%100
58	M91	Z	0	0	0	%100
59	M92	X	0	0	0	%100
60	M92	Z	0	0	0	%100
61	M101	X	-.311	-.311	0	%100
62	M101	Z	.538	.538	0	%100
63	M91A	X	-.311	-.311	0	%100
64	M91A	Z	.538	.538	0	%100
65	M93	X	-.311	-.311	0	%100
66	M93	Z	.538	.538	0	%100
67	M95B	X	-.311	-.311	0	%100
68	M95B	Z	.538	.538	0	%100
69	M97	X	0	0	0	%100
70	M97	Z	0	0	0	%100
71	M99	X	0	0	0	%100
72	M99	Z	0	0	0	%100
73	M101A	X	-.311	-.311	0	%100
74	M101A	Z	.538	.538	0	%100
75	M104	X	-.311	-.311	0	%100
76	M104	Z	.538	.538	0	%100
77	M105B	X	-.148	-.148	0	%100
78	M105B	Z	.256	.256	0	%100
79	M104B	X	-.148	-.148	0	%100
80	M104B	Z	.256	.256	0	%100
81	M105C	X	0	0	0	%100
82	M105C	Z	0	0	0	%100
83	M95C	X	-.023	-.023	0	%100
84	M95C	Z	.039	.039	0	%100

Member Distributed Loads (BLC 72 : Structure Wm (210 Deg)) (Continued)

	Member Label	Direction	Start Magnitude[lb/ft,...	End Magnitude[lb/ft,...	Start Location[ft,%]	End Location[ft,%]
85	M96A	X	-.023	-.023	0	%100
86	M96A	Z	.039	.039	0	%100
87	M101B	X	-.023	-.023	0	%100
88	M101B	Z	.039	.039	0	%100
89	M102B	X	-.023	-.023	0	%100
90	M102B	Z	.039	.039	0	%100
91	MP1A	X	-.222	-.222	0	%100
92	MP1A	Z	.385	.385	0	%100
93	M144	X	-.188	-.188	0	%100
94	M144	Z	.326	.326	0	%100
95	M147	X	-.032	-.032	0	%100
96	M147	Z	.056	.056	0	%100
97	M149A	X	-.032	-.032	0	%100
98	M149A	Z	.056	.056	0	%100
99	M152	X	0	0	0	%100
100	M152	Z	0	0	0	%100
101	M155	X	-.031	-.031	0	%100
102	M155	Z	.053	.053	0	%100
103	M159	X	-.031	-.031	0	%100
104	M159	Z	.053	.053	0	%100
105	M163	X	0	0	0	%100
106	M163	Z	0	0	0	%100
107	M166A	X	-.031	-.031	0	%100
108	M166A	Z	.054	.054	0	%100
109	M167	X	0	0	0	%100
110	M167	Z	0	0	0	%100
111	M168	X	-.031	-.031	0	%100
112	M168	Z	.054	.054	0	%100
113	MP2A	X	-.222	-.222	0	%100
114	MP2A	Z	.385	.385	0	%100
115	MP4A	X	-.222	-.222	0	%100
116	MP4A	Z	.385	.385	0	%100
117	MP5A	X	-.222	-.222	0	%100
118	MP5A	Z	.385	.385	0	%100
119	MP3A	X	-.222	-.222	0	%100
120	MP3A	Z	.385	.385	0	%100
121	MP1C	X	-.222	-.222	0	%100
122	MP1C	Z	.385	.385	0	%100
123	MP2C	X	-.222	-.222	0	%100
124	MP2C	Z	.385	.385	0	%100
125	MP4C	X	-.222	-.222	0	%100
126	MP4C	Z	.385	.385	0	%100
127	MP5C	X	-.222	-.222	0	%100
128	MP5C	Z	.385	.385	0	%100
129	MP3C	X	-.222	-.222	0	%100
130	MP3C	Z	.385	.385	0	%100
131	MP1B	X	-.222	-.222	0	%100
132	MP1B	Z	.385	.385	0	%100
133	MP2B	X	-.222	-.222	0	%100
134	MP2B	Z	.385	.385	0	%100
135	MP4B	X	-.222	-.222	0	%100
136	MP4B	Z	.385	.385	0	%100
137	MP5B	X	-.222	-.222	0	%100
138	MP5B	Z	.385	.385	0	%100
139	MP3B	X	-.222	-.222	0	%100
140	MP3B	Z	.385	.385	0	%100

Member Distributed Loads (BLC 73 : Structure Wm (240 Deg))

	Member Label	Direction	Start Magnitude[lb/ft,...	End Magnitude[lb/ft,...	Start Location[ft,%]	End Location[ft,%]
1	M19	X	0	0	0	%100
2	M19	Z	0	0	0	%100
3	M19A	X	-.179	-.179	0	%100
4	M19A	Z	.104	.104	0	%100
5	M38C	X	-.324	-.324	0	%100
6	M38C	Z	.187	.187	0	%100
7	M51	X	-.324	-.324	0	%100
8	M51	Z	.187	.187	0	%100
9	M104A	X	-.011	-.011	0	%100
10	M104A	Z	.006	.006	0	%100
11	M105A	X	-.011	-.011	0	%100
12	M105A	Z	.006	.006	0	%100
13	M134	X	-.013	-.013	0	%100
14	M134	Z	.008	.008	0	%100
15	M135	X	-.013	-.013	0	%100
16	M135	Z	.008	.008	0	%100
17	M93A	X	-.085	-.085	0	%100
18	M93A	Z	.049	.049	0	%100
19	M94A	X	-.085	-.085	0	%100
20	M94A	Z	.049	.049	0	%100
21	M93B	X	-.077	-.077	0	%100
22	M93B	Z	.044	.044	0	%100
23	M94D	X	-.077	-.077	0	%100
24	M94D	Z	.044	.044	0	%100
25	M53	X	-.045	-.045	0	%100
26	M53	Z	.026	.026	0	%100
27	M54	X	-.045	-.045	0	%100
28	M54	Z	.026	.026	0	%100
29	M63	X	-.342	-.342	0	%100
30	M63	Z	.197	.197	0	%100
31	M64	X	-.342	-.342	0	%100
32	M64	Z	.197	.197	0	%100
33	M69	X	-.307	-.307	0	%100
34	M69	Z	.177	.177	0	%100
35	M70	X	-.307	-.307	0	%100
36	M70	Z	.177	.177	0	%100
37	M71	X	-.011	-.011	0	%100
38	M71	Z	.006	.006	0	%100
39	M72	X	-.011	-.011	0	%100
40	M72	Z	.006	.006	0	%100
41	M81	X	-.085	-.085	0	%100
42	M81	Z	.049	.049	0	%100
43	M82	X	-.085	-.085	0	%100
44	M82	Z	.049	.049	0	%100
45	M87	X	-.077	-.077	0	%100
46	M87	Z	.044	.044	0	%100
47	M88	X	-.077	-.077	0	%100
48	M88	Z	.044	.044	0	%100
49	M89	X	-.326	-.326	0	%100
50	M89	Z	.188	.188	0	%100
51	M90	X	-.326	-.326	0	%100
52	M90	Z	.188	.188	0	%100
53	M89A	X	-1.306	-1.306	0	%100
54	M89A	Z	.754	.754	0	%100
55	M90A	X	-1.306	-1.306	0	%100
56	M90A	Z	.754	.754	0	%100
57	M91	X	-.326	-.326	0	%100

Member Distributed Loads (BLC 73 : Structure Wm (240 Deg)) (Continued)

	Member Label	Direction	Start Magnitude[lb/ft,...	End Magnitude[lb/ft,...	Start Location[ft,%]	End Location[ft,%]
58	M91	Z	.188	.188	0	%100
59	M92	X	-.326	-.326	0	%100
60	M92	Z	.188	.188	0	%100
61	M101	X	-.179	-.179	0	%100
62	M101	Z	.104	.104	0	%100
63	M91A	X	-.179	-.179	0	%100
64	M91A	Z	.104	.104	0	%100
65	M93	X	-.718	-.718	0	%100
66	M93	Z	.414	.414	0	%100
67	M95B	X	-.718	-.718	0	%100
68	M95B	Z	.414	.414	0	%100
69	M97	X	-.179	-.179	0	%100
70	M97	Z	.104	.104	0	%100
71	M99	X	-.179	-.179	0	%100
72	M99	Z	.104	.104	0	%100
73	M101A	X	-.179	-.179	0	%100
74	M101A	Z	.104	.104	0	%100
75	M104	X	-.718	-.718	0	%100
76	M104	Z	.414	.414	0	%100
77	M105B	X	-.085	-.085	0	%100
78	M105B	Z	.049	.049	0	%100
79	M104B	X	-.341	-.341	0	%100
80	M104B	Z	.197	.197	0	%100
81	M105C	X	-.085	-.085	0	%100
82	M105C	Z	.049	.049	0	%100
83	M95C	X	-.013	-.013	0	%100
84	M95C	Z	.008	.008	0	%100
85	M96A	X	-.013	-.013	0	%100
86	M96A	Z	.008	.008	0	%100
87	M101B	X	-.052	-.052	0	%100
88	M101B	Z	.03	.03	0	%100
89	M102B	X	-.052	-.052	0	%100
90	M102B	Z	.03	.03	0	%100
91	MP1A	X	-.412	-.412	0	%100
92	MP1A	Z	.238	.238	0	%100
93	M144	X	-.341	-.341	0	%100
94	M144	Z	.197	.197	0	%100
95	M147	X	-.019	-.019	0	%100
96	M147	Z	.011	.011	0	%100
97	M149A	X	-.075	-.075	0	%100
98	M149A	Z	.043	.043	0	%100
99	M152	X	-.019	-.019	0	%100
100	M152	Z	.011	.011	0	%100
101	M155	X	-.018	-.018	0	%100
102	M155	Z	.01	.01	0	%100
103	M159	X	-.071	-.071	0	%100
104	M159	Z	.041	.041	0	%100
105	M163	X	-.018	-.018	0	%100
106	M163	Z	.01	.01	0	%100
107	M166A	X	-.072	-.072	0	%100
108	M166A	Z	.041	.041	0	%100
109	M167	X	-.018	-.018	0	%100
110	M167	Z	.01	.01	0	%100
111	M168	X	-.018	-.018	0	%100
112	M168	Z	.01	.01	0	%100
113	MP2A	X	-.412	-.412	0	%100
114	MP2A	Z	.238	.238	0	%100

Member Distributed Loads (BLC 73 : Structure Wm (240 Deg)) (Continued)

	Member Label	Direction	Start Magnitude[lb/ft,...	End Magnitude[lb/ft,...	Start Location[ft,%]	End Location[ft,%]
115	MP4A	X	-.412	-.412	0	%100
116	MP4A	Z	.238	.238	0	%100
117	MP5A	X	-.412	-.412	0	%100
118	MP5A	Z	.238	.238	0	%100
119	MP3A	X	-.412	-.412	0	%100
120	MP3A	Z	.238	.238	0	%100
121	MP1C	X	-.412	-.412	0	%100
122	MP1C	Z	.238	.238	0	%100
123	MP2C	X	-.412	-.412	0	%100
124	MP2C	Z	.238	.238	0	%100
125	MP4C	X	-.412	-.412	0	%100
126	MP4C	Z	.238	.238	0	%100
127	MP5C	X	-.412	-.412	0	%100
128	MP5C	Z	.238	.238	0	%100
129	MP3C	X	-.412	-.412	0	%100
130	MP3C	Z	.238	.238	0	%100
131	MP1B	X	-.412	-.412	0	%100
132	MP1B	Z	.238	.238	0	%100
133	MP2B	X	-.412	-.412	0	%100
134	MP2B	Z	.238	.238	0	%100
135	MP4B	X	-.412	-.412	0	%100
136	MP4B	Z	.238	.238	0	%100
137	MP5B	X	-.412	-.412	0	%100
138	MP5B	Z	.238	.238	0	%100
139	MP3B	X	-.412	-.412	0	%100
140	MP3B	Z	.238	.238	0	%100

Member Distributed Loads (BLC 74 : Structure Wm (270 Deg))

	Member Label	Direction	Start Magnitude[lb/ft,...	End Magnitude[lb/ft,...	Start Location[ft,%]	End Location[ft,%]
1	M19	X	-.125	-.125	0	%100
2	M19	Z	0	0	0	%100
3	M19A	X	-.621	-.621	0	%100
4	M19A	Z	0	0	0	%100
5	M38C	X	-.125	-.125	0	%100
6	M38C	Z	0	0	0	%100
7	M51	X	-.499	-.499	0	%100
8	M51	Z	0	0	0	%100
9	M104A	X	0	0	0	%100
10	M104A	Z	0	0	0	%100
11	M105A	X	0	0	0	%100
12	M105A	Z	0	0	0	%100
13	M134	X	-.045	-.045	0	%100
14	M134	Z	0	0	0	%100
15	M135	X	-.045	-.045	0	%100
16	M135	Z	0	0	0	%100
17	M93A	X	0	0	0	%100
18	M93A	Z	0	0	0	%100
19	M94A	X	0	0	0	%100
20	M94A	Z	0	0	0	%100
21	M93B	X	0	0	0	%100
22	M93B	Z	0	0	0	%100
23	M94D	X	0	0	0	%100
24	M94D	Z	0	0	0	%100
25	M53	X	-.039	-.039	0	%100
26	M53	Z	0	0	0	%100
27	M54	X	-.039	-.039	0	%100

Member Distributed Loads (BLC 74 : Structure Wm (270 Deg)) (Continued)

	Member Label	Direction	Start Magnitude[lb/ft,...	End Magnitude[lb/ft,...	Start Location[ft,%]	End Location[ft,%]
28	M54	Z	0	0	0	%100
29	M63	X	-.296	-.296	0	%100
30	M63	Z	0	0	0	%100
31	M64	X	-.296	-.296	0	%100
32	M64	Z	0	0	0	%100
33	M69	X	-.266	-.266	0	%100
34	M69	Z	0	0	0	%100
35	M70	X	-.266	-.266	0	%100
36	M70	Z	0	0	0	%100
37	M71	X	-.039	-.039	0	%100
38	M71	Z	0	0	0	%100
39	M72	X	-.039	-.039	0	%100
40	M72	Z	0	0	0	%100
41	M81	X	-.296	-.296	0	%100
42	M81	Z	0	0	0	%100
43	M82	X	-.296	-.296	0	%100
44	M82	Z	0	0	0	%100
45	M87	X	-.266	-.266	0	%100
46	M87	Z	0	0	0	%100
47	M88	X	-.266	-.266	0	%100
48	M88	Z	0	0	0	%100
49	M89	X	0	0	0	%100
50	M89	Z	0	0	0	%100
51	M90	X	0	0	0	%100
52	M90	Z	0	0	0	%100
53	M89A	X	-1.131	-1.131	0	%100
54	M89A	Z	0	0	0	%100
55	M90A	X	-1.131	-1.131	0	%100
56	M90A	Z	0	0	0	%100
57	M91	X	-1.131	-1.131	0	%100
58	M91	Z	0	0	0	%100
59	M92	X	-1.131	-1.131	0	%100
60	M92	Z	0	0	0	%100
61	M101	X	0	0	0	%100
62	M101	Z	0	0	0	%100
63	M91A	X	0	0	0	%100
64	M91A	Z	0	0	0	%100
65	M93	X	-.621	-.621	0	%100
66	M93	Z	0	0	0	%100
67	M95B	X	-.621	-.621	0	%100
68	M95B	Z	0	0	0	%100
69	M97	X	-.621	-.621	0	%100
70	M97	Z	0	0	0	%100
71	M99	X	-.621	-.621	0	%100
72	M99	Z	0	0	0	%100
73	M101A	X	0	0	0	%100
74	M101A	Z	0	0	0	%100
75	M104	X	-.621	-.621	0	%100
76	M104	Z	0	0	0	%100
77	M105B	X	0	0	0	%100
78	M105B	Z	0	0	0	%100
79	M104B	X	-.295	-.295	0	%100
80	M104B	Z	0	0	0	%100
81	M105C	X	-.295	-.295	0	%100
82	M105C	Z	0	0	0	%100
83	M95C	X	0	0	0	%100
84	M95C	Z	0	0	0	%100

Member Distributed Loads (BLC 74 : Structure Wm (270 Deg)) (Continued)

	Member Label	Direction	Start Magnitude[lb/ft,...	End Magnitude[lb/ft,...	Start Location[ft,%]	End Location[ft,%]
85	M96A	X	0	0	0	%100
86	M96A	Z	0	0	0	%100
87	M101B	X	-.045	-.045	0	%100
88	M101B	Z	0	0	0	%100
89	M102B	X	-.045	-.045	0	%100
90	M102B	Z	0	0	0	%100
91	MP1A	X	-.492	-.492	0	%100
92	MP1A	Z	0	0	0	%100
93	M144	X	-.402	-.402	0	%100
94	M144	Z	0	0	0	%100
95	M147	X	0	0	0	%100
96	M147	Z	0	0	0	%100
97	M149A	X	-.065	-.065	0	%100
98	M149A	Z	0	0	0	%100
99	M152	X	-.065	-.065	0	%100
100	M152	Z	0	0	0	%100
101	M155	X	0	0	0	%100
102	M155	Z	0	0	0	%100
103	M159	X	-.062	-.062	0	%100
104	M159	Z	0	0	0	%100
105	M163	X	-.062	-.062	0	%100
106	M163	Z	0	0	0	%100
107	M166A	X	-.062	-.062	0	%100
108	M166A	Z	0	0	0	%100
109	M167	X	-.062	-.062	0	%100
110	M167	Z	0	0	0	%100
111	M168	X	0	0	0	%100
112	M168	Z	0	0	0	%100
113	MP2A	X	-.492	-.492	0	%100
114	MP2A	Z	0	0	0	%100
115	MP4A	X	-.492	-.492	0	%100
116	MP4A	Z	0	0	0	%100
117	MP5A	X	-.492	-.492	0	%100
118	MP5A	Z	0	0	0	%100
119	MP3A	X	-.492	-.492	0	%100
120	MP3A	Z	0	0	0	%100
121	MP1C	X	-.492	-.492	0	%100
122	MP1C	Z	0	0	0	%100
123	MP2C	X	-.492	-.492	0	%100
124	MP2C	Z	0	0	0	%100
125	MP4C	X	-.492	-.492	0	%100
126	MP4C	Z	0	0	0	%100
127	MP5C	X	-.492	-.492	0	%100
128	MP5C	Z	0	0	0	%100
129	MP3C	X	-.492	-.492	0	%100
130	MP3C	Z	0	0	0	%100
131	MP1B	X	-.492	-.492	0	%100
132	MP1B	Z	0	0	0	%100
133	MP2B	X	-.492	-.492	0	%100
134	MP2B	Z	0	0	0	%100
135	MP4B	X	-.492	-.492	0	%100
136	MP4B	Z	0	0	0	%100
137	MP5B	X	-.492	-.492	0	%100
138	MP5B	Z	0	0	0	%100
139	MP3B	X	-.492	-.492	0	%100
140	MP3B	Z	0	0	0	%100

Member Distributed Loads (BLC 75 : Structure Wm (300 Deg))

	Member Label	Direction	Start Magnitude[lb/ft,...	End Magnitude[lb/ft,...	Start Location[ft,%]	End Location[ft,%]
1	M19	X	-.324	-.324	0	%100
2	M19	Z	-.187	-.187	0	%100
3	M19A	X	-.718	-.718	0	%100
4	M19A	Z	-.414	-.414	0	%100
5	M38C	X	0	0	0	%100
6	M38C	Z	0	0	0	%100
7	M51	X	-.324	-.324	0	%100
8	M51	Z	-.187	-.187	0	%100
9	M104A	X	-.011	-.011	0	%100
10	M104A	Z	-.006	-.006	0	%100
11	M105A	X	-.011	-.011	0	%100
12	M105A	Z	-.006	-.006	0	%100
13	M134	X	-.052	-.052	0	%100
14	M134	Z	-.03	-.03	0	%100
15	M135	X	-.052	-.052	0	%100
16	M135	Z	-.03	-.03	0	%100
17	M93A	X	-.085	-.085	0	%100
18	M93A	Z	-.049	-.049	0	%100
19	M94A	X	-.085	-.085	0	%100
20	M94A	Z	-.049	-.049	0	%100
21	M93B	X	-.077	-.077	0	%100
22	M93B	Z	-.044	-.044	0	%100
23	M94D	X	-.077	-.077	0	%100
24	M94D	Z	-.044	-.044	0	%100
25	M53	X	-.011	-.011	0	%100
26	M53	Z	-.006	-.006	0	%100
27	M54	X	-.011	-.011	0	%100
28	M54	Z	-.006	-.006	0	%100
29	M63	X	-.085	-.085	0	%100
30	M63	Z	-.049	-.049	0	%100
31	M64	X	-.085	-.085	0	%100
32	M64	Z	-.049	-.049	0	%100
33	M69	X	-.077	-.077	0	%100
34	M69	Z	-.044	-.044	0	%100
35	M70	X	-.077	-.077	0	%100
36	M70	Z	-.044	-.044	0	%100
37	M71	X	-.045	-.045	0	%100
38	M71	Z	-.026	-.026	0	%100
39	M72	X	-.045	-.045	0	%100
40	M72	Z	-.026	-.026	0	%100
41	M81	X	-.342	-.342	0	%100
42	M81	Z	-.197	-.197	0	%100
43	M82	X	-.342	-.342	0	%100
44	M82	Z	-.197	-.197	0	%100
45	M87	X	-.307	-.307	0	%100
46	M87	Z	-.177	-.177	0	%100
47	M88	X	-.307	-.307	0	%100
48	M88	Z	-.177	-.177	0	%100
49	M89	X	-.326	-.326	0	%100
50	M89	Z	-.188	-.188	0	%100
51	M90	X	-.326	-.326	0	%100
52	M90	Z	-.188	-.188	0	%100
53	M89A	X	-.326	-.326	0	%100
54	M89A	Z	-.188	-.188	0	%100
55	M90A	X	-.326	-.326	0	%100
56	M90A	Z	-.188	-.188	0	%100
57	M91	X	-1.306	-1.306	0	%100

Member Distributed Loads (BLC 75 : Structure Wm (300 Deg)) (Continued)

	Member Label	Direction	Start Magnitude[lb/ft,...	End Magnitude[lb/ft,...	Start Location[ft,%]	End Location[ft,%]
58	M91	Z	-.754	-.754	0	%100
59	M92	X	-1.306	-1.306	0	%100
60	M92	Z	-.754	-.754	0	%100
61	M101	X	-.179	-.179	0	%100
62	M101	Z	-.104	-.104	0	%100
63	M91A	X	-.179	-.179	0	%100
64	M91A	Z	-.104	-.104	0	%100
65	M93	X	-.179	-.179	0	%100
66	M93	Z	-.104	-.104	0	%100
67	M95B	X	-.179	-.179	0	%100
68	M95B	Z	-.104	-.104	0	%100
69	M97	X	-.718	-.718	0	%100
70	M97	Z	-.414	-.414	0	%100
71	M99	X	-.718	-.718	0	%100
72	M99	Z	-.414	-.414	0	%100
73	M101A	X	-.179	-.179	0	%100
74	M101A	Z	-.104	-.104	0	%100
75	M104	X	-.179	-.179	0	%100
76	M104	Z	-.104	-.104	0	%100
77	M105B	X	-.085	-.085	0	%100
78	M105B	Z	-.049	-.049	0	%100
79	M104B	X	-.085	-.085	0	%100
80	M104B	Z	-.049	-.049	0	%100
81	M105C	X	-.341	-.341	0	%100
82	M105C	Z	-.197	-.197	0	%100
83	M95C	X	-.013	-.013	0	%100
84	M95C	Z	-.008	-.008	0	%100
85	M96A	X	-.013	-.013	0	%100
86	M96A	Z	-.008	-.008	0	%100
87	M101B	X	-.013	-.013	0	%100
88	M101B	Z	-.008	-.008	0	%100
89	M102B	X	-.013	-.013	0	%100
90	M102B	Z	-.008	-.008	0	%100
91	MP1A	X	-.412	-.412	0	%100
92	MP1A	Z	-.238	-.238	0	%100
93	M144	X	-.341	-.341	0	%100
94	M144	Z	-.197	-.197	0	%100
95	M147	X	-.019	-.019	0	%100
96	M147	Z	-.011	-.011	0	%100
97	M149A	X	-.019	-.019	0	%100
98	M149A	Z	-.011	-.011	0	%100
99	M152	X	-.075	-.075	0	%100
100	M152	Z	-.043	-.043	0	%100
101	M155	X	-.018	-.018	0	%100
102	M155	Z	-.01	-.01	0	%100
103	M159	X	-.018	-.018	0	%100
104	M159	Z	-.01	-.01	0	%100
105	M163	X	-.071	-.071	0	%100
106	M163	Z	-.041	-.041	0	%100
107	M166A	X	-.018	-.018	0	%100
108	M166A	Z	-.01	-.01	0	%100
109	M167	X	-.072	-.072	0	%100
110	M167	Z	-.041	-.041	0	%100
111	M168	X	-.018	-.018	0	%100
112	M168	Z	-.01	-.01	0	%100
113	MP2A	X	-.412	-.412	0	%100
114	MP2A	Z	-.238	-.238	0	%100

Member Distributed Loads (BLC 75 : Structure Wm (300 Deg)) (Continued)

	Member Label	Direction	Start Magnitude[lb/ft,...	End Magnitude[lb/ft,...	Start Location[ft,%]	End Location[ft,%]
115	MP4A	X	-.412	-.412	0	%100
116	MP4A	Z	-.238	-.238	0	%100
117	MP5A	X	-.412	-.412	0	%100
118	MP5A	Z	-.238	-.238	0	%100
119	MP3A	X	-.412	-.412	0	%100
120	MP3A	Z	-.238	-.238	0	%100
121	MP1C	X	-.412	-.412	0	%100
122	MP1C	Z	-.238	-.238	0	%100
123	MP2C	X	-.412	-.412	0	%100
124	MP2C	Z	-.238	-.238	0	%100
125	MP4C	X	-.412	-.412	0	%100
126	MP4C	Z	-.238	-.238	0	%100
127	MP5C	X	-.412	-.412	0	%100
128	MP5C	Z	-.238	-.238	0	%100
129	MP3C	X	-.412	-.412	0	%100
130	MP3C	Z	-.238	-.238	0	%100
131	MP1B	X	-.412	-.412	0	%100
132	MP1B	Z	-.238	-.238	0	%100
133	MP2B	X	-.412	-.412	0	%100
134	MP2B	Z	-.238	-.238	0	%100
135	MP4B	X	-.412	-.412	0	%100
136	MP4B	Z	-.238	-.238	0	%100
137	MP5B	X	-.412	-.412	0	%100
138	MP5B	Z	-.238	-.238	0	%100
139	MP3B	X	-.412	-.412	0	%100
140	MP3B	Z	-.238	-.238	0	%100

Member Distributed Loads (BLC 76 : Structure Wm (330 Deg))

	Member Label	Direction	Start Magnitude[lb/ft,...	End Magnitude[lb/ft,...	Start Location[ft,%]	End Location[ft,%]
1	M19	X	-.249	-.249	0	%100
2	M19	Z	-.432	-.432	0	%100
3	M19A	X	-.311	-.311	0	%100
4	M19A	Z	-.538	-.538	0	%100
5	M38C	X	-.062	-.062	0	%100
6	M38C	Z	-.108	-.108	0	%100
7	M51	X	-.062	-.062	0	%100
8	M51	Z	-.108	-.108	0	%100
9	M104A	X	-.019	-.019	0	%100
10	M104A	Z	-.034	-.034	0	%100
11	M105A	X	-.019	-.019	0	%100
12	M105A	Z	-.034	-.034	0	%100
13	M134	X	-.023	-.023	0	%100
14	M134	Z	-.039	-.039	0	%100
15	M135	X	-.023	-.023	0	%100
16	M135	Z	-.039	-.039	0	%100
17	M93A	X	-.148	-.148	0	%100
18	M93A	Z	-.256	-.256	0	%100
19	M94A	X	-.148	-.148	0	%100
20	M94A	Z	-.256	-.256	0	%100
21	M93B	X	-.133	-.133	0	%100
22	M93B	Z	-.23	-.23	0	%100
23	M94D	X	-.133	-.133	0	%100
24	M94D	Z	-.23	-.23	0	%100
25	M53	X	0	0	0	%100
26	M53	Z	0	0	0	%100
27	M54	X	0	0	0	%100

Member Distributed Loads (BLC 76 : Structure Wm (330 Deg)) (Continued)

	Member Label	Direction	Start Magnitude[lb/ft,...	End Magnitude[lb/ft,...	Start Location[ft,%]	End Location[ft,%]
28	M54	Z	0	0	0	%100
29	M63	X	0	0	0	%100
30	M63	Z	0	0	0	%100
31	M64	X	0	0	0	%100
32	M64	Z	0	0	0	%100
33	M69	X	0	0	0	%100
34	M69	Z	0	0	0	%100
35	M70	X	0	0	0	%100
36	M70	Z	0	0	0	%100
37	M71	X	-.019	-.019	0	%100
38	M71	Z	-.034	-.034	0	%100
39	M72	X	-.019	-.019	0	%100
40	M72	Z	-.034	-.034	0	%100
41	M81	X	-.148	-.148	0	%100
42	M81	Z	-.256	-.256	0	%100
43	M82	X	-.148	-.148	0	%100
44	M82	Z	-.256	-.256	0	%100
45	M87	X	-.133	-.133	0	%100
46	M87	Z	-.23	-.23	0	%100
47	M88	X	-.133	-.133	0	%100
48	M88	Z	-.23	-.23	0	%100
49	M89	X	-.565	-.565	0	%100
50	M89	Z	-.979	-.979	0	%100
51	M90	X	-.565	-.565	0	%100
52	M90	Z	-.979	-.979	0	%100
53	M89A	X	0	0	0	%100
54	M89A	Z	0	0	0	%100
55	M90A	X	0	0	0	%100
56	M90A	Z	0	0	0	%100
57	M91	X	-.565	-.565	0	%100
58	M91	Z	-.979	-.979	0	%100
59	M92	X	-.565	-.565	0	%100
60	M92	Z	-.979	-.979	0	%100
61	M101	X	-.311	-.311	0	%100
62	M101	Z	-.538	-.538	0	%100
63	M91A	X	-.311	-.311	0	%100
64	M91A	Z	-.538	-.538	0	%100
65	M93	X	0	0	0	%100
66	M93	Z	0	0	0	%100
67	M95B	X	0	0	0	%100
68	M95B	Z	0	0	0	%100
69	M97	X	-.311	-.311	0	%100
70	M97	Z	-.538	-.538	0	%100
71	M99	X	-.311	-.311	0	%100
72	M99	Z	-.538	-.538	0	%100
73	M101A	X	-.311	-.311	0	%100
74	M101A	Z	-.538	-.538	0	%100
75	M104	X	0	0	0	%100
76	M104	Z	0	0	0	%100
77	M105B	X	-.148	-.148	0	%100
78	M105B	Z	-.256	-.256	0	%100
79	M104B	X	0	0	0	%100
80	M104B	Z	0	0	0	%100
81	M105C	X	-.148	-.148	0	%100
82	M105C	Z	-.256	-.256	0	%100
83	M95C	X	-.023	-.023	0	%100
84	M95C	Z	-.039	-.039	0	%100

Member Distributed Loads (BLC 76 : Structure Wm (330 Deg)) (Continued)

	Member Label	Direction	Start Magnitude[lb/ft,...	End Magnitude[lb/ft,...	Start Location[ft,%]	End Location[ft,%]
85	M96A	X	-.023	-.023	0	%100
86	M96A	Z	-.039	-.039	0	%100
87	M101B	X	0	0	0	%100
88	M101B	Z	0	0	0	%100
89	M102B	X	0	0	0	%100
90	M102B	Z	0	0	0	%100
91	MP1A	X	-.222	-.222	0	%100
92	MP1A	Z	-.385	-.385	0	%100
93	M144	X	-.188	-.188	0	%100
94	M144	Z	-.326	-.326	0	%100
95	M147	X	-.032	-.032	0	%100
96	M147	Z	-.056	-.056	0	%100
97	M149A	X	0	0	0	%100
98	M149A	Z	0	0	0	%100
99	M152	X	-.032	-.032	0	%100
100	M152	Z	-.056	-.056	0	%100
101	M155	X	-.031	-.031	0	%100
102	M155	Z	-.053	-.053	0	%100
103	M159	X	0	0	0	%100
104	M159	Z	0	0	0	%100
105	M163	X	-.031	-.031	0	%100
106	M163	Z	-.053	-.053	0	%100
107	M166A	X	0	0	0	%100
108	M166A	Z	0	0	0	%100
109	M167	X	-.031	-.031	0	%100
110	M167	Z	-.054	-.054	0	%100
111	M168	X	-.031	-.031	0	%100
112	M168	Z	-.054	-.054	0	%100
113	MP2A	X	-.222	-.222	0	%100
114	MP2A	Z	-.385	-.385	0	%100
115	MP4A	X	-.222	-.222	0	%100
116	MP4A	Z	-.385	-.385	0	%100
117	MP5A	X	-.222	-.222	0	%100
118	MP5A	Z	-.385	-.385	0	%100
119	MP3A	X	-.222	-.222	0	%100
120	MP3A	Z	-.385	-.385	0	%100
121	MP1C	X	-.222	-.222	0	%100
122	MP1C	Z	-.385	-.385	0	%100
123	MP2C	X	-.222	-.222	0	%100
124	MP2C	Z	-.385	-.385	0	%100
125	MP4C	X	-.222	-.222	0	%100
126	MP4C	Z	-.385	-.385	0	%100
127	MP5C	X	-.222	-.222	0	%100
128	MP5C	Z	-.385	-.385	0	%100
129	MP3C	X	-.222	-.222	0	%100
130	MP3C	Z	-.385	-.385	0	%100
131	MP1B	X	-.222	-.222	0	%100
132	MP1B	Z	-.385	-.385	0	%100
133	MP2B	X	-.222	-.222	0	%100
134	MP2B	Z	-.385	-.385	0	%100
135	MP4B	X	-.222	-.222	0	%100
136	MP4B	Z	-.385	-.385	0	%100
137	MP5B	X	-.222	-.222	0	%100
138	MP5B	Z	-.385	-.385	0	%100
139	MP3B	X	-.222	-.222	0	%100
140	MP3B	Z	-.385	-.385	0	%100

Member Distributed Loads (BLC 81 : BLC 39 Transient Area Loads)

	Member Label	Direction	Start Magnitude[lb/ft,...	End Magnitude[lb/ft,...	Start Location[ft,%]	End Location[ft,%]
1	M71	Y	-4.134	-7.228	0	.167
2	M71	Y	-7.228	-13.873	.167	.333
3	M71	Y	-13.873	-24.068	.333	.5
4	M81	Y	-2.102	-4.316	0	.538
5	M81	Y	-4.316	-8.986	.538	1.076
6	M81	Y	-8.986	-11.696	1.076	1.614
7	M81	Y	-11.696	-11.625	1.614	2.152
8	M81	Y	-11.625	-13.188	2.152	2.69
9	M82	Y	-14.533	-12.345	0	.538
10	M82	Y	-12.345	-11.533	.538	1.076
11	M82	Y	-11.533	-9.065	1.076	1.614
12	M82	Y	-9.065	-4.836	1.614	2.152
13	M82	Y	-4.836	-1.873	2.152	2.69
14	M102	Y	-54.716	-54.716	0	.146
15	M96	Y	-2.32	-2.32	0	.146
16	M159B	Y	-77.65	-77.65	0	.188
17	M53	Y	-24.068	-13.873	0	.167
18	M53	Y	-13.873	-7.228	.167	.333
19	M53	Y	-7.228	-4.134	.333	.5
20	M63	Y	-1.873	-4.836	0	.538
21	M63	Y	-4.836	-9.065	.538	1.076
22	M63	Y	-9.065	-11.533	1.076	1.614
23	M63	Y	-11.533	-12.345	1.614	2.152
24	M63	Y	-12.345	-14.533	2.152	2.69
25	M64	Y	-12.744	-12.168	0	.538
26	M64	Y	-12.168	-12.239	.538	1.076
27	M64	Y	-12.239	-9.035	1.076	1.614
28	M64	Y	-9.035	-4.365	1.614	2.152
29	M64	Y	-4.365	-2.151	2.152	2.69
30	M92A	Y	-2.056	-2.056	0	.146
31	M98	Y	-48.915	-48.915	0	.146
32	M147B	Y	-79.537	-79.537	0	.188
33	M104A	Y	-24.068	-13.873	0	.167
34	M104A	Y	-13.873	-7.228	.167	.333
35	M104A	Y	-7.228	-4.134	.333	.5
36	M93A	Y	-1.873	-4.836	0	.538
37	M93A	Y	-4.836	-9.065	.538	1.076
38	M93A	Y	-9.065	-11.533	1.076	1.614
39	M93A	Y	-11.533	-12.345	1.614	2.152
40	M93A	Y	-12.345	-14.533	2.152	2.69
41	M94A	Y	-12.744	-12.168	0	.538
42	M94A	Y	-12.168	-12.239	.538	1.076
43	M94A	Y	-12.239	-9.035	1.076	1.614
44	M94A	Y	-9.035	-4.365	1.614	2.152
45	M94A	Y	-4.365	-2.151	2.152	2.69
46	M94	Y	-48.915	-48.915	0	.146
47	M100	Y	-2.056	-2.056	0	.146
48	M174	Y	-79.537	-79.537	0	.188

Member Distributed Loads (BLC 82 : BLC 40 Transient Area Loads)

	Member Label	Direction	Start Magnitude[lb/ft,...	End Magnitude[lb/ft,...	Start Location[ft,%]	End Location[ft,%]
1	M71	Y	-7.99	-13.971	0	.167
2	M71	Y	-13.971	-26.814	.167	.333
3	M71	Y	-26.814	-46.52	.333	.5
4	M81	Y	-4.063	-8.342	0	.538
5	M81	Y	-8.342	-17.368	.538	1.076

Member Distributed Loads (BLC 82 : BLC 40 Transient Area Loads) (Continued)

	Member Label	Direction	Start Magnitude[lb/ft,...	End Magnitude[lb/ft,...	Start Location[ft,%]	End Location[ft,%]
6	M81	Y	-17.368	-22.607	1.076	1.614
7	M81	Y	-22.607	-22.47	1.614	2.152
8	M81	Y	-22.47	-25.49	2.152	2.69
9	M82	Y	-28.091	-23.862	0	.538
10	M82	Y	-23.862	-22.291	.538	1.076
11	M82	Y	-22.291	-17.522	1.076	1.614
12	M82	Y	-17.522	-9.346	1.614	2.152
13	M82	Y	-9.346	-3.62	2.152	2.69
14	M102	Y	-105.76	-105.76	0	.146
15	M96	Y	-4.484	-4.484	0	.146
16	M159B	Y	-150.089	-150.089	0	.188
17	M53	Y	-46.52	-26.814	0	.167
18	M53	Y	-26.814	-13.971	.167	.333
19	M53	Y	-13.971	-7.99	.333	.5
20	M63	Y	-3.62	-9.346	0	.538
21	M63	Y	-9.346	-17.522	.538	1.076
22	M63	Y	-17.522	-22.291	1.076	1.614
23	M63	Y	-22.291	-23.862	1.614	2.152
24	M63	Y	-23.862	-28.091	2.152	2.69
25	M64	Y	-24.632	-23.519	0	.538
26	M64	Y	-23.519	-23.656	.538	1.076
27	M64	Y	-23.656	-17.464	1.076	1.614
28	M64	Y	-17.464	-8.437	1.614	2.152
29	M64	Y	-8.437	-4.158	2.152	2.69
30	M92A	Y	-3.973	-3.973	0	.146
31	M98	Y	-94.547	-94.547	0	.146
32	M147B	Y	-153.735	-153.735	0	.188
33	M104A	Y	-46.52	-26.814	0	.167
34	M104A	Y	-26.814	-13.971	.167	.333
35	M104A	Y	-13.971	-7.99	.333	.5
36	M93A	Y	-3.62	-9.346	0	.538
37	M93A	Y	-9.346	-17.522	.538	1.076
38	M93A	Y	-17.522	-22.291	1.076	1.614
39	M93A	Y	-22.291	-23.862	1.614	2.152
40	M93A	Y	-23.862	-28.091	2.152	2.69
41	M94A	Y	-24.632	-23.519	0	.538
42	M94A	Y	-23.519	-23.656	.538	1.076
43	M94A	Y	-23.656	-17.464	1.076	1.614
44	M94A	Y	-17.464	-8.437	1.614	2.152
45	M94A	Y	-8.437	-4.158	2.152	2.69
46	M94	Y	-94.547	-94.547	0	.146
47	M100	Y	-3.973	-3.973	0	.146
48	M174	Y	-153.735	-153.735	0	.188

Member Area Loads (BLC 39 : Structure D)

	Joint A	Joint B	Joint C	Joint D	Direction	Distribution	Magnitude[ksf]
1	N104	N103	N109A	N108A	Y	Two Way	-.005
2	N82	N83	N111	N109	Y	Two Way	-.005
3	N117	N118	N108B	N112	Y	Two Way	-.005
4	N97	N97	N215		Y	Two Way	-.005
5	N186	N186	N203B		Y	Two Way	-.005
6	N117B	N117B	N214A		Y	Two Way	-.005
7	N119A	N119A	N216		Y	Two Way	-.005

Member Area Loads (BLC 40 : Structure Di)

	Joint A	Joint B	Joint C	Joint D	Direction	Distribution	Magnitude[ksf]
1	N104	N103	N109A	N108A	Y	Two Way	-.01
2	N82	N83	N111	N109	Y	Two Way	-.01
3	N117	N118	N108B	N112	Y	Two Way	-.01

Envelope AISC 15th(360-16): LRFD Steel Code Checks

	Member	Shape	Code C...	Loc[ft]	LC	Shear ...	Loc[ft]	Dir	LC	phi*Pnc [lb]	phi*Pnt [lb]	phi*Mn y-...	phi*Mn z-...	Cb	Eqn
1	M19	HSS6X3X4	.756	5.125	21	.102	5.125	z	23	133934.6...	158976	15.215	24.806	1....	H1-1b
2	M19A	PL1/4x4	.314	.56	17	.196	0	y	37	20526.067	32400	.169	2.7	1....	H1-1b
3	M38C	HSS6X3X4	.774	5.125	17	.112	5.125	z	19	133934.6...	158976	15.215	24.806	1....	H1-1b
4	M51	HSS6X3X4	.760	5.125	13	.102	5.125	z	15	133934.6...	158976	15.215	24.806	1....	H1-1b
5	M104A	PL1/4x3	1.392	.5	23	.023	.5	z	10	16887.517	24300	.127	1.44	1	H1-1b
6	M105A	PL1/4x3	1.859	.5	24	.032	.5	z	10	16887.517	24300	.127	1.44	1	H1-1b
7	M134	PL1/4x2	.835	0	18	.064	0	y	8	2922.063	16200	.084	.649	1....	H1-1a
8	M135	PL1/4x2	.869	0	18	.069	0	y	2	2922.063	16200	.084	.649	1....	H1-1a
9	M53	PL1/4x3	1.394	.5	19	.024	.5	z	6	16887.517	24300	.127	1.44	1	H1-1b
10	M54	PL1/4x3	1.857	.5	19	.034	.5	z	6	16887.517	24300	.127	1.44	1	H1-1b
11	M71	PL1/4x3	1.392	.5	15	.022	.5	z	2	16887.517	24300	.127	1.44	1	H1-1b
12	M72	PL1/4x3	1.850	.5	16	.032	.5	z	2	16887.517	24300	.127	1.44	1	H1-1b
13	M101	PL1/4x4	1.228	.208	17	.481	0	y	38	30416.373	32400	.169	2.7	1....	H1-1b
14	M91A	PL1/4x4	1.226	.208	21	.454	0	y	12	30416.373	32400	.169	2.7	1....	H1-1b
15	M93	PL1/4x4	1.235	.208	13	.387	.208	y	4	30416.373	32400	.169	2.7	1....	H1-1b
16	M95B	PL1/4x4	1.226	.208	17	.446	.208	y	38	30416.373	32400	.169	2.7	1....	H1-1b
17	M97	PL1/4x4	1.228	.208	21	.402	.208	y	12	30416.373	32400	.169	2.7	1....	H1-1b
18	M99	PL1/4x4	1.233	.208	13	.434	0	y	4	30416.373	32400	.169	2.7	1....	H1-1b
19	M101A	PL1/4x4	.316	.56	13	.064	.56	y	39	20526.067	32400	.169	2.7	2....	H1-1b
20	M104	PL1/4x4	.315	.56	21	.072	.56	y	36	20526.067	32400	.169	2.7	2....	H1-1b
21	M105B	PIPE_1.5	.505	7.25	7	.183	2.568		7	2186.296	23593.5	1.105	1.105	2....	H1-1b
22	M104B	PIPE_1.5	.492	7.25	3	.175	2.568		3	2186.296	23593.5	1.105	1.105	2....	H1-1b
23	M105C	PIPE_1.5	.513	7.25	11	.187	2.568		11	2186.296	23593.5	1.105	1.105	2....	H1-1b
24	M95C	PL1/4x2	.838	0	14	.064	0	y	4	2922.063	16200	.084	.652	1....	H1-1a
25	M96A	PL1/4x2	.879	1.182	13	.067	0	y	10	2922.063	16200	.084	.618	1....	H1-1a
26	M101B	PL1/4x2	.836	0	22	.066	0	y	12	2922.063	16200	.084	.649	1....	H1-1a
27	M102B	PL1/4x2	.872	1.182	21	.071	0	y	6	2922.063	16200	.084	.621	1....	H1-1a
28	MP1A	PIPE_2.0	.217	5.167	10	.159	5.167		8	14916.096	32130	1.872	1.872	2....	H1-1b
29	M144	PIPE_2.0	.095	2.5	6	.015	2.5		6	28843.414	32130	1.872	1.872	2....	H1-1b
30	M147	PL1/4x2	.000	0	52	.000	0	y	52	118.164	16200	.084	.305	1	H1-1a
31	M149A	PL1/4x2	.000	0	52	.000	0	y	52	118.164	16200	.084	.305	1	H1-1a
32	M152	PL1/4x2	.000	0	52	.000	0	y	52	118.164	16200	.084	.305	1	H1-1a
33	M155	PL1/4x2	.000	0	52	.000	0	y	52	303.861	16200	.084	.468	1	H1-1a
34	M159	PL1/4x2	.000	0	52	.000	0	y	52	303.861	16200	.084	.468	1	H1-1a
35	M163	PL1/4x2	.000	0	52	.000	0	y	52	303.861	16200	.084	.468	1	H1-1a
36	M166A	PL3/8X4.75	.126	0	11	.035	0	y	6	11569.767	57712.5	.451	5.711	2....	H1-1b
37	M167	PL3/8X4.75	.125	0	7	.034	0	y	2	11569.767	57712.5	.451	5.711	2....	H1-1b
38	M168	PL3/8X4.75	.121	0	3	.034	0	y	10	11569.767	57712.5	.451	5.711	2....	H1-1b
39	MP2A	PIPE_2.0	.373	5.167	4	.257	1.25		7	14916.096	32130	1.872	1.872	2....	H1-1b
40	MP4A	PIPE_2.0	.361	5.167	11	.255	1.25		7	14916.096	32130	1.872	1.872	2....	H1-1b
41	MP5A	PIPE_2.0	.253	5.167	11	.168	1.25		6	14916.096	32130	1.872	1.872	2....	H1-1b
42	MP3A	PIPE_2.0	.394	5.167	11	.099	2		10	14916.096	32130	1.872	1.872	2....	H1-1b
43	MP1C	PIPE_2.0	.226	5.167	6	.155	5.167		4	14916.096	32130	1.872	1.872	2....	H1-1b
44	MP2C	PIPE_2.0	.386	5.167	12	.250	1.25		3	14916.096	32130	1.872	1.872	2....	H1-1b
45	MP4C	PIPE_2.0	.367	5.167	6	.247	1.25		3	14916.096	32130	1.872	1.872	1....	H1-1b
46	MP5C	PIPE_2.0	.255	5.167	7	.165	5.167		2	14916.096	32130	1.872	1.872	2....	H1-1b
47	MP3C	PIPE_2.0	.404	5.167	12	.102	2		6	14916.096	32130	1.872	1.872	2....	H1-1b
48	MP1B	PIPE_2.0	.223	5.167	1	.164	5.167		12	14916.096	32130	1.872	1.872	2....	H1-1b
49	MP2B	PIPE_2.0	.373	5.167	8	.261	1.25		11	14916.096	32130	1.872	1.872	1....	H1-1b

Envelope AISC 15th(360-16): LRFD Steel Code Checks (Continued)

	Member	Shape	Code C...	Loc[ft]	LC	Shear ...	Loc[ft]	Dir	LC	phi*Pnc [lb]	phi*Pnt [lb]	phi*Mn y-...	phi*Mn z-...	Cb	Eqn
50	MP4B	PIPE_2.0	.354	5.167	2	.260	1.25		11	14916.096	32130	1.872	1.872	2....	H1-1b
51	MP5B	PIPE_2.0	.240	5.167	3	.162	1.25		10	14916.096	32130	1.872	1.872	2....	H1-1b
52	MP3B	PIPE_2.0	.388	5.167	8	.100	2		2	14916.096	32130	1.872	1.872	2....	H1-1b

Envelope AISI S100-16: LRFD Cold Formed Steel Code Checks

	Member	Shape	Code ...	Loc[ft]	LC	Shear ...	Loc[ft]	Dir	LC	phi*Pn[lb]	phi*Tn[lb]	phi*Mny...	phi*Mnz...	phi*V...	phi*V...	Cb	Eqn
1	M93A	3CU1.5X...	.566	2.69	21	.065	2.69	y	18	29957.4...	41594.9...	.688	2.779	9747	9747	2.267	H1.2-1
2	M94A	3CU1.5X...	.567	0	19	.066	0	y	20	29957.4...	41594.9...	.688	2.779	9747	9747	2.268	H1.2-1
3	M93B	3CU1.5X...	1.750	0	14	.135	1.583	y	6	35762.94	41594.9...	.688	2.78	9747	9747	1.797	H1.1-1
4	M94D	3CU1.5X...	1.839	1.583	24	.138	0	y	8	35762.94	41594.9...	.688	2.78	9747	9747	1.795	H1.1-1
5	M63	3CU1.5X...	.566	2.69	17	.065	2.69	y	14	29957.4...	41594.9...	.688	2.779	9747	9747	2.267	H1.2-1
6	M64	3CU1.5X...	.566	0	13	.065	0	y	16	29957.4...	41594.9...	.688	2.779	9747	9747	2.271	H1.2-1
7	M69	3CU1.5X...	1.745	0	22	.131	1.583	y	2	35762.94	41594.9...	.688	2.78	9747	9747	1.796	H1.1-1
8	M70	3CU1.5X...	1.832	1.583	20	.139	0	y	4	35762.94	41594.9...	.688	2.78	9747	9747	1.801	H1.1-1
9	M81	3CU1.5X...	.566	2.69	13	.064	2.69	y	22	29957.4...	41594.9...	.688	2.779	9747	9747	2.268	H1.2-1
10	M82	3CU1.5X...	.564	0	23	.065	0	y	24	29957.4...	41594.9...	.688	2.779	9747	9747	2.268	H1.2-1
11	M87	3CU1.5X...	1.746	0	18	.131	1.583	y	11	35762.94	41594.9...	.688	2.78	9747	9747	1.795	H1.1-1
12	M88	3CU1.5X...	1.829	1.583	16	.140	0	y	12	35762.94	41594.9...	.688	2.78	9747	9747	1.803	H1.1-1
13	M89	4.5CU3X...	1.419	3.096	22	1.280	2.568	z	22	46428.4...	75945.6	2.934	9.327	1859...	2628...	1.756	H2-1
14	M90	4.5CU3X...	1.542	3.096	16	1.419	2.643	z	16	46428.4...	75945.6	2.934	9.327	1859...	2628...	1.779	H2-1
15	M89A	4.5CU3X...	1.420	3.096	18	1.280	2.568	z	18	46428.4...	75945.6	2.934	9.327	1859...	2628...	1.76	H2-1
16	M90A	4.5CU3X...	1.553	3.096	24	1.428	2.643	z	24	46428.4...	75945.6	2.934	9.327	1859...	2628...	1.782	H2-1
17	M91	4.5CU3X...	1.422	3.096	14	1.282	2.568	z	14	46428.4...	75945.6	2.934	9.327	1859...	2628...	1.755	H2-1
18	M92	4.5CU3X...	1.545	3.096	20	1.421	2.643	z	20	46428.4...	75945.6	2.934	9.327	1859...	2628...	1.783	H2-1

Envelope Joint Reactions

	Joint		X [lb]	LC	Y [lb]	LC	Z [lb]	LC	MX [k-ft]	LC	MY [k-ft]	LC	MZ [k-ft]	LC
1	N23	max	422.74	10	2561.759	21	1892.556	13	-.742	3	2.409	12	-1.302	3
2		min	-3212.585	15	502.631	3	-372.578	7	-5.655	21	-2.414	6	-9.812	21
3	N47A	max	3255.187	23	2714.741	17	2116.899	1	-.593	12	2.542	8	10.015	17
4		min	-585.16	5	527.784	11	-741.828	7	-5.856	18	-2.548	2	1.091	11
5	N65	max	1079.831	10	2573.367	13	550.338	1	11.383	13	2.31	4	.497	4
6		min	-1084.381	4	471.493	7	-3727.487	19	1.337	7	-2.313	10	-.488	10
7	Totals:	max	4327.372	10	7385.64	23	4420.968	1						
8		min	-4327.348	4	2806.365	52	-4420.978	7						

Client:	Verizon Wireless	Date:	12/3/2020
Site Name:	Plymouth West Relo CT		
Project No.	20777381A		
Title:	Mount Analysis	Page:	1

Version 3.1

I. Mount-to-Tower Connection Check

RISA Model Data

Nodes *(labeled per RISA)*	Orientation *(per graphic of typical platform)*
N23	30
N47A	150
N65	270

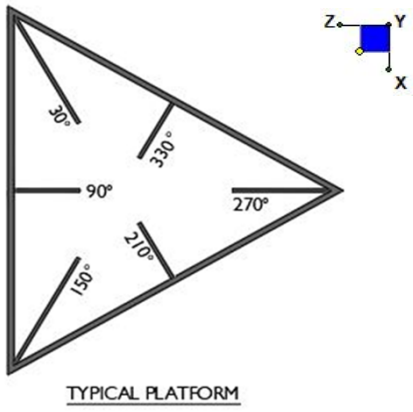

TYPICAL PLATFORM

Tower Connection Bolt Checks

Any moment resistance?:	yes
Bolt Quantity per Reaction:	4
d_x (in) *(Delta X of typ. bolt config. sketch)* :	9.5
d_y (in) *(Delta Y of typ. bolt config. sketch)* :	9.5
Bolt Type:	A307
Bolt Diameter (in):	0.625
Required Tensile Strength (kips):	32.0
Required Shear Strength (kips):	3.3
Tensile Strength / bolt (kips):	10.0
Shear Strength / bolt (kips):	6.0
Tensile Capacity Overall:	**79.9%***
Shear Capacity Overall:	**13.9%**

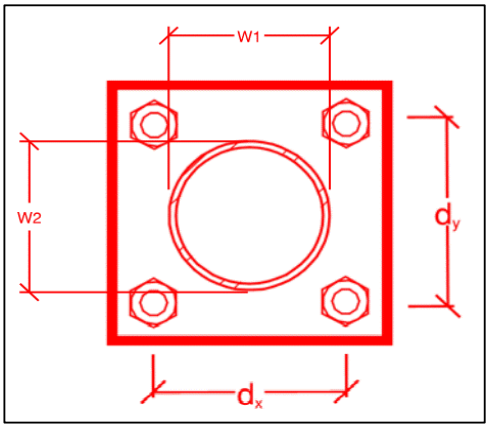

**Note: Tension reduction not required if tension or shear capacity < 30%*

Tower Connection Plate and Weld Check

Connecting Standoff Member Shape:	Rect
Plate Width (in):	11.5
Plate Height (in):	11.5
W1 (in):	6
W2 (in):	3
Fy (ksi, plate):	36
t_{Plate} (in):	0.5
Weld Size (1/16 in):	3
Phi*Rn (kip/in):	4.18
Required Weld Strength (kip/in):	6.78
Plate Bending Capacity:	**223.5%**
Weld Capacity:	**162.3%**

Max Plate Bending Strengths

Mu_{xx} *(kip-in)* :	51.9
$Phi*Mn_{xx}$ *(kip-in)* :	23.3
Mu_{yy} *(kip-in)* :	0.1
$Phi*Mn_{yy}$ *(kip-in)* :	23.3

Structure: 467737-VZW - Plymouth West Relo CT

Sector: **A**

Structure Type: Monopole

Mount Elev: 138.00

12/2/2020

Plan View

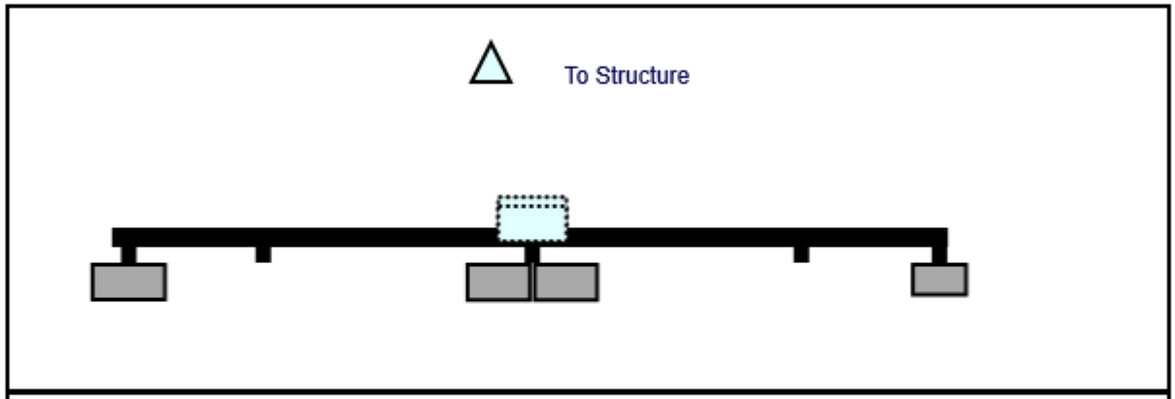

Front View
Looking at Structure

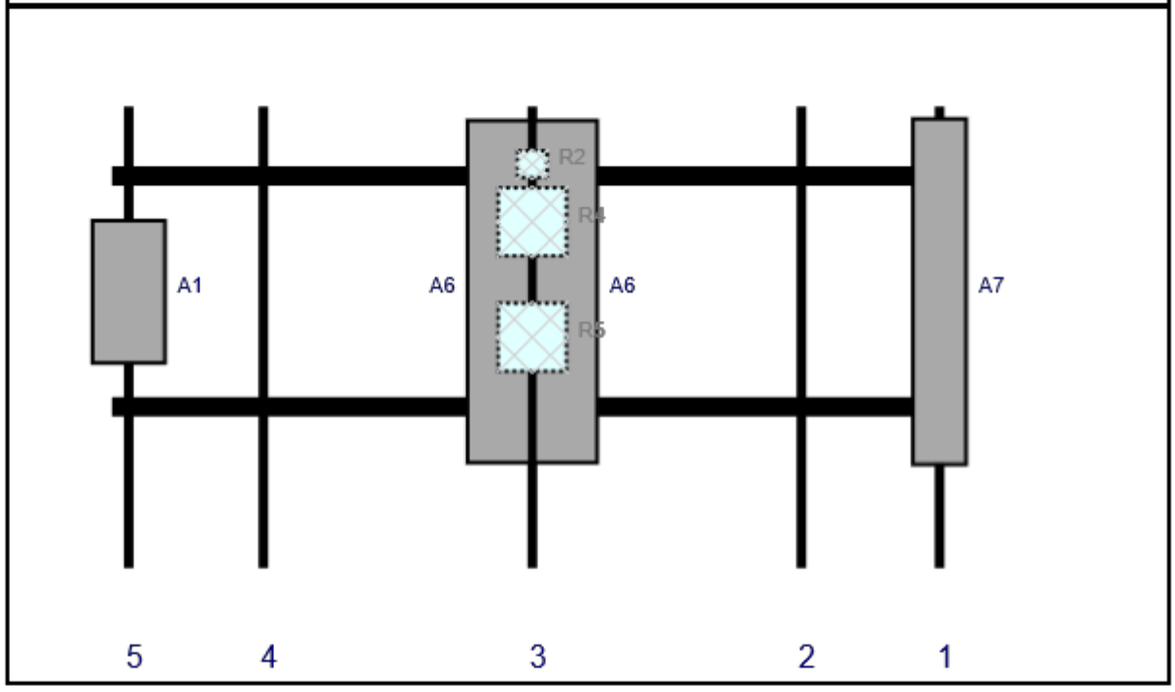

Ref#	Model	Height (in)	Width (in)	H Dist Frm L.	Pipe #	Pipe Pos V	Ant Pos	C. Ant Frm T.	Ant H Off	Status	Validation
A7	LNX-6514DS-A1M	72.7	11.9	172.25	1	a	Front	38.52	0	Retained	10/27/2020
A6	JAHH-65B-R3B	72	13.8	87.5	3	a	Front	38.52	7	Added	
A6	JAHH-65B-R3B	72	13.8	87.5	3	b	Front	38.52	-7	Added	
R2	CBC78T-DS-43-2X	6.4	6.9	87.5	3	a	Behind	12	0	Added	
R4	B2/B66A RRH-BR049	15	15	87.5	3	a	Behind	24	0	Added	
R5	B5/B13 RRH-BR04C	15	15	87.5	3	a	Behind	48	0	Added	
A1	nL-Sub6 Antenna	30.4	15.9	3.5	5	a	Front	38.52	0	Added	

Copyright 2019 by Tower Engineering Solutions, LLC. All Rights Reserved

Sector: **B** 12/2/2020

Structure Type: Monopole

Mount Elev: 138.00 Page: 2

Plan View

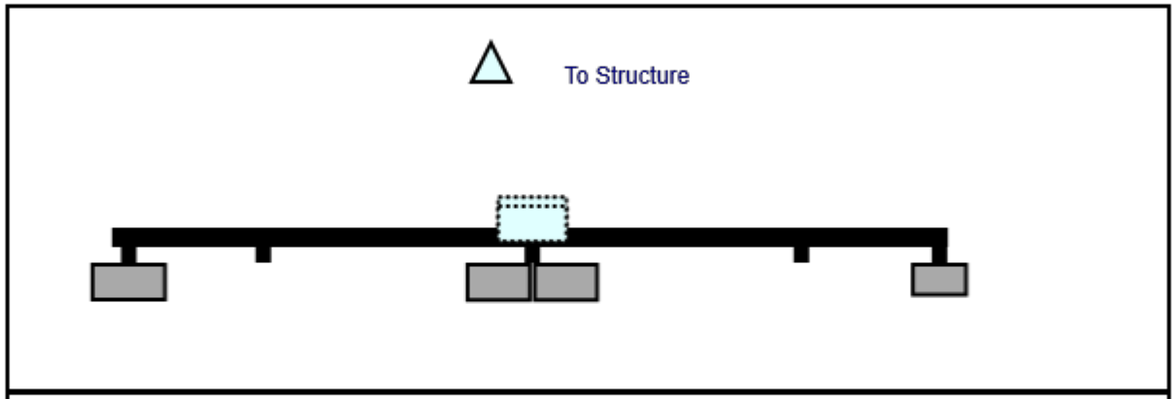

Front View
Looking at Structure

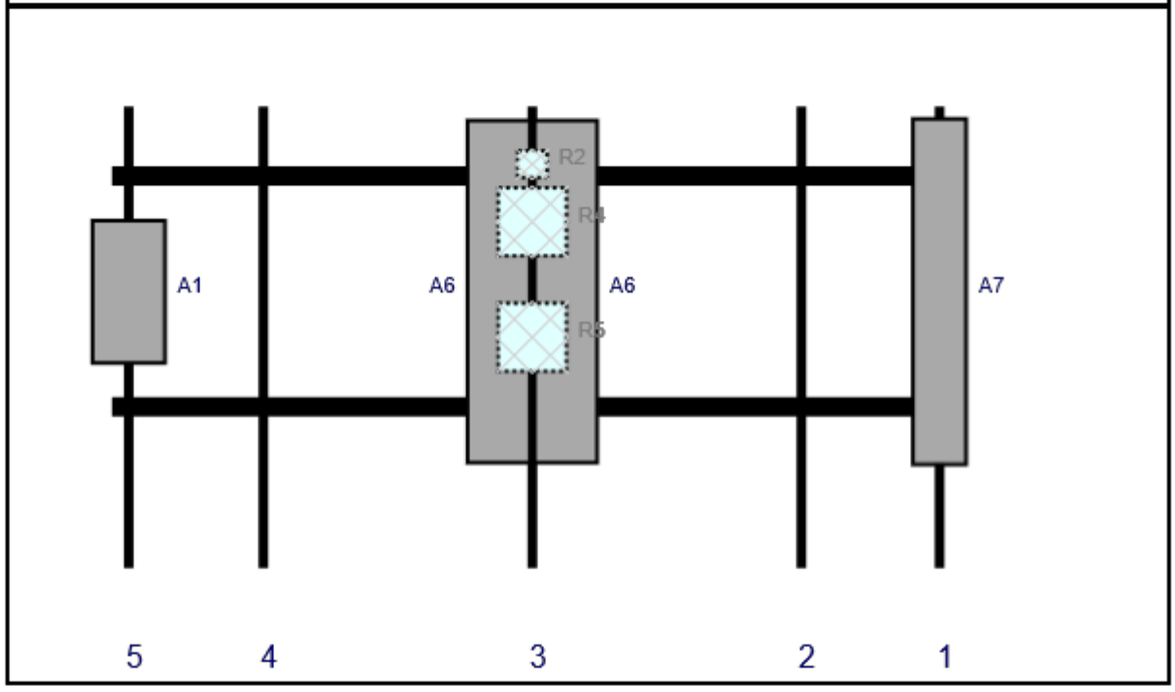

Ref#	Model	Height (in)	Width (in)	H Dist Frm L.	Pipe #	Pipe Pos V	Ant Pos	C. Ant Frm T.	Ant H Off	Status	Validation
A7	LNX-6514DS-A1M	72.7	11.9	172.25	1	a	Front	38.52	0	Retained	10/27/2020
A6	JAHH-65B-R3B	72	13.8	87.5	3	a	Front	38.52	7	Added	
A6	JAHH-65B-R3B	72	13.8	87.5	3	b	Front	38.52	-7	Added	
R2	CBC78T-DS-43-2X	6.4	6.9	87.5	3	a	Behind	12	0	Added	
R4	B2/B66A RRH-BR049	15	15	87.5	3	a	Behind	24	0	Added	
R5	B5/B13 RRH-BR04C	15	15	87.5	3	a	Behind	48	0	Added	
A1	nL-Sub6 Antenna	30.4	15.9	3.5	5	a	Front	38.52	0	Added	

Copyright 2019 by Tower Engineering Solutions, LLC. All Rights Reserved

Sector: **C**

Structure Type: Monopole

Mount Elev: 138.00

12/2/2020

Plan View

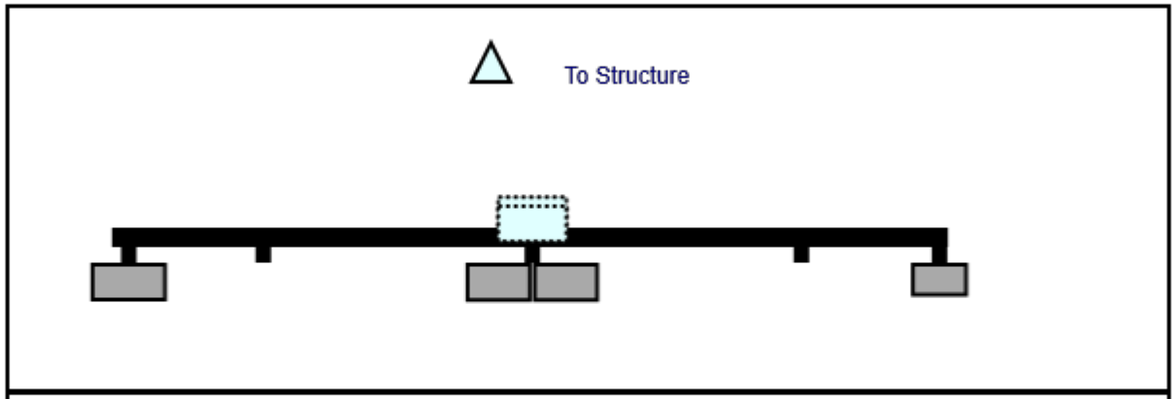

Front View
Looking at Structure

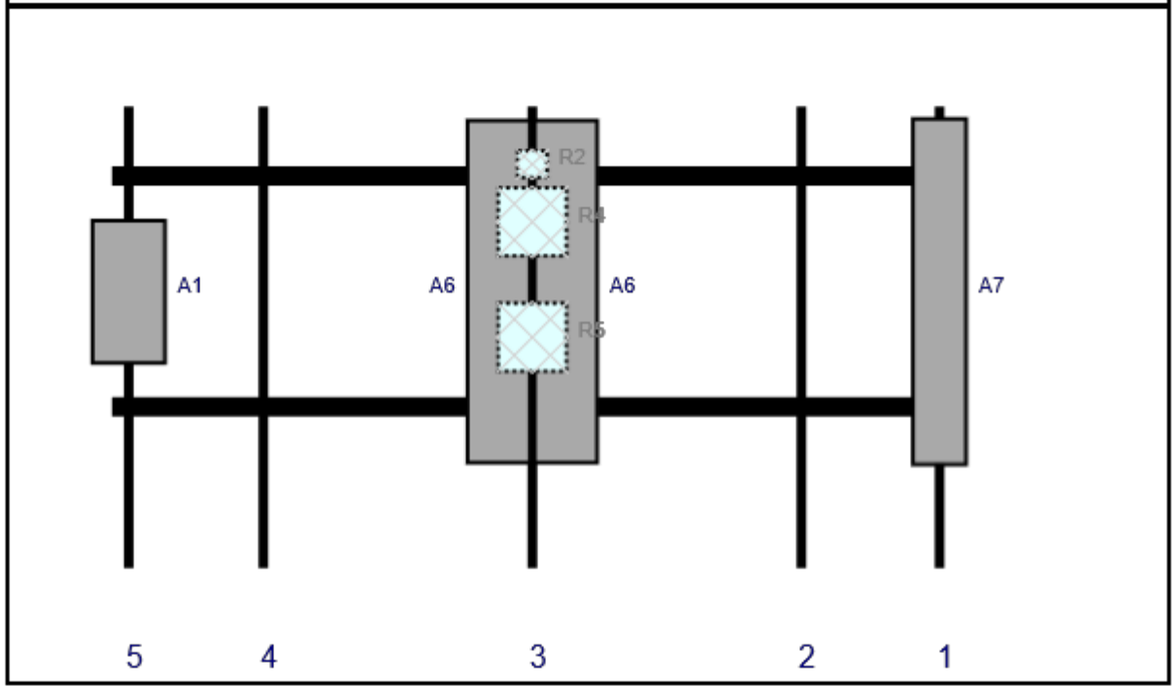

Ref#	Model	Height (in)	Width (in)	H Dist Frm L.	Pipe #	Pipe Pos V	Ant Pos	C. Ant Frm T.	Ant H Off	Status	Validation
A7	LNX-6514DS-A1M	72.7	11.9	172.25	1	a	Front	38.52	0	Retained	10/27/2020
A6	JAHH-65B-R3B	72	13.8	87.5	3	a	Front	38.52	7	Added	
A6	JAHH-65B-R3B	72	13.8	87.5	3	b	Front	38.52	-7	Added	
R2	CBC78T-DS-43-2X	6.4	6.9	87.5	3	a	Behind	12	0	Added	
R4	B2/B66A RRH-BR049	15	15	87.5	3	a	Behind	24	0	Added	
R5	B5/B13 RRH-BR04C	15	15	87.5	3	a	Behind	48	0	Added	
A1	nL-Sub6 Antenna	30.4	15.9	3.5	5	a	Front	38.52	0	Added	

Copyright 2019 by Tower Engineering Solutions, LLC. All Rights Reserved

Maser Consulting Connecticut

MASER CONSULTING
—CONNECTICUT—

Subject TIA-222-H Usage

Site Information

Site ID:	*467737-VZW / Plymouth West Relo CT*
Site Name:	Plymouth West Relo CT
Carrier Name:	*Verizon Wireless*
Address:	33 Keegan Rd *Plymouth, Connecticut 06782* *Litchfield County*
Latitude:	*41.66175944°*
Longitude:	*-73.04564472°*

Structure Information

Tower Type:	*140-Ft Monopole*
Mount Type:	*14.50-Ft Platform*

To Whom It May Concern,

We respectfully submit the above referenced Antenna Mount Structural Analysis report in conformance with ANSI/TIA-222-H, Structural Standard for Antenna Supporting Structures and Antennas and Small Wind Turbine Support Structures.

The 2015 International Building Code states that, in Section 3108, telecommunication towers shall be designed and constructed in accordance with the provisions of TIA-222. The TIA-222-H is the latest revision of the TIA-222 Standard, effective as of January 01, 2018.

As with all ANSI standards and engineering best practice is to apply the most current revision of the standard. This ensures the engineer is applying all updates. As an example, the TIA-222-H standard includes updates to bring it in line with the latest AISC and ACI standards and it also incorporates the latest wind speed maps by ASCE 7 based on updated studies of the wind data.

The TIA-222-H standard clarifies these specific requirements for the antenna mount analysis such as modeling methods, seismic analysis, 30-degree increment wind directions and maintenance loading. Therefore, it is our opinion that TIA-222-H is the most appropriate standard for antenna mount structural analysis and is acceptable for use at this tower site to ensure the engineer is taking into account the most current engineering standard available.

Sincerely,

Dejian Xu

Dejian Xu, PE
Technical Specialist

Maser Consulting Connecticut
2000 Midlantic Drive, Suite 100
Mt. Laurel, NJ 08054
856.797.0412
GDulnik@maserconsulting.com

Post-Mod Antenna Mount Analysis Report and PMI Requirements

Mount Fix

SMART Tool Project #: 10027146
Maser Consulting Connecticut Project #: 20777381A

December 30, 2020

Site Information	*Site ID:*	*467737-VZW / Plymouth West Relo CT*
	Site Name:	*Plymouth West Relo CT*
	Carrier Name:	*Verizon Wireless*
	Address:	*33 Keegan RD* *Plymouth, Connecticut 06782* *Litchfield County*
	Latitude:	*41.66175944°*
	Longitude:	*-73.04564472°*
Structure Information	*Tower Type:*	*140-Ft Monopole*
	Mount Type:	*14.50-Ft Platform*

FUZE ID # 16244613

Analysis Results

Platform: **50.3% Pass**

******Contractor PMI Requirements***:
Included at the end of this MA report
Available & Submitted via portal at https://pmi.vzwsmart.com
Contractor - Please Review Specific Site PMI Requirements Upon Award
Requirements also Noted on Mount Modification Drawings
Requirements may also be Noted on A & E drawings

Report Prepared By: Selene Chen

Executive Summary:

The objective of this report is to summarize the analysis results of the antenna support mount including the proposed modifications at the subject facility for the final wireless telecommunications configuration, per the applicable codes and standards.

This analysis is inclusive of the mount structure only, and does not address the structural capacity of the supporting structure. This mounting frame was not analyzed as an anchor attachment point for fall protection. All climbing activities are required to have a fall protection plan completed by a competent person.

Sources of Information:

Document Type	Remarks
Radio Frequency Data Sheet (RFDS)	*Verizon RFDS Site ID: 2073514, dated October 27, 2020*
Mount Mapping Report	*Tower Engineering Professionals, Site ID: 467737, dated November 19, 2020*
Previous Mount Analysis Report	*Maser Consulting Connecticut, Project #: 20777381A, dated December 3, 2020*
Mount Modification Drawings	*Maser Consulting Connecticut, Project #: 20777381A, dated December 30, 2020*

Analysis Criteria:

Codes and Standards:	ANSI/TIA-222-H	
Wind Parameters:	Basic Wind Speed (Ultimate 3-sec. Gust), V_{ULT}:	116 mph
	Ice Wind Speed (3-sec. Gust):	50 mph
	Design Ice Thickness:	1.00 in
	Risk Category:	II
	Exposure Category:	B
	Topographic Category:	1
	Topographic Feature Considered:	N/A
	Topographic Method:	N/A
	Ground Elevation Factor, K_e:	0.971
Seismic Parameters:	S_S:	0.186
	S_1:	0.054
Maintenance Parameters:	Wind Speed (3-sec. Gust):	30 mph
	Maintenance Live Load, Lv:	250 lbs.
	Maintenance Live Load, Lm:	500 lbs.
Analysis Software:	RISA-3D (V17)	

Final Loading Configuration:

The following equipment has been considered for the analysis of the mount:

Mount Elevation (ft)	Equipment Elevation (ft)	Quantity	Manufacturer	Model	Status
138.00	140.00	3	-	Licensed Sub 6 Antenna	Added
		3	Commscope	CBC78T-DS-43-2X	
		1	RFS	DB-C1-12C-24AB-0Z	
		3	Samsung	B2/B66A RRH-BR049	
		3	Samsung	B5/B13 RRH-BR04C	
		6	Commscope	JAHH-65B-R3B	
		3	Andrew	LNX-6514DS-A1M	Retained

Standard Conditions:

1. All engineering services are performed on the basis that the information provided to Maser Consulting Connecticut and used in this analysis is current and correct. The existing equipment loading has been applied at locations determined from the supplied documentation. Any deviation from the loading locations specified in this report shall be communicated to Maser Consulting Connecticut to verify deviation will not adversely impact the analysis.

2. Mounts are assumed to have been properly fabricated, installed and maintained in good condition, twist free and plumb in accordance with its original design and manufacturer's specifications.

   Obvious safety and structural issues/deficiencies noticed at the time of the mount mapping and reported in the Mount Mapping Report are assumed to be corrected and documented as part of the PMI process and are not considered in the mount analysis.

   The mount analysis and the mount mapping are not a condition assessment of the mount. Proper maintenance and condition assessments are still required post analysis.

3. For mount analyses completed from other data sources (including new replacement mounts) and not specifically mapped by Maser Consulting Connecticut, the mounts are assumed to have been properly fabricated, installed and maintained in good condition, twist free and plumb in accordance with its original design and manufacturer's specifications.

4. All member connections are assumed to have been designed to meet or exceed the load carrying capacity of the connected member unless otherwise specified in this report.

5. The mount was checked up to, and including, the bolts that fasten it to the mount collar/attachment and threaded rod connections in collar members if applicable. Local deformation and interaction between the mount collar/attachment and the supporting tower structure are outside the scope of this analysis.

6. All services are performed, results obtained, and recommendations made in accordance with generally accepted engineering principles and practices. Maser Consulting Connecticut is not responsible for the conclusion, opinions, and recommendations made by others based on the information supplied.

7. Structural Steel Grades have been assumed as follows, if applicable, unless otherwise noted in this analysis:
   - Channel, Solid Round, Angle, Plate — ASTM A36 (Gr. 36)
   - HSS (Rectangular) — ASTM 500 (Gr. B-46)
   - Pipe — ASTM A53 (Gr. B-35)
   - Threaded Rod — F1554 (Gr. 36)
   - Bolts — ASTM A325

8. Any mount modifications listed under Sources of Information are assumed to have been installed per the design specifications.

Discrepancies between in-field conditions and the assumptions listed above may render this analysis invalid unless explicitly approved by Maser Consulting Connecticut.

Analysis Results:

Component	Utilization %	Pass/Fail
Mount Pipe	*42.4%*	*Pass*
Corner Plate	*50.3%*	*Pass*
Support Rail Bracing	*18.1%*	*Pass*
Support Rail Plate	*7.4%*	*Pass*
Support Rail	*32.3%*	*Pass*
Standoff Horizontal	*11.9%*	*Pass*
Face Horizontal	*29.5%*	*Pass*
Cross Arm	*29.5%*	*Pass*
Kicker	*11.4%*	*Pass*
Mount Connection	*35.8%*	*Pass*

Structure Rating – *(Controlling Utilization of all Components)*	**50.3%**

Recommendation:

The existing mount will be **SUFFICIENT** for the final loading after the proposed modifications are successfully completed.

ANSI/ASSP rigging plan review services compliant with the requirements of ANSI/TIA 322 are available for a Construction Class IV site or other, if required. Separate review fees will apply.

Attachments:

1. Mount Photos
2. Mount Mapping Report (for reference only)
3. Analysis Calculations
4. **Contractor Required PMI Report Deliverables**
5. Antenna Placement Diagrams
6. TIA Adoption and Wind Speed Usage Letter

11/19/2020 13:57

11/19/2020 14:25

V3.0 Updated on 8-31-2020

Antenna Mount Mapping Form (PATENT PENDING)

FCC # Not Posted

Tower Owner:	Unknown	**Mapping Date:**	11/19/2020
Site Name:	Plymouth West Relo CT	**Tower Type:**	Monopole
Site Number or ID:	467737	**Tower Height (Ft.):**	140
Mapping Contractor:	TEP	**Mount Elevation (Ft.):**	138

This antenna mapping form is the property of TES and under **PATENT PENDING**. The formation contained herein is considered confidential in nature and is to be used only for the specific customer it was intended for. Reproduction, transmission, publication, modification or disclosure by any method is prohibited except by express written permission of TES. All means and methods are the responsibility of the contractor and the work shall be compliant with ANSI/ASSE A 10.48, OSHA, FCC, FAA and other safety requirements that may apply. TES is not warrantying the usability of the safety climb as it must be assessed prior to each use in compliance with OSHA requirements.

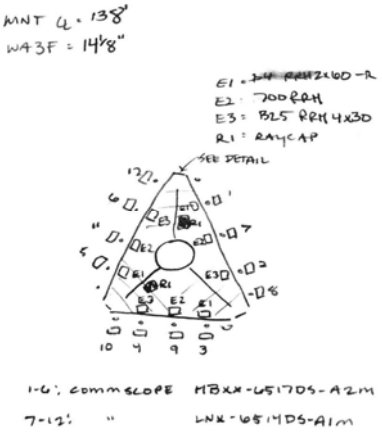

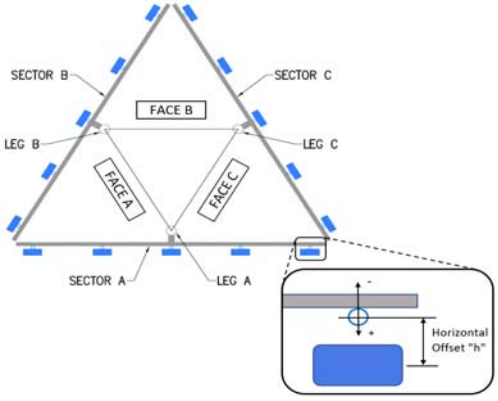

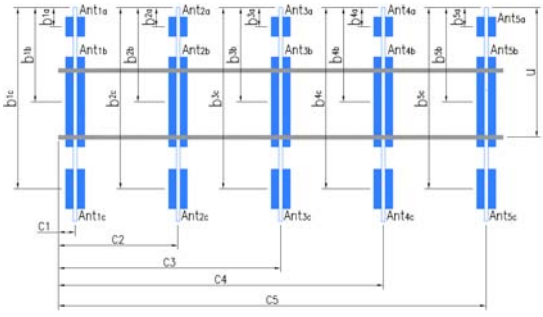

Antenna Layout (Looking Out From Tower)

Mount Pipe Configuration and Geometries [Unit = Inches]

Sector / Position	Mount Pipe Size & Length	Vertical Offset Dimension "u"	Horizontal Offset "C1, C2, C3, etc."	Sector / Position	Mount Pipe Size & Length	Vertical Offset Dimension "u"	Horizontal Offset "C1, C2, C3, etc."
A1	2.4"Ø x 1/8" x 8'-0"	62.50	3.50	C1	2.4"Ø x 1/8" x 8'-0"	62.50	3.50
A2	2.4"Ø x 1/8" x 8'-0"	62.50	31.50	C2	2.4"Ø x 1/8" x 8'-0"	62.50	31.50
A3	2.4"Ø x 1/8" x 8'-0"	62.50	87.50	C3	2.4"Ø x 1/8" x 8'-0"	62.50	87.50
A4	2.4"Ø x 1/8" x 8'-0"	62.50	143.50	C4	2.4"Ø x 1/8" x 8'-0"	62.50	143.50
A5	2.4"Ø x 1/8" x 8'-0"	62.50	172.25	C5	2.4"Ø x 1/8" x 8'-0"	62.50	172.25
A6				C6			
B1	2.4"Ø x 1/8" x 8'-0"	62.50	3.50	D1			
B2	2.4"Ø x 1/8" x 8'-0"	62.50	31.50	D2			
B3	2.4"Ø x 1/8" x 8'-0"	62.50	87.50	D3			
B4	2.4"Ø x 1/8" x 8'-0"	62.50	143.50	D4			
B5	2.4"Ø x 1/8" x 8'-0"	62.50	172.25	D5			
B6				D6			

Distance between bottom rail and mount CL elevation (dim d). Unit is inches. See 'Mount Elev Ref' tab for details. :	0.00
Distance from top of bottom support rail to lowest tip of ant./eqpt. of Carrier above. (N/A if > 10 ft.) :	
Distance from top of bottom support rail to highest tip of ant./eqpt. of Carrier below. (N/A if > 10 ft.) :	
Please enter additional infomation or comments below.	

Tower Face Width at Mount Elev. (ft.):		Tower Leg Size or Pole Shaft Diameter at Mount Elev. (in.):	26.71

	Enter antenna model. If not labeled, enter "Unknown".						Mounting Locations [Units are inches and degrees]			Photos of antennas
Ants. Items	Antenna Models if Known	Width (in.)	Depth (in.)	Height (in.)	Coax Size and Qty	Antenna Center-line (Ft.)	Vertical Distances"b_{1a}, b_{2a}, b_{3a}, b_{1b}...." (Inches)	Horiz. Offset "h" (Use "-" if Ant. is behind)	Antenna Azimuth (Degrees)	Photo Numbers
Sector A										
Ant_{1a}										
Ant_{1b}										
Ant_{1c}										
Ant_{2a}	HBXX-6517DS-A2M	12.00	6.50	75.00	Raycap	141.042	26.00	7.50	30.00	50-51
Ant_{2b}	B4 RRH 2x60-4R	10.63	5.75	36.60		140.875	28.00	-6.50		52-53
Ant_{2c}										
Ant_{3a}	LNX-6514DS-A1M	11.90	7.10	72.70	Raycap	140.25	35.50	7.00	30.00	54-56
Ant_{3b}	KS24822L1	15.00	7.90	15.70		140.708	30.00	-6.50		57-58
Ant_{3c}										
Ant_{4a}	HBXX-6517DS-A2M	12.00	6.50	75.00	Raycap	141.042	26.00	7.50	30.00	59-60
Ant_{4b}	B25 RRH 4x30	12.00	7.20	21.20		140.75	29.50	-7.50		61-62
Ant_{4c}										
Ant_{5a}	LNX-6514DS-A1M	11.90	7.10	72.70	(2) 1.625	140.25	35.50	7.00	30.00	63-64
Ant_{5b}										
Ant_{5c}										
Ant on Standoff	RRFDC-3315-PF-48	15.73	10.25	25.66	(1) 1.25 Hybrid					94-95
Ant on Standoff										
Ant on Tower										
Ant on Tower										

Mount Azimuth (Degree) for Each Sector			Tower Leg Azimuth (Degree) for Each Sector		
Sector A:	30.00	Deg	Leg A:		Deg
Sector B:	150.00	Deg	Leg B:		Deg
Sector C:	270.00	Deg	Leg C:		Deg
Sector D:		Deg	Leg D:		Deg

Climbing Facility Information			
Location:	150.00	Deg	Sector B
Climbing Facility	Corrosion Type:		Good condition.
	Access:		Climbing path was unobstructed.
	Condition:		Good condition.

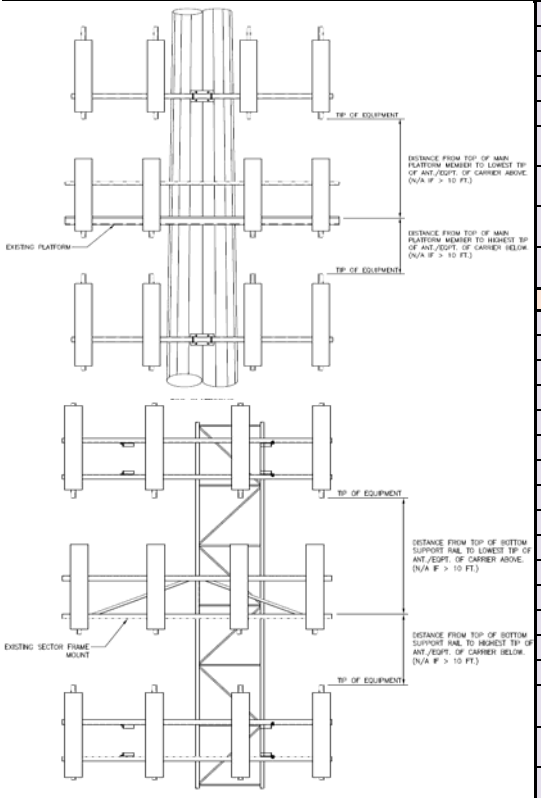

Sector B										
Ant_{1a}										
Ant_{1b}										
Ant_{1c}										
Ant_{2a}	HBXX-6517DS-A2M	12.00	6.50	75.00	Raycap	141.042	26.00	7.50	150.00	65-67
Ant_{2b}	B4 RRH 2x60-4R	10.63	5.75	36.60		140.875	28.00	-6.50		68-69
Ant_{2c}										
Ant_{3a}	LNX-6514DS-A1M	11.90	7.10	72.70	Raycap	140.25	35.50	7.00	150.00	70-71
Ant_{3b}	KS24822L1	15.00	7.90	15.70		140.708	30.00	-6.50		72-73
Ant_{3c}										
Ant_{4a}	HBXX-6517DS-A2M	12.00	6.50	75.00	Raycap	141.042	26.00	7.50	150.00	74-75
Ant_{4b}	B25 RRH 4x30	12.00	7.20	21.20		140.75	29.50	-7.50		76-77
Ant_{4c}										
Ant_{5a}	LNX-6514DS-A1M	11.90	7.10	72.70	(2) 1.625	140.25	35.50	7.00	150.00	78-79
Ant_{5b}										
Ant_{5c}										
Ant on Standoff										
Ant on Standoff										
Ant on Tower										
Ant on Tower										
Sector C										
Ant_{1a}										
Ant_{1b}										
Ant_{1c}										
Ant_{2a}	HBXX-6517DS-A2M	12.00	6.50	75.00	Raycap	141.042	26.00	7.50	270.00	80-81
Ant_{2b}	B4 RRH 2x60-4R	10.63	5.75	36.60		140.875	28.00	-6.50		82-83
Ant_{2c}										
Ant_{3a}	LNX-6514DS-A1M	11.90	7.10	72.70	Raycap	140.25	35.50	7.00	270.00	84-85
Ant_{3b}	KS24822L1	15.00	7.90	15.70		140.708	30.00	-6.50		86-87
Ant_{3c}										
Ant_{4a}	HBXX-6517DS-A2M	12.00	6.50	75.00	Raycap	141.042	26.00	7.50	270.00	88-89
Ant_{4b}	B25 RRH 4x30	12.00	7.20	21.20		140.75	29.50	-7.50		90-91
Ant_{4c}										
Ant_{5a}	LNX-6514DS-A1M	11.90	7.10	72.70	(2) 1.625	140.25	35.50	7.00	270.00	92-93
Ant_{5b}										
Ant_{5c}										
Ant on Standoff	RRFDC-3315-PF-48	15.73	10.25	25.66	(1) 1.25 Hybrid					96-97
Ant on Standoff										
Ant on Tower										
Ant on Tower										
Sector D										
Ant_{1a}										
Ant_{1b}										
Ant_{1c}										
Ant_{2a}										
Ant_{2b}										
Ant_{2c}										
Ant_{3a}										
Ant_{3b}										
Ant_{3c}										
Ant_{4a}										
Ant_{4b}										
Ant_{4c}										
Ant_{5a}										
Ant_{5b}										
Ant_{5c}										
Ant on Standoff										
Ant on Standoff										
Ant on Tower										
Ant on Tower										

Observed Safety and Structural Issues During the Mount Mapping		
Issue #	Description of Issue	Photo #

1		
2		
3		
4		
5		
6		
7		
8		

Mapping Notes
1. Please report any visible structural or safety issues observed on the antenna mounts (Damaged members, loose connections, tilting mounts, safety climb issues, etc.)
2. If the thickness of the existing pipes or tubing can't be obtained from a general tool (such as Caliper), please use an ultrasonic measurement tool (thickness gauge) to measure the thickness.
3. Please create all required detail sketches of the mounts and insert them into the "Sketches" tab.
4. Please measure and enter the bolt sizes and types under the Members Box in the spreadsheet of the mount type.
5. Take and label the photos of the tower, mounts, connections, antennas and all measurements. Minimum 50 photos are required.
6. Please measure and report the size and length of all existing antenna mounting pipes.
7. Please measure and report the antenna information for all sectors.
8. Don't delete or rearrange any sheet or contents of any sheet from this mapping form.

Standard Conditions
1. Obvious safety and structural issues/deficiencies noticed at the time of the mount mapping are to be reported in this mapping. However, this mount mapping is not a condition assessment of the mount.

Antenna Mount Mapping Form (PATENT PENDING)

FCC # Not Posted

Tower Owner:	Unknown	**Mapping Date:**	11/19/2020
Site Name:	Plymouth West Relo CT	**Tower Type:**	Monopole
Site Number or ID:	467737	**Tower Height (Ft.):**	140
Mapping Contractor:	TEP	**Mount Elevation (Ft.):**	138

This antenna mapping form is the property of TES and under **PATENT PENDING.** The formation contained herein is considered confidential in nature and is to be used only for the specific customer it was intended for. Reproduction, transmission, publication, modification or disclosure by any method is prohibited except by express written permission of TES. All means and methods are the responsibility of the contractor and the work shall be compliant with ANSI/ASSE A 10.48, OSHA, FCC, FAA and other safety requirements that may apply. TES is not warrantying the usability of the safety climb as it must be assessed prior to each use in compliance with OSHA requirements.

Please Insert Sketches of the Antenna Mount

PLYMOUTH

MNT @ 138'

WA3F = 14⅛"

E1 = [redacted] RR12x60 -R

E2 = 700 RRH

E3 = B25 RRH 4x30

R1 = RAYCAP

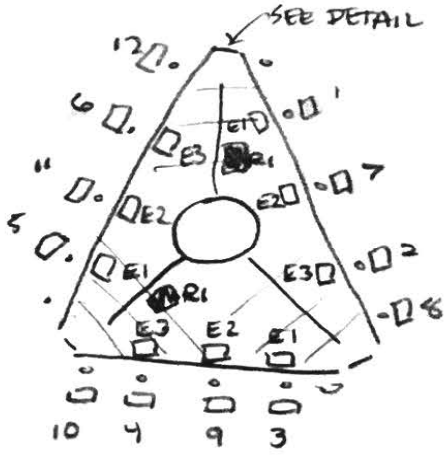

1-6: COMMSCOPE MBXX-65170S-A2M

7-12: " LNX-6514DS-A1M

	B	U	H
1-6	26	62½	7½
7-12	35½		7
E1	28		6½
E2	30		6½
E3	29½		7½

Please Insert Sketches of the Antenna Mount, cont'd

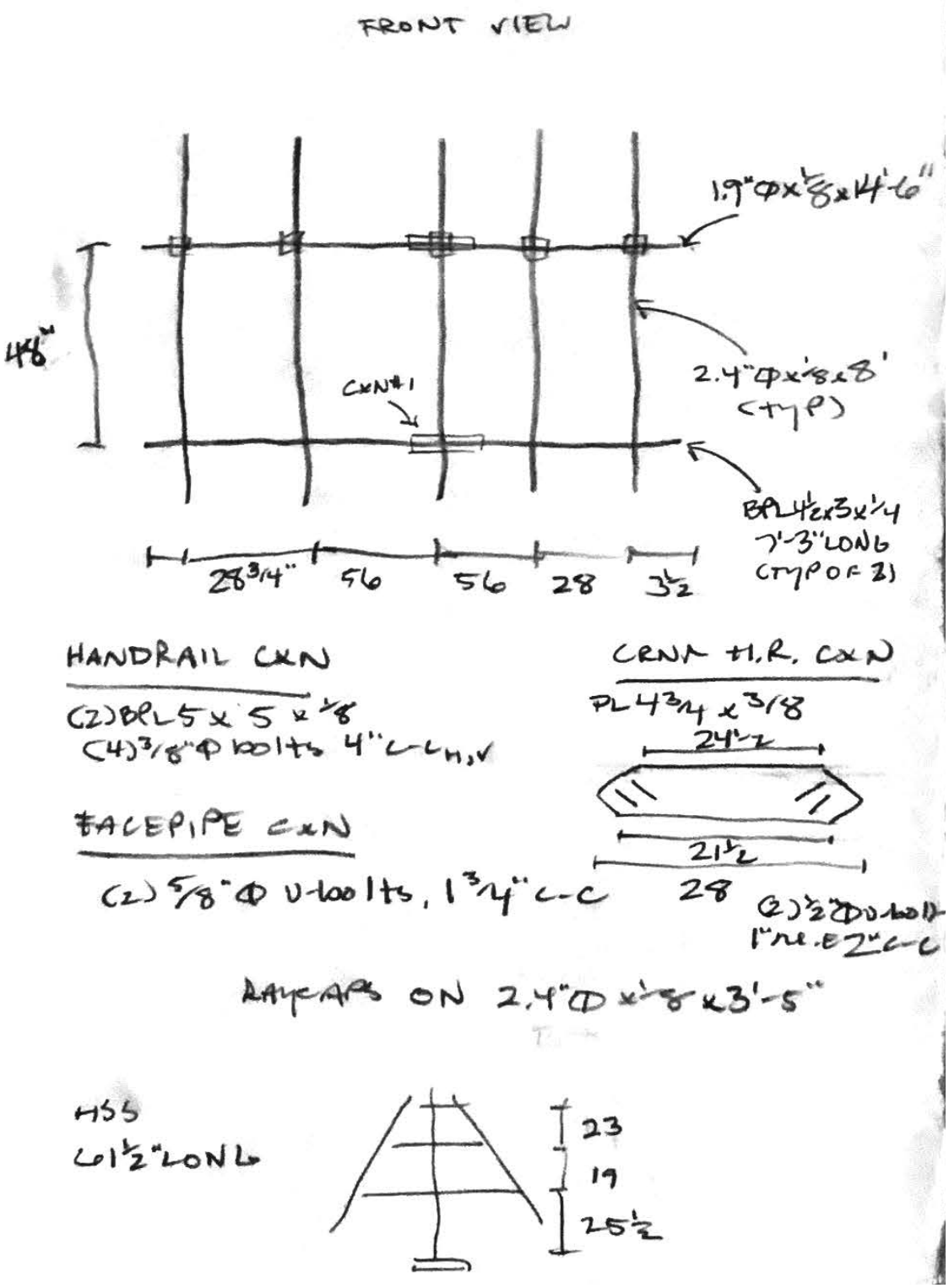

Please Insert Sketches of the Antenna Mount, cont'd

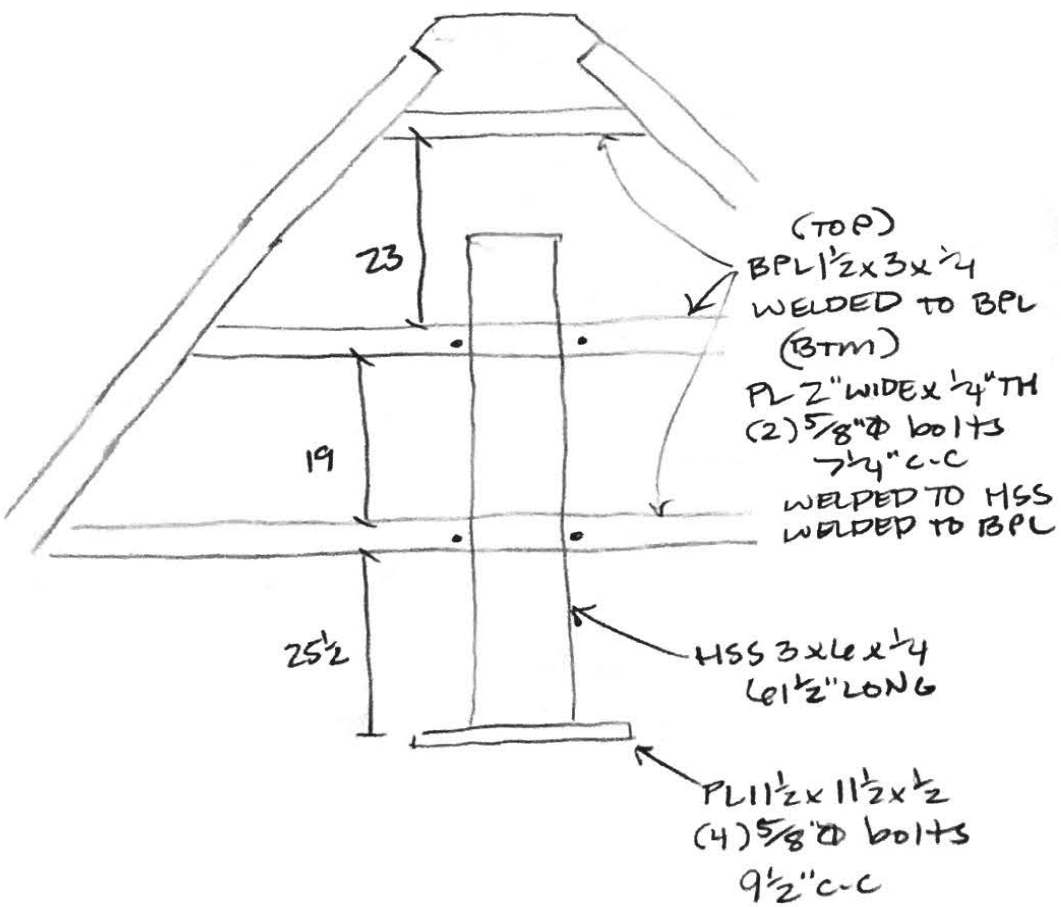

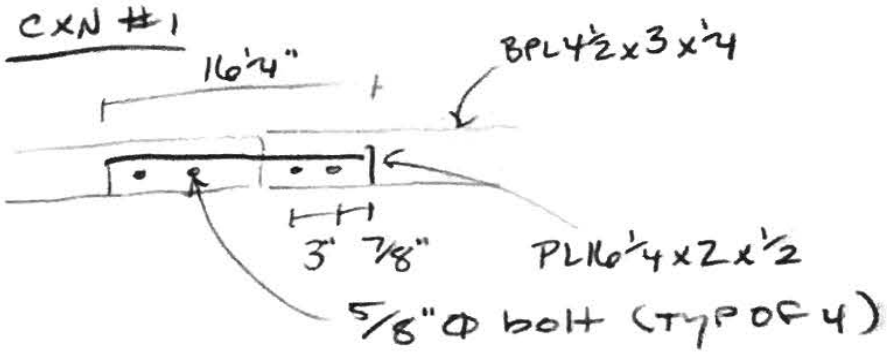

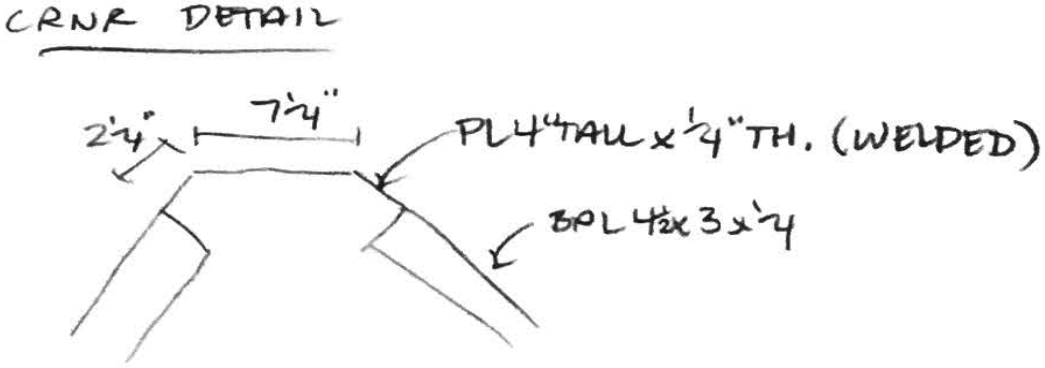

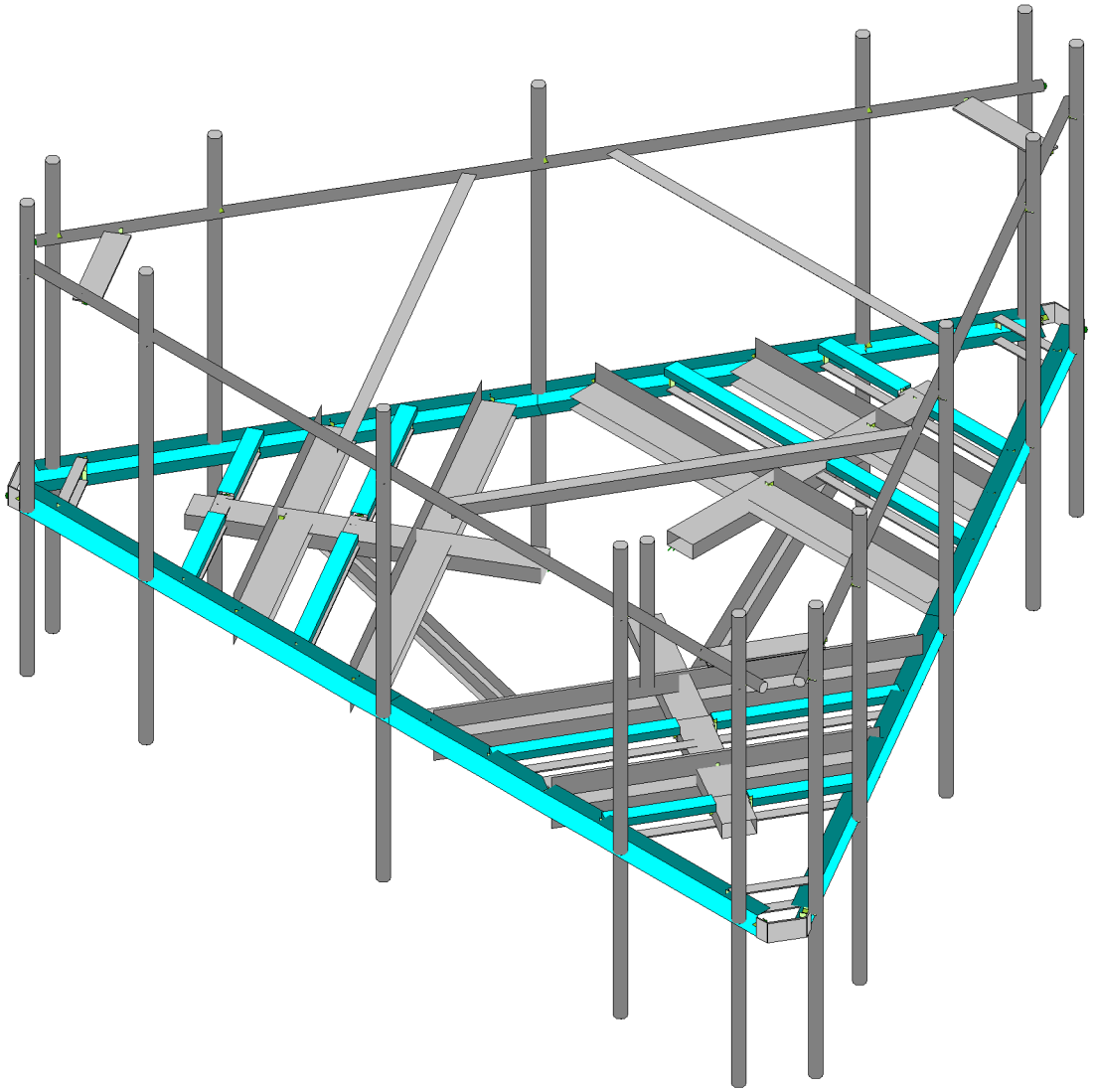

Envelope Only Solution

Maser Consulting	467737-VZW_MT_LO_H	SK - 1
MNC		Dec 18, 2020 at 11:48 PM
Project No. 10019482		467737-VZW_MT_LO_H - Mod Loa...

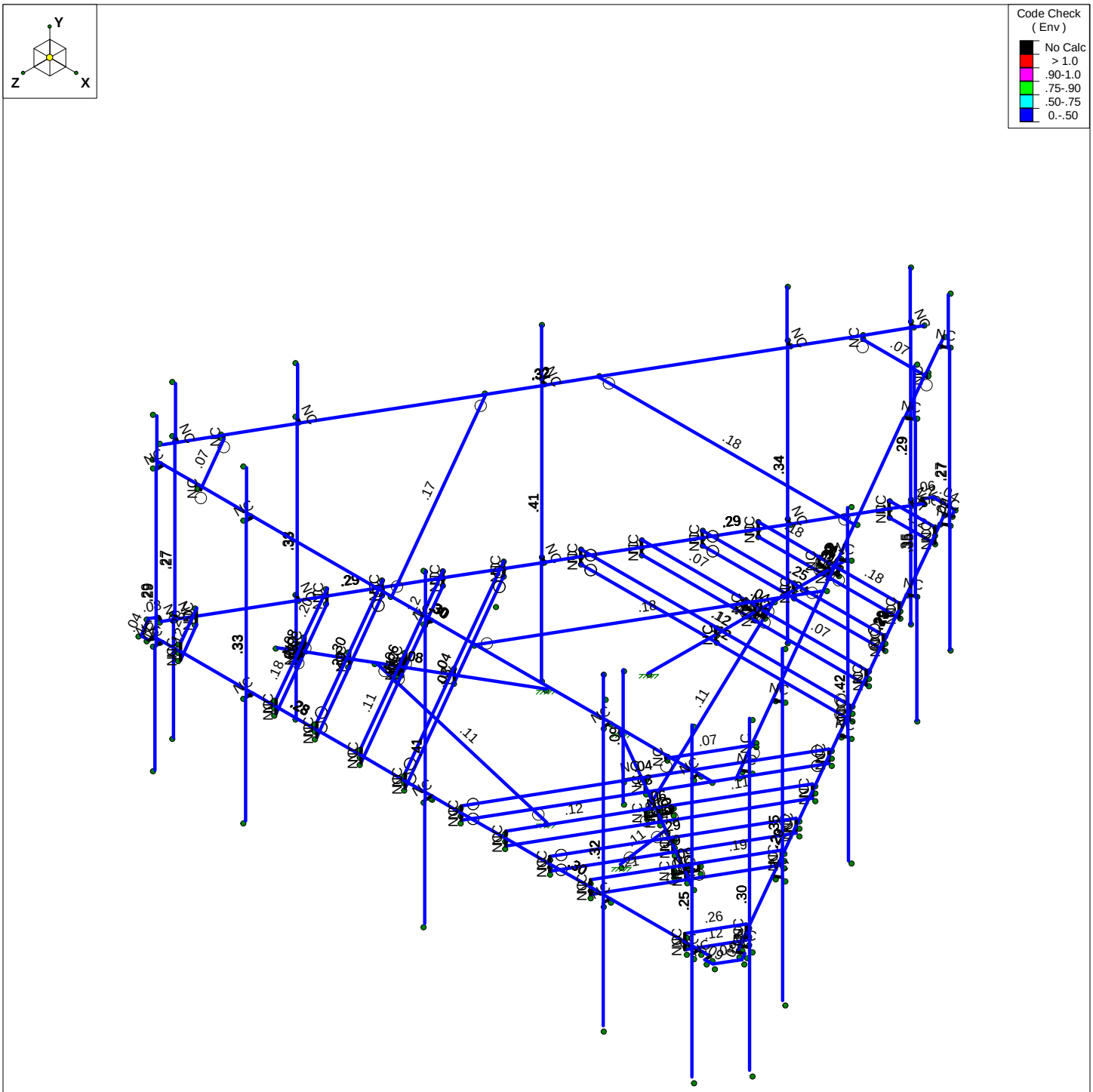

Member Code Checks Displayed (Enveloped)
Envelope Only Solution

Maser Consulting	467737-VZW_MT_LO_H	SK - 2
MNC		Dec 18, 2020 at 11:48 PM
Project No. 10019482		467737-VZW_MT_LO_H - Mod Loa...

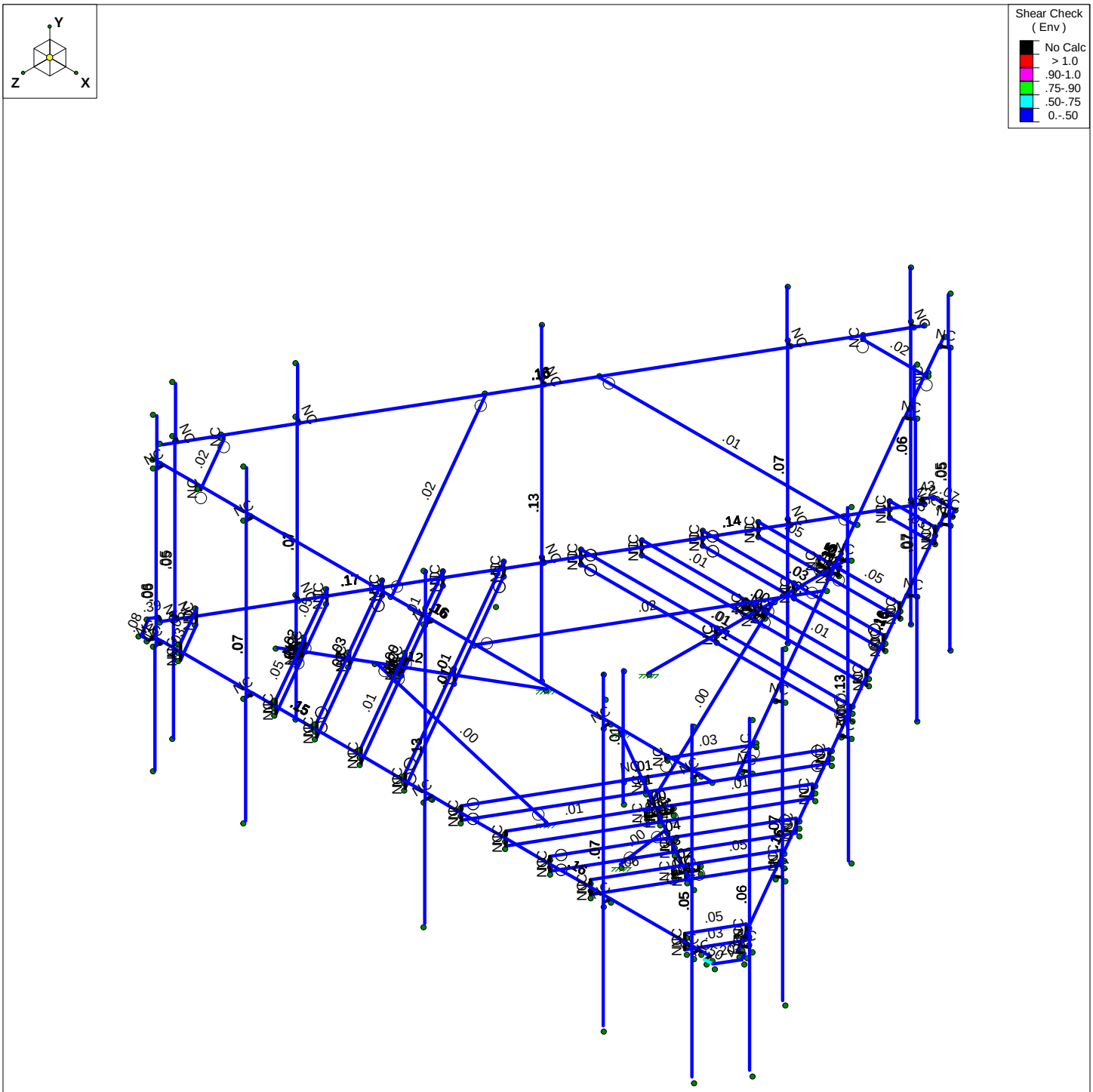

Member Shear Checks Displayed (Enveloped)
Envelope Only Solution

Maser Consulting	467737-VZW_MT_LO_H	SK - 3
MNC		Dec 18, 2020 at 11:48 PM
Project No. 10019482		467737-VZW_MT_LO_H - Mod Loa...

Basic Load Cases

	BLC Description	Category	X Gravity	Y Gravity	Z Gravity	Joint	Point	Distributed	Area(Me...	Surface(P...
1	Antenna D	None					102			
2	Antenna Di	None					102			
3	Antenna Wo (0 Deg)	None					102			
4	Antenna Wo (30 Deg)	None					102			
5	Antenna Wo (60 Deg)	None					102			
6	Antenna Wo (90 Deg)	None					102			
7	Antenna Wo (120 Deg)	None					102			
8	Antenna Wo (150 Deg)	None					102			
9	Antenna Wo (180 Deg)	None					102			
10	Antenna Wo (210 Deg)	None					102			
11	Antenna Wo (240 Deg)	None					102			
12	Antenna Wo (270 Deg)	None					102			
13	Antenna Wo (300 Deg)	None					102			
14	Antenna Wo (330 Deg)	None					102			
15	Antenna Wi (0 Deg)	None					102			
16	Antenna Wi (30 Deg)	None					102			
17	Antenna Wi (60 Deg)	None					102			
18	Antenna Wi (90 Deg)	None					102			
19	Antenna Wi (120 Deg)	None					102			
20	Antenna Wi (150 Deg)	None					102			
21	Antenna Wi (180 Deg)	None					102			
22	Antenna Wi (210 Deg)	None					102			
23	Antenna Wi (240 Deg)	None					102			
24	Antenna Wi (270 Deg)	None					102			
25	Antenna Wi (300 Deg)	None					102			
26	Antenna Wi (330 Deg)	None					102			
27	Antenna Wm (0 Deg)	None					102			
28	Antenna Wm (30 Deg)	None					102			
29	Antenna Wm (60 Deg)	None					102			
30	Antenna Wm (90 Deg)	None					102			
31	Antenna Wm (120 De...	None					102			
32	Antenna Wm (150 De...	None					102			
33	Antenna Wm (180 De...	None					102			
34	Antenna Wm (210 De...	None					102			
35	Antenna Wm (240 De...	None					102			
36	Antenna Wm (270 De...	None					102			
37	Antenna Wm (300 De...	None					102			
38	Antenna Wm (330 De...	None					102			
39	Structure D	None		-1					3	
40	Structure Di	None						88	3	
41	Structure Wo (0 Deg)	None						176		
42	Structure Wo (30 Deg)	None						176		
43	Structure Wo (60 Deg)	None						176		
44	Structure Wo (90 Deg)	None						176		
45	Structure Wo (120 D...	None						176		
46	Structure Wo (150 D...	None						176		
47	Structure Wo (180 D...	None						176		
48	Structure Wo (210 D...	None						176		
49	Structure Wo (240 D...	None						176		
50	Structure Wo (270 D...	None						176		
51	Structure Wo (300 D...	None						176		

Basic Load Cases (Continued)

	BLC Description	Category	X Gravity	Y Gravity	Z Gravity	Joint	Point	Distributed	Area(Me...	Surface(P...
52	Structure Wo (330 D...	None						176		
53	Structure Wi (0 Deg)	None						176		
54	Structure Wi (30 Deg)	None						176		
55	Structure Wi (60 Deg)	None						176		
56	Structure Wi (90 Deg)	None						176		
57	Structure Wi (120 De...	None						176		
58	Structure Wi (150 De...	None						176		
59	Structure Wi (180 De...	None						176		
60	Structure Wi (210 De...	None						176		
61	Structure Wi (240 De...	None						176		
62	Structure Wi (270 De...	None						176		
63	Structure Wi (300 De...	None						176		
64	Structure Wi (330 De...	None						176		
65	Structure Wm (0 Deg)	None						176		
66	Structure Wm (30 D...	None						176		
67	Structure Wm (60 D...	None						176		
68	Structure Wm (90 D...	None						176		
69	Structure Wm (120 ...	None						176		
70	Structure Wm (150 ...	None						176		
71	Structure Wm (180 ...	None						176		
72	Structure Wm (210 ...	None						176		
73	Structure Wm (240 ...	None						176		
74	Structure Wm (270 ...	None						176		
75	Structure Wm (300 ...	None						176		
76	Structure Wm (330 ...	None						176		
77	Lm1	None					1			
78	Lm2	None					1			
79	Lv1	None					1			
80	Lv2	None					1			
81	BLC 39 Transient Are...	None						48		
82	BLC 40 Transient Are...	None						48		

Load Combinations

	Description	Solve	PDelta	S...	BLC	Fac...	BLC	Fac...	BLC	Fac...	BLC	Fac...	BLC	Fac...	BLC	Fac...	BLC	Fac...	BLC	Fac...	BLC	Fac...	BLC	Fac...
1	1.2D+1.0Wo (0...	Yes	Y		1	1.2	39	1.2	3	1	41	1												
2	1.2D+1.0Wo (3...	Yes	Y		1	1.2	39	1.2	4	1	42	1												
3	1.2D+1.0Wo (6...	Yes	Y		1	1.2	39	1.2	5	1	43	1												
4	1.2D+1.0Wo (9...	Yes	Y		1	1.2	39	1.2	6	1	44	1												
5	1.2D+1.0Wo (1...	Yes	Y		1	1.2	39	1.2	7	1	45	1												
6	1.2D+1.0Wo (1...	Yes	Y		1	1.2	39	1.2	8	1	46	1												
7	1.2D+1.0Wo (1...	Yes	Y		1	1.2	39	1.2	9	1	47	1												
8	1.2D+1.0Wo (2...	Yes	Y		1	1.2	39	1.2	10	1	48	1												
9	1.2D+1.0Wo (2...	Yes	Y		1	1.2	39	1.2	11	1	49	1												
10	1.2D+1.0Wo (2...	Yes	Y		1	1.2	39	1.2	12	1	50	1												
11	1.2D+1.0Wo (3...	Yes	Y		1	1.2	39	1.2	13	1	51	1												
12	1.2D+1.0Wo (3...	Yes	Y		1	1.2	39	1.2	14	1	52	1												
13	1.2D + 1.0Di + ...	Yes	Y		1	1.2	39	1.2	2	1	40	1	15	1	53	1								
14	1.2D + 1.0Di + ...	Yes	Y		1	1.2	39	1.2	2	1	40	1	16	1	54	1								
15	1.2D + 1.0Di + ...	Yes	Y		1	1.2	39	1.2	2	1	40	1	17	1	55	1								
16	1.2D + 1.0Di + ...	Yes	Y		1	1.2	39	1.2	2	1	40	1	18	1	56	1								

Load Combinations (Continued)

	Description	Solve	PDelta	S...	BLC	Fac...	BLC	Fac...	BLC	Fac...	BLC	Fac...	BLC	Fac...	BLC	Fac...	BLC	Fac...	BLC	Fac...	BLC	Fac...	BLC	Fac...	BLC	Fac...
17	1.2D + 1.0Di + ...	Yes	Y		1	1.2	39	1.2	2	1	40	1	19	1	57	1										
18	1.2D + 1.0Di + ...	Yes	Y		1	1.2	39	1.2	2	1	40	1	20	1	58	1										
19	1.2D + 1.0Di + ...	Yes	Y		1	1.2	39	1.2	2	1	40	1	21	1	59	1										
20	1.2D + 1.0Di + ...	Yes	Y		1	1.2	39	1.2	2	1	40	1	22	1	60	1										
21	1.2D + 1.0Di + ...	Yes	Y		1	1.2	39	1.2	2	1	40	1	23	1	61	1										
22	1.2D + 1.0Di + ...	Yes	Y		1	1.2	39	1.2	2	1	40	1	24	1	62	1										
23	1.2D + 1.0Di + ...	Yes	Y		1	1.2	39	1.2	2	1	40	1	25	1	63	1										
24	1.2D + 1.0Di + ...	Yes	Y		1	1.2	39	1.2	2	1	40	1	26	1	64	1										
25	1.2D + 1.5Lm1 ...	Yes	Y		1	1.2	39	1.2	77	1.5	27	1	65	1												
26	1.2D + 1.5Lm1 ...	Yes	Y		1	1.2	39	1.2	77	1.5	28	1	66	1												
27	1.2D + 1.5Lm1 ...	Yes	Y		1	1.2	39	1.2	77	1.5	29	1	67	1												
28	1.2D + 1.5Lm1 ...	Yes	Y		1	1.2	39	1.2	77	1.5	30	1	68	1												
29	1.2D + 1.5Lm1 ...	Yes	Y		1	1.2	39	1.2	77	1.5	31	1	69	1												
30	1.2D + 1.5Lm1 ...	Yes	Y		1	1.2	39	1.2	77	1.5	32	1	70	1												
31	1.2D + 1.5Lm1 ...	Yes	Y		1	1.2	39	1.2	77	1.5	33	1	71	1												
32	1.2D + 1.5Lm1 ...	Yes	Y		1	1.2	39	1.2	77	1.5	34	1	72	1												
33	1.2D + 1.5Lm1 ...	Yes	Y		1	1.2	39	1.2	77	1.5	35	1	73	1												
34	1.2D + 1.5Lm1 ...	Yes	Y		1	1.2	39	1.2	77	1.5	36	1	74	1												
35	1.2D + 1.5Lm1 ...	Yes	Y		1	1.2	39	1.2	77	1.5	37	1	75	1												
36	1.2D + 1.5Lm1 ...	Yes	Y		1	1.2	39	1.2	77	1.5	38	1	76	1												
37	1.2D + 1.5Lm2 ...	Yes	Y		1	1.2	39	1.2	78	1.5	27	1	65	1												
38	1.2D + 1.5Lm2 ...	Yes	Y		1	1.2	39	1.2	78	1.5	28	1	66	1												
39	1.2D + 1.5Lm2 ...	Yes	Y		1	1.2	39	1.2	78	1.5	29	1	67	1												
40	1.2D + 1.5Lm2 ...	Yes	Y		1	1.2	39	1.2	78	1.5	30	1	68	1												
41	1.2D + 1.5Lm2 ...	Yes	Y		1	1.2	39	1.2	78	1.5	31	1	69	1												
42	1.2D + 1.5Lm2 ...	Yes	Y		1	1.2	39	1.2	78	1.5	32	1	70	1												
43	1.2D + 1.5Lm2 ...	Yes	Y		1	1.2	39	1.2	78	1.5	33	1	71	1												
44	1.2D + 1.5Lm2 ...	Yes	Y		1	1.2	39	1.2	78	1.5	34	1	72	1												
45	1.2D + 1.5Lm2 ...	Yes	Y		1	1.2	39	1.2	78	1.5	35	1	73	1												
46	1.2D + 1.5Lm2 ...	Yes	Y		1	1.2	39	1.2	78	1.5	36	1	74	1												
47	1.2D + 1.5Lm2 ...	Yes	Y		1	1.2	39	1.2	78	1.5	37	1	75	1												
48	1.2D + 1.5Lm2 ...	Yes	Y		1	1.2	39	1.2	78	1.5	38	1	76	1												
49	1.2D + 1.5Lv1	Yes	Y		1	1.2	39	1.2	79	1.5																
50	1.2D + 1.5Lv2	Yes	Y		1	1.2	39	1.2	80	1.5																
51	1.4D	Yes	Y		1	1.4	39	1.4																		
52	Seismic Mass		Y		1	1	39	1																		
53	1.2D + 1.0Ev + ...		Y		1	1.2	39	1.2	SX		SY	1	SZ	-1												
54	1.2D + 1.0Ev + ...		Y		1	1.2	39	1.2	SX	.5	SY	1	SZ	-.866												
55	1.2D + 1.0Ev + ...		Y		1	1.2	39	1.2	SX	.866	SY	1	SZ	-.5												
56	1.2D + 1.0Ev + ...		Y		1	1.2	39	1.2	SX	1	SY	1	SZ													
57	1.2D + 1.0Ev + ...		Y		1	1.2	39	1.2	SX	.866	SY	1	SZ	.5												
58	1.2D + 1.0Ev + ...		Y		1	1.2	39	1.2	SX	.5	SY	1	SZ	.866												
59	1.2D + 1.0Ev + ...		Y		1	1.2	39	1.2	SX		SY	1	SZ	1												
60	1.2D + 1.0Ev + ...		Y		1	1.2	39	1.2	SX	-.5	SY	1	SZ	.866												
61	1.2D + 1.0Ev + ...		Y		1	1.2	39	1.2	SX	-.866	SY	1	SZ	.5												
62	1.2D + 1.0Ev + ...		Y		1	1.2	39	1.2	SX	-1	SY	1	SZ													
63	1.2D + 1.0Ev + ...		Y		1	1.2	39	1.2	SX	-.866	SY	1	SZ	-.5												
64	1.2D + 1.0Ev + ...		Y		1	1.2	39	1.2	SX	-.5	SY	1	SZ	-.866												

Joint Coordinates and Temperatures

	Label	X [ft]	Y [ft]	Z [ft]	Temp [F]	Detach From Diap...
1	CP	0	0	0	0	
2	N23	-0.974279	0	0.5625	0	
3	N24	-5.412659	0	3.125	0	
4	N47A	0.974279	0	0.5625	0	
5	N48A	5.412659	0	3.125	0	
6	N65	-0.	0	-1.125	0	
7	N66	-0.	0	-6.25	0	
8	N75	0.25	0.166667	-3.874997	0	
9	N76	-0.25	0.166667	-3.874997	0	
10	N77	0.25	0.166667	-5.791667	0	
11	N78	-0.25	0.166667	-5.791667	0	
12	N182	0.25	0	-3.874997	0	
13	N183	-.25	0	-3.874997	0	
14	N184	0.25	0	-5.791667	0	
15	N185	-0.25	0	-5.791667	0	
16	N186	-0.	0	-5.791667	0	
17	N187	-0.	0	-3.874997	0	
18	N188	-0.	0.166667	-5.791667	0	
19	N189	-0.	0.166667	-3.874997	0	
20	N113	-2.939925	0	-3.874997	0	
21	N114	2.939925	0	-3.874997	0	
22	N117	-2.939925	0.166667	-3.874997	0	
23	N118	2.939925	0.166667	-3.874997	0	
24	N113A	-1.833335	0	-5.791667	0	
25	N114A	1.833335	0	-5.791667	0	
26	N115	-1.833335	0.166667	-5.791667	0	
27	N114B	1.833335	0.166667	-5.791667	0	
28	N68	-3.480846	0.166667	1.720992	0	
29	N69	-3.230846	0.166667	2.154005	0	
30	N70	-5.140731	0.166667	2.679327	0	
31	N71	-4.890731	0.166667	3.11234	0	
32	N72	-3.480846	0	1.720992	0	
33	N73	-3.230846	0	2.154005	0	
34	N74	-5.140731	0	2.679327	0	
35	N75A	-4.890731	0	3.11234	0	
36	N76A	-5.015731	0	2.895833	0	
37	N77A	-3.355846	0	1.937498	0	
38	N78A	-5.015731	0.166667	2.895833	0	
39	N79	-3.355846	0.166667	1.937498	0	
40	N80	-1.885883	0	4.483548	0	
41	N81	-4.825808	0	-0.608551	0	
42	N82	-1.885883	0.166667	4.483548	0	
43	N83	-4.825808	0.166667	-0.608551	0	
44	N84	-4.099063	0	4.483548	0	
45	N85	-5.932398	0	1.308119	0	
46	N86	-4.099063	0.166667	4.483548	0	
47	N87	-5.932398	0.166667	1.308119	0	
48	N89	3.230846	0.166667	2.154005	0	
49	N90	3.480846	0.166667	1.720992	0	
50	N91	4.890731	0.166667	3.11234	0	
51	N92	5.140731	0.166667	2.679327	0	

Joint Coordinates and Temperatures (Continued)

	Label	X [ft]	Y [ft]	Z [ft]	Temp [F]	Detach From Diap...
52	N93	3.230846	0	2.154005	0	
53	N94	3.480846	0	1.720992	0	
54	N95	4.890731	0	3.11234	0	
55	N96	5.140731	0	2.679327	0	
56	N97	5.015731	0	2.895833	0	
57	N98	3.355846	0	1.937498	0	
58	N99	5.015731	0.166667	2.895833	0	
59	N100	3.355846	0.166667	1.937498	0	
60	N101	4.825808	0	-0.608551	0	
61	N102	1.885883	0	4.483548	0	
62	N103	4.825808	0.166667	-0.608551	0	
63	N104	1.885883	0.166667	4.483548	0	
64	N105	5.932398	0	1.308119	0	
65	N106	4.099063	0	4.483548	0	
66	N107	5.932398	0.166667	1.308119	0	
67	N108	4.099063	0.166667	4.483548	0	
68	N107A	0.	0	4.483548	0	
69	N108A	7.25	0	4.483548	0	
70	N109	-7.25	0	4.483548	0	
71	N107B	3.882867	0	-2.241774	0	
72	N108B	0.257867	0	-8.520458	0	
73	N109A	7.507867	0	4.03691	0	
74	N110	-3.882867	0	-2.241774	0	
75	N111	-7.507867	0	4.03691	0	
76	N112	-0.257867	0	-8.520458	0	
77	N126	7.458333	0	4.629381	0	
78	N127	7.25	0	4.629381	0	
79	N112A	-7.458333	0	4.629381	0	
80	N113B	-7.25	0	4.629381	0	
81	N115A	0.279995	0	-8.773797	0	
82	N116	0.384162	0	-8.593375	0	
83	N117A	7.738329	0	4.144415	0	
84	N118A	7.634162	0	3.963993	0	
85	N121	-7.738329	0	4.144415	0	
86	N122	-7.634162	0	3.963993	0	
87	N123	-0.279995	0	-8.773797	0	
88	N124	-0.384162	0	-8.593375	0	
89	N115B	-7.25	4	4.483548	0	
90	N116A	7.25	4	4.483548	0	
91	N113C	7.507867	4	4.03691	0	
92	N114C	0.257867	4	-8.520458	0	
93	N115C	-0.257867	4	-8.520458	0	
94	N116B	-7.507867	4	4.03691	0	
95	N115D	-6.083333	4	4.483548	0	
96	N116C	6.083333	4	4.483548	0	
97	N117B	6.924533	4	3.026547	0	
98	N118C	0.8412	4	-7.510095	0	
99	N119A	-0.8412	4	-7.510095	0	
100	N120	-6.924533	4	3.026547	0	
101	N119	6.583333	0	4.483548	0	
102	N123A	7.174533	0	3.45956	0	
103	N126B	6.583333	-0.1875	4.483548	0	

Joint Coordinates and Temperatures (Continued)

	Label	X [ft]	Y [ft]	Z [ft]	Temp [F]	Detach From Diap...
104	N127A	6.583333	0.1875	4.483548	0	
105	N127B	7.174533	-0.1875	3.45956	0	
106	N128	7.174533	0.1875	3.45956	0	
107	N107C	0.5912	0	-7.943108	0	
108	N108C	-0.5912	0	-7.943108	0	
109	N109B	0.5912	-0.1875	-7.943108	0	
110	N110A	0.5912	0.1875	-7.943108	0	
111	N111A	-0.5912	-0.1875	-7.943108	0	
112	N112B	-0.5912	0.1875	-7.943108	0	
113	N113D	-7.174533	0	3.45956	0	
114	N114D	-6.583333	0	4.483548	0	
115	N115E	-7.174533	-0.1875	3.45956	0	
116	N116D	-7.174533	0.1875	3.45956	0	
117	N117C	-6.583333	-0.1875	4.483548	0	
118	N118B	-6.583333	0.1875	4.483548	0	
119	N135	1.833333	5.333333	4.671048	0	
120	N137	6.958333	0	4.483548	0	
121	N138	6.958333	0	4.671048	0	
122	N139	6.958333	4	4.483548	0	
123	N140	6.958333	4	4.671048	0	
124	N141	6.958333	5.208333	4.671048	0	
125	N142	6.958333	-2.791667	4.671048	0	
126	N191	2.273317	0	1.3125	0	
127	N194	2.096233	0	1.619217	0	
128	N193	2.096233	-.5	1.619217	0	
129	N194A	2.096233	2.5	1.619217	0	
130	N198	-2.939925	-0.166667	-3.874997	0	
131	N199	2.939925	-0.166667	-3.874997	0	
132	N198A	-0.	-0.166667	-3.874997	0	
133	N199A	-1.885883	-0.166667	4.483548	0	
134	N200	-4.825808	-0.166667	-0.608551	0	
135	N203	4.825808	-0.166667	-0.608551	0	
136	N204	1.885883	-0.166667	4.483548	0	
137	N202	-1.833335	-0.166667	-5.791667	0	
138	N203A	1.833335	-0.166667	-5.791667	0	
139	N203B	-0.	-0.166667	-5.791667	0	
140	N207	-4.099063	-0.166667	4.483548	0	
141	N208	-5.932398	-0.166667	1.308119	0	
142	N209	-5.015731	-0.166667	2.895833	0	
143	N213	5.932398	-0.166667	1.308119	0	
144	N214	4.099063	-0.166667	4.483548	0	
145	N215	5.015731	-0.166667	2.895833	0	
146	N211	-3.355846	-0.166667	1.937498	0	
147	N213A	3.355846	-0.166667	1.937498	0	
148	N212	-6.083333	3.916667	4.483548	0	
149	N213B	6.083333	3.916667	4.483548	0	
150	N214A	6.924533	3.916667	3.026547	0	
151	N215A	0.8412	3.916667	-7.510095	0	
152	N216	-0.8412	3.916667	-7.510095	0	
153	N217	-6.924533	3.916667	3.026547	0	
154	N171	4.625	0	4.483548	0	
155	N172	4.625	0	4.671048	0	

Joint Coordinates and Temperatures (Continued)

	Label	X [ft]	Y [ft]	Z [ft]	Temp [F]	Detach From Diap...
156	N173	4.625	4	4.483548	0	
157	N174	4.625	4	4.671048	0	
158	N175	4.625	5.208333	4.671048	0	
159	N176	4.625	-2.791667	4.671048	0	
160	N163	0.	4	4.671048	0	
161	N164	0.	5.208333	4.671048	0	
162	N166	-4.708333	0	4.483548	0	
163	N167	-4.708333	0	4.671048	0	
164	N168	-4.708333	4	4.483548	0	
165	N169	-4.708333	4	4.671048	0	
166	N170	-4.708333	5.208333	4.671048	0	
167	N171A	-4.708333	-2.791667	4.671048	0	
168	N172A	-7.041667	0	4.483548	0	
169	N173A	-7.041667	0	4.671048	0	
170	N174A	-7.041667	4	4.483548	0	
171	N175A	-7.041667	4	4.671048	0	
172	N176A	-7.041667	5.208333	4.671048	0	
173	N177	-7.041667	-2.791667	4.671048	0	
174	N177A	-0.041667	0	4.483548	0	
175	N178	-0.041667	0	4.671048	0	
176	N179	-0.041667	4	4.483548	0	
177	N180	-0.041667	4	4.671048	0	
178	N181	-0.041667	5.208333	4.671048	0	
179	N182A	-0.041667	-2.791667	4.671048	0	
180	N181A	0.4037	0	-8.267867	0	
181	N182B	0.56608	0	-8.361617	0	
182	N183A	0.4037	4	-8.267867	0	
183	N184A	0.56608	4	-8.361617	0	
184	N185A	0.56608	5.208333	-8.361617	0	
185	N186A	0.56608	-2.791667	-8.361617	0	
186	N187A	1.570367	0	-6.247142	0	
187	N188A	1.732746	0	-6.340892	0	
188	N189A	1.570367	4	-6.247142	0	
189	N190	1.732746	4	-6.340892	0	
190	N191A	1.732746	5.208333	-6.340892	0	
191	N192	1.732746	-2.791667	-6.340892	0	
192	N193A	6.237033	0	1.835762	0	
193	N194B	6.399413	0	1.742012	0	
194	N195	6.237033	4	1.835762	0	
195	N196	6.399413	4	1.742012	0	
196	N197	6.399413	5.208333	1.742012	0	
197	N198B	6.399413	-2.791667	1.742012	0	
198	N199B	7.4037	0	3.856488	0	
199	N200A	7.56608	0	3.762738	0	
200	N201	7.4037	4	3.856488	0	
201	N202A	7.56608	4	3.762738	0	
202	N203C	7.56608	5.208333	3.762738	0	
203	N204A	7.56608	-2.791667	3.762738	0	
204	N205	3.9037	0	-2.20569	0	
205	N206	4.06608	0	-2.29944	0	
206	N207A	3.9037	4	-2.20569	0	
207	N208A	4.06608	4	-2.29944	0	

Joint Coordinates and Temperatures (Continued)

	Label	X [ft]	Y [ft]	Z [ft]	Temp [F]	Detach From Diap...
208	N209A	4.06608	5.208333	-2.29944	0	
209	N210	4.06608	-2.791667	-2.29944	0	
210	N212A	-7.362033	0	3.784319	0	
211	N213C	-7.524413	0	3.690569	0	
212	N214B	-7.362033	4	3.784319	0	
213	N215B	-7.524413	4	3.690569	0	
214	N216A	-7.524413	5.208333	3.690569	0	
215	N217A	-7.524413	-2.791667	3.690569	0	
216	N218	-6.195367	0	1.763593	0	
217	N219	-6.357746	0	1.669843	0	
218	N220	-6.195367	4	1.763593	0	
219	N221	-6.357746	4	1.669843	0	
220	N222	-6.357746	5.208333	1.669843	0	
221	N223	-6.357746	-2.791667	1.669843	0	
222	N224	-1.5287	0	-6.31931	0	
223	N225	-1.69108	0	-6.41306	0	
224	N226	-1.5287	4	-6.31931	0	
225	N227	-1.69108	4	-6.41306	0	
226	N228	-1.69108	5.208333	-6.41306	0	
227	N229	-1.69108	-2.791667	-6.41306	0	
228	N230	-0.362033	0	-8.340036	0	
229	N231	-0.524413	0	-8.433786	0	
230	N232	-0.362033	4	-8.340036	0	
231	N233	-0.524413	4	-8.433786	0	
232	N234	-0.524413	5.208333	-8.433786	0	
233	N235	-0.524413	-2.791667	-8.433786	0	
234	N236	-3.862033	0	-2.277858	0	
235	N237	-4.024413	0	-2.371608	0	
236	N238	-3.862033	4	-2.277858	0	
237	N239	-4.024413	4	-2.371608	0	
238	N240	-4.024413	5.208333	-2.371608	0	
239	N241	-4.024413	-2.791667	-2.371608	0	
240	N240A	-1.083333	4	4.483548	0	
241	N241A	1.083333	4	4.483548	0	
242	N243	4.424533	4	-1.30358	0	
243	N244	3.3412	4	-3.179968	0	
244	N246	-3.3412	4	-3.179968	0	
245	N247	-4.424533	4	-1.30358	0	
246	N246A	-0.	0	-2.874997	0	
247	N247A	-0.	0	-4.874997	0	
248	N252	3.517275	0	-2.874997	0	
249	N253	2.362575	0	-4.874997	0	
250	N254	-3.517275	0	-2.874997	0	
251	N255	-2.362575	0	-4.874997	0	
252	N252A	-0.	.167	-2.874997	0	
253	N253A	-0.	.167	-4.874997	0	
254	N254A	3.517275	.167	-2.874997	0	
255	N255A	2.362575	.167	-4.874997	0	
256	N256	-3.517275	.167	-2.874997	0	
257	N257	-2.362575	.167	-4.874997	0	
258	N258	-0.	-.166	-2.874997	0	
259	N259	-0.	-.166	-4.874997	0	

Joint Coordinates and Temperatures (Continued)

	Label	X [ft]	Y [ft]	Z [ft]	Temp [F]	Detach From Diap...
260	N260	3.517275	-.166	-2.874997	0	
261	N261	2.362575	-.166	-4.874997	0	
262	N262	-3.517275	-.166	-2.874997	0	
263	N263	-2.362575	-.166	-4.874997	0	
264	N265	-4.248458	0	-1.608551	0	
265	N266	-5.403158	0	0.391449	0	
266	N267	-0.731183	0	4.483548	0	
267	N268	-3.040584	0	4.483548	0	
268	N269	-4.248458	.167	-1.608551	0	
269	N270	-5.403158	.167	0.391449	0	
270	N271	-0.731183	.167	4.483548	0	
271	N272	-3.040584	.167	4.483548	0	
272	N273	-4.248458	-.166	-1.608551	0	
273	N274	-5.403158	-.166	0.391449	0	
274	N275	-0.731183	-.166	4.483548	0	
275	N276	-3.040584	-.166	4.483548	0	
276	N278	0.731183	0	4.483548	0	
277	N279	3.040584	0	4.483548	0	
278	N280	4.248458	0	-1.608551	0	
279	N281	5.403158	0	0.391449	0	
280	N282	0.731183	.167	4.483548	0	
281	N283	3.040584	.167	4.483548	0	
282	N284	4.248458	.167	-1.608551	0	
283	N285	5.403158	.167	0.391449	0	
284	N286	0.731183	-.166	4.483548	0	
285	N287	3.040584	-.166	4.483548	0	
286	N288	4.248458	-.166	-1.608551	0	
287	N289	5.403158	-.166	0.391449	0	
288	N288A	-0.	0	-4.374997	0	
289	N289A	-0.	-3	-1.125	0	
290	N291	-3.788858	0	2.187498	0	
291	N292	-0.974279	-3	0.5625	0	
292	N294	3.788858	0	2.187498	0	
293	N295	0.974279	-3	0.5625	0	
294	N295A	-4.221871	0	2.437498	0	
295	N296	-2.48982	.167	1.437498	0	
296	N297	-4.221871	.167	2.437498	0	
297	N298	-2.48982	-.166	1.437498	0	
298	N299	-4.221871	-.166	2.437498	0	
299	N301	4.221871	0	2.437498	0	
300	N302	2.48982	.167	1.437498	0	
301	N303	4.221871	.167	2.437498	0	
302	N304	2.48982	-.166	1.437498	0	
303	N305	4.221871	-.166	2.437498	0	

Hot Rolled Steel Section Sets

	Label	Shape	Type	Design List	Material	Design Rules	A [in2]	Iyy [in4]	Izz [in4]	J [in4]
1	Mount Pipe	PIPE_2.0	Column	Pipe	A53 Gr. B	Typical	1.02	.627	.627	1.25
2	TES Face Horizon...	C5X9	Beam	Channel	A36 Gr.36	Typical	2.64	.624	8.89	.109
3	Support Rail	PIPE_1.5	Beam	Pipe	A53 Gr. B	Typical	.749	.293	.293	.586

Hot Rolled Steel Section Sets (Continued)

	Label	Shape	Type	Design List	Material	Design Rules	A [in2]	Iyy [in4]	Izz [in4]	J [in4]
4	Standoff Horizontal	HSS6X3X4	Beam	SquareTube	A500 Gr. B ...	Typical	3.84	5.7	17	14.2
5	TES Cross Brace	C3X5	Beam	Channel	A36 Gr.36	Typical	1.47	.241	1.85	.043
6	Support Rail Corn...	PL3/8x4.75	Beam	RECT	A36 Gr.36	Typical	1.781	.021	3.349	.079
7	Bottom Corner Pla...	PL1/4x4	Beam	RECT	A36 Gr.36	Typical	1	.005	1.333	.02
8	Face Plate	PL1/4x2	Beam	RECT	A36 Gr.36	Typical	.5	.003	.167	.01
9	Cross Brace Plate	PL1/4x2	Beam	RECT	A36 Gr.36	Typical	.5	.003	.167	.01
10	Connector Plate	PL1/4x3	Beam	RECT	A36 Gr.36	Typical	.75	.004	.563	.015
11	Mod Plan Bracing	L2.5x2.5x4	Beam	Single Angle	A36 Gr.36	Typical	1.19	.692	.692	.026
12	Mod Standoff Bra...	L6X4X5	Beam	Single Angle	A36 Gr.36	Typical	3.03	4.13	11.4	.104
13	Mod Kicker	LL3x3x3x6	Beam	Double Angl...	A36 Gr.36	Typical	2.18	4.97	1.9	.027

Hot Rolled Steel Properties

	Label	E [ksi]	G [ksi]	Nu	Therm (/1E...	Density[k/ft...	Yield[ksi]	Ry	Fu[ksi]	Rt
1	A36 Gr.36	29000	11154	.3	.65	.49	36	1.5	58	1.2
2	A53 Gr. B	29000	11154	.3	.65	.49	35	1.5	60	1.2
3	A572 Gr.50	29000	11154	.3	.65	.49	50	1.1	65	1.1
4	A992	29000	11154	.3	.65	.49	50	1.1	65	1.1
5	A500 Gr. B 42	29000	11154	.3	.65	.49	42	1.4	58	1.3
6	A500 Gr. B 46	29000	11154	.3	.65	.49	46	1.4	58	1.3

Cold Formed Steel Section Sets

	Label	Shape	Type	Design List	Material	Design Rules	A [in2]	Iyy [in4]	Izz [in4]	J [in4]
1	Face Horiz...	4.5CU3X02...	Beam	CU	A570 Gr. 36	Typical	2.344	2.111	7.314	.049
2	Cross Brace	3CU1.5X025	Beam	CU	A570 Gr. 36	Typical	1.284	.255	1.544	.027

Cold Formed Steel Properties

	Label	E [ksi]	G [ksi]	Nu	Therm (/1E5 F)	Density[k/ft^3]	Yield[ksi]	Fu[ksi]
1	A570 Gr.33	29500	11346	.3	.65	.49	33	52
2	A607 C1 Gr.55	29500	11346	.3	.65	.49	55	70
3	A570 Gr. 36	29500	11346	.3	.65	.49	36	58

Member Primary Data

	Label	I Joint	J Joint	K Joint	Rotate(deg)	Section/Shape	Type	Design List	Material	Design Rules
1	M19	N24	N23		90	Standoff Horiz...	Beam	SquareTube	A500 Gr. ...	Typical
2	M19A	N117A	N126			Bottom Corner...	Beam	RECT	A36 Gr.36	Typical
3	M38C	N48A	N47A		90	Standoff Horiz...	Beam	SquareTube	A500 Gr. ...	Typical
4	M51	N66	N65		90	Standoff Horiz...	Beam	SquareTube	A500 Gr. ...	Typical
5	M104A	N75	N76		90	Connector Plate	Beam	RECT	A36 Gr.36	Typical
6	M105A	N77	N78		90	Connector Plate	Beam	RECT	A36 Gr.36	Typical
7	M122	N76	N183			RIGID	None	None	RIGID	Typical
8	M123	N75	N182			RIGID	None	None	RIGID	Typical
9	M124	N78	N185			RIGID	None	None	RIGID	Typical
10	M125	N77	N184			RIGID	None	None	RIGID	Typical
11	M126	N184	N185			RIGID	None	None	RIGID	Typical
12	M127	N182	N183			RIGID	None	None	RIGID	Typical
13	M128	N189	N187			RIGID	None	None	RIGID	Typical

Member Primary Data (Continued)

	Label	I Joint	J Joint	K Joint	Rotate(deg)	Section/Shape	Type	Design List	Material	Design Rules
14	M129	N188	N186			RIGID	None	None	RIGID	Typical
15	M134	N127A	N128		90	Face Plate	Beam	RECT	A36 Gr.36	Typical
16	M135	N127B	N126B		90	Face Plate	Beam	RECT	A36 Gr.36	Typical
17	M93A	N117	N76		90	Cross Brace	Beam	CU	A570 Gr. 36	Typical
18	M94A	N75	N118		90	Cross Brace	Beam	CU	A570 Gr. 36	Typical
19	M95	N117	N113			RIGID	None	None	RIGID	Typical
20	M94B	N118	N114			RIGID	None	None	RIGID	Typical
21	M95A	N115	N113A			RIGID	None	None	RIGID	Typical
22	M94C	N114B	N114A			RIGID	None	None	RIGID	Typical
23	M93B	N115	N78		90	Cross Brace	Beam	CU	A570 Gr. 36	Typical
24	M94D	N77	N114B		90	Cross Brace	Beam	CU	A570 Gr. 36	Typical
25	M53	N68	N69		90	Connector Plate	Beam	RECT	A36 Gr.36	Typical
26	M54	N70	N71		90	Connector Plate	Beam	RECT	A36 Gr.36	Typical
27	M55	N69	N73			RIGID	None	None	RIGID	Typical
28	M56	N68	N72			RIGID	None	None	RIGID	Typical
29	M57	N71	N75A			RIGID	None	None	RIGID	Typical
30	M58	N70	N74			RIGID	None	None	RIGID	Typical
31	M59	N74	N75A			RIGID	None	None	RIGID	Typical
32	M60	N72	N73			RIGID	None	None	RIGID	Typical
33	M61	N79	N77A			RIGID	None	None	RIGID	Typical
34	M62	N78A	N76A			RIGID	None	None	RIGID	Typical
35	M63	N82	N69		90	Cross Brace	Beam	CU	A570 Gr. 36	Typical
36	M64	N68	N83		90	Cross Brace	Beam	CU	A570 Gr. 36	Typical
37	M65	N82	N80			RIGID	None	None	RIGID	Typical
38	M66	N83	N81			RIGID	None	None	RIGID	Typical
39	M67	N86	N84			RIGID	None	None	RIGID	Typical
40	M68	N87	N85			RIGID	None	None	RIGID	Typical
41	M69	N86	N71		90	Cross Brace	Beam	CU	A570 Gr. 36	Typical
42	M70	N70	N87		90	Cross Brace	Beam	CU	A570 Gr. 36	Typical
43	M71	N89	N90		90	Connector Plate	Beam	RECT	A36 Gr.36	Typical
44	M72	N91	N92		90	Connector Plate	Beam	RECT	A36 Gr.36	Typical
45	M73	N90	N94			RIGID	None	None	RIGID	Typical
46	M74	N89	N93			RIGID	None	None	RIGID	Typical
47	M75	N92	N96			RIGID	None	None	RIGID	Typical
48	M76	N91	N95			RIGID	None	None	RIGID	Typical
49	M77	N95	N96			RIGID	None	None	RIGID	Typical
50	M78	N93	N94			RIGID	None	None	RIGID	Typical
51	M79	N100	N98			RIGID	None	None	RIGID	Typical
52	M80	N99	N97			RIGID	None	None	RIGID	Typical
53	M81	N103	N90		90	Cross Brace	Beam	CU	A570 Gr. 36	Typical
54	M82	N89	N104		90	Cross Brace	Beam	CU	A570 Gr. 36	Typical
55	M83	N103	N101			RIGID	None	None	RIGID	Typical
56	M84	N104	N102			RIGID	None	None	RIGID	Typical
57	M85	N107	N105			RIGID	None	None	RIGID	Typical
58	M86	N108	N106			RIGID	None	None	RIGID	Typical
59	M87	N107	N92		90	Cross Brace	Beam	CU	A570 Gr. 36	Typical
60	M88	N91	N108		90	Cross Brace	Beam	CU	A570 Gr. 36	Typical
61	M89	N109	N107A		180	Face Horizontal	Beam	CU	A570 Gr. 36	Typical
62	M90	N108A	N107A			Face Horizontal	Beam	CU	A570 Gr. 36	Typical
63	M89A	N109A	N107B		180	Face Horizontal	Beam	CU	A570 Gr. 36	Typical
64	M90A	N108B	N107B			Face Horizontal	Beam	CU	A570 Gr. 36	Typical
65	M91	N112	N110		180	Face Horizontal	Beam	CU	A570 Gr. 36	Typical

Member Primary Data (Continued)

	Label	I Joint	J Joint	K Joint	Rotate(deg)	Section/Shape	Type	Design List	Material	Design Rules
66	M92	N111	N110			Face Horizontal	Beam	CU	A570 Gr. 36	Typical
67	M101	N126	N127			Bottom Corner...	Beam	RECT	A36 Gr.36	Typical
68	M102	N108A	N127			RIGID	None	None	RIGID	Typical
69	M91A	N112A	N113B			Bottom Corner...	Beam	RECT	A36 Gr.36	Typical
70	M92A	N109	N113B			RIGID	None	None	RIGID	Typical
71	M93	N115A	N116			Bottom Corner...	Beam	RECT	A36 Gr.36	Typical
72	M94	N108B	N116			RIGID	None	None	RIGID	Typical
73	M95B	N117A	N118A			Bottom Corner...	Beam	RECT	A36 Gr.36	Typical
74	M96	N109A	N118A			RIGID	None	None	RIGID	Typical
75	M97	N121	N122			Bottom Corner...	Beam	RECT	A36 Gr.36	Typical
76	M98	N111	N122			RIGID	None	None	RIGID	Typical
77	M99	N123	N124			Bottom Corner...	Beam	RECT	A36 Gr.36	Typical
78	M100	N112	N124			RIGID	None	None	RIGID	Typical
79	M101A	N123	N115A			Bottom Corner...	Beam	RECT	A36 Gr.36	Typical
80	M104	N112A	N121			Bottom Corner...	Beam	RECT	A36 Gr.36	Typical
81	M105B	N115B	N116A			Support Rail	Beam	Pipe	A53 Gr. B	Typical
82	M104B	N113C	N114C			Support Rail	Beam	Pipe	A53 Gr. B	Typical
83	M105C	N115C	N116B			Support Rail	Beam	Pipe	A53 Gr. B	Typical
84	M107	N127A	N119			RIGID	None	None	RIGID	Typical
85	M108	N126B	N119			RIGID	None	None	RIGID	Typical
86	M107A	N128	N123A			RIGID	None	None	RIGID	Typical
87	M108A	N127B	N123A			RIGID	None	None	RIGID	Typical
88	M95C	N110A	N112B		90	Face Plate	Beam	RECT	A36 Gr.36	Typical
89	M96A	N111A	N109B		90	Face Plate	Beam	RECT	A36 Gr.36	Typical
90	M97A	N110A	N107C			RIGID	None	None	RIGID	Typical
91	M98A	N109B	N107C			RIGID	None	None	RIGID	Typical
92	M99A	N112B	N108C			RIGID	None	None	RIGID	Typical
93	M100A	N111A	N108C			RIGID	None	None	RIGID	Typical
94	M101B	N116D	N118B		90	Face Plate	Beam	RECT	A36 Gr.36	Typical
95	M102B	N117C	N115E		90	Face Plate	Beam	RECT	A36 Gr.36	Typical
96	M103A	N116D	N113D			RIGID	None	None	RIGID	Typical
97	M104C	N115E	N113D			RIGID	None	None	RIGID	Typical
98	M105E	N118B	N114D			RIGID	None	None	RIGID	Typical
99	M106C	N117C	N114D			RIGID	None	None	RIGID	Typical
100	M116	N138	N137			RIGID	None	None	RIGID	Typical
101	M117	N140	N139			RIGID	None	None	RIGID	Typical
102	MP1A	N141	N142			Mount Pipe	Column	Pipe	A53 Gr. B	Typical
103	M143	N194	N191			RIGID	None	None	RIGID	Typical
104	M144	N194A	N193			Mount Pipe	Column	Pipe	A53 Gr. B	Typical
105	M147	N198	N199		90	Cross Brace Pl...	Beam	RECT	A36 Gr.36	Typical
106	M148	N113	N198			RIGID	None	None	RIGID	Typical
107	M149	N114	N199			RIGID	None	None	RIGID	Typical
108	M149A	N199A	N200		90	Cross Brace Pl...	Beam	RECT	A36 Gr.36	Typical
109	M150A	N80	N199A			RIGID	None	None	RIGID	Typical
110	M151	N81	N200			RIGID	None	None	RIGID	Typical
111	M152	N203	N204		90	Cross Brace Pl...	Beam	RECT	A36 Gr.36	Typical
112	M153	N101	N203			RIGID	None	None	RIGID	Typical
113	M154	N102	N204			RIGID	None	None	RIGID	Typical
114	M155	N202	N203A		90	Cross Brace Pl...	Beam	RECT	A36 Gr.36	Typical
115	M157	N113A	N202			RIGID	None	None	RIGID	Typical
116	M158	N114A	N203A			RIGID	None	None	RIGID	Typical
117	M159	N207	N208		90	Cross Brace Pl...	Beam	RECT	A36 Gr.36	Typical

Member Primary Data (Continued)

	Label	I Joint	J Joint	K Joint	Rotate(deg)	Section/Shape	Type	Design List	Material	Design Rules
118	M161	N84	N207			RIGID	None	None	RIGID	Typical
119	M162	N85	N208			RIGID	None	None	RIGID	Typical
120	M163	N213	N214		90	Cross Brace Pl...	Beam	RECT	A36 Gr.36	Typical
121	M165	N105	N213			RIGID	None	None	RIGID	Typical
122	M166	N106	N214			RIGID	None	None	RIGID	Typical
123	M159A	N76A	N209			RIGID	None	None	RIGID	Typical
124	M160	N77A	N211			RIGID	None	None	RIGID	Typical
125	M161A	N97	N215			RIGID	None	None	RIGID	Typical
126	M162A	N98	N213A			RIGID	None	None	RIGID	Typical
127	M163A	N186	N203B			RIGID	None	None	RIGID	Typical
128	M164	N187	N198A			RIGID	None	None	RIGID	Typical
129	M165A	N212	N115D			RIGID	None	None	RIGID	Typical
130	M166A	N217	N212		90	Support Rail C...	Beam	RECT	A36 Gr.36	Typical
131	M167	N213B	N214A		90	Support Rail C...	Beam	RECT	A36 Gr.36	Typical
132	M168	N215A	N216		90	Support Rail C...	Beam	RECT	A36 Gr.36	Typical
133	M166B	N213B	N116C			RIGID	None	None	RIGID	Typical
134	M167A	N214A	N117B		120	RIGID	None	None	RIGID	Typical
135	M168A	N215A	N118C		120	RIGID	None	None	RIGID	Typical
136	M169	N216	N119A		240	RIGID	None	None	RIGID	Typical
137	M170	N217	N120		240	RIGID	None	None	RIGID	Typical
138	M147A	N172	N171			RIGID	None	None	RIGID	Typical
139	M148A	N174	N173			RIGID	None	None	RIGID	Typical
140	MP2A	N175	N176			Mount Pipe	Column	Pipe	A53 Gr. B	Typical
141	M144A	N167	N166			RIGID	None	None	RIGID	Typical
142	M145	N169	N168			RIGID	None	None	RIGID	Typical
143	MP4A	N170	N171A			Mount Pipe	Column	Pipe	A53 Gr. B	Typical
144	M147B	N173A	N172A			RIGID	None	None	RIGID	Typical
145	M148B	N175A	N174A			RIGID	None	None	RIGID	Typical
146	MP5A	N176A	N177			Mount Pipe	Column	Pipe	A53 Gr. B	Typical
147	M150	N178	N177A			RIGID	None	None	RIGID	Typical
148	M151A	N180	N179			RIGID	None	None	RIGID	Typical
149	MP3A	N181	N182A			Mount Pipe	Column	Pipe	A53 Gr. B	Typical
150	M150B	N182B	N181A			RIGID	None	None	RIGID	Typical
151	M151B	N184A	N183A			RIGID	None	None	RIGID	Typical
152	MP1C	N185A	N186A			Mount Pipe	Column	Pipe	A53 Gr. B	Typical
153	M153A	N188A	N187A			RIGID	None	None	RIGID	Typical
154	M154A	N190	N189A			RIGID	None	None	RIGID	Typical
155	MP2C	N191A	N192			Mount Pipe	Column	Pipe	A53 Gr. B	Typical
156	M156	N194B	N193A			RIGID	None	None	RIGID	Typical
157	M157A	N196	N195			RIGID	None	None	RIGID	Typical
158	MP4C	N197	N198B			Mount Pipe	Column	Pipe	A53 Gr. B	Typical
159	M159B	N200A	N199B			RIGID	None	None	RIGID	Typical
160	M160A	N202A	N201			RIGID	None	None	RIGID	Typical
161	MP5C	N203C	N204A			Mount Pipe	Column	Pipe	A53 Gr. B	Typical
162	M162B	N206	N205			RIGID	None	None	RIGID	Typical
163	M163B	N208A	N207A			RIGID	None	None	RIGID	Typical
164	MP3C	N209A	N210			Mount Pipe	Column	Pipe	A53 Gr. B	Typical
165	M165B	N213C	N212A			RIGID	None	None	RIGID	Typical
166	M166C	N215B	N214B			RIGID	None	None	RIGID	Typical
167	MP1B	N216A	N217A			Mount Pipe	Column	Pipe	A53 Gr. B	Typical
168	M168B	N219	N218			RIGID	None	None	RIGID	Typical
169	M169A	N221	N220			RIGID	None	None	RIGID	Typical

Member Primary Data (Continued)

	Label	I Joint	J Joint	K Joint	Rotate(deg)	Section/Shape	Type	Design List	Material	Design Rules
170	MP2B	N222	N223			Mount Pipe	Column	Pipe	A53 Gr. B	Typical
171	M171	N225	N224			RIGID	None	None	RIGID	Typical
172	M172	N227	N226			RIGID	None	None	RIGID	Typical
173	MP4B	N228	N229			Mount Pipe	Column	Pipe	A53 Gr. B	Typical
174	M174	N231	N230			RIGID	None	None	RIGID	Typical
175	M175	N233	N232			RIGID	None	None	RIGID	Typical
176	MP5B	N234	N235			Mount Pipe	Column	Pipe	A53 Gr. B	Typical
177	M177	N237	N236			RIGID	None	None	RIGID	Typical
178	M178	N239	N238			RIGID	None	None	RIGID	Typical
179	MP3B	N240	N241			Mount Pipe	Column	Pipe	A53 Gr. B	Typical
180	M180	N240A	N247		90	Mod Plan Brac...	Beam	Single Angle	A36 Gr.36	Typical
181	M181	N243	N241A		90	Mod Plan Brac...	Beam	Single Angle	A36 Gr.36	Typical
182	M182	N246	N244		90	Mod Plan Brac...	Beam	Single Angle	A36 Gr.36	Typical
183	M183	N254	N256			RIGID	None	None	RIGID	Typical
184	M184	N262	N254			RIGID	None	None	RIGID	Typical
185	M185	N258	N252A			RIGID	None	None	RIGID	Typical
186	M186	N252	N254A			RIGID	None	None	RIGID	Typical
187	M187	N260	N252			RIGID	None	None	RIGID	Typical
188	M188	N261	N253			RIGID	None	None	RIGID	Typical
189	M189	N253	N255A			RIGID	None	None	RIGID	Typical
190	M190	N259	N247A			RIGID	None	None	RIGID	Typical
191	M191	N247A	N253A			RIGID	None	None	RIGID	Typical
192	M192	N263	N255			RIGID	None	None	RIGID	Typical
193	M193	N255	N257			RIGID	None	None	RIGID	Typical
194	M194	N254A	N256		270	Mod Standoff ...	Beam	Single Angle	A36 Gr.36	Typical
195	M195	N255A	N257		270	Mod Standoff ...	Beam	Single Angle	A36 Gr.36	Typical
196	M196	N262	N260		90	Mod Standoff ...	Beam	Single Angle	A36 Gr.36	Typical
197	M197	N263	N261		90	Mod Standoff ...	Beam	Single Angle	A36 Gr.36	Typical
198	M198	N267	N271		120	RIGID	None	None	RIGID	Typical
199	M199	N275	N267		120	RIGID	None	None	RIGID	Typical
200	M200	N265	N269		120	RIGID	None	None	RIGID	Typical
201	M201	N273	N265		120	RIGID	None	None	RIGID	Typical
202	M202	N274	N266		120	RIGID	None	None	RIGID	Typical
203	M203	N266	N270		120	RIGID	None	None	RIGID	Typical
204	M204	N276	N268		120	RIGID	None	None	RIGID	Typical
205	M205	N268	N272		120	RIGID	None	None	RIGID	Typical
206	M206	N269	N271		270	Mod Standoff ...	Beam	Single Angle	A36 Gr.36	Typical
207	M207	N270	N272		270	Mod Standoff ...	Beam	Single Angle	A36 Gr.36	Typical
208	M208	N275	N273		90	Mod Standoff ...	Beam	Single Angle	A36 Gr.36	Typical
209	M209	N276	N274		90	Mod Standoff ...	Beam	Single Angle	A36 Gr.36	Typical
210	M210	N280	N284		240	RIGID	None	None	RIGID	Typical
211	M211	N288	N280		240	RIGID	None	None	RIGID	Typical
212	M212	N278	N282		240	RIGID	None	None	RIGID	Typical
213	M213	N286	N278		240	RIGID	None	None	RIGID	Typical
214	M214	N287	N279		240	RIGID	None	None	RIGID	Typical
215	M215	N279	N283		240	RIGID	None	None	RIGID	Typical
216	M216	N289	N281		240	RIGID	None	None	RIGID	Typical
217	M217	N281	N285		240	RIGID	None	None	RIGID	Typical
218	M218	N282	N284		270	Mod Standoff ...	Beam	Single Angle	A36 Gr.36	Typical
219	M219	N283	N285		270	Mod Standoff ...	Beam	Single Angle	A36 Gr.36	Typical
220	M220	N288	N286		90	Mod Standoff ...	Beam	Single Angle	A36 Gr.36	Typical
221	M221	N289	N287		90	Mod Standoff ...	Beam	Single Angle	A36 Gr.36	Typical

Member Primary Data (Continued)

	Label	I Joint	J Joint	K Joint	Rotate(deg)	Section/Shape	Type	Design List	Material	Design Rules
222	M222	N288A	N289A			Mod Kicker	Beam	Double Angle (...	A36 Gr.36	Typical
223	M223	N291	N292			Mod Kicker	Beam	Double Angle (...	A36 Gr.36	Typical
224	M224	N294	N295			Mod Kicker	Beam	Double Angle (...	A36 Gr.36	Typical
225	M225	N298	N296		120	RIGID	None	None	RIGID	Typical
226	M226	N299	N295A		120	RIGID	None	None	RIGID	Typical
227	M227	N295A	N297		120	RIGID	None	None	RIGID	Typical
228	M228	N304	N302		240	RIGID	None	None	RIGID	Typical
229	M229	N305	N301		240	RIGID	None	None	RIGID	Typical
230	M230	N301	N303		240	RIGID	None	None	RIGID	Typical

Member Advanced Data

	Label	I Release	J Release	I Offset[in]	J Offset[in]	T/C Only	Physical	Defl Rat...	Analysis ...	Inactive	Seismic...
1	M19						Yes				None
2	M19A						Yes	Default			None
3	M38C						Yes	Default			None
4	M51						Yes				None
5	M104A						Yes	Default			None
6	M105A						Yes				None
7	M122	BenPIN					Yes	** NA **			None
8	M123	BenPIN					Yes	** NA **			None
9	M124	BenPIN					Yes	** NA **			None
10	M125	BenPIN					Yes	** NA **			None
11	M126						Yes	** NA **			None
12	M127						Yes	** NA **			None
13	M128					Compres...	Yes	** NA **			None
14	M129					Compres...	Yes	** NA **			None
15	M134						Yes	Default			None
16	M135						Yes				None
17	M93A						Yes				None
18	M94A						Yes				None
19	M95						Yes	** NA **			None
20	M94B						Yes	** NA **			None
21	M95A						Yes	** NA **			None
22	M94C						Yes	** NA **			None
23	M93B						Yes				None
24	M94D						Yes				None
25	M53						Yes				None
26	M54						Yes				None
27	M55	BenPIN					Yes	** NA **			None
28	M56	BenPIN					Yes	** NA **			None
29	M57	BenPIN					Yes	** NA **			None
30	M58	BenPIN					Yes	** NA **			None
31	M59						Yes	** NA **			None
32	M60						Yes	** NA **			None
33	M61					Compres...	Yes	** NA **			None
34	M62					Compres...	Yes	** NA **			None
35	M63						Yes				None
36	M64						Yes				None
37	M65						Yes	** NA **			None
38	M66						Yes	** NA **			None

Member Advanced Data (Continued)

	Label	I Release	J Release	I Offset[in]	J Offset[in]	T/C Only	Physical	Defl Rat...	Analysis ...	Inactive	Seismic...
39	M67						Yes	** NA **			None
40	M68						Yes	** NA **			None
41	M69						Yes				None
42	M70						Yes				None
43	M71						Yes				None
44	M72						Yes				None
45	M73	BenPIN					Yes	** NA **			None
46	M74	BenPIN					Yes	** NA **			None
47	M75	BenPIN					Yes	** NA **			None
48	M76	BenPIN					Yes	** NA **			None
49	M77						Yes	** NA **			None
50	M78						Yes	** NA **			None
51	M79					Compres...	Yes	** NA **			None
52	M80					Compres...	Yes	** NA **			None
53	M81						Yes				None
54	M82						Yes				None
55	M83						Yes	** NA **			None
56	M84						Yes	** NA **			None
57	M85						Yes	** NA **			None
58	M86						Yes	** NA **			None
59	M87						Yes				None
60	M88						Yes				None
61	M89						Yes				None
62	M90						Yes				None
63	M89A						Yes				None
64	M90A						Yes				None
65	M91						Yes				None
66	M92						Yes				None
67	M101						Yes				None
68	M102						Yes	** NA **			None
69	M91A						Yes				None
70	M92A						Yes	** NA **			None
71	M93						Yes				None
72	M94						Yes	** NA **			None
73	M95B						Yes				None
74	M96						Yes	** NA **			None
75	M97						Yes				None
76	M98						Yes	** NA **			None
77	M99						Yes				None
78	M100						Yes	** NA **			None
79	M101A						Yes				None
80	M104						Yes	Default			None
81	M105B						Yes				None
82	M104B						Yes				None
83	M105C						Yes				None
84	M107						Yes	** NA **			None
85	M108						Yes	** NA **			None
86	M107A						Yes	** NA **			None
87	M108A						Yes	** NA **			None
88	M95C						Yes	Default			None
89	M96A						Yes				None
90	M97A						Yes	** NA **			None

Member Advanced Data (Continued)

	Label	I Release	J Release	I Offset[in]	J Offset[in]	T/C Only	Physical	Defl Rat...	Analysis ...	Inactive	Seismic...
91	M98A						Yes	** NA **			None
92	M99A						Yes	** NA **			None
93	M100A						Yes	** NA **			None
94	M101B						Yes	Default			None
95	M102B						Yes				None
96	M103A						Yes	** NA **			None
97	M104C						Yes	** NA **			None
98	M105E						Yes	** NA **			None
99	M106C						Yes	** NA **			None
100	M116						Yes	** NA **			None
101	M117						Yes	** NA **			None
102	MP1A						Yes	** NA **			None
103	M143						Yes	** NA **			None
104	M144						Yes	** NA **			None
105	M147					Euler Buc...	Yes	Default			None
106	M148						Yes	** NA **			None
107	M149						Yes	** NA **			None
108	M149A					Euler Buc...	Yes	Default			None
109	M150A						Yes	** NA **			None
110	M151						Yes	** NA **			None
111	M152					Euler Buc...	Yes	Default			None
112	M153						Yes	** NA **			None
113	M154						Yes	** NA **			None
114	M155					Euler Buc...	Yes				None
115	M157						Yes	** NA **			None
116	M158						Yes	** NA **			None
117	M159					Euler Buc...	Yes				None
118	M161						Yes	** NA **			None
119	M162						Yes	** NA **			None
120	M163					Euler Buc...	Yes				None
121	M165						Yes	** NA **			None
122	M166						Yes	** NA **			None
123	M159A						Yes	** NA **			None
124	M160						Yes	** NA **			None
125	M161A						Yes	** NA **			None
126	M162A						Yes	** NA **			None
127	M163A						Yes	** NA **			None
128	M164						Yes	** NA **			None
129	M165A		OOOOOO				Yes	** NA **			None
130	M166A						Yes				None
131	M167						Yes				None
132	M168						Yes				None
133	M166B		OOOOOO				Yes	** NA **			None
134	M167A		OOOOOO				Yes	** NA **			None
135	M168A		OOOOOO				Yes	** NA **			None
136	M169		OOOOOO				Yes	** NA **			None
137	M170		OOOOOO				Yes	** NA **			None
138	M147A						Yes	** NA **			None
139	M148A						Yes	** NA **			None
140	MP2A						Yes	** NA **			None
141	M144A						Yes	** NA **			None
142	M145						Yes	** NA **			None

Member Advanced Data (Continued)

	Label	I Release	J Release	I Offset[in]	J Offset[in]	T/C Only	Physical	Defl Rat...	Analysis ...	Inactive	Seismic...
143	MP4A						Yes	** NA **			None
144	M147B						Yes	** NA **			None
145	M148B						Yes	** NA **			None
146	MP5A						Yes	** NA **			None
147	M150						Yes	** NA **			None
148	M151A						Yes	** NA **			None
149	MP3A						Yes	** NA **			None
150	M150B						Yes	** NA **			None
151	M151B						Yes	** NA **			None
152	MP1C						Yes	** NA **			None
153	M153A						Yes	** NA **			None
154	M154A						Yes	** NA **			None
155	MP2C						Yes	** NA **			None
156	M156						Yes	** NA **			None
157	M157A						Yes	** NA **			None
158	MP4C						Yes	** NA **			None
159	M159B						Yes	** NA **			None
160	M160A						Yes	** NA **			None
161	MP5C						Yes	** NA **			None
162	M162B						Yes	** NA **			None
163	M163B						Yes	** NA **			None
164	MP3C						Yes	** NA **			None
165	M165B						Yes	** NA **			None
166	M166C						Yes	** NA **			None
167	MP1B						Yes	** NA **			None
168	M168B						Yes	** NA **			None
169	M169A						Yes	** NA **			None
170	MP2B						Yes	** NA **			None
171	M171						Yes	** NA **			None
172	M172						Yes	** NA **			None
173	MP4B						Yes	** NA **			None
174	M174						Yes	** NA **			None
175	M175						Yes	** NA **			None
176	MP5B						Yes	** NA **			None
177	M177						Yes	** NA **			None
178	M178						Yes	** NA **			None
179	MP3B						Yes	** NA **			None
180	M180	OOOOXO	OOOOXO				Yes	Default			None
181	M181	OOOOXO	OOOOXO				Yes	Default			None
182	M182	OOOOXO	OOOOXO				Yes	Default			None
183	M183						Yes	** NA **			None
184	M184						Yes	** NA **			None
185	M185						Yes	** NA **			None
186	M186						Yes	** NA **			None
187	M187						Yes	** NA **			None
188	M188						Yes	** NA **			None
189	M189						Yes	** NA **			None
190	M190						Yes	** NA **			None
191	M191						Yes	** NA **			None
192	M192						Yes	** NA **			None
193	M193						Yes	** NA **			None
194	M194	OOOOXO	OOOOXO				Yes	Default			None

Member Advanced Data (Continued)

	Label	I Release	J Release	I Offset[in]	J Offset[in]	T/C Only	Physical	Defl Rat...	Analysis ...	Inactive	Seismic...
195	M195	OOOOXO	OOOOXO				Yes	Default			None
196	M196	OOOOXO	OOOOXO				Yes	Default			None
197	M197	OOOOXO	OOOOXO				Yes	Default			None
198	M198						Yes	** NA **			None
199	M199						Yes	** NA **			None
200	M200						Yes	** NA **			None
201	M201						Yes	** NA **			None
202	M202						Yes	** NA **			None
203	M203						Yes	** NA **			None
204	M204						Yes	** NA **			None
205	M205						Yes	** NA **			None
206	M206	OOOOXO	OOOOXO				Yes	Default			None
207	M207	OOOOXO	OOOOXO				Yes	Default			None
208	M208	OOOOXO	OOOOXO				Yes	Default			None
209	M209	OOOOXO	OOOOXO				Yes	Default			None
210	M210						Yes	** NA **			None
211	M211						Yes	** NA **			None
212	M212						Yes	** NA **			None
213	M213						Yes	** NA **			None
214	M214						Yes	** NA **			None
215	M215						Yes	** NA **			None
216	M216						Yes	** NA **			None
217	M217						Yes	** NA **			None
218	M218	OOOOXO	OOOOXO				Yes	Default			None
219	M219	OOOOXO	OOOOXO				Yes	Default			None
220	M220	OOOOXO	OOOOXO				Yes	Default			None
221	M221	OOOOXO	OOOOXO				Yes	Default			None
222	M222	BenPIN	BenPIN				Yes				None
223	M223	BenPIN	BenPIN				Yes				None
224	M224	BenPIN	BenPIN				Yes				None
225	M225						Yes	** NA **			None
226	M226						Yes	** NA **			None
227	M227						Yes	** NA **			None
228	M228						Yes	** NA **			None
229	M229						Yes	** NA **			None
230	M230						Yes	** NA **			None

Member Point Loads (BLC 1 : Antenna D)

	Member Label	Direction	Magnitude[lb,k-ft]	Location[ft,%]
1	MP5A	Y	-40.8	2.21
2	MP5A	My	-.019	2.21
3	MP5A	Mz	.007	2.21
4	MP5A	Y	-40.8	4.21
5	MP5A	My	-.019	4.21
6	MP5A	Mz	.007	4.21
7	MP5B	Y	-40.8	2.21
8	MP5B	My	.007	2.21
9	MP5B	Mz	-.019	2.21
10	MP5B	Y	-40.8	4.21
11	MP5B	My	.007	4.21

Member Point Loads (BLC 1 : Antenna D) (Continued)

	Member Label	Direction	Magnitude[lb,k-ft]	Location[ft,%]
12	MP5B	Mz	-.019	4.21
13	MP5C	Y	-40.8	2.21
14	MP5C	My	.018	2.21
15	MP5C	Mz	.01	2.21
16	MP5C	Y	-40.8	4.21
17	MP5C	My	.018	4.21
18	MP5C	Mz	.01	4.21
19	MP3A	Y	-10.4	1
20	MP3A	My	.006	1
21	MP3A	Mz	-.002	1
22	MP3B	Y	-10.4	1
23	MP3B	My	-.002	1
24	MP3B	Mz	.006	1
25	MP3C	Y	-10.4	1
26	MP3C	My	-.006	1
27	MP3C	Mz	-.003	1
28	M144	Y	-32	1.25
29	M144	My	0	1.25
30	M144	Mz	0	1.25
31	MP3A	Y	-84.4	2
32	MP3A	My	.05	2
33	MP3A	Mz	-.018	2
34	MP3B	Y	-84.4	2
35	MP3B	My	-.018	2
36	MP3B	Mz	.05	2
37	MP3C	Y	-84.4	2
38	MP3C	My	-.046	2
39	MP3C	Mz	-.026	2
40	MP3A	Y	-70.3	4
41	MP3A	My	.041	4
42	MP3A	Mz	-.015	4
43	MP3B	Y	-70.3	4
44	MP3B	My	-.015	4
45	MP3B	Mz	.041	4
46	MP3C	Y	-70.3	4
47	MP3C	My	-.038	4
48	MP3C	Mz	-.022	4
49	MP3A	Y	-31.65	.71
50	MP3A	My	-.009	.71
51	MP3A	Mz	.023	.71
52	MP3A	Y	-31.65	5.71
53	MP3A	My	-.009	5.71
54	MP3A	Mz	.023	5.71
55	MP3B	Y	-31.65	.71
56	MP3B	My	-.012	.71
57	MP3B	Mz	-.021	.71
58	MP3B	Y	-31.65	5.71
59	MP3B	My	-.012	5.71
60	MP3B	Mz	-.021	5.71
61	MP3C	Y	-31.65	.71
62	MP3C	My	.023	.71
63	MP3C	Mz	-.008	.71

Member Point Loads (BLC 1 : Antenna D) (Continued)

	Member Label	Direction	Magnitude[lb,k-ft]	Location[ft,%]
64	MP3C	Y	-31.65	5.71
65	MP3C	My	.023	5.71
66	MP3C	Mz	-.008	5.71
67	MP3A	Y	-31.65	.71
68	MP3A	My	-.021	.71
69	MP3A	Mz	-.012	.71
70	MP3A	Y	-31.65	5.71
71	MP3A	My	-.021	5.71
72	MP3A	Mz	-.012	5.71
73	MP3B	Y	-31.65	.71
74	MP3B	My	.023	.71
75	MP3B	Mz	-.009	.71
76	MP3B	Y	-31.65	5.71
77	MP3B	My	.023	5.71
78	MP3B	Mz	-.009	5.71
79	MP3C	Y	-31.65	.71
80	MP3C	My	.004	.71
81	MP3C	Mz	.024	.71
82	MP3C	Y	-31.65	5.71
83	MP3C	My	.004	5.71
84	MP3C	Mz	.024	5.71
85	MP1A	Y	-19.2	.71
86	MP1A	My	-.011	.71
87	MP1A	Mz	.004	.71
88	MP1A	Y	-19.2	5.71
89	MP1A	My	-.011	5.71
90	MP1A	Mz	.004	5.71
91	MP1B	Y	-19.2	.71
92	MP1B	My	.004	.71
93	MP1B	Mz	-.011	.71
94	MP1B	Y	-19.2	5.71
95	MP1B	My	.004	5.71
96	MP1B	Mz	-.011	5.71
97	MP1C	Y	-19.2	.71
98	MP1C	My	.01	.71
99	MP1C	Mz	.006	.71
100	MP1C	Y	-19.2	5.71
101	MP1C	My	.01	5.71
102	MP1C	Mz	.006	5.71

Member Point Loads (BLC 2 : Antenna Di)

	Member Label	Direction	Magnitude[lb,k-ft]	Location[ft,%]
1	MP5A	Y	-35.888	2.21
2	MP5A	My	-.017	2.21
3	MP5A	Mz	.006	2.21
4	MP5A	Y	-35.888	4.21
5	MP5A	My	-.017	4.21
6	MP5A	Mz	.006	4.21
7	MP5B	Y	-35.888	2.21
8	MP5B	My	.006	2.21
9	MP5B	Mz	-.017	2.21

Member Point Loads (BLC 2 : Antenna Di) (Continued)

	Member Label	Direction	Magnitude[lb,k-ft]	Location[ft,%]
10	MP5B	Y	-35.888	4.21
11	MP5B	My	.006	4.21
12	MP5B	Mz	-.017	4.21
13	MP5C	Y	-35.888	2.21
14	MP5C	My	.016	2.21
15	MP5C	Mz	.009	2.21
16	MP5C	Y	-35.888	4.21
17	MP5C	My	.016	4.21
18	MP5C	Mz	.009	4.21
19	MP3A	Y	-10.739	1
20	MP3A	My	.006	1
21	MP3A	Mz	-.002	1
22	MP3B	Y	-10.739	1
23	MP3B	My	-.002	1
24	MP3B	Mz	.006	1
25	MP3C	Y	-10.739	1
26	MP3C	My	-.006	1
27	MP3C	Mz	-.003	1
28	M144	Y	-87.897	1.25
29	M144	My	0	1.25
30	M144	Mz	0	1.25
31	MP3A	Y	-44.892	2
32	MP3A	My	.026	2
33	MP3A	Mz	-.01	2
34	MP3B	Y	-44.892	2
35	MP3B	My	-.01	2
36	MP3B	Mz	.026	2
37	MP3C	Y	-44.892	2
38	MP3C	My	-.024	2
39	MP3C	Mz	-.014	2
40	MP3A	Y	-40.372	4
41	MP3A	My	.024	4
42	MP3A	Mz	-.009	4
43	MP3B	Y	-40.372	4
44	MP3B	My	-.009	4
45	MP3B	Mz	.024	4
46	MP3C	Y	-40.372	4
47	MP3C	My	-.022	4
48	MP3C	Mz	-.013	4
49	MP3A	Y	-69.935	.71
50	MP3A	My	-.019	.71
51	MP3A	Mz	.05	.71
52	MP3A	Y	-69.935	5.71
53	MP3A	My	-.019	5.71
54	MP3A	Mz	.05	5.71
55	MP3B	Y	-69.935	.71
56	MP3B	My	-.026	.71
57	MP3B	Mz	-.047	.71
58	MP3B	Y	-69.935	5.71
59	MP3B	My	-.026	5.71
60	MP3B	Mz	-.047	5.71
61	MP3C	Y	-69.935	.71

Member Point Loads (BLC 2 : Antenna Di) (Continued)

	Member Label	Direction	Magnitude[lb,k-ft]	Location[ft,%]
62	MP3C	My	.051	.71
63	MP3C	Mz	-.018	.71
64	MP3C	Y	-69.935	5.71
65	MP3C	My	.051	5.71
66	MP3C	Mz	-.018	5.71
67	MP3A	Y	-69.935	.71
68	MP3A	My	-.047	.71
69	MP3A	Mz	-.026	.71
70	MP3A	Y	-69.935	5.71
71	MP3A	My	-.047	5.71
72	MP3A	Mz	-.026	5.71
73	MP3B	Y	-69.935	.71
74	MP3B	My	.05	.71
75	MP3B	Mz	-.019	.71
76	MP3B	Y	-69.935	5.71
77	MP3B	My	.05	5.71
78	MP3B	Mz	-.019	5.71
79	MP3C	Y	-69.935	.71
80	MP3C	My	.01	.71
81	MP3C	Mz	.053	.71
82	MP3C	Y	-69.935	5.71
83	MP3C	My	.01	5.71
84	MP3C	Mz	.053	5.71
85	MP1A	Y	-61.128	.71
86	MP1A	My	-.034	.71
87	MP1A	Mz	.012	.71
88	MP1A	Y	-61.128	5.71
89	MP1A	My	-.034	5.71
90	MP1A	Mz	.012	5.71
91	MP1B	Y	-61.128	.71
92	MP1B	My	.012	.71
93	MP1B	Mz	-.034	.71
94	MP1B	Y	-61.128	5.71
95	MP1B	My	.012	5.71
96	MP1B	Mz	-.034	5.71
97	MP1C	Y	-61.128	.71
98	MP1C	My	.031	.71
99	MP1C	Mz	.018	.71
100	MP1C	Y	-61.128	5.71
101	MP1C	My	.031	5.71
102	MP1C	Mz	.018	5.71

Member Point Loads (BLC 3 : Antenna Wo (0 Deg))

	Member Label	Direction	Magnitude[lb,k-ft]	Location[ft,%]
1	MP5A	X	0	2.21
2	MP5A	Z	-58.999	2.21
3	MP5A	Mx	-.01	2.21
4	MP5A	X	0	4.21
5	MP5A	Z	-58.999	4.21
6	MP5A	Mx	-.01	4.21
7	MP5B	X	0	2.21

Member Point Loads (BLC 3 : Antenna Wo (0 Deg)) (Continued)

	Member Label	Direction	Magnitude[lb,k-ft]	Location[ft,%]
8	MP5B	Z	-36.664	2.21
9	MP5B	Mx	.017	2.21
10	MP5B	X	0	4.21
11	MP5B	Z	-36.664	4.21
12	MP5B	Mx	.017	4.21
13	MP5C	X	0	2.21
14	MP5C	Z	-55.121	2.21
15	MP5C	Mx	-.014	2.21
16	MP5C	X	0	4.21
17	MP5C	Z	-55.121	4.21
18	MP5C	Mx	-.014	4.21
19	MP3A	X	0	1
20	MP3A	Z	-11.047	1
21	MP3A	Mx	.002	1
22	MP3B	X	0	1
23	MP3B	Z	-8.342	1
24	MP3B	Mx	-.005	1
25	MP3C	X	0	1
26	MP3C	Z	-10.577	1
27	MP3C	Mx	.003	1
28	M144	X	0	1.25
29	M144	Z	-118.297	1.25
30	M144	Mx	0	1.25
31	MP3A	X	0	2
32	MP3A	Z	-55.673	2
33	MP3A	Mx	.012	2
34	MP3B	X	0	2
35	MP3B	Z	-40.962	2
36	MP3B	Mx	-.024	2
37	MP3C	X	0	2
38	MP3C	Z	-53.118	2
39	MP3C	Mx	.017	2
40	MP3A	X	0	4
41	MP3A	Z	-54.812	4
42	MP3A	Mx	.012	4
43	MP3B	X	0	4
44	MP3B	Z	-34.467	4
45	MP3B	Mx	-.02	4
46	MP3C	X	0	4
47	MP3C	Z	-51.279	4
48	MP3C	Mx	.016	4
49	MP3A	X	0	.71
50	MP3A	Z	-135.417	.71
51	MP3A	Mx	-.097	.71
52	MP3A	X	0	5.71
53	MP3A	Z	-135.417	5.71
54	MP3A	Mx	-.097	5.71
55	MP3B	X	0	.71
56	MP3B	Z	-98.324	.71
57	MP3B	Mx	.066	.71
58	MP3B	X	0	5.71
59	MP3B	Z	-98.324	5.71

Member Point Loads (BLC 3 : Antenna Wo (0 Deg)) (Continued)

	Member Label	Direction	Magnitude[lb,k-ft]	Location[ft,%]
60	MP3B	Mx	.066	5.71
61	MP3C	X	0	.71
62	MP3C	Z	-128.976	.71
63	MP3C	Mx	.033	.71
64	MP3C	X	0	5.71
65	MP3C	Z	-128.976	5.71
66	MP3C	Mx	.033	5.71
67	MP3A	X	0	.71
68	MP3A	Z	-135.417	.71
69	MP3A	Mx	.051	.71
70	MP3A	X	0	5.71
71	MP3A	Z	-135.417	5.71
72	MP3A	Mx	.051	5.71
73	MP3B	X	0	.71
74	MP3B	Z	-98.324	.71
75	MP3B	Mx	.027	.71
76	MP3B	X	0	5.71
77	MP3B	Z	-98.324	5.71
78	MP3B	Mx	.027	5.71
79	MP3C	X	0	.71
80	MP3C	Z	-128.976	.71
81	MP3C	Mx	-.097	.71
82	MP3C	X	0	5.71
83	MP3C	Z	-128.976	5.71
84	MP3C	Mx	-.097	5.71
85	MP1A	X	0	.71
86	MP1A	Z	-121.516	.71
87	MP1A	Mx	-.024	.71
88	MP1A	X	0	5.71
89	MP1A	Z	-121.516	5.71
90	MP1A	Mx	-.024	5.71
91	MP1B	X	0	.71
92	MP1B	Z	-88.718	.71
93	MP1B	Mx	.049	.71
94	MP1B	X	0	5.71
95	MP1B	Z	-88.718	5.71
96	MP1B	Mx	.049	5.71
97	MP1C	X	0	.71
98	MP1C	Z	-115.82	.71
99	MP1C	Mx	-.034	.71
100	MP1C	X	0	5.71
101	MP1C	Z	-115.82	5.71
102	MP1C	Mx	-.034	5.71

Member Point Loads (BLC 4 : Antenna Wo (30 Deg))

	Member Label	Direction	Magnitude[lb,k-ft]	Location[ft,%]
1	MP5A	X	22.65	2.21
2	MP5A	Z	-39.231	2.21
3	MP5A	Mx	-.017	2.21
4	MP5A	X	22.65	4.21
5	MP5A	Z	-39.231	4.21

Member Point Loads (BLC 4 : Antenna Wo (30 Deg)) (Continued)

	Member Label	Direction	Magnitude[lb,k-ft]	Location[ft,%]
6	MP5A	Mx	-.017	4.21
7	MP5B	X	17.066	2.21
8	MP5B	Z	-29.559	2.21
9	MP5B	Mx	.017	2.21
10	MP5B	X	17.066	4.21
11	MP5B	Z	-29.559	4.21
12	MP5B	Mx	.017	4.21
13	MP5C	X	31.205	2.21
14	MP5C	Z	-54.049	2.21
15	MP5C	Mx	0	2.21
16	MP5C	X	31.205	4.21
17	MP5C	Z	-54.049	4.21
18	MP5C	Mx	0	4.21
19	MP3A	X	4.694	1
20	MP3A	Z	-8.13	1
21	MP3A	Mx	.004	1
22	MP3B	X	4.018	1
23	MP3B	Z	-6.959	1
24	MP3B	Mx	-.005	1
25	MP3C	X	5.73	1
26	MP3C	Z	-9.925	1
27	MP3C	Mx	0	1
28	M144	X	51.696	1.25
29	M144	Z	-89.539	1.25
30	M144	Mx	0	1.25
31	MP3A	X	23.325	2
32	MP3A	Z	-40.4	2
33	MP3A	Mx	.022	2
34	MP3B	X	19.648	2
35	MP3B	Z	-34.031	2
36	MP3B	Mx	-.024	2
37	MP3C	X	28.96	2
38	MP3C	Z	-50.159	2
39	MP3C	Mx	0	2
40	MP3A	X	21.167	4
41	MP3A	Z	-36.662	4
42	MP3A	Mx	.02	4
43	MP3B	X	16.08	4
44	MP3B	Z	-27.852	4
45	MP3B	Mx	-.02	4
46	MP3C	X	28.96	4
47	MP3C	Z	-50.159	4
48	MP3C	Mx	0	4
49	MP3A	X	56.333	.71
50	MP3A	Z	-97.572	.71
51	MP3A	Mx	-.085	.71
52	MP3A	X	56.333	5.71
53	MP3A	Z	-97.572	5.71
54	MP3A	Mx	-.085	5.71
55	MP3B	X	47.06	.71
56	MP3B	Z	-81.511	.71
57	MP3B	Mx	.037	.71

Member Point Loads (BLC 4 : Antenna Wo (30 Deg)) (Continued)

	Member Label	Direction	Magnitude[lb,k-ft]	Location[ft,%]
58	MP3B	X	47.06	5.71
59	MP3B	Z	-81.511	5.71
60	MP3B	Mx	.037	5.71
61	MP3C	X	70.541	.71
62	MP3C	Z	-122.18	.71
63	MP3C	Mx	.082	.71
64	MP3C	X	70.541	5.71
65	MP3C	Z	-122.18	5.71
66	MP3C	Mx	.082	5.71
67	MP3A	X	56.333	.71
68	MP3A	Z	-97.572	.71
69	MP3A	Mx	-.000908	.71
70	MP3A	X	56.333	5.71
71	MP3A	Z	-97.572	5.71
72	MP3A	Mx	-.000908	5.71
73	MP3B	X	47.06	.71
74	MP3B	Z	-81.511	.71
75	MP3B	Mx	.056	.71
76	MP3B	X	47.06	5.71
77	MP3B	Z	-81.511	5.71
78	MP3B	Mx	.056	5.71
79	MP3C	X	70.541	.71
80	MP3C	Z	-122.18	.71
81	MP3C	Mx	-.082	.71
82	MP3C	X	70.541	5.71
83	MP3C	Z	-122.18	5.71
84	MP3C	Mx	-.082	5.71
85	MP1A	X	50.7	.71
86	MP1A	Z	-87.815	.71
87	MP1A	Mx	-.045	.71
88	MP1A	X	50.7	5.71
89	MP1A	Z	-87.815	5.71
90	MP1A	Mx	-.045	5.71
91	MP1B	X	42.5	.71
92	MP1B	Z	-73.613	.71
93	MP1B	Mx	.049	.71
94	MP1B	X	42.5	5.71
95	MP1B	Z	-73.613	5.71
96	MP1B	Mx	.049	5.71
97	MP1C	X	63.262	.71
98	MP1C	Z	-109.573	.71
99	MP1C	Mx	0	.71
100	MP1C	X	63.262	5.71
101	MP1C	Z	-109.573	5.71
102	MP1C	Mx	0	5.71

Member Point Loads (BLC 5 : Antenna Wo (60 Deg))

	Member Label	Direction	Magnitude[lb,k-ft]	Location[ft,%]
1	MP5A	X	29.559	2.21
2	MP5A	Z	-17.066	2.21
3	MP5A	Mx	-.017	2.21

Member Point Loads (BLC 5 : Antenna Wo (60 Deg)) (Continued)

	Member Label	Direction	Magnitude[lb,k-ft]	Location[ft,%]
4	MP5A	X	29.559	4.21
5	MP5A	Z	-17.066	4.21
6	MP5A	Mx	-.017	4.21
7	MP5B	X	39.231	2.21
8	MP5B	Z	-22.65	2.21
9	MP5B	Mx	.017	2.21
10	MP5B	X	39.231	4.21
11	MP5B	Z	-22.65	4.21
12	MP5B	Mx	.017	4.21
13	MP5C	X	47.736	2.21
14	MP5C	Z	-27.56	2.21
15	MP5C	Mx	.014	2.21
16	MP5C	X	47.736	4.21
17	MP5C	Z	-27.56	4.21
18	MP5C	Mx	.014	4.21
19	MP3A	X	6.959	1
20	MP3A	Z	-4.018	1
21	MP3A	Mx	.005	1
22	MP3B	X	8.13	1
23	MP3B	Z	-4.694	1
24	MP3B	Mx	-.004	1
25	MP3C	X	9.16	1
26	MP3C	Z	-5.289	1
27	MP3C	Mx	-.003	1
28	M144	X	83.085	1.25
29	M144	Z	-47.969	1.25
30	M144	Mx	0	1.25
31	MP3A	X	34.031	2
32	MP3A	Z	-19.648	2
33	MP3A	Mx	.024	2
34	MP3B	X	40.4	2
35	MP3B	Z	-23.325	2
36	MP3B	Mx	-.022	2
37	MP3C	X	46.002	2
38	MP3C	Z	-26.559	2
39	MP3C	Mx	-.017	2
40	MP3A	X	27.852	4
41	MP3A	Z	-16.08	4
42	MP3A	Mx	.02	4
43	MP3B	X	36.662	4
44	MP3B	Z	-21.167	4
45	MP3B	Mx	-.02	4
46	MP3C	X	44.409	4
47	MP3C	Z	-25.64	4
48	MP3C	Mx	-.016	4
49	MP3A	X	81.511	.71
50	MP3A	Z	-47.06	.71
51	MP3A	Mx	-.056	.71
52	MP3A	X	81.511	5.71
53	MP3A	Z	-47.06	5.71
54	MP3A	Mx	-.056	5.71
55	MP3B	X	97.572	.71

Member Point Loads (BLC 5 : Antenna Wo (60 Deg)) (Continued)

	Member Label	Direction	Magnitude[lb,k-ft]	Location[ft,%]
56	MP3B	Z	-56.333	.71
57	MP3B	Mx	.000908	.71
58	MP3B	X	97.572	5.71
59	MP3B	Z	-56.333	5.71
60	MP3B	Mx	.000908	5.71
61	MP3C	X	111.696	.71
62	MP3C	Z	-64.488	.71
63	MP3C	Mx	.097	.71
64	MP3C	X	111.696	5.71
65	MP3C	Z	-64.488	5.71
66	MP3C	Mx	.097	5.71
67	MP3A	X	81.511	.71
68	MP3A	Z	-47.06	.71
69	MP3A	Mx	-.037	.71
70	MP3A	X	81.511	5.71
71	MP3A	Z	-47.06	5.71
72	MP3A	Mx	-.037	5.71
73	MP3B	X	97.572	.71
74	MP3B	Z	-56.333	.71
75	MP3B	Mx	.085	.71
76	MP3B	X	97.572	5.71
77	MP3B	Z	-56.333	5.71
78	MP3B	Mx	.085	5.71
79	MP3C	X	111.696	.71
80	MP3C	Z	-64.488	.71
81	MP3C	Mx	-.033	.71
82	MP3C	X	111.696	5.71
83	MP3C	Z	-64.488	5.71
84	MP3C	Mx	-.033	5.71
85	MP1A	X	73.613	.71
86	MP1A	Z	-42.5	.71
87	MP1A	Mx	-.049	.71
88	MP1A	X	73.613	5.71
89	MP1A	Z	-42.5	5.71
90	MP1A	Mx	-.049	5.71
91	MP1B	X	87.815	.71
92	MP1B	Z	-50.7	.71
93	MP1B	Mx	.045	.71
94	MP1B	X	87.815	5.71
95	MP1B	Z	-50.7	5.71
96	MP1B	Mx	.045	5.71
97	MP1C	X	100.303	.71
98	MP1C	Z	-57.91	.71
99	MP1C	Mx	.034	.71
100	MP1C	X	100.303	5.71
101	MP1C	Z	-57.91	5.71
102	MP1C	Mx	.034	5.71

Member Point Loads (BLC 6 : Antenna Wo (90 Deg))

	Member Label	Direction	Magnitude[lb,k-ft]	Location[ft,%]
1	MP5A	X	36.664	2.21

Member Point Loads (BLC 6 : Antenna Wo (90 Deg)) (Continued)

	Member Label	Direction	Magnitude[lb,k-ft]	Location[ft,%]
2	MP5A	Z	0	2.21
3	MP5A	Mx	-.017	2.21
4	MP5A	X	36.664	4.21
5	MP5A	Z	0	4.21
6	MP5A	Mx	-.017	4.21
7	MP5B	X	58.999	2.21
8	MP5B	Z	0	2.21
9	MP5B	Mx	.01	2.21
10	MP5B	X	58.999	4.21
11	MP5B	Z	0	4.21
12	MP5B	Mx	.01	4.21
13	MP5C	X	40.542	2.21
14	MP5C	Z	0	2.21
15	MP5C	Mx	.018	2.21
16	MP5C	X	40.542	4.21
17	MP5C	Z	0	4.21
18	MP5C	Mx	.018	4.21
19	MP3A	X	8.342	1
20	MP3A	Z	0	1
21	MP3A	Mx	.005	1
22	MP3B	X	11.047	1
23	MP3B	Z	0	1
24	MP3B	Mx	-.002	1
25	MP3C	X	8.812	1
26	MP3C	Z	0	1
27	MP3C	Mx	-.005	1
28	M144	X	103.391	1.25
29	M144	Z	0	1.25
30	M144	Mx	0	1.25
31	MP3A	X	40.962	2
32	MP3A	Z	0	2
33	MP3A	Mx	.024	2
34	MP3B	X	55.673	2
35	MP3B	Z	0	2
36	MP3B	Mx	-.012	2
37	MP3C	X	43.517	2
38	MP3C	Z	0	2
39	MP3C	Mx	-.024	2
40	MP3A	X	34.467	4
41	MP3A	Z	0	4
42	MP3A	Mx	.02	4
43	MP3B	X	54.812	4
44	MP3B	Z	0	4
45	MP3B	Mx	-.012	4
46	MP3C	X	38	4
47	MP3C	Z	0	4
48	MP3C	Mx	-.021	4
49	MP3A	X	98.324	.71
50	MP3A	Z	0	.71
51	MP3A	Mx	-.027	.71
52	MP3A	X	98.324	5.71
53	MP3A	Z	0	5.71

Member Point Loads (BLC 6 : Antenna Wo (90 Deg)) (Continued)

	Member Label	Direction	Magnitude[lb,k-ft]	Location[ft,%]
54	MP3A	Mx	-.027	5.71
55	MP3B	X	135.417	.71
56	MP3B	Z	0	.71
57	MP3B	Mx	-.051	.71
58	MP3B	X	135.417	5.71
59	MP3B	Z	0	5.71
60	MP3B	Mx	-.051	5.71
61	MP3C	X	104.766	.71
62	MP3C	Z	0	.71
63	MP3C	Mx	.076	.71
64	MP3C	X	104.766	5.71
65	MP3C	Z	0	5.71
66	MP3C	Mx	.076	5.71
67	MP3A	X	98.324	.71
68	MP3A	Z	0	.71
69	MP3A	Mx	-.066	.71
70	MP3A	X	98.324	5.71
71	MP3A	Z	0	5.71
72	MP3A	Mx	-.066	5.71
73	MP3B	X	135.417	.71
74	MP3B	Z	0	.71
75	MP3B	Mx	.097	.71
76	MP3B	X	135.417	5.71
77	MP3B	Z	0	5.71
78	MP3B	Mx	.097	5.71
79	MP3C	X	104.766	.71
80	MP3C	Z	0	.71
81	MP3C	Mx	.015	.71
82	MP3C	X	104.766	5.71
83	MP3C	Z	0	5.71
84	MP3C	Mx	.015	5.71
85	MP1A	X	88.718	.71
86	MP1A	Z	0	.71
87	MP1A	Mx	-.049	.71
88	MP1A	X	88.718	5.71
89	MP1A	Z	0	5.71
90	MP1A	Mx	-.049	5.71
91	MP1B	X	121.516	.71
92	MP1B	Z	0	.71
93	MP1B	Mx	.024	.71
94	MP1B	X	121.516	5.71
95	MP1B	Z	0	5.71
96	MP1B	Mx	.024	5.71
97	MP1C	X	94.413	.71
98	MP1C	Z	0	.71
99	MP1C	Mx	.048	.71
100	MP1C	X	94.413	5.71
101	MP1C	Z	0	5.71
102	MP1C	Mx	.048	5.71

Member Point Loads (BLC 7 : Antenna Wo (120 Deg))

Member Label	Direction	Magnitude[lb,k-ft]	Location[ft,%]

Member Point Loads (BLC 7 : Antenna Wo (120 Deg)) (Continued)

	Member Label	Direction	Magnitude[lb,k-ft]	Location[ft,%]
1	MP5A	X	43.616	2.21
2	MP5A	Z	25.182	2.21
3	MP5A	Mx	-.016	2.21
4	MP5A	X	43.616	4.21
5	MP5A	Z	25.182	4.21
6	MP5A	Mx	-.016	4.21
7	MP5B	X	53.287	2.21
8	MP5B	Z	30.766	2.21
9	MP5B	Mx	-.005	2.21
10	MP5B	X	53.287	4.21
11	MP5B	Z	30.766	4.21
12	MP5B	Mx	-.005	4.21
13	MP5C	X	28.798	2.21
14	MP5C	Z	16.626	2.21
15	MP5C	Mx	.017	2.21
16	MP5C	X	28.798	4.21
17	MP5C	Z	16.626	4.21
18	MP5C	Mx	.017	4.21
19	MP3A	X	8.661	1
20	MP3A	Z	5.001	1
21	MP3A	Mx	.004	1
22	MP3B	X	9.832	1
23	MP3B	Z	5.677	1
24	MP3B	Mx	.001	1
25	MP3C	X	6.867	1
26	MP3C	Z	3.965	1
27	MP3C	Mx	-.005	1
28	M144	X	102.448	1.25
29	M144	Z	59.148	1.25
30	M144	Mx	0	1.25
31	MP3A	X	43.288	2
32	MP3A	Z	24.992	2
33	MP3A	Mx	.02	2
34	MP3B	X	49.658	2
35	MP3B	Z	28.67	2
36	MP3B	Mx	.006	2
37	MP3C	X	33.529	2
38	MP3C	Z	19.358	2
39	MP3C	Mx	-.024	2
40	MP3A	X	40.656	4
41	MP3A	Z	23.473	4
42	MP3A	Mx	.019	4
43	MP3B	X	49.466	4
44	MP3B	Z	28.559	4
45	MP3B	Mx	.006	4
46	MP3C	X	27.159	4
47	MP3C	Z	15.68	4
48	MP3C	Mx	-.02	4
49	MP3A	X	104.854	.71
50	MP3A	Z	60.537	.71
51	MP3A	Mx	.015	.71
52	MP3A	X	104.854	5.71

Member Point Loads (BLC 7 : Antenna Wo (120 Deg)) (Continued)

	Member Label	Direction	Magnitude[lb,k-ft]	Location[ft,%]
53	MP3A	Z	60.537	5.71
54	MP3A	Mx	.015	5.71
55	MP3B	X	120.915	.71
56	MP3B	Z	69.811	.71
57	MP3B	Mx	-.092	.71
58	MP3B	X	120.915	5.71
59	MP3B	Z	69.811	5.71
60	MP3B	Mx	-.092	5.71
61	MP3C	X	80.246	.71
62	MP3C	Z	46.33	.71
63	MP3C	Mx	.046	.71
64	MP3C	X	80.246	5.71
65	MP3C	Z	46.33	5.71
66	MP3C	Mx	.046	5.71
67	MP3A	X	104.854	.71
68	MP3A	Z	60.537	.71
69	MP3A	Mx	-.093	.71
70	MP3A	X	104.854	5.71
71	MP3A	Z	60.537	5.71
72	MP3A	Mx	-.093	5.71
73	MP3B	X	120.915	.71
74	MP3B	Z	69.811	.71
75	MP3B	Mx	.068	.71
76	MP3B	X	120.915	5.71
77	MP3B	Z	69.811	5.71
78	MP3B	Mx	.068	5.71
79	MP3C	X	80.246	.71
80	MP3C	Z	46.33	.71
81	MP3C	Mx	.046	.71
82	MP3C	X	80.246	5.71
83	MP3C	Z	46.33	5.71
84	MP3C	Mx	.046	5.71
85	MP1A	X	94.253	.71
86	MP1A	Z	54.417	.71
87	MP1A	Mx	-.041	.71
88	MP1A	X	94.253	5.71
89	MP1A	Z	54.417	5.71
90	MP1A	Mx	-.041	5.71
91	MP1B	X	108.455	.71
92	MP1B	Z	62.616	.71
93	MP1B	Mx	-.013	.71
94	MP1B	X	108.455	5.71
95	MP1B	Z	62.616	5.71
96	MP1B	Mx	-.013	5.71
97	MP1C	X	72.495	.71
98	MP1C	Z	41.855	.71
99	MP1C	Mx	.049	.71
100	MP1C	X	72.495	5.71
101	MP1C	Z	41.855	5.71
102	MP1C	Mx	.049	5.71

Member Point Loads (BLC 8 : Antenna Wo (150 Deg))

	Member Label	Direction	Magnitude[lb,k-ft]	Location[ft,%]
1	MP5A	X	30.766	2.21
2	MP5A	Z	53.287	2.21
3	MP5A	Mx	-.005	2.21
4	MP5A	X	30.766	4.21
5	MP5A	Z	53.287	4.21
6	MP5A	Mx	-.005	4.21
7	MP5B	X	25.182	2.21
8	MP5B	Z	43.616	2.21
9	MP5B	Mx	-.016	2.21
10	MP5B	X	25.182	4.21
11	MP5B	Z	43.616	4.21
12	MP5B	Mx	-.016	4.21
13	MP5C	X	20.271	2.21
14	MP5C	Z	35.111	2.21
15	MP5C	Mx	.018	2.21
16	MP5C	X	20.271	4.21
17	MP5C	Z	35.111	4.21
18	MP5C	Mx	.018	4.21
19	MP3A	X	5.677	1
20	MP3A	Z	9.832	1
21	MP3A	Mx	.001	1
22	MP3B	X	5.001	1
23	MP3B	Z	8.661	1
24	MP3B	Mx	.004	1
25	MP3C	X	4.406	1
26	MP3C	Z	7.631	1
27	MP3C	Mx	-.005	1
28	M144	X	62.875	1.25
29	M144	Z	108.902	1.25
30	M144	Mx	0	1.25
31	MP3A	X	28.67	2
32	MP3A	Z	49.658	2
33	MP3A	Mx	.006	2
34	MP3B	X	24.992	2
35	MP3B	Z	43.288	2
36	MP3B	Mx	.02	2
37	MP3C	X	21.758	2
38	MP3C	Z	37.687	2
39	MP3C	Mx	-.024	2
40	MP3A	X	28.559	4
41	MP3A	Z	49.466	4
42	MP3A	Mx	.006	4
43	MP3B	X	23.473	4
44	MP3B	Z	40.656	4
45	MP3B	Mx	.019	4
46	MP3C	X	19	4
47	MP3C	Z	32.909	4
48	MP3C	Mx	-.021	4
49	MP3A	X	69.811	.71
50	MP3A	Z	120.915	.71
51	MP3A	Mx	.068	.71
52	MP3A	X	69.811	5.71

Member Point Loads (BLC 8 : Antenna Wo (150 Deg)) (Continued)

	Member Label	Direction	Magnitude[lb,k-ft]	Location[ft,%]
53	MP3A	Z	120.915	5.71
54	MP3A	Mx	.068	5.71
55	MP3B	X	60.537	.71
56	MP3B	Z	104.854	.71
57	MP3B	Mx	-.093	.71
58	MP3B	X	60.537	5.71
59	MP3B	Z	104.854	5.71
60	MP3B	Mx	-.093	5.71
61	MP3C	X	52.383	.71
62	MP3C	Z	90.73	.71
63	MP3C	Mx	.015	.71
64	MP3C	X	52.383	5.71
65	MP3C	Z	90.73	5.71
66	MP3C	Mx	.015	5.71
67	MP3A	X	69.811	.71
68	MP3A	Z	120.915	.71
69	MP3A	Mx	-.092	.71
70	MP3A	X	69.811	5.71
71	MP3A	Z	120.915	5.71
72	MP3A	Mx	-.092	5.71
73	MP3B	X	60.537	.71
74	MP3B	Z	104.854	.71
75	MP3B	Mx	.015	.71
76	MP3B	X	60.537	5.71
77	MP3B	Z	104.854	5.71
78	MP3B	Mx	.015	5.71
79	MP3C	X	52.383	.71
80	MP3C	Z	90.73	.71
81	MP3C	Mx	.076	.71
82	MP3C	X	52.383	5.71
83	MP3C	Z	90.73	5.71
84	MP3C	Mx	.076	5.71
85	MP1A	X	62.616	.71
86	MP1A	Z	108.455	.71
87	MP1A	Mx	-.013	.71
88	MP1A	X	62.616	5.71
89	MP1A	Z	108.455	5.71
90	MP1A	Mx	-.013	5.71
91	MP1B	X	54.417	.71
92	MP1B	Z	94.253	.71
93	MP1B	Mx	-.041	.71
94	MP1B	X	54.417	5.71
95	MP1B	Z	94.253	5.71
96	MP1B	Mx	-.041	5.71
97	MP1C	X	47.207	.71
98	MP1C	Z	81.764	.71
99	MP1C	Mx	.048	.71
100	MP1C	X	47.207	5.71
101	MP1C	Z	81.764	5.71
102	MP1C	Mx	.048	5.71

Member Point Loads (BLC 9 : Antenna Wo (180 Deg))

	Member Label	Direction	Magnitude[lb,k-ft]	Location[ft,%]
1	MP5A	X	0	2.21
2	MP5A	Z	58.999	2.21
3	MP5A	Mx	.01	2.21
4	MP5A	X	0	4.21
5	MP5A	Z	58.999	4.21
6	MP5A	Mx	.01	4.21
7	MP5B	X	0	2.21
8	MP5B	Z	36.664	2.21
9	MP5B	Mx	-.017	2.21
10	MP5B	X	0	4.21
11	MP5B	Z	36.664	4.21
12	MP5B	Mx	-.017	4.21
13	MP5C	X	0	2.21
14	MP5C	Z	55.121	2.21
15	MP5C	Mx	.014	2.21
16	MP5C	X	0	4.21
17	MP5C	Z	55.121	4.21
18	MP5C	Mx	.014	4.21
19	MP3A	X	0	1
20	MP3A	Z	11.047	1
21	MP3A	Mx	-.002	1
22	MP3B	X	0	1
23	MP3B	Z	8.342	1
24	MP3B	Mx	.005	1
25	MP3C	X	0	1
26	MP3C	Z	10.577	1
27	MP3C	Mx	-.003	1
28	M144	X	0	1.25
29	M144	Z	118.297	1.25
30	M144	Mx	0	1.25
31	MP3A	X	0	2
32	MP3A	Z	55.673	2
33	MP3A	Mx	-.012	2
34	MP3B	X	0	2
35	MP3B	Z	40.962	2
36	MP3B	Mx	.024	2
37	MP3C	X	0	2
38	MP3C	Z	53.118	2
39	MP3C	Mx	-.017	2
40	MP3A	X	0	4
41	MP3A	Z	54.812	4
42	MP3A	Mx	-.012	4
43	MP3B	X	0	4
44	MP3B	Z	34.467	4
45	MP3B	Mx	.02	4
46	MP3C	X	0	4
47	MP3C	Z	51.279	4
48	MP3C	Mx	-.016	4
49	MP3A	X	0	.71
50	MP3A	Z	135.417	.71
51	MP3A	Mx	.097	.71
52	MP3A	X	0	5.71

Member Point Loads (BLC 9 : Antenna Wo (180 Deg)) (Continued)

	Member Label	Direction	Magnitude[lb,k-ft]	Location[ft,%]
53	MP3A	Z	135.417	5.71
54	MP3A	Mx	.097	5.71
55	MP3B	X	0	.71
56	MP3B	Z	98.324	.71
57	MP3B	Mx	-.066	.71
58	MP3B	X	0	5.71
59	MP3B	Z	98.324	5.71
60	MP3B	Mx	-.066	5.71
61	MP3C	X	0	.71
62	MP3C	Z	128.976	.71
63	MP3C	Mx	-.033	.71
64	MP3C	X	0	5.71
65	MP3C	Z	128.976	5.71
66	MP3C	Mx	-.033	5.71
67	MP3A	X	0	.71
68	MP3A	Z	135.417	.71
69	MP3A	Mx	-.051	.71
70	MP3A	X	0	5.71
71	MP3A	Z	135.417	5.71
72	MP3A	Mx	-.051	5.71
73	MP3B	X	0	.71
74	MP3B	Z	98.324	.71
75	MP3B	Mx	-.027	.71
76	MP3B	X	0	5.71
77	MP3B	Z	98.324	5.71
78	MP3B	Mx	-.027	5.71
79	MP3C	X	0	.71
80	MP3C	Z	128.976	.71
81	MP3C	Mx	.097	.71
82	MP3C	X	0	5.71
83	MP3C	Z	128.976	5.71
84	MP3C	Mx	.097	5.71
85	MP1A	X	0	.71
86	MP1A	Z	121.516	.71
87	MP1A	Mx	.024	.71
88	MP1A	X	0	5.71
89	MP1A	Z	121.516	5.71
90	MP1A	Mx	.024	5.71
91	MP1B	X	0	.71
92	MP1B	Z	88.718	.71
93	MP1B	Mx	-.049	.71
94	MP1B	X	0	5.71
95	MP1B	Z	88.718	5.71
96	MP1B	Mx	-.049	5.71
97	MP1C	X	0	.71
98	MP1C	Z	115.82	.71
99	MP1C	Mx	.034	.71
100	MP1C	X	0	5.71
101	MP1C	Z	115.82	5.71
102	MP1C	Mx	.034	5.71

Member Point Loads (BLC 10 : Antenna Wo (210 Deg))

	Member Label	Direction	Magnitude[lb,k-ft]	Location[ft,%]
1	MP5A	X	-22.65	2.21
2	MP5A	Z	39.231	2.21
3	MP5A	Mx	.017	2.21
4	MP5A	X	-22.65	4.21
5	MP5A	Z	39.231	4.21
6	MP5A	Mx	.017	4.21
7	MP5B	X	-17.066	2.21
8	MP5B	Z	29.559	2.21
9	MP5B	Mx	-.017	2.21
10	MP5B	X	-17.066	4.21
11	MP5B	Z	29.559	4.21
12	MP5B	Mx	-.017	4.21
13	MP5C	X	-31.205	2.21
14	MP5C	Z	54.049	2.21
15	MP5C	Mx	0	2.21
16	MP5C	X	-31.205	4.21
17	MP5C	Z	54.049	4.21
18	MP5C	Mx	0	4.21
19	MP3A	X	-4.694	1
20	MP3A	Z	8.13	1
21	MP3A	Mx	-.004	1
22	MP3B	X	-4.018	1
23	MP3B	Z	6.959	1
24	MP3B	Mx	.005	1
25	MP3C	X	-5.73	1
26	MP3C	Z	9.925	1
27	MP3C	Mx	0	1
28	M144	X	-51.696	1.25
29	M144	Z	89.539	1.25
30	M144	Mx	0	1.25
31	MP3A	X	-23.325	2
32	MP3A	Z	40.4	2
33	MP3A	Mx	-.022	2
34	MP3B	X	-19.648	2
35	MP3B	Z	34.031	2
36	MP3B	Mx	.024	2
37	MP3C	X	-28.96	2
38	MP3C	Z	50.159	2
39	MP3C	Mx	0	2
40	MP3A	X	-21.167	4
41	MP3A	Z	36.662	4
42	MP3A	Mx	-.02	4
43	MP3B	X	-16.08	4
44	MP3B	Z	27.852	4
45	MP3B	Mx	.02	4
46	MP3C	X	-28.96	4
47	MP3C	Z	50.159	4
48	MP3C	Mx	0	4
49	MP3A	X	-56.333	.71
50	MP3A	Z	97.572	.71
51	MP3A	Mx	.085	.71
52	MP3A	X	-56.333	5.71

Member Point Loads (BLC 10 : Antenna Wo (210 Deg)) (Continued)

	Member Label	Direction	Magnitude[lb,k-ft]	Location[ft,%]
53	MP3A	Z	97.572	5.71
54	MP3A	Mx	.085	5.71
55	MP3B	X	-47.06	.71
56	MP3B	Z	81.511	.71
57	MP3B	Mx	-.037	.71
58	MP3B	X	-47.06	5.71
59	MP3B	Z	81.511	5.71
60	MP3B	Mx	-.037	5.71
61	MP3C	X	-70.541	.71
62	MP3C	Z	122.18	.71
63	MP3C	Mx	-.082	.71
64	MP3C	X	-70.541	5.71
65	MP3C	Z	122.18	5.71
66	MP3C	Mx	-.082	5.71
67	MP3A	X	-56.333	.71
68	MP3A	Z	97.572	.71
69	MP3A	Mx	.000908	.71
70	MP3A	X	-56.333	5.71
71	MP3A	Z	97.572	5.71
72	MP3A	Mx	.000908	5.71
73	MP3B	X	-47.06	.71
74	MP3B	Z	81.511	.71
75	MP3B	Mx	-.056	.71
76	MP3B	X	-47.06	5.71
77	MP3B	Z	81.511	5.71
78	MP3B	Mx	-.056	5.71
79	MP3C	X	-70.541	.71
80	MP3C	Z	122.18	.71
81	MP3C	Mx	.082	.71
82	MP3C	X	-70.541	5.71
83	MP3C	Z	122.18	5.71
84	MP3C	Mx	.082	5.71
85	MP1A	X	-50.7	.71
86	MP1A	Z	87.815	.71
87	MP1A	Mx	.045	.71
88	MP1A	X	-50.7	5.71
89	MP1A	Z	87.815	5.71
90	MP1A	Mx	.045	5.71
91	MP1B	X	-42.5	.71
92	MP1B	Z	73.613	.71
93	MP1B	Mx	-.049	.71
94	MP1B	X	-42.5	5.71
95	MP1B	Z	73.613	5.71
96	MP1B	Mx	-.049	5.71
97	MP1C	X	-63.262	.71
98	MP1C	Z	109.573	.71
99	MP1C	Mx	0	.71
100	MP1C	X	-63.262	5.71
101	MP1C	Z	109.573	5.71
102	MP1C	Mx	0	5.71

Member Point Loads (BLC 11 : Antenna Wo (240 Deg))

	Member Label	Direction	Magnitude[lb,k-ft]	Location[ft,%]
1	MP5A	X	-29.559	2.21
2	MP5A	Z	17.066	2.21
3	MP5A	Mx	.017	2.21
4	MP5A	X	-29.559	4.21
5	MP5A	Z	17.066	4.21
6	MP5A	Mx	.017	4.21
7	MP5B	X	-39.231	2.21
8	MP5B	Z	22.65	2.21
9	MP5B	Mx	-.017	2.21
10	MP5B	X	-39.231	4.21
11	MP5B	Z	22.65	4.21
12	MP5B	Mx	-.017	4.21
13	MP5C	X	-47.736	2.21
14	MP5C	Z	27.56	2.21
15	MP5C	Mx	-.014	2.21
16	MP5C	X	-47.736	4.21
17	MP5C	Z	27.56	4.21
18	MP5C	Mx	-.014	4.21
19	MP3A	X	-6.959	1
20	MP3A	Z	4.018	1
21	MP3A	Mx	-.005	1
22	MP3B	X	-8.13	1
23	MP3B	Z	4.694	1
24	MP3B	Mx	.004	1
25	MP3C	X	-9.16	1
26	MP3C	Z	5.289	1
27	MP3C	Mx	.003	1
28	M144	X	-83.085	1.25
29	M144	Z	47.969	1.25
30	M144	Mx	0	1.25
31	MP3A	X	-34.031	2
32	MP3A	Z	19.648	2
33	MP3A	Mx	-.024	2
34	MP3B	X	-40.4	2
35	MP3B	Z	23.325	2
36	MP3B	Mx	.022	2
37	MP3C	X	-46.002	2
38	MP3C	Z	26.559	2
39	MP3C	Mx	.017	2
40	MP3A	X	-27.852	4
41	MP3A	Z	16.08	4
42	MP3A	Mx	-.02	4
43	MP3B	X	-36.662	4
44	MP3B	Z	21.167	4
45	MP3B	Mx	.02	4
46	MP3C	X	-44.409	4
47	MP3C	Z	25.64	4
48	MP3C	Mx	.016	4
49	MP3A	X	-81.511	.71
50	MP3A	Z	47.06	.71
51	MP3A	Mx	.056	.71
52	MP3A	X	-81.511	5.71

Member Point Loads (BLC 11 : Antenna Wo (240 Deg)) (Continued)

	Member Label	Direction	Magnitude[lb,k-ft]	Location[ft,%]
53	MP3A	Z	47.06	5.71
54	MP3A	Mx	.056	5.71
55	MP3B	X	-97.572	.71
56	MP3B	Z	56.333	.71
57	MP3B	Mx	-.000908	.71
58	MP3B	X	-97.572	5.71
59	MP3B	Z	56.333	5.71
60	MP3B	Mx	-.000908	5.71
61	MP3C	X	-111.696	.71
62	MP3C	Z	64.488	.71
63	MP3C	Mx	-.097	.71
64	MP3C	X	-111.696	5.71
65	MP3C	Z	64.488	5.71
66	MP3C	Mx	-.097	5.71
67	MP3A	X	-81.511	.71
68	MP3A	Z	47.06	.71
69	MP3A	Mx	.037	.71
70	MP3A	X	-81.511	5.71
71	MP3A	Z	47.06	5.71
72	MP3A	Mx	.037	5.71
73	MP3B	X	-97.572	.71
74	MP3B	Z	56.333	.71
75	MP3B	Mx	-.085	.71
76	MP3B	X	-97.572	5.71
77	MP3B	Z	56.333	5.71
78	MP3B	Mx	-.085	5.71
79	MP3C	X	-111.696	.71
80	MP3C	Z	64.488	.71
81	MP3C	Mx	.033	.71
82	MP3C	X	-111.696	5.71
83	MP3C	Z	64.488	5.71
84	MP3C	Mx	.033	5.71
85	MP1A	X	-73.613	.71
86	MP1A	Z	42.5	.71
87	MP1A	Mx	.049	.71
88	MP1A	X	-73.613	5.71
89	MP1A	Z	42.5	5.71
90	MP1A	Mx	.049	5.71
91	MP1B	X	-87.815	.71
92	MP1B	Z	50.7	.71
93	MP1B	Mx	-.045	.71
94	MP1B	X	-87.815	5.71
95	MP1B	Z	50.7	5.71
96	MP1B	Mx	-.045	5.71
97	MP1C	X	-100.303	.71
98	MP1C	Z	57.91	.71
99	MP1C	Mx	-.034	.71
100	MP1C	X	-100.303	5.71
101	MP1C	Z	57.91	5.71
102	MP1C	Mx	-.034	5.71

Member Point Loads (BLC 12 : Antenna Wo (270 Deg))

	Member Label	Direction	Magnitude[lb,k-ft]	Location[ft,%]
1	MP5A	X	-36.664	2.21
2	MP5A	Z	0	2.21
3	MP5A	Mx	.017	2.21
4	MP5A	X	-36.664	4.21
5	MP5A	Z	0	4.21
6	MP5A	Mx	.017	4.21
7	MP5B	X	-58.999	2.21
8	MP5B	Z	0	2.21
9	MP5B	Mx	-.01	2.21
10	MP5B	X	-58.999	4.21
11	MP5B	Z	0	4.21
12	MP5B	Mx	-.01	4.21
13	MP5C	X	-40.542	2.21
14	MP5C	Z	0	2.21
15	MP5C	Mx	-.018	2.21
16	MP5C	X	-40.542	4.21
17	MP5C	Z	0	4.21
18	MP5C	Mx	-.018	4.21
19	MP3A	X	-8.342	1
20	MP3A	Z	0	1
21	MP3A	Mx	-.005	1
22	MP3B	X	-11.047	1
23	MP3B	Z	0	1
24	MP3B	Mx	.002	1
25	MP3C	X	-8.812	1
26	MP3C	Z	0	1
27	MP3C	Mx	.005	1
28	M144	X	-103.391	1.25
29	M144	Z	0	1.25
30	M144	Mx	0	1.25
31	MP3A	X	-40.962	2
32	MP3A	Z	0	2
33	MP3A	Mx	-.024	2
34	MP3B	X	-55.673	2
35	MP3B	Z	0	2
36	MP3B	Mx	.012	2
37	MP3C	X	-43.517	2
38	MP3C	Z	0	2
39	MP3C	Mx	.024	2
40	MP3A	X	-34.467	4
41	MP3A	Z	0	4
42	MP3A	Mx	-.02	4
43	MP3B	X	-54.812	4
44	MP3B	Z	0	4
45	MP3B	Mx	.012	4
46	MP3C	X	-38	4
47	MP3C	Z	0	4
48	MP3C	Mx	.021	4
49	MP3A	X	-98.324	.71
50	MP3A	Z	0	.71
51	MP3A	Mx	.027	.71
52	MP3A	X	-98.324	5.71

Member Point Loads (BLC 12 : Antenna Wo (270 Deg)) (Continued)

	Member Label	Direction	Magnitude[lb,k-ft]	Location[ft,%]
53	MP3A	Z	0	5.71
54	MP3A	Mx	.027	5.71
55	MP3B	X	-135.417	.71
56	MP3B	Z	0	.71
57	MP3B	Mx	.051	.71
58	MP3B	X	-135.417	5.71
59	MP3B	Z	0	5.71
60	MP3B	Mx	.051	5.71
61	MP3C	X	-104.766	.71
62	MP3C	Z	0	.71
63	MP3C	Mx	-.076	.71
64	MP3C	X	-104.766	5.71
65	MP3C	Z	0	5.71
66	MP3C	Mx	-.076	5.71
67	MP3A	X	-98.324	.71
68	MP3A	Z	0	.71
69	MP3A	Mx	.066	.71
70	MP3A	X	-98.324	5.71
71	MP3A	Z	0	5.71
72	MP3A	Mx	.066	5.71
73	MP3B	X	-135.417	.71
74	MP3B	Z	0	.71
75	MP3B	Mx	-.097	.71
76	MP3B	X	-135.417	5.71
77	MP3B	Z	0	5.71
78	MP3B	Mx	-.097	5.71
79	MP3C	X	-104.766	.71
80	MP3C	Z	0	.71
81	MP3C	Mx	-.015	.71
82	MP3C	X	-104.766	5.71
83	MP3C	Z	0	5.71
84	MP3C	Mx	-.015	5.71
85	MP1A	X	-88.718	.71
86	MP1A	Z	0	.71
87	MP1A	Mx	.049	.71
88	MP1A	X	-88.718	5.71
89	MP1A	Z	0	5.71
90	MP1A	Mx	.049	5.71
91	MP1B	X	-121.516	.71
92	MP1B	Z	0	.71
93	MP1B	Mx	-.024	.71
94	MP1B	X	-121.516	5.71
95	MP1B	Z	0	5.71
96	MP1B	Mx	-.024	5.71
97	MP1C	X	-94.413	.71
98	MP1C	Z	0	.71
99	MP1C	Mx	-.048	.71
100	MP1C	X	-94.413	5.71
101	MP1C	Z	0	5.71
102	MP1C	Mx	-.048	5.71

Member Point Loads (BLC 13 : Antenna Wo (300 Deg))

	Member Label	Direction	Magnitude[lb,k-ft]	Location[ft,%]
1	MP5A	X	-43.616	2.21
2	MP5A	Z	-25.182	2.21
3	MP5A	Mx	.016	2.21
4	MP5A	X	-43.616	4.21
5	MP5A	Z	-25.182	4.21
6	MP5A	Mx	.016	4.21
7	MP5B	X	-53.287	2.21
8	MP5B	Z	-30.766	2.21
9	MP5B	Mx	.005	2.21
10	MP5B	X	-53.287	4.21
11	MP5B	Z	-30.766	4.21
12	MP5B	Mx	.005	4.21
13	MP5C	X	-28.798	2.21
14	MP5C	Z	-16.626	2.21
15	MP5C	Mx	-.017	2.21
16	MP5C	X	-28.798	4.21
17	MP5C	Z	-16.626	4.21
18	MP5C	Mx	-.017	4.21
19	MP3A	X	-8.661	1
20	MP3A	Z	-5.001	1
21	MP3A	Mx	-.004	1
22	MP3B	X	-9.832	1
23	MP3B	Z	-5.677	1
24	MP3B	Mx	-.001	1
25	MP3C	X	-6.867	1
26	MP3C	Z	-3.965	1
27	MP3C	Mx	.005	1
28	M144	X	-102.448	1.25
29	M144	Z	-59.148	1.25
30	M144	Mx	0	1.25
31	MP3A	X	-43.288	2
32	MP3A	Z	-24.992	2
33	MP3A	Mx	-.02	2
34	MP3B	X	-49.658	2
35	MP3B	Z	-28.67	2
36	MP3B	Mx	-.006	2
37	MP3C	X	-33.529	2
38	MP3C	Z	-19.358	2
39	MP3C	Mx	.024	2
40	MP3A	X	-40.656	4
41	MP3A	Z	-23.473	4
42	MP3A	Mx	-.019	4
43	MP3B	X	-49.466	4
44	MP3B	Z	-28.559	4
45	MP3B	Mx	-.006	4
46	MP3C	X	-27.159	4
47	MP3C	Z	-15.68	4
48	MP3C	Mx	.02	4
49	MP3A	X	-104.854	.71
50	MP3A	Z	-60.537	.71
51	MP3A	Mx	-.015	.71
52	MP3A	X	-104.854	5.71

Member Point Loads (BLC 13 : Antenna Wo (300 Deg)) (Continued)

	Member Label	Direction	Magnitude[lb,k-ft]	Location[ft,%]
53	MP3A	Z	-60.537	5.71
54	MP3A	Mx	-.015	5.71
55	MP3B	X	-120.915	.71
56	MP3B	Z	-69.811	.71
57	MP3B	Mx	.092	.71
58	MP3B	X	-120.915	5.71
59	MP3B	Z	-69.811	5.71
60	MP3B	Mx	.092	5.71
61	MP3C	X	-80.246	.71
62	MP3C	Z	-46.33	.71
63	MP3C	Mx	-.046	.71
64	MP3C	X	-80.246	5.71
65	MP3C	Z	-46.33	5.71
66	MP3C	Mx	-.046	5.71
67	MP3A	X	-104.854	.71
68	MP3A	Z	-60.537	.71
69	MP3A	Mx	.093	.71
70	MP3A	X	-104.854	5.71
71	MP3A	Z	-60.537	5.71
72	MP3A	Mx	.093	5.71
73	MP3B	X	-120.915	.71
74	MP3B	Z	-69.811	.71
75	MP3B	Mx	-.068	.71
76	MP3B	X	-120.915	5.71
77	MP3B	Z	-69.811	5.71
78	MP3B	Mx	-.068	5.71
79	MP3C	X	-80.246	.71
80	MP3C	Z	-46.33	.71
81	MP3C	Mx	-.046	.71
82	MP3C	X	-80.246	5.71
83	MP3C	Z	-46.33	5.71
84	MP3C	Mx	-.046	5.71
85	MP1A	X	-94.253	.71
86	MP1A	Z	-54.417	.71
87	MP1A	Mx	.041	.71
88	MP1A	X	-94.253	5.71
89	MP1A	Z	-54.417	5.71
90	MP1A	Mx	.041	5.71
91	MP1B	X	-108.455	.71
92	MP1B	Z	-62.616	.71
93	MP1B	Mx	.013	.71
94	MP1B	X	-108.455	5.71
95	MP1B	Z	-62.616	5.71
96	MP1B	Mx	.013	5.71
97	MP1C	X	-72.495	.71
98	MP1C	Z	-41.855	.71
99	MP1C	Mx	-.049	.71
100	MP1C	X	-72.495	5.71
101	MP1C	Z	-41.855	5.71
102	MP1C	Mx	-.049	5.71

Member Point Loads (BLC 14 : Antenna Wo (330 Deg))

	Member Label	Direction	Magnitude[lb,k-ft]	Location[ft,%]
1	MP5A	X	-30.766	2.21
2	MP5A	Z	-53.287	2.21
3	MP5A	Mx	.005	2.21
4	MP5A	X	-30.766	4.21
5	MP5A	Z	-53.287	4.21
6	MP5A	Mx	.005	4.21
7	MP5B	X	-25.182	2.21
8	MP5B	Z	-43.616	2.21
9	MP5B	Mx	.016	2.21
10	MP5B	X	-25.182	4.21
11	MP5B	Z	-43.616	4.21
12	MP5B	Mx	.016	4.21
13	MP5C	X	-20.271	2.21
14	MP5C	Z	-35.111	2.21
15	MP5C	Mx	-.018	2.21
16	MP5C	X	-20.271	4.21
17	MP5C	Z	-35.111	4.21
18	MP5C	Mx	-.018	4.21
19	MP3A	X	-5.677	1
20	MP3A	Z	-9.832	1
21	MP3A	Mx	-.001	1
22	MP3B	X	-5.001	1
23	MP3B	Z	-8.661	1
24	MP3B	Mx	-.004	1
25	MP3C	X	-4.406	1
26	MP3C	Z	-7.631	1
27	MP3C	Mx	.005	1
28	M144	X	-62.875	1.25
29	M144	Z	-108.902	1.25
30	M144	Mx	0	1.25
31	MP3A	X	-28.67	2
32	MP3A	Z	-49.658	2
33	MP3A	Mx	-.006	2
34	MP3B	X	-24.992	2
35	MP3B	Z	-43.288	2
36	MP3B	Mx	-.02	2
37	MP3C	X	-21.758	2
38	MP3C	Z	-37.687	2
39	MP3C	Mx	.024	2
40	MP3A	X	-28.559	4
41	MP3A	Z	-49.466	4
42	MP3A	Mx	-.006	4
43	MP3B	X	-23.473	4
44	MP3B	Z	-40.656	4
45	MP3B	Mx	-.019	4
46	MP3C	X	-19	4
47	MP3C	Z	-32.909	4
48	MP3C	Mx	.021	4
49	MP3A	X	-69.811	.71
50	MP3A	Z	-120.915	.71
51	MP3A	Mx	-.068	.71
52	MP3A	X	-69.811	5.71

Member Point Loads (BLC 14 : Antenna Wo (330 Deg)) (Continued)

	Member Label	Direction	Magnitude[lb,k-ft]	Location[ft,%]
53	MP3A	Z	-120.915	5.71
54	MP3A	Mx	-.068	5.71
55	MP3B	X	-60.537	.71
56	MP3B	Z	-104.854	.71
57	MP3B	Mx	.093	.71
58	MP3B	X	-60.537	5.71
59	MP3B	Z	-104.854	5.71
60	MP3B	Mx	.093	5.71
61	MP3C	X	-52.383	.71
62	MP3C	Z	-90.73	.71
63	MP3C	Mx	-.015	.71
64	MP3C	X	-52.383	5.71
65	MP3C	Z	-90.73	5.71
66	MP3C	Mx	-.015	5.71
67	MP3A	X	-69.811	.71
68	MP3A	Z	-120.915	.71
69	MP3A	Mx	.092	.71
70	MP3A	X	-69.811	5.71
71	MP3A	Z	-120.915	5.71
72	MP3A	Mx	.092	5.71
73	MP3B	X	-60.537	.71
74	MP3B	Z	-104.854	.71
75	MP3B	Mx	-.015	.71
76	MP3B	X	-60.537	5.71
77	MP3B	Z	-104.854	5.71
78	MP3B	Mx	-.015	5.71
79	MP3C	X	-52.383	.71
80	MP3C	Z	-90.73	.71
81	MP3C	Mx	-.076	.71
82	MP3C	X	-52.383	5.71
83	MP3C	Z	-90.73	5.71
84	MP3C	Mx	-.076	5.71
85	MP1A	X	-62.616	.71
86	MP1A	Z	-108.455	.71
87	MP1A	Mx	.013	.71
88	MP1A	X	-62.616	5.71
89	MP1A	Z	-108.455	5.71
90	MP1A	Mx	.013	5.71
91	MP1B	X	-54.417	.71
92	MP1B	Z	-94.253	.71
93	MP1B	Mx	.041	.71
94	MP1B	X	-54.417	5.71
95	MP1B	Z	-94.253	5.71
96	MP1B	Mx	.041	5.71
97	MP1C	X	-47.207	.71
98	MP1C	Z	-81.764	.71
99	MP1C	Mx	-.048	.71
100	MP1C	X	-47.207	5.71
101	MP1C	Z	-81.764	5.71
102	MP1C	Mx	-.048	5.71

Member Point Loads (BLC 15 : Antenna Wi (0 Deg))

	Member Label	Direction	Magnitude[lb,k-ft]	Location[ft,%]
1	MP5A	X	0	2.21
2	MP5A	Z	-12.483	2.21
3	MP5A	Mx	-.002	2.21
4	MP5A	X	0	4.21
5	MP5A	Z	-12.483	4.21
6	MP5A	Mx	-.002	4.21
7	MP5B	X	0	2.21
8	MP5B	Z	-8.064	2.21
9	MP5B	Mx	.004	2.21
10	MP5B	X	0	4.21
11	MP5B	Z	-8.064	4.21
12	MP5B	Mx	.004	4.21
13	MP5C	X	0	2.21
14	MP5C	Z	-11.716	2.21
15	MP5C	Mx	-.003	2.21
16	MP5C	X	0	4.21
17	MP5C	Z	-11.716	4.21
18	MP5C	Mx	-.003	4.21
19	MP3A	X	0	1
20	MP3A	Z	-3.034	1
21	MP3A	Mx	.000649	1
22	MP3B	X	0	1
23	MP3B	Z	-2.436	1
24	MP3B	Mx	-.001	1
25	MP3C	X	0	1
26	MP3C	Z	-2.93	1
27	MP3C	Mx	.000916	1
28	M144	X	0	1.25
29	M144	Z	-25.018	1.25
30	M144	Mx	0	1.25
31	MP3A	X	0	2
32	MP3A	Z	-12.417	2
33	MP3A	Mx	.003	2
34	MP3B	X	0	2
35	MP3B	Z	-9.414	2
36	MP3B	Mx	-.006	2
37	MP3C	X	0	2
38	MP3C	Z	-11.895	2
39	MP3C	Mx	.004	2
40	MP3A	X	0	4
41	MP3A	Z	-12.242	4
42	MP3A	Mx	.003	4
43	MP3B	X	0	4
44	MP3B	Z	-8.099	4
45	MP3B	Mx	-.005	4
46	MP3C	X	0	4
47	MP3C	Z	-11.523	4
48	MP3C	Mx	.004	4
49	MP3A	X	0	.71
50	MP3A	Z	-27.655	.71
51	MP3A	Mx	-.02	.71
52	MP3A	X	0	5.71

Member Point Loads (BLC 15 : Antenna Wi (0 Deg)) (Continued)

	Member Label	Direction	Magnitude[lb,k-ft]	Location[ft,%]
53	MP3A	Z	-27.655	5.71
54	MP3A	Mx	-.02	5.71
55	MP3B	X	0	.71
56	MP3B	Z	-20.661	.71
57	MP3B	Mx	.014	.71
58	MP3B	X	0	5.71
59	MP3B	Z	-20.661	5.71
60	MP3B	Mx	.014	5.71
61	MP3C	X	0	.71
62	MP3C	Z	-26.44	.71
63	MP3C	Mx	.007	.71
64	MP3C	X	0	5.71
65	MP3C	Z	-26.44	5.71
66	MP3C	Mx	.007	5.71
67	MP3A	X	0	.71
68	MP3A	Z	-27.655	.71
69	MP3A	Mx	.01	.71
70	MP3A	X	0	5.71
71	MP3A	Z	-27.655	5.71
72	MP3A	Mx	.01	5.71
73	MP3B	X	0	.71
74	MP3B	Z	-20.661	.71
75	MP3B	Mx	.006	.71
76	MP3B	X	0	5.71
77	MP3B	Z	-20.661	5.71
78	MP3B	Mx	.006	5.71
79	MP3C	X	0	.71
80	MP3C	Z	-26.44	.71
81	MP3C	Mx	-.02	.71
82	MP3C	X	0	5.71
83	MP3C	Z	-26.44	5.71
84	MP3C	Mx	-.02	5.71
85	MP1A	X	0	.71
86	MP1A	Z	-24.99	.71
87	MP1A	Mx	-.005	.71
88	MP1A	X	0	5.71
89	MP1A	Z	-24.99	5.71
90	MP1A	Mx	-.005	5.71
91	MP1B	X	0	.71
92	MP1B	Z	-18.825	.71
93	MP1B	Mx	.01	.71
94	MP1B	X	0	5.71
95	MP1B	Z	-18.825	5.71
96	MP1B	Mx	.01	5.71
97	MP1C	X	0	.71
98	MP1C	Z	-23.919	.71
99	MP1C	Mx	-.007	.71
100	MP1C	X	0	5.71
101	MP1C	Z	-23.919	5.71
102	MP1C	Mx	-.007	5.71

Member Point Loads (BLC 16 : Antenna Wi (30 Deg))

	Member Label	Direction	Magnitude[lb,k-ft]	Location[ft,%]
1	MP5A	X	4.886	2.21
2	MP5A	Z	-8.463	2.21
3	MP5A	Mx	-.004	2.21
4	MP5A	X	4.886	4.21
5	MP5A	Z	-8.463	4.21
6	MP5A	Mx	-.004	4.21
7	MP5B	X	3.781	2.21
8	MP5B	Z	-6.549	2.21
9	MP5B	Mx	.004	2.21
10	MP5B	X	3.781	4.21
11	MP5B	Z	-6.549	4.21
12	MP5B	Mx	.004	4.21
13	MP5C	X	6.579	2.21
14	MP5C	Z	-11.395	2.21
15	MP5C	Mx	0	2.21
16	MP5C	X	6.579	4.21
17	MP5C	Z	-11.395	4.21
18	MP5C	Mx	0	4.21
19	MP3A	X	1.334	1
20	MP3A	Z	-2.31	1
21	MP3A	Mx	.001	1
22	MP3B	X	1.184	1
23	MP3B	Z	-2.051	1
24	MP3B	Mx	-.001	1
25	MP3C	X	1.563	1
26	MP3C	Z	-2.706	1
27	MP3C	Mx	0	1
28	M144	X	11.067	1.25
29	M144	Z	-19.168	1.25
30	M144	Mx	0	1.25
31	MP3A	X	5.288	2
32	MP3A	Z	-9.158	2
33	MP3A	Mx	.005	2
34	MP3B	X	4.537	2
35	MP3B	Z	-7.858	2
36	MP3B	Mx	-.006	2
37	MP3C	X	6.438	2
38	MP3C	Z	-11.15	2
39	MP3C	Mx	0	2
40	MP3A	X	4.851	4
41	MP3A	Z	-8.401	4
42	MP3A	Mx	.005	4
43	MP3B	X	3.815	4
44	MP3B	Z	-6.607	4
45	MP3B	Mx	-.005	4
46	MP3C	X	6.438	4
47	MP3C	Z	-11.15	4
48	MP3C	Mx	0	4
49	MP3A	X	11.683	.71
50	MP3A	Z	-20.235	.71
51	MP3A	Mx	-.018	.71
52	MP3A	X	11.683	5.71

Member Point Loads (BLC 16 : Antenna Wi (30 Deg)) (Continued)

	Member Label	Direction	Magnitude[lb,k-ft]	Location[ft,%]
53	MP3A	Z	-20.235	5.71
54	MP3A	Mx	-.018	5.71
55	MP3B	X	9.934	.71
56	MP3B	Z	-17.206	.71
57	MP3B	Mx	.008	.71
58	MP3B	X	9.934	5.71
59	MP3B	Z	-17.206	5.71
60	MP3B	Mx	.008	5.71
61	MP3C	X	14.361	.71
62	MP3C	Z	-24.874	.71
63	MP3C	Mx	.017	.71
64	MP3C	X	14.361	5.71
65	MP3C	Z	-24.874	5.71
66	MP3C	Mx	.017	5.71
67	MP3A	X	11.683	.71
68	MP3A	Z	-20.235	.71
69	MP3A	Mx	-.000189	.71
70	MP3A	X	11.683	5.71
71	MP3A	Z	-20.235	5.71
72	MP3A	Mx	-.000189	5.71
73	MP3B	X	9.934	.71
74	MP3B	Z	-17.206	.71
75	MP3B	Mx	.012	.71
76	MP3B	X	9.934	5.71
77	MP3B	Z	-17.206	5.71
78	MP3B	Mx	.012	5.71
79	MP3C	X	14.361	.71
80	MP3C	Z	-24.874	.71
81	MP3C	Mx	-.017	.71
82	MP3C	X	14.361	5.71
83	MP3C	Z	-24.874	5.71
84	MP3C	Mx	-.017	5.71
85	MP1A	X	10.604	.71
86	MP1A	Z	-18.367	.71
87	MP1A	Mx	-.009	.71
88	MP1A	X	10.604	5.71
89	MP1A	Z	-18.367	5.71
90	MP1A	Mx	-.009	5.71
91	MP1B	X	9.063	.71
92	MP1B	Z	-15.698	.71
93	MP1B	Mx	.01	.71
94	MP1B	X	9.063	5.71
95	MP1B	Z	-15.698	5.71
96	MP1B	Mx	.01	5.71
97	MP1C	X	12.965	.71
98	MP1C	Z	-22.457	.71
99	MP1C	Mx	0	.71
100	MP1C	X	12.965	5.71
101	MP1C	Z	-22.457	5.71
102	MP1C	Mx	0	5.71

Member Point Loads (BLC 17 : Antenna Wi (60 Deg))

	Member Label	Direction	Magnitude[lb,k-ft]	Location[ft,%]
1	MP5A	X	6.549	2.21
2	MP5A	Z	-3.781	2.21
3	MP5A	Mx	-.004	2.21
4	MP5A	X	6.549	4.21
5	MP5A	Z	-3.781	4.21
6	MP5A	Mx	-.004	4.21
7	MP5B	X	8.463	2.21
8	MP5B	Z	-4.886	2.21
9	MP5B	Mx	.004	2.21
10	MP5B	X	8.463	4.21
11	MP5B	Z	-4.886	4.21
12	MP5B	Mx	.004	4.21
13	MP5C	X	10.146	2.21
14	MP5C	Z	-5.858	2.21
15	MP5C	Mx	.003	2.21
16	MP5C	X	10.146	4.21
17	MP5C	Z	-5.858	4.21
18	MP5C	Mx	.003	4.21
19	MP3A	X	2.051	1
20	MP3A	Z	-1.184	1
21	MP3A	Mx	.001	1
22	MP3B	X	2.31	1
23	MP3B	Z	-1.334	1
24	MP3B	Mx	-.001	1
25	MP3C	X	2.538	1
26	MP3C	Z	-1.465	1
27	MP3C	Mx	-.000916	1
28	M144	X	17.919	1.25
29	M144	Z	-10.346	1.25
30	M144	Mx	0	1.25
31	MP3A	X	7.858	2
32	MP3A	Z	-4.537	2
33	MP3A	Mx	.006	2
34	MP3B	X	9.158	2
35	MP3B	Z	-5.288	2
36	MP3B	Mx	-.005	2
37	MP3C	X	10.302	2
38	MP3C	Z	-5.948	2
39	MP3C	Mx	-.004	2
40	MP3A	X	6.607	4
41	MP3A	Z	-3.815	4
42	MP3A	Mx	.005	4
43	MP3B	X	8.401	4
44	MP3B	Z	-4.851	4
45	MP3B	Mx	-.005	4
46	MP3C	X	9.979	4
47	MP3C	Z	-5.761	4
48	MP3C	Mx	-.004	4
49	MP3A	X	17.206	.71
50	MP3A	Z	-9.934	.71
51	MP3A	Mx	-.012	.71
52	MP3A	X	17.206	5.71

Member Point Loads (BLC 17 : Antenna Wi (60 Deg)) (Continued)

	Member Label	Direction	Magnitude[lb,k-ft]	Location[ft,%]
53	MP3A	Z	-9.934	5.71
54	MP3A	Mx	-.012	5.71
55	MP3B	X	20.235	.71
56	MP3B	Z	-11.683	.71
57	MP3B	Mx	.000189	.71
58	MP3B	X	20.235	5.71
59	MP3B	Z	-11.683	5.71
60	MP3B	Mx	.000189	5.71
61	MP3C	X	22.898	.71
62	MP3C	Z	-13.22	.71
63	MP3C	Mx	.02	.71
64	MP3C	X	22.898	5.71
65	MP3C	Z	-13.22	5.71
66	MP3C	Mx	.02	5.71
67	MP3A	X	17.206	.71
68	MP3A	Z	-9.934	.71
69	MP3A	Mx	-.008	.71
70	MP3A	X	17.206	5.71
71	MP3A	Z	-9.934	5.71
72	MP3A	Mx	-.008	5.71
73	MP3B	X	20.235	.71
74	MP3B	Z	-11.683	.71
75	MP3B	Mx	.018	.71
76	MP3B	X	20.235	5.71
77	MP3B	Z	-11.683	5.71
78	MP3B	Mx	.018	5.71
79	MP3C	X	22.898	.71
80	MP3C	Z	-13.22	.71
81	MP3C	Mx	-.007	.71
82	MP3C	X	22.898	5.71
83	MP3C	Z	-13.22	5.71
84	MP3C	Mx	-.007	5.71
85	MP1A	X	15.698	.71
86	MP1A	Z	-9.063	.71
87	MP1A	Mx	-.01	.71
88	MP1A	X	15.698	5.71
89	MP1A	Z	-9.063	5.71
90	MP1A	Mx	-.01	5.71
91	MP1B	X	18.367	.71
92	MP1B	Z	-10.604	.71
93	MP1B	Mx	.009	.71
94	MP1B	X	18.367	5.71
95	MP1B	Z	-10.604	5.71
96	MP1B	Mx	.009	5.71
97	MP1C	X	20.715	.71
98	MP1C	Z	-11.96	.71
99	MP1C	Mx	.007	.71
100	MP1C	X	20.715	5.71
101	MP1C	Z	-11.96	5.71
102	MP1C	Mx	.007	5.71

Member Point Loads (BLC 18 : Antenna Wi (90 Deg))

	Member Label	Direction	Magnitude[lb,k-ft]	Location[ft,%]
1	MP5A	X	8.064	2.21
2	MP5A	Z	0	2.21
3	MP5A	Mx	-.004	2.21
4	MP5A	X	8.064	4.21
5	MP5A	Z	0	4.21
6	MP5A	Mx	-.004	4.21
7	MP5B	X	12.483	2.21
8	MP5B	Z	0	2.21
9	MP5B	Mx	.002	2.21
10	MP5B	X	12.483	4.21
11	MP5B	Z	0	4.21
12	MP5B	Mx	.002	4.21
13	MP5C	X	8.831	2.21
14	MP5C	Z	0	2.21
15	MP5C	Mx	.004	2.21
16	MP5C	X	8.831	4.21
17	MP5C	Z	0	4.21
18	MP5C	Mx	.004	4.21
19	MP3A	X	2.436	1
20	MP3A	Z	0	1
21	MP3A	Mx	.001	1
22	MP3B	X	3.034	1
23	MP3B	Z	0	1
24	MP3B	Mx	-.000649	1
25	MP3C	X	2.54	1
26	MP3C	Z	0	1
27	MP3C	Mx	-.001	1
28	M144	X	22.133	1.25
29	M144	Z	0	1.25
30	M144	Mx	0	1.25
31	MP3A	X	9.414	2
32	MP3A	Z	0	2
33	MP3A	Mx	.006	2
34	MP3B	X	12.417	2
35	MP3B	Z	0	2
36	MP3B	Mx	-.003	2
37	MP3C	X	9.936	2
38	MP3C	Z	0	2
39	MP3C	Mx	-.005	2
40	MP3A	X	8.099	4
41	MP3A	Z	0	4
42	MP3A	Mx	.005	4
43	MP3B	X	12.242	4
44	MP3B	Z	0	4
45	MP3B	Mx	-.003	4
46	MP3C	X	8.819	4
47	MP3C	Z	0	4
48	MP3C	Mx	-.005	4
49	MP3A	X	20.661	.71
50	MP3A	Z	0	.71
51	MP3A	Mx	-.006	.71
52	MP3A	X	20.661	5.71

Member Point Loads (BLC 18 : Antenna Wi (90 Deg)) (Continued)

	Member Label	Direction	Magnitude[lb,k-ft]	Location[ft,%]
53	MP3A	Z	0	5.71
54	MP3A	Mx	-.006	5.71
55	MP3B	X	27.655	.71
56	MP3B	Z	0	.71
57	MP3B	Mx	-.01	.71
58	MP3B	X	27.655	5.71
59	MP3B	Z	0	5.71
60	MP3B	Mx	-.01	5.71
61	MP3C	X	21.875	.71
62	MP3C	Z	0	.71
63	MP3C	Mx	.016	.71
64	MP3C	X	21.875	5.71
65	MP3C	Z	0	5.71
66	MP3C	Mx	.016	5.71
67	MP3A	X	20.661	.71
68	MP3A	Z	0	.71
69	MP3A	Mx	-.014	.71
70	MP3A	X	20.661	5.71
71	MP3A	Z	0	5.71
72	MP3A	Mx	-.014	5.71
73	MP3B	X	27.655	.71
74	MP3B	Z	0	.71
75	MP3B	Mx	.02	.71
76	MP3B	X	27.655	5.71
77	MP3B	Z	0	5.71
78	MP3B	Mx	.02	5.71
79	MP3C	X	21.875	.71
80	MP3C	Z	0	.71
81	MP3C	Mx	.003	.71
82	MP3C	X	21.875	5.71
83	MP3C	Z	0	5.71
84	MP3C	Mx	.003	5.71
85	MP1A	X	18.825	.71
86	MP1A	Z	0	.71
87	MP1A	Mx	-.01	.71
88	MP1A	X	18.825	5.71
89	MP1A	Z	0	5.71
90	MP1A	Mx	-.01	5.71
91	MP1B	X	24.99	.71
92	MP1B	Z	0	.71
93	MP1B	Mx	.005	.71
94	MP1B	X	24.99	5.71
95	MP1B	Z	0	5.71
96	MP1B	Mx	.005	5.71
97	MP1C	X	19.896	.71
98	MP1C	Z	0	.71
99	MP1C	Mx	.01	.71
100	MP1C	X	19.896	5.71
101	MP1C	Z	0	5.71
102	MP1C	Mx	.01	5.71

Member Point Loads (BLC 19 : Antenna Wi (120 Deg))

	Member Label	Direction	Magnitude[lb,k-ft]	Location[ft,%]
1	MP5A	X	9.331	2.21
2	MP5A	Z	5.387	2.21
3	MP5A	Mx	-.003	2.21
4	MP5A	X	9.331	4.21
5	MP5A	Z	5.387	4.21
6	MP5A	Mx	-.003	4.21
7	MP5B	X	11.245	2.21
8	MP5B	Z	6.492	2.21
9	MP5B	Mx	-.001	2.21
10	MP5B	X	11.245	4.21
11	MP5B	Z	6.492	4.21
12	MP5B	Mx	-.001	4.21
13	MP5C	X	6.399	2.21
14	MP5C	Z	3.694	2.21
15	MP5C	Mx	.004	2.21
16	MP5C	X	6.399	4.21
17	MP5C	Z	3.694	4.21
18	MP5C	Mx	.004	4.21
19	MP3A	X	2.427	1
20	MP3A	Z	1.401	1
21	MP3A	Mx	.001	1
22	MP3B	X	2.686	1
23	MP3B	Z	1.551	1
24	MP3B	Mx	.000337	1
25	MP3C	X	2.031	1
26	MP3C	Z	1.173	1
27	MP3C	Mx	-.001	1
28	M144	X	21.666	1.25
29	M144	Z	12.509	1.25
30	M144	Mx	0	1.25
31	MP3A	X	9.748	2
32	MP3A	Z	5.628	2
33	MP3A	Mx	.005	2
34	MP3B	X	11.048	2
35	MP3B	Z	6.378	2
36	MP3B	Mx	.001	2
37	MP3C	X	7.756	2
38	MP3C	Z	4.478	2
39	MP3C	Mx	-.006	2
40	MP3A	X	9.215	4
41	MP3A	Z	5.32	4
42	MP3A	Mx	.004	4
43	MP3B	X	11.009	4
44	MP3B	Z	6.356	4
45	MP3B	Mx	.001	4
46	MP3C	X	6.466	4
47	MP3C	Z	3.733	4
48	MP3C	Mx	-.005	4
49	MP3A	X	21.608	.71
50	MP3A	Z	12.475	.71
51	MP3A	Mx	.003	.71
52	MP3A	X	21.608	5.71

Member Point Loads (BLC 19 : Antenna Wi (120 Deg)) (Continued)

	Member Label	Direction	Magnitude[lb,k-ft]	Location[ft,%]
53	MP3A	Z	12.475	5.71
54	MP3A	Mx	.003	5.71
55	MP3B	X	24.636	.71
56	MP3B	Z	14.224	.71
57	MP3B	Mx	-.019	.71
58	MP3B	X	24.636	5.71
59	MP3B	Z	14.224	5.71
60	MP3B	Mx	-.019	5.71
61	MP3C	X	16.968	.71
62	MP3C	Z	9.797	.71
63	MP3C	Mx	.01	.71
64	MP3C	X	16.968	5.71
65	MP3C	Z	9.797	5.71
66	MP3C	Mx	.01	5.71
67	MP3A	X	21.608	.71
68	MP3A	Z	12.475	.71
69	MP3A	Mx	-.019	.71
70	MP3A	X	21.608	5.71
71	MP3A	Z	12.475	5.71
72	MP3A	Mx	-.019	5.71
73	MP3B	X	24.636	.71
74	MP3B	Z	14.224	.71
75	MP3B	Mx	.014	.71
76	MP3B	X	24.636	5.71
77	MP3B	Z	14.224	5.71
78	MP3B	Mx	.014	5.71
79	MP3C	X	16.968	.71
80	MP3C	Z	9.797	.71
81	MP3C	Mx	.01	.71
82	MP3C	X	16.968	5.71
83	MP3C	Z	9.797	5.71
84	MP3C	Mx	.01	5.71
85	MP1A	X	19.577	.71
86	MP1A	Z	11.303	.71
87	MP1A	Mx	-.008	.71
88	MP1A	X	19.577	5.71
89	MP1A	Z	11.303	5.71
90	MP1A	Mx	-.008	5.71
91	MP1B	X	22.247	.71
92	MP1B	Z	12.844	.71
93	MP1B	Mx	-.003	.71
94	MP1B	X	22.247	5.71
95	MP1B	Z	12.844	5.71
96	MP1B	Mx	-.003	5.71
97	MP1C	X	15.488	.71
98	MP1C	Z	8.942	.71
99	MP1C	Mx	.01	.71
100	MP1C	X	15.488	5.71
101	MP1C	Z	8.942	5.71
102	MP1C	Mx	.01	5.71

Member Point Loads (BLC 20 : Antenna Wi (150 Deg))

	Member Label	Direction	Magnitude[lb,k-ft]	Location[ft,%]
1	MP5A	X	6.492	2.21
2	MP5A	Z	11.245	2.21
3	MP5A	Mx	-.001	2.21
4	MP5A	X	6.492	4.21
5	MP5A	Z	11.245	4.21
6	MP5A	Mx	-.001	4.21
7	MP5B	X	5.387	2.21
8	MP5B	Z	9.331	2.21
9	MP5B	Mx	-.003	2.21
10	MP5B	X	5.387	4.21
11	MP5B	Z	9.331	4.21
12	MP5B	Mx	-.003	4.21
13	MP5C	X	4.416	2.21
14	MP5C	Z	7.648	2.21
15	MP5C	Mx	.004	2.21
16	MP5C	X	4.416	4.21
17	MP5C	Z	7.648	4.21
18	MP5C	Mx	.004	4.21
19	MP3A	X	1.551	1
20	MP3A	Z	2.686	1
21	MP3A	Mx	.000337	1
22	MP3B	X	1.401	1
23	MP3B	Z	2.427	1
24	MP3B	Mx	.001	1
25	MP3C	X	1.27	1
26	MP3C	Z	2.2	1
27	MP3C	Mx	-.001	1
28	M144	X	13.23	1.25
29	M144	Z	22.915	1.25
30	M144	Mx	0	1.25
31	MP3A	X	6.378	2
32	MP3A	Z	11.048	2
33	MP3A	Mx	.001	2
34	MP3B	X	5.628	2
35	MP3B	Z	9.748	2
36	MP3B	Mx	.005	2
37	MP3C	X	4.968	2
38	MP3C	Z	8.605	2
39	MP3C	Mx	-.005	2
40	MP3A	X	6.356	4
41	MP3A	Z	11.009	4
42	MP3A	Mx	.001	4
43	MP3B	X	5.32	4
44	MP3B	Z	9.215	4
45	MP3B	Mx	.004	4
46	MP3C	X	4.409	4
47	MP3C	Z	7.637	4
48	MP3C	Mx	-.005	4
49	MP3A	X	14.224	.71
50	MP3A	Z	24.636	.71
51	MP3A	Mx	.014	.71
52	MP3A	X	14.224	5.71

Member Point Loads (BLC 20 : Antenna Wi (150 Deg)) (Continued)

	Member Label	Direction	Magnitude[lb,k-ft]	Location[ft,%]
53	MP3A	Z	24.636	5.71
54	MP3A	Mx	.014	5.71
55	MP3B	X	12.475	.71
56	MP3B	Z	21.608	.71
57	MP3B	Mx	-.019	.71
58	MP3B	X	12.475	5.71
59	MP3B	Z	21.608	5.71
60	MP3B	Mx	-.019	5.71
61	MP3C	X	10.938	.71
62	MP3C	Z	18.945	.71
63	MP3C	Mx	.003	.71
64	MP3C	X	10.938	5.71
65	MP3C	Z	18.945	5.71
66	MP3C	Mx	.003	5.71
67	MP3A	X	14.224	.71
68	MP3A	Z	24.636	.71
69	MP3A	Mx	-.019	.71
70	MP3A	X	14.224	5.71
71	MP3A	Z	24.636	5.71
72	MP3A	Mx	-.019	5.71
73	MP3B	X	12.475	.71
74	MP3B	Z	21.608	.71
75	MP3B	Mx	.003	.71
76	MP3B	X	12.475	5.71
77	MP3B	Z	21.608	5.71
78	MP3B	Mx	.003	5.71
79	MP3C	X	10.938	.71
80	MP3C	Z	18.945	.71
81	MP3C	Mx	.016	.71
82	MP3C	X	10.938	5.71
83	MP3C	Z	18.945	5.71
84	MP3C	Mx	.016	5.71
85	MP1A	X	12.844	.71
86	MP1A	Z	22.247	.71
87	MP1A	Mx	-.003	.71
88	MP1A	X	12.844	5.71
89	MP1A	Z	22.247	5.71
90	MP1A	Mx	-.003	5.71
91	MP1B	X	11.303	.71
92	MP1B	Z	19.577	.71
93	MP1B	Mx	-.008	.71
94	MP1B	X	11.303	5.71
95	MP1B	Z	19.577	5.71
96	MP1B	Mx	-.008	5.71
97	MP1C	X	9.948	.71
98	MP1C	Z	17.23	.71
99	MP1C	Mx	.01	.71
100	MP1C	X	9.948	5.71
101	MP1C	Z	17.23	5.71
102	MP1C	Mx	.01	5.71

Member Point Loads (BLC 21 : Antenna Wi (180 Deg))

	Member Label	Direction	Magnitude[lb,k-ft]	Location[ft,%]
1	MP5A	X	0	2.21
2	MP5A	Z	12.483	2.21
3	MP5A	Mx	.002	2.21
4	MP5A	X	0	4.21
5	MP5A	Z	12.483	4.21
6	MP5A	Mx	.002	4.21
7	MP5B	X	0	2.21
8	MP5B	Z	8.064	2.21
9	MP5B	Mx	-.004	2.21
10	MP5B	X	0	4.21
11	MP5B	Z	8.064	4.21
12	MP5B	Mx	-.004	4.21
13	MP5C	X	0	2.21
14	MP5C	Z	11.716	2.21
15	MP5C	Mx	.003	2.21
16	MP5C	X	0	4.21
17	MP5C	Z	11.716	4.21
18	MP5C	Mx	.003	4.21
19	MP3A	X	0	1
20	MP3A	Z	3.034	1
21	MP3A	Mx	-.000649	1
22	MP3B	X	0	1
23	MP3B	Z	2.436	1
24	MP3B	Mx	.001	1
25	MP3C	X	0	1
26	MP3C	Z	2.93	1
27	MP3C	Mx	-.000916	1
28	M144	X	0	1.25
29	M144	Z	25.018	1.25
30	M144	Mx	0	1.25
31	MP3A	X	0	2
32	MP3A	Z	12.417	2
33	MP3A	Mx	-.003	2
34	MP3B	X	0	2
35	MP3B	Z	9.414	2
36	MP3B	Mx	.006	2
37	MP3C	X	0	2
38	MP3C	Z	11.895	2
39	MP3C	Mx	-.004	2
40	MP3A	X	0	4
41	MP3A	Z	12.242	4
42	MP3A	Mx	-.003	4
43	MP3B	X	0	4
44	MP3B	Z	8.099	4
45	MP3B	Mx	.005	4
46	MP3C	X	0	4
47	MP3C	Z	11.523	4
48	MP3C	Mx	-.004	4
49	MP3A	X	0	.71
50	MP3A	Z	27.655	.71
51	MP3A	Mx	.02	.71
52	MP3A	X	0	5.71

Member Point Loads (BLC 21 : Antenna Wi (180 Deg)) (Continued)

	Member Label	Direction	Magnitude[lb,k-ft]	Location[ft,%]
53	MP3A	Z	27.655	5.71
54	MP3A	Mx	.02	5.71
55	MP3B	X	0	.71
56	MP3B	Z	20.661	.71
57	MP3B	Mx	-.014	.71
58	MP3B	X	0	5.71
59	MP3B	Z	20.661	5.71
60	MP3B	Mx	-.014	5.71
61	MP3C	X	0	.71
62	MP3C	Z	26.44	.71
63	MP3C	Mx	-.007	.71
64	MP3C	X	0	5.71
65	MP3C	Z	26.44	5.71
66	MP3C	Mx	-.007	5.71
67	MP3A	X	0	.71
68	MP3A	Z	27.655	.71
69	MP3A	Mx	-.01	.71
70	MP3A	X	0	5.71
71	MP3A	Z	27.655	5.71
72	MP3A	Mx	-.01	5.71
73	MP3B	X	0	.71
74	MP3B	Z	20.661	.71
75	MP3B	Mx	-.006	.71
76	MP3B	X	0	5.71
77	MP3B	Z	20.661	5.71
78	MP3B	Mx	-.006	5.71
79	MP3C	X	0	.71
80	MP3C	Z	26.44	.71
81	MP3C	Mx	.02	.71
82	MP3C	X	0	5.71
83	MP3C	Z	26.44	5.71
84	MP3C	Mx	.02	5.71
85	MP1A	X	0	.71
86	MP1A	Z	24.99	.71
87	MP1A	Mx	.005	.71
88	MP1A	X	0	5.71
89	MP1A	Z	24.99	5.71
90	MP1A	Mx	.005	5.71
91	MP1B	X	0	.71
92	MP1B	Z	18.825	.71
93	MP1B	Mx	-.01	.71
94	MP1B	X	0	5.71
95	MP1B	Z	18.825	5.71
96	MP1B	Mx	-.01	5.71
97	MP1C	X	0	.71
98	MP1C	Z	23.919	.71
99	MP1C	Mx	.007	.71
100	MP1C	X	0	5.71
101	MP1C	Z	23.919	5.71
102	MP1C	Mx	.007	5.71

Member Point Loads (BLC 22 : Antenna Wi (210 Deg))

	Member Label	Direction	Magnitude[lb,k-ft]	Location[ft,%]
1	MP5A	X	-4.886	2.21
2	MP5A	Z	8.463	2.21
3	MP5A	Mx	.004	2.21
4	MP5A	X	-4.886	4.21
5	MP5A	Z	8.463	4.21
6	MP5A	Mx	.004	4.21
7	MP5B	X	-3.781	2.21
8	MP5B	Z	6.549	2.21
9	MP5B	Mx	-.004	2.21
10	MP5B	X	-3.781	4.21
11	MP5B	Z	6.549	4.21
12	MP5B	Mx	-.004	4.21
13	MP5C	X	-6.579	2.21
14	MP5C	Z	11.395	2.21
15	MP5C	Mx	0	2.21
16	MP5C	X	-6.579	4.21
17	MP5C	Z	11.395	4.21
18	MP5C	Mx	0	4.21
19	MP3A	X	-1.334	1
20	MP3A	Z	2.31	1
21	MP3A	Mx	-.001	1
22	MP3B	X	-1.184	1
23	MP3B	Z	2.051	1
24	MP3B	Mx	.001	1
25	MP3C	X	-1.563	1
26	MP3C	Z	2.706	1
27	MP3C	Mx	0	1
28	M144	X	-11.067	1.25
29	M144	Z	19.168	1.25
30	M144	Mx	0	1.25
31	MP3A	X	-5.288	2
32	MP3A	Z	9.158	2
33	MP3A	Mx	-.005	2
34	MP3B	X	-4.537	2
35	MP3B	Z	7.858	2
36	MP3B	Mx	.006	2
37	MP3C	X	-6.438	2
38	MP3C	Z	11.15	2
39	MP3C	Mx	0	2
40	MP3A	X	-4.851	4
41	MP3A	Z	8.401	4
42	MP3A	Mx	-.005	4
43	MP3B	X	-3.815	4
44	MP3B	Z	6.607	4
45	MP3B	Mx	.005	4
46	MP3C	X	-6.438	4
47	MP3C	Z	11.15	4
48	MP3C	Mx	0	4
49	MP3A	X	-11.683	.71
50	MP3A	Z	20.235	.71
51	MP3A	Mx	.018	.71
52	MP3A	X	-11.683	5.71

Member Point Loads (BLC 22 : Antenna Wi (210 Deg)) (Continued)

	Member Label	Direction	Magnitude[lb,k-ft]	Location[ft,%]
53	MP3A	Z	20.235	5.71
54	MP3A	Mx	.018	5.71
55	MP3B	X	-9.934	.71
56	MP3B	Z	17.206	.71
57	MP3B	Mx	-.008	.71
58	MP3B	X	-9.934	5.71
59	MP3B	Z	17.206	5.71
60	MP3B	Mx	-.008	5.71
61	MP3C	X	-14.361	.71
62	MP3C	Z	24.874	.71
63	MP3C	Mx	-.017	.71
64	MP3C	X	-14.361	5.71
65	MP3C	Z	24.874	5.71
66	MP3C	Mx	-.017	5.71
67	MP3A	X	-11.683	.71
68	MP3A	Z	20.235	.71
69	MP3A	Mx	.000189	.71
70	MP3A	X	-11.683	5.71
71	MP3A	Z	20.235	5.71
72	MP3A	Mx	.000189	5.71
73	MP3B	X	-9.934	.71
74	MP3B	Z	17.206	.71
75	MP3B	Mx	-.012	.71
76	MP3B	X	-9.934	5.71
77	MP3B	Z	17.206	5.71
78	MP3B	Mx	-.012	5.71
79	MP3C	X	-14.361	.71
80	MP3C	Z	24.874	.71
81	MP3C	Mx	.017	.71
82	MP3C	X	-14.361	5.71
83	MP3C	Z	24.874	5.71
84	MP3C	Mx	.017	5.71
85	MP1A	X	-10.604	.71
86	MP1A	Z	18.367	.71
87	MP1A	Mx	.009	.71
88	MP1A	X	-10.604	5.71
89	MP1A	Z	18.367	5.71
90	MP1A	Mx	.009	5.71
91	MP1B	X	-9.063	.71
92	MP1B	Z	15.698	.71
93	MP1B	Mx	-.01	.71
94	MP1B	X	-9.063	5.71
95	MP1B	Z	15.698	5.71
96	MP1B	Mx	-.01	5.71
97	MP1C	X	-12.965	.71
98	MP1C	Z	22.457	.71
99	MP1C	Mx	0	.71
100	MP1C	X	-12.965	5.71
101	MP1C	Z	22.457	5.71
102	MP1C	Mx	0	5.71

Member Point Loads (BLC 23 : Antenna Wi (240 Deg))

	Member Label	Direction	Magnitude[lb,k-ft]	Location[ft,%]
1	MP5A	X	-6.549	2.21
2	MP5A	Z	3.781	2.21
3	MP5A	Mx	.004	2.21
4	MP5A	X	-6.549	4.21
5	MP5A	Z	3.781	4.21
6	MP5A	Mx	.004	4.21
7	MP5B	X	-8.463	2.21
8	MP5B	Z	4.886	2.21
9	MP5B	Mx	-.004	2.21
10	MP5B	X	-8.463	4.21
11	MP5B	Z	4.886	4.21
12	MP5B	Mx	-.004	4.21
13	MP5C	X	-10.146	2.21
14	MP5C	Z	5.858	2.21
15	MP5C	Mx	-.003	2.21
16	MP5C	X	-10.146	4.21
17	MP5C	Z	5.858	4.21
18	MP5C	Mx	-.003	4.21
19	MP3A	X	-2.051	1
20	MP3A	Z	1.184	1
21	MP3A	Mx	-.001	1
22	MP3B	X	-2.31	1
23	MP3B	Z	1.334	1
24	MP3B	Mx	.001	1
25	MP3C	X	-2.538	1
26	MP3C	Z	1.465	1
27	MP3C	Mx	.000916	1
28	M144	X	-17.919	1.25
29	M144	Z	10.346	1.25
30	M144	Mx	0	1.25
31	MP3A	X	-7.858	2
32	MP3A	Z	4.537	2
33	MP3A	Mx	-.006	2
34	MP3B	X	-9.158	2
35	MP3B	Z	5.288	2
36	MP3B	Mx	.005	2
37	MP3C	X	-10.302	2
38	MP3C	Z	5.948	2
39	MP3C	Mx	.004	2
40	MP3A	X	-6.607	4
41	MP3A	Z	3.815	4
42	MP3A	Mx	-.005	4
43	MP3B	X	-8.401	4
44	MP3B	Z	4.851	4
45	MP3B	Mx	.005	4
46	MP3C	X	-9.979	4
47	MP3C	Z	5.761	4
48	MP3C	Mx	.004	4
49	MP3A	X	-17.206	.71
50	MP3A	Z	9.934	.71
51	MP3A	Mx	.012	.71
52	MP3A	X	-17.206	5.71

Member Point Loads (BLC 23 : Antenna Wi (240 Deg)) (Continued)

	Member Label	Direction	Magnitude[lb,k-ft]	Location[ft,%]
53	MP3A	Z	9.934	5.71
54	MP3A	Mx	.012	5.71
55	MP3B	X	-20.235	.71
56	MP3B	Z	11.683	.71
57	MP3B	Mx	-.000189	.71
58	MP3B	X	-20.235	5.71
59	MP3B	Z	11.683	5.71
60	MP3B	Mx	-.000189	5.71
61	MP3C	X	-22.898	.71
62	MP3C	Z	13.22	.71
63	MP3C	Mx	-.02	.71
64	MP3C	X	-22.898	5.71
65	MP3C	Z	13.22	5.71
66	MP3C	Mx	-.02	5.71
67	MP3A	X	-17.206	.71
68	MP3A	Z	9.934	.71
69	MP3A	Mx	.008	.71
70	MP3A	X	-17.206	5.71
71	MP3A	Z	9.934	5.71
72	MP3A	Mx	.008	5.71
73	MP3B	X	-20.235	.71
74	MP3B	Z	11.683	.71
75	MP3B	Mx	-.018	.71
76	MP3B	X	-20.235	5.71
77	MP3B	Z	11.683	5.71
78	MP3B	Mx	-.018	5.71
79	MP3C	X	-22.898	.71
80	MP3C	Z	13.22	.71
81	MP3C	Mx	.007	.71
82	MP3C	X	-22.898	5.71
83	MP3C	Z	13.22	5.71
84	MP3C	Mx	.007	5.71
85	MP1A	X	-15.698	.71
86	MP1A	Z	9.063	.71
87	MP1A	Mx	.01	.71
88	MP1A	X	-15.698	5.71
89	MP1A	Z	9.063	5.71
90	MP1A	Mx	.01	5.71
91	MP1B	X	-18.367	.71
92	MP1B	Z	10.604	.71
93	MP1B	Mx	-.009	.71
94	MP1B	X	-18.367	5.71
95	MP1B	Z	10.604	5.71
96	MP1B	Mx	-.009	5.71
97	MP1C	X	-20.715	.71
98	MP1C	Z	11.96	.71
99	MP1C	Mx	-.007	.71
100	MP1C	X	-20.715	5.71
101	MP1C	Z	11.96	5.71
102	MP1C	Mx	-.007	5.71

Member Point Loads (BLC 24 : Antenna Wi (270 Deg))

	Member Label	Direction	Magnitude[lb,k-ft]	Location[ft,%]
1	MP5A	X	-8.064	2.21
2	MP5A	Z	0	2.21
3	MP5A	Mx	.004	2.21
4	MP5A	X	-8.064	4.21
5	MP5A	Z	0	4.21
6	MP5A	Mx	.004	4.21
7	MP5B	X	-12.483	2.21
8	MP5B	Z	0	2.21
9	MP5B	Mx	-.002	2.21
10	MP5B	X	-12.483	4.21
11	MP5B	Z	0	4.21
12	MP5B	Mx	-.002	4.21
13	MP5C	X	-8.831	2.21
14	MP5C	Z	0	2.21
15	MP5C	Mx	-.004	2.21
16	MP5C	X	-8.831	4.21
17	MP5C	Z	0	4.21
18	MP5C	Mx	-.004	4.21
19	MP3A	X	-2.436	1
20	MP3A	Z	0	1
21	MP3A	Mx	-.001	1
22	MP3B	X	-3.034	1
23	MP3B	Z	0	1
24	MP3B	Mx	.000649	1
25	MP3C	X	-2.54	1
26	MP3C	Z	0	1
27	MP3C	Mx	.001	1
28	M144	X	-22.133	1.25
29	M144	Z	0	1.25
30	M144	Mx	0	1.25
31	MP3A	X	-9.414	2
32	MP3A	Z	0	2
33	MP3A	Mx	-.006	2
34	MP3B	X	-12.417	2
35	MP3B	Z	0	2
36	MP3B	Mx	.003	2
37	MP3C	X	-9.936	2
38	MP3C	Z	0	2
39	MP3C	Mx	.005	2
40	MP3A	X	-8.099	4
41	MP3A	Z	0	4
42	MP3A	Mx	-.005	4
43	MP3B	X	-12.242	4
44	MP3B	Z	0	4
45	MP3B	Mx	.003	4
46	MP3C	X	-8.819	4
47	MP3C	Z	0	4
48	MP3C	Mx	.005	4
49	MP3A	X	-20.661	.71
50	MP3A	Z	0	.71
51	MP3A	Mx	.006	.71
52	MP3A	X	-20.661	5.71

Member Point Loads (BLC 24 : Antenna Wi (270 Deg)) (Continued)

	Member Label	Direction	Magnitude[lb,k-ft]	Location[ft,%]
53	MP3A	Z	0	5.71
54	MP3A	Mx	.006	5.71
55	MP3B	X	-27.655	.71
56	MP3B	Z	0	.71
57	MP3B	Mx	.01	.71
58	MP3B	X	-27.655	5.71
59	MP3B	Z	0	5.71
60	MP3B	Mx	.01	5.71
61	MP3C	X	-21.875	.71
62	MP3C	Z	0	.71
63	MP3C	Mx	-.016	.71
64	MP3C	X	-21.875	5.71
65	MP3C	Z	0	5.71
66	MP3C	Mx	-.016	5.71
67	MP3A	X	-20.661	.71
68	MP3A	Z	0	.71
69	MP3A	Mx	.014	.71
70	MP3A	X	-20.661	5.71
71	MP3A	Z	0	5.71
72	MP3A	Mx	.014	5.71
73	MP3B	X	-27.655	.71
74	MP3B	Z	0	.71
75	MP3B	Mx	-.02	.71
76	MP3B	X	-27.655	5.71
77	MP3B	Z	0	5.71
78	MP3B	Mx	-.02	5.71
79	MP3C	X	-21.875	.71
80	MP3C	Z	0	.71
81	MP3C	Mx	-.003	.71
82	MP3C	X	-21.875	5.71
83	MP3C	Z	0	5.71
84	MP3C	Mx	-.003	5.71
85	MP1A	X	-18.825	.71
86	MP1A	Z	0	.71
87	MP1A	Mx	.01	.71
88	MP1A	X	-18.825	5.71
89	MP1A	Z	0	5.71
90	MP1A	Mx	.01	5.71
91	MP1B	X	-24.99	.71
92	MP1B	Z	0	.71
93	MP1B	Mx	-.005	.71
94	MP1B	X	-24.99	5.71
95	MP1B	Z	0	5.71
96	MP1B	Mx	-.005	5.71
97	MP1C	X	-19.896	.71
98	MP1C	Z	0	.71
99	MP1C	Mx	-.01	.71
100	MP1C	X	-19.896	5.71
101	MP1C	Z	0	5.71
102	MP1C	Mx	-.01	5.71

Member Point Loads (BLC 25 : Antenna Wi (300 Deg))

	Member Label	Direction	Magnitude[lb,k-ft]	Location[ft,%]
1	MP5A	X	-9.331	2.21
2	MP5A	Z	-5.387	2.21
3	MP5A	Mx	.003	2.21
4	MP5A	X	-9.331	4.21
5	MP5A	Z	-5.387	4.21
6	MP5A	Mx	.003	4.21
7	MP5B	X	-11.245	2.21
8	MP5B	Z	-6.492	2.21
9	MP5B	Mx	.001	2.21
10	MP5B	X	-11.245	4.21
11	MP5B	Z	-6.492	4.21
12	MP5B	Mx	.001	4.21
13	MP5C	X	-6.399	2.21
14	MP5C	Z	-3.694	2.21
15	MP5C	Mx	-.004	2.21
16	MP5C	X	-6.399	4.21
17	MP5C	Z	-3.694	4.21
18	MP5C	Mx	-.004	4.21
19	MP3A	X	-2.427	1
20	MP3A	Z	-1.401	1
21	MP3A	Mx	-.001	1
22	MP3B	X	-2.686	1
23	MP3B	Z	-1.551	1
24	MP3B	Mx	-.000337	1
25	MP3C	X	-2.031	1
26	MP3C	Z	-1.173	1
27	MP3C	Mx	.001	1
28	M144	X	-21.666	1.25
29	M144	Z	-12.509	1.25
30	M144	Mx	0	1.25
31	MP3A	X	-9.748	2
32	MP3A	Z	-5.628	2
33	MP3A	Mx	-.005	2
34	MP3B	X	-11.048	2
35	MP3B	Z	-6.378	2
36	MP3B	Mx	-.001	2
37	MP3C	X	-7.756	2
38	MP3C	Z	-4.478	2
39	MP3C	Mx	.006	2
40	MP3A	X	-9.215	4
41	MP3A	Z	-5.32	4
42	MP3A	Mx	-.004	4
43	MP3B	X	-11.009	4
44	MP3B	Z	-6.356	4
45	MP3B	Mx	-.001	4
46	MP3C	X	-6.466	4
47	MP3C	Z	-3.733	4
48	MP3C	Mx	.005	4
49	MP3A	X	-21.608	.71
50	MP3A	Z	-12.475	.71
51	MP3A	Mx	-.003	.71
52	MP3A	X	-21.608	5.71

Member Point Loads (BLC 25 : Antenna Wi (300 Deg)) (Continued)

	Member Label	Direction	Magnitude[lb,k-ft]	Location[ft,%]
53	MP3A	Z	-12.475	5.71
54	MP3A	Mx	-.003	5.71
55	MP3B	X	-24.636	.71
56	MP3B	Z	-14.224	.71
57	MP3B	Mx	.019	.71
58	MP3B	X	-24.636	5.71
59	MP3B	Z	-14.224	5.71
60	MP3B	Mx	.019	5.71
61	MP3C	X	-16.968	.71
62	MP3C	Z	-9.797	.71
63	MP3C	Mx	-.01	.71
64	MP3C	X	-16.968	5.71
65	MP3C	Z	-9.797	5.71
66	MP3C	Mx	-.01	5.71
67	MP3A	X	-21.608	.71
68	MP3A	Z	-12.475	.71
69	MP3A	Mx	.019	.71
70	MP3A	X	-21.608	5.71
71	MP3A	Z	-12.475	5.71
72	MP3A	Mx	.019	5.71
73	MP3B	X	-24.636	.71
74	MP3B	Z	-14.224	.71
75	MP3B	Mx	-.014	.71
76	MP3B	X	-24.636	5.71
77	MP3B	Z	-14.224	5.71
78	MP3B	Mx	-.014	5.71
79	MP3C	X	-16.968	.71
80	MP3C	Z	-9.797	.71
81	MP3C	Mx	-.01	.71
82	MP3C	X	-16.968	5.71
83	MP3C	Z	-9.797	5.71
84	MP3C	Mx	-.01	5.71
85	MP1A	X	-19.577	.71
86	MP1A	Z	-11.303	.71
87	MP1A	Mx	.008	.71
88	MP1A	X	-19.577	5.71
89	MP1A	Z	-11.303	5.71
90	MP1A	Mx	.008	5.71
91	MP1B	X	-22.247	.71
92	MP1B	Z	-12.844	.71
93	MP1B	Mx	.003	.71
94	MP1B	X	-22.247	5.71
95	MP1B	Z	-12.844	5.71
96	MP1B	Mx	.003	5.71
97	MP1C	X	-15.488	.71
98	MP1C	Z	-8.942	.71
99	MP1C	Mx	-.01	.71
100	MP1C	X	-15.488	5.71
101	MP1C	Z	-8.942	5.71
102	MP1C	Mx	-.01	5.71

Member Point Loads (BLC 26 : Antenna Wi (330 Deg))

	Member Label	Direction	Magnitude[lb,k-ft]	Location[ft,%]
1	MP5A	X	-6.492	2.21
2	MP5A	Z	-11.245	2.21
3	MP5A	Mx	.001	2.21
4	MP5A	X	-6.492	4.21
5	MP5A	Z	-11.245	4.21
6	MP5A	Mx	.001	4.21
7	MP5B	X	-5.387	2.21
8	MP5B	Z	-9.331	2.21
9	MP5B	Mx	.003	2.21
10	MP5B	X	-5.387	4.21
11	MP5B	Z	-9.331	4.21
12	MP5B	Mx	.003	4.21
13	MP5C	X	-4.416	2.21
14	MP5C	Z	-7.648	2.21
15	MP5C	Mx	-.004	2.21
16	MP5C	X	-4.416	4.21
17	MP5C	Z	-7.648	4.21
18	MP5C	Mx	-.004	4.21
19	MP3A	X	-1.551	1
20	MP3A	Z	-2.686	1
21	MP3A	Mx	-.000337	1
22	MP3B	X	-1.401	1
23	MP3B	Z	-2.427	1
24	MP3B	Mx	-.001	1
25	MP3C	X	-1.27	1
26	MP3C	Z	-2.2	1
27	MP3C	Mx	.001	1
28	M144	X	-13.23	1.25
29	M144	Z	-22.915	1.25
30	M144	Mx	0	1.25
31	MP3A	X	-6.378	2
32	MP3A	Z	-11.048	2
33	MP3A	Mx	-.001	2
34	MP3B	X	-5.628	2
35	MP3B	Z	-9.748	2
36	MP3B	Mx	-.005	2
37	MP3C	X	-4.968	2
38	MP3C	Z	-8.605	2
39	MP3C	Mx	.005	2
40	MP3A	X	-6.356	4
41	MP3A	Z	-11.009	4
42	MP3A	Mx	-.001	4
43	MP3B	X	-5.32	4
44	MP3B	Z	-9.215	4
45	MP3B	Mx	-.004	4
46	MP3C	X	-4.409	4
47	MP3C	Z	-7.637	4
48	MP3C	Mx	.005	4
49	MP3A	X	-14.224	.71
50	MP3A	Z	-24.636	.71
51	MP3A	Mx	-.014	.71
52	MP3A	X	-14.224	5.71

Member Point Loads (BLC 26 : Antenna Wi (330 Deg)) (Continued)

	Member Label	Direction	Magnitude[lb,k-ft]	Location[ft,%]
53	MP3A	Z	-24.636	5.71
54	MP3A	Mx	-.014	5.71
55	MP3B	X	-12.475	.71
56	MP3B	Z	-21.608	.71
57	MP3B	Mx	.019	.71
58	MP3B	X	-12.475	5.71
59	MP3B	Z	-21.608	5.71
60	MP3B	Mx	.019	5.71
61	MP3C	X	-10.938	.71
62	MP3C	Z	-18.945	.71
63	MP3C	Mx	-.003	.71
64	MP3C	X	-10.938	5.71
65	MP3C	Z	-18.945	5.71
66	MP3C	Mx	-.003	5.71
67	MP3A	X	-14.224	.71
68	MP3A	Z	-24.636	.71
69	MP3A	Mx	.019	.71
70	MP3A	X	-14.224	5.71
71	MP3A	Z	-24.636	5.71
72	MP3A	Mx	.019	5.71
73	MP3B	X	-12.475	.71
74	MP3B	Z	-21.608	.71
75	MP3B	Mx	-.003	.71
76	MP3B	X	-12.475	5.71
77	MP3B	Z	-21.608	5.71
78	MP3B	Mx	-.003	5.71
79	MP3C	X	-10.938	.71
80	MP3C	Z	-18.945	.71
81	MP3C	Mx	-.016	.71
82	MP3C	X	-10.938	5.71
83	MP3C	Z	-18.945	5.71
84	MP3C	Mx	-.016	5.71
85	MP1A	X	-12.844	.71
86	MP1A	Z	-22.247	.71
87	MP1A	Mx	.003	.71
88	MP1A	X	-12.844	5.71
89	MP1A	Z	-22.247	5.71
90	MP1A	Mx	.003	5.71
91	MP1B	X	-11.303	.71
92	MP1B	Z	-19.577	.71
93	MP1B	Mx	.008	.71
94	MP1B	X	-11.303	5.71
95	MP1B	Z	-19.577	5.71
96	MP1B	Mx	.008	5.71
97	MP1C	X	-9.948	.71
98	MP1C	Z	-17.23	.71
99	MP1C	Mx	-.01	.71
100	MP1C	X	-9.948	5.71
101	MP1C	Z	-17.23	5.71
102	MP1C	Mx	-.01	5.71

Member Point Loads (BLC 27 : Antenna Wm (0 Deg))

	Member Label	Direction	Magnitude[lb,k-ft]	Location[ft,%]
1	MP5A	X	0	2.21
2	MP5A	Z	-3.946	2.21
3	MP5A	Mx	-.000675	2.21
4	MP5A	X	0	4.21
5	MP5A	Z	-3.946	4.21
6	MP5A	Mx	-.000675	4.21
7	MP5B	X	0	2.21
8	MP5B	Z	-2.452	2.21
9	MP5B	Mx	.001	2.21
10	MP5B	X	0	4.21
11	MP5B	Z	-2.452	4.21
12	MP5B	Mx	.001	4.21
13	MP5C	X	0	2.21
14	MP5C	Z	-3.687	2.21
15	MP5C	Mx	-.000922	2.21
16	MP5C	X	0	4.21
17	MP5C	Z	-3.687	4.21
18	MP5C	Mx	-.000922	4.21
19	MP3A	X	0	1
20	MP3A	Z	-.739	1
21	MP3A	Mx	.000158	1
22	MP3B	X	0	1
23	MP3B	Z	-.558	1
24	MP3B	Mx	-.000328	1
25	MP3C	X	0	1
26	MP3C	Z	-.707	1
27	MP3C	Mx	.000221	1
28	M144	X	0	1.25
29	M144	Z	-7.912	1.25
30	M144	Mx	0	1.25
31	MP3A	X	0	2
32	MP3A	Z	-3.724	2
33	MP3A	Mx	.000796	2
34	MP3B	X	0	2
35	MP3B	Z	-2.74	2
36	MP3B	Mx	-.002	2
37	MP3C	X	0	2
38	MP3C	Z	-3.553	2
39	MP3C	Mx	.001	2
40	MP3A	X	0	4
41	MP3A	Z	-3.666	4
42	MP3A	Mx	.000784	4
43	MP3B	X	0	4
44	MP3B	Z	-2.305	4
45	MP3B	Mx	-.001	4
46	MP3C	X	0	4
47	MP3C	Z	-3.43	4
48	MP3C	Mx	.001	4
49	MP3A	X	0	.71
50	MP3A	Z	-9.057	.71
51	MP3A	Mx	-.007	.71
52	MP3A	X	0	5.71

Member Point Loads (BLC 27 : Antenna Wm (0 Deg)) (Continued)

	Member Label	Direction	Magnitude[lb,k-ft]	Location[ft,%]
53	MP3A	Z	-9.057	5.71
54	MP3A	Mx	-.007	5.71
55	MP3B	X	0	.71
56	MP3B	Z	-6.576	.71
57	MP3B	Mx	.004	.71
58	MP3B	X	0	5.71
59	MP3B	Z	-6.576	5.71
60	MP3B	Mx	.004	5.71
61	MP3C	X	0	.71
62	MP3C	Z	-8.627	.71
63	MP3C	Mx	.002	.71
64	MP3C	X	0	5.71
65	MP3C	Z	-8.627	5.71
66	MP3C	Mx	.002	5.71
67	MP3A	X	0	.71
68	MP3A	Z	-9.057	.71
69	MP3A	Mx	.003	.71
70	MP3A	X	0	5.71
71	MP3A	Z	-9.057	5.71
72	MP3A	Mx	.003	5.71
73	MP3B	X	0	.71
74	MP3B	Z	-6.576	.71
75	MP3B	Mx	.002	.71
76	MP3B	X	0	5.71
77	MP3B	Z	-6.576	5.71
78	MP3B	Mx	.002	5.71
79	MP3C	X	0	.71
80	MP3C	Z	-8.627	.71
81	MP3C	Mx	-.007	.71
82	MP3C	X	0	5.71
83	MP3C	Z	-8.627	5.71
84	MP3C	Mx	-.007	5.71
85	MP1A	X	0	.71
86	MP1A	Z	-8.128	.71
87	MP1A	Mx	-.002	.71
88	MP1A	X	0	5.71
89	MP1A	Z	-8.128	5.71
90	MP1A	Mx	-.002	5.71
91	MP1B	X	0	.71
92	MP1B	Z	-5.934	.71
93	MP1B	Mx	.003	.71
94	MP1B	X	0	5.71
95	MP1B	Z	-5.934	5.71
96	MP1B	Mx	.003	5.71
97	MP1C	X	0	.71
98	MP1C	Z	-7.747	.71
99	MP1C	Mx	-.002	.71
100	MP1C	X	0	5.71
101	MP1C	Z	-7.747	5.71
102	MP1C	Mx	-.002	5.71

Member Point Loads (BLC 28 : Antenna Wm (30 Deg))

	Member Label	Direction	Magnitude[lb,k-ft]	Location[ft,%]
1	MP5A	X	1.515	2.21
2	MP5A	Z	-2.624	2.21
3	MP5A	Mx	-.001	2.21
4	MP5A	X	1.515	4.21
5	MP5A	Z	-2.624	4.21
6	MP5A	Mx	-.001	4.21
7	MP5B	X	1.141	2.21
8	MP5B	Z	-1.977	2.21
9	MP5B	Mx	.001	2.21
10	MP5B	X	1.141	4.21
11	MP5B	Z	-1.977	4.21
12	MP5B	Mx	.001	4.21
13	MP5C	X	2.087	2.21
14	MP5C	Z	-3.615	2.21
15	MP5C	Mx	0	2.21
16	MP5C	X	2.087	4.21
17	MP5C	Z	-3.615	4.21
18	MP5C	Mx	0	4.21
19	MP3A	X	.314	1
20	MP3A	Z	-.544	1
21	MP3A	Mx	.000301	1
22	MP3B	X	.269	1
23	MP3B	Z	-.465	1
24	MP3B	Mx	-.000331	1
25	MP3C	X	.383	1
26	MP3C	Z	-.664	1
27	MP3C	Mx	0	1
28	M144	X	3.458	1.25
29	M144	Z	-5.989	1.25
30	M144	Mx	0	1.25
31	MP3A	X	1.56	2
32	MP3A	Z	-2.702	2
33	MP3A	Mx	.001	2
34	MP3B	X	1.314	2
35	MP3B	Z	-2.276	2
36	MP3B	Mx	-.002	2
37	MP3C	X	1.937	2
38	MP3C	Z	-3.355	2
39	MP3C	Mx	0	2
40	MP3A	X	1.416	4
41	MP3A	Z	-2.452	4
42	MP3A	Mx	.001	4
43	MP3B	X	1.076	4
44	MP3B	Z	-1.863	4
45	MP3B	Mx	-.001	4
46	MP3C	X	1.937	4
47	MP3C	Z	-3.355	4
48	MP3C	Mx	0	4
49	MP3A	X	3.768	.71
50	MP3A	Z	-6.526	.71
51	MP3A	Mx	-.006	.71
52	MP3A	X	3.768	5.71

Member Point Loads (BLC 28 : Antenna Wm (30 Deg)) (Continued)

	Member Label	Direction	Magnitude[lb,k-ft]	Location[ft,%]
53	MP3A	Z	-6.526	5.71
54	MP3A	Mx	-.006	5.71
55	MP3B	X	3.148	.71
56	MP3B	Z	-5.452	.71
57	MP3B	Mx	.002	.71
58	MP3B	X	3.148	5.71
59	MP3B	Z	-5.452	5.71
60	MP3B	Mx	.002	5.71
61	MP3C	X	4.718	.71
62	MP3C	Z	-8.172	.71
63	MP3C	Mx	.006	.71
64	MP3C	X	4.718	5.71
65	MP3C	Z	-8.172	5.71
66	MP3C	Mx	.006	5.71
67	MP3A	X	3.768	.71
68	MP3A	Z	-6.526	.71
69	MP3A	Mx	-6.1e-5	.71
70	MP3A	X	3.768	5.71
71	MP3A	Z	-6.526	5.71
72	MP3A	Mx	-6.1e-5	5.71
73	MP3B	X	3.148	.71
74	MP3B	Z	-5.452	.71
75	MP3B	Mx	.004	.71
76	MP3B	X	3.148	5.71
77	MP3B	Z	-5.452	5.71
78	MP3B	Mx	.004	5.71
79	MP3C	X	4.718	.71
80	MP3C	Z	-8.172	.71
81	MP3C	Mx	-.006	.71
82	MP3C	X	4.718	5.71
83	MP3C	Z	-8.172	5.71
84	MP3C	Mx	-.006	5.71
85	MP1A	X	3.391	.71
86	MP1A	Z	-5.873	.71
87	MP1A	Mx	-.003	.71
88	MP1A	X	3.391	5.71
89	MP1A	Z	-5.873	5.71
90	MP1A	Mx	-.003	5.71
91	MP1B	X	2.843	.71
92	MP1B	Z	-4.924	.71
93	MP1B	Mx	.003	.71
94	MP1B	X	2.843	5.71
95	MP1B	Z	-4.924	5.71
96	MP1B	Mx	.003	5.71
97	MP1C	X	4.231	.71
98	MP1C	Z	-7.329	.71
99	MP1C	Mx	0	.71
100	MP1C	X	4.231	5.71
101	MP1C	Z	-7.329	5.71
102	MP1C	Mx	0	5.71

Member Point Loads (BLC 29 : Antenna Wm (60 Deg))

	Member Label	Direction	Magnitude[lb,k-ft]	Location[ft,%]
1	MP5A	X	1.977	2.21
2	MP5A	Z	-1.141	2.21
3	MP5A	Mx	-.001	2.21
4	MP5A	X	1.977	4.21
5	MP5A	Z	-1.141	4.21
6	MP5A	Mx	-.001	4.21
7	MP5B	X	2.624	2.21
8	MP5B	Z	-1.515	2.21
9	MP5B	Mx	.001	2.21
10	MP5B	X	2.624	4.21
11	MP5B	Z	-1.515	4.21
12	MP5B	Mx	.001	4.21
13	MP5C	X	3.193	2.21
14	MP5C	Z	-1.843	2.21
15	MP5C	Mx	.000922	2.21
16	MP5C	X	3.193	4.21
17	MP5C	Z	-1.843	4.21
18	MP5C	Mx	.000922	4.21
19	MP3A	X	.465	1
20	MP3A	Z	-.269	1
21	MP3A	Mx	.000331	1
22	MP3B	X	.544	1
23	MP3B	Z	-.314	1
24	MP3B	Mx	-.000301	1
25	MP3C	X	.613	1
26	MP3C	Z	-.354	1
27	MP3C	Mx	-.000221	1
28	M144	X	5.557	1.25
29	M144	Z	-3.208	1.25
30	M144	Mx	0	1.25
31	MP3A	X	2.276	2
32	MP3A	Z	-1.314	2
33	MP3A	Mx	.002	2
34	MP3B	X	2.702	2
35	MP3B	Z	-1.56	2
36	MP3B	Mx	-.001	2
37	MP3C	X	3.077	2
38	MP3C	Z	-1.776	2
39	MP3C	Mx	-.001	2
40	MP3A	X	1.863	4
41	MP3A	Z	-1.076	4
42	MP3A	Mx	.001	4
43	MP3B	X	2.452	4
44	MP3B	Z	-1.416	4
45	MP3B	Mx	-.001	4
46	MP3C	X	2.97	4
47	MP3C	Z	-1.715	4
48	MP3C	Mx	-.001	4
49	MP3A	X	5.452	.71
50	MP3A	Z	-3.148	.71
51	MP3A	Mx	-.004	.71
52	MP3A	X	5.452	5.71

Member Point Loads (BLC 29 : Antenna Wm (60 Deg)) (Continued)

	Member Label	Direction	Magnitude[lb,k-ft]	Location[ft,%]
53	MP3A	Z	-3.148	5.71
54	MP3A	Mx	-.004	5.71
55	MP3B	X	6.526	.71
56	MP3B	Z	-3.768	.71
57	MP3B	Mx	6.1e-5	.71
58	MP3B	X	6.526	5.71
59	MP3B	Z	-3.768	5.71
60	MP3B	Mx	6.1e-5	5.71
61	MP3C	X	7.471	.71
62	MP3C	Z	-4.313	.71
63	MP3C	Mx	.007	.71
64	MP3C	X	7.471	5.71
65	MP3C	Z	-4.313	5.71
66	MP3C	Mx	.007	5.71
67	MP3A	X	5.452	.71
68	MP3A	Z	-3.148	.71
69	MP3A	Mx	-.002	.71
70	MP3A	X	5.452	5.71
71	MP3A	Z	-3.148	5.71
72	MP3A	Mx	-.002	5.71
73	MP3B	X	6.526	.71
74	MP3B	Z	-3.768	.71
75	MP3B	Mx	.006	.71
76	MP3B	X	6.526	5.71
77	MP3B	Z	-3.768	5.71
78	MP3B	Mx	.006	5.71
79	MP3C	X	7.471	.71
80	MP3C	Z	-4.313	.71
81	MP3C	Mx	-.002	.71
82	MP3C	X	7.471	5.71
83	MP3C	Z	-4.313	5.71
84	MP3C	Mx	-.002	5.71
85	MP1A	X	4.924	.71
86	MP1A	Z	-2.843	.71
87	MP1A	Mx	-.003	.71
88	MP1A	X	4.924	5.71
89	MP1A	Z	-2.843	5.71
90	MP1A	Mx	-.003	5.71
91	MP1B	X	5.873	.71
92	MP1B	Z	-3.391	.71
93	MP1B	Mx	.003	.71
94	MP1B	X	5.873	5.71
95	MP1B	Z	-3.391	5.71
96	MP1B	Mx	.003	5.71
97	MP1C	X	6.709	.71
98	MP1C	Z	-3.873	.71
99	MP1C	Mx	.002	.71
100	MP1C	X	6.709	5.71
101	MP1C	Z	-3.873	5.71
102	MP1C	Mx	.002	5.71

Member Point Loads (BLC 30 : Antenna Wm (90 Deg))

	Member Label	Direction	Magnitude[lb,k-ft]	Location[ft,%]
1	MP5A	X	2.452	2.21
2	MP5A	Z	0	2.21
3	MP5A	Mx	-.001	2.21
4	MP5A	X	2.452	4.21
5	MP5A	Z	0	4.21
6	MP5A	Mx	-.001	4.21
7	MP5B	X	3.946	2.21
8	MP5B	Z	0	2.21
9	MP5B	Mx	.000675	2.21
10	MP5B	X	3.946	4.21
11	MP5B	Z	0	4.21
12	MP5B	Mx	.000675	4.21
13	MP5C	X	2.712	2.21
14	MP5C	Z	0	2.21
15	MP5C	Mx	.001	2.21
16	MP5C	X	2.712	4.21
17	MP5C	Z	0	4.21
18	MP5C	Mx	.001	4.21
19	MP3A	X	.558	1
20	MP3A	Z	0	1
21	MP3A	Mx	.000328	1
22	MP3B	X	.739	1
23	MP3B	Z	0	1
24	MP3B	Mx	-.000158	1
25	MP3C	X	.589	1
26	MP3C	Z	0	1
27	MP3C	Mx	-.000319	1
28	M144	X	6.915	1.25
29	M144	Z	0	1.25
30	M144	Mx	0	1.25
31	MP3A	X	2.74	2
32	MP3A	Z	0	2
33	MP3A	Mx	.002	2
34	MP3B	X	3.724	2
35	MP3B	Z	0	2
36	MP3B	Mx	-.000796	2
37	MP3C	X	2.911	2
38	MP3C	Z	0	2
39	MP3C	Mx	-.002	2
40	MP3A	X	2.305	4
41	MP3A	Z	0	4
42	MP3A	Mx	.001	4
43	MP3B	X	3.666	4
44	MP3B	Z	0	4
45	MP3B	Mx	-.000784	4
46	MP3C	X	2.542	4
47	MP3C	Z	0	4
48	MP3C	Mx	-.001	4
49	MP3A	X	6.576	.71
50	MP3A	Z	0	.71
51	MP3A	Mx	-.002	.71
52	MP3A	X	6.576	5.71

Member Point Loads (BLC 30 : Antenna Wm (90 Deg)) (Continued)

	Member Label	Direction	Magnitude[lb,k-ft]	Location[ft,%]
53	MP3A	Z	0	5.71
54	MP3A	Mx	-.002	5.71
55	MP3B	X	9.057	.71
56	MP3B	Z	0	.71
57	MP3B	Mx	-.003	.71
58	MP3B	X	9.057	5.71
59	MP3B	Z	0	5.71
60	MP3B	Mx	-.003	5.71
61	MP3C	X	7.007	.71
62	MP3C	Z	0	.71
63	MP3C	Mx	.005	.71
64	MP3C	X	7.007	5.71
65	MP3C	Z	0	5.71
66	MP3C	Mx	.005	5.71
67	MP3A	X	6.576	.71
68	MP3A	Z	0	.71
69	MP3A	Mx	-.004	.71
70	MP3A	X	6.576	5.71
71	MP3A	Z	0	5.71
72	MP3A	Mx	-.004	5.71
73	MP3B	X	9.057	.71
74	MP3B	Z	0	.71
75	MP3B	Mx	.007	.71
76	MP3B	X	9.057	5.71
77	MP3B	Z	0	5.71
78	MP3B	Mx	.007	5.71
79	MP3C	X	7.007	.71
80	MP3C	Z	0	.71
81	MP3C	Mx	.00099	.71
82	MP3C	X	7.007	5.71
83	MP3C	Z	0	5.71
84	MP3C	Mx	.00099	5.71
85	MP1A	X	5.934	.71
86	MP1A	Z	0	.71
87	MP1A	Mx	-.003	.71
88	MP1A	X	5.934	5.71
89	MP1A	Z	0	5.71
90	MP1A	Mx	-.003	5.71
91	MP1B	X	8.128	.71
92	MP1B	Z	0	.71
93	MP1B	Mx	.002	.71
94	MP1B	X	8.128	5.71
95	MP1B	Z	0	5.71
96	MP1B	Mx	.002	5.71
97	MP1C	X	6.315	.71
98	MP1C	Z	0	.71
99	MP1C	Mx	.003	.71
100	MP1C	X	6.315	5.71
101	MP1C	Z	0	5.71
102	MP1C	Mx	.003	5.71

Member Point Loads (BLC 31 : Antenna Wm (120 Deg))

	Member Label	Direction	Magnitude[lb,k-ft]	Location[ft,%]
1	MP5A	X	2.917	2.21
2	MP5A	Z	1.684	2.21
3	MP5A	Mx	-.001	2.21
4	MP5A	X	2.917	4.21
5	MP5A	Z	1.684	4.21
6	MP5A	Mx	-.001	4.21
7	MP5B	X	3.564	2.21
8	MP5B	Z	2.058	2.21
9	MP5B	Mx	-.000357	2.21
10	MP5B	X	3.564	4.21
11	MP5B	Z	2.058	4.21
12	MP5B	Mx	-.000357	4.21
13	MP5C	X	1.926	2.21
14	MP5C	Z	1.112	2.21
15	MP5C	Mx	.001	2.21
16	MP5C	X	1.926	4.21
17	MP5C	Z	1.112	4.21
18	MP5C	Mx	.001	4.21
19	MP3A	X	.579	1
20	MP3A	Z	.334	1
21	MP3A	Mx	.000269	1
22	MP3B	X	.658	1
23	MP3B	Z	.38	1
24	MP3B	Mx	8.3e-5	1
25	MP3C	X	.459	1
26	MP3C	Z	.265	1
27	MP3C	Mx	-.000331	1
28	M144	X	6.852	1.25
29	M144	Z	3.956	1.25
30	M144	Mx	0	1.25
31	MP3A	X	2.895	2
32	MP3A	Z	1.672	2
33	MP3A	Mx	.001	2
34	MP3B	X	3.321	2
35	MP3B	Z	1.918	2
36	MP3B	Mx	.000417	2
37	MP3C	X	2.243	2
38	MP3C	Z	1.295	2
39	MP3C	Mx	-.002	2
40	MP3A	X	2.719	4
41	MP3A	Z	1.57	4
42	MP3A	Mx	.001	4
43	MP3B	X	3.309	4
44	MP3B	Z	1.91	4
45	MP3B	Mx	.000414	4
46	MP3C	X	1.816	4
47	MP3C	Z	1.049	4
48	MP3C	Mx	-.001	4
49	MP3A	X	7.013	.71
50	MP3A	Z	4.049	.71
51	MP3A	Mx	.001	.71
52	MP3A	X	7.013	5.71

Member Point Loads (BLC 31 : Antenna Wm (120 Deg)) (Continued)

	Member Label	Direction	Magnitude[lb,k-ft]	Location[ft,%]
53	MP3A	Z	4.049	5.71
54	MP3A	Mx	.001	5.71
55	MP3B	X	8.087	.71
56	MP3B	Z	4.669	.71
57	MP3B	Mx	-.006	.71
58	MP3B	X	8.087	5.71
59	MP3B	Z	4.669	5.71
60	MP3B	Mx	-.006	5.71
61	MP3C	X	5.367	.71
62	MP3C	Z	3.099	.71
63	MP3C	Mx	.003	.71
64	MP3C	X	5.367	5.71
65	MP3C	Z	3.099	5.71
66	MP3C	Mx	.003	5.71
67	MP3A	X	7.013	.71
68	MP3A	Z	4.049	.71
69	MP3A	Mx	-.006	.71
70	MP3A	X	7.013	5.71
71	MP3A	Z	4.049	5.71
72	MP3A	Mx	-.006	5.71
73	MP3B	X	8.087	.71
74	MP3B	Z	4.669	.71
75	MP3B	Mx	.005	.71
76	MP3B	X	8.087	5.71
77	MP3B	Z	4.669	5.71
78	MP3B	Mx	.005	5.71
79	MP3C	X	5.367	.71
80	MP3C	Z	3.099	.71
81	MP3C	Mx	.003	.71
82	MP3C	X	5.367	5.71
83	MP3C	Z	3.099	5.71
84	MP3C	Mx	.003	5.71
85	MP1A	X	6.304	.71
86	MP1A	Z	3.64	.71
87	MP1A	Mx	-.003	.71
88	MP1A	X	6.304	5.71
89	MP1A	Z	3.64	5.71
90	MP1A	Mx	-.003	5.71
91	MP1B	X	7.254	.71
92	MP1B	Z	4.188	.71
93	MP1B	Mx	-.000848	.71
94	MP1B	X	7.254	5.71
95	MP1B	Z	4.188	5.71
96	MP1B	Mx	-.000848	5.71
97	MP1C	X	4.849	.71
98	MP1C	Z	2.799	.71
99	MP1C	Mx	.003	.71
100	MP1C	X	4.849	5.71
101	MP1C	Z	2.799	5.71
102	MP1C	Mx	.003	5.71

Member Point Loads (BLC 32 : Antenna Wm (150 Deg))

	Member Label	Direction	Magnitude[lb,k-ft]	Location[ft,%]
1	MP5A	X	2.058	2.21
2	MP5A	Z	3.564	2.21
3	MP5A	Mx	-.000357	2.21
4	MP5A	X	2.058	4.21
5	MP5A	Z	3.564	4.21
6	MP5A	Mx	-.000357	4.21
7	MP5B	X	1.684	2.21
8	MP5B	Z	2.917	2.21
9	MP5B	Mx	-.001	2.21
10	MP5B	X	1.684	4.21
11	MP5B	Z	2.917	4.21
12	MP5B	Mx	-.001	4.21
13	MP5C	X	1.356	2.21
14	MP5C	Z	2.348	2.21
15	MP5C	Mx	.001	2.21
16	MP5C	X	1.356	4.21
17	MP5C	Z	2.348	4.21
18	MP5C	Mx	.001	4.21
19	MP3A	X	.38	1
20	MP3A	Z	.658	1
21	MP3A	Mx	8.3e-5	1
22	MP3B	X	.334	1
23	MP3B	Z	.579	1
24	MP3B	Mx	.000269	1
25	MP3C	X	.295	1
26	MP3C	Z	.51	1
27	MP3C	Mx	-.000319	1
28	M144	X	4.205	1.25
29	M144	Z	7.284	1.25
30	M144	Mx	0	1.25
31	MP3A	X	1.918	2
32	MP3A	Z	3.321	2
33	MP3A	Mx	.000417	2
34	MP3B	X	1.672	2
35	MP3B	Z	2.895	2
36	MP3B	Mx	.001	2
37	MP3C	X	1.455	2
38	MP3C	Z	2.521	2
39	MP3C	Mx	-.002	2
40	MP3A	X	1.91	4
41	MP3A	Z	3.309	4
42	MP3A	Mx	.000414	4
43	MP3B	X	1.57	4
44	MP3B	Z	2.719	4
45	MP3B	Mx	.001	4
46	MP3C	X	1.271	4
47	MP3C	Z	2.201	4
48	MP3C	Mx	-.001	4
49	MP3A	X	4.669	.71
50	MP3A	Z	8.087	.71
51	MP3A	Mx	.005	.71
52	MP3A	X	4.669	5.71

Member Point Loads (BLC 32 : Antenna Wm (150 Deg)) (Continued)

	Member Label	Direction	Magnitude[lb,k-ft]	Location[ft,%]
53	MP3A	Z	8.087	5.71
54	MP3A	Mx	.005	5.71
55	MP3B	X	4.049	.71
56	MP3B	Z	7.013	.71
57	MP3B	Mx	-.006	.71
58	MP3B	X	4.049	5.71
59	MP3B	Z	7.013	5.71
60	MP3B	Mx	-.006	5.71
61	MP3C	X	3.504	.71
62	MP3C	Z	6.068	.71
63	MP3C	Mx	.000991	.71
64	MP3C	X	3.504	5.71
65	MP3C	Z	6.068	5.71
66	MP3C	Mx	.000991	5.71
67	MP3A	X	4.669	.71
68	MP3A	Z	8.087	.71
69	MP3A	Mx	-.006	.71
70	MP3A	X	4.669	5.71
71	MP3A	Z	8.087	5.71
72	MP3A	Mx	-.006	5.71
73	MP3B	X	4.049	.71
74	MP3B	Z	7.013	.71
75	MP3B	Mx	.001	.71
76	MP3B	X	4.049	5.71
77	MP3B	Z	7.013	5.71
78	MP3B	Mx	.001	5.71
79	MP3C	X	3.504	.71
80	MP3C	Z	6.068	.71
81	MP3C	Mx	.005	.71
82	MP3C	X	3.504	5.71
83	MP3C	Z	6.068	5.71
84	MP3C	Mx	.005	5.71
85	MP1A	X	4.188	.71
86	MP1A	Z	7.254	.71
87	MP1A	Mx	-.000848	.71
88	MP1A	X	4.188	5.71
89	MP1A	Z	7.254	5.71
90	MP1A	Mx	-.000848	5.71
91	MP1B	X	3.64	.71
92	MP1B	Z	6.304	.71
93	MP1B	Mx	-.003	.71
94	MP1B	X	3.64	5.71
95	MP1B	Z	6.304	5.71
96	MP1B	Mx	-.003	5.71
97	MP1C	X	3.157	.71
98	MP1C	Z	5.469	.71
99	MP1C	Mx	.003	.71
100	MP1C	X	3.157	5.71
101	MP1C	Z	5.469	5.71
102	MP1C	Mx	.003	5.71

Member Point Loads (BLC 33 : Antenna Wm (180 Deg))

	Member Label	Direction	Magnitude[lb,k-ft]	Location[ft,%]
1	MP5A	X	0	2.21
2	MP5A	Z	3.946	2.21
3	MP5A	Mx	.000675	2.21
4	MP5A	X	0	4.21
5	MP5A	Z	3.946	4.21
6	MP5A	Mx	.000675	4.21
7	MP5B	X	0	2.21
8	MP5B	Z	2.452	2.21
9	MP5B	Mx	-.001	2.21
10	MP5B	X	0	4.21
11	MP5B	Z	2.452	4.21
12	MP5B	Mx	-.001	4.21
13	MP5C	X	0	2.21
14	MP5C	Z	3.687	2.21
15	MP5C	Mx	.000922	2.21
16	MP5C	X	0	4.21
17	MP5C	Z	3.687	4.21
18	MP5C	Mx	.000922	4.21
19	MP3A	X	0	1
20	MP3A	Z	.739	1
21	MP3A	Mx	-.000158	1
22	MP3B	X	0	1
23	MP3B	Z	.558	1
24	MP3B	Mx	.000328	1
25	MP3C	X	0	1
26	MP3C	Z	.707	1
27	MP3C	Mx	-.000221	1
28	M144	X	0	1.25
29	M144	Z	7.912	1.25
30	M144	Mx	0	1.25
31	MP3A	X	0	2
32	MP3A	Z	3.724	2
33	MP3A	Mx	-.000796	2
34	MP3B	X	0	2
35	MP3B	Z	2.74	2
36	MP3B	Mx	.002	2
37	MP3C	X	0	2
38	MP3C	Z	3.553	2
39	MP3C	Mx	-.001	2
40	MP3A	X	0	4
41	MP3A	Z	3.666	4
42	MP3A	Mx	-.000784	4
43	MP3B	X	0	4
44	MP3B	Z	2.305	4
45	MP3B	Mx	.001	4
46	MP3C	X	0	4
47	MP3C	Z	3.43	4
48	MP3C	Mx	-.001	4
49	MP3A	X	0	.71
50	MP3A	Z	9.057	.71
51	MP3A	Mx	.007	.71
52	MP3A	X	0	5.71

Member Point Loads (BLC 33 : Antenna Wm (180 Deg)) (Continued)

	Member Label	Direction	Magnitude[lb,k-ft]	Location[ft,%]
53	MP3A	Z	9.057	5.71
54	MP3A	Mx	.007	5.71
55	MP3B	X	0	.71
56	MP3B	Z	6.576	.71
57	MP3B	Mx	-.004	.71
58	MP3B	X	0	5.71
59	MP3B	Z	6.576	5.71
60	MP3B	Mx	-.004	5.71
61	MP3C	X	0	.71
62	MP3C	Z	8.627	.71
63	MP3C	Mx	-.002	.71
64	MP3C	X	0	5.71
65	MP3C	Z	8.627	5.71
66	MP3C	Mx	-.002	5.71
67	MP3A	X	0	.71
68	MP3A	Z	9.057	.71
69	MP3A	Mx	-.003	.71
70	MP3A	X	0	5.71
71	MP3A	Z	9.057	5.71
72	MP3A	Mx	-.003	5.71
73	MP3B	X	0	.71
74	MP3B	Z	6.576	.71
75	MP3B	Mx	-.002	.71
76	MP3B	X	0	5.71
77	MP3B	Z	6.576	5.71
78	MP3B	Mx	-.002	5.71
79	MP3C	X	0	.71
80	MP3C	Z	8.627	.71
81	MP3C	Mx	.007	.71
82	MP3C	X	0	5.71
83	MP3C	Z	8.627	5.71
84	MP3C	Mx	.007	5.71
85	MP1A	X	0	.71
86	MP1A	Z	8.128	.71
87	MP1A	Mx	.002	.71
88	MP1A	X	0	5.71
89	MP1A	Z	8.128	5.71
90	MP1A	Mx	.002	5.71
91	MP1B	X	0	.71
92	MP1B	Z	5.934	.71
93	MP1B	Mx	-.003	.71
94	MP1B	X	0	5.71
95	MP1B	Z	5.934	5.71
96	MP1B	Mx	-.003	5.71
97	MP1C	X	0	.71
98	MP1C	Z	7.747	.71
99	MP1C	Mx	.002	.71
100	MP1C	X	0	5.71
101	MP1C	Z	7.747	5.71
102	MP1C	Mx	.002	5.71

Member Point Loads (BLC 34 : Antenna Wm (210 Deg))

	Member Label	Direction	Magnitude[lb,k-ft]	Location[ft,%]
1	MP5A	X	-1.515	2.21
2	MP5A	Z	2.624	2.21
3	MP5A	Mx	.001	2.21
4	MP5A	X	-1.515	4.21
5	MP5A	Z	2.624	4.21
6	MP5A	Mx	.001	4.21
7	MP5B	X	-1.141	2.21
8	MP5B	Z	1.977	2.21
9	MP5B	Mx	-.001	2.21
10	MP5B	X	-1.141	4.21
11	MP5B	Z	1.977	4.21
12	MP5B	Mx	-.001	4.21
13	MP5C	X	-2.087	2.21
14	MP5C	Z	3.615	2.21
15	MP5C	Mx	0	2.21
16	MP5C	X	-2.087	4.21
17	MP5C	Z	3.615	4.21
18	MP5C	Mx	0	4.21
19	MP3A	X	-.314	1
20	MP3A	Z	.544	1
21	MP3A	Mx	-.000301	1
22	MP3B	X	-.269	1
23	MP3B	Z	.465	1
24	MP3B	Mx	.000331	1
25	MP3C	X	-.383	1
26	MP3C	Z	.664	1
27	MP3C	Mx	0	1
28	M144	X	-3.458	1.25
29	M144	Z	5.989	1.25
30	M144	Mx	0	1.25
31	MP3A	X	-1.56	2
32	MP3A	Z	2.702	2
33	MP3A	Mx	-.001	2
34	MP3B	X	-1.314	2
35	MP3B	Z	2.276	2
36	MP3B	Mx	.002	2
37	MP3C	X	-1.937	2
38	MP3C	Z	3.355	2
39	MP3C	Mx	0	2
40	MP3A	X	-1.416	4
41	MP3A	Z	2.452	4
42	MP3A	Mx	-.001	4
43	MP3B	X	-1.076	4
44	MP3B	Z	1.863	4
45	MP3B	Mx	.001	4
46	MP3C	X	-1.937	4
47	MP3C	Z	3.355	4
48	MP3C	Mx	0	4
49	MP3A	X	-3.768	.71
50	MP3A	Z	6.526	.71
51	MP3A	Mx	.006	.71
52	MP3A	X	-3.768	5.71

Member Point Loads (BLC 34 : Antenna Wm (210 Deg)) (Continued)

	Member Label	Direction	Magnitude[lb,k-ft]	Location[ft,%]
53	MP3A	Z	6.526	5.71
54	MP3A	Mx	.006	5.71
55	MP3B	X	-3.148	.71
56	MP3B	Z	5.452	.71
57	MP3B	Mx	-.002	.71
58	MP3B	X	-3.148	5.71
59	MP3B	Z	5.452	5.71
60	MP3B	Mx	-.002	5.71
61	MP3C	X	-4.718	.71
62	MP3C	Z	8.172	.71
63	MP3C	Mx	-.006	.71
64	MP3C	X	-4.718	5.71
65	MP3C	Z	8.172	5.71
66	MP3C	Mx	-.006	5.71
67	MP3A	X	-3.768	.71
68	MP3A	Z	6.526	.71
69	MP3A	Mx	6.1e-5	.71
70	MP3A	X	-3.768	5.71
71	MP3A	Z	6.526	5.71
72	MP3A	Mx	6.1e-5	5.71
73	MP3B	X	-3.148	.71
74	MP3B	Z	5.452	.71
75	MP3B	Mx	-.004	.71
76	MP3B	X	-3.148	5.71
77	MP3B	Z	5.452	5.71
78	MP3B	Mx	-.004	5.71
79	MP3C	X	-4.718	.71
80	MP3C	Z	8.172	.71
81	MP3C	Mx	.006	.71
82	MP3C	X	-4.718	5.71
83	MP3C	Z	8.172	5.71
84	MP3C	Mx	.006	5.71
85	MP1A	X	-3.391	.71
86	MP1A	Z	5.873	.71
87	MP1A	Mx	.003	.71
88	MP1A	X	-3.391	5.71
89	MP1A	Z	5.873	5.71
90	MP1A	Mx	.003	5.71
91	MP1B	X	-2.843	.71
92	MP1B	Z	4.924	.71
93	MP1B	Mx	-.003	.71
94	MP1B	X	-2.843	5.71
95	MP1B	Z	4.924	5.71
96	MP1B	Mx	-.003	5.71
97	MP1C	X	-4.231	.71
98	MP1C	Z	7.329	.71
99	MP1C	Mx	0	.71
100	MP1C	X	-4.231	5.71
101	MP1C	Z	7.329	5.71
102	MP1C	Mx	0	5.71

Member Point Loads (BLC 35 : Antenna Wm (240 Deg))

	Member Label	Direction	Magnitude[lb,k-ft]	Location[ft,%]
1	MP5A	X	-1.977	2.21
2	MP5A	Z	1.141	2.21
3	MP5A	Mx	.001	2.21
4	MP5A	X	-1.977	4.21
5	MP5A	Z	1.141	4.21
6	MP5A	Mx	.001	4.21
7	MP5B	X	-2.624	2.21
8	MP5B	Z	1.515	2.21
9	MP5B	Mx	-.001	2.21
10	MP5B	X	-2.624	4.21
11	MP5B	Z	1.515	4.21
12	MP5B	Mx	-.001	4.21
13	MP5C	X	-3.193	2.21
14	MP5C	Z	1.843	2.21
15	MP5C	Mx	-.000922	2.21
16	MP5C	X	-3.193	4.21
17	MP5C	Z	1.843	4.21
18	MP5C	Mx	-.000922	4.21
19	MP3A	X	-.465	1
20	MP3A	Z	.269	1
21	MP3A	Mx	-.000331	1
22	MP3B	X	-.544	1
23	MP3B	Z	.314	1
24	MP3B	Mx	.000301	1
25	MP3C	X	-.613	1
26	MP3C	Z	.354	1
27	MP3C	Mx	.000221	1
28	M144	X	-5.557	1.25
29	M144	Z	3.208	1.25
30	M144	Mx	0	1.25
31	MP3A	X	-2.276	2
32	MP3A	Z	1.314	2
33	MP3A	Mx	-.002	2
34	MP3B	X	-2.702	2
35	MP3B	Z	1.56	2
36	MP3B	Mx	.001	2
37	MP3C	X	-3.077	2
38	MP3C	Z	1.776	2
39	MP3C	Mx	.001	2
40	MP3A	X	-1.863	4
41	MP3A	Z	1.076	4
42	MP3A	Mx	-.001	4
43	MP3B	X	-2.452	4
44	MP3B	Z	1.416	4
45	MP3B	Mx	.001	4
46	MP3C	X	-2.97	4
47	MP3C	Z	1.715	4
48	MP3C	Mx	.001	4
49	MP3A	X	-5.452	.71
50	MP3A	Z	3.148	.71
51	MP3A	Mx	.004	.71
52	MP3A	X	-5.452	5.71

Member Point Loads (BLC 35 : Antenna Wm (240 Deg)) (Continued)

	Member Label	Direction	Magnitude[lb,k-ft]	Location[ft,%]
53	MP3A	Z	3.148	5.71
54	MP3A	Mx	.004	5.71
55	MP3B	X	-6.526	.71
56	MP3B	Z	3.768	.71
57	MP3B	Mx	-6.1e-5	.71
58	MP3B	X	-6.526	5.71
59	MP3B	Z	3.768	5.71
60	MP3B	Mx	-6.1e-5	5.71
61	MP3C	X	-7.471	.71
62	MP3C	Z	4.313	.71
63	MP3C	Mx	-.007	.71
64	MP3C	X	-7.471	5.71
65	MP3C	Z	4.313	5.71
66	MP3C	Mx	-.007	5.71
67	MP3A	X	-5.452	.71
68	MP3A	Z	3.148	.71
69	MP3A	Mx	.002	.71
70	MP3A	X	-5.452	5.71
71	MP3A	Z	3.148	5.71
72	MP3A	Mx	.002	5.71
73	MP3B	X	-6.526	.71
74	MP3B	Z	3.768	.71
75	MP3B	Mx	-.006	.71
76	MP3B	X	-6.526	5.71
77	MP3B	Z	3.768	5.71
78	MP3B	Mx	-.006	5.71
79	MP3C	X	-7.471	.71
80	MP3C	Z	4.313	.71
81	MP3C	Mx	.002	.71
82	MP3C	X	-7.471	5.71
83	MP3C	Z	4.313	5.71
84	MP3C	Mx	.002	5.71
85	MP1A	X	-4.924	.71
86	MP1A	Z	2.843	.71
87	MP1A	Mx	.003	.71
88	MP1A	X	-4.924	5.71
89	MP1A	Z	2.843	5.71
90	MP1A	Mx	.003	5.71
91	MP1B	X	-5.873	.71
92	MP1B	Z	3.391	.71
93	MP1B	Mx	-.003	.71
94	MP1B	X	-5.873	5.71
95	MP1B	Z	3.391	5.71
96	MP1B	Mx	-.003	5.71
97	MP1C	X	-6.709	.71
98	MP1C	Z	3.873	.71
99	MP1C	Mx	-.002	.71
100	MP1C	X	-6.709	5.71
101	MP1C	Z	3.873	5.71
102	MP1C	Mx	-.002	5.71

Member Point Loads (BLC 36 : Antenna Wm (270 Deg))

	Member Label	Direction	Magnitude[lb,k-ft]	Location[ft,%]
1	MP5A	X	-2.452	2.21
2	MP5A	Z	0	2.21
3	MP5A	Mx	.001	2.21
4	MP5A	X	-2.452	4.21
5	MP5A	Z	0	4.21
6	MP5A	Mx	.001	4.21
7	MP5B	X	-3.946	2.21
8	MP5B	Z	0	2.21
9	MP5B	Mx	-.000675	2.21
10	MP5B	X	-3.946	4.21
11	MP5B	Z	0	4.21
12	MP5B	Mx	-.000675	4.21
13	MP5C	X	-2.712	2.21
14	MP5C	Z	0	2.21
15	MP5C	Mx	-.001	2.21
16	MP5C	X	-2.712	4.21
17	MP5C	Z	0	4.21
18	MP5C	Mx	-.001	4.21
19	MP3A	X	-.558	1
20	MP3A	Z	0	1
21	MP3A	Mx	-.000328	1
22	MP3B	X	-.739	1
23	MP3B	Z	0	1
24	MP3B	Mx	.000158	1
25	MP3C	X	-.589	1
26	MP3C	Z	0	1
27	MP3C	Mx	.000319	1
28	M144	X	-6.915	1.25
29	M144	Z	0	1.25
30	M144	Mx	0	1.25
31	MP3A	X	-2.74	2
32	MP3A	Z	0	2
33	MP3A	Mx	-.002	2
34	MP3B	X	-3.724	2
35	MP3B	Z	0	2
36	MP3B	Mx	.000796	2
37	MP3C	X	-2.911	2
38	MP3C	Z	0	2
39	MP3C	Mx	.002	2
40	MP3A	X	-2.305	4
41	MP3A	Z	0	4
42	MP3A	Mx	-.001	4
43	MP3B	X	-3.666	4
44	MP3B	Z	0	4
45	MP3B	Mx	.000784	4
46	MP3C	X	-2.542	4
47	MP3C	Z	0	4
48	MP3C	Mx	.001	4
49	MP3A	X	-6.576	.71
50	MP3A	Z	0	.71
51	MP3A	Mx	.002	.71
52	MP3A	X	-6.576	5.71

Member Point Loads (BLC 36 : Antenna Wm (270 Deg)) (Continued)

	Member Label	Direction	Magnitude[lb,k-ft]	Location[ft,%]
53	MP3A	Z	0	5.71
54	MP3A	Mx	.002	5.71
55	MP3B	X	-9.057	.71
56	MP3B	Z	0	.71
57	MP3B	Mx	.003	.71
58	MP3B	X	-9.057	5.71
59	MP3B	Z	0	5.71
60	MP3B	Mx	.003	5.71
61	MP3C	X	-7.007	.71
62	MP3C	Z	0	.71
63	MP3C	Mx	-.005	.71
64	MP3C	X	-7.007	5.71
65	MP3C	Z	0	5.71
66	MP3C	Mx	-.005	5.71
67	MP3A	X	-6.576	.71
68	MP3A	Z	0	.71
69	MP3A	Mx	.004	.71
70	MP3A	X	-6.576	5.71
71	MP3A	Z	0	5.71
72	MP3A	Mx	.004	5.71
73	MP3B	X	-9.057	.71
74	MP3B	Z	0	.71
75	MP3B	Mx	-.007	.71
76	MP3B	X	-9.057	5.71
77	MP3B	Z	0	5.71
78	MP3B	Mx	-.007	5.71
79	MP3C	X	-7.007	.71
80	MP3C	Z	0	.71
81	MP3C	Mx	-.00099	.71
82	MP3C	X	-7.007	5.71
83	MP3C	Z	0	5.71
84	MP3C	Mx	-.00099	5.71
85	MP1A	X	-5.934	.71
86	MP1A	Z	0	.71
87	MP1A	Mx	.003	.71
88	MP1A	X	-5.934	5.71
89	MP1A	Z	0	5.71
90	MP1A	Mx	.003	5.71
91	MP1B	X	-8.128	.71
92	MP1B	Z	0	.71
93	MP1B	Mx	-.002	.71
94	MP1B	X	-8.128	5.71
95	MP1B	Z	0	5.71
96	MP1B	Mx	-.002	5.71
97	MP1C	X	-6.315	.71
98	MP1C	Z	0	.71
99	MP1C	Mx	-.003	.71
100	MP1C	X	-6.315	5.71
101	MP1C	Z	0	5.71
102	MP1C	Mx	-.003	5.71

Member Point Loads (BLC 37 : Antenna Wm (300 Deg))

	Member Label	Direction	Magnitude[lb,k-ft]	Location[ft,%]
1	MP5A	X	-2.917	2.21
2	MP5A	Z	-1.684	2.21
3	MP5A	Mx	.001	2.21
4	MP5A	X	-2.917	4.21
5	MP5A	Z	-1.684	4.21
6	MP5A	Mx	.001	4.21
7	MP5B	X	-3.564	2.21
8	MP5B	Z	-2.058	2.21
9	MP5B	Mx	.000357	2.21
10	MP5B	X	-3.564	4.21
11	MP5B	Z	-2.058	4.21
12	MP5B	Mx	.000357	4.21
13	MP5C	X	-1.926	2.21
14	MP5C	Z	-1.112	2.21
15	MP5C	Mx	-.001	2.21
16	MP5C	X	-1.926	4.21
17	MP5C	Z	-1.112	4.21
18	MP5C	Mx	-.001	4.21
19	MP3A	X	-.579	1
20	MP3A	Z	-.334	1
21	MP3A	Mx	-.000269	1
22	MP3B	X	-.658	1
23	MP3B	Z	-.38	1
24	MP3B	Mx	-8.3e-5	1
25	MP3C	X	-.459	1
26	MP3C	Z	-.265	1
27	MP3C	Mx	.000331	1
28	M144	X	-6.852	1.25
29	M144	Z	-3.956	1.25
30	M144	Mx	0	1.25
31	MP3A	X	-2.895	2
32	MP3A	Z	-1.672	2
33	MP3A	Mx	-.001	2
34	MP3B	X	-3.321	2
35	MP3B	Z	-1.918	2
36	MP3B	Mx	-.000417	2
37	MP3C	X	-2.243	2
38	MP3C	Z	-1.295	2
39	MP3C	Mx	.002	2
40	MP3A	X	-2.719	4
41	MP3A	Z	-1.57	4
42	MP3A	Mx	-.001	4
43	MP3B	X	-3.309	4
44	MP3B	Z	-1.91	4
45	MP3B	Mx	-.000414	4
46	MP3C	X	-1.816	4
47	MP3C	Z	-1.049	4
48	MP3C	Mx	.001	4
49	MP3A	X	-7.013	.71
50	MP3A	Z	-4.049	.71
51	MP3A	Mx	-.001	.71
52	MP3A	X	-7.013	5.71

Member Point Loads (BLC 37 : Antenna Wm (300 Deg)) (Continued)

	Member Label	Direction	Magnitude[lb,k-ft]	Location[ft,%]
53	MP3A	Z	-4.049	5.71
54	MP3A	Mx	-.001	5.71
55	MP3B	X	-8.087	.71
56	MP3B	Z	-4.669	.71
57	MP3B	Mx	.006	.71
58	MP3B	X	-8.087	5.71
59	MP3B	Z	-4.669	5.71
60	MP3B	Mx	.006	5.71
61	MP3C	X	-5.367	.71
62	MP3C	Z	-3.099	.71
63	MP3C	Mx	-.003	.71
64	MP3C	X	-5.367	5.71
65	MP3C	Z	-3.099	5.71
66	MP3C	Mx	-.003	5.71
67	MP3A	X	-7.013	.71
68	MP3A	Z	-4.049	.71
69	MP3A	Mx	.006	.71
70	MP3A	X	-7.013	5.71
71	MP3A	Z	-4.049	5.71
72	MP3A	Mx	.006	5.71
73	MP3B	X	-8.087	.71
74	MP3B	Z	-4.669	.71
75	MP3B	Mx	-.005	.71
76	MP3B	X	-8.087	5.71
77	MP3B	Z	-4.669	5.71
78	MP3B	Mx	-.005	5.71
79	MP3C	X	-5.367	.71
80	MP3C	Z	-3.099	.71
81	MP3C	Mx	-.003	.71
82	MP3C	X	-5.367	5.71
83	MP3C	Z	-3.099	5.71
84	MP3C	Mx	-.003	5.71
85	MP1A	X	-6.304	.71
86	MP1A	Z	-3.64	.71
87	MP1A	Mx	.003	.71
88	MP1A	X	-6.304	5.71
89	MP1A	Z	-3.64	5.71
90	MP1A	Mx	.003	5.71
91	MP1B	X	-7.254	.71
92	MP1B	Z	-4.188	.71
93	MP1B	Mx	.000848	.71
94	MP1B	X	-7.254	5.71
95	MP1B	Z	-4.188	5.71
96	MP1B	Mx	.000848	5.71
97	MP1C	X	-4.849	.71
98	MP1C	Z	-2.799	.71
99	MP1C	Mx	-.003	.71
100	MP1C	X	-4.849	5.71
101	MP1C	Z	-2.799	5.71
102	MP1C	Mx	-.003	5.71

Member Point Loads (BLC 38 : Antenna Wm (330 Deg))

	Member Label	Direction	Magnitude[lb,k-ft]	Location[ft,%]
1	MP5A	X	-2.058	2.21
2	MP5A	Z	-3.564	2.21
3	MP5A	Mx	.000357	2.21
4	MP5A	X	-2.058	4.21
5	MP5A	Z	-3.564	4.21
6	MP5A	Mx	.000357	4.21
7	MP5B	X	-1.684	2.21
8	MP5B	Z	-2.917	2.21
9	MP5B	Mx	.001	2.21
10	MP5B	X	-1.684	4.21
11	MP5B	Z	-2.917	4.21
12	MP5B	Mx	.001	4.21
13	MP5C	X	-1.356	2.21
14	MP5C	Z	-2.348	2.21
15	MP5C	Mx	-.001	2.21
16	MP5C	X	-1.356	4.21
17	MP5C	Z	-2.348	4.21
18	MP5C	Mx	-.001	4.21
19	MP3A	X	-.38	1
20	MP3A	Z	-.658	1
21	MP3A	Mx	-8.3e-5	1
22	MP3B	X	-.334	1
23	MP3B	Z	-.579	1
24	MP3B	Mx	-.000269	1
25	MP3C	X	-.295	1
26	MP3C	Z	-.51	1
27	MP3C	Mx	.000319	1
28	M144	X	-4.205	1.25
29	M144	Z	-7.284	1.25
30	M144	Mx	0	1.25
31	MP3A	X	-1.918	2
32	MP3A	Z	-3.321	2
33	MP3A	Mx	-.000417	2
34	MP3B	X	-1.672	2
35	MP3B	Z	-2.895	2
36	MP3B	Mx	-.001	2
37	MP3C	X	-1.455	2
38	MP3C	Z	-2.521	2
39	MP3C	Mx	.002	2
40	MP3A	X	-1.91	4
41	MP3A	Z	-3.309	4
42	MP3A	Mx	-.000414	4
43	MP3B	X	-1.57	4
44	MP3B	Z	-2.719	4
45	MP3B	Mx	-.001	4
46	MP3C	X	-1.271	4
47	MP3C	Z	-2.201	4
48	MP3C	Mx	.001	4
49	MP3A	X	-4.669	.71
50	MP3A	Z	-8.087	.71
51	MP3A	Mx	-.005	.71
52	MP3A	X	-4.669	5.71

Member Point Loads (BLC 38 : Antenna Wm (330 Deg)) (Continued)

	Member Label	Direction	Magnitude[lb,k-ft]	Location[ft,%]
53	MP3A	Z	-8.087	5.71
54	MP3A	Mx	-.005	5.71
55	MP3B	X	-4.049	.71
56	MP3B	Z	-7.013	.71
57	MP3B	Mx	.006	.71
58	MP3B	X	-4.049	5.71
59	MP3B	Z	-7.013	5.71
60	MP3B	Mx	.006	5.71
61	MP3C	X	-3.504	.71
62	MP3C	Z	-6.068	.71
63	MP3C	Mx	-.000991	.71
64	MP3C	X	-3.504	5.71
65	MP3C	Z	-6.068	5.71
66	MP3C	Mx	-.000991	5.71
67	MP3A	X	-4.669	.71
68	MP3A	Z	-8.087	.71
69	MP3A	Mx	.006	.71
70	MP3A	X	-4.669	5.71
71	MP3A	Z	-8.087	5.71
72	MP3A	Mx	.006	5.71
73	MP3B	X	-4.049	.71
74	MP3B	Z	-7.013	.71
75	MP3B	Mx	-.001	.71
76	MP3B	X	-4.049	5.71
77	MP3B	Z	-7.013	5.71
78	MP3B	Mx	-.001	5.71
79	MP3C	X	-3.504	.71
80	MP3C	Z	-6.068	.71
81	MP3C	Mx	-.005	.71
82	MP3C	X	-3.504	5.71
83	MP3C	Z	-6.068	5.71
84	MP3C	Mx	-.005	5.71
85	MP1A	X	-4.188	.71
86	MP1A	Z	-7.254	.71
87	MP1A	Mx	.000848	.71
88	MP1A	X	-4.188	5.71
89	MP1A	Z	-7.254	5.71
90	MP1A	Mx	.000848	5.71
91	MP1B	X	-3.64	.71
92	MP1B	Z	-6.304	.71
93	MP1B	Mx	.003	.71
94	MP1B	X	-3.64	5.71
95	MP1B	Z	-6.304	5.71
96	MP1B	Mx	.003	5.71
97	MP1C	X	-3.157	.71
98	MP1C	Z	-5.469	.71
99	MP1C	Mx	-.003	.71
100	MP1C	X	-3.157	5.71
101	MP1C	Z	-5.469	5.71
102	MP1C	Mx	-.003	5.71

Member Point Loads (BLC 77 : Lm1)

	Member Label	Direction	Magnitude[lb,k-ft]	Location[ft,%]
1	M89	Y	-500	%99

Member Point Loads (BLC 78 : Lm2)

	Member Label	Direction	Magnitude[lb,k-ft]	Location[ft,%]
1	M90	Y	-500	%4

Member Point Loads (BLC 79 : Lv1)

	Member Label	Direction	Magnitude[lb,k-ft]	Location[ft,%]
1	M90	Y	-250	0

Member Point Loads (BLC 80 : Lv2)

	Member Label	Direction	Magnitude[lb,k-ft]	Location[ft,%]
1	M90	Y	-250	%100

Member Distributed Loads (BLC 40 : Structure Di)

	Member Label	Direction	Start Magnitude[lb/ft,...	End Magnitude[lb/ft,F...	Start Location[ft,%]	End Location[ft,%]
1	M19	Y	-11.083	-11.083	0	%100
2	M19A	Y	-7.276	-7.276	0	%100
3	M38C	Y	-11.083	-11.083	0	%100
4	M51	Y	-11.083	-11.083	0	%100
5	M104A	Y	-5.87	-5.87	0	%100
6	M105A	Y	-5.87	-5.87	0	%100
7	M134	Y	-4.468	-4.468	0	%100
8	M135	Y	-4.468	-4.468	0	%100
9	M93A	Y	-6.353	-6.353	0	%100
10	M94A	Y	-6.353	-6.353	0	%100
11	M93B	Y	-6.353	-6.353	0	%100
12	M94D	Y	-6.353	-6.353	0	%100
13	M53	Y	-5.87	-5.87	0	%100
14	M54	Y	-5.87	-5.87	0	%100
15	M63	Y	-6.353	-6.353	0	%100
16	M64	Y	-6.353	-6.353	0	%100
17	M69	Y	-6.353	-6.353	0	%100
18	M70	Y	-6.353	-6.353	0	%100
19	M71	Y	-5.87	-5.87	0	%100
20	M72	Y	-5.87	-5.87	0	%100
21	M81	Y	-6.353	-6.353	0	%100
22	M82	Y	-6.353	-6.353	0	%100
23	M87	Y	-6.353	-6.353	0	%100
24	M88	Y	-6.353	-6.353	0	%100
25	M89	Y	-9.159	-9.159	0	%100
26	M90	Y	-9.159	-9.159	0	%100
27	M89A	Y	-9.159	-9.159	0	%100
28	M90A	Y	-9.159	-9.159	0	%100
29	M91	Y	-9.159	-9.159	0	%100
30	M92	Y	-9.159	-9.159	0	%100
31	M101	Y	-7.276	-7.276	0	%100
32	M91A	Y	-7.276	-7.276	0	%100
33	M93	Y	-7.276	-7.276	0	%100

Member Distributed Loads (BLC 40 : Structure Di) (Continued)

	Member Label	Direction	Start Magnitude[lb/ft,...	End Magnitude[lb/ft,F...	Start Location[ft,%]	End Location[ft,%]
34	M95B	Y	-7.276	-7.276	0	%100
35	M97	Y	-7.276	-7.276	0	%100
36	M99	Y	-7.276	-7.276	0	%100
37	M101A	Y	-7.276	-7.276	0	%100
38	M104	Y	-7.276	-7.276	0	%100
39	M105B	Y	-4.305	-4.305	0	%100
40	M104B	Y	-4.305	-4.305	0	%100
41	M105C	Y	-4.305	-4.305	0	%100
42	M95C	Y	-4.468	-4.468	0	%100
43	M96A	Y	-4.468	-4.468	0	%100
44	M101B	Y	-4.468	-4.468	0	%100
45	M102B	Y	-4.468	-4.468	0	%100
46	MP1A	Y	-4.974	-4.974	0	%100
47	M144	Y	-4.974	-4.974	0	%100
48	M147	Y	-4.468	-4.468	0	%100
49	M149A	Y	-4.468	-4.468	0	%100
50	M152	Y	-4.468	-4.468	0	%100
51	M155	Y	-4.468	-4.468	0	%100
52	M159	Y	-4.468	-4.468	0	%100
53	M163	Y	-4.468	-4.468	0	%100
54	M166A	Y	-8.343	-8.343	0	%100
55	M167	Y	-8.343	-8.343	0	%100
56	M168	Y	-8.343	-8.343	0	%100
57	MP2A	Y	-4.974	-4.974	0	%100
58	MP4A	Y	-4.974	-4.974	0	%100
59	MP5A	Y	-4.974	-4.974	0	%100
60	MP3A	Y	-4.974	-4.974	0	%100
61	MP1C	Y	-4.974	-4.974	0	%100
62	MP2C	Y	-4.974	-4.974	0	%100
63	MP4C	Y	-4.974	-4.974	0	%100
64	MP5C	Y	-4.974	-4.974	0	%100
65	MP3C	Y	-4.974	-4.974	0	%100
66	MP1B	Y	-4.974	-4.974	0	%100
67	MP2B	Y	-4.974	-4.974	0	%100
68	MP4B	Y	-4.974	-4.974	0	%100
69	MP5B	Y	-4.974	-4.974	0	%100
70	MP3B	Y	-4.974	-4.974	0	%100
71	M180	Y	-6.61	-6.61	0	%100
72	M181	Y	-6.61	-6.61	0	%100
73	M182	Y	-6.61	-6.61	0	%100
74	M194	Y	-11.792	-11.792	0	%100
75	M195	Y	-11.792	-11.792	0	%100
76	M196	Y	-11.792	-11.792	0	%100
77	M197	Y	-11.792	-11.792	0	%100
78	M206	Y	-11.792	-11.792	0	%100
79	M207	Y	-11.792	-11.792	0	%100
80	M208	Y	-11.792	-11.792	0	%100
81	M209	Y	-11.792	-11.792	0	%100
82	M218	Y	-11.792	-11.792	0	%100
83	M219	Y	-11.792	-11.792	0	%100
84	M220	Y	-11.792	-11.792	0	%100
85	M221	Y	-11.792	-11.792	0	%100

Member Distributed Loads (BLC 40 : Structure Di) (Continued)

	Member Label	Direction	Start Magnitude[lb/ft,...	End Magnitude[lb/ft,F...	Start Location[ft,%]	End Location[ft,%]
86	M222	Y	-11.142	-11.142	0	%100
87	M223	Y	-11.142	-11.142	0	%100
88	M224	Y	-11.142	-11.142	0	%100

Member Distributed Loads (BLC 41 : Structure Wo (0 Deg))

	Member Label	Direction	Start Magnitude[lb/ft,...	End Magnitude[lb/ft,F...	Start Location[ft,%]	End Location[ft,%]
1	M19	X	0	0	0	%100
2	M19	Z	-5.594	-5.594	0	%100
3	M19A	X	0	0	0	%100
4	M19A	Z	-3.097	-3.097	0	%100
5	M38C	X	0	0	0	%100
6	M38C	Z	-5.594	-5.594	0	%100
7	M51	X	0	0	0	%100
8	M51	Z	0	0	0	%100
9	M104A	X	0	0	0	%100
10	M104A	Z	-.774	-.774	0	%100
11	M105A	X	0	0	0	%100
12	M105A	Z	-.774	-.774	0	%100
13	M134	X	0	0	0	%100
14	M134	Z	-.226	-.226	0	%100
15	M135	X	0	0	0	%100
16	M135	Z	-.226	-.226	0	%100
17	M93A	X	0	0	0	%100
18	M93A	Z	-5.898	-5.898	0	%100
19	M94A	X	0	0	0	%100
20	M94A	Z	-5.898	-5.898	0	%100
21	M93B	X	0	0	0	%100
22	M93B	Z	-5.298	-5.298	0	%100
23	M94D	X	0	0	0	%100
24	M94D	Z	-5.298	-5.298	0	%100
25	M53	X	0	0	0	%100
26	M53	Z	-.194	-.194	0	%100
27	M54	X	0	0	0	%100
28	M54	Z	-.194	-.194	0	%100
29	M63	X	0	0	0	%100
30	M63	Z	-1.474	-1.474	0	%100
31	M64	X	0	0	0	%100
32	M64	Z	-1.474	-1.474	0	%100
33	M69	X	0	0	0	%100
34	M69	Z	-1.325	-1.325	0	%100
35	M70	X	0	0	0	%100
36	M70	Z	-1.325	-1.325	0	%100
37	M71	X	0	0	0	%100
38	M71	Z	-.194	-.194	0	%100
39	M72	X	0	0	0	%100
40	M72	Z	-.194	-.194	0	%100
41	M81	X	0	0	0	%100
42	M81	Z	-1.474	-1.474	0	%100
43	M82	X	0	0	0	%100
44	M82	Z	-1.474	-1.474	0	%100
45	M87	X	0	0	0	%100

Member Distributed Loads (BLC 41 : Structure Wo (0 Deg)) (Continued)

	Member Label	Direction	Start Magnitude[lb/ft,...	End Magnitude[lb/ft,F...	Start Location[ft,%]	End Location[ft,%]
46	M87	Z	-1.325	-1.325	0	%100
47	M88	X	0	0	0	%100
48	M88	Z	-1.325	-1.325	0	%100
49	M89	X	0	0	0	%100
50	M89	Z	-22.541	-22.541	0	%100
51	M90	X	0	0	0	%100
52	M90	Z	-22.541	-22.541	0	%100
53	M89A	X	0	0	0	%100
54	M89A	Z	-5.635	-5.635	0	%100
55	M90A	X	0	0	0	%100
56	M90A	Z	-5.635	-5.635	0	%100
57	M91	X	0	0	0	%100
58	M91	Z	-5.635	-5.635	0	%100
59	M92	X	0	0	0	%100
60	M92	Z	-5.635	-5.635	0	%100
61	M101	X	0	0	0	%100
62	M101	Z	-12.389	-12.389	0	%100
63	M91A	X	0	0	0	%100
64	M91A	Z	-12.389	-12.389	0	%100
65	M93	X	0	0	0	%100
66	M93	Z	-3.097	-3.097	0	%100
67	M95B	X	0	0	0	%100
68	M95B	Z	-3.097	-3.097	0	%100
69	M97	X	0	0	0	%100
70	M97	Z	-3.097	-3.097	0	%100
71	M99	X	0	0	0	%100
72	M99	Z	-3.097	-3.097	0	%100
73	M101A	X	0	0	0	%100
74	M101A	Z	-12.389	-12.389	0	%100
75	M104	X	0	0	0	%100
76	M104	Z	-3.097	-3.097	0	%100
77	M105B	X	0	0	0	%100
78	M105B	Z	-5.885	-5.885	0	%100
79	M104B	X	0	0	0	%100
80	M104B	Z	-1.471	-1.471	0	%100
81	M105C	X	0	0	0	%100
82	M105C	Z	-1.471	-1.471	0	%100
83	M95C	X	0	0	0	%100
84	M95C	Z	-.905	-.905	0	%100
85	M96A	X	0	0	0	%100
86	M96A	Z	-.905	-.905	0	%100
87	M101B	X	0	0	0	%100
88	M101B	Z	-.226	-.226	0	%100
89	M102B	X	0	0	0	%100
90	M102B	Z	-.226	-.226	0	%100
91	MP1A	X	0	0	0	%100
92	MP1A	Z	-6.402	-6.402	0	%100
93	M144	X	0	0	0	%100
94	M144	Z	-5.503	-5.503	0	%100
95	M147	X	0	0	0	%100
96	M147	Z	-1.291	-1.291	0	%100
97	M149A	X	0	0	0	%100

Member Distributed Loads (BLC 41 : Structure Wo (0 Deg)) (Continued)

	Member Label	Direction	Start Magnitude[lb/ft,...	End Magnitude[lb/ft,F...	Start Location[ft,%]	End Location[ft,%]
98	M149A	Z	-.323	-.323	0	%100
99	M152	X	0	0	0	%100
100	M152	Z	-.323	-.323	0	%100
101	M155	X	0	0	0	%100
102	M155	Z	-1.226	-1.226	0	%100
103	M159	X	0	0	0	%100
104	M159	Z	-.307	-.307	0	%100
105	M163	X	0	0	0	%100
106	M163	Z	-.307	-.307	0	%100
107	M166A	X	0	0	0	%100
108	M166A	Z	-.309	-.309	0	%100
109	M167	X	0	0	0	%100
110	M167	Z	-.309	-.309	0	%100
111	M168	X	0	0	0	%100
112	M168	Z	-1.237	-1.237	0	%100
113	MP2A	X	0	0	0	%100
114	MP2A	Z	-6.402	-6.402	0	%100
115	MP4A	X	0	0	0	%100
116	MP4A	Z	-6.402	-6.402	0	%100
117	MP5A	X	0	0	0	%100
118	MP5A	Z	-6.402	-6.402	0	%100
119	MP3A	X	0	0	0	%100
120	MP3A	Z	-6.402	-6.402	0	%100
121	MP1C	X	0	0	0	%100
122	MP1C	Z	-6.402	-6.402	0	%100
123	MP2C	X	0	0	0	%100
124	MP2C	Z	-6.402	-6.402	0	%100
125	MP4C	X	0	0	0	%100
126	MP4C	Z	-6.402	-6.402	0	%100
127	MP5C	X	0	0	0	%100
128	MP5C	Z	-6.402	-6.402	0	%100
129	MP3C	X	0	0	0	%100
130	MP3C	Z	-6.402	-6.402	0	%100
131	MP1B	X	0	0	0	%100
132	MP1B	Z	-6.402	-6.402	0	%100
133	MP2B	X	0	0	0	%100
134	MP2B	Z	-6.402	-6.402	0	%100
135	MP4B	X	0	0	0	%100
136	MP4B	Z	-6.402	-6.402	0	%100
137	MP5B	X	0	0	0	%100
138	MP5B	Z	-6.402	-6.402	0	%100
139	MP3B	X	0	0	0	%100
140	MP3B	Z	-6.402	-6.402	0	%100
141	M180	X	0	0	0	%100
142	M180	Z	-3.226	-3.226	0	%100
143	M181	X	0	0	0	%100
144	M181	Z	-3.226	-3.226	0	%100
145	M182	X	0	0	0	%100
146	M182	Z	-12.905	-12.905	0	%100
147	M194	X	0	0	0	%100
148	M194	Z	-16.887	-16.887	0	%100
149	M195	X	0	0	0	%100

Member Distributed Loads (BLC 41 : Structure Wo (0 Deg)) (Continued)

	Member Label	Direction	Start Magnitude[lb/ft,...	End Magnitude[lb/ft,F...	Start Location[ft,%]	End Location[ft,%]
150	M195	Z	-15.297	-15.297	0	%100
151	M196	X	0	0	0	%100
152	M196	Z	-16.887	-16.887	0	%100
153	M197	X	0	0	0	%100
154	M197	Z	-15.297	-15.297	0	%100
155	M206	X	0	0	0	%100
156	M206	Z	-4.222	-4.222	0	%100
157	M207	X	0	0	0	%100
158	M207	Z	-3.824	-3.824	0	%100
159	M208	X	0	0	0	%100
160	M208	Z	-4.222	-4.222	0	%100
161	M209	X	0	0	0	%100
162	M209	Z	-3.824	-3.824	0	%100
163	M218	X	0	0	0	%100
164	M218	Z	-4.222	-4.222	0	%100
165	M219	X	0	0	0	%100
166	M219	Z	-3.824	-3.824	0	%100
167	M220	X	0	0	0	%100
168	M220	Z	-4.222	-4.222	0	%100
169	M221	X	0	0	0	%100
170	M221	Z	-3.824	-3.824	0	%100
171	M222	X	0	0	0	%100
172	M222	Z	-11.452	-11.452	0	%100
173	M223	X	0	0	0	%100
174	M223	Z	-13.063	-13.063	0	%100
175	M224	X	0	0	0	%100
176	M224	Z	-13.063	-13.063	0	%100

Member Distributed Loads (BLC 42 : Structure Wo (30 Deg))

	Member Label	Direction	Start Magnitude[lb/ft,...	End Magnitude[lb/ft,F...	Start Location[ft,%]	End Location[ft,%]
1	M19	X	.932	.932	0	%100
2	M19	Z	-1.615	-1.615	0	%100
3	M19A	X	0	0	0	%100
4	M19A	Z	0	0	0	%100
5	M38C	X	3.729	3.729	0	%100
6	M38C	Z	-6.459	-6.459	0	%100
7	M51	X	.932	.932	0	%100
8	M51	Z	-1.615	-1.615	0	%100
9	M104A	X	.29	.29	0	%100
10	M104A	Z	-.503	-.503	0	%100
11	M105A	X	.29	.29	0	%100
12	M105A	Z	-.503	-.503	0	%100
13	M134	X	0	0	0	%100
14	M134	Z	0	0	0	%100
15	M135	X	0	0	0	%100
16	M135	Z	0	0	0	%100
17	M93A	X	2.212	2.212	0	%100
18	M93A	Z	-3.831	-3.831	0	%100
19	M94A	X	2.212	2.212	0	%100
20	M94A	Z	-3.831	-3.831	0	%100
21	M93B	X	1.987	1.987	0	%100

Member Distributed Loads (BLC 42 : Structure Wo (30 Deg)) (Continued)

	Member Label	Direction	Start Magnitude[lb/ft,...	End Magnitude[lb/ft,F...	Start Location[ft,%]	End Location[ft,%]
22	M93B	Z	-3.441	-3.441	0	%100
23	M94D	X	1.987	1.987	0	%100
24	M94D	Z	-3.441	-3.441	0	%100
25	M53	X	.29	.29	0	%100
26	M53	Z	-.503	-.503	0	%100
27	M54	X	.29	.29	0	%100
28	M54	Z	-.503	-.503	0	%100
29	M63	X	2.212	2.212	0	%100
30	M63	Z	-3.831	-3.831	0	%100
31	M64	X	2.212	2.212	0	%100
32	M64	Z	-3.831	-3.831	0	%100
33	M69	X	1.987	1.987	0	%100
34	M69	Z	-3.441	-3.441	0	%100
35	M70	X	1.987	1.987	0	%100
36	M70	Z	-3.441	-3.441	0	%100
37	M71	X	0	0	0	%100
38	M71	Z	0	0	0	%100
39	M72	X	0	0	0	%100
40	M72	Z	0	0	0	%100
41	M81	X	0	0	0	%100
42	M81	Z	0	0	0	%100
43	M82	X	0	0	0	%100
44	M82	Z	0	0	0	%100
45	M87	X	0	0	0	%100
46	M87	Z	0	0	0	%100
47	M88	X	0	0	0	%100
48	M88	Z	0	0	0	%100
49	M89	X	8.453	8.453	0	%100
50	M89	Z	-14.641	-14.641	0	%100
51	M90	X	8.453	8.453	0	%100
52	M90	Z	-14.641	-14.641	0	%100
53	M89A	X	8.453	8.453	0	%100
54	M89A	Z	-14.641	-14.641	0	%100
55	M90A	X	8.453	8.453	0	%100
56	M90A	Z	-14.641	-14.641	0	%100
57	M91	X	0	0	0	%100
58	M91	Z	0	0	0	%100
59	M92	X	0	0	0	%100
60	M92	Z	0	0	0	%100
61	M101	X	4.646	4.646	0	%100
62	M101	Z	-8.047	-8.047	0	%100
63	M91A	X	4.646	4.646	0	%100
64	M91A	Z	-8.047	-8.047	0	%100
65	M93	X	4.646	4.646	0	%100
66	M93	Z	-8.047	-8.047	0	%100
67	M95B	X	4.646	4.646	0	%100
68	M95B	Z	-8.047	-8.047	0	%100
69	M97	X	0	0	0	%100
70	M97	Z	0	0	0	%100
71	M99	X	0	0	0	%100
72	M99	Z	0	0	0	%100
73	M101A	X	4.646	4.646	0	%100

Member Distributed Loads (BLC 42 : Structure Wo (30 Deg)) (Continued)

	Member Label	Direction	Start Magnitude[lb/ft,...	End Magnitude[lb/ft,F...	Start Location[ft,%]	End Location[ft,%]
74	M101A	Z	-8.047	-8.047	0	%100
75	M104	X	4.646	4.646	0	%100
76	M104	Z	-8.047	-8.047	0	%100
77	M105B	X	2.207	2.207	0	%100
78	M105B	Z	-3.822	-3.822	0	%100
79	M104B	X	2.207	2.207	0	%100
80	M104B	Z	-3.822	-3.822	0	%100
81	M105C	X	0	0	0	%100
82	M105C	Z	0	0	0	%100
83	M95C	X	.34	.34	0	%100
84	M95C	Z	-.588	-.588	0	%100
85	M96A	X	.34	.34	0	%100
86	M96A	Z	-.588	-.588	0	%100
87	M101B	X	.34	.34	0	%100
88	M101B	Z	-.588	-.588	0	%100
89	M102B	X	.34	.34	0	%100
90	M102B	Z	-.588	-.588	0	%100
91	MP1A	X	3.32	3.32	0	%100
92	MP1A	Z	-5.751	-5.751	0	%100
93	M144	X	2.816	2.816	0	%100
94	M144	Z	-4.877	-4.877	0	%100
95	M147	X	.484	.484	0	%100
96	M147	Z	-.838	-.838	0	%100
97	M149A	X	.484	.484	0	%100
98	M149A	Z	-.838	-.838	0	%100
99	M152	X	0	0	0	%100
100	M152	Z	0	0	0	%100
101	M155	X	.46	.46	0	%100
102	M155	Z	-.796	-.796	0	%100
103	M159	X	.46	.46	0	%100
104	M159	Z	-.796	-.796	0	%100
105	M163	X	0	0	0	%100
106	M163	Z	0	0	0	%100
107	M166A	X	.464	.464	0	%100
108	M166A	Z	-.803	-.803	0	%100
109	M167	X	0	0	0	%100
110	M167	Z	0	0	0	%100
111	M168	X	.464	.464	0	%100
112	M168	Z	-.803	-.803	0	%100
113	MP2A	X	3.32	3.32	0	%100
114	MP2A	Z	-5.751	-5.751	0	%100
115	MP4A	X	3.32	3.32	0	%100
116	MP4A	Z	-5.751	-5.751	0	%100
117	MP5A	X	3.32	3.32	0	%100
118	MP5A	Z	-5.751	-5.751	0	%100
119	MP3A	X	3.32	3.32	0	%100
120	MP3A	Z	-5.751	-5.751	0	%100
121	MP1C	X	3.32	3.32	0	%100
122	MP1C	Z	-5.751	-5.751	0	%100
123	MP2C	X	3.32	3.32	0	%100
124	MP2C	Z	-5.751	-5.751	0	%100
125	MP4C	X	3.32	3.32	0	%100

Member Distributed Loads (BLC 42 : Structure Wo (30 Deg)) (Continued)

	Member Label	Direction	Start Magnitude[lb/ft,...	End Magnitude[lb/ft,F...	Start Location[ft,%]	End Location[ft,%]
126	MP4C	Z	-5.751	-5.751	0	%100
127	MP5C	X	3.32	3.32	0	%100
128	MP5C	Z	-5.751	-5.751	0	%100
129	MP3C	X	3.32	3.32	0	%100
130	MP3C	Z	-5.751	-5.751	0	%100
131	MP1B	X	3.32	3.32	0	%100
132	MP1B	Z	-5.751	-5.751	0	%100
133	MP2B	X	3.32	3.32	0	%100
134	MP2B	Z	-5.751	-5.751	0	%100
135	MP4B	X	3.32	3.32	0	%100
136	MP4B	Z	-5.751	-5.751	0	%100
137	MP5B	X	3.32	3.32	0	%100
138	MP5B	Z	-5.751	-5.751	0	%100
139	MP3B	X	3.32	3.32	0	%100
140	MP3B	Z	-5.751	-5.751	0	%100
141	M180	X	4.84	4.84	0	%100
142	M180	Z	-8.382	-8.382	0	%100
143	M181	X	0	0	0	%100
144	M181	Z	0	0	0	%100
145	M182	X	4.84	4.84	0	%100
146	M182	Z	-8.382	-8.382	0	%100
147	M194	X	6.333	6.333	0	%100
148	M194	Z	-10.968	-10.968	0	%100
149	M195	X	5.736	5.736	0	%100
150	M195	Z	-9.936	-9.936	0	%100
151	M196	X	6.333	6.333	0	%100
152	M196	Z	-10.968	-10.968	0	%100
153	M197	X	5.736	5.736	0	%100
154	M197	Z	-9.936	-9.936	0	%100
155	M206	X	6.333	6.333	0	%100
156	M206	Z	-10.968	-10.968	0	%100
157	M207	X	5.736	5.736	0	%100
158	M207	Z	-9.936	-9.936	0	%100
159	M208	X	6.333	6.333	0	%100
160	M208	Z	-10.968	-10.968	0	%100
161	M209	X	5.736	5.736	0	%100
162	M209	Z	-9.936	-9.936	0	%100
163	M218	X	0	0	0	%100
164	M218	Z	0	0	0	%100
165	M219	X	0	0	0	%100
166	M219	Z	0	0	0	%100
167	M220	X	0	0	0	%100
168	M220	Z	0	0	0	%100
169	M221	X	0	0	0	%100
170	M221	Z	0	0	0	%100
171	M222	X	5.995	5.995	0	%100
172	M222	Z	-10.383	-10.383	0	%100
173	M223	X	5.995	5.995	0	%100
174	M223	Z	-10.383	-10.383	0	%100
175	M224	X	6.8	6.8	0	%100
176	M224	Z	-11.778	-11.778	0	%100

Member Distributed Loads (BLC 43 : Structure Wo (60 Deg))

	Member Label	Direction	Start Magnitude[lb/ft,...	End Magnitude[lb/ft,F...	Start Location[ft,%]	End Location[ft,%]
1	M19	X	0	0	0	%100
2	M19	Z	0	0	0	%100
3	M19A	X	2.682	2.682	0	%100
4	M19A	Z	-1.549	-1.549	0	%100
5	M38C	X	4.844	4.844	0	%100
6	M38C	Z	-2.797	-2.797	0	%100
7	M51	X	4.844	4.844	0	%100
8	M51	Z	-2.797	-2.797	0	%100
9	M104A	X	.168	.168	0	%100
10	M104A	Z	-.097	-.097	0	%100
11	M105A	X	.168	.168	0	%100
12	M105A	Z	-.097	-.097	0	%100
13	M134	X	.196	.196	0	%100
14	M134	Z	-.113	-.113	0	%100
15	M135	X	.196	.196	0	%100
16	M135	Z	-.113	-.113	0	%100
17	M93A	X	1.277	1.277	0	%100
18	M93A	Z	-.737	-.737	0	%100
19	M94A	X	1.277	1.277	0	%100
20	M94A	Z	-.737	-.737	0	%100
21	M93B	X	1.147	1.147	0	%100
22	M93B	Z	-.662	-.662	0	%100
23	M94D	X	1.147	1.147	0	%100
24	M94D	Z	-.662	-.662	0	%100
25	M53	X	.671	.671	0	%100
26	M53	Z	-.387	-.387	0	%100
27	M54	X	.671	.671	0	%100
28	M54	Z	-.387	-.387	0	%100
29	M63	X	5.107	5.107	0	%100
30	M63	Z	-2.949	-2.949	0	%100
31	M64	X	5.107	5.107	0	%100
32	M64	Z	-2.949	-2.949	0	%100
33	M69	X	4.589	4.589	0	%100
34	M69	Z	-2.649	-2.649	0	%100
35	M70	X	4.589	4.589	0	%100
36	M70	Z	-2.649	-2.649	0	%100
37	M71	X	.168	.168	0	%100
38	M71	Z	-.097	-.097	0	%100
39	M72	X	.168	.168	0	%100
40	M72	Z	-.097	-.097	0	%100
41	M81	X	1.277	1.277	0	%100
42	M81	Z	-.737	-.737	0	%100
43	M82	X	1.277	1.277	0	%100
44	M82	Z	-.737	-.737	0	%100
45	M87	X	1.147	1.147	0	%100
46	M87	Z	-.662	-.662	0	%100
47	M88	X	1.147	1.147	0	%100
48	M88	Z	-.662	-.662	0	%100
49	M89	X	4.88	4.88	0	%100
50	M89	Z	-2.818	-2.818	0	%100
51	M90	X	4.88	4.88	0	%100
52	M90	Z	-2.818	-2.818	0	%100

Member Distributed Loads (BLC 43 : Structure Wo (60 Deg)) (Continued)

	Member Label	Direction	Start Magnitude[lb/ft,...	End Magnitude[lb/ft,F...	Start Location[ft,%]	End Location[ft,%]
53	M89A	X	19.521	19.521	0	%100
54	M89A	Z	-11.271	-11.271	0	%100
55	M90A	X	19.521	19.521	0	%100
56	M90A	Z	-11.271	-11.271	0	%100
57	M91	X	4.88	4.88	0	%100
58	M91	Z	-2.818	-2.818	0	%100
59	M92	X	4.88	4.88	0	%100
60	M92	Z	-2.818	-2.818	0	%100
61	M101	X	2.682	2.682	0	%100
62	M101	Z	-1.549	-1.549	0	%100
63	M91A	X	2.682	2.682	0	%100
64	M91A	Z	-1.549	-1.549	0	%100
65	M93	X	10.729	10.729	0	%100
66	M93	Z	-6.195	-6.195	0	%100
67	M95B	X	10.729	10.729	0	%100
68	M95B	Z	-6.195	-6.195	0	%100
69	M97	X	2.682	2.682	0	%100
70	M97	Z	-1.549	-1.549	0	%100
71	M99	X	2.682	2.682	0	%100
72	M99	Z	-1.549	-1.549	0	%100
73	M101A	X	2.682	2.682	0	%100
74	M101A	Z	-1.549	-1.549	0	%100
75	M104	X	10.729	10.729	0	%100
76	M104	Z	-6.195	-6.195	0	%100
77	M105B	X	1.274	1.274	0	%100
78	M105B	Z	-.736	-.736	0	%100
79	M104B	X	5.096	5.096	0	%100
80	M104B	Z	-2.942	-2.942	0	%100
81	M105C	X	1.274	1.274	0	%100
82	M105C	Z	-.736	-.736	0	%100
83	M95C	X	.196	.196	0	%100
84	M95C	Z	-.113	-.113	0	%100
85	M96A	X	.196	.196	0	%100
86	M96A	Z	-.113	-.113	0	%100
87	M101B	X	.784	.784	0	%100
88	M101B	Z	-.453	-.453	0	%100
89	M102B	X	.784	.784	0	%100
90	M102B	Z	-.453	-.453	0	%100
91	MP1A	X	6.164	6.164	0	%100
92	MP1A	Z	-3.559	-3.559	0	%100
93	M144	X	5.099	5.099	0	%100
94	M144	Z	-2.944	-2.944	0	%100
95	M147	X	.279	.279	0	%100
96	M147	Z	-.161	-.161	0	%100
97	M149A	X	1.118	1.118	0	%100
98	M149A	Z	-.645	-.645	0	%100
99	M152	X	.279	.279	0	%100
100	M152	Z	-.161	-.161	0	%100
101	M155	X	.265	.265	0	%100
102	M155	Z	-.153	-.153	0	%100
103	M159	X	1.062	1.062	0	%100
104	M159	Z	-.613	-.613	0	%100

Member Distributed Loads (BLC 43 : Structure Wo (60 Deg)) (Continued)

	Member Label	Direction	Start Magnitude[lb/ft,...	End Magnitude[lb/ft,F...	Start Location[ft,%]	End Location[ft,%]
105	M163	X	.265	.265	0	%100
106	M163	Z	-.153	-.153	0	%100
107	M166A	X	1.071	1.071	0	%100
108	M166A	Z	-.618	-.618	0	%100
109	M167	X	.268	.268	0	%100
110	M167	Z	-.155	-.155	0	%100
111	M168	X	.268	.268	0	%100
112	M168	Z	-.155	-.155	0	%100
113	MP2A	X	6.164	6.164	0	%100
114	MP2A	Z	-3.559	-3.559	0	%100
115	MP4A	X	6.164	6.164	0	%100
116	MP4A	Z	-3.559	-3.559	0	%100
117	MP5A	X	6.164	6.164	0	%100
118	MP5A	Z	-3.559	-3.559	0	%100
119	MP3A	X	6.164	6.164	0	%100
120	MP3A	Z	-3.559	-3.559	0	%100
121	MP1C	X	6.164	6.164	0	%100
122	MP1C	Z	-3.559	-3.559	0	%100
123	MP2C	X	6.164	6.164	0	%100
124	MP2C	Z	-3.559	-3.559	0	%100
125	MP4C	X	6.164	6.164	0	%100
126	MP4C	Z	-3.559	-3.559	0	%100
127	MP5C	X	6.164	6.164	0	%100
128	MP5C	Z	-3.559	-3.559	0	%100
129	MP3C	X	6.164	6.164	0	%100
130	MP3C	Z	-3.559	-3.559	0	%100
131	MP1B	X	6.164	6.164	0	%100
132	MP1B	Z	-3.559	-3.559	0	%100
133	MP2B	X	6.164	6.164	0	%100
134	MP2B	Z	-3.559	-3.559	0	%100
135	MP4B	X	6.164	6.164	0	%100
136	MP4B	Z	-3.559	-3.559	0	%100
137	MP5B	X	6.164	6.164	0	%100
138	MP5B	Z	-3.559	-3.559	0	%100
139	MP3B	X	6.164	6.164	0	%100
140	MP3B	Z	-3.559	-3.559	0	%100
141	M180	X	11.176	11.176	0	%100
142	M180	Z	-6.453	-6.453	0	%100
143	M181	X	2.794	2.794	0	%100
144	M181	Z	-1.613	-1.613	0	%100
145	M182	X	2.794	2.794	0	%100
146	M182	Z	-1.613	-1.613	0	%100
147	M194	X	3.656	3.656	0	%100
148	M194	Z	-2.111	-2.111	0	%100
149	M195	X	3.312	3.312	0	%100
150	M195	Z	-1.912	-1.912	0	%100
151	M196	X	3.656	3.656	0	%100
152	M196	Z	-2.111	-2.111	0	%100
153	M197	X	3.312	3.312	0	%100
154	M197	Z	-1.912	-1.912	0	%100
155	M206	X	14.624	14.624	0	%100
156	M206	Z	-8.443	-8.443	0	%100

Member Distributed Loads (BLC 43 : Structure Wo (60 Deg)) (Continued)

	Member Label	Direction	Start Magnitude[lb/ft,...	End Magnitude[lb/ft,F...	Start Location[ft,%]	End Location[ft,%]
157	M207	X	13.248	13.248	0	%100
158	M207	Z	-7.649	-7.649	0	%100
159	M208	X	14.624	14.624	0	%100
160	M208	Z	-8.443	-8.443	0	%100
161	M209	X	13.248	13.248	0	%100
162	M209	Z	-7.649	-7.649	0	%100
163	M218	X	3.656	3.656	0	%100
164	M218	Z	-2.111	-2.111	0	%100
165	M219	X	3.312	3.312	0	%100
166	M219	Z	-1.912	-1.912	0	%100
167	M220	X	3.656	3.656	0	%100
168	M220	Z	-2.111	-2.111	0	%100
169	M221	X	3.312	3.312	0	%100
170	M221	Z	-1.912	-1.912	0	%100
171	M222	X	11.313	11.313	0	%100
172	M222	Z	-6.532	-6.532	0	%100
173	M223	X	9.918	9.918	0	%100
174	M223	Z	-5.726	-5.726	0	%100
175	M224	X	11.313	11.313	0	%100
176	M224	Z	-6.532	-6.532	0	%100

Member Distributed Loads (BLC 44 : Structure Wo (90 Deg))

	Member Label	Direction	Start Magnitude[lb/ft,...	End Magnitude[lb/ft,F...	Start Location[ft,%]	End Location[ft,%]
1	M19	X	1.865	1.865	0	%100
2	M19	Z	0	0	0	%100
3	M19A	X	9.292	9.292	0	%100
4	M19A	Z	0	0	0	%100
5	M38C	X	1.865	1.865	0	%100
6	M38C	Z	0	0	0	%100
7	M51	X	7.458	7.458	0	%100
8	M51	Z	0	0	0	%100
9	M104A	X	0	0	0	%100
10	M104A	Z	0	0	0	%100
11	M105A	X	0	0	0	%100
12	M105A	Z	0	0	0	%100
13	M134	X	.679	.679	0	%100
14	M134	Z	0	0	0	%100
15	M135	X	.679	.679	0	%100
16	M135	Z	0	0	0	%100
17	M93A	X	0	0	0	%100
18	M93A	Z	0	0	0	%100
19	M94A	X	0	0	0	%100
20	M94A	Z	0	0	0	%100
21	M93B	X	0	0	0	%100
22	M93B	Z	0	0	0	%100
23	M94D	X	0	0	0	%100
24	M94D	Z	0	0	0	%100
25	M53	X	.581	.581	0	%100
26	M53	Z	0	0	0	%100
27	M54	X	.581	.581	0	%100
28	M54	Z	0	0	0	%100

Member Distributed Loads (BLC 44 : Structure Wo (90 Deg)) (Continued)

	Member Label	Direction	Start Magnitude[lb/ft,...	End Magnitude[lb/ft,F...	Start Location[ft,%]	End Location[ft,%]
29	M63	X	4.423	4.423	0	%100
30	M63	Z	0	0	0	%100
31	M64	X	4.423	4.423	0	%100
32	M64	Z	0	0	0	%100
33	M69	X	3.974	3.974	0	%100
34	M69	Z	0	0	0	%100
35	M70	X	3.974	3.974	0	%100
36	M70	Z	0	0	0	%100
37	M71	X	.581	.581	0	%100
38	M71	Z	0	0	0	%100
39	M72	X	.581	.581	0	%100
40	M72	Z	0	0	0	%100
41	M81	X	4.423	4.423	0	%100
42	M81	Z	0	0	0	%100
43	M82	X	4.423	4.423	0	%100
44	M82	Z	0	0	0	%100
45	M87	X	3.974	3.974	0	%100
46	M87	Z	0	0	0	%100
47	M88	X	3.974	3.974	0	%100
48	M88	Z	0	0	0	%100
49	M89	X	0	0	0	%100
50	M89	Z	0	0	0	%100
51	M90	X	0	0	0	%100
52	M90	Z	0	0	0	%100
53	M89A	X	16.906	16.906	0	%100
54	M89A	Z	0	0	0	%100
55	M90A	X	16.906	16.906	0	%100
56	M90A	Z	0	0	0	%100
57	M91	X	16.906	16.906	0	%100
58	M91	Z	0	0	0	%100
59	M92	X	16.906	16.906	0	%100
60	M92	Z	0	0	0	%100
61	M101	X	0	0	0	%100
62	M101	Z	0	0	0	%100
63	M91A	X	0	0	0	%100
64	M91A	Z	0	0	0	%100
65	M93	X	9.292	9.292	0	%100
66	M93	Z	0	0	0	%100
67	M95B	X	9.292	9.292	0	%100
68	M95B	Z	0	0	0	%100
69	M97	X	9.292	9.292	0	%100
70	M97	Z	0	0	0	%100
71	M99	X	9.292	9.292	0	%100
72	M99	Z	0	0	0	%100
73	M101A	X	0	0	0	%100
74	M101A	Z	0	0	0	%100
75	M104	X	9.292	9.292	0	%100
76	M104	Z	0	0	0	%100
77	M105B	X	0	0	0	%100
78	M105B	Z	0	0	0	%100
79	M104B	X	4.414	4.414	0	%100
80	M104B	Z	0	0	0	%100

Member Distributed Loads (BLC 44 : Structure Wo (90 Deg)) (Continued)

	Member Label	Direction	Start Magnitude[lb/ft,...	End Magnitude[lb/ft,F...	Start Location[ft,%]	End Location[ft,%]
81	M105C	X	4.414	4.414	0	%100
82	M105C	Z	0	0	0	%100
83	M95C	X	0	0	0	%100
84	M95C	Z	0	0	0	%100
85	M96A	X	0	0	0	%100
86	M96A	Z	0	0	0	%100
87	M101B	X	.679	.679	0	%100
88	M101B	Z	0	0	0	%100
89	M102B	X	.679	.679	0	%100
90	M102B	Z	0	0	0	%100
91	MP1A	X	7.356	7.356	0	%100
92	MP1A	Z	0	0	0	%100
93	M144	X	6.015	6.015	0	%100
94	M144	Z	0	0	0	%100
95	M147	X	0	0	0	%100
96	M147	Z	0	0	0	%100
97	M149A	X	.968	.968	0	%100
98	M149A	Z	0	0	0	%100
99	M152	X	.968	.968	0	%100
100	M152	Z	0	0	0	%100
101	M155	X	0	0	0	%100
102	M155	Z	0	0	0	%100
103	M159	X	.92	.92	0	%100
104	M159	Z	0	0	0	%100
105	M163	X	.92	.92	0	%100
106	M163	Z	0	0	0	%100
107	M166A	X	.928	.928	0	%100
108	M166A	Z	0	0	0	%100
109	M167	X	.928	.928	0	%100
110	M167	Z	0	0	0	%100
111	M168	X	0	0	0	%100
112	M168	Z	0	0	0	%100
113	MP2A	X	7.356	7.356	0	%100
114	MP2A	Z	0	0	0	%100
115	MP4A	X	7.356	7.356	0	%100
116	MP4A	Z	0	0	0	%100
117	MP5A	X	7.356	7.356	0	%100
118	MP5A	Z	0	0	0	%100
119	MP3A	X	7.356	7.356	0	%100
120	MP3A	Z	0	0	0	%100
121	MP1C	X	7.356	7.356	0	%100
122	MP1C	Z	0	0	0	%100
123	MP2C	X	7.356	7.356	0	%100
124	MP2C	Z	0	0	0	%100
125	MP4C	X	7.356	7.356	0	%100
126	MP4C	Z	0	0	0	%100
127	MP5C	X	7.356	7.356	0	%100
128	MP5C	Z	0	0	0	%100
129	MP3C	X	7.356	7.356	0	%100
130	MP3C	Z	0	0	0	%100
131	MP1B	X	7.356	7.356	0	%100
132	MP1B	Z	0	0	0	%100

Member Distributed Loads (BLC 44 : Structure Wo (90 Deg)) (Continued)

	Member Label	Direction	Start Magnitude[lb/ft,...	End Magnitude[lb/ft,F...	Start Location[ft,%]	End Location[ft,%]
133	MP2B	X	7.356	7.356	0	%100
134	MP2B	Z	0	0	0	%100
135	MP4B	X	7.356	7.356	0	%100
136	MP4B	Z	0	0	0	%100
137	MP5B	X	7.356	7.356	0	%100
138	MP5B	Z	0	0	0	%100
139	MP3B	X	7.356	7.356	0	%100
140	MP3B	Z	0	0	0	%100
141	M180	X	9.679	9.679	0	%100
142	M180	Z	0	0	0	%100
143	M181	X	9.679	9.679	0	%100
144	M181	Z	0	0	0	%100
145	M182	X	0	0	0	%100
146	M182	Z	0	0	0	%100
147	M194	X	0	0	0	%100
148	M194	Z	0	0	0	%100
149	M195	X	0	0	0	%100
150	M195	Z	0	0	0	%100
151	M196	X	0	0	0	%100
152	M196	Z	0	0	0	%100
153	M197	X	0	0	0	%100
154	M197	Z	0	0	0	%100
155	M206	X	12.665	12.665	0	%100
156	M206	Z	0	0	0	%100
157	M207	X	11.473	11.473	0	%100
158	M207	Z	0	0	0	%100
159	M208	X	12.665	12.665	0	%100
160	M208	Z	0	0	0	%100
161	M209	X	11.473	11.473	0	%100
162	M209	Z	0	0	0	%100
163	M218	X	12.665	12.665	0	%100
164	M218	Z	0	0	0	%100
165	M219	X	11.473	11.473	0	%100
166	M219	Z	0	0	0	%100
167	M220	X	12.665	12.665	0	%100
168	M220	Z	0	0	0	%100
169	M221	X	11.473	11.473	0	%100
170	M221	Z	0	0	0	%100
171	M222	X	13.6	13.6	0	%100
172	M222	Z	0	0	0	%100
173	M223	X	11.989	11.989	0	%100
174	M223	Z	0	0	0	%100
175	M224	X	11.989	11.989	0	%100
176	M224	Z	0	0	0	%100

Member Distributed Loads (BLC 45 : Structure Wo (120 Deg))

	Member Label	Direction	Start Magnitude[lb/ft,...	End Magnitude[lb/ft,F...	Start Location[ft,%]	End Location[ft,%]
1	M19	X	4.844	4.844	0	%100
2	M19	Z	2.797	2.797	0	%100
3	M19A	X	10.729	10.729	0	%100
4	M19A	Z	6.195	6.195	0	%100

Member Distributed Loads (BLC 45 : Structure Wo (120 Deg)) (Continued)

	Member Label	Direction	Start Magnitude[lb/ft,...	End Magnitude[lb/ft,F...	Start Location[ft,%]	End Location[ft,%]
5	M38C	X	0	0	0	%100
6	M38C	Z	0	0	0	%100
7	M51	X	4.844	4.844	0	%100
8	M51	Z	2.797	2.797	0	%100
9	M104A	X	.168	.168	0	%100
10	M104A	Z	.097	.097	0	%100
11	M105A	X	.168	.168	0	%100
12	M105A	Z	.097	.097	0	%100
13	M134	X	.784	.784	0	%100
14	M134	Z	.453	.453	0	%100
15	M135	X	.784	.784	0	%100
16	M135	Z	.453	.453	0	%100
17	M93A	X	1.277	1.277	0	%100
18	M93A	Z	.737	.737	0	%100
19	M94A	X	1.277	1.277	0	%100
20	M94A	Z	.737	.737	0	%100
21	M93B	X	1.147	1.147	0	%100
22	M93B	Z	.662	.662	0	%100
23	M94D	X	1.147	1.147	0	%100
24	M94D	Z	.662	.662	0	%100
25	M53	X	.168	.168	0	%100
26	M53	Z	.097	.097	0	%100
27	M54	X	.168	.168	0	%100
28	M54	Z	.097	.097	0	%100
29	M63	X	1.277	1.277	0	%100
30	M63	Z	.737	.737	0	%100
31	M64	X	1.277	1.277	0	%100
32	M64	Z	.737	.737	0	%100
33	M69	X	1.147	1.147	0	%100
34	M69	Z	.662	.662	0	%100
35	M70	X	1.147	1.147	0	%100
36	M70	Z	.662	.662	0	%100
37	M71	X	.671	.671	0	%100
38	M71	Z	.387	.387	0	%100
39	M72	X	.671	.671	0	%100
40	M72	Z	.387	.387	0	%100
41	M81	X	5.107	5.107	0	%100
42	M81	Z	2.949	2.949	0	%100
43	M82	X	5.107	5.107	0	%100
44	M82	Z	2.949	2.949	0	%100
45	M87	X	4.589	4.589	0	%100
46	M87	Z	2.649	2.649	0	%100
47	M88	X	4.589	4.589	0	%100
48	M88	Z	2.649	2.649	0	%100
49	M89	X	4.88	4.88	0	%100
50	M89	Z	2.818	2.818	0	%100
51	M90	X	4.88	4.88	0	%100
52	M90	Z	2.818	2.818	0	%100
53	M89A	X	4.88	4.88	0	%100
54	M89A	Z	2.818	2.818	0	%100
55	M90A	X	4.88	4.88	0	%100
56	M90A	Z	2.818	2.818	0	%100

Member Distributed Loads (BLC 45 : Structure Wo (120 Deg)) (Continued)

	Member Label	Direction	Start Magnitude[lb/ft,...	End Magnitude[lb/ft,F...	Start Location[ft,%]	End Location[ft,%]
57	M91	X	19.521	19.521	0	%100
58	M91	Z	11.271	11.271	0	%100
59	M92	X	19.521	19.521	0	%100
60	M92	Z	11.271	11.271	0	%100
61	M101	X	2.682	2.682	0	%100
62	M101	Z	1.549	1.549	0	%100
63	M91A	X	2.682	2.682	0	%100
64	M91A	Z	1.549	1.549	0	%100
65	M93	X	2.682	2.682	0	%100
66	M93	Z	1.549	1.549	0	%100
67	M95B	X	2.682	2.682	0	%100
68	M95B	Z	1.549	1.549	0	%100
69	M97	X	10.729	10.729	0	%100
70	M97	Z	6.195	6.195	0	%100
71	M99	X	10.729	10.729	0	%100
72	M99	Z	6.195	6.195	0	%100
73	M101A	X	2.682	2.682	0	%100
74	M101A	Z	1.549	1.549	0	%100
75	M104	X	2.682	2.682	0	%100
76	M104	Z	1.549	1.549	0	%100
77	M105B	X	1.274	1.274	0	%100
78	M105B	Z	.736	.736	0	%100
79	M104B	X	1.274	1.274	0	%100
80	M104B	Z	.736	.736	0	%100
81	M105C	X	5.096	5.096	0	%100
82	M105C	Z	2.942	2.942	0	%100
83	M95C	X	.196	.196	0	%100
84	M95C	Z	.113	.113	0	%100
85	M96A	X	.196	.196	0	%100
86	M96A	Z	.113	.113	0	%100
87	M101B	X	.196	.196	0	%100
88	M101B	Z	.113	.113	0	%100
89	M102B	X	.196	.196	0	%100
90	M102B	Z	.113	.113	0	%100
91	MP1A	X	6.164	6.164	0	%100
92	MP1A	Z	3.559	3.559	0	%100
93	M144	X	5.099	5.099	0	%100
94	M144	Z	2.944	2.944	0	%100
95	M147	X	.279	.279	0	%100
96	M147	Z	.161	.161	0	%100
97	M149A	X	.279	.279	0	%100
98	M149A	Z	.161	.161	0	%100
99	M152	X	1.118	1.118	0	%100
100	M152	Z	.645	.645	0	%100
101	M155	X	.265	.265	0	%100
102	M155	Z	.153	.153	0	%100
103	M159	X	.265	.265	0	%100
104	M159	Z	.153	.153	0	%100
105	M163	X	1.062	1.062	0	%100
106	M163	Z	.613	.613	0	%100
107	M166A	X	.268	.268	0	%100
108	M166A	Z	.155	.155	0	%100

Member Distributed Loads (BLC 45 : Structure Wo (120 Deg)) (Continued)

	Member Label	Direction	Start Magnitude[lb/ft,...	End Magnitude[lb/ft,F...	Start Location[ft,%]	End Location[ft,%]
109	M167	X	1.071	1.071	0	%100
110	M167	Z	.618	.618	0	%100
111	M168	X	.268	.268	0	%100
112	M168	Z	.155	.155	0	%100
113	MP2A	X	6.164	6.164	0	%100
114	MP2A	Z	3.559	3.559	0	%100
115	MP4A	X	6.164	6.164	0	%100
116	MP4A	Z	3.559	3.559	0	%100
117	MP5A	X	6.164	6.164	0	%100
118	MP5A	Z	3.559	3.559	0	%100
119	MP3A	X	6.164	6.164	0	%100
120	MP3A	Z	3.559	3.559	0	%100
121	MP1C	X	6.164	6.164	0	%100
122	MP1C	Z	3.559	3.559	0	%100
123	MP2C	X	6.164	6.164	0	%100
124	MP2C	Z	3.559	3.559	0	%100
125	MP4C	X	6.164	6.164	0	%100
126	MP4C	Z	3.559	3.559	0	%100
127	MP5C	X	6.164	6.164	0	%100
128	MP5C	Z	3.559	3.559	0	%100
129	MP3C	X	6.164	6.164	0	%100
130	MP3C	Z	3.559	3.559	0	%100
131	MP1B	X	6.164	6.164	0	%100
132	MP1B	Z	3.559	3.559	0	%100
133	MP2B	X	6.164	6.164	0	%100
134	MP2B	Z	3.559	3.559	0	%100
135	MP4B	X	6.164	6.164	0	%100
136	MP4B	Z	3.559	3.559	0	%100
137	MP5B	X	6.164	6.164	0	%100
138	MP5B	Z	3.559	3.559	0	%100
139	MP3B	X	6.164	6.164	0	%100
140	MP3B	Z	3.559	3.559	0	%100
141	M180	X	2.794	2.794	0	%100
142	M180	Z	1.613	1.613	0	%100
143	M181	X	11.176	11.176	0	%100
144	M181	Z	6.453	6.453	0	%100
145	M182	X	2.794	2.794	0	%100
146	M182	Z	1.613	1.613	0	%100
147	M194	X	3.656	3.656	0	%100
148	M194	Z	2.111	2.111	0	%100
149	M195	X	3.312	3.312	0	%100
150	M195	Z	1.912	1.912	0	%100
151	M196	X	3.656	3.656	0	%100
152	M196	Z	2.111	2.111	0	%100
153	M197	X	3.312	3.312	0	%100
154	M197	Z	1.912	1.912	0	%100
155	M206	X	3.656	3.656	0	%100
156	M206	Z	2.111	2.111	0	%100
157	M207	X	3.312	3.312	0	%100
158	M207	Z	1.912	1.912	0	%100
159	M208	X	3.656	3.656	0	%100
160	M208	Z	2.111	2.111	0	%100

Member Distributed Loads (BLC 45 : Structure Wo (120 Deg)) (Continued)

	Member Label	Direction	Start Magnitude[lb/ft,...	End Magnitude[lb/ft,F...	Start Location[ft,%]	End Location[ft,%]
161	M209	X	3.312	3.312	0	%100
162	M209	Z	1.912	1.912	0	%100
163	M218	X	14.624	14.624	0	%100
164	M218	Z	8.443	8.443	0	%100
165	M219	X	13.248	13.248	0	%100
166	M219	Z	7.649	7.649	0	%100
167	M220	X	14.624	14.624	0	%100
168	M220	Z	8.443	8.443	0	%100
169	M221	X	13.248	13.248	0	%100
170	M221	Z	7.649	7.649	0	%100
171	M222	X	11.313	11.313	0	%100
172	M222	Z	6.532	6.532	0	%100
173	M223	X	11.313	11.313	0	%100
174	M223	Z	6.532	6.532	0	%100
175	M224	X	9.918	9.918	0	%100
176	M224	Z	5.726	5.726	0	%100

Member Distributed Loads (BLC 46 : Structure Wo (150 Deg))

	Member Label	Direction	Start Magnitude[lb/ft,...	End Magnitude[lb/ft,F...	Start Location[ft,%]	End Location[ft,%]
1	M19	X	3.729	3.729	0	%100
2	M19	Z	6.459	6.459	0	%100
3	M19A	X	4.646	4.646	0	%100
4	M19A	Z	8.047	8.047	0	%100
5	M38C	X	.932	.932	0	%100
6	M38C	Z	1.615	1.615	0	%100
7	M51	X	.932	.932	0	%100
8	M51	Z	1.615	1.615	0	%100
9	M104A	X	.29	.29	0	%100
10	M104A	Z	.503	.503	0	%100
11	M105A	X	.29	.29	0	%100
12	M105A	Z	.503	.503	0	%100
13	M134	X	.34	.34	0	%100
14	M134	Z	.588	.588	0	%100
15	M135	X	.34	.34	0	%100
16	M135	Z	.588	.588	0	%100
17	M93A	X	2.212	2.212	0	%100
18	M93A	Z	3.831	3.831	0	%100
19	M94A	X	2.212	2.212	0	%100
20	M94A	Z	3.831	3.831	0	%100
21	M93B	X	1.987	1.987	0	%100
22	M93B	Z	3.441	3.441	0	%100
23	M94D	X	1.987	1.987	0	%100
24	M94D	Z	3.441	3.441	0	%100
25	M53	X	0	0	0	%100
26	M53	Z	0	0	0	%100
27	M54	X	0	0	0	%100
28	M54	Z	0	0	0	%100
29	M63	X	0	0	0	%100
30	M63	Z	0	0	0	%100
31	M64	X	0	0	0	%100
32	M64	Z	0	0	0	%100

Member Distributed Loads (BLC 46 : Structure Wo (150 Deg)) (Continued)

	Member Label	Direction	Start Magnitude[lb/ft,...	End Magnitude[lb/ft,F...	Start Location[ft,%]	End Location[ft,%]
33	M69	X	0	0	0	%100
34	M69	Z	0	0	0	%100
35	M70	X	0	0	0	%100
36	M70	Z	0	0	0	%100
37	M71	X	.29	.29	0	%100
38	M71	Z	.503	.503	0	%100
39	M72	X	.29	.29	0	%100
40	M72	Z	.503	.503	0	%100
41	M81	X	2.212	2.212	0	%100
42	M81	Z	3.831	3.831	0	%100
43	M82	X	2.212	2.212	0	%100
44	M82	Z	3.831	3.831	0	%100
45	M87	X	1.987	1.987	0	%100
46	M87	Z	3.441	3.441	0	%100
47	M88	X	1.987	1.987	0	%100
48	M88	Z	3.441	3.441	0	%100
49	M89	X	8.453	8.453	0	%100
50	M89	Z	14.641	14.641	0	%100
51	M90	X	8.453	8.453	0	%100
52	M90	Z	14.641	14.641	0	%100
53	M89A	X	0	0	0	%100
54	M89A	Z	0	0	0	%100
55	M90A	X	0	0	0	%100
56	M90A	Z	0	0	0	%100
57	M91	X	8.453	8.453	0	%100
58	M91	Z	14.641	14.641	0	%100
59	M92	X	8.453	8.453	0	%100
60	M92	Z	14.641	14.641	0	%100
61	M101	X	4.646	4.646	0	%100
62	M101	Z	8.047	8.047	0	%100
63	M91A	X	4.646	4.646	0	%100
64	M91A	Z	8.047	8.047	0	%100
65	M93	X	0	0	0	%100
66	M93	Z	0	0	0	%100
67	M95B	X	0	0	0	%100
68	M95B	Z	0	0	0	%100
69	M97	X	4.646	4.646	0	%100
70	M97	Z	8.047	8.047	0	%100
71	M99	X	4.646	4.646	0	%100
72	M99	Z	8.047	8.047	0	%100
73	M101A	X	4.646	4.646	0	%100
74	M101A	Z	8.047	8.047	0	%100
75	M104	X	0	0	0	%100
76	M104	Z	0	0	0	%100
77	M105B	X	2.207	2.207	0	%100
78	M105B	Z	3.822	3.822	0	%100
79	M104B	X	0	0	0	%100
80	M104B	Z	0	0	0	%100
81	M105C	X	2.207	2.207	0	%100
82	M105C	Z	3.822	3.822	0	%100
83	M95C	X	.34	.34	0	%100
84	M95C	Z	.588	.588	0	%100

Member Distributed Loads (BLC 46 : Structure Wo (150 Deg)) (Continued)

	Member Label	Direction	Start Magnitude[lb/ft,...	End Magnitude[lb/ft,F...	Start Location[ft,%]	End Location[ft,%]
85	M96A	X	.34	.34	0	%100
86	M96A	Z	.588	.588	0	%100
87	M101B	X	0	0	0	%100
88	M101B	Z	0	0	0	%100
89	M102B	X	0	0	0	%100
90	M102B	Z	0	0	0	%100
91	MP1A	X	3.32	3.32	0	%100
92	MP1A	Z	5.751	5.751	0	%100
93	M144	X	2.816	2.816	0	%100
94	M144	Z	4.877	4.877	0	%100
95	M147	X	.484	.484	0	%100
96	M147	Z	.838	.838	0	%100
97	M149A	X	0	0	0	%100
98	M149A	Z	0	0	0	%100
99	M152	X	.484	.484	0	%100
100	M152	Z	.838	.838	0	%100
101	M155	X	.46	.46	0	%100
102	M155	Z	.796	.796	0	%100
103	M159	X	0	0	0	%100
104	M159	Z	0	0	0	%100
105	M163	X	.46	.46	0	%100
106	M163	Z	.796	.796	0	%100
107	M166A	X	0	0	0	%100
108	M166A	Z	0	0	0	%100
109	M167	X	.464	.464	0	%100
110	M167	Z	.803	.803	0	%100
111	M168	X	.464	.464	0	%100
112	M168	Z	.803	.803	0	%100
113	MP2A	X	3.32	3.32	0	%100
114	MP2A	Z	5.751	5.751	0	%100
115	MP4A	X	3.32	3.32	0	%100
116	MP4A	Z	5.751	5.751	0	%100
117	MP5A	X	3.32	3.32	0	%100
118	MP5A	Z	5.751	5.751	0	%100
119	MP3A	X	3.32	3.32	0	%100
120	MP3A	Z	5.751	5.751	0	%100
121	MP1C	X	3.32	3.32	0	%100
122	MP1C	Z	5.751	5.751	0	%100
123	MP2C	X	3.32	3.32	0	%100
124	MP2C	Z	5.751	5.751	0	%100
125	MP4C	X	3.32	3.32	0	%100
126	MP4C	Z	5.751	5.751	0	%100
127	MP5C	X	3.32	3.32	0	%100
128	MP5C	Z	5.751	5.751	0	%100
129	MP3C	X	3.32	3.32	0	%100
130	MP3C	Z	5.751	5.751	0	%100
131	MP1B	X	3.32	3.32	0	%100
132	MP1B	Z	5.751	5.751	0	%100
133	MP2B	X	3.32	3.32	0	%100
134	MP2B	Z	5.751	5.751	0	%100
135	MP4B	X	3.32	3.32	0	%100
136	MP4B	Z	5.751	5.751	0	%100

Member Distributed Loads (BLC 46 : Structure Wo (150 Deg)) (Continued)

	Member Label	Direction	Start Magnitude[lb/ft,...	End Magnitude[lb/ft,F...	Start Location[ft,%]	End Location[ft,%]
137	MP5B	X	3.32	3.32	0	%100
138	MP5B	Z	5.751	5.751	0	%100
139	MP3B	X	3.32	3.32	0	%100
140	MP3B	Z	5.751	5.751	0	%100
141	M180	X	0	0	0	%100
142	M180	Z	0	0	0	%100
143	M181	X	4.84	4.84	0	%100
144	M181	Z	8.382	8.382	0	%100
145	M182	X	4.84	4.84	0	%100
146	M182	Z	8.382	8.382	0	%100
147	M194	X	6.333	6.333	0	%100
148	M194	Z	10.968	10.968	0	%100
149	M195	X	5.736	5.736	0	%100
150	M195	Z	9.936	9.936	0	%100
151	M196	X	6.333	6.333	0	%100
152	M196	Z	10.968	10.968	0	%100
153	M197	X	5.736	5.736	0	%100
154	M197	Z	9.936	9.936	0	%100
155	M206	X	0	0	0	%100
156	M206	Z	0	0	0	%100
157	M207	X	0	0	0	%100
158	M207	Z	0	0	0	%100
159	M208	X	0	0	0	%100
160	M208	Z	0	0	0	%100
161	M209	X	0	0	0	%100
162	M209	Z	0	0	0	%100
163	M218	X	6.333	6.333	0	%100
164	M218	Z	10.968	10.968	0	%100
165	M219	X	5.736	5.736	0	%100
166	M219	Z	9.936	9.936	0	%100
167	M220	X	6.333	6.333	0	%100
168	M220	Z	10.968	10.968	0	%100
169	M221	X	5.736	5.736	0	%100
170	M221	Z	9.936	9.936	0	%100
171	M222	X	5.995	5.995	0	%100
172	M222	Z	10.383	10.383	0	%100
173	M223	X	6.8	6.8	0	%100
174	M223	Z	11.778	11.778	0	%100
175	M224	X	5.995	5.995	0	%100
176	M224	Z	10.383	10.383	0	%100

Member Distributed Loads (BLC 47 : Structure Wo (180 Deg))

	Member Label	Direction	Start Magnitude[lb/ft,...	End Magnitude[lb/ft,F...	Start Location[ft,%]	End Location[ft,%]
1	M19	X	0	0	0	%100
2	M19	Z	5.594	5.594	0	%100
3	M19A	X	0	0	0	%100
4	M19A	Z	3.097	3.097	0	%100
5	M38C	X	0	0	0	%100
6	M38C	Z	5.594	5.594	0	%100
7	M51	X	0	0	0	%100
8	M51	Z	0	0	0	%100

Member Distributed Loads (BLC 47 : Structure Wo (180 Deg)) (Continued)

	Member Label	Direction	Start Magnitude[lb/ft,...	End Magnitude[lb/ft,F...	Start Location[ft,%]	End Location[ft,%]
9	M104A	X	0	0	0	%100
10	M104A	Z	.774	.774	0	%100
11	M105A	X	0	0	0	%100
12	M105A	Z	.774	.774	0	%100
13	M134	X	0	0	0	%100
14	M134	Z	.226	.226	0	%100
15	M135	X	0	0	0	%100
16	M135	Z	.226	.226	0	%100
17	M93A	X	0	0	0	%100
18	M93A	Z	5.898	5.898	0	%100
19	M94A	X	0	0	0	%100
20	M94A	Z	5.898	5.898	0	%100
21	M93B	X	0	0	0	%100
22	M93B	Z	5.298	5.298	0	%100
23	M94D	X	0	0	0	%100
24	M94D	Z	5.298	5.298	0	%100
25	M53	X	0	0	0	%100
26	M53	Z	.194	.194	0	%100
27	M54	X	0	0	0	%100
28	M54	Z	.194	.194	0	%100
29	M63	X	0	0	0	%100
30	M63	Z	1.474	1.474	0	%100
31	M64	X	0	0	0	%100
32	M64	Z	1.474	1.474	0	%100
33	M69	X	0	0	0	%100
34	M69	Z	1.325	1.325	0	%100
35	M70	X	0	0	0	%100
36	M70	Z	1.325	1.325	0	%100
37	M71	X	0	0	0	%100
38	M71	Z	.194	.194	0	%100
39	M72	X	0	0	0	%100
40	M72	Z	.194	.194	0	%100
41	M81	X	0	0	0	%100
42	M81	Z	1.474	1.474	0	%100
43	M82	X	0	0	0	%100
44	M82	Z	1.474	1.474	0	%100
45	M87	X	0	0	0	%100
46	M87	Z	1.325	1.325	0	%100
47	M88	X	0	0	0	%100
48	M88	Z	1.325	1.325	0	%100
49	M89	X	0	0	0	%100
50	M89	Z	22.541	22.541	0	%100
51	M90	X	0	0	0	%100
52	M90	Z	22.541	22.541	0	%100
53	M89A	X	0	0	0	%100
54	M89A	Z	5.635	5.635	0	%100
55	M90A	X	0	0	0	%100
56	M90A	Z	5.635	5.635	0	%100
57	M91	X	0	0	0	%100
58	M91	Z	5.635	5.635	0	%100
59	M92	X	0	0	0	%100
60	M92	Z	5.635	5.635	0	%100

Member Distributed Loads (BLC 47 : Structure Wo (180 Deg)) (Continued)

	Member Label	Direction	Start Magnitude[lb/ft,...	End Magnitude[lb/ft,F...	Start Location[ft,%]	End Location[ft,%]
61	M101	X	0	0	0	%100
62	M101	Z	12.389	12.389	0	%100
63	M91A	X	0	0	0	%100
64	M91A	Z	12.389	12.389	0	%100
65	M93	X	0	0	0	%100
66	M93	Z	3.097	3.097	0	%100
67	M95B	X	0	0	0	%100
68	M95B	Z	3.097	3.097	0	%100
69	M97	X	0	0	0	%100
70	M97	Z	3.097	3.097	0	%100
71	M99	X	0	0	0	%100
72	M99	Z	3.097	3.097	0	%100
73	M101A	X	0	0	0	%100
74	M101A	Z	12.389	12.389	0	%100
75	M104	X	0	0	0	%100
76	M104	Z	3.097	3.097	0	%100
77	M105B	X	0	0	0	%100
78	M105B	Z	5.885	5.885	0	%100
79	M104B	X	0	0	0	%100
80	M104B	Z	1.471	1.471	0	%100
81	M105C	X	0	0	0	%100
82	M105C	Z	1.471	1.471	0	%100
83	M95C	X	0	0	0	%100
84	M95C	Z	.905	.905	0	%100
85	M96A	X	0	0	0	%100
86	M96A	Z	.905	.905	0	%100
87	M101B	X	0	0	0	%100
88	M101B	Z	.226	.226	0	%100
89	M102B	X	0	0	0	%100
90	M102B	Z	.226	.226	0	%100
91	MP1A	X	0	0	0	%100
92	MP1A	Z	6.402	6.402	0	%100
93	M144	X	0	0	0	%100
94	M144	Z	5.503	5.503	0	%100
95	M147	X	0	0	0	%100
96	M147	Z	1.291	1.291	0	%100
97	M149A	X	0	0	0	%100
98	M149A	Z	.323	.323	0	%100
99	M152	X	0	0	0	%100
100	M152	Z	.323	.323	0	%100
101	M155	X	0	0	0	%100
102	M155	Z	1.226	1.226	0	%100
103	M159	X	0	0	0	%100
104	M159	Z	.307	.307	0	%100
105	M163	X	0	0	0	%100
106	M163	Z	.307	.307	0	%100
107	M166A	X	0	0	0	%100
108	M166A	Z	.309	.309	0	%100
109	M167	X	0	0	0	%100
110	M167	Z	.309	.309	0	%100
111	M168	X	0	0	0	%100
112	M168	Z	1.237	1.237	0	%100

Member Distributed Loads (BLC 47 : Structure Wo (180 Deg)) (Continued)

	Member Label	Direction	Start Magnitude[lb/ft,...	End Magnitude[lb/ft,F...	Start Location[ft,%]	End Location[ft,%]
113	MP2A	X	0	0	0	%100
114	MP2A	Z	6.402	6.402	0	%100
115	MP4A	X	0	0	0	%100
116	MP4A	Z	6.402	6.402	0	%100
117	MP5A	X	0	0	0	%100
118	MP5A	Z	6.402	6.402	0	%100
119	MP3A	X	0	0	0	%100
120	MP3A	Z	6.402	6.402	0	%100
121	MP1C	X	0	0	0	%100
122	MP1C	Z	6.402	6.402	0	%100
123	MP2C	X	0	0	0	%100
124	MP2C	Z	6.402	6.402	0	%100
125	MP4C	X	0	0	0	%100
126	MP4C	Z	6.402	6.402	0	%100
127	MP5C	X	0	0	0	%100
128	MP5C	Z	6.402	6.402	0	%100
129	MP3C	X	0	0	0	%100
130	MP3C	Z	6.402	6.402	0	%100
131	MP1B	X	0	0	0	%100
132	MP1B	Z	6.402	6.402	0	%100
133	MP2B	X	0	0	0	%100
134	MP2B	Z	6.402	6.402	0	%100
135	MP4B	X	0	0	0	%100
136	MP4B	Z	6.402	6.402	0	%100
137	MP5B	X	0	0	0	%100
138	MP5B	Z	6.402	6.402	0	%100
139	MP3B	X	0	0	0	%100
140	MP3B	Z	6.402	6.402	0	%100
141	M180	X	0	0	0	%100
142	M180	Z	3.226	3.226	0	%100
143	M181	X	0	0	0	%100
144	M181	Z	3.226	3.226	0	%100
145	M182	X	0	0	0	%100
146	M182	Z	12.905	12.905	0	%100
147	M194	X	0	0	0	%100
148	M194	Z	16.887	16.887	0	%100
149	M195	X	0	0	0	%100
150	M195	Z	15.297	15.297	0	%100
151	M196	X	0	0	0	%100
152	M196	Z	16.887	16.887	0	%100
153	M197	X	0	0	0	%100
154	M197	Z	15.297	15.297	0	%100
155	M206	X	0	0	0	%100
156	M206	Z	4.222	4.222	0	%100
157	M207	X	0	0	0	%100
158	M207	Z	3.824	3.824	0	%100
159	M208	X	0	0	0	%100
160	M208	Z	4.222	4.222	0	%100
161	M209	X	0	0	0	%100
162	M209	Z	3.824	3.824	0	%100
163	M218	X	0	0	0	%100
164	M218	Z	4.222	4.222	0	%100

Member Distributed Loads (BLC 47 : Structure Wo (180 Deg)) (Continued)

	Member Label	Direction	Start Magnitude[lb/ft,...	End Magnitude[lb/ft,F...	Start Location[ft,%]	End Location[ft,%]
165	M219	X	0	0	0	%100
166	M219	Z	3.824	3.824	0	%100
167	M220	X	0	0	0	%100
168	M220	Z	4.222	4.222	0	%100
169	M221	X	0	0	0	%100
170	M221	Z	3.824	3.824	0	%100
171	M222	X	0	0	0	%100
172	M222	Z	11.452	11.452	0	%100
173	M223	X	0	0	0	%100
174	M223	Z	13.063	13.063	0	%100
175	M224	X	0	0	0	%100
176	M224	Z	13.063	13.063	0	%100

Member Distributed Loads (BLC 48 : Structure Wo (210 Deg))

	Member Label	Direction	Start Magnitude[lb/ft,...	End Magnitude[lb/ft,F...	Start Location[ft,%]	End Location[ft,%]
1	M19	X	-.932	-.932	0	%100
2	M19	Z	1.615	1.615	0	%100
3	M19A	X	0	0	0	%100
4	M19A	Z	0	0	0	%100
5	M38C	X	-3.729	-3.729	0	%100
6	M38C	Z	6.459	6.459	0	%100
7	M51	X	-.932	-.932	0	%100
8	M51	Z	1.615	1.615	0	%100
9	M104A	X	-.29	-.29	0	%100
10	M104A	Z	.503	.503	0	%100
11	M105A	X	-.29	-.29	0	%100
12	M105A	Z	.503	.503	0	%100
13	M134	X	0	0	0	%100
14	M134	Z	0	0	0	%100
15	M135	X	0	0	0	%100
16	M135	Z	0	0	0	%100
17	M93A	X	-2.212	-2.212	0	%100
18	M93A	Z	3.831	3.831	0	%100
19	M94A	X	-2.212	-2.212	0	%100
20	M94A	Z	3.831	3.831	0	%100
21	M93B	X	-1.987	-1.987	0	%100
22	M93B	Z	3.441	3.441	0	%100
23	M94D	X	-1.987	-1.987	0	%100
24	M94D	Z	3.441	3.441	0	%100
25	M53	X	-.29	-.29	0	%100
26	M53	Z	.503	.503	0	%100
27	M54	X	-.29	-.29	0	%100
28	M54	Z	.503	.503	0	%100
29	M63	X	-2.212	-2.212	0	%100
30	M63	Z	3.831	3.831	0	%100
31	M64	X	-2.212	-2.212	0	%100
32	M64	Z	3.831	3.831	0	%100
33	M69	X	-1.987	-1.987	0	%100
34	M69	Z	3.441	3.441	0	%100
35	M70	X	-1.987	-1.987	0	%100
36	M70	Z	3.441	3.441	0	%100

Member Distributed Loads (BLC 48 : Structure Wo (210 Deg)) (Continued)

	Member Label	Direction	Start Magnitude[lb/ft,...	End Magnitude[lb/ft,F...	Start Location[ft,%]	End Location[ft,%]
37	M71	X	0	0	0	%100
38	M71	Z	0	0	0	%100
39	M72	X	0	0	0	%100
40	M72	Z	0	0	0	%100
41	M81	X	0	0	0	%100
42	M81	Z	0	0	0	%100
43	M82	X	0	0	0	%100
44	M82	Z	0	0	0	%100
45	M87	X	0	0	0	%100
46	M87	Z	0	0	0	%100
47	M88	X	0	0	0	%100
48	M88	Z	0	0	0	%100
49	M89	X	-8.453	-8.453	0	%100
50	M89	Z	14.641	14.641	0	%100
51	M90	X	-8.453	-8.453	0	%100
52	M90	Z	14.641	14.641	0	%100
53	M89A	X	-8.453	-8.453	0	%100
54	M89A	Z	14.641	14.641	0	%100
55	M90A	X	-8.453	-8.453	0	%100
56	M90A	Z	14.641	14.641	0	%100
57	M91	X	0	0	0	%100
58	M91	Z	0	0	0	%100
59	M92	X	0	0	0	%100
60	M92	Z	0	0	0	%100
61	M101	X	-4.646	-4.646	0	%100
62	M101	Z	8.047	8.047	0	%100
63	M91A	X	-4.646	-4.646	0	%100
64	M91A	Z	8.047	8.047	0	%100
65	M93	X	-4.646	-4.646	0	%100
66	M93	Z	8.047	8.047	0	%100
67	M95B	X	-4.646	-4.646	0	%100
68	M95B	Z	8.047	8.047	0	%100
69	M97	X	0	0	0	%100
70	M97	Z	0	0	0	%100
71	M99	X	0	0	0	%100
72	M99	Z	0	0	0	%100
73	M101A	X	-4.646	-4.646	0	%100
74	M101A	Z	8.047	8.047	0	%100
75	M104	X	-4.646	-4.646	0	%100
76	M104	Z	8.047	8.047	0	%100
77	M105B	X	-2.207	-2.207	0	%100
78	M105B	Z	3.822	3.822	0	%100
79	M104B	X	-2.207	-2.207	0	%100
80	M104B	Z	3.822	3.822	0	%100
81	M105C	X	0	0	0	%100
82	M105C	Z	0	0	0	%100
83	M95C	X	-.34	-.34	0	%100
84	M95C	Z	.588	.588	0	%100
85	M96A	X	-.34	-.34	0	%100
86	M96A	Z	.588	.588	0	%100
87	M101B	X	-.34	-.34	0	%100
88	M101B	Z	.588	.588	0	%100

Member Distributed Loads (BLC 48 : Structure Wo (210 Deg)) (Continued)

	Member Label	Direction	Start Magnitude[lb/ft,...	End Magnitude[lb/ft,F...	Start Location[ft,%]	End Location[ft,%]
89	M102B	X	-.34	-.34	0	%100
90	M102B	Z	.588	.588	0	%100
91	MP1A	X	-3.32	-3.32	0	%100
92	MP1A	Z	5.751	5.751	0	%100
93	M144	X	-2.816	-2.816	0	%100
94	M144	Z	4.877	4.877	0	%100
95	M147	X	-.484	-.484	0	%100
96	M147	Z	.838	.838	0	%100
97	M149A	X	-.484	-.484	0	%100
98	M149A	Z	.838	.838	0	%100
99	M152	X	0	0	0	%100
100	M152	Z	0	0	0	%100
101	M155	X	-.46	-.46	0	%100
102	M155	Z	.796	.796	0	%100
103	M159	X	-.46	-.46	0	%100
104	M159	Z	.796	.796	0	%100
105	M163	X	0	0	0	%100
106	M163	Z	0	0	0	%100
107	M166A	X	-.464	-.464	0	%100
108	M166A	Z	.803	.803	0	%100
109	M167	X	0	0	0	%100
110	M167	Z	0	0	0	%100
111	M168	X	-.464	-.464	0	%100
112	M168	Z	.803	.803	0	%100
113	MP2A	X	-3.32	-3.32	0	%100
114	MP2A	Z	5.751	5.751	0	%100
115	MP4A	X	-3.32	-3.32	0	%100
116	MP4A	Z	5.751	5.751	0	%100
117	MP5A	X	-3.32	-3.32	0	%100
118	MP5A	Z	5.751	5.751	0	%100
119	MP3A	X	-3.32	-3.32	0	%100
120	MP3A	Z	5.751	5.751	0	%100
121	MP1C	X	-3.32	-3.32	0	%100
122	MP1C	Z	5.751	5.751	0	%100
123	MP2C	X	-3.32	-3.32	0	%100
124	MP2C	Z	5.751	5.751	0	%100
125	MP4C	X	-3.32	-3.32	0	%100
126	MP4C	Z	5.751	5.751	0	%100
127	MP5C	X	-3.32	-3.32	0	%100
128	MP5C	Z	5.751	5.751	0	%100
129	MP3C	X	-3.32	-3.32	0	%100
130	MP3C	Z	5.751	5.751	0	%100
131	MP1B	X	-3.32	-3.32	0	%100
132	MP1B	Z	5.751	5.751	0	%100
133	MP2B	X	-3.32	-3.32	0	%100
134	MP2B	Z	5.751	5.751	0	%100
135	MP4B	X	-3.32	-3.32	0	%100
136	MP4B	Z	5.751	5.751	0	%100
137	MP5B	X	-3.32	-3.32	0	%100
138	MP5B	Z	5.751	5.751	0	%100
139	MP3B	X	-3.32	-3.32	0	%100
140	MP3B	Z	5.751	5.751	0	%100

Member Distributed Loads (BLC 48 : Structure Wo (210 Deg)) (Continued)

	Member Label	Direction	Start Magnitude[lb/ft,...	End Magnitude[lb/ft,F...	Start Location[ft,%]	End Location[ft,%]
141	M180	X	-4.84	-4.84	0	%100
142	M180	Z	8.382	8.382	0	%100
143	M181	X	0	0	0	%100
144	M181	Z	0	0	0	%100
145	M182	X	-4.84	-4.84	0	%100
146	M182	Z	8.382	8.382	0	%100
147	M194	X	-6.333	-6.333	0	%100
148	M194	Z	10.968	10.968	0	%100
149	M195	X	-5.736	-5.736	0	%100
150	M195	Z	9.936	9.936	0	%100
151	M196	X	-6.333	-6.333	0	%100
152	M196	Z	10.968	10.968	0	%100
153	M197	X	-5.736	-5.736	0	%100
154	M197	Z	9.936	9.936	0	%100
155	M206	X	-6.333	-6.333	0	%100
156	M206	Z	10.968	10.968	0	%100
157	M207	X	-5.736	-5.736	0	%100
158	M207	Z	9.936	9.936	0	%100
159	M208	X	-6.333	-6.333	0	%100
160	M208	Z	10.968	10.968	0	%100
161	M209	X	-5.736	-5.736	0	%100
162	M209	Z	9.936	9.936	0	%100
163	M218	X	0	0	0	%100
164	M218	Z	0	0	0	%100
165	M219	X	0	0	0	%100
166	M219	Z	0	0	0	%100
167	M220	X	0	0	0	%100
168	M220	Z	0	0	0	%100
169	M221	X	0	0	0	%100
170	M221	Z	0	0	0	%100
171	M222	X	-5.995	-5.995	0	%100
172	M222	Z	10.383	10.383	0	%100
173	M223	X	-5.995	-5.995	0	%100
174	M223	Z	10.383	10.383	0	%100
175	M224	X	-6.8	-6.8	0	%100
176	M224	Z	11.778	11.778	0	%100

Member Distributed Loads (BLC 49 : Structure Wo (240 Deg))

	Member Label	Direction	Start Magnitude[lb/ft,...	End Magnitude[lb/ft,F...	Start Location[ft,%]	End Location[ft,%]
1	M19	X	0	0	0	%100
2	M19	Z	0	0	0	%100
3	M19A	X	-2.682	-2.682	0	%100
4	M19A	Z	1.549	1.549	0	%100
5	M38C	X	-4.844	-4.844	0	%100
6	M38C	Z	2.797	2.797	0	%100
7	M51	X	-4.844	-4.844	0	%100
8	M51	Z	2.797	2.797	0	%100
9	M104A	X	-.168	-.168	0	%100
10	M104A	Z	.097	.097	0	%100
11	M105A	X	-.168	-.168	0	%100
12	M105A	Z	.097	.097	0	%100

Member Distributed Loads (BLC 49 : Structure Wo (240 Deg)) (Continued)

	Member Label	Direction	Start Magnitude[lb/ft,...	End Magnitude[lb/ft,F...	Start Location[ft,%]	End Location[ft,%]
13	M134	X	-.196	-.196	0	%100
14	M134	Z	.113	.113	0	%100
15	M135	X	-.196	-.196	0	%100
16	M135	Z	.113	.113	0	%100
17	M93A	X	-1.277	-1.277	0	%100
18	M93A	Z	.737	.737	0	%100
19	M94A	X	-1.277	-1.277	0	%100
20	M94A	Z	.737	.737	0	%100
21	M93B	X	-1.147	-1.147	0	%100
22	M93B	Z	.662	.662	0	%100
23	M94D	X	-1.147	-1.147	0	%100
24	M94D	Z	.662	.662	0	%100
25	M53	X	-.671	-.671	0	%100
26	M53	Z	.387	.387	0	%100
27	M54	X	-.671	-.671	0	%100
28	M54	Z	.387	.387	0	%100
29	M63	X	-5.107	-5.107	0	%100
30	M63	Z	2.949	2.949	0	%100
31	M64	X	-5.107	-5.107	0	%100
32	M64	Z	2.949	2.949	0	%100
33	M69	X	-4.589	-4.589	0	%100
34	M69	Z	2.649	2.649	0	%100
35	M70	X	-4.589	-4.589	0	%100
36	M70	Z	2.649	2.649	0	%100
37	M71	X	-.168	-.168	0	%100
38	M71	Z	.097	.097	0	%100
39	M72	X	-.168	-.168	0	%100
40	M72	Z	.097	.097	0	%100
41	M81	X	-1.277	-1.277	0	%100
42	M81	Z	.737	.737	0	%100
43	M82	X	-1.277	-1.277	0	%100
44	M82	Z	.737	.737	0	%100
45	M87	X	-1.147	-1.147	0	%100
46	M87	Z	.662	.662	0	%100
47	M88	X	-1.147	-1.147	0	%100
48	M88	Z	.662	.662	0	%100
49	M89	X	-4.88	-4.88	0	%100
50	M89	Z	2.818	2.818	0	%100
51	M90	X	-4.88	-4.88	0	%100
52	M90	Z	2.818	2.818	0	%100
53	M89A	X	-19.521	-19.521	0	%100
54	M89A	Z	11.271	11.271	0	%100
55	M90A	X	-19.521	-19.521	0	%100
56	M90A	Z	11.271	11.271	0	%100
57	M91	X	-4.88	-4.88	0	%100
58	M91	Z	2.818	2.818	0	%100
59	M92	X	-4.88	-4.88	0	%100
60	M92	Z	2.818	2.818	0	%100
61	M101	X	-2.682	-2.682	0	%100
62	M101	Z	1.549	1.549	0	%100
63	M91A	X	-2.682	-2.682	0	%100
64	M91A	Z	1.549	1.549	0	%100

Member Distributed Loads (BLC 49 : Structure Wo (240 Deg)) (Continued)

	Member Label	Direction	Start Magnitude[lb/ft,...	End Magnitude[lb/ft,F...	Start Location[ft,%]	End Location[ft,%]
65	M93	X	-10.729	-10.729	0	%100
66	M93	Z	6.195	6.195	0	%100
67	M95B	X	-10.729	-10.729	0	%100
68	M95B	Z	6.195	6.195	0	%100
69	M97	X	-2.682	-2.682	0	%100
70	M97	Z	1.549	1.549	0	%100
71	M99	X	-2.682	-2.682	0	%100
72	M99	Z	1.549	1.549	0	%100
73	M101A	X	-2.682	-2.682	0	%100
74	M101A	Z	1.549	1.549	0	%100
75	M104	X	-10.729	-10.729	0	%100
76	M104	Z	6.195	6.195	0	%100
77	M105B	X	-1.274	-1.274	0	%100
78	M105B	Z	.736	.736	0	%100
79	M104B	X	-5.096	-5.096	0	%100
80	M104B	Z	2.942	2.942	0	%100
81	M105C	X	-1.274	-1.274	0	%100
82	M105C	Z	.736	.736	0	%100
83	M95C	X	-.196	-.196	0	%100
84	M95C	Z	.113	.113	0	%100
85	M96A	X	-.196	-.196	0	%100
86	M96A	Z	.113	.113	0	%100
87	M101B	X	-.784	-.784	0	%100
88	M101B	Z	.453	.453	0	%100
89	M102B	X	-.784	-.784	0	%100
90	M102B	Z	.453	.453	0	%100
91	MP1A	X	-6.164	-6.164	0	%100
92	MP1A	Z	3.559	3.559	0	%100
93	M144	X	-5.099	-5.099	0	%100
94	M144	Z	2.944	2.944	0	%100
95	M147	X	-.279	-.279	0	%100
96	M147	Z	.161	.161	0	%100
97	M149A	X	-1.118	-1.118	0	%100
98	M149A	Z	.645	.645	0	%100
99	M152	X	-.279	-.279	0	%100
100	M152	Z	.161	.161	0	%100
101	M155	X	-.265	-.265	0	%100
102	M155	Z	.153	.153	0	%100
103	M159	X	-1.062	-1.062	0	%100
104	M159	Z	.613	.613	0	%100
105	M163	X	-.265	-.265	0	%100
106	M163	Z	.153	.153	0	%100
107	M166A	X	-1.071	-1.071	0	%100
108	M166A	Z	.618	.618	0	%100
109	M167	X	-.268	-.268	0	%100
110	M167	Z	.155	.155	0	%100
111	M168	X	-.268	-.268	0	%100
112	M168	Z	.155	.155	0	%100
113	MP2A	X	-6.164	-6.164	0	%100
114	MP2A	Z	3.559	3.559	0	%100
115	MP4A	X	-6.164	-6.164	0	%100
116	MP4A	Z	3.559	3.559	0	%100

Member Distributed Loads (BLC 49 : Structure Wo (240 Deg)) (Continued)

	Member Label	Direction	Start Magnitude[lb/ft,...	End Magnitude[lb/ft,F...	Start Location[ft,%]	End Location[ft,%]
117	MP5A	X	-6.164	-6.164	0	%100
118	MP5A	Z	3.559	3.559	0	%100
119	MP3A	X	-6.164	-6.164	0	%100
120	MP3A	Z	3.559	3.559	0	%100
121	MP1C	X	-6.164	-6.164	0	%100
122	MP1C	Z	3.559	3.559	0	%100
123	MP2C	X	-6.164	-6.164	0	%100
124	MP2C	Z	3.559	3.559	0	%100
125	MP4C	X	-6.164	-6.164	0	%100
126	MP4C	Z	3.559	3.559	0	%100
127	MP5C	X	-6.164	-6.164	0	%100
128	MP5C	Z	3.559	3.559	0	%100
129	MP3C	X	-6.164	-6.164	0	%100
130	MP3C	Z	3.559	3.559	0	%100
131	MP1B	X	-6.164	-6.164	0	%100
132	MP1B	Z	3.559	3.559	0	%100
133	MP2B	X	-6.164	-6.164	0	%100
134	MP2B	Z	3.559	3.559	0	%100
135	MP4B	X	-6.164	-6.164	0	%100
136	MP4B	Z	3.559	3.559	0	%100
137	MP5B	X	-6.164	-6.164	0	%100
138	MP5B	Z	3.559	3.559	0	%100
139	MP3B	X	-6.164	-6.164	0	%100
140	MP3B	Z	3.559	3.559	0	%100
141	M180	X	-11.176	-11.176	0	%100
142	M180	Z	6.453	6.453	0	%100
143	M181	X	-2.794	-2.794	0	%100
144	M181	Z	1.613	1.613	0	%100
145	M182	X	-2.794	-2.794	0	%100
146	M182	Z	1.613	1.613	0	%100
147	M194	X	-3.656	-3.656	0	%100
148	M194	Z	2.111	2.111	0	%100
149	M195	X	-3.312	-3.312	0	%100
150	M195	Z	1.912	1.912	0	%100
151	M196	X	-3.656	-3.656	0	%100
152	M196	Z	2.111	2.111	0	%100
153	M197	X	-3.312	-3.312	0	%100
154	M197	Z	1.912	1.912	0	%100
155	M206	X	-14.624	-14.624	0	%100
156	M206	Z	8.443	8.443	0	%100
157	M207	X	-13.248	-13.248	0	%100
158	M207	Z	7.649	7.649	0	%100
159	M208	X	-14.624	-14.624	0	%100
160	M208	Z	8.443	8.443	0	%100
161	M209	X	-13.248	-13.248	0	%100
162	M209	Z	7.649	7.649	0	%100
163	M218	X	-3.656	-3.656	0	%100
164	M218	Z	2.111	2.111	0	%100
165	M219	X	-3.312	-3.312	0	%100
166	M219	Z	1.912	1.912	0	%100
167	M220	X	-3.656	-3.656	0	%100
168	M220	Z	2.111	2.111	0	%100

Member Distributed Loads (BLC 49 : Structure Wo (240 Deg)) (Continued)

	Member Label	Direction	Start Magnitude[lb/ft,...	End Magnitude[lb/ft,F...	Start Location[ft,%]	End Location[ft,%]
169	M221	X	-3.312	-3.312	0	%100
170	M221	Z	1.912	1.912	0	%100
171	M222	X	-11.313	-11.313	0	%100
172	M222	Z	6.532	6.532	0	%100
173	M223	X	-9.918	-9.918	0	%100
174	M223	Z	5.726	5.726	0	%100
175	M224	X	-11.313	-11.313	0	%100
176	M224	Z	6.532	6.532	0	%100

Member Distributed Loads (BLC 50 : Structure Wo (270 Deg))

	Member Label	Direction	Start Magnitude[lb/ft,...	End Magnitude[lb/ft,F...	Start Location[ft,%]	End Location[ft,%]
1	M19	X	-1.865	-1.865	0	%100
2	M19	Z	0	0	0	%100
3	M19A	X	-9.292	-9.292	0	%100
4	M19A	Z	0	0	0	%100
5	M38C	X	-1.865	-1.865	0	%100
6	M38C	Z	0	0	0	%100
7	M51	X	-7.458	-7.458	0	%100
8	M51	Z	0	0	0	%100
9	M104A	X	0	0	0	%100
10	M104A	Z	0	0	0	%100
11	M105A	X	0	0	0	%100
12	M105A	Z	0	0	0	%100
13	M134	X	-.679	-.679	0	%100
14	M134	Z	0	0	0	%100
15	M135	X	-.679	-.679	0	%100
16	M135	Z	0	0	0	%100
17	M93A	X	0	0	0	%100
18	M93A	Z	0	0	0	%100
19	M94A	X	0	0	0	%100
20	M94A	Z	0	0	0	%100
21	M93B	X	0	0	0	%100
22	M93B	Z	0	0	0	%100
23	M94D	X	0	0	0	%100
24	M94D	Z	0	0	0	%100
25	M53	X	-.581	-.581	0	%100
26	M53	Z	0	0	0	%100
27	M54	X	-.581	-.581	0	%100
28	M54	Z	0	0	0	%100
29	M63	X	-4.423	-4.423	0	%100
30	M63	Z	0	0	0	%100
31	M64	X	-4.423	-4.423	0	%100
32	M64	Z	0	0	0	%100
33	M69	X	-3.974	-3.974	0	%100
34	M69	Z	0	0	0	%100
35	M70	X	-3.974	-3.974	0	%100
36	M70	Z	0	0	0	%100
37	M71	X	-.581	-.581	0	%100
38	M71	Z	0	0	0	%100
39	M72	X	-.581	-.581	0	%100
40	M72	Z	0	0	0	%100

Member Distributed Loads (BLC 50 : Structure Wo (270 Deg)) (Continued)

	Member Label	Direction	Start Magnitude[lb/ft,...	End Magnitude[lb/ft,F...	Start Location[ft,%]	End Location[ft,%]
41	M81	X	-4.423	-4.423	0	%100
42	M81	Z	0	0	0	%100
43	M82	X	-4.423	-4.423	0	%100
44	M82	Z	0	0	0	%100
45	M87	X	-3.974	-3.974	0	%100
46	M87	Z	0	0	0	%100
47	M88	X	-3.974	-3.974	0	%100
48	M88	Z	0	0	0	%100
49	M89	X	0	0	0	%100
50	M89	Z	0	0	0	%100
51	M90	X	0	0	0	%100
52	M90	Z	0	0	0	%100
53	M89A	X	-16.906	-16.906	0	%100
54	M89A	Z	0	0	0	%100
55	M90A	X	-16.906	-16.906	0	%100
56	M90A	Z	0	0	0	%100
57	M91	X	-16.906	-16.906	0	%100
58	M91	Z	0	0	0	%100
59	M92	X	-16.906	-16.906	0	%100
60	M92	Z	0	0	0	%100
61	M101	X	0	0	0	%100
62	M101	Z	0	0	0	%100
63	M91A	X	0	0	0	%100
64	M91A	Z	0	0	0	%100
65	M93	X	-9.292	-9.292	0	%100
66	M93	Z	0	0	0	%100
67	M95B	X	-9.292	-9.292	0	%100
68	M95B	Z	0	0	0	%100
69	M97	X	-9.292	-9.292	0	%100
70	M97	Z	0	0	0	%100
71	M99	X	-9.292	-9.292	0	%100
72	M99	Z	0	0	0	%100
73	M101A	X	0	0	0	%100
74	M101A	Z	0	0	0	%100
75	M104	X	-9.292	-9.292	0	%100
76	M104	Z	0	0	0	%100
77	M105B	X	0	0	0	%100
78	M105B	Z	0	0	0	%100
79	M104B	X	-4.414	-4.414	0	%100
80	M104B	Z	0	0	0	%100
81	M105C	X	-4.414	-4.414	0	%100
82	M105C	Z	0	0	0	%100
83	M95C	X	0	0	0	%100
84	M95C	Z	0	0	0	%100
85	M96A	X	0	0	0	%100
86	M96A	Z	0	0	0	%100
87	M101B	X	-.679	-.679	0	%100
88	M101B	Z	0	0	0	%100
89	M102B	X	-.679	-.679	0	%100
90	M102B	Z	0	0	0	%100
91	MP1A	X	-7.356	-7.356	0	%100
92	MP1A	Z	0	0	0	%100

Member Distributed Loads (BLC 50 : Structure Wo (270 Deg)) (Continued)

	Member Label	Direction	Start Magnitude[lb/ft,...	End Magnitude[lb/ft,F...	Start Location[ft,%]	End Location[ft,%]
93	M144	X	-6.015	-6.015	0	%100
94	M144	Z	0	0	0	%100
95	M147	X	0	0	0	%100
96	M147	Z	0	0	0	%100
97	M149A	X	-.968	-.968	0	%100
98	M149A	Z	0	0	0	%100
99	M152	X	-.968	-.968	0	%100
100	M152	Z	0	0	0	%100
101	M155	X	0	0	0	%100
102	M155	Z	0	0	0	%100
103	M159	X	-.92	-.92	0	%100
104	M159	Z	0	0	0	%100
105	M163	X	-.92	-.92	0	%100
106	M163	Z	0	0	0	%100
107	M166A	X	-.928	-.928	0	%100
108	M166A	Z	0	0	0	%100
109	M167	X	-.928	-.928	0	%100
110	M167	Z	0	0	0	%100
111	M168	X	0	0	0	%100
112	M168	Z	0	0	0	%100
113	MP2A	X	-7.356	-7.356	0	%100
114	MP2A	Z	0	0	0	%100
115	MP4A	X	-7.356	-7.356	0	%100
116	MP4A	Z	0	0	0	%100
117	MP5A	X	-7.356	-7.356	0	%100
118	MP5A	Z	0	0	0	%100
119	MP3A	X	-7.356	-7.356	0	%100
120	MP3A	Z	0	0	0	%100
121	MP1C	X	-7.356	-7.356	0	%100
122	MP1C	Z	0	0	0	%100
123	MP2C	X	-7.356	-7.356	0	%100
124	MP2C	Z	0	0	0	%100
125	MP4C	X	-7.356	-7.356	0	%100
126	MP4C	Z	0	0	0	%100
127	MP5C	X	-7.356	-7.356	0	%100
128	MP5C	Z	0	0	0	%100
129	MP3C	X	-7.356	-7.356	0	%100
130	MP3C	Z	0	0	0	%100
131	MP1B	X	-7.356	-7.356	0	%100
132	MP1B	Z	0	0	0	%100
133	MP2B	X	-7.356	-7.356	0	%100
134	MP2B	Z	0	0	0	%100
135	MP4B	X	-7.356	-7.356	0	%100
136	MP4B	Z	0	0	0	%100
137	MP5B	X	-7.356	-7.356	0	%100
138	MP5B	Z	0	0	0	%100
139	MP3B	X	-7.356	-7.356	0	%100
140	MP3B	Z	0	0	0	%100
141	M180	X	-9.679	-9.679	0	%100
142	M180	Z	0	0	0	%100
143	M181	X	-9.679	-9.679	0	%100
144	M181	Z	0	0	0	%100

Member Distributed Loads (BLC 50 : Structure Wo (270 Deg)) (Continued)

	Member Label	Direction	Start Magnitude[lb/ft,...	End Magnitude[lb/ft,F...	Start Location[ft,%]	End Location[ft,%]
145	M182	X	0	0	0	%100
146	M182	Z	0	0	0	%100
147	M194	X	0	0	0	%100
148	M194	Z	0	0	0	%100
149	M195	X	0	0	0	%100
150	M195	Z	0	0	0	%100
151	M196	X	0	0	0	%100
152	M196	Z	0	0	0	%100
153	M197	X	0	0	0	%100
154	M197	Z	0	0	0	%100
155	M206	X	-12.665	-12.665	0	%100
156	M206	Z	0	0	0	%100
157	M207	X	-11.473	-11.473	0	%100
158	M207	Z	0	0	0	%100
159	M208	X	-12.665	-12.665	0	%100
160	M208	Z	0	0	0	%100
161	M209	X	-11.473	-11.473	0	%100
162	M209	Z	0	0	0	%100
163	M218	X	-12.665	-12.665	0	%100
164	M218	Z	0	0	0	%100
165	M219	X	-11.473	-11.473	0	%100
166	M219	Z	0	0	0	%100
167	M220	X	-12.665	-12.665	0	%100
168	M220	Z	0	0	0	%100
169	M221	X	-11.473	-11.473	0	%100
170	M221	Z	0	0	0	%100
171	M222	X	-13.6	-13.6	0	%100
172	M222	Z	0	0	0	%100
173	M223	X	-11.989	-11.989	0	%100
174	M223	Z	0	0	0	%100
175	M224	X	-11.989	-11.989	0	%100
176	M224	Z	0	0	0	%100

Member Distributed Loads (BLC 51 : Structure Wo (300 Deg))

	Member Label	Direction	Start Magnitude[lb/ft,...	End Magnitude[lb/ft,F...	Start Location[ft,%]	End Location[ft,%]
1	M19	X	-4.844	-4.844	0	%100
2	M19	Z	-2.797	-2.797	0	%100
3	M19A	X	-10.729	-10.729	0	%100
4	M19A	Z	-6.195	-6.195	0	%100
5	M38C	X	0	0	0	%100
6	M38C	Z	0	0	0	%100
7	M51	X	-4.844	-4.844	0	%100
8	M51	Z	-2.797	-2.797	0	%100
9	M104A	X	-.168	-.168	0	%100
10	M104A	Z	-.097	-.097	0	%100
11	M105A	X	-.168	-.168	0	%100
12	M105A	Z	-.097	-.097	0	%100
13	M134	X	-.784	-.784	0	%100
14	M134	Z	-.453	-.453	0	%100
15	M135	X	-.784	-.784	0	%100
16	M135	Z	-.453	-.453	0	%100

Member Distributed Loads (BLC 51 : Structure Wo (300 Deg)) (Continued)

	Member Label	Direction	Start Magnitude[lb/ft,...	End Magnitude[lb/ft,F...	Start Location[ft,%]	End Location[ft,%]
17	M93A	X	-1.277	-1.277	0	%100
18	M93A	Z	-.737	-.737	0	%100
19	M94A	X	-1.277	-1.277	0	%100
20	M94A	Z	-.737	-.737	0	%100
21	M93B	X	-1.147	-1.147	0	%100
22	M93B	Z	-.662	-.662	0	%100
23	M94D	X	-1.147	-1.147	0	%100
24	M94D	Z	-.662	-.662	0	%100
25	M53	X	-.168	-.168	0	%100
26	M53	Z	-.097	-.097	0	%100
27	M54	X	-.168	-.168	0	%100
28	M54	Z	-.097	-.097	0	%100
29	M63	X	-1.277	-1.277	0	%100
30	M63	Z	-.737	-.737	0	%100
31	M64	X	-1.277	-1.277	0	%100
32	M64	Z	-.737	-.737	0	%100
33	M69	X	-1.147	-1.147	0	%100
34	M69	Z	-.662	-.662	0	%100
35	M70	X	-1.147	-1.147	0	%100
36	M70	Z	-.662	-.662	0	%100
37	M71	X	-.671	-.671	0	%100
38	M71	Z	-.387	-.387	0	%100
39	M72	X	-.671	-.671	0	%100
40	M72	Z	-.387	-.387	0	%100
41	M81	X	-5.107	-5.107	0	%100
42	M81	Z	-2.949	-2.949	0	%100
43	M82	X	-5.107	-5.107	0	%100
44	M82	Z	-2.949	-2.949	0	%100
45	M87	X	-4.589	-4.589	0	%100
46	M87	Z	-2.649	-2.649	0	%100
47	M88	X	-4.589	-4.589	0	%100
48	M88	Z	-2.649	-2.649	0	%100
49	M89	X	-4.88	-4.88	0	%100
50	M89	Z	-2.818	-2.818	0	%100
51	M90	X	-4.88	-4.88	0	%100
52	M90	Z	-2.818	-2.818	0	%100
53	M89A	X	-4.88	-4.88	0	%100
54	M89A	Z	-2.818	-2.818	0	%100
55	M90A	X	-4.88	-4.88	0	%100
56	M90A	Z	-2.818	-2.818	0	%100
57	M91	X	-19.521	-19.521	0	%100
58	M91	Z	-11.271	-11.271	0	%100
59	M92	X	-19.521	-19.521	0	%100
60	M92	Z	-11.271	-11.271	0	%100
61	M101	X	-2.682	-2.682	0	%100
62	M101	Z	-1.549	-1.549	0	%100
63	M91A	X	-2.682	-2.682	0	%100
64	M91A	Z	-1.549	-1.549	0	%100
65	M93	X	-2.682	-2.682	0	%100
66	M93	Z	-1.549	-1.549	0	%100
67	M95B	X	-2.682	-2.682	0	%100
68	M95B	Z	-1.549	-1.549	0	%100

Member Distributed Loads (BLC 51 : Structure Wo (300 Deg)) (Continued)

	Member Label	Direction	Start Magnitude[lb/ft,...	End Magnitude[lb/ft,F...	Start Location[ft,%]	End Location[ft,%]
69	M97	X	-10.729	-10.729	0	%100
70	M97	Z	-6.195	-6.195	0	%100
71	M99	X	-10.729	-10.729	0	%100
72	M99	Z	-6.195	-6.195	0	%100
73	M101A	X	-2.682	-2.682	0	%100
74	M101A	Z	-1.549	-1.549	0	%100
75	M104	X	-2.682	-2.682	0	%100
76	M104	Z	-1.549	-1.549	0	%100
77	M105B	X	-1.274	-1.274	0	%100
78	M105B	Z	-.736	-.736	0	%100
79	M104B	X	-1.274	-1.274	0	%100
80	M104B	Z	-.736	-.736	0	%100
81	M105C	X	-5.096	-5.096	0	%100
82	M105C	Z	-2.942	-2.942	0	%100
83	M95C	X	-.196	-.196	0	%100
84	M95C	Z	-.113	-.113	0	%100
85	M96A	X	-.196	-.196	0	%100
86	M96A	Z	-.113	-.113	0	%100
87	M101B	X	-.196	-.196	0	%100
88	M101B	Z	-.113	-.113	0	%100
89	M102B	X	-.196	-.196	0	%100
90	M102B	Z	-.113	-.113	0	%100
91	MP1A	X	-6.164	-6.164	0	%100
92	MP1A	Z	-3.559	-3.559	0	%100
93	M144	X	-5.099	-5.099	0	%100
94	M144	Z	-2.944	-2.944	0	%100
95	M147	X	-.279	-.279	0	%100
96	M147	Z	-.161	-.161	0	%100
97	M149A	X	-.279	-.279	0	%100
98	M149A	Z	-.161	-.161	0	%100
99	M152	X	-1.118	-1.118	0	%100
100	M152	Z	-.645	-.645	0	%100
101	M155	X	-.265	-.265	0	%100
102	M155	Z	-.153	-.153	0	%100
103	M159	X	-.265	-.265	0	%100
104	M159	Z	-.153	-.153	0	%100
105	M163	X	-1.062	-1.062	0	%100
106	M163	Z	-.613	-.613	0	%100
107	M166A	X	-.268	-.268	0	%100
108	M166A	Z	-.155	-.155	0	%100
109	M167	X	-1.071	-1.071	0	%100
110	M167	Z	-.618	-.618	0	%100
111	M168	X	-.268	-.268	0	%100
112	M168	Z	-.155	-.155	0	%100
113	MP2A	X	-6.164	-6.164	0	%100
114	MP2A	Z	-3.559	-3.559	0	%100
115	MP4A	X	-6.164	-6.164	0	%100
116	MP4A	Z	-3.559	-3.559	0	%100
117	MP5A	X	-6.164	-6.164	0	%100
118	MP5A	Z	-3.559	-3.559	0	%100
119	MP3A	X	-6.164	-6.164	0	%100
120	MP3A	Z	-3.559	-3.559	0	%100

Member Distributed Loads (BLC 51 : Structure Wo (300 Deg)) (Continued)

	Member Label	Direction	Start Magnitude[lb/ft,...	End Magnitude[lb/ft,F...	Start Location[ft,%]	End Location[ft,%]
121	MP1C	X	-6.164	-6.164	0	%100
122	MP1C	Z	-3.559	-3.559	0	%100
123	MP2C	X	-6.164	-6.164	0	%100
124	MP2C	Z	-3.559	-3.559	0	%100
125	MP4C	X	-6.164	-6.164	0	%100
126	MP4C	Z	-3.559	-3.559	0	%100
127	MP5C	X	-6.164	-6.164	0	%100
128	MP5C	Z	-3.559	-3.559	0	%100
129	MP3C	X	-6.164	-6.164	0	%100
130	MP3C	Z	-3.559	-3.559	0	%100
131	MP1B	X	-6.164	-6.164	0	%100
132	MP1B	Z	-3.559	-3.559	0	%100
133	MP2B	X	-6.164	-6.164	0	%100
134	MP2B	Z	-3.559	-3.559	0	%100
135	MP4B	X	-6.164	-6.164	0	%100
136	MP4B	Z	-3.559	-3.559	0	%100
137	MP5B	X	-6.164	-6.164	0	%100
138	MP5B	Z	-3.559	-3.559	0	%100
139	MP3B	X	-6.164	-6.164	0	%100
140	MP3B	Z	-3.559	-3.559	0	%100
141	M180	X	-2.794	-2.794	0	%100
142	M180	Z	-1.613	-1.613	0	%100
143	M181	X	-11.176	-11.176	0	%100
144	M181	Z	-6.453	-6.453	0	%100
145	M182	X	-2.794	-2.794	0	%100
146	M182	Z	-1.613	-1.613	0	%100
147	M194	X	-3.656	-3.656	0	%100
148	M194	Z	-2.111	-2.111	0	%100
149	M195	X	-3.312	-3.312	0	%100
150	M195	Z	-1.912	-1.912	0	%100
151	M196	X	-3.656	-3.656	0	%100
152	M196	Z	-2.111	-2.111	0	%100
153	M197	X	-3.312	-3.312	0	%100
154	M197	Z	-1.912	-1.912	0	%100
155	M206	X	-3.656	-3.656	0	%100
156	M206	Z	-2.111	-2.111	0	%100
157	M207	X	-3.312	-3.312	0	%100
158	M207	Z	-1.912	-1.912	0	%100
159	M208	X	-3.656	-3.656	0	%100
160	M208	Z	-2.111	-2.111	0	%100
161	M209	X	-3.312	-3.312	0	%100
162	M209	Z	-1.912	-1.912	0	%100
163	M218	X	-14.624	-14.624	0	%100
164	M218	Z	-8.443	-8.443	0	%100
165	M219	X	-13.248	-13.248	0	%100
166	M219	Z	-7.649	-7.649	0	%100
167	M220	X	-14.624	-14.624	0	%100
168	M220	Z	-8.443	-8.443	0	%100
169	M221	X	-13.248	-13.248	0	%100
170	M221	Z	-7.649	-7.649	0	%100
171	M222	X	-11.313	-11.313	0	%100
172	M222	Z	-6.532	-6.532	0	%100

Member Distributed Loads (BLC 51 : Structure Wo (300 Deg)) (Continued)

	Member Label	Direction	Start Magnitude[lb/ft,...	End Magnitude[lb/ft,F...	Start Location[ft,%]	End Location[ft,%]
173	M223	X	-11.313	-11.313	0	%100
174	M223	Z	-6.532	-6.532	0	%100
175	M224	X	-9.918	-9.918	0	%100
176	M224	Z	-5.726	-5.726	0	%100

Member Distributed Loads (BLC 52 : Structure Wo (330 Deg))

	Member Label	Direction	Start Magnitude[lb/ft,...	End Magnitude[lb/ft,F...	Start Location[ft,%]	End Location[ft,%]
1	M19	X	-3.729	-3.729	0	%100
2	M19	Z	-6.459	-6.459	0	%100
3	M19A	X	-4.646	-4.646	0	%100
4	M19A	Z	-8.047	-8.047	0	%100
5	M38C	X	-.932	-.932	0	%100
6	M38C	Z	-1.615	-1.615	0	%100
7	M51	X	-.932	-.932	0	%100
8	M51	Z	-1.615	-1.615	0	%100
9	M104A	X	-.29	-.29	0	%100
10	M104A	Z	-.503	-.503	0	%100
11	M105A	X	-.29	-.29	0	%100
12	M105A	Z	-.503	-.503	0	%100
13	M134	X	-.34	-.34	0	%100
14	M134	Z	-.588	-.588	0	%100
15	M135	X	-.34	-.34	0	%100
16	M135	Z	-.588	-.588	0	%100
17	M93A	X	-2.212	-2.212	0	%100
18	M93A	Z	-3.831	-3.831	0	%100
19	M94A	X	-2.212	-2.212	0	%100
20	M94A	Z	-3.831	-3.831	0	%100
21	M93B	X	-1.987	-1.987	0	%100
22	M93B	Z	-3.441	-3.441	0	%100
23	M94D	X	-1.987	-1.987	0	%100
24	M94D	Z	-3.441	-3.441	0	%100
25	M53	X	0	0	0	%100
26	M53	Z	0	0	0	%100
27	M54	X	0	0	0	%100
28	M54	Z	0	0	0	%100
29	M63	X	0	0	0	%100
30	M63	Z	0	0	0	%100
31	M64	X	0	0	0	%100
32	M64	Z	0	0	0	%100
33	M69	X	0	0	0	%100
34	M69	Z	0	0	0	%100
35	M70	X	0	0	0	%100
36	M70	Z	0	0	0	%100
37	M71	X	-.29	-.29	0	%100
38	M71	Z	-.503	-.503	0	%100
39	M72	X	-.29	-.29	0	%100
40	M72	Z	-.503	-.503	0	%100
41	M81	X	-2.212	-2.212	0	%100
42	M81	Z	-3.831	-3.831	0	%100
43	M82	X	-2.212	-2.212	0	%100
44	M82	Z	-3.831	-3.831	0	%100

Member Distributed Loads (BLC 52 : Structure Wo (330 Deg)) (Continued)

	Member Label	Direction	Start Magnitude[lb/ft,...	End Magnitude[lb/ft,F...	Start Location[ft,%]	End Location[ft,%]
45	M87	X	-1.987	-1.987	0	%100
46	M87	Z	-3.441	-3.441	0	%100
47	M88	X	-1.987	-1.987	0	%100
48	M88	Z	-3.441	-3.441	0	%100
49	M89	X	-8.453	-8.453	0	%100
50	M89	Z	-14.641	-14.641	0	%100
51	M90	X	-8.453	-8.453	0	%100
52	M90	Z	-14.641	-14.641	0	%100
53	M89A	X	0	0	0	%100
54	M89A	Z	0	0	0	%100
55	M90A	X	0	0	0	%100
56	M90A	Z	0	0	0	%100
57	M91	X	-8.453	-8.453	0	%100
58	M91	Z	-14.641	-14.641	0	%100
59	M92	X	-8.453	-8.453	0	%100
60	M92	Z	-14.641	-14.641	0	%100
61	M101	X	-4.646	-4.646	0	%100
62	M101	Z	-8.047	-8.047	0	%100
63	M91A	X	-4.646	-4.646	0	%100
64	M91A	Z	-8.047	-8.047	0	%100
65	M93	X	0	0	0	%100
66	M93	Z	0	0	0	%100
67	M95B	X	0	0	0	%100
68	M95B	Z	0	0	0	%100
69	M97	X	-4.646	-4.646	0	%100
70	M97	Z	-8.047	-8.047	0	%100
71	M99	X	-4.646	-4.646	0	%100
72	M99	Z	-8.047	-8.047	0	%100
73	M101A	X	-4.646	-4.646	0	%100
74	M101A	Z	-8.047	-8.047	0	%100
75	M104	X	0	0	0	%100
76	M104	Z	0	0	0	%100
77	M105B	X	-2.207	-2.207	0	%100
78	M105B	Z	-3.822	-3.822	0	%100
79	M104B	X	0	0	0	%100
80	M104B	Z	0	0	0	%100
81	M105C	X	-2.207	-2.207	0	%100
82	M105C	Z	-3.822	-3.822	0	%100
83	M95C	X	-.34	-.34	0	%100
84	M95C	Z	-.588	-.588	0	%100
85	M96A	X	-.34	-.34	0	%100
86	M96A	Z	-.588	-.588	0	%100
87	M101B	X	0	0	0	%100
88	M101B	Z	0	0	0	%100
89	M102B	X	0	0	0	%100
90	M102B	Z	0	0	0	%100
91	MP1A	X	-3.32	-3.32	0	%100
92	MP1A	Z	-5.751	-5.751	0	%100
93	M144	X	-2.816	-2.816	0	%100
94	M144	Z	-4.877	-4.877	0	%100
95	M147	X	-.484	-.484	0	%100
96	M147	Z	-.838	-.838	0	%100

Member Distributed Loads (BLC 52 : Structure Wo (330 Deg)) (Continued)

	Member Label	Direction	Start Magnitude[lb/ft,...	End Magnitude[lb/ft,F...	Start Location[ft,%]	End Location[ft,%]
97	M149A	X	0	0	0	%100
98	M149A	Z	0	0	0	%100
99	M152	X	-.484	-.484	0	%100
100	M152	Z	-.838	-.838	0	%100
101	M155	X	-.46	-.46	0	%100
102	M155	Z	-.796	-.796	0	%100
103	M159	X	0	0	0	%100
104	M159	Z	0	0	0	%100
105	M163	X	-.46	-.46	0	%100
106	M163	Z	-.796	-.796	0	%100
107	M166A	X	0	0	0	%100
108	M166A	Z	0	0	0	%100
109	M167	X	-.464	-.464	0	%100
110	M167	Z	-.803	-.803	0	%100
111	M168	X	-.464	-.464	0	%100
112	M168	Z	-.803	-.803	0	%100
113	MP2A	X	-3.32	-3.32	0	%100
114	MP2A	Z	-5.751	-5.751	0	%100
115	MP4A	X	-3.32	-3.32	0	%100
116	MP4A	Z	-5.751	-5.751	0	%100
117	MP5A	X	-3.32	-3.32	0	%100
118	MP5A	Z	-5.751	-5.751	0	%100
119	MP3A	X	-3.32	-3.32	0	%100
120	MP3A	Z	-5.751	-5.751	0	%100
121	MP1C	X	-3.32	-3.32	0	%100
122	MP1C	Z	-5.751	-5.751	0	%100
123	MP2C	X	-3.32	-3.32	0	%100
124	MP2C	Z	-5.751	-5.751	0	%100
125	MP4C	X	-3.32	-3.32	0	%100
126	MP4C	Z	-5.751	-5.751	0	%100
127	MP5C	X	-3.32	-3.32	0	%100
128	MP5C	Z	-5.751	-5.751	0	%100
129	MP3C	X	-3.32	-3.32	0	%100
130	MP3C	Z	-5.751	-5.751	0	%100
131	MP1B	X	-3.32	-3.32	0	%100
132	MP1B	Z	-5.751	-5.751	0	%100
133	MP2B	X	-3.32	-3.32	0	%100
134	MP2B	Z	-5.751	-5.751	0	%100
135	MP4B	X	-3.32	-3.32	0	%100
136	MP4B	Z	-5.751	-5.751	0	%100
137	MP5B	X	-3.32	-3.32	0	%100
138	MP5B	Z	-5.751	-5.751	0	%100
139	MP3B	X	-3.32	-3.32	0	%100
140	MP3B	Z	-5.751	-5.751	0	%100
141	M180	X	0	0	0	%100
142	M180	Z	0	0	0	%100
143	M181	X	-4.84	-4.84	0	%100
144	M181	Z	-8.382	-8.382	0	%100
145	M182	X	-4.84	-4.84	0	%100
146	M182	Z	-8.382	-8.382	0	%100
147	M194	X	-6.333	-6.333	0	%100
148	M194	Z	-10.968	-10.968	0	%100

Member Distributed Loads (BLC 52 : Structure Wo (330 Deg)) (Continued)

	Member Label	Direction	Start Magnitude[lb/ft,...	End Magnitude[lb/ft,F...	Start Location[ft,%]	End Location[ft,%]
149	M195	X	-5.736	-5.736	0	%100
150	M195	Z	-9.936	-9.936	0	%100
151	M196	X	-6.333	-6.333	0	%100
152	M196	Z	-10.968	-10.968	0	%100
153	M197	X	-5.736	-5.736	0	%100
154	M197	Z	-9.936	-9.936	0	%100
155	M206	X	0	0	0	%100
156	M206	Z	0	0	0	%100
157	M207	X	0	0	0	%100
158	M207	Z	0	0	0	%100
159	M208	X	0	0	0	%100
160	M208	Z	0	0	0	%100
161	M209	X	0	0	0	%100
162	M209	Z	0	0	0	%100
163	M218	X	-6.333	-6.333	0	%100
164	M218	Z	-10.968	-10.968	0	%100
165	M219	X	-5.736	-5.736	0	%100
166	M219	Z	-9.936	-9.936	0	%100
167	M220	X	-6.333	-6.333	0	%100
168	M220	Z	-10.968	-10.968	0	%100
169	M221	X	-5.736	-5.736	0	%100
170	M221	Z	-9.936	-9.936	0	%100
171	M222	X	-5.995	-5.995	0	%100
172	M222	Z	-10.383	-10.383	0	%100
173	M223	X	-6.8	-6.8	0	%100
174	M223	Z	-11.778	-11.778	0	%100
175	M224	X	-5.995	-5.995	0	%100
176	M224	Z	-10.383	-10.383	0	%100

Member Distributed Loads (BLC 53 : Structure Wi (0 Deg))

	Member Label	Direction	Start Magnitude[lb/ft,...	End Magnitude[lb/ft,F...	Start Location[ft,%]	End Location[ft,%]
1	M19	X	0	0	0	%100
2	M19	Z	-2.035	-2.035	0	%100
3	M19A	X	0	0	0	%100
4	M19A	Z	-.772	-.772	0	%100
5	M38C	X	0	0	0	%100
6	M38C	Z	-2.035	-2.035	0	%100
7	M51	X	0	0	0	%100
8	M51	Z	0	0	0	%100
9	M104A	X	0	0	0	%100
10	M104A	Z	-.921	-.921	0	%100
11	M105A	X	0	0	0	%100
12	M105A	Z	-.921	-.921	0	%100
13	M134	X	0	0	0	%100
14	M134	Z	-.258	-.258	0	%100
15	M135	X	0	0	0	%100
16	M135	Z	-.258	-.258	0	%100
17	M93A	X	0	0	0	%100
18	M93A	Z	-2.153	-2.153	0	%100
19	M94A	X	0	0	0	%100
20	M94A	Z	-2.153	-2.153	0	%100

Member Distributed Loads (BLC 53 : Structure Wi (0 Deg)) (Continued)

	Member Label	Direction	Start Magnitude[lb/ft,...	End Magnitude[lb/ft,F...	Start Location[ft,%]	End Location[ft,%]
21	M93B	X	0	0	0	%100
22	M93B	Z	-1.9	-1.9	0	%100
23	M94D	X	0	0	0	%100
24	M94D	Z	-1.9	-1.9	0	%100
25	M53	X	0	0	0	%100
26	M53	Z	-.23	-.23	0	%100
27	M54	X	0	0	0	%100
28	M54	Z	-.23	-.23	0	%100
29	M63	X	0	0	0	%100
30	M63	Z	-.538	-.538	0	%100
31	M64	X	0	0	0	%100
32	M64	Z	-.538	-.538	0	%100
33	M69	X	0	0	0	%100
34	M69	Z	-.475	-.475	0	%100
35	M70	X	0	0	0	%100
36	M70	Z	-.475	-.475	0	%100
37	M71	X	0	0	0	%100
38	M71	Z	-.23	-.23	0	%100
39	M72	X	0	0	0	%100
40	M72	Z	-.23	-.23	0	%100
41	M81	X	0	0	0	%100
42	M81	Z	-.538	-.538	0	%100
43	M82	X	0	0	0	%100
44	M82	Z	-.538	-.538	0	%100
45	M87	X	0	0	0	%100
46	M87	Z	-.475	-.475	0	%100
47	M88	X	0	0	0	%100
48	M88	Z	-.475	-.475	0	%100
49	M89	X	0	0	0	%100
50	M89	Z	-5.516	-5.516	0	%100
51	M90	X	0	0	0	%100
52	M90	Z	-5.516	-5.516	0	%100
53	M89A	X	0	0	0	%100
54	M89A	Z	-1.379	-1.379	0	%100
55	M90A	X	0	0	0	%100
56	M90A	Z	-1.379	-1.379	0	%100
57	M91	X	0	0	0	%100
58	M91	Z	-1.379	-1.379	0	%100
59	M92	X	0	0	0	%100
60	M92	Z	-1.379	-1.379	0	%100
61	M101	X	0	0	0	%100
62	M101	Z	-3.076	-3.076	0	%100
63	M91A	X	0	0	0	%100
64	M91A	Z	-3.076	-3.076	0	%100
65	M93	X	0	0	0	%100
66	M93	Z	-.769	-.769	0	%100
67	M95B	X	0	0	0	%100
68	M95B	Z	-.769	-.769	0	%100
69	M97	X	0	0	0	%100
70	M97	Z	-.769	-.769	0	%100
71	M99	X	0	0	0	%100
72	M99	Z	-.769	-.769	0	%100

Member Distributed Loads (BLC 53 : Structure Wi (0 Deg)) (Continued)

	Member Label	Direction	Start Magnitude[lb/ft,...	End Magnitude[lb/ft,F...	Start Location[ft,%]	End Location[ft,%]
73	M101A	X	0	0	0	%100
74	M101A	Z	-3.087	-3.087	0	%100
75	M104	X	0	0	0	%100
76	M104	Z	-.772	-.772	0	%100
77	M105B	X	0	0	0	%100
78	M105B	Z	-2.421	-2.421	0	%100
79	M104B	X	0	0	0	%100
80	M104B	Z	-.605	-.605	0	%100
81	M105C	X	0	0	0	%100
82	M105C	Z	-.605	-.605	0	%100
83	M95C	X	0	0	0	%100
84	M95C	Z	-1.033	-1.033	0	%100
85	M96A	X	0	0	0	%100
86	M96A	Z	-1.033	-1.033	0	%100
87	M101B	X	0	0	0	%100
88	M101B	Z	-.258	-.258	0	%100
89	M102B	X	0	0	0	%100
90	M102B	Z	-.258	-.258	0	%100
91	MP1A	X	0	0	0	%100
92	MP1A	Z	-2.517	-2.517	0	%100
93	M144	X	0	0	0	%100
94	M144	Z	-2.119	-2.119	0	%100
95	M147	X	0	0	0	%100
96	M147	Z	-1.568	-1.568	0	%100
97	M149A	X	0	0	0	%100
98	M149A	Z	-.392	-.392	0	%100
99	M152	X	0	0	0	%100
100	M152	Z	-.392	-.392	0	%100
101	M155	X	0	0	0	%100
102	M155	Z	-1.41	-1.41	0	%100
103	M159	X	0	0	0	%100
104	M159	Z	-.352	-.352	0	%100
105	M163	X	0	0	0	%100
106	M163	Z	-.352	-.352	0	%100
107	M166A	X	0	0	0	%100
108	M166A	Z	-.29	-.29	0	%100
109	M167	X	0	0	0	%100
110	M167	Z	-.29	-.29	0	%100
111	M168	X	0	0	0	%100
112	M168	Z	-1.158	-1.158	0	%100
113	MP2A	X	0	0	0	%100
114	MP2A	Z	-2.517	-2.517	0	%100
115	MP4A	X	0	0	0	%100
116	MP4A	Z	-2.517	-2.517	0	%100
117	MP5A	X	0	0	0	%100
118	MP5A	Z	-2.517	-2.517	0	%100
119	MP3A	X	0	0	0	%100
120	MP3A	Z	-2.517	-2.517	0	%100
121	MP1C	X	0	0	0	%100
122	MP1C	Z	-2.517	-2.517	0	%100
123	MP2C	X	0	0	0	%100
124	MP2C	Z	-2.517	-2.517	0	%100

Member Distributed Loads (BLC 53 : Structure Wi (0 Deg)) (Continued)

	Member Label	Direction	Start Magnitude[lb/ft,...	End Magnitude[lb/ft,F...	Start Location[ft,%]	End Location[ft,%]
125	MP4C	X	0	0	0	%100
126	MP4C	Z	-2.517	-2.517	0	%100
127	MP5C	X	0	0	0	%100
128	MP5C	Z	-2.517	-2.517	0	%100
129	MP3C	X	0	0	0	%100
130	MP3C	Z	-2.517	-2.517	0	%100
131	MP1B	X	0	0	0	%100
132	MP1B	Z	-2.517	-2.517	0	%100
133	MP2B	X	0	0	0	%100
134	MP2B	Z	-2.517	-2.517	0	%100
135	MP4B	X	0	0	0	%100
136	MP4B	Z	-2.517	-2.517	0	%100
137	MP5B	X	0	0	0	%100
138	MP5B	Z	-2.517	-2.517	0	%100
139	MP3B	X	0	0	0	%100
140	MP3B	Z	-2.517	-2.517	0	%100
141	M180	X	0	0	0	%100
142	M180	Z	-.931	-.931	0	%100
143	M181	X	0	0	0	%100
144	M181	Z	-.931	-.931	0	%100
145	M182	X	0	0	0	%100
146	M182	Z	-3.726	-3.726	0	%100
147	M194	X	0	0	0	%100
148	M194	Z	-4.465	-4.465	0	%100
149	M195	X	0	0	0	%100
150	M195	Z	-4.159	-4.159	0	%100
151	M196	X	0	0	0	%100
152	M196	Z	-4.465	-4.465	0	%100
153	M197	X	0	0	0	%100
154	M197	Z	-4.159	-4.159	0	%100
155	M206	X	0	0	0	%100
156	M206	Z	-1.116	-1.116	0	%100
157	M207	X	0	0	0	%100
158	M207	Z	-1.04	-1.04	0	%100
159	M208	X	0	0	0	%100
160	M208	Z	-1.116	-1.116	0	%100
161	M209	X	0	0	0	%100
162	M209	Z	-1.04	-1.04	0	%100
163	M218	X	0	0	0	%100
164	M218	Z	-1.116	-1.116	0	%100
165	M219	X	0	0	0	%100
166	M219	Z	-1.04	-1.04	0	%100
167	M220	X	0	0	0	%100
168	M220	Z	-1.116	-1.116	0	%100
169	M221	X	0	0	0	%100
170	M221	Z	-1.04	-1.04	0	%100
171	M222	X	0	0	0	%100
172	M222	Z	-2.716	-2.716	0	%100
173	M223	X	0	0	0	%100
174	M223	Z	-3.533	-3.533	0	%100
175	M224	X	0	0	0	%100
176	M224	Z	-3.533	-3.533	0	%100

Member Distributed Loads (BLC 54 : Structure Wi (30 Deg))

	Member Label	Direction	Start Magnitude[lb/ft,...	End Magnitude[lb/ft,F...	Start Location[ft,%]	End Location[ft,%]
1	M19	X	.339	.339	0	%100
2	M19	Z	-.588	-.588	0	%100
3	M19A	X	0	0	0	%100
4	M19A	Z	0	0	0	%100
5	M38C	X	1.357	1.357	0	%100
6	M38C	Z	-2.35	-2.35	0	%100
7	M51	X	.339	.339	0	%100
8	M51	Z	-.588	-.588	0	%100
9	M104A	X	.345	.345	0	%100
10	M104A	Z	-.598	-.598	0	%100
11	M105A	X	.345	.345	0	%100
12	M105A	Z	-.598	-.598	0	%100
13	M134	X	0	0	0	%100
14	M134	Z	0	0	0	%100
15	M135	X	0	0	0	%100
16	M135	Z	0	0	0	%100
17	M93A	X	.807	.807	0	%100
18	M93A	Z	-1.398	-1.398	0	%100
19	M94A	X	.807	.807	0	%100
20	M94A	Z	-1.398	-1.398	0	%100
21	M93B	X	.713	.713	0	%100
22	M93B	Z	-1.234	-1.234	0	%100
23	M94D	X	.713	.713	0	%100
24	M94D	Z	-1.234	-1.234	0	%100
25	M53	X	.345	.345	0	%100
26	M53	Z	-.598	-.598	0	%100
27	M54	X	.345	.345	0	%100
28	M54	Z	-.598	-.598	0	%100
29	M63	X	.807	.807	0	%100
30	M63	Z	-1.398	-1.398	0	%100
31	M64	X	.807	.807	0	%100
32	M64	Z	-1.398	-1.398	0	%100
33	M69	X	.713	.713	0	%100
34	M69	Z	-1.234	-1.234	0	%100
35	M70	X	.713	.713	0	%100
36	M70	Z	-1.234	-1.234	0	%100
37	M71	X	0	0	0	%100
38	M71	Z	0	0	0	%100
39	M72	X	0	0	0	%100
40	M72	Z	0	0	0	%100
41	M81	X	0	0	0	%100
42	M81	Z	0	0	0	%100
43	M82	X	0	0	0	%100
44	M82	Z	0	0	0	%100
45	M87	X	0	0	0	%100
46	M87	Z	0	0	0	%100
47	M88	X	0	0	0	%100
48	M88	Z	0	0	0	%100
49	M89	X	2.068	2.068	0	%100
50	M89	Z	-3.583	-3.583	0	%100
51	M90	X	2.068	2.068	0	%100
52	M90	Z	-3.583	-3.583	0	%100

Member Distributed Loads (BLC 54 : Structure Wi (30 Deg)) (Continued)

	Member Label	Direction	Start Magnitude[lb/ft,...	End Magnitude[lb/ft,F...	Start Location[ft,%]	End Location[ft,%]
53	M89A	X	2.068	2.068	0	%100
54	M89A	Z	-3.583	-3.583	0	%100
55	M90A	X	2.068	2.068	0	%100
56	M90A	Z	-3.583	-3.583	0	%100
57	M91	X	0	0	0	%100
58	M91	Z	0	0	0	%100
59	M92	X	0	0	0	%100
60	M92	Z	0	0	0	%100
61	M101	X	1.154	1.154	0	%100
62	M101	Z	-1.998	-1.998	0	%100
63	M91A	X	1.154	1.154	0	%100
64	M91A	Z	-1.998	-1.998	0	%100
65	M93	X	1.154	1.154	0	%100
66	M93	Z	-1.998	-1.998	0	%100
67	M95B	X	1.154	1.154	0	%100
68	M95B	Z	-1.998	-1.998	0	%100
69	M97	X	0	0	0	%100
70	M97	Z	0	0	0	%100
71	M99	X	0	0	0	%100
72	M99	Z	0	0	0	%100
73	M101A	X	1.157	1.157	0	%100
74	M101A	Z	-2.005	-2.005	0	%100
75	M104	X	1.157	1.157	0	%100
76	M104	Z	-2.005	-2.005	0	%100
77	M105B	X	.908	.908	0	%100
78	M105B	Z	-1.573	-1.573	0	%100
79	M104B	X	.908	.908	0	%100
80	M104B	Z	-1.573	-1.573	0	%100
81	M105C	X	0	0	0	%100
82	M105C	Z	0	0	0	%100
83	M95C	X	.387	.387	0	%100
84	M95C	Z	-.671	-.671	0	%100
85	M96A	X	.387	.387	0	%100
86	M96A	Z	-.671	-.671	0	%100
87	M101B	X	.387	.387	0	%100
88	M101B	Z	-.671	-.671	0	%100
89	M102B	X	.387	.387	0	%100
90	M102B	Z	-.671	-.671	0	%100
91	MP1A	X	1.281	1.281	0	%100
92	MP1A	Z	-2.218	-2.218	0	%100
93	M144	X	1.071	1.071	0	%100
94	M144	Z	-1.856	-1.856	0	%100
95	M147	X	.588	.588	0	%100
96	M147	Z	-1.018	-1.018	0	%100
97	M149A	X	.588	.588	0	%100
98	M149A	Z	-1.018	-1.018	0	%100
99	M152	X	0	0	0	%100
100	M152	Z	0	0	0	%100
101	M155	X	.529	.529	0	%100
102	M155	Z	-.916	-.916	0	%100
103	M159	X	.529	.529	0	%100
104	M159	Z	-.916	-.916	0	%100

Member Distributed Loads (BLC 54 : Structure Wi (30 Deg)) (Continued)

	Member Label	Direction	Start Magnitude[lb/ft,...	End Magnitude[lb/ft,F...	Start Location[ft,%]	End Location[ft,%]
105	M163	X	0	0	0	%100
106	M163	Z	0	0	0	%100
107	M166A	X	.434	.434	0	%100
108	M166A	Z	-.752	-.752	0	%100
109	M167	X	0	0	0	%100
110	M167	Z	0	0	0	%100
111	M168	X	.434	.434	0	%100
112	M168	Z	-.752	-.752	0	%100
113	MP2A	X	1.281	1.281	0	%100
114	MP2A	Z	-2.218	-2.218	0	%100
115	MP4A	X	1.281	1.281	0	%100
116	MP4A	Z	-2.218	-2.218	0	%100
117	MP5A	X	1.281	1.281	0	%100
118	MP5A	Z	-2.218	-2.218	0	%100
119	MP3A	X	1.281	1.281	0	%100
120	MP3A	Z	-2.218	-2.218	0	%100
121	MP1C	X	1.281	1.281	0	%100
122	MP1C	Z	-2.218	-2.218	0	%100
123	MP2C	X	1.281	1.281	0	%100
124	MP2C	Z	-2.218	-2.218	0	%100
125	MP4C	X	1.281	1.281	0	%100
126	MP4C	Z	-2.218	-2.218	0	%100
127	MP5C	X	1.281	1.281	0	%100
128	MP5C	Z	-2.218	-2.218	0	%100
129	MP3C	X	1.281	1.281	0	%100
130	MP3C	Z	-2.218	-2.218	0	%100
131	MP1B	X	1.281	1.281	0	%100
132	MP1B	Z	-2.218	-2.218	0	%100
133	MP2B	X	1.281	1.281	0	%100
134	MP2B	Z	-2.218	-2.218	0	%100
135	MP4B	X	1.281	1.281	0	%100
136	MP4B	Z	-2.218	-2.218	0	%100
137	MP5B	X	1.281	1.281	0	%100
138	MP5B	Z	-2.218	-2.218	0	%100
139	MP3B	X	1.281	1.281	0	%100
140	MP3B	Z	-2.218	-2.218	0	%100
141	M180	X	1.397	1.397	0	%100
142	M180	Z	-2.42	-2.42	0	%100
143	M181	X	0	0	0	%100
144	M181	Z	0	0	0	%100
145	M182	X	1.397	1.397	0	%100
146	M182	Z	-2.42	-2.42	0	%100
147	M194	X	1.674	1.674	0	%100
148	M194	Z	-2.9	-2.9	0	%100
149	M195	X	1.56	1.56	0	%100
150	M195	Z	-2.702	-2.702	0	%100
151	M196	X	1.674	1.674	0	%100
152	M196	Z	-2.9	-2.9	0	%100
153	M197	X	1.56	1.56	0	%100
154	M197	Z	-2.702	-2.702	0	%100
155	M206	X	1.674	1.674	0	%100
156	M206	Z	-2.9	-2.9	0	%100

Member Distributed Loads (BLC 54 : Structure Wi (30 Deg)) (Continued)

	Member Label	Direction	Start Magnitude[lb/ft,...	End Magnitude[lb/ft,F...	Start Location[ft,%]	End Location[ft,%]
157	M207	X	1.56	1.56	0	%100
158	M207	Z	-2.702	-2.702	0	%100
159	M208	X	1.674	1.674	0	%100
160	M208	Z	-2.9	-2.9	0	%100
161	M209	X	1.56	1.56	0	%100
162	M209	Z	-2.702	-2.702	0	%100
163	M218	X	0	0	0	%100
164	M218	Z	0	0	0	%100
165	M219	X	0	0	0	%100
166	M219	Z	0	0	0	%100
167	M220	X	0	0	0	%100
168	M220	Z	0	0	0	%100
169	M221	X	0	0	0	%100
170	M221	Z	0	0	0	%100
171	M222	X	1.494	1.494	0	%100
172	M222	Z	-2.588	-2.588	0	%100
173	M223	X	1.494	1.494	0	%100
174	M223	Z	-2.588	-2.588	0	%100
175	M224	X	1.903	1.903	0	%100
176	M224	Z	-3.296	-3.296	0	%100

Member Distributed Loads (BLC 55 : Structure Wi (60 Deg))

	Member Label	Direction	Start Magnitude[lb/ft,...	End Magnitude[lb/ft,F...	Start Location[ft,%]	End Location[ft,%]
1	M19	X	0	0	0	%100
2	M19	Z	0	0	0	%100
3	M19A	X	.668	.668	0	%100
4	M19A	Z	-.386	-.386	0	%100
5	M38C	X	1.763	1.763	0	%100
6	M38C	Z	-1.018	-1.018	0	%100
7	M51	X	1.763	1.763	0	%100
8	M51	Z	-1.018	-1.018	0	%100
9	M104A	X	.199	.199	0	%100
10	M104A	Z	-.115	-.115	0	%100
11	M105A	X	.199	.199	0	%100
12	M105A	Z	-.115	-.115	0	%100
13	M134	X	.224	.224	0	%100
14	M134	Z	-.129	-.129	0	%100
15	M135	X	.224	.224	0	%100
16	M135	Z	-.129	-.129	0	%100
17	M93A	X	.466	.466	0	%100
18	M93A	Z	-.269	-.269	0	%100
19	M94A	X	.466	.466	0	%100
20	M94A	Z	-.269	-.269	0	%100
21	M93B	X	.411	.411	0	%100
22	M93B	Z	-.238	-.238	0	%100
23	M94D	X	.411	.411	0	%100
24	M94D	Z	-.238	-.238	0	%100
25	M53	X	.798	.798	0	%100
26	M53	Z	-.46	-.46	0	%100
27	M54	X	.798	.798	0	%100
28	M54	Z	-.46	-.46	0	%100

Member Distributed Loads (BLC 55 : Structure Wi (60 Deg)) (Continued)

	Member Label	Direction	Start Magnitude[lb/ft,...	End Magnitude[lb/ft,F...	Start Location[ft,%]	End Location[ft,%]
29	M63	X	1.864	1.864	0	%100
30	M63	Z	-1.076	-1.076	0	%100
31	M64	X	1.864	1.864	0	%100
32	M64	Z	-1.076	-1.076	0	%100
33	M69	X	1.645	1.645	0	%100
34	M69	Z	-.95	-.95	0	%100
35	M70	X	1.645	1.645	0	%100
36	M70	Z	-.95	-.95	0	%100
37	M71	X	.199	.199	0	%100
38	M71	Z	-.115	-.115	0	%100
39	M72	X	.199	.199	0	%100
40	M72	Z	-.115	-.115	0	%100
41	M81	X	.466	.466	0	%100
42	M81	Z	-.269	-.269	0	%100
43	M82	X	.466	.466	0	%100
44	M82	Z	-.269	-.269	0	%100
45	M87	X	.411	.411	0	%100
46	M87	Z	-.238	-.238	0	%100
47	M88	X	.411	.411	0	%100
48	M88	Z	-.238	-.238	0	%100
49	M89	X	1.194	1.194	0	%100
50	M89	Z	-.689	-.689	0	%100
51	M90	X	1.194	1.194	0	%100
52	M90	Z	-.689	-.689	0	%100
53	M89A	X	4.777	4.777	0	%100
54	M89A	Z	-2.758	-2.758	0	%100
55	M90A	X	4.777	4.777	0	%100
56	M90A	Z	-2.758	-2.758	0	%100
57	M91	X	1.194	1.194	0	%100
58	M91	Z	-.689	-.689	0	%100
59	M92	X	1.194	1.194	0	%100
60	M92	Z	-.689	-.689	0	%100
61	M101	X	.666	.666	0	%100
62	M101	Z	-.385	-.385	0	%100
63	M91A	X	.666	.666	0	%100
64	M91A	Z	-.385	-.385	0	%100
65	M93	X	2.664	2.664	0	%100
66	M93	Z	-1.538	-1.538	0	%100
67	M95B	X	2.664	2.664	0	%100
68	M95B	Z	-1.538	-1.538	0	%100
69	M97	X	.666	.666	0	%100
70	M97	Z	-.385	-.385	0	%100
71	M99	X	.666	.666	0	%100
72	M99	Z	-.385	-.385	0	%100
73	M101A	X	.668	.668	0	%100
74	M101A	Z	-.386	-.386	0	%100
75	M104	X	2.673	2.673	0	%100
76	M104	Z	-1.543	-1.543	0	%100
77	M105B	X	.524	.524	0	%100
78	M105B	Z	-.303	-.303	0	%100
79	M104B	X	2.097	2.097	0	%100
80	M104B	Z	-1.211	-1.211	0	%100

Member Distributed Loads (BLC 55 : Structure Wi (60 Deg)) (Continued)

	Member Label	Direction	Start Magnitude[lb/ft,...	End Magnitude[lb/ft,F...	Start Location[ft,%]	End Location[ft,%]
81	M105C	X	.524	.524	0	%100
82	M105C	Z	-.303	-.303	0	%100
83	M95C	X	.224	.224	0	%100
84	M95C	Z	-.129	-.129	0	%100
85	M96A	X	.224	.224	0	%100
86	M96A	Z	-.129	-.129	0	%100
87	M101B	X	.894	.894	0	%100
88	M101B	Z	-.516	-.516	0	%100
89	M102B	X	.894	.894	0	%100
90	M102B	Z	-.516	-.516	0	%100
91	MP1A	X	2.295	2.295	0	%100
92	MP1A	Z	-1.325	-1.325	0	%100
93	M144	X	1.897	1.897	0	%100
94	M144	Z	-1.095	-1.095	0	%100
95	M147	X	.339	.339	0	%100
96	M147	Z	-.196	-.196	0	%100
97	M149A	X	1.358	1.358	0	%100
98	M149A	Z	-.784	-.784	0	%100
99	M152	X	.339	.339	0	%100
100	M152	Z	-.196	-.196	0	%100
101	M155	X	.305	.305	0	%100
102	M155	Z	-.176	-.176	0	%100
103	M159	X	1.221	1.221	0	%100
104	M159	Z	-.705	-.705	0	%100
105	M163	X	.305	.305	0	%100
106	M163	Z	-.176	-.176	0	%100
107	M166A	X	1.003	1.003	0	%100
108	M166A	Z	-.579	-.579	0	%100
109	M167	X	.251	.251	0	%100
110	M167	Z	-.145	-.145	0	%100
111	M168	X	.251	.251	0	%100
112	M168	Z	-.145	-.145	0	%100
113	MP2A	X	2.295	2.295	0	%100
114	MP2A	Z	-1.325	-1.325	0	%100
115	MP4A	X	2.295	2.295	0	%100
116	MP4A	Z	-1.325	-1.325	0	%100
117	MP5A	X	2.295	2.295	0	%100
118	MP5A	Z	-1.325	-1.325	0	%100
119	MP3A	X	2.295	2.295	0	%100
120	MP3A	Z	-1.325	-1.325	0	%100
121	MP1C	X	2.295	2.295	0	%100
122	MP1C	Z	-1.325	-1.325	0	%100
123	MP2C	X	2.295	2.295	0	%100
124	MP2C	Z	-1.325	-1.325	0	%100
125	MP4C	X	2.295	2.295	0	%100
126	MP4C	Z	-1.325	-1.325	0	%100
127	MP5C	X	2.295	2.295	0	%100
128	MP5C	Z	-1.325	-1.325	0	%100
129	MP3C	X	2.295	2.295	0	%100
130	MP3C	Z	-1.325	-1.325	0	%100
131	MP1B	X	2.295	2.295	0	%100
132	MP1B	Z	-1.325	-1.325	0	%100

Member Distributed Loads (BLC 55 : Structure Wi (60 Deg)) (Continued)

	Member Label	Direction	Start Magnitude[lb/ft,...	End Magnitude[lb/ft,F...	Start Location[ft,%]	End Location[ft,%]
133	MP2B	X	2.295	2.295	0	%100
134	MP2B	Z	-1.325	-1.325	0	%100
135	MP4B	X	2.295	2.295	0	%100
136	MP4B	Z	-1.325	-1.325	0	%100
137	MP5B	X	2.295	2.295	0	%100
138	MP5B	Z	-1.325	-1.325	0	%100
139	MP3B	X	2.295	2.295	0	%100
140	MP3B	Z	-1.325	-1.325	0	%100
141	M180	X	3.226	3.226	0	%100
142	M180	Z	-1.863	-1.863	0	%100
143	M181	X	.807	.807	0	%100
144	M181	Z	-.466	-.466	0	%100
145	M182	X	.807	.807	0	%100
146	M182	Z	-.466	-.466	0	%100
147	M194	X	.967	.967	0	%100
148	M194	Z	-.558	-.558	0	%100
149	M195	X	.901	.901	0	%100
150	M195	Z	-.52	-.52	0	%100
151	M196	X	.967	.967	0	%100
152	M196	Z	-.558	-.558	0	%100
153	M197	X	.901	.901	0	%100
154	M197	Z	-.52	-.52	0	%100
155	M206	X	3.867	3.867	0	%100
156	M206	Z	-2.233	-2.233	0	%100
157	M207	X	3.602	3.602	0	%100
158	M207	Z	-2.08	-2.08	0	%100
159	M208	X	3.867	3.867	0	%100
160	M208	Z	-2.233	-2.233	0	%100
161	M209	X	3.602	3.602	0	%100
162	M209	Z	-2.08	-2.08	0	%100
163	M218	X	.967	.967	0	%100
164	M218	Z	-.558	-.558	0	%100
165	M219	X	.901	.901	0	%100
166	M219	Z	-.52	-.52	0	%100
167	M220	X	.967	.967	0	%100
168	M220	Z	-.558	-.558	0	%100
169	M221	X	.901	.901	0	%100
170	M221	Z	-.52	-.52	0	%100
171	M222	X	3.06	3.06	0	%100
172	M222	Z	-1.767	-1.767	0	%100
173	M223	X	2.352	2.352	0	%100
174	M223	Z	-1.358	-1.358	0	%100
175	M224	X	3.06	3.06	0	%100
176	M224	Z	-1.767	-1.767	0	%100

Member Distributed Loads (BLC 56 : Structure Wi (90 Deg))

	Member Label	Direction	Start Magnitude[lb/ft,...	End Magnitude[lb/ft,F...	Start Location[ft,%]	End Location[ft,%]
1	M19	X	.678	.678	0	%100
2	M19	Z	0	0	0	%100
3	M19A	X	2.315	2.315	0	%100
4	M19A	Z	0	0	0	%100

Member Distributed Loads (BLC 56 : Structure Wi (90 Deg)) (Continued)

	Member Label	Direction	Start Magnitude[lb/ft,...	End Magnitude[lb/ft,F...	Start Location[ft,%]	End Location[ft,%]
5	M38C	X	.678	.678	0	%100
6	M38C	Z	0	0	0	%100
7	M51	X	2.714	2.714	0	%100
8	M51	Z	0	0	0	%100
9	M104A	X	0	0	0	%100
10	M104A	Z	0	0	0	%100
11	M105A	X	0	0	0	%100
12	M105A	Z	0	0	0	%100
13	M134	X	.774	.774	0	%100
14	M134	Z	0	0	0	%100
15	M135	X	.774	.774	0	%100
16	M135	Z	0	0	0	%100
17	M93A	X	0	0	0	%100
18	M93A	Z	0	0	0	%100
19	M94A	X	0	0	0	%100
20	M94A	Z	0	0	0	%100
21	M93B	X	0	0	0	%100
22	M93B	Z	0	0	0	%100
23	M94D	X	0	0	0	%100
24	M94D	Z	0	0	0	%100
25	M53	X	.691	.691	0	%100
26	M53	Z	0	0	0	%100
27	M54	X	.691	.691	0	%100
28	M54	Z	0	0	0	%100
29	M63	X	1.615	1.615	0	%100
30	M63	Z	0	0	0	%100
31	M64	X	1.615	1.615	0	%100
32	M64	Z	0	0	0	%100
33	M69	X	1.425	1.425	0	%100
34	M69	Z	0	0	0	%100
35	M70	X	1.425	1.425	0	%100
36	M70	Z	0	0	0	%100
37	M71	X	.691	.691	0	%100
38	M71	Z	0	0	0	%100
39	M72	X	.691	.691	0	%100
40	M72	Z	0	0	0	%100
41	M81	X	1.615	1.615	0	%100
42	M81	Z	0	0	0	%100
43	M82	X	1.615	1.615	0	%100
44	M82	Z	0	0	0	%100
45	M87	X	1.425	1.425	0	%100
46	M87	Z	0	0	0	%100
47	M88	X	1.425	1.425	0	%100
48	M88	Z	0	0	0	%100
49	M89	X	0	0	0	%100
50	M89	Z	0	0	0	%100
51	M90	X	0	0	0	%100
52	M90	Z	0	0	0	%100
53	M89A	X	4.137	4.137	0	%100
54	M89A	Z	0	0	0	%100
55	M90A	X	4.137	4.137	0	%100
56	M90A	Z	0	0	0	%100

Member Distributed Loads (BLC 56 : Structure Wi (90 Deg)) (Continued)

	Member Label	Direction	Start Magnitude[lb/ft,...	End Magnitude[lb/ft,F...	Start Location[ft,%]	End Location[ft,%]
57	M91	X	4.137	4.137	0	%100
58	M91	Z	0	0	0	%100
59	M92	X	4.137	4.137	0	%100
60	M92	Z	0	0	0	%100
61	M101	X	0	0	0	%100
62	M101	Z	0	0	0	%100
63	M91A	X	0	0	0	%100
64	M91A	Z	0	0	0	%100
65	M93	X	2.307	2.307	0	%100
66	M93	Z	0	0	0	%100
67	M95B	X	2.307	2.307	0	%100
68	M95B	Z	0	0	0	%100
69	M97	X	2.307	2.307	0	%100
70	M97	Z	0	0	0	%100
71	M99	X	2.307	2.307	0	%100
72	M99	Z	0	0	0	%100
73	M101A	X	0	0	0	%100
74	M101A	Z	0	0	0	%100
75	M104	X	2.315	2.315	0	%100
76	M104	Z	0	0	0	%100
77	M105B	X	0	0	0	%100
78	M105B	Z	0	0	0	%100
79	M104B	X	1.816	1.816	0	%100
80	M104B	Z	0	0	0	%100
81	M105C	X	1.816	1.816	0	%100
82	M105C	Z	0	0	0	%100
83	M95C	X	0	0	0	%100
84	M95C	Z	0	0	0	%100
85	M96A	X	0	0	0	%100
86	M96A	Z	0	0	0	%100
87	M101B	X	.774	.774	0	%100
88	M101B	Z	0	0	0	%100
89	M102B	X	.774	.774	0	%100
90	M102B	Z	0	0	0	%100
91	MP1A	X	2.695	2.695	0	%100
92	MP1A	Z	0	0	0	%100
93	M144	X	2.214	2.214	0	%100
94	M144	Z	0	0	0	%100
95	M147	X	0	0	0	%100
96	M147	Z	0	0	0	%100
97	M149A	X	1.176	1.176	0	%100
98	M149A	Z	0	0	0	%100
99	M152	X	1.176	1.176	0	%100
100	M152	Z	0	0	0	%100
101	M155	X	0	0	0	%100
102	M155	Z	0	0	0	%100
103	M159	X	1.057	1.057	0	%100
104	M159	Z	0	0	0	%100
105	M163	X	1.057	1.057	0	%100
106	M163	Z	0	0	0	%100
107	M166A	X	.869	.869	0	%100
108	M166A	Z	0	0	0	%100

Member Distributed Loads (BLC 56 : Structure Wi (90 Deg)) (Continued)

	Member Label	Direction	Start Magnitude[lb/ft,...	End Magnitude[lb/ft,F...	Start Location[ft,%]	End Location[ft,%]
109	M167	X	.869	.869	0	%100
110	M167	Z	0	0	0	%100
111	M168	X	0	0	0	%100
112	M168	Z	0	0	0	%100
113	MP2A	X	2.695	2.695	0	%100
114	MP2A	Z	0	0	0	%100
115	MP4A	X	2.695	2.695	0	%100
116	MP4A	Z	0	0	0	%100
117	MP5A	X	2.695	2.695	0	%100
118	MP5A	Z	0	0	0	%100
119	MP3A	X	2.695	2.695	0	%100
120	MP3A	Z	0	0	0	%100
121	MP1C	X	2.695	2.695	0	%100
122	MP1C	Z	0	0	0	%100
123	MP2C	X	2.695	2.695	0	%100
124	MP2C	Z	0	0	0	%100
125	MP4C	X	2.695	2.695	0	%100
126	MP4C	Z	0	0	0	%100
127	MP5C	X	2.695	2.695	0	%100
128	MP5C	Z	0	0	0	%100
129	MP3C	X	2.695	2.695	0	%100
130	MP3C	Z	0	0	0	%100
131	MP1B	X	2.695	2.695	0	%100
132	MP1B	Z	0	0	0	%100
133	MP2B	X	2.695	2.695	0	%100
134	MP2B	Z	0	0	0	%100
135	MP4B	X	2.695	2.695	0	%100
136	MP4B	Z	0	0	0	%100
137	MP5B	X	2.695	2.695	0	%100
138	MP5B	Z	0	0	0	%100
139	MP3B	X	2.695	2.695	0	%100
140	MP3B	Z	0	0	0	%100
141	M180	X	2.794	2.794	0	%100
142	M180	Z	0	0	0	%100
143	M181	X	2.794	2.794	0	%100
144	M181	Z	0	0	0	%100
145	M182	X	0	0	0	%100
146	M182	Z	0	0	0	%100
147	M194	X	0	0	0	%100
148	M194	Z	0	0	0	%100
149	M195	X	0	0	0	%100
150	M195	Z	0	0	0	%100
151	M196	X	0	0	0	%100
152	M196	Z	0	0	0	%100
153	M197	X	0	0	0	%100
154	M197	Z	0	0	0	%100
155	M206	X	3.349	3.349	0	%100
156	M206	Z	0	0	0	%100
157	M207	X	3.12	3.12	0	%100
158	M207	Z	0	0	0	%100
159	M208	X	3.349	3.349	0	%100
160	M208	Z	0	0	0	%100

Member Distributed Loads (BLC 56 : Structure Wi (90 Deg)) (Continued)

	Member Label	Direction	Start Magnitude[lb/ft,...	End Magnitude[lb/ft,F...	Start Location[ft,%]	End Location[ft,%]
161	M209	X	3.12	3.12	0	%100
162	M209	Z	0	0	0	%100
163	M218	X	3.349	3.349	0	%100
164	M218	Z	0	0	0	%100
165	M219	X	3.12	3.12	0	%100
166	M219	Z	0	0	0	%100
167	M220	X	3.349	3.349	0	%100
168	M220	Z	0	0	0	%100
169	M221	X	3.12	3.12	0	%100
170	M221	Z	0	0	0	%100
171	M222	X	3.806	3.806	0	%100
172	M222	Z	0	0	0	%100
173	M223	X	2.988	2.988	0	%100
174	M223	Z	0	0	0	%100
175	M224	X	2.988	2.988	0	%100
176	M224	Z	0	0	0	%100

Member Distributed Loads (BLC 57 : Structure Wi (120 Deg))

	Member Label	Direction	Start Magnitude[lb/ft,...	End Magnitude[lb/ft,F...	Start Location[ft,%]	End Location[ft,%]
1	M19	X	1.763	1.763	0	%100
2	M19	Z	1.018	1.018	0	%100
3	M19A	X	2.673	2.673	0	%100
4	M19A	Z	1.543	1.543	0	%100
5	M38C	X	0	0	0	%100
6	M38C	Z	0	0	0	%100
7	M51	X	1.763	1.763	0	%100
8	M51	Z	1.018	1.018	0	%100
9	M104A	X	.199	.199	0	%100
10	M104A	Z	.115	.115	0	%100
11	M105A	X	.199	.199	0	%100
12	M105A	Z	.115	.115	0	%100
13	M134	X	.894	.894	0	%100
14	M134	Z	.516	.516	0	%100
15	M135	X	.894	.894	0	%100
16	M135	Z	.516	.516	0	%100
17	M93A	X	.466	.466	0	%100
18	M93A	Z	.269	.269	0	%100
19	M94A	X	.466	.466	0	%100
20	M94A	Z	.269	.269	0	%100
21	M93B	X	.411	.411	0	%100
22	M93B	Z	.238	.238	0	%100
23	M94D	X	.411	.411	0	%100
24	M94D	Z	.238	.238	0	%100
25	M53	X	.199	.199	0	%100
26	M53	Z	.115	.115	0	%100
27	M54	X	.199	.199	0	%100
28	M54	Z	.115	.115	0	%100
29	M63	X	.466	.466	0	%100
30	M63	Z	.269	.269	0	%100
31	M64	X	.466	.466	0	%100
32	M64	Z	.269	.269	0	%100

Member Distributed Loads (BLC 57 : Structure Wi (120 Deg)) (Continued)

	Member Label	Direction	Start Magnitude[lb/ft,...	End Magnitude[lb/ft,F...	Start Location[ft,%]	End Location[ft,%]
33	M69	X	.411	.411	0	%100
34	M69	Z	.238	.238	0	%100
35	M70	X	.411	.411	0	%100
36	M70	Z	.238	.238	0	%100
37	M71	X	.798	.798	0	%100
38	M71	Z	.46	.46	0	%100
39	M72	X	.798	.798	0	%100
40	M72	Z	.46	.46	0	%100
41	M81	X	1.864	1.864	0	%100
42	M81	Z	1.076	1.076	0	%100
43	M82	X	1.864	1.864	0	%100
44	M82	Z	1.076	1.076	0	%100
45	M87	X	1.645	1.645	0	%100
46	M87	Z	.95	.95	0	%100
47	M88	X	1.645	1.645	0	%100
48	M88	Z	.95	.95	0	%100
49	M89	X	1.194	1.194	0	%100
50	M89	Z	.689	.689	0	%100
51	M90	X	1.194	1.194	0	%100
52	M90	Z	.689	.689	0	%100
53	M89A	X	1.194	1.194	0	%100
54	M89A	Z	.689	.689	0	%100
55	M90A	X	1.194	1.194	0	%100
56	M90A	Z	.689	.689	0	%100
57	M91	X	4.777	4.777	0	%100
58	M91	Z	2.758	2.758	0	%100
59	M92	X	4.777	4.777	0	%100
60	M92	Z	2.758	2.758	0	%100
61	M101	X	.666	.666	0	%100
62	M101	Z	.385	.385	0	%100
63	M91A	X	.666	.666	0	%100
64	M91A	Z	.385	.385	0	%100
65	M93	X	.666	.666	0	%100
66	M93	Z	.385	.385	0	%100
67	M95B	X	.666	.666	0	%100
68	M95B	Z	.385	.385	0	%100
69	M97	X	2.664	2.664	0	%100
70	M97	Z	1.538	1.538	0	%100
71	M99	X	2.664	2.664	0	%100
72	M99	Z	1.538	1.538	0	%100
73	M101A	X	.668	.668	0	%100
74	M101A	Z	.386	.386	0	%100
75	M104	X	.668	.668	0	%100
76	M104	Z	.386	.386	0	%100
77	M105B	X	.524	.524	0	%100
78	M105B	Z	.303	.303	0	%100
79	M104B	X	.524	.524	0	%100
80	M104B	Z	.303	.303	0	%100
81	M105C	X	2.097	2.097	0	%100
82	M105C	Z	1.211	1.211	0	%100
83	M95C	X	.224	.224	0	%100
84	M95C	Z	.129	.129	0	%100

Member Distributed Loads (BLC 57 : Structure Wi (120 Deg)) (Continued)

	Member Label	Direction	Start Magnitude[lb/ft,...	End Magnitude[lb/ft,F...	Start Location[ft,%]	End Location[ft,%]
85	M96A	X	.224	.224	0	%100
86	M96A	Z	.129	.129	0	%100
87	M101B	X	.224	.224	0	%100
88	M101B	Z	.129	.129	0	%100
89	M102B	X	.224	.224	0	%100
90	M102B	Z	.129	.129	0	%100
91	MP1A	X	2.295	2.295	0	%100
92	MP1A	Z	1.325	1.325	0	%100
93	M144	X	1.897	1.897	0	%100
94	M144	Z	1.095	1.095	0	%100
95	M147	X	.339	.339	0	%100
96	M147	Z	.196	.196	0	%100
97	M149A	X	.339	.339	0	%100
98	M149A	Z	.196	.196	0	%100
99	M152	X	1.358	1.358	0	%100
100	M152	Z	.784	.784	0	%100
101	M155	X	.305	.305	0	%100
102	M155	Z	.176	.176	0	%100
103	M159	X	.305	.305	0	%100
104	M159	Z	.176	.176	0	%100
105	M163	X	1.221	1.221	0	%100
106	M163	Z	.705	.705	0	%100
107	M166A	X	.251	.251	0	%100
108	M166A	Z	.145	.145	0	%100
109	M167	X	1.003	1.003	0	%100
110	M167	Z	.579	.579	0	%100
111	M168	X	.251	.251	0	%100
112	M168	Z	.145	.145	0	%100
113	MP2A	X	2.295	2.295	0	%100
114	MP2A	Z	1.325	1.325	0	%100
115	MP4A	X	2.295	2.295	0	%100
116	MP4A	Z	1.325	1.325	0	%100
117	MP5A	X	2.295	2.295	0	%100
118	MP5A	Z	1.325	1.325	0	%100
119	MP3A	X	2.295	2.295	0	%100
120	MP3A	Z	1.325	1.325	0	%100
121	MP1C	X	2.295	2.295	0	%100
122	MP1C	Z	1.325	1.325	0	%100
123	MP2C	X	2.295	2.295	0	%100
124	MP2C	Z	1.325	1.325	0	%100
125	MP4C	X	2.295	2.295	0	%100
126	MP4C	Z	1.325	1.325	0	%100
127	MP5C	X	2.295	2.295	0	%100
128	MP5C	Z	1.325	1.325	0	%100
129	MP3C	X	2.295	2.295	0	%100
130	MP3C	Z	1.325	1.325	0	%100
131	MP1B	X	2.295	2.295	0	%100
132	MP1B	Z	1.325	1.325	0	%100
133	MP2B	X	2.295	2.295	0	%100
134	MP2B	Z	1.325	1.325	0	%100
135	MP4B	X	2.295	2.295	0	%100
136	MP4B	Z	1.325	1.325	0	%100

Member Distributed Loads (BLC 57 : Structure Wi (120 Deg)) (Continued)

	Member Label	Direction	Start Magnitude[lb/ft,...	End Magnitude[lb/ft,F...	Start Location[ft,%]	End Location[ft,%]
137	MP5B	X	2.295	2.295	0	%100
138	MP5B	Z	1.325	1.325	0	%100
139	MP3B	X	2.295	2.295	0	%100
140	MP3B	Z	1.325	1.325	0	%100
141	M180	X	.807	.807	0	%100
142	M180	Z	.466	.466	0	%100
143	M181	X	3.226	3.226	0	%100
144	M181	Z	1.863	1.863	0	%100
145	M182	X	.807	.807	0	%100
146	M182	Z	.466	.466	0	%100
147	M194	X	.967	.967	0	%100
148	M194	Z	.558	.558	0	%100
149	M195	X	.901	.901	0	%100
150	M195	Z	.52	.52	0	%100
151	M196	X	.967	.967	0	%100
152	M196	Z	.558	.558	0	%100
153	M197	X	.901	.901	0	%100
154	M197	Z	.52	.52	0	%100
155	M206	X	.967	.967	0	%100
156	M206	Z	.558	.558	0	%100
157	M207	X	.901	.901	0	%100
158	M207	Z	.52	.52	0	%100
159	M208	X	.967	.967	0	%100
160	M208	Z	.558	.558	0	%100
161	M209	X	.901	.901	0	%100
162	M209	Z	.52	.52	0	%100
163	M218	X	3.867	3.867	0	%100
164	M218	Z	2.233	2.233	0	%100
165	M219	X	3.602	3.602	0	%100
166	M219	Z	2.08	2.08	0	%100
167	M220	X	3.867	3.867	0	%100
168	M220	Z	2.233	2.233	0	%100
169	M221	X	3.602	3.602	0	%100
170	M221	Z	2.08	2.08	0	%100
171	M222	X	3.06	3.06	0	%100
172	M222	Z	1.767	1.767	0	%100
173	M223	X	3.06	3.06	0	%100
174	M223	Z	1.767	1.767	0	%100
175	M224	X	2.352	2.352	0	%100
176	M224	Z	1.358	1.358	0	%100

Member Distributed Loads (BLC 58 : Structure Wi (150 Deg))

	Member Label	Direction	Start Magnitude[lb/ft,...	End Magnitude[lb/ft,F...	Start Location[ft,%]	End Location[ft,%]
1	M19	X	1.357	1.357	0	%100
2	M19	Z	2.35	2.35	0	%100
3	M19A	X	1.157	1.157	0	%100
4	M19A	Z	2.005	2.005	0	%100
5	M38C	X	.339	.339	0	%100
6	M38C	Z	.588	.588	0	%100
7	M51	X	.339	.339	0	%100
8	M51	Z	.588	.588	0	%100

Member Distributed Loads (BLC 58 : Structure Wi (150 Deg)) (Continued)

	Member Label	Direction	Start Magnitude[lb/ft,...	End Magnitude[lb/ft,F...	Start Location[ft,%]	End Location[ft,%]
9	M104A	X	.345	.345	0	%100
10	M104A	Z	.598	.598	0	%100
11	M105A	X	.345	.345	0	%100
12	M105A	Z	.598	.598	0	%100
13	M134	X	.387	.387	0	%100
14	M134	Z	.671	.671	0	%100
15	M135	X	.387	.387	0	%100
16	M135	Z	.671	.671	0	%100
17	M93A	X	.807	.807	0	%100
18	M93A	Z	1.398	1.398	0	%100
19	M94A	X	.807	.807	0	%100
20	M94A	Z	1.398	1.398	0	%100
21	M93B	X	.713	.713	0	%100
22	M93B	Z	1.234	1.234	0	%100
23	M94D	X	.713	.713	0	%100
24	M94D	Z	1.234	1.234	0	%100
25	M53	X	0	0	0	%100
26	M53	Z	0	0	0	%100
27	M54	X	0	0	0	%100
28	M54	Z	0	0	0	%100
29	M63	X	0	0	0	%100
30	M63	Z	0	0	0	%100
31	M64	X	0	0	0	%100
32	M64	Z	0	0	0	%100
33	M69	X	0	0	0	%100
34	M69	Z	0	0	0	%100
35	M70	X	0	0	0	%100
36	M70	Z	0	0	0	%100
37	M71	X	.345	.345	0	%100
38	M71	Z	.598	.598	0	%100
39	M72	X	.345	.345	0	%100
40	M72	Z	.598	.598	0	%100
41	M81	X	.807	.807	0	%100
42	M81	Z	1.398	1.398	0	%100
43	M82	X	.807	.807	0	%100
44	M82	Z	1.398	1.398	0	%100
45	M87	X	.713	.713	0	%100
46	M87	Z	1.234	1.234	0	%100
47	M88	X	.713	.713	0	%100
48	M88	Z	1.234	1.234	0	%100
49	M89	X	2.068	2.068	0	%100
50	M89	Z	3.583	3.583	0	%100
51	M90	X	2.068	2.068	0	%100
52	M90	Z	3.583	3.583	0	%100
53	M89A	X	0	0	0	%100
54	M89A	Z	0	0	0	%100
55	M90A	X	0	0	0	%100
56	M90A	Z	0	0	0	%100
57	M91	X	2.068	2.068	0	%100
58	M91	Z	3.583	3.583	0	%100
59	M92	X	2.068	2.068	0	%100
60	M92	Z	3.583	3.583	0	%100

Member Distributed Loads (BLC 58 : Structure Wi (150 Deg)) (Continued)

	Member Label	Direction	Start Magnitude[lb/ft,...	End Magnitude[lb/ft,F...	Start Location[ft,%]	End Location[ft,%]
61	M101	X	1.154	1.154	0	%100
62	M101	Z	1.998	1.998	0	%100
63	M91A	X	1.154	1.154	0	%100
64	M91A	Z	1.998	1.998	0	%100
65	M93	X	0	0	0	%100
66	M93	Z	0	0	0	%100
67	M95B	X	0	0	0	%100
68	M95B	Z	0	0	0	%100
69	M97	X	1.154	1.154	0	%100
70	M97	Z	1.998	1.998	0	%100
71	M99	X	1.154	1.154	0	%100
72	M99	Z	1.998	1.998	0	%100
73	M101A	X	1.157	1.157	0	%100
74	M101A	Z	2.005	2.005	0	%100
75	M104	X	0	0	0	%100
76	M104	Z	0	0	0	%100
77	M105B	X	.908	.908	0	%100
78	M105B	Z	1.573	1.573	0	%100
79	M104B	X	0	0	0	%100
80	M104B	Z	0	0	0	%100
81	M105C	X	.908	.908	0	%100
82	M105C	Z	1.573	1.573	0	%100
83	M95C	X	.387	.387	0	%100
84	M95C	Z	.671	.671	0	%100
85	M96A	X	.387	.387	0	%100
86	M96A	Z	.671	.671	0	%100
87	M101B	X	0	0	0	%100
88	M101B	Z	0	0	0	%100
89	M102B	X	0	0	0	%100
90	M102B	Z	0	0	0	%100
91	MP1A	X	1.281	1.281	0	%100
92	MP1A	Z	2.218	2.218	0	%100
93	M144	X	1.071	1.071	0	%100
94	M144	Z	1.856	1.856	0	%100
95	M147	X	.588	.588	0	%100
96	M147	Z	1.018	1.018	0	%100
97	M149A	X	0	0	0	%100
98	M149A	Z	0	0	0	%100
99	M152	X	.588	.588	0	%100
100	M152	Z	1.018	1.018	0	%100
101	M155	X	.529	.529	0	%100
102	M155	Z	.916	.916	0	%100
103	M159	X	0	0	0	%100
104	M159	Z	0	0	0	%100
105	M163	X	.529	.529	0	%100
106	M163	Z	.916	.916	0	%100
107	M166A	X	0	0	0	%100
108	M166A	Z	0	0	0	%100
109	M167	X	.434	.434	0	%100
110	M167	Z	.752	.752	0	%100
111	M168	X	.434	.434	0	%100
112	M168	Z	.752	.752	0	%100

Member Distributed Loads (BLC 58 : Structure Wi (150 Deg)) (Continued)

	Member Label	Direction	Start Magnitude[lb/ft,...	End Magnitude[lb/ft,F...	Start Location[ft,%]	End Location[ft,%]
113	MP2A	X	1.281	1.281	0	%100
114	MP2A	Z	2.218	2.218	0	%100
115	MP4A	X	1.281	1.281	0	%100
116	MP4A	Z	2.218	2.218	0	%100
117	MP5A	X	1.281	1.281	0	%100
118	MP5A	Z	2.218	2.218	0	%100
119	MP3A	X	1.281	1.281	0	%100
120	MP3A	Z	2.218	2.218	0	%100
121	MP1C	X	1.281	1.281	0	%100
122	MP1C	Z	2.218	2.218	0	%100
123	MP2C	X	1.281	1.281	0	%100
124	MP2C	Z	2.218	2.218	0	%100
125	MP4C	X	1.281	1.281	0	%100
126	MP4C	Z	2.218	2.218	0	%100
127	MP5C	X	1.281	1.281	0	%100
128	MP5C	Z	2.218	2.218	0	%100
129	MP3C	X	1.281	1.281	0	%100
130	MP3C	Z	2.218	2.218	0	%100
131	MP1B	X	1.281	1.281	0	%100
132	MP1B	Z	2.218	2.218	0	%100
133	MP2B	X	1.281	1.281	0	%100
134	MP2B	Z	2.218	2.218	0	%100
135	MP4B	X	1.281	1.281	0	%100
136	MP4B	Z	2.218	2.218	0	%100
137	MP5B	X	1.281	1.281	0	%100
138	MP5B	Z	2.218	2.218	0	%100
139	MP3B	X	1.281	1.281	0	%100
140	MP3B	Z	2.218	2.218	0	%100
141	M180	X	0	0	0	%100
142	M180	Z	0	0	0	%100
143	M181	X	1.397	1.397	0	%100
144	M181	Z	2.42	2.42	0	%100
145	M182	X	1.397	1.397	0	%100
146	M182	Z	2.42	2.42	0	%100
147	M194	X	1.674	1.674	0	%100
148	M194	Z	2.9	2.9	0	%100
149	M195	X	1.56	1.56	0	%100
150	M195	Z	2.702	2.702	0	%100
151	M196	X	1.674	1.674	0	%100
152	M196	Z	2.9	2.9	0	%100
153	M197	X	1.56	1.56	0	%100
154	M197	Z	2.702	2.702	0	%100
155	M206	X	0	0	0	%100
156	M206	Z	0	0	0	%100
157	M207	X	0	0	0	%100
158	M207	Z	0	0	0	%100
159	M208	X	0	0	0	%100
160	M208	Z	0	0	0	%100
161	M209	X	0	0	0	%100
162	M209	Z	0	0	0	%100
163	M218	X	1.674	1.674	0	%100
164	M218	Z	2.9	2.9	0	%100

Member Distributed Loads (BLC 58 : Structure Wi (150 Deg)) (Continued)

	Member Label	Direction	Start Magnitude[lb/ft,...	End Magnitude[lb/ft,F...	Start Location[ft,%]	End Location[ft,%]
165	M219	X	1.56	1.56	0	%100
166	M219	Z	2.702	2.702	0	%100
167	M220	X	1.674	1.674	0	%100
168	M220	Z	2.9	2.9	0	%100
169	M221	X	1.56	1.56	0	%100
170	M221	Z	2.702	2.702	0	%100
171	M222	X	1.494	1.494	0	%100
172	M222	Z	2.588	2.588	0	%100
173	M223	X	1.903	1.903	0	%100
174	M223	Z	3.296	3.296	0	%100
175	M224	X	1.494	1.494	0	%100
176	M224	Z	2.588	2.588	0	%100

Member Distributed Loads (BLC 59 : Structure Wi (180 Deg))

	Member Label	Direction	Start Magnitude[lb/ft,...	End Magnitude[lb/ft,F...	Start Location[ft,%]	End Location[ft,%]
1	M19	X	0	0	0	%100
2	M19	Z	2.035	2.035	0	%100
3	M19A	X	0	0	0	%100
4	M19A	Z	.772	.772	0	%100
5	M38C	X	0	0	0	%100
6	M38C	Z	2.035	2.035	0	%100
7	M51	X	0	0	0	%100
8	M51	Z	0	0	0	%100
9	M104A	X	0	0	0	%100
10	M104A	Z	.921	.921	0	%100
11	M105A	X	0	0	0	%100
12	M105A	Z	.921	.921	0	%100
13	M134	X	0	0	0	%100
14	M134	Z	.258	.258	0	%100
15	M135	X	0	0	0	%100
16	M135	Z	.258	.258	0	%100
17	M93A	X	0	0	0	%100
18	M93A	Z	2.153	2.153	0	%100
19	M94A	X	0	0	0	%100
20	M94A	Z	2.153	2.153	0	%100
21	M93B	X	0	0	0	%100
22	M93B	Z	1.9	1.9	0	%100
23	M94D	X	0	0	0	%100
24	M94D	Z	1.9	1.9	0	%100
25	M53	X	0	0	0	%100
26	M53	Z	.23	.23	0	%100
27	M54	X	0	0	0	%100
28	M54	Z	.23	.23	0	%100
29	M63	X	0	0	0	%100
30	M63	Z	.538	.538	0	%100
31	M64	X	0	0	0	%100
32	M64	Z	.538	.538	0	%100
33	M69	X	0	0	0	%100
34	M69	Z	.475	.475	0	%100
35	M70	X	0	0	0	%100
36	M70	Z	.475	.475	0	%100

Member Distributed Loads (BLC 59 : Structure Wi (180 Deg)) (Continued)

	Member Label	Direction	Start Magnitude[lb/ft,...	End Magnitude[lb/ft,F...	Start Location[ft,%]	End Location[ft,%]
37	M71	X	0	0	0	%100
38	M71	Z	.23	.23	0	%100
39	M72	X	0	0	0	%100
40	M72	Z	.23	.23	0	%100
41	M81	X	0	0	0	%100
42	M81	Z	.538	.538	0	%100
43	M82	X	0	0	0	%100
44	M82	Z	.538	.538	0	%100
45	M87	X	0	0	0	%100
46	M87	Z	.475	.475	0	%100
47	M88	X	0	0	0	%100
48	M88	Z	.475	.475	0	%100
49	M89	X	0	0	0	%100
50	M89	Z	5.516	5.516	0	%100
51	M90	X	0	0	0	%100
52	M90	Z	5.516	5.516	0	%100
53	M89A	X	0	0	0	%100
54	M89A	Z	1.379	1.379	0	%100
55	M90A	X	0	0	0	%100
56	M90A	Z	1.379	1.379	0	%100
57	M91	X	0	0	0	%100
58	M91	Z	1.379	1.379	0	%100
59	M92	X	0	0	0	%100
60	M92	Z	1.379	1.379	0	%100
61	M101	X	0	0	0	%100
62	M101	Z	3.076	3.076	0	%100
63	M91A	X	0	0	0	%100
64	M91A	Z	3.076	3.076	0	%100
65	M93	X	0	0	0	%100
66	M93	Z	.769	.769	0	%100
67	M95B	X	0	0	0	%100
68	M95B	Z	.769	.769	0	%100
69	M97	X	0	0	0	%100
70	M97	Z	.769	.769	0	%100
71	M99	X	0	0	0	%100
72	M99	Z	.769	.769	0	%100
73	M101A	X	0	0	0	%100
74	M101A	Z	3.087	3.087	0	%100
75	M104	X	0	0	0	%100
76	M104	Z	.772	.772	0	%100
77	M105B	X	0	0	0	%100
78	M105B	Z	2.421	2.421	0	%100
79	M104B	X	0	0	0	%100
80	M104B	Z	.605	.605	0	%100
81	M105C	X	0	0	0	%100
82	M105C	Z	.605	.605	0	%100
83	M95C	X	0	0	0	%100
84	M95C	Z	1.033	1.033	0	%100
85	M96A	X	0	0	0	%100
86	M96A	Z	1.033	1.033	0	%100
87	M101B	X	0	0	0	%100
88	M101B	Z	.258	.258	0	%100

Member Distributed Loads (BLC 59 : Structure Wi (180 Deg)) (Continued)

	Member Label	Direction	Start Magnitude[lb/ft,...	End Magnitude[lb/ft,F...	Start Location[ft,%]	End Location[ft,%]
89	M102B	X	0	0	0	%100
90	M102B	Z	.258	.258	0	%100
91	MP1A	X	0	0	0	%100
92	MP1A	Z	2.517	2.517	0	%100
93	M144	X	0	0	0	%100
94	M144	Z	2.119	2.119	0	%100
95	M147	X	0	0	0	%100
96	M147	Z	1.568	1.568	0	%100
97	M149A	X	0	0	0	%100
98	M149A	Z	.392	.392	0	%100
99	M152	X	0	0	0	%100
100	M152	Z	.392	.392	0	%100
101	M155	X	0	0	0	%100
102	M155	Z	1.41	1.41	0	%100
103	M159	X	0	0	0	%100
104	M159	Z	.352	.352	0	%100
105	M163	X	0	0	0	%100
106	M163	Z	.352	.352	0	%100
107	M166A	X	0	0	0	%100
108	M166A	Z	.29	.29	0	%100
109	M167	X	0	0	0	%100
110	M167	Z	.29	.29	0	%100
111	M168	X	0	0	0	%100
112	M168	Z	1.158	1.158	0	%100
113	MP2A	X	0	0	0	%100
114	MP2A	Z	2.517	2.517	0	%100
115	MP4A	X	0	0	0	%100
116	MP4A	Z	2.517	2.517	0	%100
117	MP5A	X	0	0	0	%100
118	MP5A	Z	2.517	2.517	0	%100
119	MP3A	X	0	0	0	%100
120	MP3A	Z	2.517	2.517	0	%100
121	MP1C	X	0	0	0	%100
122	MP1C	Z	2.517	2.517	0	%100
123	MP2C	X	0	0	0	%100
124	MP2C	Z	2.517	2.517	0	%100
125	MP4C	X	0	0	0	%100
126	MP4C	Z	2.517	2.517	0	%100
127	MP5C	X	0	0	0	%100
128	MP5C	Z	2.517	2.517	0	%100
129	MP3C	X	0	0	0	%100
130	MP3C	Z	2.517	2.517	0	%100
131	MP1B	X	0	0	0	%100
132	MP1B	Z	2.517	2.517	0	%100
133	MP2B	X	0	0	0	%100
134	MP2B	Z	2.517	2.517	0	%100
135	MP4B	X	0	0	0	%100
136	MP4B	Z	2.517	2.517	0	%100
137	MP5B	X	0	0	0	%100
138	MP5B	Z	2.517	2.517	0	%100
139	MP3B	X	0	0	0	%100
140	MP3B	Z	2.517	2.517	0	%100

Member Distributed Loads (BLC 59 : Structure Wi (180 Deg)) (Continued)

	Member Label	Direction	Start Magnitude[lb/ft,...	End Magnitude[lb/ft,F...	Start Location[ft,%]	End Location[ft,%]
141	M180	X	0	0	0	%100
142	M180	Z	.931	.931	0	%100
143	M181	X	0	0	0	%100
144	M181	Z	.931	.931	0	%100
145	M182	X	0	0	0	%100
146	M182	Z	3.726	3.726	0	%100
147	M194	X	0	0	0	%100
148	M194	Z	4.465	4.465	0	%100
149	M195	X	0	0	0	%100
150	M195	Z	4.159	4.159	0	%100
151	M196	X	0	0	0	%100
152	M196	Z	4.465	4.465	0	%100
153	M197	X	0	0	0	%100
154	M197	Z	4.159	4.159	0	%100
155	M206	X	0	0	0	%100
156	M206	Z	1.116	1.116	0	%100
157	M207	X	0	0	0	%100
158	M207	Z	1.04	1.04	0	%100
159	M208	X	0	0	0	%100
160	M208	Z	1.116	1.116	0	%100
161	M209	X	0	0	0	%100
162	M209	Z	1.04	1.04	0	%100
163	M218	X	0	0	0	%100
164	M218	Z	1.116	1.116	0	%100
165	M219	X	0	0	0	%100
166	M219	Z	1.04	1.04	0	%100
167	M220	X	0	0	0	%100
168	M220	Z	1.116	1.116	0	%100
169	M221	X	0	0	0	%100
170	M221	Z	1.04	1.04	0	%100
171	M222	X	0	0	0	%100
172	M222	Z	2.716	2.716	0	%100
173	M223	X	0	0	0	%100
174	M223	Z	3.533	3.533	0	%100
175	M224	X	0	0	0	%100
176	M224	Z	3.533	3.533	0	%100

Member Distributed Loads (BLC 60 : Structure Wi (210 Deg))

	Member Label	Direction	Start Magnitude[lb/ft,...	End Magnitude[lb/ft,F...	Start Location[ft,%]	End Location[ft,%]
1	M19	X	-.339	-.339	0	%100
2	M19	Z	.588	.588	0	%100
3	M19A	X	0	0	0	%100
4	M19A	Z	0	0	0	%100
5	M38C	X	-1.357	-1.357	0	%100
6	M38C	Z	2.35	2.35	0	%100
7	M51	X	-.339	-.339	0	%100
8	M51	Z	.588	.588	0	%100
9	M104A	X	-.345	-.345	0	%100
10	M104A	Z	.598	.598	0	%100
11	M105A	X	-.345	-.345	0	%100
12	M105A	Z	.598	.598	0	%100

Member Distributed Loads (BLC 60 : Structure Wi (210 Deg)) (Continued)

	Member Label	Direction	Start Magnitude[lb/ft,...	End Magnitude[lb/ft,F...	Start Location[ft,%]	End Location[ft,%]
13	M134	X	0	0	0	%100
14	M134	Z	0	0	0	%100
15	M135	X	0	0	0	%100
16	M135	Z	0	0	0	%100
17	M93A	X	-.807	-.807	0	%100
18	M93A	Z	1.398	1.398	0	%100
19	M94A	X	-.807	-.807	0	%100
20	M94A	Z	1.398	1.398	0	%100
21	M93B	X	-.713	-.713	0	%100
22	M93B	Z	1.234	1.234	0	%100
23	M94D	X	-.713	-.713	0	%100
24	M94D	Z	1.234	1.234	0	%100
25	M53	X	-.345	-.345	0	%100
26	M53	Z	.598	.598	0	%100
27	M54	X	-.345	-.345	0	%100
28	M54	Z	.598	.598	0	%100
29	M63	X	-.807	-.807	0	%100
30	M63	Z	1.398	1.398	0	%100
31	M64	X	-.807	-.807	0	%100
32	M64	Z	1.398	1.398	0	%100
33	M69	X	-.713	-.713	0	%100
34	M69	Z	1.234	1.234	0	%100
35	M70	X	-.713	-.713	0	%100
36	M70	Z	1.234	1.234	0	%100
37	M71	X	0	0	0	%100
38	M71	Z	0	0	0	%100
39	M72	X	0	0	0	%100
40	M72	Z	0	0	0	%100
41	M81	X	0	0	0	%100
42	M81	Z	0	0	0	%100
43	M82	X	0	0	0	%100
44	M82	Z	0	0	0	%100
45	M87	X	0	0	0	%100
46	M87	Z	0	0	0	%100
47	M88	X	0	0	0	%100
48	M88	Z	0	0	0	%100
49	M89	X	-2.068	-2.068	0	%100
50	M89	Z	3.583	3.583	0	%100
51	M90	X	-2.068	-2.068	0	%100
52	M90	Z	3.583	3.583	0	%100
53	M89A	X	-2.068	-2.068	0	%100
54	M89A	Z	3.583	3.583	0	%100
55	M90A	X	-2.068	-2.068	0	%100
56	M90A	Z	3.583	3.583	0	%100
57	M91	X	0	0	0	%100
58	M91	Z	0	0	0	%100
59	M92	X	0	0	0	%100
60	M92	Z	0	0	0	%100
61	M101	X	-1.154	-1.154	0	%100
62	M101	Z	1.998	1.998	0	%100
63	M91A	X	-1.154	-1.154	0	%100
64	M91A	Z	1.998	1.998	0	%100

Member Distributed Loads (BLC 60 : Structure Wi (210 Deg)) (Continued)

	Member Label	Direction	Start Magnitude[lb/ft,...	End Magnitude[lb/ft,F...	Start Location[ft,%]	End Location[ft,%]
65	M93	X	-1.154	-1.154	0	%100
66	M93	Z	1.998	1.998	0	%100
67	M95B	X	-1.154	-1.154	0	%100
68	M95B	Z	1.998	1.998	0	%100
69	M97	X	0	0	0	%100
70	M97	Z	0	0	0	%100
71	M99	X	0	0	0	%100
72	M99	Z	0	0	0	%100
73	M101A	X	-1.157	-1.157	0	%100
74	M101A	Z	2.005	2.005	0	%100
75	M104	X	-1.157	-1.157	0	%100
76	M104	Z	2.005	2.005	0	%100
77	M105B	X	-.908	-.908	0	%100
78	M105B	Z	1.573	1.573	0	%100
79	M104B	X	-.908	-.908	0	%100
80	M104B	Z	1.573	1.573	0	%100
81	M105C	X	0	0	0	%100
82	M105C	Z	0	0	0	%100
83	M95C	X	-.387	-.387	0	%100
84	M95C	Z	.671	.671	0	%100
85	M96A	X	-.387	-.387	0	%100
86	M96A	Z	.671	.671	0	%100
87	M101B	X	-.387	-.387	0	%100
88	M101B	Z	.671	.671	0	%100
89	M102B	X	-.387	-.387	0	%100
90	M102B	Z	.671	.671	0	%100
91	MP1A	X	-1.281	-1.281	0	%100
92	MP1A	Z	2.218	2.218	0	%100
93	M144	X	-1.071	-1.071	0	%100
94	M144	Z	1.856	1.856	0	%100
95	M147	X	-.588	-.588	0	%100
96	M147	Z	1.018	1.018	0	%100
97	M149A	X	-.588	-.588	0	%100
98	M149A	Z	1.018	1.018	0	%100
99	M152	X	0	0	0	%100
100	M152	Z	0	0	0	%100
101	M155	X	-.529	-.529	0	%100
102	M155	Z	.916	.916	0	%100
103	M159	X	-.529	-.529	0	%100
104	M159	Z	.916	.916	0	%100
105	M163	X	0	0	0	%100
106	M163	Z	0	0	0	%100
107	M166A	X	-.434	-.434	0	%100
108	M166A	Z	.752	.752	0	%100
109	M167	X	0	0	0	%100
110	M167	Z	0	0	0	%100
111	M168	X	-.434	-.434	0	%100
112	M168	Z	.752	.752	0	%100
113	MP2A	X	-1.281	-1.281	0	%100
114	MP2A	Z	2.218	2.218	0	%100
115	MP4A	X	-1.281	-1.281	0	%100
116	MP4A	Z	2.218	2.218	0	%100

Member Distributed Loads (BLC 60 : Structure Wi (210 Deg)) (Continued)

	Member Label	Direction	Start Magnitude[lb/ft,...	End Magnitude[lb/ft,F...	Start Location[ft,%]	End Location[ft,%]
117	MP5A	X	-1.281	-1.281	0	%100
118	MP5A	Z	2.218	2.218	0	%100
119	MP3A	X	-1.281	-1.281	0	%100
120	MP3A	Z	2.218	2.218	0	%100
121	MP1C	X	-1.281	-1.281	0	%100
122	MP1C	Z	2.218	2.218	0	%100
123	MP2C	X	-1.281	-1.281	0	%100
124	MP2C	Z	2.218	2.218	0	%100
125	MP4C	X	-1.281	-1.281	0	%100
126	MP4C	Z	2.218	2.218	0	%100
127	MP5C	X	-1.281	-1.281	0	%100
128	MP5C	Z	2.218	2.218	0	%100
129	MP3C	X	-1.281	-1.281	0	%100
130	MP3C	Z	2.218	2.218	0	%100
131	MP1B	X	-1.281	-1.281	0	%100
132	MP1B	Z	2.218	2.218	0	%100
133	MP2B	X	-1.281	-1.281	0	%100
134	MP2B	Z	2.218	2.218	0	%100
135	MP4B	X	-1.281	-1.281	0	%100
136	MP4B	Z	2.218	2.218	0	%100
137	MP5B	X	-1.281	-1.281	0	%100
138	MP5B	Z	2.218	2.218	0	%100
139	MP3B	X	-1.281	-1.281	0	%100
140	MP3B	Z	2.218	2.218	0	%100
141	M180	X	-1.397	-1.397	0	%100
142	M180	Z	2.42	2.42	0	%100
143	M181	X	0	0	0	%100
144	M181	Z	0	0	0	%100
145	M182	X	-1.397	-1.397	0	%100
146	M182	Z	2.42	2.42	0	%100
147	M194	X	-1.674	-1.674	0	%100
148	M194	Z	2.9	2.9	0	%100
149	M195	X	-1.56	-1.56	0	%100
150	M195	Z	2.702	2.702	0	%100
151	M196	X	-1.674	-1.674	0	%100
152	M196	Z	2.9	2.9	0	%100
153	M197	X	-1.56	-1.56	0	%100
154	M197	Z	2.702	2.702	0	%100
155	M206	X	-1.674	-1.674	0	%100
156	M206	Z	2.9	2.9	0	%100
157	M207	X	-1.56	-1.56	0	%100
158	M207	Z	2.702	2.702	0	%100
159	M208	X	-1.674	-1.674	0	%100
160	M208	Z	2.9	2.9	0	%100
161	M209	X	-1.56	-1.56	0	%100
162	M209	Z	2.702	2.702	0	%100
163	M218	X	0	0	0	%100
164	M218	Z	0	0	0	%100
165	M219	X	0	0	0	%100
166	M219	Z	0	0	0	%100
167	M220	X	0	0	0	%100
168	M220	Z	0	0	0	%100

Member Distributed Loads (BLC 60 : Structure Wi (210 Deg)) (Continued)

	Member Label	Direction	Start Magnitude[lb/ft,...	End Magnitude[lb/ft,F...	Start Location[ft,%]	End Location[ft,%]
169	M221	X	0	0	0	%100
170	M221	Z	0	0	0	%100
171	M222	X	-1.494	-1.494	0	%100
172	M222	Z	2.588	2.588	0	%100
173	M223	X	-1.494	-1.494	0	%100
174	M223	Z	2.588	2.588	0	%100
175	M224	X	-1.903	-1.903	0	%100
176	M224	Z	3.296	3.296	0	%100

Member Distributed Loads (BLC 61 : Structure Wi (240 Deg))

	Member Label	Direction	Start Magnitude[lb/ft,...	End Magnitude[lb/ft,F...	Start Location[ft,%]	End Location[ft,%]
1	M19	X	0	0	0	%100
2	M19	Z	0	0	0	%100
3	M19A	X	-.668	-.668	0	%100
4	M19A	Z	.386	.386	0	%100
5	M38C	X	-1.763	-1.763	0	%100
6	M38C	Z	1.018	1.018	0	%100
7	M51	X	-1.763	-1.763	0	%100
8	M51	Z	1.018	1.018	0	%100
9	M104A	X	-.199	-.199	0	%100
10	M104A	Z	.115	.115	0	%100
11	M105A	X	-.199	-.199	0	%100
12	M105A	Z	.115	.115	0	%100
13	M134	X	-.224	-.224	0	%100
14	M134	Z	.129	.129	0	%100
15	M135	X	-.224	-.224	0	%100
16	M135	Z	.129	.129	0	%100
17	M93A	X	-.466	-.466	0	%100
18	M93A	Z	.269	.269	0	%100
19	M94A	X	-.466	-.466	0	%100
20	M94A	Z	.269	.269	0	%100
21	M93B	X	-.411	-.411	0	%100
22	M93B	Z	.238	.238	0	%100
23	M94D	X	-.411	-.411	0	%100
24	M94D	Z	.238	.238	0	%100
25	M53	X	-.798	-.798	0	%100
26	M53	Z	.46	.46	0	%100
27	M54	X	-.798	-.798	0	%100
28	M54	Z	.46	.46	0	%100
29	M63	X	-1.864	-1.864	0	%100
30	M63	Z	1.076	1.076	0	%100
31	M64	X	-1.864	-1.864	0	%100
32	M64	Z	1.076	1.076	0	%100
33	M69	X	-1.645	-1.645	0	%100
34	M69	Z	.95	.95	0	%100
35	M70	X	-1.645	-1.645	0	%100
36	M70	Z	.95	.95	0	%100
37	M71	X	-.199	-.199	0	%100
38	M71	Z	.115	.115	0	%100
39	M72	X	-.199	-.199	0	%100
40	M72	Z	.115	.115	0	%100

Member Distributed Loads (BLC 61 : Structure Wi (240 Deg)) (Continued)

	Member Label	Direction	Start Magnitude[lb/ft,...	End Magnitude[lb/ft,F...	Start Location[ft,%]	End Location[ft,%]
41	M81	X	-.466	-.466	0	%100
42	M81	Z	.269	.269	0	%100
43	M82	X	-.466	-.466	0	%100
44	M82	Z	.269	.269	0	%100
45	M87	X	-.411	-.411	0	%100
46	M87	Z	.238	.238	0	%100
47	M88	X	-.411	-.411	0	%100
48	M88	Z	.238	.238	0	%100
49	M89	X	-1.194	-1.194	0	%100
50	M89	Z	.689	.689	0	%100
51	M90	X	-1.194	-1.194	0	%100
52	M90	Z	.689	.689	0	%100
53	M89A	X	-4.777	-4.777	0	%100
54	M89A	Z	2.758	2.758	0	%100
55	M90A	X	-4.777	-4.777	0	%100
56	M90A	Z	2.758	2.758	0	%100
57	M91	X	-1.194	-1.194	0	%100
58	M91	Z	.689	.689	0	%100
59	M92	X	-1.194	-1.194	0	%100
60	M92	Z	.689	.689	0	%100
61	M101	X	-.666	-.666	0	%100
62	M101	Z	.385	.385	0	%100
63	M91A	X	-.666	-.666	0	%100
64	M91A	Z	.385	.385	0	%100
65	M93	X	-2.664	-2.664	0	%100
66	M93	Z	1.538	1.538	0	%100
67	M95B	X	-2.664	-2.664	0	%100
68	M95B	Z	1.538	1.538	0	%100
69	M97	X	-.666	-.666	0	%100
70	M97	Z	.385	.385	0	%100
71	M99	X	-.666	-.666	0	%100
72	M99	Z	.385	.385	0	%100
73	M101A	X	-.668	-.668	0	%100
74	M101A	Z	.386	.386	0	%100
75	M104	X	-2.673	-2.673	0	%100
76	M104	Z	1.543	1.543	0	%100
77	M105B	X	-.524	-.524	0	%100
78	M105B	Z	.303	.303	0	%100
79	M104B	X	-2.097	-2.097	0	%100
80	M104B	Z	1.211	1.211	0	%100
81	M105C	X	-.524	-.524	0	%100
82	M105C	Z	.303	.303	0	%100
83	M95C	X	-.224	-.224	0	%100
84	M95C	Z	.129	.129	0	%100
85	M96A	X	-.224	-.224	0	%100
86	M96A	Z	.129	.129	0	%100
87	M101B	X	-.894	-.894	0	%100
88	M101B	Z	.516	.516	0	%100
89	M102B	X	-.894	-.894	0	%100
90	M102B	Z	.516	.516	0	%100
91	MP1A	X	-2.295	-2.295	0	%100
92	MP1A	Z	1.325	1.325	0	%100

Member Distributed Loads (BLC 61 : Structure Wi (240 Deg)) (Continued)

	Member Label	Direction	Start Magnitude[lb/ft,...	End Magnitude[lb/ft,F...	Start Location[ft,%]	End Location[ft,%]
93	M144	X	-1.897	-1.897	0	%100
94	M144	Z	1.095	1.095	0	%100
95	M147	X	-.339	-.339	0	%100
96	M147	Z	.196	.196	0	%100
97	M149A	X	-1.358	-1.358	0	%100
98	M149A	Z	.784	.784	0	%100
99	M152	X	-.339	-.339	0	%100
100	M152	Z	.196	.196	0	%100
101	M155	X	-.305	-.305	0	%100
102	M155	Z	.176	.176	0	%100
103	M159	X	-1.221	-1.221	0	%100
104	M159	Z	.705	.705	0	%100
105	M163	X	-.305	-.305	0	%100
106	M163	Z	.176	.176	0	%100
107	M166A	X	-1.003	-1.003	0	%100
108	M166A	Z	.579	.579	0	%100
109	M167	X	-.251	-.251	0	%100
110	M167	Z	.145	.145	0	%100
111	M168	X	-.251	-.251	0	%100
112	M168	Z	.145	.145	0	%100
113	MP2A	X	-2.295	-2.295	0	%100
114	MP2A	Z	1.325	1.325	0	%100
115	MP4A	X	-2.295	-2.295	0	%100
116	MP4A	Z	1.325	1.325	0	%100
117	MP5A	X	-2.295	-2.295	0	%100
118	MP5A	Z	1.325	1.325	0	%100
119	MP3A	X	-2.295	-2.295	0	%100
120	MP3A	Z	1.325	1.325	0	%100
121	MP1C	X	-2.295	-2.295	0	%100
122	MP1C	Z	1.325	1.325	0	%100
123	MP2C	X	-2.295	-2.295	0	%100
124	MP2C	Z	1.325	1.325	0	%100
125	MP4C	X	-2.295	-2.295	0	%100
126	MP4C	Z	1.325	1.325	0	%100
127	MP5C	X	-2.295	-2.295	0	%100
128	MP5C	Z	1.325	1.325	0	%100
129	MP3C	X	-2.295	-2.295	0	%100
130	MP3C	Z	1.325	1.325	0	%100
131	MP1B	X	-2.295	-2.295	0	%100
132	MP1B	Z	1.325	1.325	0	%100
133	MP2B	X	-2.295	-2.295	0	%100
134	MP2B	Z	1.325	1.325	0	%100
135	MP4B	X	-2.295	-2.295	0	%100
136	MP4B	Z	1.325	1.325	0	%100
137	MP5B	X	-2.295	-2.295	0	%100
138	MP5B	Z	1.325	1.325	0	%100
139	MP3B	X	-2.295	-2.295	0	%100
140	MP3B	Z	1.325	1.325	0	%100
141	M180	X	-3.226	-3.226	0	%100
142	M180	Z	1.863	1.863	0	%100
143	M181	X	-.807	-.807	0	%100
144	M181	Z	.466	.466	0	%100

Member Distributed Loads (BLC 61 : Structure Wi (240 Deg)) (Continued)

	Member Label	Direction	Start Magnitude[lb/ft,...	End Magnitude[lb/ft,F...	Start Location[ft,%]	End Location[ft,%]
145	M182	X	-.807	-.807	0	%100
146	M182	Z	.466	.466	0	%100
147	M194	X	-.967	-.967	0	%100
148	M194	Z	.558	.558	0	%100
149	M195	X	-.901	-.901	0	%100
150	M195	Z	.52	.52	0	%100
151	M196	X	-.967	-.967	0	%100
152	M196	Z	.558	.558	0	%100
153	M197	X	-.901	-.901	0	%100
154	M197	Z	.52	.52	0	%100
155	M206	X	-3.867	-3.867	0	%100
156	M206	Z	2.233	2.233	0	%100
157	M207	X	-3.602	-3.602	0	%100
158	M207	Z	2.08	2.08	0	%100
159	M208	X	-3.867	-3.867	0	%100
160	M208	Z	2.233	2.233	0	%100
161	M209	X	-3.602	-3.602	0	%100
162	M209	Z	2.08	2.08	0	%100
163	M218	X	-.967	-.967	0	%100
164	M218	Z	.558	.558	0	%100
165	M219	X	-.901	-.901	0	%100
166	M219	Z	.52	.52	0	%100
167	M220	X	-.967	-.967	0	%100
168	M220	Z	.558	.558	0	%100
169	M221	X	-.901	-.901	0	%100
170	M221	Z	.52	.52	0	%100
171	M222	X	-3.06	-3.06	0	%100
172	M222	Z	1.767	1.767	0	%100
173	M223	X	-2.352	-2.352	0	%100
174	M223	Z	1.358	1.358	0	%100
175	M224	X	-3.06	-3.06	0	%100
176	M224	Z	1.767	1.767	0	%100

Member Distributed Loads (BLC 62 : Structure Wi (270 Deg))

	Member Label	Direction	Start Magnitude[lb/ft,...	End Magnitude[lb/ft,F...	Start Location[ft,%]	End Location[ft,%]
1	M19	X	-.678	-.678	0	%100
2	M19	Z	0	0	0	%100
3	M19A	X	-2.315	-2.315	0	%100
4	M19A	Z	0	0	0	%100
5	M38C	X	-.678	-.678	0	%100
6	M38C	Z	0	0	0	%100
7	M51	X	-2.714	-2.714	0	%100
8	M51	Z	0	0	0	%100
9	M104A	X	0	0	0	%100
10	M104A	Z	0	0	0	%100
11	M105A	X	0	0	0	%100
12	M105A	Z	0	0	0	%100
13	M134	X	-.774	-.774	0	%100
14	M134	Z	0	0	0	%100
15	M135	X	-.774	-.774	0	%100
16	M135	Z	0	0	0	%100

Member Distributed Loads (BLC 62 : Structure Wi (270 Deg)) (Continued)

	Member Label	Direction	Start Magnitude[lb/ft,...	End Magnitude[lb/ft,F...	Start Location[ft,%]	End Location[ft,%]
17	M93A	X	0	0	0	%100
18	M93A	Z	0	0	0	%100
19	M94A	X	0	0	0	%100
20	M94A	Z	0	0	0	%100
21	M93B	X	0	0	0	%100
22	M93B	Z	0	0	0	%100
23	M94D	X	0	0	0	%100
24	M94D	Z	0	0	0	%100
25	M53	X	-.691	-.691	0	%100
26	M53	Z	0	0	0	%100
27	M54	X	-.691	-.691	0	%100
28	M54	Z	0	0	0	%100
29	M63	X	-1.615	-1.615	0	%100
30	M63	Z	0	0	0	%100
31	M64	X	-1.615	-1.615	0	%100
32	M64	Z	0	0	0	%100
33	M69	X	-1.425	-1.425	0	%100
34	M69	Z	0	0	0	%100
35	M70	X	-1.425	-1.425	0	%100
36	M70	Z	0	0	0	%100
37	M71	X	-.691	-.691	0	%100
38	M71	Z	0	0	0	%100
39	M72	X	-.691	-.691	0	%100
40	M72	Z	0	0	0	%100
41	M81	X	-1.615	-1.615	0	%100
42	M81	Z	0	0	0	%100
43	M82	X	-1.615	-1.615	0	%100
44	M82	Z	0	0	0	%100
45	M87	X	-1.425	-1.425	0	%100
46	M87	Z	0	0	0	%100
47	M88	X	-1.425	-1.425	0	%100
48	M88	Z	0	0	0	%100
49	M89	X	0	0	0	%100
50	M89	Z	0	0	0	%100
51	M90	X	0	0	0	%100
52	M90	Z	0	0	0	%100
53	M89A	X	-4.137	-4.137	0	%100
54	M89A	Z	0	0	0	%100
55	M90A	X	-4.137	-4.137	0	%100
56	M90A	Z	0	0	0	%100
57	M91	X	-4.137	-4.137	0	%100
58	M91	Z	0	0	0	%100
59	M92	X	-4.137	-4.137	0	%100
60	M92	Z	0	0	0	%100
61	M101	X	0	0	0	%100
62	M101	Z	0	0	0	%100
63	M91A	X	0	0	0	%100
64	M91A	Z	0	0	0	%100
65	M93	X	-2.307	-2.307	0	%100
66	M93	Z	0	0	0	%100
67	M95B	X	-2.307	-2.307	0	%100
68	M95B	Z	0	0	0	%100

Member Distributed Loads (BLC 62 : Structure Wi (270 Deg)) (Continued)

	Member Label	Direction	Start Magnitude[lb/ft,...	End Magnitude[lb/ft,F...	Start Location[ft,%]	End Location[ft,%]
69	M97	X	-2.307	-2.307	0	%100
70	M97	Z	0	0	0	%100
71	M99	X	-2.307	-2.307	0	%100
72	M99	Z	0	0	0	%100
73	M101A	X	0	0	0	%100
74	M101A	Z	0	0	0	%100
75	M104	X	-2.315	-2.315	0	%100
76	M104	Z	0	0	0	%100
77	M105B	X	0	0	0	%100
78	M105B	Z	0	0	0	%100
79	M104B	X	-1.816	-1.816	0	%100
80	M104B	Z	0	0	0	%100
81	M105C	X	-1.816	-1.816	0	%100
82	M105C	Z	0	0	0	%100
83	M95C	X	0	0	0	%100
84	M95C	Z	0	0	0	%100
85	M96A	X	0	0	0	%100
86	M96A	Z	0	0	0	%100
87	M101B	X	-.774	-.774	0	%100
88	M101B	Z	0	0	0	%100
89	M102B	X	-.774	-.774	0	%100
90	M102B	Z	0	0	0	%100
91	MP1A	X	-2.695	-2.695	0	%100
92	MP1A	Z	0	0	0	%100
93	M144	X	-2.214	-2.214	0	%100
94	M144	Z	0	0	0	%100
95	M147	X	0	0	0	%100
96	M147	Z	0	0	0	%100
97	M149A	X	-1.176	-1.176	0	%100
98	M149A	Z	0	0	0	%100
99	M152	X	-1.176	-1.176	0	%100
100	M152	Z	0	0	0	%100
101	M155	X	0	0	0	%100
102	M155	Z	0	0	0	%100
103	M159	X	-1.057	-1.057	0	%100
104	M159	Z	0	0	0	%100
105	M163	X	-1.057	-1.057	0	%100
106	M163	Z	0	0	0	%100
107	M166A	X	-.869	-.869	0	%100
108	M166A	Z	0	0	0	%100
109	M167	X	-.869	-.869	0	%100
110	M167	Z	0	0	0	%100
111	M168	X	0	0	0	%100
112	M168	Z	0	0	0	%100
113	MP2A	X	-2.695	-2.695	0	%100
114	MP2A	Z	0	0	0	%100
115	MP4A	X	-2.695	-2.695	0	%100
116	MP4A	Z	0	0	0	%100
117	MP5A	X	-2.695	-2.695	0	%100
118	MP5A	Z	0	0	0	%100
119	MP3A	X	-2.695	-2.695	0	%100
120	MP3A	Z	0	0	0	%100

Member Distributed Loads (BLC 62 : Structure Wi (270 Deg)) (Continued)

	Member Label	Direction	Start Magnitude[lb/ft,...	End Magnitude[lb/ft,F...	Start Location[ft,%]	End Location[ft,%]
121	MP1C	X	-2.695	-2.695	0	%100
122	MP1C	Z	0	0	0	%100
123	MP2C	X	-2.695	-2.695	0	%100
124	MP2C	Z	0	0	0	%100
125	MP4C	X	-2.695	-2.695	0	%100
126	MP4C	Z	0	0	0	%100
127	MP5C	X	-2.695	-2.695	0	%100
128	MP5C	Z	0	0	0	%100
129	MP3C	X	-2.695	-2.695	0	%100
130	MP3C	Z	0	0	0	%100
131	MP1B	X	-2.695	-2.695	0	%100
132	MP1B	Z	0	0	0	%100
133	MP2B	X	-2.695	-2.695	0	%100
134	MP2B	Z	0	0	0	%100
135	MP4B	X	-2.695	-2.695	0	%100
136	MP4B	Z	0	0	0	%100
137	MP5B	X	-2.695	-2.695	0	%100
138	MP5B	Z	0	0	0	%100
139	MP3B	X	-2.695	-2.695	0	%100
140	MP3B	Z	0	0	0	%100
141	M180	X	-2.794	-2.794	0	%100
142	M180	Z	0	0	0	%100
143	M181	X	-2.794	-2.794	0	%100
144	M181	Z	0	0	0	%100
145	M182	X	0	0	0	%100
146	M182	Z	0	0	0	%100
147	M194	X	0	0	0	%100
148	M194	Z	0	0	0	%100
149	M195	X	0	0	0	%100
150	M195	Z	0	0	0	%100
151	M196	X	0	0	0	%100
152	M196	Z	0	0	0	%100
153	M197	X	0	0	0	%100
154	M197	Z	0	0	0	%100
155	M206	X	-3.349	-3.349	0	%100
156	M206	Z	0	0	0	%100
157	M207	X	-3.12	-3.12	0	%100
158	M207	Z	0	0	0	%100
159	M208	X	-3.349	-3.349	0	%100
160	M208	Z	0	0	0	%100
161	M209	X	-3.12	-3.12	0	%100
162	M209	Z	0	0	0	%100
163	M218	X	-3.349	-3.349	0	%100
164	M218	Z	0	0	0	%100
165	M219	X	-3.12	-3.12	0	%100
166	M219	Z	0	0	0	%100
167	M220	X	-3.349	-3.349	0	%100
168	M220	Z	0	0	0	%100
169	M221	X	-3.12	-3.12	0	%100
170	M221	Z	0	0	0	%100
171	M222	X	-3.806	-3.806	0	%100
172	M222	Z	0	0	0	%100

Member Distributed Loads (BLC 62 : Structure Wi (270 Deg)) (Continued)

	Member Label	Direction	Start Magnitude[lb/ft,...	End Magnitude[lb/ft,F...	Start Location[ft,%]	End Location[ft,%]
173	M223	X	-2.988	-2.988	0	%100
174	M223	Z	0	0	0	%100
175	M224	X	-2.988	-2.988	0	%100
176	M224	Z	0	0	0	%100

Member Distributed Loads (BLC 63 : Structure Wi (300 Deg))

	Member Label	Direction	Start Magnitude[lb/ft,...	End Magnitude[lb/ft,F...	Start Location[ft,%]	End Location[ft,%]
1	M19	X	-1.763	-1.763	0	%100
2	M19	Z	-1.018	-1.018	0	%100
3	M19A	X	-2.673	-2.673	0	%100
4	M19A	Z	-1.543	-1.543	0	%100
5	M38C	X	0	0	0	%100
6	M38C	Z	0	0	0	%100
7	M51	X	-1.763	-1.763	0	%100
8	M51	Z	-1.018	-1.018	0	%100
9	M104A	X	-.199	-.199	0	%100
10	M104A	Z	-.115	-.115	0	%100
11	M105A	X	-.199	-.199	0	%100
12	M105A	Z	-.115	-.115	0	%100
13	M134	X	-.894	-.894	0	%100
14	M134	Z	-.516	-.516	0	%100
15	M135	X	-.894	-.894	0	%100
16	M135	Z	-.516	-.516	0	%100
17	M93A	X	-.466	-.466	0	%100
18	M93A	Z	-.269	-.269	0	%100
19	M94A	X	-.466	-.466	0	%100
20	M94A	Z	-.269	-.269	0	%100
21	M93B	X	-.411	-.411	0	%100
22	M93B	Z	-.238	-.238	0	%100
23	M94D	X	-.411	-.411	0	%100
24	M94D	Z	-.238	-.238	0	%100
25	M53	X	-.199	-.199	0	%100
26	M53	Z	-.115	-.115	0	%100
27	M54	X	-.199	-.199	0	%100
28	M54	Z	-.115	-.115	0	%100
29	M63	X	-.466	-.466	0	%100
30	M63	Z	-.269	-.269	0	%100
31	M64	X	-.466	-.466	0	%100
32	M64	Z	-.269	-.269	0	%100
33	M69	X	-.411	-.411	0	%100
34	M69	Z	-.238	-.238	0	%100
35	M70	X	-.411	-.411	0	%100
36	M70	Z	-.238	-.238	0	%100
37	M71	X	-.798	-.798	0	%100
38	M71	Z	-.46	-.46	0	%100
39	M72	X	-.798	-.798	0	%100
40	M72	Z	-.46	-.46	0	%100
41	M81	X	-1.864	-1.864	0	%100
42	M81	Z	-1.076	-1.076	0	%100
43	M82	X	-1.864	-1.864	0	%100
44	M82	Z	-1.076	-1.076	0	%100

Member Distributed Loads (BLC 63 : Structure Wi (300 Deg)) (Continued)

	Member Label	Direction	Start Magnitude[lb/ft,...	End Magnitude[lb/ft,F...	Start Location[ft,%]	End Location[ft,%]
45	M87	X	-1.645	-1.645	0	%100
46	M87	Z	-.95	-.95	0	%100
47	M88	X	-1.645	-1.645	0	%100
48	M88	Z	-.95	-.95	0	%100
49	M89	X	-1.194	-1.194	0	%100
50	M89	Z	-.689	-.689	0	%100
51	M90	X	-1.194	-1.194	0	%100
52	M90	Z	-.689	-.689	0	%100
53	M89A	X	-1.194	-1.194	0	%100
54	M89A	Z	-.689	-.689	0	%100
55	M90A	X	-1.194	-1.194	0	%100
56	M90A	Z	-.689	-.689	0	%100
57	M91	X	-4.777	-4.777	0	%100
58	M91	Z	-2.758	-2.758	0	%100
59	M92	X	-4.777	-4.777	0	%100
60	M92	Z	-2.758	-2.758	0	%100
61	M101	X	-.666	-.666	0	%100
62	M101	Z	-.385	-.385	0	%100
63	M91A	X	-.666	-.666	0	%100
64	M91A	Z	-.385	-.385	0	%100
65	M93	X	-.666	-.666	0	%100
66	M93	Z	-.385	-.385	0	%100
67	M95B	X	-.666	-.666	0	%100
68	M95B	Z	-.385	-.385	0	%100
69	M97	X	-2.664	-2.664	0	%100
70	M97	Z	-1.538	-1.538	0	%100
71	M99	X	-2.664	-2.664	0	%100
72	M99	Z	-1.538	-1.538	0	%100
73	M101A	X	-.668	-.668	0	%100
74	M101A	Z	-.386	-.386	0	%100
75	M104	X	-.668	-.668	0	%100
76	M104	Z	-.386	-.386	0	%100
77	M105B	X	-.524	-.524	0	%100
78	M105B	Z	-.303	-.303	0	%100
79	M104B	X	-.524	-.524	0	%100
80	M104B	Z	-.303	-.303	0	%100
81	M105C	X	-2.097	-2.097	0	%100
82	M105C	Z	-1.211	-1.211	0	%100
83	M95C	X	-.224	-.224	0	%100
84	M95C	Z	-.129	-.129	0	%100
85	M96A	X	-.224	-.224	0	%100
86	M96A	Z	-.129	-.129	0	%100
87	M101B	X	-.224	-.224	0	%100
88	M101B	Z	-.129	-.129	0	%100
89	M102B	X	-.224	-.224	0	%100
90	M102B	Z	-.129	-.129	0	%100
91	MP1A	X	-2.295	-2.295	0	%100
92	MP1A	Z	-1.325	-1.325	0	%100
93	M144	X	-1.897	-1.897	0	%100
94	M144	Z	-1.095	-1.095	0	%100
95	M147	X	-.339	-.339	0	%100
96	M147	Z	-.196	-.196	0	%100

Member Distributed Loads (BLC 63 : Structure Wi (300 Deg)) (Continued)

	Member Label	Direction	Start Magnitude[lb/ft,...	End Magnitude[lb/ft,F...	Start Location[ft,%]	End Location[ft,%]
97	M149A	X	-.339	-.339	0	%100
98	M149A	Z	-.196	-.196	0	%100
99	M152	X	-1.358	-1.358	0	%100
100	M152	Z	-.784	-.784	0	%100
101	M155	X	-.305	-.305	0	%100
102	M155	Z	-.176	-.176	0	%100
103	M159	X	-.305	-.305	0	%100
104	M159	Z	-.176	-.176	0	%100
105	M163	X	-1.221	-1.221	0	%100
106	M163	Z	-.705	-.705	0	%100
107	M166A	X	-.251	-.251	0	%100
108	M166A	Z	-.145	-.145	0	%100
109	M167	X	-1.003	-1.003	0	%100
110	M167	Z	-.579	-.579	0	%100
111	M168	X	-.251	-.251	0	%100
112	M168	Z	-.145	-.145	0	%100
113	MP2A	X	-2.295	-2.295	0	%100
114	MP2A	Z	-1.325	-1.325	0	%100
115	MP4A	X	-2.295	-2.295	0	%100
116	MP4A	Z	-1.325	-1.325	0	%100
117	MP5A	X	-2.295	-2.295	0	%100
118	MP5A	Z	-1.325	-1.325	0	%100
119	MP3A	X	-2.295	-2.295	0	%100
120	MP3A	Z	-1.325	-1.325	0	%100
121	MP1C	X	-2.295	-2.295	0	%100
122	MP1C	Z	-1.325	-1.325	0	%100
123	MP2C	X	-2.295	-2.295	0	%100
124	MP2C	Z	-1.325	-1.325	0	%100
125	MP4C	X	-2.295	-2.295	0	%100
126	MP4C	Z	-1.325	-1.325	0	%100
127	MP5C	X	-2.295	-2.295	0	%100
128	MP5C	Z	-1.325	-1.325	0	%100
129	MP3C	X	-2.295	-2.295	0	%100
130	MP3C	Z	-1.325	-1.325	0	%100
131	MP1B	X	-2.295	-2.295	0	%100
132	MP1B	Z	-1.325	-1.325	0	%100
133	MP2B	X	-2.295	-2.295	0	%100
134	MP2B	Z	-1.325	-1.325	0	%100
135	MP4B	X	-2.295	-2.295	0	%100
136	MP4B	Z	-1.325	-1.325	0	%100
137	MP5B	X	-2.295	-2.295	0	%100
138	MP5B	Z	-1.325	-1.325	0	%100
139	MP3B	X	-2.295	-2.295	0	%100
140	MP3B	Z	-1.325	-1.325	0	%100
141	M180	X	-.807	-.807	0	%100
142	M180	Z	-.466	-.466	0	%100
143	M181	X	-3.226	-3.226	0	%100
144	M181	Z	-1.863	-1.863	0	%100
145	M182	X	-.807	-.807	0	%100
146	M182	Z	-.466	-.466	0	%100
147	M194	X	-.967	-.967	0	%100
148	M194	Z	-.558	-.558	0	%100

Member Distributed Loads (BLC 63 : Structure Wi (300 Deg)) (Continued)

	Member Label	Direction	Start Magnitude[lb/ft,...	End Magnitude[lb/ft,F...	Start Location[ft,%]	End Location[ft,%]
149	M195	X	-.901	-.901	0	%100
150	M195	Z	-.52	-.52	0	%100
151	M196	X	-.967	-.967	0	%100
152	M196	Z	-.558	-.558	0	%100
153	M197	X	-.901	-.901	0	%100
154	M197	Z	-.52	-.52	0	%100
155	M206	X	-.967	-.967	0	%100
156	M206	Z	-.558	-.558	0	%100
157	M207	X	-.901	-.901	0	%100
158	M207	Z	-.52	-.52	0	%100
159	M208	X	-.967	-.967	0	%100
160	M208	Z	-.558	-.558	0	%100
161	M209	X	-.901	-.901	0	%100
162	M209	Z	-.52	-.52	0	%100
163	M218	X	-3.867	-3.867	0	%100
164	M218	Z	-2.233	-2.233	0	%100
165	M219	X	-3.602	-3.602	0	%100
166	M219	Z	-2.08	-2.08	0	%100
167	M220	X	-3.867	-3.867	0	%100
168	M220	Z	-2.233	-2.233	0	%100
169	M221	X	-3.602	-3.602	0	%100
170	M221	Z	-2.08	-2.08	0	%100
171	M222	X	-3.06	-3.06	0	%100
172	M222	Z	-1.767	-1.767	0	%100
173	M223	X	-3.06	-3.06	0	%100
174	M223	Z	-1.767	-1.767	0	%100
175	M224	X	-2.352	-2.352	0	%100
176	M224	Z	-1.358	-1.358	0	%100

Member Distributed Loads (BLC 64 : Structure Wi (330 Deg))

	Member Label	Direction	Start Magnitude[lb/ft,...	End Magnitude[lb/ft,F...	Start Location[ft,%]	End Location[ft,%]
1	M19	X	-1.357	-1.357	0	%100
2	M19	Z	-2.35	-2.35	0	%100
3	M19A	X	-1.157	-1.157	0	%100
4	M19A	Z	-2.005	-2.005	0	%100
5	M38C	X	-.339	-.339	0	%100
6	M38C	Z	-.588	-.588	0	%100
7	M51	X	-.339	-.339	0	%100
8	M51	Z	-.588	-.588	0	%100
9	M104A	X	-.345	-.345	0	%100
10	M104A	Z	-.598	-.598	0	%100
11	M105A	X	-.345	-.345	0	%100
12	M105A	Z	-.598	-.598	0	%100
13	M134	X	-.387	-.387	0	%100
14	M134	Z	-.671	-.671	0	%100
15	M135	X	-.387	-.387	0	%100
16	M135	Z	-.671	-.671	0	%100
17	M93A	X	-.807	-.807	0	%100
18	M93A	Z	-1.398	-1.398	0	%100
19	M94A	X	-.807	-.807	0	%100
20	M94A	Z	-1.398	-1.398	0	%100

Member Distributed Loads (BLC 64 : Structure Wi (330 Deg)) (Continued)

	Member Label	Direction	Start Magnitude[lb/ft,...	End Magnitude[lb/ft,F...	Start Location[ft,%]	End Location[ft,%]
21	M93B	X	-.713	-.713	0	%100
22	M93B	Z	-1.234	-1.234	0	%100
23	M94D	X	-.713	-.713	0	%100
24	M94D	Z	-1.234	-1.234	0	%100
25	M53	X	0	0	0	%100
26	M53	Z	0	0	0	%100
27	M54	X	0	0	0	%100
28	M54	Z	0	0	0	%100
29	M63	X	0	0	0	%100
30	M63	Z	0	0	0	%100
31	M64	X	0	0	0	%100
32	M64	Z	0	0	0	%100
33	M69	X	0	0	0	%100
34	M69	Z	0	0	0	%100
35	M70	X	0	0	0	%100
36	M70	Z	0	0	0	%100
37	M71	X	-.345	-.345	0	%100
38	M71	Z	-.598	-.598	0	%100
39	M72	X	-.345	-.345	0	%100
40	M72	Z	-.598	-.598	0	%100
41	M81	X	-.807	-.807	0	%100
42	M81	Z	-1.398	-1.398	0	%100
43	M82	X	-.807	-.807	0	%100
44	M82	Z	-1.398	-1.398	0	%100
45	M87	X	-.713	-.713	0	%100
46	M87	Z	-1.234	-1.234	0	%100
47	M88	X	-.713	-.713	0	%100
48	M88	Z	-1.234	-1.234	0	%100
49	M89	X	-2.068	-2.068	0	%100
50	M89	Z	-3.583	-3.583	0	%100
51	M90	X	-2.068	-2.068	0	%100
52	M90	Z	-3.583	-3.583	0	%100
53	M89A	X	0	0	0	%100
54	M89A	Z	0	0	0	%100
55	M90A	X	0	0	0	%100
56	M90A	Z	0	0	0	%100
57	M91	X	-2.068	-2.068	0	%100
58	M91	Z	-3.583	-3.583	0	%100
59	M92	X	-2.068	-2.068	0	%100
60	M92	Z	-3.583	-3.583	0	%100
61	M101	X	-1.154	-1.154	0	%100
62	M101	Z	-1.998	-1.998	0	%100
63	M91A	X	-1.154	-1.154	0	%100
64	M91A	Z	-1.998	-1.998	0	%100
65	M93	X	0	0	0	%100
66	M93	Z	0	0	0	%100
67	M95B	X	0	0	0	%100
68	M95B	Z	0	0	0	%100
69	M97	X	-1.154	-1.154	0	%100
70	M97	Z	-1.998	-1.998	0	%100
71	M99	X	-1.154	-1.154	0	%100
72	M99	Z	-1.998	-1.998	0	%100

Member Distributed Loads (BLC 64 : Structure Wi (330 Deg)) (Continued)

	Member Label	Direction	Start Magnitude[lb/ft,...	End Magnitude[lb/ft,F...	Start Location[ft,%]	End Location[ft,%]
73	M101A	X	-1.157	-1.157	0	%100
74	M101A	Z	-2.005	-2.005	0	%100
75	M104	X	0	0	0	%100
76	M104	Z	0	0	0	%100
77	M105B	X	-.908	-.908	0	%100
78	M105B	Z	-1.573	-1.573	0	%100
79	M104B	X	0	0	0	%100
80	M104B	Z	0	0	0	%100
81	M105C	X	-.908	-.908	0	%100
82	M105C	Z	-1.573	-1.573	0	%100
83	M95C	X	-.387	-.387	0	%100
84	M95C	Z	-.671	-.671	0	%100
85	M96A	X	-.387	-.387	0	%100
86	M96A	Z	-.671	-.671	0	%100
87	M101B	X	0	0	0	%100
88	M101B	Z	0	0	0	%100
89	M102B	X	0	0	0	%100
90	M102B	Z	0	0	0	%100
91	MP1A	X	-1.281	-1.281	0	%100
92	MP1A	Z	-2.218	-2.218	0	%100
93	M144	X	-1.071	-1.071	0	%100
94	M144	Z	-1.856	-1.856	0	%100
95	M147	X	-.588	-.588	0	%100
96	M147	Z	-1.018	-1.018	0	%100
97	M149A	X	0	0	0	%100
98	M149A	Z	0	0	0	%100
99	M152	X	-.588	-.588	0	%100
100	M152	Z	-1.018	-1.018	0	%100
101	M155	X	-.529	-.529	0	%100
102	M155	Z	-.916	-.916	0	%100
103	M159	X	0	0	0	%100
104	M159	Z	0	0	0	%100
105	M163	X	-.529	-.529	0	%100
106	M163	Z	-.916	-.916	0	%100
107	M166A	X	0	0	0	%100
108	M166A	Z	0	0	0	%100
109	M167	X	-.434	-.434	0	%100
110	M167	Z	-.752	-.752	0	%100
111	M168	X	-.434	-.434	0	%100
112	M168	Z	-.752	-.752	0	%100
113	MP2A	X	-1.281	-1.281	0	%100
114	MP2A	Z	-2.218	-2.218	0	%100
115	MP4A	X	-1.281	-1.281	0	%100
116	MP4A	Z	-2.218	-2.218	0	%100
117	MP5A	X	-1.281	-1.281	0	%100
118	MP5A	Z	-2.218	-2.218	0	%100
119	MP3A	X	-1.281	-1.281	0	%100
120	MP3A	Z	-2.218	-2.218	0	%100
121	MP1C	X	-1.281	-1.281	0	%100
122	MP1C	Z	-2.218	-2.218	0	%100
123	MP2C	X	-1.281	-1.281	0	%100
124	MP2C	Z	-2.218	-2.218	0	%100

Member Distributed Loads (BLC 64 : Structure Wi (330 Deg)) (Continued)

	Member Label	Direction	Start Magnitude[lb/ft,...	End Magnitude[lb/ft,F...	Start Location[ft,%]	End Location[ft,%]
125	MP4C	X	-1.281	-1.281	0	%100
126	MP4C	Z	-2.218	-2.218	0	%100
127	MP5C	X	-1.281	-1.281	0	%100
128	MP5C	Z	-2.218	-2.218	0	%100
129	MP3C	X	-1.281	-1.281	0	%100
130	MP3C	Z	-2.218	-2.218	0	%100
131	MP1B	X	-1.281	-1.281	0	%100
132	MP1B	Z	-2.218	-2.218	0	%100
133	MP2B	X	-1.281	-1.281	0	%100
134	MP2B	Z	-2.218	-2.218	0	%100
135	MP4B	X	-1.281	-1.281	0	%100
136	MP4B	Z	-2.218	-2.218	0	%100
137	MP5B	X	-1.281	-1.281	0	%100
138	MP5B	Z	-2.218	-2.218	0	%100
139	MP3B	X	-1.281	-1.281	0	%100
140	MP3B	Z	-2.218	-2.218	0	%100
141	M180	X	0	0	0	%100
142	M180	Z	0	0	0	%100
143	M181	X	-1.397	-1.397	0	%100
144	M181	Z	-2.42	-2.42	0	%100
145	M182	X	-1.397	-1.397	0	%100
146	M182	Z	-2.42	-2.42	0	%100
147	M194	X	-1.674	-1.674	0	%100
148	M194	Z	-2.9	-2.9	0	%100
149	M195	X	-1.56	-1.56	0	%100
150	M195	Z	-2.702	-2.702	0	%100
151	M196	X	-1.674	-1.674	0	%100
152	M196	Z	-2.9	-2.9	0	%100
153	M197	X	-1.56	-1.56	0	%100
154	M197	Z	-2.702	-2.702	0	%100
155	M206	X	0	0	0	%100
156	M206	Z	0	0	0	%100
157	M207	X	0	0	0	%100
158	M207	Z	0	0	0	%100
159	M208	X	0	0	0	%100
160	M208	Z	0	0	0	%100
161	M209	X	0	0	0	%100
162	M209	Z	0	0	0	%100
163	M218	X	-1.674	-1.674	0	%100
164	M218	Z	-2.9	-2.9	0	%100
165	M219	X	-1.56	-1.56	0	%100
166	M219	Z	-2.702	-2.702	0	%100
167	M220	X	-1.674	-1.674	0	%100
168	M220	Z	-2.9	-2.9	0	%100
169	M221	X	-1.56	-1.56	0	%100
170	M221	Z	-2.702	-2.702	0	%100
171	M222	X	-1.494	-1.494	0	%100
172	M222	Z	-2.588	-2.588	0	%100
173	M223	X	-1.903	-1.903	0	%100
174	M223	Z	-3.296	-3.296	0	%100
175	M224	X	-1.494	-1.494	0	%100
176	M224	Z	-2.588	-2.588	0	%100

Member Distributed Loads (BLC 65 : Structure Wm (0 Deg))

	Member Label	Direction	Start Magnitude[lb/ft,...	End Magnitude[lb/ft,F...	Start Location[ft,%]	End Location[ft,%]
1	M19	X	0	0	0	%100
2	M19	Z	-.374	-.374	0	%100
3	M19A	X	0	0	0	%100
4	M19A	Z	-.207	-.207	0	%100
5	M38C	X	0	0	0	%100
6	M38C	Z	-.374	-.374	0	%100
7	M51	X	0	0	0	%100
8	M51	Z	0	0	0	%100
9	M104A	X	0	0	0	%100
10	M104A	Z	-.052	-.052	0	%100
11	M105A	X	0	0	0	%100
12	M105A	Z	-.052	-.052	0	%100
13	M134	X	0	0	0	%100
14	M134	Z	-.015	-.015	0	%100
15	M135	X	0	0	0	%100
16	M135	Z	-.015	-.015	0	%100
17	M93A	X	0	0	0	%100
18	M93A	Z	-.394	-.394	0	%100
19	M94A	X	0	0	0	%100
20	M94A	Z	-.394	-.394	0	%100
21	M93B	X	0	0	0	%100
22	M93B	Z	-.354	-.354	0	%100
23	M94D	X	0	0	0	%100
24	M94D	Z	-.354	-.354	0	%100
25	M53	X	0	0	0	%100
26	M53	Z	-.013	-.013	0	%100
27	M54	X	0	0	0	%100
28	M54	Z	-.013	-.013	0	%100
29	M63	X	0	0	0	%100
30	M63	Z	-.099	-.099	0	%100
31	M64	X	0	0	0	%100
32	M64	Z	-.099	-.099	0	%100
33	M69	X	0	0	0	%100
34	M69	Z	-.089	-.089	0	%100
35	M70	X	0	0	0	%100
36	M70	Z	-.089	-.089	0	%100
37	M71	X	0	0	0	%100
38	M71	Z	-.013	-.013	0	%100
39	M72	X	0	0	0	%100
40	M72	Z	-.013	-.013	0	%100
41	M81	X	0	0	0	%100
42	M81	Z	-.099	-.099	0	%100
43	M82	X	0	0	0	%100
44	M82	Z	-.099	-.099	0	%100
45	M87	X	0	0	0	%100
46	M87	Z	-.089	-.089	0	%100
47	M88	X	0	0	0	%100
48	M88	Z	-.089	-.089	0	%100
49	M89	X	0	0	0	%100
50	M89	Z	-1.508	-1.508	0	%100
51	M90	X	0	0	0	%100
52	M90	Z	-1.508	-1.508	0	%100

Member Distributed Loads (BLC 65 : Structure Wm (0 Deg)) (Continued)

	Member Label	Direction	Start Magnitude[lb/ft,...	End Magnitude[lb/ft,F...	Start Location[ft,%]	End Location[ft,%]
53	M89A	X	0	0	0	%100
54	M89A	Z	-.377	-.377	0	%100
55	M90A	X	0	0	0	%100
56	M90A	Z	-.377	-.377	0	%100
57	M91	X	0	0	0	%100
58	M91	Z	-.377	-.377	0	%100
59	M92	X	0	0	0	%100
60	M92	Z	-.377	-.377	0	%100
61	M101	X	0	0	0	%100
62	M101	Z	-.829	-.829	0	%100
63	M91A	X	0	0	0	%100
64	M91A	Z	-.829	-.829	0	%100
65	M93	X	0	0	0	%100
66	M93	Z	-.207	-.207	0	%100
67	M95B	X	0	0	0	%100
68	M95B	Z	-.207	-.207	0	%100
69	M97	X	0	0	0	%100
70	M97	Z	-.207	-.207	0	%100
71	M99	X	0	0	0	%100
72	M99	Z	-.207	-.207	0	%100
73	M101A	X	0	0	0	%100
74	M101A	Z	-.829	-.829	0	%100
75	M104	X	0	0	0	%100
76	M104	Z	-.207	-.207	0	%100
77	M105B	X	0	0	0	%100
78	M105B	Z	-.394	-.394	0	%100
79	M104B	X	0	0	0	%100
80	M104B	Z	-.098	-.098	0	%100
81	M105C	X	0	0	0	%100
82	M105C	Z	-.098	-.098	0	%100
83	M95C	X	0	0	0	%100
84	M95C	Z	-.061	-.061	0	%100
85	M96A	X	0	0	0	%100
86	M96A	Z	-.061	-.061	0	%100
87	M101B	X	0	0	0	%100
88	M101B	Z	-.015	-.015	0	%100
89	M102B	X	0	0	0	%100
90	M102B	Z	-.015	-.015	0	%100
91	MP1A	X	0	0	0	%100
92	MP1A	Z	-.428	-.428	0	%100
93	M144	X	0	0	0	%100
94	M144	Z	-.368	-.368	0	%100
95	M147	X	0	0	0	%100
96	M147	Z	-.086	-.086	0	%100
97	M149A	X	0	0	0	%100
98	M149A	Z	-.022	-.022	0	%100
99	M152	X	0	0	0	%100
100	M152	Z	-.022	-.022	0	%100
101	M155	X	0	0	0	%100
102	M155	Z	-.082	-.082	0	%100
103	M159	X	0	0	0	%100
104	M159	Z	-.021	-.021	0	%100

Member Distributed Loads (BLC 65 : Structure Wm (0 Deg)) (Continued)

	Member Label	Direction	Start Magnitude[lb/ft,...	End Magnitude[lb/ft,F...	Start Location[ft,%]	End Location[ft,%]
105	M163	X	0	0	0	%100
106	M163	Z	-.021	-.021	0	%100
107	M166A	X	0	0	0	%100
108	M166A	Z	-.021	-.021	0	%100
109	M167	X	0	0	0	%100
110	M167	Z	-.021	-.021	0	%100
111	M168	X	0	0	0	%100
112	M168	Z	-.083	-.083	0	%100
113	MP2A	X	0	0	0	%100
114	MP2A	Z	-.428	-.428	0	%100
115	MP4A	X	0	0	0	%100
116	MP4A	Z	-.428	-.428	0	%100
117	MP5A	X	0	0	0	%100
118	MP5A	Z	-.428	-.428	0	%100
119	MP3A	X	0	0	0	%100
120	MP3A	Z	-.428	-.428	0	%100
121	MP1C	X	0	0	0	%100
122	MP1C	Z	-.428	-.428	0	%100
123	MP2C	X	0	0	0	%100
124	MP2C	Z	-.428	-.428	0	%100
125	MP4C	X	0	0	0	%100
126	MP4C	Z	-.428	-.428	0	%100
127	MP5C	X	0	0	0	%100
128	MP5C	Z	-.428	-.428	0	%100
129	MP3C	X	0	0	0	%100
130	MP3C	Z	-.428	-.428	0	%100
131	MP1B	X	0	0	0	%100
132	MP1B	Z	-.428	-.428	0	%100
133	MP2B	X	0	0	0	%100
134	MP2B	Z	-.428	-.428	0	%100
135	MP4B	X	0	0	0	%100
136	MP4B	Z	-.428	-.428	0	%100
137	MP5B	X	0	0	0	%100
138	MP5B	Z	-.428	-.428	0	%100
139	MP3B	X	0	0	0	%100
140	MP3B	Z	-.428	-.428	0	%100
141	M180	X	0	0	0	%100
142	M180	Z	-.216	-.216	0	%100
143	M181	X	0	0	0	%100
144	M181	Z	-.216	-.216	0	%100
145	M182	X	0	0	0	%100
146	M182	Z	-.863	-.863	0	%100
147	M194	X	0	0	0	%100
148	M194	Z	-1.129	-1.129	0	%100
149	M195	X	0	0	0	%100
150	M195	Z	-1.023	-1.023	0	%100
151	M196	X	0	0	0	%100
152	M196	Z	-1.129	-1.129	0	%100
153	M197	X	0	0	0	%100
154	M197	Z	-1.023	-1.023	0	%100
155	M206	X	0	0	0	%100
156	M206	Z	-.282	-.282	0	%100

Member Distributed Loads (BLC 65 : Structure Wm (0 Deg)) (Continued)

	Member Label	Direction	Start Magnitude[lb/ft,...	End Magnitude[lb/ft,F...	Start Location[ft,%]	End Location[ft,%]
157	M207	X	0	0	0	%100
158	M207	Z	-.256	-.256	0	%100
159	M208	X	0	0	0	%100
160	M208	Z	-.282	-.282	0	%100
161	M209	X	0	0	0	%100
162	M209	Z	-.256	-.256	0	%100
163	M218	X	0	0	0	%100
164	M218	Z	-.282	-.282	0	%100
165	M219	X	0	0	0	%100
166	M219	Z	-.256	-.256	0	%100
167	M220	X	0	0	0	%100
168	M220	Z	-.282	-.282	0	%100
169	M221	X	0	0	0	%100
170	M221	Z	-.256	-.256	0	%100
171	M222	X	0	0	0	%100
172	M222	Z	-.766	-.766	0	%100
173	M223	X	0	0	0	%100
174	M223	Z	-.874	-.874	0	%100
175	M224	X	0	0	0	%100
176	M224	Z	-.874	-.874	0	%100

Member Distributed Loads (BLC 66 : Structure Wm (30 Deg))

	Member Label	Direction	Start Magnitude[lb/ft,...	End Magnitude[lb/ft,F...	Start Location[ft,%]	End Location[ft,%]
1	M19	X	.062	.062	0	%100
2	M19	Z	-.108	-.108	0	%100
3	M19A	X	0	0	0	%100
4	M19A	Z	0	0	0	%100
5	M38C	X	.249	.249	0	%100
6	M38C	Z	-.432	-.432	0	%100
7	M51	X	.062	.062	0	%100
8	M51	Z	-.108	-.108	0	%100
9	M104A	X	.019	.019	0	%100
10	M104A	Z	-.034	-.034	0	%100
11	M105A	X	.019	.019	0	%100
12	M105A	Z	-.034	-.034	0	%100
13	M134	X	0	0	0	%100
14	M134	Z	0	0	0	%100
15	M135	X	0	0	0	%100
16	M135	Z	0	0	0	%100
17	M93A	X	.148	.148	0	%100
18	M93A	Z	-.256	-.256	0	%100
19	M94A	X	.148	.148	0	%100
20	M94A	Z	-.256	-.256	0	%100
21	M93B	X	.133	.133	0	%100
22	M93B	Z	-.23	-.23	0	%100
23	M94D	X	.133	.133	0	%100
24	M94D	Z	-.23	-.23	0	%100
25	M53	X	.019	.019	0	%100
26	M53	Z	-.034	-.034	0	%100
27	M54	X	.019	.019	0	%100
28	M54	Z	-.034	-.034	0	%100

Member Distributed Loads (BLC 66 : Structure Wm (30 Deg)) (Continued)

	Member Label	Direction	Start Magnitude[lb/ft,...	End Magnitude[lb/ft,F...	Start Location[ft,%]	End Location[ft,%]
29	M63	X	.148	.148	0	%100
30	M63	Z	-.256	-.256	0	%100
31	M64	X	.148	.148	0	%100
32	M64	Z	-.256	-.256	0	%100
33	M69	X	.133	.133	0	%100
34	M69	Z	-.23	-.23	0	%100
35	M70	X	.133	.133	0	%100
36	M70	Z	-.23	-.23	0	%100
37	M71	X	0	0	0	%100
38	M71	Z	0	0	0	%100
39	M72	X	0	0	0	%100
40	M72	Z	0	0	0	%100
41	M81	X	0	0	0	%100
42	M81	Z	0	0	0	%100
43	M82	X	0	0	0	%100
44	M82	Z	0	0	0	%100
45	M87	X	0	0	0	%100
46	M87	Z	0	0	0	%100
47	M88	X	0	0	0	%100
48	M88	Z	0	0	0	%100
49	M89	X	.565	.565	0	%100
50	M89	Z	-.979	-.979	0	%100
51	M90	X	.565	.565	0	%100
52	M90	Z	-.979	-.979	0	%100
53	M89A	X	.565	.565	0	%100
54	M89A	Z	-.979	-.979	0	%100
55	M90A	X	.565	.565	0	%100
56	M90A	Z	-.979	-.979	0	%100
57	M91	X	0	0	0	%100
58	M91	Z	0	0	0	%100
59	M92	X	0	0	0	%100
60	M92	Z	0	0	0	%100
61	M101	X	.311	.311	0	%100
62	M101	Z	-.538	-.538	0	%100
63	M91A	X	.311	.311	0	%100
64	M91A	Z	-.538	-.538	0	%100
65	M93	X	.311	.311	0	%100
66	M93	Z	-.538	-.538	0	%100
67	M95B	X	.311	.311	0	%100
68	M95B	Z	-.538	-.538	0	%100
69	M97	X	0	0	0	%100
70	M97	Z	0	0	0	%100
71	M99	X	0	0	0	%100
72	M99	Z	0	0	0	%100
73	M101A	X	.311	.311	0	%100
74	M101A	Z	-.538	-.538	0	%100
75	M104	X	.311	.311	0	%100
76	M104	Z	-.538	-.538	0	%100
77	M105B	X	.148	.148	0	%100
78	M105B	Z	-.256	-.256	0	%100
79	M104B	X	.148	.148	0	%100
80	M104B	Z	-.256	-.256	0	%100

Member Distributed Loads (BLC 66 : Structure Wm (30 Deg)) (Continued)

	Member Label	Direction	Start Magnitude[lb/ft,...	End Magnitude[lb/ft,F...	Start Location[ft,%]	End Location[ft,%]
81	M105C	X	0	0	0	%100
82	M105C	Z	0	0	0	%100
83	M95C	X	.023	.023	0	%100
84	M95C	Z	-.039	-.039	0	%100
85	M96A	X	.023	.023	0	%100
86	M96A	Z	-.039	-.039	0	%100
87	M101B	X	.023	.023	0	%100
88	M101B	Z	-.039	-.039	0	%100
89	M102B	X	.023	.023	0	%100
90	M102B	Z	-.039	-.039	0	%100
91	MP1A	X	.222	.222	0	%100
92	MP1A	Z	-.385	-.385	0	%100
93	M144	X	.188	.188	0	%100
94	M144	Z	-.326	-.326	0	%100
95	M147	X	.032	.032	0	%100
96	M147	Z	-.056	-.056	0	%100
97	M149A	X	.032	.032	0	%100
98	M149A	Z	-.056	-.056	0	%100
99	M152	X	0	0	0	%100
100	M152	Z	0	0	0	%100
101	M155	X	.031	.031	0	%100
102	M155	Z	-.053	-.053	0	%100
103	M159	X	.031	.031	0	%100
104	M159	Z	-.053	-.053	0	%100
105	M163	X	0	0	0	%100
106	M163	Z	0	0	0	%100
107	M166A	X	.031	.031	0	%100
108	M166A	Z	-.054	-.054	0	%100
109	M167	X	0	0	0	%100
110	M167	Z	0	0	0	%100
111	M168	X	.031	.031	0	%100
112	M168	Z	-.054	-.054	0	%100
113	MP2A	X	.222	.222	0	%100
114	MP2A	Z	-.385	-.385	0	%100
115	MP4A	X	.222	.222	0	%100
116	MP4A	Z	-.385	-.385	0	%100
117	MP5A	X	.222	.222	0	%100
118	MP5A	Z	-.385	-.385	0	%100
119	MP3A	X	.222	.222	0	%100
120	MP3A	Z	-.385	-.385	0	%100
121	MP1C	X	.222	.222	0	%100
122	MP1C	Z	-.385	-.385	0	%100
123	MP2C	X	.222	.222	0	%100
124	MP2C	Z	-.385	-.385	0	%100
125	MP4C	X	.222	.222	0	%100
126	MP4C	Z	-.385	-.385	0	%100
127	MP5C	X	.222	.222	0	%100
128	MP5C	Z	-.385	-.385	0	%100
129	MP3C	X	.222	.222	0	%100
130	MP3C	Z	-.385	-.385	0	%100
131	MP1B	X	.222	.222	0	%100
132	MP1B	Z	-.385	-.385	0	%100

Member Distributed Loads (BLC 66 : Structure Wm (30 Deg)) (Continued)

	Member Label	Direction	Start Magnitude[lb/ft,...	End Magnitude[lb/ft,F...	Start Location[ft,%]	End Location[ft,%]
133	MP2B	X	.222	.222	0	%100
134	MP2B	Z	-.385	-.385	0	%100
135	MP4B	X	.222	.222	0	%100
136	MP4B	Z	-.385	-.385	0	%100
137	MP5B	X	.222	.222	0	%100
138	MP5B	Z	-.385	-.385	0	%100
139	MP3B	X	.222	.222	0	%100
140	MP3B	Z	-.385	-.385	0	%100
141	M180	X	.324	.324	0	%100
142	M180	Z	-.561	-.561	0	%100
143	M181	X	0	0	0	%100
144	M181	Z	0	0	0	%100
145	M182	X	.324	.324	0	%100
146	M182	Z	-.561	-.561	0	%100
147	M194	X	.424	.424	0	%100
148	M194	Z	-.734	-.734	0	%100
149	M195	X	.384	.384	0	%100
150	M195	Z	-.665	-.665	0	%100
151	M196	X	.424	.424	0	%100
152	M196	Z	-.734	-.734	0	%100
153	M197	X	.384	.384	0	%100
154	M197	Z	-.665	-.665	0	%100
155	M206	X	.424	.424	0	%100
156	M206	Z	-.734	-.734	0	%100
157	M207	X	.384	.384	0	%100
158	M207	Z	-.665	-.665	0	%100
159	M208	X	.424	.424	0	%100
160	M208	Z	-.734	-.734	0	%100
161	M209	X	.384	.384	0	%100
162	M209	Z	-.665	-.665	0	%100
163	M218	X	0	0	0	%100
164	M218	Z	0	0	0	%100
165	M219	X	0	0	0	%100
166	M219	Z	0	0	0	%100
167	M220	X	0	0	0	%100
168	M220	Z	0	0	0	%100
169	M221	X	0	0	0	%100
170	M221	Z	0	0	0	%100
171	M222	X	.401	.401	0	%100
172	M222	Z	-.694	-.694	0	%100
173	M223	X	.401	.401	0	%100
174	M223	Z	-.694	-.694	0	%100
175	M224	X	.455	.455	0	%100
176	M224	Z	-.788	-.788	0	%100

Member Distributed Loads (BLC 67 : Structure Wm (60 Deg))

	Member Label	Direction	Start Magnitude[lb/ft,...	End Magnitude[lb/ft,F...	Start Location[ft,%]	End Location[ft,%]
1	M19	X	0	0	0	%100
2	M19	Z	0	0	0	%100
3	M19A	X	.179	.179	0	%100
4	M19A	Z	-.104	-.104	0	%100

Member Distributed Loads (BLC 67 : Structure Wm (60 Deg)) (Continued)

	Member Label	Direction	Start Magnitude[lb/ft,...	End Magnitude[lb/ft,F...	Start Location[ft,%]	End Location[ft,%]
5	M38C	X	.324	.324	0	%100
6	M38C	Z	-.187	-.187	0	%100
7	M51	X	.324	.324	0	%100
8	M51	Z	-.187	-.187	0	%100
9	M104A	X	.011	.011	0	%100
10	M104A	Z	-.006	-.006	0	%100
11	M105A	X	.011	.011	0	%100
12	M105A	Z	-.006	-.006	0	%100
13	M134	X	.013	.013	0	%100
14	M134	Z	-.008	-.008	0	%100
15	M135	X	.013	.013	0	%100
16	M135	Z	-.008	-.008	0	%100
17	M93A	X	.085	.085	0	%100
18	M93A	Z	-.049	-.049	0	%100
19	M94A	X	.085	.085	0	%100
20	M94A	Z	-.049	-.049	0	%100
21	M93B	X	.077	.077	0	%100
22	M93B	Z	-.044	-.044	0	%100
23	M94D	X	.077	.077	0	%100
24	M94D	Z	-.044	-.044	0	%100
25	M53	X	.045	.045	0	%100
26	M53	Z	-.026	-.026	0	%100
27	M54	X	.045	.045	0	%100
28	M54	Z	-.026	-.026	0	%100
29	M63	X	.342	.342	0	%100
30	M63	Z	-.197	-.197	0	%100
31	M64	X	.342	.342	0	%100
32	M64	Z	-.197	-.197	0	%100
33	M69	X	.307	.307	0	%100
34	M69	Z	-.177	-.177	0	%100
35	M70	X	.307	.307	0	%100
36	M70	Z	-.177	-.177	0	%100
37	M71	X	.011	.011	0	%100
38	M71	Z	-.006	-.006	0	%100
39	M72	X	.011	.011	0	%100
40	M72	Z	-.006	-.006	0	%100
41	M81	X	.085	.085	0	%100
42	M81	Z	-.049	-.049	0	%100
43	M82	X	.085	.085	0	%100
44	M82	Z	-.049	-.049	0	%100
45	M87	X	.077	.077	0	%100
46	M87	Z	-.044	-.044	0	%100
47	M88	X	.077	.077	0	%100
48	M88	Z	-.044	-.044	0	%100
49	M89	X	.326	.326	0	%100
50	M89	Z	-.188	-.188	0	%100
51	M90	X	.326	.326	0	%100
52	M90	Z	-.188	-.188	0	%100
53	M89A	X	1.306	1.306	0	%100
54	M89A	Z	-.754	-.754	0	%100
55	M90A	X	1.306	1.306	0	%100
56	M90A	Z	-.754	-.754	0	%100

Member Distributed Loads (BLC 67 : Structure Wm (60 Deg)) (Continued)

	Member Label	Direction	Start Magnitude[lb/ft,...	End Magnitude[lb/ft,F...	Start Location[ft,%]	End Location[ft,%]
57	M91	X	.326	.326	0	%100
58	M91	Z	-.188	-.188	0	%100
59	M92	X	.326	.326	0	%100
60	M92	Z	-.188	-.188	0	%100
61	M101	X	.179	.179	0	%100
62	M101	Z	-.104	-.104	0	%100
63	M91A	X	.179	.179	0	%100
64	M91A	Z	-.104	-.104	0	%100
65	M93	X	.718	.718	0	%100
66	M93	Z	-.414	-.414	0	%100
67	M95B	X	.718	.718	0	%100
68	M95B	Z	-.414	-.414	0	%100
69	M97	X	.179	.179	0	%100
70	M97	Z	-.104	-.104	0	%100
71	M99	X	.179	.179	0	%100
72	M99	Z	-.104	-.104	0	%100
73	M101A	X	.179	.179	0	%100
74	M101A	Z	-.104	-.104	0	%100
75	M104	X	.718	.718	0	%100
76	M104	Z	-.414	-.414	0	%100
77	M105B	X	.085	.085	0	%100
78	M105B	Z	-.049	-.049	0	%100
79	M104B	X	.341	.341	0	%100
80	M104B	Z	-.197	-.197	0	%100
81	M105C	X	.085	.085	0	%100
82	M105C	Z	-.049	-.049	0	%100
83	M95C	X	.013	.013	0	%100
84	M95C	Z	-.008	-.008	0	%100
85	M96A	X	.013	.013	0	%100
86	M96A	Z	-.008	-.008	0	%100
87	M101B	X	.052	.052	0	%100
88	M101B	Z	-.03	-.03	0	%100
89	M102B	X	.052	.052	0	%100
90	M102B	Z	-.03	-.03	0	%100
91	MP1A	X	.412	.412	0	%100
92	MP1A	Z	-.238	-.238	0	%100
93	M144	X	.341	.341	0	%100
94	M144	Z	-.197	-.197	0	%100
95	M147	X	.019	.019	0	%100
96	M147	Z	-.011	-.011	0	%100
97	M149A	X	.075	.075	0	%100
98	M149A	Z	-.043	-.043	0	%100
99	M152	X	.019	.019	0	%100
100	M152	Z	-.011	-.011	0	%100
101	M155	X	.018	.018	0	%100
102	M155	Z	-.01	-.01	0	%100
103	M159	X	.071	.071	0	%100
104	M159	Z	-.041	-.041	0	%100
105	M163	X	.018	.018	0	%100
106	M163	Z	-.01	-.01	0	%100
107	M166A	X	.072	.072	0	%100
108	M166A	Z	-.041	-.041	0	%100

Member Distributed Loads (BLC 67 : Structure Wm (60 Deg)) (Continued)

	Member Label	Direction	Start Magnitude[lb/ft,...	End Magnitude[lb/ft,F...	Start Location[ft,%]	End Location[ft,%]
109	M167	X	.018	.018	0	%100
110	M167	Z	-.01	-.01	0	%100
111	M168	X	.018	.018	0	%100
112	M168	Z	-.01	-.01	0	%100
113	MP2A	X	.412	.412	0	%100
114	MP2A	Z	-.238	-.238	0	%100
115	MP4A	X	.412	.412	0	%100
116	MP4A	Z	-.238	-.238	0	%100
117	MP5A	X	.412	.412	0	%100
118	MP5A	Z	-.238	-.238	0	%100
119	MP3A	X	.412	.412	0	%100
120	MP3A	Z	-.238	-.238	0	%100
121	MP1C	X	.412	.412	0	%100
122	MP1C	Z	-.238	-.238	0	%100
123	MP2C	X	.412	.412	0	%100
124	MP2C	Z	-.238	-.238	0	%100
125	MP4C	X	.412	.412	0	%100
126	MP4C	Z	-.238	-.238	0	%100
127	MP5C	X	.412	.412	0	%100
128	MP5C	Z	-.238	-.238	0	%100
129	MP3C	X	.412	.412	0	%100
130	MP3C	Z	-.238	-.238	0	%100
131	MP1B	X	.412	.412	0	%100
132	MP1B	Z	-.238	-.238	0	%100
133	MP2B	X	.412	.412	0	%100
134	MP2B	Z	-.238	-.238	0	%100
135	MP4B	X	.412	.412	0	%100
136	MP4B	Z	-.238	-.238	0	%100
137	MP5B	X	.412	.412	0	%100
138	MP5B	Z	-.238	-.238	0	%100
139	MP3B	X	.412	.412	0	%100
140	MP3B	Z	-.238	-.238	0	%100
141	M180	X	.748	.748	0	%100
142	M180	Z	-.432	-.432	0	%100
143	M181	X	.187	.187	0	%100
144	M181	Z	-.108	-.108	0	%100
145	M182	X	.187	.187	0	%100
146	M182	Z	-.108	-.108	0	%100
147	M194	X	.245	.245	0	%100
148	M194	Z	-.141	-.141	0	%100
149	M195	X	.222	.222	0	%100
150	M195	Z	-.128	-.128	0	%100
151	M196	X	.245	.245	0	%100
152	M196	Z	-.141	-.141	0	%100
153	M197	X	.222	.222	0	%100
154	M197	Z	-.128	-.128	0	%100
155	M206	X	.978	.978	0	%100
156	M206	Z	-.565	-.565	0	%100
157	M207	X	.886	.886	0	%100
158	M207	Z	-.512	-.512	0	%100
159	M208	X	.978	.978	0	%100
160	M208	Z	-.565	-.565	0	%100

Member Distributed Loads (BLC 67 : Structure Wm (60 Deg)) (Continued)

	Member Label	Direction	Start Magnitude[lb/ft,...	End Magnitude[lb/ft,F...	Start Location[ft,%]	End Location[ft,%]
161	M209	X	.886	.886	0	%100
162	M209	Z	-.512	-.512	0	%100
163	M218	X	.245	.245	0	%100
164	M218	Z	-.141	-.141	0	%100
165	M219	X	.222	.222	0	%100
166	M219	Z	-.128	-.128	0	%100
167	M220	X	.245	.245	0	%100
168	M220	Z	-.141	-.141	0	%100
169	M221	X	.222	.222	0	%100
170	M221	Z	-.128	-.128	0	%100
171	M222	X	.757	.757	0	%100
172	M222	Z	-.437	-.437	0	%100
173	M223	X	.663	.663	0	%100
174	M223	Z	-.383	-.383	0	%100
175	M224	X	.757	.757	0	%100
176	M224	Z	-.437	-.437	0	%100

Member Distributed Loads (BLC 68 : Structure Wm (90 Deg))

	Member Label	Direction	Start Magnitude[lb/ft,...	End Magnitude[lb/ft,F...	Start Location[ft,%]	End Location[ft,%]
1	M19	X	.125	.125	0	%100
2	M19	Z	0	0	0	%100
3	M19A	X	.621	.621	0	%100
4	M19A	Z	0	0	0	%100
5	M38C	X	.125	.125	0	%100
6	M38C	Z	0	0	0	%100
7	M51	X	.499	.499	0	%100
8	M51	Z	0	0	0	%100
9	M104A	X	0	0	0	%100
10	M104A	Z	0	0	0	%100
11	M105A	X	0	0	0	%100
12	M105A	Z	0	0	0	%100
13	M134	X	.045	.045	0	%100
14	M134	Z	0	0	0	%100
15	M135	X	.045	.045	0	%100
16	M135	Z	0	0	0	%100
17	M93A	X	0	0	0	%100
18	M93A	Z	0	0	0	%100
19	M94A	X	0	0	0	%100
20	M94A	Z	0	0	0	%100
21	M93B	X	0	0	0	%100
22	M93B	Z	0	0	0	%100
23	M94D	X	0	0	0	%100
24	M94D	Z	0	0	0	%100
25	M53	X	.039	.039	0	%100
26	M53	Z	0	0	0	%100
27	M54	X	.039	.039	0	%100
28	M54	Z	0	0	0	%100
29	M63	X	.296	.296	0	%100
30	M63	Z	0	0	0	%100
31	M64	X	.296	.296	0	%100
32	M64	Z	0	0	0	%100

Member Distributed Loads (BLC 68 : Structure Wm (90 Deg)) (Continued)

	Member Label	Direction	Start Magnitude[lb/ft,...	End Magnitude[lb/ft,F...	Start Location[ft,%]	End Location[ft,%]
33	M69	X	.266	.266	0	%100
34	M69	Z	0	0	0	%100
35	M70	X	.266	.266	0	%100
36	M70	Z	0	0	0	%100
37	M71	X	.039	.039	0	%100
38	M71	Z	0	0	0	%100
39	M72	X	.039	.039	0	%100
40	M72	Z	0	0	0	%100
41	M81	X	.296	.296	0	%100
42	M81	Z	0	0	0	%100
43	M82	X	.296	.296	0	%100
44	M82	Z	0	0	0	%100
45	M87	X	.266	.266	0	%100
46	M87	Z	0	0	0	%100
47	M88	X	.266	.266	0	%100
48	M88	Z	0	0	0	%100
49	M89	X	0	0	0	%100
50	M89	Z	0	0	0	%100
51	M90	X	0	0	0	%100
52	M90	Z	0	0	0	%100
53	M89A	X	1.131	1.131	0	%100
54	M89A	Z	0	0	0	%100
55	M90A	X	1.131	1.131	0	%100
56	M90A	Z	0	0	0	%100
57	M91	X	1.131	1.131	0	%100
58	M91	Z	0	0	0	%100
59	M92	X	1.131	1.131	0	%100
60	M92	Z	0	0	0	%100
61	M101	X	0	0	0	%100
62	M101	Z	0	0	0	%100
63	M91A	X	0	0	0	%100
64	M91A	Z	0	0	0	%100
65	M93	X	.621	.621	0	%100
66	M93	Z	0	0	0	%100
67	M95B	X	.621	.621	0	%100
68	M95B	Z	0	0	0	%100
69	M97	X	.621	.621	0	%100
70	M97	Z	0	0	0	%100
71	M99	X	.621	.621	0	%100
72	M99	Z	0	0	0	%100
73	M101A	X	0	0	0	%100
74	M101A	Z	0	0	0	%100
75	M104	X	.621	.621	0	%100
76	M104	Z	0	0	0	%100
77	M105B	X	0	0	0	%100
78	M105B	Z	0	0	0	%100
79	M104B	X	.295	.295	0	%100
80	M104B	Z	0	0	0	%100
81	M105C	X	.295	.295	0	%100
82	M105C	Z	0	0	0	%100
83	M95C	X	0	0	0	%100
84	M95C	Z	0	0	0	%100

Member Distributed Loads (BLC 68 : Structure Wm (90 Deg)) (Continued)

	Member Label	Direction	Start Magnitude[lb/ft,...	End Magnitude[lb/ft,F...	Start Location[ft,%]	End Location[ft,%]
85	M96A	X	0	0	0	%100
86	M96A	Z	0	0	0	%100
87	M101B	X	.045	.045	0	%100
88	M101B	Z	0	0	0	%100
89	M102B	X	.045	.045	0	%100
90	M102B	Z	0	0	0	%100
91	MP1A	X	.492	.492	0	%100
92	MP1A	Z	0	0	0	%100
93	M144	X	.402	.402	0	%100
94	M144	Z	0	0	0	%100
95	M147	X	0	0	0	%100
96	M147	Z	0	0	0	%100
97	M149A	X	.065	.065	0	%100
98	M149A	Z	0	0	0	%100
99	M152	X	.065	.065	0	%100
100	M152	Z	0	0	0	%100
101	M155	X	0	0	0	%100
102	M155	Z	0	0	0	%100
103	M159	X	.062	.062	0	%100
104	M159	Z	0	0	0	%100
105	M163	X	.062	.062	0	%100
106	M163	Z	0	0	0	%100
107	M166A	X	.062	.062	0	%100
108	M166A	Z	0	0	0	%100
109	M167	X	.062	.062	0	%100
110	M167	Z	0	0	0	%100
111	M168	X	0	0	0	%100
112	M168	Z	0	0	0	%100
113	MP2A	X	.492	.492	0	%100
114	MP2A	Z	0	0	0	%100
115	MP4A	X	.492	.492	0	%100
116	MP4A	Z	0	0	0	%100
117	MP5A	X	.492	.492	0	%100
118	MP5A	Z	0	0	0	%100
119	MP3A	X	.492	.492	0	%100
120	MP3A	Z	0	0	0	%100
121	MP1C	X	.492	.492	0	%100
122	MP1C	Z	0	0	0	%100
123	MP2C	X	.492	.492	0	%100
124	MP2C	Z	0	0	0	%100
125	MP4C	X	.492	.492	0	%100
126	MP4C	Z	0	0	0	%100
127	MP5C	X	.492	.492	0	%100
128	MP5C	Z	0	0	0	%100
129	MP3C	X	.492	.492	0	%100
130	MP3C	Z	0	0	0	%100
131	MP1B	X	.492	.492	0	%100
132	MP1B	Z	0	0	0	%100
133	MP2B	X	.492	.492	0	%100
134	MP2B	Z	0	0	0	%100
135	MP4B	X	.492	.492	0	%100
136	MP4B	Z	0	0	0	%100

Member Distributed Loads (BLC 68 : Structure Wm (90 Deg)) (Continued)

	Member Label	Direction	Start Magnitude[lb/ft,...	End Magnitude[lb/ft,F...	Start Location[ft,%]	End Location[ft,%]
137	MP5B	X	.492	.492	0	%100
138	MP5B	Z	0	0	0	%100
139	MP3B	X	.492	.492	0	%100
140	MP3B	Z	0	0	0	%100
141	M180	X	.647	.647	0	%100
142	M180	Z	0	0	0	%100
143	M181	X	.647	.647	0	%100
144	M181	Z	0	0	0	%100
145	M182	X	0	0	0	%100
146	M182	Z	0	0	0	%100
147	M194	X	0	0	0	%100
148	M194	Z	0	0	0	%100
149	M195	X	0	0	0	%100
150	M195	Z	0	0	0	%100
151	M196	X	0	0	0	%100
152	M196	Z	0	0	0	%100
153	M197	X	0	0	0	%100
154	M197	Z	0	0	0	%100
155	M206	X	.847	.847	0	%100
156	M206	Z	0	0	0	%100
157	M207	X	.767	.767	0	%100
158	M207	Z	0	0	0	%100
159	M208	X	.847	.847	0	%100
160	M208	Z	0	0	0	%100
161	M209	X	.767	.767	0	%100
162	M209	Z	0	0	0	%100
163	M218	X	.847	.847	0	%100
164	M218	Z	0	0	0	%100
165	M219	X	.767	.767	0	%100
166	M219	Z	0	0	0	%100
167	M220	X	.847	.847	0	%100
168	M220	Z	0	0	0	%100
169	M221	X	.767	.767	0	%100
170	M221	Z	0	0	0	%100
171	M222	X	.91	.91	0	%100
172	M222	Z	0	0	0	%100
173	M223	X	.802	.802	0	%100
174	M223	Z	0	0	0	%100
175	M224	X	.802	.802	0	%100
176	M224	Z	0	0	0	%100

Member Distributed Loads (BLC 69 : Structure Wm (120 Deg))

	Member Label	Direction	Start Magnitude[lb/ft,...	End Magnitude[lb/ft,F...	Start Location[ft,%]	End Location[ft,%]
1	M19	X	.324	.324	0	%100
2	M19	Z	.187	.187	0	%100
3	M19A	X	.718	.718	0	%100
4	M19A	Z	.414	.414	0	%100
5	M38C	X	0	0	0	%100
6	M38C	Z	0	0	0	%100
7	M51	X	.324	.324	0	%100
8	M51	Z	.187	.187	0	%100

Member Distributed Loads (BLC 69 : Structure Wm (120 Deg)) (Continued)

	Member Label	Direction	Start Magnitude[lb/ft,...	End Magnitude[lb/ft,F...	Start Location[ft,%]	End Location[ft,%]
9	M104A	X	.011	.011	0	%100
10	M104A	Z	.006	.006	0	%100
11	M105A	X	.011	.011	0	%100
12	M105A	Z	.006	.006	0	%100
13	M134	X	.052	.052	0	%100
14	M134	Z	.03	.03	0	%100
15	M135	X	.052	.052	0	%100
16	M135	Z	.03	.03	0	%100
17	M93A	X	.085	.085	0	%100
18	M93A	Z	.049	.049	0	%100
19	M94A	X	.085	.085	0	%100
20	M94A	Z	.049	.049	0	%100
21	M93B	X	.077	.077	0	%100
22	M93B	Z	.044	.044	0	%100
23	M94D	X	.077	.077	0	%100
24	M94D	Z	.044	.044	0	%100
25	M53	X	.011	.011	0	%100
26	M53	Z	.006	.006	0	%100
27	M54	X	.011	.011	0	%100
28	M54	Z	.006	.006	0	%100
29	M63	X	.085	.085	0	%100
30	M63	Z	.049	.049	0	%100
31	M64	X	.085	.085	0	%100
32	M64	Z	.049	.049	0	%100
33	M69	X	.077	.077	0	%100
34	M69	Z	.044	.044	0	%100
35	M70	X	.077	.077	0	%100
36	M70	Z	.044	.044	0	%100
37	M71	X	.045	.045	0	%100
38	M71	Z	.026	.026	0	%100
39	M72	X	.045	.045	0	%100
40	M72	Z	.026	.026	0	%100
41	M81	X	.342	.342	0	%100
42	M81	Z	.197	.197	0	%100
43	M82	X	.342	.342	0	%100
44	M82	Z	.197	.197	0	%100
45	M87	X	.307	.307	0	%100
46	M87	Z	.177	.177	0	%100
47	M88	X	.307	.307	0	%100
48	M88	Z	.177	.177	0	%100
49	M89	X	.326	.326	0	%100
50	M89	Z	.188	.188	0	%100
51	M90	X	.326	.326	0	%100
52	M90	Z	.188	.188	0	%100
53	M89A	X	.326	.326	0	%100
54	M89A	Z	.188	.188	0	%100
55	M90A	X	.326	.326	0	%100
56	M90A	Z	.188	.188	0	%100
57	M91	X	1.306	1.306	0	%100
58	M91	Z	.754	.754	0	%100
59	M92	X	1.306	1.306	0	%100
60	M92	Z	.754	.754	0	%100

Member Distributed Loads (BLC 69 : Structure Wm (120 Deg)) (Continued)

	Member Label	Direction	Start Magnitude[lb/ft,...	End Magnitude[lb/ft,F...	Start Location[ft,%]	End Location[ft,%]
61	M101	X	.179	.179	0	%100
62	M101	Z	.104	.104	0	%100
63	M91A	X	.179	.179	0	%100
64	M91A	Z	.104	.104	0	%100
65	M93	X	.179	.179	0	%100
66	M93	Z	.104	.104	0	%100
67	M95B	X	.179	.179	0	%100
68	M95B	Z	.104	.104	0	%100
69	M97	X	.718	.718	0	%100
70	M97	Z	.414	.414	0	%100
71	M99	X	.718	.718	0	%100
72	M99	Z	.414	.414	0	%100
73	M101A	X	.179	.179	0	%100
74	M101A	Z	.104	.104	0	%100
75	M104	X	.179	.179	0	%100
76	M104	Z	.104	.104	0	%100
77	M105B	X	.085	.085	0	%100
78	M105B	Z	.049	.049	0	%100
79	M104B	X	.085	.085	0	%100
80	M104B	Z	.049	.049	0	%100
81	M105C	X	.341	.341	0	%100
82	M105C	Z	.197	.197	0	%100
83	M95C	X	.013	.013	0	%100
84	M95C	Z	.008	.008	0	%100
85	M96A	X	.013	.013	0	%100
86	M96A	Z	.008	.008	0	%100
87	M101B	X	.013	.013	0	%100
88	M101B	Z	.008	.008	0	%100
89	M102B	X	.013	.013	0	%100
90	M102B	Z	.008	.008	0	%100
91	MP1A	X	.412	.412	0	%100
92	MP1A	Z	.238	.238	0	%100
93	M144	X	.341	.341	0	%100
94	M144	Z	.197	.197	0	%100
95	M147	X	.019	.019	0	%100
96	M147	Z	.011	.011	0	%100
97	M149A	X	.019	.019	0	%100
98	M149A	Z	.011	.011	0	%100
99	M152	X	.075	.075	0	%100
100	M152	Z	.043	.043	0	%100
101	M155	X	.018	.018	0	%100
102	M155	Z	.01	.01	0	%100
103	M159	X	.018	.018	0	%100
104	M159	Z	.01	.01	0	%100
105	M163	X	.071	.071	0	%100
106	M163	Z	.041	.041	0	%100
107	M166A	X	.018	.018	0	%100
108	M166A	Z	.01	.01	0	%100
109	M167	X	.072	.072	0	%100
110	M167	Z	.041	.041	0	%100
111	M168	X	.018	.018	0	%100
112	M168	Z	.01	.01	0	%100

Member Distributed Loads (BLC 69 : Structure Wm (120 Deg)) (Continued)

	Member Label	Direction	Start Magnitude[lb/ft,...	End Magnitude[lb/ft,F...	Start Location[ft,%]	End Location[ft,%]
113	MP2A	X	.412	.412	0	%100
114	MP2A	Z	.238	.238	0	%100
115	MP4A	X	.412	.412	0	%100
116	MP4A	Z	.238	.238	0	%100
117	MP5A	X	.412	.412	0	%100
118	MP5A	Z	.238	.238	0	%100
119	MP3A	X	.412	.412	0	%100
120	MP3A	Z	.238	.238	0	%100
121	MP1C	X	.412	.412	0	%100
122	MP1C	Z	.238	.238	0	%100
123	MP2C	X	.412	.412	0	%100
124	MP2C	Z	.238	.238	0	%100
125	MP4C	X	.412	.412	0	%100
126	MP4C	Z	.238	.238	0	%100
127	MP5C	X	.412	.412	0	%100
128	MP5C	Z	.238	.238	0	%100
129	MP3C	X	.412	.412	0	%100
130	MP3C	Z	.238	.238	0	%100
131	MP1B	X	.412	.412	0	%100
132	MP1B	Z	.238	.238	0	%100
133	MP2B	X	.412	.412	0	%100
134	MP2B	Z	.238	.238	0	%100
135	MP4B	X	.412	.412	0	%100
136	MP4B	Z	.238	.238	0	%100
137	MP5B	X	.412	.412	0	%100
138	MP5B	Z	.238	.238	0	%100
139	MP3B	X	.412	.412	0	%100
140	MP3B	Z	.238	.238	0	%100
141	M180	X	.187	.187	0	%100
142	M180	Z	.108	.108	0	%100
143	M181	X	.748	.748	0	%100
144	M181	Z	.432	.432	0	%100
145	M182	X	.187	.187	0	%100
146	M182	Z	.108	.108	0	%100
147	M194	X	.245	.245	0	%100
148	M194	Z	.141	.141	0	%100
149	M195	X	.222	.222	0	%100
150	M195	Z	.128	.128	0	%100
151	M196	X	.245	.245	0	%100
152	M196	Z	.141	.141	0	%100
153	M197	X	.222	.222	0	%100
154	M197	Z	.128	.128	0	%100
155	M206	X	.245	.245	0	%100
156	M206	Z	.141	.141	0	%100
157	M207	X	.222	.222	0	%100
158	M207	Z	.128	.128	0	%100
159	M208	X	.245	.245	0	%100
160	M208	Z	.141	.141	0	%100
161	M209	X	.222	.222	0	%100
162	M209	Z	.128	.128	0	%100
163	M218	X	.978	.978	0	%100
164	M218	Z	.565	.565	0	%100

Member Distributed Loads (BLC 69 : Structure Wm (120 Deg)) (Continued)

	Member Label	Direction	Start Magnitude[lb/ft,...	End Magnitude[lb/ft,F...	Start Location[ft,%]	End Location[ft,%]
165	M219	X	.886	.886	0	%100
166	M219	Z	.512	.512	0	%100
167	M220	X	.978	.978	0	%100
168	M220	Z	.565	.565	0	%100
169	M221	X	.886	.886	0	%100
170	M221	Z	.512	.512	0	%100
171	M222	X	.757	.757	0	%100
172	M222	Z	.437	.437	0	%100
173	M223	X	.757	.757	0	%100
174	M223	Z	.437	.437	0	%100
175	M224	X	.663	.663	0	%100
176	M224	Z	.383	.383	0	%100

Member Distributed Loads (BLC 70 : Structure Wm (150 Deg))

	Member Label	Direction	Start Magnitude[lb/ft,...	End Magnitude[lb/ft,F...	Start Location[ft,%]	End Location[ft,%]
1	M19	X	.249	.249	0	%100
2	M19	Z	.432	.432	0	%100
3	M19A	X	.311	.311	0	%100
4	M19A	Z	.538	.538	0	%100
5	M38C	X	.062	.062	0	%100
6	M38C	Z	.108	.108	0	%100
7	M51	X	.062	.062	0	%100
8	M51	Z	.108	.108	0	%100
9	M104A	X	.019	.019	0	%100
10	M104A	Z	.034	.034	0	%100
11	M105A	X	.019	.019	0	%100
12	M105A	Z	.034	.034	0	%100
13	M134	X	.023	.023	0	%100
14	M134	Z	.039	.039	0	%100
15	M135	X	.023	.023	0	%100
16	M135	Z	.039	.039	0	%100
17	M93A	X	.148	.148	0	%100
18	M93A	Z	.256	.256	0	%100
19	M94A	X	.148	.148	0	%100
20	M94A	Z	.256	.256	0	%100
21	M93B	X	.133	.133	0	%100
22	M93B	Z	.23	.23	0	%100
23	M94D	X	.133	.133	0	%100
24	M94D	Z	.23	.23	0	%100
25	M53	X	0	0	0	%100
26	M53	Z	0	0	0	%100
27	M54	X	0	0	0	%100
28	M54	Z	0	0	0	%100
29	M63	X	0	0	0	%100
30	M63	Z	0	0	0	%100
31	M64	X	0	0	0	%100
32	M64	Z	0	0	0	%100
33	M69	X	0	0	0	%100
34	M69	Z	0	0	0	%100
35	M70	X	0	0	0	%100
36	M70	Z	0	0	0	%100

Member Distributed Loads (BLC 70 : Structure Wm (150 Deg)) (Continued)

	Member Label	Direction	Start Magnitude[lb/ft,...	End Magnitude[lb/ft,F...	Start Location[ft,%]	End Location[ft,%]
37	M71	X	.019	.019	0	%100
38	M71	Z	.034	.034	0	%100
39	M72	X	.019	.019	0	%100
40	M72	Z	.034	.034	0	%100
41	M81	X	.148	.148	0	%100
42	M81	Z	.256	.256	0	%100
43	M82	X	.148	.148	0	%100
44	M82	Z	.256	.256	0	%100
45	M87	X	.133	.133	0	%100
46	M87	Z	.23	.23	0	%100
47	M88	X	.133	.133	0	%100
48	M88	Z	.23	.23	0	%100
49	M89	X	.565	.565	0	%100
50	M89	Z	.979	.979	0	%100
51	M90	X	.565	.565	0	%100
52	M90	Z	.979	.979	0	%100
53	M89A	X	0	0	0	%100
54	M89A	Z	0	0	0	%100
55	M90A	X	0	0	0	%100
56	M90A	Z	0	0	0	%100
57	M91	X	.565	.565	0	%100
58	M91	Z	.979	.979	0	%100
59	M92	X	.565	.565	0	%100
60	M92	Z	.979	.979	0	%100
61	M101	X	.311	.311	0	%100
62	M101	Z	.538	.538	0	%100
63	M91A	X	.311	.311	0	%100
64	M91A	Z	.538	.538	0	%100
65	M93	X	0	0	0	%100
66	M93	Z	0	0	0	%100
67	M95B	X	0	0	0	%100
68	M95B	Z	0	0	0	%100
69	M97	X	.311	.311	0	%100
70	M97	Z	.538	.538	0	%100
71	M99	X	.311	.311	0	%100
72	M99	Z	.538	.538	0	%100
73	M101A	X	.311	.311	0	%100
74	M101A	Z	.538	.538	0	%100
75	M104	X	0	0	0	%100
76	M104	Z	0	0	0	%100
77	M105B	X	.148	.148	0	%100
78	M105B	Z	.256	.256	0	%100
79	M104B	X	0	0	0	%100
80	M104B	Z	0	0	0	%100
81	M105C	X	.148	.148	0	%100
82	M105C	Z	.256	.256	0	%100
83	M95C	X	.023	.023	0	%100
84	M95C	Z	.039	.039	0	%100
85	M96A	X	.023	.023	0	%100
86	M96A	Z	.039	.039	0	%100
87	M101B	X	0	0	0	%100
88	M101B	Z	0	0	0	%100

Member Distributed Loads (BLC 70 : Structure Wm (150 Deg)) (Continued)

	Member Label	Direction	Start Magnitude[lb/ft,...	End Magnitude[lb/ft,F...	Start Location[ft,%]	End Location[ft,%]
89	M102B	X	0	0	0	%100
90	M102B	Z	0	0	0	%100
91	MP1A	X	.222	.222	0	%100
92	MP1A	Z	.385	.385	0	%100
93	M144	X	.188	.188	0	%100
94	M144	Z	.326	.326	0	%100
95	M147	X	.032	.032	0	%100
96	M147	Z	.056	.056	0	%100
97	M149A	X	0	0	0	%100
98	M149A	Z	0	0	0	%100
99	M152	X	.032	.032	0	%100
100	M152	Z	.056	.056	0	%100
101	M155	X	.031	.031	0	%100
102	M155	Z	.053	.053	0	%100
103	M159	X	0	0	0	%100
104	M159	Z	0	0	0	%100
105	M163	X	.031	.031	0	%100
106	M163	Z	.053	.053	0	%100
107	M166A	X	0	0	0	%100
108	M166A	Z	0	0	0	%100
109	M167	X	.031	.031	0	%100
110	M167	Z	.054	.054	0	%100
111	M168	X	.031	.031	0	%100
112	M168	Z	.054	.054	0	%100
113	MP2A	X	.222	.222	0	%100
114	MP2A	Z	.385	.385	0	%100
115	MP4A	X	.222	.222	0	%100
116	MP4A	Z	.385	.385	0	%100
117	MP5A	X	.222	.222	0	%100
118	MP5A	Z	.385	.385	0	%100
119	MP3A	X	.222	.222	0	%100
120	MP3A	Z	.385	.385	0	%100
121	MP1C	X	.222	.222	0	%100
122	MP1C	Z	.385	.385	0	%100
123	MP2C	X	.222	.222	0	%100
124	MP2C	Z	.385	.385	0	%100
125	MP4C	X	.222	.222	0	%100
126	MP4C	Z	.385	.385	0	%100
127	MP5C	X	.222	.222	0	%100
128	MP5C	Z	.385	.385	0	%100
129	MP3C	X	.222	.222	0	%100
130	MP3C	Z	.385	.385	0	%100
131	MP1B	X	.222	.222	0	%100
132	MP1B	Z	.385	.385	0	%100
133	MP2B	X	.222	.222	0	%100
134	MP2B	Z	.385	.385	0	%100
135	MP4B	X	.222	.222	0	%100
136	MP4B	Z	.385	.385	0	%100
137	MP5B	X	.222	.222	0	%100
138	MP5B	Z	.385	.385	0	%100
139	MP3B	X	.222	.222	0	%100
140	MP3B	Z	.385	.385	0	%100

Member Distributed Loads (BLC 70 : Structure Wm (150 Deg)) (Continued)

	Member Label	Direction	Start Magnitude[lb/ft,...	End Magnitude[lb/ft,F...	Start Location[ft,%]	End Location[ft,%]
141	M180	X	0	0	0	%100
142	M180	Z	0	0	0	%100
143	M181	X	.324	.324	0	%100
144	M181	Z	.561	.561	0	%100
145	M182	X	.324	.324	0	%100
146	M182	Z	.561	.561	0	%100
147	M194	X	.424	.424	0	%100
148	M194	Z	.734	.734	0	%100
149	M195	X	.384	.384	0	%100
150	M195	Z	.665	.665	0	%100
151	M196	X	.424	.424	0	%100
152	M196	Z	.734	.734	0	%100
153	M197	X	.384	.384	0	%100
154	M197	Z	.665	.665	0	%100
155	M206	X	0	0	0	%100
156	M206	Z	0	0	0	%100
157	M207	X	0	0	0	%100
158	M207	Z	0	0	0	%100
159	M208	X	0	0	0	%100
160	M208	Z	0	0	0	%100
161	M209	X	0	0	0	%100
162	M209	Z	0	0	0	%100
163	M218	X	.424	.424	0	%100
164	M218	Z	.734	.734	0	%100
165	M219	X	.384	.384	0	%100
166	M219	Z	.665	.665	0	%100
167	M220	X	.424	.424	0	%100
168	M220	Z	.734	.734	0	%100
169	M221	X	.384	.384	0	%100
170	M221	Z	.665	.665	0	%100
171	M222	X	.401	.401	0	%100
172	M222	Z	.694	.694	0	%100
173	M223	X	.455	.455	0	%100
174	M223	Z	.788	.788	0	%100
175	M224	X	.401	.401	0	%100
176	M224	Z	.694	.694	0	%100

Member Distributed Loads (BLC 71 : Structure Wm (180 Deg))

	Member Label	Direction	Start Magnitude[lb/ft,...	End Magnitude[lb/ft,F...	Start Location[ft,%]	End Location[ft,%]
1	M19	X	0	0	0	%100
2	M19	Z	.374	.374	0	%100
3	M19A	X	0	0	0	%100
4	M19A	Z	.207	.207	0	%100
5	M38C	X	0	0	0	%100
6	M38C	Z	.374	.374	0	%100
7	M51	X	0	0	0	%100
8	M51	Z	0	0	0	%100
9	M104A	X	0	0	0	%100
10	M104A	Z	.052	.052	0	%100
11	M105A	X	0	0	0	%100
12	M105A	Z	.052	.052	0	%100

Member Distributed Loads (BLC 71 : Structure Wm (180 Deg)) (Continued)

	Member Label	Direction	Start Magnitude[lb/ft,...	End Magnitude[lb/ft,F...	Start Location[ft,%]	End Location[ft,%]
13	M134	X	0	0	0	%100
14	M134	Z	.015	.015	0	%100
15	M135	X	0	0	0	%100
16	M135	Z	.015	.015	0	%100
17	M93A	X	0	0	0	%100
18	M93A	Z	.394	.394	0	%100
19	M94A	X	0	0	0	%100
20	M94A	Z	.394	.394	0	%100
21	M93B	X	0	0	0	%100
22	M93B	Z	.354	.354	0	%100
23	M94D	X	0	0	0	%100
24	M94D	Z	.354	.354	0	%100
25	M53	X	0	0	0	%100
26	M53	Z	.013	.013	0	%100
27	M54	X	0	0	0	%100
28	M54	Z	.013	.013	0	%100
29	M63	X	0	0	0	%100
30	M63	Z	.099	.099	0	%100
31	M64	X	0	0	0	%100
32	M64	Z	.099	.099	0	%100
33	M69	X	0	0	0	%100
34	M69	Z	.089	.089	0	%100
35	M70	X	0	0	0	%100
36	M70	Z	.089	.089	0	%100
37	M71	X	0	0	0	%100
38	M71	Z	.013	.013	0	%100
39	M72	X	0	0	0	%100
40	M72	Z	.013	.013	0	%100
41	M81	X	0	0	0	%100
42	M81	Z	.099	.099	0	%100
43	M82	X	0	0	0	%100
44	M82	Z	.099	.099	0	%100
45	M87	X	0	0	0	%100
46	M87	Z	.089	.089	0	%100
47	M88	X	0	0	0	%100
48	M88	Z	.089	.089	0	%100
49	M89	X	0	0	0	%100
50	M89	Z	1.508	1.508	0	%100
51	M90	X	0	0	0	%100
52	M90	Z	1.508	1.508	0	%100
53	M89A	X	0	0	0	%100
54	M89A	Z	.377	.377	0	%100
55	M90A	X	0	0	0	%100
56	M90A	Z	.377	.377	0	%100
57	M91	X	0	0	0	%100
58	M91	Z	.377	.377	0	%100
59	M92	X	0	0	0	%100
60	M92	Z	.377	.377	0	%100
61	M101	X	0	0	0	%100
62	M101	Z	.829	.829	0	%100
63	M91A	X	0	0	0	%100
64	M91A	Z	.829	.829	0	%100

Member Distributed Loads (BLC 71 : Structure Wm (180 Deg)) (Continued)

	Member Label	Direction	Start Magnitude[lb/ft,...	End Magnitude[lb/ft,F...	Start Location[ft,%]	End Location[ft,%]
65	M93	X	0	0	0	%100
66	M93	Z	.207	.207	0	%100
67	M95B	X	0	0	0	%100
68	M95B	Z	.207	.207	0	%100
69	M97	X	0	0	0	%100
70	M97	Z	.207	.207	0	%100
71	M99	X	0	0	0	%100
72	M99	Z	.207	.207	0	%100
73	M101A	X	0	0	0	%100
74	M101A	Z	.829	.829	0	%100
75	M104	X	0	0	0	%100
76	M104	Z	.207	.207	0	%100
77	M105B	X	0	0	0	%100
78	M105B	Z	.394	.394	0	%100
79	M104B	X	0	0	0	%100
80	M104B	Z	.098	.098	0	%100
81	M105C	X	0	0	0	%100
82	M105C	Z	.098	.098	0	%100
83	M95C	X	0	0	0	%100
84	M95C	Z	.061	.061	0	%100
85	M96A	X	0	0	0	%100
86	M96A	Z	.061	.061	0	%100
87	M101B	X	0	0	0	%100
88	M101B	Z	.015	.015	0	%100
89	M102B	X	0	0	0	%100
90	M102B	Z	.015	.015	0	%100
91	MP1A	X	0	0	0	%100
92	MP1A	Z	.428	.428	0	%100
93	M144	X	0	0	0	%100
94	M144	Z	.368	.368	0	%100
95	M147	X	0	0	0	%100
96	M147	Z	.086	.086	0	%100
97	M149A	X	0	0	0	%100
98	M149A	Z	.022	.022	0	%100
99	M152	X	0	0	0	%100
100	M152	Z	.022	.022	0	%100
101	M155	X	0	0	0	%100
102	M155	Z	.082	.082	0	%100
103	M159	X	0	0	0	%100
104	M159	Z	.021	.021	0	%100
105	M163	X	0	0	0	%100
106	M163	Z	.021	.021	0	%100
107	M166A	X	0	0	0	%100
108	M166A	Z	.021	.021	0	%100
109	M167	X	0	0	0	%100
110	M167	Z	.021	.021	0	%100
111	M168	X	0	0	0	%100
112	M168	Z	.083	.083	0	%100
113	MP2A	X	0	0	0	%100
114	MP2A	Z	.428	.428	0	%100
115	MP4A	X	0	0	0	%100
116	MP4A	Z	.428	.428	0	%100

Member Distributed Loads (BLC 71 : Structure Wm (180 Deg)) (Continued)

	Member Label	Direction	Start Magnitude[lb/ft,...	End Magnitude[lb/ft,F...	Start Location[ft,%]	End Location[ft,%]
117	MP5A	X	0	0	0	%100
118	MP5A	Z	.428	.428	0	%100
119	MP3A	X	0	0	0	%100
120	MP3A	Z	.428	.428	0	%100
121	MP1C	X	0	0	0	%100
122	MP1C	Z	.428	.428	0	%100
123	MP2C	X	0	0	0	%100
124	MP2C	Z	.428	.428	0	%100
125	MP4C	X	0	0	0	%100
126	MP4C	Z	.428	.428	0	%100
127	MP5C	X	0	0	0	%100
128	MP5C	Z	.428	.428	0	%100
129	MP3C	X	0	0	0	%100
130	MP3C	Z	.428	.428	0	%100
131	MP1B	X	0	0	0	%100
132	MP1B	Z	.428	.428	0	%100
133	MP2B	X	0	0	0	%100
134	MP2B	Z	.428	.428	0	%100
135	MP4B	X	0	0	0	%100
136	MP4B	Z	.428	.428	0	%100
137	MP5B	X	0	0	0	%100
138	MP5B	Z	.428	.428	0	%100
139	MP3B	X	0	0	0	%100
140	MP3B	Z	.428	.428	0	%100
141	M180	X	0	0	0	%100
142	M180	Z	.216	.216	0	%100
143	M181	X	0	0	0	%100
144	M181	Z	.216	.216	0	%100
145	M182	X	0	0	0	%100
146	M182	Z	.863	.863	0	%100
147	M194	X	0	0	0	%100
148	M194	Z	1.129	1.129	0	%100
149	M195	X	0	0	0	%100
150	M195	Z	1.023	1.023	0	%100
151	M196	X	0	0	0	%100
152	M196	Z	1.129	1.129	0	%100
153	M197	X	0	0	0	%100
154	M197	Z	1.023	1.023	0	%100
155	M206	X	0	0	0	%100
156	M206	Z	.282	.282	0	%100
157	M207	X	0	0	0	%100
158	M207	Z	.256	.256	0	%100
159	M208	X	0	0	0	%100
160	M208	Z	.282	.282	0	%100
161	M209	X	0	0	0	%100
162	M209	Z	.256	.256	0	%100
163	M218	X	0	0	0	%100
164	M218	Z	.282	.282	0	%100
165	M219	X	0	0	0	%100
166	M219	Z	.256	.256	0	%100
167	M220	X	0	0	0	%100
168	M220	Z	.282	.282	0	%100

Member Distributed Loads (BLC 71 : Structure Wm (180 Deg)) (Continued)

	Member Label	Direction	Start Magnitude[lb/ft,...	End Magnitude[lb/ft,F...	Start Location[ft,%]	End Location[ft,%]
169	M221	X	0	0	0	%100
170	M221	Z	.256	.256	0	%100
171	M222	X	0	0	0	%100
172	M222	Z	.766	.766	0	%100
173	M223	X	0	0	0	%100
174	M223	Z	.874	.874	0	%100
175	M224	X	0	0	0	%100
176	M224	Z	.874	.874	0	%100

Member Distributed Loads (BLC 72 : Structure Wm (210 Deg))

	Member Label	Direction	Start Magnitude[lb/ft,...	End Magnitude[lb/ft,F...	Start Location[ft,%]	End Location[ft,%]
1	M19	X	-.062	-.062	0	%100
2	M19	Z	.108	.108	0	%100
3	M19A	X	0	0	0	%100
4	M19A	Z	0	0	0	%100
5	M38C	X	-.249	-.249	0	%100
6	M38C	Z	.432	.432	0	%100
7	M51	X	-.062	-.062	0	%100
8	M51	Z	.108	.108	0	%100
9	M104A	X	-.019	-.019	0	%100
10	M104A	Z	.034	.034	0	%100
11	M105A	X	-.019	-.019	0	%100
12	M105A	Z	.034	.034	0	%100
13	M134	X	0	0	0	%100
14	M134	Z	0	0	0	%100
15	M135	X	0	0	0	%100
16	M135	Z	0	0	0	%100
17	M93A	X	-.148	-.148	0	%100
18	M93A	Z	.256	.256	0	%100
19	M94A	X	-.148	-.148	0	%100
20	M94A	Z	.256	.256	0	%100
21	M93B	X	-.133	-.133	0	%100
22	M93B	Z	.23	.23	0	%100
23	M94D	X	-.133	-.133	0	%100
24	M94D	Z	.23	.23	0	%100
25	M53	X	-.019	-.019	0	%100
26	M53	Z	.034	.034	0	%100
27	M54	X	-.019	-.019	0	%100
28	M54	Z	.034	.034	0	%100
29	M63	X	-.148	-.148	0	%100
30	M63	Z	.256	.256	0	%100
31	M64	X	-.148	-.148	0	%100
32	M64	Z	.256	.256	0	%100
33	M69	X	-.133	-.133	0	%100
34	M69	Z	.23	.23	0	%100
35	M70	X	-.133	-.133	0	%100
36	M70	Z	.23	.23	0	%100
37	M71	X	0	0	0	%100
38	M71	Z	0	0	0	%100
39	M72	X	0	0	0	%100
40	M72	Z	0	0	0	%100

Member Distributed Loads (BLC 72 : Structure Wm (210 Deg)) (Continued)

	Member Label	Direction	Start Magnitude[lb/ft,...	End Magnitude[lb/ft,F...	Start Location[ft,%]	End Location[ft,%]
41	M81	X	0	0	0	%100
42	M81	Z	0	0	0	%100
43	M82	X	0	0	0	%100
44	M82	Z	0	0	0	%100
45	M87	X	0	0	0	%100
46	M87	Z	0	0	0	%100
47	M88	X	0	0	0	%100
48	M88	Z	0	0	0	%100
49	M89	X	-.565	-.565	0	%100
50	M89	Z	.979	.979	0	%100
51	M90	X	-.565	-.565	0	%100
52	M90	Z	.979	.979	0	%100
53	M89A	X	-.565	-.565	0	%100
54	M89A	Z	.979	.979	0	%100
55	M90A	X	-.565	-.565	0	%100
56	M90A	Z	.979	.979	0	%100
57	M91	X	0	0	0	%100
58	M91	Z	0	0	0	%100
59	M92	X	0	0	0	%100
60	M92	Z	0	0	0	%100
61	M101	X	-.311	-.311	0	%100
62	M101	Z	.538	.538	0	%100
63	M91A	X	-.311	-.311	0	%100
64	M91A	Z	.538	.538	0	%100
65	M93	X	-.311	-.311	0	%100
66	M93	Z	.538	.538	0	%100
67	M95B	X	-.311	-.311	0	%100
68	M95B	Z	.538	.538	0	%100
69	M97	X	0	0	0	%100
70	M97	Z	0	0	0	%100
71	M99	X	0	0	0	%100
72	M99	Z	0	0	0	%100
73	M101A	X	-.311	-.311	0	%100
74	M101A	Z	.538	.538	0	%100
75	M104	X	-.311	-.311	0	%100
76	M104	Z	.538	.538	0	%100
77	M105B	X	-.148	-.148	0	%100
78	M105B	Z	.256	.256	0	%100
79	M104B	X	-.148	-.148	0	%100
80	M104B	Z	.256	.256	0	%100
81	M105C	X	0	0	0	%100
82	M105C	Z	0	0	0	%100
83	M95C	X	-.023	-.023	0	%100
84	M95C	Z	.039	.039	0	%100
85	M96A	X	-.023	-.023	0	%100
86	M96A	Z	.039	.039	0	%100
87	M101B	X	-.023	-.023	0	%100
88	M101B	Z	.039	.039	0	%100
89	M102B	X	-.023	-.023	0	%100
90	M102B	Z	.039	.039	0	%100
91	MP1A	X	-.222	-.222	0	%100
92	MP1A	Z	.385	.385	0	%100

Member Distributed Loads (BLC 72 : Structure Wm (210 Deg)) (Continued)

	Member Label	Direction	Start Magnitude[lb/ft,...	End Magnitude[lb/ft,F...	Start Location[ft,%]	End Location[ft,%]
93	M144	X	-.188	-.188	0	%100
94	M144	Z	.326	.326	0	%100
95	M147	X	-.032	-.032	0	%100
96	M147	Z	.056	.056	0	%100
97	M149A	X	-.032	-.032	0	%100
98	M149A	Z	.056	.056	0	%100
99	M152	X	0	0	0	%100
100	M152	Z	0	0	0	%100
101	M155	X	-.031	-.031	0	%100
102	M155	Z	.053	.053	0	%100
103	M159	X	-.031	-.031	0	%100
104	M159	Z	.053	.053	0	%100
105	M163	X	0	0	0	%100
106	M163	Z	0	0	0	%100
107	M166A	X	-.031	-.031	0	%100
108	M166A	Z	.054	.054	0	%100
109	M167	X	0	0	0	%100
110	M167	Z	0	0	0	%100
111	M168	X	-.031	-.031	0	%100
112	M168	Z	.054	.054	0	%100
113	MP2A	X	-.222	-.222	0	%100
114	MP2A	Z	.385	.385	0	%100
115	MP4A	X	-.222	-.222	0	%100
116	MP4A	Z	.385	.385	0	%100
117	MP5A	X	-.222	-.222	0	%100
118	MP5A	Z	.385	.385	0	%100
119	MP3A	X	-.222	-.222	0	%100
120	MP3A	Z	.385	.385	0	%100
121	MP1C	X	-.222	-.222	0	%100
122	MP1C	Z	.385	.385	0	%100
123	MP2C	X	-.222	-.222	0	%100
124	MP2C	Z	.385	.385	0	%100
125	MP4C	X	-.222	-.222	0	%100
126	MP4C	Z	.385	.385	0	%100
127	MP5C	X	-.222	-.222	0	%100
128	MP5C	Z	.385	.385	0	%100
129	MP3C	X	-.222	-.222	0	%100
130	MP3C	Z	.385	.385	0	%100
131	MP1B	X	-.222	-.222	0	%100
132	MP1B	Z	.385	.385	0	%100
133	MP2B	X	-.222	-.222	0	%100
134	MP2B	Z	.385	.385	0	%100
135	MP4B	X	-.222	-.222	0	%100
136	MP4B	Z	.385	.385	0	%100
137	MP5B	X	-.222	-.222	0	%100
138	MP5B	Z	.385	.385	0	%100
139	MP3B	X	-.222	-.222	0	%100
140	MP3B	Z	.385	.385	0	%100
141	M180	X	-.324	-.324	0	%100
142	M180	Z	.561	.561	0	%100
143	M181	X	0	0	0	%100
144	M181	Z	0	0	0	%100

Member Distributed Loads (BLC 72 : Structure Wm (210 Deg)) (Continued)

	Member Label	Direction	Start Magnitude[lb/ft,...	End Magnitude[lb/ft,F...	Start Location[ft,%]	End Location[ft,%]
145	M182	X	-.324	-.324	0	%100
146	M182	Z	.561	.561	0	%100
147	M194	X	-.424	-.424	0	%100
148	M194	Z	.734	.734	0	%100
149	M195	X	-.384	-.384	0	%100
150	M195	Z	.665	.665	0	%100
151	M196	X	-.424	-.424	0	%100
152	M196	Z	.734	.734	0	%100
153	M197	X	-.384	-.384	0	%100
154	M197	Z	.665	.665	0	%100
155	M206	X	-.424	-.424	0	%100
156	M206	Z	.734	.734	0	%100
157	M207	X	-.384	-.384	0	%100
158	M207	Z	.665	.665	0	%100
159	M208	X	-.424	-.424	0	%100
160	M208	Z	.734	.734	0	%100
161	M209	X	-.384	-.384	0	%100
162	M209	Z	.665	.665	0	%100
163	M218	X	0	0	0	%100
164	M218	Z	0	0	0	%100
165	M219	X	0	0	0	%100
166	M219	Z	0	0	0	%100
167	M220	X	0	0	0	%100
168	M220	Z	0	0	0	%100
169	M221	X	0	0	0	%100
170	M221	Z	0	0	0	%100
171	M222	X	-.401	-.401	0	%100
172	M222	Z	.694	.694	0	%100
173	M223	X	-.401	-.401	0	%100
174	M223	Z	.694	.694	0	%100
175	M224	X	-.455	-.455	0	%100
176	M224	Z	.788	.788	0	%100

Member Distributed Loads (BLC 73 : Structure Wm (240 Deg))

	Member Label	Direction	Start Magnitude[lb/ft,...	End Magnitude[lb/ft,F...	Start Location[ft,%]	End Location[ft,%]
1	M19	X	0	0	0	%100
2	M19	Z	0	0	0	%100
3	M19A	X	-.179	-.179	0	%100
4	M19A	Z	.104	.104	0	%100
5	M38C	X	-.324	-.324	0	%100
6	M38C	Z	.187	.187	0	%100
7	M51	X	-.324	-.324	0	%100
8	M51	Z	.187	.187	0	%100
9	M104A	X	-.011	-.011	0	%100
10	M104A	Z	.006	.006	0	%100
11	M105A	X	-.011	-.011	0	%100
12	M105A	Z	.006	.006	0	%100
13	M134	X	-.013	-.013	0	%100
14	M134	Z	.008	.008	0	%100
15	M135	X	-.013	-.013	0	%100
16	M135	Z	.008	.008	0	%100

Member Distributed Loads (BLC 73 : Structure Wm (240 Deg)) (Continued)

	Member Label	Direction	Start Magnitude[lb/ft,...	End Magnitude[lb/ft,F...	Start Location[ft,%]	End Location[ft,%]
17	M93A	X	-.085	-.085	0	%100
18	M93A	Z	.049	.049	0	%100
19	M94A	X	-.085	-.085	0	%100
20	M94A	Z	.049	.049	0	%100
21	M93B	X	-.077	-.077	0	%100
22	M93B	Z	.044	.044	0	%100
23	M94D	X	-.077	-.077	0	%100
24	M94D	Z	.044	.044	0	%100
25	M53	X	-.045	-.045	0	%100
26	M53	Z	.026	.026	0	%100
27	M54	X	-.045	-.045	0	%100
28	M54	Z	.026	.026	0	%100
29	M63	X	-.342	-.342	0	%100
30	M63	Z	.197	.197	0	%100
31	M64	X	-.342	-.342	0	%100
32	M64	Z	.197	.197	0	%100
33	M69	X	-.307	-.307	0	%100
34	M69	Z	.177	.177	0	%100
35	M70	X	-.307	-.307	0	%100
36	M70	Z	.177	.177	0	%100
37	M71	X	-.011	-.011	0	%100
38	M71	Z	.006	.006	0	%100
39	M72	X	-.011	-.011	0	%100
40	M72	Z	.006	.006	0	%100
41	M81	X	-.085	-.085	0	%100
42	M81	Z	.049	.049	0	%100
43	M82	X	-.085	-.085	0	%100
44	M82	Z	.049	.049	0	%100
45	M87	X	-.077	-.077	0	%100
46	M87	Z	.044	.044	0	%100
47	M88	X	-.077	-.077	0	%100
48	M88	Z	.044	.044	0	%100
49	M89	X	-.326	-.326	0	%100
50	M89	Z	.188	.188	0	%100
51	M90	X	-.326	-.326	0	%100
52	M90	Z	.188	.188	0	%100
53	M89A	X	-1.306	-1.306	0	%100
54	M89A	Z	.754	.754	0	%100
55	M90A	X	-1.306	-1.306	0	%100
56	M90A	Z	.754	.754	0	%100
57	M91	X	-.326	-.326	0	%100
58	M91	Z	.188	.188	0	%100
59	M92	X	-.326	-.326	0	%100
60	M92	Z	.188	.188	0	%100
61	M101	X	-.179	-.179	0	%100
62	M101	Z	.104	.104	0	%100
63	M91A	X	-.179	-.179	0	%100
64	M91A	Z	.104	.104	0	%100
65	M93	X	-.718	-.718	0	%100
66	M93	Z	.414	.414	0	%100
67	M95B	X	-.718	-.718	0	%100
68	M95B	Z	.414	.414	0	%100

Member Distributed Loads (BLC 73 : Structure Wm (240 Deg)) (Continued)

	Member Label	Direction	Start Magnitude[lb/ft,...	End Magnitude[lb/ft,F...	Start Location[ft,%]	End Location[ft,%]
69	M97	X	-.179	-.179	0	%100
70	M97	Z	.104	.104	0	%100
71	M99	X	-.179	-.179	0	%100
72	M99	Z	.104	.104	0	%100
73	M101A	X	-.179	-.179	0	%100
74	M101A	Z	.104	.104	0	%100
75	M104	X	-.718	-.718	0	%100
76	M104	Z	.414	.414	0	%100
77	M105B	X	-.085	-.085	0	%100
78	M105B	Z	.049	.049	0	%100
79	M104B	X	-.341	-.341	0	%100
80	M104B	Z	.197	.197	0	%100
81	M105C	X	-.085	-.085	0	%100
82	M105C	Z	.049	.049	0	%100
83	M95C	X	-.013	-.013	0	%100
84	M95C	Z	.008	.008	0	%100
85	M96A	X	-.013	-.013	0	%100
86	M96A	Z	.008	.008	0	%100
87	M101B	X	-.052	-.052	0	%100
88	M101B	Z	.03	.03	0	%100
89	M102B	X	-.052	-.052	0	%100
90	M102B	Z	.03	.03	0	%100
91	MP1A	X	-.412	-.412	0	%100
92	MP1A	Z	.238	.238	0	%100
93	M144	X	-.341	-.341	0	%100
94	M144	Z	.197	.197	0	%100
95	M147	X	-.019	-.019	0	%100
96	M147	Z	.011	.011	0	%100
97	M149A	X	-.075	-.075	0	%100
98	M149A	Z	.043	.043	0	%100
99	M152	X	-.019	-.019	0	%100
100	M152	Z	.011	.011	0	%100
101	M155	X	-.018	-.018	0	%100
102	M155	Z	.01	.01	0	%100
103	M159	X	-.071	-.071	0	%100
104	M159	Z	.041	.041	0	%100
105	M163	X	-.018	-.018	0	%100
106	M163	Z	.01	.01	0	%100
107	M166A	X	-.072	-.072	0	%100
108	M166A	Z	.041	.041	0	%100
109	M167	X	-.018	-.018	0	%100
110	M167	Z	.01	.01	0	%100
111	M168	X	-.018	-.018	0	%100
112	M168	Z	.01	.01	0	%100
113	MP2A	X	-.412	-.412	0	%100
114	MP2A	Z	.238	.238	0	%100
115	MP4A	X	-.412	-.412	0	%100
116	MP4A	Z	.238	.238	0	%100
117	MP5A	X	-.412	-.412	0	%100
118	MP5A	Z	.238	.238	0	%100
119	MP3A	X	-.412	-.412	0	%100
120	MP3A	Z	.238	.238	0	%100

Member Distributed Loads (BLC 73 : Structure Wm (240 Deg)) (Continued)

	Member Label	Direction	Start Magnitude[lb/ft,...	End Magnitude[lb/ft,F...	Start Location[ft,%]	End Location[ft,%]
121	MP1C	X	-.412	-.412	0	%100
122	MP1C	Z	.238	.238	0	%100
123	MP2C	X	-.412	-.412	0	%100
124	MP2C	Z	.238	.238	0	%100
125	MP4C	X	-.412	-.412	0	%100
126	MP4C	Z	.238	.238	0	%100
127	MP5C	X	-.412	-.412	0	%100
128	MP5C	Z	.238	.238	0	%100
129	MP3C	X	-.412	-.412	0	%100
130	MP3C	Z	.238	.238	0	%100
131	MP1B	X	-.412	-.412	0	%100
132	MP1B	Z	.238	.238	0	%100
133	MP2B	X	-.412	-.412	0	%100
134	MP2B	Z	.238	.238	0	%100
135	MP4B	X	-.412	-.412	0	%100
136	MP4B	Z	.238	.238	0	%100
137	MP5B	X	-.412	-.412	0	%100
138	MP5B	Z	.238	.238	0	%100
139	MP3B	X	-.412	-.412	0	%100
140	MP3B	Z	.238	.238	0	%100
141	M180	X	-.748	-.748	0	%100
142	M180	Z	.432	.432	0	%100
143	M181	X	-.187	-.187	0	%100
144	M181	Z	.108	.108	0	%100
145	M182	X	-.187	-.187	0	%100
146	M182	Z	.108	.108	0	%100
147	M194	X	-.245	-.245	0	%100
148	M194	Z	.141	.141	0	%100
149	M195	X	-.222	-.222	0	%100
150	M195	Z	.128	.128	0	%100
151	M196	X	-.245	-.245	0	%100
152	M196	Z	.141	.141	0	%100
153	M197	X	-.222	-.222	0	%100
154	M197	Z	.128	.128	0	%100
155	M206	X	-.978	-.978	0	%100
156	M206	Z	.565	.565	0	%100
157	M207	X	-.886	-.886	0	%100
158	M207	Z	.512	.512	0	%100
159	M208	X	-.978	-.978	0	%100
160	M208	Z	.565	.565	0	%100
161	M209	X	-.886	-.886	0	%100
162	M209	Z	.512	.512	0	%100
163	M218	X	-.245	-.245	0	%100
164	M218	Z	.141	.141	0	%100
165	M219	X	-.222	-.222	0	%100
166	M219	Z	.128	.128	0	%100
167	M220	X	-.245	-.245	0	%100
168	M220	Z	.141	.141	0	%100
169	M221	X	-.222	-.222	0	%100
170	M221	Z	.128	.128	0	%100
171	M222	X	-.757	-.757	0	%100
172	M222	Z	.437	.437	0	%100

Member Distributed Loads (BLC 73 : Structure Wm (240 Deg)) (Continued)

	Member Label	Direction	Start Magnitude[lb/ft,...	End Magnitude[lb/ft,F...	Start Location[ft,%]	End Location[ft,%]
173	M223	X	-.663	-.663	0	%100
174	M223	Z	.383	.383	0	%100
175	M224	X	-.757	-.757	0	%100
176	M224	Z	.437	.437	0	%100

Member Distributed Loads (BLC 74 : Structure Wm (270 Deg))

	Member Label	Direction	Start Magnitude[lb/ft,...	End Magnitude[lb/ft,F...	Start Location[ft,%]	End Location[ft,%]
1	M19	X	-.125	-.125	0	%100
2	M19	Z	0	0	0	%100
3	M19A	X	-.621	-.621	0	%100
4	M19A	Z	0	0	0	%100
5	M38C	X	-.125	-.125	0	%100
6	M38C	Z	0	0	0	%100
7	M51	X	-.499	-.499	0	%100
8	M51	Z	0	0	0	%100
9	M104A	X	0	0	0	%100
10	M104A	Z	0	0	0	%100
11	M105A	X	0	0	0	%100
12	M105A	Z	0	0	0	%100
13	M134	X	-.045	-.045	0	%100
14	M134	Z	0	0	0	%100
15	M135	X	-.045	-.045	0	%100
16	M135	Z	0	0	0	%100
17	M93A	X	0	0	0	%100
18	M93A	Z	0	0	0	%100
19	M94A	X	0	0	0	%100
20	M94A	Z	0	0	0	%100
21	M93B	X	0	0	0	%100
22	M93B	Z	0	0	0	%100
23	M94D	X	0	0	0	%100
24	M94D	Z	0	0	0	%100
25	M53	X	-.039	-.039	0	%100
26	M53	Z	0	0	0	%100
27	M54	X	-.039	-.039	0	%100
28	M54	Z	0	0	0	%100
29	M63	X	-.296	-.296	0	%100
30	M63	Z	0	0	0	%100
31	M64	X	-.296	-.296	0	%100
32	M64	Z	0	0	0	%100
33	M69	X	-.266	-.266	0	%100
34	M69	Z	0	0	0	%100
35	M70	X	-.266	-.266	0	%100
36	M70	Z	0	0	0	%100
37	M71	X	-.039	-.039	0	%100
38	M71	Z	0	0	0	%100
39	M72	X	-.039	-.039	0	%100
40	M72	Z	0	0	0	%100
41	M81	X	-.296	-.296	0	%100
42	M81	Z	0	0	0	%100
43	M82	X	-.296	-.296	0	%100
44	M82	Z	0	0	0	%100

Member Distributed Loads (BLC 74 : Structure Wm (270 Deg)) (Continued)

	Member Label	Direction	Start Magnitude[lb/ft,...	End Magnitude[lb/ft,F...	Start Location[ft,%]	End Location[ft,%]
45	M87	X	-.266	-.266	0	%100
46	M87	Z	0	0	0	%100
47	M88	X	-.266	-.266	0	%100
48	M88	Z	0	0	0	%100
49	M89	X	0	0	0	%100
50	M89	Z	0	0	0	%100
51	M90	X	0	0	0	%100
52	M90	Z	0	0	0	%100
53	M89A	X	-1.131	-1.131	0	%100
54	M89A	Z	0	0	0	%100
55	M90A	X	-1.131	-1.131	0	%100
56	M90A	Z	0	0	0	%100
57	M91	X	-1.131	-1.131	0	%100
58	M91	Z	0	0	0	%100
59	M92	X	-1.131	-1.131	0	%100
60	M92	Z	0	0	0	%100
61	M101	X	0	0	0	%100
62	M101	Z	0	0	0	%100
63	M91A	X	0	0	0	%100
64	M91A	Z	0	0	0	%100
65	M93	X	-.621	-.621	0	%100
66	M93	Z	0	0	0	%100
67	M95B	X	-.621	-.621	0	%100
68	M95B	Z	0	0	0	%100
69	M97	X	-.621	-.621	0	%100
70	M97	Z	0	0	0	%100
71	M99	X	-.621	-.621	0	%100
72	M99	Z	0	0	0	%100
73	M101A	X	0	0	0	%100
74	M101A	Z	0	0	0	%100
75	M104	X	-.621	-.621	0	%100
76	M104	Z	0	0	0	%100
77	M105B	X	0	0	0	%100
78	M105B	Z	0	0	0	%100
79	M104B	X	-.295	-.295	0	%100
80	M104B	Z	0	0	0	%100
81	M105C	X	-.295	-.295	0	%100
82	M105C	Z	0	0	0	%100
83	M95C	X	0	0	0	%100
84	M95C	Z	0	0	0	%100
85	M96A	X	0	0	0	%100
86	M96A	Z	0	0	0	%100
87	M101B	X	-.045	-.045	0	%100
88	M101B	Z	0	0	0	%100
89	M102B	X	-.045	-.045	0	%100
90	M102B	Z	0	0	0	%100
91	MP1A	X	-.492	-.492	0	%100
92	MP1A	Z	0	0	0	%100
93	M144	X	-.402	-.402	0	%100
94	M144	Z	0	0	0	%100
95	M147	X	0	0	0	%100
96	M147	Z	0	0	0	%100

Member Distributed Loads (BLC 74 : Structure Wm (270 Deg)) (Continued)

	Member Label	Direction	Start Magnitude[lb/ft,...	End Magnitude[lb/ft,F...	Start Location[ft,%]	End Location[ft,%]
97	M149A	X	-.065	-.065	0	%100
98	M149A	Z	0	0	0	%100
99	M152	X	-.065	-.065	0	%100
100	M152	Z	0	0	0	%100
101	M155	X	0	0	0	%100
102	M155	Z	0	0	0	%100
103	M159	X	-.062	-.062	0	%100
104	M159	Z	0	0	0	%100
105	M163	X	-.062	-.062	0	%100
106	M163	Z	0	0	0	%100
107	M166A	X	-.062	-.062	0	%100
108	M166A	Z	0	0	0	%100
109	M167	X	-.062	-.062	0	%100
110	M167	Z	0	0	0	%100
111	M168	X	0	0	0	%100
112	M168	Z	0	0	0	%100
113	MP2A	X	-.492	-.492	0	%100
114	MP2A	Z	0	0	0	%100
115	MP4A	X	-.492	-.492	0	%100
116	MP4A	Z	0	0	0	%100
117	MP5A	X	-.492	-.492	0	%100
118	MP5A	Z	0	0	0	%100
119	MP3A	X	-.492	-.492	0	%100
120	MP3A	Z	0	0	0	%100
121	MP1C	X	-.492	-.492	0	%100
122	MP1C	Z	0	0	0	%100
123	MP2C	X	-.492	-.492	0	%100
124	MP2C	Z	0	0	0	%100
125	MP4C	X	-.492	-.492	0	%100
126	MP4C	Z	0	0	0	%100
127	MP5C	X	-.492	-.492	0	%100
128	MP5C	Z	0	0	0	%100
129	MP3C	X	-.492	-.492	0	%100
130	MP3C	Z	0	0	0	%100
131	MP1B	X	-.492	-.492	0	%100
132	MP1B	Z	0	0	0	%100
133	MP2B	X	-.492	-.492	0	%100
134	MP2B	Z	0	0	0	%100
135	MP4B	X	-.492	-.492	0	%100
136	MP4B	Z	0	0	0	%100
137	MP5B	X	-.492	-.492	0	%100
138	MP5B	Z	0	0	0	%100
139	MP3B	X	-.492	-.492	0	%100
140	MP3B	Z	0	0	0	%100
141	M180	X	-.647	-.647	0	%100
142	M180	Z	0	0	0	%100
143	M181	X	-.647	-.647	0	%100
144	M181	Z	0	0	0	%100
145	M182	X	0	0	0	%100
146	M182	Z	0	0	0	%100
147	M194	X	0	0	0	%100
148	M194	Z	0	0	0	%100

Member Distributed Loads (BLC 74 : Structure Wm (270 Deg)) (Continued)

	Member Label	Direction	Start Magnitude[lb/ft,...	End Magnitude[lb/ft,F...	Start Location[ft,%]	End Location[ft,%]
149	M195	X	0	0	0	%100
150	M195	Z	0	0	0	%100
151	M196	X	0	0	0	%100
152	M196	Z	0	0	0	%100
153	M197	X	0	0	0	%100
154	M197	Z	0	0	0	%100
155	M206	X	-.847	-.847	0	%100
156	M206	Z	0	0	0	%100
157	M207	X	-.767	-.767	0	%100
158	M207	Z	0	0	0	%100
159	M208	X	-.847	-.847	0	%100
160	M208	Z	0	0	0	%100
161	M209	X	-.767	-.767	0	%100
162	M209	Z	0	0	0	%100
163	M218	X	-.847	-.847	0	%100
164	M218	Z	0	0	0	%100
165	M219	X	-.767	-.767	0	%100
166	M219	Z	0	0	0	%100
167	M220	X	-.847	-.847	0	%100
168	M220	Z	0	0	0	%100
169	M221	X	-.767	-.767	0	%100
170	M221	Z	0	0	0	%100
171	M222	X	-.91	-.91	0	%100
172	M222	Z	0	0	0	%100
173	M223	X	-.802	-.802	0	%100
174	M223	Z	0	0	0	%100
175	M224	X	-.802	-.802	0	%100
176	M224	Z	0	0	0	%100

Member Distributed Loads (BLC 75 : Structure Wm (300 Deg))

	Member Label	Direction	Start Magnitude[lb/ft,...	End Magnitude[lb/ft,F...	Start Location[ft,%]	End Location[ft,%]
1	M19	X	-.324	-.324	0	%100
2	M19	Z	-.187	-.187	0	%100
3	M19A	X	-.718	-.718	0	%100
4	M19A	Z	-.414	-.414	0	%100
5	M38C	X	0	0	0	%100
6	M38C	Z	0	0	0	%100
7	M51	X	-.324	-.324	0	%100
8	M51	Z	-.187	-.187	0	%100
9	M104A	X	-.011	-.011	0	%100
10	M104A	Z	-.006	-.006	0	%100
11	M105A	X	-.011	-.011	0	%100
12	M105A	Z	-.006	-.006	0	%100
13	M134	X	-.052	-.052	0	%100
14	M134	Z	-.03	-.03	0	%100
15	M135	X	-.052	-.052	0	%100
16	M135	Z	-.03	-.03	0	%100
17	M93A	X	-.085	-.085	0	%100
18	M93A	Z	-.049	-.049	0	%100
19	M94A	X	-.085	-.085	0	%100
20	M94A	Z	-.049	-.049	0	%100

Member Distributed Loads (BLC 75 : Structure Wm (300 Deg)) (Continued)

	Member Label	Direction	Start Magnitude[lb/ft,...	End Magnitude[lb/ft,F...	Start Location[ft,%]	End Location[ft,%]
21	M93B	X	-.077	-.077	0	%100
22	M93B	Z	-.044	-.044	0	%100
23	M94D	X	-.077	-.077	0	%100
24	M94D	Z	-.044	-.044	0	%100
25	M53	X	-.011	-.011	0	%100
26	M53	Z	-.006	-.006	0	%100
27	M54	X	-.011	-.011	0	%100
28	M54	Z	-.006	-.006	0	%100
29	M63	X	-.085	-.085	0	%100
30	M63	Z	-.049	-.049	0	%100
31	M64	X	-.085	-.085	0	%100
32	M64	Z	-.049	-.049	0	%100
33	M69	X	-.077	-.077	0	%100
34	M69	Z	-.044	-.044	0	%100
35	M70	X	-.077	-.077	0	%100
36	M70	Z	-.044	-.044	0	%100
37	M71	X	-.045	-.045	0	%100
38	M71	Z	-.026	-.026	0	%100
39	M72	X	-.045	-.045	0	%100
40	M72	Z	-.026	-.026	0	%100
41	M81	X	-.342	-.342	0	%100
42	M81	Z	-.197	-.197	0	%100
43	M82	X	-.342	-.342	0	%100
44	M82	Z	-.197	-.197	0	%100
45	M87	X	-.307	-.307	0	%100
46	M87	Z	-.177	-.177	0	%100
47	M88	X	-.307	-.307	0	%100
48	M88	Z	-.177	-.177	0	%100
49	M89	X	-.326	-.326	0	%100
50	M89	Z	-.188	-.188	0	%100
51	M90	X	-.326	-.326	0	%100
52	M90	Z	-.188	-.188	0	%100
53	M89A	X	-.326	-.326	0	%100
54	M89A	Z	-.188	-.188	0	%100
55	M90A	X	-.326	-.326	0	%100
56	M90A	Z	-.188	-.188	0	%100
57	M91	X	-1.306	-1.306	0	%100
58	M91	Z	-.754	-.754	0	%100
59	M92	X	-1.306	-1.306	0	%100
60	M92	Z	-.754	-.754	0	%100
61	M101	X	-.179	-.179	0	%100
62	M101	Z	-.104	-.104	0	%100
63	M91A	X	-.179	-.179	0	%100
64	M91A	Z	-.104	-.104	0	%100
65	M93	X	-.179	-.179	0	%100
66	M93	Z	-.104	-.104	0	%100
67	M95B	X	-.179	-.179	0	%100
68	M95B	Z	-.104	-.104	0	%100
69	M97	X	-.718	-.718	0	%100
70	M97	Z	-.414	-.414	0	%100
71	M99	X	-.718	-.718	0	%100
72	M99	Z	-.414	-.414	0	%100

Member Distributed Loads (BLC 75 : Structure Wm (300 Deg)) (Continued)

	Member Label	Direction	Start Magnitude[lb/ft,...	End Magnitude[lb/ft,F...	Start Location[ft,%]	End Location[ft,%]
73	M101A	X	-.179	-.179	0	%100
74	M101A	Z	-.104	-.104	0	%100
75	M104	X	-.179	-.179	0	%100
76	M104	Z	-.104	-.104	0	%100
77	M105B	X	-.085	-.085	0	%100
78	M105B	Z	-.049	-.049	0	%100
79	M104B	X	-.085	-.085	0	%100
80	M104B	Z	-.049	-.049	0	%100
81	M105C	X	-.341	-.341	0	%100
82	M105C	Z	-.197	-.197	0	%100
83	M95C	X	-.013	-.013	0	%100
84	M95C	Z	-.008	-.008	0	%100
85	M96A	X	-.013	-.013	0	%100
86	M96A	Z	-.008	-.008	0	%100
87	M101B	X	-.013	-.013	0	%100
88	M101B	Z	-.008	-.008	0	%100
89	M102B	X	-.013	-.013	0	%100
90	M102B	Z	-.008	-.008	0	%100
91	MP1A	X	-.412	-.412	0	%100
92	MP1A	Z	-.238	-.238	0	%100
93	M144	X	-.341	-.341	0	%100
94	M144	Z	-.197	-.197	0	%100
95	M147	X	-.019	-.019	0	%100
96	M147	Z	-.011	-.011	0	%100
97	M149A	X	-.019	-.019	0	%100
98	M149A	Z	-.011	-.011	0	%100
99	M152	X	-.075	-.075	0	%100
100	M152	Z	-.043	-.043	0	%100
101	M155	X	-.018	-.018	0	%100
102	M155	Z	-.01	-.01	0	%100
103	M159	X	-.018	-.018	0	%100
104	M159	Z	-.01	-.01	0	%100
105	M163	X	-.071	-.071	0	%100
106	M163	Z	-.041	-.041	0	%100
107	M166A	X	-.018	-.018	0	%100
108	M166A	Z	-.01	-.01	0	%100
109	M167	X	-.072	-.072	0	%100
110	M167	Z	-.041	-.041	0	%100
111	M168	X	-.018	-.018	0	%100
112	M168	Z	-.01	-.01	0	%100
113	MP2A	X	-.412	-.412	0	%100
114	MP2A	Z	-.238	-.238	0	%100
115	MP4A	X	-.412	-.412	0	%100
116	MP4A	Z	-.238	-.238	0	%100
117	MP5A	X	-.412	-.412	0	%100
118	MP5A	Z	-.238	-.238	0	%100
119	MP3A	X	-.412	-.412	0	%100
120	MP3A	Z	-.238	-.238	0	%100
121	MP1C	X	-.412	-.412	0	%100
122	MP1C	Z	-.238	-.238	0	%100
123	MP2C	X	-.412	-.412	0	%100
124	MP2C	Z	-.238	-.238	0	%100

Member Distributed Loads (BLC 75 : Structure Wm (300 Deg)) (Continued)

	Member Label	Direction	Start Magnitude[lb/ft,...	End Magnitude[lb/ft,F...	Start Location[ft,%]	End Location[ft,%]
125	MP4C	X	-.412	-.412	0	%100
126	MP4C	Z	-.238	-.238	0	%100
127	MP5C	X	-.412	-.412	0	%100
128	MP5C	Z	-.238	-.238	0	%100
129	MP3C	X	-.412	-.412	0	%100
130	MP3C	Z	-.238	-.238	0	%100
131	MP1B	X	-.412	-.412	0	%100
132	MP1B	Z	-.238	-.238	0	%100
133	MP2B	X	-.412	-.412	0	%100
134	MP2B	Z	-.238	-.238	0	%100
135	MP4B	X	-.412	-.412	0	%100
136	MP4B	Z	-.238	-.238	0	%100
137	MP5B	X	-.412	-.412	0	%100
138	MP5B	Z	-.238	-.238	0	%100
139	MP3B	X	-.412	-.412	0	%100
140	MP3B	Z	-.238	-.238	0	%100
141	M180	X	-.187	-.187	0	%100
142	M180	Z	-.108	-.108	0	%100
143	M181	X	-.748	-.748	0	%100
144	M181	Z	-.432	-.432	0	%100
145	M182	X	-.187	-.187	0	%100
146	M182	Z	-.108	-.108	0	%100
147	M194	X	-.245	-.245	0	%100
148	M194	Z	-.141	-.141	0	%100
149	M195	X	-.222	-.222	0	%100
150	M195	Z	-.128	-.128	0	%100
151	M196	X	-.245	-.245	0	%100
152	M196	Z	-.141	-.141	0	%100
153	M197	X	-.222	-.222	0	%100
154	M197	Z	-.128	-.128	0	%100
155	M206	X	-.245	-.245	0	%100
156	M206	Z	-.141	-.141	0	%100
157	M207	X	-.222	-.222	0	%100
158	M207	Z	-.128	-.128	0	%100
159	M208	X	-.245	-.245	0	%100
160	M208	Z	-.141	-.141	0	%100
161	M209	X	-.222	-.222	0	%100
162	M209	Z	-.128	-.128	0	%100
163	M218	X	-.978	-.978	0	%100
164	M218	Z	-.565	-.565	0	%100
165	M219	X	-.886	-.886	0	%100
166	M219	Z	-.512	-.512	0	%100
167	M220	X	-.978	-.978	0	%100
168	M220	Z	-.565	-.565	0	%100
169	M221	X	-.886	-.886	0	%100
170	M221	Z	-.512	-.512	0	%100
171	M222	X	-.757	-.757	0	%100
172	M222	Z	-.437	-.437	0	%100
173	M223	X	-.757	-.757	0	%100
174	M223	Z	-.437	-.437	0	%100
175	M224	X	-.663	-.663	0	%100
176	M224	Z	-.383	-.383	0	%100

Member Distributed Loads (BLC 76 : Structure Wm (330 Deg))

	Member Label	Direction	Start Magnitude[lb/ft,...	End Magnitude[lb/ft,F...	Start Location[ft,%]	End Location[ft,%]
1	M19	X	-.249	-.249	0	%100
2	M19	Z	-.432	-.432	0	%100
3	M19A	X	-.311	-.311	0	%100
4	M19A	Z	-.538	-.538	0	%100
5	M38C	X	-.062	-.062	0	%100
6	M38C	Z	-.108	-.108	0	%100
7	M51	X	-.062	-.062	0	%100
8	M51	Z	-.108	-.108	0	%100
9	M104A	X	-.019	-.019	0	%100
10	M104A	Z	-.034	-.034	0	%100
11	M105A	X	-.019	-.019	0	%100
12	M105A	Z	-.034	-.034	0	%100
13	M134	X	-.023	-.023	0	%100
14	M134	Z	-.039	-.039	0	%100
15	M135	X	-.023	-.023	0	%100
16	M135	Z	-.039	-.039	0	%100
17	M93A	X	-.148	-.148	0	%100
18	M93A	Z	-.256	-.256	0	%100
19	M94A	X	-.148	-.148	0	%100
20	M94A	Z	-.256	-.256	0	%100
21	M93B	X	-.133	-.133	0	%100
22	M93B	Z	-.23	-.23	0	%100
23	M94D	X	-.133	-.133	0	%100
24	M94D	Z	-.23	-.23	0	%100
25	M53	X	0	0	0	%100
26	M53	Z	0	0	0	%100
27	M54	X	0	0	0	%100
28	M54	Z	0	0	0	%100
29	M63	X	0	0	0	%100
30	M63	Z	0	0	0	%100
31	M64	X	0	0	0	%100
32	M64	Z	0	0	0	%100
33	M69	X	0	0	0	%100
34	M69	Z	0	0	0	%100
35	M70	X	0	0	0	%100
36	M70	Z	0	0	0	%100
37	M71	X	-.019	-.019	0	%100
38	M71	Z	-.034	-.034	0	%100
39	M72	X	-.019	-.019	0	%100
40	M72	Z	-.034	-.034	0	%100
41	M81	X	-.148	-.148	0	%100
42	M81	Z	-.256	-.256	0	%100
43	M82	X	-.148	-.148	0	%100
44	M82	Z	-.256	-.256	0	%100
45	M87	X	-.133	-.133	0	%100
46	M87	Z	-.23	-.23	0	%100
47	M88	X	-.133	-.133	0	%100
48	M88	Z	-.23	-.23	0	%100
49	M89	X	-.565	-.565	0	%100
50	M89	Z	-.979	-.979	0	%100
51	M90	X	-.565	-.565	0	%100
52	M90	Z	-.979	-.979	0	%100

Member Distributed Loads (BLC 76 : Structure Wm (330 Deg)) (Continued)

	Member Label	Direction	Start Magnitude[lb/ft,...	End Magnitude[lb/ft,F...	Start Location[ft,%]	End Location[ft,%]
53	M89A	X	0	0	0	%100
54	M89A	Z	0	0	0	%100
55	M90A	X	0	0	0	%100
56	M90A	Z	0	0	0	%100
57	M91	X	-.565	-.565	0	%100
58	M91	Z	-.979	-.979	0	%100
59	M92	X	-.565	-.565	0	%100
60	M92	Z	-.979	-.979	0	%100
61	M101	X	-.311	-.311	0	%100
62	M101	Z	-.538	-.538	0	%100
63	M91A	X	-.311	-.311	0	%100
64	M91A	Z	-.538	-.538	0	%100
65	M93	X	0	0	0	%100
66	M93	Z	0	0	0	%100
67	M95B	X	0	0	0	%100
68	M95B	Z	0	0	0	%100
69	M97	X	-.311	-.311	0	%100
70	M97	Z	-.538	-.538	0	%100
71	M99	X	-.311	-.311	0	%100
72	M99	Z	-.538	-.538	0	%100
73	M101A	X	-.311	-.311	0	%100
74	M101A	Z	-.538	-.538	0	%100
75	M104	X	0	0	0	%100
76	M104	Z	0	0	0	%100
77	M105B	X	-.148	-.148	0	%100
78	M105B	Z	-.256	-.256	0	%100
79	M104B	X	0	0	0	%100
80	M104B	Z	0	0	0	%100
81	M105C	X	-.148	-.148	0	%100
82	M105C	Z	-.256	-.256	0	%100
83	M95C	X	-.023	-.023	0	%100
84	M95C	Z	-.039	-.039	0	%100
85	M96A	X	-.023	-.023	0	%100
86	M96A	Z	-.039	-.039	0	%100
87	M101B	X	0	0	0	%100
88	M101B	Z	0	0	0	%100
89	M102B	X	0	0	0	%100
90	M102B	Z	0	0	0	%100
91	MP1A	X	-.222	-.222	0	%100
92	MP1A	Z	-.385	-.385	0	%100
93	M144	X	-.188	-.188	0	%100
94	M144	Z	-.326	-.326	0	%100
95	M147	X	-.032	-.032	0	%100
96	M147	Z	-.056	-.056	0	%100
97	M149A	X	0	0	0	%100
98	M149A	Z	0	0	0	%100
99	M152	X	-.032	-.032	0	%100
100	M152	Z	-.056	-.056	0	%100
101	M155	X	-.031	-.031	0	%100
102	M155	Z	-.053	-.053	0	%100
103	M159	X	0	0	0	%100
104	M159	Z	0	0	0	%100

Member Distributed Loads (BLC 76 : Structure Wm (330 Deg)) (Continued)

	Member Label	Direction	Start Magnitude[lb/ft,...	End Magnitude[lb/ft,F...	Start Location[ft,%]	End Location[ft,%]
105	M163	X	-.031	-.031	0	%100
106	M163	Z	-.053	-.053	0	%100
107	M166A	X	0	0	0	%100
108	M166A	Z	0	0	0	%100
109	M167	X	-.031	-.031	0	%100
110	M167	Z	-.054	-.054	0	%100
111	M168	X	-.031	-.031	0	%100
112	M168	Z	-.054	-.054	0	%100
113	MP2A	X	-.222	-.222	0	%100
114	MP2A	Z	-.385	-.385	0	%100
115	MP4A	X	-.222	-.222	0	%100
116	MP4A	Z	-.385	-.385	0	%100
117	MP5A	X	-.222	-.222	0	%100
118	MP5A	Z	-.385	-.385	0	%100
119	MP3A	X	-.222	-.222	0	%100
120	MP3A	Z	-.385	-.385	0	%100
121	MP1C	X	-.222	-.222	0	%100
122	MP1C	Z	-.385	-.385	0	%100
123	MP2C	X	-.222	-.222	0	%100
124	MP2C	Z	-.385	-.385	0	%100
125	MP4C	X	-.222	-.222	0	%100
126	MP4C	Z	-.385	-.385	0	%100
127	MP5C	X	-.222	-.222	0	%100
128	MP5C	Z	-.385	-.385	0	%100
129	MP3C	X	-.222	-.222	0	%100
130	MP3C	Z	-.385	-.385	0	%100
131	MP1B	X	-.222	-.222	0	%100
132	MP1B	Z	-.385	-.385	0	%100
133	MP2B	X	-.222	-.222	0	%100
134	MP2B	Z	-.385	-.385	0	%100
135	MP4B	X	-.222	-.222	0	%100
136	MP4B	Z	-.385	-.385	0	%100
137	MP5B	X	-.222	-.222	0	%100
138	MP5B	Z	-.385	-.385	0	%100
139	MP3B	X	-.222	-.222	0	%100
140	MP3B	Z	-.385	-.385	0	%100
141	M180	X	0	0	0	%100
142	M180	Z	0	0	0	%100
143	M181	X	-.324	-.324	0	%100
144	M181	Z	-.561	-.561	0	%100
145	M182	X	-.324	-.324	0	%100
146	M182	Z	-.561	-.561	0	%100
147	M194	X	-.424	-.424	0	%100
148	M194	Z	-.734	-.734	0	%100
149	M195	X	-.384	-.384	0	%100
150	M195	Z	-.665	-.665	0	%100
151	M196	X	-.424	-.424	0	%100
152	M196	Z	-.734	-.734	0	%100
153	M197	X	-.384	-.384	0	%100
154	M197	Z	-.665	-.665	0	%100
155	M206	X	0	0	0	%100
156	M206	Z	0	0	0	%100

Member Distributed Loads (BLC 76 : Structure Wm (330 Deg)) (Continued)

	Member Label	Direction	Start Magnitude[lb/ft,...	End Magnitude[lb/ft,F...	Start Location[ft,%]	End Location[ft,%]
157	M207	X	0	0	0	%100
158	M207	Z	0	0	0	%100
159	M208	X	0	0	0	%100
160	M208	Z	0	0	0	%100
161	M209	X	0	0	0	%100
162	M209	Z	0	0	0	%100
163	M218	X	-.424	-.424	0	%100
164	M218	Z	-.734	-.734	0	%100
165	M219	X	-.384	-.384	0	%100
166	M219	Z	-.665	-.665	0	%100
167	M220	X	-.424	-.424	0	%100
168	M220	Z	-.734	-.734	0	%100
169	M221	X	-.384	-.384	0	%100
170	M221	Z	-.665	-.665	0	%100
171	M222	X	-.401	-.401	0	%100
172	M222	Z	-.694	-.694	0	%100
173	M223	X	-.455	-.455	0	%100
174	M223	Z	-.788	-.788	0	%100
175	M224	X	-.401	-.401	0	%100
176	M224	Z	-.694	-.694	0	%100

Member Distributed Loads (BLC 81 : BLC 39 Transient Area Loads)

	Member Label	Direction	Start Magnitude[lb/ft,...	End Magnitude[lb/ft,F...	Start Location[ft,%]	End Location[ft,%]
1	M71	Y	-4.134	-7.228	0	.167
2	M71	Y	-7.228	-13.873	.167	.333
3	M71	Y	-13.873	-24.068	.333	.5
4	M81	Y	-2.102	-4.316	0	.538
5	M81	Y	-4.316	-8.986	.538	1.076
6	M81	Y	-8.986	-11.696	1.076	1.614
7	M81	Y	-11.696	-11.625	1.614	2.152
8	M81	Y	-11.625	-13.188	2.152	2.69
9	M82	Y	-14.533	-12.345	0	.538
10	M82	Y	-12.345	-11.533	.538	1.076
11	M82	Y	-11.533	-9.065	1.076	1.614
12	M82	Y	-9.065	-4.836	1.614	2.152
13	M82	Y	-4.836	-1.873	2.152	2.69
14	M102	Y	-54.716	-54.716	0	.146
15	M96	Y	-2.32	-2.32	0	.146
16	M159B	Y	-77.65	-77.65	0	.188
17	M53	Y	-24.068	-13.873	0	.167
18	M53	Y	-13.873	-7.228	.167	.333
19	M53	Y	-7.228	-4.134	.333	.5
20	M63	Y	-1.873	-4.836	0	.538
21	M63	Y	-4.836	-9.065	.538	1.076
22	M63	Y	-9.065	-11.533	1.076	1.614
23	M63	Y	-11.533	-12.345	1.614	2.152
24	M63	Y	-12.345	-14.533	2.152	2.69
25	M64	Y	-12.744	-12.168	0	.538
26	M64	Y	-12.168	-12.239	.538	1.076
27	M64	Y	-12.239	-9.035	1.076	1.614
28	M64	Y	-9.035	-4.365	1.614	2.152

Member Distributed Loads (BLC 81 : BLC 39 Transient Area Loads) (Continued)

	Member Label	Direction	Start Magnitude[lb/ft,...	End Magnitude[lb/ft,F...	Start Location[ft,%]	End Location[ft,%]
29	M64	Y	-4.365	-2.151	2.152	2.69
30	M92A	Y	-2.056	-2.056	0	.146
31	M98	Y	-48.915	-48.915	0	.146
32	M147B	Y	-79.537	-79.537	0	.188
33	M104A	Y	-24.068	-13.873	0	.167
34	M104A	Y	-13.873	-7.228	.167	.333
35	M104A	Y	-7.228	-4.134	.333	.5
36	M93A	Y	-1.873	-4.836	0	.538
37	M93A	Y	-4.836	-9.065	.538	1.076
38	M93A	Y	-9.065	-11.533	1.076	1.614
39	M93A	Y	-11.533	-12.345	1.614	2.152
40	M93A	Y	-12.345	-14.533	2.152	2.69
41	M94A	Y	-12.744	-12.168	0	.538
42	M94A	Y	-12.168	-12.239	.538	1.076
43	M94A	Y	-12.239	-9.035	1.076	1.614
44	M94A	Y	-9.035	-4.365	1.614	2.152
45	M94A	Y	-4.365	-2.151	2.152	2.69
46	M94	Y	-48.915	-48.915	0	.146
47	M100	Y	-2.056	-2.056	0	.146
48	M174	Y	-79.537	-79.537	0	.188

Member Distributed Loads (BLC 82 : BLC 40 Transient Area Loads)

	Member Label	Direction	Start Magnitude[lb/ft,...	End Magnitude[lb/ft,F...	Start Location[ft,%]	End Location[ft,%]
1	M71	Y	-7.99	-13.971	0	.167
2	M71	Y	-13.971	-26.814	.167	.333
3	M71	Y	-26.814	-46.52	.333	.5
4	M81	Y	-4.063	-8.342	0	.538
5	M81	Y	-8.342	-17.368	.538	1.076
6	M81	Y	-17.368	-22.607	1.076	1.614
7	M81	Y	-22.607	-22.47	1.614	2.152
8	M81	Y	-22.47	-25.49	2.152	2.69
9	M82	Y	-28.091	-23.862	0	.538
10	M82	Y	-23.862	-22.291	.538	1.076
11	M82	Y	-22.291	-17.522	1.076	1.614
12	M82	Y	-17.522	-9.346	1.614	2.152
13	M82	Y	-9.346	-3.62	2.152	2.69
14	M102	Y	-105.76	-105.76	0	.146
15	M96	Y	-4.484	-4.484	0	.146
16	M159B	Y	-150.089	-150.089	0	.188
17	M53	Y	-46.52	-26.814	0	.167
18	M53	Y	-26.814	-13.971	.167	.333
19	M53	Y	-13.971	-7.99	.333	.5
20	M63	Y	-3.62	-9.346	0	.538
21	M63	Y	-9.346	-17.522	.538	1.076
22	M63	Y	-17.522	-22.291	1.076	1.614
23	M63	Y	-22.291	-23.862	1.614	2.152
24	M63	Y	-23.862	-28.091	2.152	2.69
25	M64	Y	-24.632	-23.519	0	.538
26	M64	Y	-23.519	-23.656	.538	1.076
27	M64	Y	-23.656	-17.464	1.076	1.614
28	M64	Y	-17.464	-8.437	1.614	2.152

Member Distributed Loads (BLC 82 : BLC 40 Transient Area Loads) (Continued)

	Member Label	Direction	Start Magnitude[lb/ft,...	End Magnitude[lb/ft,F...	Start Location[ft,%]	End Location[ft,%]
29	M64	Y	-8.437	-4.158	2.152	2.69
30	M92A	Y	-3.973	-3.973	0	.146
31	M98	Y	-94.547	-94.547	0	.146
32	M147B	Y	-153.735	-153.735	0	.188
33	M104A	Y	-46.52	-26.814	0	.167
34	M104A	Y	-26.814	-13.971	.167	.333
35	M104A	Y	-13.971	-7.99	.333	.5
36	M93A	Y	-3.62	-9.346	0	.538
37	M93A	Y	-9.346	-17.522	.538	1.076
38	M93A	Y	-17.522	-22.291	1.076	1.614
39	M93A	Y	-22.291	-23.862	1.614	2.152
40	M93A	Y	-23.862	-28.091	2.152	2.69
41	M94A	Y	-24.632	-23.519	0	.538
42	M94A	Y	-23.519	-23.656	.538	1.076
43	M94A	Y	-23.656	-17.464	1.076	1.614
44	M94A	Y	-17.464	-8.437	1.614	2.152
45	M94A	Y	-8.437	-4.158	2.152	2.69
46	M94	Y	-94.547	-94.547	0	.146
47	M100	Y	-3.973	-3.973	0	.146
48	M174	Y	-153.735	-153.735	0	.188

Member Area Loads (BLC 39 : Structure D)

	Joint A	Joint B	Joint C	Joint D	Direction	Distribution	Magnitude[ksf]
1	N104	N103	N109A	N108A	Y	Two Way	-.005
2	N82	N83	N111	N109	Y	Two Way	-.005
3	N117	N118	N108B	N112	Y	Two Way	-.005

Member Area Loads (BLC 40 : Structure Di)

	Joint A	Joint B	Joint C	Joint D	Direction	Distribution	Magnitude[ksf]
1	N104	N103	N109A	N108A	Y	Two Way	-.01
2	N82	N83	N111	N109	Y	Two Way	-.01
3	N117	N118	N108B	N112	Y	Two Way	-.01

Envelope AISC 15th(360-16): LRFD Steel Code Checks

	Member	Shape	Code C...	Loc[ft]	LC	Shear ...	Loc[ft]	Dir	LC	phi*Pnc [lb]	phi*Pnt [lb]	phi*Mn y-...	phi*Mn z-...	Cb	Eqn
1	M101	PL1/4x4	.085	.208	42	.503	0	y	38	30416.496	32400	.169	2.7	1....	H1-1b
2	M91A	PL1/4x4	.054	.208	11	.463	0	y	12	30416.496	32400	.169	2.7	1....	H1-1b
3	M95B	PL1/4x4	.086	.208	40	.433	.208	y	38	30416.496	32400	.169	2.7	1....	H1-1b
4	M99	PL1/4x4	.060	.208	2	.427	0	y	4	30416.496	32400	.169	2.7	1....	H1-1b
5	M97	PL1/4x4	.080	.208	11	.388	.208	y	12	30416.496	32400	.169	2.7	1....	H1-1b
6	M93	PL1/4x4	.086	.208	3	.352	.208	y	4	30416.496	32400	.169	2.7	1....	H1-1b
7	M19A	PL1/4x4	.043	.56	38	.200	0	y	38	20526.667	32400	.169	2.7	2....	H1-1b
8	M105C	PIPE_1.5	.323	14.198	1	.163	6.193		6	2186.296	23593.5	1.105	1.105	1....	H1-1b
9	M105B	PIPE_1.5	.297	14.198	9	.158	6.193		2	2186.296	23593.5	1.105	1.105	1....	H1-1b
10	M104B	PIPE_1.5	.319	14.198	6	.150	6.193		10	2186.296	23593.5	1.105	1.105	1....	H1-1b
11	MP3C	PIPE_2.0	.424	5.167	12	.133	2		12	14916.096	32130	1.872	1.872	2....	H1-1b
12	MP3A	PIPE_2.0	.412	5.167	4	.130	2		4	14916.096	32130	1.872	1.872	2....	H1-1b
13	MP3B	PIPE_2.0	.413	5.167	8	.129	2		8	14916.096	32130	1.872	1.872	2....	H1-1b

Envelope AISC 15th(360-16): LRFD Steel Code Checks (Continued)

	Member	Shape	Code C...	Loc[ft]	LC	Shear ...	Loc[ft]	Dir	LC	phi*Pnc [lb]	phi*Pnt [lb]	phi*Mn y-...	phi*Mn z-...	Cb	Eqn
14	M19	HSS6X3X4	.078	1.922	20	.119	1.868	z	21	133934.6...	158976	15.215	24.806	1....	H1-1b
15	M38C	HSS6X3X4	.079	1.922	6	.118	1.868	z	17	133934.6...	158976	15.215	24.806	1....	H1-1b
16	M51	HSS6X3X4	.073	1.922	13	.094	1.868	z	13	133934.6...	158976	15.215	24.806	3....	H1-1b
17	M104	PL1/4x4	.044	0	12	.081	.56	y	12	20526.667	32400	.169	2.7	2....	H1-1b
18	MP2C	PIPE_2.0	.345	5.167	6	.074	5.167		5	14916.096	32130	1.872	1.872	2....	H1-1b
19	MP4C	PIPE_2.0	.350	5.167	1	.074	5.167		1	14916.096	32130	1.872	1.872	2....	H1-1b
20	MP2B	PIPE_2.0	.334	5.167	1	.074	5.167		1	14916.096	32130	1.872	1.872	2....	H1-1b
21	M101A	PL1/4x4	.043	0	4	.073	.56	y	4	20526.667	32400	.169	2.7	2....	H1-1b
22	MP4A	PIPE_2.0	.335	5.167	5	.072	5.167		5	14916.096	32130	1.872	1.872	2....	H1-1b
23	MP4B	PIPE_2.0	.337	5.167	9	.071	5.167		9	14916.096	32130	1.872	1.872	2....	H1-1b
24	MP2A	PIPE_2.0	.318	5.167	10	.069	5.167		9	14916.096	32130	1.872	1.872	2....	H1-1b
25	MP5A	PIPE_2.0	.287	5.167	5	.064	2.167		5	14916.096	32130	1.872	1.872	2....	H1-1b
26	MP5B	PIPE_2.0	.288	5.167	9	.064	2.167		9	14916.096	32130	1.872	1.872	2....	H1-1b
27	MP5C	PIPE_2.0	.303	5.167	1	.063	2.167		1	14916.096	32130	1.872	1.872	2....	H1-1b
28	M134	PL1/4x2	.261	0	8	.055	0	y	2	2922.25	16200	.084	.675	2....	H1-1b
29	M101B	PL1/4x2	.283	0	12	.054	0	y	6	2922.25	16200	.084	.675	2....	H1-1b
30	M95C	PL1/4x2	.270	0	4	.053	0	y	10	2922.25	16200	.084	.675	2....	H1-1b
31	MP1C	PIPE_2.0	.270	5.167	5	.050	5.167		5	14916.096	32130	1.872	1.872	2....	H1-1b
32	MP1B	PIPE_2.0	.271	5.167	1	.049	5.167		12	14916.096	32130	1.872	1.872	2....	H1-1b
33	MP1A	PIPE_2.0	.249	5.167	9	.045	5.167		9	14916.096	32130	1.872	1.872	2....	H1-1b
34	M219	L6X4X5	.294	2.363	16	.036	2.363	z	41	70699.84	98172	4.311	11.002	1....	H2-1
35	M221	L6X4X5	.291	2.363	17	.034	2.363	y	5	70699.84	98172	4.311	13.012	1....	H2-1
36	M209	L6X4X5	.292	2.363	21	.032	2.363	y	9	70699.84	98172	4.311	13.012	1....	H2-1
37	M197	L6X4X5	.244	2.363	1	.032	2.363	y	1	70699.84	98172	4.311	13.012	1....	H2-1
38	M207	L6X4X5	.295	2.363	22	.031	2.363	z	21	70699.84	98172	4.311	11.002	1....	H2-1
39	M195	L6X4X5	.246	2.363	13	.030	2.363	z	13	70699.84	98172	4.311	11.002	1....	H2-1
40	M135	PL1/4x2	.119	0	38	.029	0	y	2	2922.25	16200	.084	.675	2....	H1-1b
41	M102B	PL1/4x2	.119	1.182	11	.028	0	y	6	2922.25	16200	.084	.675	1....	H1-1b
42	M96A	PL1/4x2	.119	1.182	3	.028	0	y	10	2922.25	16200	.084	.675	1....	H1-1b
43	M167	PL3/8x4.75	.073	0	7	.025	0	y	44	11569.78	57712.5	.451	5.711	2....	H1-1b
44	M166A	PL3/8x4.75	.074	0	11	.020	0	y	6	11569.78	57712.5	.451	5.711	2....	H1-1b
45	M168	PL3/8x4.75	.072	0	3	.019	0	y	10	11569.78	57712.5	.451	5.711	2....	H1-1b
46	M72	PL1/4x3	.091	0	41	.018	0	y	11	16887.517	24300	.127	1.44	1	H1-1b
47	M54	PL1/4x3	.075	0	3	.018	0	y	3	16887.517	24300	.127	1.44	1	H1-1b
48	M180	L2.5x2.5x4	.174	3.202	3	.015	6.682	z	12	9713.002	38556	1.114	2.111	1....	H2-1
49	M105A	PL1/4x3	.069	0	7	.015	0	y	7	16887.517	24300	.127	1.44	1	H1-1b
50	M181	L2.5x2.5x4	.180	3.341	11	.015	0	z	2	9713.002	38556	1.114	2.089	1....	H2-1
51	M182	L2.5x2.5x4	.181	3.272	7	.015	0	z	10	9713.002	38556	1.114	2.101	1....	H2-1
52	M144	PIPE_2.0	.094	2.5	6	.015	2.5		6	28843.414	32130	1.872	1.872	2....	H1-1b
53	M206	L6X4X5	.036	3.517	15	.014	0	z	14	56838.28	98172	4.311	12.691	1....	H2-1
54	M220	L6X4X5	.033	3.517	17	.014	0	z	17	56838.28	98172	4.311	10.768	1....	H2-1
55	M208	L6X4X5	.034	3.517	21	.014	7.035	z	22	56838.28	98172	4.311	10.695	1....	H2-1
56	M218	L6X4X5	.036	3.517	23	.014	7.035	z	24	56838.28	98172	4.311	12.705	1....	H2-1
57	M163	PL1/4x2	.026	1.833	11	.012	1.833	y	11	303.88	16200	.084	.675	1....	H1-1b*
58	M159	PL1/4x2	.025	1.833	3	.012	1.833	y	3	303.88	16200	.084	.675	1....	H1-1b*
59	M155	PL1/4x2	.025	1.833	7	.011	1.833	y	7	303.88	16200	.084	.675	1....	H1-1b*
60	M196	L6X4X5	.115	3.517	15	.010	3.517	z	14	56838.28	98172	4.311	12.912	1....	H2-1
61	M194	L6X4X5	.121	3.517	20	.010	3.517	z	17	56838.28	98172	4.311	10.763	1....	H2-1
62	M147	PL1/4x2	.002	5.88	9	.004	2.94	y	1	118.172	16200	.084	.582	1....	H1-1b*
63	M71	PL1/4x3	.058	0	19	.003	0	y	38	16887.517	24300	.127	1.44	1	H1-1b
64	M53	PL1/4x3	.059	.5	18	.003	0	y	12	16887.517	24300	.127	1.44	1	H1-1b
65	M149A	PL1/4x2	.006	2.94	8	.003	0	y	39	118.172	16200	.084	.552	1....	H1-1b*

Envelope AISC 15th(360-16): LRFD Steel Code Checks (Continued)

	Member	Shape	Code C...	Loc[ft]	LC	Shear ...	Loc[ft]	Dir	LC	phi*Pnc [lb]	phi*Pnt [lb]	phi*Mn y-...	phi*Mn z-...	Cb	Eqn
66	M152	PL1/4x2	.007	0	5	.002	2.94	y	5	118.172	16200	.084	.573	1....	H1-1b*
67	M224	LL3x3x3x6	.114	4.423	17	.002	4.423	y	17	46511.315	70632	6.362	3.751	1	H1-1b*
68	M223	LL3x3x3x6	.112	4.423	21	.002	0	y	22	46511.315	70632	6.362	3.751	1	H1-1b*
69	M222	LL3x3x3x6	.106	4.423	13	.002	4.423	y	24	46511.315	70632	6.362	3.751	1	H1-1b*
70	M104A	PL1/4x3	.039	0	24	.002	.25	y	10	16887.517	24300	.127	1.44	1	H1-1b

Envelope AISI S100-16: LRFD Cold Formed Steel Code Checks

	Member	Shape	Code ...	Loc[ft]	LC	Shear ...	Loc[ft]	Dir	LC	phi*Pn[lb]	phi*Tn[lb]	phi*Mny...	phi*Mnz...	phi*V...	phi*V...	Cb	Eqn
1	M93A	3CU1.5X...	.072	0	1	.012	2.69	y	12	29957.4...	41594.9...	.688	2.78	9747	9747	2.271	H1.1-1
2	M94A	3CU1.5X...	.072	2.69	1	.012	0	y	8	29957.4...	41594.9...	.688	2.78	9747	9747	2.274	H1.1-1
3	M93B	3CU1.5X...	.182	0	18	.048	1.583	y	7	35762.94	41594.9...	.688	2.78	9747	9747	2.268	H1.1-1
4	M94D	3CU1.5X...	.185	1.583	7	.051	0	y	7	35762.94	41594.9...	.688	2.779	9747	9747	2.251	H1.1-2
5	M63	3CU1.5X...	.110	0	6	.013	2.69	y	2	29957.4...	41594.9...	.688	2.78	9747	9747	1.085	H1.1-1
6	M64	3CU1.5X...	.122	2.69	11	.012	0	y	4	29957.4...	41594.9...	.688	2.78	9747	9747	2.093	H1.1-1
7	M69	3CU1.5X...	.179	0	14	.050	1.583	y	3	35762.94	41594.9...	.688	2.78	9747	9747	2.257	H1.1-1
8	M70	3CU1.5X...	.196	1.583	3	.053	0	y	3	35762.94	41594.9...	.688	2.779	9747	9747	2.25	H1.1-2
9	M81	3CU1.5X...	.108	0	2	.012	2.69	y	10	29957.4...	41594.9...	.688	2.78	9747	9747	1.095	H1.1-1
10	M82	3CU1.5X...	.122	2.69	7	.014	0	y	12	29957.4...	41594.9...	.688	2.78	9747	9747	2.155	H1.1-1
11	M87	3CU1.5X...	.191	0	11	.053	1.583	y	11	35762.94	41594.9...	.688	2.779	9747	9747	2.247	H1.1-2
12	M88	3CU1.5X...	.211	1.583	41	.055	0	y	11	35762.94	41594.9...	.688	2.78	9747	9747	2.152	H1.1-1
13	M89	4.5CU3X...	.285	4.229	9	.154	3.096	y	6	46428.4...	75945.6	2.87	8.777	1859...	2628...	1.58	H1.2-1
14	M90	4.5CU3X...	.298	4.229	5	.163	3.096	z	2	46428.4...	75945.6	2.87	8.777	1859...	2628...	1.568	H1.2-1
15	M89A	4.5CU3X...	.295	4.229	5	.157	3.096	y	2	46428.4...	75945.6	2.87	8.777	1859...	2628...	1.55	H1.2-1
16	M90A	4.5CU3X...	.290	4.229	1	.159	3.096	y	4	46428.4...	75945.6	2.87	8.777	1859...	2628...	1.516	H1.2-1
17	M91	4.5CU3X...	.286	4.229	1	.142	3.096	z	4	46428.4...	75945.6	2.87	8.777	1859...	2628...	1.523	H1.2-1
18	M92	4.5CU3X...	.287	4.229	9	.173	3.096	y	12	46428.4...	75945.6	2.87	8.777	1859...	2628...	1.551	H1.2-1

Envelope Joint Reactions

	Joint		X [lb]	LC	Y [lb]	LC	Z [lb]	LC	MX [k-ft]	LC	MY [k-ft]	LC	MZ [k-ft]	LC
1	N23	max	4261.93	9	134.925	3	1164.703	3	.03	10	1.394	12	.26	33
2		min	-2013.444	3	-301.532	9	-2482.859	9	-.306	28	-1.418	6	-.06	3
3	N47A	max	2381.696	11	234.892	11	1356.74	12	.073	2	1.564	8	.114	12
4		min	-4654.264	5	-326.209	5	-2680.889	6	-.312	33	-1.527	2	-.287	42
5	N65	max	1252.603	10	420.663	7	5488.371	1	.382	19	1.235	4	.03	11
6		min	-1249.656	4	-19.189	1	-3072.159	7	.017	25	-1.237	10	-.2	41
7	N289A	max	29.882	10	3371.554	13	-164.713	7	0	51	0	44	0	2
8		min	-29.881	4	148.358	7	-3599.585	13	0	1	0	2	0	44
9	N292	max	-274.872	3	3558.242	21	1900.939	21	0	41	0	35	0	35
10		min	-3292.599	21	289.303	3	158.708	3	0	35	0	41	0	41
11	N295	max	3346.532	17	3615.644	17	1931.981	17	0	11	0	11	0	11
12		min	197.157	11	206.479	11	113.864	11	0	29	0	29	0	29
13	Totals:	max	5196.416	10	9584.605	22	5289.09	1						
14		min	-5196.542	4	4455.26	3	-5288.972	7						

Client:	Verizon Wireless	Date:	12/18/2020
Site Name:	Plymouth West Relo CT		
Project No.	20777381A		
Title:	Mount Analysis	Page:	1

Version 3.1

I. Mount-to-Tower Connection Check

RISA Model Data

Nodes *(labeled per RISA)*	Orientation *(per graphic of typical platform)*
N23	30
N47A	150
N65	270

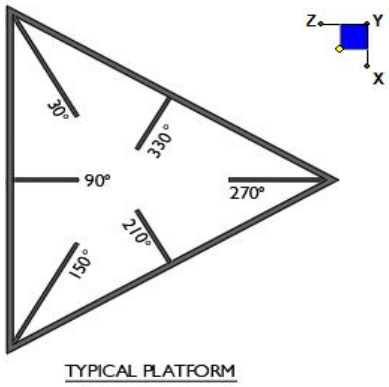

TYPICAL PLATFORM

Tower Connection Bolt Checks

Any moment resistance?:	yes
Bolt Quantity per Reaction:	4
d_x (in) *(Delta X of typ. bolt config. sketch)* :	9.5
d_y (in) *(Delta Y of typ. bolt config. sketch)* :	9.5
Bolt Type:	A307
Bolt Diameter (in):	0.625
Required Tensile Strength (kips):	6.6
Required Shear Strength (kips):	1.4
Tensile Strength / bolt (kips):	10.0
Shear Strength / bolt (kips):	6.0
Tensile Capacity Overall:	**16.6%***
Shear Capacity Overall:	**6.0%**

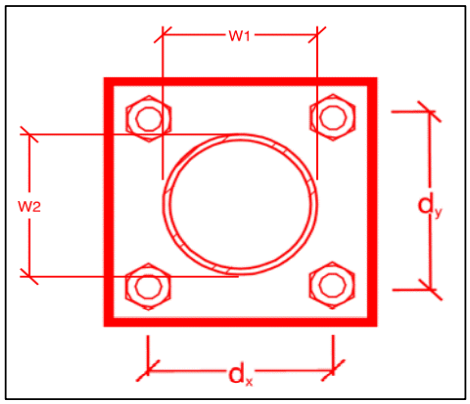

**Note: Tension reduction not required if tension or shear capacity < 30%*

Tower Connection Plate and Weld Check

Connecting Standoff Member Shape:	Rect
Plate Width (in):	11.5
Plate Height (in):	11.5
W1 (in):	6
W2 (in):	3
Fy (ksi, plate):	36
t_{Plate} (in):	0.5
Weld Size (1/16 in):	3
Phi*Rn (kip/in):	4.18
Required Weld Strength (kip/in):	0.73
Plate Bending Capacity:	**35.8%**
Weld Capacity:	**17.5%**

Max Plate Bending Strengths

Mu_{xx} *(kip-in)* :	7.6
$Phi*Mn_{xx}$ *(kip-in)* :	23.3
Mu_{yy} *(kip-in)* :	0.8
$Phi*Mn_{yy}$ *(kip-in)* :	23.3

Mount Desktop – Post Modification Inspection (PMI) Report Requirements

Documents & Photos Required from Contractor – Mount Modification

Purpose – to provide TES the proper documentation in order to complete the required Mount Desktop review of the Post Modification Inspection Report.

- Contractor is responsible for making certain the photos provided as noted below provide confirmation that the modification was completed in accordance with the modification drawings.
- Contractor shall relay any data that can impact the performance of the mount or the mount modification, this includes safety issues.

Base Requirements:

- Any special photos outside of the standard requirements will be indicated on the drawings
- Provide "as built drawings" showing contractor's name, preparer's signature, and date. Any deviations from the drawings (proposed modification) must be shown.
- Notation that all hardware was properly installed, and the existing hardware was inspected for any issues.
- Verification that loading is as communicated in the modification drawings. NOTE If loading is different than what is conveyed in the modification drawing contact TES immediately.
- Each photo should be time and date stamped
- Photos should be high resolution and submitted in a Zip File and should be organized in the file structure as depicted in Schedule A attached.
- Contractor shall ensure that the safety climb wire rope is supported and not adversely impacted by the install of the modification components. This may involve the install of wire rope guides, or other items to protect the wire rope.
- The photos in the file structure should be uploaded **to** **https://pmi.vzwsmart.com** as depicted on the drawings

Photo Requirements:

- *Base and "During Installation Photos"*
  - Base pictures include
    - Photo of Gate Signs showing the tower owner, site name, and number
    - Photo of carrier shelter showing the carrier site name and number if available
    - Photos of the galvanizing compound and/or paint used (if applicable), clearly showing the label and name
  - "During Installation Photos if provided - must be placed only in this folder
- *Photos taken at ground level*
  - Overall tower structure before and after installation of the modifications
  - Photos of the appropriate mount before and after installation of the modifications; if the mounts are at different rad elevations, pictures must be provided for all elevations that the modifications were installed

- *Photos taken at Mount Elevation*
    - Photos showing each individual sector before and also after installation of modifications. Each entire sector must be in one photo to show in the inter-connection of members.
        - These photos should also certify that the placement and geometry of the equipment on the mount is as depicted on the sketch and table in the mount analysis
    - Close-up photos of each installed modification per the modification drawings; pictures should also include connection hardware (U-bolts, bolts, nuts, all-threaded rods, etc.)
    - Photos showing the measurements of the installed modification member sizes (i.e. lengths, widths, depths, diameters, thicknesses)
    - Photos showing the elevation or distances of the installed modifications from the appropriate reference locations shown in the modification drawings
    - Photos showing the installed modifications onto the tower with tape drop measurements (if applicable) (i.e. ring/collar mounts, tie-backs, V-bracing kits, etc.); if the existing mount elevation needs to be changed according to the modification drawings, a tape drop measurement shall be provided before the elevation change
    - Photos showing the safety climb wire rope above and below the mount prior to modification.
    - Photos showing the climbing facility and safety climb if present.

Material Certification:

- Materials utilized must be as per specification on the drawings or the equivalent as validated by TES.

    - If the drawings are as specified on the drawings
        - The contractor should provide the packing list or the materials utilized to perform the mount modification
    - If an equivalent is utilized
        - It is required that the TES certification of such is included in the contractor submission package. There may be an additional charge for this certification if the equivalent submission doesn't meet specifications as prescribed in the drawings.

- The contractor must certify that the materials meet these specifications by one of these methods.

☐ The Material utilized was as specified on the TES Mount Modification Drawings and included in the Material certification folder is a packing list or invoice for these materials

☐ The material utilized was an "equivalent" and included as part of the contractor submission is the TES certification, invoices, or specifications validating accepted status

Certifying Individual: Company _____

Name _____

Signature _____

Antenna & equipment placement and Geometry Confirmation:

- The contractor must certify that the antenna & equipment placement and geometry is in accordance with the antenna placement diagrams as included in this mount analysis.

☐ The contractor certifies that the photos support and the equipment on the mount is as depicted on the antenna placement diagrams as included in this mount analysis.

☐ The contractor notes that the equipment on the mount is not in accordance with the antenna placement diagrams and has accordingly marked up the diagrams or provided a diagram outlining the differences.

Certifying Individual: Company _____

Name _____

Signature _____

Special Instructions / Validation as required from the MA or Mod Drawings:

Issue:

Response:

Schedule A – Photo & Document File Structure

- VzW Site Number / Name
  - Base & “During Installation” Photos
  - Pre-Installation Photos
    - Alpha
    - Beta
    - Gamma
    - Ground Level
    - Tape Drop
  - Post-Installation Photos
    - Alpha
    - Beta
    - Gamma
    - Ground Level
    - Tape Drop
    - Photos of climbing facility and safety climb – If Present
  - Certifications – Submission of this document including certifications
  - Specific Required Additional Photos

Structure: 467737-VZW - Plymouth West Relo CT

Sector: **A**

Structure Type: Monopole

Mount Elev: 138.00

12/2/2020

Plan View

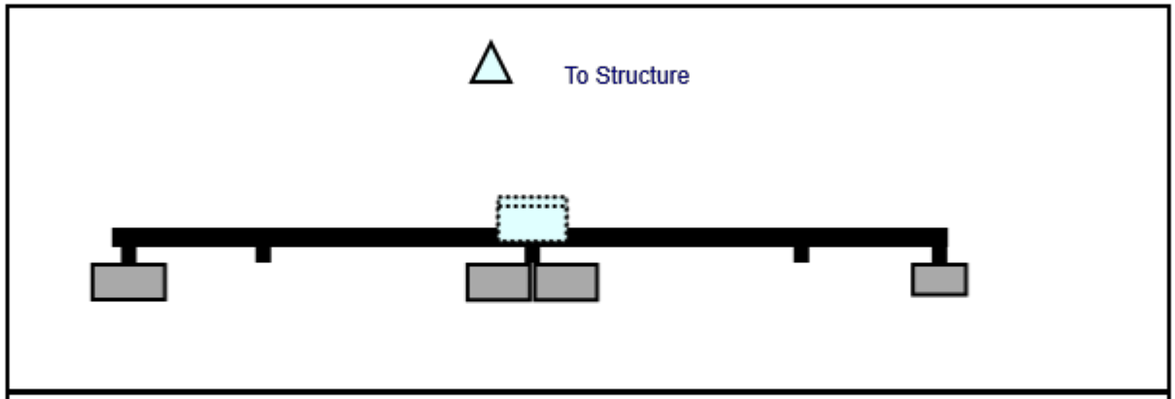

Front View
Looking at Structure

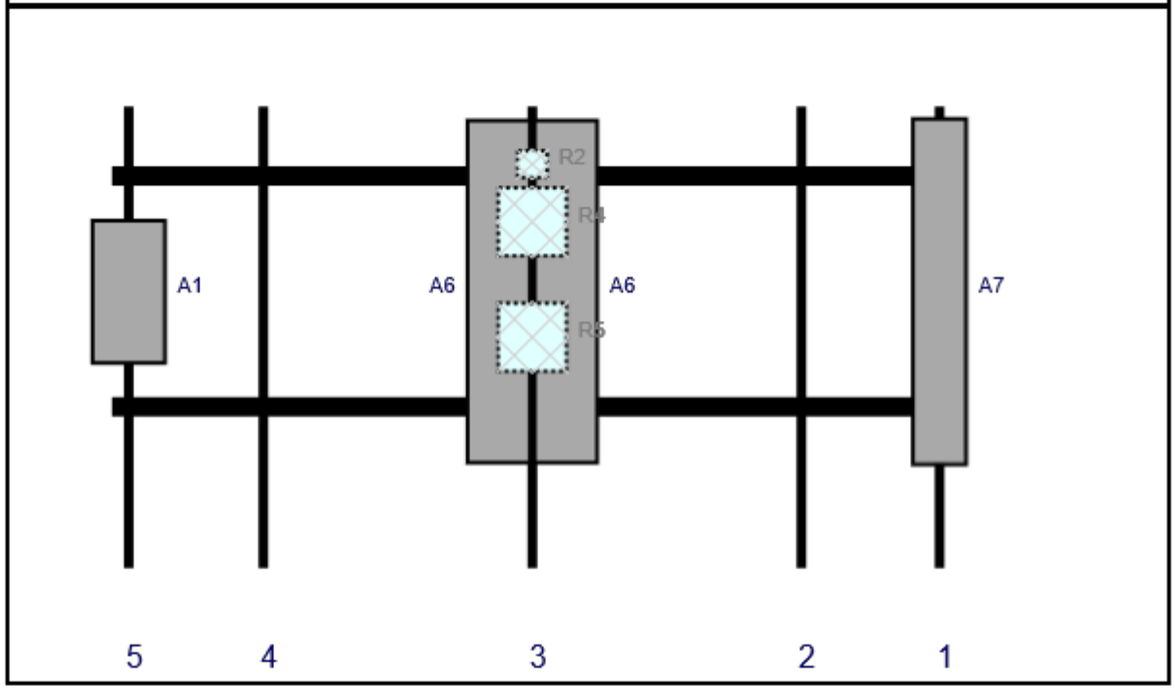

Ref#	Model	Height (in)	Width (in)	H Dist Frm L.	Pipe #	Pipe Pos V	Ant Pos	C. Ant Frm T.	Ant H Off	Status	Validation
A7	LNX-6514DS-A1M	72.7	11.9	172.25	1	a	Front	38.52	0	Retained	10/27/2020
A6	JAHH-65B-R3B	72	13.8	87.5	3	a	Front	38.52	7	Added	
A6	JAHH-65B-R3B	72	13.8	87.5	3	b	Front	38.52	-7	Added	
R2	CBC78T-DS-43-2X	6.4	6.9	87.5	3	a	Behind	12	0	Added	
R4	B2/B66A RRH-BR049	15	15	87.5	3	a	Behind	24	0	Added	
R5	B5/B13 RRH-BR04C	15	15	87.5	3	a	Behind	48	0	Added	
A1	nL-Sub6 Antenna	30.4	15.9	3.5	5	a	Front	38.52	0	Added	

Copyright 2019 by Tower Engineering Solutions, LLC. All Rights Reserved

Sector: **B** 12/2/2020

Structure Type: Monopole

Mount Elev: 138.00 Page: 2

Plan View

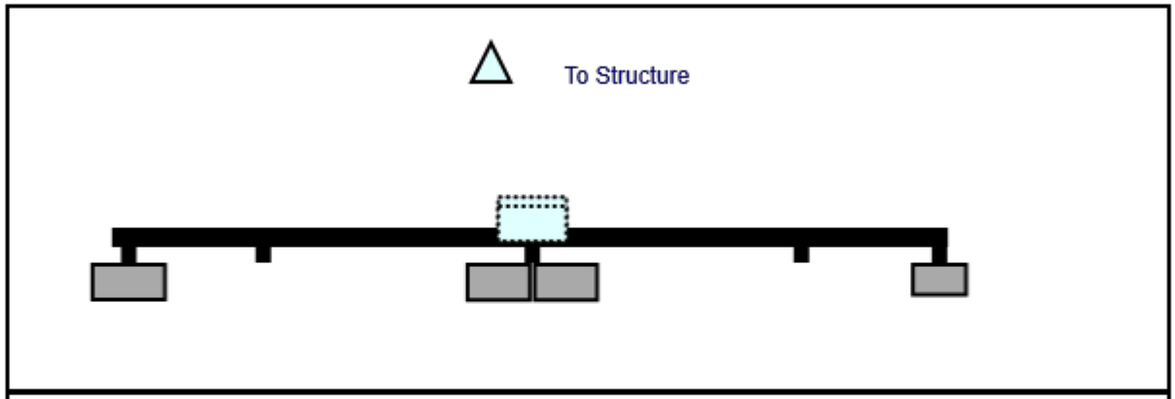

Front View
Looking at Structure

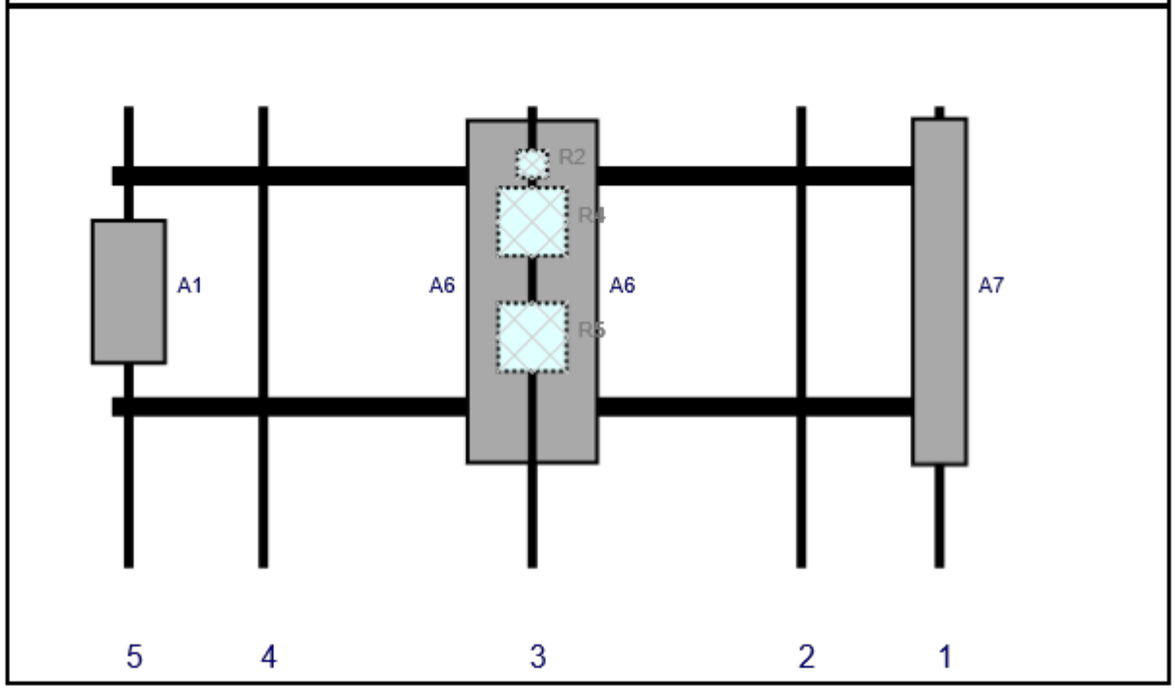

Ref#	Model	Height (in)	Width (in)	H Dist Frm L.	Pipe #	Pipe Pos V	Ant Pos	C. Ant Frm T.	Ant H Off	Status	Validation
A7	LNX-6514DS-A1M	72.7	11.9	172.25	1	a	Front	38.52	0	Retained	10/27/2020
A6	JAHH-65B-R3B	72	13.8	87.5	3	a	Front	38.52	7	Added	
A6	JAHH-65B-R3B	72	13.8	87.5	3	b	Front	38.52	-7	Added	
R2	CBC78T-DS-43-2X	6.4	6.9	87.5	3	a	Behind	12	0	Added	
R4	B2/B66A RRH-BR049	15	15	87.5	3	a	Behind	24	0	Added	
R5	B5/B13 RRH-BR04C	15	15	87.5	3	a	Behind	48	0	Added	
A1	nL-Sub6 Antenna	30.4	15.9	3.5	5	a	Front	38.52	0	Added	

Copyright 2019 by Tower Engineering Solutions, LLC. All Rights Reserved

Sector: **C**

Structure Type: Monopole

Mount Elev: 138.00

12/2/2020

Plan View

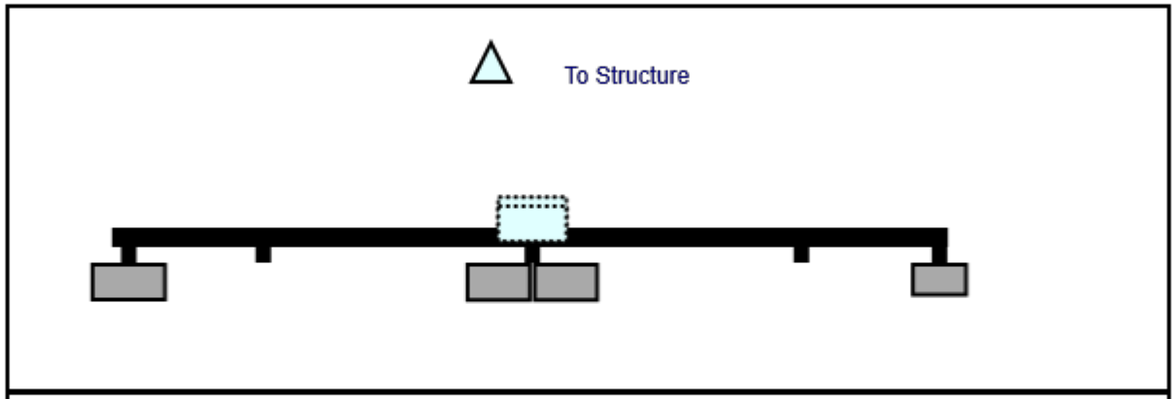

Front View
Looking at Structure

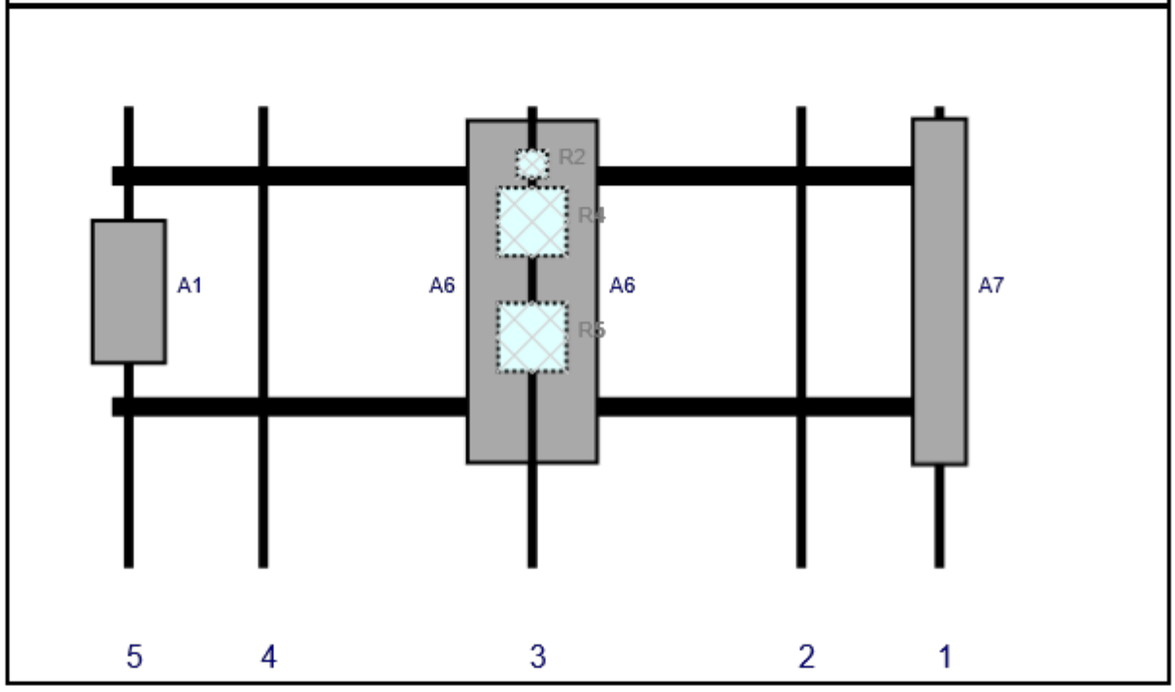

Ref#	Model	Height (in)	Width (in)	H Dist Frm L.	Pipe #	Pipe Pos V	Ant Pos	C. Ant Frm T.	Ant H Off	Status	Validation
A7	LNX-6514DS-A1M	72.7	11.9	172.25	1	a	Front	38.52	0	Retained	10/27/2020
A6	JAHH-65B-R3B	72	13.8	87.5	3	a	Front	38.52	7	Added	
A6	JAHH-65B-R3B	72	13.8	87.5	3	b	Front	38.52	-7	Added	
R2	CBC78T-DS-43-2X	6.4	6.9	87.5	3	a	Behind	12	0	Added	
R4	B2/B66A RRH-BR049	15	15	87.5	3	a	Behind	24	0	Added	
R5	B5/B13 RRH-BR04C	15	15	87.5	3	a	Behind	48	0	Added	
A1	nL-Sub6 Antenna	30.4	15.9	3.5	5	a	Front	38.52	0	Added	

Copyright 2019 by Tower Engineering Solutions, LLC. All Rights Reserved

Maser Consulting Connecticut

MASER CONSULTING
—CONNECTICUT—

Subject TIA-222-H Usage

Site Information

Site ID:	*467737-VZW / Plymouth West Relo CT*
Site Name:	Plymouth West Relo CT
Carrier Name:	*Verizon Wireless*
Address:	33 Keegan Rd *Plymouth, Connecticut 06782* *Litchfield County*
Latitude:	*41.66175944°*
Longitude:	*-73.04564472°*

Structure Information

Tower Type:	*140-Ft Monopole*
Mount Type:	*14.50-Ft Platform*

To Whom It May Concern,

We respectfully submit the above referenced Antenna Mount Structural Analysis report in conformance with ANSI/TIA-222-H, Structural Standard for Antenna Supporting Structures and Antennas and Small Wind Turbine Support Structures.

The 2015 International Building Code states that, in Section 3108, telecommunication towers shall be designed and constructed in accordance with the provisions of TIA-222. The TIA-222-H is the latest revision of the TIA-222 Standard, effective as of January 01, 2018.

As with all ANSI standards and engineering best practice is to apply the most current revision of the standard. This ensures the engineer is applying all updates. As an example, the TIA-222-H standard includes updates to bring it in line with the latest AISC and ACI standards and it also incorporates the latest wind speed maps by ASCE 7 based on updated studies of the wind data.

The TIA-222-H standard clarifies these specific requirements for the antenna mount analysis such as modeling methods, seismic analysis, 30-degree increment wind directions and maintenance loading. Therefore, it is our opinion that TIA-222-H is the most appropriate standard for antenna mount structural analysis and is acceptable for use at this tower site to ensure the engineer is taking into account the most current engineering standard available.

Sincerely,

Michael Cleary , PE
Technical Specialist

PROJECT NOTES

1. SEE MODIFICATION NOTES
2. THE CONTRACTOR SHALL COMPLY WITH ALL APPLICABLE CODES, ORDINANCES, LAWS AND REGULATIONS OF ALL MUNICIPALITIES, UTILITY COMPANIES OR OTHER PUBLIC/GOVERNING AUTHORITIES.
3. THE CONTRACTOR SHALL BE RESPONSIBLE FOR OBTAINING ALL PERMITS AND INSPECTIONS THAT MAY BE REQUIRED BY ANY FEDERAL, STATE, COUNTY OR MUNICIPAL AUTHORITIES.
4. THE CONTRACTOR SHALL NOTIFY THE CONSTRUCTION MANAGER, IN WRITING, OF ANY CONFLICTS, ERRORS OR OMISSIONS PRIOR TO THE SUBMISSION OF BIDS OR PERFORMANCE OF WORK.
5. THE CONTRACTOR SHALL BE RESPONSIBLE FOR PROTECTING ALL EXISTING SITE IMPROVEMENTS PRIOR TO COMMENCING CONSTRUCTION. THE CONTRACTOR SHALL REPAIR ANY DAMAGE AS A RESULT OF CONSTRUCTION OF THIS FACILITY AT THE CONTRACTOR'S EXPENSE TO THE SATISFACTION OF THE OWNER.
6. THE SCOPE OF WORK FOR THIS PROJECT SHALL INCLUDE PROVIDING ALL MATERIALS, EQUIPMENT AND LABOR REQUIRED TO COMPLETE THIS PROJECT. ALL EQUIPMENT SHALL BE INSTALLED IN ACCORDANCE WITH MANUFACTURER'S RECOMMENDATIONS.
7. THE CONTRACTOR SHALL VISIT THE PROJECT SITE PRIOR TO SUBMITTING THE BID TO VERIFY THAT THE PROJECT CAN BE CONSTRUCTED IN ACCORDANCE WITH THE CONTRACT DOCUMENTS AND CONSTRUCTION DRAWINGS.
8. THE CONTRACTOR SHALL VERIFY ALL EXISTING DIMENSIONS AND CONDITIONS PRIOR TO COMMENCING ANY WORK. ALL DIMENSIONS OF EXISTING CONSTRUCTION SHOWN ON THESE DRAWINGS MUST BE VERIFIED. THE CONTRACTOR SHALL NOTIFY THE CONSTRUCTION MANAGER OF ANY DISCREPANCIES PRIOR TO ORDERING MATERIAL OR PROCEEDING WITH CONSTRUCTION.
9. SINCE THE CELL SITE MAY BE ACTIVE, ALL SAFETY PRECAUTIONS MUST BE TAKEN WHEN WORKING AROUND HIGH LEVELS OF ELECTROMAGNETIC RADIATION. EQUIPMENT SHOULD BE SHUTDOWN PRIOR TO PERFORMING ANY WORK THAT COULD EXPOSE THE WORKERS TO DANGER. PERSONAL RF EXPOSURE MONITORS ARE REQUIRED TO BE WORN TO ALERT OF ANY POTENTIALLY DANGEROUS EXPOSURE LEVELS.
10. NO NOISE, SMOKE, DUST OR ODOR WILL RESULT FROM THIS FACILITY AS TO CAUSE A NUISANCE.
11. THE FACILITY IS UNMANNED AND NOT FOR HUMAN HABITATION (NO HANDICAP ACCESS IS REQUIRED).

COPYRIGHT ©2020
MASER CONSULTING CONNECTICUT
ALL RIGHTS RESERVED
THIS DRAWING AND ALL THE INFORMATION CONTAINED HEREIN IS AUTHORIZED FOR USE ONLY BY THE PARTY FOR WHOM THE WORK WAS CONTRACTED OR TO WHOM IT IS CERTIFIED. THIS DRAWING MAY NOT BE COPIED, REUSED, DISCLOSED, DISTRIBUTED OR RELIED UPON FOR ANY OTHER PURPOSE WITHOUT THE EXPRESS WRITTEN CONSENT OF MASER CONSULTING

M:\Public_474\Closeout\Drawing\Sheet\T-1 By: FCENTONE

verizon

MOUNT MODIFICATION DRAWINGS
EXISTING 14.50' PLATFORM MOUNT

SITE NAME: PLYMOUTH WEST RELO CT
SITE NUMBER: 467737

33 KEEGAN RD
PLYMOUTH, CT 06782
LITCHFIELD COUNTY

PROJECT INFORMATION

SITE INFORMATION	
LATITUDE:	41.66175944° N
LONGITUDE:	73.04564472° W
JURISDICTION	LITCHFIELD COUNTY
APPLICANT/LESSEE	
COMPANY	VERIZON WIRELESS
CLIENT REPRESENTATIVE	
COMPANY	VERIZON WIRELESS
ADDRESS	118 FLANDERS ROAD, 3RD FLOOR
CITY, STATE, ZIP	WESTBOROUGH, MA 01518
CONTACT	ANDREW CANDIELLO
E-MAIL	ANDREW.CANDIELLO@VERIZONWIRELESS.COM
PROJECT MANAGER	
COMPANY	MASER CONSULTING CONNECTICUT
CONTACT	GREG DULNIK
PHONE	(615) 686-2575
E-MAIL	GDULNIK@MASERCONSULTING.COM

SHEET INDEX

SHEET	DESCRIPTION
T-1	TITLE SHEET
S-1	BILL OF MATERIALS
S-2	MODIFICATION NOTES
S-3	MODIFICATION NOTES
S-4	MODIFICATION DETAILS
S-5	MODIFICATION DETAILS
S-6	MOUNT PHOTOS
	SPECIFICATION SHEETS

CONTRACTOR PMI REQUIREMENTS

PMI LOCATION	HTTPS://PMI.VZWSMART.COM
SMART TOOL PROJECT #	10027146
VZW LOCATION CODE (PSLC)	467737
FUZE ID	16244613

PMI REQUIREMENTS EMBEDDED WITHIN MOUNT MODIFICATION REPORT

REFERENCED DOCUMENTS

FAILING MOUNT ANALYSIS REPORT

SMART TOOL PROJECT #	10019482
MASER CONSULTING PROJECT #	20777381A
ANALYSIS DATE	12/03/2020

MASER CONSULTING CONNECTICUT
WILL BE KNOWN AS COLLIERS ENGINEERING & DESIGN IN 2021
Customer Loyalty *through* Client Satisfaction
www.maserconsulting.com
Office Locations:
- NEW JERSEY
- NEW YORK
- PENNSYLVANIA
- VIRGINIA
- FLORIDA
- NORTH CAROLINA
- SOUTH CAROLINA
- NEW MEXICO
- MARYLAND
- GEORGIA
- TEXAS
- TENNESSEE
- COLORADO

Copyright © 2020 Maser Consulting All Rights Reserved. This drawing and all the information contained herein is authorized for use only by the party for whom the services were contracted or to whom it is certified. This drawing may not be copied, reused, disclosed, distributed or relied upon for any other purpose without the express written consent of Maser Consulting.

verizon

811 PROTECT YOURSELF
ALL STATES REQUIRE NOTIFICATION OF EXCAVATORS, DESIGNERS, OR ANY PERSON PREPARING TO DISTURB THE EARTHS SURFACE ANYWHERE IN ANY STATE
Know what's below. Call before you dig.
FOR STATE SPECIFIC DIRECT PHONE NUMBERS VISIT: WWW.CALL811.COM

SCALE: AS SHOWN | JOB NUMBER: 20777381A

REV	DATE	DESCRIPTION	DRAWN BY	CHECKED BY
0	12/30/2020	ISSUED FOR CONSTRUCTION	FAC	MPC

STATE OF CONNECTICUT
MICHAEL CLEARY
LICENSED PROFESSIONAL ENGINEER
Michael Cleary
CONNECTICUT LICENSED PROFESSIONAL ENGINEER
LICENSE NUMBER: 33102
MASER CONSULTING, INC.
(973) 538-4006

IT IS A VIOLATION OF LAW FOR ANY PERSON, UNLESS THEY ARE ACTING UNDER THE DIRECTION OF THE RESPONSIBLE LICENSED PROFESSIONAL ENGINEER, TO ALTER THIS DOCUMENT.

SITE NAME:
PLYMOUTH WEST RELO CT
467737
33 KEEGAN RD
PLYMOUTH, CT 06782
LITCHFIELD COUNTY

MT. LAUREL OFFICE
2000 Midlantic Drive
Suite 100
Mount Laurel, NJ 08054
Phone: 856.797.0412
Fax: 856.722.1120

SHEET TITLE: TITLE SHEET

SHEET NUMBER: T-1

NOTE: DO NOT SCALE DRAWINGS FOR CONSTRUCTION.

BILL OF MATERIALS

VZWSMART KITS

QUANTITY	MANUFACTURER	PART NUMBER	DESCRIPTION	NOTES
1	VZWSMART	VZWSMART-PLK2	PLATFORM SUPPORT RAIL MODIFICATION BRACING	FINAL LENGTH TO BE DETERMINED IN FIELD, CONTRACTOR TO TRIM AS REQUIRED
1		VZWSMART-PLK5	KICKER KIT	FINAL LENGTH TO BE DETERMINED IN FIELD, CONTRACTOR TO TRIM AS REQUIRED
1		VZWSMART-PLK7	MONOPOLE COLLAR MOUNT ASSEMBLY	

OTHER REQUIRED PARTS

QUANTITY	MANUFACTURER	PART NUMBER	DESCRIPTION	NOTES
6	-	-	69" LONG L6X4X1/2 ANGLE	GALVANIZE. FINAL LENGTH TO BE DETERMINED IN FIELD, CONTRACTOR TRIM AS REQUIRED
6	-	-	96" LONG L6X4X1/2 ANGLE	GALVANIZE. FINAL LENGTH TO BE DETERMINED IN FIELD, CONTRACTOR TRIM AS REQUIRED

NOTE: ALL MATERIALS REQUIRED FOR THE DESIGNED MODIFICATIONS BUT NOT LISTED IN THIS SHEET ARE ASSUMED TO BE PROVIDED BY THE CONTRACTOR

VZWSMART KITS - APPROVED VENDORS

COMMSCOPE

CONTACT	SALVADOR ANGUIANO
PHONE	(817) 304-7492
EMAIL	SALVADOR.ANGUIANO@COMMSCOPE.COM
WEBSITE	WWW.COMMSCOPE.COM

METROSITE FABRICATORS, LLC

CONTACT	KENT RAMEY
PHONE	(706) 335-7045 (O), (706) 982-9788 (M)
EMAIL	KENT@METROSITELLC.COM
WEBSITE	METROSITEFABRICATORS.COM

PERFECTVISION

CONTACT	WIRELESS SALES
PHONE	(844) 887-6723
EMAIL	WWW.PERFECT-VISION.COM
WEBSITE	WIRELESSSALES@PERFECT-VISION.COM

SABRE INDUSTRIES, INC.

CONTACT	ANGIE WELCH
PHONE	(866) 428-6937
EMAIL	AKWELCH@SABREINDUSTRIES.COM
WEBSITE	WWW.SABRESITESOLUTIONS.COM

SITE PRO 1

CONTACT	PAULA BOSWELL
PHONE	(972) 236-9843
EMAIL	PAULA.BOSWELL@VALMONT.COM
WEBSITE	WWW.SITEPRO1.COM

NOTE: WHEN SPECIFIED, VZWSMART KITS SHALL BE REQUIRED AND WILL BE VERIFIED DURING THE DESKTOP PMI

MASER CONSULTING CONNETICUT
WILL BE KNOWN AS COLLIERS ENGINEERING & DESIGN IN 2021!
Customer Loyalty *through* Client Satisfaction
www.maserconsulting.com
Office Locations:
- NEW JERSEY
- NEW YORK
- PENNSYLVANIA
- VIRGINIA
- FLORIDA
- NORTH CAROLINA
- SOUTH CAROLINA
- NEW MEXICO
- MARYLAND
- GEORGIA
- TEXAS
- TENNESSEE
- COLORADO

Copyright © 2020, Maser Consulting All Rights Reserved. This drawing and all the information contained herein is authorized for use only by the party for whom the services were contracted or to whom it is certified. This drawing may not be copied, reused, disclosed, distributed or relied upon for any other purpose without the express written consent of Maser Consulting.

verizon

PROTECT YOURSELF
811 Know what's below. Call before you dig.
ALL STATES REQUIRE NOTIFICATION OF EXCAVATORS, DESIGNERS, OR ANY PERSON PREPARING TO DISTURB THE EARTHS SURFACE ANYWHERE IN ANY STATE
FOR STATE SPECIFIC DIRECT PHONE NUMBERS VISIT: WWW.CALL811.COM

SCALE :	JOB NUMBER :
AS SHOWN	20777381A

REV	DATE	DESCRIPTION	DRAWN BY	CHECKED BY
0	12/30/2020	ISSUED FOR CONSTRUCTION	FAC	MPC

STATE OF CONNECTICUT
MICHAEL CLEARY
LICENSED
PROFESSIONAL ENGINEER

Michael Cleary
CONNECTICUT LICENSED PROFESSIONAL ENGINEER
LICENSE NUMBER: 33102
MASER CONSULTING, P.A.
LICENSE #: PE.0033102

IT IS A VIOLATION OF LAW FOR ANY PERSON, UNLESS THEY ARE ACTING UNDER THE DIRECTION OF THE RESPONSIBLE LICENSED PROFESSIONAL ENGINEER, TO ALTER THIS DOCUMENT.

SITE NAME:

PLYMOUTH WEST RELO CT
467737

33 KEEGAN RD
PLYMOUTH, CT 06782
LITCHFIELD COUNTY

MT. LAUREL OFFICE
2000 Midlantic Drive
Suite 100
Mount Laurel, NJ 08054
Phone: 856.797.0412
Fax: 856.722.1120

SHEET TITLE :
BILL OF MATERIALS

SHEET NUMBER :
S-1

GENERAL NOTES

1. THESE MODIFICATIONS HAVE BEEN DESIGNED IN ACCORDANCE WITH THE GOVERNING PROVISIONS OF THE TELECOMMUNICATIONS INDUSTRY STANDARD TIA-222-H. MATERIALS AND SERVICES PROVIDED BY THE CONTRACTOR SHALL CONFORM TO THE ABOVE MENTIONED CODES.
2. CONTRACTOR SHALL TAKE ALL PRECAUTIONS NECESSARY TO PREVENT DAMAGE TO EXISTING STRUCTURES. ANY DAMAGE TO EXISTING STRUCTURES AS A RESULT OF THE CONTRACTOR'S WORK OR FROM DAMAGE DUE TO OTHER CAUSES SHALL BE REPAIRED AT THE CONTRACTOR'S EXPENSE TO THE SATISFACTION OF THE OWNER.
3. CONTRACTOR SHALL VERIFY ALL DIMENSIONS AND EXISTING CONDITIONS BEFORE BEGINNING WORK, ORDERING MATERIAL, AND PREPARING OF SHOP DRAWINGS. ANY DISCREPANCIES BETWEEN FIELD CONDITIONS AND THE CONTRACT DOCUMENTS SHALL BE BROUGHT TO THE IMMEDIATE ATTENTION OF THE ENGINEER. IF THE CONTRACTOR DISCOVERS ANY EXISTING CONDITIONS THAT ARE NOT REPRESENTED ON THESE DRAWINGS, OR ANY CONDITIONS THAT WOULD INTERFERE WITH THE INSTALLATION OF THE MODIFICATIONS, NOTIFY THE ENGINEER IMMEDIATELY.
4. IT IS ASSUMED THAT ANY STRUCTURAL MODIFICATION WORK SPECIFIED ON THESE PLANS WILL BE ACCOMPLISHED BY KNOWLEDGEABLE WORKMEN WITH TOWER CONSTRUCTION EXPERIENCE.
5. THE CONTRACTOR SHALL SUPERVISE AND DIRECT THE WORK AND SHALL BE SOLELY RESPONSIBLE FOR ALL CONSTRUCTION METHODS, MEANS, TECHNIQUES, SEQUENCES, AND PROCEDURES.
6. ALL CONSTRUCTION MEANS AND METHODS; INCLUDING BUT NOT LIMITED TO, ERECTION PLANS, RIGGING PLANS, CLIMBING PLANS, AND RESCUE PLANS SHALL BE THE RESPONSIBILITY OF THE GENERAL CONTRACTOR RESPONSIBLE FOR THE EXECUTION OF THE WORK CONTAINED HEREIN AND SHALL MEET ANSI/TIA-322 (LATEST EDITION), OSHA, AND GENERAL INDUSTRY STANDARDS. ALL RIGGING PLANS SHALL ADHERE TO ANSI/TIA-322 (LATEST EDITION) INCLUDING THE REQUIRED INVOLVEMENT OF A QUALIFIED ENGINEER FOR CLASS IV CONSTRUCTION.
7. THE CONTRACTOR IS SOLELY RESPONSIBLE FOR INITIATING, MAINTAINING, AND SUPERVISING ALL SAFETY PROGRAMS IN ACCORDANCE WITH APPLICABLE SAFETY CODES.
8. WORK SHALL ONLY BE PERFORMED DURING CALM DRY DAYS (WINDS LESS THAN 30-MPH). THE STRUCTURE SHOWN ON THE DRAWINGS IS STRUCTURALLY SOUND ONLY IN THE COMPLETED FORM. THE CONTRACTOR SHALL BE RESPONSIBLE FOR THE STRENGTH AND STABILITY OF THE STRUCTURE DURING ERECTION. CONTRACTOR SHALL PROVIDE TEMPORARY SUPPORT, SHORING, BRACING AND ANY OTHER STRUCTURAL SYSTEMS AS REQUIRED TO RESIST ALL FORCES THAT MAY OCCUR DURING HANDLING AND ERECTION UNTIL THE STRUCTURE IS FULLY COMPLETED. TEMPORARY SUPPORTS, BRACING AND OTHER STRUCTURAL SYSTEMS REQUIRED DURING CONSTRUCTION SHALL REMAIN THE CONTRACTOR'S PROPERTY AFTER THEIR USE.
9. ALL INSTALLATIONS PERFORMED ON THIS STRUCTURE SHALL BE COMPLETED IN ACCORDANCE WITH THE GOVERNING PROVISIONS OF THE STANDARD FOR INSTALLATION, ALTERATION AND MAINTENANCE OF ANTENNA SUPPORTING STRUCTURES AND ANTENNAS, ANSI/TIA-322.
10. CONTRACTOR SHALL SECURE SITE BACK TO EXISTING CONDITION UNDER SUPERVISION OF OWNER. ALL FENCE, STONE, GEOFABRIC, GROUNDING, AND SURROUNDING GRADE SHALL BE REPLACED AND REPAIRED AS REQUIRED TO ACHIEVE OWNER APPROVAL. POSITIVE DRAINAGE AWAY FROM TOWER SITE SHALL BE MAINTAINED.
11. CONNECTIONS BETWEEN ITEMS SUPPORTED BY THE STRUCTURE AND THE STRUCTURE NOT SPECIFICALLY DETAILED IN THE CONTRACT DOCUMENTS ARE THE RESPONSIBILITY OF THE CONTRACTOR. SUCH CONNECTIONS SHALL BE DESIGNED, COORDINATED AND INSPECTED BY A PROFESSIONAL STRUCTURAL ENGINEER LICENSED IN THE STATE OF THE PROJECT. SUBMIT SIGNED AND SEALED CALCULATIONS DURING SHOP DRAWING REVIEW.
12. DO NOT SCALE DRAWINGS.
13. DO NOT USE THESE DRAWINGS FOR ANY OTHER SITE.
14. ALL MATERIAL UTILIZED FOR THIS PROJECT MUST BE NEW AND FREE OF ANY DEFECTS. ANY MATERIAL SUBSTITUTIONS, INCLUDING BUT NOT LIMITED TO ALTERED SIZE AND/OR STRENGTHS, MUST BE APPROVED BY THE OWNER AND ENGINEER IN WRITING.
15. THE MOUNT UNDER NO CIRCUMSTANCES SHOULD BE USED AS A TIE OFF POINT.

DESIGN LOADS

WIND LOADS

a. BASIC WIND SPEED (3 SECOND GUST), V = 116 MPH
b. EXPOSURE CATEGORY B
c. TOPOGRAPHIC CATEGORY 1
d. MEAN BASE ELEVATION (AMSL) = 842.78'

ICE LOADS

a. ICE WIND SPEED (3 SECOND GUST), V = 50 MPH
b. ICE THICKNESS = 1.0 IN

SEISMIC LOADS

a. SEISMIC DESIGN CATEGORY B
b. SHORT TERM MCER GROUND MOTION, S_S = .186
c. LONG TERM MCER GROUND MOTION, S_1 = .054

STRUCTURAL STEEL

1. DESIGN, DETAILING, FABRICATION AND ERECTION OF STRUCTURAL STEEL SHALL CONFORM TO THE FOLLOWING PUBLICATIONS EXCEPT AS SPECIFICALLY INDICATED IN THE CONTRACT DOCUMENTS.
   a. AMERICAN INSTITUTE OF STEEL CONSTRUCTION (AISC) MANUAL OF STEEL CONSTRUCTION (15TH EDITION)
   b. SPECIFICATION FOR STRUCTURAL JOINTS USING ASTM A325 OR A490 BOLTS
   c. AISC CODE OF STANDARD PRACTICE
2. STRUCTURAL STEEL SHALL CONFORM TO THE FOLLOWING UNLESS OTHERWISE SHOWN:

CHANNELS, ANGLES, PLATES, ETC.	ASTM A36 (GR 36)
STEEL PIPE	ASTM A53 (GR 35)
BOLTS	ASTM A325
NUTS	ASTM A563
LOCK WASHERS	LOCKING STRUCTURAL GRADE

3. ALL SUBSTITUTIONS PROPOSED BY THE CONTRACTOR SHALL BE APPROVED IN WRITING BY THE ENGINEER. CONTRACTOR SHALL PROVIDE DOCUMENTATION TO ENGINEER FOR VERIFYING THE SUBSTITUTE IS SUITABLE FOR USE AND MEETS ORIGINAL DESIGN CRITERIA. DIFFERENCES FROM THE ORIGINAL DESIGN, INCLUDING MAINTENANCE, REPAIR AND REPLACEMENT, SHALL BE NOTED. ESTIMATES OF COSTS/CREDITS ASSOCIATED WITH THE SUBSTITUTION (INCLUDING RE-DESIGN COSTS AND COSTS TO SUB-CONTRACTORS) SHALL BE PROVIDED TO THE ENGINEER. CONTRACTOR SHALL PROVIDE ADDITIONAL DOCUMENTATION AND/OR SPECIFICATIONS TO THE ENGINEER AS REQUESTED.
4. PROVIDE STRUCTURAL STEEL SHOP DRAWINGS TO ENGINEER FOR APPROVAL PRIOR TO FABRICATION.
   a. SUBMIT SHOP DRAWINGS TO GDULNIK@MASERCONSULTING.COM
   b. PROVIDE MASER CONSULTING PROJECT # AND MASER CONSULTING PROJECT ENGINEER CONTACT IN THE BODY OF THE EMAIL.
5. DRILL NO HOLES IN ANY NEW OR EXISTING STRUCTURAL STEEL MEMBERS OTHER THAN THOSE SHOWN ON STRUCTURAL DRAWINGS WITHOUT THE APPROVAL OF THE ENGINEER OF RECORD.
6. GALVANIZED ASTM A325 BOLTS SHALL NOT BE REUSED.
7. ALL NEW STEEL SHALL BE HOT BE DIPPED GALVANIZED FOR FULL WEATHER PROTECTION. IN ADDITION ALL NEW STEEL SHALL BE PAINTED TO MATCH EXISTING STEEL. CONTRACTOR SHALL OBTAIN WRITTEN PERMISSION TO PROTECT STEEL BY ANY OTHER MEANS.
8. ALL BOLT ASSEMBLIES FOR STRUCTURAL MEMBERS REPRESENTED IN THIS DRAWING REQUIRE LOCKING DEVICES TO BE INSTALLED IN ACCORDANCE WITH TIA-222-H SECTION 4.9.2 REQUIREMENTS.
9. WHERE CONNECTIONS ARE NOT FULLY DETAILED ON THESE DRAWINGS, FABRICATOR SHALL DESIGN CONNECTIONS TO RESIST LOADS AND FORCES WHERE SHOWN ON DRAWINGS AND AS OUTLINED IN SPECIFICATIONS.
10. FOR MEMBERS BEING REPLACED, PROVIDE NEW BOLTS AND MATCH EXISTING SIZE AND GRADE. MAINTAIN AISC REQUIREMENTS FOR MINIMUM BOLT DISTANCE AND SPACING.
11. ALL PROPOSED AND/OR REPLACED BOLTS SHALL BE OF SUFFICIENT LENGTH SUCH THAT THE END OF THE BOLT IS AT LEAST FLUSH WITH THE FACE OF THE NUT. IT IS NOT PERMITTED FOR THE BOLT END TO BE BELOW THE FACE OF THE NUT AFTER TIGHTENING IS COMPLETED.
12. GALVANIZED ASTM A325 BOLTS SHALL NOT BE REUSED.
13. ALL NEW STEEL SHALL BE HOT BE DIPPED GALVANIZED FOR FULL WEATHER PROTECTION. CONTRACTOR SHALL OBTAIN WRITTEN PERMISSION TO PROTECT STEEL BY ANY OTHER MEANS.
14. ALL EXISTING PAINTED/GALVANIZED SURFACES DAMAGED DURING REHAB INCLUDING AREAS UNDER STIFFENER PLATES SHALL BE WIRE BRUSHED CLEAN, REPAIRED BY COLD GALVANIZING (ZINGA OR ZINC COTE), AND REPAINTED TO MATCH THE EXISTING FINISH (IF APPLICABLE).
15. ALL HOLES IN STEEL MEMBERS SHALL BE SIZED 1/16" LARGER THAN THE BOLT DIAMETER. STANDARD HOLES SHALL BE USED UNLESS NOTED OTHERWISE.

MASER CONSULTING CONNECTICUT
WILL BE KNOWN AS COLLIERS ENGINEERING & DESIGN IN 2021
Customer Loyalty *through* Client Satisfaction
www.maserconsulting.com
Office Locations:
- NEW JERSEY
- NEW YORK
- PENNSYLVANIA
- VIRGINIA
- FLORIDA
- NORTH CAROLINA
- SOUTH CAROLINA
- NEW MEXICO
- MARYLAND
- GEORGIA
- TEXAS
- TENNESSEE
- COLORADO

Copyright © 2020 Maser Consulting All Rights Reserved. This drawing and all the information contained herein is authorized for use only by the party for whom the services were contracted or to whom it is certified. This drawing may not be copied, reused, disclosed, distributed or relied upon for any other purpose without the express written consent of Maser Consulting.

verizon

811 PROTECT YOURSELF
ALL STATES REQUIRE NOTIFICATION OF EXCAVATORS, DESIGNERS, OR ANY PERSON PREPARING TO DISTURB THE EARTHS SURFACE ANYWHERE IN ANY STATE
Know what's below. Call before you dig.
FOR STATE SPECIFIC DIRECT PHONE NUMBERS VISIT: WWW.CALL811.COM

SCALE: AS SHOWN
JOB NUMBER: 20777381A

REV	DATE	DESCRIPTION	DRAWN BY	CHECKED BY
0	12/30/2020	ISSUED FOR CONSTRUCTION	FAC	MPC

STATE OF CONNECTICUT
MICHAEL CLEARY
12/30/2020
Michael Cleary, PE
CONNECTICUT LICENSED PROFESSIONAL ENGINEER
LICENSE NUMBER: 33102
MASER CONSULTING, INC.
LICENSED PROFESSIONAL ENGINEER

IT IS A VIOLATION OF LAW FOR ANY PERSON, UNLESS THEY ARE ACTING UNDER THE DIRECTION OF THE RESPONSIBLE LICENSED PROFESSIONAL ENGINEER, TO ALTER THIS DOCUMENT.

SITE NAME:

PLYMOUTH WEST RELO CT
467737

33 KEEGAN RD
PLYMOUTH, CT 06782
LITCHFIELD COUNTY

MT. LAUREL OFFICE
2000 Midlantic Drive
Suite 100
Mount Laurel, NJ 08054
Phone: 856.797.0412
Fax: 856.722.1120

SHEET TITLE: MODIFICATION NOTES

SHEET NUMBER: S-2

NOTE: DO NOT SCALE DRAWINGS FOR CONSTRUCTION.

X:\Jobs_4\467\Drawings\Sheets\S-2.dwg, 12/30/2020 8:47:53 AM, By: FCRITCHI

MODIFICATION INSPECTION NOTES

MI CHECKLIST	
CONSTRUCTION/ INSTALLATION INSPECTIONS AND TESTING REQUIRED (COMPLETED BY EOR)	REPORT ITEM
PRE-CONSTRUCTION	
X	MI CHECKLIST DRAWING
X	EOR APPROVED SHOP DRAWINGS
NA	FABRICATION INSPECTION
NA	FABRICATOR CERTIFIED WELD INSPECTION
X	MATERIAL TEST REPORT (MTR)
NA	FABRICATOR NDE INSPECTION
X	PACKING SLIPS
ADDITIONAL TESTING AND INSPECTIONS:	
CONSTRUCTION	
X	CONSTRUCTION INSPECTIONS
NA	CONTRACTOR'S CERTIFIED WELD INSPECTION AND NDE REPORTS
X	ON SITE COLD GALVANIZING VERIFICATION
X	GC AS-BUILT DOCUMENTS
ADDITIONAL TESTING AND INSPECTIONS:	
POST-CONSTRUCTION	
X	MI INSPECTOR REDLINE OR RECORD DRAWING(S)
X	VZW PMI DOCUMENTS
X	PHOTOGRAPHS
ADDITIONAL TESTING AND INSPECTIONS:	

NOTE: X DENOTES A DOCUMENT REQUIRED FOR THE MI REPORT
NA DENOTES A DOCUMENT THAT IS NOT REQUIRED FOR THE MI REPORT

THE MODIFICATION INSPECTION (MI) IS A VISUAL INSPECTION OF MODIFICATIONS AND A REVIEW OF CONSTRUCTION INSPECTIONS AND OTHER REPORTS TO ENSURE THE INSTALLATION WAS CONSTRUCTED IN ACCORDANCE WITH THE CONTRACT DOCUMENTS, NAMELY THE MODIFICATION DRAWINGS, AS DESIGNED BY THE ENGINEER OF RECORD (EOR).

THE MI IS TO CONFIRM INSTALLATION CONFIGURATION AND WORKMANSHIP ONLY AND IS NOT A REVIEW OF THE MODIFICATION DESIGN ITSELF, NOR DOES THE MI INSPECTOR TAKE OWNERSHIP OF THE MODIFICATION DESIGN. OWNERSHIP OF THE STRUCTURAL MODIFICATION DESIGN EFFECTIVENESS AND INTEGRITY RESIDES WITH THE EOR AT ALL TIMES.

TO ENSURE THAT THE REQUIREMENTS OF THE MI ARE MET, IT IS VITAL THAT THE GENERAL CONTRACTOR (GC) AND THE MI INSPECTOR BEGIN COMMUNICATING AND COORDINATING AS SOON AS A PURCHASE ORDER (PO) IS RECEIVED. IT IS EXPECTED THAT EACH PARTY WILL BE PROACTIVE IN REACHING OUT TO THE OTHER PARTY.

MI INSPECTOR

THE MI INSPECTOR IS REQUIRED TO CONTACT THE GC AS SOON AS RECEIVING A PO FOR THE MI TO, AT A MINIMUM:

- REVIEW THE REQUIREMENTS OF THE MI CHECKLIST
- WORK WITH THE GC TO DEVELOP A SCHEDULE TO CONDUCT ON-SITE INSPECTIONS

THE MI INSPECTOR IS RESPONSIBLE FOR COLLECTING ALL GC INSPECTION AND TEST REPORTS, REVIEWING THE DOCUMENTS FOR ADHERENCE TO THE CONTRACT DOCUMENTS, CONDUCTING THE IN-FIELD INSPECTIONS, AND SUBMITTING THE MI REPORT TO EOR.

GENERAL CONTRACTOR

THE GC IS REQUIRED TO CONTACT THE MI INSPECTOR AS SOON AS RECEIVING A PO FOR THE MODIFICATION INSTALLATION OR TURNKEY PROJECT TO, AT A MINIMUM:

- REVIEW THE REQUIREMENTS OF THE MI CHECKLIST
- WORK WITH THE MI INSPECTOR TO DEVELOP A SCHEDULE TO CONDUCT ON-SITE MI INSPECTIONS, INCLUDING FOUNDATION INSPECTIONS
- BETTER UNDERSTAND ALL INSPECTION AND TESTING REQUIREMENTS

THE GC SHALL PERFORM AND RECORD THE TEST AND INSPECTION RESULTS IN ACCORDANCE WITH THE REQUIREMENTS OF THE MI CHECKLIST.

RECOMMENDATIONS

THE FOLLOWING RECOMMENDATIONS AND SUGGESTIONS ARE OFFERED TO ENHANCE THE EFFICIENCY AND EFFECTIVENESS OF DELIVERING AN MI REPORT:

- IT IS SUGGESTED THAT THE GC PROVIDE A MINIMUM OF 5 BUSINESS DAYS NOTICE, PREFERABLY 10, TO THE MI INSPECTOR AS TO WHEN THE SITE WILL BE READY FOR THE MI TO BE CONDUCTED.
- THE GC AND MI INSPECTOR COORDINATE CLOSELY THROUGHOUT THE ENTIRE PROJECT.
- WHEN POSSIBLE, IT IS PREFERRED TO HAVE THE GC AND MI INSPECTOR ON-SITE SIMULTANEOUSLY FOR ANY GUY WIRE TENSIONING OR RE-TENSIONING OPERATIONS.
- IT MAY BE BENEFICIAL TO INSTALL ALL MODIFICATIONS PRIOR TO CONDUCTING THE FOUNDATION INSPECTIONS TO ALLOW THE FOUNDATION AND MI INSPECTION(S) TO COMMENCE WITH ONE SITE VISIT.
- WHEN POSSIBLE, IT IS PREFERRED TO HAVE THE GC AND MI INSPECTOR ON-SITE DURING THE MI TO HAVE ANY DEFICIENCIES CORRECTED DURING THE INITIAL MI. THEREFORE, THE GC MAY CHOOSE TO COORDINATE THE MI CAREFULLY TO ENSURE ALL CONSTRUCTION FACILITIES ARE AT THEIR DISPOSAL WHEN THE MI INSPECTOR IS ON SITE.

CORRECTION OF FAILING MI'S

IF THE MODIFICATION INSTALLATION WOULD FAIL THE MI ("FAILED MI"), THE GC SHALL WORK WITH THE OWNER TO COORDINATE A REMEDIATION PLAN:

- CORRECT FAILING ISSUES TO COMPLY WITH THE SPECIFICATIONS CONTAINED IN THE ORIGINAL CONTRACT DOCUMENTS AND COORDINATE A SUPPLEMENT MI.

REQUIRED PHOTOS

BETWEEN THE GC AND THE MI INSPECTOR THE FOLLOWING PHOTOGRAPHS, AT A MINIMUM, ARE TO BE TAKEN AND INCLUDED IN THE MI REPORT:

- PRE-CONSTRUCTION GENERAL SITE CONDITION
- PHOTOGRAPHS DURING THE REINFORCEMENT MODIFICATION CONSTRUCTION/ERECTION AND INSPECTION
  - RAW MATERIALS
  - PHOTOS OF ALL CRITICAL DETAILS
  - FOUNDATION MODIFICATIONS
  - WELD PREPARATION
  - BOLT INSTALLATION
  - FINAL INSTALLED CONDITION
  - SURFACE COATING REPAIR
- POST CONSTRUCTION PHOTOGRAPHS
  - FINAL INFIELD CONDITION

PHOTOS OF ELEVATED MODIFICATIONS TAKEN ONLY FROM THE GROUND SHALL BE CONSIDERED INADEQUATE.

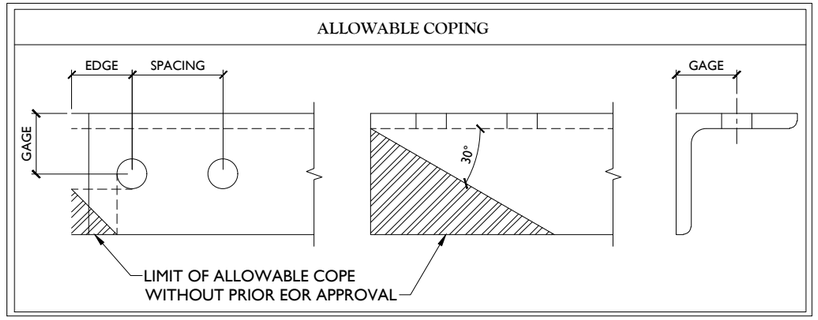

BOLT SCHEDULE (IN.)				
BOLT DIAMETER	STANDARD HOLE	SHORT SLOT	MIN. EDGE DISTANCE	SPACING
1/2	9/16	9/16 x 11/16	7/8	1 1/2
5/8	11/16	11/16 x 7/8	1 1/8	1 7/8
3/4	13/16	13/16 x 1	1 1/4	2 1/4
7/8	15/16	15/16 x 1 1/8	1 1/2	2 5/8
1	1 1/16	1 1/16 x 1 5/16	1 3/4	3

WORKABLE GAGES (IN.)	
LEG	GAGE
4	2 1/2
3 1/2	2
3	1 3/4
2 1/2	1 3/8
2	1 1/8

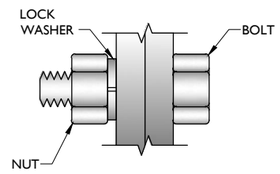

TYP. BOLT ASSEMBLY

NOTES:

1. ALL DIMENSIONS REPRESENTED IN THE ABOVE TABLES ARE AISC MINIMUM REQUIREMENTS. CONTRACTOR SHALL VERIFY EXISTING CONDITIONS IN FIELD AND NOTIFY ENGINEER IF DISTANCES ARE LESS THAN THOSE PROVIDED.
2. THE DIMENSIONS PROVIDED ARE MINIMUM REQUIREMENTS. ACTUAL DIMENSIONS OF PROPOSED MEMBERS WITHIN THESE DRAWINGS MAY VARY FROM THE AISC MINIMUM REQUIREMENTS.
3. SHORT SLOT HOLES SHALL ONLY BE USED WHEN DEPICTED IN THE DRAWINGS
4. MATCH EXISTING GAGES WHEN APPLICABLE, UNLESS MINIMUM EDGE DISTANCES ARE COMPROMISED.

MASER CONSULTING CONNETICUT
WILL BE KNOWN AS COLLIERS ENGINEERING & DESIGN IN 2021
Customer Loyalty *through* Client Satisfaction
www.maserconsulting.com
Office Locations:
- NEW JERSEY
- NEW YORK
- PENNSYLVANIA
- VIRGINIA
- FLORIDA
- NORTH CAROLINA
- SOUTH CAROLINA
- NEW MEXICO
- MARYLAND
- GEORGIA
- TEXAS
- TENNESSEE
- COLORADO

Copyright © 2020 Maser Consulting All Rights Reserved. This drawing and all the information contained herein is authorized for use only by the party for whom the services were contracted or to whom it is certified. This drawing may not be copied, reused, disclosed, distributed or relied upon for any other purpose without the express written consent of Maser Consulting.

verizon

811 Know what's below. Call before you dig.

PROTECT YOURSELF
ALL STATES REQUIRE NOTIFICATION OF EXCAVATORS, DESIGNERS, OR ANY PERSON PREPARING TO DISTURB THE EARTH'S SURFACE ANYWHERE IN ANY STATE

FOR STATE SPECIFIC DIRECT PHONE NUMBERS VISIT: WWW.CALL811.COM

SCALE :	JOB NUMBER :
AS SHOWN	20777381A

REV	DATE	DESCRIPTION	DRAWN BY	CHECKED BY
0	12/30/2020	ISSUED FOR CONSTRUCTION	FAC	MPC

STATE OF CONNECTICUT
MICHAEL CLEARY
LICENSED PROFESSIONAL ENGINEER
LICENSE NO. 33102
MASER CONSULTING, P.A.
LICENSE NO. PEN.0008500
PROFESSIONAL ENGINEER

Michael Cleary

IT IS A VIOLATION OF LAW FOR ANY PERSON, UNLESS THEY ARE ACTING UNDER THE DIRECTION OF THE RESPONSIBLE LICENSED PROFESSIONAL ENGINEER, TO ALTER THIS DOCUMENT.

SITE NAME:

PLYMOUTH WEST RELO CT
467737

33 KEEGAN RD
PLYMOUTH, CT 06782
LITCHFIELD COUNTY

MT. LAUREL OFFICE
2000 Midlantic Drive
Suite 100
Mount Laurel, NJ 08054
Phone: 856.797.0412
Fax: 856.722.1120

SHEET TITLE :
MODIFICATION NOTES

SHEET NUMBER :
S-3

NOTE: DO NOT SCALE DRAWINGS FOR CONSTRUCTION.

\\Allstate_47\All Users\Documents\2.dwg\S-3 By: FCENTOLE

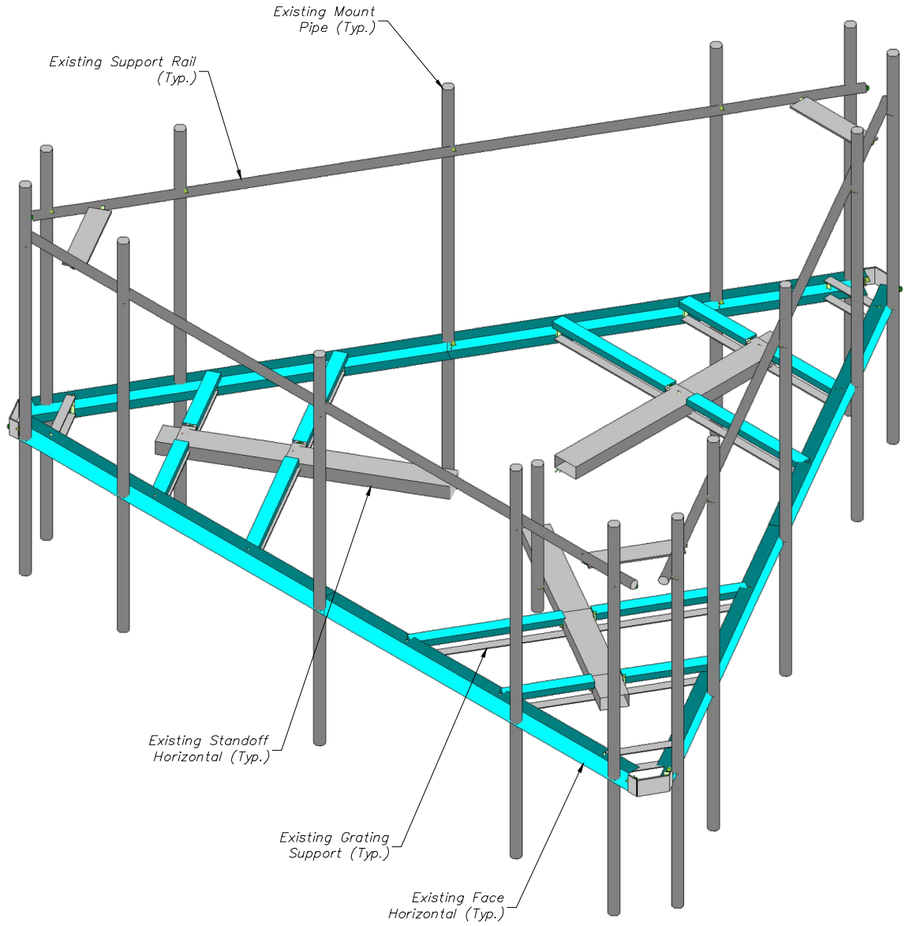

1 EXISTING PLATFORM ISOMETRIC VIEW (TYP. ALL SECTORS)

SCALE : N.T.S.

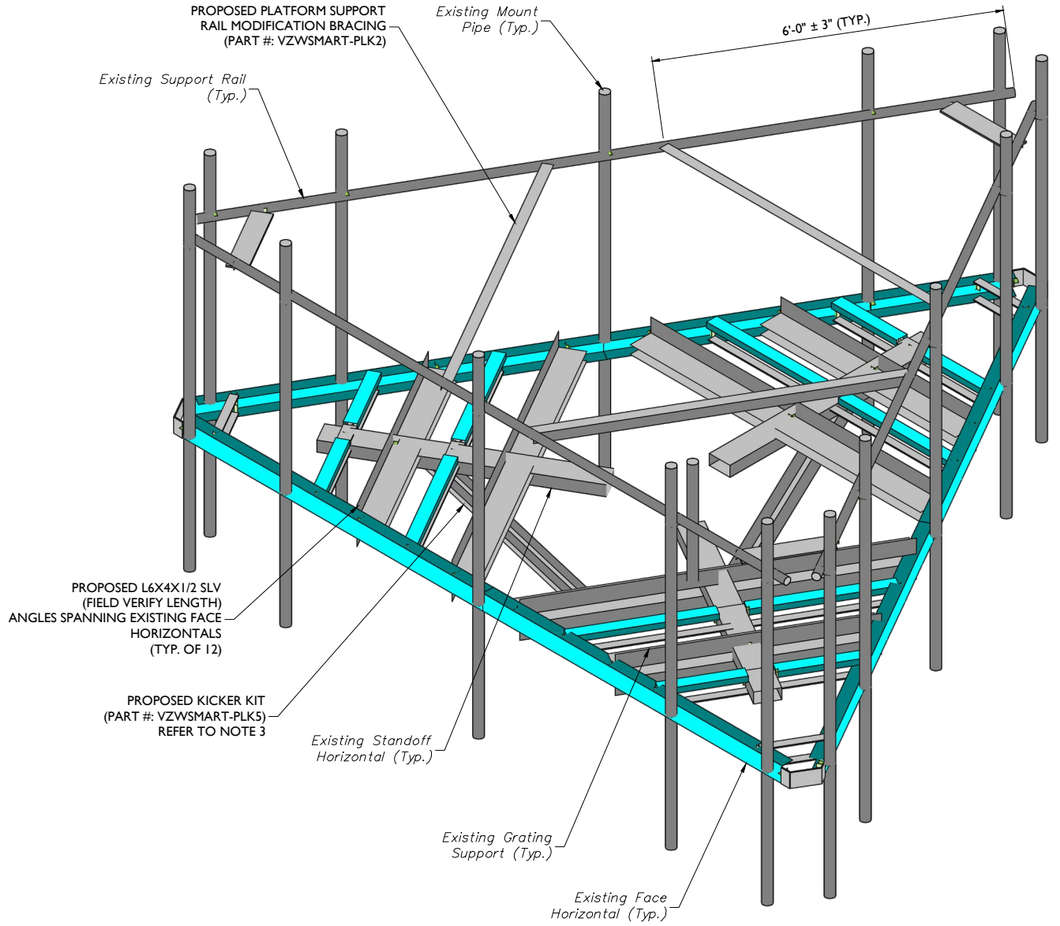

2 PROPOSED PLATFORM ISOMETRIC VIEW (TYP. ALL SECTORS)

SCALE : N.T.S.

STRUCTURAL NOTES:

1. PER THE MOUNT MAPPING COMPLETED BY TOWER ENGINEER PROFESSIONALS ON 11/19/2020, THE SAFETY CLIMB AND CLIMBING FACILITIES UP TO THE VERIZON MOUNT ELEVATION (138'-0") ARE IN GOOD CONDITION. MASER DOES NOT WARRANT THIS INFORMATION.
2. INSTALL SHALL NOT CAUSE HARM TO THE STRUCTURE, CLIMBING FACILITY, SAFETY CLIMB, OR ANY SYSTEM INSTALLED ON THE STRUCTURE. TIMELY NOTICE AND DOCUMENTATION SHALL BE PROVIDED BY CONTRACTORS TO THE EOR (OF STRUCTURAL DESIGN) IF AN OBSTRUCTION WAS REQUIRED TO MEET THE RF SYSTEM DESIGN REQUIREMENTS AND PERFORMANCES.

MODIFICATION NOTES:

1. MOUNT MEMBERS NOT SHOWN FOR CLARITY U.N.O.
2. RADIO AND/OR TME POSITIONS SHALL BE ADJUSTED VERTICALLY AS NEEDED IN ORDER TO ACHIEVE INSTALLATION OF HORIZONTAL AS SHOWN. EOR SHALL BE NOTIFIED IF EQUIPMENT NEEDS TO BE RELOCATED TO ANOTHER MOUNT PIPE.
3. CONNECT OTHER END OF PROPOSED KICKER TO MONOPOLE COLLAR MOUNT ASSEMBLY (PART #: VZWSMART-PLK7).

MASER CONSULTING CONNECTICUT
WILL BE KNOWN AS COLLIERS ENGINEERING & DESIGN IN 2021
Customer Loyalty *through* Client Satisfaction
www.maserconsulting.com
Office Locations:
- NEW JERSEY
- NEW YORK
- PENNSYLVANIA
- VIRGINIA
- FLORIDA
- NORTH CAROLINA
- SOUTH CAROLINA
- NEW MEXICO
- MARYLAND
- GEORGIA
- TEXAS
- TENNESSEE
- COLORADO

Copyright © 2020. Maser Consulting All Rights Reserved. This drawing and all the information contained herein is authorized for use only by the party for whom the services were contracted or to whom it is certified. This drawing may not be copied, reused, disclosed, distributed or relied upon for any other purpose without the express written consent of Maser Consulting.

verizon

811 Know what's below. Call before you dig.

PROTECT YOURSELF
ALL STATES REQUIRE NOTIFICATION OF EXCAVATORS, DESIGNERS, OR ANY PERSON PREPARING TO DISTURB THE EARTH'S SURFACE ANYWHERE IN ANY STATE

FOR STATE SPECIFIC DIRECT PHONE NUMBERS VISIT: WWW.CALL811.COM

SCALE : AS SHOWN | JOB NUMBER : 20777381A

REV	DATE	DESCRIPTION	DRAWN BY	CHECKED BY
.	.	.	.	.
.	.	.	.	.
.	.	.	.	.
0	12/30/2020	ISSUED FOR CONSTRUCTION	FAC	MPC

STATE OF CONNECTICUT
MICHAEL CLEARY
LICENSED PROFESSIONAL ENGINEER
Michael Cleary
CONNECTICUT LICENSED PROFESSIONAL ENGINEER
LICENSE NUMBER: 33102
MASER CONSULTING, INC.
PH: 201-421-4220 FAX: 201-421-4226

IT IS A VIOLATION OF LAW FOR ANY PERSON, UNLESS THEY ARE ACTING UNDER THE DIRECTION OF THE RESPONSIBLE LICENSED PROFESSIONAL ENGINEER, TO ALTER THIS DOCUMENT.

SITE NAME:

PLYMOUTH WEST RELO CT
467737

33 KEEGAN RD
PLYMOUTH, CT 06782
LITCHFIELD COUNTY

MT. LAUREL OFFICE
2000 Midlantic Drive
Suite 100
Mount Laurel, NJ 08054
Phone: 856.797.0412
Fax: 856.722.1120

SHEET TITLE : MODIFICATION DETAILS

SHEET NUMBER : S-4

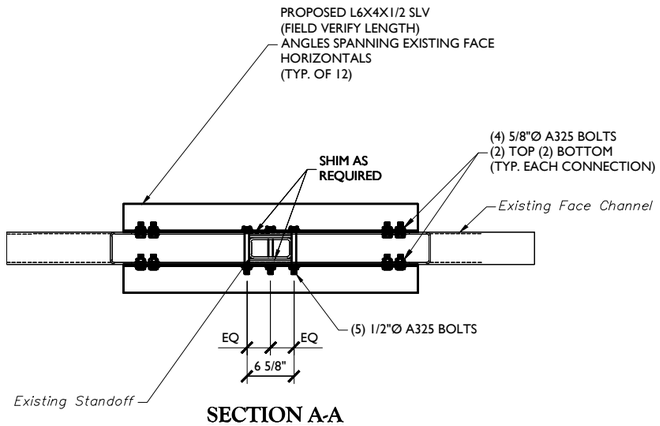

SECTION A-A

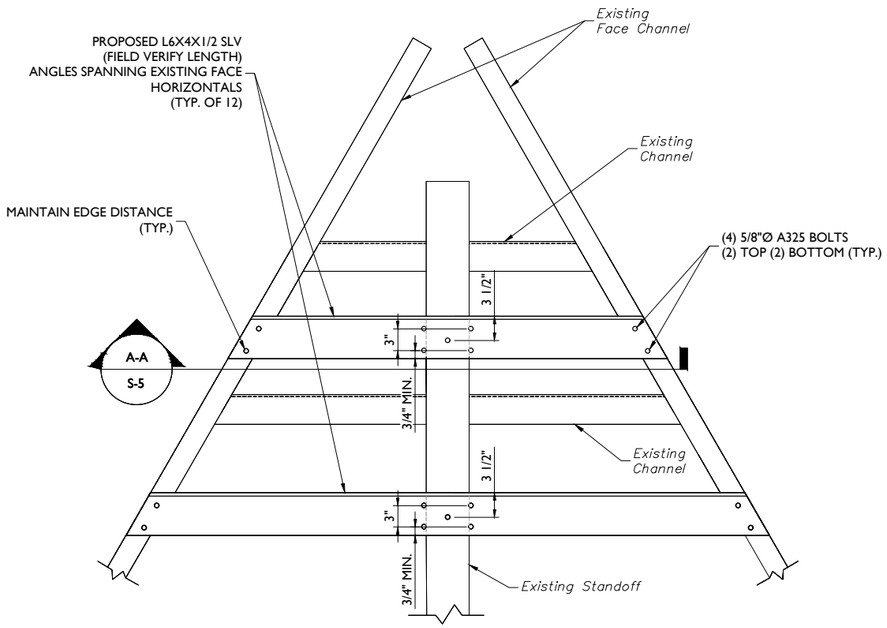

2 PLATFORM CORNER PLAN (TYP.)

SCALE : N.T.S.

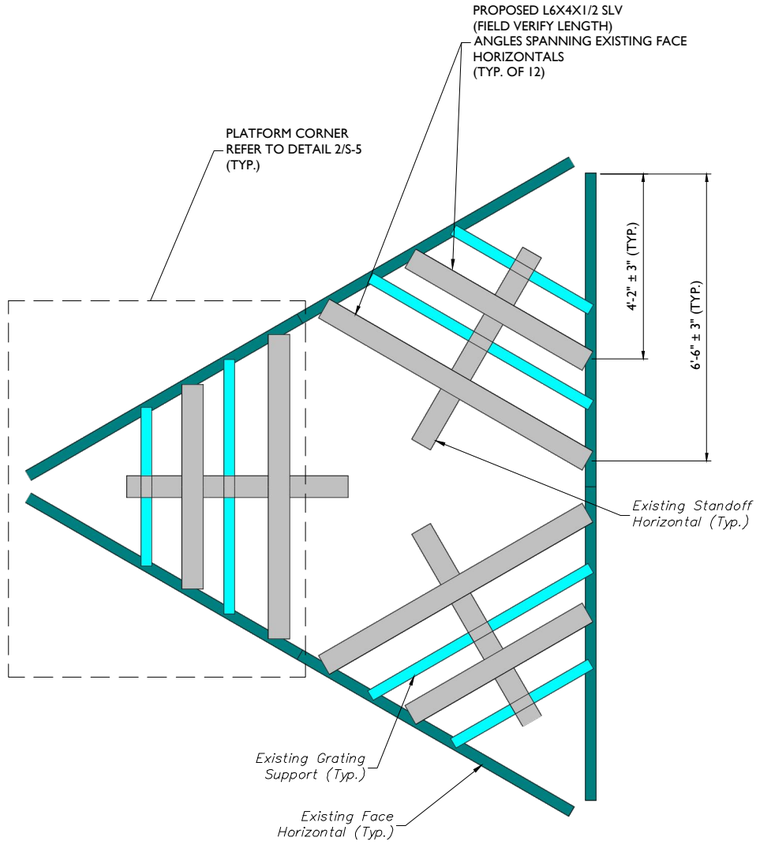

1 PROPOSED FRAME PLAN VIEW

SCALE : N.T.S.

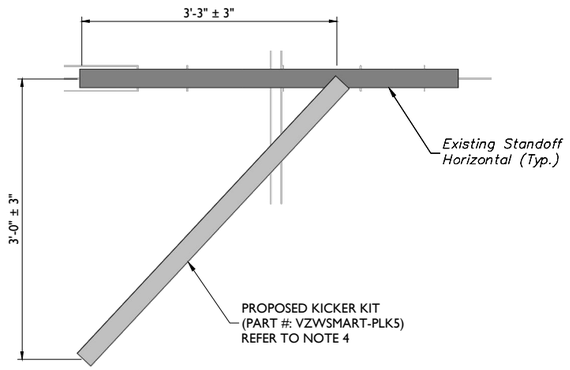

3 PROPOSED SIDE ELEVATION VIEW (TYP. ALL SECTORS)

SCALE : N.T.S.

MODIFICATION NOTES:

1. MOUNT MEMBERS NOT SHOWN FOR CLARITY U.N.O.
2. RADIO AND/OR TME POSITIONS SHALL BE ADJUSTED VERTICALLY AS NEEDED IN ORDER TO ACHIEVE INSTALLATION OF HORIZONTAL AS SHOWN. EOR SHALL BE NOTIFIED IF EQUIPMENT NEEDS TO BE RELOCATED TO ANOTHER MOUNT PIPE.
3. CONNECT OTHER END OF PROPOSED KICKER TO MONOPOLE COLLAR MOUNT ASSEMBLY (PART #: VZWSMART-PLK7).

MASER CONSULTING CONNETICUT

WILL BE KNOWN AS COLLIERS ENGINEERING & DESIGN IN 2021

Customer Loyalty *through* Client Satisfaction

www.maserconsulting.com

Office Locations:

- NEW JERSEY
- NEW YORK
- PENNSYLVANIA
- VIRGINIA
- FLORIDA
- NORTH CAROLINA
- SOUTH CAROLINA
- NEW MEXICO
- MARYLAND
- GEORGIA
- TEXAS
- TENNESSEE
- COLORADO

Copyright © 2020. Maser Consulting All Rights Reserved. This drawing and all the information contained herein is authorized for use only by the party for whom the services were contracted or to whom it is certified. This drawing may not be copied, reused, disclosed, distributed or relied upon for any other purpose without the express written consent of Maser Consulting.

verizon

811 Know what's below. Call before you dig.

PROTECT YOURSELF

ALL STATES REQUIRE NOTIFICATION OF EXCAVATORS, DESIGNERS, OR ANY PERSON PREPARING TO DISTURB THE EARTH'S SURFACE ANYWHERE IN ANY STATE

FOR STATE SPECIFIC DIRECT PHONE NUMBERS VISIT: WWW.CALL811.COM

SCALE : AS SHOWN

JOB NUMBER : 20777381A

REV	DATE	DESCRIPTION	DRAWN BY	CHECKED BY
.	.	.	.	.
.	.	.	.	.
.	.	.	.	.
0	12/30/2020	ISSUED FOR CONSTRUCTION	FAC	MPC

STATE OF CONNECTICUT
MICHAEL CLEARY
LICENSED PROFESSIONAL ENGINEER

Michael Cleary
CONNECTICUT LICENSED PROFESSIONAL ENGINEER
LICENSE NUMBER: 33102
MASER CONSULTING, INC.
PHONE: 856.797.0412
FAX: 856.722.1120

IT IS A VIOLATION OF LAW FOR ANY PERSON, UNLESS THEY ARE ACTING UNDER THE DIRECTION OF THE RESPONSIBLE LICENSED PROFESSIONAL ENGINEER, TO ALTER THIS DOCUMENT.

SITE NAME:

PLYMOUTH WEST RELO CT
467737

33 KEEGAN RD
PLYMOUTH, CT 06782
LITCHFIELD COUNTY

MT. LAUREL OFFICE
2000 Midlantic Drive
Suite 100
Mount Laurel, NJ 08054

Phone: 856.797.0412
Fax: 856.722.1120

SHEET TITLE :

MODIFICATION DETAILS

SHEET NUMBER :

S-5

MOUNT PHOTO 1

MOUNT PHOTO 2

MOUNT PHOTO 3

MOUNT PHOTO 4

MASER CONSULTING CONNECTICUT
WILL BE KNOWN AS COLLIERS ENGINEERING & DESIGN IN 2021
Customer Loyalty *through* Client Satisfaction
www.maserconsulting.com
Office Locations:
- NEW JERSEY
- NEW YORK
- PENNSYLVANIA
- VIRGINIA
- FLORIDA
- NORTH CAROLINA
- SOUTH CAROLINA
- NEW MEXICO
- MARYLAND
- GEORGIA
- TEXAS
- TENNESSEE
- COLORADO

Copyright © 2020 Maser Consulting All Rights Reserved. This drawing and all the information contained herein is authorized for use only by the party for whom the services were contracted or to whom it is certified. This drawing may not be copied, reused, disclosed, distributed or relied upon for any other purpose without the express written consent of Maser Consulting.

verizon

811 PROTECT YOURSELF
ALL STATES REQUIRE NOTIFICATION OF EXCAVATORS, DESIGNERS, OR ANY PERSON PREPARING TO DISTURB THE EARTH'S SURFACE ANYWHERE IN ANY STATE
Know what's below. Call before you dig.
FOR STATE SPECIFIC DIRECT PHONE NUMBERS VISIT: WWW.CALL811.COM

SCALE : AS SHOWN
JOB NUMBER : 20777381A

REV	DATE	DESCRIPTION	DRAWN BY	CHECKED BY
0	12/30/2020	ISSUED FOR CONSTRUCTION	FAC	MPC

STATE OF CONNECTICUT
MICHAEL CLEARY
LICENSED PROFESSIONAL ENGINEER

Michael Cleary
CONNECTICUT LICENSED PROFESSIONAL ENGINEER
LICENSE NUMBER: 33102
MASER CONSULTING, INC.
NJ CERTIFICATE #24GE05285500

IT IS A VIOLATION OF LAW FOR ANY PERSON, UNLESS THEY ARE ACTING UNDER THE DIRECTION OF THE RESPONSIBLE LICENSED PROFESSIONAL ENGINEER, TO ALTER THIS DOCUMENT.

SITE NAME:

PLYMOUTH WEST RELO CT
467737

33 KEEGAN RD
PLYMOUTH, CT 06782
LITCHFIELD COUNTY

MT. LAUREL OFFICE
2000 Midlantic Drive
Suite 100
Mount Laurel, NJ 08054

Phone: 856.797.0412
Fax: 856.722.1120

SHEET TITLE : MOUNT PHOTOS

SHEET NUMBER : S-6

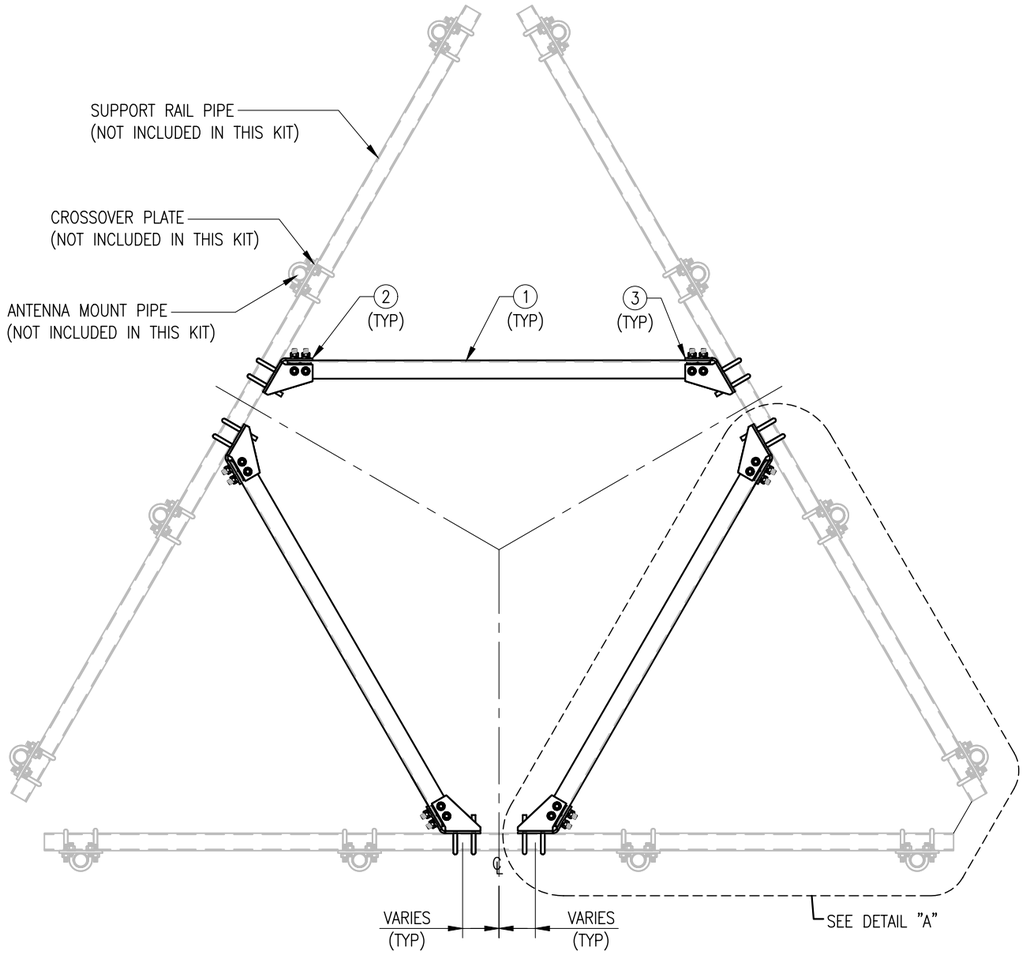

PLAN VIEW

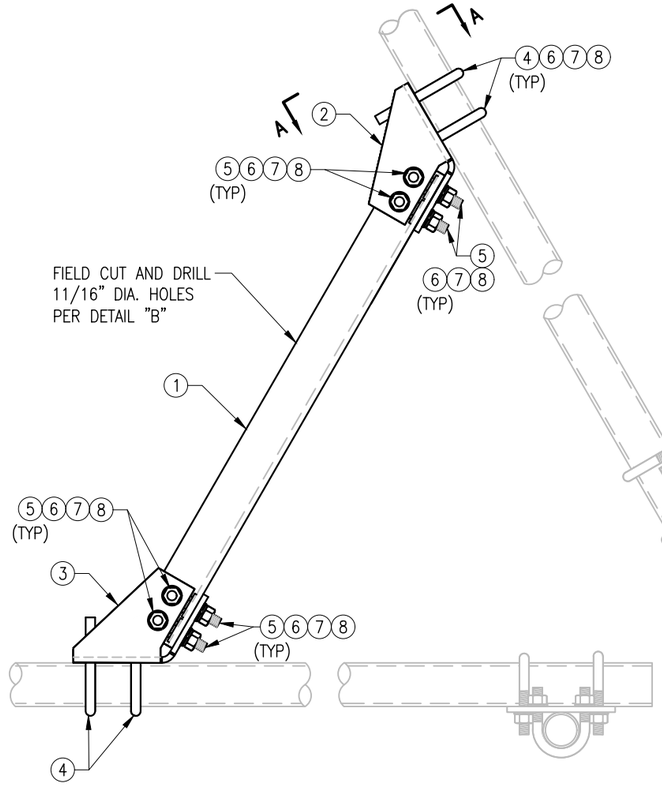

DETAIL "A"

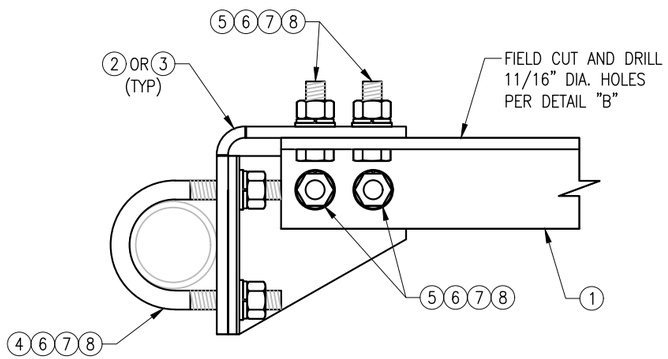

SECTION "A-A"

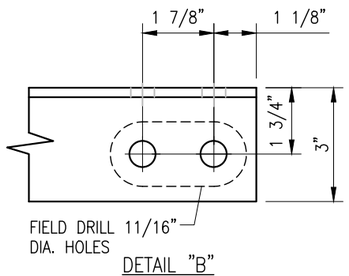

DETAIL "B"

NOTES:
1. HOT-DIPPED GALVANIZED PER ASTM A123.

VZWSMART-PLK2 (PLATFORM SUPPORT RAIL BRACING)

ITEM NO.	QTY.	PART NO.	DESCRIPTION	SHEET #	WT
1	3	L3325-8	L 3" X 3" X 1/4" X 8'-0" A36	PLK2-F1	120
2	3	CBP-L	CORNER BENT PLATE BRACKET	PLK2-F2	28
3	3	CBP-R	CORNER BENT PLATE BRACKET	PLK2-F2	28
4	12	MS02-625-300-500	RU-BOLT 5/8" X 3" I.W. X 5" I.L. A36 (OR EQUIV.)	RBC-1	16
5	24	---	BOLT 5/8" X 2" A325 W/HHN & LKW EA.	---	9
6	48	FW-625	5/8" HDG USS FLAT WASHER	---	4
7	48	LW-625	5/8" HDG LOCK WASHER	---	1
8	48	NUT-625	5/8" HDG HEX NUT	---	6
				GALVANIZED WT	211

VzW SMART Tool© Vendor

verizon

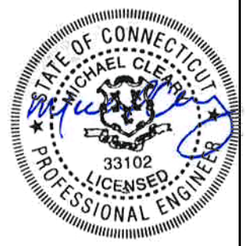

DRAWN BY: CH/HR | CHECKED BY: HMA/KW

REV.	DESCRIPTION	BY	DATE
0	FIRST ISSUE	CH/HR	05/08/20

SHEET TITLE:
VZWSMART-PLK2
PLATFORM SUPPORT
RAIL KIT

SHEET NUMBER: VZWSMART-PLK2

REV #: 0

NOTE:
THE LOCATION OF KICKER AND EXISTING ANTENNA MOUNT SHOWN ON THE DRAWING IS FOR REPRESENTATION PURPOSE ONLY. SEE INSTALLATION DRAWINGS FOR ACTUAL INSTALLATION OF DETAILS.

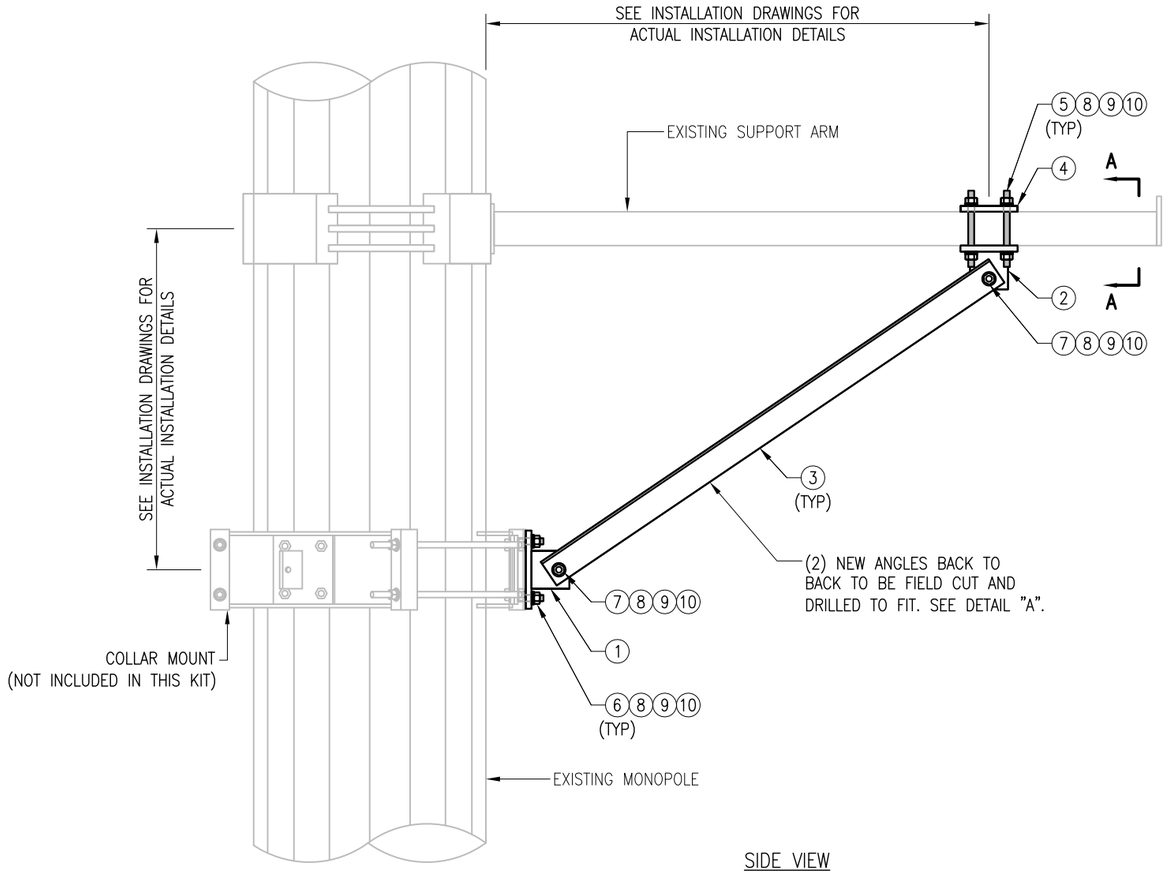

SIDE VIEW
KICKER KIT

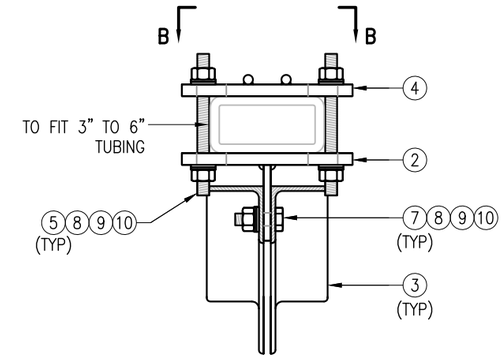

SECTION "A–A"
RECT. HSS MOUNTING

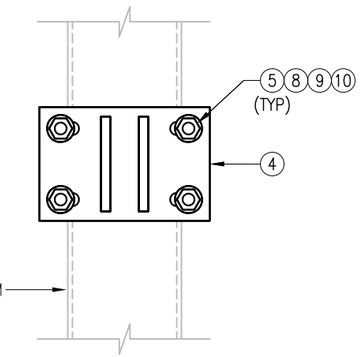

SECTION "B–B"

NOTE:
TOP PLATE FLIPPED 180° FOR ROUND PIPES

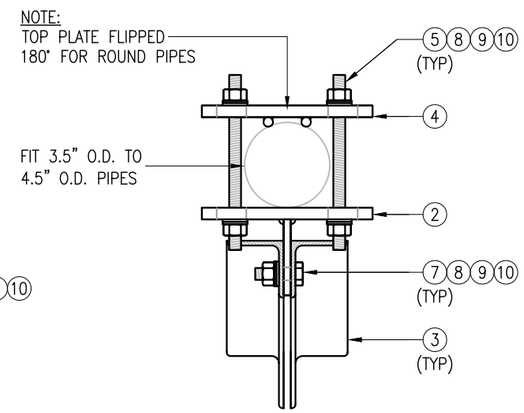

SECTION "A–A"
ROUND PIPE MOUNTING

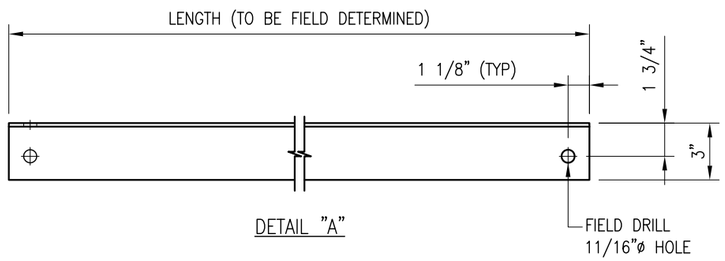

DETAIL "A"

NOTES:
1. ALL HOLES ARE 11/16" DIA. U.N.O
2. HOT–DIPPED GALVANIZED PER ASTM A123.
3. FIT UP TO 6" SQ. TUBING OR 4 1/2" O.D. PIPE

VZWSMART–PLK5 (KICKER KIT)

ITEM NO.	QTY.	PART NO.	DESCRIPTION	SHEET #	WT
1	3	BRKW–XXX	BRACKET WELDMENT A36	PLK5–F3	43.8
2	3	BRKW–XXXX	BRACKET WELDMENT A36	PLK5–F2	35.7
3	6	L331875–8	L 3" X 3" X 3/16" X 8'–0" A36	PLK5–F4	182.9
4	3	PL–KI	PL 5/8" X 6" X 9" A36	PLK5–F1	29.0
5	12	---	THREADED ROD 5/8" DIA. X 1'–0" F1554–36 HDG	---	--
6	6	---	BOLT 5/8" X 2" A325	---	--
7	12	---	BOLT 5/8" X 2 1/2" A325	---	--
8	42	FW–625	5/8" HDG USS FLAT WASHER	---	3
9	42	LW–625	5/8" HDG LOCK WASHER	---	1
10	42	NUT–625	5/8" HDG HEX NUT	---	5
				GALVANIZED WT	291

VzW
SMART Tool©
Vendor

verizon

DRAWN BY: MN | CHECKED BY: HMA/KW

REV.	DESCRIPTION	BY	DATE
0	FIRST ISSUE	MN	05/08/20

SHEET TITLE:
VZWSMART–PLK5
KICKER KIT

SHEET NUMBER: VZWSMART–PLK5
REV #: 0

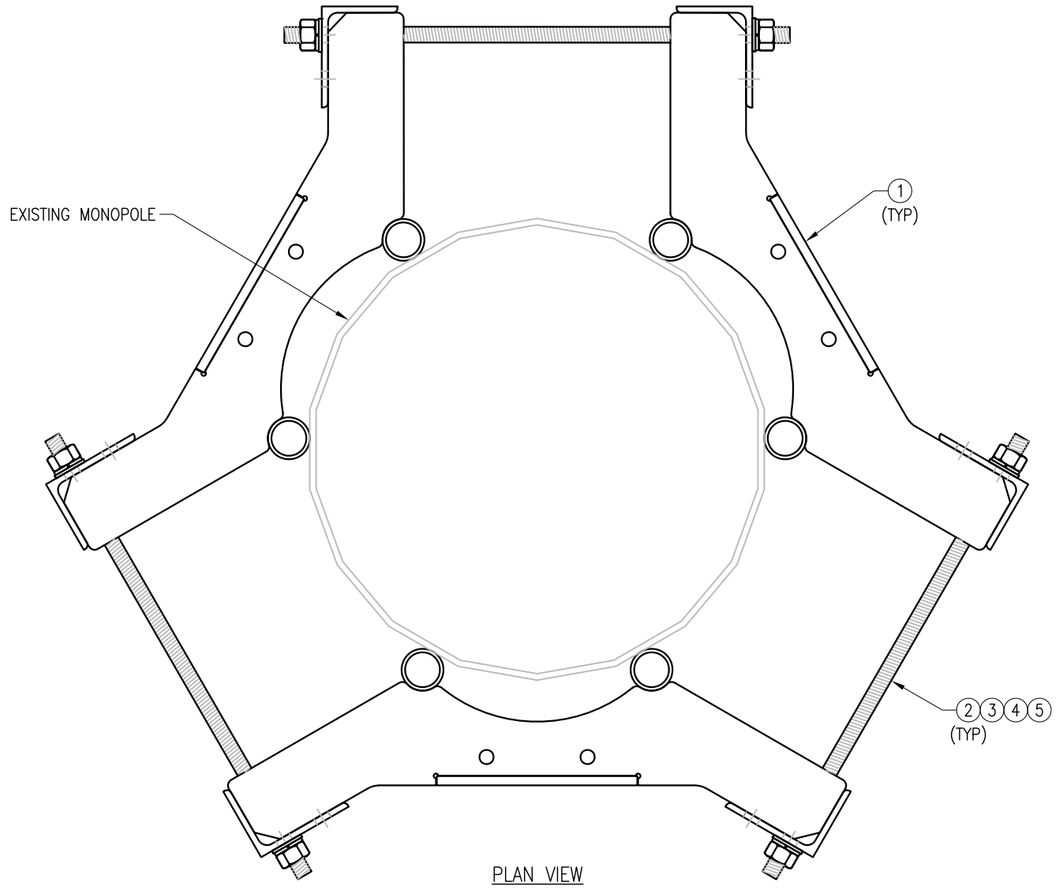

PLAN VIEW
MONOPOLE COLLAR MOUNT ASSEMBLY

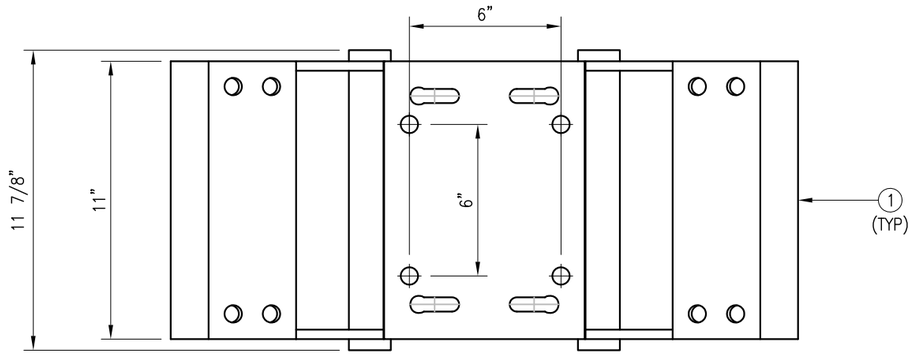

FRONT VIEW

NOTES:
1. FIT 12" TO 45" DIA MONOPOLE.
2. HOT-DIPPED GALVANIZED PER ASTM A123.

VZWSMART-PLK7 (MONOPOLE COLLAR MOUNT ASSEMBLY)

ITEM NO.	QTY.	PART NO.	DESCRIPTION	SHEET #	WT
1	3	CM-1245	COLLAR MOUNT ASSEMBLY	PLK7-F1	147
2	6	---	THREADED ROD 5/8" X 4'-0" A193-B7	---	
3	12	FW-625	5/8" HDG USS FLAT WASHER	---	1
4	12	LW-625	5/8" HDG LOCK WASHER	---	0
5	12	NUT-625	5/8" HDG HEX NUT	---	1
				GALVANIZED WT	150

VzW SMART Tool© Vendor

verizon

DRAWN BY: BT | CHECKED BY: HMA/KW

REV.	DESCRIPTION	BY	DATE
0	FIRST ISSUE	BT	05/11/20

SHEET TITLE:
VZWSMART-PLK7
MONOPOLE COLLAR
MOUNT ASSEMBLY

SHEET NUMBER: VZWSMART-PLK7

REV #: 0

ATTACHMENT 5

Town of Plymouth, Connecticut. Assessment Parcel Map

GIS Link **054-065-016** Address: **55 KEEGAN RD**

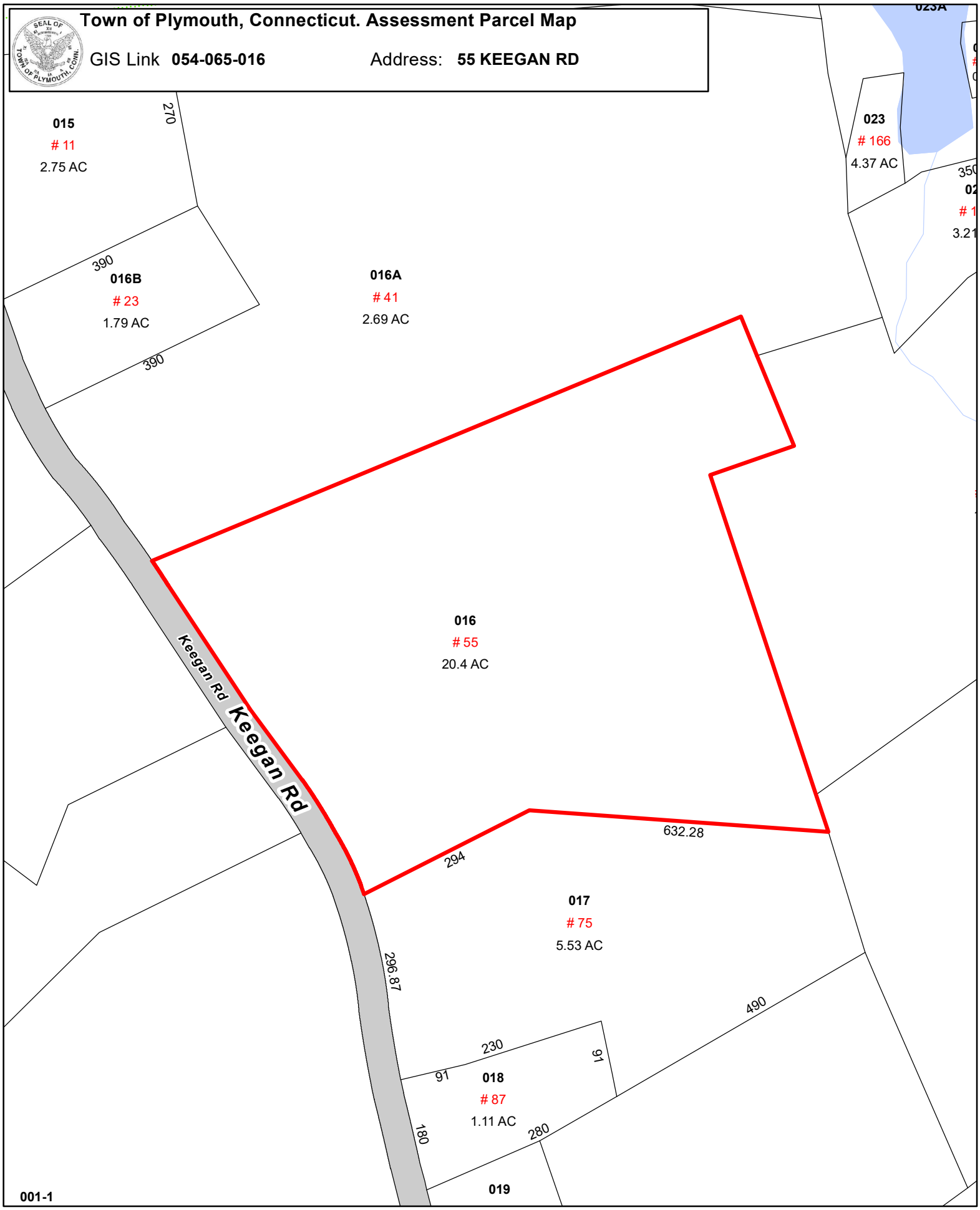

1 inch = 200 feet

0 100 200 300 400 Feet

Disclaimer: This map is for informational purposes only All information is subject to verification by any user. The Town of Plymouth and its mapping contractors assume no legal responsibility for the information contained herein.

Map Produced: October 2020

Plymouth, CT : Residential Property Record Card

Search For Properties

Account	Name	Street Name	
			Search Reset

Map-Block-Lot	Card	Account	Location	Zoning	State Class	Acres
054-065-016	1	00018100	55 KEEGAN RD	RA1	130 - Developable Land	20.400

Living Units
0

Owner Information

Westall Steven A
41 Keegan Rd
Plymouth CT 06782

Property Picture

Deed Information

Book/Page: 171/948

Deed Date: 1981/09/30

Dwelling Information

Style:

Story Height: 0

Attic:

Basement:

Year Built: 0

Ground Flr Area: 0

Tot Living Area: 0

Rooms: 0

Bedrooms: 0

Full Baths: 0

Half Baths: 0

Valuation	
Land:	$183,100
Building:	$0
Total:	$4,900
Net Assessment:	$3,430

Sales History

Book/Page	Date	Price	Type	Validity

Out Building Information

Type	Qty	Year	Size1	Size2	Grade	Cond

Building Sketch

Notice

The information delivered through this on-line database is provided in the spirit of open access to government information and is intended as an enhanced service and convenience for citizens of Plymouth, CT.

The providers of this database: CLT, Big Room Studios, and Plymouth, CT assume no liability for any error or omission in the information provided here.

Currently All Values Have Not Been Finalized and Are Subject To Change.

Comments regarding this service should be directed to: carena@plymouthct.us

BUILT BY
bigRoom STUDIOS

ATTACHMENT 6

PLYMOUTH WEST RELO

UNITED STATES POSTAL SERVICE®

Certificate of Mailing — Firm

Name and Address of Sender	TOTAL NO. of Pieces Listed by Sender	TOTAL NO. of Pieces Received at Post Office™	Affix Stamp Here *Postmark with Date of Receipt.*
Kenneth C. Baldwin, Esq. Robinson & Cole LLP 280 Trumbull Street Hartford, CT 06103			neopost 05/24/2021 US POSTAGE $002.89 ZIP 06103 041L12203937
	Postmaster, per *(name of receiving employee)*		

USPS® Tracking Number / Firm-specific Identifier	Address (Name, Street, City, State, and ZIP Code™)	Postage	Fee	Special Handling	Parcel Airlift
1.	David V. Merchant, Mayor Town of Plymouth 80 Main Street Terryville, CT 06786				
2.	Margus T. Laan, Director of Planning and Economic Development Town of Plymouth 80 Main Street Terryville, CT 06786				
3.					
4.					
5.					
6.					

USPS MAY 24 2021 OLD STATE HOUSE STATION 06103