STATE OF CONNECTICUT

CONNECTICUT SITING COUNCIL

Ten Franklin Square, New Britain, CT 06051

Phone: (860) 827-2935 Fax: (860) 827-2950

E-Mail: siting.council@ct.gov

Internet: ct.gov/csc

Daniel F. Caruso
Chairman

January 16, 2009

Mark R. Richard
UMTS Project Manager
T-Mobile USA, Inc.
35 Griffin Road South
Bloomfield, CT 06002

RE: **EM-T-MOBILE-107-081218** - Omnipoint Communications, as subsidiary of T-Mobile USA, Inc., notice of intent to modify an existing telecommunications facility located at 26 South Orange Center Road, Orange, Connecticut.

Dear Mr. Richard:

The Connecticut Siting Council (Council) hereby acknowledges your notice to modify this existing telecommunications facility, pursuant to Section 16-50j-73 of the Regulations of Connecticut State Agencies.

The proposed modifications are to be implemented as specified here and in your notice dated December 18, 2008, including the placement of all necessary equipment and shelters within the tower compound. The modifications are in compliance with the exception criteria in Section 16-50j-72 (b) of the Regulations of Connecticut State Agencies as changes to an existing facility site that would not increase tower height, extend the boundaries of the tower site, increase noise levels at the tower site boundary by six decibels, and increase the total radio frequencies electromagnetic radiation power density measured at the tower site boundary to or above the standard adopted by the State Department of Environmental Protection pursuant to General Statutes § 22a-162. This facility has also been carefully modeled to ensure that radio frequency emissions are conservatively below State and federal standards applicable to the frequencies now used on this tower.

This decision is under the exclusive jurisdiction of the Council. Please be advised that the validity of this action shall expire one year from the date of this letter. Any additional change to this facility will require explicit notice to this agency pursuant to Regulations of Connecticut State Agencies Section 16-50j-73. Such notice shall include all relevant information regarding the proposed change with cumulative worst-case modeling of radio frequency exposure at the closest point of uncontrolled access to the tower base, consistent with Federal Communications Commission, Office of Engineering and Technology, Bulletin 65. Any deviation from this format may result in the Council implementing enforcement proceedings pursuant to General Statutes § 16-50u including, without limitation, imposition of expenses resulting from such failure and of civil penalties in an amount not less than one thousand dollars per day for each day of construction or operation in material violation.

Thank you for your attention and cooperation.

Very truly yours,

S. Derek Phelps
Executive Director

SDP/MP/laf

c: The Honorable James M. Zeoli, First Selectman, Town of Orange
Paul Dinice, Zoning Enforcement Officer, Town of Orange
Carrie L. Larson, Esq., Pullman & Comley LLC

STATE OF CONNECTICUT

CONNECTICUT SITING COUNCIL

Ten Franklin Square, New Britain, CT 06051
Phone: (860) 827-2935 Fax: (860) 827-2950
E-Mail: siting.council@ct.gov
www.ct.gov/csc

December 24, 2008

The Honorable James M. Zeoli
First Selectman
Town of Orange
Town Hall
617 Orange Center Road
Orange, CT 06477-2423

RE: **EM-T-MOBILE-107-081218** - Omnipoint Communications, as subsidiary of T-Mobile USA, Inc., notice of intent to modify an existing telecommunications facility located at 26 South Orange Center Road, Orange, Connecticut.

Dear Mr. Zeoli: Jim

The Connecticut Siting Council (Council) received this request to modify an existing telecommunications facility, pursuant to Regulations of Connecticut State Agencies Section 16-50j-72.

If you have any questions or comments regarding this proposal, please call me or inform the Council by January 6, 2009.

Thank you for your cooperation and consideration.

Very truly yours,

S. Derek Phelps
Executive Director

SDP/jb

Enclosure: Notice of Intent

c: Paul Dinice, Zoning Enforcement Officer, Town of Orange

G:\EM\T-MOBILE\orange\Zeoli.DOC

CSC
CONNECTICUT SITING COUNCIL

T-Mobile

December 18, 2008

EM-T-MOBILE-107-081218

Via Federal Express

ORIGINAL

RECEIVED
DEC 18 2008
CONNECTICUT SITING COUNCIL

S. Derek Phelps, Executive Director
Connecticut Siting Council
Ten Franklin Square
New Britain, CT 06051

Re: Notice of Exempt Modification
Town of Orange Telecommunications Facility
26 South Orange Center Road, Orange, Connecticut
T-Mobile Site CT11720A

Dear Mr. Phelps:

Omnipoint Communications, a subsidiary of T-Mobile USA, Inc. ("T-Mobile"), intends to replace existing antennas, install additional antennas and replace existing ground equipment at the existing 177-foot Monopole facility owned by the Town of Orange and located at 26 South Orange Center Road, Orange, Connecticut ("Facility"). T-Mobile is licensed by the Federal Communications Commission (FCC) to provide PCS wireless telecommunications service in the State of Connecticut, which includes the area to be served by the proposed installation. This installation constitutes an exempt modification pursuant to the Public Utility Environmental Standards Act, Connecticut General Statutes Section 16-50g *et. seq.* (PUESA), and Section 16-50j-72(b)(2) of the Regulations of the Connecticut State Agencies adopted pursuant to PUESA. In accordance with R.C.S.A. Section 16-50j-73, a copy of this notice has been sent to, James Zeoli, First Selectman, Town of Orange.

The existing Facility consists of a 177-foot self-supporting Monopole tower capable of supporting multiple carriers within a fenced compound and was previously approved by the City of Bridgeport. The coordinates for the Facility are approximately **Lat: 41°-15'-39" and Long: 73°-00-39".** The tower is located in the southeast portion of Orange, approximately 1,600 feet southeast of Boston Post Road (Route 1) and roughly 2,000 feet to the northwest of Interstate 95 (see Site Map, attached as Exhibit A). The tower currently supports Verizon antennas at the one hundred twenty foot (120') level centerline AGL (above ground level), Sprint antennas at the one hundred thirty foot level (130') AGL, Nextel antennas at the one hundred forty foot level (140') AGL and AT&T antennas at the one hundred seventy five foot level (175') AGL. T-Mobile currently has antennas on the tower at the one hundred fifty foot (150') level centerline AGL (above ground level) The current T-Mobile antenna configuration is one per sector, for a total of three antennas. T-Mobile proposes to add an additional three antennas (one per sector), for a total of six antennas at their current elevation on the tower. T-Mobile proposes to install three RFS APX16PV-16PVL-C antennas on existing pipe mounts at the same elevation, one hundred fifty foot (150') level centerline AGL. T-Mobile also intends to add a UMTS 3106 equipment cabinet to its current configuration of two existing S8000 equipment cabinets on an existing concrete pad. The three cabinets will all be mounted on T-Mobile's existing equipment pad

T-Mobile USA, Inc.
Office: (860) 692-7100
Fax: (860) 692-7159
35 Griffin Rd S
Bloomfield, CT 06002

contained within T-Mobile's existing lease area. T-Mobile intends to run new coaxial cable on its existing ice bridge from its current equipment pad to the existing tower. Utilities will be run via a proposed underground conduit from existing utility sources at the Facility (See Design Drawings and Equipment Specifications, attached as Exhibits B and C respectively).

For the following reasons, the proposed modifications to the South Orange Center Road Facility meet the exempt modification criteria set forth in R.C.S.A. Section 16-50j-72(b)(2):

1. The proposed modification will not increase the height of the tower as T-Mobile seeks to add to its existing antenna configuration and install additional antennas at a center line height of approximately 150 feet.

2. The installation and replacement of T-Mobile's antennas and ground equipment will not require an extension of the site boundaries.

3. The proposed modifications will not increase the noise levels at the existing Facility by six decibels or more.

4. The operation of the additional antennas will not increase the total radio frequency (RF) power density, measured at the site boundary, to a level at or above the standard adopted by the Connecticut Department of Environmental Protection as set forth in Section 22a-162 of the Connecticut General Statutes and MPE limits established by the Federal Communications Commission. The worst-case RF power density calculations for the proposed Pocket antennas would be 26.6840% of the FCC standard (see general power density calculations table, attached as Exhibit D).

Also attached, Exhibit E, is a structural assessment confirming that the tower can support the existing and proposed antennas and associated equipment. Of note, because all antennas are internally mounted in the flagpole, the additional three antennas will not increase the ice and winding loading for the tower.

For the foregoing reasons, T-Mobile respectfully submits that the proposed antenna installation and equipment at the Orange Facility constitutes an exempt modification under R.C.S.A. Section 16-50j-72(b)(2).

Respectfully Submitted,

Mark R. Richard
UMTS Project Manager
Agent for T-Mobile

cc: James Zeoli, First Selectman, Town is also underlying property owner
Carrie Larson

T-Mobile USA, Inc.
Office: (860) 692-7[illegible]
Fax: (860) 692-7159
35 Griffin Rd S
Bloomfield, CT 06002

Exhibit A

Site Map

T-Mobile Site CT11720A

26 South Orange Center Rd.

Orange, Connecticut

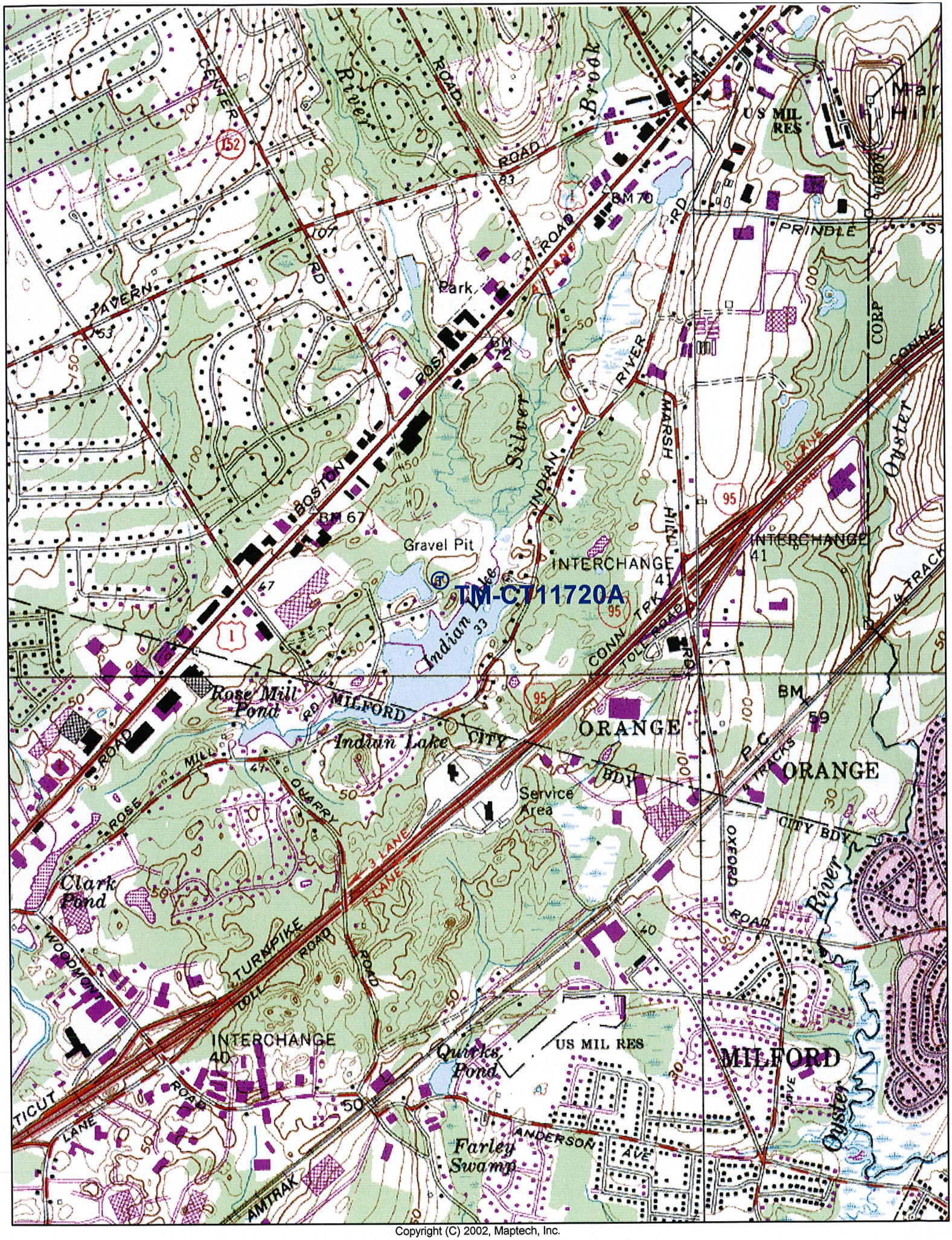

Exhibit B

Design Drawings

T-Mobile Site CT11720A

26 South Orange Center Rd.

Orange, Connecticut

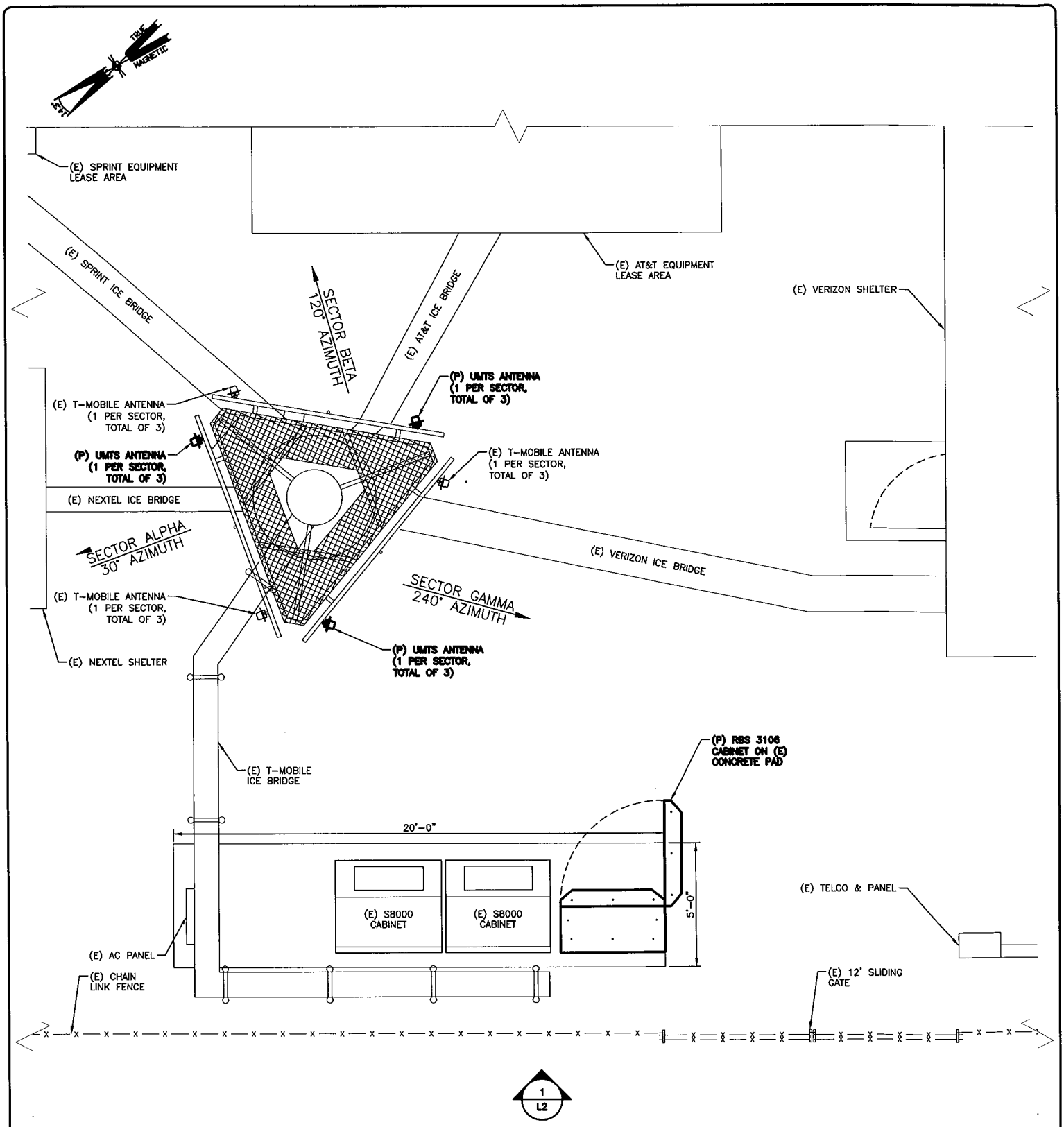

SITE PLAN

SCALE: NTS

1

T··Mobile· 15 COMMERCE WAY NORTON, MA 02766	MAXTON 50 Eastman St. South Easton, MA 02375 Phone: (508) 936-6393 Fax: (508) 936-6395	PROJECT LOCATION: CT720/TOWN OF ORANGE MP **CT11720A** 26 SO. ORANGE CENTER ROAD ORANGE, CT 06477 APPROVED BY:	PROJECT MANAGER: KB	DRAWN BY: MK	BSDA PROJ. #: 2889.102
			10/20/08	SITE PLAN	SHEET: L1

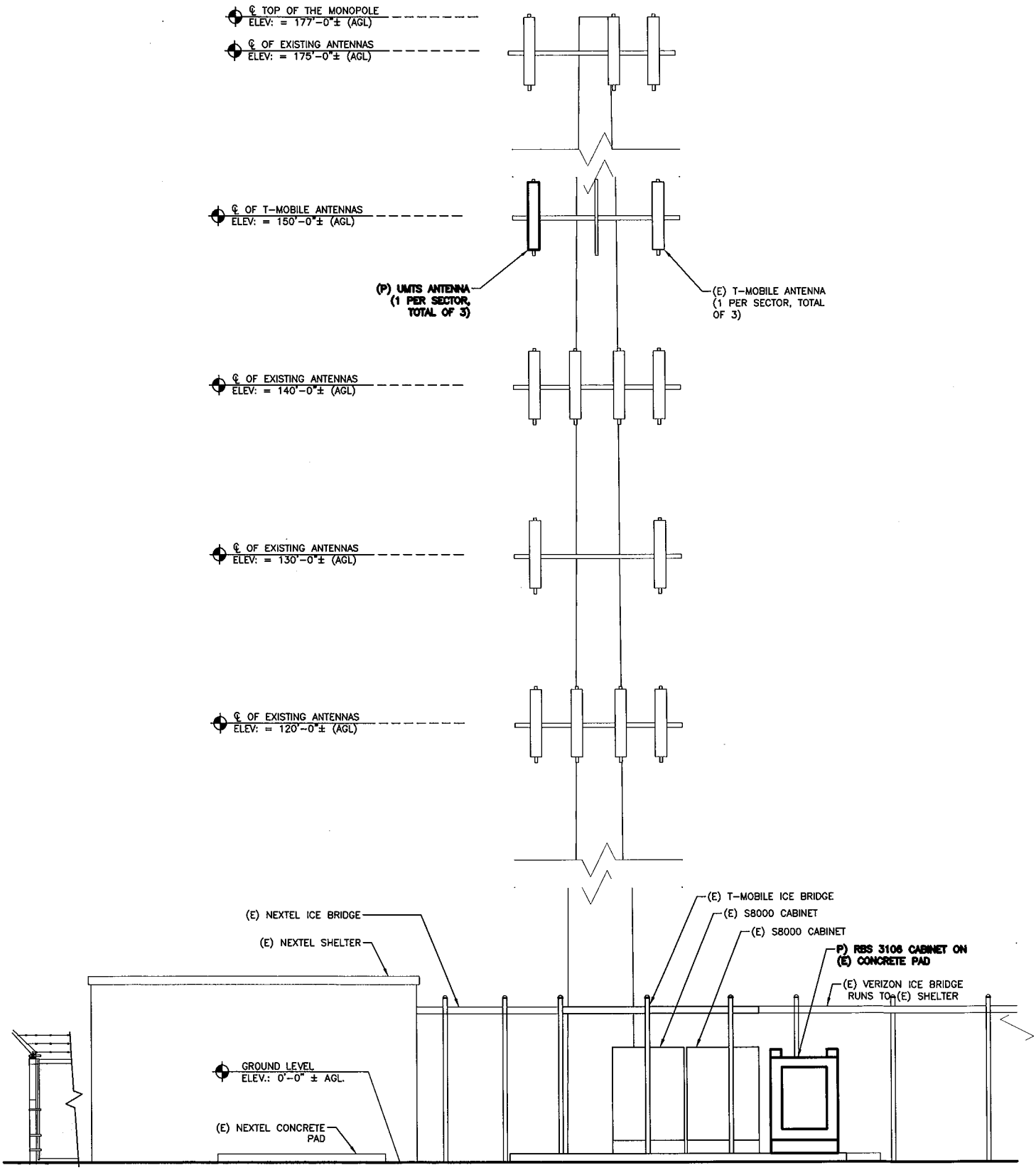

ELEVATION 1

SCALE: N.T.S.

T··Mobile· 15 COMMERCE WAY NORTON, MA 02766	MAXTON 50 Eastman St. South Easton, MA 02375 Phone: (508) 936-6393 Fax: (508) 936-6395	PROJECT LOCATION: CT720/TOWN OF ORANGE MP **CT11720A** 26 SO. ORANGE CENTER ROAD ORANGE, CT 06477 APPROVED BY:	PROJECT MANAGER: KB 10/20/08	DRAWN BY: MK ELEVATION	BSDA PROJ. #: 2889.102 SHEET: L2

Exhibit C

Equipment Specifications

T-Mobile Site CT11720A

26 South Orange Center Rd.

Orange, Connecticut

Optimizer® Panel Dual Polarized Antenna

Product Description

Gathering two X-Polarised antennas in a sigle radome this pair of variable tilt antenna provides exceptional suppression of all upper sidelobes at all downtilt angles. It also features a wide downtilt range with optional remote tilt.

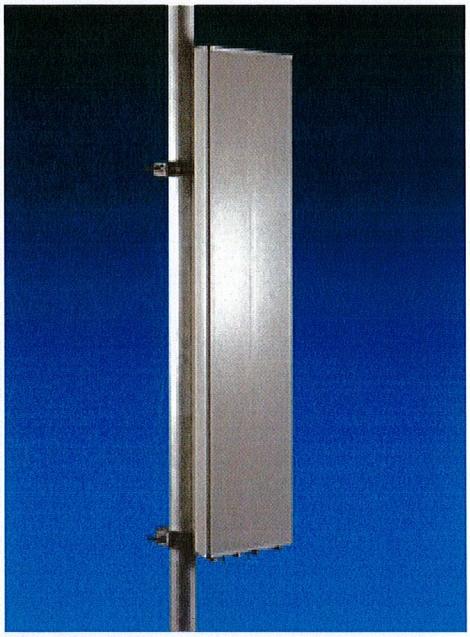

Features/Benefits

- **Variable electrical downtilt - provides enhanced precision in controlling intercell interference. The tilt is infield adjustable 0-10 deg.**
- **High Suppression of all Upper Sidelobes (Typically <-20dB).**
- **Optional remote tilt - can be retrofitted.**
- **Two X-Polarised panels in a single radome.**
- **Dual polarization.**
- **Low profile for low visual impact.**
- **Broadband design.**

Technical Features

Frequency Band	PCS 1900 (1850-1990 MHz)
Horizontal Pattern	Directional
Antenna Type	Panel Dual Polarized
Electrical Down Tilt Option	Variable
Gain, dBi (dBd)	17.8 (15.8) , 17.8 (15.8)
Frequency Range, MHz	1850-1990 , 1850-1990

Optimizer® Panel Dual Polarized Antenna

Connector Type	(4) 7-16 DIN Female
Connector Location	Bottom
Mount Type	Downtilt
Electrical Downtilt, deg	0-10 , 0-10
Horizontal Beamwidth, deg	66 , 66
Mounting Hardware	APM40-2
Rated Wind Speed, km/h (mph)	160 (100)
VSWR	< 1.5:1
Vertical Beamwidth, deg	6.6
1st Upper Sidelobe Suppression, dB	> 17 (typically > 20)
Upper Sidelobe Suppression, dB	> 18 all (typically > 20)
Polarization	Dual pol +/-45°
Front-To-Back Ratio, dB	> 25
Maximum Power Input, W	300
Isolation between Ports, dB	> 30
Lightning protection	Direct Ground
3rd Order IMP @ 2 x 38 dBm, dBc	> 160
Overall Length, m (ft)	1.35 (4.42)
Dimensions - HxWxD, mm (in)	1349 x 330 x 80 (53 x 12.9 x 3.1)
Weight w/o Mtg. Hardware, kg (lb)	18.0 (39.6)
Radiating Element Material	Brass
Radome Material	Fiberglass
Reflector Material	Aluminum
Max Wind Loading Area, m² (ft²)	0.64 (6.6)
Maximum Thrust @ Rated Wind, N (lbf)	787 (177)
Shipping Weight, kg (lb)	23.8 (52)
Packing Dimensions, HxWxD, mm (in)	1550 x 420 x 210 (61 x 16.5 x 8.3)
Survival Wind Speed, km/h (mph)	200 (125)

Optimizer® Panel Dual Polarized Antenna

Vertical Pattern

(This is a general representation of the antenna family pattern. For the latest detailed pattern contact Applications Engineering. You may also download the CELplot(TM) pattern reader and antenna pattern data fields from our website.)

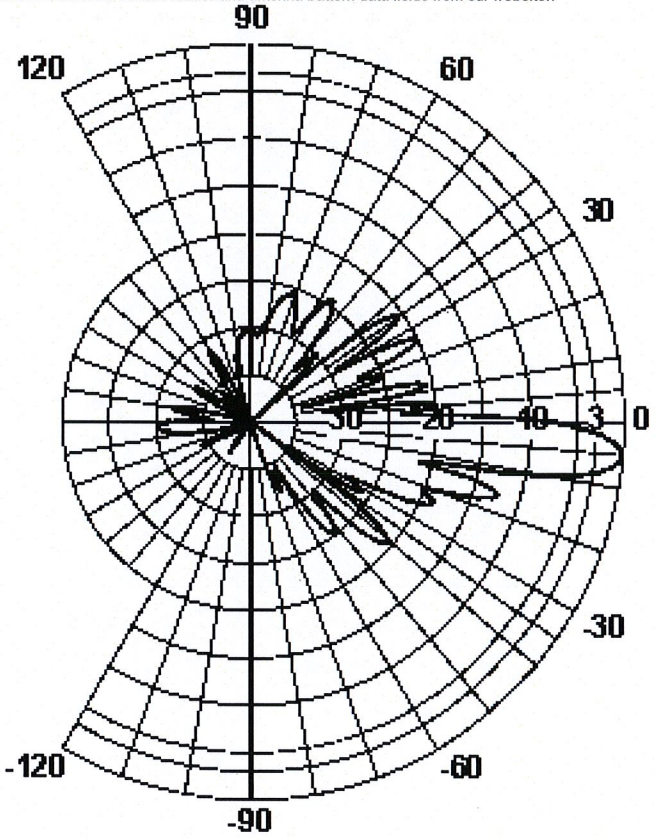

Optimizer® Panel Dual Polarized Antenna

Horizontal Pattern

(This is a general representation of the antenna family pattern. For the latest detailed pattern contact Applications Engineering. You may also download the CELplot(TM) pattern reader and antenna pattern data fields from our website.)

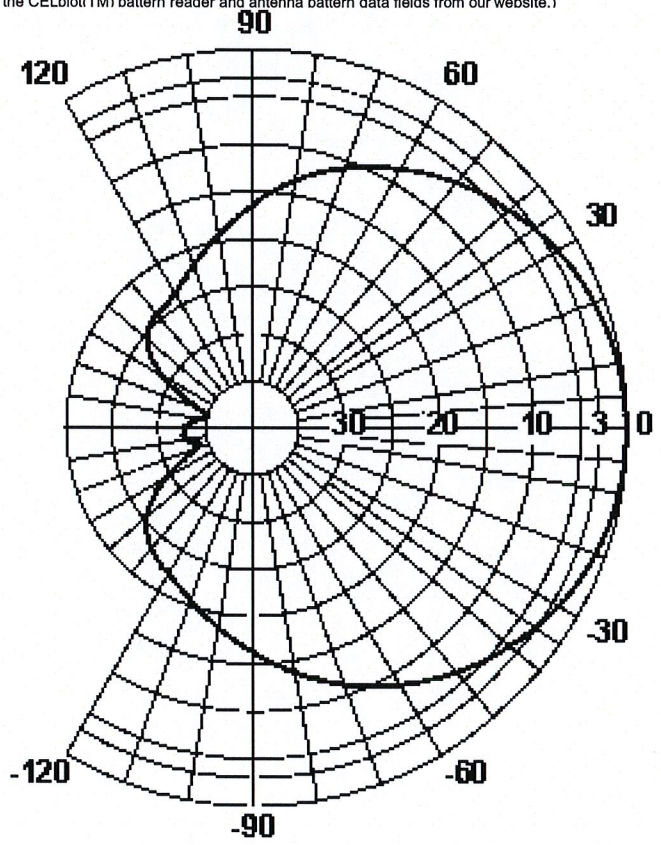

The Outdoor Cabinet

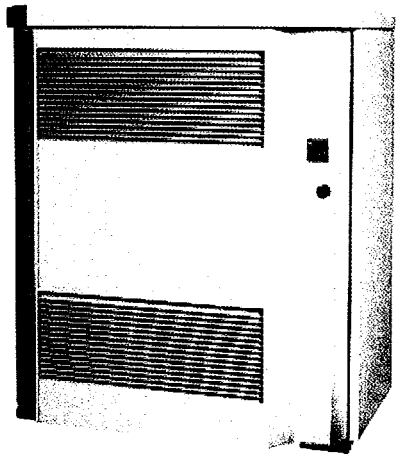

Figure 2 RBS 3106 Cabinet

- Specified for outdoor environment
- Can be configured for both 6 and 9 radio units.
- The cabinet fulfils seismic requirements
- Vandal protected
- Forced convection and heat exchanger (Eco-Cooling)

The RBS 3106 cabinet has the same footprint as the GSM RBS 2106 and the WCDMA RBS 3101.

The RBS 3106 cabinet is a weatherproof outdoor cabinet for outdoor sites with primarily high capacity and high coverage requirements. The RBS 3106 houses integrated power supply with optional backup batteries, space for transmission equipment and a climate package for ensuring an indoor climate for all units inside, including the batteries.

2 Descriptions

The RBS HW is modularly structured into several subsystems for easy expansion and evolution purposes. From a physical viewpoint the subsystem are located together on shelves in the cabinet. The shelves are basically identical between the cabinets.

Exhibit D

Power Density Calculations

T-Mobile Site CT11720A

26 South Orange Center Rd.

Orange, Connecticut

T-Mobile

T-Mobile USA Inc.
35 Griffin Rd South, Bloomfield, CT 06002-1853
Phone: (860) 692-7100
Fax: (860) 692-7159

Technical Memo

To: Maxton
From: Farid Marbouh - Radio Frequency Engineer
cc: Jason Overbey
Subject: Power Density Report for CT11720A
Date: December 12, 2008

1. Introduction:

This report is the result of an Electromagnetic Field Intensities (EMF - Power Densities) study for the T-Mobile PCS antenna installation on a Monopole at 26 So. Orange Center Rd, Orange, CT. This study incorporates the most conservative consideration for determining the practical combined worst case power density levels that would be theoretically encountered from locations surrounding the transmitting location.

2. Discussion:

The following assumptions were used in the calculations:

1) The emissions from T-Mobile transmitters are in the (1935-1944.8), (1980.2-1984.8), (2140-2145), (2110-2120)MHz frequency Band.
2) The antenna array consists of three sectors, with 2 antennas per sector.
3) The model number for GSM antenna is APX16PV-16PVL.
3) The model number for UMTS antenna is APX16DWV-16DWV.
4) GSM antenna center line height is 150 ft.
4) UMTS antenna center line height is 150 ft.
5) The maximum transmit power from any GSM sector is 2026.56 Watts Effective Radiated Power (EiRP) assuming 8 channels per sector.
5) The maximum transmit power from any UMTS sector is 2117.04 Watts Effective Radiated Power (EiRP) assuming 2 channels per sector.
6) All the antennas are simultaneously transmitting and receiving, 24 hours a day.
7) Power levels emitting from the antennas are increased by a factor of 2.56 to account for possible in-phase reflections from the surrounding environment. This is rarely the case, and if so, is never continuous.
8) The average ground level of the studied area does not change significantly with respect to the transmitting location

Equations given in "FCC OET Bulletin 65, Edition 97-01" were then used with the above information to perform the calculations.

3. Conclusion:

Based on the above worst case assumptions, the power density calculation from the T-Mobile PCS antenna installation on a Monopole at 26 So. Orange Center Rd, Orange, CT, is 0.04384 mW/cm^2. This value represents 4.384% of the Maximum Permissible Exposure (MPE) standard of 1 milliwatt per square centimeter (mW/cm^2) set forth in the FCC/ANSI/IEEE C95.1-1991. Furthermore, the proposed antenna location for T-Mobile will not interfere with existing public safety communications, AM or FM radio broadcasts, TV, Police Communications, HAM Radio communications or any other signals in the area.
The combined Power Density from other carriers is 22.3%. The combined Power Density for the site is 26.684% of the M.P.E. standard.

Connecticut Market

T · · Mobile ·

Worst Case Power Density

Site:	**CT11720A**
Site Address:	**26 So. Orange Center Rd**
Town:	**Orange**
Tower Height:	**170 ft.**
Tower Style:	**Monopole**

GSM Data		**UMTS Data**	
Base Station TX output	20 W	**Base Station TX output**	40 W
Number of channels	8	**Number of channels**	2
Antenna Model	APX16PV-16PVL	**Antenna Model**	APX16DWV-16DWV
Cable Size	1 5/8 in.	**Cable Size**	1 5/8 in.
Cable Length	196 ft.	**Cable Length**	196 ft.
Antenna Height	150.0 ft.	**Antenna Height**	150.0 ft.
Ground Reflection	1.6	**Ground Reflection**	1.6
Frequency	1945.0 MHz	**Frequency**	2.1 GHz
Jumper & Connector loss	4.50 dB	**Jumper & Connector loss**	1.50 dB
Antenna Gain	17.8 dBi	**Antenna Gain**	18.0 dBi
Cable Loss per foot	0.0116 dB	**Cable Loss per foot**	0.0116 dB
Total Cable Loss	2.2736 dB	**Total Cable Loss**	2.2736 dB
Total Attenuation	6.7736 dB	**Total Attenuation**	3.7736 dB
Total EIRP per Channel	54.04 dBm	**Total EIRP per Channel**	60.25 dBm
(In Watts)	253.32 W	**(In Watts)**	1058.52 W
Total EIRP per Sector	63.07 dBm	**Total EIRP per Sector**	63.26 dBm
(In Watts)	2026.56 W	**(In Watts)**	2117.04 W
nsg	11.0264	**nsg**	14.2264
Power Density (S) =	**0.021442 mW/cm^2**	**Power Density (S) =**	**0.022399 mW/cm^2**

T-Mobile Worst Case % MPE = 4.3840%

Equation Used :

$$S = \frac{(1000)(grf)^2(Power)*10^{(nsg/10)}}{4\pi(R)^2}$$

Office of Engineering and Technology (OET) Bulletin 65, Edition 97-01, August 1997

Co-Location Total

Carrier	**% of Standard**
Verizon	9.7400 %
Cingular	5.5200 %
Sprint	2.9900 %
AT&T Wireless	
Nextel	4.0500 %
MetroPCS	
Other Antenna Systems	
Total Excluding T-Mobile	**22.3000 %**
T-Mobile	4.3840
Total % MPE for Site	**26.6840%**

Exhibit E

Structural Analysis

T-Mobile Site CT11720A

26 South Orange Center Rd.

Orange, Connecticut

BAY STATE
DESIGN

December 12, 2008

Mr. Hans Fiedler
UMTS Development Project Manager
T-Mobile, USA
35 Griffin Rd South
Bloomfield, CT 06002

Ref: T-Mobile Site CT11720A
Town of Orange MP
26 South Center Rd
Orange, CT 06477

Dear Mr. Fiedler:

As requested, Bay State Design, Inc. performed the structural analysis for adding one (1) new RFS antenna and two (2) $1^5/_8$ in. coax, and one (1) twin TMA per sector. Based on the field survey report and calculations performed for this project, it is concluded that the structure is adequate to support the additional loads imposed by the proposed changes.

This analysis is based on T-Mobile's RF data sheet V2.0 dated 10-31-2008. BSD shall be notified if there any changes.

Please feel free to contact this office if you have any questions.

Sincerely yours,

Gordon Govalet, P.E.
Vice President
Bay State Design, Inc.

STATE OF CONNECTICUT
GORDON E. GOVALET
No. 16430
LICENSED
PROFESSIONAL ENGINEER

Bay State Design, Inc. 70 Tower Office Park, Woburn, MA 01801 TEL: (781) 932-2467 FAX: (781) 932-9771
Architects • Engineers

BAY STATE
DESIGN

STRUCTURAL ANALYSIS REPORT

CT11720A
26 South Orange Center Rd.
Orange, CT 06477

Submitted to T- MOBILE Wireless

December 12, 2008

Bay State Design, Inc. 70 Tower Office Park, Woburn, MA 01801 TEL: (781) 932-2467 FAX: (781) 932-9771
Architects • Engineers

TABLE OF CONTENT

I. INTRODUCTION

This assessment has been performed by Bay State Design at the request of Mr. Hans Fiedler, UMTS Development Project Manager for T Mobile, USA with the intent of determining the structural adequacies of the existing 180 foot free standing monopole tower and its foundation to support all existing and proposed equipment, as shown on the Data sheets, UMTS RFDS v2.0, dated 10/31/08 (enclosed as Appendix B- Data Sheets). The site is located at 26 South Orange Center Rd., Orange, CT.

The Structural assessment is for the addition one (1) new RFS, Model # APX16DWV-16DWVS-A20 antenna and two (2) 1 5/8" coax, and one (1) of twin TMA per sector.

For the purpose of the assessment, the structural members are assumed to be in good condition and free of defects. Existing equipment and tower information was obtained from Paul J. Ford and Company report dated December July 12, 2004 (enclosed as Appendix C).

II. SCOPE OF WORK

The scope of work required the addition of one (1) new APX16DWV-16DWVS-A20, twin TMAs, along with 2 (1 5/8") coax per sector.

1. Assess the tower and foundation structural adequacy to carry and support the new antennas Model # APX16DWV-16DWVS-A20, TMAs, and coax.

III. ASSESSMENT RESULTS

This assessment was performed by AJA Engineering to determine if the tower is capable of accommodating the New Antennas to be installed by T-Mobile in accordance with TIA/EIA-222F specification. No condition assessment survey was performed by AJA Engineering Structural engineers.

The tower was analyzed using RISA Tower, version 5.3 a commercially available structural analysis and design software package. Loads were calculated in accordance with TIA/EIA-222F specification including 120 mph wind loads and 3/4 inch solid radial ice loading.

TOWER: The assessment indicates that the existing tower does meet the structural requirements as specified by TIA/EIA-222F. Based on the required wind and ice loadings, the analysis indicated no overstresses in the main structural members.

FOUNDATION: The existing foundation, as shown in the from Paul J. Ford and Company report dated December July 12, 2004 was found to be adequate for design loads and overturning with a safety factor of more than 2.

IV. CONCLUSION AND RECOMMENDATIONS

No further design assessment is recommended.

Appendix A- Assessment Report

Section	1	2	3	4	5
Length (ft)	12.84	52.75	54.00	54.56	26.58
Number of Sides	18	18	18	18	18
Thickness (in)	0.1875	0.2500	0.3125	0.3750	0.4375
Lap Splice (ft)	3.42	4.75	6.00	6.56	
Top Dia (in)	24.0000	25.2757	35.0120	44.4714	53.6567
Bot Dia (in)	26.2500	36.5250	46.3570	55.7650	64.7500
Grade			A572-65		
Weight (lb)	648.4	4365.6	7358.1	10992.6	7380.7

30745.5

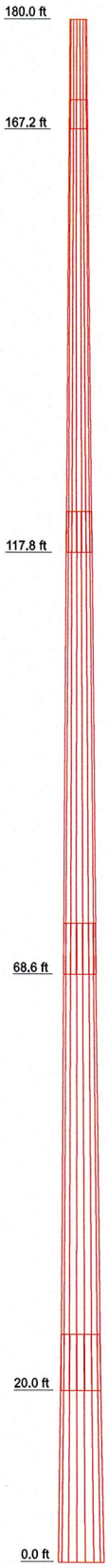

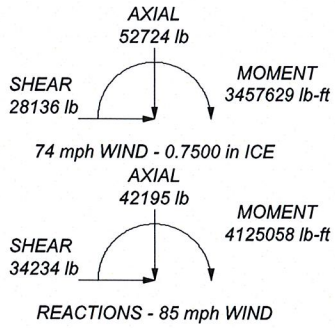

DESIGNED APPURTENANCE LOADING

TYPE	ELEVATION	TYPE	ELEVATION
(6) EMS RR90-17-02DP (ATI)	180 - 177.75	(9) DR65-19-00DPQ (T-MOBILE)	150 - 148
(3) 776QNB120EXM (ATI)	180 - 177.75	(12) Decibel DB844H80 (Nextel)	139 - 137
(3) RFS APX16DWV-16DWVS-A20 (T-MOBILE)	153 - 150	(12) Decibel DB983H65 (Sprint)	130 - 128
		(12) Decibel DB846H90-SX (Verizon)	119 - 117

MATERIAL STRENGTH

GRADE	Fy	Fu	GRADE	Fy	Fu
A572-65	65 ksi	80 ksi			

TOWER DESIGN NOTES

1. Tower is located in New Haven County, Connecticut.
2. Tower designed for a 85 mph basic wind in accordance with the TIA/EIA-222-F Standard.
3. Tower is also designed for a 74 mph basic wind with 0.75 in ice.
4. Deflections are based upon a 60 mph wind.
5. Weld together tower sections have flange connections.
6. Connections use galvanized A325 bolts, nuts and locking devices. Installation per TIA/EIA-222 and AISC Specifications.
7. Tower members are "hot dipped" galvanized in accordance with ASTM A123 and ASTM A153 Standards.
8. Welds are fabricated with ER-70S-6 electrodes.

AJA Engineering
475 School Street, Suite #12
Marshfield, MA 02050
Phone: (781) 319-9812
FAX: (781) 319-1932
Professionalism From Every Angle

Job:	***CT11720A 180-ft Monopole Tower***		
Project:	***26 South Orange Center Rd. Oragne, CT 06477***		
Client: T-Mobile	Drawn by: Aboud Al-Zaim	App'd:	
Code: TIA/EIA-222-F	Date: 12/12/08	Scale: NTS	
Path: \\Ajaengeering-pc\active jobs-ibm\Active Jobs\STS\CT\Site CT 11720A\CT 11720A.erl		Dwg No. E-1	

Tower Input Data

There is a pole section.
This tower is designed using the TIA/EIA-222-F standard.
The following design criteria apply:

Tower is located in New Haven County, Connecticut.
Basic wind speed of 85 mph.
Nominal ice thickness of 0.7500 in.
Ice density of 56 pcf.
A wind speed of 74 mph is used in combination with ice.
Temperature drop of 50 °F.
Deflections calculated using a wind speed of 60 mph.
Weld together tower sections have flange connections..
Connections use galvanized A325 bolts, nuts and locking devices. Installation per TIA/EIA-222 and AISC Specifications..
Tower members are "hot dipped" galvanized in accordance with ASTM A123 and ASTM A153 Standards..
Welds are fabricated with ER-70S-6 electrodes..
A non-linear (P-delta) analysis was used.
Pressures are calculated at each section.
Stress ratio used in pole design is 1.333.
Local bending stresses due to climbing loads, feedline supports, and appurtenance mounts are not considered.

Options

Consider Moments - Legs
Consider Moments - Horizontals
Consider Moments - Diagonals
Use Moment Magnification
√ Use Code Stress Ratios
√ Use Code Safety Factors - Guys
Escalate Ice
Always Use Max Kz
Use Special Wind Profile
√ Include Bolts In Member Capacity
√ Leg Bolts Are At Top Of Section
√ Secondary Horizontal Braces Leg
Use Diamond Inner Bracing (4 Sided)
Add IBC .6D+W Combination

Distribute Leg Loads As Uniform
Assume Legs Pinned
√ Assume Rigid Index Plate
Use Clear Spans For Wind Area
Use Clear Spans Fo
√ Retension Guys To Initial Tension
Bypass Mast Stability Checks
√ Use Azimuth Dish Coefficients
√ Project Wind Area of Appurt.
√ Autocalc Torque Arm Areas
SR Cut Ends
Sort Capacity Reports By Component
√ Triangulate Diamond Inner Bracing

Treat Feedline Bundles As Cylinder
Use ASCE 10 X-Brace Ly Rules
Calculate Redundant Bracing Forces
Ignore Redundant Members in FEA
SR Leg Bolts Resist Compression
√ All Leg Panels Have Same Allowable
Offset Girt At Foundation
Consider Feedline Torque
Include Angle Block Shear Check

Poles

Include Shear-Torsion Interaction
Always Use Sub-Critical Flow
Use Top Mounted Sockets

Tapered Pole Section Geometry

Section	Elevation ft	Section Length ft	Splice Length ft	Number of Sides	Top Diameter in	Bottom Diameter in	Wall Thickness in	Bend Radius in	Pole Grade
L1	180.00-167.16	12.84	3.42	18	24.0000	26.2500	0.1875	0.7500	A572-65 (65 ksi)
L2	167.16-117.83	52.75	4.75	18	25.2757	36.5250	0.2500	1.0000	A572-65 (65 ksi)
L3	117.83-68.58	54.00	6.00	18	35.0120	46.3570	0.3125	1.2500	A572-65

Section	Elevation ft	Section Length ft	Splice Length ft	Number of Sides	Top Diameter in	Bottom Diameter in	Wall Thickness in	Bend Radius in	Pole Grade
L4	68.58-20.02	54.56	6.56	18	44.4714	55.7650	0.3750	1.5000	(65 ksi) A572-65
L5	20.02-0.00	26.58	18	53.6567	64.7500	0.4375	1.7500	A572-65	(65 ksi) (65 ksi)

Tapered Pole Properties

Section	Tip Dia. in	Area in^2	I in^4	r in	C in	I/C in^3	J in^4	It/Q in^2	w in	w/t
L1	24.3702	14.1714	1015.2211	8.4534	12.1920	83.2694	2031.7780	7.0871	3.8940	20.768
26.6549	15.5104	1331.0484	9.2522	13.3350	99.8162	2663.8483	7.7567	4.2900	22.88	
L2	26.4062	19.8579	1571.2422	8.8841	12.8401	122.3704	3144.5519	9.9308	4.0085	16.034
37.0885	28.7842	4785.2722	12.8776	18.5547	257.9008	9576.8409	14.3948	5.9884	23.954	
L3	36.5655	34.4176	5235.5845	12.3183	17.7861	294.3636	10478.0580	17.2121	5.6121	17.959
47.0721	45.6704	12232.8508	16.3458	23.5494	519.4559	24481.7979	22.8395	7.6088	24.348	
L4	46.4186	52.4858	12893.9641	15.6542	22.5915	570.7442	25804.8945	26.2479	7.1670	19.112
56.6253	65.9279	25554.6382	19.6635	28.3286	902.0785	51142.9018	32.9702	9.1546	24.412	
L5	57.2656	73.9015	26443.9725	18.8928	27.2576	970.1509	52922.7406	36.9578	8.6736	19.825
65.7489	89.3059	46666.8628	22.8309	32.8930	1418.7475	93395.1311	44.6615	10.6260	24.288	

Tower Elevation ft	Gusset Area (per face) ft^2	Gusset Thickness in	Gusset Grade	Adjust. Factor A_f	Adjust. Factor A_r	Weight Mult.	Double Angle Stitch Bolt Spacing Diagonals in	Double Angle Stitch Bolt Spacing Horizontals in
L1 180.00-167.16				1	1	1		
L2 167.16-117.83				1	1	1		
L3 117.83-68.58				1	1	1		
L4 68.58-20.02				1	1	1		
L5 20.02-0.00				1	1	1		

Feed Line/Linear Appurtenances - Entered As Area

Description	Face or Leg	Allow Shield	Component Type	Placement ft	Total Number	C	$_AA_A$ ft^2/ft	Weight plf
VXL7-50 (1-5/8 FOAM) (AT&T)	A	No	Inside Pole	177.50 - 0.00	24	No Ice	0.00	0.75
						1/2" Ice	0.00	0.75
						1" Ice	0.00	0.75
LDF4RN-50A (1/2 FOAM) (AT&T)	A	No	Inside Pole	177.50 - 0.00	3	No Ice	0.00	0.15
						1/2" Ice	0.00	0.15
						1" Ice	0.00	0.15
VXL7-50 (1-5/8 FOAM) (T-MOBILE)	A	No	Inside Pole	148.00 - 0.00	24	No Ice	0.00	0.75
						1/2" Ice	0.00	0.75
						1" Ice	0.00	0.75
VXL7-50 (1-5/8 FOAM) (NEXTEL)	A	No	Inside Pole	137.00 - 0.00	12	No Ice	0.00	0.75
						1/2" Ice	0.00	0.75
						1" Ice	0.00	0.75

Description	Face or Leg	Allow Shield	Component Type	Placement ft	Total Number	C	$_AA_A$ ft²/ft	Weight plf
VXL7-50 (1-5/8 FOAM) (SPRINT)	A	No	Inside Pole	128.00 - 0.00	12	No Ice	0.00	0.75
						1/2" Ice	0.00	0.75
						1" Ice	0.00	0.75
VXL7-50 (1-5/8 FOAM) (VERIZON)	A	No	Inside Pole	117.00 - 0.00	12	No Ice	0.00	0.75
						1/2" Ice	0.00	0.75
						1" Ice	0.00	0.75
VXL7-50 (1-5/8 FOAM) (T-MOBILE)	A	No	Inside Pole	150.00 - 0.00	6	No Ice	0.00	0.75
						1/2" Ice	0.00	0.75
						1" Ice	0.00	0.75

Feed Line/Linear Appurtenances Section Areas

Tower Section	Tower Elevation ft	Face	A_R ft²	A_F ft²	C_AA_A In Face ft²	C_AA_A Out Face ft²	Weight lb
L1	180.00-167.16	A	0.000	0.000	0.000	0.000	190.77
		B	0.000	0.000	0.000	0.000	0.00
		C	0.000	0.000	0.000	0.000	0.00
L2	167.16-117.83	A	0.000	0.000	0.000	0.000	1862.02
		B	0.000	0.000	0.000	0.000	0.00
		C	0.000	0.000	0.000	0.000	0.00
L3	117.83-68.58	A	0.000	0.000	0.000	0.000	3339.07
		B	0.000	0.000	0.000	0.000	0.00
		C	0.000	0.000	0.000	0.000	0.00
L4	68.58-20.02	A	0.000	0.000	0.000	0.000	3299.82
		B	0.000	0.000	0.000	0.000	0.00
		C	0.000	0.000	0.000	0.000	0.00
L5	20.02-0.00	A	0.000	0.000	0.000	0.000	1360.19
		B	0.000	0.000	0.000	0.000	0.00
		C	0.000	0.000	0.000	0.000	0.00

Feed Line/Linear Appurtenances Section Areas - With Ice

Tower Section	Tower Elevation ft	Face or Leg	Ice Thickness in	A_R ft²	A_F ft²	C_AA_A In Face ft²	C_AA_A Out Face ft²	Weight lb
L1	180.00-167.16	A	0.750	0.000	0.000	0.000	0.000	190.77
		B		0.000	0.000	0.000	0.000	0.00
		C		0.000	0.000	0.000	0.000	0.00
L2	167.16-117.83	A	0.750	0.000	0.000	0.000	0.000	1862.02
		B		0.000	0.000	0.000	0.000	0.00
		C		0.000	0.000	0.000	0.000	0.00
L3	117.83-68.58	A	0.750	0.000	0.000	0.000	0.000	3339.07
		B		0.000	0.000	0.000	0.000	0.00
		C		0.000	0.000	0.000	0.000	0.00
L4	68.58-20.02	A	0.750	0.000	0.000	0.000	0.000	3299.82
		B		0.000	0.000	0.000	0.000	0.00
		C		0.000	0.000	0.000	0.000	0.00
L5	20.02-0.00	A	0.750	0.000	0.000	0.000	0.000	1360.19
		B		0.000	0.000	0.000	0.000	0.00
		C		0.000	0.000	0.000	0.000	0.00

Discrete Tower Loads

Description	Face or Leg	Offset Type	Offsets: Horz Lateral Vert ft ft ft	Azimuth Adjustment °	Placement ft	C	$_AA_A$ Front ft^2	C_AA_A Side ft^2	Weight lb
(6) EMS RR90-17-02DP (AT&T)	A	None		0.0000	180.00 - 177.75	No Ice	4.36	4.36	18.00
						1/2" Ice	4.99	4.99	39.00
						1" Ice	5.62	5.62	60.00
(3) 776QNB120EXM (AT&T)	A	None		0.0000	180.00 - 177.75	No Ice	25.69	5.58	110.00
						1/2" Ice	26.40	6.03	225.85
						1" Ice	27.12	6.49	349.43
(9) DR65-19-00DPQ (T-MOBILE)	A	None		0.0000	150.00 - 148.00	No Ice	8.40	3.53	32.00
						1/2" Ice	8.95	3.97	73.77
						1" Ice	9.51	4.41	121.44
(12) Decibel DB844H80 (Nextel)	A	None		0.0000	139.00 - 137.00	No Ice	2.87	2.87	10.00
						1/2" Ice	3.33	3.33	34.00
						1" Ice	3.79	3.79	58.00
(12) Decibel DB983H65 (Sprint)	A	None		0.0000	130.00 - 128.00	No Ice	5.07	5.07	12.00
						1/2" Ice	5.78	5.78	36.00
						1" Ice	6.49	6.49	60.00
(12) Decibel DB846H90-SX (Verizon)	A	None		0.0000	119.00 - 117.00	No Ice	4.70	4.70	15.00
						1/2" Ice	5.37	5.37	51.00
						1" Ice	6.04	6.04	87.00
(3) RFS APX16DWV-16DWVS-A20 (T-MOBILE)	A	None		0.0000	153.00 - 150.00	No Ice	6.52	1.72	40.70
						1/2" Ice	6.70	1.85	83.58
						1" Ice	6.88	1.98	126.47

Tower Pressures - No Ice

$G_H = 1.690$

Section Elevation ft	z ft	K_Z	q_z psf	A_G ft^2	Face	A_F ft^2	A_R ft^2	A_{leg} ft^2	Leg % %	C_AA_A In Face ft^2	C_AA_A Out Face ft^2
L1	173.48	1.607	30	26.884	A	0.000	26.884	26.884	100.00	0.000	0.000
180.00-167.16					B	0.000	26.884		100.00	0.000	0.000
					C	0.000	26.884		100.00	0.000	0.000
L2	141.42	1.516	28	128.525	A	0.000	128.525	128.525	100.00	0.000	0.000
167.16-117.83					B	0.000	128.525		100.00	0.000	0.000
					C	0.000	128.525		100.00	0.000	0.000
L3	92.64	1.343	25	169.024	A	0.000	169.024	169.024	100.00	0.000	0.000
117.83-68.58					B	0.000	169.024		100.00	0.000	0.000
					C	0.000	169.024		100.00	0.000	0.000
L4 68.58-20.02	44.42	1.089	20	205.335	A	0.000	205.335	205.335	100.00	0.000	0.000
					B	0.000	205.335		100.00	0.000	0.000
					C	0.000	205.335		100.00	0.000	0.000
L5 20.02-0.00	9.78	1	18	101.043	A	0.000	101.043	101.043	100.00	0.000	0.000
					B	0.000	101.043		100.00	0.000	0.000
					C	0.000	101.043		100.00	0.000	0.000

Tower Pressure - With Ice

$G_H = 1.690$

Section Elevation ft	z ft	K_Z	q_z psf	t_Z in	A_G ft²	Face	A_F ft²	A_R ft²	A_{leg} ft²	Leg %	C_AA_A In Face ft²	C_AA_A Out Face ft²
L1	173.48	1.607	22	0.7500	28.489	A	0.000	28.489	28.489	100.00	0.000	0.000
180.00-167.16						B	0.000	28.489		100.00	0.000	0.000
						C	0.000	28.489		100.00	0.000	0.000
L2	141.42	1.516	21	0.7500	134.692	A	0.000	134.692	134.692	100.00	0.000	0.000
167.16-117.83						B	0.000	134.692		100.00	0.000	0.000
						C	0.000	134.692		100.00	0.000	0.000
L3 117.83-68.58	92.64	1.343	19	0.7500	175.180	A	0.000	175.180	175.180	100.00	0.000	0.000
						B	0.000	175.180		100.00	0.000	0.000
						C	0.000	175.180		100.00	0.000	0.000
L4 68.58-20.02	44.42	1.089	15	0.7500	211.405	A	0.000	211.405	211.405	100.00	0.000	0.000
						B	0.000	211.405		100.00	0.000	0.000
						C	0.000	211.405		100.00	0.000	0.000
L5 20.02-0.00	9.78	1	14	0.7500	103.545	A	0.000	103.545	103.545	100.00	0.000	0.000
						B	0.000	103.545		100.00	0.000	0.000
						C	0.000	103.545		100.00	0.000	0.000

Tower Pressure - Service

$G_H = 1.690$

Section Elevation ft	z ft	K_Z	q_z psf	A_G ft²	Face	A_F ft²	A_R ft²	A_{leg} ft²	Leg %	C_AA_A In Face ft²	C_AA_A Out Face ft²
L1	173.48	1.607	15	26.884	A	0.000	26.884	26.884	100.00	0.000	0.000
180.00-167.16					B	0.000	26.884		100.00	0.000	0.000
					C	0.000	26.884		100.00	0.000	0.000
L2	141.42	1.516	14	128.525	A	0.000	128.525	128.525	100.00	0.000	0.000
167.16-117.83					B	0.000	128.525		100.00	0.000	0.000
					C	0.000	128.525		100.00	0.000	0.000
L3	92.64	1.343	12	169.024	A	0.000	169.024	169.024	100.00	0.000	0.000
117.83-68.58					B	0.000	169.024		100.00	0.000	0.000
					C	0.000	169.024		100.00	0.000	0.000
L4 68.58-20.02	44.42	1.089	10	205.335	A	0.000	205.335	205.335	100.00	0.000	0.000
					B	0.000	205.335		100.00	0.000	0.000
					C	0.000	205.335		100.00	0.000	0.000
L5 20.02-0.00	9.78	1	9	101.043	A	0.000	101.043	101.043	100.00	0.000	0.000
					B	0.000	101.043		100.00	0.000	0.000
					C	0.000	101.043		100.00	0.000	0.000

Tower Forces - No Ice - Wind Normal To Face

Section Elevation ft	Add Weight lb	Self Weight lb	Face	e	C_F	R_R	D_F	D_R	A_E ft²	F lb	w plf	Ctrl. Face
L1	190.77	648.43	A	1	0.65	1	1	1	26.884	877.60	68.35	C

Section Elevation ft	Add Weight lb	Self Weight lb	Face	e	C_F	R_R	D_F	D_R	A_E ft^2	F lb	w plf	Ctrl. Face
180.00-167.16			B	1	0.65	1	1	1	26.884			
			C	1	0.65	1	1	1	26.884			
L2	1862.02	4365.56	A	1	0.65	1	1	1	128.525	3952.15	80.12	C
167.16-117.83			B	1	0.65	1	1	1	128.525			
			C	1	0.65	1	1	1	128.525			
L3	3339.07	7358.11	A	1	0.65	1	1	1	169.024	4597.24	93.34	C
117.83-68.58			B	1	0.65	1	1	1	169.024			
			C	1	0.65	1	1	1	169.024			
L4	3299.82	10992.63	A	1	0.65	1	1	1	205.335	4498.05	92.62	C
68.58-20.02			B	1	0.65	1	1	1	205.335			
			C	1	0.65	1	1	1	205.335			
L5 20.02-0.00	1360.19	7380.75	A	1	0.65	1	1	1	101.043	2052.98	102.56	C
			B	1	0.65	1	1	1	101.043			
			C	1	0.65	1	1	1	101.043			
Sum Weight:	10051.88	30745.49			OTM	1356912.4			7 lb-ft	15978.01		

Tower Forces - No Ice - Wind 60 To Face

Section Elevation ft	Add Weight lb	Self Weight lb	Face	e	C_F	R_R	D_F	D_R	A_E ft^2	F lb	w plf	Ctrl. Face
L1	190.77	648.43	A	1	0.65	1	1	1	26.884	877.60	68.35	C
180.00-167.16			B	1	0.65	1	1	1	26.884			
			C	1	0.65	1	1	1	26.884			
L2	1862.02	4365.56	A	1	0.65	1	1	1	128.525	3952.15	80.12	C
167.16-117.83			B	1	0.65	1	1	1	128.525			
			C	1	0.65	1	1	1	128.525			
L3	3339.07	7358.11	A	1	0.65	1	1	1	169.024	4597.24	93.34	C
117.83-68.58			B	1	0.65	1	1	1	169.024			
			C	1	0.65	1	1	1	169.024			
L4	3299.82	10992.63	A	1	0.65	1	1	1	205.335	4498.05	92.62	C
68.58-20.02			B	1	0.65	1	1	1	205.335			
			C	1	0.65	1	1	1	205.335			
L5 20.02-0.00	1360.19	7380.75	A	1	0.65	1	1	1	101.043	2052.98	102.56	C
			B	1	0.65	1	1	1	101.043			
			C	1	0.65	1	1	1	101.043			
Sum Weight:	10051.88	30745.49			OTM	1356912.4			7 lb-ft	15978.01		

Tower Forces - No Ice - Wind 90 To Face

Section Elevation ft	Add Weight lb	Self Weight lb	Face	e	C_F	R_R	D_F	D_R	A_E ft^2	F lb	w plf	Ctrl. Face
L1	190.77	648.43	A	1	0.65	1	1	1	26.884	877.60	68.35	C
180.00-167.16			B	1	0.65	1	1	1	26.884			
			C	1	0.65	1	1	1	26.884			
L2	1862.02	4365.56	A	1	0.65	1	1	1	128.525	3952.15	80.12	C

Section Elevation ft	Add Weight lb	Self Weight lb	Face	e	C_F	R_R	D_F	D_R	A_E ft^2	F lb	w plf	Ctrl. Face
167.16-117.83			B	1	0.65	1	1	1	128.525			
			C	1	0.65	1	1	1	128.525			
L3	3339.07	7358.11	A	1	0.65	1	1	1	169.024	4597.24	93.34	C
117.83-68.58			B	1	0.65	1	1	1	169.024			
			C	1	0.65	1	1	1	169.024			
L4	3299.82	10992.63	A	1	0.65	1	1	1	205.335	4498.05	92.62	C
68.58-20.02			B	1	0.65	1	1	1	205.335			
			C	1	0.65	1	1	1	205.335			
L5 20.02-0.00	1360.19	7380.75	A	1	0.65	1	1	1	101.043	2052.98	102.56	C
			B	1	0.65	1	1	1	101.043			
			C	1	0.65	1	1	1	101.043			
Sum Weight:	10051.88	30745.49			OTM	1356912.4			7 lb-ft	15978.01		

Tower Forces - With Ice - Wind Normal To Face

Section Elevation ft	Add Weight lb	Self Weight lb	Face	e	C_F	R_R	D_F	D_R	A_E ft^2	F lb	w plf	Ctrl. Face
L1	190.77	955.99	A	1	0.65	1	1	1	28.489	697.49	54.32	C
180.00-167.16			B	1	0.65	1	1	1	28.489			
			C	1	0.65	1	1	1	28.489			
L2	1862.02	5827.60	A	1	0.65	1	1	1	134.692	3106.33	62.97	C
167.16-117.83			B	1	0.65	1	1	1	134.692			
			C	1	0.65	1	1	1	134.692			
L3	3339.07	9270.00	A	1	0.65	1	1	1	175.180	3573.52	72.56	C
117.83-68.58			B	1	0.65	1	1	1	175.180			
			C	1	0.65	1	1	1	175.180			
L4	3299.82	13307.42	A	1	0.65	1	1	1	211.405	3473.27	71.52	C
68.58-20.02			B	1	0.65	1	1	1	211.405			
			C	1	0.65	1	1	1	211.405			
L5 20.02-0.00	1360.19	8517.13	A	1	0.65	1	1	1	103.545	1577.86	78.82	C
			B	1	0.65	1	1	1	103.545			
			C	1	0.65	1	1	1	103.545			
Sum Weight:	10051.88	37878.14			OTM	1061050.0			7 lb-ft	12428.47		

Tower Forces - With Ice - Wind 60 To Face

Section Elevation ft	Add Weight lb	Self Weight lb	Face	e	C_F	R_R	D_F	D_R	A_E ft^2	F lb	w plf	Ctrl. Face
L1	190.77	955.99	A	1	0.65	1	1	1	28.489	697.49	54.32	C
180.00-167.16			B	1	0.65	1	1	1	28.489			
			C	1	0.65	1	1	1	28.489			
L2	1862.02	5827.60	A	1	0.65	1	1	1	134.692	3106.33	62.97	C
167.16-117.83			B	1	0.65	1	1	1	134.692			
			C	1	0.65	1	1	1	134.692			
L3	3339.07	9270.00	A	1	0.65	1	1	1	175.180	3573.52	72.56	C

Section Elevation ft	Add Weight lb	Self Weight lb	Face	e	C_F	R_R	D_F	D_R	A_E ft^2	F lb	w plf	Ctrl. Face
117.83-68.58			B	1	0.65	1	1	1	175.180			
			C	1	0.65	1	1	1	175.180			
L4	3299.82	13307.42	A	1	0.65	1	1	1	211.405	3473.27	71.52	C
68.58-20.02			B	1	0.65	1	1	1	211.405			
			C	1	0.65	1	1	1	211.405			
L5 20.02-0.00	1360.19	8517.13	A	1	0.65	1	1	1	103.545	1577.86	78.82	C
			B	1	0.65	1	1	1	103.545			
			C	1	0.65	1	1	1	103.545			
Sum Weight:	10051.88	37878.14			OTM	1061050.0			7 lb-ft	12428.47		

Tower Forces - With Ice - Wind 90 To Face

Section Elevation ft	Add Weight lb	Self Weight lb	Face	e	C_F	R_R	D_F	D_R	A_E ft^2	F lb	w plf	Ctrl. Face
L1	190.77	955.99	A	1	0.65	1	1	1	28.489	697.49	54.32	C
180.00-167.16			B	1	0.65	1	1	1	28.489			
			C	1	0.65	1	1	1	28.489			
L2	1862.02	5827.60	A	1	0.65	1	1	1	134.692	3106.33	62.97	C
167.16-117.83			B	1	0.65	1	1	1	134.692			
			C	1	0.65	1	1	1	134.692			
L3	3339.07	9270.00	A	1	0.65	1	1	1	175.180	3573.52	72.56	C
117.83-68.58			B	1	0.65	1	1	1	175.180			
			C	1	0.65	1	1	1	175.180			
L4	3299.82	13307.42	A	1	0.65	1	1	1	211.405	3473.27	71.52	C
68.58-20.02			B	1	0.65	1	1	1	211.405			
			C	1	0.65	1	1	1	211.405			
L5 20.02-0.00	1360.19	8517.13	A	1	0.65	1	1	1	103.545	1577.86	78.82	C
			B	1	0.65	1	1	1	103.545			
			C	1	0.65	1	1	1	103.545			
Sum Weight:	10051.88	37878.14			OTM	1061050.0			7 lb-ft	12428.47		

Tower Forces - Service - Wind Normal To Face

Section Elevation ft	Add Weight lb	Self Weight lb	Face	e	C_F	R_R	D_F	D_R	A_E ft^2	F lb	w plf	Ctrl. Face
L1	190.77	648.43	A	1	0.65	1	1	1	26.884	437.28	34.06	C
180.00-167.16			B	1	0.65	1	1	1	26.884			
			C	1	0.65	1	1	1	26.884			
L2	1862.02	4365.56	A	1	0.65	1	1	1	128.525	1969.24	39.92	C
167.16-117.83			B	1	0.65	1	1	1	128.525			
			C	1	0.65	1	1	1	128.525			
L3	3339.07	7358.11	A	1	0.65	1	1	1	169.024	2290.67	46.51	C
117.83-68.58			B	1	0.65	1	1	1	169.024			
			C	1	0.65	1	1	1	169.024			
L4	3299.82	10992.63	A	1	0.65	1	1	1	205.335	2241.24	46.15	C

Section Elevation ft	Add Weight lb	Self Weight lb	Face	e	C_F	R_R	D_F	D_R	A_E ft^2	F lb	w plf	Ctrl. Face
68.58-20.02			B	1	0.65	1	1	1	205.335			
			C	1	0.65	1	1	1	205.335			
L5 20.02-0.00	1360.19	7380.75	A	1	0.65	1	1	1	101.043	1022.94	51.10	C
			B	1	0.65	1	1	1	101.043			
			C	1	0.65	1	1	1	101.043			
Sum Weight:	10051.88	30745.49			OTM	676108.63			lb-ft	7961.36		

Tower Forces - Service - Wind 60 To Face

Section Elevation ft	Add Weight lb	Self Weight lb	Face	e	C_F	R_R	D_F	D_R	A_E ft^2	F lb	w plf	Ctrl. Face
L1	190.77	648.43	A	1	0.65	1	1	1	26.884	437.28	34.06	C
180.00-167.16			B	1	0.65	1	1	1	26.884			
			C	1	0.65	1	1	1	26.884			
L2	1862.02	4365.56	A	1	0.65	1	1	1	128.525	1969.24	39.92	C
167.16-117.83			B	1	0.65	1	1	1	128.525			
			C	1	0.65	1	1	1	128.525			
L3	3339.07	7358.11	A	1	0.65	1	1	1	169.024	2290.67	46.51	C
117.83-68.58			B	1	0.65	1	1	1	169.024			
			C	1	0.65	1	1	1	169.024			
L4	3299.82	10992.63	A	1	0.65	1	1	1	205.335	2241.24	46.15	C
68.58-20.02			B	1	0.65	1	1	1	205.335			
			C	1	0.65	1	1	1	205.335			
L5 20.02-0.00	1360.19	7380.75	A	1	0.65	1	1	1	101.043	1022.94	51.10	C
			B	1	0.65	1	1	1	101.043			
			C	1	0.65	1	1	1	101.043			
Sum Weight:	10051.88	30745.49			OTM	676108.63			lb-ft	7961.36		

Tower Forces - Service - Wind 90 To Face

Section Elevation ft	Add Weight lb	Self Weight lb	Face	e	C_F	R_R	D_F	D_R	A_E ft^2	F lb	w plf	Ctrl. Face
L1	190.77	648.43	A	1	0.65	1	1	1	26.884	437.28	34.06	C
180.00-167.16			B	1	0.65	1	1	1	26.884			
			C	1	0.65	1	1	1	26.884			
L2	1862.02	4365.56	A	1	0.65	1	1	1	128.525	1969.24	39.92	C
167.16-117.83			B	1	0.65	1	1	1	128.525			
			C	1	0.65	1	1	1	128.525			
L3	3339.07	7358.11	A	1	0.65	1	1	1	169.024	2290.67	46.51	C
117.83-68.58			B	1	0.65	1	1	1	169.024			
			C	1	0.65	1	1	1	169.024			
L4	3299.82	10992.63	A	1	0.65	1	1	1	205.335	2241.24	46.15	C
68.58-20.02			B	1	0.65	1	1	1	205.335			
			C	1	0.65	1	1	1	205.335			
L5 20.02-0.00	1360.19	7380.75	A	1	0.65	1	1	1	101.043	1022.94	51.10	C

Section Elevation ft	Add Weight lb	Self Weight lb	Face	e	C_F	R_R	D_F	D_R	A_E ft^2	F lb	w plf	Ctrl. Face
			B	1	0.65	1	1	1	101.043			
			C	1	0.65	1	1	1	101.043			
Sum Weight:	10051.88	30745.49			OTM	676108.63			lb-ft	7961.36		

Force Totals

Load Case	Vertical Forces lb	Sum of Forces X lb	Sum of Forces Z lb	Sum of Overturning Moments, M_x lb-ft	Sum of Overturning Moments, M_z lb-ft	Sum of Torques lb-ft
Leg Weight	30745.49					
Bracing Weight	0.00					
Total Member Self-Weight	30745.49			0.00	0.00	
Total Weight	42089.46			0.00	0.00	
Wind 0 deg - No Ice		0.00	-34237.29	-4037516.33	0.00	0.00
Wind 90 deg - No Ice		34237.29	0.00	0.00	-4037516.33	0.00
Wind 180 deg - No Ice		0.00	34237.29	4037516.33	0.00	0.00
Member Ice	7132.66					
Total Weight Ice	52239.49			0.00	0.00	
Wind 0 deg - Ice		0.00	-28136.99	-3349690.33	0.00	0.00
Wind 90 deg - Ice		28136.99	0.00	0.00	-3349690.33	0.00
Wind 180 deg - Ice		0.00	28136.99	3349690.33	0.00	0.00
Total Weight	42089.46			0.00	0.00	
Wind 0 deg - Service		0.00	-17059.41	-2011772.84	0.00	0.00
Wind 90 deg - Service		17059.41	0.00	0.00	-2011772.84	0.00
Wind 180 deg - Service		0.00	17059.41	2011772.84	0.00	0.00

Load Combinations

Comb. No.	Description
1	Dead Only
2	Dead+Wind 0 deg - No Ice
3	Dead+Wind 90 deg - No Ice
4	Dead+Wind 180 deg - No Ice
5	Dead+Ice+Temp
6	Dead+Wind 0 deg+Ice+Temp
7	Dead+Wind 90 deg+Ice+Temp
8	Dead+Wind 180 deg+Ice+Temp
9	Dead+Wind 0 deg - Service
10	Dead+Wind 90 deg - Service
11	Dead+Wind 180 deg - Service

Maximum Member Forces

Section No.	Elevation ft	Component Type	Condition	Gov. Load Comb.	Force lb	Major Axis Moment lb-ft	Minor Axis Moment lb-ft

Section No.	Elevation ft	Component Type	Condition	Gov. Load Comb.	Force lb	Major Axis Moment lb-ft	Minor Axis Moment lb-ft
L1	180 - 167.16	Pole	Max Tension	3	0.04	0.00	0.00
			Max. Compression	5	-1992.91	0.00	0.00
			Max. Mx	3	-479.29	-46748.51	0.00
			Max. My	2	-479.29	0.00	46748.51
			Max. Vy	3	5938.62	-46748.51	0.00
			Max. Vx	2	-5938.62	0.00	46748.51
L2	167.16 - 117.83	Pole	Max Tension	1	0.00	0.00	0.00
			Max. Compression	5	-11518.14	0.00	0.00
			Max. Mx	3	-6079.45	-596457.70	0.00
			Max. My	2	-6079.45	0.00	596457.70
			Max. Vy	3	19165.82	-596457.70	0.00
			Max. Vx	2	-19165.82	0.00	596457.70
L3	117.83 - 68.58	Pole	Max Tension	1	0.00	0.00	0.00
			Max. Compression	5	-24654.69	0.00	0.00
			Max. Mx	3	-16616.69	-1804737.49	0.00
			Max. My	2	-16616.69	0.00	1804737.49
			Max. Vy	3	27853.20	-1804737.49	0.00
			Max. Vx	2	-27853.20	0.00	1804737.49
L4	68.58 - 20.0175	Pole	Max Tension	1	0.00	0.00	0.00
			Max. Compression	5	-40607.24	0.00	0.00
			Max. Mx	3	-31148.27	-3245655.30	0.00
			Max. My	2	-31148.27	0.00	3245655.30
			Max. Vy	3	31980.96	-3245655.30	0.00
			Max. Vx	2	-31980.96	0.00	3245655.30
L5	20.0175 - 0	Pole	Max Tension	1	0.00	0.00	0.00
			Max. Compression	5	-52723.87	0.00	0.00
			Max. Mx	3	-42186.58	-4125057.79	0.00
			Max. My	2	-42186.58	0.00	4125057.79
			Max. Vy	3	34243.68	-4125057.79	0.00
			Max. Vx	2	-34243.68	0.00	4125057.79

Compression Checks

Pole Design Data

Section No.	Elevation ft	Size	L ft	L_u ft	Kl/r	F_a ksi	A in^2	Actual P lb	Allow. P_a lb	Ratio $\frac{P}{P_a}$
L1	180 - 167.16 (1)	TP26.25x24x0.1875	12.84	180.00	239.0	2.615	15.1538	-1601.71	39632.10	0.040
L2	167.16 - 117.83 (2)	TP36.525x25.2757x0.25	52.75	180.00	172.6	5.016	27.9804	-6079.45	140336.00	0.043
L3	117.83 - 68.58 (3)	TP46.357x35.012x0.3125	54.00	180.00	135.9	8.090	44.4201	-16616.70	359356.00	0.046
L4	68.58 - 20.0175 (4)	TP55.765x44.4714x0.375	54.56	180.00	112.6	11.776	64.3112	-31148.30	757327.00	0.041
L5	20.0175 - 0 (5)	TP64.75x53.6567x0.4375	26.58	180.00	108.7	12.631	77.7048	-35010.60	981462.00	0.036

Section No.	Elevation ft	Size	L ft	L_u ft	Kl/r	F_a ksi	A in^2	Actual P lb	Allow. P_a lb	Ratio $\frac{P}{P_a}$

Pole Bending Design Data

Section No.	Elevation ft	Size	Actual M_x lb-ft	Actual f_{bx} ksi	Allow. F_{bx} ksi	Ratio $\frac{f_{bx}}{F_{bx}}$	Actual M_y lb-ft	Actual f_{by} ksi	Allow. F_{by} ksi	Ratio $\frac{f_{by}}{F_{by}}$
L1	180 - 167.16 (1)	TP26.25x24x0.1875	38660.08	-4.870	39.000	0.125	0.00	0.000	39.000	0.000
L2	167.16 - 117.83 (2)	TP36.525x25.2757x0.25	596457.50	-29.376	39.000	0.753	0.00	0.000	39.000	0.000
L3	117.83 - 68.58 (3)	TP46.357x35.012x0.3125	1804741.67	-44.080	39.000	1.130	0.00	0.000	39.000	0.000
L4	68.58 - 20.0175 (4)	TP55.765x44.4714x0.375	3245658.33	-45.382	39.000	1.164	0.00	0.000	39.000	0.000
L5	20.0175 - 0 (5)	TP64.75x53.6567x0.4375	3457258.33	-38.664	39.000	0.991	0.00	0.000	39.000	0.000

Pole Interaction Design Data

Section No.	Elevation ft	Size	Ratio $\frac{P}{P_a}$	Ratio $\frac{f_{bx}}{F_{bx}}$	Ratio $\frac{f_{by}}{F_{by}}$	Comb. Stress Ratio	Allow. Stress Ratio	Criteria
L1	180 - 167.16 (1)	TP26.25x24x0.1875	0.040	0.125	0.000	0.165 ✓	1.333	H1-3 ✓
L2	167.16 - 117.83 (2)	TP36.525x25.2757x0.25	0.043	0.753	0.000	0.797 ✓	1.333	H1-3 ✓
L3	117.83 - 68.58 (3)	TP46.357x35.012x0.3125	0.046	1.130	0.000	1.176 ✓	1.333	H1-3 ✓
L4	68.58 - 20.0175 (4)	TP55.765x44.4714x0.375	0.041	1.164	0.000	1.205 ✓	1.333	H1-3 ✓
L5	20.0175 - 0 (5)	TP64.75x53.6567x0.4375	0.036	0.991	0.000	1.027 ✓	1.333	H1-3 ✓

Section Capacity Table

Section No.	Elevation ft	Component Type	Size	Critical Element	P lb	$SF*P_{allow}$ lb	% Capacity	Pass Fail
L1	180 - 167.16	Pole	TP26.25x24x0.1875	1	-1601.71	52829.59	12.4	Pass
L2	167.16 - 117.83	Pole	TP36.525x25.2757x0.25	2	-6079.45	187067.88	59.8	Pass
L3	117.83 - 68.58	Pole	TP46.357x35.012x0.3125	3	-16616.70	479021.53	88.3	Pass
L4	68.58 - 20.0175	Pole	TP55.765x44.4714x0.375	4	-31148.30	1009516.85	90.4	Pass
L5	20.0175 - 0	Pole	TP64.75x53.6567x0.4375	5	-35010.60	1308288.79	77.0	Pass
						Summary		
					Pole(L4)		90.4	Pass
					RATING =		**90.4**	**Pass**

AJA ENGINEERING
475 School Street, Suite # 12
Marshfield, MA 02050
781-319-9812
www.ajaengineering.com

SHEET NO. 1 OF 1
CALCULATED BY AJA DATE 12/2/08
CHECKED BY DATE
~~SCALE~~ CT1172eA

Foundation Assessment

Existing foundation is drilled shaft 8'-0" ø by 32'-6" in length

W.T. of existing foundation $= 3.14 \times (4)^2 \times 32.5 \times \frac{150}{1000}$

W.T. of ext. foundation = 245.1 K

Axial load = 52.72 K

Total ↓ load = 298 K $M_R = \frac{298 \times (8)^2}{2} = 9536$ 'K

Max Mom to be Resisted M = 4125.1 'K

F.S. overturning = 2.3 ∴ ok

The July 2004 Report attached as Appendix "C" analysised the foundation with the following loads

	2004	2008	% ↑
Mom	3888 'K	4125 'K	6%
Shear	33 K	34.23 K	3%
Axial	51 K	52.72 K	4%

∴ The footing is ok all load ↑ are less than 10%

Appendix B- Data Sheets

UMTS RFDS v2.0

Site ID	**CT11720A**	**Site Type**	Co-Location.
Address	26 So. Orange Center Rd, Orange, CT, 6477	**Latitude**	41.25556
		Longitude	-73.01091

TMO UMTS Engineer	Mlucey

GSM Impacted?	
Alpha	
Beta	
Gamma	
Delta	

History (approvals)	Date
RFDS	10/31/08
GSM RF Acceptance	

RFDS Revision	1

Site Leasing/Zoning	Preliminary Leasing	Preliminary Zoning
* # of Sectors	3	—
* # of Antennas	9	not specified
Antenna Model	none specified	—
Antenna Size	---	not specified
* # of TMA	not specified	—
* # of Feeders	not specified	not specified
Feeder Diameter	not specified	not specified
Leased area (sq ft)	225	not specified
* # of Cabinets	not specified	
Cabinet Model	Nortel S12000	—
Site Comments		

* Legend: Config under threshold | Config meets threshold | Config above threshold | Text / Not checked

GSM Information

Existing Configuration					Proposed Configuration			
Alpha	**Beta**	**Gamma**	**Delta**		**Alpha**	**Beta**	**Gamma**	**Delta**
150	150	150		**Ant. Height (ft)**	150	150	150	
YES	YES	YES		**RET deployed**	YES	YES	YES	
1 5/8"	1 5/8"	1 5/8"		**Feeder Type**	1 5/8"	1 5/8"	1 5/8"	
195	195	195		**Feeder Length**	195	195	195	
3	3	3		**# Current TRX**	3	3	3	
3	3	3		**# Forec. TRX**	3	3	3	
				# of Nortel HePA				
			S8000 outdoor	**Cabinet Type**	S8000 outdoor			
			2	**Cabinet #**	2			

UMTS Information

Existing Configuration					Proposed Configuration			
Alpha	**Beta**	**Gamma**	**Delta**		**Alpha**	**Beta**	**Gamma**	**Delta**
---	---	---	---	**Ant. Height (ft)**	150	150	150	
---	---	---	---	**RET deployed**	YES	YES	YES	
---	---	---	---	**Feeder Type**	1 5/8"	1 5/8"	1 5/8"	
---	---	---	---	**Feeder Length**	195	195	195	
			—	**Cabinet Type**	RBS 3106			
			—	**Cabinet #**	1			

UMTS RFDS v2.0

Site ID	CT11720A	Site Type	Co-Location.
Address	26 So. Orange Center Rd, Orange, CT, 6477	Latitude	41.25556
		Longitude	-73.01091

TMO UMTS Engineer	Mlucey

GSM Impacted?

Alpha	
Beta	
Gamma	
Delta	

History (approvals)	Date
RFDS	10/31/08
GSM RF Acceptance	

RFDS Revision	1

ALPHA

	Existing Configuration				Mount	Proposed Configuration			
	X	X	X			X		X	
Antenna Deployed	GSM					GSM		UMTS	
Ant. Type	Quad pole					Quad pole		Quad pole	
Ant. Model	APX16PV-16PVL					APX16PV-16PVL		BX16DWV-16DWVS-A	
Ant. Vendor	RFS					RFS		RFS	
Azimuth	0					0			
E-Tilt (sw)	- / - / -					- / - / -			
M-Tilt									
TMA #	1					1		1	
TMA Type	ddTMA 1.9 GHz					ddTMA 1.9 GHz		RFS - Twin AWS	
Used Feeders	4					4		2	

☐ GSM Lost Spatial Diversity

Req	OK	
		Add new Mount
		Relocate GSM antenna
		Swap GSM antenna
		Consolidate GSM feeders
X		Add Twin TMA
		Swap single TMA with twin TMA
		Add Booster
X		Add two new feeders for UMTS
		Reuse GSM feeders for UMTS

Comments

Full RET system to all antenna (both 2 and 3 G technogies) with this sector 1st in line.

BETA

	Existing Configuration				Mount	Proposed Configuration			
	X	X	X			X		X	
Antenna Deployed	GSM					GSM		UMTS	
Ant. Type	Quad pole					Quad pole		Quad pole	
Ant. Model	APX16PV-16PVL					APX16PV-16PVL		BX16DWV-16DWVS-A	
Ant. Vendor	RFS					RFS		RFS	
Azimuth	120					120			
E-Tilt (sw)	- / - / -					- / - / -			
M-Tilt									
TMA #	1					1		1	
TMA Type	ddTMA 1.9 GHz					ddTMA 1.9 GHz		RFS - Twin AWS	
Used Feeders	4					4		2	

☐ GSM Lost Spatial Diversity

Req	OK	
		Add new Mount
		Relocate GSM antenna
		Swap GSM antenna
		Consolidate GSM feeders
X		Add Twin TMA
		Swap single TMA with twin TMA
		Add Booster
X		Add two new feeders for UMTS
		Reuse GSM feeders for UMTS

Comments

UMTS RFDS v2.0

Site ID	CT11720A	Site Type	Co-Location.
Address	26 So. Orange Center Rd, Orange, CT, 6477	Latitude	41.25556
		Longitude	-73.01091

TMO UMTS Engineer	Mlucey

GSM Impacted?	
Alpha	
Beta	
Gamma	
Delta	

History (approvals)	Date
RFDS	10/31/08
GSM RF Acceptance	

RFDS Revision	1

GAMMA

	Existing Configuration				Proposed Configuration			
Mount	X	X	X		X		X	
Antenna Deployed	GSM				GSM		UMTS	
Ant. Type	Quad pole				Quad pole		Quad pole	
Ant. Model	APX16PV-16PVL				APX16PV-16PVL		PX16DWV-16DWVS-A	
Ant. Vendor	RFS				RFS		RFS	
Azimuth	240				240			
E-Tilt (sw)	- / - / -				- / - / -			
M-Tilt								
TMA #	1				1		1	
TMA Type	ddTMA 1.9 GHz				ddTMA 1.9 GHz		RFS - Twin AWS	
Used Feeders	4				4		2	

☐ GSM Lost Spatial Diversity

Req	OK	
		Add new Mount
		Relocate GSM antenna
		Swap GSM antenna
		Consolidate GSM feeders
X		Add Twin TMA
		Swap single TMA with twin TMA
		Add Booster
X		Add two new feeders for UMTS
		Reuse GSM feeders for UMTS

Comments

DELTA

	Existing Configuration				Proposed Configuration			
Mount								
Antenna Deployed								
Ant. Type								
Ant. Model								
Ant. Vendor								
Azimuth								
E-Tilt (sw)								
M-Tilt								
TMA #								
TMA Type								
Used Feeders								

☐ GSM Lost Spatial Diversity

Req	OK	
		Add new Mount
		Relocate GSM antenna
		Swap GSM antenna
		Consolidate GSM feeders
		Add Twin TMA
		Swap single TMA with twin TMA
		Add Booster
		Add two new feeders for UMTS
		Reuse GSM feeders for UMTS

Comments

Appendix C- Paul J. Ford and Company Tower Report

PAUL J. FORD AND COMPANY
STRUCTURAL ENGINEERS
250 East Broad Street • Suite 1500 • Columbus, Ohio 43215

Structural Analysis Report

PJF Project No.: **31205-0019 Rev. 1**

Structure: Existing 180-ft Monopole

Manufacturer: Rohn Industries
Location: Orange, CT
Site Number: CT-11-720A

Prepared For:

Omnipoint Communications, Inc.
100 Filley Street
Bloomfield, CT 06002
Attn: Charmaine Simpson

July 12, 2005

APPROVED
T-Mobile Site No: CT11720A
A & E Manager: D. O'Connor
Date: 7/12/05
Antenna Make: EMS Model No. DRU5-11-DQ
Antenna Quantities: 9 Rad Center Height: 148'
Coaxial Cable Number: 24 Cable No Upgrade
Comments Reviewed

STATE OF CONNECTICUT
KEVIN P. BAUMAN
No. 17881
LICENSED
PROFESSIONAL ENGINEER

7-12-05

Analyzed by:
Kurt J. Swarts, P.E.
Project Manager
kswarts@pjfweb.com

Reviewed by:
Kevin P. Bauman
Department Manager
kbauman@pjfweb.com

PAUL J. FORD AND COMPANY
STRUCTURAL ENGINEERS
250 East Broad Street • Suite 1500 • Columbus, Ohio 43215

Executive Summary

Design Standard:

Paul J. Ford and Company has analyzed the existing monopole in accordance with the Telecommunications Industry Association Standard TIA/EIA-222-F for the following *fastest mile* design wind velocities:

85 mph Basic Wind Velocity without ice
74 mph Basic Wind Velocity with 1/2" radial ice
50 mph (Operational) Basic Wind Velocity without ice

Antenna Loads:

The existing monopole was analyzed for the following antenna loading:

Status	Elevation	Description	Coax	Owner
Existing	178'	(6) EMS RR90-17-02DP (3) Decibel 776QNB120EXM 12' Low Profile Platform	(12) 1 5/8" (12) 1 5/8" + (3) 1/2"	AT&T
Proposed	148'	(9) EMS DR65-190XXDPQ + (6) PCS 1900 10' Low Profile Platform	(24) 1 5/8"	T-Mobile
Proposed	137'	(12) DB844H80 12' Low Profile Platform	(12) 1 5/8"	Nextel
Existing	128'	(12) Decibel DB980H65T2E 12' Low Profile Platform	(12) 1 5/8"	Sprint
Existing	117'	(12) Decibel DB844H90 12' Low Profile Platform	(12) 1 5/8"	Verizon

Results:

The monopole and foundation have sufficient capacity to support the above antenna loading while meeting the local minimum wind requirements. The existing monopole is loaded to 67% of its allowable capacity

PAUL J. FORD AND COMPANY
STRUCTURAL ENGINEERS
250 East Broad Street • Suite 1500 • Columbus, Ohio 43215

Project Description:

Paul J. Ford and Company has analyzed the existing monopole for T-Mobile in accordance with the Telecommunications Industry Association / Electronic Industry Association, TIA/EIA-222-F, "Structural Standards for Steel Antenna Towers and Antenna Supporting Structures." The TIA/EIA standard was developed by professional engineers experienced in the design of communication structures.

Pole History:

The monopole was manufactured by Rohn Industries in 1991 per job number 44820TT, and Paul J. Ford and Company job number 20501-0701. The monopole was originally designed in accordance with TIA/EIA-222-F for an 85 mph design wind for the following antenna loading:

Elevation	Description
180'	(12) Swedcom ALP-9212-N + (4) Celwave PD220 12' Low Profile Platform
168'	(12) Swedcom ALP-9212-N 12' Low Profile Platform
158'	(12) Swedcom ALP-9212-N 12' Low Profile Platform
148'	(12) Swedcom ALP-9212-N 12' Low Profile Platform
138'	(12) Swedcom ALP-9212-N 12' Low Profile Platform
128'	(12) Swedcom ALP-9212-N 12' Low Profile Platform

Structural Analysis:

Our analysis was completed according to the recommendations of the TIA/EIA-222-F 1996. This standard recommends a minimum design wind velocity of 85 mph (no ice) for New Haven County. If ice accumulation is considered, the TIA/EIA standard allows the design wind velocity reduced by 25% in conjunction with ½" radial ice. Our analysis was completed in compliance with the minimum wind requirements under the following load cases:

85 mph Basic Wind Velocity without ice
74 mph Basic Wind Velocity with 1/2" radial ice
50 mph (Operational) Basic Wind Velocity without ice

Existing & Proposed Antenna Loading:

Our analysis was completed using the following existing and proposed antenna loading:

Status	Elevation	Description	Coax	Owner
Existing	178'	(6) EMS RR90-17-02DP (3) Decibel 776QNB120EXM 12' Low Profile Platform	(12) 1 5/8" (12) 1 5/8" + (3) 1/2"	AT&T
Proposed	148'	(9) EMS DR65-190XXDPQ + (6) PCS 1900 10' Low Profile Platform	(24) 1 5/8"	T-Mobile
Proposed	137'	(12) DB844H80 12' Low Profile Platform	(12) 1 5/8"	Nextel
Existing	128'	(12) Decibel DB980H65T2E 12' Low Profile Platform	(12) 1 5/8"	Sprint
Existing	117'	(12) Decibel DB844H90 12' Low Profile Platform	(12) 1 5/8"	Verizon

Coaxial cable for this analysis was assumed internally mounted and not exposed to the wind.

Results:

When the new antenna configuration is considered, the monopole has sufficient capacity to safely support the new loading while maintaining the minimum wind rating:

Member	Elevation	Actual Stress	Allowable Stress	Percent Capacity	
Shaft #1	174'	3.2 ksi	52.0 ksi	6.2%	☑
Shaft #2	131'	20.5 ksi	52.0 ksi	39.4%	☑
Shaft #3	89'	32.9 ksi	52.0 ksi	63.2%	☑
Shaft #4	48'	34.7 ksi	52.0 ksi	66.7%	☑
Shaft #5	0'	33.5 ksi	52.0 ksi	64.4%	☑
Base Plate	0'	37.0 ksi	60.0 ksi	61.7%	☑
Anchor Bolts	0'	43.9 ksi	66.0 ksi	66.5%	☑

The existing drilled pier foundation has sufficient capacity to support the new loading while maintaining the minimum required safety factors. ☑

PAUL J. FORD AND COMPANY
STRUCTURAL ENGINEERS
250 East Broad Street • Suite 1500 • Columbus, Ohio 43215

Conclusion:

The existing monopole and foundation have sufficient capacity to support the new antenna loading while meeting the minimum wind requirements of this analysis.

If you have any questions concerning our analysis, or if we can be of further service to you, please feel free to contact us at (614) 221-6679.

Sincerely,

Paul J. Ford and Company

Kurt J. Swarts, P.E.
Project Manager

PAUL J. FORD AND COMPANY
STRUCTURAL ENGINEERS
250 East Broad Street • Suite 1500 • Columbus, Ohio 43215

STANDARD CONDITIONS FOR FURNISHING OF PROFESSIONAL ENGINEERING SERVICES ON EXISTING STRUCTURES BY PAUL J. FORD AND COMPANY

1. Paul J. Ford and Company has not made a field inspection to verify the monopole dimensions or the antenna/coax loading. If the existing conditions are not as represented on these sketches, we should be contacted immediately to reevaluate any conclusions stated in this report.

2. No allowance was made for any damaged, missing, or rusted monopole parts. The analysis of this pole assumes that no physical deterioration has occurred in any of the structural components of the pole and that all the pole members have the same capacity as the day the pole was erected.

3. It is not possible to have all of the very detailed information to perform a thorough analysis of every structural sub-component of an existing monopole. The structural analysis provided by Paul J. Ford and Company verifies the adequacy of the main structural members of the monopole. Paul J. Ford and Company provides a limited scope of service in that we cannot verify the adequacy of every weld, plate, connection detail, etc.

4. It is the owner's responsibility to determine the amount of ice accumulation, if any, that shall be used in the structural analysis.

5. The monopole has been analyzed according to the minimum basic design wind velocity recommended by the Electronics Industry Association Standard ANSI/EIA-222-F. If the owner or local or state agencies require a higher design wind velocity, Paul J. Ford and Company should be made aware of this requirement.

6. The enclosed sketches are a schematic representation of the monopole we have analyzed. If any material is fabricated from these sketches, the fabricator shall be responsible for field verifying the existing conditions and for proper fit and clearance in the field.

7. Miscellaneous items such as antenna mounts, etc., have not been designed or detailed as part of our work. We recommend that material of adequate size and strength be purchased from a reputable tower manufacturer.

8. Installation of new hand hole ports and/or cable access ports will not reduce the structural capacity of the monopole shaft, if the hand hole frames and/or cable access ports are properly designed and installed in accordance to proper procedures. Paul J. Ford and Company recommends that new hand holes and/or cable access port hole frames be purchased from the original pole manufacturer. The new hand hole and/or cable access frames shall be installed per the original manufacturer's installation procedures. Paul J. Ford and Company will design and provide installation procedures for new hand holes and/or cable access ports if required, as an additional scope of services.

Omnipoint Communications, Inc.

100 Filley Street, Bloomfield, CT 06002

PAUL J. FORD AND COMPANY
STRUCTURAL ENGINEERS
250 East Broad Street, Suite 1500, Columbus, Ohio 43215
(614) 221-6679 Fax: (614) 448-4105 www.PJFweb.com

IF EXISTING CONDITIONS ARE NOT AS REPRESENTED ON THESE SKETCHES, PJF SHOULD BE CONTACTED IMMEDIATELY TO RE-EVALUATE THE STRUCTURAL ADEQUACY OF THE POLE.

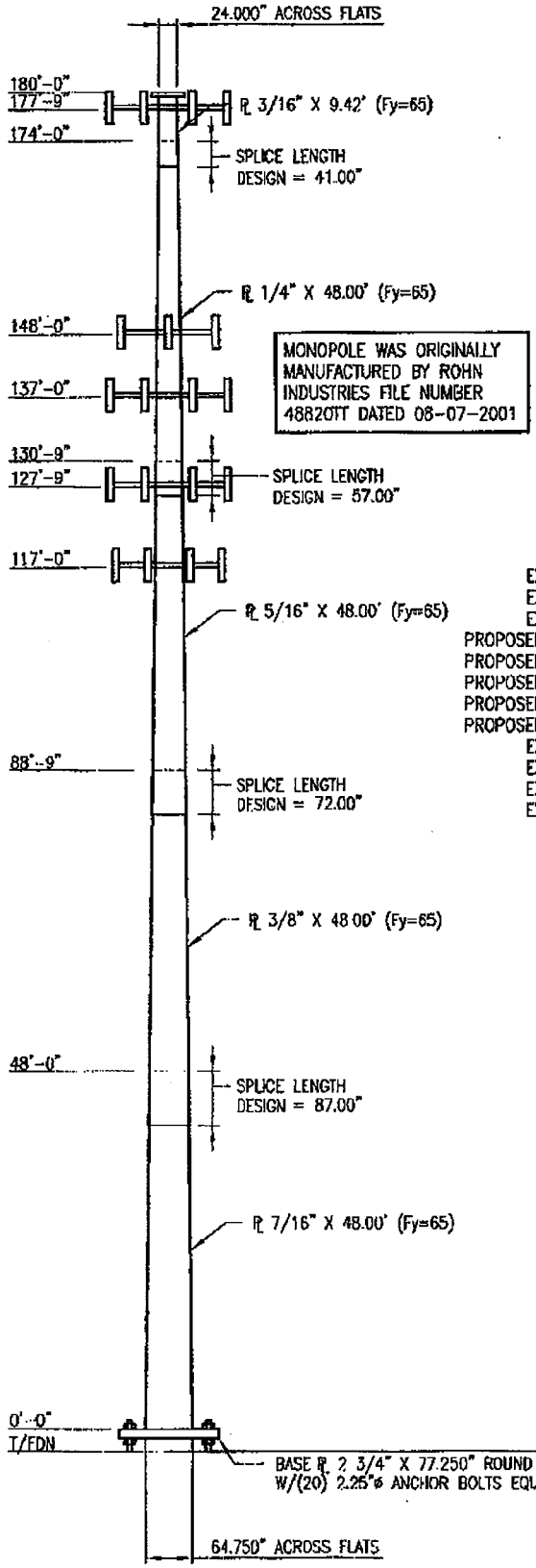

MONOPOLE WAS ORIGINALLY MANUFACTURED BY ROHN INDUSTRIES FILE NUMBER 48820TT DATED 08-07-2001

G:\TOWER\DRAWINGS\MONOPOLE\312-VOICESTREAM\312-2005\31205001 9\MOD1.DWG KSWARTS TUE 14-JUN-2005 8:31:56 PM

JOB DATA

Page 1 of 2		Job No.	31205-0019
By	KJS	Design No.	ROHN #48820TT
Chk'd By	KJS	Date	06-15-2005
		Rev. No. 1	Rev. Date 07-12-2005
Pole	180-FT MONOPOLE		
Site	CT-11-720A: ORANGE, CT		
Owner	AT&T		
Ref. No.	20501-0701		
Design	85 MPH / 74 MPH + 1/2" RADIAL ICE ACCORDING TO TIA/EIA-222-F 1996		

PLEASE NOTE: THE MAXIMUM WIND RATING FOR THIS MONOPOLE IS 103 MPH.

LOAD CASES

CASE 1	85 MPH WITH NO ICE	DESIGN WIND
CASE 2	74 MPH WITH 1/2" RADIAL ICE	REDUCED WIND WITH ICE
CASE 3	50 MPH WITH NO ICE	OPERATIONAL WIND

POLE SPECIFICATIONS

Pole Shape Type:	18-SIDED POLYGON
Taper:	0.238889 IN/FT
Shaft Steel:	ASTM A572 GRADE 65
Base PL Steel:	ASTM A633 GR. E (60 KSI)
Anchor Bolts:	2 1/4"ø #18J ASTM A615 GRADE 75

ANTENNA LIST

	No.	Elev.	Description	
	--	TOP	3/4" LIGHTNING ROD	
EX	1-3	177.75	(3) 776QNB120EXM W/ (12) 1 5/8" & (3) 1/2" COAX	<AT&T>
EX	4-9	177.75	(6) EMS RR90-17-02DP W/ (12) 1 5/8" COAX	<AT&T>
EX	--	177.75	12' LOW PROFILE PLATFORM	
PROPOSED	10-18	148.00	(9) EMS DR65-19-XXDPQ W/ (24) 1 5/8" COAX	<T-MOBILE>
PROPOSED	19-24	148.00	(6) PCS 1900	<T-MOBILE>
PROPOSED	--	148.00	10' LOW PROFILE PLATFORM	
PROPOSED	25-36	137.00	(12) DB844H80	<NEXTEL>
PROPOSED	--	137.00	12' LOW PROFILE PLATFORM	
EX	37-48	127.75	(12) DECIBEL DB980H65T2E W/ (12) 1 5/8" COAX	<SPRINT>
EX	--	127.75	12' LOW PROFILE PLATFORM	
EX	48-60	117.00	(12) DB844H90 W/ (12) 1 5/8" COAX	<VERIZON>
EX	--	117.00	12' LOW PROFILE PLATFORM	

STEP BOLTS FULL HEIGHT.
ANTENNA FEED LINES RUN INSIDE OF POLE.

Elevation	85 MPH WIND Lateral Deflection (Inches)	85 MPH WIND Rotation (sway) (degrees)	50 MPH WIND Lateral Deflection (Inches)	50 MPH WIND Rotation (sway) (degrees)
TOP	91.8	4.341	31.7	1.502

SHAFT SECTION DATA

Shaft Section	Section Length (feet)	Plate Thickness (in.)	Lap Splice (in.)	Diameter Across Flats (inches) @ Top	Diameter Across Flats (inches) @ Bottom
1	9.42	0.1875	41.00	24.000	26.250
2	48.00	0.2500	57.00	25.058	36.525
3	48.00	0.3125	72.00	34.890	46.357
4	48.00	0.3750	87.00	44.299	55.765
5	48.00	0.4375		53.283	64.750

NOTE: DIMENSIONS SHOWN DO NOT INCLUDE GALVANIZING TOLERANCES

UNFACTORED BASE REACTIONS

MOMENT =	3888 ft-kips
SHEAR =	33 kips
AXIAL =	51 kips

Omnipoint Communications, Inc.
100 Filley Street, Bloomfield, CT 06002

PAUL J. FORD AND COMPANY
STRUCTURAL ENGINEERS
250 East Broad Street, Suite 1500, Columbus, Ohio 43215
(614) 221-6679 Fax: (614) 448-4105 www.PJFweb.com

JOB DATA			
Page 2 of 2	Job No.		31205-0019
By KJS	Design No.		ROHN #48820TT
Chk'd By KJS	Date		06-15-2005
	Rev. No. 1	Rev. Date	07-12-2005
Pole	180-FT MONOPOLE		
Site	CT-11-720A: ORANGE, CT		
Owner	AT&T		
Ref. No.	20501-0701		
Design	85 MPH / 74 MPH + 1/2" RADIAL ICE ACCORDING TO TIA/EIA-222-F 1996		

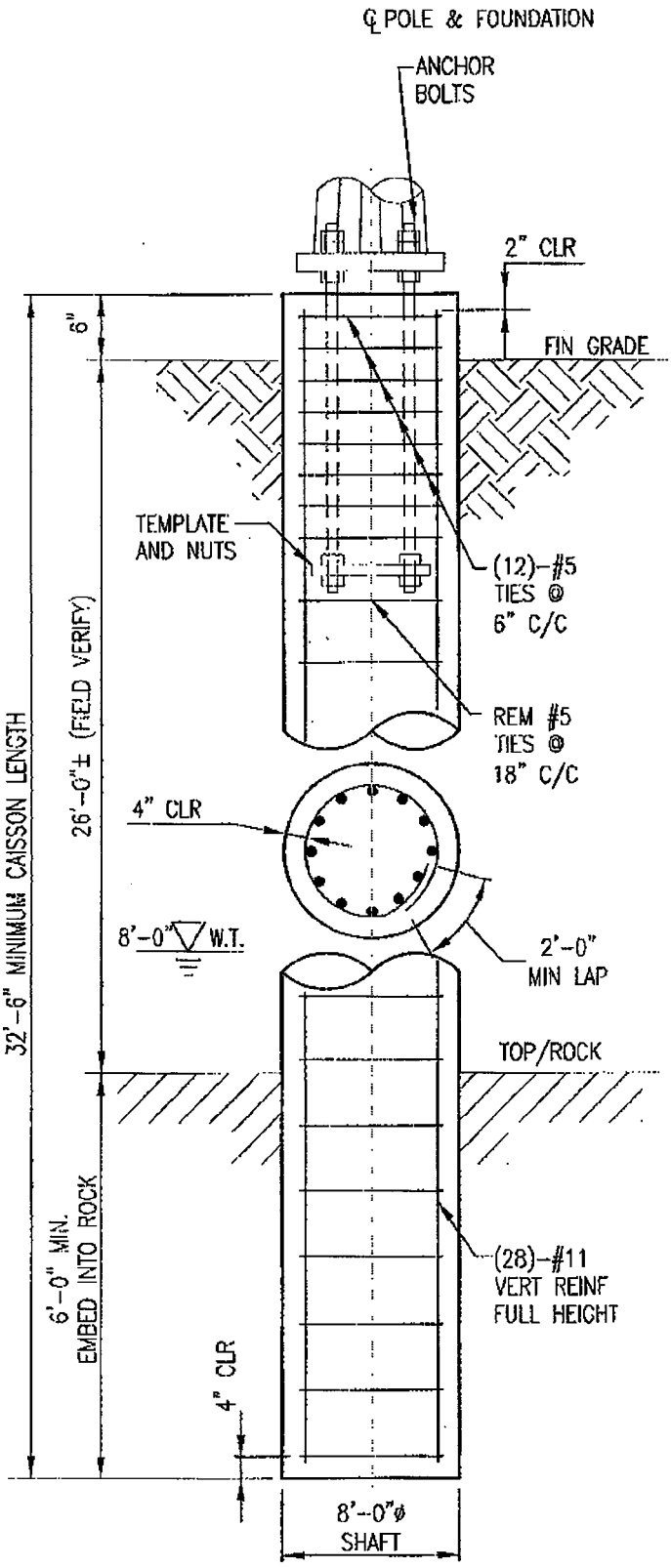

NOTES:

1. ALL CONCRETE ASSUMED TO HAVE A MINIMUM COMPRESSIVE STRENGTH OF 3000 PSI AT 28 DAYS. CONCRETE SHALL BE AIR ENTRAINED (6±1.5%).

2. REINFORCING STEEL ASSUMED TO CONFORM TO THE REQUIREMENTS OF ASTM A-615 (GRADE 60) EXCEPT THAT CAISSON TIES MAY BE ASTM A-615 (GRADE 40).

3. SEE PAGE 1 FOR ANCHOR BOLT QUANTITY, SIZE, LENGTH, AND BOLT CIRCLE.

4. FOUNDATION ANALYSIS IS BASED UPON GEOTECHNICAL EXPLORATION REPORT
PREPARED BY: CLARENCE WELTI ASSOC.
REPORT NO.: 2014895605
DATED: 06-07-2001

5. THE FOUNDATION WAS ANALYZED USING THE FOLLOWING SERVICE LOADS:
MOMENT: 3888 FT-KIPS
SHEAR: 33 KIPS
AXIAL: 51 KIPS
THE EXISTING FOUNDATION HAS SUFFICIENT CAPACITY TO SAFELY SUPPORT THE NEW LOADING.

6. ORIGINAL FOUNDATION DESIGN COMPLETED BY PAUL J. FORD & CO., PER PJF JOB #20501-0701 DATED 08-27-2001. ANALYSIS ASSUMES THE AS BUILT CONDITION OF THE FOUNDATION IS PER THE ORIGINAL DESIGN DRAWINGS. IF AS BUILT CONDITIONS ARE NOT AS SHOWN ON THIS SKETCH, PAUL J. FORD & CO. SHALL BE NOTIFIED SO THAT THE EXISTING CONDITION OF THE FOUNDATION MAY BE RE-EVALUATED.

EXISTING DRILLED PIER FOUNDATION

PJF_Pole (tm) - Monopole Design Program
Windows Version 3.04.0000 Tue Jul 12, 2005 - 9:48:55 am
(c) 1993 to 2000 PAUL J. FORD AND COMPANY, Columbus, Ohio

Job No.....: 31205-0019 Design No: ROHN #48820TT Engineer : KJS
Description : 180-Ft Monopole - CT-11-720A: ORANGE, CT
Design..... : 85 mph / 74 mph + 1/2" radial ice
Owner..... : AT&T Client: T-Mobile
Status..... : Final Design Revision: 1 Rev. Date : 7/12/2005

S U M M A R Y O F A N A L Y S I S R E S U L T S

Pole Height.....: 180.00 ft
Top Diameter.....: 24.000 in
Bottom Diameter.....: 64.750 in
Pole Shape.....: 18-Sided Polygon
Splice Joint Type.....: Taper shaft - Slip Joint
Shaft Taper.....: 0.238889 (in/ft)
Shaft Steel Weight.....: 33.903 kips

POLE SHAFT PROPERTIES:

Shaft Section Number	Section Length (ft)	Wall Thickness [t] (in)	Steel Yield [Fy] (ksi)	Top Diameter [Dt] (in)	Bottom Diameter [Db] (in)	Slip Joint Overlap (in)
1.	9.417	0.18750	65	24.000	26.250	41.00
2.	48.000	0.25000	65	25.058	36.525	57.00
3.	48.000	0.31250	65	34.890	46.357	72.00
4.	48.000	0.37500	65	44.299	55.765	87.00
5.	48.000	0.43750	65	53.283	64.750	

POLE SHAFT SECTION MAXIMUM FORCES AND MOMENTS:

Shaft Section Number	Wind Load No.	Wind Speed (mph)	Radial Ice (in)	At Base of Section: Sect. Elev. (ft)	Axial Load (kips)	Horiz. Shear (kips)	Bending Moment (ft-kips)	Max. Ratio Actual/ Allowable [Ftot/Fb]
1.	1	85.0	0.00	174.00	2.330	5.122	19.736	0.0623
2.	1	85.0	0.00	130.75	10.357	14.696	402.877	0.3942
3.	1	85.0	0.00	88.75	21.416	23.946	1312.548	0.6322
4.	1	85.0	0.00	48.00	34.073	28.134	2405.381	0.6669
5.	1	85.0	0.00	0.00	51.019	32.916	3888.023	0.6439
>> MAXIMUM BASE REACTIONS :					51.019	32.916	3888.023 <<	

POLE DEFLECTION AND ROTATION AT TOP AND AT HIGHEST MICROWAVE DISH ELEVATION:

Wind Load No.	Wind Speed (mph)	Radial Ice (in)	Location	Elev (ft)	Deflection (in)	Rotation (deg)	Max. Allowable Rotation Limit (deg)
1.	85.0	0.00	Top	180.00	91.776	4.341	
2.	73.6	0.50	Top	180.00	75.729	3.590	
3.	50.0	0.00	Top	180.00	31.723	1.502	

PJF_Pole (tm) - Monopole Design Program
Windows Version 3.04.0000 Tue Jul 12, 2005 - 9:49:01 am
(c) 1993 to 2000 PAUL J. FORD AND COMPANY, Columbus, Ohio

Job No.....: 31205-0019 Design No: ROHN #48820TT Engineer : KJS
Description : 180-Ft Monopole - CT-11-720A: ORANGE, CT
Design..... : 85 mph / 74 mph + 1/2" radial ice
Owner..... : AT&T Client: T-Mobile
Status..... : Final Design Revision: 1 Rev. Date : 7/12/2005

S U M M A R Y O F A N A L Y S I S R E S U L T S

Pole Height.....: 180.00 ft
Top Diameter.....: 24.000 in
Bottom Diameter.....: 64.750 in
Pole Shape.....: 18-Sided Polygon
Splice Joint Type.....: Taper shaft - Slip Joint
Shaft Taper.....: 0.238889 (in/ft)
Shaft Steel Weight.....: 33.903 kips

POLE SHAFT PROPERTIES:

Shaft Section Number	Section Length (ft)	Wall Thickness [t] (in)	Steel Yield [Fy] (ksi)	Top Diameter [Dt] (in)	Bottom Diameter [Db] (in)	Slip Joint Overlap (in)
1.	9.417	0.18750	65	24.000	26.250	41.00
2.	48.000	0.25000	65	25.058	36.525	57.00
3.	48.000	0.31250	65	34.890	46.357	72.00
4.	48.000	0.37500	65	44.299	55.765	87.00
5.	48.000	0.43750	65	53.283	64.750	

POLE SHAFT SECTION MAXIMUM FORCES AND MOMENTS:

Shaft Section Number	Wind Load No.	Wind Speed (mph)	Radial Ice (in)	At Base of Section: Sect. Elev. (ft)	Axial Load (kips)	Horiz. Shear (kips)	Bending Moment (ft-kips)	Max. Ratio Actual/ Allowable [Ftot/Fb]
1.	1	85.0	0.00	174.00	2.330	5.122	19.736	0.0623
2.	1	85.0	0.00	130.75	10.357	14.696	402.877	0.3942
3.	1	85.0	0.00	88.75	21.416	23.946	1312.548	0.6322
4.	1	85.0	0.00	48.00	34.073	28.134	2405.381	0.6669
5.	1	85.0	0.00	0.00	51.019	32.916	3888.023	0.6439
>> MAXIMUM BASE REACTIONS :					51.019	32.916	3888.023 <<	

POLE DEFLECTION AND ROTATION AT TOP AND AT HIGHEST MICROWAVE DISH ELEVATION:

Wind Load No.	Wind Speed (mph)	Radial Ice (in)	Location	Elev (ft)	Deflection (in)	Rotation (deg)	Max. Allowable Rotation Limit (deg)
1.	85.0	0.00	Top	180.00	91.776	4.341	

PJF_Pole (tm) - Monopole Design Program
Windows Version 3.04.0000 Tue Jul 12, 2005 - 9:49:01 am

Job No.....: 31205-0019 Design No: ROHN #48820TT Engineer : KJS
Description : 180-Ft Monopole - CT-11-720A: ORANGE, CT
Design..... : 85 mph / 74 mph + 1/2" radial ice
Owner..... : AT&T Client: T-Mobile
Status..... : Final Design Revision: 1 Rev. Date : 7/12/2005

Pole Height : 180 ft
Pole Shape : 18-Sided Polygon
Pole Type : Taper shaft - Slip Joint
Pole Taper : 0.238889 (in/ft)

INPUT TUBE PROPERTIES:

Tube Sect No.	Top / Splice Elev (ft)	Bot Tube Elev (ft)	Tube Length (ft)	Wall Thick [t] (in)	Steel [Fy] (ksi)	Top Diam [Dt] (in)	Bot Diam [Db] (in)	Slip Joint Overlap (in)
1.	180.00	170.58	9.417	0.18750	65	24.000	26.250	41.00
2.	174.00	126.00	48.000	0.25000	65	25.058	36.525	57.00
3.	130.75	82.75	48.000	0.31250	65	34.890	46.357	72.00
4.	88.75	40.75	48.000	0.37500	65	44.299	55.765	87.00
5.	48.00	0.00	48.000	0.43750	65	53.283	64.750	

TUBE SECTION PROPERTIES:

Tube Sect No.	Section Weight (kips)	Location	Elev (ft)	Diam. Across Flats (in)	Wall Thick [t] (in)	[W/t] Ratio	Diam/ Thick [D/t] Ratio	Area (in^2)	Ix (in^4)
1	0.476	@Top	180.0	24.000	0.1875	20.81	128.00	14.17	1014.9
		@Splice	174.0	25.433		22.15	135.64	15.02	1209.4
		@Bot	170.6	26.250		22.92	140.00	15.51	1330.5
2	3.958	@Top	174.0	25.058	0.2500	15.91	100.23	19.68	1530.2
		@Splice	130.8	35.390		23.20	141.56	27.88	4348.6
		@Bot	126.0	36.525		24.00	146.10	28.78	4783.7
3	6.530	@Top	130.8	34.890	0.3125	17.92	111.65	34.30	5179.1
		@Splice	88.8	44.924		23.58	143.76	44.25	11121.8
		@Bot	82.8	46.357		24.39	148.34	45.67	12228.7
4	9.653	@Top	88.8	44.299	0.3750	19.07	118.13	52.28	12738.9
		@Splice	48.0	54.033		23.64	144.09	63.86	23224.2
		@Bot	40.8	55.765		24.46	148.71	65.93	25546.4
5	13.286	@Top	48.0	53.283	0.4375	19.71	121.79	73.38	25883.1
		@Bot	0.0	64.750		24.33	148.00	89.30	46651.3

Total Shaft Steel Weight = 33.903 kips

PJF_Pole (tm) - Monopole Design Program
Windows Version 3.04.0000 Tue Jul 12, 2005 - 9:49:01 am
(c) 1993 to 2000 PAUL J. FORD AND COMPANY, Columbus, Ohio

Job No.....: 31205-0019 Design No: ROHN #48820TT Engineer : KJS
Description : 180-Ft Monopole - CT-11-720A: ORANGE, CT
Design..... : 85 mph / 74 mph + 1/2" radial ice
Owner..... : AT&T Client: T-Mobile
Status..... : Final Design Revision: 1 Rev. Date : 7/12/2005

Segment Properties: (@ Max Segment = 10 ft)

Tube Segmt No.	Segment Feature Location	Segment Elev. (ft)	Diam. Across Flats (in)	Wall Thick [t] (in)	[W/t] Ratio	Diam/ Thick [D/t] Ratio	Area (in^2)	Ix (in^4)
1.	top	180.000	24.000	0.18750	20.81	128.00	14.17	1014.9
2.	<arm [1]>	180.000	24.000	0.18750	20.81	128.00	14.17	1014.9
3.	<arm [2]>	177.750	24.538	0.18750	21.31	130.87	14.49	1085.2
4.	<arm [3]>	177.750	24.538	0.18750	21.31	130.87	14.49	1085.2
5.	<arm [4]>	177.750	24.538	0.18750	21.31	130.87	14.49	1085.2
6.	top sec(2)	174.000	25.433	0.18750	22.15	135.64	15.02	1209.4
7.	bot sec(1)	170.583	25.875	0.25000	16.49	103.50	20.33	1686.3
8.		170.000	26.014	0.25000	16.58	104.06	20.44	1713.9
9.		160.000	28.403	0.25000	18.27	113.61	22.34	2236.2
10.		150.000	30.792	0.25000	19.95	123.17	24.23	2855.1
11.	<arm [5]>	148.000	31.269	0.25000	20.29	125.08	24.61	2991.2
12.	<arm [6]>	148.000	31.269	0.25000	20.29	125.08	24.61	2991.2
13.	<arm [7]>	148.000	31.269	0.25000	20.29	125.08	24.61	2991.2
14.		140.000	33.181	0.25000	21.64	132.72	26.13	3578.8
15.	<arm [8]>	137.000	33.897	0.25000	22.14	135.59	26.70	3817.6
16.	<arm [9]>	137.000	33.897	0.25000	22.14	135.59	26.70	3817.6
17.	top sec(3)	130.750	35.390	0.25000	23.20	141.56	27.88	4348.6
18.		130.000	35.069	0.31250	18.02	112.22	34.47	5260.0
19.	<arm [10]>	127.750	35.607	0.31250	18.33	113.94	35.01	5507.8
20.	<arm [11]>	127.750	35.607	0.31250	18.33	113.94	35.01	5507.8
21.	bot sec(2)	126.000	36.525	0.31250	18.85	116.88	35.92	5948.9
22.		120.000	37.458	0.31250	19.37	119.87	36.84	6420.8
23.	<arm [12]>	117.000	38.175	0.31250	19.78	122.16	37.55	6799.6
24.	<arm [13]>	117.000	38.175	0.31250	19.78	122.16	37.55	6799.6
25.		110.000	39.847	0.31250	20.72	127.51	39.21	7740.9
26.		100.000	42.236	0.31250	22.07	135.16	41.58	9230.5
27.		90.000	44.625	0.31250	23.42	142.80	43.95	10900.0
28.	top sec(4)	88.750	44.924	0.31250	23.58	143.76	44.25	11121.8
29.	bot sec(3)	82.750	45.732	0.37500	19.74	121.95	53.98	14027.1
30.		80.000	46.389	0.37500	20.05	123.70	54.77	14645.5
31.		70.000	48.778	0.37500	21.17	130.07	57.61	17046.9
32.		60.000	51.167	0.37500	22.30	136.44	60.45	19697.4
33.		50.000	53.555	0.37500	23.42	142.81	63.30	22609.3
34.	top sec(5)	48.000	54.033	0.37500	23.64	144.09	63.86	23224.2
35.	bot sec(4)	40.750	55.015	0.43750	20.41	125.75	75.79	28512.1
36.		40.000	55.194	0.43750	20.48	126.16	76.03	28793.8
37.		30.000	57.583	0.43750	21.44	131.62	79.35	32729.0
38.		20.000	59.972	0.43750	22.41	137.08	82.67	37007.4
39.		10.000	62.361	0.43750	23.37	142.54	85.99	41643.3
40.	base	0.000	64.750	0.43750	24.33	148.00	89.30	46651.3

Total Number of Antennas / Arms = 13

PJF_Pole (tm) - Monopole Design Program
Windows Version 3.04.0000 Tue Jul 12, 2005 - 9:49:01 am

Job No.....: 31205-0019 Design No: ROHN #48820TT Engineer : KJS
Description : 180-Ft Monopole - CT-11-720A: ORANGE, CT
Design..... : 85 mph / 74 mph + 1/2" radial ice
Owner..... : AT&T Client: T-Mobile
Status..... : Final Design Revision: 1 Rev. Date : 7/12/2005

ANTENNA AND ARM PROPERTIES AND LOAD DATA:

LOAD CASE 1: BASIC WIND VELOCITY = 85.00 mph

Ant Arm No.	Arm Mount. Elev. (ft)	Load Applic. Elev. (ft)	Arm Length (ft)	Ice Load Case	Antenna Area [CaAa] (sf)	Antenna Force [qzGhCaAa] (lbs)	Antenna Weight (lbs)
[1]	180.000	183.000	2.0000	No Ice:	1.00	50.99	108.00
Description: 3/4" Lightning Rod							
		[Gh]	[Kz]		[qz] (psf)	[qz][Gh] (psf)	
		1.69	1.631	No Ice:	30.174	50.994	
[2]	177.750	177.750	0.0000	No Ice:	50.81	2569.54	330.00
Description: (3) 776QNB120EXM							
		[Gh]	[Kz]		[qz] (psf)	[qz][Gh] (psf)	
		1.69	1.618	No Ice:	29.924	50.572	
[3]	177.750	177.750	0.0000	No Ice:	18.85	953.27	108.00
Description: (6) EMS RR90-17-02DP							
		[Gh]	[Kz]		[qz] (psf)	[qz][Gh] (psf)	
		1.69	1.618	No Ice:	29.924	50.572	
[4]	177.750	177.750	2.0000	No Ice:	21.22	1073.13	1100.00
Description: 12' Low Profile Platform							
		[Gh]	[Kz]		[qz] (psf)	[qz][Gh] (psf)	
		1.69	1.618	No Ice:	29.924	50.572	
[5]	148.000	148.000	0.0000	No Ice:	54.32	2606.98	288.00
Description: (9) EMS DR65-19-XXDPQ							
		[Gh]	[Kz]		[qz] (psf)	[qz][Gh] (psf)	
		1.69	1.535	No Ice:	28.398	47.993	
[6]	148.000	148.000	0.0000	No Ice:	3.78	181.41	108.00
Description: (6) PCS 1900							
		[Gh]	[Kz]		[qz] (psf)	[qz][Gh] (psf)	
		1.69	1.535	No Ice:	28.398	47.993	
[7]	148.000	148.000	2.0000	No Ice:	13.84	664.22	1200.00
Description: 10' Low Profile Platform							
		[Gh]	[Kz]		[qz] (psf)	[qz][Gh] (psf)	
		1.69	1.535	No Ice:	28.398	47.993	
[8]	137.000	137.000	2.0000	No Ice:	38.54	1809.28	180.00
Description: (12) Decibel DB844H80 Panel							

		[Gh]	[Kz]		[qz] (psf)	[qz][Gh] (psf)	
		1.69	1.502	No Ice:	27.778	46.946	
[9]	137.000	137.000	2.0000	No Ice:	19.07	895.25	1100.00
Description: 12' Low Profile Platform							
		[Gh]	[Kz]		[qz] (psf)	[qz][Gh] (psf)	
		1.69	1.502	No Ice:	27.778	46.946	
[10]	127.750	127.750	2.0000	No Ice:	36.09	1660.76	108.00
Description: (12) Decibel DB980H65T2E							
		[Gh]	[Kz]		[qz] (psf)	[qz][Gh] (psf)	
		1.69	1.472	No Ice:	27.229	46.017	
[11]	127.750	127.750	2.0000	No Ice:	20.68	951.64	1100.00
Description: 12' Low Profile Platform							
		[Gh]	[Kz]		[qz] (psf)	[qz][Gh] (psf)	
		1.69	1.472	No Ice:	27.229	46.017	
[12]	117.000	117.000	0.0000	No Ice:	37.90	1700.80	228.00
Description: (12) DB844H90							
		[Gh]	[Kz]		[qz] (psf)	[qz][Gh] (psf)	
		1.69	1.436	No Ice:	26.554	44.876	
[13]	117.000	117.000	2.0000	No Ice:	20.82	934.32	1100.00
Description: 12' Low Profile Platform							
		[Gh]	[Kz]		[qz] (psf)	[qz][Gh] (psf)	
		1.69	1.436	No Ice:	26.554	44.876	

PJF_Pole (tm) - Monopole Design Program
Windows Version 3.04.0000 Tue Jul 12, 2005 - 9:49:01 am
(c) 1993 to 2000 PAUL J. FORD AND COMPANY, Columbus, Ohio

Job No.....: 31205-0019 Design No: ROHN #48820TT Engineer : KJS
Description : 180-Ft Monopole - CT-11-720A: ORANGE, CT
Design..... : 85 mph / 74 mph + 1/2" radial ice
Owner..... : AT&T Client: T-Mobile
Status..... : Final Design Revision: 1 Rev. Date : 7/12/2005

POLE SHAFT LOADS:

LOAD CASE 1: BASIC WIND VELOCITY = 85.00 mph

Design Loads per TIA/EIA-222-F Standard; Gust Factor ..... Gh = 1.69
Pole DL Overload Factor = 1.3
Per TIA/EIA Table 1: Note 3: For all cross sectional shapes,
Force Coefficient [Cf] need not exceed 1.2
for any value of C. (Where C=sqrt(Kz)*V*D.)

Top of Segment Elev. (ft)	Expos Coeff [Kz]	Veloc Press [qz] (psf)	Pole Veloc Coeff [C]	Force Coeff [Cf]	Projected Area Shaft Segment [Ae] (sf)	[Cf Ae] (sf)	Segment Wind Force (lbs)	Shaft Segment Weight (lbs)
180.000	1.624	30.03	216.62	0.650	0.000	0.000	0.00	0.00
180.000	1.624	30.03	216.62	0.650	2.010	1.306	66.31	63.00
177.750	1.618	29.92	221.07	0.650	2.540	1.651	83.65	79.64
177.750	1.618	29.92	221.07	0.650	0.000	0.000	0.00	0.00
177.750	1.618	29.92	221.07	0.650	1.539	1.000	50.60	48.25
174.000	1.608	29.74	228.45	0.650	8.383	5.449	274.54	493.57
170.583	1.599	29.57	231.75	0.650	6.414	4.169	208.83	267.52
170.000	1.597	29.55	232.89	0.650	2.178	1.416	70.68	90.85
160.000	1.570	29.04	252.08	0.650	22.873	14.867	735.29	954.62
150.000	1.541	28.51	270.78	0.650	24.863	16.161	785.09	1038.47
148.000	1.535	28.40	274.45	0.650	2.596	1.687	81.13	108.46
148.000	1.535	28.40	274.45	0.650	0.000	0.000	0.00	0.00
148.000	1.535	28.40	274.45	0.650	2.616	1.700	81.60	109.30
140.000	1.511	27.95	288.92	0.650	21.643	14.068	669.15	904.57
137.000	1.502	27.78	294.25	0.650	5.610	3.646	171.71	234.53
137.000	1.502	27.78	294.25	0.650	2.835	1.843	86.50	118.52
130.750	1.482	27.41	305.17	0.650	17.411	11.317	527.30	1323.41
130.000	1.480	27.37	302.15	0.650	2.932	1.906	88.15	153.02
127.750	1.472	27.23	306.02	0.650	3.693	2.401	110.74	192.75
127.750	1.472	27.23	306.02	0.650	2.231	1.450	66.73	116.44
126.000	1.466	27.12	313.29	0.650	6.046	3.930	180.33	315.57
120.000	1.446	26.75	319.07	0.650	18.490	12.019	546.44	965.29
117.000	1.436	26.55	324.00	0.650	6.323	4.110	185.10	330.15
117.000	1.436	26.55	324.00	0.650	3.191	2.074	93.09	166.65
110.000	1.411	26.09	335.22	0.650	22.896	14.882	661.19	1195.87
100.000	1.373	25.39	350.51	0.650	34.400	22.360	971.36	1797.48
90.000	1.332	24.64	364.81	0.650	36.391	23.654	998.44	1902.29
88.750	1.327	24.54	366.51	0.650	3.729	2.424	100.54	1388.22
82.750	1.300	24.05	369.40	0.650	22.597	14.688	602.52	1415.85
80.000	1.288	23.82	372.90	0.650	11.567	7.519	303.75	724.90
70.000	1.240	22.93	384.69	0.650	39.852	25.904	1021.48	2498.10
60.000	1.186	21.94	394.74	0.650	41.843	27.198	1029.17	2623.87
50.000	1.126	20.83	402.55	0.650	43.833	28.492	1027.37	2749.65
48.000	1.113	20.59	403.78	0.650	8.974	5.833	203.54	2644.31
40.750	1.062	19.65	401.61	0.650	31.709	20.611	699.09	2318.46
40.000	1.057	19.54	401.85	0.650	4.609	2.996	98.95	337.08
30.000	1.000	18.50	407.88	0.650	47.190	30.673	975.27	3451.49
20.000	1.000	18.50	424.80	0.650	49.180	31.967	999.24	3598.23
10.000	1.000	18.50	441.72	0.650	51.171	33.261	1039.69	3744.96

1.000	1.000	18.50	456.95	0.650	47.756	31.042	970.30	3495.93

Summation TOTAL = 16864.86 43961.24

---------(END LOAD CASE 1 -- POLE SHAFT LOADS)----------

PJF_Pole (tm) - Monopole Design Program
Windows Version 3.04.0000 Tue Jul 12, 2005 - 9:49:01 am

Job No.....: 31205-0019 Design No: ROHN #48820TT Engineer : KJS
Description : 180-Ft Monopole - CT-11-720A: ORANGE, CT
Design..... : 85 mph / 74 mph + 1/2" radial ice
Owner..... : AT&T Client: T-Mobile
Status..... : Final Design Revision: 1 Rev. Date : 7/12/2005

POLE SHAFT SEGMENTS -- AXIAL AND SHEAR FORCES:

LOAD CASE 1: BASIC WIND VELOCITY = 85.00 mph

Tube Segment No.	Segment Elevation (ft)	Axial Load (kips)	Cumulative Axial Load (kips)	Horiz. Shear (kips)	Cumulative Horiz. Shear (kips)
1.	180.000	0.000	0.000	0.000	0.000
2.	180.000	0.171	0.171	0.117	0.117
3.	177.750	0.410	0.581	2.653	2.770
4.	177.750	0.108	0.689	0.953	3.724
5.	177.750	1.148	1.837	1.124	4.847
6.	174.000	0.494	2.330	0.275	5.122
7.	170.583	0.268	2.598	0.209	5.331
8.	170.000	0.091	2.689	0.071	5.402
9.	160.000	0.955	3.643	0.735	6.137
10.	150.000	1.038	4.682	0.785	6.922
11.	148.000	0.396	5.078	2.688	9.610
12.	148.000	0.108	5.186	0.181	9.791
13.	148.000	1.309	6.496	0.746	10.537
14.	140.000	0.905	7.400	0.669	11.206
15.	137.000	0.415	7.815	1.981	13.187
16.	137.000	1.219	9.033	0.982	14.169
17.	130.750	1.323	10.357	0.527	14.696
18.	130.000	0.153	10.510	0.088	14.785
19.	127.750	0.301	10.810	1.771	16.556
20.	127.750	1.216	12.027	1.018	17.574
21.	126.000	0.316	12.342	0.180	17.755
22.	120.000	0.965	13.308	0.546	18.301
23.	117.000	0.558	13.866	1.886	20.187
24.	117.000	1.267	15.133	1.027	21.215
25.	110.000	1.196	16.328	0.661	21.876
26.	100.000	1.797	18.126	0.971	22.847
27.	90.000	1.902	20.028	0.998	23.846
28.	88.750	1.388	21.416	0.101	23.946
29.	82.750	1.416	22.832	0.603	24.549
30.	80.000	0.725	23.557	0.304	24.852
31.	70.000	2.498	26.055	1.021	25.874
32.	60.000	2.624	28.679	1.029	26.903
33.	50.000	2.750	31.429	1.027	27.930
34.	48.000	2.644	34.073	0.204	28.134
35.	40.750	2.318	36.392	0.699	28.833
36.	40.000	0.337	36.729	0.099	28.932
37.	30.000	3.451	40.180	0.975	29.907
38.	20.000	3.598	43.778	0.999	30.906
39.	10.000	3.745	47.523	1.040	31.946
40.	1.000	3.496	51.019	0.970	32.916
Base	0.000		51.019		32.916

----------(END LOAD CASE 1 -- AXIAL AND SHEAR FORCE)----------

PJF_Pole (tm) - Monopole Design Program
Windows Version 3.04.0000 Tue Jul 12, 2005 - 9:49:01 am
(c) 1993 to 2000 PAUL J. FORD AND COMPANY, Columbus, Ohio

Job No.....: 31205-0019 Design No: ROHN #48820TT Engineer : KJS
Description : 180-Ft Monopole - CT-11-720A: ORANGE, CT
Design..... : 85 mph / 74 mph + 1/2" radial ice
Owner..... : AT&T Client: T-Mobile
Status..... : Final Design Revision: 1 Rev. Date : 7/12/2005

POLE SHAFT SEGMENTS -- MOMENTS and DEFLECTIONS:

LOAD CASE 1: BASIC WIND VELOCITY = 85.00 mph

Segmnt Elev (ft)	[-------- MOMENTS (ft-kips) From Ant/ Arm	From Shaft Wind	From P-Delta Effects	Total Moment ---------]	[--DEFLECTIONS (inch) No P-Delta Effects	Total W/ P-Delta Effects	Total Rotation (deg)-------]
180.00	0.153	0.000	0.000	0.153	88.504	91.776	4.341
180.00	0.153	0.000	0.000	0.153	87.627	90.865	4.341
177.75	0.268	0.237	0.017	0.522	86.531	89.726	4.341
177.75	0.268	0.237	0.017	0.522	86.531	89.726	4.341
177.75	0.268	0.237	0.057	0.561	85.873	89.043	4.341
174.00	17.694	1.399	0.644	19.736	82.367	85.402	4.332
170.58	33.571	3.300	1.194	38.065	79.746	82.680	4.314
170.00	36.281	3.699	1.390	41.370	78.875	81.775	4.310
160.00	82.751	14.511	3.709	100.971	70.260	72.828	4.209
150.00	129.220	32.903	6.675	168.799	61.901	64.147	4.059
148.00	138.514	37.534	7.007	183.056	61.081	63.295	4.025
148.00	138.514	37.534	7.007	183.056	61.081	63.295	4.025
148.00	138.514	37.534	7.372	183.421	60.268	62.451	4.025
140.00	203.311	59.359	11.174	273.844	53.886	55.823	3.867
137.00	227.609	68.937	12.178	308.725	52.330	54.208	3.800
137.00	227.609	68.937	12.698	309.244	51.563	53.411	3.800
130.75	295.135	91.396	16.346	402.877	47.045	48.721	3.645
130.00	303.238	94.316	17.004	414.557	46.311	47.959	3.627
127.75	327.547	103.388	17.837	448.772	45.397	47.010	3.576
127.75	327.547	103.388	18.344	449.279	44.855	46.448	3.576
126.00	351.026	110.755	19.848	481.629	43.419	44.956	3.535
120.00	431.525	138.144	24.470	594.139	39.223	40.602	3.384
117.00	471.774	153.076	26.045	650.895	37.863	39.191	3.304
117.00	471.774	153.076	26.845	651.695	37.196	38.499	3.304
110.00	584.135	191.190	32.974	808.300	32.662	33.795	3.104
100.00	744.652	253.779	41.795	1040.225	26.696	27.609	2.794
90.00	905.168	326.206	50.504	1281.878	21.375	22.095	2.466
88.75	925.232	335.955	51.361	1312.548	20.881	21.583	2.424
82.75	1021.542	384.957	56.754	1463.252	18.041	18.641	2.245
80.00	1065.684	408.627	59.420	1533.731	16.702	17.255	2.163
70.00	1226.200	501.221	68.085	1795.506	12.624	13.035	1.864
60.00	1386.716	604.072	76.224	2067.012	9.151	9.442	1.565
50.00	1547.232	717.215	83.606	2348.052	6.279	6.476	1.268
48.00	1579.335	741.075	84.971	2405.381	5.777	5.957	1.209
40.75	1695.709	830.932	89.743	2616.384	4.194	4.322	1.017
40.00	1707.748	840.517	90.382	2638.647	3.990	4.112	0.997
30.00	1868.264	973.722	96.166	2938.153	2.227	2.294	0.739
20.00	2028.780	1116.742	100.621	3246.143	0.982	1.011	0.487
10.00	2189.296	1269.936	103.487	3562.719	0.244	0.251	0.240
0.00	2349.813	1433.708	104.503	3888.023	0.000	0.000	0.000

---------(END LOAD CASE 1 -- MOMENTS AND DEFLECTIONS)----------

PJF_Pole (tm) - Monopole Design Program
Windows Version 3.04.0000 Tue Jul 12, 2005 - 9:49:01 am
(c) 1993 to 2000 PAUL J. FORD AND COMPANY, Columbus, Ohio

Job No.....: 31205-0019 Design No: ROHN #48820TT Engineer : KJS
Description : 180-Ft Monopole - CT-11-720A: ORANGE, CT
Design..... : 85 mph / 74 mph + 1/2" radial ice
Owner..... : AT&T Client: T-Mobile
Status..... : Final Design Revision: 1 Rev. Date : 7/12/2005

POLE SHAFT SEGMENTS -- ACTUAL VS. ALLOWABLE STRESSES:

LOAD CASE 1: BASIC WIND VELOCITY = 85.00 mph
Note: Per TIA/EIA Sec. 3.1.1.1: Allow a 1/3 stress increase for poles under 700 feet in height. The allowable stresses shown include the factor of 1.333

Segmnt Elev (ft)	[---- ACTUAL STRESSES ----] Bending [fb] (ksi)	Axial [fa] (ksi)	Torsion [ft] (ksi)	Shear [fv] (ksi)	Combined [Ftot] (ksi)	Allow. Stress [Fb] (ksi)	Actual/ Allowable [Ftot/Fb] Ratio
180.00	0.022	0.000	0.000	0.000	0.022	52.00	0.0004
180.00	0.022	0.012	0.007	0.017	0.053	52.00	0.0010
177.75	0.072	0.040	0.183	0.381	0.985	52.00	0.0189
177.75	0.072	0.048	0.249	0.513	1.324	52.00	0.0255
177.75	0.077	0.127	0.393	0.667	1.848	52.00	0.0355
174.00	2.529	0.155	0.365	0.680	3.238	52.00	0.0623
170.58	3.559	0.128	0.266	0.523	3.932	52.00	0.0756
170.00	3.826	0.132	0.263	0.527	4.187	52.00	0.0805
160.00	7.813	0.163	0.220	0.548	8.087	52.00	0.1555
150.00	11.091	0.193	0.187	0.570	11.360	52.00	0.2185
148.00	11.659	0.206	0.287	0.779	12.008	52.00	0.2309
148.00	11.659	0.211	0.294	0.794	12.018	52.00	0.2311
148.00	11.682	0.264	0.335	0.854	12.122	52.00	0.2331
140.00	15.468	0.283	0.298	0.856	15.878	52.00	0.3053
137.00	16.701	0.293	0.381	0.986	17.158	52.00	0.3300
137.00	16.729	0.338	0.428	1.059	17.261	52.00	0.3319
130.75	19.976	0.371	0.392	1.052	20.500	52.00	0.3942
130.00	16.839	0.305	0.321	0.856	17.265	52.00	0.3320
127.75	17.676	0.309	0.375	0.944	18.129	52.00	0.3486
127.75	17.696	0.344	0.411	1.002	18.205	52.00	0.3501
126.00	18.016	0.344	0.391	0.986	18.514	52.00	0.3560
120.00	21.118	0.361	0.371	0.991	21.608	52.00	0.4155
117.00	22.264	0.369	0.402	1.073	22.777	52.00	0.4380
117.00	22.291	0.403	0.434	1.127	22.855	52.00	0.4395
110.00	25.350	0.416	0.398	1.113	25.899	52.00	0.4981
100.00	28.999	0.436	0.354	1.096	29.542	52.00	0.5681
90.00	31.974	0.456	0.316	1.083	32.520	52.00	0.6254
88.75	32.301	0.484	0.312	1.080	32.873	52.00	0.6322
82.75	29.065	0.423	0.252	0.907	29.556	52.00	0.5684
80.00	29.598	0.430	0.245	0.905	30.094	52.00	0.5787
70.00	31.301	0.452	0.221	0.896	31.813	52.00	0.6118
60.00	32.713	0.474	0.201	0.888	33.241	52.00	0.6392
50.00	33.886	0.497	0.183	0.880	34.432	52.00	0.6622
48.00	34.096	0.534	0.180	0.879	34.678	52.00	0.6669
40.75	30.758	0.480	0.149	0.759	31.278	52.00	0.6015
40.00	30.816	0.483	0.148	0.759	31.338	52.00	0.6027
30.00	31.495	0.506	0.136	0.752	32.038	52.00	0.6161
20.00	32.050	0.530	0.125	0.746	32.614	52.00	0.6272
10.00	32.505	0.553	0.116	0.741	33.091	52.00	0.6364
0.00	32.878	0.571	0.107	0.735	33.481	52.00	0.6439

PJF_Pole (tm) - Monopole Design Program
Windows Version 3.04.0000 Tue Jul 12, 2005 - 10:50:12 am
(c) 1993 to 2000 PAUL J. FORD AND COMPANY, Columbus, Ohio

Job No.....: 31205-0019 Design No: ROHN #48820TT Engineer : KJS
Description : 180-Ft Monopole - CT-11-720A: ORANGE, CT
Design..... : 85 mph / 74 mph + 1/2" radial ice
Owner..... : AT&T Client: T-Mobile
Status..... : Final Design Revision: 1 Rev. Date : 7/12/2005

M O N O P O L E B A S E P L A T E D E S I G N D E T A I L S

Shaft Shape .....:	18 Sided Polygon	Stress Increase ...:	1.333 Factor
Base Dia, DF ....:	64.750 Inches	Base Plate Shape ..:	Round
PT-to-PT, DP ....:	65.749 Inches		
Min Bolt Circle .:	71.999 Inches	Use Bolt Circle ...:	72.000 Inches

---

Base Reactions :	DESIGN	USER
Moment .....:	3888.02 Ft-Kips	3888.02 Ft-Kips
Axial Load .....:	51.02 Kips	51.02 Kips

Anchor Bolt Details :	DESIGN	USER
Number of Bolts .....:	16	20
Bolt Diameter .....:	2.250 Inches	2.250 Inches
Bolt Type .....:	#18J ASTM A615	#18J ASTM A615
Y-Distance .....:	9	12
Mom. of Inertia .....:	10367.71 In^4	12960.00 In^4
Bolt Tension, T .....:	162.00 Kips	129.60 Kips
Allowable Tension ...:	194.81 Kips	194.81 Kips
Bolt Compression, C .:	165.19 Kips	132.15 Kips

Base Plate Details :	DESIGN	USER
Plate Moment, MPL ...:	598.74 In-Kips	479.05 In-Kips
Bend Plane, W .....:	12.84 Inches	10.28 Inches
Plate Thickness, t ..:	2.159 Inches	2.750 Inches
Plate Width .....:	77.249 Inches	77.250 Inches
Plate Steel .....:	ASTM A633 GR. E (60 KSI)	ASTM A633 GR. E (60 KSI)
Gross Weight .....:	2869.50 Lbs	3655.10 Lbs
Net Weight .....:	2100.30 Lbs	2661.60 Lbs
Allowable Stress ....:	59.99 Ksi	59.99 Ksi
Actual Stress .....:	59.99 Ksi	36.99 Ksi
Act./Allow Ratio ....:	1.00	0.62

B A S E P L A T E D E S I G N S U M M A R Y

USE FOLLOWING SPECIFICATIONS:

Plate Thickness .....:	2.750 Inches	Number of Bolts ..:	20
Plate Width/Diameter :	77.250 Inches (Round)	Bolt Circle .....:	72.00 Inches
Plate Weight .....:	3.655 Kips	Bolt Diameter ....:	2.25 Inches
		Bolt Type .....:	#18J ASTM A615

PJF_Pole (tm) - Monopole Design Program
Windows Version 3.04.0000 Tue Jul 12, 2005 - 10:08:04 am
(c) 1993 to 2000 PAUL J. FORD AND COMPANY, Columbus, Ohio

Job No.....: 31205-0019 Design No: ROHN #48820TT Engineer : KJS
Description : 180-Ft Monopole - CT-11-720A: ORANGE, CT
Design..... : 85 mph / 74 mph + 1/2" radial ice
Owner..... : AT&T Client: T-Mobile
Status..... : Final Design Revision: 1 Rev. Date : 7/12/2005

S U M M A R Y O F C U R R E N T C A I S S O N D E S I G N

Diameter (ft) .....:	8.00	Compression (kips):	51.02	Friction S.F .....:	2.00
Min. Depth (ft) ...:	24.50	Horizontal (kips) :	32.92	Lateral S.F .....:	2.00
Depth Used (ft) ...:	32.00	Uplift (kips) ....:	0.00	Concrete S.F .....:	1.30
Rebar Area (in^2) .:	43.68	Moment (Ft-kips) .:	3888.0	Concrete F'c (psi) :	3000.0
Rebar Used .....:	(28)#11	Full Cohesion (ft):	24.00	Steel Cover (in) ..:	4.00
Water at (ft) .....:	8.00	Rock at (ft) .....:	26.00		

SOIL PROFILE :

Soil Layer	Layer Thickness (ft)	Unit Weight (pcf)	Ult. Skin Friction (psf)	Allowable Bearing (psf)	Friction Angle- Phi (deg)	Passive Coeff.- KP	Cohesion (c) (psf)
1	6.00	100.00	0.00	0.00	0.00	1.000	0.00
2	2.00	130.00	0.00	0.00	34.00	3.537	0.00
3	16.00	70.00	0.00	0.00	34.00	3.537	0.00
4	10.00	70.00	0.00	20000.00	34.00	3.537	0.00

LATERAL / MOMENT CAPACITY (CHECK) :	Min Design	Actual Design
Caisson Diameter (ft) .....:	8.00	8.00
Height Above Grade (ft) .....:	0.50	0.50
Depth Below Grade (ft) .....:	24.50	32.00
Concrete Volume (CY) .....:	46.54	60.50
Applied Moment From Loads (Working), Mwork(Ft-kip):	4485.52	4650.12
Resisting Moment From Soil (Ult), Mult(Ft-kip) ...:	9086.06	18979.69
Moment S.F. (Mult / Mwork) .....:	2.03	4.08
Applied Horizontal Load (Working), Hwork (Kips) ..:	32.92	32.92
Horizontal Soil Resistance (Ultimate), Hult (Kips):	72.82	74.81
Horizontal S.F. (Hult / Hwork) .....:	2.21	2.27
Center of Rotation (from grade) (ft) .....:	17.65	22.65
Inflection Point (Max Design Moment Location (ft) :	7.30	7.30
Maximum Factored Design Moment for Reinf. (Ft-kip):	5522.36	5522.36
Area Steel Required From Loads (in^2) .....:	27.60	27.60
ACI Minimum Steel (0.5%) (in^2) .....:	36.19	36.19
Area Reinf. Steel Provided (in^2) .....:	43.68	43.68

UPLIFT CAPACITY CHECK :		
Actual Uplift on Caisson (Kips) .....:	0.00	0.00
Allowable Uplift Capacity (Kips) .....:	109.39	135.81

COMPRESSION CAPACITY CHECK :		
Actual Compression on Caisson (Kips) .....:	51.02	51.02
Total Compression (Includes Concrete Wt.) (Kips) .:	116.37	135.21
Allowable Compression Capacity (Kips) .....:	1005.31	1005.31

CAISSON DESIGN:
USE: 8.00 ft Diameter X 32.50 ft Long (Concrete Volume = 60.50 CY)
Reinf: (28)#11 Vert, w/Closed Ties: (12)#5 @6.0", remaining ties @18.0" (ASTM A615)
