Quietsource® Series

QUIETSOURCE® SERIES
Standby Generators
Liquid-Cooled Gas Engine

INCLUDES:

- Two Line LCD Tri-Lingual Digital Nexus™ Controller
- Isochronous Electronic Governor
- Sound Attenuated Enclosure
- Closed Coolant Recovery System
- Smart Battery Charger
- UV/Ozone Resistant Hoses
- ±1% Voltage Regulation
- Natural Gas or LP Operation
- 2 Year Limited Warranty
- UL 2200 Listed

Standby Power Rating

Model QT022 (Aluminum - Gray) - 22 kW 60 Hz
Model QT027 (Aluminum - Gray) - 27 kW 60 Hz
Model QT036 (Aluminum - Gray) - 36 kW 60 Hz
Model QT048 (Aluminum - Gray) - 48 kW 60 Hz

Meets EPA Emission Regulations
22 & 27 kW are CA/MA emissions compliant
48 kW meets CA/MA emissions requirements with optional catalyst
36 kW not for sale in CA/MA

FEATURES

- **INNOVATIVE DESIGN & PROTOTYPE TESTING** are key components of GENERAC'S success in "IMPROVING POWER BY DESIGN." But it doesn't stop there. Total commitment to component testing, reliability testing, environmental testing, destruction and life testing, plus testing to applicable CSA, NEMA, EGSA, and other standards, allows you to choose GENERAC POWER SYSTEMS with the confidence that these systems will provide superior performance.

- **TEST CRITERIA:**
  - ✓ **PROTOTYPE TESTED**
  - ✓ **SYSTEM TORSIONAL TESTED**
  - ✓ **NEMA MG1-22 EVALUATION**
  - ✓ **MOTOR STARTING ABILITY**

- **SOLID-STATE, FREQUENCY COMPENSATED VOLTAGE REGULATION.** This state-of-the-art power maximizing regulation system is standard on all Generac models. It provides optimized FAST RESPONSE to changing load conditions and MAXIMUM MOTOR STARTING CAPABILITY by electronically torque-matching the surge loads to the engine. Digital voltage regulation at ±1%.

- **SINGLE SOURCE SERVICE RESPONSE** from Generac's extensive dealer network provides parts and service know-how for the entire unit, from the engine to the smallest electronic component.

- **GENERAC TRANSFER SWITCHES.** Long life and reliability are synonymous with GENERAC POWER SYSTEMS. One reason for this confidence is that the GENERAC product line includes its own transfer systems and controls for total system compatibility.

GENERAC®

22 • 27 • 36 • 48 kW

application & engineering data

GENERATOR SPECIFICATIONS

Type	Synchronous
Rotor Insulation Class	H (22 & 27 kW) or F (36 & 48 kW)
Stator Insulation Class	H
Telephone Interference Factor (TIF)	<50
Alternator Output Leads 1-Phase	4 wire
Alternator Output Leads 3-Phase	6 wire
Bearings	Sealed Ball
Coupling	Flexible Disc
Excitation System	Direct

VOLTAGE REGULATION

Type	Electronic
Sensing	Single Phase
Regulation	± 1%

GOVERNOR SPECIFICATIONS

Type	Electronic
Frequency Regulation	Isochronous
Steady State Regulation	± 0.25%

ELECTRICAL SYSTEM

Battery Charge Alternator	12 Volt 30 Amp
Static Battery Charger	2 Amp
Recommended Battery	Group 26 (22, 27 & 36 kW) or Group 24F (48 kW), 525CCA
System Voltage	12 Volts

GENERATOR FEATURES

Revolving field heavy duty generator
Directly connected to the engine
Operating temperature rise 120 °C above a 40 °C ambient
Class H insulation is rated at 150 °C rise at 25 °C ambient
Class F insulation is rated at 145 °C rise at 25 °C ambient
All models fully prototyped tested

ENCLOSURE FEATURES

Aluminum weather protective enclosure	Ensures protection against mother nature. Electrostatically applied textured epoxy paint for added durability.
Enclosed critical grade muffler	Quiet, critical grade muffler is mounted inside the unit to prevent injuries.
Small, compact, attractive	Makes for an easy, eye appealing installation.
SAE	Sound attenuated enclosure ensures quiet operation.

ENGINE SPECIFICATIONS: 22, 27 & 36 kW

Make	Generac
Model	In-line
Cylinders	4
Displacement (Liters)	2.4
Bore (in/mm)	3.41/86.5
Stroke (in/mm)	3.94/100
Compression Ratio	9.5:1
Intake Air System	Naturally Aspirated (22 & 27 kW) or Turbocharged/Aftercooled (36 kW)
Lifter Type	Hydraulic

ENGINE SPECIFICATIONS: 48 kW

Make	Generac
Model	V-Type
Cylinders	8
Displacement (Liters)	5.4
Bore (in/mm)	3.55/90.2
Stroke (in/mm)	4.17/105.9
Compression Ratio	9:1
Intake Air System	Naturally Aspirated
Lifter Type	Hydraulic

ENGINE LUBRICATION SYSTEM

Oil Pump Type	Gear
Oil Filter Type	Full flow spin-on cartridge
Crankcase Capacity (qt/l)	4/3.8 (22, 27 & 36 kW) or 6/5.7 (48 kW)

ENGINE COOLING SYSTEM

Type	Closed
Water Pump	Belt driven
Fan Speed (rpm)	1980 - 22 & 27 kW 1500 - 36 kW 1954 - 48 kW
Fan Diameter (in/mm)	18.1/459.7 (22 & 27 kW) or 22/558.8 (36 & 48 kW)
Fan Mode	Pusher (22 & 27 kW) or Puller (36 & 48 kW)

FUEL SYSTEM

Fuel Type	Natural gas, propane vapor
Carburetor	Down Draft
Secondary Fuel Regulator	Standard
Fuel Shut Off Solenoid	Standard
Operating Fuel Pressure	5-14" water column/9-26 mm HG

(All ratings in accordance with BS5514, ISO3046, ISO8528, SAE J1349 and DIN6271)

22 • 27 • 36 • 48 kW

operating data

GENERATOR OUTPUT VOLTAGE/kW - 60 Hz

		kW LPG	Amp LPG	kW Nat. Gas	Amp Nat. Gas	CB Size (Both)
QT022	120/240 V, 1Ø, 1.0 pf	22	92	22	92	100
	120/208 V, 3Ø, 0.8 pf	22	76	22	76	80
	120/240 V, 3Ø, 0.8 pf	22	66	22	66	80
QT027	120/240 V, 1Ø, 1.0 pf	27	113	25	104	125
	120/208 V, 3Ø, 0.8 pf	27	94	25	87	100
	120/240 V, 3Ø, 0.8 pf	27	81	25	75	90
QT036	120/240 V, 1Ø, 1.0 pf	36	150	35	146	175
	120/208 V, 3Ø, 0.8 pf	36	125	35	121	150
	120/240 V, 3Ø, 0.8 pf	36	108	35	105	125
	277/480 V, 3Ø, 0.8 pf	36	54	35	53	60
QT048	120/240 V, 1Ø, 1.0 pf	48	200	48	200	200
	120/208 V, 3Ø, 0.8 pf	48	166.5	48	166	175
	120/240 V, 3Ø, 0.8 pf	48	144	48	144	150
	277/480 V, 3Ø, 0.8 pf	48	72	48	72	80

SURGE CAPACITY IN AMPS

		Voltage Dip @ < .4 pf	
		15%	30%
QT022	120/240 V, 1Ø	89	216
	120/208 V, 3Ø	74	180
	120/240 V, 3Ø	64	156
QT027	120/240 V, 1Ø	109	265
	120/208 V, 3Ø	91	221
	120/240 V, 3Ø	79	192
QT036	120/240 V, 1Ø	54	149
	120/208 V, 3Ø	87	210
	120/240 V, 3Ø	75	182
	277/480 V, 3Ø	36	87
QT048	120/240 V, 1Ø	69	189
	120/208 V, 3Ø	111	269
	120/240 V, 3Ø	96	233
	277/480 V, 3Ø	43	104

ENGINE FUEL CONSUMPTION

		Natural Gas		Propane	
		(ft^3/hr)	(m^3/hr)	(gal/hr)	(l/hr)
QT022	Exercise cycle	42	1.2	0.44	1.7
	25% of rated load	100	2.8	1.1	4.2
	50% of rated load	190	5.4	2.1	7.8
	75% of rated load	255	7.2	2.8	10.5
	100% of rated load	316	9	3.4	13
QT027	Exercise cycle	42	1.2	0.44	1.7
	25% of rated load	108	3.1	1.2	4.5
	50% of rated load	197	5.6	2.1	8.1
	75% of rated load	287	8.2	3.1	11.8
	100% of rated load	359	10.2	3.9	14.8
QT036	Exercise cycle	48	1.4	0.5	2
	25% of rated load	156	4.4	1.7	6.4
	50% of rated load	282	8	3.1	11.6
	75% of rated load	392	11.1	4.3	16.2
	100% of rated load	503	14.3	5.5	20.8
QT048	Exercise cycle	95	2.7	1	3.9
	25% of rated load	204	5.8	2.16	8.5
	50% of rated load	392	11.1	4.14	15.7
	75% of rated load	547	15.5	5.8	22.8
	100% of rated load	756	21.5	7.96	31.3

Note: **Fuel pipe must be sized for full load.**

For Btu content, multiply gal/hr x 90950 (LP) or ft^3/hr x 1000 (NG)

For megajoule content, multiply l/hr x 25.35 (LP) or m^3/hr x 37.26 (NG)

Refer to "Emissions Data Sheets" for maximum fuel flow for EPA and SCAQMD permitting purposes.

STANDBY RATING: Standby ratings apply to installations served by a reliable utility source. The standby rating is applicable to varying loads for the duration of a power outage. There is no overload capability for this rating. Ratings are in accordance with ISO-3046-1. Design and specifications are subject to change without notice.

GENERAC®

22 • 27 • 36 • 48 kW

operating data

ENGINE COOLING

	22 kW	27 kW	36 kW	48 kW
Air flow (inlet air including alternator and combustion air in cfm/cmm)	2400/68	2400/68	2200/62.3	4350/123.2
System coolant capacity (gal/liters)	3/11.4	3/11.4	2.5/9.5	3/11.4
Heat rejection to coolant (BTU per hr/MJ per hr)	99,000/104.5	105,000/110.8	145,000/153	186,000/196.2
Maximum operation air temperature on radiator (°C/°F)	60/150			
Maximum ambient temperature (°C/°F)	50/140			

COMBUSTION REQUIREMENTS

Flow at rated power (cfm/cmm)	68/1.9	68/1.9	106/3	163/4.6

SOUND EMISSIONS

Sound output in dB(A) at 23 ft (7 m) with generator in exercise mode*	61	61	58	63
Sound output in dB(A) at 23 ft (7 m) with generator operating at normal load*	70	70	64	68

*Sound levels are taken from the front of the generator. Sound levels taken from other sides of the generator may be higher depending on installation parameters.

EXHAUST

Exhaust flow at rated output (cfm/cmm)	165/4.7	180/5.1	300/8.5	414/11.7
Exhaust temperature at muffler outlet (°C/°F)	482/900	538/1000	579/1075	552/1025

ENGINE PARAMETERS

Rated Synchronous rpm	1800

POWER ADJUSTMENT FOR AMBIENT CONDITIONS

Temperature Deration ..... 3% for every 10 °C above 25 °C or 1.65% for every 10 °F above 77 °F
Altitude Deration (22, 27 & 48 kW) ..... 1% for every 100 m above 183 m or 3% for every 1000 ft above 600 ft
Altitude Deration (36 kW) ..... 1% for every 100 m above 915 m or 3% for every 1000 ft above 3000 ft

CONTROLLER FEATURES

2-Line Plain Text LCD Display ..... Simple user interface for ease of operation.
Mode Switch: Auto ..... Automatic Start on Utility failure. 7 day exerciser
Off ..... Stops unit. Power is removed. Control and charger still operate.
Manual ..... Start with starter control, unit stays on. If utility fails, transfer to load takes place.
Programmable start delay between 10-30 seconds ..... Standard
Engine Start Sequence ..... Cyclic cranking: 16 sec on, 7 rest (90 sec maximum duration)
Engine Warm-up ..... 5 sec
Engine Cool-Down ..... 1 min
Starter Lock-out ..... Starter cannot re-engage until 5 sec after engine has stopped.
Smart Battery Charger ..... Standard
Automatic Voltage Regulation with Over and Under Voltage Protection ..... Standard
Automatic Low Oil Pressure Shutdown ..... Standard
Overspeed Shutdown ..... Standard, 72 Hz
High Temperature Shutdown ..... Standard
Overcrank Protection ..... Standard
Safety Fused ..... Standard
Failure to Transfer Protection ..... Standard
Low Battery Protection ..... Standard
50 Event Run Log ..... Standard
Future Set Capable Exerciser ..... Standard
Incorrect Wiring Protection ..... Standard
Internal Fault Protection ..... Standard
Common External Fault Capability ..... Standard
Governor Failure Protection ..... Standard

22 • 27 • 36 • 48 kW

available accessories

Model #	Product	Description
005630-0 - 22, 27 & 36 kW 005632-0 - 48 kW	Cold Weather Kit	If the temperature regularly falls below 32 °F (0 °C), install a cold weather kit to maintain optimal battery temperature. Kit consists of battery warmer with thermostat built into the wrap.
005616-0 - 22, 27 & 36 kW 006204-0 - 48 kW	Extreme Cold Weather Kit	Recommended where the temperature regularly falls below 32 °F (0 °C) for extended periods of time. For liquid cooled units only.
005621-0	Auxiliary Transfer Switch Contact Kit	The auxiliary transfer switch contact kit allows the transfer switch to lock out a single large electrical load you may not need.
005651-0	Base Plug Kit	Add base plugs to the base of the generator to keep out debris.
005704-0	Paint Kit	If the generator enclosure is scratched or damaged, it is important to touch-up the paint to protect from future corrosion. The paint kit includes the necessary paint to properly maintain or touch-up a generator enclosure.
005656-0 - 22 & 27 kW 005984-0 - 36 kW 006205-0 - 48 kW	Scheduled Maintenance Kit	The Liquid-Cooled Scheduled Maintenance Kits offer all the hardware necessary to perform complete maintenance on Generac liquid-cooled generators.
005928-0	Wireless Remote	Completely wireless and battery powered, Generac's wireless remote monitor provides you with instant status information without ever leaving the house.
005951-0	Advanced Wireless Remote	Remotely control generator functions with the advanced model's LCD display. In addition to remote testing of the generator, set the exercise cycle and maintenance interval reminders.
006199-0	PMM Starter Kit	The PMM Starter Kit consists of a 24 VAC, field installed transformer that enables the use of the 24 VAC Power Management Modules (PMMs) and one PMM. The standard controller (without starter kit) can control two HVAC loads with no additional hardware. Not compatible with pre-wired switches.
006186-0	Power Management Module (50 Amps)	Power Management Modules are used in conjunction with the Smart Switch to increase its power management capabilities. It gives the Smart Switch additional power management flexibility not found in any other transfer switch. Not compatible with pre-wired switches. Note: PMM Starter Kit required.
006463-1	Mobile Link™	Generac's Mobile Link allows you to check the status of your generator from anywhere that you have access to an Internet connection from a PC or with any smart device. You will even be notified when a change in the generator's status occurs via e-mail or text message. Note: Harness Adapter Kit required.
006478-0	Harness Adapter Kit	The Harness Adapter Kit is required to make liquid-cooled units compatible with Mobile Link™.

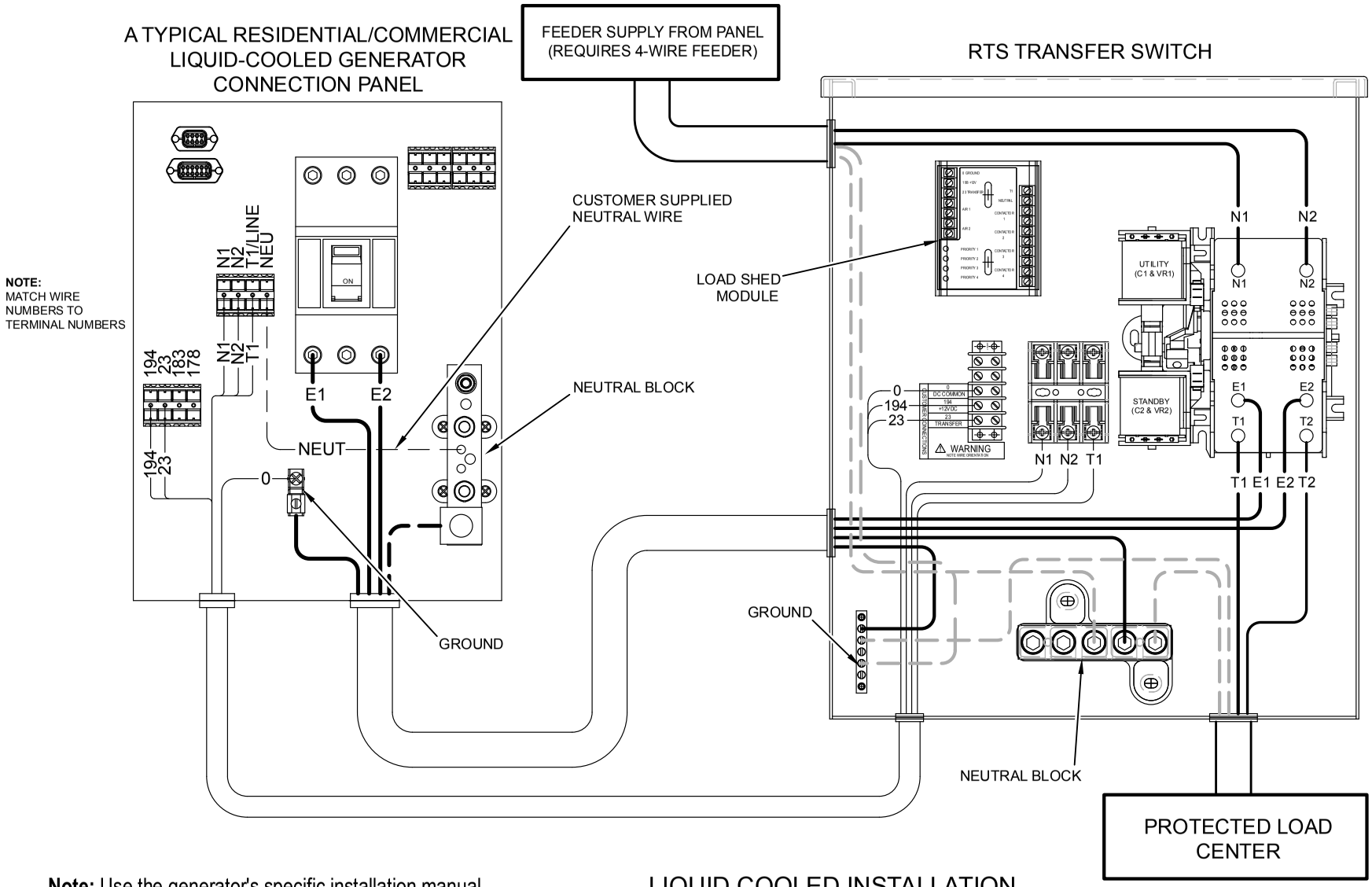

Note: Use the generator's specific installation manual and wiring diagrams to verify generator wiring connections, as they may differ slightly from illustration.

LIQUID COOLED INSTALLATION

NOTES:

1) MINIMUM RECOMMENDED CONCRETE PAD SIZE:1041 (41.0") WIDE X 1892 (74 1/2") LONG.REFERENCE INSTALLATION GUIDE SUPPLIED WITH UNIT FOR CONCRETE PAD GUIDELINES.

2) ALLOW SUFFICIENT ROOM ON ALL SIDES OF THE GENERATOR FOR MAINTENANCE AND SERVICING, THIS UNIT MUST BE INSTALLED IN ACCORDANCE WITH CURRENT APPLICABLE NFPA 37 AND NFPA 70 STANDARDS AS WELL AS ANY OTHER FEDERAL, STATE AND LOCAL CODES FOR MINIMUM DISTANCES FROM OTHER STRUCTURES.

3) CIRCUIT BREAKER INFORMATION: SEE SPECIFICATION SHEET WITHIN OWNERS MANUAL.

4) INSIDE STUB-UP AREA FOR AC LOAD LEAD CONDUIT CONNECTION, NEUTRAL CONNECTION, BATTERY CHARGER 120 VOLT AC (0.5 AMP MAX.) CONNECTION, ACCESS TO TRANSFER SWITCH CONTROL WIRES, AND TRANSFER SWITCH CONNECTION (IF SO EQUIPPED). REMOVE FRONT COVER FOR ACCESS.

4A) ONE 1-1/2" NEMA ELECTRICAL KNOCKOUT AND TWO 1/2" NEMA ELECTRICAL KNOCKOUTS PROVIDED FOR OUTSIDE AC LOAD CONDUIT CONNECTION, NEUTRAL CONNECTION, BATTERY CHARGER 120 VOLT AC (0.5 AMP MAX.) CONNECTION, ACCESS TO TRANSFER SWITCH CONTROL WIRES, AND TRANSFER SWITCH CONNECTION (IF SO EQUIPPED). REMOVE FRONT COVER FOR ACCESS.

5) REFERENCE OWNERS MANUAL FOR LIFTING WARNINGS.

6) REMOVE LIFT-OFF ENCLOSURE TO ACCESS EXHAUST MUFFLER.

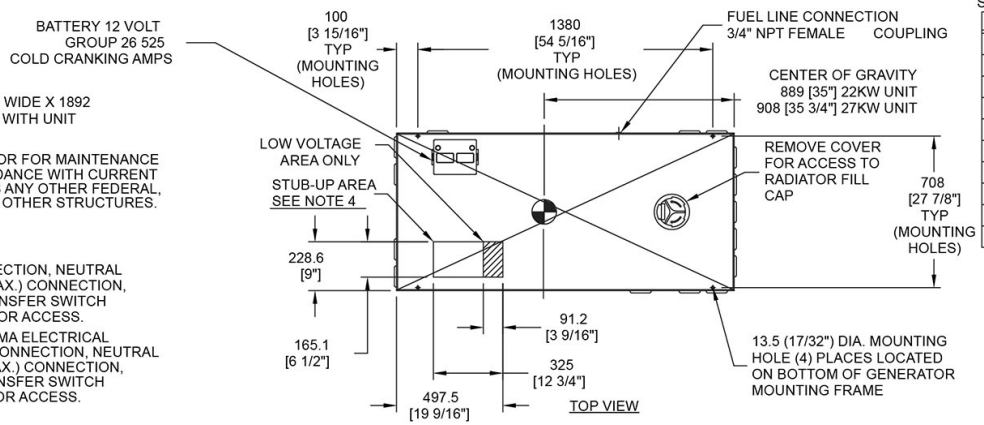

SERVICE ITEM ACCESSIBILITY CHART

SERVICE ITEM	ACCESS
OIL FILL CAP	THRU RIGHT DOOR
OIL DIP STICK	THRU RIGHT DOOR
OIL FILTER	THRU RIGHT DOOR
OIL DRAIN HOSE	THRU LEFT DOOR
RADIATOR DRAIN HOSE	THRU LEFT DOOR
AIR CLEANER ELEMENT	THRU LEFT DOOR
SPARK PLUGS	THRU LEFT DOOR
MUFFLERS	SEE NOTE 6
FAN BELT	THRU RIGHT DOOR
BATTERY	THRU LEFT DOOR

REFERENCE OWNERS MANUAL FOR PERIODIC REPLACEMENT PART LISTINGS

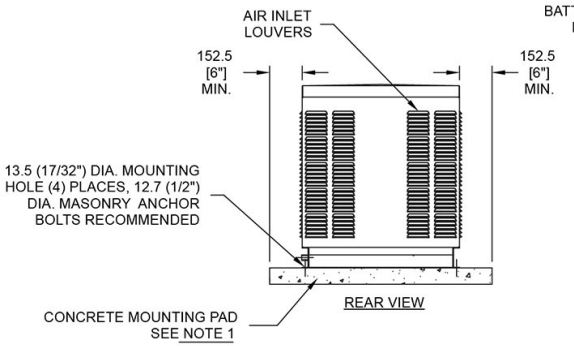

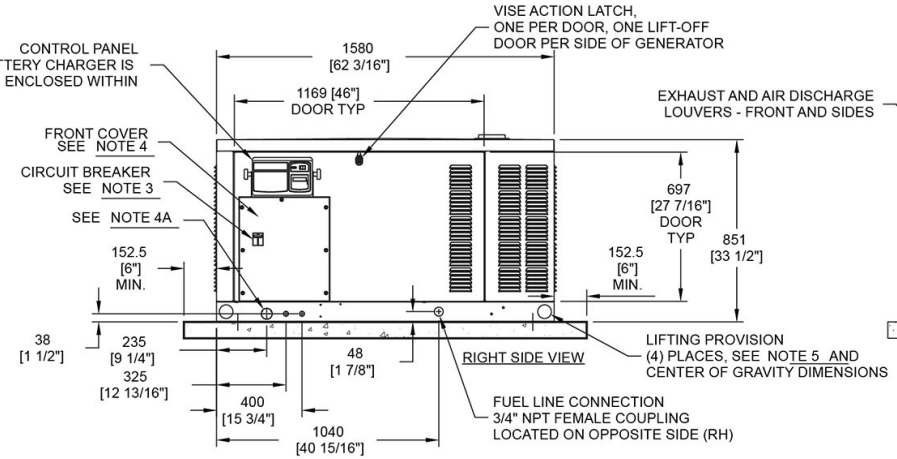

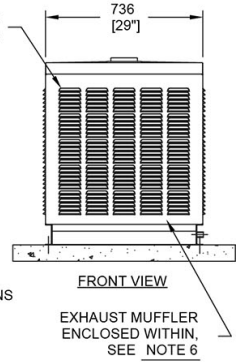

WEIGHT DATA				
ENGINE/KW	ENCLOSURE MATERIAL	WEIGHT (GENSET ONLY) KG [LBS]	WEIGHT (SHIPPING CARTON/SKID) KG [LBS]	SHIPPING WEIGHT (GENSET,SKID,&CARTON) KG [LBS]
2.4L/22KW	ALUMINUM	383 [843]	30 [66]	413 [909]
2.4L/27KW	ALUMINUM	405 [891]		434 [957]

36 kW

WEIGHT DATA			
ENCLOSURE MATERIAL	WEIGHT (GENSET ONLY) KG [LBS]	WEIGHT (WOODEN SHIPPING CRATE/SKID) KG [LBS]	SHIPPING WEIGHT (SKID AND GENSET) KG [LBS]
ALUMINUM	577 [1271]	44 [98]	621 [1369]

NOTES:

1) MINIMUM RECOMMENDED CONCRETE PAD SIZE:1155 [45 1/2"] WIDE X 2255 [88 7/8"] LONG.REFERENCE INSTALLATION GUIDE SUPPLIED WITH UNIT FOR CONCRETE PAD GUIDELINES.

2) ALLOW SUFFICIENT ROOM ON ALL SIDES OF THE GENERATOR FOR MAINTENANCE AND SERVICING. THIS UNIT MUST BE INSTALLED IN ACCORDANCE WITH CURRENT APPLICABLE NFPA 37 AND NFPA 70 STANDARDS AS WELL AS ANY OTHER FEDERAL, STATE AND LOCAL CODES FOR MINIMUM DISTANCES FROM OTHER STRUCTURES.

3) CIRCUIT BREAKER INFORMATION: SEE SPECIFICATION SHEET WITHIN OWNERS MANUAL

4) INSIDE STUB-UP AREA FOR AC LOAD LEAD CONDUIT CONNECTION, NEUTRAL CONNECTION, BATTERY CHARGER 120 VOLT AC (.5 AMP MAX.) CONNECTION, AND ACCESS TO TRANSFER SWITCH CONTROL WIRES. REMOVE FRONT COVER FOR ACCESS.

4A) FIELD CUT HOLE IS ONLY REQUIRED FOR MOUNTING OF GENERATOR ON AN EXISTING PAD.

5) REFERENCE OWNERS MANUAL FOR LIFTING WARNINGS.

6) REMOVE EITHER LEFT OR RIGHT HAND SIDE PANEL TO ACCESS EXHAUST MUFFLER AND FAN BELT.

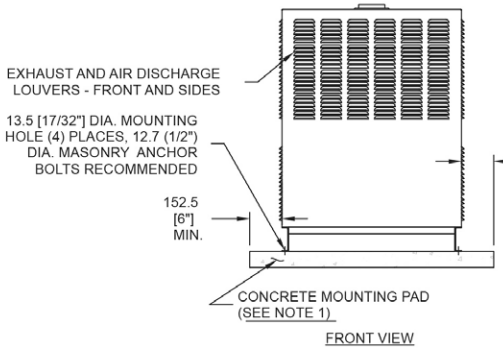

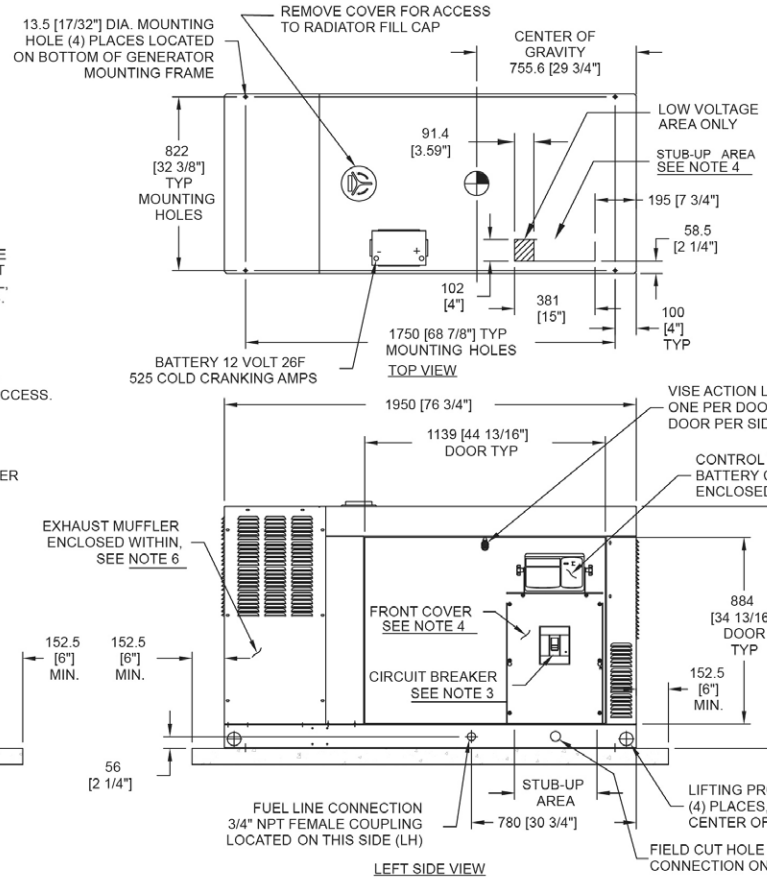

SERVICE ITEM ACCESSIBILITY CHART

SERVICE ITEM	2.4L
OIL FILL CAP	EITHER DOOR
OIL DIP STICK	THRU RIGHT DOOR
OIL FILTER	THRU RIGHT DOOR
OIL DRAIN HOSE	THRU RIGHT DOOR
RADIATOR DRAIN HOSE	THRU LEFT DOOR
AIR CLEANER ELEMENT	THRU RIGHT DOOR
SPARK PLUGS	THRU LEFT DOOR
MUFFLER	SEE NOTE 6
FAN BELT	SEE NOTE 6
BATTERY	THRU LEFT DOOR

REFERENCE OWNERS MANUAL FOR PERIODIC REPLACEMENT PART LISTINGS

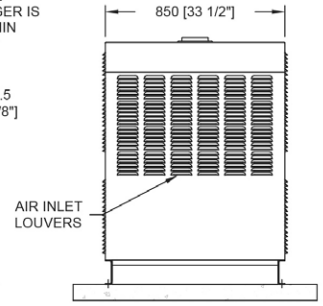

48 kW

installation layout

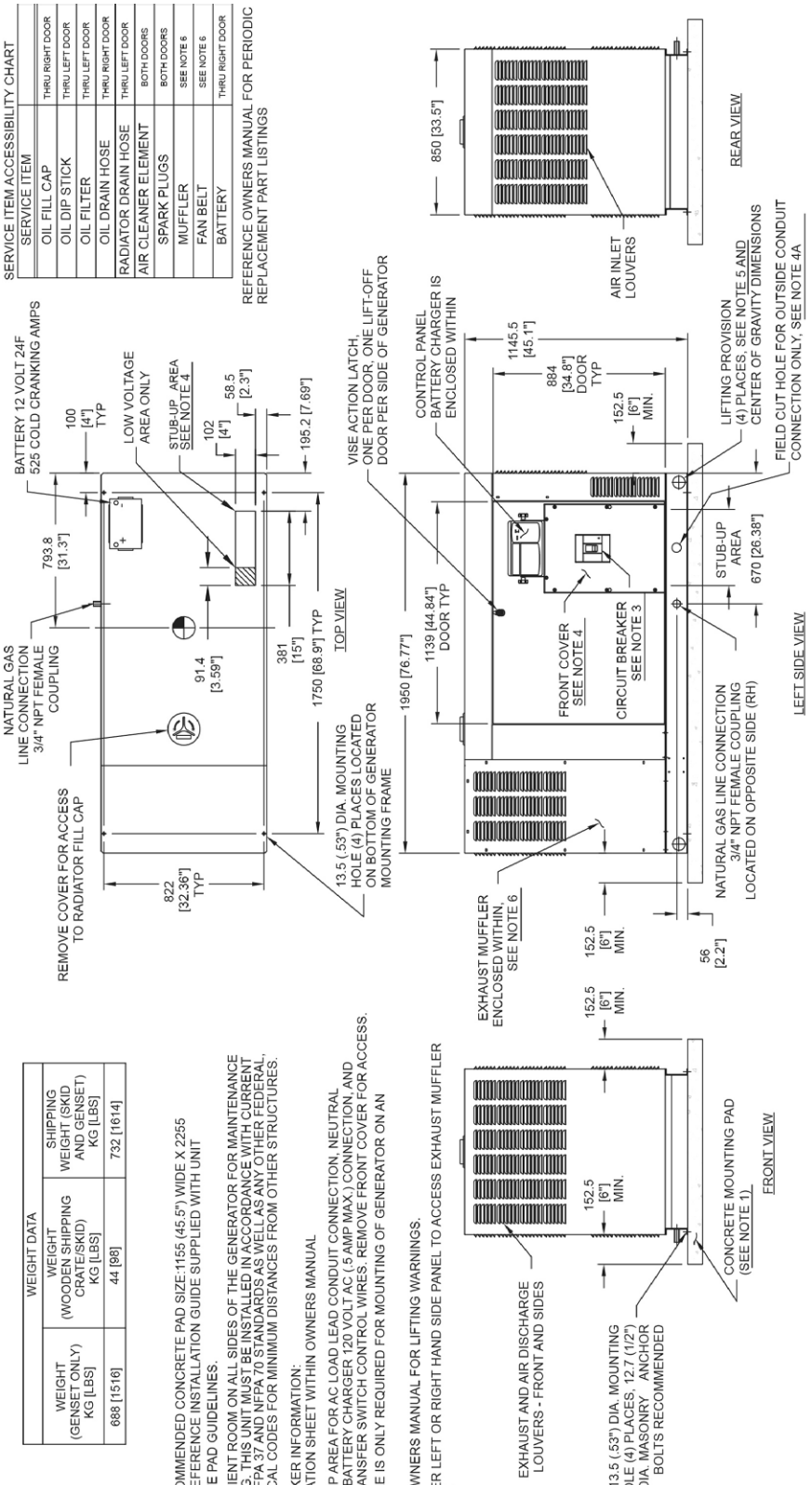

SERVICE ITEM ACCESSIBILITY CHART

SERVICE ITEM	
OIL FILL CAP	THRU RIGHT DOOR
OIL DIP STICK	THRU LEFT DOOR
OIL FILTER	THRU LEFT DOOR
OIL DRAIN HOSE	THRU RIGHT DOOR
RADIATOR DRAIN HOSE	THRU LEFT DOOR
AIR CLEANER ELEMENT	BOTH DOORS
SPARK PLUGS	BOTH DOORS
MUFFLER	SEE NOTE 6
FAN BELT	SEE NOTE 6
BATTERY	THRU RIGHT DOOR

REFERENCE OWNERS MANUAL FOR PERIODIC REPLACEMENT PART LISTINGS

WEIGHT DATA

WEIGHT (GENSET ONLY) KG [LBS]	WEIGHT (WOODEN SHIPPING CRATE/SKID) KG [LBS]	SHIPPING WEIGHT (SKID AND GENSET) KG [LBS]
688 [1516]	44 [98]	732 [1614]

NOTES:

1) MINIMUM RECOMMENDED CONCRETE PAD SIZE:1155 (45.5") WIDE X 2255 (88.8") LONG.REFERENCE INSTALLATION GUIDE SUPPLIED WITH UNIT FOR CONCRETE PAD GUIDELINES.

2) ALLOW SUFFICIENT ROOM ON ALL SIDES OF THE GENERATOR FOR MAINTENANCE AND SERVICING. THIS UNIT MUST BE INSTALLED IN ACCORDANCE WITH CURRENT APPLICABLE NFPA 37 AND NFPA 70 STANDARDS AS WELL AS ANY OTHER FEDERAL, STATE AND LOCAL CODES FOR MINIMUM DISTANCES FROM OTHER STRUCTURES.

3) CIRCUIT BREAKER INFORMATION:
SEE SPECIFICATION SHEET WITHIN OWNERS MANUAL

4) INSIDE STUB-UP AREA FOR AC LOAD LEAD CONDUIT CONNECTION, NEUTRAL CONNECTION, BATTERY CHARGER 120 VOLT AC (.5 AMP MAX.) CONNECTION, AND ACCESS TO TRANSFER SWITCH CONTROL WIRES. REMOVE FRONT COVER FOR ACCESS.

4A) FIELD CUT HOLE IS ONLY REQUIRED FOR MOUNTING OF GENERATOR ON AN EXISTING PAD.

5) REFERENCE OWNERS MANUAL FOR LIFTING WARNINGS.

6) REMOVE EITHER LEFT OR RIGHT HAND SIDE PANEL TO ACCESS EXHAUST MUFFLER AND FAN BELT.

©2013 Generac Power Systems, Inc. All rights reserved. All specifications are subject to change without notice. Bulletin 0199360SBY-C Printed in U.S.A. 11/20/13