QC Development
PO Box 916
Storrs, CT 06268
860-670-9068
Mark.Roberts@QCDevelopment.net

April 17, 2020

Melanie A. Bachman
Acting Executive Director
Connecticut Siting Council
10 Franklin Square
New Britain, CT 06051

Notice of Exempt Modification – New Cingular Wireless PCS, LLC (AT&T) – CT2132
10 Willard Road, Norwalk, CT 06851
N 41.1282888888889
W -73.3901805555556

Dear Ms. Bachman:

AT&T currently maintains nine (9) antennas at the 347-foot level of the existing 3750-foot Self Support Tower at 10 Willard Road, Norwalk, CT. The tower and property are owned by FDSPIN WILLARD LLC. AT&T now intends to remove (3) Andrew antennas and install (6) Kathrein 800-10964 antennas. AT&T will also AT&T will also remove (3) Ericsson RRUS-11 and (3) RRUS-32 Remote Radio Units (RRU) and install (3) Ericsson 8843 B2/B66, (3) 4449 B5/B12 and (3) 4478-B14 RRUs. The new antennas and RRUS will also be installed at the 347' level of the tower.

AT&T's use of this facility was originally approved by the Siting Council on April 19, 1988 (EM-103-880324). Since no further modification to the overall facility height is proposed, this modification therefore complies with the aforementioned approval.

Please accept this letter as notification pursuant to Regulations of Connecticut State Agencies § 16-50j-73, for construction that constitutes an exempt modification pursuant to R.C.S.A. § 16-50j-72(b)(2). In accordance with R.C.S.A. § 16-50j-73, a copy of this letter is being sent to Mayor Harry Rilling, Mayor of the City of Norwalk, as elected official and to the Norwalk Planning and Zoning Department, as well as to the tower and property owner.

The planned modifications to the facility fall squarely within those activities explicitly provided for in R.C.S.A. § 16-50j-72(b)(2).

1. The proposed modifications will not result in an increase in the height of the existing structure.

2. The proposed modifications will not require the extension of the site boundary.

3. The proposed modifications will not increase noise levels at the facility by six decibels or more, or to levels that exceed state and local criteria.

4. The operation of the replacement antennas will not increase radio frequency emissions at the facility to a level at or above the Federal Communications Commission safety standard.

5. The proposed modifications will not cause a change or alteration in the physical or environmental characteristics of the site.

6. The existing structure and its foundation can support the proposed loading.

For the foregoing reasons, AT&T respectfully submits that the proposed modifications to the above-referenced telecommunications facility constitute an exempt modification under R.C.S.A. § 16-50j-72(b)(2).

Please feel free to call me at (860) 670-9068 with any questions regarding this matter. Thank you for your consideration.

Sincerely,

Mark Roberts
QC Development
Consultant for AT&T

Attachments

cc: The Honorable Harry Rilling - Elected Official
Steven Kleppin – Director of Planning & Zoning
FDSPIN WILLARD LLC - Tower and Property Owner

Power Density

Existing Loading on Tower

Carrier	# of Channels	ERP/Ch (W)	Antenna Centerline Height (ft)	Power Density (mW/cm^2)	Freq. Band (MHz**)	Limit S (mW /cm^2)	%MPE
Other Carriers*							7.82%
AT&T UMTS	2	414	347	0.0026	850	0.5667	0.05%
AT&T UMTS	2	656	347	0.0041	1900	1.0000	0.04%
AT&T LTE	2	681	347	0.0042	700	0.4667	0.09%
AT&T LTE	2	730	347	0.0045	700	0.4667	0.10%
AT&T LTE	2	782	347	0.0048	850	0.5667	0.09%
AT&T LTE	2	1711	347	0.0106	1900	1.0000	0.11%
AT&T LTE	2	1751	347	0.0108	2300	1.0000	0.11%
Site Total							8.39%

*Per CSC Records (available upon request, includes calculation formulas)

** If a range of frequencies are used, such as 880-894, enter the lowest value, i.e. 880

Proposed Loading on Tower

Carrier	# of Channels	ERP/Ch (W)	Antenna Centerline Height (ft)	Power Density (mW/cm^2)	Freq. Band (MHz**)	Limit S (mW /cm^2)	%MPE
Other Carriers*							7.82%
AT&T UMTS	1	184	347	0.0006	850	0.5667	0.01%
AT&T LTE	2	1476	347	0.0091	700	0.4667	0.20%
AT&T LTE	1	2951	347	0.0091	700	0.4667	0.20%
AT&T LTE	1	1000	347	0.0031	850	0.5667	0.05%
AT&T 5G	1	1000	347	0.0031	850	0.5667	0.05%
AT&T LTE	2	3664	347	0.0227	1900	1.0000	0.23%
AT&T LTE	1	3837	347	0.0119	2100	1.0000	0.12%
AT&T LTE	1	1285	347	0.0040	2300	1.0000	0.04%
Site Total							8.71%

*Per CSC Records (available upon request, includes calculation formulas)

** If a range of frequencies are used, such as 880-894, enter the lowest value, i.e. 880

PROJECT INFORMATION

SCOPE OF WORK:

ITEMS TO BE MOUNTED ON THE EXISTING TOWER:
- NEW AT&T ANTENNA (800–10964) (TYP. OF 2 PER SECTOR, TOTAL OF 6).
- NEW AT&T RRUS B5/B12 4449 (850/700) (TYP. OF 1 PER SECTOR, TOTAL OF 3).
- NEW AT&T RRUS B2/B66A 8843 (PCS/AWS) (TYP. OF 1 PER SECTOR, TOTAL OF 3).
- NEW AT&T RRUS B14 4478 (700) (TYP. OF 1 PER SECTOR, TOTAL OF 3).
- NEW DC ONLY SURGE ARRESTOR DC6–48–60–0–8C–EV (TOTAL OF 1) WITH (2) DC POWER.
- PROPOSED SECTOR FRAME AND MODS (SEE SHEETS S–1 TO S–3).

ITEMS TO BE MOUNTED AT EQUIPMENT LOCATION:
- ADD RBS 6630 WITH IDLe.
- REMOVE 2ND XMU.
- ADD 5G RBS 6630.
- ADD DC–12.
- INSTALL POWERSHIFT TO SUPPORT POWER REQUIREMENTS FOR 8843 B2/B66A RADIOS.
- INSTALL (1) FIF RACK FOR PROPOSED POWERSHIFT.
- BASEBAND CONFIGURATION AS PER PD / SECTION–7.

ITEMS TO BE REMOVED:
- EXISTING AT&T ANTENNA (SBNHH–1D65A) @ POS. 4 (TYP. OF 1 PER SECTOR, TOTAL OF 3).
- EXISTING AT&T RRUS–11 B5 (TYP. OF 1 PER SECTOR, TOTAL OF 3).
- EXISTING AT&T RRUS–11 B12 (TYP. OF 1 PER SECTOR, TOTAL OF 3).
- EXISTING AT&T RRUS–32 (TYP OF 1 PER SECTOR, TOTAL OF 3).
- EXISTING MOUNTS (TYP OF 1 PER SECTOR, TOTAL OF 3).

SITE ADDRESS:	WILLARD ROAD NORWALK, CT 06851
LATITUDE:	41.128270° N, 41° 07' 41.77" N
LONGITUDE:	73.390166° W, 73° 23' 24.59" W
TYPE OF SITE:	SELF–SUPPORT TOWER / INDOOR EQUIPMENT
STRUCTURE HEIGHT:	350'±
RAD CENTER:	347'±
CURRENT USE:	TELECOMMUNICATIONS FACILITY
PROPOSED USE:	TELECOMMUNICATIONS FACILITY

DRAWING INDEX

SITE NUMBER: CT2132

SITE NAME: NORWALK EAST-WILLARD RD

FA CODE: 10034993

PACE ID: MRCTB038163, MRCTB038167, MRCTB038164

PROJECT: LTE 6C/7C/5G 2019 UPGRADE

VICINITY MAP

DIRECTIONS TO SITE:

FROM ROCKY HILL, CT:
START OUT GOING NORTHEAST ON ENTERPRISE DR TOWARD CAPITOL BLVD. 0.4 MI. TURN LEFT ONTO CAPITOL BLVD. 0.3 MI. TURN LEFT ONTO WEST ST. 0.3 MI. MERGE ONTO I–91S VIA THE RAMP ON THE LEFT TOWARD NEW HAVEN. 9.7 MI. MERGE ONTO CT–15 S VIA EXIT 17. 43.3 MI. TAKE THE CT–57 EXIT, EXIT 42, TOWARD WESTPORT / WESTON. 0.1 MI. TURN RIGHT ONTO CT–57 / WESTON RD. 0.2 MI. KEEP RIGHT AT THE FORK TO GO ON CT–57. 0.9 MI. TURN SLIGHT RIGHT ONTO CANAL ST / CT–57. CONTINUE TO FOLLOW CANAL ST. 0.5 MI. CANAL ST BECOMES KINGS HWY N. 0.6 MI. TURN SLIGHT RIGHT ONTO POST RD W / US–1. CONTINUE TO FOLLOW US–1. 1.1 MI. TURN RIGHT ONTO WILLARD RD. 10 WILLARD RD IS ON THE LEFT.

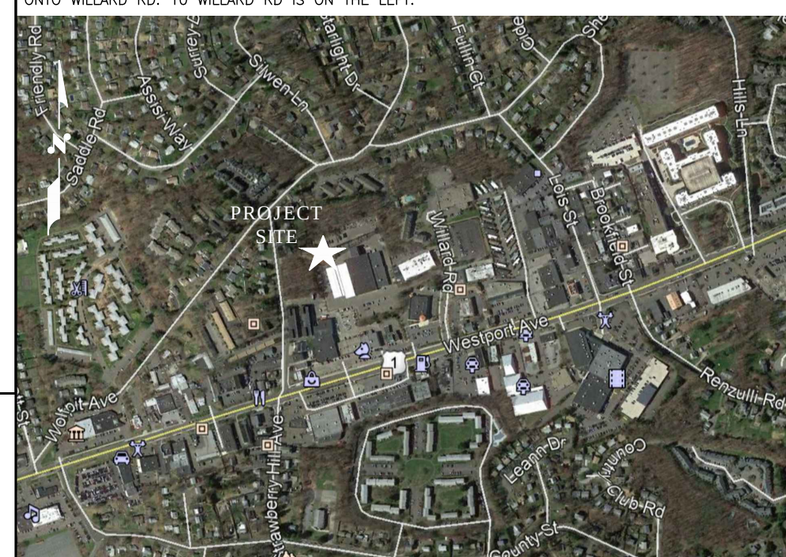

GENERAL NOTES

1. THIS DOCUMENT IS THE CREATION, DESIGN, PROPERTY AND COPYRIGHTED WORK OF AT&T. ANY DUPLICATION OR USE WITHOUT EXPRESS WRITTEN CONSENT IS STRICTLY PROHIBITED. DUPLICATION AND USE BY GOVERNMENT AGENCIES FOR THE PURPOSES OF CONDUCTING THEIR LAWFULLY AUTHORIZED REGULATORY AND ADMINISTRATIVE FUNCTIONS IS SPECIFICALLY ALLOWED.
2. THE FACILITY IS AN UNMANNED PRIVATE AND SECURED EQUIPMENT INSTALLATION. IT IS ONLY ACCESSED BY TRAINED TECHNICIANS FOR PERIODIC ROUTINE MAINTENANCE AND THEREFORE DOES NOT REQUIRE ANY WATER OR SANITARY SEWER SERVICE. THE FACILITY IS NOT GOVERNED BY REGULATIONS REQUIRING PUBLIC ACCESS PER ADA REQUIREMENTS.
3. CONTRACTOR SHALL VERIFY ALL PLANS AND EXISTING DIMENSIONS AND CONDITIONS ON THE JOB SITE AND SHALL IMMEDIATELY NOTIFY THE AT&T MOBILITY REPRESENTATIVE IN WRITING OF DISCREPANCIES BEFORE PROCEEDING WITH THE WORK OR BE RESPONSIBLE FOR SAME.
4. CONSTRUCTION DRAWINGS ARE VALID FOR SIX MONTHS AFTER ENGINEER OF RECORD'S STAMPED AND SIGNED SUBMITTAL DATE LISTED HEREIN.

72 HOURS

CALL BEFORE YOU DIG

CALL TOLL FREE 1–800–922–4455

OR CALL 811

UNDERGROUND SERVICE ALERT

STATE OF CONNECTICUT
DANIEL P. HAMM
No. 24178
LICENSED PROFESSIONAL ENGINEER

HUDSON Design Group LLC
45 BEECHWOOD DRIVE
NORTH ANDOVER, MA 01845
TEL: (978) 557-5553
FAX: (978) 336-5586

SAI
12 INDUSTRIAL WAY
SALEM, NH 03079

SITE NUMBER: CT2132
SITE NAME: NORWALK EAST-WILLARD RD

WILLARD ROAD
NORWALK, CT 06851
FAIRFIELD COUNTY

at&t
500 ENTERPRISE DRIVE, SUITE 3A
ROCKY HILL, CT 06067

NO.	DATE	REVISIONS	BY	CHK	APP'D
2	04/15/20	ISSUED FOR CONSTRUCTION	ET	HC	DPH
1	01/10/20	ISSUED FOR CONSTRUCTION	ET	HC	DPH
0	12/12/19	ISSUED FOR REVIEW	ET	HC	DPH
A	04/24/19	ISSUED FOR REVIEW	ET	HC	DPH

SCALE: AS SHOWN | DESIGNED BY: HC | DRAWN BY: ET

AT&T

TITLE SHEET
(LTE 6C/7C)

SITE NUMBER	DRAWING NUMBER	REV
CT2132	T–1	2

GROUNDING NOTES

1. THE SUBCONTRACTOR SHALL REVIEW AND INSPECT THE EXISTING FACILITY GROUNDING SYSTEM AND LIGHTNING PROTECTION SYSTEM (AS DESIGNED AND INSTALLED) FOR STRICT COMPLIANCE WITH THE NEC (AS ADOPTED BY THE AHJ), THE SITE-SPECIFIC (UL, LPI, OR NFPA) LIGHTING PROTECTION CODE, AND GENERAL COMPLIANCE WITH TELCORDIA AND TIA GROUNDING STANDARDS. THE SUBCONTRACTOR SHALL REPORT ANY VIOLATIONS OR ADVERSE FINDINGS TO THE CONTRACTOR FOR RESOLUTION.
2. ALL GROUND ELECTRODE SYSTEMS (INCLUDING TELECOMMUNICATION, RADIO, LIGHTNING PROTECTION, AND AC POWER GES'S) SHALL BE BONDED TOGETHER, AT OR BELOW GRADE, BY TWO OR MORE COPPER BONDING CONDUCTORS IN ACCORDANCE WITH THE NEC.
3. THE SUBCONTRACTOR SHALL PERFORM IEEE FALL-OF-POTENTIAL RESISTANCE TO EARTH TESTING (PER IEEE 1100 AND 81 STANDARDS) FOR NEW GROUND ELECTRODE SYSTEMS. THE SUBCONTRACTOR SHALL FURNISH AND INSTALL SUPPLEMENTAL GROUND ELECTRODES AS NEEDED TO ACHIEVE A TEST RESULT OF 5 OHMS OR LESS.
4. METAL RACEWAY SHALL NOT BE USED AS THE NEC REQUIRED EQUIPMENT GROUND CONDUCTOR. STRANDED COPPER CONDUCTORS WITH GREEN INSULATION, SIZED IN ACCORDANCE WITH THE NEC, SHALL BE FURNISHED AND INSTALLED WITH THE POWER CIRCUITS TO BTS EQUIPMENT.
5. EACH BTS CABINET FRAME SHALL BE DIRECTLY CONNECTED TO THE MASTER GROUND BAR WITH GREEN INSULATED SUPPLEMENTAL EQUIPMENT GROUND WIRES, #6 AWG STRANDED COPPER OR LARGER FOR INDOOR BTS AND #2 AWG STRANDED COPPER FOR OUTDOOR BTS.
6. EXOTHERMIC WELDS SHALL BE USED FOR ALL GROUNDING CONNECTIONS BELOW GRADE.
7. APPROVED ANTIOXIDANT COATINGS (I.E., CONDUCTIVE GEL OR PASTE) SHALL BE USED ON ALL COMPRESSION AND BOLTED GROUND CONNECTIONS.
8. ICE BRIDGE BONDING CONDUCTORS SHALL BE EXOTHERMICALLY BONDED OR BOLTED TO GROUND BAR.
9. ALUMINUM CONDUCTOR OR COPPER CLAD STEEL CONDUCTOR SHALL NOT BE USED FOR GROUNDING CONNECTIONS.
10. MISCELLANEOUS ELECTRICAL AND NON-ELECTRICAL METAL BOXES, FRAMES AND SUPPORTS SHALL BE BONDED TO THE GROUND RING, IN ACCORDANCE WITH THE NEC.
11. METAL CONDUIT SHALL BE MADE ELECTRICALLY CONTINUOUS WITH LISTED BONDING FITTINGS OR BY BONDING ACROSS THE DISCONTINUITY WITH #6 AWG COPPER WIRE UL APPROVED GROUNDING TYPE CONDUIT CLAMPS.
12. ALL NEW STRUCTURES WITH A FOUNDATION AND/OR FOOTING HAVING 20 FT. OR MORE OF 1/2 IN. OR GREATER ELECTRICALLY CONDUCTIVE REINFORCING STEEL MUST HAVE IT BONDED TO THE GROUND RING USING AN EXOTHERMIC WELD CONNECTION USING #2 AWG SOLID BARE TINNED COPPER GROUND WIRE, PER NEC 250.50

GENERAL NOTES

1. FOR THE PURPOSE OF CONSTRUCTION DRAWING, THE FOLLOWING DEFINITIONS SHALL APPLY:

   CONTRACTOR – SAI
   SUBCONTRACTOR – GENERAL CONTRACTOR (CONSTRUCTION)
   OWNER – AT&T MOBILITY

2. PRIOR TO THE SUBMISSION OF BIDS, THE BIDDING SUBCONTRACTOR SHALL VISIT THE CELL SITE TO FAMILIARIZE WITH THE EXISTING CONDITIONS AND TO CONFIRM THAT THE WORK CAN BE ACCOMPLISHED AS SHOWN ON THE CONSTRUCTION DRAWINGS. ANY DISCREPANCY FOUND SHALL BE BROUGHT TO THE ATTENTION OF CONTRACTOR.
3. ALL MATERIALS FURNISHED AND INSTALLED SHALL BE IN STRICT ACCORDANCE WITH ALL APPLICABLE CODES, REGULATIONS, AND ORDINANCES. SUBCONTRACTOR SHALL ISSUE ALL APPROPRIATE NOTICES AND COMPLY WITH ALL LAWS, ORDINANCES, RULES, REGULATIONS, AND LAWFUL ORDERS OF ANY PUBLIC AUTHORITY REGARDING THE PERFORMANCE OF THE WORK. ALL WORK CARRIED OUT SHALL COMPLY WITH ALL APPLICABLE MUNICIPAL AND UTILITY COMPANY SPECIFICATIONS AND LOCAL JURISDICTIONAL CODES, ORDINANCES AND APPLICABLE REGULATIONS.
4. DRAWINGS PROVIDED HERE ARE NOT TO BE SCALED AND ARE INTENDED TO SHOW OUTLINE ONLY.
5. UNLESS NOTED OTHERWISE, THE WORK SHALL INCLUDE FURNISHING MATERIALS, EQUIPMENT, APPURTENANCES, AND LABOR NECESSARY TO COMPLETE ALL INSTALLATIONS AS INDICATED ON THE DRAWINGS.
6. "KITTING LIST" SUPPLIED WITH THE BID PACKAGE IDENTIFIES ITEMS THAT WILL BE SUPPLIED BY CONTRACTOR. ITEMS NOT INCLUDED IN THE BILL OF MATERIALS AND KITTING LIST SHALL BE SUPPLIED BY THE SUBCONTRACTOR.
7. THE SUBCONTRACTOR SHALL INSTALL ALL EQUIPMENT AND MATERIALS IN ACCORDANCE WITH MANUFACTURER'S RECOMMENDATIONS UNLESS SPECIFICALLY STATED OTHERWISE.
8. IF THE SPECIFIED EQUIPMENT CANNOT BE INSTALLED AS SHOWN ON THESE DRAWINGS, THE SUBCONTRACTOR SHALL PROPOSE AN ALTERNATIVE INSTALLATION SPACE FOR APPROVAL BY THE CONTRACTOR.
9. SUBCONTRACTOR SHALL DETERMINE ACTUAL ROUTING OF CONDUIT, POWER AND T1 CABLES, GROUNDING CABLES AS SHOWN ON THE POWER, GROUNDING AND TELCO PLAN DRAWING. SUBCONTRACTOR SHALL UTILIZE EXISTING TRAYS AND/OR SHALL ADD NEW TRAYS AS NECESSARY. SUBCONTRACTOR SHALL CONFIRM THE ACTUAL ROUTING WITH THE CONTRACTOR.
10. THE SUBCONTRACTOR SHALL PROTECT EXISTING IMPROVEMENTS, PAVEMENTS, CURBS, LANDSCAPING AND STRUCTURES. ANY DAMAGED PART SHALL BE REPAIRED AT SUBCONTRACTOR'S EXPENSE TO THE SATISFACTION OF OWNER.
11. SUBCONTRACTOR SHALL LEGALLY AND PROPERLY DISPOSE OF ALL SCRAP MATERIALS SUCH AS COAXIAL CABLES AND OTHER ITEMS REMOVED FROM THE EXISTING FACILITY. ANTENNAS REMOVED SHALL BE RETURNED TO THE OWNER'S DESIGNATED LOCATION.
12. SUBCONTRACTOR SHALL LEAVE PREMISES IN CLEAN CONDITION.
13. ALL CONCRETE REPAIR WORK SHALL BE DONE IN ACCORDANCE WITH AMERICAN CONCRETE INSTITUTE (ACI) 301.
14. ANY NEW CONCRETE NEEDED FOR THE CONSTRUCTION SHALL BE AIR-ENTRAINED AND SHALL HAVE 4000 PSI STRENGTH AT 28 DAYS. ALL CONCRETE WORK SHALL BE DONE IN ACCORDANCE WITH ACI 318 CODE REQUIREMENTS.
15. ALL STRUCTURAL STEEL WORK SHALL BE DETAILED, FABRICATED AND ERECTED IN ACCORDANCE WITH AISC SPECIFICATIONS. ALL STRUCTURAL STEEL SHALL BE ASTM A36 (Fy = 36 ksi) UNLESS OTHERWISE NOTED. PIPES SHALL BE ASTM A53 TYPE E (Fy = 36 ksi). ALL STEEL EXPOSED TO WEATHER SHALL BE HOT DIPPED GALVANIZED. TOUCH UP ALL SCRATCHES AND OTHER MARKS IN THE FIELD AFTER STEEL IS ERECTED USING A COMPATIBLE ZINC RICH PAINT.
16. CONSTRUCTION SHALL COMPLY WITH SPECIFICATIONS AND "GENERAL CONSTRUCTION SERVICES FOR CONSTRUCTION OF AT&T SITES."
17. SUBCONTRACTOR SHALL VERIFY ALL EXISTING DIMENSIONS AND CONDITIONS PRIOR TO COMMENCING ANY WORK. ALL DIMENSIONS OF EXISTING CONSTRUCTION SHOWN ON THE DRAWINGS MUST BE VERIFIED. SUBCONTRACTOR SHALL NOTIFY THE CONTRACTOR OF ANY DISCREPANCIES PRIOR TO ORDERING MATERIAL OR PROCEEDING WITH CONSTRUCTION.
18. THE EXISTING CELL SITE IS IN FULL COMMERCIAL OPERATION. ANY CONSTRUCTION WORK BY SUBCONTRACTOR SHALL NOT DISRUPT THE EXISTING NORMAL OPERATION. ANY WORK ON EXISTING EQUIPMENT MUST BE COORDINATED WITH CONTRACTOR. ALSO, WORK SHOULD BE SCHEDULED FOR AN APPROPRIATE MAINTENANCE WINDOW USUALLY IN LOW TRAFFIC PERIODS AFTER MIDNIGHT.
19. SINCE THE CELL SITE IS ACTIVE, ALL SAFETY PRECAUTIONS MUST BE TAKEN WHEN WORKING AROUND HIGH LEVELS OF ELECTROMAGNETIC RADIATION. EQUIPMENT SHOULD BE SHUTDOWN PRIOR TO PERFORMING ANY WORK THAT COULD EXPOSE THE WORKERS TO DANGER. PERSONAL RF EXPOSURE MONITORS ARE ADVISED TO BE WORN TO ALERT OF ANY DANGEROUS EXPOSURE LEVELS.
20. **APPLICABLE BUILDING CODES:**
    SUBCONTRACTOR'S WORK SHALL COMPLY WITH ALL APPLICABLE NATIONAL, STATE, AND LOCAL CODES AS ADOPTED BY THE LOCAL AUTHORITY HAVING JURISDICTION (AHJ) FOR THE LOCATION. THE EDITION OF THE AHJ ADOPTED CODES AND STANDARDS IN EFFECT ON THE DATE OF CONTRACT AWARD SHALL GOVERN THE DESIGN.

    BUILDING CODE: IBC 2015 WITH 2018 CT STATE BUILDING CODE AMENDMENTS
    ELECTRICAL CODE: 2017 NATIONAL ELECTRICAL CODE (NFPA 70-2017)

    SUBCONTRACTOR'S WORK SHALL COMPLY WITH THE LATEST EDITION OF THE FOLLOWING STANDARDS:

    AMERICAN CONCRETE INSTITUTE (ACI) 318; BUILDING CODE REQUIREMENTS FOR STRUCTURAL CONCRETE;

    AMERICAN INSTITUTE OF STEEL CONSTRUCTION (AISC) MANUAL OF STEEL CONSTRUCTION, ASD, FOURTEENTH EDITION;

    TELECOMMUNICATIONS INDUSTRY ASSOCIATION (TIA) 222-H, STRUCTURAL STANDARDS FOR STEEL

    FOR ANY CONFLICTS BETWEEN SECTIONS OF LISTED CODES AND STANDARDS REGARDING MATERIAL, METHODS OF CONSTRUCTION, OR OTHER REQUIREMENTS, THE MOST RESTRICTIVE REQUIREMENT SHALL GOVERN. WHERE THERE IS CONFLICT BETWEEN A GENERAL REQUIREMENT AND A SPECIFIC REQUIREMENT, THE SPECIFIC REQUIREMENT SHALL GOVERN.

ABBREVIATIONS

AGL	ABOVE GRADE LEVEL	EQ	EQUAL	REQ	REQUIRED
AWG	AMERICAN WIRE GAUGE	GC	GENERAL CONTRACTOR	RF	RADIO FREQUENCY
BBU	BATTERY BACKUP UNIT	GRC	GALVANIZED RIGID CONDUIT	TBD	TO BE DETERMINED
BTCW	BARE TINNED SOLID COPPER WIRE	MGB	MASTER GROUND BAR	TBR	TO BE REMOVED
BGR	BURIED GROUND RING	MIN	MINIMUM	TBRR	TO BE REMOVED AND REPLACED
BTS	BASE TRANSCEIVER STATION	P	PROPOSED	TYP	TYPICAL
E	EXISTING	NTS	NOT TO SCALE	UG	UNDER GROUND
EGB	EQUIPMENT GROUND BAR	RAD	RADIATION CENTER LINE (ANTENNA)	VIF	VERIFY IN FIELD
EGR	EQUIPMENT GROUND RING	REF	REFERENCE		

HUDSON Design Group LLC
45 BEECHWOOD DRIVE
NORTH ANDOVER, MA 01845
TEL: (978) 557-5553
FAX: (978) 336-5586

SAI
12 INDUSTRIAL WAY
SALEM, NH 03079

SITE NUMBER: CT2132
SITE NAME: NORWALK EAST-WILLARD RD

WILLARD ROAD
NORWALK, CT 06851
FAIRFIELD COUNTY

at&t
500 ENTERPRISE DRIVE, SUITE 3A
ROCKY HILL, CT 06067

NO.	DATE	REVISIONS	BY	CHK	APP'D
2	04/15/20	ISSUED FOR CONSTRUCTION	HC	HC	DPH
1	01/10/20	ISSUED FOR CONSTRUCTION	ET	HC	DPH
0	12/12/19	ISSUED FOR REVIEW	ET	HC	DPH
A	04/24/19	ISSUED FOR REVIEW	ET	HC	DPH

SCALE: AS SHOWN | DESIGNED BY: HC | DRAWN BY: ET

STATE OF CONNECTICUT
DANIEL PHILLIP HAMM
No. 24178
LICENSED PROFESSIONAL ENGINEER

AT&T

GENERAL NOTES
(LTE 6C/7C)

SITE NUMBER	DRAWING NUMBER	REV
CT2132	GN-1	2

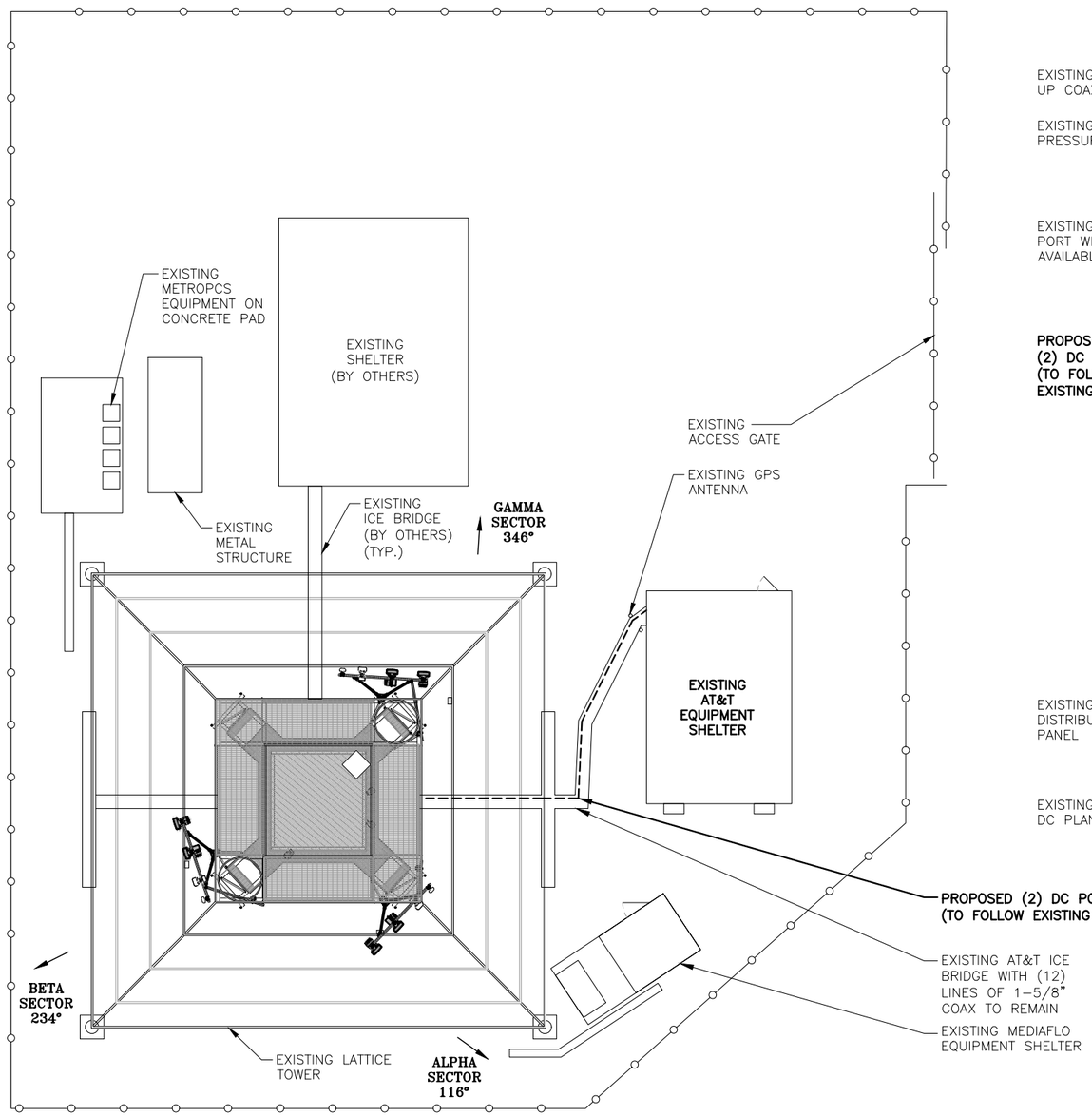

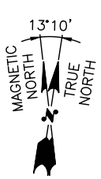

COMPOUND PLAN (1 / A-1)
22x34 SCALE: 3/32"=1'-0"
11x17 SCALE: 3/64"=1'-0"

0 5'-4" 10'-8" 21'-4" 32'-0"

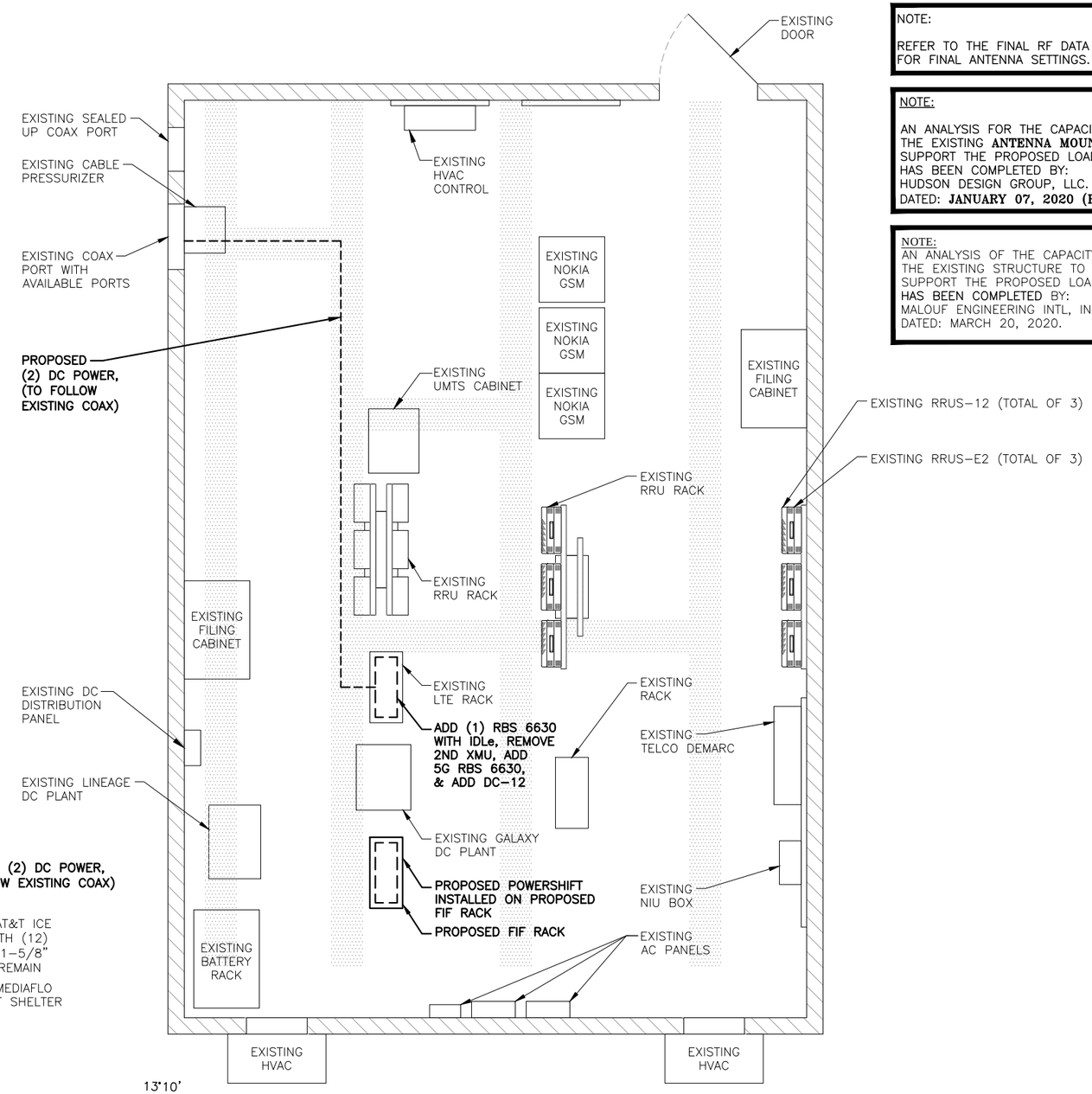

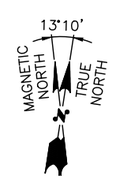

EQUIPMENT PLAN (2 / A-1)
22x34 SCALE: 1/2"=1'-0"
11x17 SCALE: 1/4"=1'-0"

0 1'-0" 2'-0" 4'-0" 6'-0"

NOTE:

REFER TO THE FINAL RF DATA SHEET FOR FINAL ANTENNA SETTINGS.

NOTE:

AN ANALYSIS FOR THE CAPACITY OF THE EXISTING **ANTENNA MOUNT** TO SUPPORT THE PROPOSED LOADING HAS BEEN COMPLETED BY: HUDSON DESIGN GROUP, LLC. DATED: **JANUARY 07, 2020 (REV. 1).**

NOTE:

AN ANALYSIS OF THE CAPACITY OF THE EXISTING STRUCTURE TO SUPPORT THE PROPOSED LOADING HAS BEEN COMPLETED BY: MALOUF ENGINEERING INTL, INC, DATED: MARCH 20, 2020.

STATE OF CONNECTICUT — DANIEL P. HAMM — No. 24178 — LICENSED PROFESSIONAL ENGINEER

HUDSON Design Group LLC
45 BEECHWOOD DRIVE
NORTH ANDOVER, MA 01845
TEL: (978) 557-5553
FAX: (978) 336-5586

SAI
12 INDUSTRIAL WAY
SALEM, NH 03079

SITE NUMBER: CT2132
SITE NAME: NORWALK EAST-WILLARD RD

WILLARD ROAD
NORWALK, CT 06851
FAIRFIELD COUNTY

at&t
500 ENTERPRISE DRIVE, SUITE 3A
ROCKY HILL, CT 06067

NO.	DATE	REVISIONS	BY	CHK	APP'D
2	04/15/20	ISSUED FOR CONSTRUCTION	HC	HC	DPH
1	01/10/20	ISSUED FOR CONSTRUCTION	ET	HC	DPH
0	12/12/19	ISSUED FOR REVIEW	ET	HC	DPH
A	04/24/19	ISSUED FOR REVIEW	ET	HC	DPH

SCALE: AS SHOWN | DESIGNED BY: HC | DRAWN BY: ET

AT&T

COMPOUND & EQUIPMENT PLANS
(LTE 6C/7C)

SITE NUMBER	DRAWING NUMBER	REV
CT2132	A-1	2

NOTE:

REFER TO THE FINAL RF DATA SHEET FOR FINAL ANTENNA SETTINGS.

NOTE:

AN ANALYSIS FOR THE CAPACITY OF THE EXISTING **ANTENNA MOUNT** TO SUPPORT THE PROPOSED LOADING HAS BEEN COMPLETED BY: HUDSON DESIGN GROUP, LLC. DATED: **JANUARY 07, 2020 (REV. 1).**

NOTE:

AN ANALYSIS OF THE CAPACITY OF THE EXISTING STRUCTURE TO SUPPORT THE PROPOSED LOADING HAS BEEN COMPLETED BY: MALOUF ENGINEERING INTL, INC, DATED: MARCH 20, 2020.

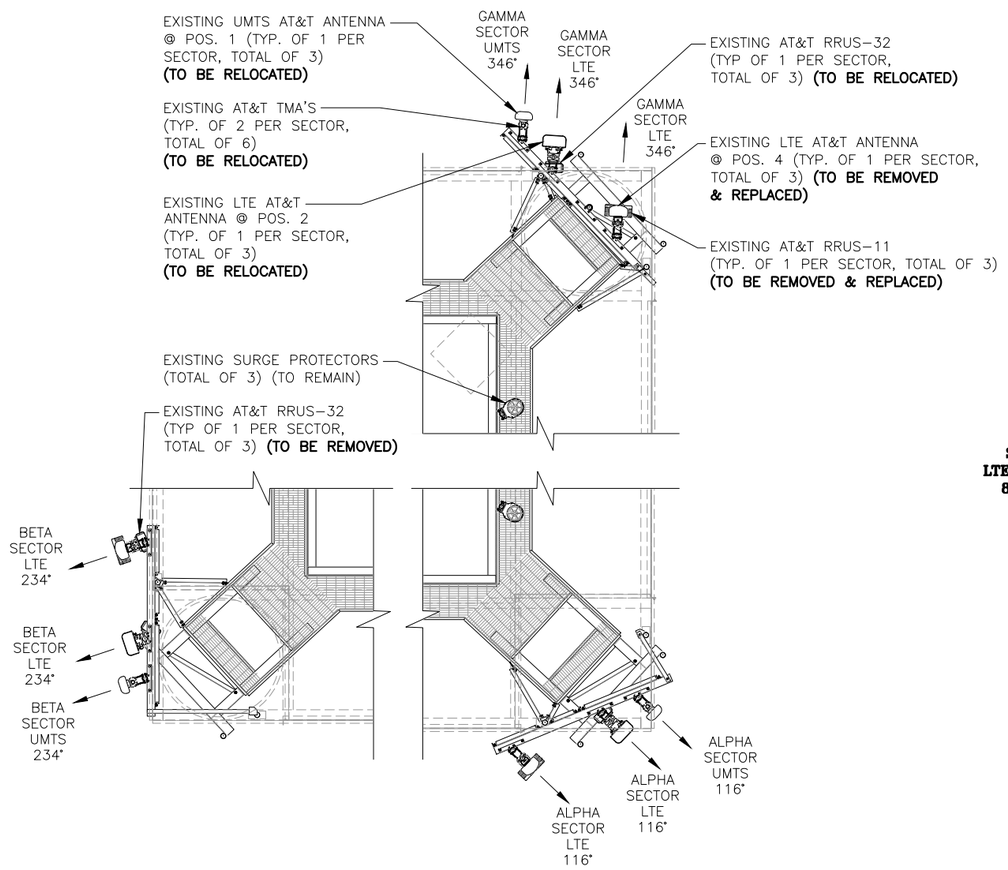

EXISTING ANTENNA LAYOUT (1 / A–2)
SCALE: N.T.S

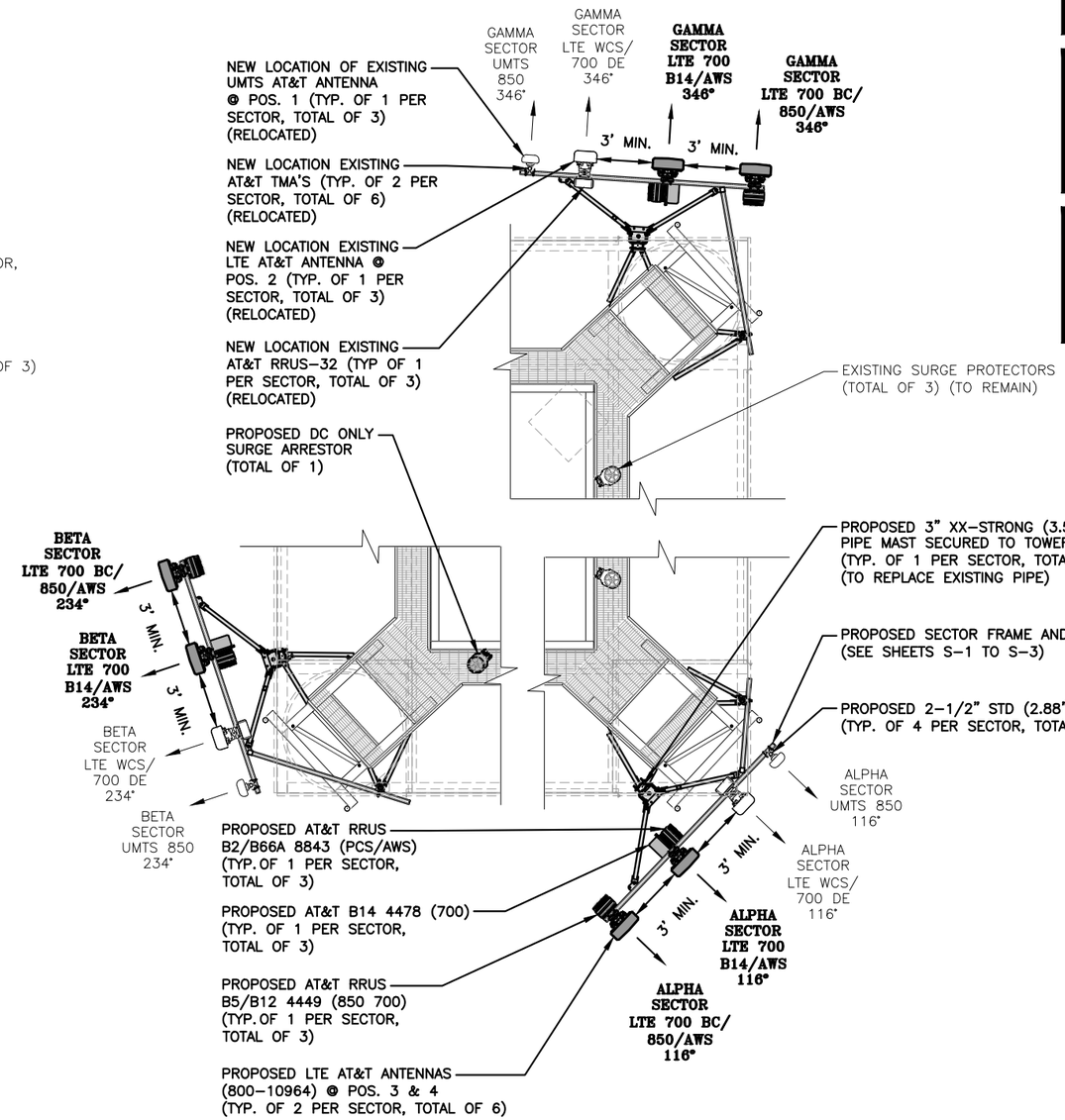

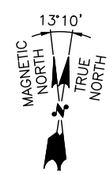

PROPOSED ANTENNA LAYOUT (2 / A–2)
SCALE: N.T.S

STATE OF CONNECTICUT
DANIEL P. HAMM
No. 24178
LICENSED PROFESSIONAL ENGINEER

HUDSON Design Group LLC
45 BEECHWOOD DRIVE
NORTH ANDOVER, MA 01845
TEL: (978) 557-5553
FAX: (978) 336-5586

SAI
12 INDUSTRIAL WAY
SALEM, NH 03079

SITE NUMBER: CT2132
SITE NAME: NORWALK EAST-WILLARD RD

WILLARD ROAD
NORWALK, CT 06851
FAIRFIELD COUNTY

at&t
500 ENTERPRISE DRIVE, SUITE 3A
ROCKY HILL, CT 06067

NO.	DATE	REVISIONS	BY	CHK	APP'D
2	04/15/20	ISSUED FOR CONSTRUCTION	HC	HC	DPH
1	01/10/20	ISSUED FOR CONSTRUCTION	ET	HC	DPH
0	12/12/19	ISSUED FOR REVIEW	ET	HC	DPH
A	04/24/19	ISSUED FOR REVIEW	ET	HC	DPH

SCALE: AS SHOWN | DESIGNED BY: HC | DRAWN BY: ET

AT&T

ANTENNA LAYOUTS
(LTE 6C/7C)

SITE NUMBER	DRAWING NUMBER	REV
CT2132	A–2	2

NOTE:

REFER TO THE FINAL RF DATA SHEET FOR FINAL ANTENNA SETTINGS.

NOTE:
AN ANALYSIS OF THE CAPACITY OF THE EXISTING STRUCTURE TO SUPPORT THE PROPOSED LOADING HAS BEEN COMPLETED BY:
MALOUF ENGINEERING INTL, INC,
DATED: MARCH 20, 2020.

NOTE:

AN ANALYSIS FOR THE CAPACITY OF THE EXISTING **ANTENNA MOUNT** TO SUPPORT THE PROPOSED LOADING HAS BEEN COMPLETED BY:
HUDSON DESIGN GROUP, LLC.
DATED: **JANUARY 07, 2020 (REV. 1).**

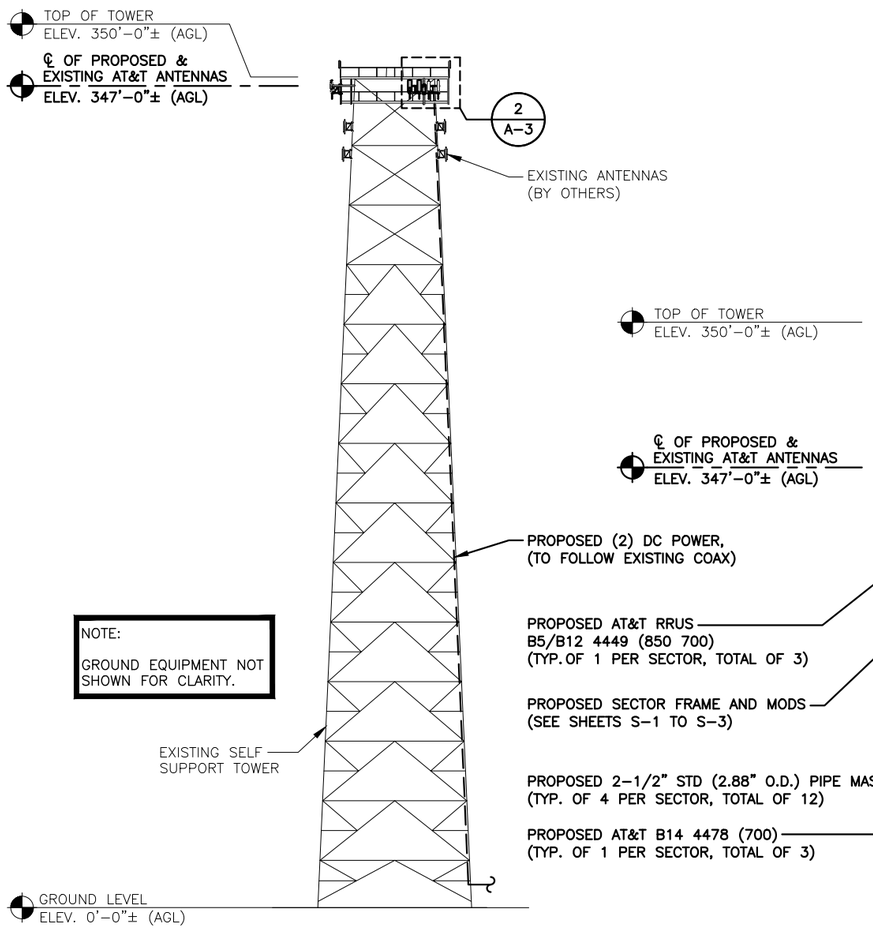

NOTE:

GROUND EQUIPMENT NOT SHOWN FOR CLARITY.

ELEVATION (1 / A-3)
22x34 SCALE: 1/32"=1'-0"
11x17 SCALE: 1/64"=1'-0"

0 16'-0" 32'-0" 64'-0" 96'-0"

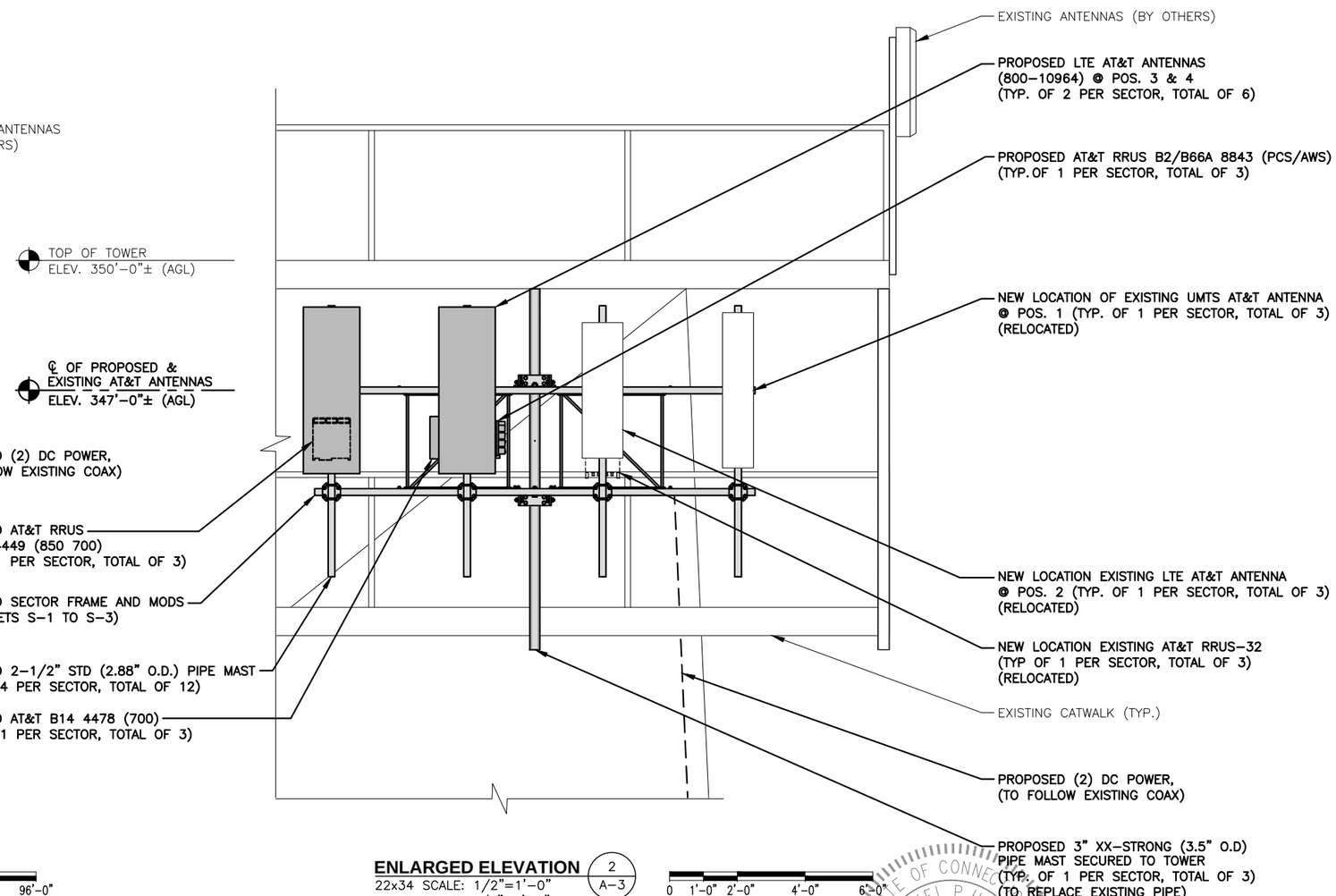

ENLARGED ELEVATION (2 / A-3)
22x34 SCALE: 1/2"=1'-0"
11x17 SCALE: 1/4"=1'-0"

0 1'-0" 2'-0" 4'-0" 6'-0"

STATE OF CONNECTICUT
DANIEL P. HAMM
No. 24178
LICENSED PROFESSIONAL ENGINEER

HUDSON Design Group LLC
45 BEECHWOOD DRIVE
NORTH ANDOVER, MA 01845
TEL: (978) 557-5553
FAX: (978) 336-5586

SAI
12 INDUSTRIAL WAY
SALEM, NH 03079

SITE NUMBER: CT2132
SITE NAME: NORWALK EAST-WILLARD RD

WILLARD ROAD
NORWALK, CT 06851
FAIRFIELD COUNTY

at&t
500 ENTERPRISE DRIVE, SUITE 3A
ROCKY HILL, CT 06067

NO.	DATE	REVISIONS	BY	CHK	APP'D
2	04/15/20	ISSUED FOR CONSTRUCTION	HC	HC	DPH
1	01/10/20	ISSUED FOR CONSTRUCTION	ET	HC	DPH
0	12/12/19	ISSUED FOR REVIEW	ET	HC	DPH
A	04/24/19	ISSUED FOR REVIEW	ET	HC	DPH

SCALE: AS SHOWN | DESIGNED BY: HC | DRAWN BY: ET

AT&T

ELEVATION
(LTE 6C/7C)

SITE NUMBER	DRAWING NUMBER	REV
CT2132	A-3	2

NOTE:

REFER TO THE FINAL RF DATA SHEET FOR FINAL ANTENNA SETTINGS.

NOTE:

AN ANALYSIS FOR THE CAPACITY OF THE EXISTING **ANTENNA MOUNT** TO SUPPORT THE PROPOSED LOADING HAS BEEN COMPLETED BY: HUDSON DESIGN GROUP, LLC. DATED: **JANUARY 07, 2020 (REV. 1).**

NOTE:
AN ANALYSIS OF THE CAPACITY OF THE EXISTING STRUCTURE TO SUPPORT THE PROPOSED LOADING HAS BEEN COMPLETED BY: MALOUF ENGINEERING INTL, INC, DATED: MARCH 20, 2020.

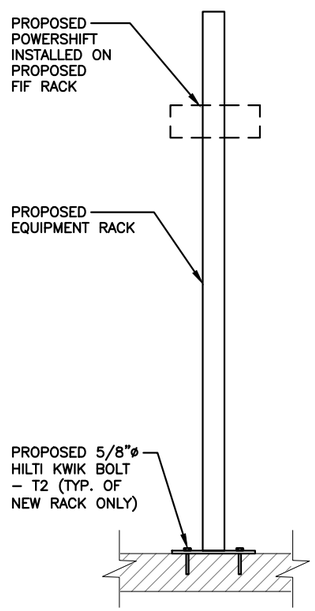

PROPOSED EQUIPMENT RACK DETAIL (1 / A–3)
SCALE: N.T.S

ANTENNA SCHEDULE

SECTOR	EXISTING/ PROPOSED	BAND	ANTENNA	SIZE (INCHES) (L x W x D)	ANTENNA ℄ HEIGHT	AZIMUTH	TMA/ DIPLEXER	RRU	SIZE (INCHES) (L x W x D)	FEEDER	RAYCAP
A1	EXISTING	UMTS 850	7770	55X11X5	347'±	116°	(E)(2) POWERWAVE LGP21401 (E)(G)(2) POWERWAVE LGP21901	–	–	(2) 1–5/8 COAX (LENGTH 410'±)	(E) (1) RAYCAP SURGE PROTECTOR (P) (1) RAYCAP DC6–48–60–0–8C–EV
A2	EXISTING	LTE WCS/ 700 DE	OPA–65R–LCUU–H4	48X14.4X7.3	347'±	116°	(E)(2) CCI TPX–070821 (E)(G)(2) CCI TPX–070821	(E)(1) RRUS–32 (WCS) (E)(G)(1) RRUS–E2 (700)	– –	(2) 1–5/8 COAX (LENGTH 410'±)	
A3	**PROPOSED**	**LTE 700 B14/AWS**	**800–10964**	**59X20X6.9**	**347'±**	**116°**	–	**(P)(1) 4478 B14 (700) (P)(1) 8843 B2/B66A (AWS/PCS)**	**18.1X13.4X8.3 14.9X13.2X10.9**	**(2) DC POWER**	
A4	**PROPOSED**	**LTE 700 BC/ 850/AWS**	**800–10964**	**59X20X6.9**	**347'±**	**116°**	–	**(P)(1) 4449 B5/B12 (700BC/850)**	**14.9X13.2X10.4**	–	
B1	EXISTING	UMTS 850	7770	55X11X5	347'±	234°	(E)(2) POWERWAVE LGP21401 (E)(G)(2) POWERWAVE LGP21901	–	–	(2) 1–5/8 COAX (LENGTH 410'±)	(E) (1) RAYCAP SURGE PROTECTOR
B2	EXISTING	LTE WCS/ 700 DE	OPA–65R–LCUU–H4	48X14.4X7.3	347'±	234°	(E)(2) CCI TPX–070821 (E)(G)(2) CCI TPX–070821	(E)(1) RRUS–32 (WCS) (E)(G)(1) RRUS–E2 (700)	– –	(2) 1–5/8 COAX (LENGTH 410'±)	
B3	**PROPOSED**	**LTE 700 B14/AWS**	**800–10964**	**59X20X6.9**	**347'±**	**234°**	–	**(P)(1) 4478 B14 (700) (P)(1) 8843 B2/B66A (AWS/PCS)**	**18.1X13.4X8.3 14.9X13.2X10.9**	**(2) DC POWER**	
B4	**PROPOSED**	**LTE 700 BC/ 850/AWS**	**800–10964**	**59X20X6.9**	**347'±**	**234°**	–	**(P)(1) 4449 B5/B12 (700BC/850)**	**14.9X13.2X10.4**	–	
C1	EXISTING	UMTS 850	7770	55X11X5	347'±	346°	(E)(2) POWERWAVE LGP21401 (E)(G)(2) POWERWAVE LGP21901	–	–	(2) 1–5/8 COAX (LENGTH 410'±)	(E) (1) RAYCAP SURGE PROTECTOR
C2	EXISTING	LTE WCS/ 700 DE	OPA–65R–LCUU–H4	48X14.4X7.3	347'±	346°	(E)(2) CCI TPX–070821 (E)(G)(2) CCI TPX–070821	(E)(1) RRUS–32 (WCS) (E)(G)(1) RRUS–E2 (700)	– –	(2) 1–5/8 COAX (LENGTH 410'±)	
C3	**PROPOSED**	**LTE 700 B14/AWS**	**800–10964**	**59X20X6.9**	**347'±**	**346°**	–	**(P)(1) 4478 B14 (700) (P)(1) 8843 B2/B66A (AWS/PCS)**	**18.1X13.4X8.3 14.9X13.2X10.9**	**(2) DC POWER**	
C4	**PROPOSED**	**LTE 700 BC/ 850/AWS**	**800–10964**	**59X20X6.9**	**347'±**	**346°**	–	**(P)(1) 4449 B5/B12 (700BC/850)**	**14.9X13.2X10.4**	–	

FINAL ANTENNA SCHEDULE (2 / A–4)
SCALE: N.T.S

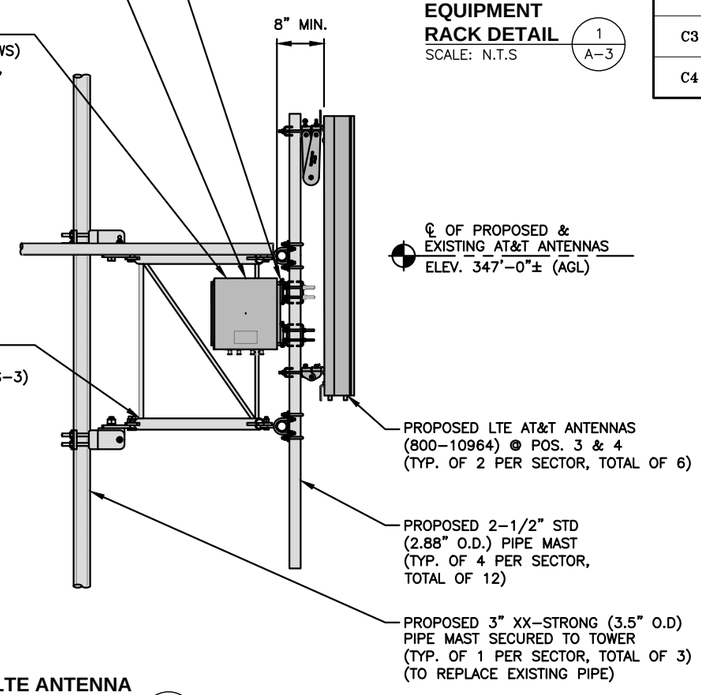

PROPOSED LTE ANTENNA & RRH MOUNTING DETAIL (3 / A–4)
22x34 SCALE: 3/4"=1'–0"
11x17 SCALE: 3/8"=1'–0"

0 8" 1'–4" 2'–8" 4'–0"

RRU CHART

QUANTITY	MODEL	SIZE (L x W x D)
P(3)	4449 (850/700)	14.9"x13.2"x10.4"
P(3)	8843 (AWS/PCS)	14.9"x13.2"x10.9"
P(3)	4478 B14 (700)	18.1"x13.4"x8.3"
E(3)	RRUS–32 (WCS)	27.2"x12.1"x7.0"
E(G)(3)	RRUS–E2 (700)	20.4"x18.5"x7.5"

NOTE:
MOUNT PER MANUFACTURER'S SPECIFICATIONS

NOTE:

SEE RFDS FOR RRH FREQUENCY AND MODEL NUMBER

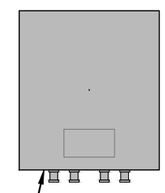

PROPOSED RRU REFER TO THE FINAL RFDS AND CHART FOR QUANTITY, MODEL AND DIMENSIONS

NOTE:
MOUNT PER MANUFACTURER'S SPECIFICATIONS.

PROPOSED RRUS DETAIL (4 / A–4)
SCALE: N.T.S

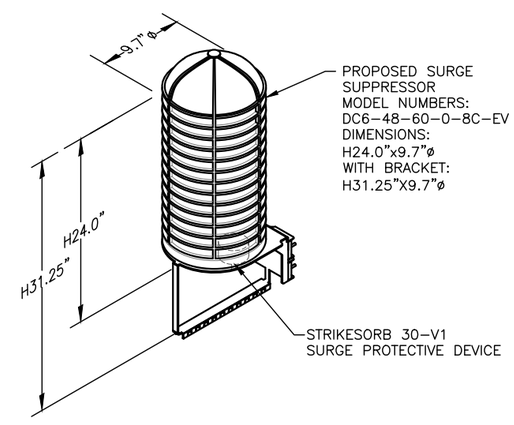

NOTE:
MOUNT PER MANUFACTURER'S SPECIFICATIONS.

DC SURGE SUPPRESSOR DETAIL (5 / A–4)
SCALE: N.T.S

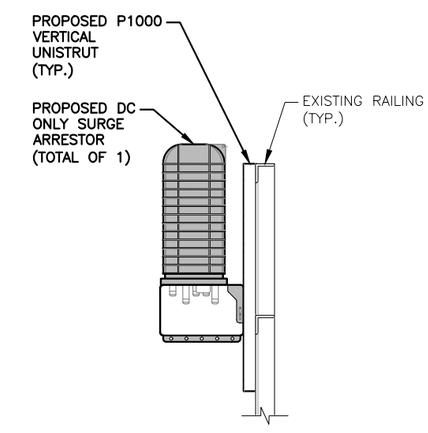

PROPOSED SURGE ARRESTOR MOUNTING DETAIL (6 / A–4)
SCALE: N.T.S

STATE OF CONNECTICUT — DANIEL P. HAMM — No. 24178 — LICENSED PROFESSIONAL ENGINEER

HUDSON Design Group LLC
45 BEECHWOOD DRIVE
NORTH ANDOVER, MA 01845
TEL: (978) 557-5553
FAX: (978) 336-5586

SAI
12 INDUSTRIAL WAY
SALEM, NH 03079

SITE NUMBER: CT2132
SITE NAME: NORWALK EAST-WILLARD RD

WILLARD ROAD
NORWALK, CT 06851
FAIRFIELD COUNTY

at&t
500 ENTERPRISE DRIVE, SUITE 3A
ROCKY HILL, CT 06067

NO.	DATE	REVISIONS	BY	CHK	APP'D
2	04/15/20	ISSUED FOR CONSTRUCTION	HC	HC	DPH
1	01/10/20	ISSUED FOR CONSTRUCTION	ET	HC	DPH
0	12/12/19	ISSUED FOR REVIEW	ET	HC	DPH
A	04/24/19	ISSUED FOR REVIEW	ET	HC	DPH

SCALE: AS SHOWN | DESIGNED BY: HC | DRAWN BY: ET

AT&T

DETAILS
(LTE 6C/7C)

SITE NUMBER	DRAWING NUMBER	REV
CT2132	A–4	2

STRUCTURAL NOTES:

1. DESIGN REQUIREMENTS ARE PER STATE BUILDING CODE AND APPLICABLE SUPPLEMENTS, INTERNATIONAL BUILDING CODE, EIA/TIA-222-H STRUCTURAL STANDARDS FOR STEEL ANTENNA, TOWERS AND ANTENNA SUPPORTING STRUCTURES.
2. CONTRACTOR SHALL VERIFY ALL DIMENSIONS AND CONDITIONS IN THE FIELD PRIOR TO FABRICATION AND ERECTION OF ANY MATERIAL. ANY UNUSUAL CONDITIONS SHALL BE REPORTED TO THE ATTENTION OF THE CONSTRUCTION MANAGER AND ENGINEER OF RECORD.
3. DESIGN AND CONSTRUCTION OF STRUCTURAL STEEL SHALL CONFORM TO THE AMERICAN INSTITUTE OF STEEL CONSTRUCTION "SPECIFICATION FOR THE DESIGN, FABRICATION AND ERECTION OF STRUCTURAL STEEL FOR BUILDINGS".
4. STRUCTURAL STEEL SHALL CONFORM TO ASTM A992 (Fy=50 ksi), MISCELLANEOUS STEEL SHALL CONFORM TO ASTM A36 UNLESS OTHERWISE INDICATED.
5. STEEL PIPE SHALL CONFORM TO ASTM A500 "COLD-FORMED WELDED & SEAMLESS CARBON STEEL STRUCTURAL TUBING", GRADE B, OR ASTM A53 PIPE STEEL BLACK AND HOT-DIPPED ZINC-COATED WELDED AND SEAMLESS TYPE E OR S, GRADE B. PIPE SIZES INDICATED ARE NOMINAL. ACTUAL OUTSIDE DIAMETER IS LARGER.
6. STRUCTURAL CONNECTION BOLTS SHALL BE HIGH STRENGTH BOLTS (BEARING TYPE) AND CONFORM TO ASTM A325 TYPE-X "HIGH STRENGTH BOLTS FOR STRUCTURAL JOINTS, INCLUDING SUITABLE NUTS AND PLAIN HARDENED WASHERS". ALL BOLTS SHALL BE 3/4" DIA UON.
7. ALL STEEL MATERIALS SHALL BE GALVANIZED AFTER FABRICATION IN ACCORDANCE WITH ASTM A123 "ZINC (HOT-DIP GALVANIZED) COATINGS ON IRON AND STEEL PRODUCTS", UNLESS OTHERWISE NOTED.
8. ALL BOLTS, ANCHORS AND MISCELLANEOUS HARDWARE SHALL BE GALVANIZED IN ACCORDANCE WITH ASTM A153 "ZINC-COATING (HOT-DIP) ON IRON AND STEEL HARDWARE", UNLESS OTHERWISE NOTED.
9. FIELD WELDS, DRILL HOLES, SAW CUTS AND ALL DAMAGED GALVANIZED SURFACES SHALL BE REPAIRED WITH AN ORGANIC ZINC REPAIR PAINT COMPLYING WITH REQUIREMENTS OF ASTM A780. GALVANIZING REPAIR PAINT SHALL HAVE 65 PERCENT ZINC BY WEIGHT, ZIRP BY DUNCAN GALVANIZING, GALVA BRIGHT PREMIUM BY CROWN OR EQUAL. THICKNESS OF APPLIED GALVANIZING REPAIR PAINT SHALL BE NOT NOT LESS THAN 4 COATS (ALLOW TIME TO DRY BETWEEN COATS) WITH A RESULTING COATING THICKNESS REQUIRED BY ASTM A123 OR A153 AS APPLICABLE.
10. CONTRACTOR SHALL COMPLY WITH AWS CODE FOR PROCEDURES, APPEARANCE AND QUALITY OF WELDS, AND FOR METHODS USED IN CORRECTING WELDING. ALL WELDERS AND WELDING PROCESSES SHALL BE QUALIFIED IN ACCORDANCE WITH AWS "STANDARD QUALIFICATION PROCEDURES". ALL WELDING SHALL BE DONE USING E70XX ELECTRODES AND WELDING SHALL CONFORM TO AISC AND DI.I. WHERE FILLET WELD SIZES ARE NOT SHOWN, PROVIDE THE MINIMUM SIZE PER TABLE J2.4 IN THE AISC "STEEL CONSTRUCTION MANUAL". 14TH EDITION.
11. INCORRECTLY FABRICATED, DAMAGED OR OTHERWISE MISFITTING OR NON-CONFORMING MATERIALS OR CONDITIONS SHALL BE REPORTED TO THE CONSTRUCTION MANAGER PRIOR TO REMEDIAL OR CORRECTIVE ACTION. ANY SUCH ACTION SHALL REQUIRE CONSTRUCTION MANAGER APPROVAL.
12. UNISTRUT SHALL BE FORMED STEEL CHANNEL STRUT FRAMING AS MANUFACTURED BY UNISTRUT CORP., WAYNE, MI OR EQUAL. STRUT MEMBERS SHALL BE 1 5/8"x1 5/8"x12GA, UNLESS OTHERWISE NOTED, AND SHALL BE HOT-DIP GALVANIZED AFTER FABRICATION.
13. EPOXY ANCHOR ASSEMBLY SHALL CONSIST OF STAINLESS STEEL ANCHOR ROD WITH NUTS & WASHERS. AN INTERNALLY THREADED INSERT, A SCREEN TUBE AND A EPOXY ADHESIVE. THE ANCHORING SYSTEM SHALL BE THE HILTI-HIT HY-270 AND OR HY-200 SYSTEMS (AS SPECIFIED IN DWG.) OR ENGINEERS APPROVED EQUAL.
14. EXPANSION BOLTS SHALL CONFORM TO FEDERAL SPECIFICATION FF-S-325, GROUP II, TYPE 4, CLASS I, HILTI KWIK BOLT III OR APPROVED EQUAL. INSTALLATION SHALL BE IN ACCORDANCE WITH THE MANUFACTURER'S RECOMMENDATIONS.
15. LUMBER SHALL COMPLY WITH THE REQUIREMENTS OF THE AMERICAN INSTITUTE OF TIMBER CONSTRUCTION AND THE NATIONAL FOREST PRODUCTS ASSOCIATION'S NATIONAL DESIGN SPECIFICATION FOR WOOD CONSTRUCTION. ALL LUMBER SHALL BE PRESSURE TREATED AND SHALL BE STRUCTURAL GRADE NO. 2 OR BETTER.
16. WHERE ROOF PENETRATIONS ARE REQUIRED, THE CONTRACTOR SHALL CONTACT AND COORDINATE RELATED WORK WITH THE BUILDING OWNER AND THE EXISTING ROOF INSTALLER. WORK SHALL BE PERFORMED IN SUCH A MANNER AS TO NOT VOID THE EXISTING ROOF WARRANTY. ROOF SHALL BE WATERTIGHT.
17. ALL FIBERGLASS MEMBERS USED ARE AS MANUFACTURED BY STRONGWELL COMPANY OF BRISTOL, VA 24203. ALL DESIGN CRITERIA FOR THESE MEMBERS IS BASED ON INFORMATION PROVIDED IN THE DESIGN MANUAL. ALL REQUIREMENTS PUBLISHED IN SAID MANUAL MUST BE STRICTLY ADHERED TO.
18. NO MATERIALS TO BE ORDERED AND NO WORK TO BE COMPLETED UNTIL SHOP DRAWINGS HAVE BEEN REVIEWED AND APPROVED IN WRITING.
19. SUBCONTRACTOR SHALL FIREPROOF ALL STEEL TO PRE-EXISTING CONDITIONS.

SPECIAL INSPECTIONS (REFERENCE IBC CHAPTER 17):

GENERAL: WHERE APPLICATION IS MADE FOR CONSTRUCTION, THE OWNER OR THE REGISTERED DESIGN PROFESSIONAL IN RESPONSIBLE CHARGE ACTING AS THE OWNER'S AGENT SHALL EMPLOY ONE OR MORE APPROVED AGENCIES TO PERFORM INSPECTIONS DURING CONSTRUCTION ON THE TYPES OF WORK LISTED IN THE INSPECTION CHECKLIST ABOVE.

THE REGISTERED DESIGN PROFESSIONAL IN RESPONSIBLE CHARGE AND ENGINEERS OF RECORD INVOLVED IN THE DESIGN OF THE PROJECT ARE PERMITTED TO ACT AS THE APPROVED AGENCY AND THEIR PERSONNEL ARE PERMITTED TO ACT AS THE SPECIAL INSPECTOR FOR THE WORK DESIGNED BY THEM, PROVIDED THOSE PERSONNEL MEET THE QUALIFICATION REQUIREMENTS.

STATEMENT OF SPECIAL INSPECTIONS: THE APPLICANT SHALL SUBMIT A STATEMENT OF SPECIAL INSPECTIONS PREPARED BY THE REGISTERED DESIGN PROFESSIONAL IN RESPONSIBLE CHARGE IN ACCORDANCE WITH SECTION 107.1 AS A CONDITION FOR ISSUANCE. THIS STATEMENT SHALL BE IN ACCORDANCE WITH SECTION 1705.

REPORT REQUIREMENT: SPECIAL INSPECTORS SHALL KEEP RECORDS OF INSPECTIONS. THE SPECIAL INSPECTOR SHALL FURNISH INSPECTION REPORTS TO THE BUILDING OFFICIAL, AND TO THE REGISTERED DESIGN PROFESSIONAL IN RESPONSIBLE CHARGE. REPORTS SHALL INDICATE THAT WORK INSPECTED WAS OR WAS NOT COMPLETED IN CONFORMANCE TO APPROVED CONSTRUCTION DOCUMENTS. DISCREPANCIES SHALL BE BROUGHT TO THE IMMEDIATE ATTENTION OF THE CONTRACTOR FOR CORRECTION. IF THEY ARE NOT CORRECTED, THE DISCREPANCIES SHALL BE BROUGHT TO THE ATTENTION OF THE BUILDING OFFICIAL AND TO THE REGISTERED DESIGN PROFESSIONAL IN RESPONSIBLE CHARGE. A FINAL REPORT DOCUMENTING REQUIRED SPECIAL INSPECTIONS SHALL BE SUBMITTED.

NOTES:

1. ALL CONNECTIONS TO BE SHOP WELDED & FIELD BOLTED USING 3/4"ø A325-X BOLTS, UNLESS OTHERWISE NOTIFIED.
2. SHOP DRAWING ENGINEER REVIEW & APPROVAL REQUIRED BEFORE ORDERING MATERIAL.
3. SHOP DRAWING ENGINEER REVIEW & APPROVAL REQUIRED PRIOR TO STEEL FABRICATION.
4. VERIFICATION OF EXISTING ROOF CONSTRUCTION IS REQUIRED PRIOR TO THE INSTALLATION OF THE ROOF PLATFORM. ENGINEER OF RECORD IS TO APPROVE EXISTING CONDITIONS IN ORDER TO MOVE FORWARD.
5. CENTERLINE OF PROPOSED STEEL PLATFORM SUPPORT COLUMNS TO BE CENTRALLY LOCATED OVER THE EXISTING BUILDING COLUMNS.
6. EXISTING BRICK MASONRY COLUMNS/BEARING TO BE REPAIRED/REPLACED AT ALL PROPOSED PLATFORM SUPPORT POINTS. ENGINEER OF RECORD TO REVIEW AND APPROVE.

NOTES:

1. REQUIRED FOR ANY NEW SHOP FABRICATED FRP OR STEEL.
2. PROVIDED BY MANUFACTURER, REQUIRED IF HIGH STRENGTH BOLTS OR STEEL.
3. PROVIDED BY GENERAL CONTRACTOR; PROOF OF MATERIALS.
4. HIGH WIND ZONE INSPECTION CATB 120MPH OR CAT C,D 110MPH INSPECT FRAMING OF WALLS, ANCHORING, FASTENING SCHEDULE.
5. ADHESIVE FOR REBAR AND ANCHORS SHALL HAVE BEEN TESTED IN ACCORDANCE WITH ACI 355.4 AND ICC-ES AC308 FOR CRACKED CONCRETE AND SEISMIC APPLICATIONS. DESIGN ADHESIVE BOND STRENGTH HAS BEEN BASED ON ACI 355.4 TEMPERATURE CATEGORY B WITH INSTALLATIONS INTO DRY HOLES DRILLED USING A CARBIDE BIT INTO CRACKED CONCRETE THAT HAS CURED FOR AT LEAST 21 DAYS. ADHESIVE ANCHORS REQUIRING CERTIFIED INSTALLATIONS SHALL BE INSTALLED BY A CERTIFIED ADHESIVE ANCHOR INSTALLER PER ACI 318-11 D.9.2.2. INSTALLATIONS REQUIRING CERTIFIED INSTALLERS SHALL BE INSPECTED PER ACI 318-11 D.8.2.4.
6. AS REQUIRED; FOR ANY FIELD CHANGES TO THE ITEMS IN THIS TABLE.

SPECIAL INSPECTION CHECKLIST

BEFORE CONSTRUCTION	
CONSTRUCTION/INSTALLATION INSPECTIONS AND TESTING REQUIRED (COMPLETED BY ENGINEER OF RECORD)	REPORT ITEM
N/A	ENGINEER OF RECORD APPROVED SHOP DRAWINGS [1]
N/A	MATERIAL SPECIFICATIONS REPORT [2]
N/A	FABRICATOR NDE INSPECTION
N/A	PACKING SLIPS [3]
ADDITIONAL TESTING AND INSPECTIONS:	
DURING CONSTRUCTION	
CONSTRUCTION/INSTALLATION INSPECTIONS AND TESTING REQUIRED (COMPLETED BY ENGINEER OF RECORD)	REPORT ITEM
REQUIRED	STEEL INSPECTIONS
N/A	HIGH STRENGTH BOLT INSPECTIONS
N/A	HIGH WIND ZONE INSPECTIONS [4]
N/A	FOUNDATION INSPECTIONS
N/A	CONCRETE COMP. STRENGTH, SLUMP TESTS AND PLACEMENT
N/A	POST INSTALLED ANCHOR VERIFICATION [5]
N/A	GROUT VERIFICATION
N/A	CERTIFIED WELD INSPECTION
N/A	EARTHWORK: LIFT AND DENSITY
N/A	ON SITE COLD GALVANIZING VERIFICATION
N/A	GUY WIRE TENSION REPORT
ADDITIONAL TESTING AND INSPECTIONS:	
AFTER CONSTRUCTION	
CONSTRUCTION/INSTALLATION INSPECTIONS AND TESTING REQUIRED (COMPLETED BY ENGINEER OF RECORD)	REPORT ITEM
REQUIRED	MODIFICATION INSPECTOR REDLINE OR RECORD DRAWINGS [6]
N/A	POST INSTALLED ANCHOR PULL-OUT TESTING
REQUIRED	PHOTOGRAPHS
ADDITIONAL TESTING AND INSPECTIONS:	

HUDSON Design Group LLC
45 BEECHWOOD DRIVE
NORTH ANDOVER, MA 01845
TEL: (978) 557-5553
FAX: (978) 336-5586

SAI
12 INDUSTRIAL WAY
SALEM, NH 03079

SITE NUMBER: CT2132
SITE NAME: NORWALK EAST-WILLARD RD

WILLARD ROAD
NORWALK, CT 06851
FAIRFIELD COUNTY

at&t
500 ENTERPRISE DRIVE, SUITE 3A
ROCKY HILL, CT 06067

NO.	DATE	REVISIONS	BY	CHK	APP'D
2	04/15/20	ISSUED FOR CONSTRUCTION	HC	HC	DPH
1	01/10/20	ISSUED FOR CONSTRUCTION	ET	HC	DPH
0	12/12/19	ISSUED FOR REVIEW	ET	HC	DPH
A	04/24/19	ISSUED FOR REVIEW	ET	HC	DPH

SCALE: AS SHOWN | DESIGNED BY: HC | DRAWN BY: ET

STATE OF CONNECTICUT · DANIEL P. HAMM · No. 24178 · LICENSED PROFESSIONAL ENGINEER

AT&T

STRUCTURAL NOTES
(LTE 6C/7C)

SITE NUMBER	DRAWING NUMBER	REV
CT2132	SN-1	2

NOTE:

REFER TO THE FINAL RF DATA SHEET FOR FINAL ANTENNA SETTINGS.

NOTE:

AN ANALYSIS FOR THE CAPACITY OF THE EXISTING **ANTENNA MOUNT** TO SUPPORT THE PROPOSED LOADING HAS BEEN COMPLETED BY:
HUDSON DESIGN GROUP, LLC.
DATED: **JANUARY 07, 2020 (REV. 1).**

NOTE:
AN ANALYSIS OF THE CAPACITY OF THE EXISTING STRUCTURE TO SUPPORT THE PROPOSED LOADING HAS BEEN COMPLETED BY:
MALOUF ENGINEERING INTL, INC,
DATED: MARCH 20, 2020.

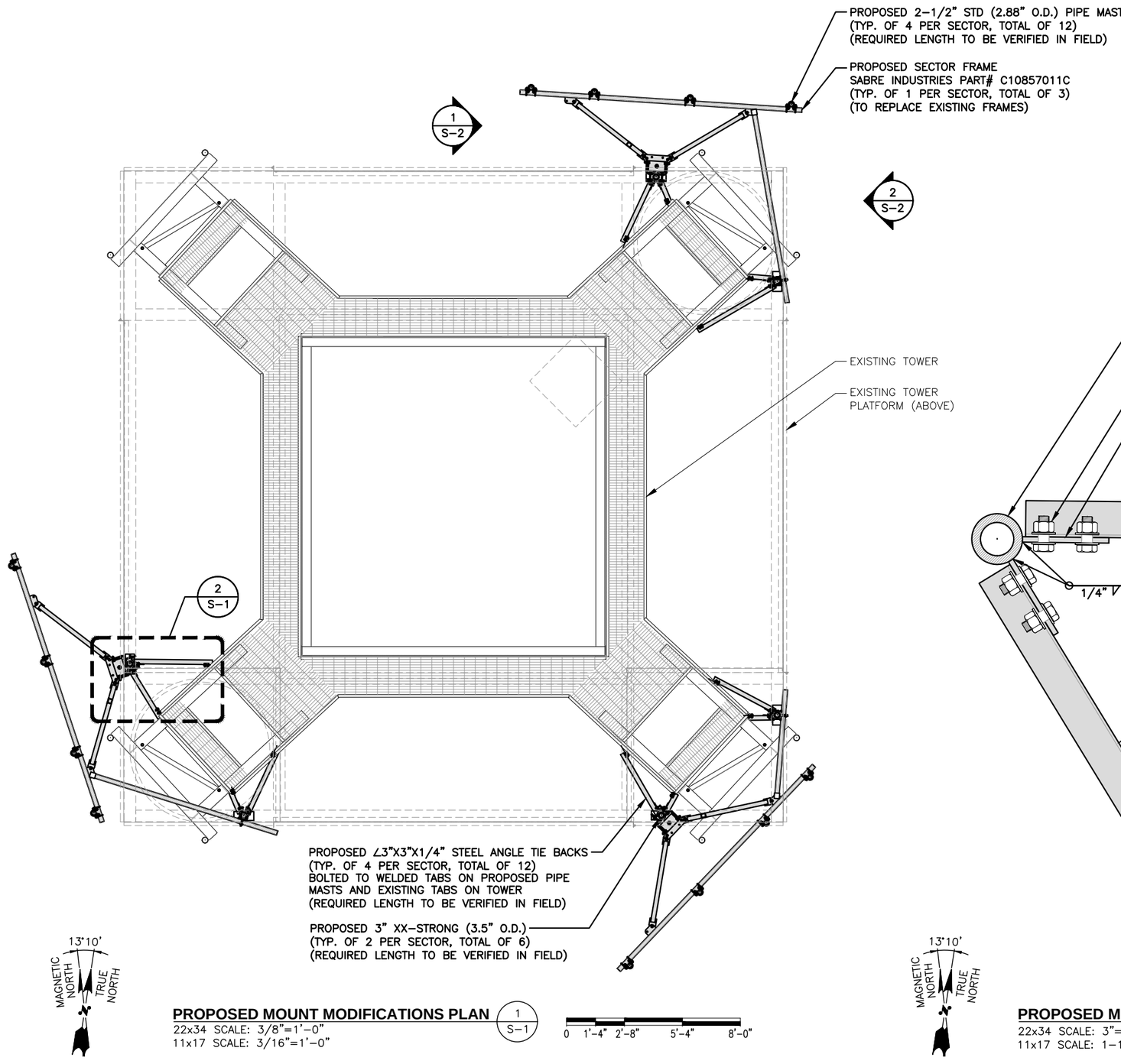

PROPOSED MOUNT MODIFICATIONS PLAN (1 / S-1)
22x34 SCALE: 3/8"=1'-0"
11x17 SCALE: 3/16"=1'-0"

0 1'-4" 2'-8" 5'-4" 8'-0"

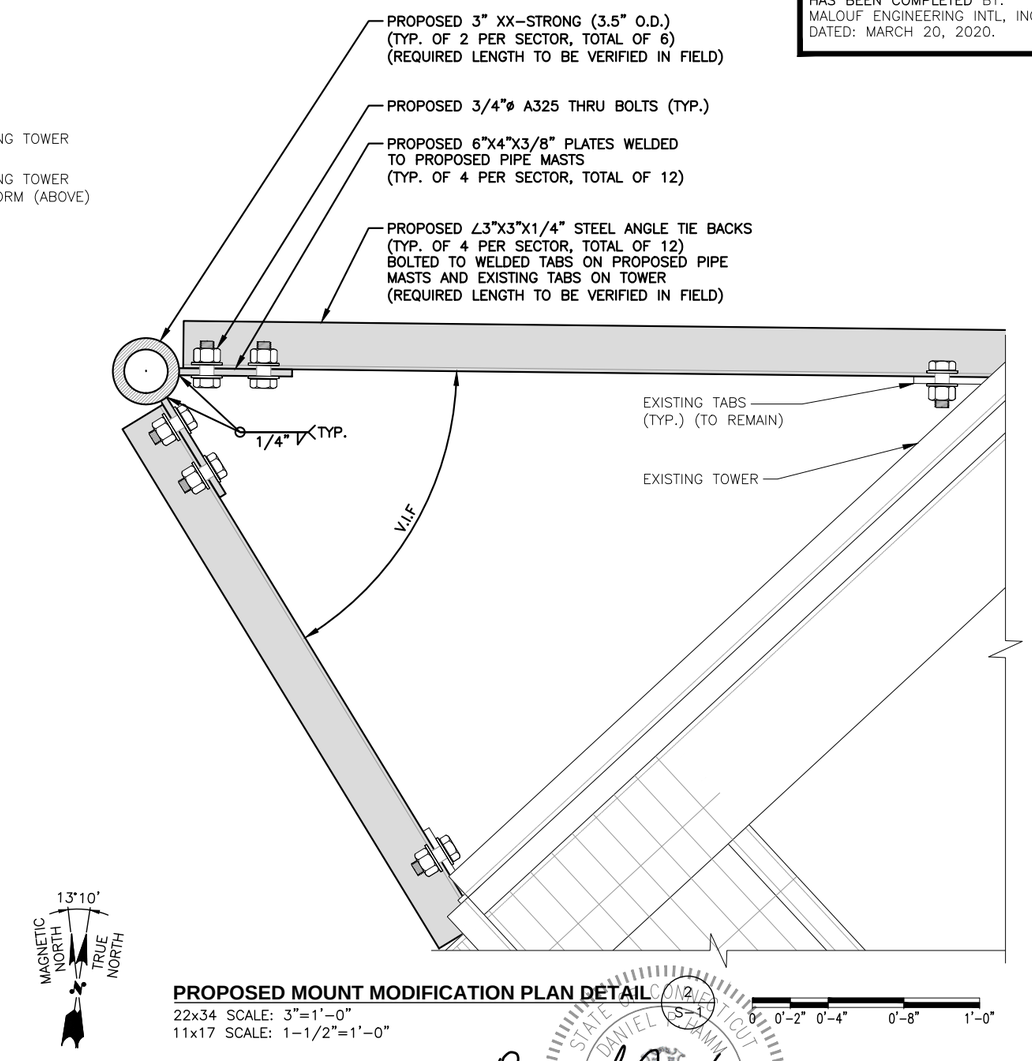

PROPOSED MOUNT MODIFICATION PLAN DETAIL (2 / S-1)
22x34 SCALE: 3"=1'-0"
11x17 SCALE: 1-1/2"=1'-0"

0 0'-2" 0'-4" 0'-8" 1'-0"

HUDSON Design Group LLC
45 BEECHWOOD DRIVE
NORTH ANDOVER, MA 01845
TEL: (978) 557-5553
FAX: (978) 336-5586

SAI
12 INDUSTRIAL WAY
SALEM, NH 03079

SITE NUMBER: CT2132
SITE NAME: NORWALK EAST-WILLARD RD

WILLARD ROAD
NORWALK, CT 06851
FAIRFIELD COUNTY

at&t
500 ENTERPRISE DRIVE, SUITE 3A
ROCKY HILL, CT 06067

NO.	DATE	REVISIONS	BY	CHK	APP'D
2	04/15/20	ISSUED FOR CONSTRUCTION	HC	HC	DPH
1	01/10/20	ISSUED FOR CONSTRUCTION	ET	HC	DPH
0	12/12/19	ISSUED FOR REVIEW	ET	HC	DPH
A	04/24/19	ISSUED FOR REVIEW	ET	HC	DPH

SCALE: AS SHOWN | DESIGNED BY: HC | DRAWN BY: ET

STATE OF CONNECTICUT
DANIEL P. HAMM
No. 24178
LICENSED PROFESSIONAL ENGINEER

AT&T

STRUCTURAL DETAILS
(LTE 6C/7C)

SITE NUMBER	DRAWING NUMBER	REV
CT2132	S-1	2

NOTE:

REFER TO THE FINAL RF DATA SHEET FOR FINAL ANTENNA SETTINGS.

NOTE:
AN ANALYSIS OF THE CAPACITY OF THE EXISTING STRUCTURE TO SUPPORT THE PROPOSED LOADING HAS BEEN COMPLETED BY:
MALOUF ENGINEERING INTL, INC,
DATED: MARCH 20, 2020.

NOTE:

AN ANALYSIS FOR THE CAPACITY OF THE EXISTING **ANTENNA MOUNT** TO SUPPORT THE PROPOSED LOADING HAS BEEN COMPLETED BY:
HUDSON DESIGN GROUP, LLC.
DATED: **JANUARY 07, 2020 (REV. 1).**

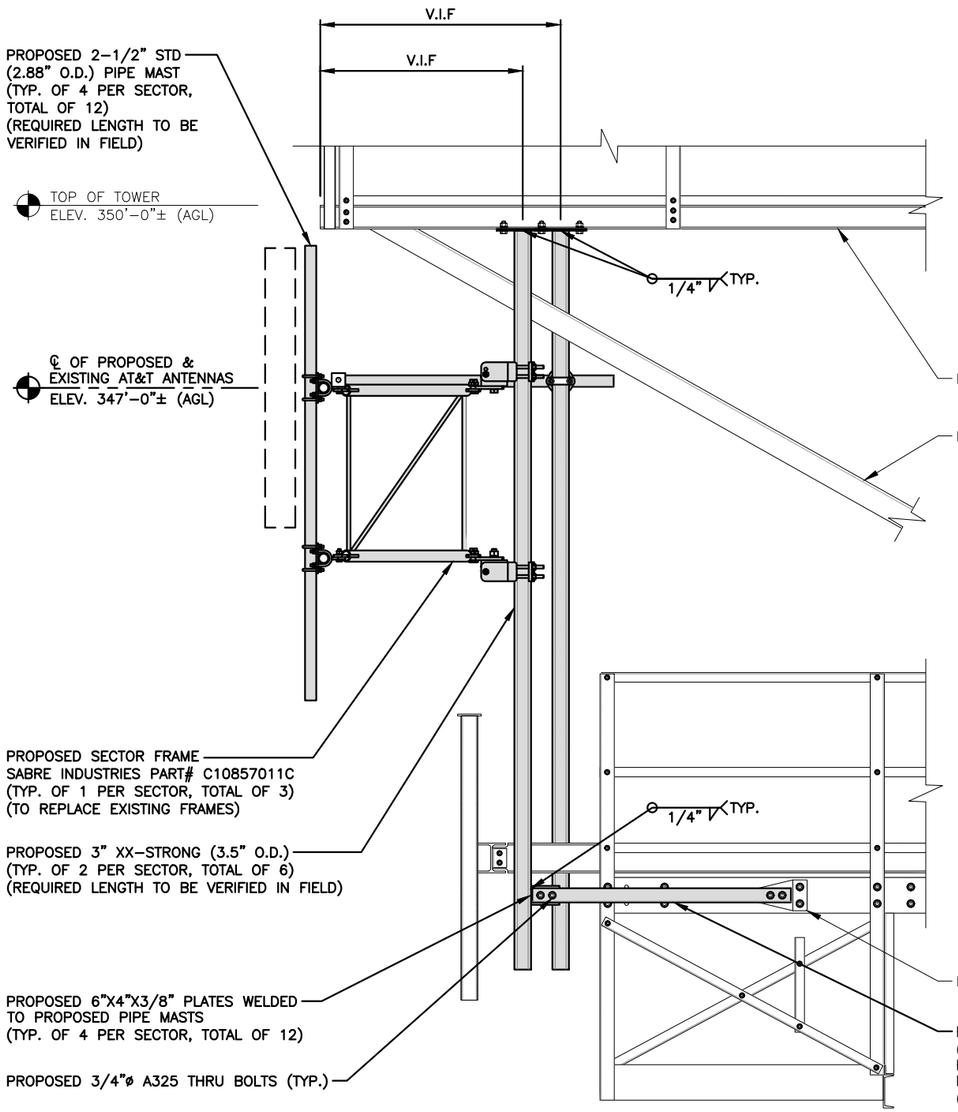

PROPOSED MOUNT MODIFICATIONS SIDE DETAIL (1 / S-2)
22x34 SCALE: 3/4"=1'-0"
11x17 SCALE: 3/8"=1'-0"

0 8" 1'-4" 2'-8" 4'-0"

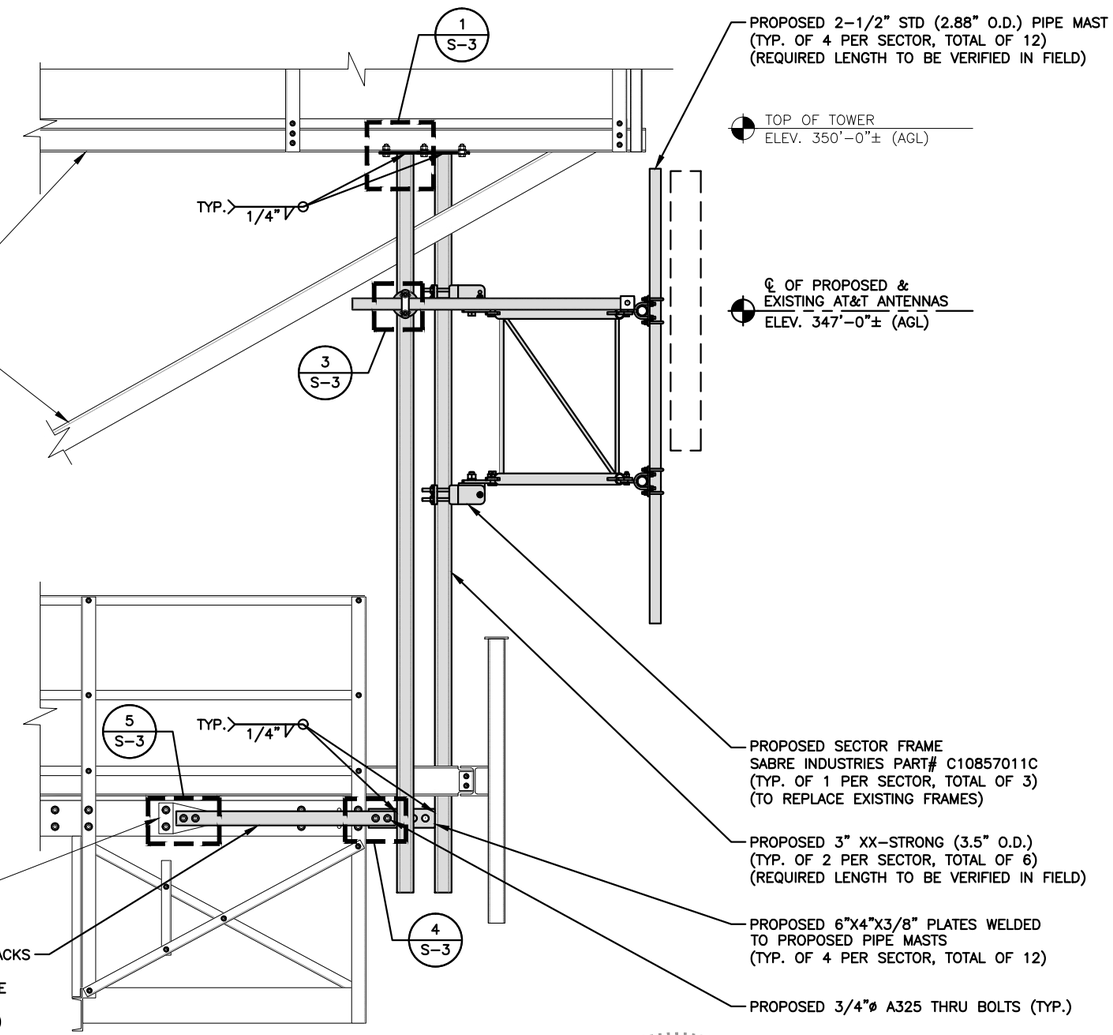

PROPOSED MOUNT MODIFICATIONS SIDE DETAIL (2 / S-2)
22x34 SCALE: 3/4"=1'-0"
11x17 SCALE: 3/8"=1'-0"

0 8" 1'-4" 2'-8" 4'-0"

STATE OF CONNECTICUT · DANIEL P. HAMM · No. 24178 · LICENSED PROFESSIONAL ENGINEER

HUDSON Design Group LLC
45 BEECHWOOD DRIVE
NORTH ANDOVER, MA 01845
TEL: (978) 557-5553
FAX: (978) 336-5586

SAI
12 INDUSTRIAL WAY
SALEM, NH 03079

SITE NUMBER: CT2132
SITE NAME: NORWALK EAST-WILLARD RD

WILLARD ROAD
NORWALK, CT 06851
FAIRFIELD COUNTY

at&t
500 ENTERPRISE DRIVE, SUITE 3A
ROCKY HILL, CT 06067

NO.	DATE	REVISIONS	BY	CHK	APP'D
2	04/15/20	ISSUED FOR CONSTRUCTION	ET	HC	DPH
1	01/10/20	ISSUED FOR CONSTRUCTION	ET	HC	DPH
0	12/12/19	ISSUED FOR REVIEW	ET	HC	DPH
A	04/24/19	ISSUED FOR REVIEW	ET	HC	DPH

SCALE: AS SHOWN | DESIGNED BY: HC | DRAWN BY: ET

AT&T

STRUCTURAL DETAILS
(LTE 6C/7C)

SITE NUMBER	DRAWING NUMBER	REV
CT2132	S-2	2

NOTE:

REFER TO THE FINAL RF DATA SHEET FOR FINAL ANTENNA SETTINGS.

NOTE:

AN ANALYSIS FOR THE CAPACITY OF THE EXISTING **ANTENNA MOUNT** TO SUPPORT THE PROPOSED LOADING HAS BEEN COMPLETED BY:
HUDSON DESIGN GROUP, LLC.
DATED: **JANUARY 07, 2020 (REV. 1).**

NOTE:
AN ANALYSIS OF THE CAPACITY OF THE EXISTING STRUCTURE TO SUPPORT THE PROPOSED LOADING HAS BEEN COMPLETED BY:
MALOUF ENGINEERING INTL, INC,
DATED: MARCH 20, 2020.

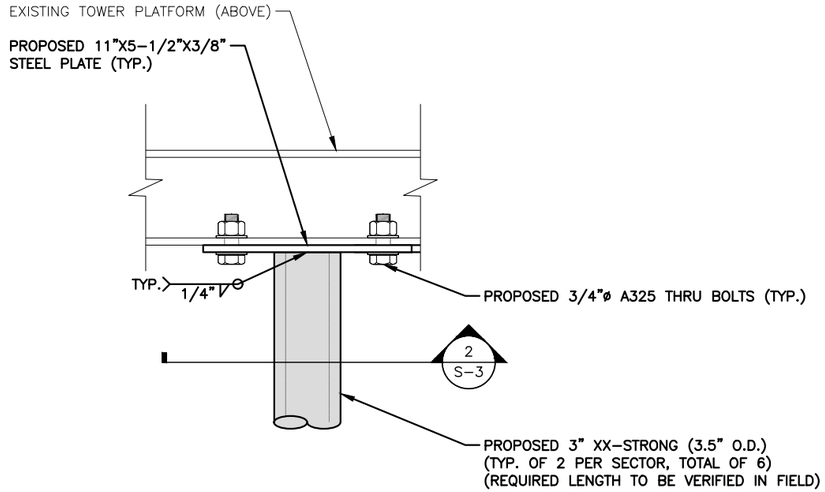

CONNECTION DETAIL (1 / S-3)
22x34 SCALE: 3"=1'-0"
11x17 SCALE: 1-1/2"=1'-0"
0 0'-2" 0'-4" 0'-8" 1'-0"

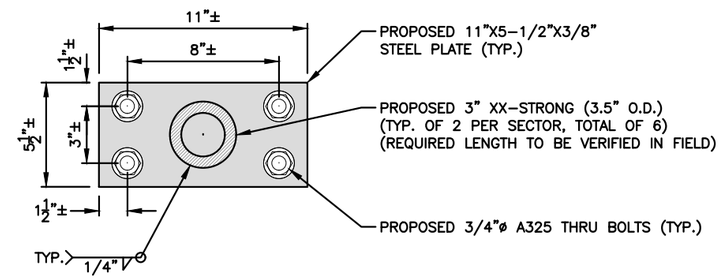

PROPOSED PLATE DETAIL (2 / S-3)
22x34 SCALE: 3"=1'-0"
11x17 SCALE: 1-1/2"=1'-0"
0 0'-2" 0'-4" 0'-8" 1'-0"

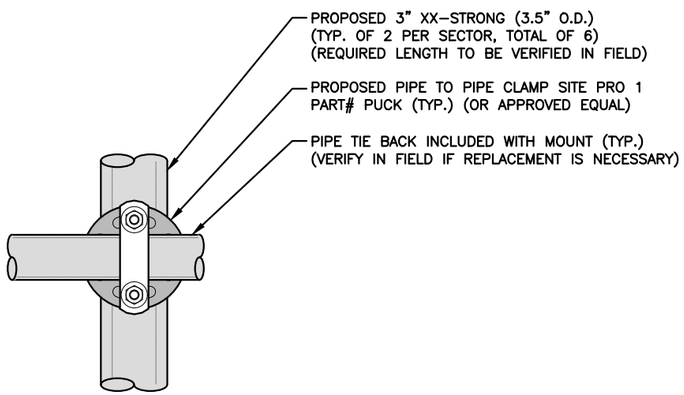

CONNECTION DETAIL (3 / S-3)
22x34 SCALE: 3"=1'-0"
11x17 SCALE: 1-1/2"=1'-0"
0 0'-2" 0'-4" 0'-8" 1'-0"

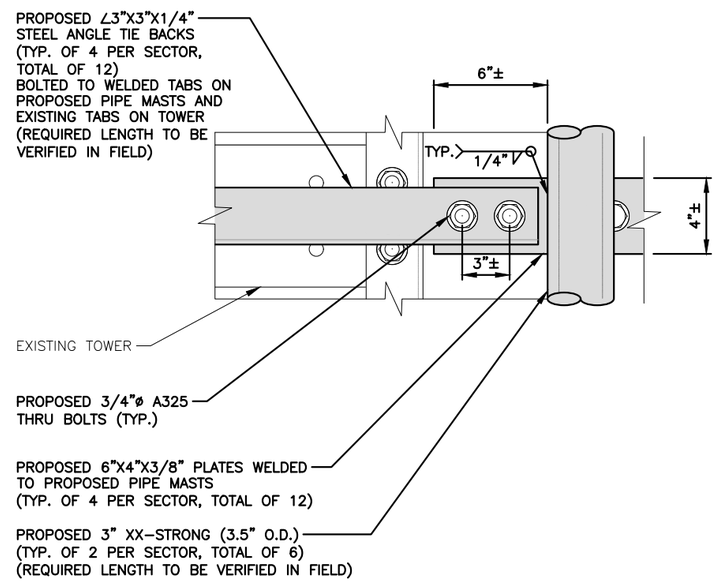

CONNECTION DETAIL (4 / S-3)
22x34 SCALE: 3"=1'-0"
11x17 SCALE: 1-1/2"=1'-0"
0 0'-2" 0'-4" 0'-8" 1'-0"

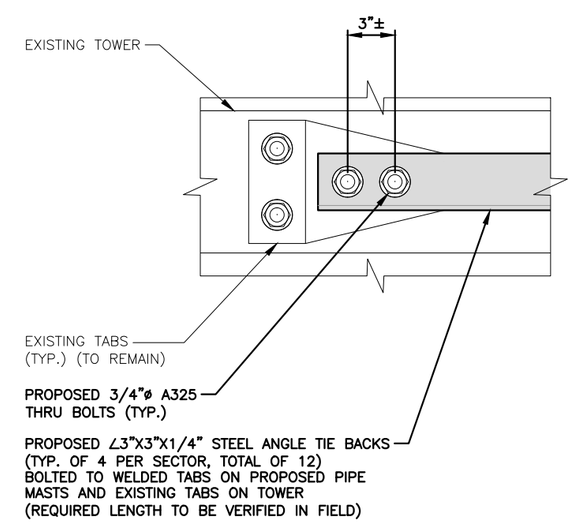

CONNECTION DETAIL (5 / S-3)
22x34 SCALE: 3"=1'-0"
11x17 SCALE: 1-1/2"=1'-0"
0 0'-2" 0'-4" 0'-8" 1'-0"

HUDSON Design Group LLC
45 BEECHWOOD DRIVE
NORTH ANDOVER, MA 01845
TEL: (978) 557-5553
FAX: (978) 336-5586

SAI
12 INDUSTRIAL WAY
SALEM, NH 03079

SITE NUMBER: CT2132
SITE NAME: NORWALK EAST-WILLARD RD

WILLARD ROAD
NORWALK, CT 06851
FAIRFIELD COUNTY

at&t
500 ENTERPRISE DRIVE, SUITE 3A
ROCKY HILL, CT 06067

NO.	DATE	REVISIONS	BY	CHK	APP'D
2	04/15/20	ISSUED FOR CONSTRUCTION	HC	HC	DPH
1	01/10/20	ISSUED FOR CONSTRUCTION	ET	HC	DPH
0	12/12/19	ISSUED FOR REVIEW	ET	HC	DPH
A	04/24/19	ISSUED FOR REVIEW	ET	HC	DPH

SCALE: AS SHOWN | DESIGNED BY: HC | DRAWN BY: ET

STATE OF CONNECTICUT
No. 24178
LICENSED PROFESSIONAL ENGINEER

AT&T

STRUCTURAL DETAILS
(LTE 6C/7C)

SITE NUMBER	DRAWING NUMBER	REV
CT2132	S-3	2

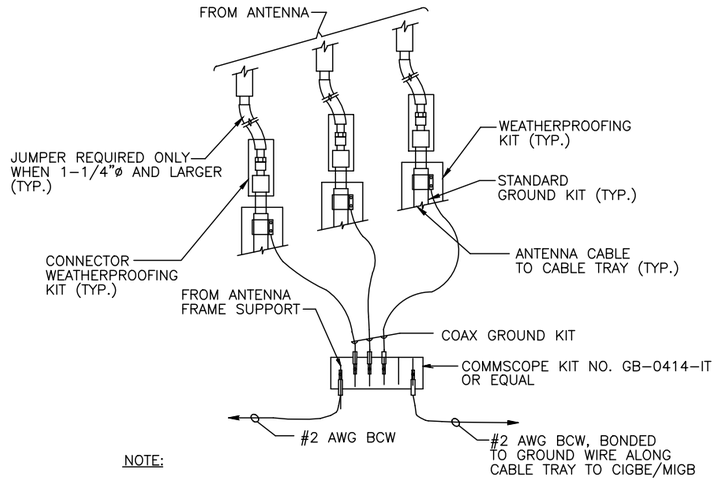

NOTE:

1. DO NOT INSTALL CABLE GROUND KIT AT A BEND AND ALWAYS DIRECT GROUND WIRE DOWN TO CIGBE.

GROUND WIRE TO GROUND BAR CONNECTION DETAIL (1 / G-1)

SCALE: N.T.S

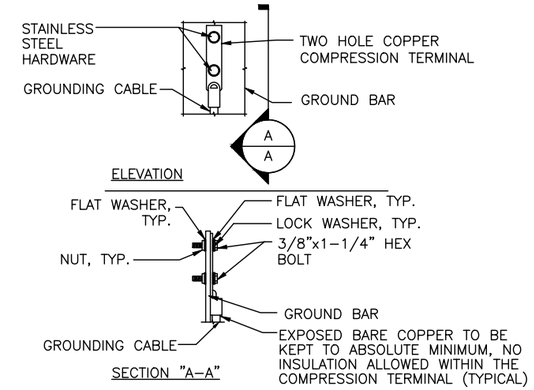

NOTES:

1. "DOUBLING UP" OR "STACKING" OF CONNECTION IS NOT PERMITTED.
2. OXIDE INHIBITING COMPOUND TO BE USED AT ALL LOCATION.
3. CADWELD DOWNLEADS FROM UPPER EGB, LOWER EGB, AND MGB

TYPICAL GROUND BAR CONNECTION DETAIL (3 / G-1)

SCALE: N.T.S

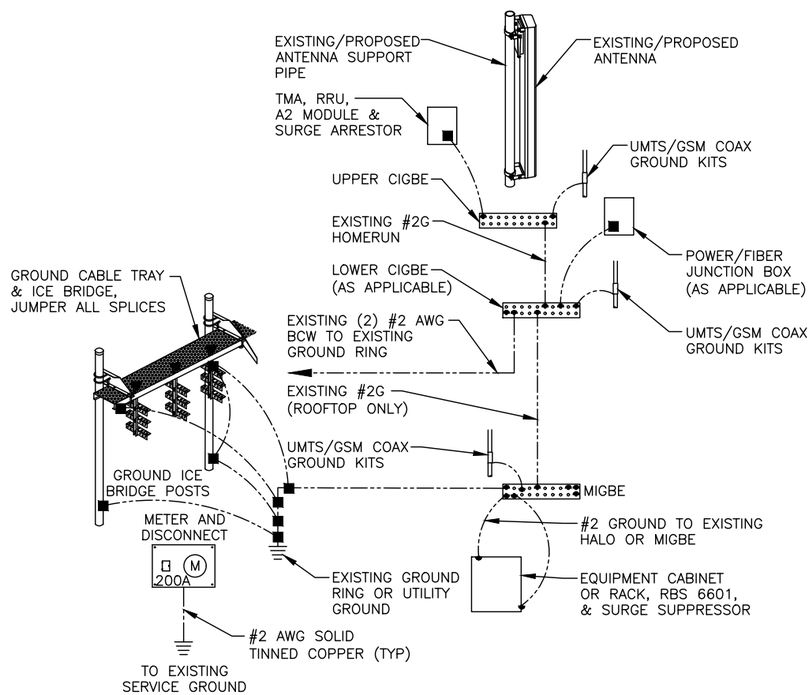

GROUNDING RISER DIAGRAM (2 / G-1)

SCALE: N.T.S

EACH GROUND CONDUCTOR TERMINATING ON ANY GROUND BAR SHALL HAVE AN IDENTIFICATION TAG ATTACHED AT EACH END THAT WILL IDENTIFY ITS ORIGIN AND DESTINATION.

SECTION "P" – SURGE PRODUCERS

CABLE ENTRY PORTS (HATCH PLATES) (#2 AWG)
GENERATOR FRAMEWORK (IF AVAILABLE) (#2 AWG)
TELCO GROUND BAR
COMMERCIAL POWER COMMON NEUTRAL/GROUND BOND (#2 AWG)
+24V POWER SUPPLY RETURN BAR (#2 AWG)
–48V POWER SUPPLY RETURN BAR (#2 AWG)
RECTIFIER FRAMES.

SECTION "A" – SURGE ABSORBERS

INTERIOR GROUND RING (#2 AWG)
EXTERNAL EARTH GROUND FIELD (BURIED GROUND RING) (#2 AWG)
METALLIC COLD WATER PIPE (IF AVAILABLE) (#2 AWG)
BUILDING STEEL (IF AVAILABLE) (#2 AWG)

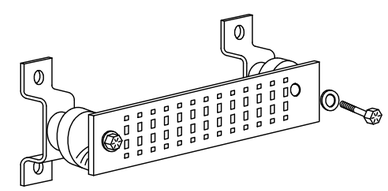

GROUND BAR - DETAIL (AS REQUIRED) (4 / G-1)

SCALE: N.T.S

HUDSON Design Group LLC
45 BEECHWOOD DRIVE
NORTH ANDOVER, MA 01845
TEL: (978) 557-5553
FAX: (978) 336-5586

SAI
12 INDUSTRIAL WAY
SALEM, NH 03079

SITE NUMBER: CT2132
SITE NAME: NORWALK EAST-WILLARD RD

WILLARD ROAD
NORWALK, CT 06851
FAIRFIELD COUNTY

at&t
500 ENTERPRISE DRIVE, SUITE 3A
ROCKY HILL, CT 06067

NO.	DATE	REVISIONS	BY	CHK	APP'D
2	04/15/20	ISSUED FOR CONSTRUCTION	ET	HC	DPH
1	01/10/20	ISSUED FOR CONSTRUCTION	ET	HC	DPH
0	12/12/19	ISSUED FOR REVIEW	ET	HC	DPH
A	04/24/19	ISSUED FOR REVIEW	ET	HC	DPH

SCALE: AS SHOWN | DESIGNED BY: HC | DRAWN BY: ET

STATE OF CONNECTICUT
DANIEL P. HAMM
No. 24178
LICENSED PROFESSIONAL ENGINEER

AT&T

GROUNDING DETAILS
(LTE 6C/7C)

SITE NUMBER	DRAWING NUMBER	REV
CT2132	G-1	2

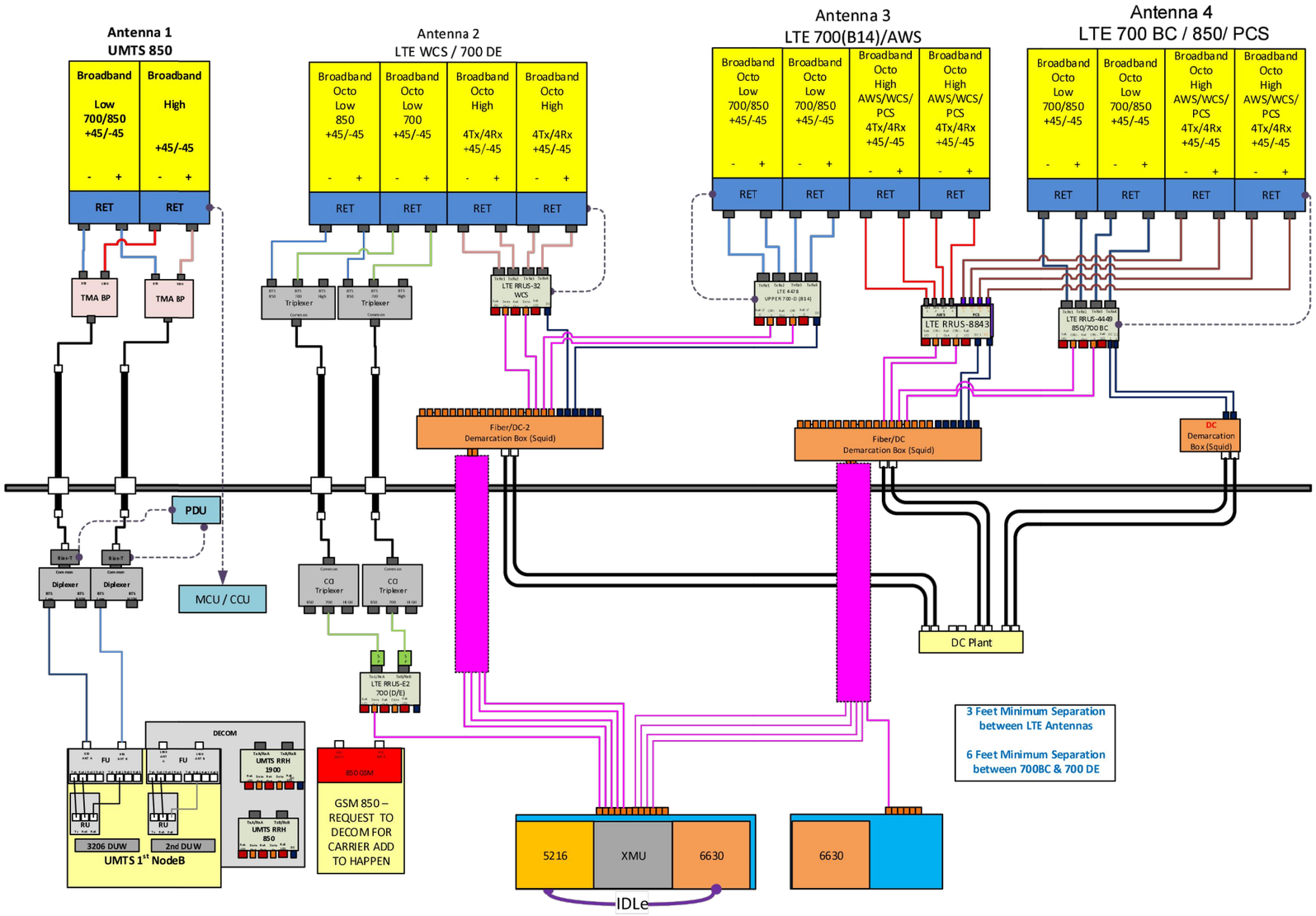

RF PLUMBING DIAGRAM (1 / RF–1)

SCALE: N.T.S

NOTE:
1. CONTRACTOR TO CONFIRM ALL PARTS.
2. INSTALL ALL EQUIPMENT TO MANUFACTURER'S RECOMMENDATIONS

NOTE:

REFER TO THE FINAL RF DATA SHEET FOR FINAL ANTENNA SETTINGS.

HUDSON Design Group LLC
45 BEECHWOOD DRIVE
NORTH ANDOVER, MA 01845
TEL: (978) 557-5553
FAX: (978) 336-5586

SAI
12 INDUSTRIAL WAY
SALEM, NH 03079

SITE NUMBER: CT2132
SITE NAME: NORWALK EAST-WILLARD RD

WILLARD ROAD
NORWALK, CT 06851
FAIRFIELD COUNTY

at&t
500 ENTERPRISE DRIVE, SUITE 3A
ROCKY HILL, CT 06067

NO.	DATE	REVISIONS	BY	CHK	APP'D
2	04/15/20	ISSUED FOR CONSTRUCTION	HC	HC	DPH
1	01/10/20	ISSUED FOR CONSTRUCTION	ET	HC	DPH
0	12/12/19	ISSUED FOR REVIEW	ET	HC	DPH
A	04/24/19	ISSUED FOR REVIEW	ET	HC	DPH

SCALE: AS SHOWN | DESIGNED BY: HC | DRAWN BY: ET

AT&T

RF PLUMBING DIAGRAM
(LTE 6C/7C)

SITE NUMBER	DRAWING NUMBER	REV
CT2132	RF–1	2

November 22, 2019
January 7, 2020 (Rev. 1)

SAI at&t

SAI Communications
12 Industrial Way
Salem NH, 03079

RE:		
	Site Number:	CT2132 (LTE 6C/7C)
	FA Number:	10034993
	PACE Number:	MRCTB038167
	PT Number:	2051A0MDY7
	Site Name:	NORWALK EAST-WILLARD RD
	Site Address:	Willard Road Norwalk, CT 06851

To Whom It May Concern:

Hudson Design Group LLC (HDG) has been authorized by SAI Communications to perform a mount analysis on the existing AT&T antenna/RRH mounts to determine their capability of supporting the following additional loading:

- (3) 7770 Antennas (55.0"x11.0"x5.0" - Wt. = 35 lbs. /each)
- (3) OPA-65R-LCUU-H4 Antennas (48.0"x14.4"x7.3"– Wt. = 57 lbs. /each)
- (3) RRUS-32 RRH's (27.2"x12.1"x7.0" – Wt. = 60 lbs. /each)
- (6) LGP21401 TMA's (14.4"x9.0"x2.7" – Wt. = 19 lbs. /each)
- (6) TPX-070821 Triplexers (5.9"x9.7"x2.1" – Wt. = 8 lbs. /each)
- (3) Squid Surge Arrestors (24.0"x9.7" Φ – Wt. = 33 lbs. /each) (Tower Mount)
- **(6) 800-10964 Antennas (59.0"x20.0"x6.9" – Wt. = 95 lbs. /each)**
- **(3) B14 4478 RRH's (18.1"x13.4"x8.3" – Wt. = 60 lbs. /each)**
- **(3) B2/B66A 8843 RRH's (14.9"x13.2"x10.9" – Wt. = 72 lbs. /each)**
- **(3) B5/B12 4449 RRH's (14.9"x13.2"x10.4" – Wt. = 73 lbs. /each)**
- **(1) Squid Surge Arrestor (24.0"x9.7" Φ – Wt. = 33 lbs.)**

**Proposed equipment shown in bold*

Mount fabrication drawings prepared by Sabre Industries Towers and Poles, P/N C10857001C, dated December 22, 2015 were used to perform this analysis.

Mount Analysis Methods:

- This analysis was conducted in accordance with EIA/TIA-222-H, Structural Standards for Steel Antenna Towers and Antenna Supporting Structures, the International Building Code 2015 with 2018 Connecticut State Building Code, and AT&T Mount Technical Directive – R13.
- HDG considers this mount to be asymmetrical and has applied wind loads in 30 degree increments all around the mount. Per TIA-222-H and Appendix N of the Connecticut State Building Code, the max basic wind speed for this site is equal to 120 mph with a max basic wind speed with ice of 50 mph and a max ice thickness of 1.0 in. An escalated ice thickness of 1.27 in was used for this analysis.
- HDG considers this site to be exposure category B; tower is located in an urban/suburban or wooded area with numerous closely spaced obstructions.
- HDG considers this site to be topographic category 1; tower is located on flat terrain or the bottom of a hill or ridge.
- The mount has been analyzed with load combinations consisting of 250 lbs live load using a service wind speed of 30 mph wind on the worst-case antenna. Analysis performed on each antenna pipe to determine worst case location; worst case location was antenna position 3.
- The mount has been analyzed with load combinations consisting of a 250 lbs live load in a worst-case location on the mount.

Based on our evaluation, we have determined that the New Sabre Industries C10857001C mounts **ARE CAPABLE** of supporting the proposed installation with the proposed modifications:

- **Remove existing pipe mast and install new 3" xx-strong (3.5" O.D.) pipe mast secured to the tower (typ. of 1 per sector, total of 3)**

	Component	Controlling Load Case	Stress Ratio	Pass/Fail
New Mount Rating	37	LC6	174%	**FAIL**
Modified New Mount Rating	11	LC12	80%	**PASS**

Reference Documents:

- Fabrication drawings prepared by Sabre Industries Towers and Poles, P/N C10857001C, dated December 22, 2015

This determination was based on the following limitations and assumptions:

1. HDG is not responsible for any modifications completed prior to and hereafter which HDG was not directly involved.
2. All structural members and their connections are assumed to be in good condition and are free from defects with no deterioration to its member capacities.
3. All antennas, coax cables and waveguide cables are assumed to be properly installed and supported as per the manufacturer's requirements.
4. The proposed mount will be adequately secured to the tower structure per the mount manufacturer's specifications.
5. All components pertaining to AT&T's mounts must be tightened and re-plumbed prior to the installation of new appurtenances.
6. HDG performed a localized analysis on the mount itself and not on the supporting tower structure.

Please feel free to contact our office should you have any questions.

Respectfully Submitted,
Hudson Design Group LLC

STATE OF CONNECTICUT
DANIEL HAMM
24178
LICENSED
PROFESSIONAL ENGINEER

Michael Cabral
Vice President

Daniel P. Hamm, PE
Principal

FIELD PHOTOS:
*Note: Existing mount to be removed and replaced.

HUDSON
Design Group LLC

Wind & Ice
Calculations

Date: 1/7/2020
Project Name: NORWALK EAST-WILLARD RD
Project No.: CT2132
Designed By: RL **Checked By:** MSC

HUDSON Design Group LLC

2.6.5.2 Velocity Pressure Coeff:

$K_z = 2.01\,(z/z_g)^{2/\alpha}$

		z=	347 (ft)
		z_g=	1200 (ft)
K_z=	**1.410**	α=	7.0

Kzmin ≤ Kz ≤ 2.01

Table 2-4

Exposure	Z_g	α	K_{zmin}	K_c
B	1200 ft	7.0	0.70	0.9
C	900 ft	9.5	0.85	1.0
D	700 ft	11.5	1.03	1.1

2.6.6.2 Topographic Factor:

Table 2-5

Topo. Category	K_t	f
2	0.43	1.25
3	0.53	2.0
4	0.72	1.5

$K_{zt} = [1+(K_c\,K_t/K_h)]^2$

$K_h = e^{(f*z/H)}$

K_{zt}= **#DIV/0!**

(If Category 1 then K_{zt} =1.0)

Category=	1

K_h=	#DIV/0!	
K_c=	0.9	(from Table 2-4)
K_t=	0	(from Table 2-5)
f=	0	(from Table 2-5)
z=	347	
z_s=	60	(Mean elevation of base of structure above sea level)
H=	0	(Ht. of the crest above surrounding terrain)
K_{zt}=	1.00	(from 2.6.6.2.1)
K_e=	1.00	(from 2.6.8)

2.6.10 Design Ice Thickness

Max Ice Thickness =	t_i =	1.00	in
Importance Factor =	I=	1.0	(from Table 2-3)
	K_{iz} =	1.27	(from Sec. 2.6.10)

$t_{iz} = t_i * I * K_{iz} * (K_{zt})^{0.35}$

t_{iz} = 1.27 in

Date: 1/7/2020
Project Name: NORWALK EAST-WILLARD RD
Project No.: CT2132
Designed By: RL Checked By: MSC

HUDSON Design Group LLC

2.6.9 Gust Effect Factor

2.6.9.1 Self Supporting Lattice Structures

G_h = 1.0 Latticed Structures > 600 ft

G_h = 0.85 Latticed Structures 450 ft or less

G_h = 0.85 + 0.15 [h/150 - 3.0] h= ht. of structure

h=	350	G_h=	0.85
2.6.9.2 Guyed Masts		G_h=	0.85
2.6.9.3 Pole Structures		G_h=	1.1
2.6.9 Appurtenances		G_h=	1.0

2.6.9.4 Structures Supported on Other Structures
(Cantilivered tubular or latticed spines, pole, structures on buildings (ht. : width ratio > 5)

G_h=	1.35	**Gh=**	**1.00**

2.6.11.2 Design Wind Force on Appurtenances

F= q_z*G_h*$(EPA)_A$

q_z= 0.00256*K_z*K_{zt}*K_s*K_e*K_d*V_{max}^2

		K_z=	1.410	(from 2.6.5.2)
		K_{zt}=	1.0	(from 2.6.6.2.1)
		K_s=	1.0	(from 2.6.7)
q_z=	**44.09**	K_e=	1.00	(from 2.6.8)
$q_{z\ (Ice)}$=	**7.65**	K_d=	0.85	(from Table 2-2)
$q_{z\ (30)}$=	**2.76**	V_{max}=	120	mph (Ultimate Wind Speed)
		$V_{max\ (ice)}$=	50	mph
		V_{30}=	30	mph

Table 2-2

Structure Type	Wind Direction Probability Factor, Kd
Latticed structures with triangular, square or rectangular cross sections	0.85
Tubular pole structures, latticed structures with other cross sections, appurtenances	0.95
Tubular pole structures supporting antennas enclosed within a cylindrical shroud	1.00

Date: 1/7/2020
Project Name: NORWALK EAST-WILLARD RD
Project No.: CT2132
Designed By: RL Checked By: MSC

HUDSON Design Group LLC

Determine Ca:

Table 2-9

Force Coefficients (Ca) for Appurtenances				
Member Type		Aspect Ratio ≤ 2.5	Aspect Ratio = 7	Aspect Ratio ≥ 25
		Ca	Ca	Ca
Flat		1.2	1.4	2.0
Square/Rectangular HSS		1.2 - 2.8(r_s) ≥ 0.85	1.4 - 4.0(r_s) ≥ 0.90	2.0 - 6.0(r_s) ≥ 1.25
Round	C < 39 (Subcritical)	0.7	0.8	1.2
	39 ≤ C ≤ 78 (Transitional)	$4.14/(C^{0.485})$	$3.66/(C^{0.415})$	$46.8/(C^{1.0})$
	C > 78 (Supercritical)	0.5	0.6	0.6

Aspect Ratio is the overall length/width ratio in the plane normal to the wind direction.
(Aspect ratio is independent of the spacing between support points of a linear appurtenance,

Note: Linear interpolation may be used for aspect ratios other than those shown.

Ice Thickness = **1.27 in** **Angle = 0 (deg)** **Equivalent Angle = 180 (deg)**

Appurtenances	Height	Width	Depth	Flat Area	Aspect Ratio	Ca	Force (lbs)	Force (lbs) (w/ Ice)	Force (lbs) (30 mph)
7770 Antenna	55.0	11.0	5.0	4.20	5.00	1.31	243	54	15
OPA-65R-LCUU-H4 Antenna	48.0	14.4	7.3	4.80	3.33	1.24	262	56	16
800-10964 Antenna	59.0	20.0	6.9	8.19	2.95	1.22	441	90	28
RRUS-32 RRH	27.2	12.1	7.0	2.29	2.25	1.20	121	28	8
B14 4478 RRH(Shielded)	27.2	0.0	7.0	0.00	0.00	1.20	0	5	0
B14 4478 RRH	18.1	8.3	13.4	1.04	2.18	1.20	55	14	3
B14 4478 RRH (Shielded)	18.1	4.2	13.4	0.52	4.36	1.28	29	9	2
B2/B66A 8843 RRH	14.9	10.9	13.2	1.13	1.37	1.20	60	15	4
B2/B66A 8843 RRH (Shielded)	14.9	5.5	13.2	0.56	2.73	1.21	30	9	2
B5/B12 4449 RRH	14.9	13.2	10.4	1.37	1.13	1.20	72	17	5
B2/B66A 8843 RRH (Shielded)	14.9	0.0	10.4	0.00	0.00	1.20	0	3	0
LGP21401 TMA	14.4	2.7	9.0	0.27	5.33	1.33	16	6	1
TPX-070821 Triplexer	5.9	9.7	2.1	0.40	0.61	1.20	21	7	1
Surge Arrestor	24.0	9.7	9.7	1.62	2.47	0.70	50	12	3
3/4" Round Bar	0.8	12.0		0.06	0.06	1.20	3	3	0
2" Pipe	2.4	12.0		0.20	0.20	1.20	10	5	1
3" Pipe	3.5	12.0		0.29	0.29	1.20	15	6	1
L 2-1/2x2-1/2 Angles	2.5	12.0		0.21	0.21	2.00	18	8	1

Date: 1/7/2020
Project Name: NORWALK EAST-WILLARD RD
Project No.: CT2132
Designed By: RL Checked By: MSC

HUDSON Design Group LLC

WIND LOADS

Angle = 30 (deg) | Ice Thickness = 1.27 in. | Equivalent Angle = 210 (deg)

WIND LOADS WITH NO ICE:

Appurtenances	Height	Width	Depth	Flat Area (normal)	Flat Area (side)	Aspect Ratio	Aspect Ratio	Ca (normal)	Ca (side)	Force (lbs) (normal)	Force (lbs) (side)	Force (lbs) (angle)
7770 Antenna	55.0	11.0	5.0	4.20	1.91	5.00	11.00	1.31	1.53	243	129	214
OPA-65R-LCUU-H4 Antenna	48.0	14.4	7.3	4.80	2.43	3.33	6.58	1.24	1.38	262	148	233
800-10964 Antenna	59.0	20.0	6.9	8.19	2.83	2.95	8.55	1.22	1.45	441	181	376
RRUS-32 RRH	27.2	12.1	7.0	2.29	1.32	2.25	3.89	1.20	1.26	121	74	109
B14 4478 RRH(Shielded)	27.2	6.1	7.0	1.14	1.32	4.50	3.89	1.29	1.26	65	74	67
B14 4478 RRH	18.1	8.3	13.4	1.04	1.68	2.18	1.35	1.20	1.20	55	89	64
B14 4478 RRH (Shielded)	18.1	4.2	13.4	0.52	1.68	4.36	1.35	1.28	1.20	29	89	44
B2/B66A 8843 RRH	14.9	10.9	13.2	1.13	1.37	1.37	1.13	1.20	1.20	60	72	63
B2/B66A 8843 RRH (Shielded)	14.9	5.5	13.2	0.56	1.37	2.73	1.13	1.21	1.20	30	72	41
B5/B12 4449 RRH	14.9	13.2	10.4	1.37	1.08	1.13	1.43	1.20	1.20	72	57	68
B2/B66A 8843 RRH (Shielded)	14.9	6.6	10.4	0.68	1.08	2.26	1.43	1.20	1.20	36	57	41
LGP21401 TMA	14.4	2.7	9.0	0.27	0.90	5.33	1.60	1.33	1.20	16	48	24
TPX-070821 Triplexer	5.9	9.7	2.1	0.40	0.09	0.61	2.81	1.20	1.21	21	5	17

WIND LOADS WITH ICE:

7770 Antenna	57.5	13.5	7.5	5.41	3.01	4.25	7.64	1.28	1.42	53	33	48
OPA-65R-LCUU-H4 Antenna	50.5	16.9	9.8	5.94	3.45	2.98	5.14	1.22	1.32	56	35	50
800-10964 Antenna	61.5	22.5	9.4	9.63	4.03	2.73	6.52	1.21	1.38	89	43	78
B14 4478 RRH(Shielded)	29.7	7.3	9.5	1.51	1.97	4.06	3.12	1.27	1.23	15	18	16
B14 4478 RRH	20.6	10.8	15.9	1.55	2.28	1.90	1.30	1.20	1.20	14	21	16
B14 4478 RRH (Shielded)	20.6	5.4	15.9	0.78	2.28	3.81	1.30	1.26	1.20	7	21	11
B2/B66A 8843 RRH	17.4	13.4	15.7	1.63	1.90	1.30	1.11	1.20	1.20	15	17	16
B2/B66A 8843 RRH (Shielded)	17.4	6.7	15.7	0.81	1.90	2.60	1.11	1.20	1.20	7	17	10
B5/B12 4449 RRH	17.4	15.7	12.9	1.90	1.57	1.11	1.35	1.20	1.20	17	14	17
B2/B66A 8843 RRH (Shielded)	17.4	7.9	12.9	0.95	1.57	2.22	1.35	1.20	1.20	9	14	10
LGP21401 TMA	16.9	5.2	11.5	0.61	1.36	3.24	1.47	1.23	1.20	6	12	7
TPX-070821 Triplexer	8.4	12.2	4.6	0.72	0.27	0.69	1.82	1.20	1.20	7	2	6

WIND LOADS AT 30 MPH:

7770 Antenna	55.0	11.0	5.0	4.20	1.91	5.00	11.00	1.31	1.53	15	8	13
OPA-65R-LCUU-H4 Antenna	48.0	14.4	7.3	4.80	2.43	3.33	6.58	1.24	1.38	16	9	15
800-10964 Antenna	59.0	20.0	6.9	8.19	2.83	2.95	8.55	1.22	1.45	28	11	23
RRUS-32 RRH	27.2	12.1	7.0	2.29	1.32	2.25	3.89	1.20	1.26	8	5	7
B14 4478 RRH(Shielded)	27.2	6.1	7.0	1.14	1.32	4.50	3.89	1.29	1.26	4	5	4
B14 4478 RRH	18.1	8.3	13.4	1.04	1.68	2.18	1.35	1.20	1.20	3	6	4
B14 4478 RRH (Shielded)	18.1	4.2	13.4	0.52	1.68	4.36	1.35	1.28	1.20	2	6	3
B2/B66A 8843 RRH	14.9	10.9	13.2	1.13	1.37	1.37	1.13	1.20	1.20	4	5	4
B2/B66A 8843 RRH (Shielded)	14.9	5.5	13.2	0.56	1.37	2.73	1.13	1.21	1.20	2	5	3
B5/B12 4449 RRH	14.9	13.2	10.4	1.37	1.08	1.13	1.43	1.20	1.20	5	4	4
B2/B66A 8843 RRH (Shielded)	14.9	6.6	10.4	0.68	1.08	2.26	1.43	1.20	1.20	2	4	3
LGP21401 TMA	14.4	2.7	9.0	0.27	0.90	5.33	1.60	1.33	1.20	1	3	1
TPX-070821 Triplexer	5.9	9.7	2.1	0.40	0.09	0.61	2.81	1.20	1.21	1	0	1

Date: 1/7/2020
Project Name: NORWALK EAST-WILLARD RD
Project No.: CT2132
Designed By: RL Checked By: MSC

HUDSON Design Group LLC

WIND LOADS

Angle = 60 (deg) | Ice Thickness = 1.27 in. | Equivalent Angle = 240 (deg)

WIND LOADS WITH NO ICE:

Appurtenances	Height	Width	Depth	Flat Area (normal)	Flat Area (side)	Ratio (normal)	Ratio (side)	Ca (normal)	Ca (side)	Force (lbs) (normal)	Force (lbs) (side)	Force (lbs) (angle)
7770 Antenna	55.0	11.0	5.0	4.20	1.91	5.00	11.00	1.31	1.53	243	129	158
OPA-65R-LCUU-H4 Antenna	48.0	14.4	7.3	4.80	2.43	3.33	6.58	1.24	1.38	262	148	177
800-10964 Antenna	59.0	20.0	6.9	8.19	2.83	2.95	8.55	1.22	1.45	441	181	246
RRUS-32 RRH	27.2	12.1	7.0	2.29	1.32	2.25	3.89	1.20	1.26	121	74	85
B14 4478 RRH(Shielded)	27.2	9.1	7.0	1.71	1.32	3.00	3.89	1.22	1.26	92	74	78
B14 4478 RRH	18.1	8.3	13.4	1.04	1.68	2.18	1.35	1.20	1.20	55	89	81
B14 4478 RRH (Shielded)	18.1	6.2	13.4	0.78	1.68	2.91	1.35	1.22	1.20	42	89	77
B2/B66A 8843 RRH	14.9	10.9	13.2	1.13	1.37	1.37	1.13	1.20	1.20	60	72	69
B2/B66A 8843 RRH (Shielded)	14.9	8.2	13.2	0.85	1.37	1.82	1.13	1.20	1.20	45	72	65
B5/B12 4449 RRH	14.9	13.2	10.4	1.37	1.08	1.13	1.43	1.20	1.20	72	57	61
B2/B66A 8843 RRH (Shielded)	14.9	9.9	10.4	1.02	1.08	1.51	1.43	1.20	1.20	54	57	56
LGP21401 TMA	14.4	2.7	9.0	0.27	0.90	5.33	1.60	1.33	1.20	16	48	40
TPX-070821 Triplexer	5.9	9.7	2.1	0.40	0.09	0.61	2.81	1.20	1.21	21	5	9

WIND LOADS WITH ICE:

7770 Antenna	57.5	13.5	7.5	5.41	3.01	4.25	7.64	1.28	1.42	53	33	38
OPA-65R-LCUU-H4 Antenna	50.5	16.9	9.8	5.94	3.45	2.98	5.14	1.22	1.32	56	35	40
800-10964 Antenna	61.5	22.5	9.4	9.63	4.03	2.73	6.52	1.21	1.38	89	43	54
B14 4478 RRH(Shielded)	29.7	11.0	9.5	2.27	1.97	2.71	3.12	1.21	1.23	21	18	19
B14 4478 RRH	20.6	10.8	15.9	1.55	2.28	1.90	1.30	1.20	1.20	14	21	19
B14 4478 RRH (Shielded)	20.6	8.1	15.9	1.16	2.28	2.54	1.30	1.20	1.20	11	21	18
B2/B66A 8843 RRH	17.4	13.4	15.7	1.63	1.90	1.30	1.11	1.20	1.20	15	17	17
B2/B66A 8843 RRH (Shielded)	17.4	10.1	15.7	1.22	1.90	1.73	1.11	1.20	1.20	11	17	16
B5/B12 4449 RRH	17.4	15.7	12.9	1.90	1.57	1.11	1.35	1.20	1.20	17	14	15
B2/B66A 8843 RRH (Shielded)	17.4	11.8	12.9	1.43	1.57	1.48	1.35	1.20	1.20	13	14	14
LGP21401 TMA	16.9	5.2	11.5	0.61	1.36	3.24	1.47	1.23	1.20	6	12	11
TPX-070821 Triplexer	8.4	12.2	4.6	0.72	0.27	0.69	1.82	1.20	1.20	7	2	4

WIND LOADS AT 30 MPH:

7770 Antenna	55.0	11.0	5.0	4.20	1.91	5.00	11.00	1.31	1.53	15	8	10
OPA-65R-LCUU-H4 Antenna	48.0	14.4	7.3	4.80	2.43	3.33	6.58	1.24	1.38	16	9	11
800-10964 Antenna	59.0	20.0	6.9	8.19	2.83	2.95	8.55	1.22	1.45	28	11	15
RRUS-32 RRH	27.2	12.1	7.0	2.29	1.32	2.25	3.89	1.20	1.26	8	5	5
B14 4478 RRH(Shielded)	27.2	9.1	7.0	1.71	1.32	3.00	3.89	1.22	1.26	6	5	5
B14 4478 RRH	18.1	8.3	13.4	1.04	1.68	2.18	1.35	1.20	1.20	3	6	5
B14 4478 RRH (Shielded)	18.1	6.2	13.4	0.78	1.68	2.91	1.35	1.22	1.20	3	6	5
B2/B66A 8843 RRH	14.9	10.9	13.2	1.13	1.37	1.37	1.13	1.20	1.20	4	5	4
B2/B66A 8843 RRH (Shielded)	14.9	8.2	13.2	0.85	1.37	1.82	1.13	1.20	1.20	3	5	4
B5/B12 4449 RRH	14.9	13.2	10.4	1.37	1.08	1.13	1.43	1.20	1.20	5	4	4
B2/B66A 8843 RRH (Shielded)	14.9	9.9	10.4	1.02	1.08	1.51	1.43	1.20	1.20	3	4	4
LGP21401 TMA	14.4	2.7	9.0	0.27	0.90	5.33	1.60	1.33	1.20	1	3	2
TPX-070821 Triplexer	5.9	9.7	2.1	0.40	0.09	0.61	2.81	1.20	1.21	1	0	1

Date: 1/7/2020
Project Name: NORWALK EAST-WILLARD RD
Project No.: CT2132
Designed By: RL Checked By: MSC

HUDSON Design Group LLC

WIND LOADS

Angle = 90 (deg) | Ice Thickness = 1.27 in. | Equivalent Angle = 270 (deg)

WIND LOADS WITH NO ICE:

Appurtenances	Height	Width	Depth	Flat Area (normal)	Flat Area (side)	Ratio (normal)	Ratio (side)	Ca (normal)	Ca (side)	Force (lbs) (normal)	Force (lbs) (side)	Force (lbs) (angle)
7770 Antenna	55.0	11.0	5.0	4.20	1.91	5.00	11.00	1.31	1.53	243	129	129
OPA-65R-LCUU-H4 Antenna	48.0	14.4	7.3	4.80	2.43	3.33	6.58	1.24	1.38	262	148	148
800-10964 Antenna	59.0	20.0	6.9	8.19	2.83	2.95	8.55	1.22	1.45	441	181	181
RRUS-32 RRH	27.2	12.1	7.0	2.29	1.32	2.25	3.89	1.20	1.26	121	74	74
B14 4478 RRH(Shielded)	27.2	0.0	7.0	0.00	1.32	0.00	3.89	1.20	1.26	0	74	74
B14 4478 RRH	18.1	8.3	13.4	1.04	1.68	2.18	1.35	1.20	1.20	55	89	89
B14 4478 RRH (Shielded)	18.1	4.2	13.4	0.52	1.68	4.36	1.35	1.28	1.20	29	89	89
B2/B66A 8843 RRH	14.9	10.9	13.2	1.13	1.37	1.37	1.13	1.20	1.20	60	72	72
B2/B66A 8843 RRH (Shielded)	14.9	5.5	13.2	0.56	1.37	2.73	1.13	1.21	1.20	30	72	72
B5/B12 4449 RRH	14.9	13.2	10.4	1.37	1.08	1.13	1.43	1.20	1.20	72	57	57
B2/B66A 8843 RRH (Shielded)	14.9	0.0	10.4	0.00	1.08	0.00	1.43	1.20	1.20	0	57	57
LGP21401 TMA	14.4	2.7	9.0	0.27	0.90	5.33	1.60	1.33	1.20	16	48	48
TPX-070821 Triplexer	5.9	9.7	2.1	0.40	0.09	0.61	2.81	1.20	1.21	21	5	5

WIND LOADS WITH ICE:

7770 Antenna	57.5	13.5	7.5	5.41	3.01	4.25	7.64	1.28	1.42	53	33	33
OPA-65R-LCUU-H4 Antenna	50.5	16.9	9.8	5.94	3.45	2.98	5.14	1.22	1.32	56	35	35
800-10964 Antenna	61.5	22.5	9.4	9.63	4.03	2.73	6.52	1.21	1.38	89	43	43
B14 4478 RRH(Shielded)	29.7	2.5	9.5	0.52	1.97	11.75	3.12	1.56	1.23	6	18	18
B14 4478 RRH	20.6	10.8	15.9	1.55	2.28	1.90	1.30	1.20	1.20	14	21	21
B14 4478 RRH (Shielded)	20.6	6.7	15.9	0.96	2.28	3.09	1.30	1.23	1.20	9	21	21
B2/B66A 8843 RRH	17.4	13.4	15.7	1.63	1.90	1.30	1.11	1.20	1.20	15	17	17
B2/B66A 8843 RRH (Shielded)	17.4	8.0	15.7	0.97	1.90	2.18	1.11	1.20	1.20	9	17	17
B5/B12 4449 RRH	17.4	15.7	12.9	1.90	1.57	1.11	1.35	1.20	1.20	17	14	14
B2/B66A 8843 RRH (Shielded)	17.4	2.5	12.9	0.31	1.57	6.89	1.35	1.40	1.20	3	14	14
LGP21401 TMA	16.9	5.2	11.5	0.61	1.36	3.24	1.47	1.23	1.20	6	12	12
TPX-070821 Triplexer	8.4	12.2	4.6	0.72	0.27	0.69	1.82	1.20	1.20	7	2	2

WIND LOADS AT 30 MPH:

7770 Antenna	55.0	11.0	5.0	4.20	1.91	5.00	11.00	1.31	1.53	15	8	8
OPA-65R-LCUU-H4 Antenna	48.0	14.4	7.3	4.80	2.43	3.33	6.58	1.24	1.38	16	9	9
800-10964 Antenna	59.0	20.0	6.9	8.19	2.83	2.95	8.55	1.22	1.45	28	11	11
RRUS-32 RRH	27.2	12.1	7.0	2.29	1.32	2.25	3.89	1.20	1.26	8	5	5
B14 4478 RRH(Shielded)	27.2	0.0	7.0	0.00	1.32	0.00	3.89	1.20	1.26	0	5	5
B14 4478 RRH	18.1	8.3	13.4	1.04	1.68	2.18	1.35	1.20	1.20	3	6	6
B14 4478 RRH (Shielded)	18.1	4.2	13.4	0.52	1.68	4.36	1.35	1.28	1.20	2	6	6
B2/B66A 8843 RRH	14.9	10.9	13.2	1.13	1.37	1.37	1.13	1.20	1.20	4	5	5
B2/B66A 8843 RRH (Shielded)	14.9	5.5	13.2	0.56	1.37	2.73	1.13	1.21	1.20	2	5	5
B5/B12 4449 RRH	14.9	13.2	10.4	1.37	1.08	1.13	1.43	1.20	1.20	5	4	4
B2/B66A 8843 RRH (Shielded)	14.9	0.0	10.4	0.00	1.08	0.00	1.43	1.20	1.20	0	4	4
LGP21401 TMA	14.4	2.7	9.0	0.27	0.90	5.33	1.60	1.33	1.20	1	3	3
TPX-070821 Triplexer	5.9	9.7	2.1	0.40	0.09	0.61	2.81	1.20	1.21	1	0	0

Date: 1/7/2020
Project Name: NORWALK EAST-WILLARD RD
Project No.: CT2132
Designed By: RL Checked By: MSC

HUDSON Design Group LLC

WIND LOADS

Angle = 120 (deg) | Ice Thickness = 1.27 in. | Equivalent Angle = 300 (deg)

WIND LOADS WITH NO ICE:

Appurtenances	Height	Width	Depth	Flat Area (normal)	Flat Area (side)	Ratio (normal)	Ratio (side)	Ca (normal)	Ca (side)	Force (lbs) (normal)	Force (lbs) (side)	Force (lbs) (angle)
7770 Antenna	55.0	11.0	5.0	4.20	1.91	5.00	11.00	1.31	1.53	243	129	158
OPA-65R-LCUU-H4 Antenna	48.0	14.4	7.3	4.80	2.43	3.33	6.58	1.24	1.38	262	148	177
800-10964 Antenna	59.0	20.0	6.9	8.19	2.83	2.95	8.55	1.22	1.45	441	181	246
RRUS-32 RRH	27.2	12.1	7.0	2.29	1.32	2.25	3.89	1.20	1.26	121	74	85
B14 4478 RRH(Shielded)	27.2	9.1	7.0	1.71	1.32	3.00	3.89	1.22	1.26	92	74	78
B14 4478 RRH	18.1	8.3	13.4	1.04	1.68	2.18	1.35	1.20	1.20	55	89	81
B14 4478 RRH (Shielded)	18.1	6.2	13.4	0.78	1.68	2.91	1.35	1.22	1.20	42	89	77
B2/B66A 8843 RRH	14.9	10.9	13.2	1.13	1.37	1.37	1.13	1.20	1.20	60	72	69
B2/B66A 8843 RRH (Shielded)	14.9	8.2	13.2	0.85	1.37	1.82	1.13	1.20	1.20	45	72	65
B5/B12 4449 RRH	14.9	13.2	10.4	1.37	1.08	1.13	1.43	1.20	1.20	72	57	61
B2/B66A 8843 RRH (Shielded)	14.9	9.9	10.4	1.02	1.08	1.51	1.43	1.20	1.20	54	57	56
LGP21401 TMA	14.4	2.7	9.0	0.27	0.90	5.33	1.60	1.33	1.20	16	48	40
TPX-070821 Triplexer	5.9	9.7	2.1	0.40	0.09	0.61	2.81	1.20	1.21	21	5	9

WIND LOADS WITH ICE:

7770 Antenna	57.5	13.5	7.5	5.41	3.01	4.25	7.64	1.28	1.42	53	33	38
OPA-65R-LCUU-H4 Antenna	50.5	16.9	9.8	5.94	3.45	2.98	5.14	1.22	1.32	56	35	40
800-10964 Antenna	61.5	22.5	9.4	9.63	4.03	2.73	6.52	1.21	1.38	89	43	54
B14 4478 RRH(Shielded)	29.7	11.0	9.5	2.27	1.97	2.71	3.12	1.21	1.23	21	18	19
B14 4478 RRH	20.6	10.8	15.9	1.55	2.28	1.90	1.30	1.20	1.20	14	21	19
B14 4478 RRH (Shielded)	20.6	8.1	15.9	1.16	2.28	2.54	1.30	1.20	1.20	11	21	18
B2/B66A 8843 RRH	17.4	13.4	15.7	1.63	1.90	1.30	1.11	1.20	1.20	15	17	17
B2/B66A 8843 RRH (Shielded)	17.4	10.1	15.7	1.22	1.90	1.73	1.11	1.20	1.20	11	17	16
B5/B12 4449 RRH	17.4	15.7	12.9	1.90	1.57	1.11	1.35	1.20	1.20	17	14	15
B2/B66A 8843 RRH (Shielded)	17.4	11.8	12.9	1.43	1.57	1.48	1.35	1.20	1.20	13	14	14
LGP21401 TMA	16.9	5.2	11.5	0.61	1.36	3.24	1.47	1.23	1.20	6	12	11
TPX-070821 Triplexer	8.4	12.2	4.6	0.72	0.27	0.69	1.82	1.20	1.20	7	2	4

WIND LOADS AT 30 MPH:

7770 Antenna	55.0	11.0	5.0	4.20	1.91	5.00	11.00	1.31	1.53	15	8	10
OPA-65R-LCUU-H4 Antenna	48.0	14.4	7.3	4.80	2.43	3.33	6.58	1.24	1.38	16	9	11
800-10964 Antenna	59.0	20.0	6.9	8.19	2.83	2.95	8.55	1.22	1.45	28	11	15
RRUS-32 RRH	27.2	12.1	7.0	2.29	1.32	2.25	3.89	1.20	1.26	8	5	5
B14 4478 RRH(Shielded)	27.2	9.1	7.0	1.71	1.32	3.00	3.89	1.22	1.26	6	5	5
B14 4478 RRH	18.1	8.3	13.4	1.04	1.68	2.18	1.35	1.20	1.20	3	6	5
B14 4478 RRH (Shielded)	18.1	6.2	13.4	0.78	1.68	2.91	1.35	1.22	1.20	3	6	5
B2/B66A 8843 RRH	14.9	10.9	13.2	1.13	1.37	1.37	1.13	1.20	1.20	4	5	4
B2/B66A 8843 RRH (Shielded)	14.9	8.2	13.2	0.85	1.37	1.82	1.13	1.20	1.20	3	5	4
B5/B12 4449 RRH	14.9	13.2	10.4	1.37	1.08	1.13	1.43	1.20	1.20	5	4	4
B2/B66A 8843 RRH (Shielded)	14.9	9.9	10.4	1.02	1.08	1.51	1.43	1.20	1.20	3	4	4
LGP21401 TMA	14.4	2.7	9.0	0.27	0.90	5.33	1.60	1.33	1.20	1	3	2
TPX-070821 Triplexer	5.9	9.7	2.1	0.40	0.09	0.61	2.81	1.20	1.21	1	0	1

Date: 1/7/2020
Project Name: NORWALK EAST-WILLARD RD
Project No.: CT2132
Designed By: RL Checked By: MSC

HUDSON Design Group LLC

WIND LOADS

Angle = 150 (deg)

Ice Thickness = 1.27 in.

Equivalent Angle = 330 (deg)

WIND LOADS WITH NO ICE:

Appurtenances	Height	Width	Depth	Flat Area (normal)	Flat Area (side)	Ratio (normal)	Ratio (side)	Ca (normal)	Ca (side)	Force (lbs) (normal)	Force (lbs) (side)	Force (lbs) (angle)
7770 Antenna	55.0	11.0	5.0	4.20	1.91	5.00	11.00	1.31	1.53	243	129	214
OPA-65R-LCUU-H4 Antenna	48.0	14.4	7.3	4.80	2.43	3.33	6.58	1.24	1.38	262	148	233
800-10964 Antenna	59.0	20.0	6.9	8.19	2.83	2.95	8.55	1.22	1.45	441	181	376
RRUS-32 RRH	27.2	12.1	7.0	2.29	1.32	2.25	3.89	1.20	1.26	121	74	109
B14 4478 RRH(Shielded)	27.2	6.1	7.0	1.14	1.32	4.50	3.89	1.29	1.26	65	74	67
B14 4478 RRH	18.1	8.3	13.4	1.04	1.68	2.18	1.35	1.20	1.20	55	89	64
B14 4478 RRH (Shielded)	18.1	4.2	13.4	0.52	1.68	4.36	1.35	1.28	1.20	29	89	44
B2/B66A 8843 RRH	14.9	10.9	13.2	1.13	1.37	1.37	1.13	1.20	1.20	60	72	63
B2/B66A 8843 RRH (Shielded)	14.9	5.5	13.2	0.56	1.37	2.73	1.13	1.21	1.20	30	72	41
B5/B12 4449 RRH	14.9	13.2	10.4	1.37	1.08	1.13	1.43	1.20	1.20	72	57	68
B2/B66A 8843 RRH (Shielded)	14.9	6.6	10.4	0.68	1.08	2.26	1.43	1.20	1.20	36	57	41
LGP21401 TMA	14.4	2.7	9.0	0.27	0.90	5.33	1.60	1.33	1.20	16	48	24
TPX-070821 Triplexer	5.9	9.7	2.1	0.40	0.09	0.61	2.81	1.20	1.21	21	5	17

WIND LOADS WITH ICE:

7770 Antenna	57.5	13.5	7.5	5.41	3.01	4.25	7.64	1.28	1.42	53	33	48
OPA-65R-LCUU-H4 Antenna	50.5	16.9	9.8	5.94	3.45	2.98	5.14	1.22	1.32	56	35	50
800-10964 Antenna	61.5	22.5	9.4	9.63	4.03	2.73	6.52	1.21	1.38	89	43	78
B14 4478 RRH(Shielded)	29.7	7.3	9.5	1.51	1.97	4.06	3.12	1.27	1.23	15	18	16
B14 4478 RRH	20.6	10.8	15.9	1.55	2.28	1.90	1.30	1.20	1.20	14	21	16
B14 4478 RRH (Shielded)	20.6	5.4	15.9	0.78	2.28	3.81	1.30	1.26	1.20	7	21	11
B2/B66A 8843 RRH	17.4	13.4	15.7	1.63	1.90	1.30	1.11	1.20	1.20	15	17	16
B2/B66A 8843 RRH (Shielded)	17.4	6.7	15.7	0.81	1.90	2.60	1.11	1.20	1.20	7	17	10
B5/B12 4449 RRH	17.4	15.7	12.9	1.90	1.57	1.11	1.35	1.20	1.20	17	14	17
B2/B66A 8843 RRH (Shielded)	17.4	7.9	12.9	0.95	1.57	2.22	1.35	1.20	1.20	9	14	10
LGP21401 TMA	16.9	5.2	11.5	0.61	1.36	3.24	1.47	1.23	1.20	6	12	7
TPX-070821 Triplexer	8.4	12.2	4.6	0.72	0.27	0.69	1.82	1.20	1.20	7	2	6

WIND LOADS AT 30 MPH:

7770 Antenna	55.0	11.0	5.0	4.20	1.91	5.00	11.00	1.31	1.53	15	8	13
OPA-65R-LCUU-H4 Antenna	48.0	14.4	7.3	4.80	2.43	3.33	6.58	1.24	1.38	16	9	15
800-10964 Antenna	59.0	20.0	6.9	8.19	2.83	2.95	8.55	1.22	1.45	28	11	23
RRUS-32 RRH	27.2	12.1	7.0	2.29	1.32	2.25	3.89	1.20	1.26	8	5	7
B14 4478 RRH(Shielded)	27.2	6.1	7.0	1.14	1.32	4.50	3.89	1.29	1.26	4	5	4
B14 4478 RRH	18.1	8.3	13.4	1.04	1.68	2.18	1.35	1.20	1.20	3	6	4
B14 4478 RRH (Shielded)	18.1	4.2	13.4	0.52	1.68	4.36	1.35	1.28	1.20	2	6	3
B2/B66A 8843 RRH	14.9	10.9	13.2	1.13	1.37	1.37	1.13	1.20	1.20	4	5	4
B2/B66A 8843 RRH (Shielded)	14.9	5.5	13.2	0.56	1.37	2.73	1.13	1.21	1.20	2	5	3
B5/B12 4449 RRH	14.9	13.2	10.4	1.37	1.08	1.13	1.43	1.20	1.20	5	4	4
B2/B66A 8843 RRH (Shielded)	14.9	6.6	10.4	0.68	1.08	2.26	1.43	1.20	1.20	2	4	3
LGP21401 TMA	14.4	2.7	9.0	0.27	0.90	5.33	1.60	1.33	1.20	1	3	1
TPX-070821 Triplexer	5.9	9.7	2.1	0.40	0.09	0.61	2.81	1.20	1.21	1	0	1

Date: 1/7/2020
Project Name: NORWALK EAST-WILLARD RD
Project No.: CT2132
Designed By: RL **Checked By:** MSC

HUDSON Design Group LLC

ICE WEIGHT CALCULATIONS

Thickness of ice: 1.27 in.
Density of ice: 56 pcf

7770 Antenna

Weight of ice based on total radial SF area:

Height (in):	55.0	
Width (in):	11.0	
Depth (in):	5.0	
Total weight of ice on object:		95 lbs
Weight of object:	35.0 lbs	
Combined weight of ice and object:		130 lbs

OPA-65R-LCUU-H4 Antenna

Weight of ice based on total radial SF area:

Height (in):	48.0	
Width (in):	14.4	
Depth (in):	7.3	
Total weight of ice on object:		108 lbs
Weight of object:	57.0 lbs	
Combined weight of ice and object:		165 lbs

800-10964 Antenna

Weight of ice based on total radial SF area:

Height (in):	59.0	
Width (in):	20.0	
Depth (in):	6.9	
Total weight of ice on object:		171 lbs
Weight of object:	95.0 lbs	
Combined weight of ice and object:		266 lbs

RRUS-32 RRH

Weight of ice based on total radial SF area:

Height (in):	27.2	
Width (in):	12.1	
Depth (in):	7.0	
Total weight of ice on object:		54 lbs
Weight of object:	60.0 lbs	
Combined weight of ice and object:		114 lbs

B14 4478 RRH

Weight of ice based on total radial SF area:

Height (in):	18.1	
Width (in):	13.4	
Depth (in):	8.3	
Total weight of ice on object:		40 lbs
Weight of object:	60.0 lbs	
Combined weight of ice and object:		100 lbs

B2/B66A 8843 RRH

Weight of ice based on total radial SF area:

Height (in):	14.9	
Width (in):	13.2	
Depth (in):	10.9	
Total weight of ice on object:		35 lbs
Weight of object:	72.0 lbs	
Combined weight of ice and object:		107 lbs

B5/B12 4449 RRH

Weight of ice based on total radial SF area:

Height (in):	14.9	
Width (in):	13.2	
Depth (in):	10.4	
Total weight of ice on object:		35 lbs
Weight of object:	73.0 lbs	
Combined weight of ice and object:		108 lbs

LGP21401 TMA

Weight of ice based on total radial SF area:

Height (in):	14.4	
Width (in):	2.7	
Depth (in):	9.0	
Total weight of ice on object:		20 lbs
Weight of object:	19.0 lbs	
Combined weight of ice and object:		39 lbs

TPX-070821 Triplexer

Weight of ice based on total radial SF area:

Height (in):	5.9	
Width (in):	9.7	
Depth (in):	2.1	
Total weight of ice on object:		9 lbs
Weight of object:	8.0 lbs	
Combined weight of ice and object:		17 lbs

Squid Surge Arrestor

Weight of ice based on total radial SF area:

Depth (in):	24.0	
Diameter(in):	9.7	
Total weight of ice on object:		34 lbs
Weight of object:	33 lbs	
Combined weight of ice and object:		67 lbs

2" pipe

Per foot weight of ice:

diameter (in):	2.38	
Per foot weight of ice on object:		6 plf

L 2-1/2x2-1/2 Angles

Weight of ice based on total radial SF area:

Height (in):	2.5	
Width (in):	2.5	
Per foot weight of ice on object:		7 plf

3" pipe

Per foot weight of ice:

diameter (in):	3.5	
Per foot weight of ice on object:		7 plf

3/4" Round Bar

Per foot weight of ice:

diameter (in):	0.75	
Per foot weight of ice on object:		3 plf

HUDSON
Design Group LLC

Mount Calculations
(NSB)

Bentley

Current Date: 1/7/2020 9:12 AM
Units system: English
File name: W:\STRUCTURAL DEPARTMENT\ANALYSIS SOFTWARE\RAM Elements\RAM Projects\AT&T\CT\CT2132\LTE (6C 7C)\Rev. 1\CT2132 (LTE 6C

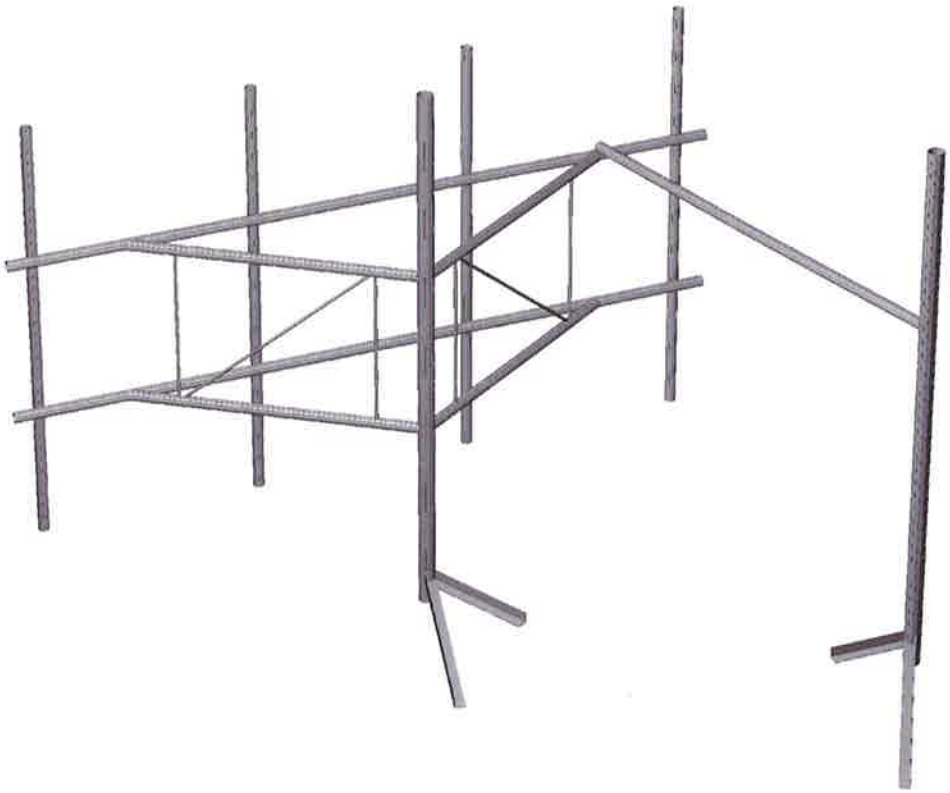

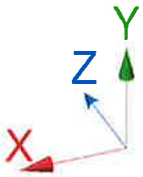

Bentley

Current Date: 1/7/2020 9:13 AM
Units system: English
File name: W:\STRUCTURAL DEPARTMENT\ANALYSIS SOFTWARE\RAM Elements\RAM Projects\AT&T\CT\CT2132\LTE (6C 7C)\Rev. 1\CT2132 (LTE 6C

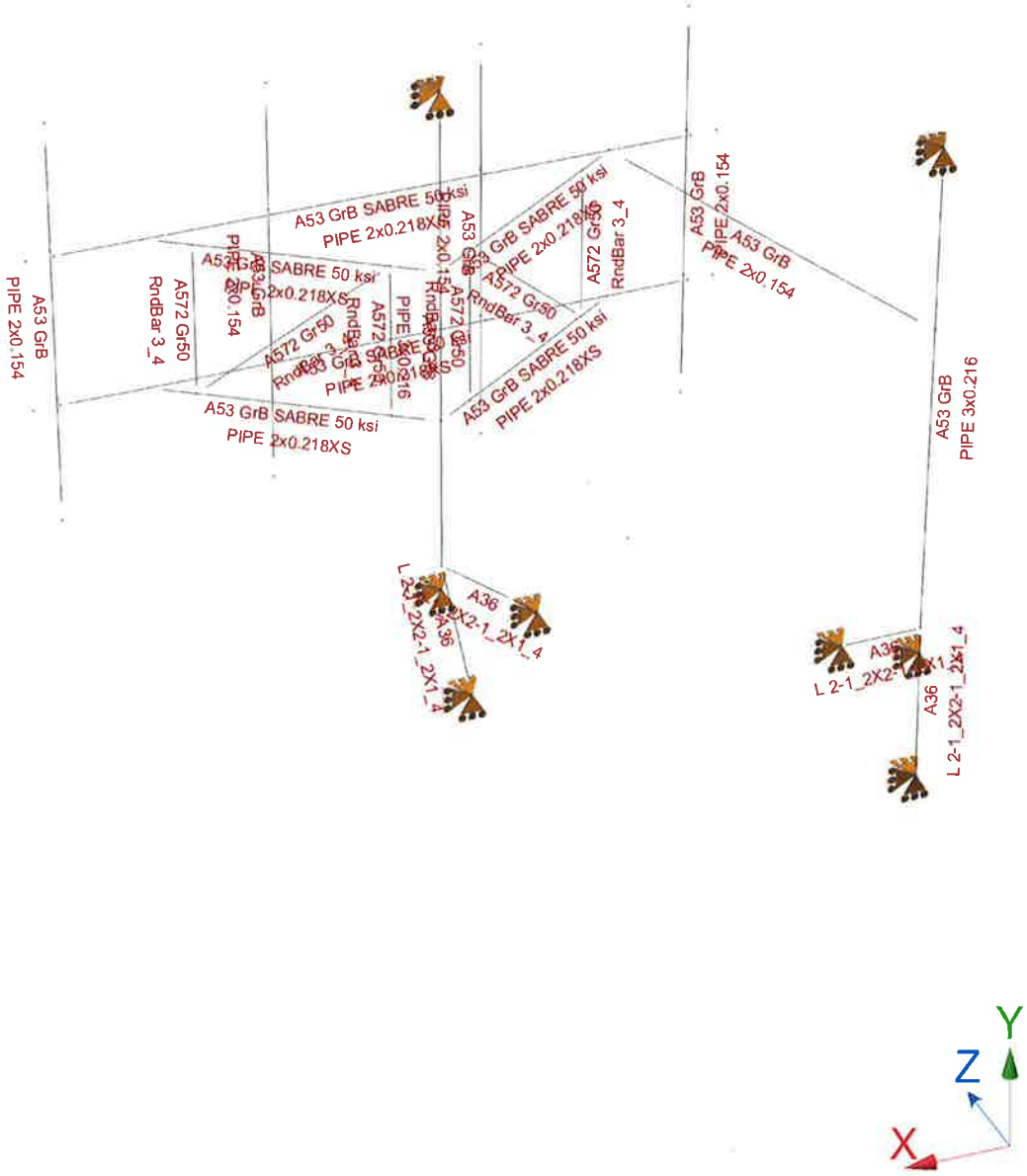

Bentley

Current Date: 1/7/2020 9:13 AM
Units system: English
File name: W:\STRUCTURAL DEPARTMENT\ANALYSIS SOFTWARE\RAM Elements\RAM Projects\AT&T\CT\CT2132\LTE (6C 7C)\Rev. 1\CT2132 (LTE 6C

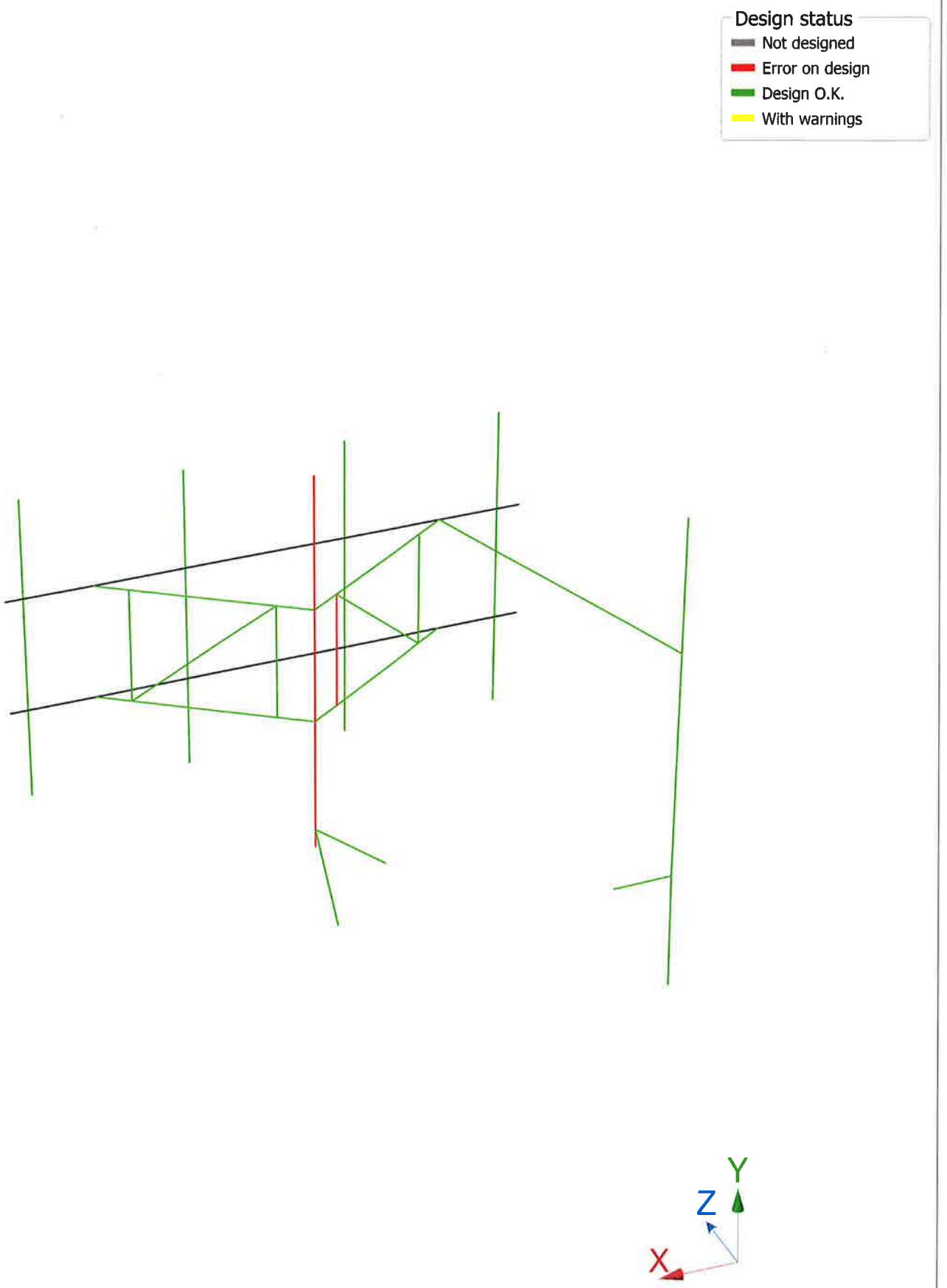

Bentley

Current Date: 1/7/2020 9:13 AM
Units system: English
File name: W:\STRUCTURAL DEPARTMENT\ANALYSIS SOFTWARE\RAM Elements\RAM Projects\AT&T\CT\CT2132\LTE (6C 7C)\Rev. 1\CT2132 (LTE 6C

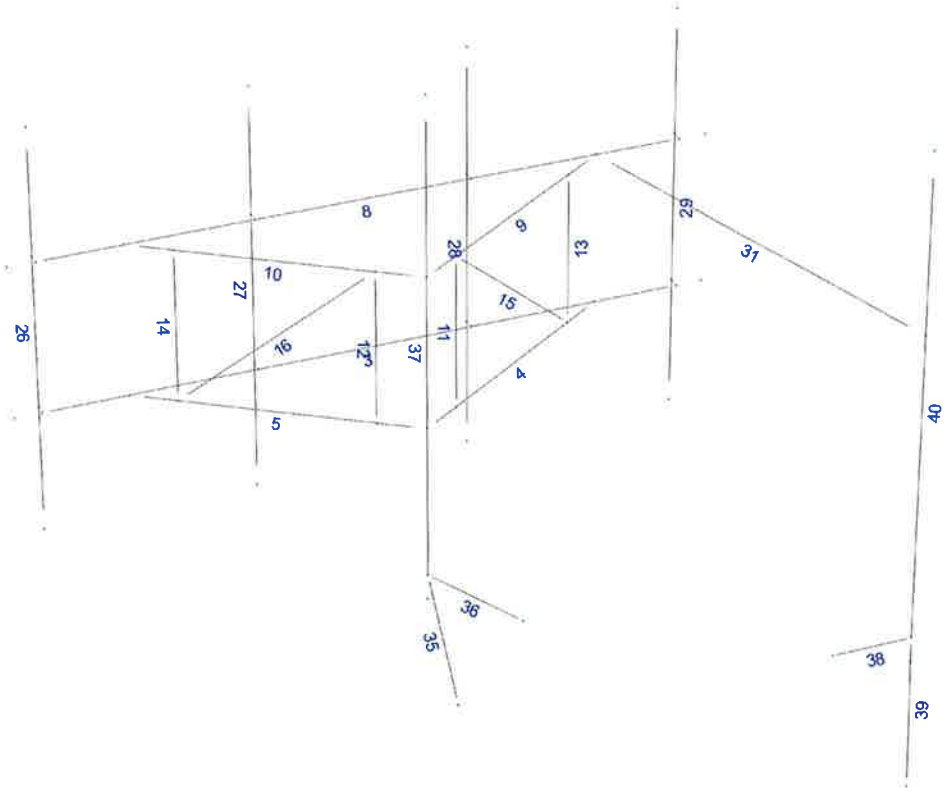

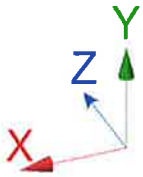

Current Date: 1/7/2020 9:13 AM
Units system: English
File name: W:\STRUCTURAL DEPARTMENT\ANALYSIS SOFTWARE\RAM Elements\RAM Projects\AT&T\CT\CT2132\LTE (6C 7C)\Rev. 1\CT2132 (L
6C 7C).retx

Load data

GLOSSARY

Comb : Indicates if load condition is a load combination

Load Conditions

Condition	Description	Comb.	Category
D	Dead Load	No	DL
Wo	Wind Load (NO ICE)	No	WIND
W30	WL 30deg	No	WIND
W60	WL 60deg	No	WIND
W90	WL 90deg	No	WIND
W120	WL 120deg	No	WIND
W150	WL 150deg	No	WIND
Di	Ice Load	No	LL
WI0	WL ICE 0deg	No	WIND
WI30	WL ICE 30deg	No	WIND
WI60	WL ICE 60deg	No	WIND
WI90	WL ICE 90deg	No	WIND
WI120	WL ICE 120deg	No	WIND
WI150	WL ICE 150deg	No	WIND
WL0	WL 30 mph 0deg	No	WIND
WL30	WL 30 mph 30deg	No	WIND
WL60	WL 30 mph 60deg	No	WIND
WL90	WL 30 mph 90deg	No	WIND
WL120	WL 30 mph 120deg	No	WIND
WL150	WL 30 mph 150deg	No	WIND
LL1	250 lb Live Load Center of Mount	No	LL
LL2	250 lb Live Load Right End of Mount	No	LL
LL3	250 lb Live Load Left End of Mount	No	LL
LLa1	250 lb Live Load Antenna 1	No	LL
LLa2	250 lb Live Load Antenna 2	No	LL
LLa3	250 lb Live Load Antenna 3	No	LL
LLa4	250 lb Live Load Antenna 4	No	LL

Distributed force on members

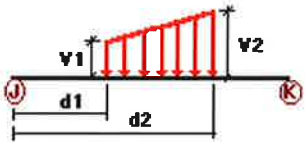

Condition	Member	Dir1	Val1 [Kip/ft]	Val2 [Kip/ft]	Dist1 [ft]	%	Dist2 [ft]	%
Wo	3	z	-0.01	-0.01	0.00	No	100.00	Yes
	4	z	-0.01	-0.01	0.00	No	100.00	Yes
	5	z	-0.01	-0.01	0.00	No	100.00	Yes
	8	z	-0.01	-0.01	0.00	No	100.00	Yes
	9	z	-0.01	-0.01	0.00	No	100.00	Yes
	10	z	-0.01	-0.01	0.00	No	100.00	Yes
	11	z	-0.003	-0.003	0.00	No	100.00	Yes
	12	z	-0.003	-0.003	0.00	No	100.00	Yes
	13	z	-0.003	-0.003	0.00	No	100.00	Yes
	14	z	-0.003	-0.003	0.00	No	100.00	Yes
	15	z	-0.003	-0.003	0.00	No	100.00	Yes
	16	z	-0.003	-0.003	0.00	No	100.00	Yes
	31	z	-0.01	-0.01	0.00	No	100.00	Yes
	35	z	-0.018	-0.018	0.00	No	100.00	Yes
	36	z	-0.018	-0.018	0.00	No	100.00	Yes
	37	z	-0.015	-0.015	0.00	No	100.00	Yes
	38	z	-0.018	-0.018	0.00	No	100.00	Yes
	39	z	-0.018	-0.018	0.00	No	100.00	Yes
	40	z	-0.015	-0.015	0.00	No	100.00	Yes
W30	3	z	-0.01	-0.01	0.00	No	100.00	Yes
	4	z	-0.01	-0.01	0.00	No	100.00	Yes
	5	z	-0.01	-0.01	0.00	No	100.00	Yes
	8	z	-0.01	-0.01	0.00	No	100.00	Yes
	9	z	-0.01	-0.01	0.00	No	100.00	Yes
	10	z	-0.01	-0.01	0.00	No	100.00	Yes
	11	z	-0.003	-0.003	0.00	No	100.00	Yes
	12	z	-0.003	-0.003	0.00	No	100.00	Yes
	13	z	-0.003	-0.003	0.00	No	100.00	Yes
	14	z	-0.003	-0.003	0.00	No	100.00	Yes
	15	z	-0.003	-0.003	0.00	No	100.00	Yes
	16	z	-0.003	-0.003	0.00	No	100.00	Yes
	26	z	-0.01	-0.01	0.00	No	100.00	Yes
	27	z	-0.01	-0.01	0.00	No	100.00	Yes
	28	z	-0.01	-0.01	0.00	No	100.00	Yes
	29	z	-0.01	-0.01	0.00	No	100.00	Yes
	31	z	-0.01	-0.01	0.00	No	100.00	Yes
	35	z	-0.018	-0.018	0.00	No	100.00	Yes
	36	z	-0.018	-0.018	0.00	No	100.00	Yes
	37	z	-0.015	-0.015	0.00	No	100.00	Yes
	38	z	-0.018	-0.018	0.00	No	100.00	Yes
	39	z	-0.018	-0.018	0.00	No	100.00	Yes
	40	z	-0.015	-0.015	0.00	No	100.00	Yes
W60	3	x	-0.01	-0.01	0.00	No	100.00	Yes
	4	x	-0.01	-0.01	0.00	No	100.00	Yes
	5	x	-0.01	-0.01	0.00	No	100.00	Yes
	8	x	-0.01	-0.01	0.00	No	100.00	Yes
	9	x	-0.01	-0.01	0.00	No	100.00	Yes
	10	x	-0.01	-0.01	0.00	No	100.00	Yes
	11	x	-0.003	-0.003	0.00	No	100.00	Yes
	12	x	-0.003	-0.003	0.00	No	100.00	Yes
	13	x	-0.003	-0.003	0.00	No	100.00	Yes
	14	x	-0.003	-0.003	0.00	No	100.00	Yes
	15	x	-0.003	-0.003	0.00	No	100.00	Yes
	16	x	-0.003	-0.003	0.00	No	100.00	Yes
	26	x	-0.01	-0.01	0.00	No	100.00	Yes
	27	x	-0.01	-0.01	0.00	No	100.00	Yes
	28	x	-0.01	-0.01	0.00	No	100.00	Yes
	29	x	-0.01	-0.01	0.00	No	100.00	Yes
	31	x	-0.01	-0.01	0.00	No	100.00	Yes
	35	x	-0.018	-0.018	0.00	No	100.00	Yes

	36	x	-0.018	-0.018	0.00	No	100.00	Yes
	37	x	-0.015	-0.015	0.00	No	100.00	Yes
	38	x	-0.018	-0.018	0.00	No	100.00	Yes
	39	x	-0.018	-0.018	0.00	No	100.00	Yes
	40	x	-0.015	-0.015	0.00	No	100.00	Yes
W90	4	x	-0.01	-0.01	0.00	No	100.00	Yes
	5	x	-0.01	-0.01	0.00	No	100.00	Yes
	9	x	-0.01	-0.01	0.00	No	100.00	Yes
	10	x	-0.01	-0.01	0.00	No	100.00	Yes
	11	x	-0.003	-0.003	0.00	No	100.00	Yes
	12	x	-0.003	-0.003	0.00	No	100.00	Yes
	13	x	-0.003	-0.003	0.00	No	100.00	Yes
	14	x	-0.003	-0.003	0.00	No	100.00	Yes
	15	x	-0.003	-0.003	0.00	No	100.00	Yes
	16	x	-0.003	-0.003	0.00	No	100.00	Yes
	26	x	-0.01	-0.01	0.00	No	100.00	Yes
	27	x	-0.01	-0.01	0.00	No	100.00	Yes
	28	x	-0.01	-0.01	0.00	No	100.00	Yes
	29	x	-0.01	-0.01	0.00	No	100.00	Yes
	31	x	-0.01	-0.01	0.00	No	100.00	Yes
	35	x	-0.018	-0.018	0.00	No	100.00	Yes
	36	x	-0.018	-0.018	0.00	No	100.00	Yes
	37	x	-0.015	-0.015	0.00	No	100.00	Yes
	38	x	-0.018	-0.018	0.00	No	100.00	Yes
	39	x	-0.018	-0.018	0.00	No	100.00	Yes
	40	x	-0.015	-0.015	0.00	No	100.00	Yes
W120	3	x	-0.01	-0.01	0.00	No	100.00	Yes
	4	x	-0.01	-0.01	0.00	No	100.00	Yes
	5	x	-0.01	-0.01	0.00	No	100.00	Yes
	8	x	-0.01	-0.01	0.00	No	100.00	Yes
	9	x	-0.01	-0.01	0.00	No	100.00	Yes
	10	x	-0.01	-0.01	0.00	No	100.00	Yes
	11	x	-0.003	-0.003	0.00	No	100.00	Yes
	12	x	-0.003	-0.003	0.00	No	100.00	Yes
	13	x	-0.003	-0.003	0.00	No	100.00	Yes
	14	x	-0.003	-0.003	0.00	No	100.00	Yes
	15	x	-0.003	-0.003	0.00	No	100.00	Yes
	16	x	-0.003	-0.003	0.00	No	100.00	Yes
	26	x	-0.01	-0.01	0.00	No	100.00	Yes
	27	x	-0.01	-0.01	0.00	No	100.00	Yes
	28	x	-0.01	-0.01	0.00	No	100.00	Yes
	29	x	-0.01	-0.01	0.00	No	100.00	Yes
	31	x	-0.01	-0.01	0.00	No	100.00	Yes
	35	x	-0.018	-0.018	0.00	No	100.00	Yes
	36	x	-0.018	-0.018	0.00	No	100.00	Yes
	37	x	-0.015	-0.015	0.00	No	100.00	Yes
	38	x	-0.018	-0.018	0.00	No	100.00	Yes
	39	x	-0.018	-0.018	0.00	No	100.00	Yes
	40	x	-0.015	-0.015	0.00	No	100.00	Yes
W150	3	z	0.01	0.01	0.00	No	100.00	Yes
	4	z	0.01	0.01	0.00	No	100.00	Yes
	5	z	0.01	0.01	0.00	No	100.00	Yes
	8	z	0.01	0.01	0.00	No	100.00	Yes
	9	z	0.01	0.01	0.00	No	100.00	Yes
	10	z	0.01	0.01	0.00	No	100.00	Yes
	11	z	0.003	0.003	0.00	No	100.00	Yes
	12	z	0.003	0.003	0.00	No	100.00	Yes
	13	z	0.003	0.003	0.00	No	100.00	Yes
	14	z	0.003	0.003	0.00	No	100.00	Yes
	15	z	0.003	0.003	0.00	No	100.00	Yes

	16	z	0.003	0.003	0.00	No	100.00	Yes
	26	z	0.01	0.01	0.00	No	100.00	Yes
	27	z	0.01	0.01	0.00	No	100.00	Yes
	28	z	0.01	0.01	0.00	No	100.00	Yes
	29	z	0.01	0.01	0.00	No	100.00	Yes
	31	z	0.01	0.01	0.00	No	100.00	Yes
	35	z	0.018	0.018	0.00	No	100.00	Yes
	36	z	0.018	0.018	0.00	No	100.00	Yes
	37	z	0.015	0.015	0.00	No	100.00	Yes
	38	z	0.018	0.018	0.00	No	100.00	Yes
	39	z	0.018	0.018	0.00	No	100.00	Yes
	40	z	0.015	0.015	0.00	No	100.00	Yes
Di	3	y	-0.006	-0.006	0.00	No	100.00	Yes
	4	y	-0.006	-0.006	0.00	No	100.00	Yes
	5	y	-0.006	-0.006	0.00	No	100.00	Yes
	8	y	-0.006	-0.006	0.00	No	100.00	Yes
	9	y	-0.006	-0.006	0.00	No	100.00	Yes
	10	y	-0.006	-0.006	0.00	No	100.00	Yes
	11	y	-0.003	-0.003	0.00	No	100.00	Yes
	12	y	-0.003	-0.003	0.00	No	100.00	Yes
	13	y	-0.003	-0.003	0.00	No	100.00	Yes
	14	y	-0.003	-0.003	0.00	No	100.00	Yes
	15	y	-0.003	-0.003	0.00	No	100.00	Yes
	16	y	-0.003	-0.003	0.00	No	100.00	Yes
	26	y	-0.006	-0.006	0.00	No	100.00	Yes
	27	y	-0.006	-0.006	0.00	No	100.00	Yes
	28	y	-0.006	-0.006	0.00	No	100.00	Yes
	29	y	-0.006	-0.006	0.00	No	100.00	Yes
	31	y	-0.006	-0.006	0.00	No	100.00	Yes
	35	y	-0.007	-0.007	0.00	No	100.00	Yes
	36	y	-0.007	-0.007	0.00	No	100.00	Yes
	37	y	-0.007	-0.007	0.00	No	100.00	Yes
	38	y	-0.007	-0.007	0.00	No	100.00	Yes
	39	y	-0.007	-0.007	0.00	No	100.00	Yes
	40	y	-0.007	-0.007	0.00	No	100.00	Yes

Concentrated forces on members

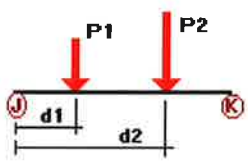

Condition	Member	Dir1	Value1 [Kip]	Dist1 [ft]	%
D	26	y	-0.018	1.00	No
		y	-0.018	4.50	No
		y	-0.038	4.00	No
	27	y	-0.029	0.50	No
		y	-0.029	5.00	No
		y	-0.06	4.00	No
	28	y	-0.048	0.50	No
		y	-0.048	5.00	No
		y	-0.132	4.00	No
	29	y	-0.048	0.50	No

		y	-0.048	5.00	No
		y	-0.073	4.00	No
Wo	26	z	-0.122	1.00	No
		z	-0.122	4.50	No
	27	z	-0.131	0.50	No
		z	-0.131	5.00	No
	28	z	-0.221	0.50	No
		z	-0.221	5.00	No
		z	-0.06	4.00	No
	29	z	-0.221	0.50	No
		z	-0.221	5.00	No
W30	26	3	-0.108	1.00	No
		3	-0.108	4.50	No
		3	-0.024	4.00	No
	27	3	-0.117	0.50	No
		3	-0.117	5.00	No
		3	-0.067	4.00	No
	28	3	-0.188	0.50	No
		3	-0.188	5.00	No
		3	-0.044	4.00	No
	29	3	-0.188	0.50	No
		3	-0.188	5.00	No
		3	-0.041	4.00	No
W60	26	3	-0.079	1.00	No
		3	-0.079	4.50	No
		3	-0.04	4.00	No
	27	3	-0.089	0.50	No
		3	-0.089	5.00	No
		3	-0.078	4.00	No
	28	3	-0.123	0.50	No
		3	-0.123	5.00	No
		3	-0.077	4.00	No
	29	3	-0.123	0.50	No
		3	-0.123	5.00	No
		3	-0.056	4.00	No
W90	26	x	-0.065	1.00	No
		x	-0.065	4.50	No
		x	-0.048	4.00	No
	27	x	-0.075	0.50	No
		x	-0.075	5.00	No
		x	-0.074	4.00	No
	28	x	-0.091	0.50	No
		x	-0.091	5.00	No
		x	-0.089	4.00	No
	29	x	-0.091	0.50	No
		x	-0.091	5.00	No
		x	-0.057	4.00	No
W120	26	2	-0.079	1.00	No
		2	-0.079	4.50	No
		2	-0.04	4.00	No
	27	2	-0.089	0.50	No
		2	-0.089	5.00	No
		2	-0.078	4.00	No
	28	2	-0.123	0.50	No
		2	-0.123	5.00	No
		2	-0.077	4.00	No
	29	2	-0.123	0.50	No
		2	-0.123	5.00	No
		2	-0.056	4.00	No
W150	26	2	-0.108	1.00	No

		2	-0.108	4.50	No
		2	-0.024	4.00	No
	27	2	-0.117	0.50	No
		2	-0.117	5.00	No
		2	-0.067	4.00	No
	28	2	-0.188	0.50	No
		2	-0.188	5.00	No
		2	-0.044	4.00	No
	29	2	-0.188	0.50	No
		2	-0.188	5.00	No
		2	-0.041	4.00	No
Di	26	y	-0.047	1.00	No
		y	-0.047	4.50	No
		y	-0.04	4.00	No
	27	y	-0.054	0.50	No
		y	-0.054	5.00	No
		y	-0.054	4.00	No
	28	y	-0.086	0.50	No
		y	-0.086	5.00	No
		y	-0.075	4.00	No
	29	y	-0.086	0.50	No
		y	-0.086	5.00	No
		y	-0.035	4.00	No
WI0	26	z	-0.028	1.00	No
		z	-0.028	4.50	No
	27	z	-0.029	0.50	No
		z	-0.029	5.00	No
	28	z	-0.045	0.50	No
		z	-0.045	5.00	No
		z	-0.018	4.00	No
	29	z	-0.045	0.50	No
		z	-0.045	5.00	No
WI30	26	3	-0.024	1.00	No
		3	-0.024	4.50	No
		3	-0.007	4.00	No
	27	3	-0.026	0.50	No
		3	-0.026	5.00	No
		3	-0.016	4.00	No
	28	3	-0.039	0.50	No
		3	-0.039	5.00	No
		3	-0.011	4.00	No
	29	3	-0.039	0.50	No
		3	-0.039	5.00	No
		3	-0.01	4.00	No
WI60	26	3	-0.019	1.00	No
		3	-0.019	4.50	No
		3	-0.011	4.00	No
	27	3	-0.02	0.50	No
		3	-0.02	5.00	No
		3	-0.019	4.00	No
	28	3	-0.028	0.50	No
		3	-0.028	5.00	No
		3	-0.018	4.00	No
	29	3	-0.028	0.50	No
		3	-0.028	5.00	No
		3	-0.014	4.00	No
WI90	26	x	-0.017	1.00	No
		x	-0.017	4.50	No
		x	-0.012	4.00	No
	27	x	-0.018	0.50	No

		x	-0.018	5.00	No
		x	-0.018	4.00	No
	28	x	-0.022	0.50	No
		x	-0.022	5.00	No
		x	-0.021	4.00	No
	29	x	-0.022	0.50	No
		x	-0.022	5.00	No
		x	-0.014	4.00	No
WI120	26	2	-0.019	1.00	No
		2	-0.019	4.50	No
		2	-0.011	4.00	No
	27	2	-0.02	0.50	No
		2	-0.02	5.00	No
		2	-0.019	4.00	No
	28	2	-0.028	0.50	No
		2	-0.028	5.00	No
		2	-0.018	4.00	No
	29	2	-0.028	0.50	No
		2	-0.028	5.00	No
		2	-0.014	4.00	No
WI150	26	2	-0.024	1.00	No
		2	-0.024	4.50	No
		2	-0.007	4.00	No
	27	2	-0.026	0.50	No
		2	-0.026	5.00	No
		2	-0.016	4.00	No
	28	2	-0.039	0.50	No
		2	-0.039	5.00	No
		2	-0.011	4.00	No
	29	2	-0.039	0.50	No
		2	-0.039	5.00	No
		2	-0.01	4.00	No
WL0	26	z	-0.008	1.00	No
		z	-0.008	4.50	No
	27	z	-0.009	0.50	No
		z	-0.009	5.00	No
	28	z	-0.014	0.50	No
		z	-0.014	5.00	No
		z	-0.004	4.00	No
	29	z	-0.014	0.50	No
		z	-0.014	5.00	No
WL30	26	3	-0.007	1.00	No
		3	-0.007	4.50	No
		3	-0.001	4.00	No
	27	3	-0.008	0.50	No
		3	-0.008	5.00	No
		3	-0.004	4.00	No
	28	3	-0.012	0.50	No
		3	-0.012	5.00	No
		3	-0.003	4.00	No
	29	3	-0.012	0.50	No
		3	-0.012	5.00	No
		3	-0.003	4.00	No
WL60	26	3	-0.005	1.00	No
		3	-0.005	4.50	No
		3	-0.002	4.00	No
	27	3	-0.006	0.50	No
		3	-0.006	5.00	No
		3	-0.005	4.00	No
	28	3	-0.008	0.50	No

		3	-0.008	5.00	No
		3	-0.005	4.00	No
	29	3	-0.008	0.50	No
		3	-0.008	5.00	No
		3	-0.004	4.00	No
WL90	26	x	-0.005	1.00	No
		x	-0.005	4.50	No
		x	-0.003	4.00	No
	27	x	-0.005	0.50	No
		x	-0.005	5.00	No
		x	-0.005	4.00	No
	28	x	-0.006	0.50	No
		x	-0.006	5.00	No
		x	-0.006	4.00	No
	29	x	-0.006	0.50	No
		x	-0.006	5.00	No
		x	-0.004	4.00	No
WL120	26	2	-0.005	1.00	No
		2	-0.005	4.50	No
		2	-0.002	4.00	No
	27	2	-0.006	0.50	No
		2	-0.006	5.00	No
		2	-0.005	4.00	No
	28	2	-0.008	0.50	No
		2	-0.008	5.00	No
		2	-0.005	4.00	No
	29	2	-0.008	0.50	No
		2	-0.008	5.00	No
		2	-0.004	4.00	No
WL150	26	2	-0.007	1.00	No
		2	-0.007	4.50	No
		2	-0.001	4.00	No
	27	2	-0.008	0.50	No
		2	-0.008	5.00	No
		2	-0.004	4.00	No
	28	2	-0.012	0.50	No
		2	-0.012	5.00	No
		2	-0.003	4.00	No
	29	2	-0.012	0.50	No
		2	-0.012	5.00	No
		2	-0.003	4.00	No
LL1	3	y	-0.25	50.00	Yes
LL2	3	y	-0.25	100.00	Yes
LL3	3	y	-0.25	0.00	No
LLa1	26	y	-0.25	50.00	Yes
LLa2	27	y	-0.25	50.00	Yes
LLa3	28	y	-0.25	50.00	Yes
LLa4	29	y	-0.25	50.00	Yes

Self weight multipliers for load conditions

Condition	Description	Comb.	Self weight multiplier MultX	MultY	MultZ
D	Dead Load	No	0.00	-1.00	0.00
Wo	Wind Load (NO ICE)	No	0.00	0.00	0.00
W30	WL 30deg	No	0.00	0.00	0.00
W60	WL 60deg	No	0.00	0.00	0.00
W90	WL 90deg	No	0.00	0.00	0.00
W120	WL 120deg	No	0.00	0.00	0.00
W150	WL 150deg	No	0.00	0.00	0.00
Di	Ice Load	No	0.00	0.00	0.00
WI0	WL ICE 0deg	No	0.00	0.00	0.00
WI30	WL ICE 30deg	No	0.00	0.00	0.00
WI60	WL ICE 60deg	No	0.00	0.00	0.00
WI90	WL ICE 90deg	No	0.00	0.00	0.00
WI120	WL ICE 120deg	No	0.00	0.00	0.00
WI150	WL ICE 150deg	No	0.00	0.00	0.00
WL0	WL 30 mph 0deg	No	0.00	0.00	0.00
WL30	WL 30 mph 30deg	No	0.00	0.00	0.00
WL60	WL 30 mph 60deg	No	0.00	0.00	0.00
WL90	WL 30 mph 90deg	No	0.00	0.00	0.00
WL120	WL 30 mph 120deg	No	0.00	0.00	0.00
WL150	WL 30 mph 150deg	No	0.00	0.00	0.00
LL1	250 lb Live Load Center of Mount	No	0.00	0.00	0.00
LL2	250 lb Live Load Right End of Mount	No	0.00	0.00	0.00
LL3	250 lb Live Load Left End of Mount	No	0.00	0.00	0.00
LLa1	250 lb Live Load Antenna 1	No	0.00	0.00	0.00
LLa2	250 lb Live Load Antenna 2	No	0.00	0.00	0.00
LLa3	250 lb Live Load Antenna 3	No	0.00	0.00	0.00
LLa4	250 lb Live Load Antenna 4	No	0.00	0.00	0.00

Earthquake (Dynamic analysis only)

Condition	a/g	Ang. [Deg]	Damp. [%]
D	0.00	0.00	0.00
Wo	0.00	0.00	0.00
W30	0.00	0.00	0.00
W60	0.00	0.00	0.00
W90	0.00	0.00	0.00
W120	0.00	0.00	0.00
W150	0.00	0.00	0.00
Di	0.00	0.00	0.00
WI0	0.00	0.00	0.00
WI30	0.00	0.00	0.00
WI60	0.00	0.00	0.00
WI90	0.00	0.00	0.00
WI120	0.00	0.00	0.00
WI150	0.00	0.00	0.00
WL0	0.00	0.00	0.00
WL30	0.00	0.00	0.00
WL60	0.00	0.00	0.00
WL90	0.00	0.00	0.00
WL120	0.00	0.00	0.00
WL150	0.00	0.00	0.00
LL1	0.00	0.00	0.00
LL2	0.00	0.00	0.00
LL3	0.00	0.00	0.00

LLa1	0.00	0.00	0.00
LLa2	0.00	0.00	0.00
LLa3	0.00	0.00	0.00
LLa4	0.00	0.00	0.00

Current Date: 1/7/2020 9:14 AM
Units system: English
File name: W:\STRUCTURAL DEPARTMENT\ANALYSIS SOFTWARE\RAM Elements\RAM Projects\AT&T\CT\CT2132\LTE (6C 7C)\Rev. 1\CT2132 (L 6C 7C).retx

Steel Code Check

Report: Summary - Group by member

Load conditions to be included in design :

LC1=1.2D+Wo
LC2=1.2D+W30
LC3=1.2D+W60
LC4=1.2D+W90
LC5=1.2D+W120
LC6=1.2D+W150
LC7=1.2D-Wo
LC8=1.2D-W30
LC9=1.2D-W60
LC10=1.2D-W90
LC11=1.2D-W120
LC12=1.2D-W150
LC13=0.9D+Wo
LC14=0.9D+W30
LC15=0.9D+W60
LC16=0.9D+W90
LC17=0.9D+W120
LC18=0.9D+W150
LC19=0.9D-Wo
LC20=0.9D-W30
LC21=0.9D-W60
LC22=0.9D-W90
LC23=0.9D-W120
LC24=0.9D-W150
LC25=1.2D+Di+WI0
LC26=1.2D+Di+WI30
LC27=1.2D+Di+WI60
LC28=1.2D+Di+WI90
LC29=1.2D+Di+WI120
LC30=1.2D+Di+WI150
LC31=1.2D+Di-WI0
LC32=1.2D+Di-WI30
LC33=1.2D+Di-WI60
LC34=1.2D+Di-WI90
LC35=1.2D+Di-WI120
LC36=1.2D+Di-WI150
LC38=1.2D+1.5LL1
LC39=1.2D+1.5LL2
LC40=1.2D+1.5LL3
LC41=1.2D+WL0+1.5LLa1
LC42=1.2D+WL30+1.5LLa1
LC43=1.2D+WL60+1.5LLa1
LC44=1.2D+WL90+1.5LLa1
LC45=1.2D+WL120+1.5LLa1
LC46=1.2D+WL150+1.5LLa1
LC47=1.2D-WL0+1.5LLa1
LC48=1.2D-WL30+1.5LLa1
LC49=1.2D-WL60+1.5LLa1
LC50=1.2D-WL90+1.5LLa1
LC51=1.2D-WL120+1.5LLa1
LC52=1.2D-WL150+1.5LLa1
LC53=1.2D+WL0+1.5LLa2

LC54=1.2D+WL30+1.5LLa2
LC55=1.2D+WL60+1.5LLa2
LC56=1.2D+WL90+1.5LLa2
LC57=1.2D+WL120+1.5LLa2
LC58=1.2D+WL150+1.5LLa2
LC59=1.2D-WL0+1.5LLa2
LC60=1.2D-WL30+1.5LLa2
LC61=1.2D-WL60+1.5LLa2
LC62=1.2D-WL90+1.5LLa2
LC63=1.2D-WL120+1.5LLa2
LC64=1.2D-WL150+1.5LLa2
LC65=1.2D+WL0+1.5LLa3
LC66=1.2D+WL30+1.5LLa3
LC67=1.2D+WL60+1.5LLa3
LC68=1.2D+WL90+1.5LLa3
LC69=1.2D+WL120+1.5LLa3
LC70=1.2D+WL150+1.5LLa3
LC71=1.2D-WL0+1.5LLa3
LC72=1.2D-WL30+1.5LLa3
LC73=1.2D-WL60+1.5LLa3
LC74=1.2D-WL90+1.5LLa3
LC75=1.2D-WL120+1.5LLa3
LC76=1.2D-WL150+1.5LLa3
LC77=1.2D+WL0+1.5LLa4
LC78=1.2D+WL30+1.5LLa4
LC79=1.2D+WL60+1.5LLa4
LC80=1.2D+WL90+1.5LLa4
LC81=1.2D+WL120+1.5LLa4
LC82=1.2D+WL150+1.5LLa4
LC83=1.2D-WL0+1.5LLa4
LC84=1.2D-WL30+1.5LLa4
LC85=1.2D-WL60+1.5LLa4
LC86=1.2D-WL90+1.5LLa4
LC87=1.2D-WL120+1.5LLa4
LC88=1.2D-WL150+1.5LLa4

Description	Section	Member	Ctrl Eq.	Ratio	Status	Reference
	L 2-1_2X2-1_2X1_4	**35**	LC11 at 50.00%	**0.57**	**OK**	Eq. H2-1
		36	LC3 at 50.00%	0.25	OK	Eq. H2-1
		38	LC9 at 50.00%	0.13	OK	Eq. H2-1
		39	LC3 at 50.00%	0.25	OK	Eq. H2-1
	PIPE 2x0.154	**26**	LC39 at 66.67%	0.29	OK	Eq. H1-1b
		27	LC4 at 31.25%	0.36	OK	Eq. H1-1b
		28	LC7 at 29.17%	**0.46**	**OK**	Eq. H1-1b
		29	LC1 at 29.17%	0.46	OK	Eq. H1-1b
		31	LC5 at 0.00%	0.27	OK	Eq. H1-1b
	PIPE 2x0.218XS	**3**	LC35 at 16.96%	0.23	With warnings	Eq. H1-1b
		4	LC12 at 100.00%	0.65	OK	Eq. H1-1b
		5	LC2 at 100.00%	0.38	OK	Eq. H1-1b
		8	LC6 at 16.96%	0.54	With warnings	Eq. H1-1a
		9	LC6 at 100.00%	**0.80**	**OK**	Eq. H1-1b
		10	LC8 at 100.00%	0.46	OK	Eq. H1-1b
	PIPE 3x0.216	**37**	LC6 at 65.63%	**1.74**	**N.G.**	Eq. H1-1b
		40	LC9 at 66.67%	0.54	OK	Eq. H1-1b
	RndBar 3_4	**11**	LC12 at 0.00%	**1.06**	**N.G.**	Eq. H1-1a
		12	LC2 at 0.00%	0.61	OK	Eq. H1-1a
		13	LC31 at 100.00%	0.49	OK	Eq. H1-1a
		14	LC39 at 0.00%	0.36	OK	Eq. H1-1a
		15	LC32 at 0.00%	0.16	OK	Eq. Sec. D2
		16	LC39 at 0.00%	0.12	OK	Eq. Sec. D2

Bentley

Current Date: 1/7/2020 9:14 AM
Units system: English
File name: W:\STRUCTURAL DEPARTMENT\ANALYSIS SOFTWARE\RAM Elements\RAM Projects\AT&T\CT\CT2132\LTE (6C 7C)\Rev. 1\CT2132 (L 6C 7C).retx

Geometry data

GLOSSARY

Cb22, Cb33	: Moment gradient coefficients
Cm22, Cm33	: Coefficients applied to bending term in interaction formula
d0	: Tapered member section depth at J end of member
DJX	: Rigid end offset distance measured from J node in axis X
DJY	: Rigid end offset distance measured from J node in axis Y
DJZ	: Rigid end offset distance measured from J node in axis Z
DKX	: Rigid end offset distance measured from K node in axis X
DKY	: Rigid end offset distance measured from K node in axis Y
DKZ	: Rigid end offset distance measured from K node in axis Z
dL	: Tapered member section depth at K end of member
Ig factor	: Inertia reduction factor (Effective Inertia/Gross Inertia) for reinforced concrete members
K22	: Effective length factor about axis 2
K33	: Effective length factor about axis 3
L22	: Member length for calculation of axial capacity
L33	: Member length for calculation of axial capacity
LB pos	: Lateral unbraced length of the compression flange in the positive side of local axis 2
LB neg	: Lateral unbraced length of the compression flange in the negative side of local axis 2
RX	: Rotation about X
RY	: Rotation about Y
RZ	: Rotation about Z
TO	: 1 = Tension only member 0 = Normal member
TX	: Translation in X
TY	: Translation in Y
TZ	: Translation in Z

Nodes

Node	X [ft]	Y [ft]	Z [ft]	Rigid Floor
60	-1.00	-3.00	-5.00	0
59	1.00	-3.00	-7.00	0
62	0.00	6.50	-3.00	0
57	0.00	-3.50	-3.00	0
63	-7.00	-3.50	-8.00	0
65	-5.50	-3.00	-8.00	0
66	-5.00	-3.00	-12.00	0
67	-7.00	6.50	-8.00	0

Restraints

Node	TX	TY	TZ	RX	RY	RZ
60	1	1	1	0	0	0
59	1	1	1	0	0	0
62	1	1	1	0	0	0
57	1	1	1	0	0	0
63	1	1	1	0	0	0
65	1	1	1	0	0	0
66	1	1	1	0	0	0
67	1	1	1	0	0	0

Members

Member	NJ	NK	Description	Section	Material	d0 [in]	dL [in]	lg factor
3	3	2		PIPE 2x0.218XS	A53 GrB SABRE 50...	0.00	0.00	0.00
4	8	10		PIPE 2x0.218XS	A53 GrB SABRE 50...	0.00	0.00	0.00
5	9	10		PIPE 2x0.218XS	A53 GrB SABRE 50...	0.00	0.00	0.00
8	17	16		PIPE 2x0.218XS	A53 GrB SABRE 50...	0.00	0.00	0.00
9	22	24		PIPE 2x0.218XS	A53 GrB SABRE 50...	0.00	0.00	0.00
10	23	24		PIPE 2x0.218XS	A53 GrB SABRE 50...	0.00	0.00	0.00
11	14	28		RndBar 3_4	A572 Gr50	0.00	0.00	0.00
12	27	13		RndBar 3_4	A572 Gr50	0.00	0.00	0.00
13	25	11		RndBar 3_4	A572 Gr50	0.00	0.00	0.00
14	12	26		RndBar 3_4	A572 Gr50	0.00	0.00	0.00
15	28	11		RndBar 3_4	A572 Gr50	0.00	0.00	0.00
16	27	12		RndBar 3_4	A572 Gr50	0.00	0.00	0.00
26	34	36		PIPE 2x0.154	A53 GrB	0.00	0.00	0.00
27	42	43		PIPE 2x0.154	A53 GrB	0.00	0.00	0.00
28	48	49		PIPE 2x0.154	A53 GrB	0.00	0.00	0.00
29	33	35		PIPE 2x0.154	A53 GrB	0.00	0.00	0.00
31	22	51		PIPE 2x0.154	A53 GrB	0.00	0.00	0.00
35	59	58		L 2-1_2X2-1_2X1_4	A36	0.00	0.00	0.00
36	58	60		L 2-1_2X2-1_2X1_4	A36	0.00	0.00	0.00
37	57	62		PIPE 3x0.216	A53 GrB	0.00	0.00	0.00
38	65	64		L 2-1_2X2-1_2X1_4	A36	0.00	0.00	0.00
39	64	66		L 2-1_2X2-1_2X1_4	A36	0.00	0.00	0.00
40	63	67		PIPE 3x0.216	A53 GrB	0.00	0.00	0.00

Orientation of local axes

Member	Rotation [Deg]	Axes23	NX	NY	NZ
12	315.00	0	0.00	0.00	0.00
26	315.00	0	0.00	0.00	0.00
27	315.00	0	0.00	0.00	0.00
28	315.00	0	0.00	0.00	0.00
29	315.00	0	0.00	0.00	0.00

Rigid end offsets

Member	DJX [in]	DJY [in]	DJZ [in]	DKX [in]	DKY [in]	DKZ [in]
31	0.00	2.00	0.00	0.00	2.00	0.00

Hinges

	Node-J				Node-K						
Member	**M33**	**M22**	**V3**	**V2**	**M33**	**M22**	**V3**	**V2**	**TOR**	**AXL**	**Axial rigidity**
15	0	0	0	0	0	0	0	0	0	0	Tension only
16	0	0	0	0	0	0	0	0	0	0	Tension only
35	0	0	0	0	1	1	0	0	0	0	Full
36	1	1	0	0	0	0	0	0	0	0	Full
38	0	0	0	0	1	1	0	0	0	0	Full
39	1	1	0	0	0	0	0	0	0	0	Full

HUDSON
Design Group LLC

Mount Calculations
(Modified Conditions)

Bentley

Current Date: 1/7/2020 9:17 AM
Units system: English
File name: W:\STRUCTURAL DEPARTMENT\ANALYSIS SOFTWARE\RAM Elements\RAM Projects\AT&T\CT\CT2132\LTE (6C 7C)\Rev. 1\CT2132 (LTE 6C 7C)(MOD).r

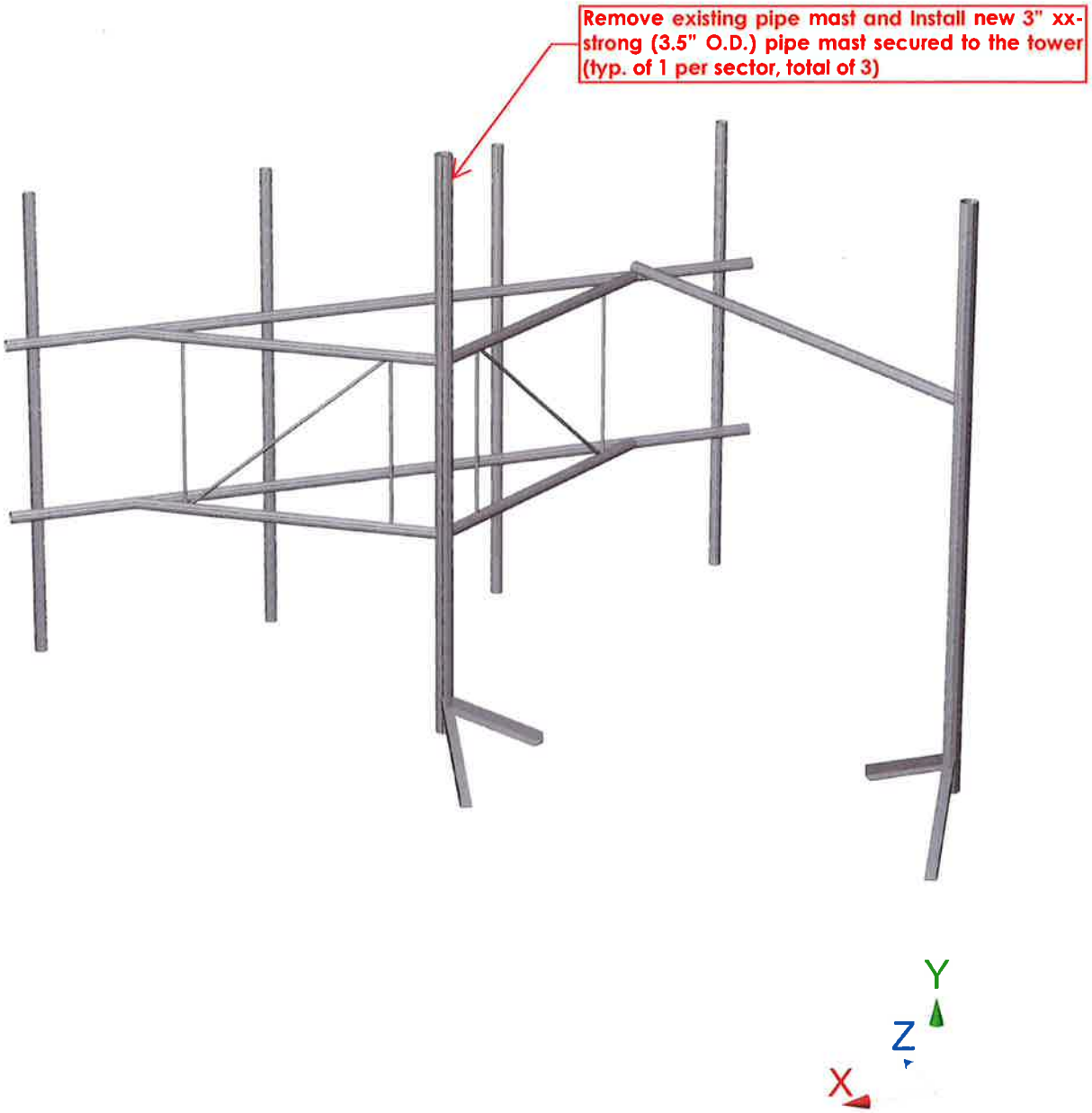

Bentley

Current Date: 1/7/2020 9:20 AM
Units system: English
File name: W:\STRUCTURAL DEPARTMENT\ANALYSIS SOFTWARE\RAM Elements\RAM Projects\AT&T\CT\CT2132\LTE (6C 7C)\Rev. 1\CT2132 (LTE 6C

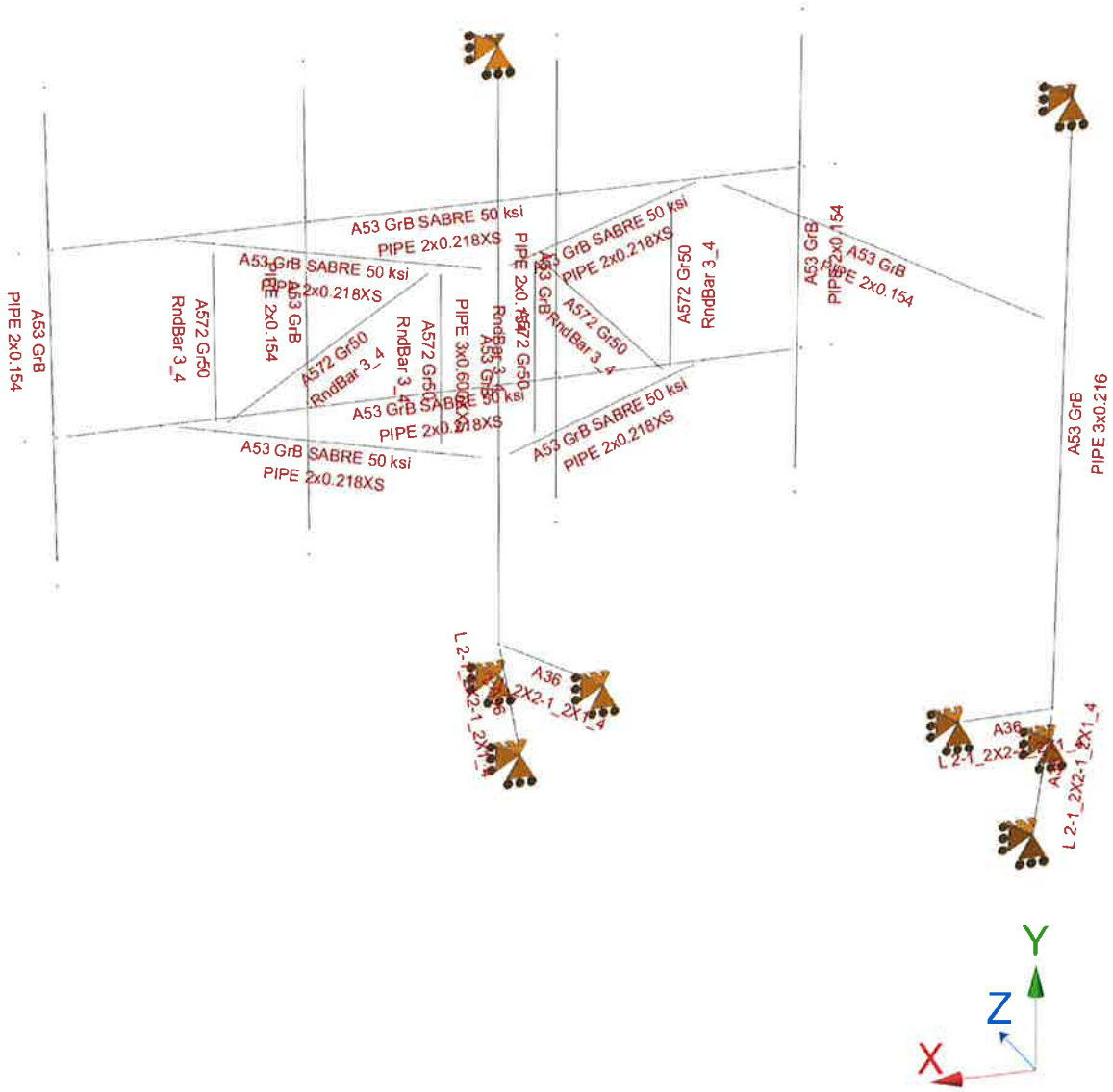

Bentley

Current Date: 1/7/2020 9:20 AM
Units system: English
File name: W:\STRUCTURAL DEPARTMENT\ANALYSIS SOFTWARE\RAM Elements\RAM Projects\AT&T\CT\CT2132\LTE (6C 7C)\Rev. 1\CT2132 (LTE 6C

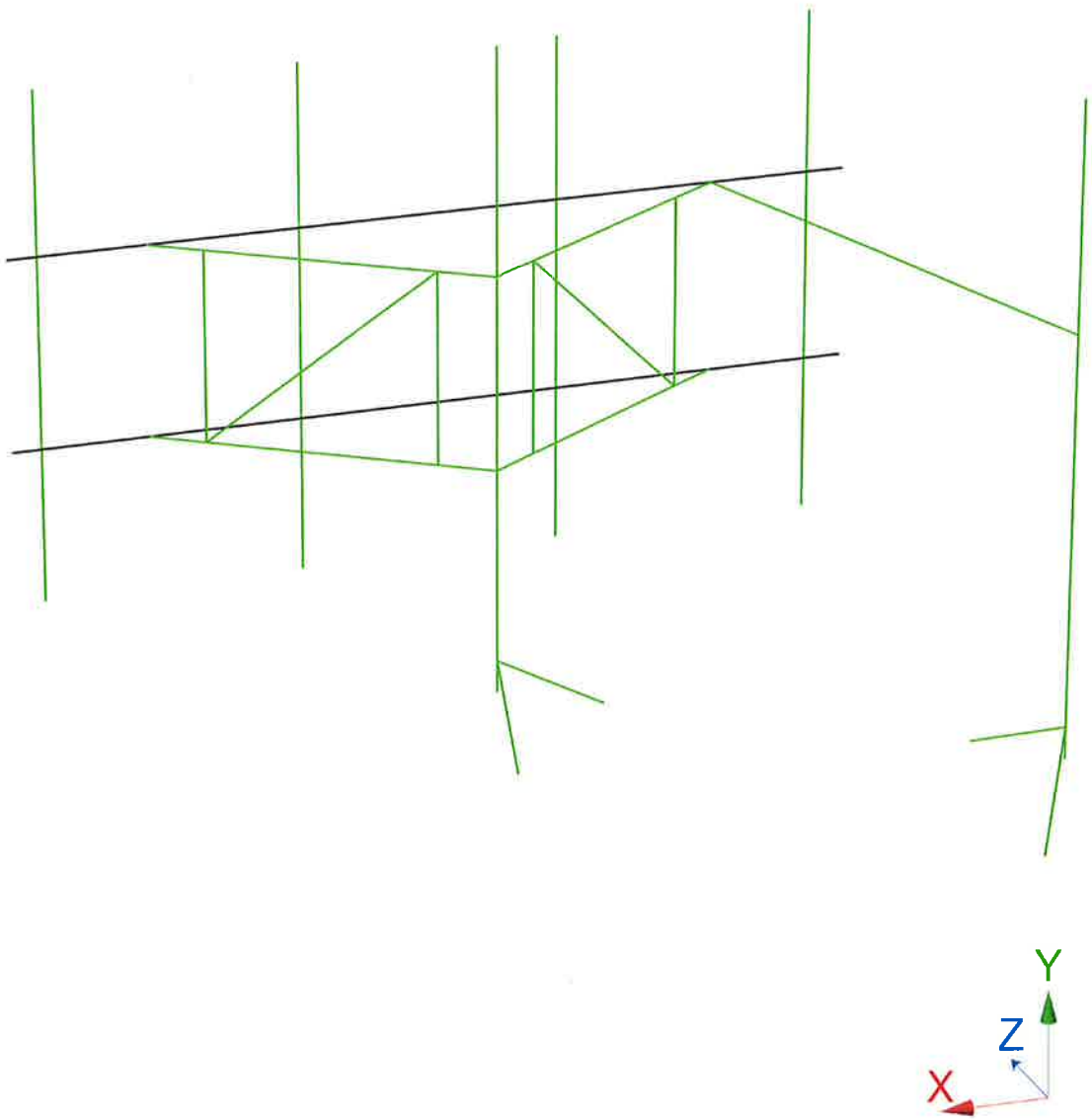

Bentley

Current Date: 1/7/2020 9:20 AM
Units system: English
File name: W:\STRUCTURAL DEPARTMENT\ANALYSIS SOFTWARE\RAM Elements\RAM Projects\AT&T\CT\CT2132\LTE (6C 7C)\Rev. 1\CT2132 (LTE 6C

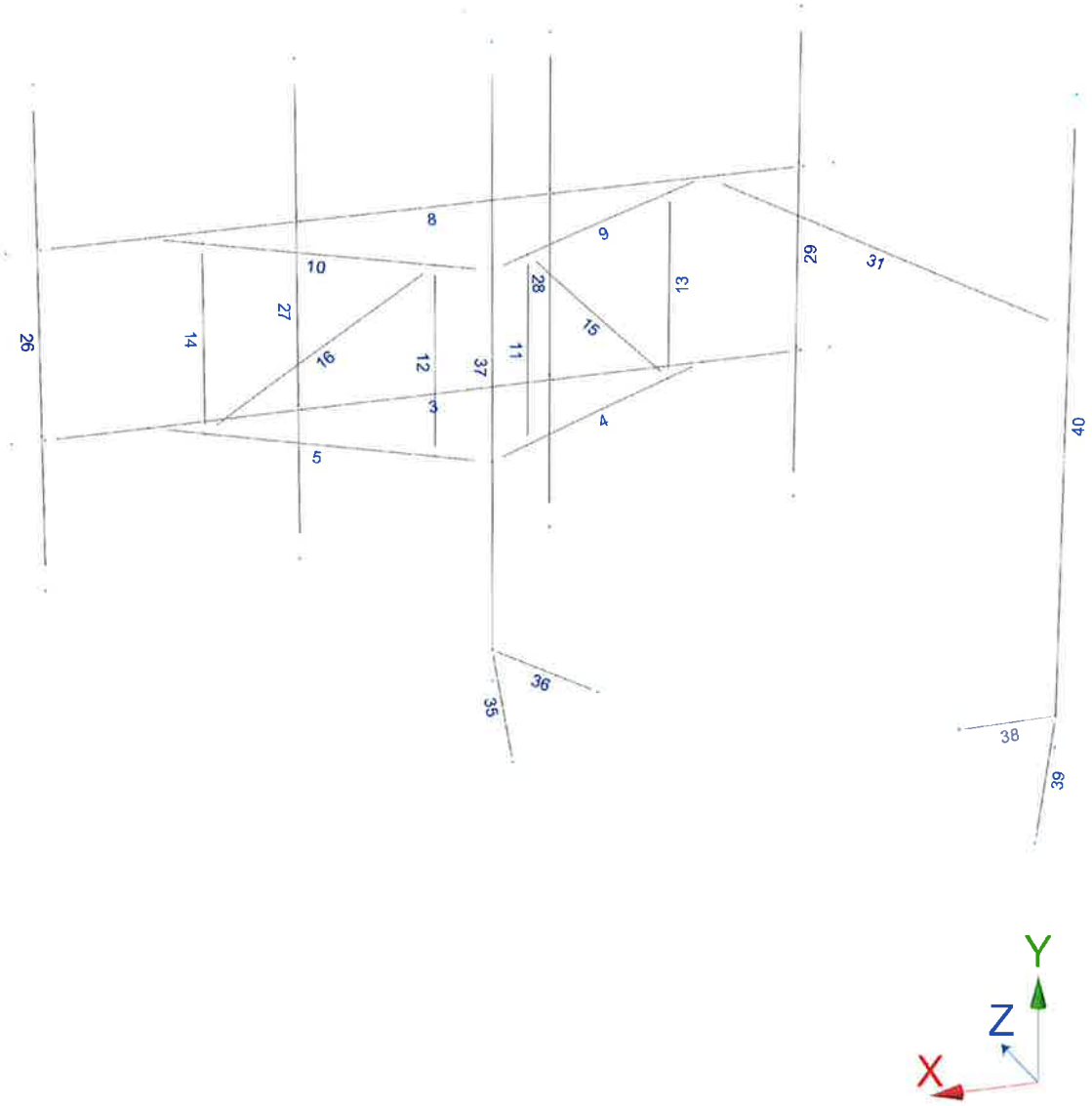

Current Date: 1/7/2020 9:20 AM
Units system: English
File name: W:\STRUCTURAL DEPARTMENT\ANALYSIS SOFTWARE\RAM Elements\RAM Projects\AT&T\CT\CT2132\LTE (6C 7C)\Rev. 1\CT2132 (L 6C 7C)(MOD).retx

Steel Code Check

Report: Summary - Group by member

Load conditions to be included in design :

LC1=1.2D+Wo
LC2=1.2D+W30
LC3=1.2D+W60
LC4=1.2D+W90
LC5=1.2D+W120
LC6=1.2D+W150
LC7=1.2D-Wo
LC8=1.2D-W30
LC9=1.2D-W60
LC10=1.2D-W90
LC11=1.2D-W120
LC12=1.2D-W150
LC13=0.9D+Wo
LC14=0.9D+W30
LC15=0.9D+W60
LC16=0.9D+W90
LC17=0.9D+W120
LC18=0.9D+W150
LC19=0.9D-Wo
LC20=0.9D-W30
LC21=0.9D-W60
LC22=0.9D-W90
LC23=0.9D-W120
LC24=0.9D-W150
LC25=1.2D+Di+WI0
LC26=1.2D+Di+WI30
LC27=1.2D+Di+WI60
LC28=1.2D+Di+WI90
LC29=1.2D+Di+WI120
LC30=1.2D+Di+WI150
LC31=1.2D+Di-WI0
LC32=1.2D+Di-WI30
LC33=1.2D+Di-WI60
LC34=1.2D+Di-WI90
LC35=1.2D+Di-WI120
LC36=1.2D+Di-WI150
LC38=1.2D+1.5LL1
LC39=1.2D+1.5LL2
LC40=1.2D+1.5LL3
LC41=1.2D+WL0+1.5LLa1
LC42=1.2D+WL30+1.5LLa1
LC43=1.2D+WL60+1.5LLa1
LC44=1.2D+WL90+1.5LLa1
LC45=1.2D+WL120+1.5LLa1
LC46=1.2D+WL150+1.5LLa1
LC47=1.2D-WL0+1.5LLa1
LC48=1.2D-WL30+1.5LLa1
LC49=1.2D-WL60+1.5LLa1
LC50=1.2D-WL90+1.5LLa1
LC51=1.2D-WL120+1.5LLa1
LC52=1.2D-WL150+1.5LLa1
LC53=1.2D+WL0+1.5LLa2

LC54=1.2D+WL30+1.5LLa2
LC55=1.2D+WL60+1.5LLa2
LC56=1.2D+WL90+1.5LLa2
LC57=1.2D+WL120+1.5LLa2
LC58=1.2D+WL150+1.5LLa2
LC59=1.2D-WL0+1.5LLa2
LC60=1.2D-WL30+1.5LLa2
LC61=1.2D-WL60+1.5LLa2
LC62=1.2D-WL90+1.5LLa2
LC63=1.2D-WL120+1.5LLa2
LC64=1.2D-WL150+1.5LLa2
LC65=1.2D+WL0+1.5LLa3
LC66=1.2D+WL30+1.5LLa3
LC67=1.2D+WL60+1.5LLa3
LC68=1.2D+WL90+1.5LLa3
LC69=1.2D+WL120+1.5LLa3
LC70=1.2D+WL150+1.5LLa3
LC71=1.2D-WL0+1.5LLa3
LC72=1.2D-WL30+1.5LLa3
LC73=1.2D-WL60+1.5LLa3
LC74=1.2D-WL90+1.5LLa3
LC75=1.2D-WL120+1.5LLa3
LC76=1.2D-WL150+1.5LLa3
LC77=1.2D+WL0+1.5LLa4
LC78=1.2D+WL30+1.5LLa4
LC79=1.2D+WL60+1.5LLa4
LC80=1.2D+WL90+1.5LLa4
LC81=1.2D+WL120+1.5LLa4
LC82=1.2D+WL150+1.5LLa4
LC83=1.2D-WL0+1.5LLa4
LC84=1.2D-WL30+1.5LLa4
LC85=1.2D-WL60+1.5LLa4
LC86=1.2D-WL90+1.5LLa4
LC87=1.2D-WL120+1.5LLa4
LC88=1.2D-WL150+1.5LLa4

Description	Section	Member	Ctrl Eq.	Ratio	Status	Reference
	L 2-1_2X2-1_2X1_4	**35**	LC12 at 50.00%	**0.51**	**OK**	Eq. H2-1
		36	LC2 at 56.25%	0.24	OK	Eq. H2-1
		38	LC9 at 50.00%	0.13	OK	Eq. H2-1
		39	LC3 at 50.00%	0.25	OK	Eq. H2-1
	PIPE 2x0.154	**26**	LC39 at 66.67%	0.29	OK	Eq. H1-1b
		27	LC4 at 31.25%	0.35	OK	Eq. H1-1b
		28	LC7 at 29.17%	0.46	OK	Eq. H1-1b
		29	LC1 at 29.17%	**0.46**	**OK**	Eq. H1-1b
		31	LC5 at 0.00%	0.27	OK	Eq. H1-1b
	PIPE 2x0.218XS	**3**	LC35 at 16.96%	0.23	With warnings	Eq. H1-1b
		4	LC12 at 100.00%	0.50	OK	Eq. H1-1b
		5	LC2 at 100.00%	0.29	OK	Eq. H1-1b
		8	LC6 at 16.96%	0.54	With warnings	Eq. H1-1a
		9	LC6 at 100.00%	**0.60**	**OK**	Eq. H1-1b
		10	LC8 at 100.00%	0.36	OK	Eq. H1-1b
	PIPE 3x0.216	**40**	LC9 at 66.67%	**0.54**	**OK**	Eq. H1-1b
	PIPE 3x0.600XXS	**37**	LC6 at 65.63%	**0.79**	**OK**	Eq. H1-1b
	RndBar 3_4	**11**	LC12 at 0.00%	**0.80**	**OK**	Eq. H1-1a
		12	LC2 at 100.00%	0.48	OK	Eq. H1-1a
		13	LC31 at 100.00%	0.50	OK	Eq. H1-1a
		14	LC39 at 0.00%	0.36	OK	Eq. H1-1a
		15	LC31 at 0.00%	0.17	OK	Eq. Sec. D2

16	LC39 at 0.00%	0.12	OK	Eq. Sec. D2

Current Date: 1/7/2020 9:21 AM
Units system: English
File name: W:\STRUCTURAL DEPARTMENT\ANALYSIS SOFTWARE\RAM Elements\RAM Projects\AT&T\CT\CT2132\LTE (6C 7C)\Rev. 1\CT2132 (L 6C 7C)(MOD).retx

Geometry data

GLOSSARY

Cb22, Cb33	: Moment gradient coefficients
Cm22, Cm33	: Coefficients applied to bending term in interaction formula
d0	: Tapered member section depth at J end of member
DJX	: Rigid end offset distance measured from J node in axis X
DJY	: Rigid end offset distance measured from J node in axis Y
DJZ	: Rigid end offset distance measured from J node in axis Z
DKX	: Rigid end offset distance measured from K node in axis X
DKY	: Rigid end offset distance measured from K node in axis Y
DKZ	: Rigid end offset distance measured from K node in axis Z
dL	: Tapered member section depth at K end of member
Ig factor	: Inertia reduction factor (Effective Inertia/Gross Inertia) for reinforced concrete members
K22	: Effective length factor about axis 2
K33	: Effective length factor about axis 3
L22	: Member length for calculation of axial capacity
L33	: Member length for calculation of axial capacity
LB pos	: Lateral unbraced length of the compression flange in the positive side of local axis 2
LB neg	: Lateral unbraced length of the compression flange in the negative side of local axis 2
RX	: Rotation about X
RY	: Rotation about Y
RZ	: Rotation about Z
TO	: 1 = Tension only member 0 = Normal member
TX	: Translation in X
TY	: Translation in Y
TZ	: Translation in Z

Nodes

Node	X [ft]	Y [ft]	Z [ft]	Rigid Floor
60	-1.00	-3.00	-5.00	0
59	1.00	-3.00	-7.00	0
57	0.00	-3.50	-3.00	0
63	-7.00	-3.50	-8.00	0
65	-5.50	-3.00	-8.00	0
66	-5.00	-3.00	-12.00	0
67	-7.00	6.50	-8.00	0
62	0.00	6.50	-3.00	0

Restraints

Node	TX	TY	TZ	RX	RY	RZ
60	1	1	1	0	0	0
59	1	1	1	0	0	0
57	1	1	1	0	0	0
63	1	1	1	0	0	0
65	1	1	1	0	0	0
66	1	1	1	0	0	0
67	1	1	1	0	0	0
62	1	1	1	0	0	0

Members

Member	NJ	NK	Description	Section	Material	d0 [in]	dL [in]	lg factor
3	3	2		PIPE 2x0.218XS	A53 GrB SABRE 50...	0.00	0.00	0.00
4	8	10		PIPE 2x0.218XS	A53 GrB SABRE 50...	0.00	0.00	0.00
5	9	10		PIPE 2x0.218XS	A53 GrB SABRE 50...	0.00	0.00	0.00
8	17	16		PIPE 2x0.218XS	A53 GrB SABRE 50...	0.00	0.00	0.00
9	22	24		PIPE 2x0.218XS	A53 GrB SABRE 50...	0.00	0.00	0.00
10	23	24		PIPE 2x0.218XS	A53 GrB SABRE 50...	0.00	0.00	0.00
11	14	28		RndBar 3_4	A572 Gr50	0.00	0.00	0.00
12	27	13		RndBar 3_4	A572 Gr50	0.00	0.00	0.00
13	25	11		RndBar 3_4	A572 Gr50	0.00	0.00	0.00
14	12	26		RndBar 3_4	A572 Gr50	0.00	0.00	0.00
15	28	11		RndBar 3_4	A572 Gr50	0.00	0.00	0.00
16	27	12		RndBar 3_4	A572 Gr50	0.00	0.00	0.00
26	34	36		PIPE 2x0.154	A53 GrB	0.00	0.00	0.00
27	42	43		PIPE 2x0.154	A53 GrB	0.00	0.00	0.00
28	48	49		PIPE 2x0.154	A53 GrB	0.00	0.00	0.00
29	33	35		PIPE 2x0.154	A53 GrB	0.00	0.00	0.00
31	22	51		PIPE 2x0.154	A53 GrB	0.00	0.00	0.00
35	59	58		L 2-1_2X2-1_2X1_4	A36	0.00	0.00	0.00
36	58	60		L 2-1_2X2-1_2X1_4	A36	0.00	0.00	0.00
37	57	62		PIPE 3x0.600XXS	A53 GrB	0.00	0.00	0.00
38	65	64		L 2-1_2X2-1_2X1_4	A36	0.00	0.00	0.00
39	64	66		L 2-1_2X2-1_2X1_4	A36	0.00	0.00	0.00
40	63	67		PIPE 3x0.216	A53 GrB	0.00	0.00	0.00

Orientation of local axes

Member	Rotation [Deg]	Axes23	NX	NY	NZ
12	315.00	0	0.00	0.00	0.00
26	315.00	0	0.00	0.00	0.00
27	315.00	0	0.00	0.00	0.00
28	315.00	0	0.00	0.00	0.00
29	315.00	0	0.00	0.00	0.00

Rigid end offsets

Member	DJX [in]	DJY [in]	DJZ [in]	DKX [in]	DKY [in]	DKZ [in]
31	0.00	2.00	0.00	0.00	2.00	0.00

Hinges

	Node-J				Node-K						
Member	**M33**	**M22**	**V3**	**V2**	**M33**	**M22**	**V3**	**V2**	**TOR**	**AXL**	**Axial rigidity**
15	0	0	0	0	0	0	0	0	0	0	Tension only
16	0	0	0	0	0	0	0	0	0	0	Tension only
35	0	0	0	0	1	1	0	0	0	0	Full
36	1	1	0	0	0	0	0	0	0	0	Full
38	0	0	0	0	1	1	0	0	0	0	Full
39	1	1	0	0	0	0	0	0	0	0	Full

Rigorous Structural Analysis Report

AT&T

AT&T | Norwalk East – Willard Rd | CT2132 | FA 10034993

Owner: CCT-4, LLC | Norwalk Site

Norwalk, Connecticut

March 20, 2020

MEI PROJECT ID: CT04761S-20V0

MALOUF ENGINEERING INTL., INC.

STRUCTURAL CONSULTANTS

17950 PRESTON ROAD, SUITE 720 ▪ DALLAS, TEXAS 75252 ▪ TEL. 972-783-2578 FAX 972-783-2583

www.maloufengineering.com

MALOUF ENGINEERING INTL., INC.

STRUCTURAL CONSULTANTS

March 20, 2020

Mr. Andrey Tsikanovsky
Hudson Design Group
North Andover, MA 01845

RIGOROUS STRUCTURAL ANALYSIS

Structure/Make/Model:	351.67 ft **Self-Supporting Tower**		Not Known / Not Known	
Client/Site Name/#:	**Hudson Design Group/ AT&T**		**Norwalk East-Willard Rd | CT2132 | FA 10034993**	
Owner/Site Name/#:	CCT-4, LLC		Norwalk	
MEI Project ID:	**CT04761S-20V0**			
Location:	10 Willard Rd Norwalk, Connecticut 06851		Fairfield County FCC #1046320	
	LAT	41-07-41.8 N	LON	73-23-24.9 W

EXECUTIVE SUMMARY:

Malouf Engineering Int'l (MEI), as requested, has performed a rigorous structural analysis of the above-mentioned structure to assess the impact of the changed condition as noted in Table 1.

Based on the stress analysis performed, the existing structure **is in conformance** with the Int'l Building Code (IBC) / ANSI/TIA-**222-G** Standard for the loading considered under the criteria listed and referenced in the report sections – tower rated at 98.3% - Sub Bracing.

The installation of the proposed changed condition as noted in Table 1 is structurally acceptable. Please refer to Appendix 1 for Schematic Lines Layout.

MEI appreciates the opportunity of providing our continuing professional services to you. If you have any questions or need further assistance on this or other projects, please contact us.

Respectfully submitted,

MALOUF ENGINEERING INT'L, INC.

Analysis performed by:

Krishna Manda, PE
Sr. Project Engineer

Reviewed & Approved by:

E. Mark Malouf, PE
Connecticut #17715
972-783-2578 ext. 106
mmalouf@maloufengineering.com

STATE OF CONNECTICUT
MARK MALOUF
No. 17715
LICENSED
PROFESSIONAL ENGINEER

3/20/2020

TABLE OF CONTENTS

1. INTRODUCTION & SCOPE

A rigorous structural analysis was performed by Malouf Engineering Int'l (MEI), as requested and authorized by Mr. Andrey Tsikanovsky, Hudson Design Group, on behalf of AT&T, to determine the acceptance of the proposed changed conditions in conformance with the IBC / ANSI/TIA-222- G Standard, "*Structural Standard for Antenna Supporting Structures and Antennas*".

The scope of this independent analysis is to determine the overall stability and the adequacy of structural members, foundations, and member connections, as available and stated. This analysis considers the structure to have been properly installed and maintained with no structural defects. Installation procedures and related loading are not within the scope of this analysis and should be performed and evaluated by a competent person of the erection contractor.

The different report sections detail the applicable information used in this evaluation, relating to the tower data, the appurtenances configuration and the wind and ice loading considered.

2. SOURCE OF DATA

The following information has been used in this evaluation as source data that accurately represent the existing structure and the related appurtenances:

	Source	Information	Reference
STRUCTURE			
Tower	MEI Records	Previous Structural Analysis	ID CT04761S-19V0 Dated 02/07/2019
	Hudson Design Group Mr. Hernan Cepeda	Tower Mapping Report – by ProVertic	Dated 02/06/2020
Foundation	MEI Records	Previous Structural Analysis	ID CT04761S-19V0 Dated 02/07/2019
Material Grade	As per supplied documents (GPD Analysis included specific material grades for the different components) - Refer to Appendix		
CURRENT APPURTENANCES			
	MEI Records	Previous Structural Analysis	ID CT04761S-19V0 Dated 02/07/2019
	Hudson Design Group Mr. Hernan Cepeda	Tower Mapping Report – by ProVertic	Dated 02/06/2020
CHANGED CONDITION			
	Hudson Design Group Mr. Hernan Cepeda	E-Mail Instructions	Dated 03/19/2020

Background Information:

Based on available information, the following is known regarding this structure:

DESIGNER / FABRICATOR	Not Known / Not Known
ORIGINAL DESIGN CRITERIA	TIA/EIA 222-Unknown
PRIOR STRUCTURAL MODIFICATIONS	As per GPD modification design Job #2012766.02 dated 06/27/2012; **MEI Drawings ID CT04761S-16V0-R1 dated 08/11/2016 are considered properly installed and maintained.**

3. ANALYSIS CRITERIA

The structural analysis performed used the following criteria:

CODE / STANDARD	2018 CT Building Code / 2015 Int'l Building Code / ANSI/TIA-222-G-4 Standard	
LOADING CASES	*Full Wind:*	120 Mph ultimate gust [equiv. 93 Mph (3-sec gust)] w/No Radial Ice**
	Iced Case:	50 Mph + 0.75" Radial Ice
	Service:	60 Mph
	Seismic:	S_s = 0.230 / S_1 = 0.067 / Site Class: D – Stiff Soil
STRUCTURE CRITERIA	*Risk Category (Structural Class):* Class II	
	Exposure Category: 'C' – *Topographic Category:* 1	

Appurtenances Configuration

The following appurtenances configuration is denoted by the *summation of Tables 1 & 2*:

Table 1: Tenant with Changed Condition Appurtenances Configuration

Elev (ft)	Tenant	Ant #	Ant Qty	Appurtenance Model / Description	Mount Description	Line #	Line Qty	Line size & Location
347	AT&T		6	800-10964 Panel Antennas	(3) 12ft V-Frame Mounts (Sabre C10857011C) and *Proposed Modifications*		2	DC Power Cables – (FZ)
			3	4478 B14 (700) RRH Boxes				
			3	8843 B2/B66A RRH Boxes				
			3	4449 B5/B12 RRH Boxes				
			1	DC6-48-60-08-8C-EV Box				
Current Appurtenances To Remain								
347	AT&T		3	7770.00 Panel Antennas w/ (2) 7020 RET Motors		49-60 46-47 48	12 6 3	1-5/8" 3/4" DC Power 5/8" Fiber-(FZ)
			3	OPA-65R-LCUU-H4 Panel Antennas				
			3	RRUS-32 Boxes				
			6	LGP21401 TMAs				
			6	TPX-070821 Triplexer Boxes				
			3	DC6-48-60-18-8C Suppressors				
Appurtenances to be Removed								
347	*AT&T*		*3*	*SBNHH-1D65A Panel Antennas*	*(3) 10.5ft Sector Mounts*			
			3	*RRUS-11 Boxes*				
			3	*RRUS-32 Boxes*				

Table 2: Remaining Tenants Current and Reserved/Future Appurtenances

Elev (ft)	Tenant	Ant #	Ant Qty	Appurtenance Model / Description	Mount Description	Line #	Line Qty	Line size & Location
365		40	1	12ft Whip Antenna + TMA	10ft Pipe Mount	25	1	7/8"-(FZ)
369.5		38	1	Whip Antenna	15ft Pipe Mount w/ Guys	34	1	1/2"-(FZ)
357	[Dead]	39	1	15ft Whip Antenna	4ft Pipe Mount	-	-	-
362		42	1	4ft Lightning Rod	14ft Mount	-	1	Grounding
		41	1	Beacon / Strobe		43	1	0.6" SO Cord
355.5		31	1	4ft Whip Antenna	8ft Pipe Mount	38	1	1-5/8"-(FZ)
354.5		32	1	15ft Whip Antenna	8ft Pipe Mount	39	1	1-5/8"-(FZ)
354.5		30	1	10ft 4-Element Dipole Antenna	8ft Pipe Mount	24	1	7/8"-(FZ)
352			1	Top Stub Tower				
350.5		35			3ft Empty Sidearm Mount			
					Top Platform w/ Rails			
350	[Dead]					35-36	2	0.25" Cables
350	[Dead]					44	1	0.8" SO Cord
349.75		34	1	8ft Whip Antenna	Railing Mounted	32	1	7/8"-(FZ)
349.5		36	1	21ft Whip Antenna	Railing Mounted	37	1	7/8"-(FZ)
349		37			8ft Empty Pipe Mount			
348.25		29	1	20ft 4-Element Dipole Antenna	6ft Pipe Mount	21	1	7/8"-(FZ)

(Appurtenances continue on next page.)

Table 2: Remaining Tenants Current and Reserved/Future Appurtenances – Cont'd

Elev (ft)	Tenant	Ant #	Ant Qty	Appurtenance Model / Description	Mount Description	Line #	Line Qty	Line size & Location
343.67		27	1	3ft 3-Elem Yagi Antenna	8ft Pipe Mount on Sector Mount	30	1	1/2"-(FZ)
343.25		33	3	TA-2335-DAB Panel Antennas	8ft Pipe Mount	19	1	EW4.75"x2.5"-(FZ)
339.5					4-Way Walkway Platform w/ Rails			
338	[Dead]					45	1	3/4" R.C. – (FZ)
325					(4) Face Frames			
306		21			(4) 14ft Empty Pipe Mounts			
299	[Dead]					23	1	1-1/4"-(FZ)
269.25		20	2	OB Lights		40	1	0.6" SO Cord
262	*T-Mobile [Final] [New]*	-	*3*	*AIR-3246 B66 Panel Antennas*	*(3) 13ft T-Frame Mounts*	-	*3*	*HCS 6x12 Hybrid Cable 1-5/8" [6 Reserve] – (FZ)*
			3	*APXVAARR24_43-U-NA20*				
			3	*AIR32 B66a/B2a Panel Antennas*			*12*	
			3	*KRY 112 144/2 TMA's*				
			3	*Radio 4449 - B71 + B12 Boxes*				
255.5		17	1	12in Square Panel Antenna	Pipe Mount	1	1	7/8"-(FZ)
253		16			(2) 25ft Rest Platform w/ Rails			
244	*Sprint [New]*	*14*	*3*	*APXVSPP18-C-A20 Panel Antennas*	*(3) Sector Mounts*	*26-28*	*3*	*HB114-1 1 1/4" Hybrid Cables LDF4-50A (1/2" FOAM) 1.55" Hybrid Cable – (FZ)*
		-	*3*	*Nokia AAHC Boxes*				
			3	*ALU 1900MHz RRH Boxes*			*1*	
			6	*ALU 800 MHz 2x50W RRH Boxes*			*1*	
208.5		12	1	7ft 5-Elem Yagi Antenna	5ft Pipe Mount	31	1	1/2"-(FZ)
191.5		11			(4) Corner Rest Platforms			
186		10	2	Beacon Ice Shield	Leg Mounted			
182.5		9	2	Beacon / Strobe		41-42	2	0.6" SO Cords
140	*VzW [New]*	-	*3*	*JAHH-65B-R3B Panel Antennas*	*(3) D&D Welding 12ft Arch Boom Mounts + (2) BSAMNT-SBS-2-2 Side-By-Side Mounting Kit + (1) BSAMNT-SBS-2-3 Side-By-Side Mounting Kit*	-	*3*	*1-5/8" Hybrid Cables – (FZ)*
			6	*JAHH-45B-R3B Panel Antennas*				
			3	*B13 RRH4x30 Boxes*				
			3	*B66A RRH4x45W Boxes*				
			3	*B25 RRH4x30W Boxes*				
			3	*B5 RRH4x40W - LOC Boxes*				
			3	*RVZDC-6627-PF-48 OVP Boxes*				
125	[Dead]					22	1	0.95"-(FZ)
		8			(2) 41ft Rest Platform w/ Rails			
100		7			4ft Rest Platform w/ Rails			
93		6	2	OB Lights		40		[Shared]
50.25		5			4ft Rest Platform w/ Rails			
47.5		4	1	3ft Dia. Dish (Az. 220°±)	4ft Sidearm Mount-NW Leg	20	1	7/8"-(FZ)
31		1	1	4ft Dia. Dish (Az. 200°±)	10ft Pipe Mount/Standoff-S Face	33	1	1/2"-(FZ)
26		2	1	GPS Antenna	Pipe Mount	29	1	1/2"-(FZ)
25		3			(4) Corner Rest Platforms			
16.67					(4) Face Frames			

Notes:

1. **As per 2015 IBC for ultimate 3-sec gust wind speed converted to nominal 3-sec gust wind speed as per Sect. 1609.3.1 as required to be used in ANSI/TIA-222-G Standard per exception 5 of Sect. 1609.1.1.
2. All elevations are measured from tower base.
3. Please note appurtenances not listed above are to be removed/not present as per data supplied.
4. (I) = Internal; (E) = External; (FZ) = Within Face Zone; (OFZ) = Outside Face Zone - as per TIA-222-G.
5. The above appurtenances represent MEI's understanding of the appurtenances configuration. If different than above, the analysis is invalid. Please contact MEI if any discrepancies are found.

4. ANALYSIS PROCEDURE

The subject structure is analyzed for feasibility of the installation of the proposed changed condition previously noted. The data records furnished were reviewed and a computer stress analysis was performed in accordance with the TIA-222 Standard provisions and with the agreed scope of work terms and the results of this analysis are reported.

Analysis Program

The computer program used to model the structure is a rigorous Finite Element Analysis program, tnxTower (ver. 8.05), a commercially available program by Tower Numerics Inc. and the second is STAAD*Pro v8i* FEA program, a structural finite element program by Bentley Systems, Carlsbad, CA. The structure members are modeled using beam/truss members. The structural parameters and geometry of the members are included in the model. The dead and temperature loads and the wind loads are internally calculated by the programs for the different loading directions and then applied as external loads on the structure. This analysis comprised of the two different analytical models with combination of the above noted 2 software programs in order to evaluate the different portions of the tower accounting for the geometrical limitation in the tnxTower software. Any applicable exemptions, as per Section 15.6 of the TIA-222-G Standard for existing structures originally designed in accordance with a previous revision of the TIA-222 Standard, have been taken.

Assumptions

This engineering study is based on the theoretical capacity of the members and is not a condition assessment of the structure. This analysis is based on information supplied, and therefore, its results are based on and as accurate as that supplied data. MEI has made no independent determination, nor is it required to, of its accuracy. The following assumptions were made for this structural stress analysis:

- This existing tower is assumed, for the purpose of this analysis, to have been properly maintained and to be in good condition with no structural defects and with no deterioration to its member capacities ('as-new' condition).
- The tower member sizes and configuration are considered accurate as supplied. The material grade is as per data supplied and/or as assumed and as stated.
- The appurtenances configuration is as supplied and/or as stated in the report. It is assumed to be complete and accurate. All antennas, mounts, coax and waveguides are assumed to be properly installed and supported as per manufacturer requirements.
- Some assumptions are made regarding antennas and mounts sizes and their projected areas based on best interpretation of data supplied and of best knowledge of antenna type & industry practice.
- Mounts/Platforms are considered adequate to support the loading. No actual analysis of the platform/mount itself is performed, with the analysis being limited to analyzing the structure.
- The soil parameters are as per data supplied or as assumed and stated in the calculations. Refer to the Appendix. If no data is available, the foundation system is assumed to support the structure with its new reactions.
- All welds and connections are assumed to develop at least the member capacity, unless determined otherwise and explicitly stated in this report.
- All prior structural modifications, if any, are assumed to be as per data supplied/available, and to have been properly installed and to be fully effective.

If any of the above assumptions are not valid or have been made in error, this analysis results may be invalided, MEI should be contacted to review any contradictory information to determine its effect.

5. ANALYSIS RESULTS

The results of the structural stress analysis based on data available and with the previous listed criteria, indicated the following:

Note: The Wind loading controls over the Seismic loading as per TIA Section 2.7.

Table 3: Stress Analysis Results

Component Type	Maximum Stress Ratio	Controlling Elev. (ft) / Component	Pass/Fail	Comment
LEGS	95.2%	25 - 0	**Pass**	
DIAGONALS	88.9%	125 - 100	**Pass**	
HORIZONTALS	93.9%	150 - 125	**Pass**	Bolts Control
SUB-BRACING	**98.3%**	**50 - 25**	**Pass**	
FOUNDATION	65.6%	Uplift	**Pass**	Geotechnical report not available. Based on soil parameters in calcs in prev. SA. Soil Stability Check Only.

Table 4: Serviceability Requirements

	Maximum Value	TIA Requirement (10dB)	Pass/Fail	Comment
TWIST/SWAY	0.014 Deg.	1.7125 Deg.	**Pass**	4ft Dish Elev. 31.00ft
	0.021 Deg.	2.35 Deg.	**Pass**	3ft Dish Elev. 47.50ft
	0.083 Deg.	4 Deg. from Vert. or Horiz. Axis	**Pass**	
HORIZONTAL DISPLACEMENT	4.467 In./ 0.11% of Ht.	3.0% of Height	**Pass**	

Notes:

1. Please note that the analysis results noted above are based on the combined analytical models using the 2 noted FEA programs.
2. The Maximum Stress Ratio is the percentage that the maximum load in the member is relative to the allowable load as determined by Code requirements.
3. Refer to the Appendix 1 for more details on the member loads.
4. A maximum stress ratio between 100% and 105% may be considered as *Acceptable* according to industry standard practice.

6. FINDINGS & RECOMMENDATIONS

- Based on the rigorous stress analysis results, the subject structure is **rated at 98.3%** of its support capacity (controlling component: Sub-Bracing) with the proposed changed condition considered. Please refer to Table 3 and to Appendix 1 for more details of the analysis results.
- Based on the stress analysis performed, the existing structure **is in conformance** with the IBC / ANSI/TIA **222-G** Standard for the loading considered under the criteria listed and referenced in the report sections.
- Please note that limited foundation data is available and with no geotechnical report. However, based on soil parameters included in supplied data, the foundation is considered acceptable.
- Please note that this analysis study considers all of the recent changes by the different tenants, mainly AT&T, T-Mobile, Verizon and Sprint, as per the latest information available,
- ***The installation of the proposed changed condition as noted in Table 1 is structurally acceptable.*** Please refer to Appendix 1 for Schematic Lines Layout.
- This structure is near its maximum support capacity for the appurtenances and loading criteria considered. Therefore, no changes to the configuration considered should be made without performing a new proper evaluation.

Rigging and temporary supports required for the erection/modification shall be determined, documented, furnished and installed by the erector/contractor accounting for the loads imposed on the structure due to the proposed construction method.

7. REPORT DISCLAIMER

The engineering services rendered by **M**alouf **E**ngineering **I**nternational, Inc. *('MEI') in connection with this Structural Analysis are limited to a computer analysis of the tower structure, size and capacity of its members. MEI does not analyze the fabrication, including welding and connection capacities, except as included in this Report.*

The analysis performed, and the conclusions contained herein are based on the assumption that the tower has been properly installed and maintained, including, but not limited to the following:

1. Proper alignment and plumbness.
2. Correct guy tensions, as applicable.
3. Correct bolt tightness or slip jacking of sleeved connections.
4. No significant deterioration or damage to any structural component.

Furthermore, the information and conclusions contained in this Report were determined by application of the current "state-of-the-art" engineering and analysis procedures and formulae. MALOUF ENGINEERING INTERNATIONAL, INC. assumes no obligation to revise any of the information or conclusions contained in this Report in the event that such engineering and analysis procedures and formulae are hereafter modified or revised. In addition, under no circumstances will MALOUF ENGINEERING INTERNATIONAL, INC. have any obligation or responsibility whatsoever for or on account of consequential or incidental damages sustained by any person, firm or organization as a result of any information or conclusions contained in the Report, and the maximum liability of MALOUF ENGINEERING INTERNATIONAL, INC., if any, pursuant to this Report shall be limited to the total funds actually received by MALOUF ENGINEERING INTERNATIONAL, INC. for preparation of this Report.

Customer has requested MALOUF ENGINEERING INTERNATIONAL, INC. to prepare and submit to Customer an engineering analysis with respect to the Subject Tower and has further requested MALOUF ENGINEERING INTERNATIONAL, INC. to make appropriate recommendations regarding suggested structural modifications and changes to the Subject Tower. In making such request of MALOUF ENGINEERING INTERNATIONAL, INC., Customer has informed MALOUF ENGINEERING INTERNATIONAL, INC. that Customer will make a determination as to whether or not to implement any of the changes or modifications which may be suggested by MALOUF ENGINEERING INTERNATIONAL, INC. and that Customer will have any such changes or modifications made by riggers, erectors and other subcontractors of Customer's choice. MALOUF ENGINEERING INTERNATIONAL, INC. shall have the right to rely upon the accuracy of the information supplied by the customer and shall not be held responsible for the Customer's misrepresentation or omission of relevant fact whether intentional or otherwise.

Customer hereby agrees and acknowledges that MALOUF ENGINEERING INTERNATIONAL, INC. shall have no liability whatsoever to Customer or to others for any work or services performed by any persons other than MALOUF ENGINEERING INTERNATIONAL, INC. in connection with the implementation of services including but not limited to any services rendered for Customer or for others by riggers, erectors or other subcontractors. Customer acknowledges and agrees that any riggers, erectors or subcontractors retained or employed by Customer shall be solely responsible to Customer and to others for the quality of work performed by them and that MALOUF ENGINEERING INTERNATIONAL, INC. shall have no liability or responsibility whatsoever as a result of any negligence or breach of contract by any such rigger, erector or subcontractor and that Customer and rigger, erector, or subcontractor will provide MALOUF ENGINEERING INTERNATIONAL, INC. with a Certificate of Insurance naming MALOUF ENGINEERING INTERNATIONAL, INC. as additional insured.

APPENDIX 1 - ANALYSIS PRINTOUT & GRAPHICS

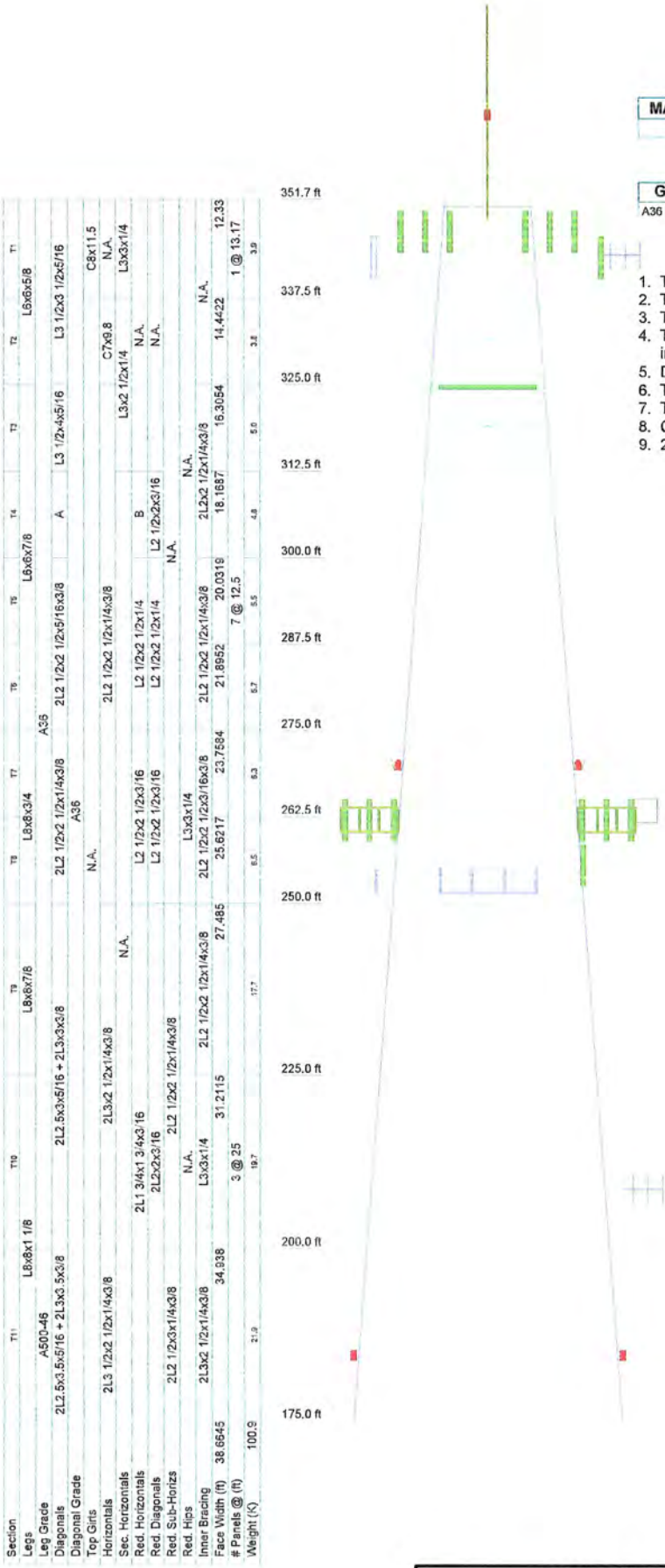

SYMBOL LIST

MARK	SIZE	MARK	SIZE
A	2L2 1/2x2 1/2x1/4x3/8	B	L2 1/2x2 1/2x3/16

MATERIAL STRENGTH

GRADE	Fy	Fu	GRADE	Fy	Fu
A36	36 ksi	58 ksi	A500-46	46 ksi	62 ksi

TOWER DESIGN NOTES

1. Tower is located in Fairfield County, Connecticut.
2. Tower designed for Exposure C to the TIA-222-G Standard.
3. Tower designed for a 93 mph basic wind in accordance with the TIA-222-G Standard.
4. Tower is also designed for a 50 mph basic wind with 0.75 in ice. Ice is considered to increase in thickness with height.
5. Deflections are based upon a 60 mph wind.
6. Tower Structure Class II.
7. Topographic Category 1 with Crest Height of 0.00 ft
8. OWNER - FULLER DEVELOPMENT LLC - NORWALK SITE
9. 2018 CT SBC / 2015 IBC / ASCE 7-10 / 120 MPH ULT - RISK CAT. 2

MALOUF ENGINEERING INTL., INC. STRUCTURAL CONSULTANTS
maloufengineering.com

Malouf Engineering Int'l Inc.
17950 Preston Road, STE 720
Dallas, Texas 75252
Phone: (972) 783 2578
FAX: (972) 783 2583

Job:	***350ft SST / Norwalk East - Willard RD Site #CT213***		
Project:	***CT04761S-20V0 - Top Tower / FA #10034993***		
Client:	HUDSON DESIGN GROUP / AT&T	Drawn by: KM	App'd:
Code:	TIA-222-G	Date: 03/20/20	Scale: NTS
Path:			Dwg No. E-1

Software licensed to MEI IT CONNECTED User: Krishna Manda	**Malouf Engineering International Inc.** **17950 Preston Rd. Suite 720** **Dallas, Texas 75252 / p (972) 783-2575** **maloufengineering.com**	Job No **CT04761S-20V**	Sheet No **1**	Rev 0
		Part 0 TO 175FT OF TOWER		
Job Title 351.7ft Self Supporting Tower		Ref		
		By KM	Date 20-Mar-20	Chd LKN
Client HUDSON DESIGN GROUP / AT&T		File CT04761S-20V0.std	Date/Time 20-Mar-2020 11:26	

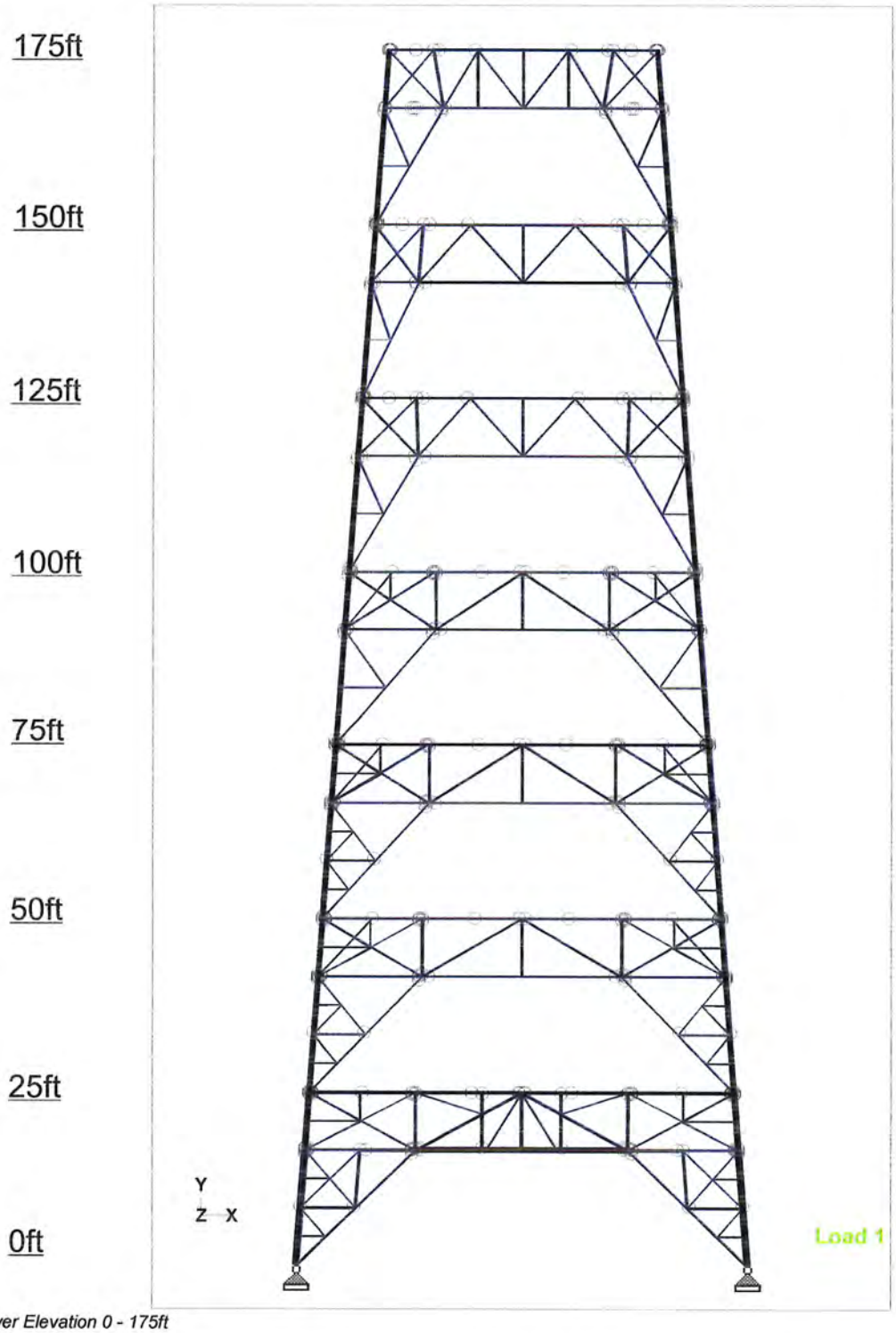

Tower Elevation 0 - 175ft

No.	QTY.	DESCRIPTION	ELEV.	tTENANT
1	1	Conduit Shield	35'	E
2	1	Unused Coduit Supports	320'	E / WG "G"
3	1	Unused Waveguide Brackets	200'	E / WG "H"
4	1	7/8"	255'	E / #1
5	12	1 5/8" (RE-WORK/BUNDLE COAXES IN TWO ROWS)	262'	T-Mobile / E / #2-10, #12-14
6	3	HCS 6x12 Hybrid Cable	262'	T-Mobile / NEW
7	-	-	-	-
8	-	-	-	-
9	1	Feedline Ladder (Af)	265'	T-Mobile / E / WG "A"
10	1	EW 4.75" x 2.5"	343'	E / #19
11	1	7/8"	47'	E / #20
12	1	7/8"	348'	E / #21
13	1	0.95" Dead Cable	125'	E / #22
14	1	1 1/4" Dead Cable	299'	E / #23
15	2	7/8"	350'	E / #24, 25
16	1	Feedline Ladder (Af)	345'	E / WG "B"
17	3	HB114-1 1 1/4" Hybrid Cable	244'	Sprint / E / #26-28
18	1	LDF4-50A (1/2 FOAM)	26'	E / #29
19	1	Feedline Ladder (Af)	241'	Sprint / E / WG "C"
20	1	1/2"	343'	E / #30
21	1	1/2"	208'	E / #31
22	1	7/8"	349'	E / #32
23	2	1/2"	31'	E / #33, 34
24	1	1/2"	350'	E / #34
25	2	0.25" Dead Cables	350'	E / #35, 36
26	1	7/8"	349'	E / #37
27	2	1 5/8"	350'	E / #38, 39
28	1	Waveguide Brackets	348'	E / WG "D"
29	1	Climbing Ladder	350'	E
30	4	0.6" SO Cords	182'	E / #40-43
31	2	0.6" SO Cords	269'	E / #40,43
32	1	0.6" SO Cord	350'	E / #43
33	1	0.8" Dead SO Cord	350'	E / #44
34	1	3/4" Rigid Conduit Unused	338'	E / #45
35	1	Conduit Shield	35'	E
36	1	Unused Coduit Supports	320'	E / WG "E"
37	1	Grounding Cable	350'	E
38	6	3/4" DC Power Cable	347'	ATT / E
39	12	1 5/8"	347'	ATT / E / #49-60
40	3	5/8" Fiber Cable	347'	ATT / E
41	2	3/4" DC POWER CABLE	345'	ATT / P
42	-	-	-	-
43	1	Feedline Ladder (Af)	347'	ATT / E / WG "F"
44	3	1 5/8" Hybrid Cable	140'	VzW / NEW
45	1	LDF4-50A (1/2 FOAM)	244'	SPRINT / E / F
46	1	1.55" Hybrid Cable	244'	SPRINT / NEW

CONTACT MEI IF LINE LAYOUT IS DIFFERENT FROM WHAT IS SHOWN BELOW.

LEGEND:

E = EXISTING — #X

P = PROPOSED — #X

F = FUTURE — #X

R = REMOVE — #X

TO RELOCATE

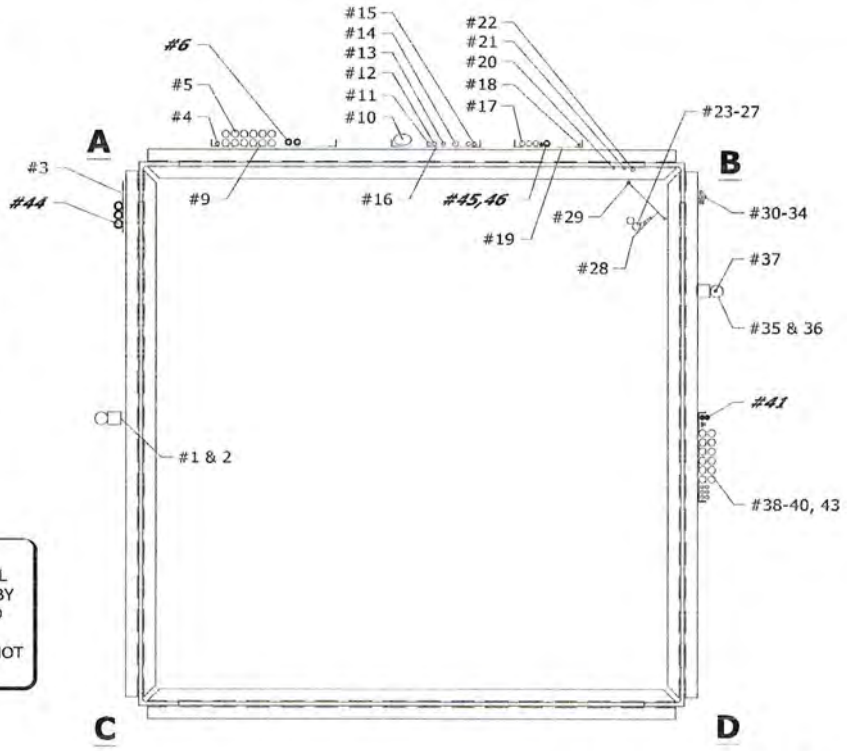

NOTES:
1) TX-LINE LAYOUT INCLUDED ALL PREVIOUS CHANGES PROPOSED BY VERIZON WIRELESS, SPRINT AND T-MOBILE (TO BE INSTALLED).
2) REMOVE ALL OTHER COAXES NOT LISTED ABOVE.

101 PLAN: SCHEMATIC Tx-LINE LAYOUT

SCALE: NOT TO SCALE

N APPROX.

NOTES:
1. Tx LINE LAYOUT IS SCHEMATIC ONLY, BASED UPON MEI MAPPING (SUB: HTS) DATED 11/30/15.
2. NEW BRACKET SUPPORT SPECIFICATION BY OTHERS.

03/20/2020

MALOUF ENGINEERING INTERNATIONAL, INC.
STRUCTURAL CONSULTANTS
17950 PRESTON ROAD SUITE 720
DALLAS, TEXAS 75252-5635
972-783-2578 (fax: 2583)
www.maloufengineering.com

AT&T

350FT SST/NORWALK EAST - WILLARD RD SITE #CT2132

TOWER TxLINE LAYOUT

MEI PROJECT ID	SHEET NUMBER	REV.
CT04761S-20V0	L01	0

TIA-222-G - Service - 60 mph

Maximum Values

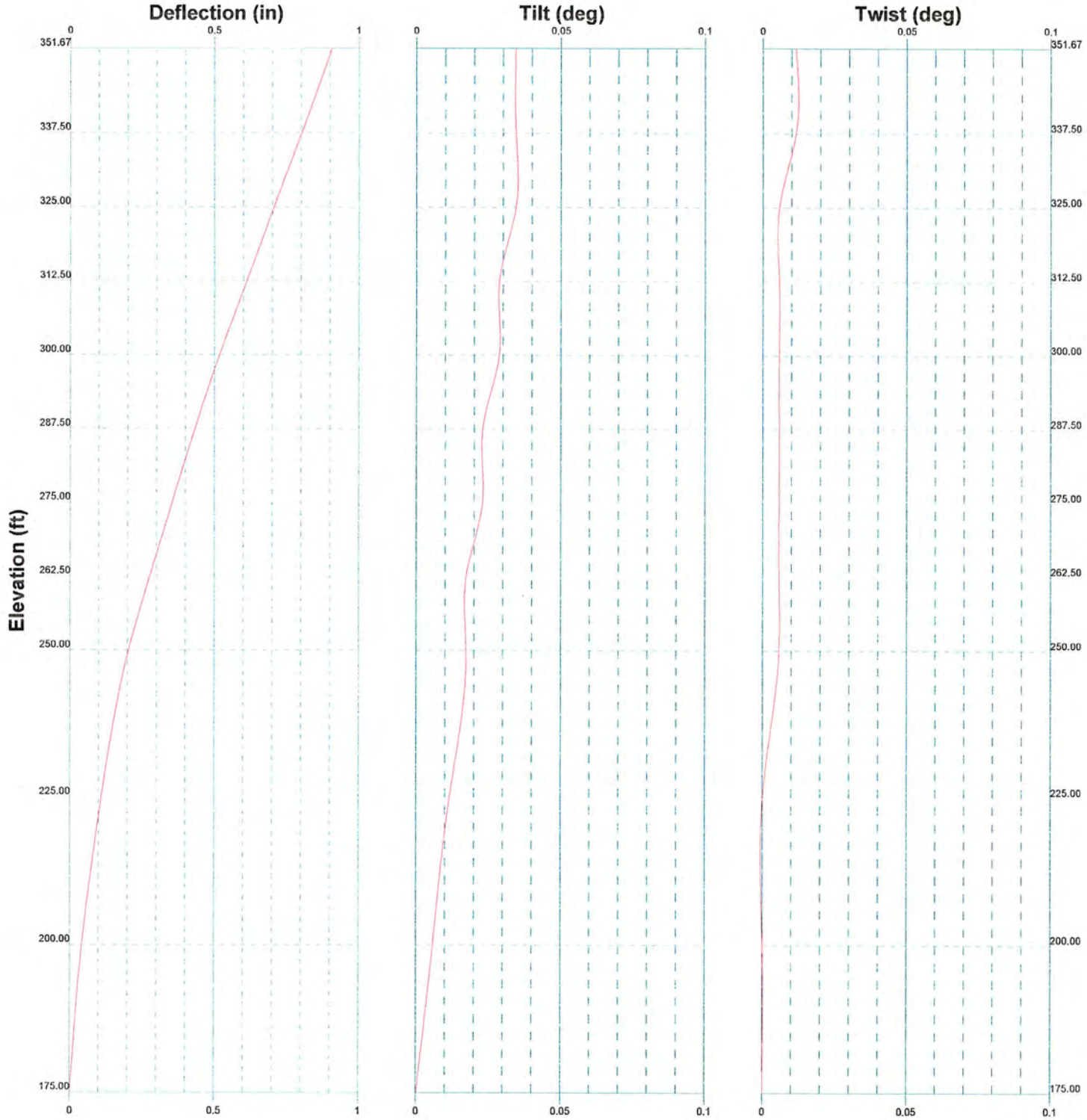

MALOUF ENGINEERING INTL., INC.
STRUCTURAL CONSULTANTS
maloufengineering.com

Malouf Engineering Int'l Inc.
17950 Preston Road, STE 720
Dallas, Texas 75252
Phone: (972) 783 2578
FAX: (972) 783 2583

Job:	***350ft SST / Norwalk East - Willard RD Site #CT213***		
Project:	***CT04761S-20V0 - Top Tower / FA #10034993***		
Client:	HUDSON DESIGN GROUP / AT&T	Drawn by: KM	App'd:
Code:	TIA-222-G	Date: 03/20/20	Scale: NTS
Path:			Dwg No. E-5

TIA-222-G - 93 mph/50 mph 0.7500 in Ice Exposure C

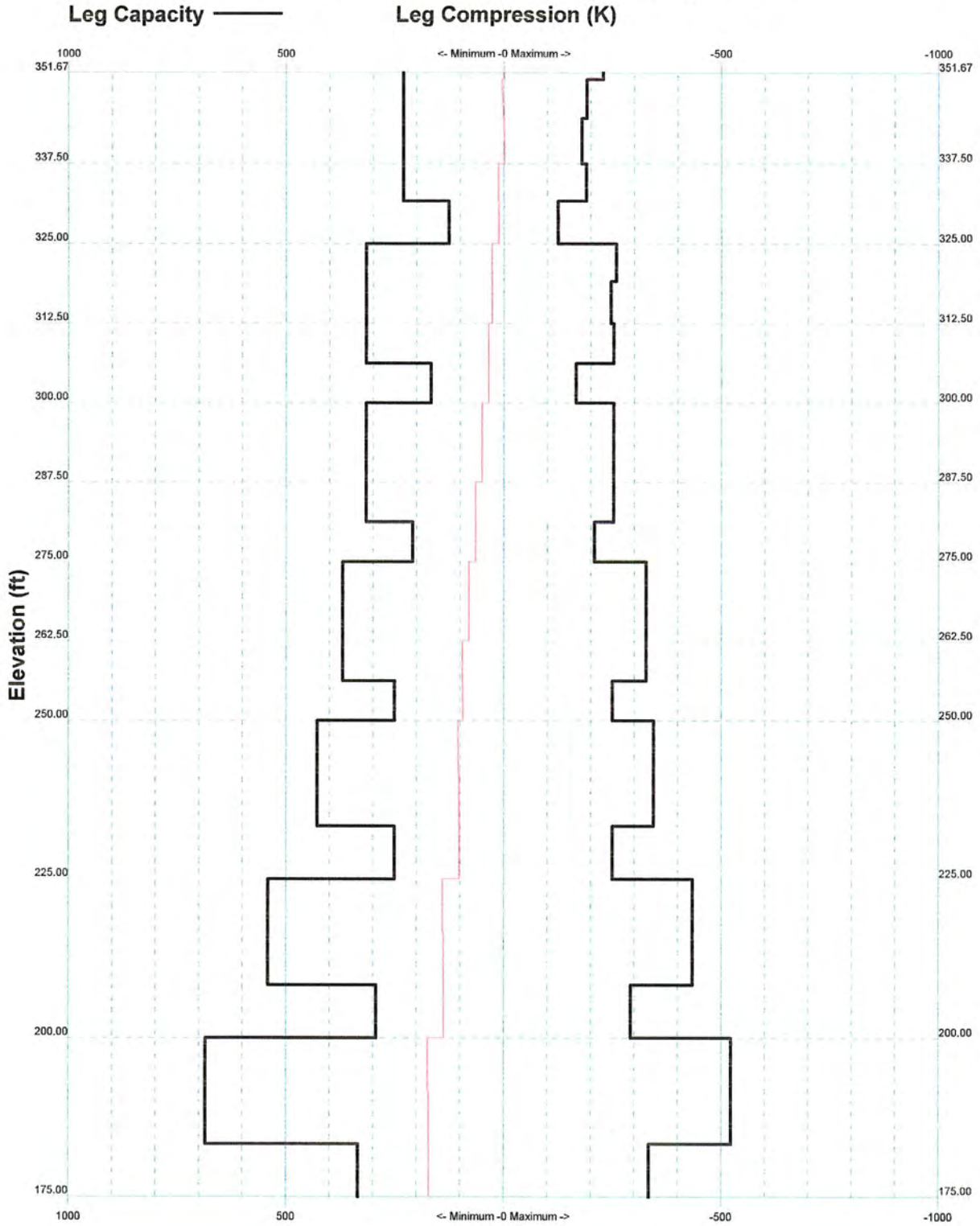

MALOUF ENGINEERING INTL, INC. STRUCTURAL CONSULTANTS
maloufengineering.com

Malouf Engineering Int'l Inc.
17950 Preston Road, STE 720
Dallas, Texas 75252
Phone: (972) 783 2578
FAX: (972) 783 2583

Job:	***350ft SST / Norwalk East - Willard RD Site #CT213***		
Project:	***CT04761S-20V0 - Top Tower / FA #10034993***		
Client:	HUDSON DESIGN GROUP / AT&T	Drawn by: KM	App'd:
Code:	TIA-222-G	Date: 03/20/20	Scale: NTS
Path:			Dwg No. E-3

Tower Input Data

The main tower is a 4x free standing tower with an overall height of 351.67 ft above the ground line.
The base of the tower is set at an elevation of 0.00 ft above the ground line.
The face width of the tower is 12.33 ft at the top and 64.75 ft at the base.
This tower is designed using the TIA-222-G standard.
The following design criteria apply:

Tower is located in Fairfield County, Connecticut.
ASCE 7-10 Wind Data is used (wind speeds converted to nominal values).
Basic wind speed of 93 mph.
Structure Class II.
Exposure Category C.
Topographic Category 1.
Crest Height 0.00 ft.
Nominal ice thickness of 0.7500 in.
Ice thickness is considered to increase with height.
Ice density of 56 pcf.
A wind speed of 50 mph is used in combination with ice.
Temperature drop of 50 °F.
Deflections calculated using a wind speed of 60 mph.
OWNER - FULLER DEVELOPMENT LLC - NORWALK SITE.
2018 CT SBC / 2015 IBC / ASCE 7-10 / 120 MPH ULT - RISK CAT. 2.
Pressures are calculated at each section.
Stress ratio used in tower member design is 1.
Local bending stresses due to climbing loads, feed line supports, and appurtenance mounts are not considered.

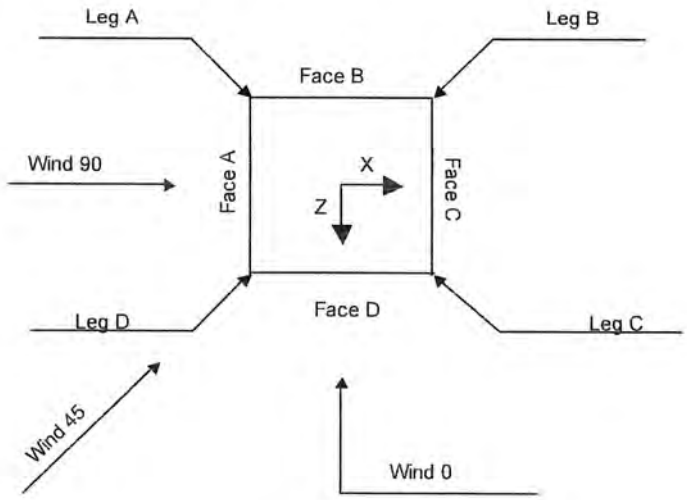

Square Tower

Feed Line/Linear Appurtenances - Entered As Round Or Flat

Description	Placement	#	Weight
	ft		plf
Conduit Shield (E)	35.00 - 12.00	1	18.50
Unused Coduit Supports (E / WG "G")	320.00 - 37.00	1	9.56
1-5/8" (6x12) Hybrid (HFT1206-24 SV2-xx) or Equiv. (VzW / New)	140.00 - 6.00	3	1.78
Unused Waveguide Brackets (E / WG "H")	200.00 - 27.00	1	1.25
7/8 (E / #1)	255.50 - 6.00	1	0.54
1 5/8 (Rework - Bundle / T-Mobile / E / #2-10, #12-14)	262.00 - 6.00	12	1.04
HCS 6x12 Hybrid Fiber Cable (T-Mobile / New)	262.00 - 6.00	3	2.40
Feedline Ladder (Af) (T-Mobile / E / WG "A")	265.00 - 8.50	1	8.40
EW 4.75" x 2.5" (E / #19)	343.25 - 6.00	1	1.85
7/8 (E / #20)	47.50 - 6.00	1	0.54
7/8 (E / #21)	348.25 - 6.00	1	0.54
0.95" Dead Cable (E / #22)	125.00 - 6.00	1	0.49
1 1/4 Dead Cable (E / #23)	299.00 - 6.00	1	0.66
7/8 (E / #24, 25)	350.00 - 6.00	2	0.54
Feedline Ladder (Af) (E / WG "B")	345.00 - 8.50	1	8.50
HB114-1 1 1/4" Hybrid Cable (Sprint / E / #26-28)	244.00 - 0.00	3	1.08
LDF4-50A (1/2 FOAM) (Sprint / E)	244.00 - 0.00	1	0.15
1.55" Hybrid Cable (Sprint / New)	244.00 - 0.00	1	1.25
LDF4-50A (1/2 FOAM) (E / #29)	26.00 - 0.00	1	0.15
Feedline Ladder (Af) (Sprint / E / WG "C")	241.00 - 2.00	1	8.45
1/2 (E / #30)	343.67 - 6.00	1	0.25
1/2 (E / #31)	208.50 - 6.00	1	0.25
7/8 (E / #32)	349.75 - 6.00	1	0.54
1/2 (E / #33, 34)	31.00 - 6.00	2	0.25
1/2 (E / #34)	350.00 - 6.00	1	0.25
0.25" Dead Cables (E / #35, 36)	350.00 - 6.00	2	0.26
7/8 (E / #37)	349.50 - 6.00	1	0.54
1 5/8 (E / #38, 39)	350.00 - 6.00	2	1.04
Waveguide Brackets (E / WG "D")	348.00 - 15.00	1	1.15
Climbing Ladder (E)	350.00 - 0.50	1	9.50
Safety Rail (E)	350.00 - 0.00	1	2.75
0.6" SO Cords (E / #40-43)	182.50 - 0.00	4	0.35
0.6" SO Cords (E / #40,43)	269.25 - 182.50	2	0.35
0.6" SO Cord (E / #43)	350.00 - 269.25	1	0.35
0.8" Dead SO Cord (E / #44)	350.00 - 14.00	1	0.40
3/4" Rigid Conduit Unused (E / #45)	338.00 - 0.00	1	1.13
Conduit Shield (E)	35.00 - 12.00	1	18.50
Unused Coduit Supports (E / WG "F")	320.00 - 37.00	1	9.56
Grounding Cable (E)	350.00 - 0.00	1	0.25
3/4" DC Power Cable (ATT / E /	347.00 - 6.00	6	0.80

Description	Placement	#	Weight
	ft		plf
#46,47) 3/4" DC Power Cable (ATT / P)	347.00 - 6.00	2	0.80
1 5/8 (ATT / E / #49-60)	347.00 - 6.00	12	1.04
5/8" Fiber Cable	347.00 - 6.00	3	0.50

Description	Placement	#	Weight
	ft		plf
(ATT / E / #48) Feedline Ladder (Af) (ATT / E / WG "F")	345.00 - 14.50	1	13.50

Discrete Tower Loads

Description	Placement	Weight
	ft	K
4ft Lightning Rod (E / #42)	364.00	0.01 0.01 0.01
Beacon / Strobe (E / #41)	363.00	0.04 0.07 0.09
14ft Mount (E / #41 / 42)	355.00	0.17 0.25 0.33
12ft Whip Antenna (E / #40)	371.00	0.02 0.04 0.06
TMA (E / #40)	353.00	0.03 0.04 0.05
10ft Pipe Mount (E / #40)	360.00	0.05 0.07 0.08
15ft Whip Antenna (E / #39)	364.50	0.03 0.05 0.08
4ft Pipe Mount (E / #39)	356.25	0.02 0.03 0.03
Top Stub Tower (E)	352.00	0.66 0.86 1.06
Whip (E / #38)	369.50	0.02 0.05 0.07
15ft Pipe Mount w/ Guys (E / #38)	355.50	0.13 0.17 0.21
8ft Empty Pipe Mount (E / #37)	349.00	0.04 0.05 0.06
21ft Whip Antenna (E / #36)	349.50	0.03 0.07 0.10
3ft Empty Side Arm Mount (E/ #35)	350.50	0.17 0.24 0.30

Description	Placement	Weight
	ft	K
8ft Whip Antenna (E / #34)	349.75	0.02 0.03 0.04
TA-2335-DAB Panel w/ Pipe Mount (E / #33)	343.25	0.06 0.11 0.17
TA-2335-DAB Panel w/ Pipe Mount (E / #33)	343.25	0.06 0.11 0.17
TA-2335-DAB Panel w/ Pipe Mount (E / #33)	343.25	0.06 0.11 0.17
15ft Whip Antenna (E / #32)	354.50	0.03 0.05 0.08
8ft Pipe Mount (E / #32)	351.00	0.04 0.05 0.06
4ft Whip Antenna (E / #31)	355.50	0.01 0.02 0.03
8ft Pipe Mount (E / #31)	351.00	0.04 0.05 0.06
10ft 4-Element Dipole (E / #30)	354.50	0.03 0.04 0.07
8ft Pipe Mount (E / #30)	351.00	0.04 0.05 0.06
20ft 4-Element Dipole (E / #29)	348.25	0.04 0.09 0.13
6ft Pipe Mount (E / #29)	351.00	0.04 0.05 0.06
Top Platform w/ Rails (E)	350.50	17.00 21.25 25.50
3ft 3-Elem Yagi (Unknown / E / #27)	343.67	0.02 0.03 0.03

Description	Placement	Weight
	ft	K
8ft Pipe Mount on Sector Mount (Unknown / E / #27)	341.00	0.02 0.03 0.03
Raycap DC6-48-60-18-8C Supressor (ATT / E)	347.00	0.02 0.04 0.05
Raycap DC6-48-60-18-8C Supressor (ATT / E)	347.00	0.02 0.04 0.05
Raycap DC6-48-60-18-8C Supressor (ATT / E)	347.00	0.02 0.04 0.05
7770.00 Panels w/ Pipe Mount (ATT / E / #24)	347.00	0.04 0.09 0.15
7770.00 Panels w/ Pipe Mount (ATT / E / #24)	347.00	0.04 0.09 0.15
7770.00 Panels w/ Pipe Mount (ATT / E / #24)	347.00	0.04 0.09 0.15
(2) LGP21401 TMA'S (ATT / E / #24)	347.00	0.02 0.03 0.04
(2) LGP21401 TMA'S (ATT / E / #24)	347.00	0.02 0.03 0.04
(2) LGP21401 TMA'S (ATT / E / #24)	347.00	0.02 0.03 0.04
(2) 7020 RET Motor (ATT / E)	344.50	0.00 0.00 0.00
(2) 7020 RET Motor (ATT / E)	344.50	0.00 0.00 0.00
(2) 7020 RET Motor (ATT / E)	344.50	0.00 0.00 0.00
(2) TPX-070821 Triplexer (ATT / E)	347.00	0.01 0.01 0.02
(2) TPX-070821 Triplexer (ATT / E)	347.00	0.01 0.01 0.02
(2) TPX-070821 Triplexer (ATT / E)	347.00	0.01 0.01 0.02
OPA-65R-LCUU-H4 w/ Pipe Mounts (ATT / E)	347.00	0.08 0.13 0.20
OPA-65R-LCUU-H4 w/ Pipe Mounts (ATT / E)	347.00	0.08 0.13 0.20
OPA-65R-LCUU-H4 w/ Pipe Mounts (ATT / E)	347.00	0.08 0.13 0.20
RRUS-32 (ATT / E)	347.00	0.08 0.10 0.14
RRUS-32 (ATT / E)	347.00	0.08 0.10 0.14
(2) 800-10964 w/ Pipe Mount (ATT / P)	347.00	0.12 0.20 0.28
(2) 800-10964 w/ Pipe Mount (ATT / P)	347.00	0.12 0.20 0.28
(2) 800-10964 w/ Pipe Mount (ATT / P)	347.00	0.12 0.20 0.28
RRUS-4478 B14 (ATT / P)	347.00	0.06 0.07 0.09
RRUS-4478 B14 (ATT / P)	347.00	0.06 0.07 0.09
RRUS-4478 B14 (ATT / P)	347.00	0.06 0.07 0.09
RADIO 8843 B2/B66A (ATT / P)	347.00	0.07 0.09 0.11
RADIO 8843 B2/B66A (ATT / P)	347.00	0.07 0.09 0.11
RADIO 8843 B2/B66A (ATT / P)	347.00	0.07 0.09 0.11
RRUS-4449 B5/B12 RRH's (ATT / P)	347.00	0.07 0.09 0.11
RRUS-4449 B5/B12 RRH's (ATT / P)	347.00	0.07 0.09 0.11
RRUS-4449 B5/B12 RRH's (ATT / P)	347.00	0.07 0.09 0.11
Raycap DC6-48-60-0-8C-EV Supressor (ATT / P)	347.00	0.03 0.04 0.05
12ft V-Frame Mount (Sabre C10857011C) (ATT / P)	347.00	0.55 0.78 1.00
12ft V-Frame Mount (Sabre C10857011C) (ATT / P)	347.00	0.55 0.78 1.00
12ft V-Frame Mount (Sabre C10857011C) (ATT / P)	347.00	0.55 0.78 1.00
Proposed Reinforcement (ATT / P)	350.00 - 339.00	0.35 0.50 0.65
Proposed Reinforcement	350.00 - 339.00	0.35

Description	Placement	Weight
	ft	K
(ATT / P)		0.50
		0.65
Proposed Reinforcement	350.00 - 339.00	0.35
(ATT / P)		0.50
		0.65
4-Way Walkway Platform w/	339.00	10.25
Rails		13.32
(E)		16.40
Corner Ladder	350.00 - 339.00	0.45
(E)		0.59
		0.74
4-Way Face Frame	325.00	3.00
(E)		3.90
		4.79
(4) 14ft Empty Pipe Mounts	306.00	0.06
(E / #21)		0.09
		0.13
OB Light	269.25	0.01
(E / #20)		0.01
		0.02
OB Light	269.25	0.01
(E / #20)		0.01
		0.02
AIR-3246 B66 Panel w/ Pipe	262.00	0.22
Mount		0.29
(T-Mobile / New)		0.37
AIR-3246 B66 Panel w/ Pipe	262.00	0.22
Mount		0.29
(T-Mobile / New)		0.37
AIR-3246 B66 Panel w/ Pipe	262.00	0.22
Mount		0.29
(T-Mobile / New)		0.37
APXVAARR24_43-U-NA20	262.00	0.18
w/ Pipe Mount		0.32
(T-Mobile / New)		0.46
APXVAARR24_43-U-NA20	262.00	0.18
w/ Pipe Mount		0.32
(T-Mobile / New)		0.46
APXVAARR24_43-U-NA20	262.00	0.18
w/ Pipe Mount		0.32
(T-Mobile / New)		0.46
AIR32 B66a/B2a Panel w/	262.00	0.15
Pipe Mount		0.22
(T-Mobile / New)		0.28
AIR32 B66a/B2a Panel w/	262.00	0.15
Pipe Mount		0.22
(T-Mobile / New)		0.28
AIR32 B66a/B2a Panel w/	262.00	0.15
Pipe Mount		0.22
(T-Mobile / New)		0.28
KRY 112 144/2 TMA	262.00	0.01
(T-Mobile / New)		0.02
		0.02
KRY 112 144/2 TMA	262.00	0.01
(T-Mobile / New)		0.02
		0.02
KRY 112 144/2 TMA	262.00	0.01
(T-Mobile / New)		0.02
		0.02

Description	Placement	Weight
	ft	K
RADIO 4449 - B71 + B12	262.00	0.07
(T-Mobile / New)		0.09
		0.11
RADIO 4449 - B71 + B12	262.00	0.07
(T-Mobile / New)		0.09
		0.11
RADIO 4449 - B71 + B12	262.00	0.07
(T-Mobile / New)		0.09
		0.11
13ft T-Frame Mount	262.00	0.35
(T-Mobile / E)		0.48
		0.60
13ft T-Frame Mount	262.00	0.35
(T-Mobile / E)		0.48
		0.60
13ft T-Frame Mount	262.00	0.35
(T-Mobile / E)		0.48
		0.60
12" Square Panel w/ Pipe	255.50	0.01
Mount		0.02
(E / #17)		0.03
25ft Rest Platform w/ Rails	251.50	2.65
(E / #16)		3.58
		4.50
25ft Rest Platform w/ Rails	251.50	2.65
(E / #16)		3.58
		4.50
APXVSPP18-C-A20 w / Pipe	244.00	0.09
Mount		0.16
(Sprint / E / #14)		0.24
APXVSPP18-C-A20 w / Pipe	244.00	0.09
Mount		0.16
(Sprint / E / #14)		0.24
APXVSPP18-C-A20 w / Pipe	244.00	0.09
Mount		0.16
(Sprint / E / #14)		0.24
1900MHz RRH	244.00	0.06
(Sprint / E)		0.08
		0.11
1900MHz RRH	244.00	0.06
(Sprint / E)		0.08
		0.11
1900MHz RRH	244.00	0.06
(Sprint / E)		0.08
		0.11
AAHC	244.00	0.11
(Sprint / New)		0.14
		0.18
AAHC	244.00	0.11
(Sprint / New)		0.14
		0.18
AAHC	244.00	0.11
(Sprint / New)		0.14
		0.18
(2) 800 MHz 2x50W RRH	244.00	0.06
(Sprint / New)		0.09
		0.11
(2) 800 MHz 2x50W RRH	244.00	0.06
(Sprint / New)		0.09

Description	Placement	Weight
	ft	K
		0.11
(2) 800 MHz 2x50W RRH	244.00	0.06
(Sprint / New)		0.09
		0.11
13ft Sector Mount	244.25 - 241.50	0.57
(Sprint / E / #13-15)		0.78
		0.98
13ft Sector Mount	244.25 - 241.50	0.57
(Sprint / E / #13-15)		0.78
		0.98
13ft Sector Mount	244.25 - 241.50	0.57
(Sprint / E / #13-15)		0.78
		0.98
7ft 5-Elem Yagi	208.50	0.01
(E / #12)		0.02
		0.03
5ft Pipe Mount	204.50	0.03
(E / #12)		0.03
		0.04
Corner Rest Platform	191.50	0.75
(E / #11)		1.01
		1.27
Corner Rest Platform	191.50	0.75
(E / #11)		1.01
		1.27
Corner Rest Platform	191.50	0.75
(E / #11)		1.01
		1.27
Corner Rest Platform	191.50	0.75
(E / #11)		1.01
		1.27
Beacon Ice Shield	186.00	0.10
(E / #10)		0.14
		0.17
Beacon Ice Shield	186.00	0.10
(E / #10)		0.14
		0.17
Beacon / Strobe	182.50	0.14
(E / #9)		0.18
		0.22
Beacon / Strobe	182.50	0.14
(E / #9)		0.18
		0.22
41ft Rest Platform w/ Rails	125.00	3.75
(E / #8)		5.50
		7.25
41ft Rest Platform w/ Rails	125.00	3.75
(E / #8)		5.50
		7.25
4ft Rest Platform w/ Rails	100.00	0.45
(E / #7)		0.61
		0.77
OB Light	93.00	0.01
(E / #6)		0.01
		0.02
OB Light	93.00	0.01
(E / #6)		0.01
		0.02
4ft Rest Platform w/ Rails	50.25	0.45

Description	Placement	Weight
	ft	K
(E / #5)		0.61
		0.77
4ft Side Arm	46.50	0.55
(E / #4)		0.78
		1.00
Corner Rest Platform	26.00	0.75
(E / #3)		1.01
		1.27
Corner Rest Platform	26.00	0.75
(E / #3)		1.01
		1.27
Corner Rest Platform	26.00	0.75
(E / #3)		1.01
		1.27
Corner Rest Platform	26.00	0.75
(E / #3)		1.01
		1.27
GPS w/ Pipe Mount	26.00	0.01
(E / #2)		0.01
		0.01
10ft Pipe Mount w/ Standoff	34.00 - 24.00	0.12
(E / #1)		0.16
		0.19
Face Frame w/ Knee Braces	25.00 - 16.67	8.50
(E)		11.05
		13.60
(3) JAHH-65B-R3B w/ Pipe	140.00	0.11
Mount		0.19
(VzW / New / F)		0.27
(3) JAHH-45B-R3B w/ pipe	140.00	0.14
mount		0.22
(VzW / New / F)		0.32
(3) JAHH-45B-R3B w/ pipe	140.00	0.14
mount		0.22
(VzW / New / F)		0.32
BSAMNT-SBS-2-3	140.00	0.11
Side-By-Side Mounting Kit		0.12
(VzW / New)		0.12
BSAMNT-SBS-2-2	140.00	0.07
Side-By-Side Mounting Kit		0.07
(VzW / New)		0.07
BSAMNT-SBS-2-2	140.00	0.07
Side-By-Side Mounting Kit		0.07
(VzW / New)		0.07
B13 RRH4x30	140.00	0.06
(VzW / New)		0.08
		0.10
B13 RRH4x30	140.00	0.06
(VzW / New)		0.08
		0.10
B13 RRH4x30	140.00	0.06
(VzW / New)		0.08
		0.10
B66A RRH4x45W	140.00	0.06
(VzW / New)		0.08
		0.11
B66A RRH4x45W	140.00	0.06
(VzW / New)		0.08
		0.11

Description	Placement	Weight
	ft	K
B66A RRH4x45W	140.00	0.06
(VzW / New)		0.08
		0.11
B25 RRH4x30W	140.00	0.06
(VzW / New)		0.08
		0.10
B25 RRH4x30W	140.00	0.06
(VzW / New)		0.08
		0.10
B25 RRH4x30W	140.00	0.06
(VzW / New)		0.08
		0.10
B5 RRH4x40W - LOC	140.00	0.05
(VzW / F)		0.06
		0.08
B5 RRH4x40W - LOC	140.00	0.05
(VzW / F)		0.06
		0.08
B5 RRH4x40W - LOC	140.00	0.05
(VzW / F)		0.06

Description	Placement	Weight
	ft	K
		0.08
RVZDC-6627-PF-48 OVP	140.00	0.03
Box w/ Bracket		0.07
(VzW / New)		0.11
RVZDC-6627-PF-48 OVP	140.00	0.03
Box w/ Bracket		0.07
(VzW / New)		0.11
RVZDC-6627-PF-48 OVP	140.00	0.03
Box w/ Bracket		0.07
(VzW / New)		0.11
D&D Welding 12ft Arch	140.00	0.38
Boom Mount		0.50
(VzW / New)		0.63
D&D Welding 12ft Arch	140.00	0.38
Boom Mount		0.50
(VzW / New)		0.63
D&D Welding 12ft Arch	140.00	0.38
Boom Mount		0.50
(VzW / New)		0.63

Dishes

Description	Elevation	Weight
	ft	K
3ft Dish	47.50	0.09
(E / #4)		0.13
		0.17
4ft Dish	31.00	0.10
(E / #1)		0.17
		0.24

Load Combinations

Comb. No.	Description
1	Dead Only
2	1.2 Dead+1.6 Wind 0 deg - No Ice
3	0.9 Dead+1.6 Wind 0 deg - No Ice
4	1.2 Dead+1.6 Wind 45 deg - No Ice
5	0.9 Dead+1.6 Wind 45 deg - No Ice
6	1.2 Dead+1.6 Wind 90 deg - No Ice
7	0.9 Dead+1.6 Wind 90 deg - No Ice
8	1.2 Dead+1.6 Wind 135 deg - No Ice
9	0.9 Dead+1.6 Wind 135 deg - No Ice
10	1.2 Dead+1.6 Wind 180 deg - No Ice
11	0.9 Dead+1.6 Wind 180 deg - No Ice
12	1.2 Dead+1.6 Wind 225 deg - No Ice
13	0.9 Dead+1.6 Wind 225 deg - No Ice
14	1.2 Dead+1.6 Wind 270 deg - No Ice
15	0.9 Dead+1.6 Wind 270 deg - No Ice
16	1.2 Dead+1.6 Wind 315 deg - No Ice
17	0.9 Dead+1.6 Wind 315 deg - No Ice
18	1.2 Dead+1.0 Ice+1.0 Temp

Comb. No.	Description
19	1.2 Dead+1.0 Wind 0 deg+1.0 Ice+1.0 Temp
20	1.2 Dead+1.0 Wind 45 deg+1.0 Ice+1.0 Temp
21	1.2 Dead+1.0 Wind 90 deg+1.0 Ice+1.0 Temp
22	1.2 Dead+1.0 Wind 135 deg+1.0 Ice+1.0 Temp
23	1.2 Dead+1.0 Wind 180 deg+1.0 Ice+1.0 Temp
24	1.2 Dead+1.0 Wind 225 deg+1.0 Ice+1.0 Temp
25	1.2 Dead+1.0 Wind 270 deg+1.0 Ice+1.0 Temp
26	1.2 Dead+1.0 Wind 315 deg+1.0 Ice+1.0 Temp
27	Dead+Wind 0 deg - Service
28	Dead+Wind 45 deg - Service
29	Dead+Wind 90 deg - Service
30	Dead+Wind 135 deg - Service
31	Dead+Wind 180 deg - Service
32	Dead+Wind 225 deg - Service
33	Dead+Wind 270 deg - Service
34	Dead+Wind 315 deg - Service

Maximum Tower Deflections - Service Wind

Section No.	Elevation ft	Horz. Deflection in	Gov. Load Comb.	Tilt °	Twist °
T1	351.67 - 337.5	0.907	28	0.0331	0.0094
T2	337.5 - 325	0.802	28	0.0328	0.0090
T3	325 - 312.5	0.706	28	0.0315	0.0085
T4	312.5 - 300	0.612	28	0.0299	0.0080
T5	300 - 287.5	0.518	28	0.0282	0.0072
T6	287.5 - 275	0.433	28	0.0257	0.0064
T7	275 - 262.5	0.354	28	0.0227	0.0056
T8	262.5 - 250	0.277	28	0.0200	0.0047
T9	250 - 225	0.204	28	0.0170	0.0037
T10	225 - 200	0.110	32	0.0112	0.0024
T11	200 - 175	0.043	32	0.0059	0.0012

Critical Deflections and Radius of Curvature - Service Wind

Elevation ft	Appurtenance	Gov. Load Comb.	Deflection in	Tilt °	Twist °	Radius of Curvature ft
371.00	12ft Whip Antenna	28	0.907	0.0331	0.0094	660500
369.50	Whip	28	0.907	0.0331	0.0094	660500
364.50	15ft Whip Antenna	28	0.907	0.0331	0.0094	660500
364.00	4ft Lightning Rod	28	0.907	0.0331	0.0094	660500
363.00	Beacon / Strobe	28	0.907	0.0331	0.0094	660500
360.00	10ft Pipe Mount	28	0.907	0.0331	0.0094	660500
356.25	4ft Pipe Mount	28	0.907	0.0331	0.0094	660500
355.50	15ft Pipe Mount w/ Guys	28	0.907	0.0331	0.0094	660500
355.00	14ft Mount	28	0.907	0.0331	0.0094	660500
354.50	15ft Whip Antenna	28	0.907	0.0331	0.0094	660500
353.00	TMA	28	0.907	0.0331	0.0094	660500
352.00	Top Stub Tower	28	0.907	0.0331	0.0094	660500
351.00	8ft Pipe Mount	28	0.902	0.0331	0.0093	660500
350.50	3ft Empty Side Arm Mount	28	0.898	0.0331	0.0093	660500
350.00	Proposed Reinforcement	28	0.894	0.0331	0.0093	660500
349.75	8ft Whip Antenna	28	0.893	0.0331	0.0093	660500
349.50	21ft Whip Antenna	28	0.891	0.0331	0.0093	660500
349.00	8ft Empty Pipe Mount	28	0.887	0.0331	0.0093	660500
348.25	20ft 4-Element Dipole	28	0.882	0.0331	0.0093	660500
347.00	Raycap DC6-48-60-18-8C Supressor	28	0.873	0.0331	0.0092	660500
344.50	(2) 7020 RET Motor	28	0.854	0.0331	0.0092	460598
343.67	3ft 3-Elem Yagi	28	0.848	0.0331	0.0092	412811
343.25	TA-2335-DAB Panel w/ Pipe Mount	28	0.845	0.0331	0.0091	392219
341.00	8ft Pipe Mount on Sector Mount	28	0.828	0.0330	0.0091	311580
339.00	Proposed Reinforcement	28	0.813	0.0329	0.0090	280576
325.00	4-Way Face Frame	28	0.706	0.0315	0.0085	332901
306.00	(4) 14ft Empty Pipe Mounts	28	0.563	0.0291	0.0076	508695
269.25	OB Light	28	0.318	0.0215	0.0052	Inf
262.00	AIR-3246 B66 Panel w/ Pipe Mount	28	0.274	0.0199	0.0047	Inf
255.50	12" Square Panel w/ Pipe Mount	28	0.234	0.0183	0.0041	132490
251.50	25ft Rest Platform w/ Rails	28	0.212	0.0173	0.0038	85449
244.25	13ft Sector Mount	28	0.177	0.0155	0.0033	92989
244.00	APXVSPP18-C-A20 w / Pipe Mount	28	0.176	0.0155	0.0033	94267
242.88	13ft Sector Mount	28	0.171	0.0152	0.0032	100481
241.50	13ft Sector Mount	28	0.166	0.0149	0.0031	109285
208.50	7ft 5-Elem Yagi	32	0.064	0.0077	0.0016	256094
204.50	5ft Pipe Mount	32	0.053	0.0069	0.0014	204856

Elevation ft	Appurtenance	Gov. Load Comb.	Deflection in	Tilt °	Twist °	Radius of Curvature ft
191.50	Corner Rest Platform	32	0.026	0.0040	0.0008	253324
186.00	Beacon Ice Shield	32	0.016	0.0027	0.0005	379985
182.50	Beacon / Strobe	32	0.011	0.0018	0.0003	557312

Maximum Tower Deflections - Design Wind

Section No.	Elevation ft	Horz. Deflection in	Gov. Load Comb.	Tilt °	Twist °
T1	351.67 - 337.5	3.366	4	0.1200	0.0360
T2	337.5 - 325	2.984	4	0.1191	0.0345
T3	325 - 312.5	2.632	4	0.1145	0.0327
T4	312.5 - 300	2.289	4	0.1087	0.0308
T5	300 - 287.5	1.942	4	0.1024	0.0275
T6	287.5 - 275	1.626	4	0.0933	0.0245
T7	275 - 262.5	1.334	4	0.0825	0.0215
T8	262.5 - 250	1.048	4	0.0727	0.0180
T9	250 - 225	0.776	4	0.0616	0.0139
T10	225 - 200	0.424	8	0.0407	0.0091
T11	200 - 175	0.161	12	0.0215	0.0044

Section Capacity Table

Section No.	Elevation ft	Component Type	Size	Critical Element	P K	ϕP_{allow} K	% Capacity	Pass Fail
T1	351.67 - 337.5	Leg	L6x6x5/8	3	-24.79	179.77	13.8	Pass
		Diagonal	L3 1/2x3 1/2x5/16	14	-8.21	20.67	39.7	Pass
		Secondary Horizontal	L3x3x1/4	18	-2.28	15.87	14.4	Pass
		Top Girt	C8x11.5	5	-0.15	54.59	0.7	Pass
T2	337.5 - 325	Leg	L6x6x5/8	23	-32.09	180.87	17.7 25.6 (b)	Pass
		Diagonal	L3 1/2x3 1/2x5/16	34	-10.88	19.20	56.7	Pass
		Horizontal	C7x9.8	25	3.76	87.64	4.3 9.0 (b)	Pass
		Secondary Horizontal	L3x2 1/2x1/4	38	-0.48	8.46	5.7	Pass
T3	325 - 312.5	Leg	L6x6x7/8	43	-51.90	247.24	21.0	Pass
		Diagonal	L3 1/2x4x5/16	59	-12.01	20.13	59.6	Pass
		Horizontal	2L2 1/2x2 1/2x1/4x3/8	47	6.24	63.37	9.8 11.6 (b)	Pass
		Secondary Horizontal	L3x2 1/2x1/4	63	-0.78	7.02	11.1	Pass
		Inner Bracing	2L2x2 1/2x1/4x3/8	53	0.01	69.01	0.8	Pass
T4	312.5 - 300	Leg	L6x6x7/8	68	-64.19	253.32	25.3 38.4 (b)	Pass
		Diagonal	2L2 1/2x2 1/2x1/4x3/8	88	-15.12	21.60	70.0	Pass
		Horizontal	2L2 1/2x2 1/2x1/4x3/8	84	-8.52	31.81	26.8	Pass
		Redund Horz 1 Bracing	L2 1/2x2 1/2x3/16	86	-0.97	15.09	6.4	Pass
		Redund Diag 1 Bracing	L2 1/2x2x3/16	83	-0.79	4.69	16.9	Pass
		Inner Bracing	2L2x2 1/2x1/4x3/8	102	-0.02	3.55	0.9	Pass
T5	300 - 287.5	Leg	L6x6x7/8	105	-82.54	253.32	32.6	Pass
		Diagonal	2L2 1/2x2 1/2x5/16x3/8	125	-15.89	25.05	63.4	Pass
		Horizontal	2L2 1/2x2 1/2x1/4x3/8	121	-10.20	26.71	38.2	Pass
		Redund Horz 1 Bracing	L2 1/2x2 1/2x1/4	119	-1.24	18.49	6.7	Pass
		Redund Diag 1 Bracing	L2 1/2x2 1/2x1/4	120	-0.96	8.41	11.4	Pass

Section No.	Elevation ft	Component Type	Size	Critical Element	P K	oP_{allow} K	% Capacity	Pass Fail
		Inner Bracing	2L2 1/2x2 1/2x1/4x3/8	139	-0.02	5.50	1.1	Pass
T6	287.5 - 275	Leg	L6x6x7/8	142	-101.09	253.32	39.9 48.4 (b)	Pass
		Diagonal	2L2 1/2x2 1/2x5/16x3/8	162	-16.46	23.23	70.9	Pass
		Horizontal	2L2 1/2x2 1/2x1/4x3/8	158	-10.97	22.98	47.7	Pass
		Redund Horz 1 Bracing	L2 1/2x2 1/2x1/4	156	-1.52	16.35	9.3	Pass
		Redund Diag 1 Bracing	L2 1/2x2 1/2x1/4	157	-1.11	7.74	14.4	Pass
		Inner Bracing	2L2 1/2x2 1/2x1/4x3/8	176	-0.02	4.61	1.2	Pass
T7	275 - 262.5	Leg	L8x8x3/4	179	-119.76	327.61	36.6	Pass
		Diagonal	2L2 1/2x2 1/2x1/4x3/8	201	-17.11	30.68	55.8	Pass
		Horizontal	2L2 1/2x2 1/2x1/4x3/8	197	-11.84	19.98	59.3	Pass
		Redund Horz 1 Bracing	L2 1/2x2 1/2x3/16	193	-1.80	11.03	16.3	Pass
		Redund Diag 1 Bracing	L2 1/2x2 1/2x3/16	194	-1.26	5.50	23.0	Pass
		Redund Hip 1 Bracing	L3x3x1/4	195	-0.05	11.22	0.6	Pass
		Redund Hip Diagonal 1 Bracing	2L2 1/2x2 1/2x1/4x3/8	196	-0.11	9.97	1.1	Pass
		Inner Bracing	2L2 1/2x2 1/2x3/16x3/8	221	-0.02	3.03	1.6	Pass
T8	262.5 - 250	Leg	L8x8x3/4	224	-142.19	327.61	43.4 56.8 (b)	Pass
		Diagonal	2L2 1/2x2 1/2x1/4x3/8	246	-19.62	28.93	67.8	Pass
		Horizontal	2L2 1/2x2 1/2x1/4x3/8	242	-14.14	17.73	79.7	Pass
		Redund Horz 1 Bracing	L2 1/2x2 1/2x3/16	238	-2.14	9.40	22.7	Pass
		Redund Diag 1 Bracing	L2 1/2x2 1/2x3/16	239	-1.44	5.22	27.6	Pass
		Redund Hip 1 Bracing	L3x3x1/4	260	-0.05	9.65	0.6	Pass
		Redund Hip Diagonal 1 Bracing	2L2 1/2x2 1/2x1/4x3/8	241	-0.11	8.81	1.3	Pass
		Inner Bracing	2L2 1/2x2 1/2x3/16x3/8	266	-0.02	2.60	1.7	Pass
T9	250 - 225	Leg	L8x8x7/8	269	-154.41	344.61	44.8 61.6 (b)	Pass
		Diagonal	2L2.5x3x5/16 + 2L3x3x3/8	303	-37.17	58.63	63.4 69.3 (b)	Pass
		Horizontal	2L3x2 1/2x1/4x3/8	297	-16.28	24.69	65.9	Pass
		Redund Horz 1 Bracing	2L1 3/4x1 3/4x3/16	299	-2.32	18.90	12.3	Pass
		Redund Horz 2 Bracing	2L2 1/2x2 1/2x1/4x3/8	291	-2.32	28.33	8.2	Pass
		Redund Diag 1 Bracing	2L2x2x3/16	292	-2.34	11.88	19.7	Pass
		Redund Diag 2 Bracing	2L2 1/2x2x3/16x3/8	307	-8.54	12.12	70.4	Pass
		Redund Hip 2 Bracing	L3 1/2x3 1/2x5/16	325	-0.18	9.30	1.9	Pass
		Redund Hip Diagonal 2 Bracing	2L2 1/2x2 1/2x1/4x3/8	296	-0.14	6.33	2.3	Pass
		Redund Sub Horz Bracing	2L2 1/2x2 1/2x1/4x3/8	294	-9.99	20.40	49.0	Pass
		Inner Bracing	2L2 1/2x2 1/2x1/4x3/8	331	-0.03	11.69	1.5	Pass
T10	225 - 200	Leg	L8x8x1 1/8	334	-204.68	434.78	47.1 70.0 (b)	Pass
		Diagonal	2L2.5x3x5/16 + 2L3x3x3/8	368	-38.33	51.39	74.6	Pass
		Horizontal	2L3x2 1/2x1/4x3/8	348	-18.85	51.94	36.3 42.4 (b)	Pass
		Redund Horz 1	2L1 3/4x1 3/4x3/16	355	-3.08	17.87	17.2	Pass

Section No.	Elevation ft	Component Type	Size	Critical Element	P K	$øP_{allow}$ K	% Capacity	Pass Fail
		Bracing						
		Redund Horz 2 Bracing	2L2 1/2x2 1/2x1/4x3/8	356	-3.08	21.77	14.1	Pass
		Redund Diag 1 Bracing	2L2x2x3/16	357	-2.82	10.92	25.8	Pass
		Redund Diag 2 Bracing	2L2 1/2x2x3/16x3/8	353	-6.02	10.35	58.2	Pass
		Redund Hip 2 Bracing	L4x4x3/8	390	-0.20	12.87	1.5	Pass
		Redund Hip Diagonal 2 Bracing	2L2 1/2x2 1/2x1/4x3/8	361	-0.14	5.15	2.8	Pass
		Redund Sub Horz Bracing	2L2 1/2x2 1/2x1/4x3/8	359	-7.57	16.28	46.5	Pass
		Inner Bracing	L3x3x1/4	396	-0.02	3.25	2.1	Pass
T11	200 - 175	Leg	L8x8x1 1/8	399	-252.49	522.80	48.3 75.6 (b)	Pass
		Diagonal	2L2.5x3.5x5/16 + 2L3x3.5x3/8	433	-42.56	70.20	60.6	Pass
		Horizontal	2L3 1/2x2 1/2x1/4x3/8	413	-21.95	53.17	41.3 49.1 (b)	Pass
		Redund Horz 1 Bracing	2L1 3/4x1 3/4x3/16	429	-3.80	16.78	22.6	Pass
		Redund Horz 2 Bracing	2L2 1/2x2 1/2x1/4x3/8	421	-3.80	17.25	22.0	Pass
		Redund Diag 1 Bracing	2L2x2x3/16	422	-3.21	10.05	31.9	Pass
		Redund Diag 2 Bracing	2L2 1/2x2x3/16x3/8	418	-8.12	8.88	91.4	Pass
		Redund Hip 2 Bracing	L4x4x3/8	455	-0.20	10.27	1.9	Pass
		Redund Hip Diagonal 2 Bracing	2L2 1/2x2 1/2x1/4x3/8	426	-0.15	4.26	3.5	Pass
		Redund Sub Horz Bracing	2L2 1/2x3x1/4x3/8	424	-10.94	14.08	77.6	Pass
		Inner Bracing	2L3x2 1/2x1/4x3/8	461	-0.04	12.07	2.1	Pass

*Elev. 175-351.67ft – Modelled in TnxTower.

Section No.	Elevation ft	Component Type	Member Size	P kips	Pallow kips	% Cap. Member	% Cap. Bolt	Pass Fail
T12	175 - 150	*Legs - A	ST L808018	274.39	522.8	52.48	92.42	Pass
		*Diagonals - B / Bolt Replacement One End Only	2L2.5x3x5/16 + 2L3x3x3/8	62.32	101.93	61.14	65.31	Pass
		*Horizontals - O / Added Redundant Braces	LD L35255 SP 0.4375	39.53	65	60.81	62.14	Pass
		*Red Horiz 1 - C (LLV)	ST L25203	1.33	13.41	9.92	8.36	Pass
		*Red Diag 1 - D	ST L30303	1.47	8.13	18.09	9.24	Pass
		*Red Horiz 2 - E	LD L25254 SP 0.375	1.86	53.8	3.46	5.85	Pass
		*Red Diag 2 - L	LD L30306 SP 0.4375	26.68	37.98	70.25	41.94	Pass
		*Red Sub Diagonal - M / New Reinforcement	2L3x2.5x1/4 + L3.5x2.5x3/8	41.38	59.54	69.5	43.36	Pass
		*Red Vertical - N	ST L30304	0.02	11.34	0.18	0.13	Pass
		*Red Sub Horizontal - F / Bolt Replacement	LD L30304 SP 0.4375	32.17	46.52	69.15	40.45	Pass
		*Hip Horizontal 2 - G	LD L40304 SP 0.375	3.48	89.16	3.9	10.94	Pass
		*Hip Diagonal 2 - K	LD L25254 SP 0.375	6.19	16.99	36.44	19.46	Pass
		*Hip Horz 2 Sub Braces - H (LLV)	ST L30254	0.24	17.78	1.35	1.51	Pass
		*Level 1 Internal Sub Diagonals - J	ST L30304	2.26	13.17	17.16	14.21	Pass
		*Level 1 Internal Horizontal - I	LD L40304 SP 0.375	5.01	71.54	7	15.75	Pass
		*Level 2 Internal Corner Diagonals - Q	ST L30304	2.33	9.62	24.23	14.65	Pass
		*Level 2 Internal Middle Diagonals - S	ST L30304	2.34	9.42	24.85	14.71	Pass
		*Level 2 Internal Corner Diagonals Sub Braces - P	ST L30254	2.24	12.19	18.38	14.08	Pass
		*Level 2 Internal Horizontal - R	LD L40304 SP 0.375	2.16	46.83	4.61	6.79	Pass
T13	150 - 125	*Legs - A	ST L808018	284.25	522.39	54.41	80.39	Pass
		*Diagonals - B / Reinforcement / Bolt Replacement	2L3x3.5x3/8 + 2L3x3.5x3/8	90.85	105.63	86.01	81.6	Pass
		*Horizontals - K / Added Redundant Braces	LD L35305 SP 0.4375	59.78	80.3	74.45	93.97	Pass
		*Red Horiz 1 - C (LLV)	ST L25204	1.79	22.08	8.11	11.25	Pass
		*Red Diag 1 - D	ST L30303	2.39	8.65	27.62	15.03	Pass
		*Red Horiz 2 - E	SD L25203 SP 0.375	5.93	16.82	35.26	18.64	Pass
		*Red Diag 2 - I / Replace Existing	LD L35356 SP 0.4375	56.78	71.18	79.77	89.25	Pass
		*Red Sub Diagonal - J / New Reinf. - Replace Bolts	2L3x2.5x1/4 + L3.5x2.5x3/8	47.12	55.38	85.08	39.5	Pass
		*Red Sub Horizontal - F / Add Kicker Internal	LD L40406 SP 0.5	42.39	55.51	76.36	66.63	Pass
		*Hip Horizontal 2 - G	SD L30254 SP 0.375	0	23.37	0	0	Pass
		*Hip Diagonal 2 - H	LD L25254 SP 0.375	0.01	16.35	0.06	0.03	Pass
		*Internal Corner Diagonals - M (LLH)	ST L35304	1.77	10.39	17.04	11.13	Pass
		*Internal Middle Diagonals - N (LLV)	ST L35304	1.55	9.45	16.41	9.75	Pass
		*Internal Corner Diagonals Sub Braces - L (LLV)	ST L30254	4.92	10.42	47.24	30.94	Pass

Section No.	Elevation ft	Component Type	Member Size	P kips	Pallow kips	% Cap. Member	% Cap. Bolt	Pass Fail
		*Internal Horizontal - O (LLV)	LD L40304 SP 0.375	3.82	39.7	9.62	12.01	Pass
T14	125 - 100	*Legs - A / Replace Bolts @ 103.5ft Approx.	ST L808016	361.39	497.74	72.61	47.7	Pass
		*Diagonals - B / Bolt Replacement One End Only	2L3x3.5x3/8 + 2L3x3.5x3/8	82.67	92.98	88.91	51.98	Pass
		*Horizontals - K / Added Redundant Braces	LD L40355 SP 0.4375	61.13	92.83	65.85	76.87	Pass
		*Red Horiz 1 - C (LLV)	ST L25203	1.52	12.93	11.75	9.56	Pass
		*Red Diag 1 - D	ST L30303	1.7	8.03	21.18	10.69	Pass
		*Red Horiz 2 - E	LD L25254 SP 0.4375	2.07	26.66	7.76	6.51	Pass
		*Red Diag 2 - I	LD L35356 SP 0.4375	49.6	63.66	77.91	77.97	Pass
		*Red Sub Diagonal - J / New Reinforcement	2L3x3x3/8 + L3.5x3x3/8	49.06	102.21	48	51.41	Pass
		*Red Sub Horizontal - F / Add Kicker Internal	LD L40406 SP 0.5	46.11	56.75	81.25	48.32	Pass
		*Hip Horizontal 2 - G	SD L30254 SP 0.375	0.01	14.86	0.07	0.03	Pass
		*Hip Diagonal 2 - H	LD L25254 SP 0.375	0	15.07	0	0	Pass
		*Internal Corner Diagonals - M	ST L35354	3.09	10.55	29.29	19.43	Pass
		*Internal Middle Diagonals - N	ST L35354	2.75	10.93	25.15	17.29	Pass
		*Internal Corner Diagonals Sub Braces - L	ST L35354	6.54	17.07	38.31	41.12	Pass
		*Internal Horizontal - O	LD L40354 SP 0.375	5.31	37.75	14.07	16.69	Pass
T15	100 - 75	*Legs - A / Replace Bolts @ 78.5ft Approx.	ST L808016	469.57	497.74	94.34	54.23	Pass
		*Diagonals - B	2L3x3.5x3/8 + 2L3x3.5x3/8	63.92	139	45.99	80.38	Pass
		*Horizontals - Q / New Reinforcement	2L3.5x3x5/16 + L4x3.5x3/8	50.1	97.93	51.16	78.75	Pass
		*Red Horiz 1 - C	ST L25253	1.46	9.37	15.58	9.18	Pass
		*Red Diag 1 - D	LD L25253 SP 0.375	1.2	15.4	7.79	3.77	Pass
		*Red Horiz 2 - E	LD L25254 SP 0.5	1.83	40.09	4.56	5.75	Pass
		*Red Diag 2 - M / Replace Existing Member	LD L35356 SP 0.4375	25.53	38	67.18	40.13	Pass
		*Red Sub Diagonal - O	LD L40408 SP 0.4375	63.97	75.65	84.56	40.22	Pass
		*Red Sub Horizontal - F / Add Kicker Internal	SD L35304 SP 0.5	18.03	24.98	72.17	56.68	Pass
		*Red Vertical Outside - N	ST L25254	0.05	6.48	0.77	0.31	Pass
		*Red Vertical Center - P	ST L25254	0	6.48	0	0	Pass
		*Hip Horizontal 1 - CC	ST L30303	0.07	7.1	0.99	0.44	Pass
		*Hip Horizontal 2 - G	LD L35254 SP 0.375	0.05	49.46	0.1	0.16	Pass
		*Hip Diagonal 2 - J	LD L25254 SP 0.375	0.01	33.01	0.03	0.03	Pass
		*Hip SubDiagonal 2 - K	ST L25253	0	6.63	0	0	Pass
		*Hip SubVertical 2 - L	ST L25253	0	17.13	0	0	Pass
		*Hip SubInternal 2 - I	ST L30303	0	7.1	0	0	Pass

Section No.	Elevation ft	Component Type	Member Size	P kips	Pallow kips	% Cap. Member	% Cap. Bolt	Pass Fail
		*Hip SubInternal 2 - H	ST L25253	0	8.1	0	0	Pass
		*Internal Corner Horizontal 1 - V	ST L30303	0.07	10.18	0.69	0.44	Pass
		*Internal Corner Diagonal 1 - U	ST L25253	0.05	8.8	0.57	0.31	Pass
		*Internal Corner Horizontal 2 - T	LD L30254 SP 0.375	4.26	40.08	10.63	13.39	Pass
		*Internal Corner Diagonal 2 - S	SD L30254 SP 0.375	2.4	43.73	5.49	7.55	Pass
		*Internal Corner Diagonal 2 - W	ST L30303	3.95	7.82	50.49	24.84	Pass
		*Internal Corner Horizontal 3 - R	LD L35254 SP 0.4375	5.99	53.92	11.11	18.83	Pass
		*Internal Corner Diagonal 3 - X	LD L30304 SP 0.375	5.59	47.01	11.89	17.57	Pass
T16	75 - 50	*Legs - A / Add Redundants / Replace Bolts	ST L808016	530.2	625.5	84.76	54.43	Pass
		*Diagonals - B	2L3x3.5x3/8 + 2L3x3.5x3/8	65.44	140.71	46.51	82.29	Pass
		*Horizontals - Q / New Reinforcement	2L4x3x1/4 + L4x3.5x3/8	53.28	76.37	69.76	67	Pass
		*Red Horiz 1 - C	ST L25253	1.15	8.72	13.19	7.23	Pass
		*Red Diag 1 - D	LD L25254 SP 0.375	5.1	38.59	13.22	16.03	Pass
		*Red Horiz 2 - E	LD L30254 SP 0.5	2.26	51.49	4.39	7.1	Pass
		*Red Diag 2 - M	LD L35356 SP 0.4375	27.76	70.68	39.28	62.84	Pass
		*Red Sub Diagonal - O / New Reinforcement	2L4x4x1/2 + L4x4x3/8	66.44	163.61	40.61	41.77	Pass
		*Red Sub Horizontal - F / Add Kicker Internal	SD L35304 SP 0.5	19.01	21.93	86.67	59.76	Pass
		*Red Vertical Outside - N	ST L25254	0.06	6.48	0.93	0.38	Pass
		*Red Vertical Center - P	ST L25254	0	6.48	0	0	Pass
		*Hip Horizontal 1 - CC	ST L30303	0.1	6.19	1.62	0.63	Pass
		*Hip Horizontal 2 - G	LD L35254 SP 0.375	0.06	46.3	0.13	0.19	Pass
		*Hip Diagonal 2 - J	LD L25254	0.03	29.89	0.1	0.09	Pass
		*Hip SubDiagonal 2 - K	ST L25253	0.01	5.97	0.17	0.06	Pass
		*Hip SubVertical 2 - L	ST L25253	0	17.13	0	0	Pass
		*Hip SubInternal 2 - I	ST L30303	0	6.19	0	0	Pass
		*Hip SubInternal 2 - H	ST L25253	0	7.06	0	0	Pass
		*Internal Corner Horizontal 1 - V	ST L30303	0.06	12.27	0.49	0.38	Pass
		*Internal Corner Diagonal 1 - U	ST L25253	0.05	7.25	0.69	0.31	Pass
		*Internal Corner Horizontal 2 - T	LD L30254 SP 0.375	5.05	37.03	13.64	15.88	Pass
		*Internal Corner Diagonal 2 - S	SD L30254 SP 0.375	2.9	40.52	7.16	9.12	Pass
		*Internal Corner Diagonal 2 - W	ST L30303	4.99	6.77	73.67	31.38	Pass
		*Internal Corner Horizontal 3 - R	LD L40356 SP 0.375	5.95	106.7	5.58	18.71	Pass
		*Internal Corner Diagonal 3 - X	LD L30304 SP 0.375	7.08	43.03	16.46	22.26	Pass
T17	50 - 25	*Legs - A / Replace Bolts @ 28.5ft Approx.	ST L808016	595.18	625.11	95.21	61.1	Pass
		*Diagonals - B	2L3x4x3/8 + 2L3x4x3/8	69.62	129.59	53.72	87.55	Pass

Section No.	Elevation ft	Component Type	Member Size	P kips	Pallow kips	% Cap. Member	% Cap. Bolt	Pass Fail
		*Horizontals - X / New Reinforcement	2L4x3x5/16 + L4x3.5x3/8	57.81	79.09	73.09	72.7	Pass
		*Red Horiz 1 - E	ST L25254	1.35	9.95	13.56	8.49	Pass
		*Red Diag 1 - G	LD L25253 SP 0.4375	5.24	36.86	14.21	16.47	Pass
		*Red Horiz 2 - M	LD L25254 SP 0.5	3.44	33.58	10.24	10.81	Pass
		*Red Diag 2 - T	LD L35356 SP 0.4375	30.66	92.25	33.23	48.19	Pass
		*Red Sub Horiz 1 - C	ST L25254	2.69	24.86	10.82	16.91	Pass
		*Red Sub Diag 1 - D	ST L25254	2.87	15.38	18.67	25.99	Pass
		*Red Sub Diag 2 - F	ST L25254	5.07	13.28	38.17	45.9	Pass
		*Red Sub Horiz 2 - H	ST L25254	4.74	24.85	19.07	42.92	Pass
		*Red Sub Diag 3 - R	ST L25254	2.2	5.78	38.09	19.92	Pass
		*Red Sub Horiz 3 - S	ST L25254	2.93	8.06	36.34	26.53	Pass
		*Red Sub Diagonal - V / New Reinforcement	2L4x4x1/2 + L4x4x3/8	70.95	151.83	46.73	44.61	Pass
		*Red Sub Horizontal - N / Add Kicker Internal	SD L40304 SP 0.5	21.06	21.43	98.3	66.21	Pass
		*Red Vertical Outside - U	ST L25254	0.06	6.48	0.93	0.38	Pass
		*Red Vertical Center - W	ST L25254	0	6.48	0	0	Pass
		*Hip Horizontal 1 - I	ST L40406	0.09	24.95	0.36	0.57	Pass
		*Hip Horizontal 2 - J	LD L35255 SP 0.375	0.07	52.43	0.13	0.22	Pass
		*Hip Diagonal 2 - O	LD L25254 SP 0.375	0.01	27.15	0.04	0.03	Pass
		*Hip SubDiagonal 2 - Q	ST L25253	0.01	5.4	0.19	0.06	Pass
		*Hip SubVertical 2 - P	ST L25253	0	17.13	0	0	Pass
		*Hip SubInternal 2 - K	ST L30304	0	7.09	0	0	Pass
		*Hip SubInternal 2 - L	ST L25253	0	6.21	0	0	Pass
		*Internal Corner Horizontal 1 - C1	ST L30304	0.06	12.37	0.49	0.38	Pass
		*Internal Corner Diagonal 1 - B1	ST L30304	0.04	14.78	0.27	0.25	Pass
		*Internal Corner Horizontal 2 - A1	LD L30254 SP 0.375	5.06	32.65	15.5	15.91	Pass
		*Internal Corner Diagonal 2 - Z	LD L25254 SP 0.375	2.95	34.24	8.62	9.27	Pass
		*Internal Corner Diagonal 2 - D1	LD L25253 SP 0.375	4.99	15.55	32.09	15.69	Pass
		*Internal Corner Horizontal 3 - Y	LD L35255 SP 0.4375	5.73	56.66	10.11	18.01	Pass
		*Internal Corner Diagonal 3 - E1	LD L30304 SP 0.4375	7.05	39.65	17.78	22.16	Pass
T18	25 - 0	*Legs - A / Replace Splice Bolts @ 3.5ft Approx.	ST L808018	663.3	696.49	95.23	61.28	Pass
		*Diagonals - B	SD L60406 SP 0.5	69.4	102.1	67.97	74.8	Pass
		*Horizontals - L1	LD L50356 SP 0.4375	58.31	94.96	61.41	73.33	Pass
		*Red Horiz 1 - E	ST L25254	1.44	9.94	14.49	9.05	Pass
		*Red Diag 1 - G	LD L25254 SP 0.5	5.01	46.82	10.7	15.75	Pass
		*Red Horiz 2 - O	LD L35256 SP 0.4375	6.02	66.02	9.12	18.93	Pass

Section No.	Elevation ft	Component Type	Member Size	P kips	Pallow kips	% Cap. Member	% Cap. Bolt	Pass Fail
		*Red Diag 2 - T	LD L35356 SP 0.4375	30.76	89.22	34.48	32.23	Pass
		*Red Sub Horiz 1 - C	ST L25254	2.92	23.56	12.4	26.44	Pass
		*Red Sub Diag 1 - D	ST L25254	3.3	14.67	22.5	29.88	Pass
		*Red Sub Diag 2 - F	ST L25254	4.8	12.57	38.18	43.46	Pass
		*Red Sub Horiz 2 - H	ST L25254	4.56	23.56	19.36	41.29	Pass
		*Red Sub Diag 3 - R	ST L25254	1.86	5.31	35.01	16.84	Pass
		*Red Sub Horiz 3 - S	ST L25254	2.4	7.18	33.42	21.73	Pass
		*Red Sub Diagonal - V	LD L50506 SP 0.4375	61.72	155.95	39.58	28.51	Pass
		*Red Sub Horizontal - Q	ST C9X13	27.19	28.94	93.95	10.68	Pass
		*Red Vertical Outside - U	ST L25254	5.93	6.45	91.93	37.29	Pass
		*Red Vertical Center - Z	LD L30254 SP 0.5	0.03	43.37	0.07	0.09	Pass
		*Red Vertical Inner 1 - X	LD L25254 SP 0.375	15.27	51.22	29.81	48.01	Pass
		*Red Vertical Inner 2 - Y / Reinforcement DBL L	LD L30304 SP 0.5	19.08	37.02	51.54	59.98	Pass
		*Red Vertical Sub Diagonal - W	LD L25254 SP 0.5	18.59	20.49	90.71	58.44	Pass
		*Hip Horizontal 1 - I	ST L40406	0.12	22.23	0.54	0.75	Pass
		*Hip Diagonal 1 - J	LD L25254 SP 0.5	0.11	14.43	0.76	0.35	Pass
		*Hip Horizontal 2 - L	LD L35354 SP 0.4375	2.66	46.21	5.76	8.36	Pass
		*Hip Diagonal 2 - A1	LD L25254 SP 0.375	1.74	24.81	7.01	5.47	Pass
		*Hip SubDiagonal 2 - C1	ST L25253	0	4.86	0	0	Pass
		*Hip SubVertical 2 - B1	ST L25253	0	17.08	0	0	Pass
		*Hip SubInternal 2-1 - KK	LD L25253 SP 0.4375	3.65	24.2	15.08	11.47	Pass
		*Hip SubInternal 2-2 - K / Reinforcement DBL L	LD L25253 SP 0.4375	6.09	22.07	27.59	19.15	Pass
		*Internal-1 Sub Braces - N	ST L30304	1.97	8.94	22.02	12.39	Pass
		*Internal-1 Inner Horiz - M	LD L60355 SP 0.375	8.03	85.5	9.39	25.24	Pass
		*Internal-2 Corner Horizontal 1 - H1	LD L25253 SP 0.4375	0.11	27.08	0.41	0.35	Pass
		*Internal-2 Corner Diagonal 1 - G1	ST L25254	0.07	7.05	0.99	0.44	Pass
		*Internal-2 Corner Horizontal 2 - F1	LD L30254 SP 0.375	3.73	28.87	12.92	11.73	Pass
		*Internal-2 Corner Diagonal 2-1 - E1	LD L25254 SP 0.375	2	30.15	6.63	6.29	Pass
		*Internal-2 Corner Diagonal 2-2 - I1	LD L25253 SP 0.4375	3.11	13.74	22.63	9.78	Pass
		*Internal-2 Corner Horizontal 3 - D1	LD L35255 SP 0.4375	4.56	51.65	8.83	14.34	Pass
		*Internal-2 Corner Diagonal 3 - K2	LD L30254 SP 0.5	4.35	48.03	9.06	13.68	Pass
		*Internal-2 Corner Diagonal 3 - Sub1 - J1	ST L30304	0.17	12.76	1.33	1.07	Pass
		*Internal-2 Corner Diagonal 3 - Sub2 - K1	LD L30304 SP 0.5	0.01	53.07	0.02	0.03	Pass
T12	175-150	Reinforcement / Redundant Vertical / RV12	ST L25254	0.12	6.27	1.92	1.09	Pass
		Reinforcement / Internal / RI12	ST L25254	0.9	10.93	8.23	8.15	Pass

Section No.	Elevation ft	Component Type	Member Size	P kips	Pallow kips	% Cap. Member	% Cap. Bolt	Pass Fail
T13	150-125	Reinforcement / Redundant Vertical / RV13	ST L25254	0.21	6.44	3.26	1.9	Pass
		Reinforcement / Internal / RI13	ST L25254	1.25	9.6	13.03	11.32	Pass
		Reinforcement / Internal Kicker / RK13	ST L30304	0.01	6.34	0.16	0.06	Pass
T14	100-125	Reinforcement / Redundant Vertical / RV14	ST L30304	0.18	11.39	1.58	1.13	Pass
		Reinforcement / Internal / RI14	ST L30304	1.11	13.08	8.49	6.98	Pass
		Reinforcement / Internal Kicker / RK14	ST L30304	0.02	5.67	0.35	0.13	Pass
T15	75-100	Reinforcement / Internal Kicker / RK15	ST L30304	0.01	6.83	0.15	0.06	Pass
T16	50-75	Reinforcement / Internal Kicker / RK16	ST L30304	0.01	6.46	0.15	0.06	Pass
		*Reinforcement / Red Sub Horiz 1 - C16	ST L25254	2.19	26.21	8.36	13.77	Pass
		*Reinforcement / Red Sub Diag 1 - D16	ST L25254	2.67	16.14	16.55	16.79	Pass
		*Reinforcement / Red Sub Diag 2 - F16	ST L25254	4.87	14.04	34.68	30.62	Pass
		*Reinforcement / Red Sub Horiz 2 - H16	ST L25254	4.22	26.21	16.1	26.53	Pass
		*Reinforcement / Red Sub Diag 3 - R16	ST L25254	1.86	6.35	29.3	11.69	Pass
		*Reinforcement / Red Sub Horiz 3 - S16	ST L25254	2.13	9.17	23.23	13.39	Pass
T17	25-50	*Reinforcement / Internal Kicker / RK17	ST L30304	0.01	6.11	0.16	0.06	Pass
T9	250-225	Red Horiz 1 - C	ST L25203	2.22	12.37	17.95	13.96	Pass
		Red Diag 1 - D	ST L30303	2.24	8.45	26.52	14.08	Pass
T10	225-200	Red Horiz 1 - C	ST L25204	2.84	12.61	22.53	17.86	Pass
		Red Diag 1 - D	ST L30303	2.6	7.77	33.45	16.35	Pass
T11	200-175	Red Horiz 1 - C	ST L25253	3.52	11.5	30.6	22.13	Pass
		Red Diag 1 - D	ST L30304	2.98	9.31	32	18.74	Pass

*Elev. 0-175ft – Tower modelled in Staad. Tower Members were considered as truss members and Loads are from Staad Analysis.

Job Information

	Engineer	Checked	Approved
Name:	KM	LKN	MM
Date:	20-Mar-20	20-Mar-20	20-Mar-20

Project ID	
Project Name	

Comments

NORWALK EAST - WILLARD RD SITE #CT2132 - FA #10034993
AT&T APPURTENANCE CHANGES - ELEV. 347FT
2018 CT SBC / 2015 IBC / ANSI/TIA-222-G
Vult=120MPH / Vasd=93MPH / 50MPH + 3/4" ICE / Vservice=60MPH
EXPOSURE 'C' / CLASS 'II' / TOPO 1
0 to 175ft of Tower Modelled

Structure Type	SPACE FRAME

Number of Nodes	804	Highest Node	820
Number of Elements	2008	Highest Beam	2024

Number of Basic Load Cases	-2
Number of Combination Load Cases	0

Included in this printout are data for:

All	The Whole Structure

Included in this printout are results for load cases:

Type	L/C	Name
Primary	1	DEAD ONLY
Primary	2	1.2 DEAD+1.6 WIND 0 DEG - NO ICE
Primary	3	0.9 DEAD+1.6 WIND 0 DEG - NO ICE
Primary	4	1.2 DEAD+1.6 WIND 45 DEG - NO ICE
Primary	5	0.9 DEAD+1.6 WIND 45 DEG - NO ICE
Primary	6	1.2 DEAD+1.6 WIND 90 DEG - NO ICE
Primary	7	0.9 DEAD+1.6 WIND 90 DEG - NO ICE
Primary	8	1.2 DEAD+1.6 WIND 135 DEG - NO ICE
Primary	9	0.9 DEAD+1.6 WIND 135 DEG - NO ICE
Primary	10	1.2 DEAD+1.6 WIND 180 DEG - NO ICE
Primary	11	0.9 DEAD+1.6 WIND 180 DEG - NO ICE
Primary	12	1.2 DEAD+1.6 WIND 225 DEG - NO ICE
Primary	13	0.9 DEAD+1.6 WIND 225 DEG - NO ICE
Primary	14	1.2 DEAD+1.6 WIND 270 DEG - NO ICE
Primary	15	0.9 DEAD+1.6 WIND 270 DEG - NO ICE
Primary	16	1.2 DEAD+1.6 WIND 315 DEG - NO ICE
Primary	17	0.9 DEAD+1.6 WIND 315 DEG - NO ICE
Primary	18	1.2 DEAD+1.0 ICE+1.0 TEMP

Job Information Cont...

Type	L/C	Name
Primary	22	1.2 DEAD+1.0 WIND 135 DEG+1.0 ICE+1
Primary	23	1.2 DEAD+1.0 WIND 180 DEG+1.0 ICE+1
Primary	24	1.2 DEAD+1.0 WIND 225 DEG+1.0 ICE+1
Primary	25	1.2 DEAD+1.0 WIND 270 DEG+1.0 ICE+1
Primary	26	1.2 DEAD+1.0 WIND 315 DEG+1.0 ICE+1
Primary	27	DEAD+WIND 0 DEG - SERVICE
Primary	28	DEAD+WIND 45 DEG - SERVICE
Primary	29	DEAD+WIND 90 DEG - SERVICE
Primary	30	DEAD+WIND 135 DEG - SERVICE
Primary	31	DEAD+WIND 180 DEG - SERVICE
Primary	32	DEAD+WIND 225 DEG - SERVICE
Primary	33	DEAD+WIND 270 DEG - SERVICE
Primary	34	DEAD+WIND 315 DEG - SERVICE

Node Displacement Summary

	Node	L/C	X (in)	Y (in)	Z (in)	Resultant (in)	rX (rad)	rY (rad)	rZ (rad)
Max X	476	6:1.2 DEAD+1.	**6.627**	-1.049	0.060	6.709	-0.000	-0.001	-0.004
Min X	478	15:0.9 DEAD+'	**-6.609**	-0.935	0.076	6.675	-0.000	0.001	0.004
Max Y	423	5:0.9 DEAD+1.	2.804	**0.766**	-2.864	4.080	-0.003	-0.000	-0.003
Min Y	476	4:1.2 DEAD+1.	4.987	**-1.366**	-4.919	7.136	-0.003	-0.000	-0.003
Max Z	474	11:0.9 DEAD+1	-0.035	-0.922	**6.626**	6.690	0.004	-0.001	-0.000
Min Z	476	2:1.2 DEAD+1.	-0.021	-1.044	**-6.657**	6.739	-0.004	0.001	-0.000
Max rX	798	8:1.2 DEAD+1.	0.851	-0.745	1.011	1.517	**0.015**	0.016	-0.004
Min rX	798	17:0.9 DEAD+'	-0.901	0.435	-1.031	1.437	**-0.011**	-0.011	0.003
Max rY	798	8:1.2 DEAD+1.	0.851	-0.745	1.011	1.517	0.015	**0.016**	-0.004
Min rY	795	12:1.2 DEAD+'	-0.895	-0.736	0.983	1.520	0.015	**-0.016**	0.004
Max rZ	462	14:1.2 DEAD+'	-4.453	0.300	-0.091	4.464	-0.000	0.001	**0.006**
Min rZ	467	6:1.2 DEAD+1.	4.451	0.315	-0.089	4.463	-0.000	-0.001	**-0.006**
Max Rst	476	16:1.2 DEAD+'	-5.043	-0.407	-5.092	**7.178**	-0.003	0.001	0.002

Reactions

Node	L/C	Horizontal FX (kip)	Vertical FY (kip)	Horizontal FZ (kip)	Moment MX (kip-in)	MY (kip-in)	MZ (kip-in)
224	1:DEAD ONLY	10.085	108.894	-10.225	0.000	0.000	0.000
	2:1.2 DEAD+1.	-25.844	-273.037	61.110	0.000	0.000	0.000
	3:0.9 DEAD+1.	-28.861	-305.610	64.172	0.000	0.000	0.000
	4:1.2 DEAD+1.	-70.627	-473.672	71.461	0.000	0.000	0.000
	5:0.9 DEAD+1.	-73.645	-506.223	74.519	0.000	0.000	0.000
	6:1.2 DEAD+1.	-59.949	-270.112	25.877	0.000	0.000	0.000
	7:0.9 DEAD+1.	-62.971	-302.685	28.934	0.000	0.000	0.000
	8:1.2 DEAD+1.	-13.614	130.771	-38.071	0.000	0.000	0.000
	9:0.9 DEAD+1.	-16.639	98.156	-35.012	0.000	0.000	0.000
	10:1.2 DEAD+'	49.979	533.860	-85.569	0.000	0.000	0.000
	11:0.9 DEAD+1	46.953	501.204	-82.507	0.000	0.000	0.000
	12:1.2 DEAD+'	94.840	734.456	-95.853	0.000	0.000	0.000
	13:0.9 DEAD+'	91.815	701.777	-92.787	0.000	0.000	0.000
	14:1.2 DEAD+'	84.095	531.113	-50.433	0.000	0.000	0.000
	15:0.9 DEAD+'	81.074	498.456	-47.366	0.000	0.000	0.000
	16:1.2 DEAD+'	37.728	130.092	13.632	0.000	0.000	0.000
	17:0.9 DEAD+'	34.710	97.476	16.697	0.000	0.000	0.000
	18:1.2 DEAD+'	23.421	252.068	-23.627	0.000	0.000	0.000
	19:1.2 DEAD+'	11.382	126.769	-1.793	0.000	0.000	0.000
	20:1.2 DEAD+'	-1.695	65.201	1.761	0.000	0.000	0.000
	21:1.2 DEAD+'	2.123	128.777	-11.660	0.000	0.000	0.000
	22:1.2 DEAD+'	16.251	252.193	-30.843	0.000	0.000	0.000
	23:1.2 DEAD+'	35.441	377.340	-45.464	0.000	0.000	0.000
	24:1.2 DEAD+'	48.546	438.907	-48.994	0.000	0.000	0.000
	25:1.2 DEAD+'	44.708	375.372	-35.612	0.000	0.000	0.000
	26:1.2 DEAD+'	30.571	251.910	-16.402	0.000	0.000	0.000
	27:DEAD+WIN	0.262	4.213	8.769	0.000	0.000	0.000
	28:DEAD+WIN	-11.300	-47.584	11.415	0.000	0.000	0.000
	29:DEAD+WIN	-8.562	4.983	-0.345	0.000	0.000	0.000
	30:DEAD+WIN	3.413	108.467	-16.804	0.000	0.000	0.000
	31:DEAD+WIN	19.831	212.537	-29.031	0.000	0.000	0.000
	32:DEAD+WIN	31.428	264.342	-31.649	0.000	0.000	0.000
	33:DEAD+WIN	28.666	211.820	-19.938	0.000	0.000	0.000
	34:DEAD+WIN	16.679	108.274	-3.446	0.000	0.000	0.000
227	1:DEAD ONLY	-10.046	110.582	-10.419	0.000	0.000	0.000
	2:1.2 DEAD+1.	24.768	-272.717	62.232	0.000	0.000	0.000
	3:0.9 DEAD+1.	27.775	-305.830	65.354	0.000	0.000	0.000
	4:1.2 DEAD+1.	-38.724	130.488	14.701	0.000	0.000	0.000
	5:0.9 DEAD+1.	-35.716	97.334	17.827	0.000	0.000	0.000
	6:1.2 DEAD+1.	-84.048	532.923	-50.651	0.000	0.000	0.000
	7:0.9 DEAD+1.	-81.037	499.727	-47.524	0.000	0.000	0.000
	8:1.2 DEAD+1.	-93.710	737.800	-97.377	0.000	0.000	0.000
	9:0.9 DEAD+1.	-90.696	704.585	-94.251	0.000	0.000	0.000
	10:1.2 DEAD+'	-48.900	538.089	-87.222	0.000	0.000	0.000

Reactions Cont...

Node	L/C	Horizontal FX (kip)	Vertical FY (kip)	Horizontal FZ (kip)	Moment MX (kip-in)	MY (kip-in)	MZ (kip-in)
	11:0.9 DEAD+1	-45.885	504.894	-84.099	0.000	0.000	0.000
	12:1.2 DEAD+'	14.684	134.686	-39.622	0.000	0.000	0.000
	13:0.9 DEAD+'	17.699	101.534	-36.502	0.000	0.000	0.000
	14:1.2 DEAD+'	59.913	-267.494	25.620	0.000	0.000	0.000
	15:0.9 DEAD+'	62.924	-300.605	28.739	0.000	0.000	0.000
	16:1.2 DEAD+'	69.569	-472.653	72.480	0.000	0.000	0.000
	17:0.9 DEAD+'	72.577	-505.744	75.600	0.000	0.000	0.000
	18:1.2 DEAD+'	-23.305	261.596	-24.691	0.000	0.000	0.000
	19:1.2 DEAD+'	-11.996	135.467	-1.976	0.000	0.000	0.000
	20:1.2 DEAD+'	-31.004	260.904	-16.835	0.000	0.000	0.000
	21:1.2 DEAD+'	-44.615	385.046	-36.710	0.000	0.000	0.000
	22:1.2 DEAD+'	-47.904	449.169	-50.743	0.000	0.000	0.000
	23:1.2 DEAD+'	-34.633	387.748	-47.398	0.000	0.000	0.000
	24:1.2 DEAD+'	-15.593	262.260	-32.534	0.000	0.000	0.000
	25:1.2 DEAD+'	-2.009	138.182	-12.679	0.000	0.000	0.000
	26:1.2 DEAD+'	1.277	74.013	1.382	0.000	0.000	0.000
	27:DEAD+WIN	-0.489	5.523	8.931	0.000	0.000	0.000
	28:DEAD+WIN	-16.894	109.755	-3.336	0.000	0.000	0.000
	29:DEAD+WIN	-28.634	213.811	-20.185	0.000	0.000	0.000
	30:DEAD+WIN	-31.130	266.794	-32.244	0.000	0.000	0.000
	31:DEAD+WIN	-19.554	215.143	-29.628	0.000	0.000	0.000
	32:DEAD+WIN	-3.110	110.843	-17.354	0.000	0.000	0.000
	33:DEAD+WIN	8.599	6.873	-0.531	0.000	0.000	0.000
	34:DEAD+WIN	11.087	-46.159	11.561	0.000	0.000	0.000
230	1:DEAD ONLY	-10.598	115.844	10.458	0.000	0.000	0.000
	2:1.2 DEAD+1.	-49.580	544.682	87.302	0.000	0.000	0.000
	3:0.9 DEAD+1.	-46.402	509.938	84.168	0.000	0.000	0.000
	4:1.2 DEAD+1.	-96.477	746.282	95.691	0.000	0.000	0.000
	5:0.9 DEAD+1.	-93.300	711.516	92.555	0.000	0.000	0.000
	6:1.2 DEAD+1.	-87.089	541.573	48.642	0.000	0.000	0.000
	7:0.9 DEAD+1.	-83.916	506.830	45.504	0.000	0.000	0.000
	8:1.2 DEAD+1.	-41.537	138.513	-16.428	0.000	0.000	0.000
	9:0.9 DEAD+1.	-38.366	103.811	-19.565	0.000	0.000	0.000
	10:1.2 DEAD+'	24.126	-266.932	-62.221	0.000	0.000	0.000
	11:0.9 DEAD+1	27.295	-301.593	-65.355	0.000	0.000	0.000
	12:1.2 DEAD+'	71.107	-468.666	-70.564	0.000	0.000	0.000
	13:0.9 DEAD+'	74.277	-503.304	-73.694	0.000	0.000	0.000
	14:1.2 DEAD+'	61.694	-264.001	-23.609	0.000	0.000	0.000
	15:0.9 DEAD+'	64.868	-298.661	-26.738	0.000	0.000	0.000
	16:1.2 DEAD+'	16.100	139.412	41.596	0.000	0.000	0.000
	17:0.9 DEAD+'	19.277	104.710	38.465	0.000	0.000	0.000
	18:1.2 DEAD+'	-25.012	277.907	24.808	0.000	0.000	0.000
	19:1.2 DEAD+'	-36.294	403.926	47.511	0.000	0.000	0.000
	20:1.2 DEAD+'	-50.433	465.834	50.055	0.000	0.000	0.000

Reactions Cont...

Node	L/C	Horizontal FX (kip)	Vertical FY (kip)	Horizontal FZ (kip)	Moment MX (kip-in)	MY (kip-in)	MZ (kip-in)
	21:1.2 DEAD+'	-47.413	401.898	35.779	0.000	0.000	0.000
	22:1.2 DEAD+'	-33.606	277.788	16.168	0.000	0.000	0.000
	23:1.2 DEAD+'	-13.736	151.915	2.116	0.000	0.000	0.000
	24:1.2 DEAD+'	0.412	89.984	-0.427	0.000	0.000	0.000
	25:1.2 DEAD+'	-2.607	153.898	13.832	0.000	0.000	0.000
	26:1.2 DEAD+'	-16.425	278.079	33.472	0.000	0.000	0.000
	27:DEAD+WIN	-19.980	219.589	29.685	0.000	0.000	0.000
	28:DEAD+WIN	-32.041	271.671	31.876	0.000	0.000	0.000
	29:DEAD+WIN	-29.607	218.807	19.766	0.000	0.000	0.000
	30:DEAD+WIN	-17.871	114.741	2.977	0.000	0.000	0.000
	31:DEAD+WIN	-0.976	10.070	-8.865	0.000	0.000	0.000
	32:DEAD+WIN	11.096	-42.039	-11.055	0.000	0.000	0.000
	33:DEAD+WIN	8.663	10.791	1.033	0.000	0.000	0.000
	34:DEAD+WIN	-3.086	114.938	17.856	0.000	0.000	0.000
233	1:DEAD ONLY	10.559	113.198	10.187	0.000	0.000	0.000
	2:1.2 DEAD+1.	50.514	538.628	85.508	0.000	0.000	0.000
	3:0.9 DEAD+1.	47.346	504.685	82.457	0.000	0.000	0.000
	4:1.2 DEAD+1.	-15.093	134.457	39.940	0.000	0.000	0.000
	5:0.9 DEAD+1.	-18.260	100.555	36.893	0.000	0.000	0.000
	6:1.2 DEAD+1.	-61.707	-266.831	-23.933	0.000	0.000	0.000
	7:0.9 DEAD+1.	-64.870	-300.691	-26.980	0.000	0.000	0.000
	8:1.2 DEAD+1.	-72.152	-469.529	-69.529	0.000	0.000	0.000
	9:0.9 DEAD+1.	-75.311	-503.369	-72.577	0.000	0.000	0.000
	10:1.2 DEAD+'	-25.271	-267.462	-61.075	0.000	0.000	0.000
	11:0.9 DEAD+1	-28.429	-301.323	-64.126	0.000	0.000	0.000
	12:1.2 DEAD+'	40.434	137.078	-15.419	0.000	0.000	0.000
	13:0.9 DEAD+'	37.274	103.176	-18.474	0.000	0.000	0.000
	14:1.2 DEAD+'	86.995	537.935	48.279	0.000	0.000	0.000
	15:0.9 DEAD+'	83.832	503.992	45.224	0.000	0.000	0.000
	16:1.2 DEAD+'	97.423	740.705	93.986	0.000	0.000	0.000
	17:0.9 DEAD+'	94.256	706.741	90.932	0.000	0.000	0.000
	18:1.2 DEAD+'	24.896	265.427	23.510	0.000	0.000	0.000
	19:1.2 DEAD+'	36.962	390.834	45.351	0.000	0.000	0.000
	20:1.2 DEAD+'	16.892	265.057	31.504	0.000	0.000	0.000
	21:1.2 DEAD+'	2.482	141.276	12.487	0.000	0.000	0.000
	22:1.2 DEAD+'	-1.127	77.846	-1.114	0.000	0.000	0.000
	23:1.2 DEAD+'	12.824	139.994	1.663	0.000	0.000	0.000
	24:1.2 DEAD+'	32.907	265.847	15.538	0.000	0.000	0.000
	25:1.2 DEAD+'	47.311	389.545	34.513	0.000	0.000	0.000
	26:1.2 DEAD+'	50.915	452.996	48.140	0.000	0.000	0.000
	27:DEAD+WIN	20.238	215.869	28.980	0.000	0.000	0.000
	28:DEAD+WIN	3.334	111.350	17.169	0.000	0.000	0.000
	29:DEAD+WIN	-8.711	7.591	0.674	0.000	0.000	0.000
	30:DEAD+WIN	-11.445	-44.810	-11.053	0.000	0.000	0.000

Reactions Cont...

Node	L/C	Horizontal FX (kip)	Vertical FY (kip)	Horizontal FZ (kip)	Moment MX (kip-in)	MY (kip-in)	MZ (kip-in)
	31:DEAD+WIN	0.608	7.443	-8.821	0.000	0.000	0.000
	32:DEAD+WIN	17.527	112.047	3.024	0.000	0.000	0.000
	33:DEAD+WIN	29.565	215.708	19.467	0.000	0.000	0.000
	34:DEAD+WIN	32.292	268.140	31.225	0.000	0.000	0.000

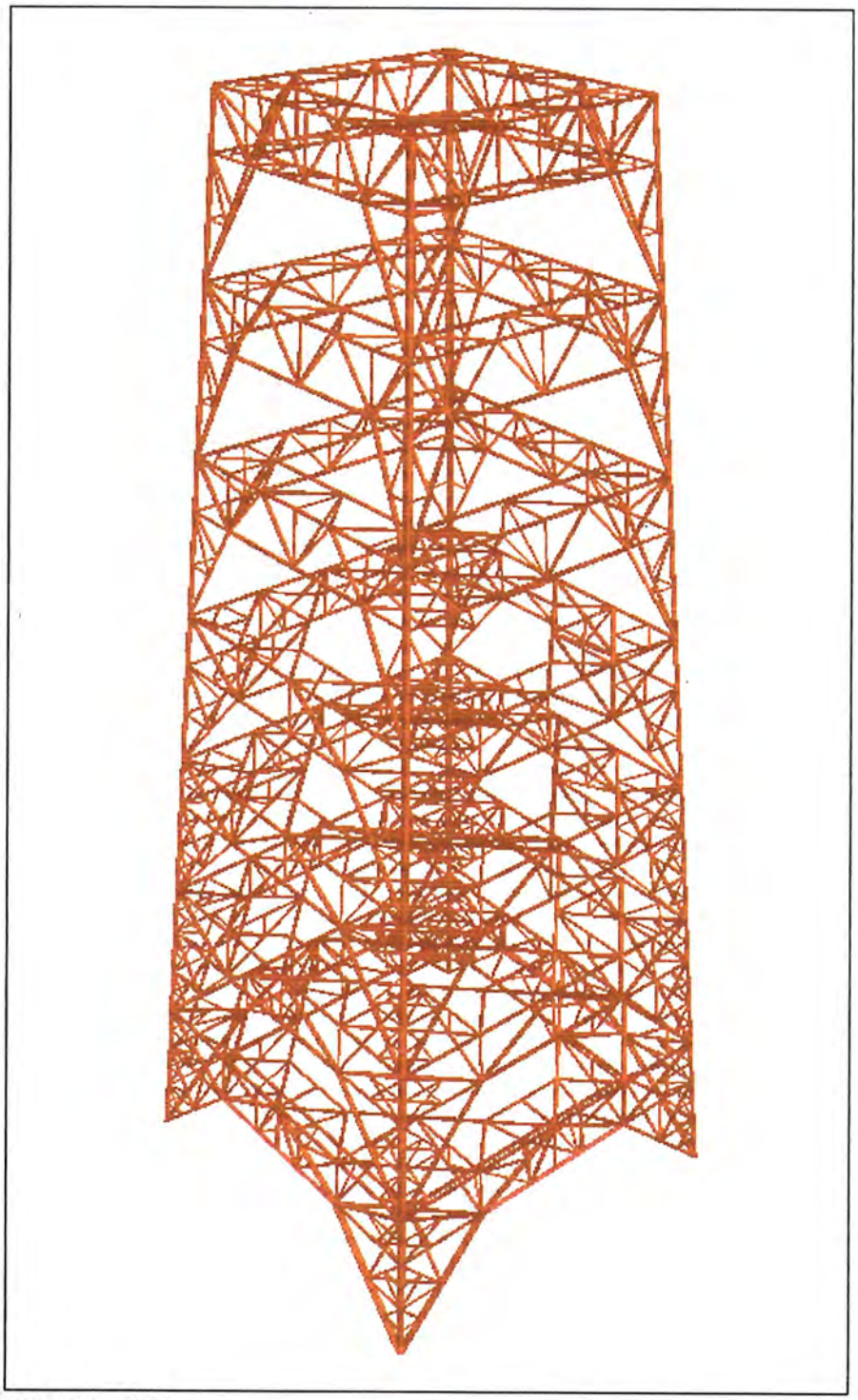

Structure 0 - 175ft (3D Rendered View)

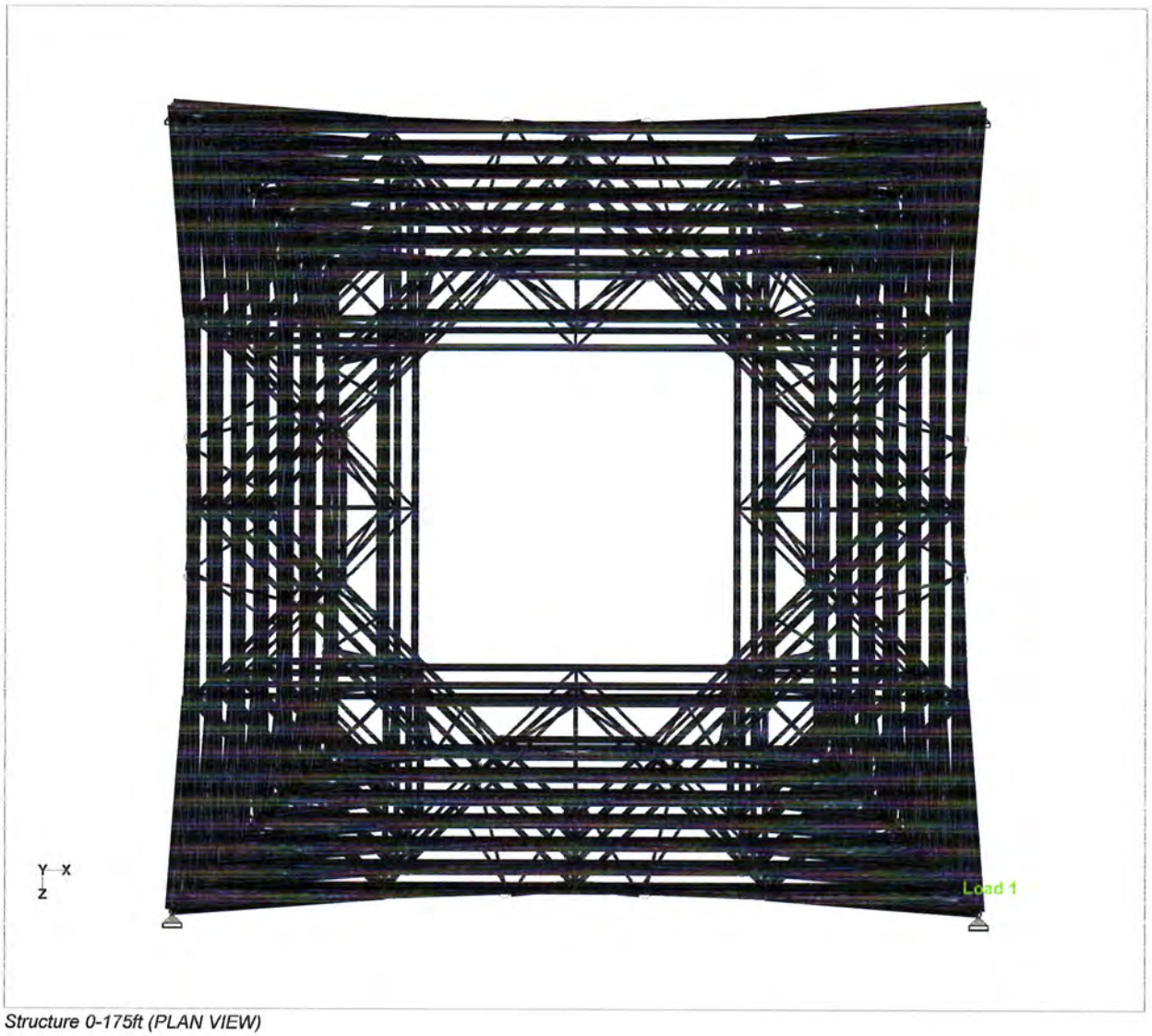

Structure 0-175ft (PLAN VIEW)

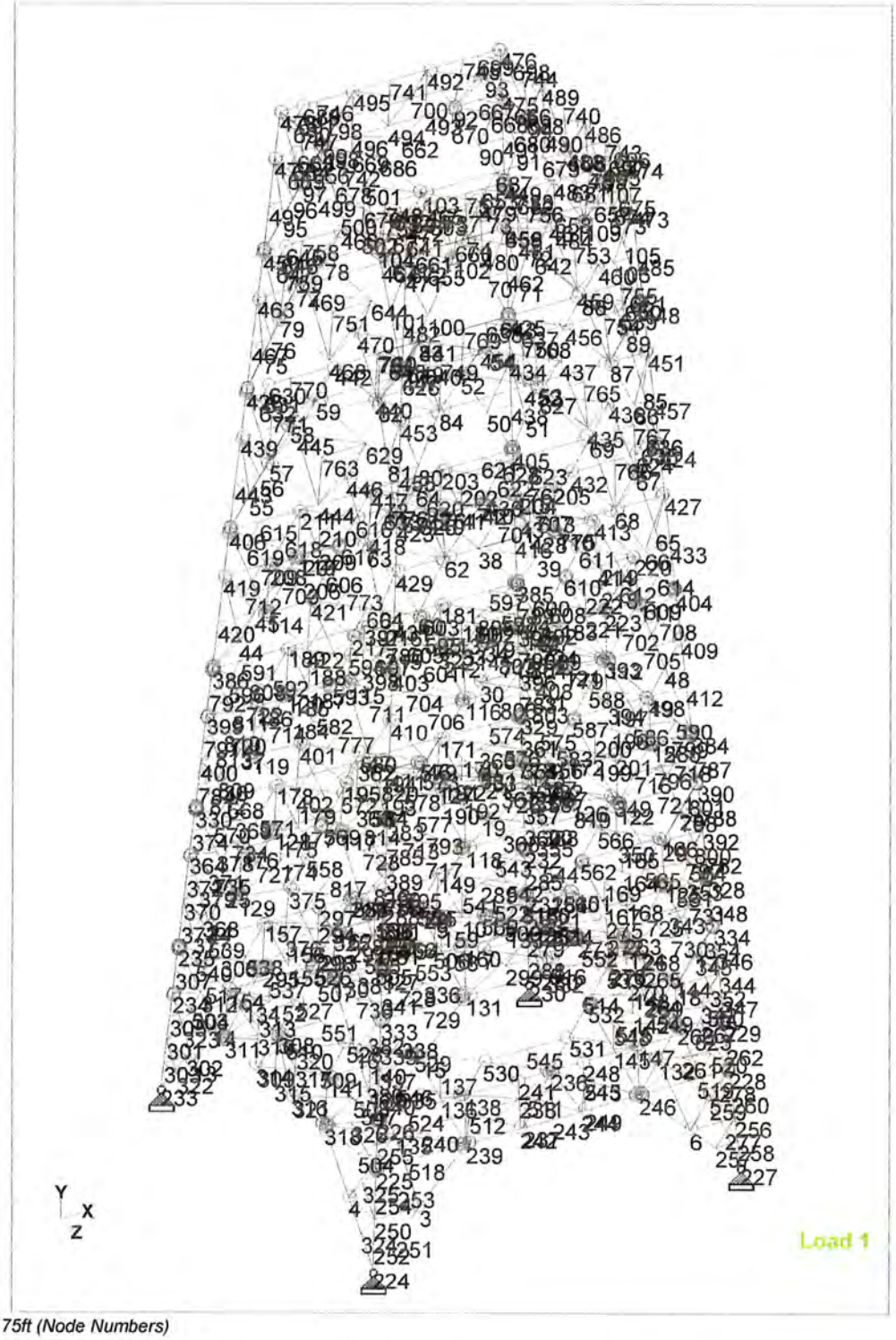

Structure 0-175ft (Node Numbers)

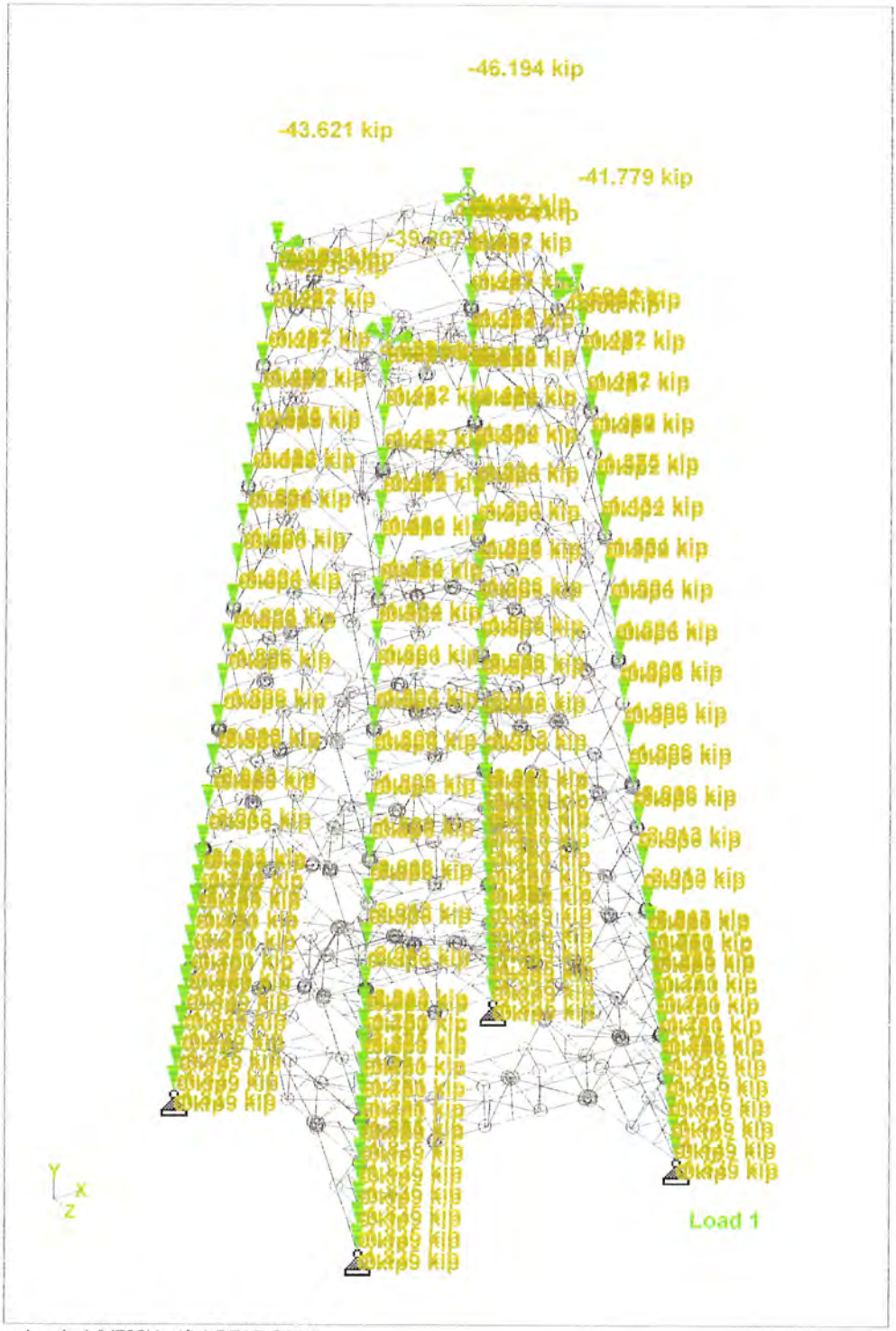

Whole Structure Loads 1.64798kip:1ft 1 DEAD ONLY

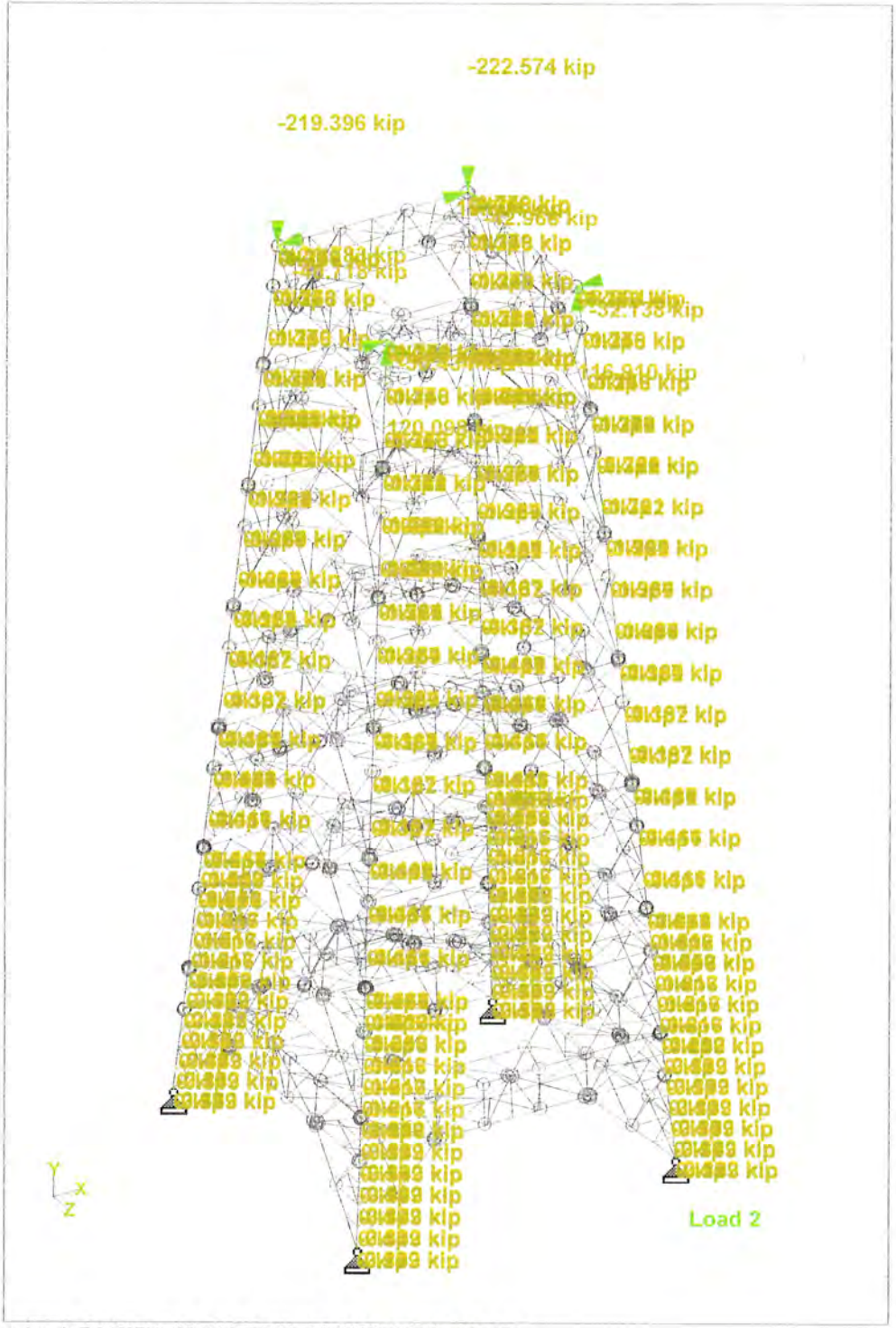

Whole Structure Loads 7.94037kip:1ft 2 1.2 DEAD+1.6 WIND 0 DEG - NO ICE

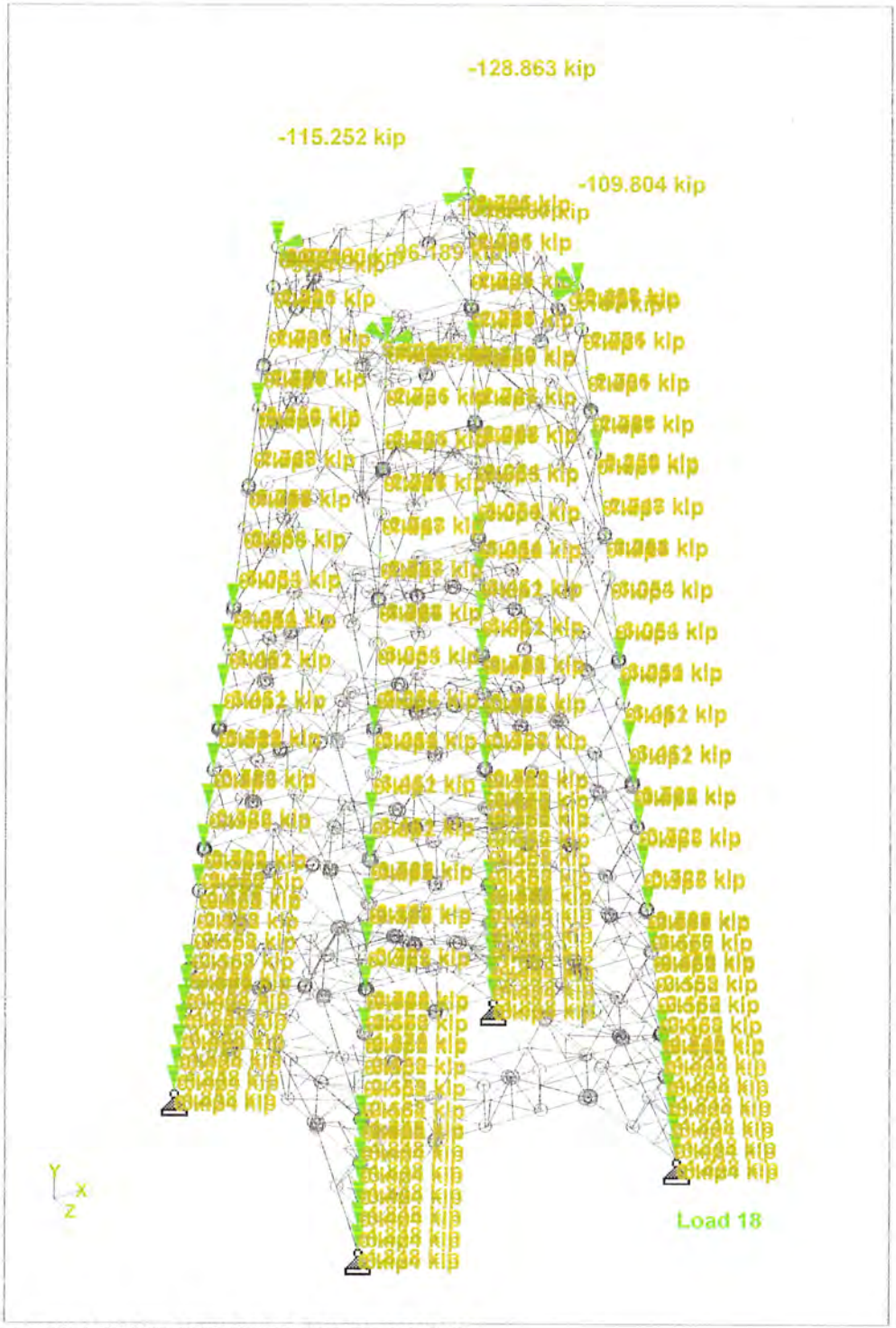

Whole Structure Loads 4.59721kip:1ft 18 1.2 DEAD+1.0 ICE+1.0 TEMP

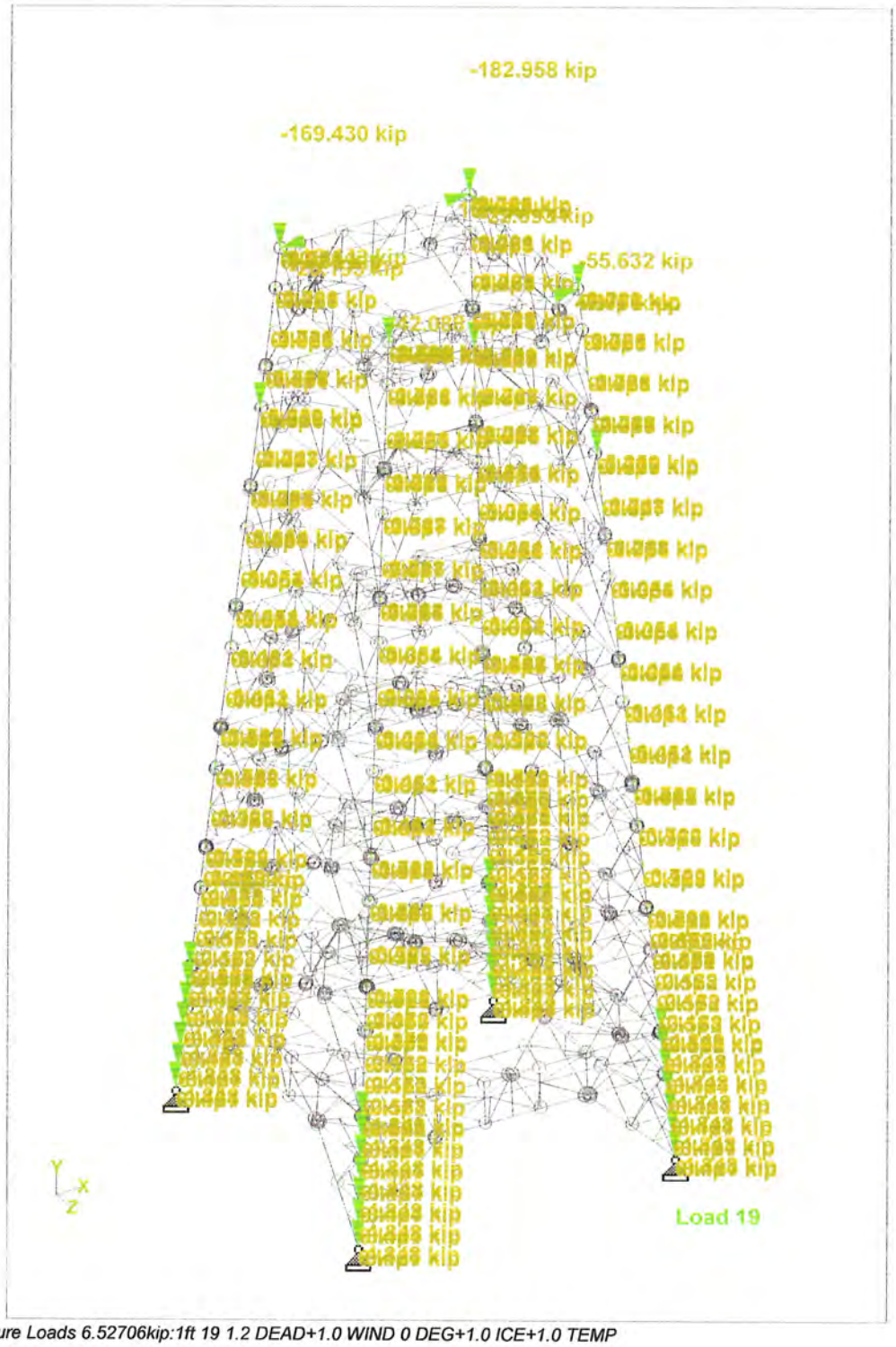

Whole Structure Loads 6.52706kip:1ft 19 1.2 DEAD+1.0 WIND 0 DEG+1.0 ICE+1.0 TEMP

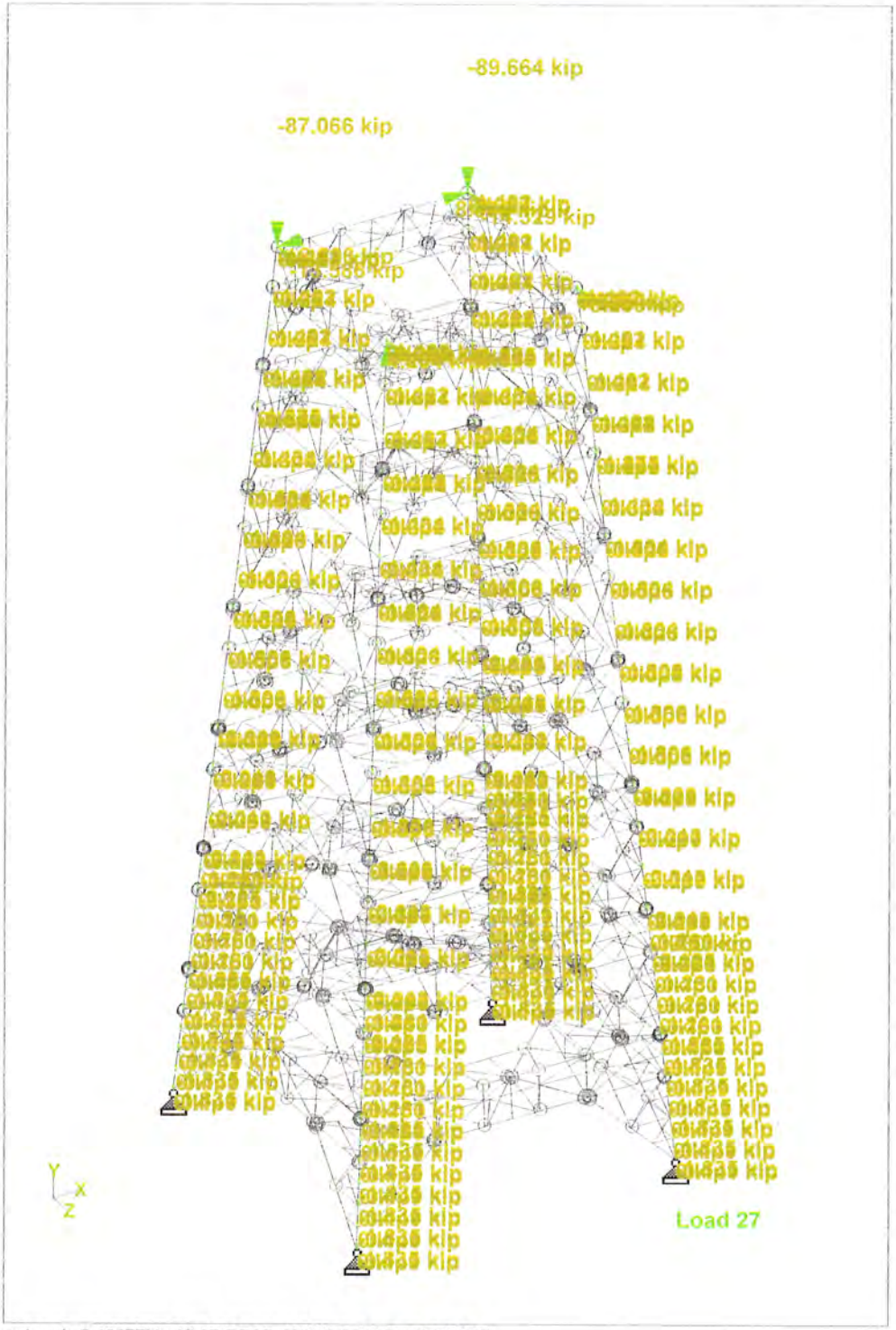

Whole Structure Loads 3.19877kip:1ft 27 DEAD+WIND 0 DEG - SERVICE

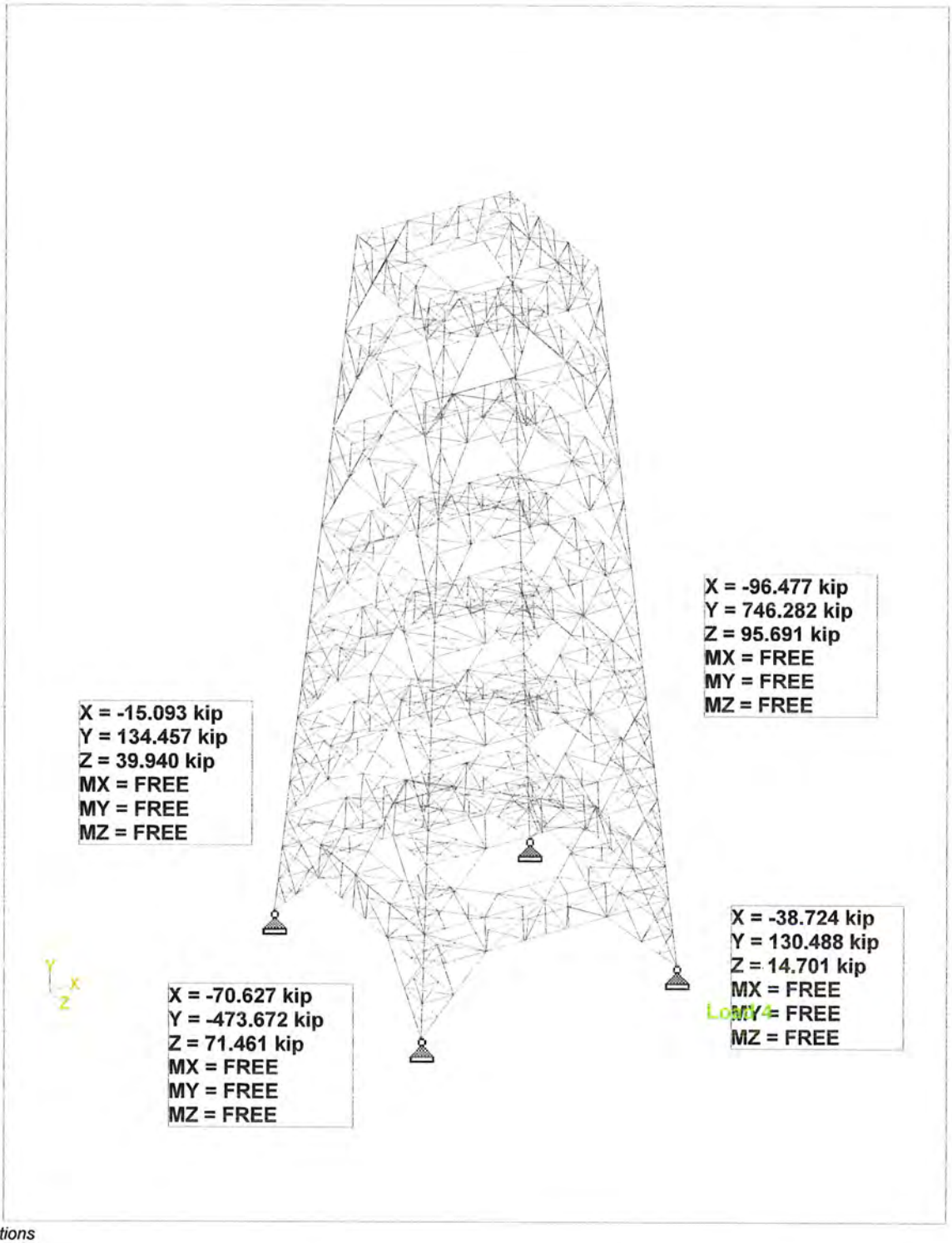
X = -96.477 kip
Y = 746.282 kip
Z = 95.691 kip
MX = FREE
MY = FREE
MZ = FREE
X = -15.093 kip
Y = 134.457 kip
Z = 39.940 kip
MX = FREE
MY = FREE
MZ = FREE
X = -38.724 kip
Y = 130.488 kip
Z = 14.701 kip
MX = FREE
MY = FREE
MZ = FREE
X = -70.627 kip
Y = -473.672 kip
Z = 71.461 kip
MX = FREE
MY = FREE
MZ = FREE
Y
X
Z

Reactions

APPENDIX 2 – SOURCE / CHANGED CONDITION

From: Hernan Cepeda <hernan.cepeda@hudsondesigngroupllc.com>
Sent: Thursday, March 19, 2020 6:19 PM
To: Mark Malouf; Andrey Tsikanovsky
Cc: Michael Cabral; Krishna Manda
Subject: RE: NEED MAPPING PHOTOS_ RE: CT2132 - REANALYSIS

Mark,
Please see confirmed loading:

Existing To Remain
(3) 7770 Panels
(3) OPA-65R-LCUU-H4 Panels
(6) Powerwave LGP 21401 TMA's
(6) TPX-070821 Triplexers
(3) RRUS-32
(3) Raycap DC6-48-60-18-8C
(12) 1-5/8"
(6) DC Power Cables
(3) 5/8" Fiber Cables

Existing To Be Removed
(3) SBNHH-1D65A Panels
(3) RRUS-11
(3) RRUS-32
(3) 10.5ft Sector Mounts

Proposed
(6) 800-10964 Panels
(3) 4478 B14 (700) RRH's
(3) 8843 B2/B66A RRH's
(3) 4449 B5/B12 RRH's
(1) Raycap DC6-48-60-0-8C-EV
(3) 12ft V-Frame Mounts (Sabre C10857011C) + Modifications
(2) DC Power Cables

Thank you
Hernan Cepeda
Assistant Project Manager
CAD Manager

Hudson Design Group LLC
978.557.5553 x239

10 WILLARD RD

Location	10 WILLARD RD	**Mblu**	5/ 17/ 2/ 0/
Acct#	11273	**Owner**	FDSPIN WILLARD LLC
Assessment	$4,691,645	**Appraisal**	$6,702,350
PID	11273	**Building Count**	3

Current Value

Appraisal			
Valuation Year	**Improvements**	**Land**	**Total**
2018	$2,533,050	$4,169,300	$6,702,350
Assessment			
Valuation Year	**Improvements**	**Land**	**Total**
2018	$1,773,135	$2,918,510	$4,691,645

Owner of Record

Owner	FDSPIN WILLARD LLC	**Sale Price**	$0
Co-Owner		**Certificate**	
Address	1 NORTH WATER ST SUITE 100 NORWALK, CT 06854-0000	**Book & Page**	8711/260
		Sale Date	07/18/2018
		Instrument	25

Ownership History

Ownership History					
Owner	**Sale Price**	**Certificate**	**Book & Page**	**Instrument**	**Sale Date**
FDSPIN WILLARD LLC	$0		8711/260	25	07/18/2018
FDSPIN WILLARD LLC	$6,625,000		8554/113	00	07/11/2017
SOUTHERN NEW ENG TEL CO	$0		401/370		03/10/1954

Building Information

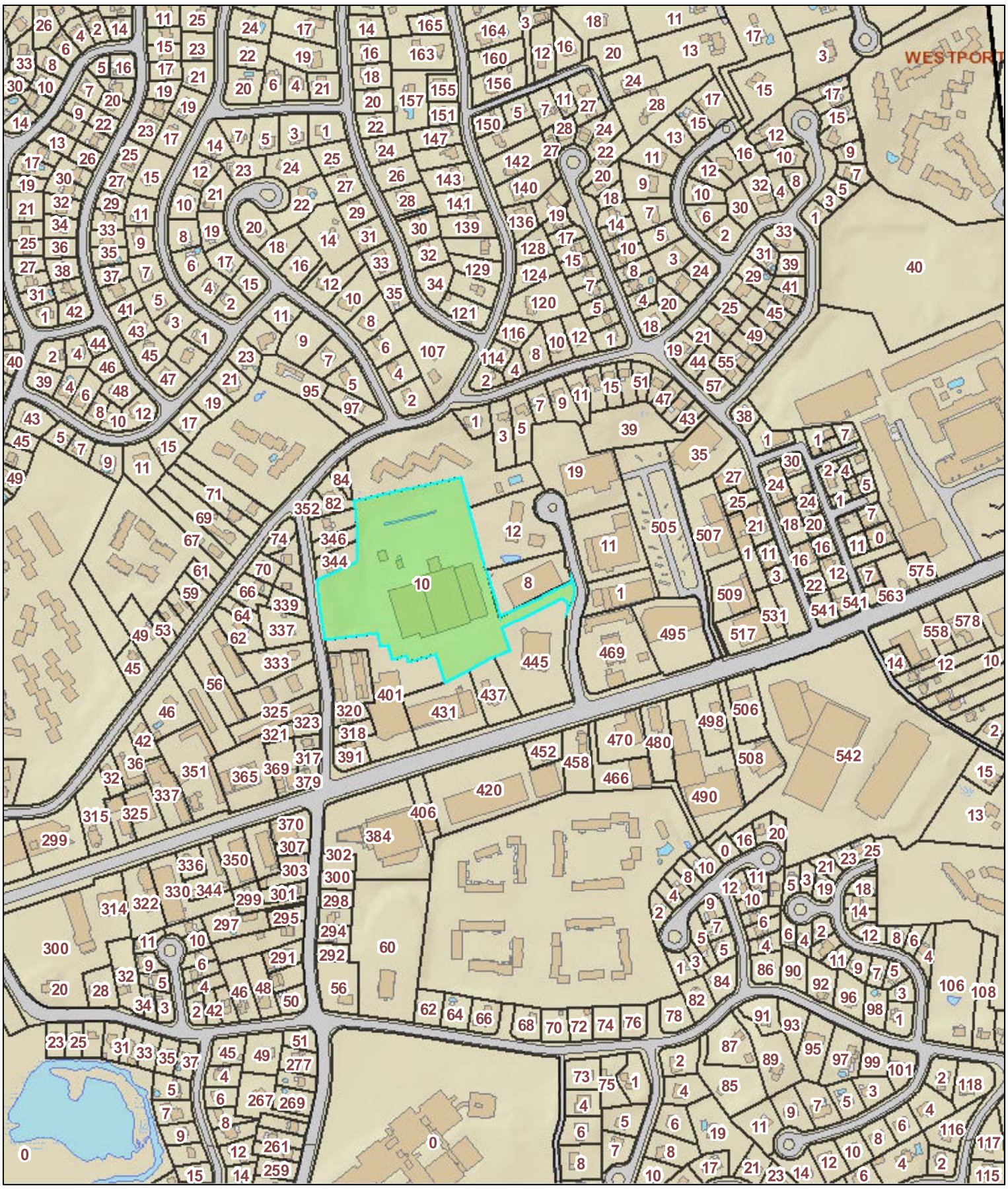

10 WILLARD ROAD

N
W E
S

Feet
0 425 850 1,700
1 inch = 625 feet

STATE OF CONNECTICUT

CONNECTICUT SITING COUNCIL

136 Main Street, Suite 401
New Britain, Connecticut 06051
Phone: 827-7682

April 25, 1988

Mr. Peter J. Tyrrell
Senior Attorney
SNET Cellular, Inc.
227 Church Street
Room 1021
New Haven, CT 06506

RE: Notice of Intent to Modify an Exempt Tower and Associated Equipment by SNET in Norwalk, Connecticut.

Dear Mr. Tyrrell:

At a meeting held on April 19, 1988, the Connecticut Siting Council acknowledged your Notice of Intent to Modify an Exempt Tower and Associated Equipment owned by the Southern New England Telephone Company located in Norwalk, Connecticut, pursuant to Section 16-50j-73 of the Regulations of State Agencies (RSA).

Your notice is in compliance with the exception criteria for changes to an existing facility site, pursuant to RSA 16-50j-72.

Very truly yours,

Gloria Dibble Pond /kr

Gloria Dibble Pond
Chairperson

GDP/JMR/cp

1349E

UNITED STATES POSTAL SERVICE®

Click-N-Ship®

usps.com
$7.75
US POSTAGE
Flat Rate Env

9405 5036 9930 0333 6880 80 0077 5000 0010 6856

04/18/2020 Mailed from 06268 062S000000311

PRIORITY MAIL 2-DAY™

MARK J ROBERTS
QC DEVELOPMENT
PO BOX 916
STORRS CT 06268-0916

Expected Delivery Date: 04/21/20

0004

Carrier -- Leave if No Response

B091

SHIP TO: MAYOR HARRY RILLING
CITY OF NORWALK
PO BOX 5125
CC: MR STEVEN KLEPPIN
NORWALK CT 06856-5125

USPS TRACKING #

9405 5036 9930 0333 6880 80

Electronic Rate Approved #038555749

Cut on dotted line.

Instructions

1. **Each Click-N-Ship® label is unique. Labels are to be used as printed and used only once. DO NOT PHOTO COPY OR ALTER LABEL.**
2. **Place your label so it does not wrap around the edge of the package.**
3. **Adhere your label to the package. A self-adhesive label is recommended. If tape or glue is used, DO NOT TAPE OVER BARCODE. Be sure all edges are secure.**
4. **To mail your package with PC Postage®, you may schedule a Package Pickup online, hand to your letter carrier, take to a Post Office™, or drop in a USPS collection box.**
5. **Mail your package on the "Ship Date" you selected when creating this label.**

Click-N-Ship® Label Record

USPS TRACKING # :
9405 5036 9930 0333 6880 80

Trans. #:	490305543	Priority Mail® Postage:	**$7.75**
Print Date:	04/17/2020	Total:	**$7.75**
Ship Date:	04/18/2020		
Expected Delivery Date:	04/21/2020		

From: MARK J ROBERTS
QC DEVELOPMENT
PO BOX 916
STORRS CT 06268-0916

To: MAYOR HARRY RILLING
CITY OF NORWALK
PO BOX 5125
CC: MR STEVEN KLEPPIN
NORWALK CT 06856-5125

* Retail Pricing Priority Mail rates apply. There is no fee for USPS Tracking® service on Priority Mail service with use of this electronic rate shipping label. Refunds for unused postage paid labels can be requested online 30 days from the print date.

UNITED STATES POSTAL SERVICE® *Thank you for shipping with the United States Postal Service!*
Check the status of your shipment on the USPS Tracking® page at usps.com

UNITED STATES POSTAL SERVICE®

Click-N-Ship®

usps.com
$7.75
US POSTAGE
Flat Rate Env

9405 5036 9930 0333 6880 97 0077 5000 0010 6854

04/18/2020 Mailed from 06268 062S0000000315

PRIORITY MAIL 2-DAY™

MARK J ROBERTS
QC DEVELOPMENT
PO BOX 916
STORRS CT 06268-0916

Expected Delivery Date: 04/21/20

0004

Carrier -- Leave if No Response

C012

SHIP TO:
FDSPIN WILLARD LLC
1 N WATER ST STE 100
NORWALK CT 06854-2260

USPS TRACKING #

9405 5036 9930 0333 6880 97

Electronic Rate Approved #038555749

Cut on dotted line.

Instructions

1. **Each Click-N-Ship® label is unique. Labels are to be used as printed and used only once. DO NOT PHOTO COPY OR ALTER LABEL.**
2. **Place your label so it does not wrap around the edge of the package.**
3. **Adhere your label to the package. A self-adhesive label is recommended. If tape or glue is used, DO NOT TAPE OVER BARCODE. Be sure all edges are secure.**
4. **To mail your package with PC Postage®, you may schedule a Package Pickup online, hand to your letter carrier, take to a Post Office™, or drop in a USPS collection box.**
5. **Mail your package on the "Ship Date" you selected when creating this label.**

Click-N-Ship® Label Record

USPS TRACKING # :
9405 5036 9930 0333 6880 97

Trans. #:	490305543	Priority Mail® Postage:	**$7.75**
Print Date:	04/17/2020	Total:	**$7.75**
Ship Date:	04/18/2020		
Expected Delivery Date:	04/21/2020		

From: MARK J ROBERTS
QC DEVELOPMENT
PO BOX 916
STORRS CT 06268-0916

To: FDSPIN WILLARD LLC
1 N WATER ST STE 100
NORWALK CT 06854-2260

* Retail Pricing Priority Mail rates apply. There is no fee for USPS Tracking® service on Priority Mail service with use of this electronic rate shipping label. Refunds for unused postage paid labels can be requested online 30 days from the print date.

UNITED STATES POSTAL SERVICE® *Thank you for shipping with the United States Postal Service!*
Check the status of your shipment on the USPS Tracking® page at usps.com