AMERICAN TOWER®
CORPORATION

Structural Analysis Report

Structure	:	**152 ft Monopole**
ATC Site Name	:	**Newtown CT 3, CT**
ATC Site Number	:	**302518**
Engineering Number	:	**OAA683410_C3_04**
Proposed Carrier	:	**T-Mobile**
Carrier Site Name	:	**Bethel SNET Mobility**
Carrier Site Number	:	**CT11105F**
Site Location	:	**6 Fairfield Dr (Brkfld)** **Newtown, CT 06470-1216** **41.425528,-73.374047**
County	:	**Fairfield**
Date	:	**January 11, 2017**
Max Usage	:	**55%**
Result	:	**Pass**

Prepared By:
Theodore A. Deters, E.I.
Structural Engineer I

Reviewed By:

STATE OF CONNECTICUT
SCOTT A. WIRGAU
30575
LICENSED
PROFESSIONAL ENGINEER

Jan 12 2017 11:00 AM

cosign

COA: PEC.0001553

Table of Contents

Introduction 1

Supporting Documents 1

Analysis 1

Conclusion 1

Existing and Reserved Equipment 2

Equipment to be Removed 2

Proposed Equipment 2

Structure Usages 3

Foundations 3

Deflection, Twist, and Sway 3

Standard Conditions 4

Calculations ..... Attached

Introduction

The purpose of this report is to summarize results of a structural analysis performed on the 152 ft monopole to reflect the change in loading by T-Mobile.

Supporting Documents

Tower Drawings	EEI Job #8238 Rev 2, dated January 30, 2001
Foundation Drawing	EEI Job #8238, dated November 16, 2000
Geotechnical Report	Soiltesting Project #G128-5268-98, dated September 8, 1999

Analysis

The tower was analyzed using American Tower Corporation's tower analysis software. This program considers an elastic three-dimensional model and second-order effects per ANSI/TIA-222.

Basic Wind Speed:	93 mph (3-Second Gust, V_{asd}) / 120 mph (3-Second Gust, V_{ult})
Basic Wind Speed w/ Ice:	50 mph (3-Second Gust) w/ 3/4" radial ice concurrent
Code:	ANSI/TIA-222-G / 2012 IBC / 2016 Connecticut State Building Code
Structure Class:	II
Exposure Category:	B
Topographic Category:	1
Crest Height:	0 ft
Spectral Response:	Ss = 0.21, S_1 = 0.07
Site Class:	D - Stiff Soil

Conclusion

Based on the analysis results, the structure meets the requirements per the applicable codes listed above. The tower and foundation can support the equipment as described in this report.

If you have any questions or require additional information, please contact American Tower via email at Engineering@americantower.com. Please include the American Tower site name, site number, and engineering number in the subject line for any questions.

Existing and Reserved Equipment

Elevation[1] (ft)		Qty	Antenna	Mount Type	Lines	Carrier
Mount	RAD					
152.0	152.0	3	Powerwave P65-16-XLH-RR	Flush	-	AT&T Mobility
151.0	151.0	1	15' Omni	Flush	(1) 7/8" Coax	Spok Holdings
149.0	149.0	6	Powerwave LGP21901	Low Profile Platform	(12) 1 5/8" Coax (2) 0.78" 8 AWG 6 (1) 0.39" Fiber Trunk (1) 2" Conduit	AT&T Mobility
		12	Powerwave 7020.00 Dual Band RET			
		3	CCI DTMABP7819VG12A			
		6	Powerwave LGP21401			
		1	Raycap DC6-48-60-18-8F			
		3	Ericsson RRUS 11 (Band 12) (55 lb)			
		3	Ericsson RRUS-12 1900MHz			
		6	Powerwave 7770.00			
141.0	141.0	1	2" x 4" GPS	Low Profile Platform	(12) 1 5/8" Coax (1) 1/2" Coax	Verizon
		3	Rymsa MGD3-800T0			
		6	Andrew DB846H80E-SX			
		3	Powerwave P65-16-XL-2			

Equipment to be Removed

Elevation[1] (ft)		Qty	Antenna	Mount Type	Lines	Carrier
Mount	RAD					
131.0	131.0	3	Kathrein 742 351	-	(12) 1 5/8" Coax	Metro PCS
		3	Kathrein 800 10504			
		6	Kathrein 860-10025			

Proposed Equipment

Elevation[1] (ft)		Qty	Antenna	Mount Type	Lines	Carrier
Mount	RAD					
134.0	134.0	3	KMW AWS Twin Dual 700 Bypass	Low Profile Platform	(12) 1 5/8" Coax (1) 1.58" Hybrid	T-Mobile
		3	Ericsson RRUS 11 B12			
		3	Ericsson AIR 21, 1.3 M, B2A B4P			
		3	Commscope SBNH-1D65C			

[1]Mount elevation is defined as height above bottom of steel structure to the bottom of mount, RAD elevation is defined as center of antenna above ground level (AGL).

Install proposed coax inside the pole shaft.

Structure Usages

Structural Component	Controlling Usage	Pass/Fail
Anchor Bolts	39%	Pass
Shaft	44%	Pass
Base Plate	55%	Pass

Foundations

Reaction Component	Original Design Reactions	Factored Design Reactions*	Analysis Reactions	% of Design
Moment (Kips-Ft)	3,859.3	5,210.1	2,088.2	40%
Shear (Kips)	34.7	46.8	19.1	41%

*** The design reactions are factored by 1.35 per ANSI/TIA-222-G, Sec. 15.5.1**

The structure base reactions resulting from this analysis are acceptable when compared to those shown on the original structure drawings, therefore no modification or reinforcement of the foundation will be required.

Deflection and Sway*

Antenna Elevation (ft)	Antenna	Carrier	Deflection (ft)	Sway (Rotation) (°)
134.0	KMW AWS Twin Dual 700 Bypass	T-Mobile	0.956	0.931
	Ericsson RRUS 11 B12			
	Ericsson AIR 21, 1.3 M, B2A B4P			
	Commscope SBNH-1D65C			

***Deflection and Sway was evaluated considering a design wind speed of 60 mph (3-Second Gust) per ANSI/TIA-222-G**

AMERICAN TOWER®
CORPORATION

Standard Conditions

All engineering services are performed on the basis that the information used is current and correct. This information may consist of, but is not necessary limited, to:

-- Information supplied by the client regarding the structure itself, antenna, mounts and feed line loading on the structure and its components, or other relevant information.

-- Information from drawings in the possession of American Tower Corporation, or generated by field inspections or measurements of the structure.

It is the responsibility of the client to ensure that the information provided to A.T. Engineering Service, PLLC and used in the performance of our engineering services is correct and complete. In the absence of information to the contrary, we assume that all structures were constructed in accordance with the drawings and specifications and that their capacity has not significantly changed from the "as new" condition.

Unless explicitly agreed by both the client and American Tower Corporation, all services will be performed in accordance with the current revision of ANSI/TIA -222. The design basic wind speed will be determined based on the minimum basic wind speed as prescribed in ANSI/TIA-222. Although every effort is taken to ensure that the loading considered is adequate to meet the requirements of all applicable regulatory entities, we can provide no assurance to meet any other local and state codes or requirements. If wind and ice loads or other relevant parameters are to be different from the minimum values recommended by the codes, the client shall specify the exact requirement.

All services are performed, results obtained, and recommendations made in accordance with generally accepted engineering principles and practices. A.T. Engineering Service, PLLC is not responsible for the conclusions, opinions and recommendations made by others based on the information we supply.

© 2007 - 2017 by ATC IP LLC. All rights reserved.

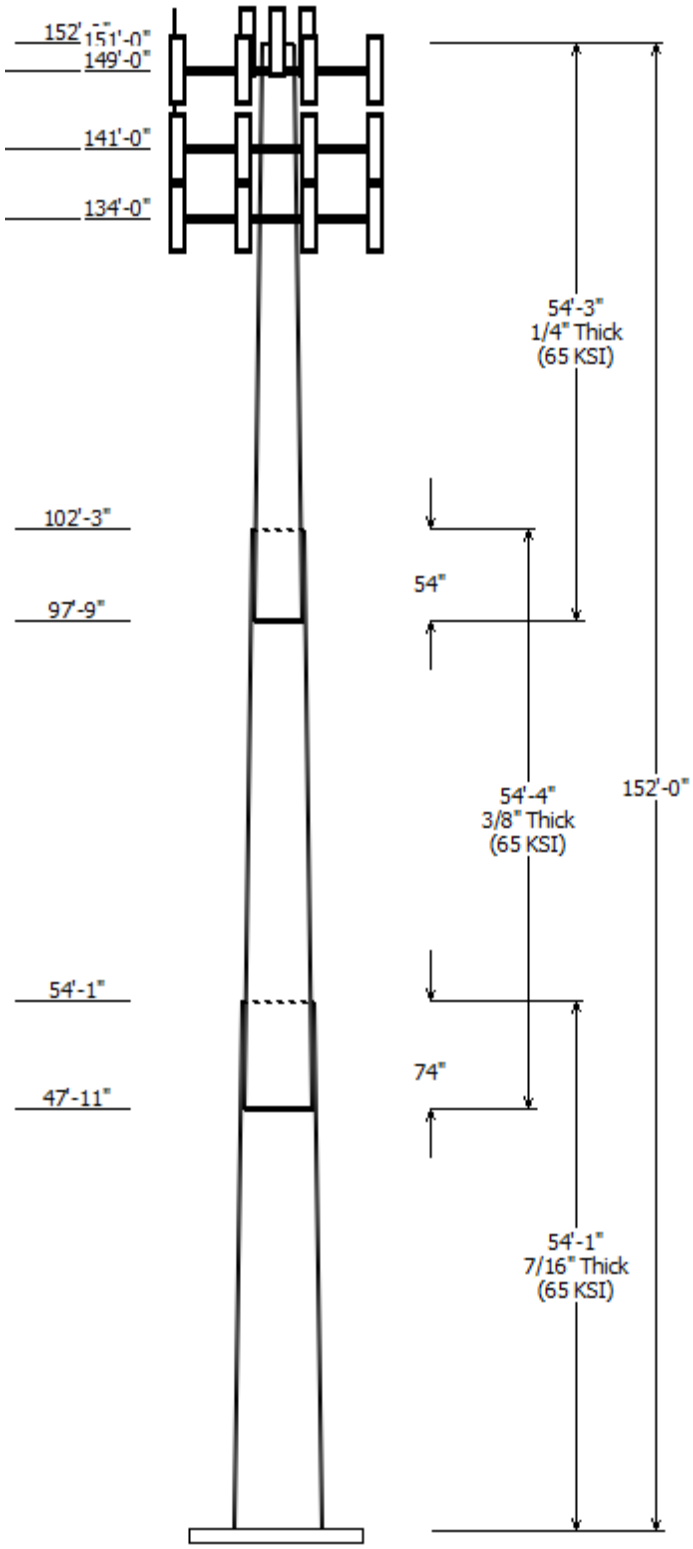

Job Information

Pole :	302518	Code:	ANSI/TIA-222-G
Description :	152 ft EEI Monopole		
Client :	T- Mobile	Struct Class :	II
Location :	Newtown CT 3, CT		
Shape :	18 Sides	Exposure :	B
Height :	152.00 (ft)	Topo :	1
Base Elev (ft):	0.00		
Taper:	0.268105 (in/ft)		

Sections Properties

Shaft Section	Length (ft)	Diameter (in) Accross Flats Top	Bottom	Thick (in)	Joint Type	Overlap Length (in)	Taper (in/ft)	Steel Grade (ksi)
1	54.083	42.25	56.75	0.438		0.000	0.268100	65
2	54.333	30.08	44.65	0.375	Slip Joint	74.000	0.268100	65
3	54.250	17.24	31.79	0.250	Slip Joint	54.000	0.268100	65

Discrete Appurtenance

Attach Elev (ft)	Force Elev (ft)	Qty	Description
152.000	152.000	3	Powerwave P65-16-XLH-RR
151.000	151.000	1	15' Omni
149.000	149.000	3	Ericsson RRUS-12 1900 MHz
149.000	149.000	3	CCI DTMABP7819VG12A
149.000	149.000	12	Powerwave 7020.00 Dual Band
149.000	149.000	1	Flat Low Profile Platform
149.000	149.000	6	Powerwave 7770.00
149.000	149.000	3	Ericsson RRUS 11 (Band 12) (55
149.000	149.000	1	Raycap DC6-48-60-18-8F
149.000	149.000	6	Powerwave LGP21401
149.000	149.000	6	Powerwave LGP21901
141.000	141.000	1	2" x 4" GPS
141.000	141.000	1	Flat Low Profile Platform
141.000	141.000	3	Powerwave P65-16-XL-2
141.000	141.000	6	Andrew DB846H80E-SX
141.000	141.000	3	Rymsa MGD3-800T0
134.000	134.000	3	Commscope SBNH-1D65C
134.000	134.000	3	Ericsson AIR 21, 1.3 M, B2A B4
134.000	134.000	3	Ericsson RRUS 11 B12
134.000	134.000	3	KMW AWS Twin Dual 700
134.000	134.000	1	Flat Low Profile Platform

Linear Appurtenance

Elev (ft) From	To	Description	Exposed To Wind
0.000	134.0	1 5/8" Coax	No
0.000	134.0	1.58" Hybrid	No
0.000	141.0	1 5/8" Coax	No
0.000	141.0	1/2" Coax	Yes
0.000	149.0	0.39" Fiber Trunk	Yes
0.000	149.0	0.78" 8 AWG 6	Yes
0.000	149.0	1 5/8" Coax	Yes
0.000	149.0	2" Conduit	Yes
0.000	151.0	7/8" Coax	No

Load Cases

1.2D + 1.6W	93 mph with No Ice
0.9D + 1.6W	93 mph with No Ice (Reduced DL)
1.2D + 1.0Di + 1.0Wi	50 mph with 0.75 in Radial Ice
(1.2 + 0.2Sds) * DL + E	Seismic Equivalent Lateral Forces Method

(1.2 + 0.2Sds) * DL + E	Seismic Equivalent Modal Analysis Method
(0.9 - 0.2Sds) * DL + E	Seismic (Reduced DL) Equivalent Lateral
(0.9 - 0.2Sds) * DL + E	Seismic (Reduced DL) Equivalent Modal
1.0D + 1.0W	Serviceability 60 mph

Reactions

Load Case	Moment (kip-ft)	Shear (kip)	Axial (kip)
1.2D + 1.6W	2088.23	19.13	42.89
0.9D + 1.6W	2011.65	18.64	32.17
1.2D + 1.0Di + 1.0Wi	613.22	5.78	69.87
(1.2 + 0.2Sds) * DL + E ELFM	193.31	1.62	42.64
(1.2 + 0.2Sds) * DL + E EMAM	286.66	2.49	42.64
(0.9 - 0.2Sds) * DL + E ELFM	191.30	1.61	29.31
(0.9 - 0.2Sds) * DL + E EMAM	283.45	2.49	29.31
1.0D + 1.0W	525.03	4.85	35.76

Dish Deflections

Load Case	Attach Elev (ft)	Deflection (in)	Rotation (deg)
	0.00	0.000	0.000

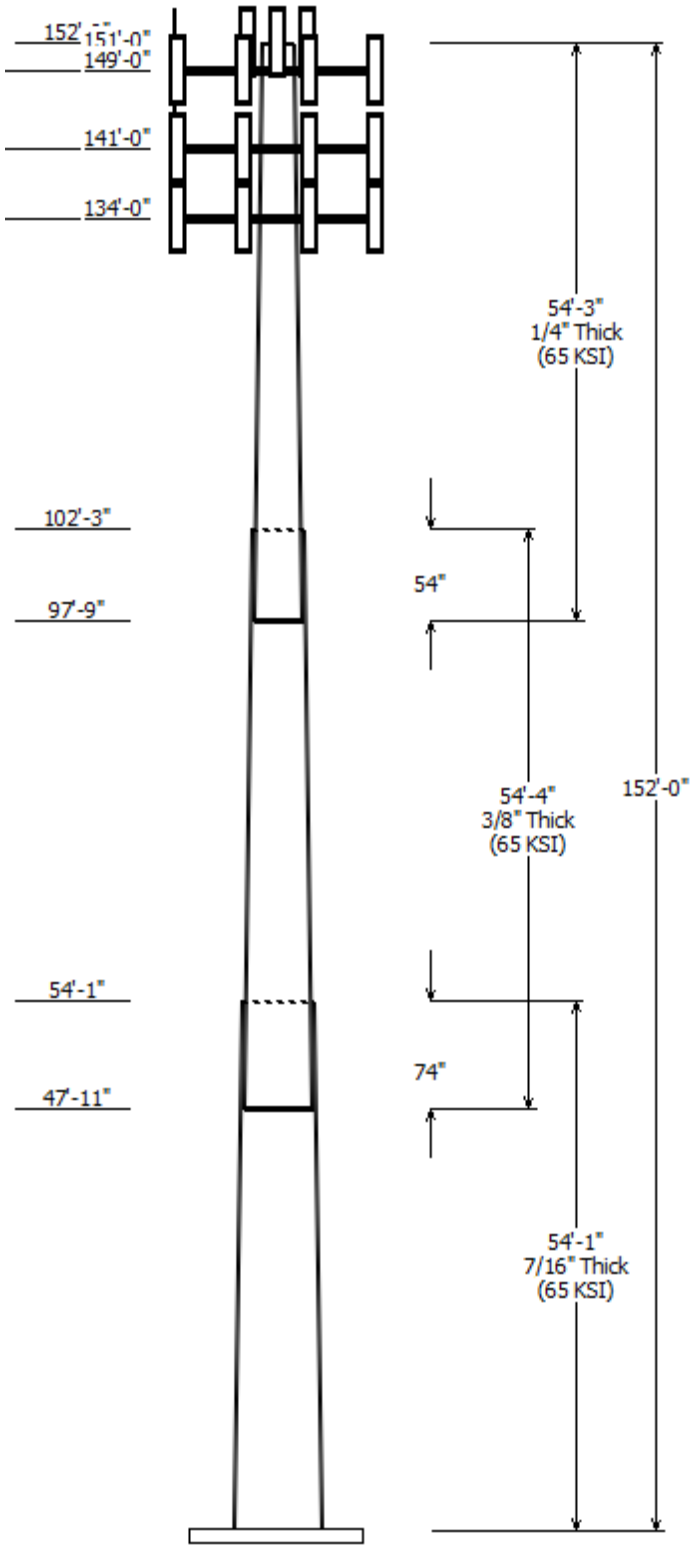

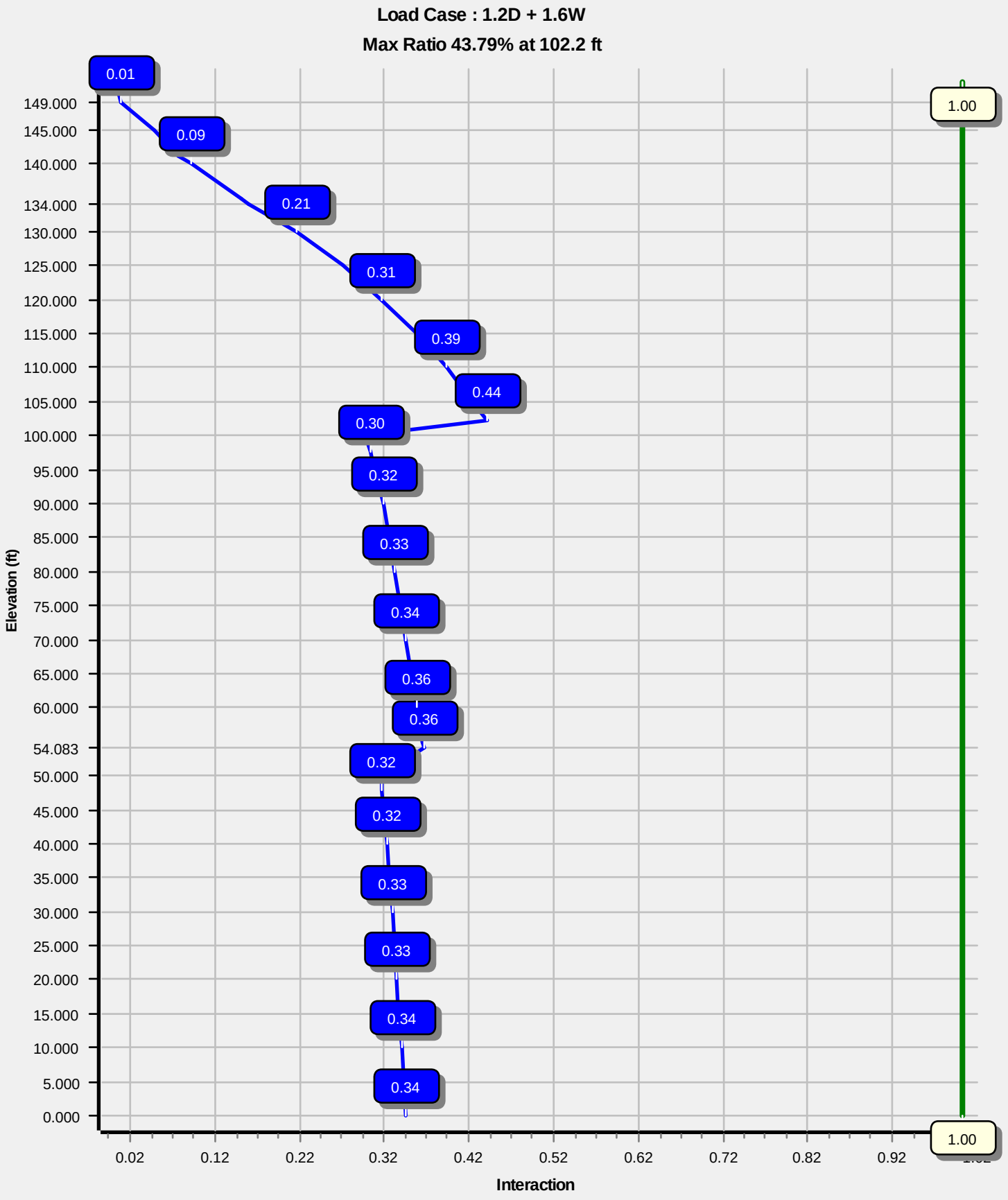
Load Case : 1.2D + 1.6W
Max Ratio 43.79% at 102.2 ft
Elevation (ft)
149.000
145.000
140.000
134.000
130.000
125.000
120.000
115.000
110.000
105.000
100.000
95.000
90.000
85.000
80.000
75.000
70.000
65.000
60.000
54.083
50.000
45.000
40.000
35.000
30.000
25.000
20.000
15.000
10.000
5.000
0.000
0.01
0.09
0.21
0.31
0.39
0.44
0.30
0.32
0.33
0.34
0.36
0.36
0.32
0.32
0.33
0.33
0.34
0.34
1.00
1.00
0.02
0.12
0.22
0.32
0.42
0.52
0.62
0.72
0.82
0.92
Interaction

Site Number:	**302518**	**Code: ANSI/TIA-222-G**	© 2007 - 2017 by ATC IP LLC. All rights reserved.
Site Name:	**Newtown CT 3, CT**	**Engineering Number:OAA683410_C3_04**	**1/11/2017 6:27:08 PM**
Customer:	**T- Mobile**		

Analysis Parameters

Location:	**Fairfield County, CT**		
Code:	**ANSI/TIA-222-G**	**Height (ft):**	**152**
Shape:	**18 Sides**	**Base Diameter (in):**	**56.75**
Pole Type:	**Taper**	**Top Diameter (in):**	**17.25**
Pole Manfacturer:	**EEI**	**Taper (in/ft) :**	**0.268**

Ice & Wind Parameters

Structure Class:	**II**	**Design Wind Speed Without Ice:**	**93 mph**
Exposure Category:	**B**	**Design Wind Speed With Ice:**	**50 mph**
Topographic Category:	**1**	**Operational Wind Speed:**	**60 mph**
Crest Height:	**0.0 ft**	**Design Ice Thickness:**	**0.75 in**

Seismic Parameters

Analysis Method:	**Equivalent Modal Analysis & Equivalent Lateral Force Methods**
Site Class:	**D - Stiff Soil**
Period Based on Rayleigh Method (sec):	**2.03**

T_L (sec):	**6**	**p:**	**1.3**	**C_s:**	**0.035**
S_s:	**0.209**	**S_1:**	**0.066**	**C_s Max:**	**0.035**
F_a:	**1.600**	**F_v:**	**2.400**	**C_s Min:**	**0.030**
S_{ds}:	**0.223**	**S_{d1}:**	**0.106**		

Load Cases

1.2D + 1.6W	**93 mph with No Ice**
0.9D + 1.6W	**93 mph with No Ice (Reduced DL)**
1.2D + 1.0Di + 1.0Wi	**50 mph with 0.75 in Radial Ice**
(1.2 + 0.2Sds) * DL + E ELFM	**Seismic Equivalent Lateral Forces Method**
(1.2 + 0.2Sds) * DL + E EMAM	**Seismic Equivalent Modal Analysis Method**
(0.9 - 0.2Sds) * DL + E ELFM	**Seismic (Reduced DL) Equivalent Lateral Forces Method**
(0.9 - 0.2Sds) * DL + E EMAM	**Seismic (Reduced DL) Equivalent Modal Analysis Method**
1.0D + 1.0W	**Serviceability 60 mph**

© 2007 - 2017 by ATC IP LLC. All rights reserved.

Shaft Section Properties

Sect Info	Length (ft)	Thick (in)	Fy (ksi)	Joint Type	Slip Joint Len (in)	Weight (lb)	Bottom Dia (in)	Bottom Elev (ft)	Bottom Area (in²)	Bottom Ix (in⁴)	Bottom W/t Ratio	Bottom D/t Ratio	Top Dia (in)	Top Elev (ft)	Top Area (in²)	Top Ix (in⁴)	Top W/t Ratio	Top D/t Ratio	Taper (in/ft)
1-18	54.083	0.4375	65		0.00	12,538	56.75	0.00	78.19	31328.3	21.11	129.71	42.25	54.08	58.06	12824.5	15.26	96.57	0.268105
2-18	54.333	0.3750	65	Slip	74.00	8,141	44.65	47.92	52.70	13054.2	19.23	119.08	30.08	102.25	35.36	3944.0	12.38	80.23	0.268105
3-18	54.250	0.2500	65	Slip	54.00	3,555	31.79	97.75	25.03	3146.2	20.66	127.17	17.24	152.00	13.49	492.4	10.40	68.99	0.268105
				Shaft Weight		24,233													

Discrete Appurtenance Properties

Attach Elev (ft)	Description	Qty	No Ice Weight (lb)	No Ice EPAa (sf)	No Ice Orientation Factor	Ice Weight (lb)	Ice EPAa (sf)	Ice Orientation Factor	Distance From Face (ft)	Vert Ecc (ft)
152.00	Powerwave P65-16-XLH-RR	3	53.00	8.130	0.79	244.88	9.431	0.79	0.000	0.000
151.00	15' Omni	1	40.00	4.500	1.00	238.09	9.926	1.00	0.000	0.000
149.00	CCI DTMABP7819VG12A	3	19.20	0.970	0.50	52.24	1.429	0.50	0.000	0.000
149.00	Ericsson RRUS 11 (Band 12)	3	55.00	2.520	0.67	135.33	3.170	0.67	0.000	0.000
149.00	Ericsson RRUS-12 1900 MHz	3	60.00	2.700	0.67	147.89	3.375	0.67	0.000	0.000
149.00	Flat Low Profile Platform	1	1500.00	26.100	1.00	2,147.91	45.192	1.00	0.000	0.000
149.00	Powerwave 7020.00 Dual	12	2.20	0.400	0.50	17.87	0.621	0.50	0.000	0.000
149.00	Powerwave 7770.00	6	35.00	5.510	0.77	169.84	6.563	0.77	0.000	0.000
149.00	Powerwave LGP21401	6	14.10	1.100	0.50	47.65	1.563	0.50	0.000	0.000
149.00	Powerwave LGP21901	6	5.50	0.230	0.50	18.07	0.428	0.50	0.000	0.000
149.00	Raycap DC6-48-60-18-8F	1	20.00	1.110	1.00	100.32	2.520	1.00	0.000	0.000
141.00	2" x 4" GPS	1	5.00	0.040	1.00	11.72	0.199	1.00	0.000	0.000
141.00	Andrew DB846H80E-SX	6	16.00	5.870	0.93	174.23	7.115	0.93	0.000	0.000
141.00	Flat Low Profile Platform	1	1500.00	26.100	1.00	2,144.99	45.106	1.00	0.000	0.000
141.00	Powerwave P65-16-XL-2	3	33.00	8.130	0.75	213.33	9.420	0.75	0.000	0.000
141.00	Rymsa MGD3-800T0	3	19.80	3.450	0.82	108.41	4.408	0.82	0.000	0.000
134.00	Commscope SBNH-1D65C	3	49.60	11.460	0.70	309.23	13.082	0.70	0.000	0.000
134.00	Ericsson AIR 21, 1.3 M, B2A	3	83.00	6.050	0.83	249.48	7.133	0.83	0.000	0.000
134.00	Ericsson RRUS 11 B12	3	50.70	2.790	0.67	135.77	3.460	0.67	0.000	0.000
134.00	Flat Low Profile Platform	1	1500.00	26.100	1.00	2,140.97	44.988	1.00	0.000	0.000
134.00	KMW AWS Twin Dual 700	3	17.40	0.990	0.50	57.85	1.430	0.50	0.000	0.000
	Totals	72	6337.10			14,420.33			Number of Loadings :	21

Linear Appurtenance Properties

Elev From (ft)	Elev To (ft)	Qty	Description	Coax Diameter (in)	Coax Weight (lb/ft)	Flat	Projected Width (in)	Exposed To Wind	Carrier
0.00	151.00	1	7/8" Coax	1.09	0.33	N	0.00	N	SPOK HOLDINGS, INC.
0.00	149.00	1	0.39" Fiber Trunk	0.39	0.06	N	0.00	Y	AT&T Mobility
0.00	149.00	2	0.78" 8 AWG 6	0.78	0.59	N	0.00	Y	AT&T Mobility
0.00	149.00	12	1 5/8" Coax	1.98	0.82	N	3.96	Y	AT&T Mobility
0.00	149.00	1	2" Conduit	2.38	3.65	N	0.00	Y	AT&T Mobility
0.00	141.00	12	1 5/8" Coax	1.98	0.82	N	0.00	N	Verizon
0.00	141.00	1	1/2" Coax	0.63	0.15	N	0.00	Y	Verizon
0.00	134.00	12	1 5/8" Coax	1.98	0.82	N	0.00	N	T-Mobile
0.00	134.00	1	1.58" Hybrid	1.58	1.61	N	0.00	N	T-Mobile

© 2007 - 2017 by ATC IP LLC. All rights reserved.

Segment Properties (Max Len : 5. ft)

Seg Top Elev (ft)	Description	Thick (in)	Flat Dia (in)	Area (in^2)	Ix (in^4)	W/t Ratio	D/t Ratio	F'y (ksi)	S (in^3)	Z (in^3)	Weight (lb)
0.00		0.4375	56.750	78.194	31,328.3	21.11	129.71	76.6	1087.	0.0	0.0
5.00		0.4375	55.409	76.333	29,143.8	20.57	126.65	77.2	1036.	0.0	1,314.6
10.00		0.4375	54.069	74.471	27,063.3	20.03	123.59	77.8	985.9	0.0	1,282.9
15.00		0.4375	52.728	72.610	25,084.3	19.49	120.52	78.5	937.0	0.0	1,251.2
20.00		0.4375	51.388	70.748	23,204.1	18.95	117.46	79.1	889.4	0.0	1,219.5
25.00		0.4375	50.047	68.887	21,420.4	18.41	114.39	79.8	843.0	0.0	1,187.9
30.00		0.4375	48.707	67.026	19,730.5	17.87	111.33	80.4	797.9	0.0	1,156.2
35.00		0.4375	47.366	65.164	18,131.8	17.33	108.27	81.0	754.0	0.0	1,124.5
40.00		0.4375	46.026	63.303	16,622.0	16.79	105.20	81.7	711.3	0.0	1,092.9
45.00		0.4375	44.685	61.441	15,198.4	16.25	102.14	82.3	669.9	0.0	1,061.2
47.92	Bot - Section 2	0.4375	43.903	60.356	14,406.8	15.93	100.35	82.6	646.3	0.0	604.4
50.00		0.4375	43.345	59.580	13,858.5	15.71	99.07	82.6	629.7	0.0	796.4
54.08	Top - Section 1	0.3750	43.000	50.733	11,645.8	18.46	114.67	79.7	533.4	0.0	1,531.2
55.00		0.3750	42.754	50.440	11,445.5	18.34	114.01	79.8	527.3	0.0	157.8
60.00		0.3750	41.414	48.845	10,393.4	17.71	110.44	80.6	494.3	0.0	844.6
65.00		0.3750	40.073	47.249	9,407.8	17.08	106.86	81.3	462.4	0.0	817.5
70.00		0.3750	38.733	45.654	8,486.6	16.45	103.29	82.1	431.6	0.0	790.3
75.00		0.3750	37.392	44.058	7,627.5	15.82	99.71	82.6	401.8	0.0	763.2
80.00		0.3750	36.052	42.463	6,828.5	15.19	96.14	82.6	373.1	0.0	736.0
85.00		0.3750	34.711	40.867	6,087.4	14.56	92.56	82.6	345.4	0.0	708.9
90.00		0.3750	33.371	39.272	5,401.9	13.93	88.99	82.6	318.8	0.0	681.7
95.00		0.3750	32.030	37.676	4,769.9	13.30	85.41	82.6	293.3	0.0	654.6
97.75	Bot - Section 3	0.3750	31.293	36.799	4,444.3	12.95	83.45	82.6	279.7	0.0	348.5
100.0		0.3750	30.690	36.081	4,189.2	12.67	81.84	82.6	268.9	0.0	468.8
102.2	Top - Section 2	0.2500	30.586	24.071	2,798.8	19.81	122.35	78.1	180.2	0.0	459.6
105.0		0.2500	29.849	23.486	2,599.7	19.29	119.40	78.7	171.5	0.0	222.5
110.0		0.2500	28.508	22.422	2,262.2	18.34	114.03	79.8	156.3	0.0	390.5
115.0		0.2500	27.168	21.359	1,955.3	17.40	108.67	80.9	141.8	0.0	372.4
120.0		0.2500	25.827	20.295	1,677.5	16.45	103.31	82.0	127.9	0.0	354.3
125.0		0.2500	24.487	19.231	1,427.3	15.51	97.95	82.6	114.8	0.0	336.2
130.0		0.2500	23.146	18.168	1,203.3	14.56	92.59	82.6	102.4	0.0	318.2
134.0		0.2500	22.074	17.317	1,042.0	13.81	88.30	82.6	93.0	0.0	241.5
135.0		0.2500	21.806	17.104	1,004.1	13.62	87.22	82.6	90.7	0.0	58.6
140.0		0.2500	20.465	16.040	828.2	12.67	81.86	82.6	79.7	0.0	282.0
141.0		0.2500	20.197	15.828	795.7	12.48	80.79	82.6	77.6	0.0	54.2
145.0		0.2500	19.125	14.977	674.1	11.73	76.50	82.6	69.4	0.0	209.6
149.0		0.2500	18.052	14.126	565.6	10.97	72.21	82.6	61.7	0.0	198.1
150.0		0.2500	17.784	13.913	540.4	10.78	71.14	82.6	59.9	0.0	47.7
151.0		0.2500	17.516	13.700	516.0	10.59	70.06	82.6	58.0	0.0	47.0
152.0		0.2500	17.248	13.488	492.4	10.40	68.99	82.6	56.2	0.0	46.3
											24,233.4

Site Number: 302518 | Code: ANSI/TIA-222-G | © 2007 - 2017 by ATC IP LLC. All rights reserved.

Site Name: Newtown CT 3, CT | Engineering Number:OAA683410_C3_04 | 1/11/2017 6:27:08 PM

Customer: T- Mobile

Load Case: 1.2D + 1.6W | 93 mph with No Ice | 24 Iterations

Gust Response Factor :1.10 | Wind Importance Factor 1.00

Dead Load Factor :1.20

Wind Load Factor :1.60

Applied Segment Forces Summary

		Shaft Forces		Discrete Forces				Linear Forces		Sum of Forces			
Seg Elev (ft)	Description	Wind FX (lb)	Dead Load (lb)	Wind FX (lb)	Torsion MY (lb-ft)	Moment MZ (lb-ft)	Dead Load (lb)	Wind FX (lb)	Dead Load (lb)	Wind FX (lb)	Dead Load (lb)	Torsion MY (lb-ft)	Moment MZ (lb)
0.00		199.8	0.0					0.0	0.0	199.8	0.0	0.0	0.0
5.00		394.9	1,577.5					0.0	219.0	394.9	1,796.4	0.0	0.0
10.00		385.3	1,539.5					0.0	219.0	385.3	1,758.4	0.0	0.0
15.00		375.8	1,501.5					0.0	219.0	375.8	1,720.4	0.0	0.0
20.00		366.2	1,463.4					0.0	219.0	366.2	1,682.4	0.0	0.0
25.00		356.7	1,425.4					0.0	219.0	356.7	1,644.4	0.0	0.0
30.00		351.2	1,387.4					0.0	219.0	351.2	1,606.4	0.0	0.0
35.00		352.8	1,349.4					0.0	219.0	352.8	1,568.4	0.0	0.0
40.00		356.2	1,311.4					0.0	219.0	356.2	1,530.4	0.0	0.0
45.00		283.1	1,273.4					0.0	219.0	283.1	1,492.4	0.0	0.0
47.92	Bot - Section 2	180.3	725.3					0.0	127.7	180.3	853.0	0.0	0.0
50.00		224.3	955.6					0.0	91.2	224.3	1,046.9	0.0	0.0
54.08	Top - Section 1	181.7	1,837.5					0.0	178.8	181.7	2,016.3	0.0	0.0
55.00		214.0	189.3					0.0	40.1	214.0	229.5	0.0	0.0
60.00		360.0	1,013.5					0.0	219.0	360.0	1,232.5	0.0	0.0
65.00		356.4	981.0					0.0	219.0	356.4	1,199.9	0.0	0.0
70.00		353.1	948.4					0.0	219.0	353.1	1,167.4	0.0	0.0
75.00		350.9	915.8					0.0	219.0	350.9	1,134.8	0.0	0.0
80.00		348.6	883.2					0.0	219.0	348.6	1,102.2	0.0	0.0
85.00		345.7	850.7					0.0	219.0	345.7	1,069.6	0.0	0.0
90.00		342.2	818.1					0.0	219.0	342.2	1,037.1	0.0	0.0
95.00		262.9	785.5					0.0	219.0	262.9	1,004.5	0.0	0.0
97.75	Bot - Section 3	169.3	418.1					0.0	120.4	169.3	538.6	0.0	0.0
100.00		152.7	562.5					0.0	98.5	152.7	661.1	0.0	0.0
102.25	Top - Section 2	167.9	551.5					0.0	98.5	167.9	650.1	0.0	0.0
105.00		256.8	267.0					0.0	120.4	256.8	387.5	0.0	0.0
110.00		327.2	468.6					0.0	219.0	327.2	687.6	0.0	0.0
115.00		321.6	446.9					0.0	219.0	321.6	665.9	0.0	0.0
120.00		315.6	425.2					0.0	219.0	315.6	644.2	0.0	0.0
125.00		309.2	403.5					0.0	219.0	309.2	622.5	0.0	0.0
130.00		272.9	381.8					0.0	219.0	272.9	600.8	0.0	0.0
134.00	Appertunance(s)	149.6	289.8	2,509.0	0.0	0.0	2,522.5	0.0	175.2	2,658.5	2,987.5	0.0	0.0
135.00		175.6	70.3					0.0	30.1	175.6	100.3	0.0	0.0
140.00		174.7	338.3					0.0	150.3	174.7	488.6	0.0	0.0
141.00	Appertunance(s)	142.3	65.1	2,977.1	0.0	0.0	2,111.3	0.0	30.1	3,119.4	2,206.4	0.0	0.0
145.00		267.7	251.6					0.0	72.3	267.7	323.9	0.0	0.0
149.00	Appertunance(s)	174.4	237.7	2,542.9	0.0	0.0	2,731.9	64.2	72.3	2,781.5	3,041.9	0.0	0.0
150.00		40.2	57.2					0.0	0.4	40.2	57.6	0.0	0.0
151.00	Appertunance(s)	39.7	56.4	148.2	0.0	0.0	48.0	0.0	0.4	187.8	104.8	0.0	0.0
152.00	Appertunance(s)	19.7	55.5	635.6	0.0	0.0	190.8	0.0	0.0	655.3	246.3	0.0	0.0
									Totals:	19,296.0	42,909.1	0.00	0.00

 © 2007 - 2017 by ATC IP LLC. All rights reserved.

Load Case: 1.2D + 1.6W 93 mph with No Ice 24 Iterations

Gust Response Factor :1.10 Wind Importance Factor 1.00
Dead Load Factor :1.20
Wind Load Factor :1.60

Calculated Forces

Seg Elev (ft)	Pu FY (-) (kips)	Vu FX (-) (kips)	Tu MY (ft-kips)	Mu MZ (ft-kips)	Mu MX (ft-kips)	Resultant Moment (ft-kips)	phi Pn (kips)	phi Vn (kips)	phi Tn (ft-kips)	phi Mn (ft-kips)	Total Deflect (in)	Rotation (deg)	Ratio
0.00	-42.89	-19.13	0.00	-2,088.23	0.00	2,088.23	5,388.79	2,694.40	12,470.2	6,244.37	0.00	0.00	0.342
5.00	-41.07	-18.80	0.00	-1,992.58	0.00	1,992.58	5,304.17	2,652.08	11,979.9	5,998.87	0.05	-0.09	0.340
10.00	-39.28	-18.48	0.00	-1,898.57	0.00	1,898.57	5,217.41	2,608.71	11,494.3	5,755.72	0.20	-0.19	0.337
15.00	-37.53	-18.16	0.00	-1,806.18	0.00	1,806.18	5,128.53	2,564.26	11,013.8	5,515.11	0.45	-0.28	0.335
20.00	-35.82	-17.85	0.00	-1,715.38	0.00	1,715.38	5,037.52	2,518.76	10,538.7	5,277.21	0.80	-0.38	0.332
25.00	-34.14	-17.54	0.00	-1,626.14	0.00	1,626.14	4,944.37	2,472.19	10,069.4	5,042.19	1.26	-0.49	0.329
30.00	-32.51	-17.23	0.00	-1,538.45	0.00	1,538.45	4,849.10	2,424.55	9,606.22	4,810.25	1.82	-0.59	0.327
35.00	-30.91	-16.92	0.00	-1,452.28	0.00	1,452.28	4,751.70	2,375.85	9,149.49	4,581.55	2.50	-0.70	0.324
40.00	-29.35	-16.60	0.00	-1,367.67	0.00	1,367.67	4,652.17	2,326.09	8,699.60	4,356.27	3.30	-0.81	0.320
45.00	-27.84	-16.34	0.00	-1,284.65	0.00	1,284.65	4,550.51	2,275.26	8,256.90	4,134.59	4.21	-0.92	0.317
47.92	-26.97	-16.18	0.00	-1,236.99	0.00	1,236.99	4,484.12	2,242.06	7,991.23	4,001.55	4.79	-0.99	0.315
50.00	-25.91	-15.97	0.00	-1,203.29	0.00	1,203.29	4,426.49	2,213.25	7,786.16	3,898.86	5.24	-1.04	0.315
54.08	-23.88	-15.77	0.00	-1,138.09	0.00	1,138.09	3,638.75	1,819.38	6,367.24	3,188.35	6.17	-1.14	0.364
55.00	-23.63	-15.59	0.00	-1,123.64	0.00	1,123.64	3,623.94	1,811.97	6,304.45	3,156.91	6.39	-1.16	0.363
60.00	-22.37	-15.25	0.00	-1,045.71	0.00	1,045.71	3,541.90	1,770.95	5,965.11	2,986.99	7.69	-1.30	0.356
65.00	-21.15	-14.92	0.00	-969.45	0.00	969.45	3,457.73	1,728.87	5,631.41	2,819.89	9.12	-1.44	0.350
70.00	-19.95	-14.59	0.00	-894.86	0.00	894.86	3,371.43	1,685.72	5,303.71	2,655.80	10.70	-1.58	0.343
75.00	-18.79	-14.25	0.00	-821.93	0.00	821.93	3,273.30	1,636.65	4,967.63	2,487.51	12.43	-1.72	0.336
80.00	-17.66	-13.91	0.00	-750.69	0.00	750.69	3,154.76	1,577.38	4,612.61	2,309.73	14.31	-1.87	0.331
85.00	-16.57	-13.57	0.00	-681.13	0.00	681.13	3,036.22	1,518.11	4,270.76	2,138.55	16.35	-2.02	0.324
90.00	-15.51	-13.24	0.00	-613.26	0.00	613.26	2,917.68	1,458.84	3,942.07	1,973.96	18.54	-2.17	0.316
95.00	-14.49	-12.96	0.00	-547.09	0.00	547.09	2,799.14	1,399.57	3,626.54	1,815.96	20.90	-2.32	0.307
97.75	-13.94	-12.79	0.00	-511.44	0.00	511.44	2,733.95	1,366.97	3,458.61	1,731.87	22.26	-2.41	0.300
100.00	-13.27	-12.63	0.00	-482.66	0.00	482.66	2,680.61	1,340.30	3,324.17	1,664.55	23.41	-2.48	0.295
102.25	-12.61	-12.45	0.00	-454.25	0.00	454.25	1,691.97	845.99	2,108.29	1,055.71	24.60	-2.55	0.438
105.00	-12.21	-12.21	0.00	-420.02	0.00	420.02	1,663.78	831.89	2,022.36	1,012.68	26.09	-2.64	0.422
110.00	-11.49	-11.89	0.00	-358.99	0.00	358.99	1,610.87	805.43	1,868.63	935.70	28.97	-2.85	0.391
115.00	-10.80	-11.57	0.00	-299.54	0.00	299.54	1,555.83	777.91	1,718.41	860.48	32.07	-3.06	0.355
120.00	-10.14	-11.25	0.00	-241.69	0.00	241.69	1,498.66	749.33	1,572.08	787.21	35.38	-3.26	0.314
125.00	-9.50	-10.94	0.00	-185.41	0.00	185.41	1,428.79	714.40	1,419.47	710.79	38.89	-3.44	0.268
130.00	-8.90	-10.65	0.00	-130.73	0.00	130.73	1,349.76	674.88	1,266.04	633.96	42.58	-3.59	0.213
134.00	-6.08	-7.81	0.00	-88.13	0.00	88.13	1,286.54	643.27	1,149.61	575.66	45.63	-3.70	0.158
135.00	-5.98	-7.64	0.00	-80.32	0.00	80.32	1,270.74	635.37	1,121.38	561.52	46.41	-3.72	0.148
140.00	-5.50	-7.43	0.00	-42.14	0.00	42.14	1,191.71	595.86	985.49	493.48	50.36	-3.81	0.090
141.00	-3.50	-4.18	0.00	-34.71	0.00	34.71	1,175.91	587.95	959.37	480.40	51.15	-3.82	0.075
145.00	-3.20	-3.89	0.00	-18.00	0.00	18.00	1,112.69	556.34	858.38	429.83	54.37	-3.86	0.045
149.00	-0.35	-0.91	0.00	-2.44	0.00	2.44	1,049.47	524.73	763.01	382.07	57.61	-3.88	0.007
150.00	-0.29	-0.86	0.00	-1.54	0.00	1.54	1,033.66	516.83	740.04	370.57	58.42	-3.88	0.004
151.00	-0.20	-0.67	0.00	-0.67	0.00	0.67	1,017.86	508.93	717.43	359.25	59.23	-3.88	0.002
152.00	0.00	-0.66	0.00	0.00	0.00	0.00	1,002.05	501.03	695.17	348.10	60.04	-3.88	0.000

© 2007 - 2017 by ATC IP LLC. All rights reserved.

Load Case: 0.9D + 1.6W 93 mph with No Ice (Reduced DL) 24 Iterations

Gust Response Factor :1.10 Wind Importance Factor :1.00
Dead Load Factor :0.90
Wind Load Factor :1.60

Applied Segment Forces Summary

		Shaft Forces		Discrete Forces				Linear Forces		Sum of Forces			
Seg Elev (ft)	Description	Wind FX (lb)	Dead Load (lb)	Wind FX (lb)	Torsion MY (lb-ft)	Moment MZ (lb-ft)	Dead Load (lb)	Wind FX (lb)	Dead Load (lb)	Wind FX (lb)	Dead Load (lb)	Torsion MY (lb-ft)	Moment MZ (lb)
0.00		199.8	0.0					0.0	0.0	199.8	0.0	0.0	0.0
5.00		394.9	1,183.1					0.0	164.2	394.9	1,347.3	0.0	0.0
10.00		385.3	1,154.6					0.0	164.2	385.3	1,318.8	0.0	0.0
15.00		375.8	1,126.1					0.0	164.2	375.8	1,290.3	0.0	0.0
20.00		366.2	1,097.6					0.0	164.2	366.2	1,261.8	0.0	0.0
25.00		356.7	1,069.1					0.0	164.2	356.7	1,233.3	0.0	0.0
30.00		351.2	1,040.6					0.0	164.2	351.2	1,204.8	0.0	0.0
35.00		352.8	1,012.1					0.0	164.2	352.8	1,176.3	0.0	0.0
40.00		356.2	983.6					0.0	164.2	356.2	1,147.8	0.0	0.0
45.00		283.1	955.1					0.0	164.2	283.1	1,119.3	0.0	0.0
47.92	Bot - Section 2	180.3	544.0					0.0	95.8	180.3	639.8	0.0	0.0
50.00		224.3	716.7					0.0	68.4	224.3	785.2	0.0	0.0
54.08	Top - Section 1	181.7	1,378.1					0.0	134.1	181.7	1,512.3	0.0	0.0
55.00		214.0	142.0					0.0	30.1	214.0	172.1	0.0	0.0
60.00		360.0	760.1					0.0	164.2	360.0	924.4	0.0	0.0
65.00		356.4	735.7					0.0	164.2	356.4	900.0	0.0	0.0
70.00		351.8	711.3					0.0	164.2	351.8	875.5	0.0	0.0
75.00		346.4	686.9					0.0	164.2	346.4	851.1	0.0	0.0
80.00		340.2	662.4					0.0	164.2	340.2	826.7	0.0	0.0
85.00		333.3	638.0					0.0	164.2	333.3	802.2	0.0	0.0
90.00		325.7	613.6					0.0	164.2	325.7	777.8	0.0	0.0
95.00		247.6	589.1					0.0	164.2	247.6	753.4	0.0	0.0
97.75	Bot - Section 3	157.7	313.6					0.0	90.3	157.7	403.9	0.0	0.0
100.00		141.2	421.9					0.0	73.9	141.2	495.8	0.0	0.0
102.25	Top - Section 2	154.6	413.7					0.0	73.9	154.6	487.6	0.0	0.0
105.00		234.3	200.3					0.0	90.3	234.3	290.6	0.0	0.0
110.00		294.7	351.5					0.0	164.2	294.7	515.7	0.0	0.0
115.00		284.4	335.2					0.0	164.2	284.4	499.4	0.0	0.0
120.00		273.7	318.9					0.0	164.2	273.7	483.1	0.0	0.0
125.00		262.5	302.6					0.0	164.2	262.5	466.9	0.0	0.0
130.00		226.9	286.3					0.0	164.2	226.9	450.6	0.0	0.0
134.00	Appertunance(s)	122.5	217.3	2,509.0	0.0	0.0	1,891.9	0.0	131.4	2,631.5	2,240.6	0.0	0.0
135.00		140.5	52.7					0.0	22.5	140.5	75.2	0.0	0.0
140.00		139.0	253.8					0.0	112.7	139.0	366.5	0.0	0.0
141.00	Appertunance(s)	110.2	48.8	2,977.1	0.0	0.0	1,583.5	0.0	22.5	3,087.3	1,654.8	0.0	0.0
145.00		241.8	188.7					0.0	54.2	241.8	242.9	0.0	0.0
149.00	Appertunance(s)	174.4	178.3	2,542.9	0.0	0.0	2,048.9	64.2	54.2	2,781.5	2,281.4	0.0	0.0
150.00		40.2	42.9					0.0	0.3	40.2	43.2	0.0	0.0
151.00	Appertunance(s)	39.7	42.3	148.2	0.0	0.0	36.0	0.0	0.3	187.8	78.6	0.0	0.0
152.00	Appertunance(s)	19.7	41.6	635.6	0.0	0.0	143.1	0.0	0.0	655.3	184.7	0.0	0.0
									Totals:	18,818.8	32,181.8	0.00	0.00

 © 2007 - 2017 by ATC IP LLC. All rights reserved.

Load Case: 0.9D + 1.6W 93 mph with No Ice (Reduced DL) 24 Iterations

Gust Response Factor :1.10 Wind Importance Factor 1.00
Dead Load Factor :0.90
Wind Load Factor :1.60

Calculated Forces

Seg Elev (ft)	Pu FY (-) (kips)	Vu FX (-) (kips)	Tu MY (ft-kips)	Mu MZ (ft-kips)	Mu MX (ft-kips)	Resultant Moment (ft-kips)	phi Pn (kips)	phi Vn (kips)	phi Tn (ft-kips)	phi Mn (ft-kips)	Total Deflect (in)	Rotation (deg)	Ratio
0.00	-32.17	-18.64	0.00	-2,011.65	0.00	2,011.65	5,388.79	2,694.40	12,470.2	6,244.37	0.00	0.00	0.328
5.00	-30.79	-18.30	0.00	-1,918.43	0.00	1,918.43	5,304.17	2,652.08	11,979.9	5,998.87	0.05	-0.09	0.326
10.00	-29.44	-17.96	0.00	-1,826.94	0.00	1,826.94	5,217.41	2,608.71	11,494.3	5,755.72	0.19	-0.18	0.323
15.00	-28.13	-17.62	0.00	-1,737.17	0.00	1,737.17	5,128.53	2,564.26	11,013.8	5,515.11	0.43	-0.27	0.321
20.00	-26.84	-17.29	0.00	-1,649.06	0.00	1,649.06	5,037.52	2,518.76	10,538.7	5,277.21	0.77	-0.37	0.318
25.00	-25.58	-16.97	0.00	-1,562.59	0.00	1,562.59	4,944.37	2,472.19	10,069.4	5,042.19	1.21	-0.47	0.315
30.00	-24.35	-16.65	0.00	-1,477.73	0.00	1,477.73	4,849.10	2,424.55	9,606.22	4,810.25	1.76	-0.57	0.312
35.00	-23.14	-16.33	0.00	-1,394.46	0.00	1,394.46	4,751.70	2,375.85	9,149.49	4,581.55	2.41	-0.67	0.309
40.00	-21.97	-16.00	0.00	-1,312.81	0.00	1,312.81	4,652.17	2,326.09	8,699.60	4,356.27	3.17	-0.78	0.306
45.00	-20.83	-15.73	0.00	-1,232.80	0.00	1,232.80	4,550.51	2,275.26	8,256.90	4,134.59	4.04	-0.89	0.303
47.92	-20.18	-15.56	0.00	-1,186.91	0.00	1,186.91	4,484.12	2,242.06	7,991.23	4,001.55	4.61	-0.95	0.301
50.00	-19.38	-15.35	0.00	-1,154.49	0.00	1,154.49	4,426.49	2,213.25	7,786.16	3,898.86	5.04	-1.00	0.301
54.08	-17.85	-15.16	0.00	-1,091.82	0.00	1,091.82	3,638.75	1,819.38	6,367.24	3,188.35	5.93	-1.10	0.347
55.00	-17.67	-14.96	0.00	-1,077.92	0.00	1,077.92	3,623.94	1,811.97	6,304.45	3,156.91	6.15	-1.12	0.346
60.00	-16.72	-14.62	0.00	-1,003.10	0.00	1,003.10	3,541.90	1,770.95	5,965.11	2,986.99	7.39	-1.25	0.341
65.00	-15.79	-14.28	0.00	-929.98	0.00	929.98	3,457.73	1,728.87	5,631.41	2,819.89	8.77	-1.38	0.334
70.00	-14.89	-13.95	0.00	-858.56	0.00	858.56	3,371.43	1,685.72	5,303.71	2,655.80	10.29	-1.52	0.328
75.00	-14.02	-13.61	0.00	-788.84	0.00	788.84	3,273.30	1,636.65	4,967.63	2,487.51	11.95	-1.65	0.321
80.00	-13.17	-13.28	0.00	-720.79	0.00	720.79	3,154.76	1,577.38	4,612.61	2,309.73	13.75	-1.79	0.316
85.00	-12.35	-12.95	0.00	-654.40	0.00	654.40	3,036.22	1,518.11	4,270.76	2,138.55	15.71	-1.94	0.310
90.00	-11.55	-12.63	0.00	-589.65	0.00	589.65	2,917.68	1,458.84	3,942.07	1,973.96	17.82	-2.08	0.303
95.00	-10.78	-12.37	0.00	-526.52	0.00	526.52	2,799.14	1,399.57	3,626.54	1,815.96	20.08	-2.23	0.294
97.75	-10.37	-12.21	0.00	-492.50	0.00	492.50	2,733.95	1,366.97	3,458.61	1,731.87	21.39	-2.31	0.288
100.00	-9.86	-12.06	0.00	-465.02	0.00	465.02	2,680.61	1,340.30	3,324.17	1,664.55	22.49	-2.38	0.283
102.25	-9.37	-11.90	0.00	-437.88	0.00	437.88	1,691.97	845.99	2,108.29	1,055.71	23.63	-2.45	0.421
105.00	-9.06	-11.68	0.00	-405.16	0.00	405.16	1,663.78	831.89	2,022.36	1,012.68	25.07	-2.54	0.406
110.00	-8.51	-11.39	0.00	-346.78	0.00	346.78	1,610.87	805.43	1,868.63	935.70	27.84	-2.74	0.376
115.00	-7.99	-11.11	0.00	-289.83	0.00	289.83	1,555.83	777.91	1,718.41	860.48	30.82	-2.94	0.342
120.00	-7.49	-10.83	0.00	-234.30	0.00	234.30	1,498.66	749.33	1,572.08	787.21	34.00	-3.13	0.303
125.00	-7.01	-10.56	0.00	-180.14	0.00	180.14	1,428.79	714.40	1,419.47	710.79	37.38	-3.31	0.259
130.00	-6.55	-10.33	0.00	-127.31	0.00	127.31	1,349.76	674.88	1,266.04	633.96	40.92	-3.46	0.206
134.00	-4.46	-7.57	0.00	-86.01	0.00	86.01	1,286.54	643.27	1,149.61	575.66	43.87	-3.56	0.153
135.00	-4.39	-7.43	0.00	-78.45	0.00	78.45	1,270.74	635.37	1,121.38	561.52	44.62	-3.58	0.143
140.00	-4.03	-7.27	0.00	-41.32	0.00	41.32	1,191.71	595.86	985.49	493.48	48.42	-3.67	0.087
141.00	-2.57	-4.08	0.00	-34.05	0.00	34.05	1,175.91	587.95	959.37	480.40	49.19	-3.68	0.073
145.00	-2.34	-3.83	0.00	-17.73	0.00	17.73	1,112.69	556.34	858.38	429.83	52.29	-3.72	0.043
149.00	-0.25	-0.90	0.00	-2.43	0.00	2.43	1,049.47	524.73	763.01	382.07	55.41	-3.74	0.007
150.00	-0.21	-0.86	0.00	-1.52	0.00	1.52	1,033.66	516.83	740.04	370.57	56.19	-3.74	0.004
151.00	-0.14	-0.67	0.00	-0.67	0.00	0.67	1,017.86	508.93	717.43	359.25	56.98	-3.74	0.002
152.00	0.00	-0.66	0.00	0.00	0.00	0.00	1,002.05	501.03	695.17	348.10	57.76	-3.74	0.000

© 2007 - 2017 by ATC IP LLC. All rights reserved.

Load Case: 1.2D + 1.0Di + 1.0Wi 50 mph with 0.75 in Radial Ice 23 Iterations

Gust Response Factor :1.10 Ice Dead Load Factor :1.00 Wind Importance Factor :1.00
Dead Load Factor :1.20 Ice Importance Factor :1.00
Wind Load Factor :1.00

Applied Segment Forces Summary

		Shaft Forces		Discrete Forces				Linear Forces		Sum of Forces			
Seg Elev (ft)	Description	Wind FX (lb)	Dead Load (lb)	Wind FX (lb)	Torsion MY (lb-ft)	Moment MZ (lb-ft)	Dead Load (lb)	Wind FX (lb)	Dead Load (lb)	Wind FX (lb)	Dead Load (lb)	Torsion MY (lb-ft)	Moment MZ (lb)
0.00		69.4	0.0					0.0	0.0	69.4	0.0	0.0	0.0
5.00		137.4	1,988.1					0.0	412.2	137.4	2,400.3	0.0	0.0
10.00		134.7	1,988.0					0.0	437.3	134.7	2,425.3	0.0	0.0
15.00		131.8	1,962.7					0.0	450.3	131.8	2,413.0	0.0	0.0
20.00		128.8	1,929.0					0.0	459.5	128.8	2,388.5	0.0	0.0
25.00		125.8	1,891.1					0.0	466.6	125.8	2,357.7	0.0	0.0
30.00		124.2	1,850.4					0.0	472.5	124.2	2,322.9	0.0	0.0
35.00		125.0	1,807.8					0.0	477.5	125.0	2,285.4	0.0	0.0
40.00		126.6	1,763.9					0.0	481.9	126.6	2,245.8	0.0	0.0
45.00		100.8	1,718.8					0.0	485.8	100.8	2,204.7	0.0	0.0
47.92	Bot - Section 2	64.3	983.1					0.0	285.1	64.3	1,268.1	0.0	0.0
50.00		80.1	1,141.5					0.0	204.3	80.1	1,345.9	0.0	0.0
54.08	Top - Section 1	64.9	2,195.4					0.0	402.1	64.9	2,597.5	0.0	0.0
55.00		76.7	269.6					0.0	90.5	76.7	360.2	0.0	0.0
60.00		129.1	1,440.6					0.0	495.6	129.1	1,936.2	0.0	0.0
65.00		128.2	1,398.3					0.0	498.4	128.2	1,896.6	0.0	0.0
70.00		127.0	1,355.5					0.0	501.0	127.0	1,856.5	0.0	0.0
75.00		125.5	1,312.3					0.0	503.4	125.5	1,815.7	0.0	0.0
80.00		123.6	1,268.8					0.0	505.7	123.6	1,774.5	0.0	0.0
85.00		121.6	1,224.9					0.0	507.9	121.6	1,732.8	0.0	0.0
90.00		119.3	1,180.8					0.0	509.9	119.3	1,690.7	0.0	0.0
95.00		90.9	1,136.3					0.0	511.9	90.9	1,648.2	0.0	0.0
97.75	Bot - Section 3	58.1	607.7					0.0	282.3	58.1	890.0	0.0	0.0
100.00		52.1	717.6					0.0	231.4	52.1	949.0	0.0	0.0
102.25	Top - Section 2	57.2	704.1					0.0	231.8	57.2	935.9	0.0	0.0
105.00		86.9	449.6					0.0	283.8	86.9	733.4	0.0	0.0
110.00		109.8	787.8					0.0	517.3	109.8	1,305.1	0.0	0.0
115.00		106.5	753.4					0.0	518.9	106.5	1,272.3	0.0	0.0
120.00		103.2	718.8					0.0	520.5	103.2	1,239.3	0.0	0.0
125.00		99.6	684.0					0.0	522.1	99.6	1,206.0	0.0	0.0
130.00		86.7	649.0					0.0	523.5	86.7	1,172.6	0.0	0.0
134.00	Appertunance(s)	47.0	495.1	635.6	0.0	0.0	4,618.4	0.0	419.9	682.7	5,533.4	0.0	0.0
135.00		54.4	121.1					0.0	91.4	54.4	212.5	0.0	0.0
140.00		53.9	578.7					0.0	457.7	53.9	1,036.4	0.0	0.0
141.00	Appertunance(s)	43.1	112.7	748.8	0.0	0.0	4,319.1	0.0	91.7	791.9	4,523.5	0.0	0.0
145.00		67.3	433.0					0.0	301.1	67.3	734.1	0.0	0.0
149.00	Appertunance(s)	41.0	410.3	677.5	0.0	0.0	5,137.7	22.0	301.8	740.5	5,849.8	0.0	0.0
150.00		16.0	99.9					0.0	0.4	16.0	100.3	0.0	0.0
151.00	Appertunance(s)	15.8	98.5	59.0	0.0	0.0	246.1	0.0	0.4	74.9	345.0	0.0	0.0
152.00	Appertunance(s)	7.9	97.0	133.2	0.0	0.0	766.5	0.0	0.0	141.1	863.5	0.0	0.0
									Totals:	5,838.23	69,868.4	0.00	0.00

 © 2007 - 2017 by ATC IP LLC. All rights reserved.

Load Case: 1.2D + 1.0Di + 1.0Wi 50 mph with 0.75 in Radial Ice 23 Iterations

Gust Response Factor :1.10 Ice Dead Load Factor :1.00 Wind Importance Factor :1.00
Dead Load Factor :1.20 Ice Importance Factor :1.00
Wind Load Factor :1.00

Calculated Forces

Seg Elev (ft)	Pu FY (-) (kips)	Vu FX (-) (kips)	Tu MY (ft-kips)	Mu MZ (ft-kips)	Mu MX (ft-kips)	Resultant Moment (ft-kips)	phi Pn (kips)	phi Vn (kips)	phi Tn (ft-kips)	phi Mn (ft-kips)	Total Deflect (in)	Rotation (deg)	Ratio
0.00	-69.87	-5.78	0.00	-613.22	0.00	613.22	5,388.79	2,694.40	12,470.2	6,244.37	0.00	0.00	0.111
5.00	-67.46	-5.68	0.00	-584.30	0.00	584.30	5,304.17	2,652.08	11,979.9	5,998.87	0.01	-0.03	0.110
10.00	-65.04	-5.57	0.00	-555.90	0.00	555.90	5,217.41	2,608.71	11,494.3	5,755.72	0.06	-0.06	0.109
15.00	-62.62	-5.47	0.00	-528.03	0.00	528.03	5,128.53	2,564.26	11,013.8	5,515.11	0.13	-0.08	0.108
20.00	-60.23	-5.37	0.00	-500.67	0.00	500.67	5,037.52	2,518.76	10,538.7	5,277.21	0.23	-0.11	0.107
25.00	-57.87	-5.27	0.00	-473.82	0.00	473.82	4,944.37	2,472.19	10,069.4	5,042.19	0.37	-0.14	0.106
30.00	-55.54	-5.17	0.00	-447.48	0.00	447.48	4,849.10	2,424.55	9,606.22	4,810.25	0.53	-0.17	0.104
35.00	-53.26	-5.07	0.00	-421.63	0.00	421.63	4,751.70	2,375.85	9,149.49	4,581.55	0.73	-0.20	0.103
40.00	-51.01	-4.96	0.00	-396.31	0.00	396.31	4,652.17	2,326.09	8,699.60	4,356.27	0.96	-0.24	0.102
45.00	-48.80	-4.87	0.00	-371.51	0.00	371.51	4,550.51	2,275.26	8,256.90	4,134.59	1.23	-0.27	0.101
47.92	-47.53	-4.81	0.00	-357.31	0.00	357.31	4,484.12	2,242.06	7,991.23	4,001.55	1.40	-0.29	0.100
50.00	-46.19	-4.75	0.00	-347.28	0.00	347.28	4,426.49	2,213.25	7,786.16	3,898.86	1.53	-0.30	0.100
54.08	-43.59	-4.68	0.00	-327.90	0.00	327.90	3,638.75	1,819.38	6,367.24	3,188.35	1.80	-0.33	0.115
55.00	-43.23	-4.62	0.00	-323.61	0.00	323.61	3,623.94	1,811.97	6,304.45	3,156.91	1.87	-0.34	0.114
60.00	-41.29	-4.50	0.00	-300.52	0.00	300.52	3,541.90	1,770.95	5,965.11	2,986.99	2.24	-0.38	0.112
65.00	-39.39	-4.39	0.00	-278.00	0.00	278.00	3,457.73	1,728.87	5,631.41	2,819.89	2.66	-0.42	0.110
70.00	-37.53	-4.28	0.00	-256.05	0.00	256.05	3,371.43	1,685.72	5,303.71	2,655.80	3.12	-0.46	0.108
75.00	-35.71	-4.16	0.00	-234.67	0.00	234.67	3,273.30	1,636.65	4,967.63	2,487.51	3.62	-0.50	0.105
80.00	-33.94	-4.05	0.00	-213.86	0.00	213.86	3,154.76	1,577.38	4,612.61	2,309.73	4.16	-0.54	0.103
85.00	-32.20	-3.93	0.00	-193.63	0.00	193.63	3,036.22	1,518.11	4,270.76	2,138.55	4.75	-0.58	0.101
90.00	-30.51	-3.82	0.00	-173.97	0.00	173.97	2,917.68	1,458.84	3,942.07	1,973.96	5.39	-0.63	0.099
95.00	-28.86	-3.73	0.00	-154.88	0.00	154.88	2,799.14	1,399.57	3,626.54	1,815.96	6.06	-0.67	0.096
97.75	-27.97	-3.67	0.00	-144.63	0.00	144.63	2,733.95	1,366.97	3,458.61	1,731.87	6.46	-0.69	0.094
100.00	-27.02	-3.61	0.00	-136.38	0.00	136.38	2,680.61	1,340.30	3,324.17	1,664.55	6.79	-0.71	0.092
102.25	-26.08	-3.55	0.00	-128.25	0.00	128.25	1,691.97	845.99	2,108.29	1,055.71	7.13	-0.73	0.137
105.00	-25.35	-3.48	0.00	-118.48	0.00	118.48	1,663.78	831.89	2,022.36	1,012.68	7.56	-0.76	0.132
110.00	-24.04	-3.37	0.00	-101.09	0.00	101.09	1,610.87	805.43	1,868.63	935.70	8.39	-0.82	0.123
115.00	-22.77	-3.27	0.00	-84.22	0.00	84.22	1,555.83	777.91	1,718.41	860.48	9.28	-0.88	0.113
120.00	-21.53	-3.17	0.00	-67.86	0.00	67.86	1,498.66	749.33	1,572.08	787.21	10.23	-0.93	0.101
125.00	-20.32	-3.07	0.00	-52.01	0.00	52.01	1,428.79	714.40	1,419.47	710.79	11.23	-0.98	0.087
130.00	-19.15	-2.97	0.00	-36.68	0.00	36.68	1,349.76	674.88	1,266.04	633.96	12.29	-1.03	0.072
134.00	-13.63	-2.19	0.00	-24.80	0.00	24.80	1,286.54	643.27	1,149.61	575.66	13.16	-1.06	0.054
135.00	-13.41	-2.14	0.00	-22.61	0.00	22.61	1,270.74	635.37	1,121.38	561.52	13.38	-1.06	0.051
140.00	-12.38	-2.07	0.00	-11.92	0.00	11.92	1,191.71	595.86	985.49	493.48	14.51	-1.09	0.035
141.00	-7.87	-1.19	0.00	-9.85	0.00	9.85	1,175.91	587.95	959.37	480.40	14.74	-1.09	0.027
145.00	-7.14	-1.11	0.00	-5.09	0.00	5.09	1,112.69	556.34	858.38	429.83	15.66	-1.10	0.018
149.00	-1.30	-0.26	0.00	-0.65	0.00	0.65	1,049.47	524.73	763.01	382.07	16.58	-1.11	0.003
150.00	-1.20	-0.24	0.00	-0.40	0.00	0.40	1,033.66	516.83	740.04	370.57	16.81	-1.11	0.002
151.00	-0.86	-0.16	0.00	-0.16	0.00	0.16	1,017.86	508.93	717.43	359.25	17.05	-1.11	0.001
152.00	0.00	-0.14	0.00	0.00	0.00	0.00	1,002.05	501.03	695.17	348.10	17.28	-1.11	0.000

© 2007 - 2017 by ATC IP LLC. All rights reserved.

Load Case: 1.0D + 1.0W Serviceability 60 mph 23 Iterations

Gust Response Factor :1.10 Wind Importance Factor 1.00
Dead Load Factor :1.00
Wind Load Factor :1.00

Applied Segment Forces Summary

Seg Elev (ft)	Description	Shaft Forces Wind FX (lb)	Shaft Forces Dead Load (lb)	Discrete Forces Wind FX (lb)	Discrete Forces Torsion MY (lb-ft)	Discrete Forces Moment MZ (lb-ft)	Discrete Forces Dead Load (lb)	Linear Forces Wind FX (lb)	Linear Forces Dead Load (lb)	Sum of Forces Wind FX (lb)	Sum of Forces Dead Load (lb)	Sum of Forces Torsion MY (lb-ft)	Sum of Forces Moment MZ (lb)
0.00		52.0	0.0					0.0	0.0	52.0	0.0	0.0	0.0
5.00		102.7	1,314.6					0.0	182.5	102.7	1,497.0	0.0	0.0
10.00		100.2	1,282.9					0.0	182.5	100.2	1,465.4	0.0	0.0
15.00		97.8	1,251.2					0.0	182.5	97.8	1,433.7	0.0	0.0
20.00		95.3	1,219.5					0.0	182.5	95.3	1,402.0	0.0	0.0
25.00		92.8	1,187.9					0.0	182.5	92.8	1,370.4	0.0	0.0
30.00		91.4	1,156.2					0.0	182.5	91.4	1,338.7	0.0	0.0
35.00		91.8	1,124.5					0.0	182.5	91.8	1,307.0	0.0	0.0
40.00		92.7	1,092.9					0.0	182.5	92.7	1,275.3	0.0	0.0
45.00		73.6	1,061.2					0.0	182.5	73.6	1,243.7	0.0	0.0
47.92	Bot - Section 2	46.9	604.4					0.0	106.5	46.9	710.9	0.0	0.0
50.00		58.3	796.4					0.0	76.0	58.3	872.4	0.0	0.0
54.08	Top - Section 1	47.3	1,531.2					0.0	149.0	47.3	1,680.3	0.0	0.0
55.00		55.7	157.8					0.0	33.5	55.7	191.2	0.0	0.0
60.00		93.6	844.6					0.0	182.5	93.6	1,027.1	0.0	0.0
65.00		92.7	817.5					0.0	182.5	92.7	1,000.0	0.0	0.0
70.00		91.5	790.3					0.0	182.5	91.5	972.8	0.0	0.0
75.00		90.1	763.2					0.0	182.5	90.1	945.7	0.0	0.0
80.00		88.5	736.0					0.0	182.5	88.5	918.5	0.0	0.0
85.00		86.7	708.9					0.0	182.5	86.7	891.4	0.0	0.0
90.00		84.7	681.7					0.0	182.5	84.7	864.2	0.0	0.0
95.00		64.4	654.6					0.0	182.5	64.4	837.1	0.0	0.0
97.75	Bot - Section 3	41.0	348.5					0.0	100.4	41.0	448.8	0.0	0.0
100.00		36.7	468.8					0.0	82.1	36.7	550.9	0.0	0.0
102.25	Top - Section 2	40.2	459.6					0.0	82.1	40.2	541.7	0.0	0.0
105.00		61.0	222.5					0.0	100.4	61.0	322.9	0.0	0.0
110.00		76.7	390.5					0.0	182.5	76.7	573.0	0.0	0.0
115.00		74.0	372.4					0.0	182.5	74.0	554.9	0.0	0.0
120.00		71.2	354.3					0.0	182.5	71.2	536.8	0.0	0.0
125.00		68.3	336.2					0.0	182.5	68.3	518.7	0.0	0.0
130.00		59.0	318.2					0.0	182.5	59.0	500.6	0.0	0.0
134.00	Appertunance(s)	31.9	241.5	652.7	0.0	0.0	2,102.1	0.0	146.0	684.6	2,489.6	0.0	0.0
135.00		36.5	58.6					0.0	25.0	36.5	83.6	0.0	0.0
140.00		36.2	282.0					0.0	125.2	36.2	407.2	0.0	0.0
141.00	Appertunance(s)	28.7	54.2	774.5	0.0	0.0	1,759.4	0.0	25.0	803.2	1,838.7	0.0	0.0
145.00		62.9	209.6					0.0	60.2	62.9	269.9	0.0	0.0
149.00	Appertunance(s)	45.4	198.1	661.5	0.0	0.0	2,276.6	16.8	60.2	723.7	2,534.9	0.0	0.0
150.00		10.5	47.7					0.0	0.3	10.5	48.0	0.0	0.0
151.00	Appertunance(s)	10.3	47.0	38.5	0.0	0.0	40.0	0.0	0.3	48.9	87.3	0.0	0.0
152.00	Appertunance(s)	5.1	46.3	165.3	0.0	0.0	159.0	0.0	0.0	170.5	205.3	0.0	0.0
									Totals:	4,895.76	35,757.6	0.00	0.00

 © 2007 - 2017 by ATC IP LLC. All rights reserved.

Load Case: 1.0D + 1.0W Serviceability 60 mph 23 Iterations

Gust Response Factor :1.10 Wind Importance Factor 1.00
Dead Load Factor :1.00
Wind Load Factor :1.00

Calculated Forces

Seg Elev (ft)	Pu FY (-) (kips)	Vu FX (-) (kips)	Tu MY (ft-kips)	Mu MZ (ft-kips)	Mu MX (ft-kips)	Resultant Moment (ft-kips)	phi Pn (kips)	phi Vn (kips)	phi Tn (ft-kips)	phi Mn (ft-kips)	Total Deflect (in)	Rotation (deg)	Ratio
0.00	-35.76	-4.85	0.00	-525.03	0.00	525.03	5,388.79	2,694.40	12,470.2	6,244.37	0.00	0.00	0.091
5.00	-34.26	-4.76	0.00	-500.78	0.00	500.78	5,304.17	2,652.08	11,979.9	5,998.87	0.01	-0.02	0.090
10.00	-32.79	-4.67	0.00	-476.97	0.00	476.97	5,217.41	2,608.71	11,494.3	5,755.72	0.05	-0.05	0.089
15.00	-31.35	-4.59	0.00	-453.60	0.00	453.60	5,128.53	2,564.26	11,013.8	5,515.11	0.11	-0.07	0.088
20.00	-29.95	-4.50	0.00	-430.66	0.00	430.66	5,037.52	2,518.76	10,538.7	5,277.21	0.20	-0.10	0.088
25.00	-28.58	-4.42	0.00	-408.14	0.00	408.14	4,944.37	2,472.19	10,069.4	5,042.19	0.32	-0.12	0.087
30.00	-27.24	-4.34	0.00	-386.03	0.00	386.03	4,849.10	2,424.55	9,606.22	4,810.25	0.46	-0.15	0.086
35.00	-25.93	-4.26	0.00	-364.33	0.00	364.33	4,751.70	2,375.85	9,149.49	4,581.55	0.63	-0.18	0.085
40.00	-24.65	-4.17	0.00	-343.04	0.00	343.04	4,652.17	2,326.09	8,699.60	4,356.27	0.83	-0.20	0.084
45.00	-23.41	-4.10	0.00	-322.18	0.00	322.18	4,550.51	2,275.26	8,256.90	4,134.59	1.06	-0.23	0.083
47.92	-22.70	-4.06	0.00	-310.21	0.00	310.21	4,484.12	2,242.06	7,991.23	4,001.55	1.20	-0.25	0.083
50.00	-21.82	-4.00	0.00	-301.75	0.00	301.75	4,426.49	2,213.25	7,786.16	3,898.86	1.32	-0.26	0.082
54.08	-20.14	-3.95	0.00	-285.40	0.00	285.40	3,638.75	1,819.38	6,367.24	3,188.35	1.55	-0.29	0.095
55.00	-19.95	-3.90	0.00	-281.78	0.00	281.78	3,623.94	1,811.97	6,304.45	3,156.91	1.61	-0.29	0.095
60.00	-18.92	-3.82	0.00	-262.25	0.00	262.25	3,541.90	1,770.95	5,965.11	2,986.99	1.93	-0.33	0.093
65.00	-17.92	-3.73	0.00	-243.17	0.00	243.17	3,457.73	1,728.87	5,631.41	2,819.89	2.29	-0.36	0.091
70.00	-16.94	-3.64	0.00	-224.53	0.00	224.53	3,371.43	1,685.72	5,303.71	2,655.80	2.69	-0.40	0.090
75.00	-16.00	-3.55	0.00	-206.32	0.00	206.32	3,273.30	1,636.65	4,967.63	2,487.51	3.12	-0.43	0.088
80.00	-15.08	-3.47	0.00	-188.54	0.00	188.54	3,154.76	1,577.38	4,612.61	2,309.73	3.59	-0.47	0.086
85.00	-14.18	-3.38	0.00	-171.20	0.00	171.20	3,036.22	1,518.11	4,270.76	2,138.55	4.10	-0.51	0.085
90.00	-13.32	-3.30	0.00	-154.28	0.00	154.28	2,917.68	1,458.84	3,942.07	1,973.96	4.66	-0.54	0.083
95.00	-12.48	-3.23	0.00	-137.78	0.00	137.78	2,799.14	1,399.57	3,626.54	1,815.96	5.25	-0.58	0.080
97.75	-12.03	-3.19	0.00	-128.89	0.00	128.89	2,733.95	1,366.97	3,458.61	1,731.87	5.59	-0.60	0.079
100.00	-11.48	-3.15	0.00	-121.70	0.00	121.70	2,680.61	1,340.30	3,324.17	1,664.55	5.88	-0.62	0.077
102.25	-10.94	-3.11	0.00	-114.61	0.00	114.61	1,691.97	845.99	2,108.29	1,055.71	6.18	-0.64	0.115
105.00	-10.61	-3.05	0.00	-106.05	0.00	106.05	1,663.78	831.89	2,022.36	1,012.68	6.55	-0.66	0.111
110.00	-10.04	-2.98	0.00	-90.78	0.00	90.78	1,610.87	805.43	1,868.63	935.70	7.28	-0.72	0.103
115.00	-9.48	-2.91	0.00	-75.89	0.00	75.89	1,555.83	777.91	1,718.41	860.48	8.05	-0.77	0.094
120.00	-8.94	-2.84	0.00	-61.35	0.00	61.35	1,498.66	749.33	1,572.08	787.21	8.89	-0.82	0.084
125.00	-8.42	-2.77	0.00	-47.17	0.00	47.17	1,428.79	714.40	1,419.47	710.79	9.77	-0.86	0.072
130.00	-7.92	-2.70	0.00	-33.34	0.00	33.34	1,349.76	674.88	1,266.04	633.96	10.70	-0.91	0.058
134.00	-5.44	-1.98	0.00	-22.53	0.00	22.53	1,286.54	643.27	1,149.61	575.66	11.47	-0.93	0.043
135.00	-5.36	-1.94	0.00	-20.54	0.00	20.54	1,270.74	635.37	1,121.38	561.52	11.67	-0.94	0.041
140.00	-4.95	-1.90	0.00	-10.82	0.00	10.82	1,191.71	595.86	985.49	493.48	12.66	-0.96	0.026
141.00	-3.13	-1.07	0.00	-8.92	0.00	8.92	1,175.91	587.95	959.37	480.40	12.86	-0.96	0.021
145.00	-2.86	-1.00	0.00	-4.64	0.00	4.64	1,112.69	556.34	858.38	429.83	13.67	-0.97	0.013
149.00	-0.34	-0.24	0.00	-0.63	0.00	0.63	1,049.47	524.73	763.01	382.07	14.49	-0.98	0.002
150.00	-0.29	-0.22	0.00	-0.40	0.00	0.40	1,033.66	516.83	740.04	370.57	14.70	-0.98	0.001
151.00	-0.20	-0.17	0.00	-0.17	0.00	0.17	1,017.86	508.93	717.43	359.25	14.90	-0.98	0.001
152.00	0.00	-0.17	0.00	0.00	0.00	0.00	1,002.05	501.03	695.17	348.10	15.10	-0.98	0.000

 © 2007 - 2017 by ATC IP LLC. All rights reserved.

Equivalent Lateral Forces Method Analysis

(Based on ASCE7-10 Chapters 11, 12, 15)

Spectral Response Acceleration for Short Period (S_s):	0.21	
Spectral Response Acceleration at 1.0 Second Period (S_1):	0.07	
Long-Period Transition Period (T_L):	6	
Importance Factor (I_E):	1.00	
Site Coefficient F_a:	1.60	
Site Coeffiecient F_v:	2.40	
Response Modification Coefficient (R):	1.50	
Design Spectral Response Acceleration at Short Period (S_{ds}):	0.22	
Design Spectral Response Acceleration at 1.0 Second Period (S_{d1}):	0.11	
Seismic Response Coefficient (C_s):	0.03	
Upper Limit C_s	0.03	
Lower Limit C_s	0.03	
Period based on Rayleigh Method (sec):	2.03	
Redundancy Factor (p):	1.30	
Seismic Force Distribution Exponent (k):	1.76	
Total Unfactored Dead Load:	35.76	k
Seismic Base Shear (E):	1.61	k

Load Case (1.2 + 0.2Sds) * DL + E ELFM **Seismic Equivalent Lateral Forces Method**

Segment	Height Above Base (ft)	Weight (lb)	W_z (lb-ft)	C_{vx}	Horizontal Force (lb)	Vertical Force (lb)
39	151.50	46	325	0.004	6	58
38	150.50	47	329	0.004	6	59
37	149.50	48	330	0.004	6	60
36	147.00	258	1,721	0.019	31	321
35	143.00	270	1,712	0.019	31	336
34	140.50	79	488	0.005	9	99
33	137.50	407	2,411	0.027	43	507
32	134.50	84	476	0.005	9	104
31	132.00	387	2,135	0.024	38	482
30	127.50	501	2,595	0.029	47	623
29	122.50	519	2,505	0.028	45	646
28	117.50	537	2,409	0.027	43	668
27	112.50	555	2,306	0.026	41	691
26	107.50	573	2,198	0.024	39	713
25	103.63	323	1,161	0.013	21	402
24	101.13	542	1,865	0.021	33	674
23	98.88	551	1,823	0.020	33	686
22	96.38	449	1,420	0.016	25	559
21	92.50	837	2,463	0.027	44	1,042
20	87.50	864	2,305	0.026	41	1,076
19	82.50	891	2,143	0.024	38	1,109
18	77.50	919	1,978	0.022	35	1,143
17	72.50	946	1,810	0.020	32	1,177

 © 2007 - 2017 by ATC IP LLC. All rights reserved.

16	67.50	973	1,642	0.018	29	1,211
15	62.50	1,000	1,473	0.016	26	1,245
14	57.50	1,027	1,306	0.015	23	1,278
13	54.54	191	222	0.002	4	238
12	52.04	1,680	1,792	0.020	32	2,091
11	48.96	872	835	0.009	15	1,086
10	46.46	711	621	0.007	11	885
9	42.50	1,244	928	0.010	17	1,548
8	37.50	1,275	763	0.008	14	1,587
7	32.50	1,307	608	0.007	11	1,627
6	27.50	1,339	463	0.005	8	1,666
5	22.50	1,370	333	0.004	6	1,706
4	17.50	1,402	219	0.002	4	1,745
3	12.50	1,434	123	0.001	2	1,784
2	7.50	1,465	51	0.001	1	1,824
1	2.50	1,497	8	0.000	0	1,863
Powerwave P65-16-XLH	152.00	159	1,124	0.012	20	198
15' Omni	151.00	40	279	0.003	5	50
Powerwave LGP21901	149.00	33	225	0.003	4	41
Powerwave 7020.00 Du	149.00	26	180	0.002	3	33
CCI DTMABP7819VG12A	149.00	58	393	0.004	7	72
Powerwave LGP21401	149.00	85	577	0.006	10	105
Raycap DC6-48-60-18-	149.00	20	136	0.002	2	25
Ericsson RRUS 11 (Ba	149.00	165	1,126	0.013	20	205
Ericsson RRUS-12 190	149.00	180	1,228	0.014	22	224
Powerwave 7770.00	149.00	210	1,433	0.016	26	261
Flat Low Profile Pla	149.00	1,500	10,234	0.114	183	1,867
2" x 4" GPS	141.00	5	31	0.000	1	6
Rymsa MGD3-800T0	141.00	59	368	0.004	7	74
Andrew DB846H80E-SX	141.00	96	594	0.007	11	119
Powerwave P65-16-XL-	141.00	99	613	0.007	11	123
Flat Low Profile Pla	141.00	1,500	9,284	0.103	166	1,867
KMW AWS Twin Dual 70	134.00	52	295	0.003	5	65
Ericsson RRUS 11 B12	134.00	152	861	0.010	15	189
Ericsson AIR 21, 1.3	134.00	249	1,409	0.016	25	310
Commscope SBNH-1D65C	134.00	149	842	0.009	15	185
Flat Low Profile Pla	134.00	1,500	8,487	0.094	152	1,867
		35,758	90,013	1.000	1,613	44,503

Load Case (0.9 - 0.2Sds) * DL + E ELFM

Seismic (Reduced DL) Equivalent Lateral Forces Method

Segment	Height Above Base (ft)	Weight (lb)	W_z (lb-ft)	C_{vx}	Horizontal Force (lb)	Vertical Force (lb)
39	151.50	46	325	0.004	6	40
38	150.50	47	329	0.004	6	40
37	149.50	48	330	0.004	6	41
36	147.00	258	1,721	0.019	31	221
35	143.00	270	1,712	0.019	31	231
34	140.50	79	488	0.005	9	68
33	137.50	407	2,411	0.027	43	348
32	134.50	84	476	0.005	9	72
31	132.00	387	2,135	0.024	38	331
30	127.50	501	2,595	0.029	47	428
29	122.50	519	2,505	0.028	45	444
28	117.50	537	2,409	0.027	43	459
27	112.50	555	2,306	0.026	41	475
26	107.50	573	2,198	0.024	39	490
25	103.63	323	1,161	0.013	21	276
24	101.13	542	1,865	0.021	33	463
23	98.88	551	1,823	0.020	33	471

© 2007 - 2017 by ATC IP LLC. All rights reserved.

22	96.38	449	1,420	0.016	25	384
21	92.50	837	2,463	0.027	44	716
20	87.50	864	2,305	0.026	41	739
19	82.50	891	2,143	0.024	38	762
18	77.50	919	1,978	0.022	35	786
17	72.50	946	1,810	0.020	32	809
16	67.50	973	1,642	0.018	29	832
15	62.50	1,000	1,473	0.016	26	855
14	57.50	1,027	1,306	0.015	23	879
13	54.54	191	222	0.002	4	164
12	52.04	1,680	1,792	0.020	32	1,437
11	48.96	872	835	0.009	15	746
10	46.46	711	621	0.007	11	608
9	42.50	1,244	928	0.010	17	1,064
8	37.50	1,275	763	0.008	14	1,091
7	32.50	1,307	608	0.007	11	1,118
6	27.50	1,339	463	0.005	8	1,145
5	22.50	1,370	333	0.004	6	1,172
4	17.50	1,402	219	0.002	4	1,199
3	12.50	1,434	123	0.001	2	1,226
2	7.50	1,465	51	0.001	1	1,253
1	2.50	1,497	8	0.000	0	1,281
Powerwave P65-16-XLH	152.00	159	1,124	0.012	20	136
15' Omni	151.00	40	279	0.003	5	34
Powerwave LGP21901	149.00	33	225	0.003	4	28
Powerwave 7020.00 Du	149.00	26	180	0.002	3	23
CCI DTMABP7819VG12A	149.00	58	393	0.004	7	49
Powerwave LGP21401	149.00	85	577	0.006	10	72
Raycap DC6-48-60-18-	149.00	20	136	0.002	2	17
Ericsson RRUS 11 (Ba	149.00	165	1,126	0.013	20	141
Ericsson RRUS-12 190	149.00	180	1,228	0.014	22	154
Powerwave 7770.00	149.00	210	1,433	0.016	26	180
Flat Low Profile Pla	149.00	1,500	10,234	0.114	183	1,283
2" x 4" GPS	141.00	5	31	0.000	1	4
Rymsa MGD3-800T0	141.00	59	368	0.004	7	51
Andrew DB846H80E-SX	141.00	96	594	0.007	11	82
Powerwave P65-16-XL-	141.00	99	613	0.007	11	85
Flat Low Profile Pla	141.00	1,500	9,284	0.103	166	1,283
KMW AWS Twin Dual 70	134.00	52	295	0.003	5	45
Ericsson RRUS 11 B12	134.00	152	861	0.010	15	130
Ericsson AIR 21, 1.3	134.00	249	1,409	0.016	25	213
Commscope SBNH-1D65C	134.00	149	842	0.009	15	127
Flat Low Profile Pla	134.00	1,500	8,487	0.094	152	1,283
		35,758	90,013	1.000	1,613	30,588

 © 2007 - 2017 by ATC IP LLC. All rights reserved.

Load Case (1.2 + 0.2Sds) * DL + E ELFM Seismic Equivalent Lateral Forces Method

Calculated Forces

Seg Elev (ft)	Pu FY (-) (kips)	Vu FX (-) (kips)	Tu MY (ft-kips)	Mu MZ (ft-kips)	Mu MX (ft-kips)	Resultant Moment (ft-kips)	phi Pn (kips)	phi Vn (kips)	phi Tn (ft-kips)	phi Mn (ft-kips)	Total Deflect (in)	Rotation (deg)	Ratio
0.00	-42.64	-1.62	0.00	-193.31	0.00	193.31	5,388.79	2,694.40	12,470.2	6,244.37	0.00	0.00	0.039
5.00	-40.82	-1.62	0.00	-185.23	0.00	185.23	5,304.17	2,652.08	11,979.9	5,998.87	0.00	-0.01	0.039
10.00	-39.03	-1.62	0.00	-177.13	0.00	177.13	5,217.41	2,608.71	11,494.3	5,755.72	0.02	-0.02	0.038
15.00	-37.29	-1.63	0.00	-169.01	0.00	169.01	5,128.53	2,564.26	11,013.8	5,515.11	0.04	-0.03	0.038
20.00	-35.58	-1.62	0.00	-160.88	0.00	160.88	5,037.52	2,518.76	10,538.7	5,277.21	0.07	-0.04	0.038
25.00	-33.91	-1.62	0.00	-152.76	0.00	152.76	4,944.37	2,472.19	10,069.4	5,042.19	0.12	-0.05	0.037
30.00	-32.29	-1.61	0.00	-144.65	0.00	144.65	4,849.10	2,424.55	9,606.22	4,810.25	0.17	-0.06	0.037
35.00	-30.70	-1.60	0.00	-136.58	0.00	136.58	4,751.70	2,375.85	9,149.49	4,581.55	0.23	-0.07	0.036
40.00	-29.15	-1.59	0.00	-128.56	0.00	128.56	4,652.17	2,326.09	8,699.60	4,356.27	0.31	-0.08	0.036
45.00	-28.27	-1.58	0.00	-120.60	0.00	120.60	4,550.51	2,275.26	8,256.90	4,134.59	0.39	-0.09	0.035
47.92	-27.18	-1.57	0.00	-115.98	0.00	115.98	4,484.12	2,242.06	7,991.23	4,001.55	0.45	-0.09	0.035
50.00	-25.09	-1.54	0.00	-112.71	0.00	112.71	4,426.49	2,213.25	7,786.16	3,898.86	0.49	-0.10	0.035
54.08	-24.85	-1.53	0.00	-106.44	0.00	106.44	3,638.75	1,819.38	6,367.24	3,188.35	0.58	-0.11	0.040
55.00	-23.57	-1.51	0.00	-105.03	0.00	105.03	3,623.94	1,811.97	6,304.45	3,156.91	0.60	-0.11	0.040
60.00	-22.33	-1.49	0.00	-97.47	0.00	97.47	3,541.90	1,770.95	5,965.11	2,986.99	0.72	-0.12	0.039
65.00	-21.12	-1.46	0.00	-90.03	0.00	90.03	3,457.73	1,728.87	5,631.41	2,819.89	0.85	-0.13	0.038
70.00	-19.94	-1.43	0.00	-82.73	0.00	82.73	3,371.43	1,685.72	5,303.71	2,655.80	1.00	-0.15	0.037
75.00	-18.80	-1.40	0.00	-75.58	0.00	75.58	3,273.30	1,636.65	4,967.63	2,487.51	1.16	-0.16	0.036
80.00	-17.69	-1.36	0.00	-68.60	0.00	68.60	3,154.76	1,577.38	4,612.61	2,309.73	1.34	-0.17	0.035
85.00	-16.61	-1.32	0.00	-61.81	0.00	61.81	3,036.22	1,518.11	4,270.76	2,138.55	1.53	-0.19	0.034
90.00	-15.57	-1.27	0.00	-55.22	0.00	55.22	2,917.68	1,458.84	3,942.07	1,973.96	1.73	-0.20	0.033
95.00	-15.01	-1.25	0.00	-48.86	0.00	48.86	2,799.14	1,399.57	3,626.54	1,815.96	1.95	-0.22	0.032
97.75	-14.32	-1.22	0.00	-45.42	0.00	45.42	2,733.95	1,366.97	3,458.61	1,731.87	2.08	-0.22	0.031
100.00	-13.65	-1.18	0.00	-42.69	0.00	42.69	2,680.61	1,340.30	3,324.17	1,664.55	2.18	-0.23	0.031
102.25	-13.25	-1.16	0.00	-40.03	0.00	40.03	1,691.97	845.99	2,108.29	1,055.71	2.29	-0.24	0.046
105.00	-12.54	-1.12	0.00	-36.84	0.00	36.84	1,663.78	831.89	2,022.36	1,012.68	2.43	-0.24	0.044
110.00	-11.84	-1.08	0.00	-31.24	0.00	31.24	1,610.87	805.43	1,868.63	935.70	2.70	-0.26	0.041
115.00	-11.18	-1.04	0.00	-25.84	0.00	25.84	1,555.83	777.91	1,718.41	860.48	2.98	-0.28	0.037
120.00	-10.53	-0.99	0.00	-20.65	0.00	20.65	1,498.66	749.33	1,572.08	787.21	3.28	-0.30	0.033
125.00	-9.91	-0.94	0.00	-15.69	0.00	15.69	1,428.79	714.40	1,419.47	710.79	3.60	-0.31	0.029
130.00	-9.43	-0.91	0.00	-10.97	0.00	10.97	1,349.76	674.88	1,266.04	633.96	3.94	-0.33	0.024
134.00	-6.71	-0.67	0.00	-7.35	0.00	7.35	1,286.54	643.27	1,149.61	575.66	4.21	-0.33	0.018
135.00	-6.20	-0.62	0.00	-6.68	0.00	6.68	1,270.74	635.37	1,121.38	561.52	4.28	-0.34	0.017
140.00	-6.10	-0.61	0.00	-3.56	0.00	3.56	1,191.71	595.86	985.49	493.48	4.64	-0.34	0.012
141.00	-3.58	-0.37	0.00	-2.95	0.00	2.95	1,175.91	587.95	959.37	480.40	4.71	-0.34	0.009
145.00	-3.26	-0.34	0.00	-1.46	0.00	1.46	1,112.69	556.34	858.38	429.83	5.00	-0.35	0.006
149.00	-0.36	-0.04	0.00	-0.09	0.00	0.09	1,049.47	524.73	763.01	382.07	5.29	-0.35	0.001
150.00	-0.31	-0.03	0.00	-0.05	0.00	0.05	1,033.66	516.83	740.04	370.57	5.37	-0.35	0.000
151.00	-0.20	-0.02	0.00	-0.02	0.00	0.02	1,017.86	508.93	717.43	359.25	5.44	-0.35	0.000
152.00	0.00	-0.02	0.00	0.00	0.00	0.00	1,002.05	501.03	695.17	348.10	5.51	-0.35	0.000

 © 2007 - 2017 by ATC IP LLC. All rights reserved.

Load Case (0.9 - 0.2Sds) * DL + E ELFM **Seismic (Reduced DL) Equivalent Lateral Forces Method**

Calculated Forces

Seg Elev (ft)	Pu FY (-) (kips)	Vu FX (-) (kips)	Tu MY (ft-kips)	Mu MZ (ft-kips)	Mu MX (ft-kips)	Resultant Moment (ft-kips)	phi Pn (kips)	phi Vn (kips)	phi Tn (ft-kips)	phi Mn (ft-kips)	Total Deflect (in)	Rotation (deg)	Ratio
0.00	-29.31	-1.61	0.00	-191.30	0.00	191.30	5,388.79	2,694.40	12,470.2	6,244.37	0.00	0.00	0.036
5.00	-28.05	-1.62	0.00	-183.22	0.00	183.22	5,304.17	2,652.08	11,979.9	5,998.87	0.00	-0.01	0.036
10.00	-26.83	-1.62	0.00	-175.13	0.00	175.13	5,217.41	2,608.71	11,494.3	5,755.72	0.02	-0.02	0.036
15.00	-25.63	-1.62	0.00	-167.04	0.00	167.04	5,128.53	2,564.26	11,013.8	5,515.11	0.04	-0.03	0.035
20.00	-24.45	-1.62	0.00	-158.94	0.00	158.94	5,037.52	2,518.76	10,538.7	5,277.21	0.07	-0.04	0.035
25.00	-23.31	-1.61	0.00	-150.86	0.00	150.86	4,944.37	2,472.19	10,069.4	5,042.19	0.12	-0.04	0.035
30.00	-22.19	-1.60	0.00	-142.80	0.00	142.80	4,849.10	2,424.55	9,606.22	4,810.25	0.17	-0.05	0.034
35.00	-21.10	-1.59	0.00	-134.78	0.00	134.78	4,751.70	2,375.85	9,149.49	4,581.55	0.23	-0.06	0.034
40.00	-20.04	-1.58	0.00	-126.82	0.00	126.82	4,652.17	2,326.09	8,699.60	4,356.27	0.30	-0.07	0.033
45.00	-19.43	-1.57	0.00	-118.93	0.00	118.93	4,550.51	2,275.26	8,256.90	4,134.59	0.39	-0.09	0.033
47.92	-18.68	-1.55	0.00	-114.35	0.00	114.35	4,484.12	2,242.06	7,991.23	4,001.55	0.44	-0.09	0.033
50.00	-17.24	-1.52	0.00	-111.11	0.00	111.11	4,426.49	2,213.25	7,786.16	3,898.86	0.48	-0.10	0.032
54.08	-17.08	-1.52	0.00	-104.90	0.00	104.90	3,638.75	1,819.38	6,367.24	3,188.35	0.57	-0.11	0.038
55.00	-16.20	-1.50	0.00	-103.50	0.00	103.50	3,623.94	1,811.97	6,304.45	3,156.91	0.59	-0.11	0.037
60.00	-15.35	-1.47	0.00	-96.02	0.00	96.02	3,541.90	1,770.95	5,965.11	2,986.99	0.71	-0.12	0.036
65.00	-14.51	-1.44	0.00	-88.66	0.00	88.66	3,457.73	1,728.87	5,631.41	2,819.89	0.84	-0.13	0.036
70.00	-13.70	-1.41	0.00	-81.44	0.00	81.44	3,371.43	1,685.72	5,303.71	2,655.80	0.99	-0.15	0.035
75.00	-12.92	-1.38	0.00	-74.38	0.00	74.38	3,273.30	1,636.65	4,967.63	2,487.51	1.15	-0.16	0.034
80.00	-12.15	-1.34	0.00	-67.49	0.00	67.49	3,154.76	1,577.38	4,612.61	2,309.73	1.32	-0.17	0.033
85.00	-11.42	-1.30	0.00	-60.79	0.00	60.79	3,036.22	1,518.11	4,270.76	2,138.55	1.51	-0.19	0.032
90.00	-10.70	-1.26	0.00	-54.29	0.00	54.29	2,917.68	1,458.84	3,942.07	1,973.96	1.71	-0.20	0.031
95.00	-10.32	-1.23	0.00	-48.01	0.00	48.01	2,799.14	1,399.57	3,626.54	1,815.96	1.93	-0.21	0.030
97.75	-9.84	-1.20	0.00	-44.63	0.00	44.63	2,733.95	1,366.97	3,458.61	1,731.87	2.05	-0.22	0.029
100.00	-9.38	-1.16	0.00	-41.94	0.00	41.94	2,680.61	1,340.30	3,324.17	1,664.55	2.16	-0.23	0.029
102.25	-9.10	-1.14	0.00	-39.32	0.00	39.32	1,691.97	845.99	2,108.29	1,055.71	2.26	-0.23	0.043
105.00	-8.61	-1.10	0.00	-36.18	0.00	36.18	1,663.78	831.89	2,022.36	1,012.68	2.40	-0.24	0.041
110.00	-8.14	-1.06	0.00	-30.67	0.00	30.67	1,610.87	805.43	1,868.63	935.70	2.66	-0.26	0.038
115.00	-7.68	-1.02	0.00	-25.36	0.00	25.36	1,555.83	777.91	1,718.41	860.48	2.94	-0.28	0.034
120.00	-7.24	-0.97	0.00	-20.26	0.00	20.26	1,498.66	749.33	1,572.08	787.21	3.24	-0.29	0.031
125.00	-6.81	-0.93	0.00	-15.39	0.00	15.39	1,428.79	714.40	1,419.47	710.79	3.55	-0.31	0.026
130.00	-6.48	-0.89	0.00	-10.76	0.00	10.76	1,349.76	674.88	1,266.04	633.96	3.88	-0.32	0.022
134.00	-4.61	-0.66	0.00	-7.21	0.00	7.21	1,286.54	643.27	1,149.61	575.66	4.15	-0.33	0.016
135.00	-4.26	-0.61	0.00	-6.55	0.00	6.55	1,270.74	635.37	1,121.38	561.52	4.22	-0.33	0.015
140.00	-4.19	-0.60	0.00	-3.50	0.00	3.50	1,191.71	595.86	985.49	493.48	4.57	-0.34	0.011
141.00	-2.46	-0.37	0.00	-2.89	0.00	2.89	1,175.91	587.95	959.37	480.40	4.64	-0.34	0.008
145.00	-2.24	-0.33	0.00	-1.43	0.00	1.43	1,112.69	556.34	858.38	429.83	4.93	-0.34	0.005
149.00	-0.25	-0.04	0.00	-0.09	0.00	0.09	1,049.47	524.73	763.01	382.07	5.22	-0.34	0.000
150.00	-0.21	-0.03	0.00	-0.05	0.00	0.05	1,033.66	516.83	740.04	370.57	5.29	-0.34	0.000
151.00	-0.14	-0.02	0.00	-0.02	0.00	0.02	1,017.86	508.93	717.43	359.25	5.36	-0.34	0.000
152.00	0.00	-0.02	0.00	0.00	0.00	0.00	1,002.05	501.03	695.17	348.10	5.43	-0.34	0.000

 © 2007 - 2017 by ATC IP LLC. All rights reserved.

Load Case (1.2 + 0.2Sds) * DL + E EMAM Seismic Equivalent Modal Analysis Method

Calculated Forces

Seg Elev (ft)	Pu FY (-) (kips)	Vu FX (-) (kips)	Tu MY (ft-kips)	Mu MZ (ft-kips)	Mu MX (ft-kips)	Resultant Moment (ft-kips)	phi Pn (kips)	phi Vn (kips)	phi Tn (ft-kips)	phi Mn (ft-kips)	Total Deflect (in)	Rotation (deg)	Ratio
0.00	-42.64	-2.49	0.00	-286.66	0.00	286.66	5,388.79	2,694.40	12,470.2	6,244.37	0.00	0.00	0.054
5.00	-40.82	-2.46	0.00	-274.19	0.00	274.19	5,304.17	2,652.08	11,979.9	5,998.87	0.01	-0.01	0.053
10.00	-39.03	-2.41	0.00	-261.89	0.00	261.89	5,217.41	2,608.71	11,494.3	5,755.72	0.03	-0.03	0.053
15.00	-37.29	-2.36	0.00	-249.83	0.00	249.83	5,128.53	2,564.26	11,013.8	5,515.11	0.06	-0.04	0.053
20.00	-35.58	-2.31	0.00	-238.03	0.00	238.03	5,037.52	2,518.76	10,538.7	5,277.21	0.11	-0.05	0.052
25.00	-33.91	-2.25	0.00	-226.50	0.00	226.50	4,944.37	2,472.19	10,069.4	5,042.19	0.17	-0.07	0.052
30.00	-32.29	-2.19	0.00	-215.25	0.00	215.25	4,849.10	2,424.55	9,606.22	4,810.25	0.25	-0.08	0.051
35.00	-30.70	-2.14	0.00	-204.28	0.00	204.28	4,751.70	2,375.85	9,149.49	4,581.55	0.35	-0.10	0.051
40.00	-29.15	-2.08	0.00	-193.60	0.00	193.60	4,652.17	2,326.09	8,699.60	4,356.27	0.46	-0.11	0.051
45.00	-28.26	-2.05	0.00	-183.21	0.00	183.21	4,550.51	2,275.26	8,256.90	4,134.59	0.58	-0.13	0.051
47.92	-27.18	-2.00	0.00	-177.24	0.00	177.24	4,484.12	2,242.06	7,991.23	4,001.55	0.66	-0.14	0.050
50.00	-25.09	-1.92	0.00	-173.06	0.00	173.06	4,426.49	2,213.25	7,786.16	3,898.86	0.73	-0.15	0.050
54.08	-24.85	-1.91	0.00	-165.23	0.00	165.23	3,638.75	1,819.38	6,367.24	3,188.35	0.86	-0.16	0.059
55.00	-23.57	-1.86	0.00	-163.48	0.00	163.48	3,623.94	1,811.97	6,304.45	3,156.91	0.89	-0.16	0.058
60.00	-22.33	-1.82	0.00	-154.17	0.00	154.17	3,541.90	1,770.95	5,965.11	2,986.99	1.07	-0.18	0.058
65.00	-21.11	-1.79	0.00	-145.05	0.00	145.05	3,457.73	1,728.87	5,631.41	2,819.89	1.27	-0.20	0.058
70.00	-19.94	-1.77	0.00	-136.09	0.00	136.09	3,371.43	1,685.72	5,303.71	2,655.80	1.50	-0.22	0.057
75.00	-18.79	-1.76	0.00	-127.24	0.00	127.24	3,273.30	1,636.65	4,967.63	2,487.51	1.75	-0.25	0.057
80.00	-17.68	-1.77	0.00	-118.42	0.00	118.42	3,154.76	1,577.38	4,612.61	2,309.73	2.02	-0.27	0.057
85.00	-16.61	-1.79	0.00	-109.57	0.00	109.57	3,036.22	1,518.11	4,270.76	2,138.55	2.31	-0.29	0.057
90.00	-15.56	-1.82	0.00	-100.62	0.00	100.62	2,917.68	1,458.84	3,942.07	1,973.96	2.63	-0.32	0.056
95.00	-15.00	-1.84	0.00	-91.53	0.00	91.53	2,799.14	1,399.57	3,626.54	1,815.96	2.98	-0.34	0.056
97.75	-14.32	-1.86	0.00	-86.48	0.00	86.48	2,733.95	1,366.97	3,458.61	1,731.87	3.18	-0.36	0.055
100.00	-13.64	-1.88	0.00	-82.29	0.00	82.29	2,680.61	1,340.30	3,324.17	1,664.55	3.35	-0.37	0.055
102.25	-13.24	-1.89	0.00	-78.07	0.00	78.07	1,691.97	845.99	2,108.29	1,055.71	3.53	-0.38	0.082
105.00	-12.53	-1.91	0.00	-72.86	0.00	72.86	1,663.78	831.89	2,022.36	1,012.68	3.76	-0.40	0.079
110.00	-11.83	-1.92	0.00	-63.31	0.00	63.31	1,610.87	805.43	1,868.63	935.70	4.19	-0.43	0.075
115.00	-11.17	-1.92	0.00	-53.68	0.00	53.68	1,555.83	777.91	1,718.41	860.48	4.67	-0.47	0.070
120.00	-10.52	-1.91	0.00	-44.06	0.00	44.06	1,498.66	749.33	1,572.08	787.21	5.18	-0.51	0.063
125.00	-9.89	-1.87	0.00	-34.52	0.00	34.52	1,428.79	714.40	1,419.47	710.79	5.73	-0.54	0.055
130.00	-9.41	-1.83	0.00	-25.16	0.00	25.16	1,349.76	674.88	1,266.04	633.96	6.31	-0.57	0.047
134.00	-6.69	-1.52	0.00	-17.84	0.00	17.84	1,286.54	643.27	1,149.61	575.66	6.80	-0.59	0.036
135.00	-6.19	-1.44	0.00	-16.33	0.00	16.33	1,270.74	635.37	1,121.38	561.52	6.92	-0.60	0.034
140.00	-6.09	-1.43	0.00	-9.11	0.00	9.11	1,191.71	595.86	985.49	493.48	7.56	-0.61	0.024
141.00	-3.57	-0.97	0.00	-7.68	0.00	7.68	1,175.91	587.95	959.37	480.40	7.69	-0.62	0.019
145.00	-3.25	-0.89	0.00	-3.81	0.00	3.81	1,112.69	556.34	858.38	429.83	8.21	-0.62	0.012
149.00	-0.36	-0.11	0.00	-0.26	0.00	0.26	1,049.47	524.73	763.01	382.07	8.73	-0.63	0.001
150.00	-0.30	-0.09	0.00	-0.15	0.00	0.15	1,033.66	516.83	740.04	370.57	8.86	-0.63	0.001
151.00	-0.20	-0.06	0.00	-0.06	0.00	0.06	1,017.86	508.93	717.43	359.25	8.99	-0.63	0.000
152.00	0.00	-0.06	0.00	0.00	0.00	0.00	1,002.05	501.03	695.17	348.10	9.13	-0.63	0.000

 © 2007 - 2017 by ATC IP LLC. All rights reserved.

Load Case (0.9 - 0.2Sds) * DL + E EMAM Seismic (Reduced DL) Equivalent Modal Analysis Method

Calculated Forces

Seg Elev (ft)	Pu FY (-) (kips)	Vu FX (-) (kips)	Tu MY (ft-kips)	Mu MZ (ft-kips)	Mu MX (ft-kips)	Resultant Moment (ft-kips)	phi Pn (kips)	phi Vn (kips)	phi Tn (ft-kips)	phi Mn (ft-kips)	Total Deflect (in)	Rotation (deg)	Ratio
0.00	-29.31	-2.49	0.00	-283.45	0.00	283.45	5,388.79	2,694.40	12,470.2	6,244.37	0.00	0.00	0.051
5.00	-28.05	-2.45	0.00	-270.99	0.00	270.99	5,304.17	2,652.08	11,979.9	5,998.87	0.01	-0.01	0.050
10.00	-26.83	-2.41	0.00	-258.71	0.00	258.71	5,217.41	2,608.71	11,494.3	5,755.72	0.03	-0.03	0.050
15.00	-25.63	-2.35	0.00	-246.68	0.00	246.68	5,128.53	2,564.26	11,013.8	5,515.11	0.06	-0.04	0.050
20.00	-24.45	-2.29	0.00	-234.93	0.00	234.93	5,037.52	2,518.76	10,538.7	5,277.21	0.11	-0.05	0.049
25.00	-23.31	-2.24	0.00	-223.46	0.00	223.46	4,944.37	2,472.19	10,069.4	5,042.19	0.17	-0.07	0.049
30.00	-22.19	-2.18	0.00	-212.28	0.00	212.28	4,849.10	2,424.55	9,606.22	4,810.25	0.25	-0.08	0.049
35.00	-21.10	-2.12	0.00	-201.39	0.00	201.39	4,751.70	2,375.85	9,149.49	4,581.55	0.34	-0.10	0.048
40.00	-20.03	-2.06	0.00	-190.80	0.00	190.80	4,652.17	2,326.09	8,699.60	4,356.27	0.45	-0.11	0.048
45.00	-19.42	-2.03	0.00	-180.51	0.00	180.51	4,550.51	2,275.26	8,256.90	4,134.59	0.58	-0.13	0.048
47.92	-18.68	-1.98	0.00	-174.60	0.00	174.60	4,484.12	2,242.06	7,991.23	4,001.55	0.66	-0.14	0.048
50.00	-17.24	-1.90	0.00	-170.47	0.00	170.47	4,426.49	2,213.25	7,786.16	3,898.86	0.72	-0.14	0.048
54.08	-17.08	-1.89	0.00	-162.73	0.00	162.73	3,638.75	1,819.38	6,367.24	3,188.35	0.85	-0.16	0.056
55.00	-16.20	-1.84	0.00	-161.00	0.00	161.00	3,623.94	1,811.97	6,304.45	3,156.91	0.88	-0.16	0.055
60.00	-15.34	-1.80	0.00	-151.79	0.00	151.79	3,541.90	1,770.95	5,965.11	2,986.99	1.06	-0.18	0.055
65.00	-14.51	-1.77	0.00	-142.80	0.00	142.80	3,457.73	1,728.87	5,631.41	2,819.89	1.26	-0.20	0.055
70.00	-13.70	-1.74	0.00	-133.97	0.00	133.97	3,371.43	1,685.72	5,303.71	2,655.80	1.48	-0.22	0.055
75.00	-12.91	-1.74	0.00	-125.25	0.00	125.25	3,273.30	1,636.65	4,967.63	2,487.51	1.72	-0.24	0.054
80.00	-12.15	-1.74	0.00	-116.57	0.00	116.57	3,154.76	1,577.38	4,612.61	2,309.73	1.99	-0.27	0.054
85.00	-11.41	-1.76	0.00	-107.85	0.00	107.85	3,036.22	1,518.11	4,270.76	2,138.55	2.28	-0.29	0.054
90.00	-10.69	-1.79	0.00	-99.05	0.00	99.05	2,917.68	1,458.84	3,942.07	1,973.96	2.60	-0.31	0.054
95.00	-10.31	-1.81	0.00	-90.10	0.00	90.10	2,799.14	1,399.57	3,626.54	1,815.96	2.94	-0.34	0.053
97.75	-9.84	-1.83	0.00	-85.13	0.00	85.13	2,733.95	1,366.97	3,458.61	1,731.87	3.14	-0.35	0.053
100.00	-9.37	-1.85	0.00	-81.02	0.00	81.02	2,680.61	1,340.30	3,324.17	1,664.55	3.31	-0.36	0.052
102.25	-9.10	-1.86	0.00	-76.85	0.00	76.85	1,691.97	845.99	2,108.29	1,055.71	3.48	-0.38	0.078
105.00	-8.61	-1.88	0.00	-71.73	0.00	71.73	1,663.78	831.89	2,022.36	1,012.68	3.70	-0.39	0.076
110.00	-8.13	-1.89	0.00	-62.32	0.00	62.32	1,610.87	805.43	1,868.63	935.70	4.13	-0.43	0.072
115.00	-7.67	-1.89	0.00	-52.85	0.00	52.85	1,555.83	777.91	1,718.41	860.48	4.60	-0.46	0.066
120.00	-7.22	-1.88	0.00	-43.38	0.00	43.38	1,498.66	749.33	1,572.08	787.21	5.11	-0.50	0.060
125.00	-6.80	-1.84	0.00	-33.99	0.00	33.99	1,428.79	714.40	1,419.47	710.79	5.65	-0.53	0.053
130.00	-6.46	-1.80	0.00	-24.79	0.00	24.79	1,349.76	674.88	1,266.04	633.96	6.22	-0.56	0.044
134.00	-4.60	-1.49	0.00	-17.59	0.00	17.59	1,286.54	643.27	1,149.61	575.66	6.70	-0.58	0.034
135.00	-4.25	-1.42	0.00	-16.10	0.00	16.10	1,270.74	635.37	1,121.38	561.52	6.82	-0.59	0.032
140.00	-4.18	-1.41	0.00	-8.99	0.00	8.99	1,191.71	595.86	985.49	493.48	7.45	-0.60	0.022
141.00	-2.45	-0.95	0.00	-7.58	0.00	7.58	1,175.91	587.95	959.37	480.40	7.58	-0.61	0.018
145.00	-2.23	-0.88	0.00	-3.77	0.00	3.77	1,112.69	556.34	858.38	429.83	8.09	-0.61	0.011
149.00	-0.25	-0.11	0.00	-0.26	0.00	0.26	1,049.47	524.73	763.01	382.07	8.60	-0.62	0.001
150.00	-0.21	-0.09	0.00	-0.15	0.00	0.15	1,033.66	516.83	740.04	370.57	8.73	-0.62	0.001
151.00	-0.14	-0.06	0.00	-0.06	0.00	0.06	1,017.86	508.93	717.43	359.25	8.86	-0.62	0.000
152.00	0.00	-0.06	0.00	0.00	0.00	0.00	1,002.05	501.03	695.17	348.10	8.99	-0.62	0.000

© 2007 - 2017 by ATC IP LLC. All rights reserved.

Analysis Summary

Load Case	Reactions: Shear FX (kips)	Shear FZ (kips)	Axial FY (kips)	Moment MX (ft-kips)	Moment MY (ft-kips)	Moment MZ (ft-kips)	Max Usage: Elev (ft)	Interaction Ratio
1.2D + 1.6W	19.13	0.00	42.89	0.00	0.00	2088.23	102.25	0.44
0.9D + 1.6W	18.64	0.00	32.17	0.00	0.00	2011.65	102.25	0.42
1.2D + 1.0Di + 1.0Wi	5.78	0.00	69.87	0.00	0.00	613.22	102.25	0.14
(1.2 + 0.2Sds) * DL + E ELFM	1.62	0.00	42.64	0.00	0.00	193.31	102.25	0.05
(1.2 + 0.2Sds) * DL + E EMAM	2.49	0.00	42.64	0.00	0.00	286.66	102.25	0.08
(0.9 - 0.2Sds) * DL + E ELFM	1.61	0.00	29.31	0.00	0.00	191.30	102.25	0.04
(0.9 - 0.2Sds) * DL + E EMAM	2.49	0.00	29.31	0.00	0.00	283.45	102.25	0.08
1.0D + 1.0W	4.85	0.00	35.76	0.00	0.00	525.03	102.25	0.12

© 2007 - 2017 by ATC IP LLC. All rights reserved.

Base Summary

Reactions

Original Design			Analysis			
Moment (kip-ft)	Axial (kip)	Shear (kip)	Moment (kip-ft)	Axial (kip)	Shear (kip)	Moment Design %
3,859.30	35.30	34.68	2,088.23	69.87	19.13	40.08

Base Plate

Yield (ksi)	Thick (in)	Width (in)	Style	Poly Sides	Clip Len (in)	Effective Len (in)	Mu (kip-in)	Phi Mn (kip-in)	Ratio
60.0	2.000	72.000	Round	0	0.00	11.257	335.08	607.90	0.55

Anchor Bolts

Bolt Circle	Num Bolts	Bolt Type	Bolt Dia (in)	Yield (ksi)	Ultimate (ksi)	Arrange	Cluster Dist (in)	Start Angle (deg)	Compression Force (kip)	Compression Allow (kip)	Compression Ratio	Tension Force (kip)	Tension Allow (kip)	Tension Ratio
66.00	16	2.25" 18J	2.25	75.00	100.00	Radial	0.00	0.0	99.29	260.00	0.39	90.55	260.00	0.36