NORTHEAST SITE SOLUTIONS
Turnkey Wireless Development

Northeast Site Solutions
Denise Sabo
4 Angela's Way, Burlington CT 06013
203-435-3640
denise@northeastsitesolutions.com

May 3, 2022

Members of the Siting Council
Connecticut Siting Council
Ten Franklin Square
New Britain, CT 06051

RE: Exempt Modification Application
36 Prospect Street, Newington, CT 06111
Latitude: 41.689902
Longitude: -72.705236
Site #: 876332_Crown_VZW

Dear Ms. Bachman:

Verizon Wireless is requesting to file an exempt modification for an existing tower located at 36 Prospect Street, Newington, CT 06111. Verizon Wireless currently maintains twelve (12) antennas at the 106-foot level of the existing 136-foot tower. The property is owned by John Oldham and the tower is owned by Crown Castle. Verizon now intends to replace six (6) antennas and install (3) antennas. The new antennas would be installed at the 106-foot level of the tower. This modification includes B2, B5 hardware that is both 4G (LTE), and 5G capable. Antenna mount modifications will be completed as per the attached Maser mount analysis dated May 18, 2021.

Verizon Planned Modifications:

Remove: None

Remove and Replace:
(3) DECIBEL Antennas (REMOVE) – (3) Samsung MT6407-77A Antennas
(3) DECIBEL Antennas (REMOVE) – (3) Samsung XXDWMM-12.5-65-8TCBRS Antennas

Install New:
(3) ANDREW LNX-6513DS-A1M Antennas
(1) Hybrid Line 1-1/4"

Existing to Remain:
(6) ANDREW SBNHH-ID65B Antennas
(3) Samsung B2/B66A BR049 - RFV01U-D1A RRH
(3) Samsung B5/B13 BR04C - RFV01U-D2A RRH
(1) Raycap OVP
(1) Hybrid Line 1-1/4"

NORTHEAST SITE SOLUTIONS

Turnkey Wireless Development

The facility was originally approved by the Newington Town Plan & Zoning Commission on April 9, 1997, please see attached.

Please accept this letter as notification pursuant to Regulations of Connecticut State Agencies§ 16- SOj-73, for construction that constitutes an exempt modification pursuant to R.C.S.A. § 16-50j-72(b)(2). In accordance with R.C.SA. § 16-SOj-73, a copy of this letter is being sent to Mayor Beth DelBuono and Renata Bertotti, Town Planner for the Town of Newington. A copy is also being sent to the tower owner and property owner.

The planned modifications to the facility fall squarely within those activities explicitly provided for in R.C.S.A. § 16-50j-72(b)(2).

1. The proposed modifications will not result in an increase in the height of the existing structure.

2. The proposed modifications will not require the extension of the site boundary.

3. The proposed modifications will not increase noise levels at the facility by six decibels or more, or to levels that exceed state and local criteria.

4. The operation of the replacement antennas will not increase radio frequency emissions at the facility to a level at or above the Federal Communications Commission safety standard.

5. The proposed modifications will not cause a change or alteration in the physical or environmental characteristics of the site.

6. The existing structure and its foundation can support the proposed loading.

For the foregoing reasons, Verizon Wireless respectfully submits that the proposed modifications to the above referenced telecommunications facility constitute an exempt modification under R.C.S.A. § 16-50j-72(b)(2).

Sincerely,

Denise Sabo
Mobile: 203-435-3640
Fax: 413-521-0558
Office: 4 Angela's Way, Burlington CT 06013
E-mail: denise@northeastsitesolutions.com

NORTHEAST SITE SOLUTIONS
Turnkey Wireless Development

Attachments

Cc: Mayor Beth DelBuono
Town of Newington
200 Garfield Street
Newington, CT 06111

Renata Bertotti, Town Planner
Town of Newington
200 Garfield Street
Newington, CT 06111

John Oldham - Property Owner
174 Fox Hill Road
Wethersfield, CT 06109

Crown Castle – Tower Owner

Exhibit A

Original Facility Approval

File

TOWN OF NEWINGTON

Town Hall • 131 Cedar Street, Newington, Connecticut 06111
FAX 665-8507 Telephone 665-8500

Certified Mail: P 917 666 630

CERTIFICATE OF ACTION

OFFICE OF: Town Planner

TO: Mr. Thomas F. Flynn III
300 Research Parkway
Meriden, CT 06450

DATE: April 11, 1997

SUBJECT: PETITION 2-97 36 Prospect Street, SBA, Inc. for Sprint PCS Limited Partnership applicant, Patricia Oldham property owner represented by Thomas F. Flynn III 300 Research Parkway Meriden, CT 06450 requests Special Exception Section 3.2.2 and Section 3.2.4 communications tower, B-BT Zone.

At a meeting held April 9, 1997 the Newington Town Plan and Zoning Commission voted to approve the above referenced PETITION subject to the following conditions:

A. Findings

1. The applicant has been granted a variance of the required minimum setback distance equal to the height of the tower (Section 3.2.4) by the Zoning Board of Appeals; December 12, 1996. At the Zoning Board of Appeals meeting, April 3, 1997, the Board accepted the applicant's professional engineer's letter prepared by Clough, Harbour & Associates, dated April 3, 1997, certifying that the design of the monopole will be such that it will collapse upon itself and will not have any impact on adjoining properties.

2. The tower will benefit the public by enhancing wireless communication services known as, Personal Communication Services (PCS).

3. Wireless communication services can improve emergency communication for Newington public safety services, businesses and residents traveling the Route I-91/5 & 15 corridor in Central Connecticut.

B. Conditions

1. The Sprint PCS tower and ground facilities at 36 Prospect Street shall be construction as shown on site plan entitled Lucent Technologies/Bechtel Alliance SSLP Project, sheet 1-3, Site Plan sheet 2, scale 1"=20'.

2. The Sprint PCS tower shall be a co-location site and may accommodate a maximum of two (2) additional FCC licensed carriers.

3. Provision shall be made on the tower for use by Newington emergency communication services.

4. Prior to the signing of the site plan mylar by the Chairman, Sprint PCS shall submit to the Newington Building Department written documentation from their structural engineer certifying that the design and construction of the tower at 36 Prospect Street will prevent its fall onto adjoining properties.

5. Telephone and electric utilities serving the tower compound area shall be located underground.

6. The west and north side of the tower compound area shall be screened with 6' to 8' evergreens planted seven feet on center.

7. Prior to the signing of the site plan mylar by the Chairman Sprint PCS shall submit a concise site location justification statement for 36 Prospect Street explaining the following:

   a) why 36 Prospect Street was chosen by Sprint PCS

   b) Sprint PCS network coverage area

   c) need for future Sprint PCS sites in Newington

8. Sprint PCS shall be responsible for removal of the tower and ground equipment, and restoration of the site to its previous condition, if the tower is not used by Sprint PCS or its co-location FCC licensed commercial wireless services for a period of six (6) months. Removal of the tower shall occur within 90 days of the end of such six (6) month period. Sprint PCS shall notify the Commission in writing that it is terminating the use of the tower.

9. Pursuant to Section 5.2.9 of the Zoning Regulations this Special Exception approval shall be void and of no effect unless construction of the tower begins within one year from the date of this approval. The term "construction of the tower" pertains to installation of the ground facilities and tower monopole. In addition, this Special Exception is not transferable to other FCC licensed commercial wireless companies without prior approval of the Commission.

Certified by:

Edmund J. Meehan
Town Planner

EJM:bjs

This Special Exception will not become effective until this Certificate of Action is filed by the applicant on the Land Records of the Town of Newington.

Ca4997-1/2

Exhibit B

Property Card

The Assessor's office is responsible for the maintenance of records on the ownership of properties. Assessments are computed at 70% of the estimated market value of real property at the time of the last revaluation which was 2015.

Information on the Property Records for the Municipality of Newington was last updated on 1/10/2019.

Parcel Information

Location:	36 PROSPECT ST	Property Use:	Industrial	Primary Use:	Warehouse
Unique ID:	O2219600	Map Block Lot:	18/051/000	Acres:	1.29
490 Acres:	0.00	Zone:	B-BT	Volume / Page:	2157/782
Developers Map / Lot:	N/E 472	Census:			

Value Information

	Appraised Value	Assessed Value
Land	100,000	70,000
Buildings	351,000	245,700
Detached Outbuildings	0	0
Total	451,000	315,700

Owner's Information

Owner's Data
OLDHAM JOHN W TRUSTEE 174 FOX HILL ROAD WETHERSFIELD CT 06109

Building 1

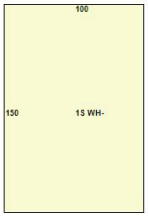

Category:	Industrial	Use:	Warehouse	GLA:	15,000
Stories:	1.00	Construction:	Masonry	Year Built:	1956
Heating:	Forced Hot Air	Fuel:	Natural Gas	Cooling Percent:	0
Siding:	Brick Veneer	Roof Material:	Other	Beds/Units:	0

Special Features

Attached Components

Owner History - Sales

Owner Name	Volume	Page	Sale Date	Deed Type	Valid Sale	Sale Price
OLDHAM JOHN W TRUSTEE	2157	782	10/23/2014	Warranty Deed	No	$0
OLDHAM JOHN W JR	329	282	12/12/1977		No	$0
THE 635 CORPORATION	93	275	04/06/1955		No	$0
HARRY E RUGAR	93	93	03/02/1955		No	$0
GUERRERA MICHAEL & MANCINI PASQUALE	93	86	03/02/1955		No	$0
CALLAHAN CLIFFORD J	65	385	10/09/1950		No	$0

Building Permits

Permit Number	Permit Type	Date Opened	Date Closed	Permit Status	Reason
E-18-300	Electrical	09/05/2018		Closed	TRENCH 12 FEET OF CONDUIT OVER TO LOCATION OF NEW EQUIPMENT INSTALL 100 AMP SERVICE
B-18-361	Comm Renovations	06/28/2018		Closed	Sigfox to install (1) Omni antenna, (1) line of coax, and (1) radio cabinet on h-frame at base of t

B-15-764	Comm Renovations	02/22/2016		Closed	9 ANTENNA PANELS
B-14-453	Remodel	07/29/2014		Closed	ADD 3 ANTENNAS, 3 REMOTE
B-13-156	Remodel	05/09/2013		Closed	3 ANTENNAS ON EXISTING MONOPOLE
62445	Building	08/16/2001		Closed	TELECOMM FACI

Information Published With Permission From The Assessor

Google Maps 36 Prospect St

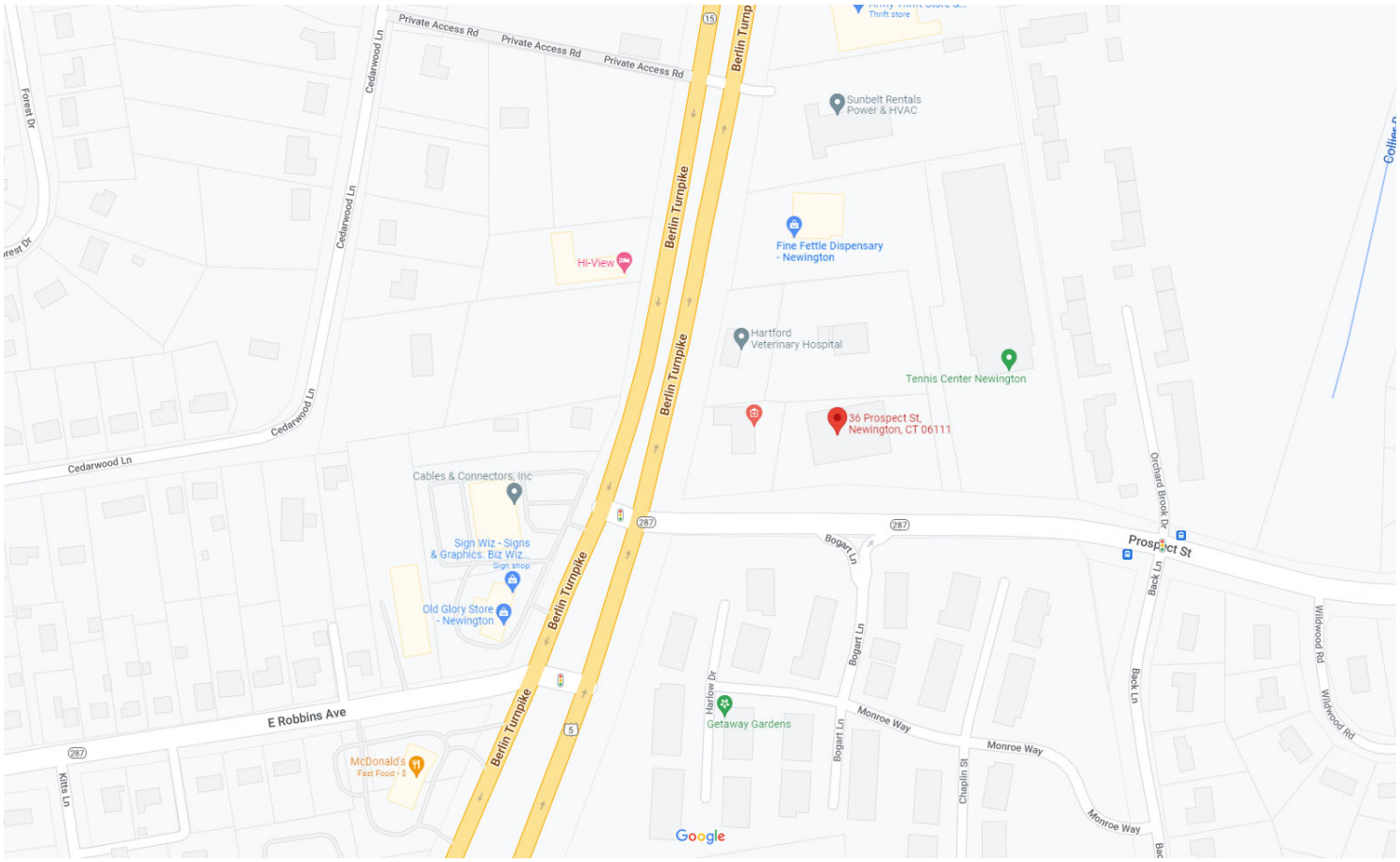

Map data ©2022 100 ft

Exhibit C

Construction Drawings

verizon

VERIZON SITE NUMBER: 468043
VERIZON SITE NAME: NEWINGTON CT
SITE TYPE: MONOPOLE
TOWER HEIGHT: 136'-0"

BUSINESS UNIT #: 876332
SITE ADDRESS: 36 PROSPECT STREET NEWINGTON, CT 06109
COUNTY: HARTFORD
JURISDICTION: CONNECTICUT SITING COUNCIL

VERIZON 5G L-SUB6 - CARRIER ADD

SITE INFORMATION

CROWN CASTLE USA INC. SITE NAME:	36 PROSPECT STREET
SITE ADDRESS:	36 PROSPECT STREET NEWINGTON, CT 06109
COUNTY:	HARTFORD
MAP/PARCEL #:	NEWI-221955-O000000
AREA OF CONSTRUCTION:	EXISTING
LATITUDE:	41° 41' 23.66"
LONGITUDE:	-72° 42' 18.85"
LAT/LONG TYPE:	NAD83
GROUND ELEVATION:	256.0 FT
CURRENT ZONING:	B-BT BUSINESS-BERLIN TURNPIKE
JURISDICTION:	CONNECTICUT SITING COUNCIL
OCCUPANCY CLASSIFICATION:	U
TYPE OF CONSTRUCTION:	IIB
A.D.A. COMPLIANCE:	FACILITY IS UNMANNED AND NOT FOR HUMAN HABITATION
PROPERTY OWNER:	OLDHAM, JOH W. TRUSTEE 174 FOX HILL ROAD WETHERSFIELD, CT 06109
TOWER OWNER:	CROWN CASTLE MU LLC 2000 CORPORATE DRIVE CANONSBURG, PA 15317
CARRIER/APPLICANT:	VERIZON WIRELESS 20 ALEXANDER DRIVE, 2ND FLOOR WALLINGFORD, CT 06492
ELECTRIC PROVIDER:	NORTHEAST UTILITIES (800) 286-2000
TELCO PROVIDER:	VERIZON (800) 483-2000

PROJECT TEAM

A&E FIRM:	B+T GROUP 1717 S. BOULDER AVE. TULSA, OK 74119 MARVIN PHILLIPS marvin.phillips@btgrp.com
CROWN CASTLE USA INC. DISTRICT CONTACTS:	3 CORPORATE PARK DRIVE, SUITE 101 CLIFTON PARK, NY 12065 WILLIAM GATES - PROJECT MANAGER WILLIAM.GATES@CROWNCASTLE.COM JASON D'AMICO - CONSTRUCTION MANAGER JASON.DAMICO@CROWNCASTLE.COM
VERIZON CONTACT:	TIMOTHY PARKS TIMOTHY.PARKS@VERIZONWIRELESS.COM

DRAWING INDEX

SHEET #	SHEET DESCRIPTION
T-1	TITLE SHEET
T-2	GENERAL NOTES
C-1	SITE PLAN
C-2	TOWER ELEVATION & ANTENNA PLANS
C-3	EQUIPMENT SCHEDULES
C-4	EQUIPMENT DETAILS
C-5	EQUIPMENT DETAILS
C-6	PLUMBING DIAGRAM
G-1	GROUNDING DETAILS
G-2	GROUNDING DETAILS

ALL DRAWINGS CONTAINED HEREIN ARE FORMATTED FOR FULL SIZE. CONTRACTOR SHALL VERIFY ALL PLANS AND EXISTING DIMENSIONS AND CONDITIONS ON THE JOB SITE AND SHALL IMMEDIATELY NOTIFY THE ENGINEER IN WRITING OF ANY DISCREPANCIES BEFORE PROCEEDING WITH THE WORK OR BE RESPONSIBLE FOR SAME.

APPROVALS

SIGNATURE	DATE

CONTRACTOR PMI REQUIREMENTS

PMI ACCESSED AT	https://pmi.vxwsmart.com
SMART TOOL VENDOR PROJECT NUMBER	----
VzW LOCATION CODE (PSLC)	468043

*** PMI AND REQUIREMENTS ALSO EMBEDDED IN MOUNT ANALYSIS REPORT

MOUNT MODIFICATION REQUIRED	N

VzW APPROVED SMART KIT VENDORS

REFER TO MOUNT MODIFICATION DRAWINGS PAGE FOR VzW SMART KIT APPROVED VENDORS

LOCATION MAP

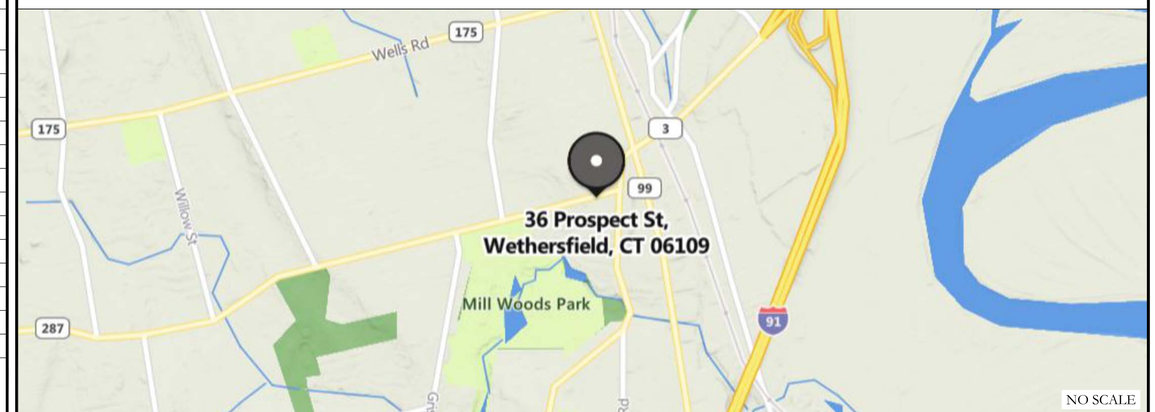

DRIVING DIRECTIONS FROM VERIZON LOCAL OFFICE (180 WASHINGTON VALLEY RD, BEDMINSTER, NJ 07921)

HEAD NORTHWEST. SLIGHT LEFT. TURN RIGHT ONTO US-202 N/US-206 N. TURN RIGHT ONTO SCHLEY MOUNTAIN RD. MERGE WITH I-287 N. ENTERING NEW YORK. TAKE THE I-87 S/NEW YORK STATE THRUWAY/I-287 EXIT TOWARD GOV MARIO M. CUOMO BR/NEW YORK CITY. MERGE WITH I-287 E/I-87 S. KEEP LEFT AT THE Y JUNCTION TO CONTINUE ON I-287 E, FOLLOW SIGNS FOR WHITE PLAINS/RYE. MERGE WITH WESTCHESTER AVE.USE THE RIGHT LANE TO TAKE THE RAMP TO WESTCHESTER AVE/NORTH HUTCHINSON PKWY/MERRITT PKWY. KEEP RIGHT AT THE Y JUNCTION TO STAY ON HUTCHINSON RIVER PKWY N. ENTERING CONNECTICUT. CONTINUE ONTO CT-15 N. KEEP LEFT TO STAY ON CT-15 N. PASS BY SUBWAY. DESTINATION WILL BE ON THE RIGHT.

APPLICABLE CODES/REFERENCE DOCUMENTS

ALL WORK SHALL BE PERFORMED AND MATERIALS INSTALLED IN ACCORDANCE WITH THE CURRENT EDITIONS OF THE FOLLOWING CODES AS ADOPTED BY THE LOCAL GOVERNING AUTHORITIES. NOTHING IN THESE PLANS IS TO BE CONSTRUED TO PERMIT WORK NOT CONFORMING TO THESE CODES:

CODE TYPE	CODE
BUILDING	2015 IBC W/AMENDMENTS
MECHANICAL	2015 IMC W/AMENDMENTS
ELECTRICAL	2014 NEC

REFERENCE DOCUMENTS:

STRUCTURAL ANALYSIS:	BY OTHERS
DATED:	
MOUNT ANALYSIS:	BY OTHERS
DATED:	
RFDS REVISION:	N/A
DATED:	3/18/21
ORDER ID:	552673
REVISION:	0

CALL CONNECTICUT ONE CALL
(800) 922-4455 CBYD.COM
CALL 2 WORKING DAYS
BEFORE YOU DIG!

PROJECT DESCRIPTION

THE PURPOSE OF THIS PROJECT IS TO ENHANCE BROADBAND CONNECTIVITY AND CAPACITY TO THE EXISTING ELIGIBLE WIRELESS FACILITY.

TOWER SCOPE OF WORK:
- REMOVE (6) ANTENNAS
- INSTALL (9) ANTENNAS
- INSTALL (1) HYBRID CABLE (1-1/4")

GROUND SCOPE OF WORK:
- NONE

NOTE:
PRIOR TO ACCESSING/ENTERING THE SITE YOU MUST CONTACT THE CROWN NOC AT (800) 788-7011 & CROWN CONSTRUCTION MANAGER

verizon
180 WASHINGTON VALLEY ROAD
BEDMINSTER, NJ 07921

CROWN CASTLE
3 CORPORATE PARK DRIVE, SUITE 101
CLIFTON PARK, NY 12065

B+T GRP
1717 S. BOULDER
SUITE 300
TULSA, OK 74119
PH: (918) 587-4630
www.btgrp.com

VERIZON SITE NUMBER:
468043

BU #: **876332**
36 PROSPECT STREET

36 PROSPECT STREET
NEWINGTON, CT 06109

EXISTING 136'-0" MONOPOLE

ISSUED FOR:

REV	DATE	DRWN	DESCRIPTION	DES./QA
0	2/25/22	JHW	CONSTRUCTION	MTJ

B&T ENGINEERING, INC.
PEC.0001564
Expires 2/10/23

IT IS A VIOLATION OF LAW FOR ANY PERSON, UNLESS THEY ARE ACTING UNDER THE DIRECTION OF A LICENSED PROFESSIONAL ENGINEER, TO ALTER THIS DOCUMENT.

SHEET NUMBER:	REVISION:
T-1	0

468043_876332_36 PROSPECT_CD REVISION.dwg – Sheet:T-1 – User: mjones – Feb 25, 2022 – 7:58am

CROWN CASTLE USA INC. SITE ACTIVITY REQUIREMENTS:

1. NOTICE TO PROCEED– NO WORK SHALL COMMENCE PRIOR TO CROWN CASTLE USA INC. WRITTEN NOTICE TO PROCEED (NTP) AND THE ISSUANCE OF A PURCHASE ORDER. PRIOR TO ACCESSING/ENTERING THE SITE YOU MUST CONTACT THE CROWN CASTLE USA INC. NOC AT 800–788–7011 & THE CROWN CASTLE USA INC. CONSTRUCTION MANAGER.
2. "LOOK UP" – CROWN CASTLE USA INC. SAFETY CLIMB REQUIREMENT:
   THE INTEGRITY OF THE SAFETY CLIMB AND ALL COMPONENTS OF THE CLIMBING FACILITY SHALL BE CONSIDERED DURING ALL STAGES OF DESIGN, INSTALLATION, AND INSPECTION. TOWER MODIFICATION, MOUNT REINFORCEMENTS, AND/OR EQUIPMENT INSTALLATIONS SHALL NOT COMPROMISE THE INTEGRITY OR FUNCTIONAL USE OF THE SAFETY CLIMB OR ANY COMPONENTS OF THE CLIMBING FACILITY ON THE STRUCTURE. THIS SHALL INCLUDE, BUT NOT BE LIMITED TO: PINCHING OF THE WIRE ROPE, BENDING OF THE WIRE ROPE FROM ITS SUPPORTS, DIRECT CONTACT OR CLOSE PROXIMITY TO THE WIRE ROPE WHICH MAY CAUSE FRICTIONAL WEAR, IMPACT TO THE ANCHORAGE POINTS IN ANY WAY, OR TO IMPEDE/BLOCK ITS INTENDED USE. ANY COMPROMISED SAFETY CLIMB, INCLUDING EXISTING CONDITIONS MUST BE TAGGED OUT AND REPORTED TO YOUR CROWN CASTLE USA INC. POC OR CALL THE NOC TO GENERATE A SAFETY CLIMB MAINTENANCE AND CONTRACTOR NOTICE TICKET.
3. PRIOR TO THE START OF CONSTRUCTION, ALL REQUIRED JURISDICTIONAL PERMITS SHALL BE OBTAINED. THIS INCLUDES, BUT IS NOT LIMITED TO, BUILDING, ELECTRICAL, MECHANICAL, FIRE, FLOOD ZONE, ENVIRONMENTAL, AND ZONING. AFTER ONSITE ACTIVITIES AND CONSTRUCTION ARE COMPLETED, ALL REQUIRED PERMITS SHALL BE SATISFIED AND CLOSED OUT ACCORDING TO LOCAL JURISDICTIONAL REQUIREMENTS.
4. ALL CONSTRUCTION MEANS AND METHODS; INCLUDING BUT NOT LIMITED TO, ERECTION PLANS, RIGGING PLANS, CLIMBING PLANS, AND RESCUE PLANS SHALL BE THE RESPONSIBILITY OF THE GENERAL CONTRACTOR RESPONSIBLE FOR THE EXECUTION OF THE WORK CONTAINED HEREIN, AND SHALL MEET ANSI/ASSE A10.48 (LATEST EDITION); FEDERAL, STATE, AND LOCAL REGULATIONS; AND ANY APPLICABLE INDUSTRY CONSENSUS STANDARDS RELATED TO THE CONSTRUCTION ACTIVITIES BEING PERFORMED. ALL RIGGING PLANS SHALL ADHERE TO ANSI/ASSE A10.48 (LATEST EDITION) AND CROWN CASTLE USA INC. STANDARD CED–STD–10253, INCLUDING THE REQUIRED INVOLVEMENT OF A QUALIFIED ENGINEER FOR CLASS IV CONSTRUCTION, TO CERTIFY THE SUPPORTING STRUCTURE(S) IN ACCORDANCE WITH ANSI/TIA–322 (LATEST EDITION).
5. ALL SITE WORK TO COMPLY WITH QAS–STD–10068 "INSTALLATION STANDARDS FOR CONSTRUCTION ACTIVITIES ON CROWN CASTLE USA INC. TOWER SITE," CED–STD–10294 "STANDARD FOR INSTALLATION OF MOUNTS AND APPURTENANCES," AND LATEST VERSION OF ANSI/TIA–1019–A–2012 "STANDARD FOR INSTALLATION, ALTERATION, AND MAINTENANCE OF ANTENNA SUPPORTING STRUCTURES AND ANTENNAS."
6. IF THE SPECIFIED EQUIPMENT CAN NOT BE INSTALLED AS SHOWN ON THESE DRAWINGS, THE CONTRACTOR SHALL PROPOSE AN ALTERNATIVE INSTALLATION FOR APPROVAL BY CROWN CASTLE USA INC. PRIOR TO PROCEEDING WITH ANY SUCH CHANGE OF INSTALLATION.
7. ALL MATERIALS FURNISHED AND INSTALLED SHALL BE IN STRICT ACCORDANCE WITH ALL APPLICABLE CODES, REGULATIONS AND ORDINANCES. CONTRACTOR SHALL ISSUE ALL APPROPRIATE NOTICES AND COMPLY WITH ALL LAWS, ORDINANCES, RULES, REGULATIONS AND LAWFUL ORDERS OF ANY PUBLIC AUTHORITY REGARDING THE PERFORMANCE OF THE WORK. ALL WORK CARRIED OUT SHALL COMPLY WITH ALL APPLICABLE MUNICIPAL AND UTILITY COMPANY SPECIFICATIONS AND LOCAL JURISDICTIONAL CODES, ORDINANCES AND APPLICABLE REGULATIONS.
8. THE CONTRACTOR SHALL INSTALL ALL EQUIPMENT AND MATERIALS IN ACCORDANCE WITH MANUFACTURER'S RECOMMENDATIONS UNLESS SPECIFICALLY STATED OTHERWISE.
9. THE CONTRACTOR SHALL CONTACT UTILITY LOCATING SERVICES PRIOR TO THE START OF CONSTRUCTION.
10. ALL EXISTING ACTIVE SEWER, WATER, GAS, ELECTRIC AND OTHER UTILITIES WHERE ENCOUNTERED IN THE WORK, SHALL BE PROTECTED AT ALL TIMES AND WHERE REQUIRED FOR THE PROPER EXECUTION OF THE WORK, SHALL BE RELOCATED AS DIRECTED BY CONTRACTOR. EXTREME CAUTION SHOULD BE USED BY THE CONTRACTOR WHEN EXCAVATING OR DRILLING PIERS AROUND OR NEAR UTILITIES. CONTRACTOR SHALL PROVIDE SAFETY TRAINING FOR THE WORKING CREW. THIS WILL INCLUDE BUT NOT BE LIMITED TO A) FALL PROTECTION B) CONFINED SPACE C) ELECTRICAL SAFETY D) TRENCHING AND EXCAVATION E) CONSTRUCTION SAFETY PROCEDURES.
11. ALL SITE WORK SHALL BE AS INDICATED ON THE STAMPED CONSTRUCTION DRAWINGS AND PROJECT SPECIFICATIONS, LATEST APPROVED REVISION.
12. CONTRACTOR SHALL KEEP THE SITE FREE FROM ACCUMULATING WASTE MATERIAL, DEBRIS, AND TRASH AT THE COMPLETION OF THE WORK. IF NECESSARY, RUBBISH, STUMPS, DEBRIS, STICKS, STONES AND OTHER REFUSE SHALL BE REMOVED FROM THE SITE AND DISPOSED OF LEGALLY.
13. ALL EXISTING INACTIVE SEWER, WATER, GAS, ELECTRIC AND OTHER UTILITIES, WHICH INTERFERE WITH THE EXECUTION OF THE WORK, SHALL BE REMOVED AND/OR CAPPED, PLUGGED OR OTHERWISE DISCONTINUED AT POINTS WHICH WILL NOT INTERFERE WITH THE EXECUTION OF THE WORK, SUBJECT TO THE APPROVAL OF CONTRACTOR, TOWER OWNER, CROWN CASTLE USA INC., AND/OR LOCAL UTILITIES.
14. THE CONTRACTOR SHALL PROVIDE SITE SIGNAGE IN ACCORDANCE WITH THE TECHNICAL SPECIFICATION FOR SITE SIGNAGE REQUIRED BY LOCAL JURISDICTION AND SIGNAGE REQUIRED ON INDIVIDUAL PIECES OF EQUIPMENT, ROOMS, AND SHELTERS.
15. THE SITE SHALL BE GRADED TO CAUSE SURFACE WATER TO FLOW AWAY FROM THE CARRIER'S EQUIPMENT AND TOWER AREAS.
16. THE SUB GRADE SHALL BE COMPACTED AND BROUGHT TO A SMOOTH UNIFORM GRADE PRIOR TO FINISHED SURFACE APPLICATION.
17. THE AREAS OF THE OWNERS PROPERTY DISTURBED BY THE WORK AND NOT COVERED BY THE TOWER, EQUIPMENT OR DRIVEWAY, SHALL BE GRADED TO A UNIFORM SLOPE, AND STABILIZED TO PREVENT EROSION AS SPECIFIED ON THE CONSTRUCTION DRAWINGS AND/OR PROJECT SPECIFICATIONS.
18. CONTRACTOR SHALL MINIMIZE DISTURBANCE TO EXISTING SITE DURING CONSTRUCTION. EROSION CONTROL MEASURES, IF REQUIRED DURING CONSTRUCTION, SHALL BE IN CONFORMANCE WITH THE LOCAL GUIDELINES FOR EROSION AND SEDIMENT CONTROL.
19. THE CONTRACTOR SHALL PROTECT EXISTING IMPROVEMENTS, PAVEMENTS, CURBS, LANDSCAPING AND STRUCTURES. ANY DAMAGED PART SHALL BE REPAIRED AT CONTRACTOR'S EXPENSE TO THE SATISFACTION OF OWNER.
20. CONTRACTOR SHALL LEGALLY AND PROPERLY DISPOSE OF ALL SCRAP MATERIALS SUCH AS COAXIAL CABLES AND OTHER ITEMS REMOVED FROM THE EXISTING FACILITY. ANTENNAS REMOVED SHALL BE RETURNED TO THE OWNER'S DESIGNATED LOCATION.
21. CONTRACTOR SHALL LEAVE PREMISES IN CLEAN CONDITION. TRASH AND DEBRIS SHOULD BE REMOVED FROM SITE ON A DAILY BASIS.
22. NO FILL OR EMBANKMENT MATERIAL SHALL BE PLACED ON FROZEN GROUND. FROZEN MATERIALS, SNOW OR ICE SHALL NOT BE PLACED IN ANY FILL OR EMBANKMENT.

GENERAL NOTES:

1. FOR THE PURPOSE OF CONSTRUCTION DRAWING, THE FOLLOWING DEFINITIONS SHALL APPLY:
   CONTRACTOR: GENERAL CONTRACTOR RESPONSIBLE FOR CONSTRUCTION
   CARRIER: VERIZON
   TOWER OWNER: CROWN CASTLE USA INC.
2. THESE DRAWINGS HAVE BEEN PREPARED USING STANDARDS OF PROFESSIONAL CARE AND COMPLETENESS NORMALLY EXERCISED UNDER SIMILAR CIRCUMSTANCES BY REPUTABLE ENGINEERS IN THIS OR SIMILAR LOCALITIES. IT IS ASSUMED THAT THE WORK DEPICTED WILL BE PERFORMED BY AN EXPERIENCED CONTRACTOR AND/OR WORKPEOPLE WHO HAVE A WORKING KNOWLEDGE OF THE APPLICABLE CODE STANDARDS AND REQUIREMENTS AND OF INDUSTRY ACCEPTED STANDARD GOOD PRACTICE. AS NOT EVERY CONDITION OR ELEMENT IS (OR CAN BE) EXPLICITLY SHOWN ON THESE DRAWINGS, THE CONTRACTOR SHALL USE INDUSTRY ACCEPTED STANDARD GOOD PRACTICE FOR MISCELLANEOUS WORK NOT EXPLICITLY SHOWN.
3. THESE DRAWINGS REPRESENT THE FINISHED STRUCTURE. THEY DO NOT INDICATE THE MEANS OR METHODS OF CONSTRUCTION. THE CONTRACTOR SHALL BE SOLELY RESPONSIBLE FOR THE CONSTRUCTION MEANS, METHODS, TECHNIQUES, SEQUENCES, AND PROCEDURES. THE CONTRACTOR SHALL PROVIDE ALL MEASURES NECESSARY FOR PROTECTION OF LIFE AND PROPERTY DURING CONSTRUCTION. SUCH MEASURES SHALL INCLUDE, BUT NOT BE LIMITED TO, BRACING, FORMWORK, SHORING, ETC. SITE VISITS BY THE ENGINEER OR HIS REPRESENTATIVE WILL NOT INCLUDE INSPECTION OF THESE ITEMS AND IS FOR STRUCTURAL OBSERVATION OF THE FINISHED STRUCTURE ONLY.
4. NOTES AND DETAILS IN THE CONSTRUCTION DRAWINGS SHALL TAKE PRECEDENCE OVER GENERAL NOTES AND TYPICAL DETAILS. WHERE NO DETAILS ARE SHOWN, CONSTRUCTION SHALL CONFORM TO SIMILAR WORK ON THE PROJECT, AND/OR AS PROVIDED FOR IN THE CONTRACT DOCUMENTS. WHERE DISCREPANCIES OCCUR BETWEEN PLANS, DETAILS, GENERAL NOTES, AND SPECIFICATIONS, THE GREATER, MORE STRICT REQUIREMENTS, SHALL GOVERN. IF FURTHER CLARIFICATION IS REQUIRED CONTACT THE ENGINEER OF RECORD.
5. SUBSTANTIAL EFFORT HAS BEEN MADE TO PROVIDE ACCURATE DIMENSIONS AND MEASUREMENTS ON THE DRAWINGS TO ASSIST IN THE FABRICATION AND/OR PLACEMENT OF CONSTRUCTION ELEMENTS BUT IT IS THE SOLE RESPONSIBILITY OF THE CONTRACTOR TO FIELD VERIFY THE DIMENSIONS, MEASUREMENTS, AND/OR CLEARANCES SHOWN IN THE CONSTRUCTION DRAWINGS PRIOR TO FABRICATION OR CUTTING OF ANY NEW OR EXISTING CONSTRUCTION ELEMENTS. IF IT IS DETERMINED THAT THERE ARE DISCREPANCIES AND/OR CONFLICTS WITH THE CONSTRUCTION DRAWINGS THE ENGINEER OF RECORD IS TO BE NOTIFIED AS SOON AS POSSIBLE.
6. PRIOR TO THE SUBMISSION OF BIDS, THE BIDDING CONTRACTOR SHALL VISIT THE CELL SITE TO FAMILIARIZE WITH THE EXISTING CONDITIONS AND TO CONFIRM THAT THE WORK CAN BE ACCOMPLISHED AS SHOWN ON THE CONSTRUCTION DRAWINGS. ANY DISCREPANCY FOUND SHALL BE BROUGHT TO THE ATTENTION OF CROWN CASTLE.
7. ALL MATERIALS FURNISHED AND INSTALLED SHALL BE IN STRICT ACCORDANCE WITH ALL APPLICABLE CODES, REGULATIONS AND ORDINANCES. CONTRACTOR SHALL ISSUE ALL APPROPRIATE NOTICES AND COMPLY WITH ALL LAWS, ORDINANCES, RULES, REGULATIONS AND LAWFUL ORDERS OF ANY PUBLIC AUTHORITY REGARDING THE PERFORMANCE OF THE WORK. ALL WORK CARRIED OUT SHALL COMPLY WITH ALL APPLICABLE MUNICIPAL AND UTILITY COMPANY SPECIFICATIONS AND LOCAL JURISDICTIONAL CODES, ORDINANCES AND APPLICABLE REGULATIONS.
8. UNLESS NOTED OTHERWISE, THE WORK SHALL INCLUDE FURNISHING MATERIALS, EQUIPMENT, APPURTENANCES AND LABOR NECESSARY TO COMPLETE ALL INSTALLATIONS AS INDICATED ON THE DRAWINGS.
9. THE CONTRACTOR SHALL INSTALL ALL EQUIPMENT AND MATERIALS IN ACCORDANCE WITH MANUFACTURER'S RECOMMENDATIONS UNLESS SPECIFICALLY STATED OTHERWISE.
10. IF THE SPECIFIED EQUIPMENT CAN NOT BE INSTALLED AS SHOWN ON THESE DRAWINGS, THE CONTRACTOR SHALL PROPOSE AN ALTERNATIVE INSTALLATION FOR APPROVAL BY THE CARRIER AND CROWN CASTLE PRIOR TO PROCEEDING WITH ANY SUCH CHANGE OF INSTALLATION.
11. CONTRACTOR IS TO PERFORM A SITE INVESTIGATION AND IS TO DETERMINE THE BEST ROUTING OF ALL CONDUITS FOR POWER, AND TELCO AND FOR GROUNDING CABLES AS SHOWN IN THE POWER, TELCO, AND GROUNDING PLAN DRAWINGS.
12. THE CONTRACTOR SHALL PROTECT EXISTING IMPROVEMENTS, PAVEMENTS, CURBS, LANDSCAPING AND STRUCTURES. ANY DAMAGED PART SHALL BE REPAIRED AT CONTRACTOR'S EXPENSE TO THE SATISFACTION OF CROWN CASTLE USA INC.
13. CONTRACTOR SHALL LEGALLY AND PROPERLY DISPOSE OF ALL SCRAP MATERIALS SUCH AS COAXIAL CABLES AND OTHER ITEMS REMOVED FROM THE EXISTING FACILITY. ANTENNAS REMOVED SHALL BE RETURNED TO THE OWNER'S DESIGNATED LOCATION.
14. CONTRACTOR SHALL LEAVE PREMISES IN CLEAN CONDITION. TRASH AND DEBRIS SHOULD BE REMOVED FROM SITE ON A DAILY BASIS.

CONCRETE, FOUNDATIONS, AND REINFORCING STEEL:

1. ALL CONCRETE WORK SHALL BE IN ACCORDANCE WITH THE ACI 301, ACI 318, ACI 336, ASTM A184, ASTM A185 AND THE DESIGN AND CONSTRUCTION SPECIFICATION FOR CAST–IN–PLACE CONCRETE.
2. UNLESS NOTED OTHERWISE, SOIL BEARING PRESSURE USED FOR DESIGN OF SLABS AND FOUNDATIONS IS ASSUMED TO BE 1000 psf.
3. ALL CONCRETE SHALL HAVE A MINIMUM COMPRESSIVE STRENGTH (f'c) OF 3000 psi AT 28 DAYS, UNLESS NOTED OTHERWISE. NO MORE THAN 90 MINUTES SHALL ELAPSE FROM BATCH TIME TO TIME OF PLACEMENT UNLESS APPROVED BY THE ENGINEER OF RECORD. TEMPERATURE OF CONCRETE SHALL NOT EXCEED 90°f AT TIME OF PLACEMENT.
4. CONCRETE EXPOSED TO FREEZE–THAW CYCLES SHALL CONTAIN AIR ENTRAINING ADMIXTURES. AMOUNT OF AIR ENTRAINMENT TO BE BASED ON SIZE OF AGGREGATE AND F3 CLASS EXPOSURE (VERY SEVERE). CEMENT USED TO BE TYPE II PORTLAND CEMENT WITH A MAXIMUM WATER–TO–CEMENT RATIO (W/C) OF 0.45.
5. ALL STEEL REINFORCING SHALL CONFORM TO ASTM A615. ALL WELDED WIRE FABRIC (WWF) SHALL CONFORM TO ASTM A185. ALL SPLICES SHALL BE CLASS "B" TENSION SPLICES, UNLESS NOTED OTHERWISE. ALL HOOKS SHALL BE STANDARD 90 DEGREE HOOKS, UNLESS NOTED OTHERWISE. YIELD STRENGTH (Fy) OF STANDARD DEFORMED BARS ARE AS FOLLOWS:
   #4 BARS AND SMALLER..40 ksi
   #5 BARS AND LARGER..60 ksi
6. THE FOLLOWING MINIMUM CONCRETE COVER SHALL BE PROVIDED FOR REINFORCING STEEL UNLESS SHOWN OTHERWISE ON DRAWINGS:
   CONCRETE CAST AGAINST AND PERMANENTLY EXPOSED TO EARTH......................3"
   CONCRETE EXPOSED TO EARTH OR WEATHER:
   #6 BARS AND LARGER..2"
   #5 BARS AND SMALLER..1–1/2"
   CONCRETE NOT EXPOSED TO EARTH OR WEATHER:
   SLAB AND WALLS..3/4"
   BEAMS AND COLUMNS..1–1/2"
7. A TOOLED EDGE OR A 3/4" CHAMFER SHALL BE PROVIDED AT ALL EXPOSED EDGES OF CONCRETE, UNLESS NOTED OTHERWISE, IN ACCORDANCE WITH ACI 301 SECTION 4.2.4.

GREENFIELD GROUNDING NOTES:

1. ALL GROUND ELECTRODE SYSTEMS (INCLUDING TELECOMMUNICATION, RADIO, LIGHTNING PROTECTION AND AC POWER GES'S) SHALL BE BONDED TOGETHER AT OR BELOW GRADE, BY TWO OR MORE COPPER BONDING CONDUCTORS IN ACCORDANCE WITH THE NEC.
2. THE CONTRACTOR SHALL PERFORM IEEE FALL–OF–POTENTAL RESISTANCE TO EARTH TESTING (PER IEEE 1100 AND 81) FOR GROUND ELECTRODE SYSTEMS, THE CONTRACTOR SHALL FURNISH AND INSTALL SUPPLEMENTAL GROUND ELECTRODES AS NEEDED TO ACHIEVE A TEST RESULT OF 5 OHMS OR LESS.
3. THE CONTRACTOR IS RESPONSIBLE FOR PROPERLY SEQUENCING GROUNDING AND UNDERGROUND CONDUIT INSTALLATION AS TO PREVENT ANY LOSS OF CONTINUITY IN THE GROUNDING SYSTEM OR DAMAGE TO THE CONDUIT AND PROVIDE TESTING RESULTS.
4. METAL CONDUIT AND TRAY SHALL BE GROUNDED AND MADE ELECTRICALLY CONTINUOUS WITH LISTED BONDING FITTINGS OR BY BONDING ACROSS THE DISCONTINUITY WITH #6 COPPER WIRE UL APPROVED GROUNDING TYPE CONDUIT CLAMPS.
5. METAL RACEWAY SHALL NOT BE USED AS THE NEC REQUIRED EQUIPMENT GROUND CONDUCTOR. STRANDED COPPER CONDUCTORS WITH GREEN INSULATION, SIZED IN ACCORDANCE WITH THE NEC, SHALL BE FURNISHED AND INSTALLED WITH THE POWER CIRCUITS TO BTS EQUIPMENT.
6. EACH CABINET FRAME SHALL BE DIRECTLY CONNECTED TO THE MASTER GROUND BAR WITH GREEN INSULATED SUPPLEMENTAL EQUIPMENT GROUND WIRES, #6 STRANDED COPPER OR LARGER FOR INDOOR BTS; #2 BARE SOLID TINNED COPPER FOR OUTDOOR BTS.
7. CONNECTIONS TO THE GROUND BUS SHALL NOT BE DOUBLED UP OR STACKED BACK TO BACK CONNECTIONS ON OPPOSITE SIDE OF THE GROUND BUS ARE PERMITTED.
8. ALL EXTERIOR GROUND CONDUCTORS BETWEEN EQUIPMENT/GROUND BARS AND THE GROUND RING SHALL BE #2 SOLID TINNED COPPER UNLESS OTHERWISE INDICATED.
9. ALUMINUM CONDUCTOR OR COPPER CLAD STEEL CONDUCTOR SHALL NOT BE USED FOR GROUNDING CONNECTIONS.
10. USE OF 90° BENDS IN THE PROTECTION GROUNDING CONDUCTORS SHALL BE AVOIDED WHEN 45° BENDS CAN BE ADEQUATELY SUPPORTED.
11. EXOTHERMIC WELDS SHALL BE USED FOR ALL GROUNDING CONNECTIONS BELOW GRADE.
12. ALL GROUND CONNECTIONS ABOVE GRADE (INTERIOR AND EXTERIOR) SHALL BE FORMED USING HIGH PRESS CRIMPS.
13. COMPRESSION GROUND CONNECTIONS MAY BE REPLACED BY EXOTHERMIC WELD CONNECTIONS.
14. ICE BRIDGE BONDING CONDUCTORS SHALL BE EXOTHERMICALLY BONDED OR BOLTED TO THE BRIDGE AND THE TOWER GROUND BAR.
15. APPROVED ANTIOXIDANT COATINGS (i.e. CONDUCTIVE GEL OR PASTE) SHALL BE USED ON ALL COMPRESSION AND BOLTED GROUND CONNECTIONS.
16. ALL EXTERIOR GROUND CONNECTIONS SHALL BE COATED WITH A CORROSION RESISTANT MATERIAL.
17. MISCELLANEOUS ELECTRICAL AND NON–ELECTRICAL METAL BOXES, FRAMES AND SUPPORTS SHALL BE BONDED TO THE GROUND RING, IN ACCORDANCE WITH THE NEC.
18. BOND ALL METALLIC OBJECTS WITHIN 6 ft OF MAIN GROUND RING WITH (1) #2 BARE SOLID TINNED COPPER GROUND CONDUCTOR.
19. GROUND CONDUCTORS USED FOR THE FACILITY GROUNDING AND LIGHTNING PROTECTION SYSTEMS SHALL NOT BE ROUTED THROUGH METALLIC OBJECTS THAT FORM A RING AROUND THE CONDUCTOR, SUCH AS METALLIC CONDUITS, METAL SUPPORT CLIPS OR SLEEVES THROUGH WALLS OR FLOORS. WHEN IT IS REQUIRED TO BE HOUSED IN CONDUIT TO MEET CODE REQUIREMENTS OR LOCAL CONDITIONS, NON–METALLIC MATERIAL SUCH AS PVC CONDUIT SHALL BE USED. WHERE USE OF METAL CONDUIT IS UNAVOIDABLE (i.e., NONMETALLIC CONDUIT PROHIBITED BY LOCAL CODE) THE GROUND CONDUCTOR SHALL BE BONDED TO EACH END OF THE METAL CONDUIT.
20. ALL GROUNDS THAT TRANSITION FROM BELOW GRADE TO ABOVE GRADE MUST BE #2 BARE SOLID TINNED COPPER IN 3/4" NON–METALLIC, FLEXIBLE CONDUIT FROM 24" BELOW GRADE TO WITHIN 3" TO 6" OF CAD–WELD TERMINATION POINT. THE EXPOSED END OF THE CONDUIT MUST BE SEALED WITH SILICONE CAULK. (ADD TRANSITIONING GROUND STANDARD DETAIL AS WELL).
21. BUILDINGS WHERE THE MAIN GROUNDING CONDUCTORS ARE REQUIRED TO BE ROUTED TO GRADE, THE CONTRACTOR SHALL ROUTE TWO GROUNDING CONDUCTORS FROM THE ROOFTOP, TOWERS, AND WATER TOWERS GROUNDING RING, TO THE EXISTING GROUNDING SYSTEM, THE GROUNDING CONDUCTORS SHALL NOT BE SMALLER THAN 2/0 COPPER. ROOFTOP GROUNDING RING SHALL BE BONDED TO THE EXISTING GROUNDING SYSTEM, THE BUILDING STEEL COLUMNS, LIGHTNING PROTECTION SYSTEM, AND BUILDING MAIN WATER LINE (FERROUS OR NONFERROUS METAL PIPING ONLY).

ELECTRICAL INSTALLATION NOTES:

1. ALL ELECTRICAL WORK SHALL BE PERFORMED IN ACCORDANCE WITH THE PROJECT SPECIFICATIONS, NEC AND ALL APPLICABLE FEDERAL, STATE, AND LOCAL CODES/ORDINANCES.
2. CONDUIT ROUTINGS ARE SCHEMATIC. CONTRACTOR SHALL INSTALL CONDUITS SO THAT ACCESS TO EQUIPMENT IS NOT BLOCKED AND TRIP HAZARDS ARE ELIMINATED.
3. WIRING, RACEWAY AND SUPPORT METHODS AND MATERIALS SHALL COMPLY WITH THE REQUIREMENTS OF THE NEC.
4. ALL CIRCUITS SHALL BE SEGREGATED AND MAINTAIN MINIMUM CABLE SEPARATION AS REQUIRED BY THE NEC.
   4.1. ALL EQUIPMENT SHALL BEAR THE UNDERWRITERS LABORATORIES LABEL OF APPROVAL, AND SHALL CONFORM TO REQUIREMENT OF THE NATIONAL ELECTRICAL CODE.
   4.2. ALL OVERCURRENT DEVICES SHALL HAVE AN INTERRUPTING CURRENT RATING THAT SHALL BE GREATER THAN THE SHORT CIRCUIT CURRENT TO WHICH THEY ARE SUBJECTED, 22,000 AIC MINIMUM. VERYIFY AVAILABLE SHORT CIRCUIT CURRENT DOES NOT EXCEED THE RATING OF ELECTRICAL EQUIPMENT IN ACCORDANCE WITH ARTICLE 110.24 NEC OR THE MOST CURRENT ADOPTED CODE PRE THE GOVERNING JURISDICTION.
5. EACH END OF EVERY POWER PHASE CONDUCTOR, GROUNDING CONDUCTOR, AND TELCO CONDUCTOR OR CABLE SHALL BE LABELED WITH COLOR–CODED INSULATION OR ELECTRICAL TAPE (3M BRAND, 1/2" PLASTIC ELECTRICAL TAPE WITH UV PROTECTION, OR EQUAL). THE IDENTIFICATION METHOD SHALL CONFORM WITH NEC AND OSHA.
6. ALL ELECTRICAL COMPONENTS SHALL BE CLEARLY LABELED WITH LAMICOID TAGS SHOWING THEIR RATED VOLTAGE, PHASE CONFIGURATION, WIRE CONFIGURATION, POWER OR AMPACITY RATING AND BRANCH CIRCUIT ID NUMBERS (i.e. PANEL BOARD AND CIRCUIT ID'S).
7. PANEL BOARDS (ID NUMBERS) SHALL BE CLEARLY LABELED WITH PLASTIC LABELS.
8. ALL TIE WRAPS SHALL BE CUT FLUSH WITH APPROVED CUTTING TOOL TO REMOVE SHARP EDGES.
9. ALL POWER AND EQUIPMENT GROUND WIRING IN TUBING OR CONDUIT SHALL BE SINGLE COPPER CONDUCTOR (#14 OR LARGER) WITH TYPE THHW, THWN, THWN–2, XHHW, XHHW–2, THW, THW–2, RHW, OR RHW–2 INSULATION UNLESS OTHERWISE SPECIFIED.
10. SUPPLEMENTAL EQUIPMENT GROUND WIRING LOCATED INDOORS SHALL BE SINGLE COPPER CONDUCTOR (#6 OR LARGER) WITH TYPE THHW, THWN, THWN–2, XHHW, XHHW–2, THW, THW–2, RHW, OR RHW–2 INSULATION UNLESS OTHERWISE SPECIFIED.
11. POWER AND CONTROL WIRING IN FLEXIBLE CORD SHALL BE MULTI–CONDUCTOR, TYPE SOOW CORD (#14 OR LARGER) UNLESS OTHERWISE SPECIFIED.
12. POWER AND CONTROL WIRING FOR USE IN CABLE TRAY SHALL BE MULTI–CONDUCTOR, TYPE TC CABLE (#14 OR LARGER), WITH TYPE THHW, THWN, THWN–2, XHHW, XHHW–2, THW, THW–2, RHW, OR RHW–2 INSULATION UNLESS OTHERWISE SPECIFIED.
13. ALL POWER AND GROUNDING CONNECTIONS SHALL BE CRIMP–STYLE, COMPRESSION WIRE LUGS AND WIRE NUTS BY THOMAS AND BETTS (OR EQUAL). LUGS AND WIRE NUTS SHALL BE RATED FOR OPERATION NOT LESS THAN 75° C (90° C IF AVAILABLE).
14. RACEWAY AND CABLE TRAY SHALL BE LISTED OR LABELED FOR ELECTRICAL USE IN ACCORDANCE WITH NEMA, UL, ANSI/IEEE AND NEC.
15. ELECTRICAL METALLIC TUBING (EMT), INTERMEDIATE METAL CONDUIT (IMC), OR RIGID METAL CONDUIT (RMC) SHALL BE USED FOR EXPOSED INDOOR LOCATIONS.
16. ELECTRICAL METALLIC TUBING (EMT) OR METAL–CLAD CABLE (MC) SHALL BE USED FOR CONCEALED INDOOR LOCATIONS.
17. SCHEDULE 40 PVC UNDERGROUND ON STRAIGHTS AND SCHEDULE 80 PVC FOR ALL ELBOWS/90s AND ALL APPROVED ABOVE GRADE PVC CONDUIT.
18. LIQUID–TIGHT FLEXIBLE METALLIC CONDUIT (LIQUID–TITE FLEX) SHALL BE USED INDOORS AND OUTDOORS, WHERE VIBRATION OCCURS OR FLEXIBILITY IS NEEDED.
19. CONDUIT AND TUBING FITTINGS SHALL BE THREADED OR COMPRESSION–TYPE AND APPROVED FOR THE LOCATION USED. SET SCREW FITTINGS ARE NOT ACCEPTABLE.
20. CABINETS, BOXES AND WIRE WAYS SHALL BE LABELED FOR ELECTRICAL USE IN ACCORDANCE WITH NEMA, UL, ANSI/IEEE AND THE NEC.
21. WIREWAYS SHALL BE METAL WITH AN ENAMEL FINISH AND INCLUDE A HINGED COVER, DESIGNED TO SWING OPEN DOWNWARDS (WIREMOLD SPECMATE WIREWAY).
22. SLOTTED WIRING DUCT SHALL BE PVC AND INCLUDE COVER (PANDUIT TYPE E OR EQUAL).
23. CONDUITS SHALL BE FASTENED SECURELY IN PLACE WITH APPROVED NON–PERFORATED STRAPS AND HANGERS. EXPLOSIVE DEVICES (i.e. POWDER–ACTUATED) FOR ATTACHING HANGERS TO STRUCTURE WILL NOT BE PERMITTED. CLOSELY FOLLOW THE LINES OF THE STRUCTURE, MAINTAIN CLOSE PROXIMITY TO THE STRUCTURE AND KEEP CONDUITS IN TIGHT ENVELOPES. CHANGES IN DIRECTION TO ROUTE AROUND OBSTACLES SHALL BE MADE WITH CONDUIT OUTLET BODIES. CONDUIT SHALL BE INSTALLED IN A NEAT AND WORKMANLIKE MANNER. PARALLEL AND PERPENDICULAR TO STRUCTURE WALL AND CEILING LINES. ALL CONDUIT SHALL BE FISHED TO CLEAR OBSTRUCTIONS. ENDS OF CONDUITS SHALL BE TEMPORARILY CAPPED FLUSH TO FINISH GRADE TO PREVENT CONCRETE, PLASTER OR DIRT FROM ENTERING. CONDUITS SHALL BE RIGIDLY CLAMPED TO BOXES BY GALVANIZED MALLEABLE IRON BUSHING ON INSIDE AND GALVANIZED MALLEABLE IRON LOCKNUT ON OUTSIDE AND INSIDE.
24. EQUIPMENT CABINETS, TERMINAL BOXES, JUNCTION BOXES AND PULL BOXES SHALL BE GALVANIZED OR EPOXY–COATED SHEET STEEL. SHALL MEET OR EXCEED UL 50 AND BE RATED NEMA 1 (OR BETTER) FOR INTERIOR LOCATIONS AND NEMA 3R (OR BETTER) FOR EXTERIOR LOCATIONS.
25. METAL RECEPTACLE, SWITCH AND DEVICE BOXES SHALL BE GALVANIZED, EPOXY–COATED OR NON–CORRODING; SHALL MEET OR EXCEED UL 514A AND NEMA OS 1 AND BE RATED NEMA 1 (OR BETTER) FOR INTERIOR LOCATIONS AND WEATHER PROTECTED (WP OR BETTER) FOR EXTERIOR LOCATIONS.
26. NONMETALLIC RECEPTACLE, SWITCH AND DEVICE BOXES SHALL MEET OR EXCEED NEMA OS 2 (NEWEST REVISION) AND BE RATED NEMA 1 (OR BETTER) FOR INTERIOR LOCATIONS AND WEATHER PROTECTED (WP OR BETTER) FOR EXTERIOR LOCATIONS.
27. THE CONTRACTOR SHALL NOTIFY AND OBTAIN NECESSARY AUTHORIZATION FROM THE CARRIER AND/OR CROWN CASTLE USA INC. BEFORE COMMENCING WORK ON THE AC POWER DISTRIBUTION PANELS.
28. THE CONTRACTOR SHALL PROVIDE NECESSARY TAGGING ON THE BREAKERS, CABLES AND DISTRIBUTION PANELS IN ACCORDANCE WITH THE APPLICABLE CODES AND STANDARDS TO SAFEGUARD LIFE AND PROPERTY.
29. INSTALL LAMICOID LABEL ON THE METER CENTER TO SHOW "VERIZON".
30. ALL EMPTY/SPARE CONDUITS THAT ARE INSTALLED ARE TO HAVE A METERED MULE TAPE PULL CORD INSTALLED.

CONDUCTOR COLOR CODE

SYSTEM	CONDUCTOR	COLOR
120/240V, 1Ø	A PHASE	BLACK
	B PHASE	RED
	NEUTRAL	WHITE
	GROUND	GREEN
120/208V, 3Ø	A PHASE	BLACK
	B PHASE	RED
	C PHASE	BLUE
	NEUTRAL	WHITE
	GROUND	GREEN
277/480V, 3Ø	A PHASE	BROWN
	B PHASE	ORANGE OR PURPLE
	C PHASE	YELLOW
	NEUTRAL	GREY
	GROUND	GREEN
DC VOLTAGE	POS (+)	RED**
	NEG (–)	BLACK**

* SEE NEC 210.5(C)(1) AND (2)
** POLARITY MARKED AT TERMINATION

APWA UNIFORM COLOR CODE:

WHITE	PROPOSED EXCAVATION
PINK	TEMPORARY SURVEY MARKINGS
RED	ELECTRIC POWER LINES, CABLES, CONDUIT, AND LIGHTING CABLES
YELLOW	GAS, OIL, STEAM, PETROLEUM, OR GASEOUS MATERIALS
ORANGE	COMMUNICATION, ALARM OR SIGNAL LINES, CABLES, OR CONDUIT AND TRAFFIC LOOPS
BLUE	POTABLE WATER
PURPLE	RECLAIMED WATER, IRRIGATION, AND SLURRY LINES
GREEN	SEWERS AND DRAIN LINES

ABBREVIATIONS:

ANT	ANTENNA
(E)	EXISTING
FIF	FACILITY INTERFACE FRAME
GEN	GENERATOR
GPS	GLOBAL POSITIONING SYSTEM
GSM	GLOBAL SYSTEM FOR MOBILE
LTE	LONG TERM EVOLUTION
MGB	MASTER GROUND BAR
MW	MICROWAVE
(N)	NEW
NEC	NATIONAL ELECTRIC CODE
(P)	PROPOSED
PP	POWER PLANT
QTY	QUANTITY
RECT	RECTIFIER
RBS	RADIO BASE STATION
RET	REMOTE ELECTRIC TILT
RFDS	RADIO FREQUENCY DATA SHEET
RRH	REMOTE RADIO HEAD
RRU	REMOTE RADIO UNIT
SIAD	SMART INTEGRATED DEVICE
TMA	TOWER MOUNTED AMPLIFIER
TYP	TYPICAL
UMTS	UNIVERSAL MOBILE TELECOMMUNICATIONS SYSTEM
W.P.	WORK POINT

verizon
180 WASHINGTON VALLEY ROAD
BEDMINSTER, NJ 07921

CROWN CASTLE
3 CORPORATE PARK DRIVE, SUITE 101
CLIFTON PARK, NY 12065

B+T GRP
1717 S. BOULDER
SUITE 300
TULSA, OK 74119
PH: (918) 587-4630
www.btgrp.com

VERIZON SITE NUMBER:
468043

BU #: **876332**
36 PROSPECT STREET

36 PROSPECT STREET
NEWINGTON, CT 06109

EXISTING 136'-0" MONOPOLE

ISSUED FOR:

REV	DATE	DRWN	DESCRIPTION	DES./QA
0	2/25/22	JHW	CONSTRUCTION	MTJ

STATE OF CONNECTICUT — CHAD TUTTLE — No. 23924 — LICENSED PROFESSIONAL ENGINEER
2/25/22

B&T ENGINEERING, INC.
PEC.0001564
Expires 2/10/23

IT IS A VIOLATION OF LAW FOR ANY PERSON, UNLESS THEY ARE ACTING UNDER THE DIRECTION OF A LICENSED PROFESSIONAL ENGINEER, TO ALTER THIS DOCUMENT.

SHEET NUMBER: **T-2**
REVISION: **0**

468043_876332_36 PROSPECT_CD REVISION.dwg – Sheet:T–2 – User: mjones – Feb 25, 2022 – 7:58am

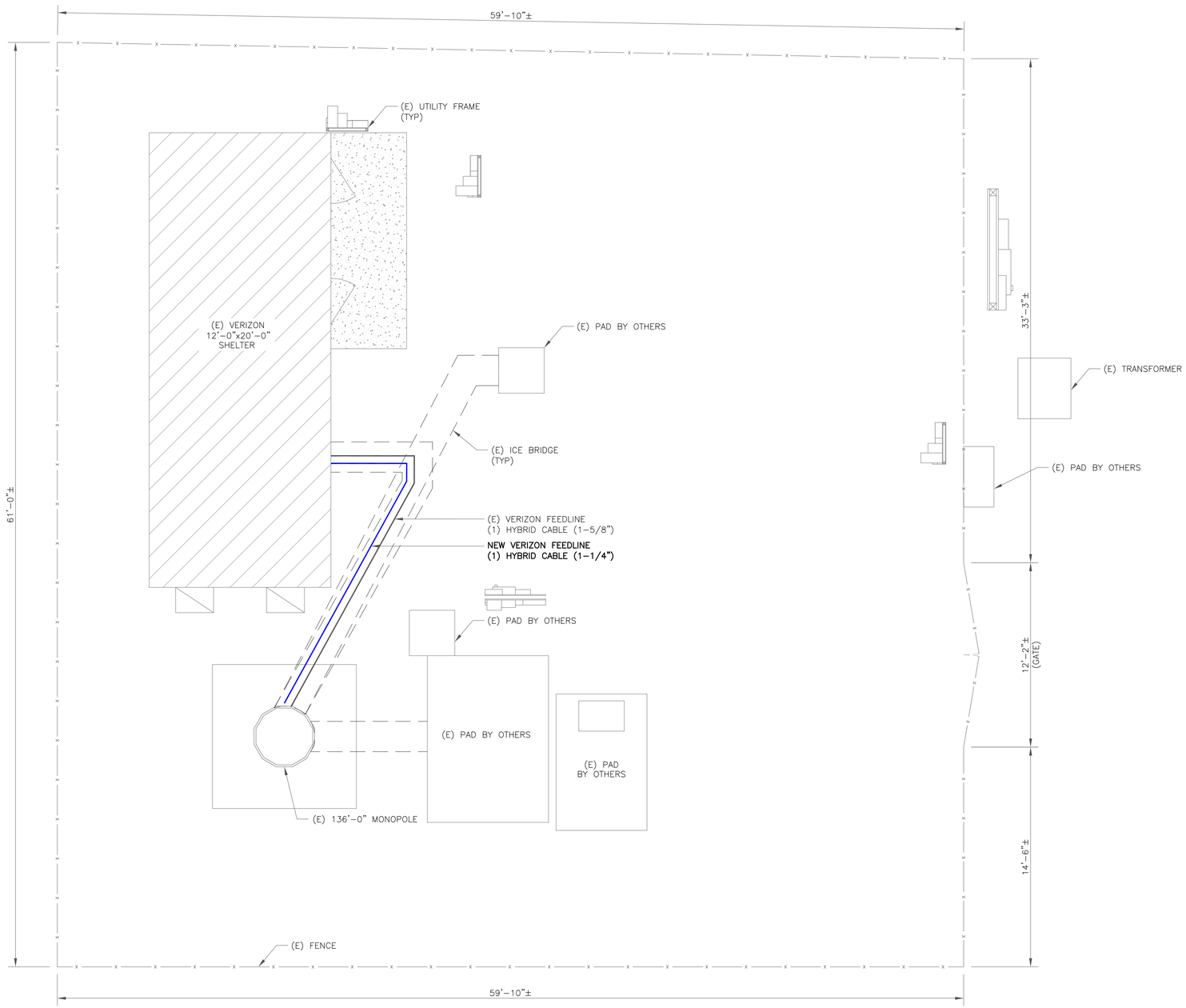

1 SITE PLAN

SCALE: 4' 3' 2' 1' 0 4' 1/4"=1'-0" (FULL SIZE) 1/8"=1'-0" (11x17)

N

468043_876332_36 PROSPECT_CD REVISION.dwg – Sheet:C-1 – User: mjones – Feb 25, 2022 – 7:59am

verizon

180 WASHINGTON VALLEY ROAD
BEDMINSTER, NJ 07921

CROWN CASTLE

3 CORPORATE PARK DRIVE, SUITE 101
CLIFTON PARK, NY 12065

B+T GRP

1717 S. BOULDER
SUITE 300
TULSA, OK 74119
PH: (918) 587-4630
www.btgrp.com

VERIZON SITE NUMBER:
468043

BU #: **876332**
36 PROSPECT STREET

36 PROSPECT STREET
NEWINGTON, CT 06109

EXISTING 136'-0" MONOPOLE

ISSUED FOR:

REV	DATE	DRWN	DESCRIPTION	DES./QA
0	2/25/22	JHW	CONSTRUCTION	MTJ

STATE OF CONNECTICUT
CHRISTOPHER R. DUFF
No. 23924
LICENSED
PROFESSIONAL ENGINEER
2/25/22

B&T ENGINEERING, INC.
PEC.0001564
Expires 2/10/23

IT IS A VIOLATION OF LAW FOR ANY PERSON, UNLESS THEY ARE ACTING UNDER THE DIRECTION OF A LICENSED PROFESSIONAL ENGINEER, TO ALTER THIS DOCUMENT.

SHEET NUMBER: C-1

REVISION: 0

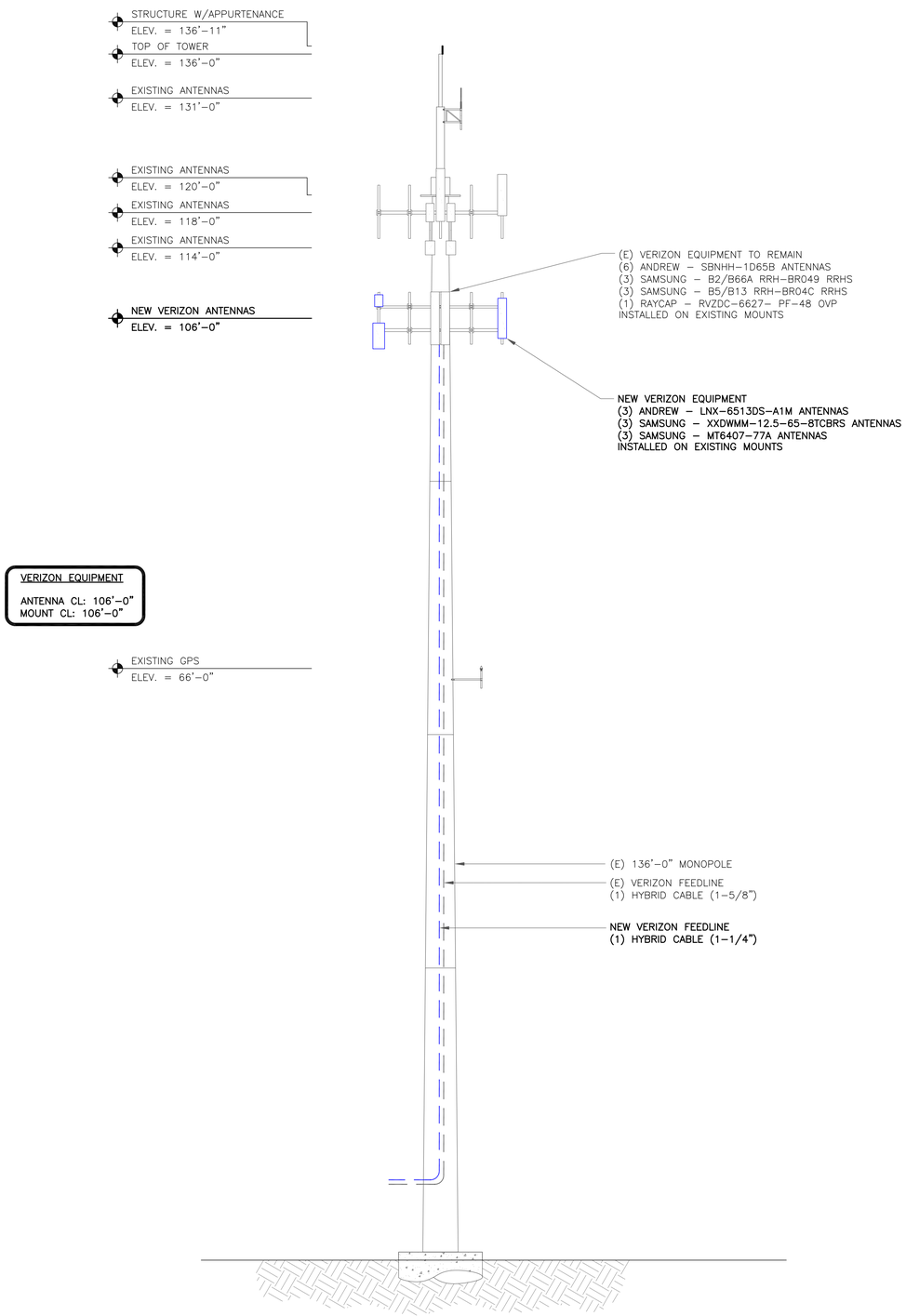

1 TOWER ELEVATION
SCALE: NOT TO SCALE

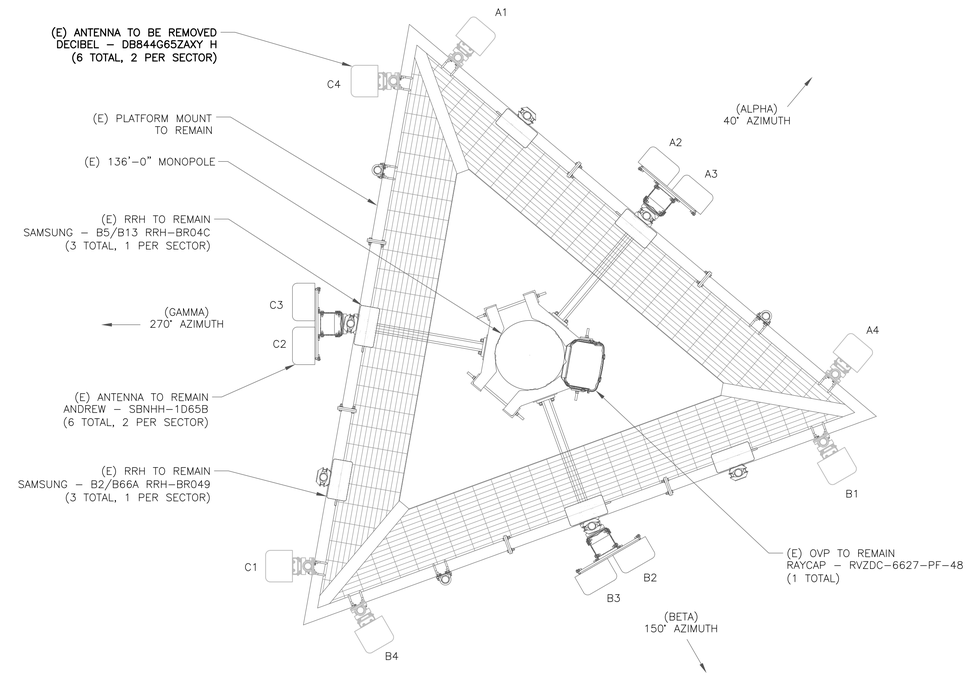

2 EXISTING ANTENNA PLAN
SCALE: NOT TO SCALE

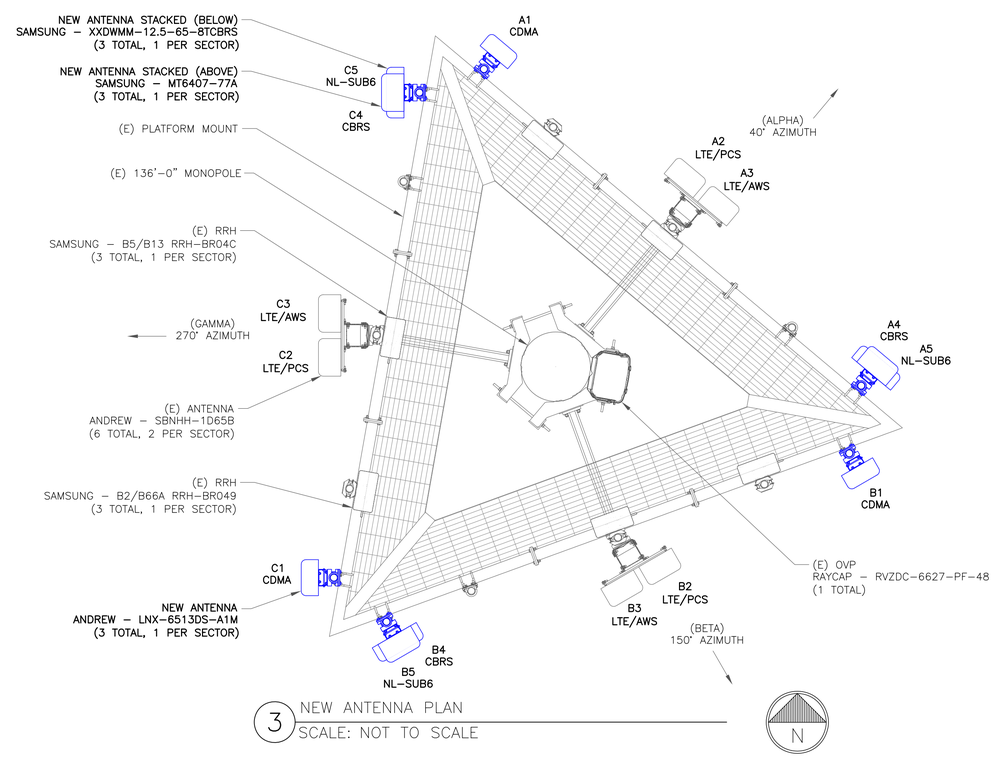

3 NEW ANTENNA PLAN
SCALE: NOT TO SCALE

verizon
180 WASHINGTON VALLEY ROAD
BEDMINSTER, NJ 07921

CROWN CASTLE
3 CORPORATE PARK DRIVE, SUITE 101
CLIFTON PARK, NY 12065

B+T GRP
1717 S. BOULDER
SUITE 300
TULSA, OK 74119
PH: (918) 587-4630
www.btgrp.com

VERIZON SITE NUMBER:
468043

BU #: **876332**
36 PROSPECT STREET

36 PROSPECT STREET
NEWINGTON, CT 06109

EXISTING 136'-0" MONOPOLE

ISSUED FOR:

REV	DATE	DRWN	DESCRIPTION	DES./QA
0	2/25/22	JHW	CONSTRUCTION	MTJ

B&T ENGINEERING, INC.
PEC.0001564
Expires 2/10/23

IT IS A VIOLATION OF LAW FOR ANY PERSON, UNLESS THEY ARE ACTING UNDER THE DIRECTION OF A LICENSED PROFESSIONAL ENGINEER, TO ALTER THIS DOCUMENT.

SHEET NUMBER: C-2
REVISION: 0

468043_876332_36 PROSPECT_CD REVISION.dwg – Sheet:C-2 – User: mjones – Feb 25, 2022 – 8:01am

ANTENNA/RRH SCHEDULE

SECTOR	STATUS	ANTENNA MANUFACTURER	ANTENNA MODEL	ANTENNA CENTERLINE	AZIMUTH	MECHANICAL DOWNTILTS	ELECTRICAL DOWNTILTS	TOWER EQUIPMENT MANUFACTURER	TOWER EQUIPMENT QTY/MODEL
A1	NEW	ANDREW	LNX-6513DS-A1M	106'-0"	40°	0°	9°	–	–
A2	EXISTING	ANDREW	SBNHH-1D65B	106'-0"	40°	0°	7°/4°	SAMSUNG	(1) B2/B66A RRH-BR049
A3	EXISTING	ANDREW	SBNHH-1D65B	106'-0"	40°	0°	7°/4°	SAMSUNG	(1) B5/B13 RRH-BR04C
A4	NEW	SAMSUNG	MT6407-77A	106'-0"	40°	0°	8°/3°	RAYCAP	(1) RVZDC-3315-PF-48
A5	NEW	SAMSUNG	XXDWMM-12.5-65-8TCBRS	106'-0"	40°	0°	8°	SAMSUNG	(1) CBRS RRH – RT4401-48A (INTEGRATED)
B1	NEW	ANDREW	LNX-6513DS-A1M	106'-0"	150°	0°	9°	–	–
B2	EXISTING	ANDREW	SBNHH-1D65B	106'-0"	150°	0°	7°/5°	SAMSUNG	(1) B2/B66A RRH-BR049
B3	EXISTING	ANDREW	SBNHH-1D65B	106'-0"	150°	0°	7°/5°	SAMSUNG	(1) B5/B13 RRH-BR04C
B4	NEW	SAMSUNG	MT6407-77A	106'-0"	150°	0°	8°/3°	–	–
B5	NEW	SAMSUNG	XXDWMM-12.5-65-8TCBRS	106'-0"	150°	0°	8°	SAMSUNG	(1) CBRS RRH – RT4401-48A (INTEGRATED)
C1	NEW	ANDREW	LNX-6513DS-A1M	106'-0"	270°	0°	7°	–	–
C2	EXISTING	ANDREW	SBNHH-1D65B	106'-0"	270°	0°	9°/5°	SAMSUNG	(1) B2/B66A RRH-BR049
C3	EXISTING	ANDREW	SBNHH-1D65B	106'-0"	270°	0°	9°/5°	SAMSUNG	(1) B5/B13 RRH-BR04C
C4	NEW	SAMSUNG	MT6407-77A	106'-0"	270°	0°	8°/3°	–	–
C5	NEW	SAMSUNG	XXDWMM-12.5-65-8TCBRS	106'-0"	270°	0°	8°	SAMSUNG	(1) CBRS RRH – RT4401-48A (INTEGRATED)

1 VERIZON TOWER EQUIPMENT SCHEDULE
SCALE: NOT TO SCALE

CABLE SCHEDULE

STATUS	CABLE TYPE	SIZE	LENGTH	QTY
EXISTING	HYBRID	1-5/8"	156'-0"±	1
NEW	HYBRID	1-1/4"	156'-0"±	1
TOTAL CABLE QTY:				2

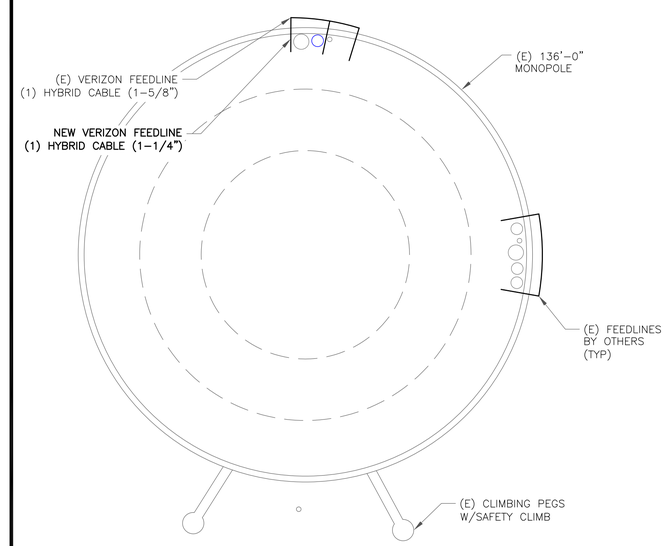

2 BASE LEVEL DETAIL
SCALE: NOT TO SCALE

N

verizon
180 WASHINGTON VALLEY ROAD
BEDMINSTER, NJ 07921

CROWN CASTLE
3 CORPORATE PARK DRIVE, SUITE 101
CLIFTON PARK, NY 12065

B+T GRP
1717 S. BOULDER
SUITE 300
TULSA, OK 74119
PH: (918) 587-4630
www.btgrp.com

VERIZON SITE NUMBER:
468043

BU #: **876332**
36 PROSPECT STREET

36 PROSPECT STREET
NEWINGTON, CT 06109

EXISTING 136'-0" MONOPOLE

ISSUED FOR:

REV	DATE	DRWN	DESCRIPTION	DES./QA
0	2/25/22	JHW	CONSTRUCTION	MTJ

STATE OF CONNECTICUT
MICHAEL T. JONES
No. 23924
LICENSED
PROFESSIONAL ENGINEER
2/25/22

B&T ENGINEERING, INC.
PEC.0001564
Expires 2/10/23

IT IS A VIOLATION OF LAW FOR ANY PERSON, UNLESS THEY ARE ACTING UNDER THE DIRECTION OF A LICENSED PROFESSIONAL ENGINEER, TO ALTER THIS DOCUMENT.

SHEET NUMBER: C-3
REVISION: 0

468043_876332_36 PROSPECT_CD REVISION.dwg – Sheet:C-3 – User: mjones – Feb 25, 2022 – 8:00am

1 NOT USED
SCALE: NOT TO SCALE

2 NOT USED
SCALE: NOT TO SCALE

3 NOT USED
SCALE: NOT TO SCALE

INSTALLER NOTES:

ALL PIPES BRACKETS AND MISCELLANEOUS HARDWARE TO BE GALVANIZED UNLESS NOTED OTHERWISE.

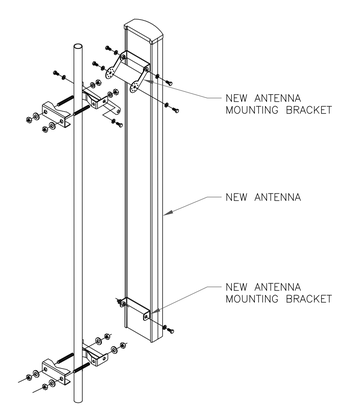

4 ANTENNA MOUNTING DETAIL
SCALE: NOT TO SCALE

verizon
180 WASHINGTON VALLEY ROAD
BEDMINSTER, NJ 07921

CROWN CASTLE
3 CORPORATE PARK DRIVE, SUITE 101
CLIFTON PARK, NY 12065

B+T GRP
1717 S. BOULDER
SUITE 300
TULSA, OK 74119
PH: (918) 587-4630
www.btgrp.com

VERIZON SITE NUMBER:
468043

BU #: **876332**
36 PROSPECT STREET

36 PROSPECT STREET
NEWINGTON, CT 06109

EXISTING 136'-0" MONOPOLE

ISSUED FOR:

REV	DATE	DRWN	DESCRIPTION	DES./QA
0	2/25/22	JHW	CONSTRUCTION	MTJ

B&T ENGINEERING, INC.
PEC.0001564
Expires 2/10/23

IT IS A VIOLATION OF LAW FOR ANY PERSON, UNLESS THEY ARE ACTING UNDER THE DIRECTION OF A LICENSED PROFESSIONAL ENGINEER, TO ALTER THIS DOCUMENT.

SHEET NUMBER: C-4
REVISION: 0

468043_876332_36 PROSPECT_CD REVISION.dwg – Sheet:C-4 – User: mjones – Feb 25, 2022 – 8:00am

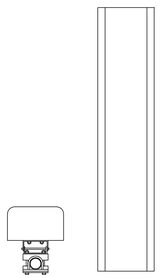

ANDREW – LNX-6513DS-A1M
WEIGHT (WITHOUT MOUNTING HARDWARE): 30.4 LBS
SIZE (HxWxD): 54.7x11.90x7.10 IN.
MOUNTING HARDWARE P/N: DB380-3 & DB5083D
RATED WIND VELOCITY: 149.8 MPH

1 ANDREW – LNX-6513DS-A1M
SCALE: NOT TO SCALE

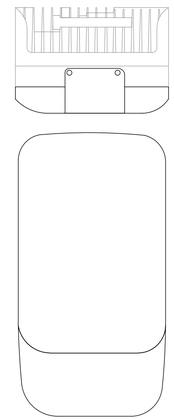

SAMSUNG – XXDWMM-12.5-65-8T-CBRS
WEIGHT (FULLY EQUIPPED): 23.14 LBS
SIZE (HxWxD): 16.16x11.39x5.45 IN.

2 SAMSUNG – XXDWMM-12.5-65-8T-CBRS
SCALE: NOT TO SCALE

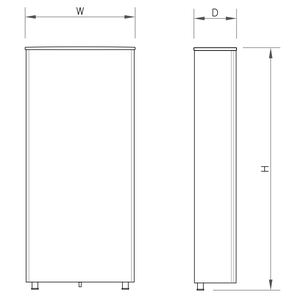

ANTENNA SPECS	
MANUFACTURER	SAMSUNG
MODEL #	MT6407-77A
WIDTH	16.06"
DEPTH	5.51"
HEIGHT	35.06"
WEIGHT	81.57 LBS

3 ANTENNA DETAIL
SCALE: NOT TO SCALE

4 NOT USED
SCALE: NOT TO SCALE

5 NOT USED
SCALE: NOT TO SCALE

6 NOT USED
SCALE: NOT TO SCALE

verizon
180 WASHINGTON VALLEY ROAD
BEDMINSTER, NJ 07921

CROWN CASTLE
3 CORPORATE PARK DRIVE, SUITE 101
CLIFTON PARK, NY 12065

B+T GRP
1717 S. BOULDER
SUITE 300
TULSA, OK 74119
PH: (918) 587-4630
www.btgrp.com

VERIZON SITE NUMBER:
468043

BU #: **876332**
36 PROSPECT STREET

36 PROSPECT STREET
NEWINGTON, CT 06109

EXISTING 136'-0" MONOPOLE

ISSUED FOR:

REV	DATE	DRWN	DESCRIPTION	DES./QA
0	2/25/22	JHW	CONSTRUCTION	MTJ

STATE OF CONNECTICUT
MICHAEL T. JONES
No. 23924
LICENSED
PROFESSIONAL ENGINEER
2/25/22

B&T ENGINEERING, INC.
PEC.0001564
Expires 2/10/23

IT IS A VIOLATION OF LAW FOR ANY PERSON, UNLESS THEY ARE ACTING UNDER THE DIRECTION OF A LICENSED PROFESSIONAL ENGINEER, TO ALTER THIS DOCUMENT.

SHEET NUMBER: C-5
REVISION: 0

468043_876332_36 PROSPECT_CD REVISION.dwg – Sheet:C-5 – User: mjones – Feb 25, 2022 – 8:00am

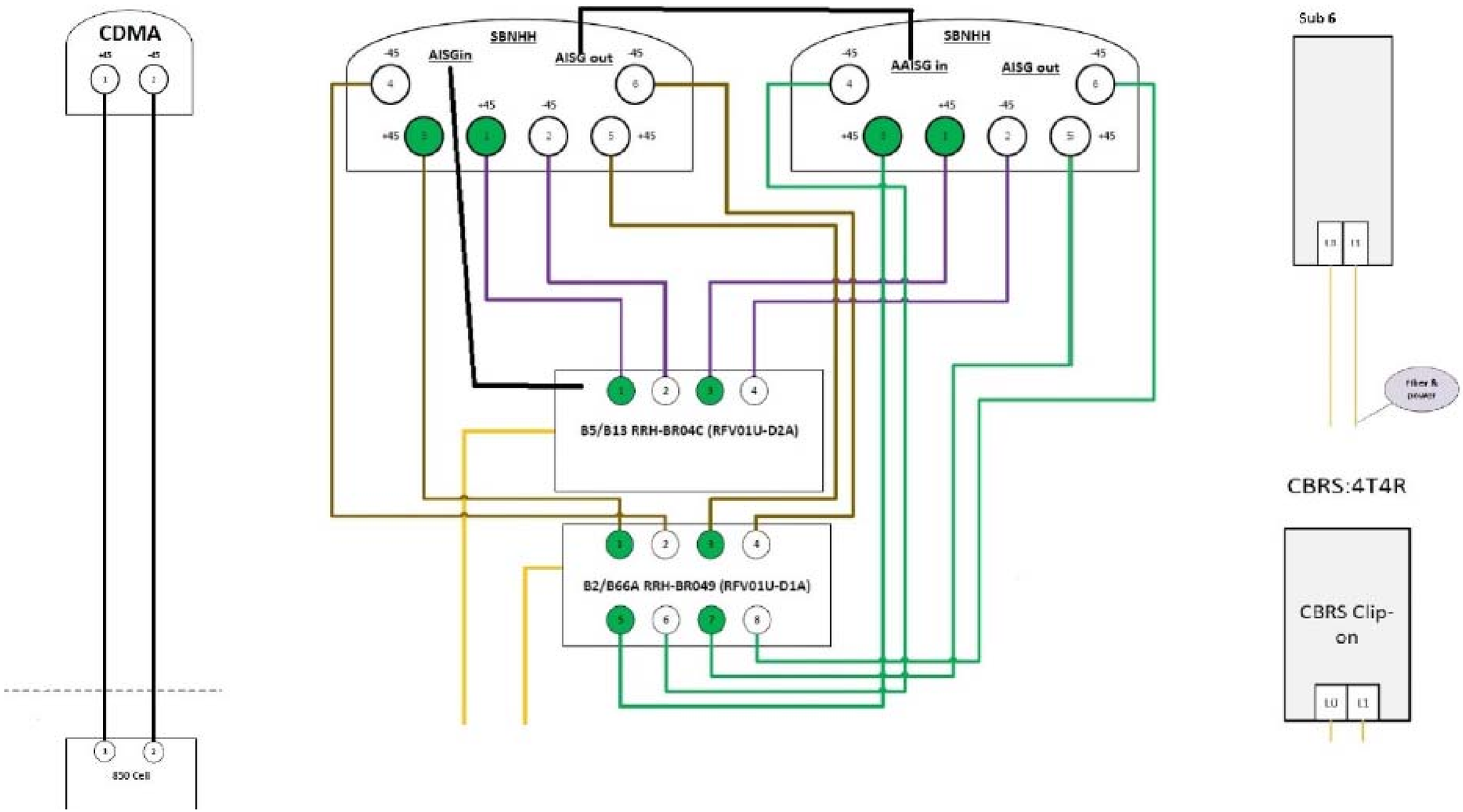

1 PLUMBING DIAGRAM
SCALE: NOT TO SCALE

468043_876332_36 PROSPECT_CD REVISION.dwg – Sheet:C-6 – User: mjones – Feb 25, 2022 – 8:00am

verizon
180 WASHINGTON VALLEY ROAD
BEDMINSTER, NJ 07921

CROWN CASTLE
3 CORPORATE PARK DRIVE, SUITE 101
CLIFTON PARK, NY 12065

B+T GRP
1717 S. BOULDER
SUITE 300
TULSA, OK 74119
PH: (918) 587-4630
www.btgrp.com

VERIZON SITE NUMBER:
468043

BU #: **876332**
36 PROSPECT STREET

36 PROSPECT STREET
NEWINGTON, CT 06109

EXISTING 136'-0" MONOPOLE

ISSUED FOR:

REV	DATE	DRWN	DESCRIPTION	DES./QA
0	2/25/22	JHW	CONSTRUCTION	MTJ

STATE OF CONNECTICUT
MICHAEL T. JONES
No. 23924
LICENSED
PROFESSIONAL ENGINEER
2/25/22

B&T ENGINEERING, INC.
PEC.0001564
Expires 2/10/23

IT IS A VIOLATION OF LAW FOR ANY PERSON, UNLESS THEY ARE ACTING UNDER THE DIRECTION OF A LICENSED PROFESSIONAL ENGINEER, TO ALTER THIS DOCUMENT.

SHEET NUMBER: C-6
REVISION: 0

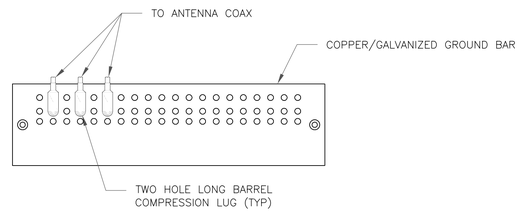

NOTES:

1. DOUBLING UP "OR STACKING" OF CONNECTIONS IS NOT PERMITTED.
2. EXTERIOR ANTIOXIDANT JOINT COMPOUND TO BE USED ON ALL EXTERIOR CONNECTIONS.
3. GROUND BAR SHALL NOT BE ISOLATED FROM TOWER. MOUNT DIRECTLY TO ANTENNA MOUNT STEEL.

1 ANTENNA SECTOR GROUND BAR DETAIL
SCALE: NOT TO SCALE

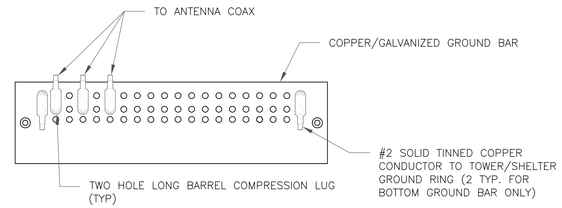

NOTES:

1. EXTERIOR ANTIOXIDANT JOINT COMPOUND TO BE USED ON ALL EXTERIOR CONNECTIONS.
2. GROUND BAR SHALL NOT BE ISOLATED FROM TOWER. MOUNT DIRECTLY TO TOWER STEEL (TOWER ONLY).
3. GROUND BAR SHALL BE ISOLATED FROM BUILDING OR SHELTER.

2 TOWER/SHELTER GROUND BAR DETAIL
SCALE: NOT TO SCALE

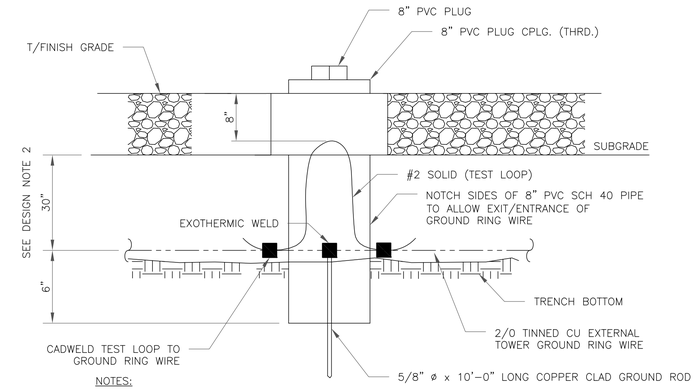

NOTES:

1. GROUND ROD SHALL BE DRIVEN VERTICALLY, NOT TO EXCEED 45 DEGREES FROM THE VERTICAL
2. GROUND WIRE SHALL BE MIN. 30" BELOW GRADE OR 6" BELOW FROST LINE. (WHICH EVER IS GREATER) AS PER N.E.C. ARTICLE 250-50(D)

3 INSPECTION WELL DETAIL
SCALE: NOT TO SCALE

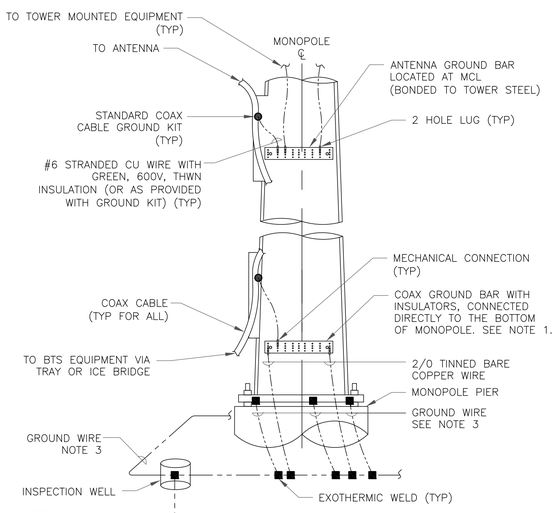

NOTES:

1. NUMBER OF GROUNDING BARS MAY VARY DEPENDING ON THE TYPE OF TOWER, ANTENNA LOCATIONS AND CONNECTION ORIENTATION. COAXIAL CABLES EXCEEDING 200 FEET ON THE TOWER SHALL HAVE GROUND KITS AT THE MIDPOINT. PROVIDE AS REQUIRED.
2. ONLY MECHANICAL CONNECTIONS ARE ALLOWED TO BE MADE TO CROWN CASTLE USA INC. TOWERS. ALL MECHANICAL CONNECTIONS SHALL BE TREATED WITH AN ANTI-OXIDANT COATING.
3. ALL TOWER GROUNDING SYSTEMS SHALL COMPLY WITH THE REQUIREMENTS OF THE RECOGNIZED EDITION OF ANSI/TIA 222 AND NFPA 780.

4 TYPICAL ANTENNA CABLE GROUNDING
SCALE: NOT TO SCALE

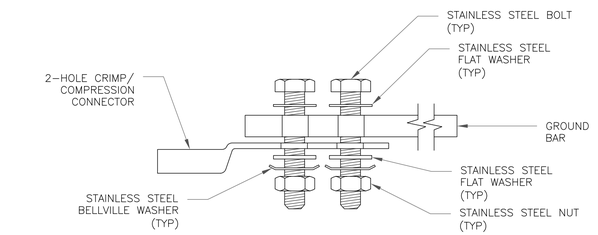

SINGLE CONNECTOR AT GROUND BARS

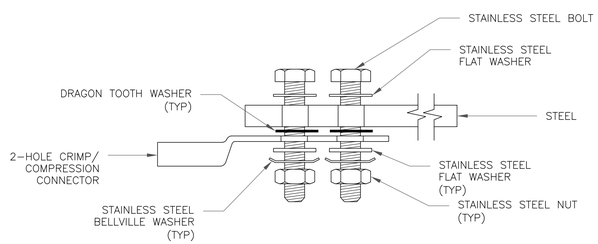

SINGLE CONNECTOR AT STEEL OBJECTS

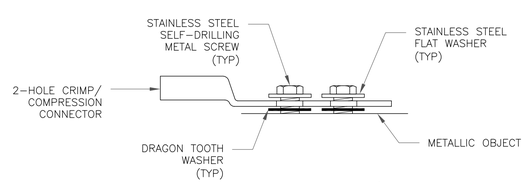

SINGLE CONNECTOR AT METALLIC/STEEL OBJECTS

5 HARDWARE DETAIL FOR EXTERIOR CONNECTIONS
SCALE: NOT TO SCALE

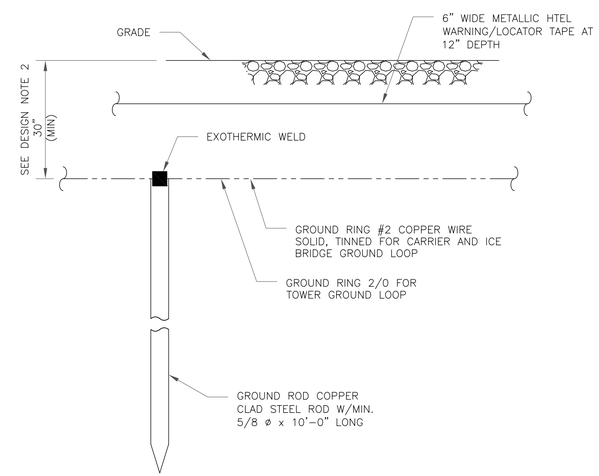

NOTES:

1. GROUND ROD SHALL BE DRIVEN VERTICALLY, NOT TO EXCEED 45 DEGREES FROM THE VERTICAL
2. GROUND WIRE SHALL BE MIN. 30" BELOW GRADE OR 6" BELOW FROST LINE. (WHICH EVER IS GREATER) AS PER N.E.C. ARTICLE 250-50(D)

6 GROUND ROD DETAIL
SCALE: NOT TO SCALE

verizon
180 WASHINGTON VALLEY ROAD
BEDMINSTER, NJ 07921

CROWN CASTLE
3 CORPORATE PARK DRIVE, SUITE 101
CLIFTON PARK, NY 12065

B+T GRP
1717 S. BOULDER
SUITE 300
TULSA, OK 74119
PH: (918) 587-4630
www.btgrp.com

VERIZON SITE NUMBER:
468043

BU #: **876332**
36 PROSPECT STREET

36 PROSPECT STREET
NEWINGTON, CT 06109

EXISTING 136'-0" MONOPOLE

ISSUED FOR:

REV	DATE	DRWN	DESCRIPTION	DES./QA
0	2/25/22	JHW	CONSTRUCTION	MTJ

B&T ENGINEERING, INC.
PEC.0001564
Expires 2/10/23

IT IS A VIOLATION OF LAW FOR ANY PERSON, UNLESS THEY ARE ACTING UNDER THE DIRECTION OF A LICENSED PROFESSIONAL ENGINEER, TO ALTER THIS DOCUMENT.

SHEET NUMBER: G-1
REVISION: 0

468043_876332_36 PROSPECT_CD REVISION.dwg – Sheet:G-1 – User: mjones – Feb 25, 2022 – 8:00am

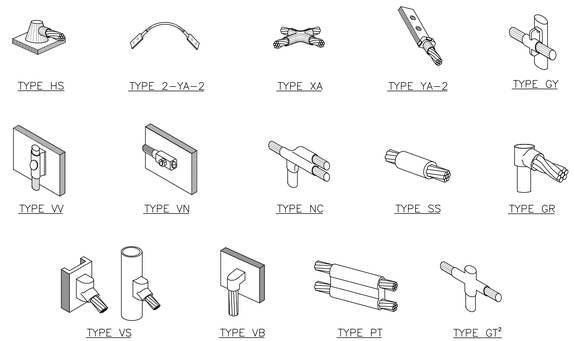

NOTE:

1. ERICO EXOTHERMIC "MOLD TYPES" SHOWN HERE ARE EXAMPLES. CONSULT WITH CONSTRUCTION MANAGER FOR SPECIFIC MOLDS TO BE USED FOR THIS PROJECT.
2. MOLD TYPE ONLY TO BE USED BELOW GRADE WHEN CONNECTING GROUND RING TO GROUND ROD.

1 CADWELD GROUNDING CONNECTIONS
SCALE: NOT TO SCALE

WIRE SIZE	BURNDY LUG	BOLT SIZE
#6 AWG GREEN INSULATED	YA6C-2TC38	3/8" - 16 NC S 2 BOLT
#2 AWG SOLID TINNED	YA3C-2TC38	3/8" - 16 NC S 2 BOLT
#2 AWG STRANDED	YA2C-2TC38	3/8" - 16 NC S 2 BOLT
#2/0 AWG STRANDED	YA26-2TC38	3/8" - 16 NC S 2 BOLT
#4/0 AWG STRANDED	YA28-2N	1/2" - 16 NC S 2 BOLT

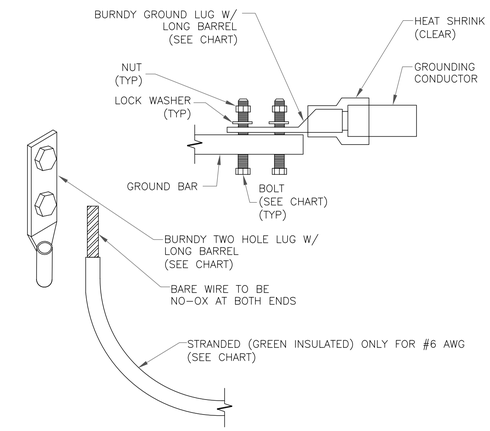

NOTES:

1. ALL GROUNDING LUGS ARE TO BE INSTALLED PER MANUFACTURER'S SPECIFICATIONS. ALL HARDWARE BOLTS, NUTS, LOCK WASHERS SHALL BE STAINLESS STEEL. ALL HARDWARE ARE TO BE AS FOLLOWS: BOLT, FLAT WASHER,GROUND BAR, GROUND LUG, FLAT WASHER AND NUT.

2 MECHANICAL LUG CONNECTION
SCALE: NOT TO SCALE

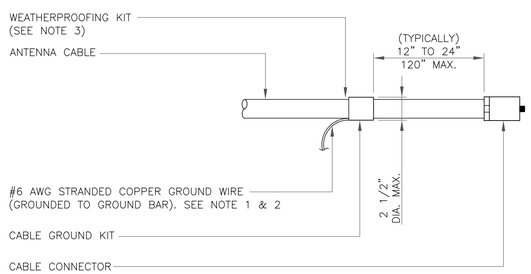

NOTES:

1. DO NOT INSTALL CABLE GROUND KIT AT A BEND AND ALWAYS DIRECT GROUND WIRE DOWN TO GROUND BAR.
2. GROUNDING KIT SHALL BE TYPE AND PART NUMBER AS SUPPLIED OR RECOMMENDED BY CABLE MANUFACTURER.
3. WEATHER PROOFING SHALL BE TWO-PART TAPE KIT, COLD SHRINK SHALL NOT BE USED.

3 CABLE GROUND KIT CONNECTION
SCALE: NOT TO SCALE

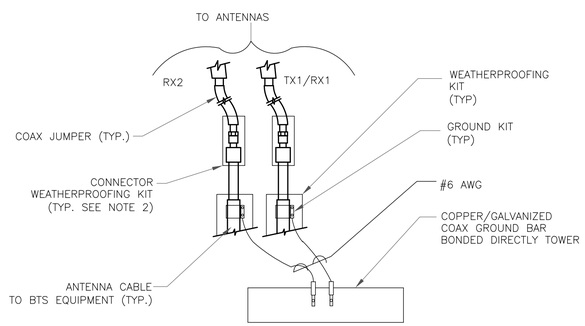

NOTES:

1. DO NOT INSTALL CABLE GROUND KIT AT A BEND AND ALWAYS DIRECT GROUND WIRE DOWN TO ANTENNA GROUND BAR.
2. WEATHER PROOFING SHALL BE TWO-PART TAPE KIT. COLD SHRINK SHALL NOT BE USED.

4 GROUND CABLE CONNECTION
SCALE: NOT TO SCALE

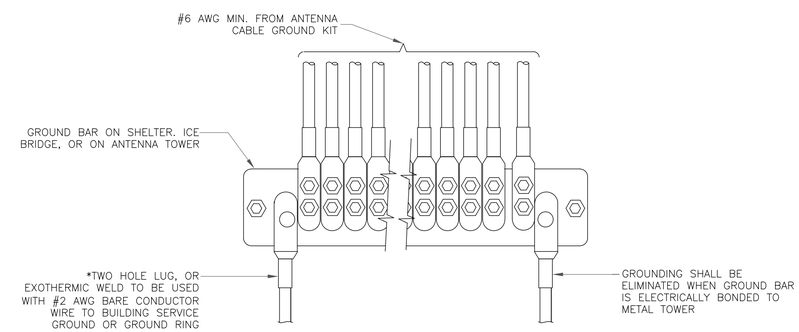

5 GROUNDWIRE INSTALLATION
SCALE: NOT TO SCALE

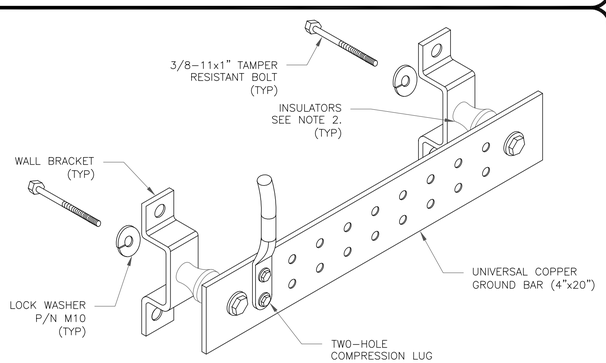

NOTES:

1. DOWN LEAD (HOME RUN) CONDUCTORS ARE NOT TO BE INSTALLED ON CROWN CASTLE USA INC. TOWER, PER THE GROUNDING DOWN CONDUCTOR POLICY QAS-STD-10091. NO MODIFICATION OR DRILLING TO TOWER STEEL IS ALLOWED IN ANY FORM OR FASHION, CAD-WELDING ON THE TOWER AND/OR IN THE AIR ARE NOT PERMITTED.
2. OMIT INSULATOR WHEN MOUNTING TO TOWER STEEL OR PLATFORM STEEL USE INSULATORS WHEN ATTACHING TO BUILDING OR SHELTERS.

6 GROUND BAR DETAIL
SCALE: NOT TO SCALE

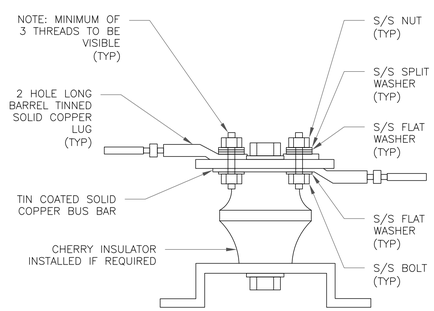

7 LUG DETAIL
SCALE: NOT TO SCALE

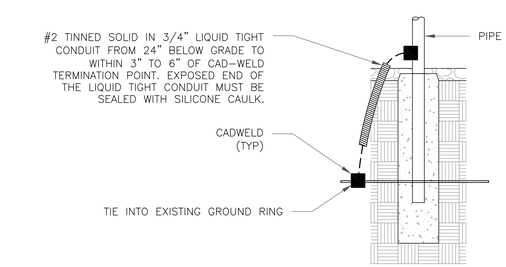

8 TRANSITIONING GROUND DETAIL
SCALE: NOT TO SCALE

verizon
180 WASHINGTON VALLEY ROAD
BEDMINSTER, NJ 07921

CROWN CASTLE
3 CORPORATE PARK DRIVE, SUITE 101
CLIFTON PARK, NY 12065

B+T GRP
1717 S. BOULDER
SUITE 300
TULSA, OK 74119
PH: (918) 587-4630
www.btgrp.com

VERIZON SITE NUMBER:
468043

BU #: **876332**
36 PROSPECT STREET

36 PROSPECT STREET
NEWINGTON, CT 06109

EXISTING 136'-0" MONOPOLE

ISSUED FOR:

REV	DATE	DRWN	DESCRIPTION	DES./QA
0	2/25/22	JHW	CONSTRUCTION	MTJ

2/25/22

B&T ENGINEERING, INC.
PEC.0001564
Expires 2/10/23

IT IS A VIOLATION OF LAW FOR ANY PERSON, UNLESS THEY ARE ACTING UNDER THE DIRECTION OF A LICENSED PROFESSIONAL ENGINEER, TO ALTER THIS DOCUMENT.

SHEET NUMBER: G-2
REVISION: 0

468043_876332_36 PROSPECT_CD REVISION.dwg - Sheet:G-2 - User: mjones - Feb 25, 2022 - 8:00am

Exhibit D

Structural Analysis Report

Date: **March 28, 2022**

Crown Castle
2000 Corporate Drive
Canonsburg, PA 15317
(724) 416-2000

Subject:	**Structural Analysis Report**	
Carrier Designation:	***Verizon Wireless* Co-Locate**	
	Site Number:	468043
	Site Name:	NEWINGTON CT
Crown Castle Designation:	**BU Number:**	876332
	Site Name:	36 PROSPECT STREET
	JDE Job Number:	711444
	Work Order Number:	2096452
	Order Number:	610891 Rev. 0
Engineering Firm Designation:	**Crown Castle Project Number:**	2096452
Site Data:	**36 Prospect Street, NEWINGTON, HARTFORD County, CT**	
	Latitude *41° 41' 23.66"*, Longitude *-72° 42' 18.85"*	
	136 Foot - Monopole Tower	

Crown Castle is pleased to submit this **"Structural Analysis Report"** to determine the structural integrity of the above-mentioned tower.

The purpose of the analysis is to determine acceptability of the tower stress level. Based on our analysis we have determined the tower stress level for the structure and foundation, under the following load case, to be:

LC7: Proposed Equipment Configuration **Sufficient Capacity-45.6%**

This analysis utilizes an ultimate 3-second gust wind speed of 125 mph as required by the 2018 Connecticut State Building Code. Applicable Standard references and design criteria are listed in Section 2 - "Analysis Criteria".

Structural analysis prepared by: Matthew Schmitt

Respectfully submitted by:

Digitally signed by Maham Barimani
Date: 2022.04.01 09:20:13 -04'00'

STATE OF CONNECTICUT
MAHAM BARIMANI
30501
LICENSED
PROFESSIONAL ENGINEER

Maham Barimani, P.E.
Senior Project Engineer

TABLE OF CONTENTS

1) INTRODUCTION

2) ANALYSIS CRITERIA
- Table 1 - Proposed Equipment Configuration
- Table 2 - Other Considered Equipment

3) ANALYSIS PROCEDURE
- Table 3 - Documents Provided
- 3.1) Analysis Method
- 3.2) Assumptions

4) ANALYSIS RESULTS
- Table 4 - Section Capacity (Summary)
- Table 5 - Tower Component Stresses vs. Capacity - LC7
- 4.1) Recommendations

5) APPENDIX A
- tnxTower Output

6) APPENDIX B
- Base Level Drawing

7) APPENDIX C
- Additional Calculations

1) INTRODUCTION

This tower is a 136 ft Monopole tower designed by SUMMIT.

2) ANALYSIS CRITERIA

TIA-222 Revision:	TIA-222-H
Risk Category:	II
Wind Speed:	125 mph
Exposure Category:	B
Topographic Factor:	1
Ice Thickness:	2 in
Wind Speed with Ice:	50 mph
Service Wind Speed:	60 mph

Table 1 - Proposed Equipment Configuration

Mounting Level (ft)	Center Line Elevation (ft)	Number of Antennas	Antenna Manufacturer	Antenna Model	Number of Feed Lines	Feed Line Size (in)
106.0	108.0	3	samsung telecommunications	MT6407-77A w/ Mount Pipe	2	1-1/4
	106.0	3	andrew	LNX-6513DS-A1M w/ Mount Pipe		
		6	andrew	SBNHH-1D65B w/ Mount Pipe		
		3	miscl	Dual Antenna Mounting Bracket		
		1	raycap	RVZDC-6627-PF-48		
		3	samsung telecommunications	RFV01U-D1A		
		3	samsung telecommunications	RFV01U-D2A		
		1	tower mounts	Platform Mount [LP 713-1]		
	104.0	3	samsung telecommunications	XXDWMM-12.5-65-8T-CBRS w/ Mount Pipe		

Table 2 - Other Considered Equipment

Mounting Level (ft)	Center Line Elevation (ft)	Number of Antennas	Antenna Manufacturer	Antenna Model	Number of Feed Lines	Feed Line Size (in)
129.0	131.0	1	sigfox	CAVITY FILTER	1	1/2
		1	sigfox	CXL 900-3LW		
		1	sigfox	LNA		
	129.0	1	tower mounts	Side Arm Mount [SO 306-1]		
118.0	120.0	3	alcatel lucent	TD-RRH8X20-25	1 3	1-5/8 1-1/4
		3	rfs celwave	APXVSPP18-C-A20 w/ Mount Pipe		
		3	rfs celwave	APXVTM14-C-120 w/ Mount Pipe		
	118.0	1	tower mounts	Platform Mount [LP 1201-1]		
116.0	118.0	3	alcatel lucent	PCS 1900MHZ 4X45W 65MHZ	-	-
	116.0	1	tower mounts	Side Arm Mount [SO 102-3]		

Mounting Level (ft)	Center Line Elevation (ft)	Number of Antennas	Antenna Manufacturer	Antenna Model	Number of Feed Lines	Feed Line Size (in)
	114.0	3	alcatel lucent	800MHz 2X50W RRH W/FILTER		
78.0	78.0	3	fujitsu	TA08025-B604	1	1-3/8
		3	fujitsu	TA08025-B605		
		3	jma wireless	MX08FRO665-21 w/ Mount Pipe		
		1	raycap	RDIDC-9181-PF-48		
		1	tower mounts	Commscope MC-PK8-DSH		
65.0	66.0	1	lucent	KS24019-L112A	1	1/2
	65.0	1	tower mounts	Side Arm Mount [SO 701-1]		

3) ANALYSIS PROCEDURE

Table 3 - Documents Provided

Document	Reference	Source
4-GEOTECHNICAL REPORTS	1529724	CCISITES
4-TOWER FOUNDATION DRAWINGS/DESIGN/SPECS	1615432	CCISITES
4-TOWER MANUFACTURER DRAWINGS	1440581	CCISITES

3.1) Analysis Method

tnxTower (version 8.1.1.0), a commercially available analysis software package, was used to create a three-dimensional model of the tower and calculate member stresses for various loading cases. Selected output from the analysis is included in Appendix A. When applicable, Crown Castle has calculated and provided the effective area for panel antennas using approved methods following the intent of the TIA-222 standard.

3.2) Assumptions

1) Tower and structures were maintained in accordance with the TIA-222 Standard.
2) The configuration of antennas, transmission cables, mounts and other appurtenances are as specified in Tables 1 and 2 and the referenced drawings.

This analysis may be affected if any assumptions are not valid or have been made in error. Crown Castle should be notified to determine the effect on the structural integrity of the tower.

4) ANALYSIS RESULTS

Table 4 - Section Capacity (Summary)

Section No.	Elevation (ft)	Component Type	Size	Critical Element	P (K)	SF*P_allow (K)	% Capacity	Pass / Fail
L1	136 - 130	Pole	TP4.5x4.5x0.216	1	-0.067	96.151	2.3	Pass
L2	130 - 129.5	Pole	TP10.75x4.5x0.216	2	-0.073	96.151	2.3	Pass
L3	129.5 - 120.5	Pole	TP10.75x10.75x0.322	3	-0.511	348.904	3.0	Pass
L4	120.5 - 120	Pole	TP22x10.75x0.322	4	-0.511	348.904	3.0	Pass
L5	120 - 87.5	Pole	TP29.476x22x0.188	5	-10.440	947.092	34.2	Pass
L6	87.5 - 58.75	Pole	TP35.715x28.238x0.25	6	-17.212	1571.493	45.6	Pass
L7	58.75 - 32.25	Pole	TP41.311x34.18x0.375	7	-22.834	2946.678	33.3	Pass
L8	32.25 - 0	Pole	TP47.98x39.353x0.438	8	-33.903	4113.973	35.0	Pass
							Summary	
						Pole (L6)	45.6	Pass
						Rating =	45.6	Pass

Table 5 - Tower Component Stresses vs. Capacity - LC7

Notes	Component	Elevation (ft)	% Capacity	Pass / Fail
1	Flange Bolts	130	0.8	Pass
1	Flange Plate	130	4.3	Pass
1	Flange Bolts	120	7.8	Pass
1	Flange Plate	120	13.4	Pass
1	Anchor Rods	0	31.6	Pass
1	Base Plate	0	32.2	Pass
1,2	Base Foundation (Compared w/ Design Loads)	0	33.7	Pass

Structure Rating (max from all components) =	45.6%

Notes:
1) See additional documentation in “Appendix C – Additional Calculations” for calculations supporting the % capacity consumed.
2) Foundation capacity determined by comparing analysis reactions to original design reactions.

4.1) Recommendations

The tower and its foundation have sufficient capacity to carry the proposed load configuration. No modifications are required at this time.

APPENDIX A

TNXTOWER OUTPUT

Section	Length (ft)	Number of Sides	Thickness (in)	Socket Length (ft)	Top Dia (in)	Bot Dia (in)	Grade	Weight (K)
1	6.000	1	0.216		4.500	4.500	A53-B-35	0.1
2	0.500	1	0.216		4.500	10.750		0.0
3	9.000	1	0.322		10.750	10.750		0.3
4	0.500	1	0.322		10.750	22.000		0.0
5	32.500	12	0.188	3.750	22.000	29.476		1.7
6	32.500	12	0.250	4.500	28.238	35.715	A572-60	2.8
7	31.000	12	0.375	5.250	34.180	41.311		4.8
8	37.500	12	0.438		39.353	47.980	A572-65	7.8
								17.5

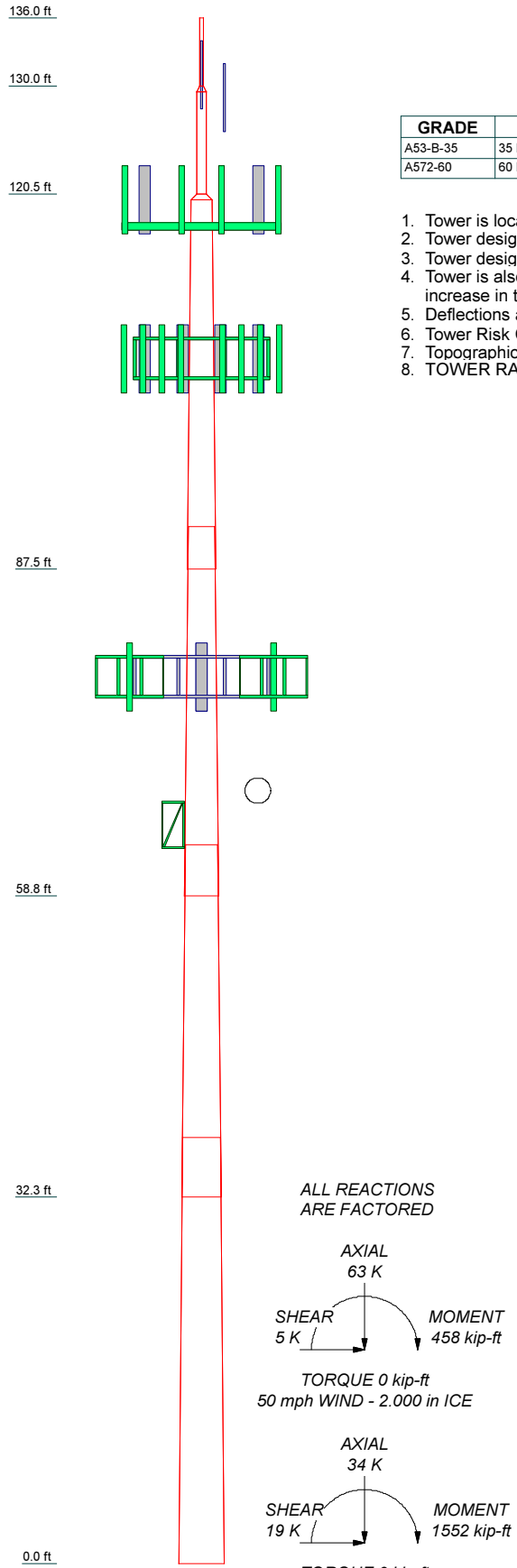

MATERIAL STRENGTH

GRADE	Fy	Fu	GRADE	Fy	Fu
A53-B-35	35 ksi	60 ksi	A572-65	65 ksi	80 ksi
A572-60	60 ksi	75 ksi			

TOWER DESIGN NOTES

1. Tower is located in Hartford County, Connecticut.
2. Tower designed for Exposure B to the TIA-222-H Standard.
3. Tower designed for a 125 mph basic wind in accordance with the TIA-222-H Standard.
4. Tower is also designed for a 50 mph basic wind with 2.00 in ice. Ice is considered to increase in thickness with height.
5. Deflections are based upon a 60 mph wind.
6. Tower Risk Category II.
7. Topographic Category 1 with Crest Height of 0.000 ft
8. TOWER RATING: 45.6%

ALL REACTIONS ARE FACTORED

AXIAL 63 K

SHEAR 5 K

MOMENT 458 kip-ft

TORQUE 0 kip-ft
50 mph WIND - 2.000 in ICE

AXIAL 34 K

SHEAR 19 K

MOMENT 1552 kip-ft

TORQUE 0 kip-ft
REACTIONS - 125 mph WIND

CROWN CASTLE
The Foundation for a Wireless World

Crown Castle
2000 Corporate Drive
Canonsburg, PA 15317
Phone: (724) 416-2000
FAX:

Job: **BU# 876332**			
Project:			
Client: Crown Castle	Drawn by: Matthew Schmitt	App'd:	
Code: TIA-222-H	Date: 03/28/22	Scale: NTS	
Path: C:\Work Area\876332\WO 2096452 - SA\Prod\876332.eri		Dwg No. E-1	

Tower Input Data

The tower is a monopole.
This tower is designed using the TIA-222-H standard.
The following design criteria apply:

- Tower is located in Hartford County, Connecticut.
- Tower base elevation above sea level: 260.000 ft.
- Basic wind speed of 125 mph.
- Risk Category II.
- Exposure Category B.
- Simplified Topographic Factor Procedure for wind speed-up calculations is used.
- Topographic Category: 1.
- Crest Height: 0.000 ft.
- Nominal ice thickness of 2.000 in.
- Ice thickness is considered to increase with height.
- Ice density of 56.000 pcf.
- A wind speed of 50 mph is used in combination with ice.
- Temperature drop of 50.000 °F.
- Deflections calculated using a wind speed of 60 mph.
- A non-linear (P-delta) analysis was used.
- Pressures are calculated at each section.
- Stress ratio used in pole design is 1.
- Tower analysis based on target reliabilities in accordance with Annex S.
- Load Modification Factors used: $K_{es}(F_w) = 0.95$, $K_{es}(t_i) = 0.85$.
- Maximum demand-capacity ratio is: 1.05.
- Local bending stresses due to climbing loads, feed line supports, and appurtenance mounts are not considered.

Options

Consider Moments - Legs	Distribute Leg Loads As Uniform	Use ASCE 10 X-Brace Ly Rules
Consider Moments - Horizontals	Assume Legs Pinned	Calculate Redundant Bracing Forces
Consider Moments - Diagonals	√ Assume Rigid Index Plate	Ignore Redundant Members in FEA
Use Moment Magnification	√ Use Clear Spans For Wind Area	SR Leg Bolts Resist Compression
√ Use Code Stress Ratios	Use Clear Spans For KL/r	All Leg Panels Have Same Allowable
√ Use Code Safety Factors - Guys	Retension Guys To Initial Tension	Offset Girt At Foundation
Escalate Ice	√ Bypass Mast Stability Checks	√ Consider Feed Line Torque
Always Use Max Kz	√ Use Azimuth Dish Coefficients	Include Angle Block Shear Check
Use Special Wind Profile	√ Project Wind Area of Appurt.	Use TIA-222-H Bracing Resist. Exemption
Include Bolts In Member Capacity	Autocalc Torque Arm Areas	Use TIA-222-H Tension Splice Exemption
Leg Bolts Are At Top Of Section	Add IBC .6D+W Combination	**Poles**
Secondary Horizontal Braces Leg	Sort Capacity Reports By Component	√ Include Shear-Torsion Interaction
Use Diamond Inner Bracing (4 Sided)	Triangulate Diamond Inner Bracing	Always Use Sub-Critical Flow
SR Members Have Cut Ends	Treat Feed Line Bundles As Cylinder	Use Top Mounted Sockets
SR Members Are Concentric	Ignore KL/ry For 60 Deg. Angle Legs	√ Pole Without Linear Attachments
		Pole With Shroud Or No Appurtenances
		Outside and Inside Corner Radii Are Known

Tapered Pole Section Geometry

Section	Elevation ft	Section Length ft	Splice Length ft	Number of Sides	Top Diameter in	Bottom Diameter in	Wall Thickness in	Bend Radius in	Pole Grade
L1	136.000-130.000	6.000	0.000	Round	4.500	4.500	0.216		A53-B-35 (35 ksi)
L2	130.000-129.500	0.500	0.000	Round	4.500	10.750	0.216		A53-B-35 (35 ksi)
L3	129.500-120.500	9.000	0.000	Round	10.750	10.750	0.322		A53-B-35 (35 ksi)
L4	120.500-120.000	0.500	0.000	Round	10.750	22.000	0.322		A53-B-35 (35 ksi)
L5	120.000-87.500	32.500	3.750	12	22.000	29.476	0.188	0.750	A572-60 (60 ksi)
L6	87.500-58.750	32.500	4.500	12	28.238	35.715	0.250	1.000	A572-60 (60 ksi)
L7	58.750-32.250	31.000	5.250	12	34.180	41.311	0.375	1.500	A572-65 (65 ksi)
L8	32.250-0.000	37.500		12	39.353	47.980	0.438	1.750	A572-65 (65 ksi)

Tapered Pole Properties

Section	Tip Dia. in	Area in^2	I in^4	r in	C in	I/C in^3	J in^4	It/Q in^2	w in	w/t
L1	4.500	2.907	6.686	1.517	2.250	2.972	13.372	1.453	0.000	0
	4.500	2.907	6.686	1.517	2.250	2.972	13.372	1.453	0.000	0
L2	4.500	2.907	6.686	1.517	2.250	2.972	13.372	1.453	0.000	0
	10.750	7.148	99.192	3.725	5.375	18.454	198.384	3.572	0.000	0
L3	10.750	10.549	143.527	3.689	5.375	26.703	287.053	5.271	0.000	0
	10.750	10.549	143.527	3.689	5.375	26.703	287.053	5.271	0.000	0
L4	10.750	10.549	143.527	3.689	5.375	26.703	287.053	5.271	0.000	0
	22.000	21.929	1288.455	7.665	11.000	117.132	2576.910	10.958	0.000	0
L5	22.710	13.169	799.760	7.809	11.396	70.179	1620.530	6.482	5.394	28.765
	30.450	17.683	1936.130	10.485	15.269	126.805	3923.124	8.703	7.397	39.451
L6	30.039	22.531	2252.762	10.020	14.627	154.009	4564.707	11.089	6.898	27.592
	36.887	28.549	4583.336	12.696	18.500	247.743	9287.082	14.051	8.902	35.606
L7	36.325	40.819	5953.979	12.102	17.705	336.286	12064.375	20.090	8.155	21.747
	42.636	49.430	10572.783	14.655	21.399	494.076	21423.324	24.328	10.066	26.844
L8	41.838	54.823	10597.356	13.932	20.385	519.860	21473.116	26.982	9.374	21.427
	49.518	66.975	19322.616	17.020	24.854	777.456	39152.859	32.963	11.686	26.711

Tower Elevation ft	Gusset Area (per face) ft^2	Gusset Thickness in	Gusset Grade	Adjust. Factor A_f	Adjust. Factor A_r	Weight Mult.	Double Angle Stitch Bolt Spacing Diagonals in	Double Angle Stitch Bolt Spacing Horizontals in	Double Angle Stitch Bolt Spacing Redundants in
L1 136.000-130.000				1	1	1			
L2 130.000-129.500				1	1	1			
L3 129.500-120.500				1	1	1			
L4 120.500-120.000				1	1	1			
L5 120.000-87.500				1	1	1			
L6 87.500-58.750				1	1	1			
L7 58.750-32.250				1	1	1			
L8 32.250-0.000				1	1	1			

Feed Line/Linear Appurtenances - Entered As Round Or Flat

Description	Face or Leg	Allow Shield	Exclude From Torque Calculation	Component Type	Placement ft	Total Number	Number Per Row	Clear Spacing in	Width or Diameter in	Perimeter in	Weight klf
***											

Feed Line/Linear Appurtenances - Entered As Area

Description	Face or Leg	Allow Shield	Exclude From Torque Calculation	Component Type	Placement ft	Total Number		C_AA_A ft^2/ft	Weight klf
EC4-50(1/2)	A	No	No	Inside Pole	129.000 - 0.000	1	No Ice	0.000	0.000
							1/2" Ice	0.000	0.000
							1" Ice	0.000	0.000
							2" Ice	0.000	0.000
*									
HB114-1-08U4-M5J(1-1/4)	B	No	No	Inside Pole	118.000 - 0.000	3	No Ice	0.000	0.001
							1/2" Ice	0.000	0.001
							1" Ice	0.000	0.001
							2" Ice	0.000	0.001
HB158-1-13U6-S6F18(1-5/8)	B	No	No	Inside Pole	118.000 - 0.000	1	No Ice	0.000	0.002
							1/2" Ice	0.000	0.002
							1" Ice	0.000	0.002
							2" Ice	0.000	0.002
*									
HB114-U6S12-XXX-LI(1-1/4)	C	No	No	Inside Pole	106.000 - 0.000	2	No Ice	0.000	0.002
							1/2" Ice	0.000	0.002
							1" Ice	0.000	0.002
							2" Ice	0.000	0.002
*									
LDF4-50A(1/2)	A	No	No	Inside Pole	65.000 - 0.000	1	No Ice	0.000	0.000
							1/2" Ice	0.000	0.000
							1" Ice	0.000	0.000
							2" Ice	0.000	0.000
*									
CU12PSM9P8XXX(1-3/8)	C	No	No	Inside Pole	78.000 - 0.000	1	No Ice	0.000	0.002
							1/2" Ice	0.000	0.002
							1" Ice	0.000	0.002
							2" Ice	0.000	0.002
***									

Feed Line/Linear Appurtenances Section Areas

Tower Section	Tower Elevation ft	Face	A_R ft^2	A_F ft^2	C_AA_A In Face ft^2	C_AA_A Out Face ft^2	Weight K
L1	136.000-130.000	A	0.000	0.000	0.000	0.000	0.000
		B	0.000	0.000	0.000	0.000	0.000
		C	0.000	0.000	0.000	0.000	0.000
L2	130.000-129.500	A	0.000	0.000	0.000	0.000	0.000
		B	0.000	0.000	0.000	0.000	0.000
		C	0.000	0.000	0.000	0.000	0.000
L3	129.500-120.500	A	0.000	0.000	0.000	0.000	0.001
		B	0.000	0.000	0.000	0.000	0.000
		C	0.000	0.000	0.000	0.000	0.000
L4	120.500-120.000	A	0.000	0.000	0.000	0.000	0.000
		B	0.000	0.000	0.000	0.000	0.000
		C	0.000	0.000	0.000	0.000	0.000
L5	120.000-87.500	A	0.000	0.000	0.000	0.000	0.005
		B	0.000	0.000	0.000	0.000	0.157

Tower Section	Tower Elevation ft	Face	A_R ft^2	A_F ft^2	C_AA_A In Face ft^2	C_AA_A Out Face ft^2	Weight K
		C	0.000	0.000	0.000	0.000	0.063
L6	87.500-58.750	A	0.000	0.000	0.000	0.000	0.006
		B	0.000	0.000	0.000	0.000	0.148
		C	0.000	0.000	0.000	0.000	0.130
L7	58.750-32.250	A	0.000	0.000	0.000	0.000	0.008
		B	0.000	0.000	0.000	0.000	0.136
		C	0.000	0.000	0.000	0.000	0.134
L8	32.250-0.000	A	0.000	0.000	0.000	0.000	0.010
		B	0.000	0.000	0.000	0.000	0.166
		C	0.000	0.000	0.000	0.000	0.163

Feed Line/Linear Appurtenances Section Areas - With Ice

Tower Section	Tower Elevation ft	Face or Leg	Ice Thickness in	A_R ft^2	A_F ft^2	C_AA_A In Face ft^2	C_AA_A Out Face ft^2	Weight K
L1	136.000-130.000	A	1.954	0.000	0.000	0.000	0.000	0.000
		B		0.000	0.000	0.000	0.000	0.000
		C		0.000	0.000	0.000	0.000	0.000
L2	130.000-129.500	A	1.949	0.000	0.000	0.000	0.000	0.000
		B		0.000	0.000	0.000	0.000	0.000
		C		0.000	0.000	0.000	0.000	0.000
L3	129.500-120.500	A	1.942	0.000	0.000	0.000	0.000	0.001
		B		0.000	0.000	0.000	0.000	0.000
		C		0.000	0.000	0.000	0.000	0.000
L4	120.500-120.000	A	1.935	0.000	0.000	0.000	0.000	0.000
		B		0.000	0.000	0.000	0.000	0.000
		C		0.000	0.000	0.000	0.000	0.000
L5	120.000-87.500	A	1.905	0.000	0.000	0.000	0.000	0.005
		B		0.000	0.000	0.000	0.000	0.157
		C		0.000	0.000	0.000	0.000	0.063
L6	87.500-58.750	A	1.840	0.000	0.000	0.000	0.000	0.006
		B		0.000	0.000	0.000	0.000	0.148
		C		0.000	0.000	0.000	0.000	0.130
L7	58.750-32.250	A	1.754	0.000	0.000	0.000	0.000	0.008
		B		0.000	0.000	0.000	0.000	0.136
		C		0.000	0.000	0.000	0.000	0.134
L8	32.250-0.000	A	1.578	0.000	0.000	0.000	0.000	0.010
		B		0.000	0.000	0.000	0.000	0.166
		C		0.000	0.000	0.000	0.000	0.163

Feed Line Center of Pressure

Section	Elevation ft	CP_X in	CP_Z in	CP_X Ice in	CP_Z Ice in
L1	136.000-130.000	0.000	0.000	0.000	0.000
L2	130.000-129.500	0.000	0.000	0.000	0.000
L3	129.500-120.500	0.000	0.000	0.000	0.000
L4	120.500-120.000	0.000	0.000	0.000	0.000
L5	120.000-87.500	0.000	0.000	0.000	0.000
L6	87.500-58.750	0.000	0.000	0.000	0.000
L7	58.750-32.250	0.000	0.000	0.000	0.000
L8	32.250-0.000	0.000	0.000	0.000	0.000

Note: For pole sections, center of pressure calculations do not consider feed line shielding.

Discrete Tower Loads

Description	Face or Leg	Offset Type	Offsets: Horz Lateral Vert ft ft ft	Azimuth Adjustment °	Placement ft
CXL 900-3LW	A	From Leg	4.000 0.000 2.000	0.000	129.000
LNA	A	From Leg	4.000 0.000 2.000	0.000	129.000
CAVITY FILTER	A	From Leg	4.000 0.000 2.000	0.000	129.000
Side Arm Mount [SO 306-1]	A	From Leg	2.000 0.000 0.000	0.000	129.000
*					
APXVTM14-C-120 w/ Mount Pipe	A	From Leg	4.000 0.000 2.000	0.000	118.000
APXVTM14-C-120 w/ Mount Pipe	B	From Leg	4.000 0.000 2.000	0.000	118.000
APXVTM14-C-120 w/ Mount Pipe	C	From Leg	4.000 0.000 2.000	0.000	118.000
APXVSPP18-C-A20 w/ Mount Pipe	A	From Leg	4.000 0.000 2.000	0.000	118.000
APXVSPP18-C-A20 w/ Mount Pipe	B	From Leg	4.000 0.000 2.000	0.000	118.000
APXVSPP18-C-A20 w/ Mount Pipe	C	From Leg	4.000 0.000 2.000	0.000	118.000
TD-RRH8X20-25	A	From Leg	4.000 0.000 2.000	0.000	118.000
TD-RRH8X20-25	B	From Leg	4.000 0.000 2.000	0.000	118.000
TD-RRH8X20-25	C	From Leg	4.000 0.000 2.000	0.000	118.000
Platform Mount [LP 1201-1]	C	None		0.000	118.000
(3) 6' x 2" Mount Pipe	A	From Leg	4.000 0.000 2.000	0.000	118.000
(3) 6' x 2" Mount Pipe	B	From Leg	4.000 0.000 2.000	0.000	118.000
(3) 6' x 2" Mount Pipe	C	From Leg	4.000 0.000 2.000	0.000	118.000
*					
PCS 1900MHZ 4X45W 65MHZ	A	From Leg	1.000 0.000 2.000	0.000	116.000
PCS 1900MHZ 4X45W 65MHZ	B	From Leg	1.000 0.000 2.000	0.000	116.000
PCS 1900MHZ 4X45W 65MHZ	C	From Leg	1.000 0.000 2.000	0.000	116.000
800MHz 2X50W RRH W/FILTER	A	From Leg	1.000 0.000	0.000	116.000

Description	Face or Leg	Offset Type	Offsets: Horz Lateral Vert ft ft ft	Azimuth Adjustment °	Placement ft
800MHz 2X50W RRH W/FILTER	B	From Leg	-2.000 1.000 0.000	0.000	116.000
800MHz 2X50W RRH W/FILTER	C	From Leg	-2.000 1.000 0.000	0.000	116.000
Side Arm Mount [SO 102-3]	C	None	-2.000	0.000	116.000
6' x 2" Mount Pipe	A	From Leg	1.000 0.000	0.000	116.000
6' x 2" Mount Pipe	B	From Leg	1.000 1.000 0.000	0.000	116.000
6' x 2" Mount Pipe	C	From Leg	1.000 1.000 0.000	0.000	116.000
*			1.000		
LNX-6513DS-A1M w/ Mount Pipe	A	From Leg	4.000 0.000	0.000	106.000
LNX-6513DS-A1M w/ Mount Pipe	B	From Leg	0.000 4.000 0.000	0.000	106.000
LNX-6513DS-A1M w/ Mount Pipe	C	From Leg	0.000 4.000 0.000	0.000	106.000
MT6407-77A w/ Mount Pipe	A	From Leg	0.000 4.000 0.000	0.000	106.000
MT6407-77A w/ Mount Pipe	B	From Leg	2.000 4.000 0.000	0.000	106.000
MT6407-77A w/ Mount Pipe	C	From Leg	2.000 4.000 0.000	0.000	106.000
XXDWMM-12.5-65-8T-CBRS w/ Mount Pipe	A	From Leg	2.000 4.000 0.000	0.000	106.000
XXDWMM-12.5-65-8T-CBRS w/ Mount Pipe	B	From Leg	-2.000 4.000 0.000	0.000	106.000
XXDWMM-12.5-65-8T-CBRS w/ Mount Pipe	C	From Leg	-2.000 4.000 0.000	0.000	106.000
RVZDC-6627-PF-48	B	From Leg	-2.000 4.000 0.000	0.000	106.000
RFV01U-D1A	A	From Leg	0.000 4.000 0.000	0.000	106.000
RFV01U-D1A	B	From Leg	0.000 4.000 0.000	0.000	106.000
RFV01U-D1A	C	From Leg	0.000 4.000 0.000	0.000	106.000
RFV01U-D2A	A	From Leg	0.000 4.000 0.000	0.000	106.000
RFV01U-D2A	B	From Leg	0.000 4.000 0.000	0.000	106.000
RFV01U-D2A	C	From Leg	0.000 4.000 0.000	0.000	106.000

Description	Face or Leg	Offset Type	Offsets: Horz Lateral Vert ft ft ft	Azimuth Adjustment °	Placement ft
			0.000		
(2) SBNHH-1D65B w/ Mount Pipe	A	From Leg	4.000	0.000	106.000
			0.000		
			0.000		
(2) SBNHH-1D65B w/ Mount Pipe	B	From Leg	4.000	0.000	106.000
			0.000		
			0.000		
(2) SBNHH-1D65B w/ Mount Pipe	C	From Leg	4.000	0.000	106.000
			0.000		
			0.000		
Platform Mount [LP 713-1]	C	None		0.000	106.000
Dual Antenna Mounting Bracket	A	From Leg	4.000	0.000	106.000
			0.000		
			0.000		
Dual Antenna Mounting Bracket	B	From Leg	4.000	0.000	106.000
			0.000		
			0.000		
Dual Antenna Mounting Bracket	C	From Leg	4.000	0.000	106.000
			0.000		
			0.000		
(2) 6' x 2" Mount Pipe	A	From Leg	4.000	0.000	106.000
			0.000		
			0.000		
(2) 6' x 2" Mount Pipe	B	From Leg	4.000	0.000	106.000
			0.000		
			0.000		
(2) 6' x 2" Mount Pipe	C	From Leg	4.000	0.000	106.000
			0.000		
			0.000		
*					
MX08FRO665-21 w/ Mount Pipe	A	From Leg	4.000	0.000	78.000
			0.000		
			0.000		
MX08FRO665-21 w/ Mount Pipe	B	From Leg	4.000	0.000	78.000
			0.000		
			0.000		
MX08FRO665-21 w/ Mount Pipe	C	From Leg	4.000	0.000	78.000
			0.000		
			0.000		
TA08025-B604	A	From Leg	4.000	0.000	78.000
			0.000		
			0.000		
TA08025-B604	B	From Leg	4.000	0.000	78.000
			0.000		
			0.000		
TA08025-B604	C	From Leg	4.000	0.000	78.000
			0.000		
			0.000		
TA08025-B605	A	From Leg	4.000	0.000	78.000
			0.000		
			0.000		
TA08025-B605	B	From Leg	4.000	0.000	78.000
			0.000		
			0.000		
TA08025-B605	C	From Leg	4.000	0.000	78.000
			0.000		
			0.000		
RDIDC-9181-PF-48	C	From Leg	4.000	0.000	78.000
			0.000		
			0.000		
Commscope MC-PK8-DSH	C	None		0.000	78.000
(2) 8' x 2" Mount Pipe	A	From Leg	4.000	0.000	78.000
			0.000		
			0.000		
(2) 8' x 2" Mount Pipe	B	From Leg	4.000	0.000	78.000

Description	Face or Leg	Offset Type	Offsets: Horz Lateral Vert ft ft ft	Azimuth Adjustment °	Placement ft
(2) 8' x 2" Mount Pipe	C	From Leg	0.000 0.000 4.000 0.000 0.000	0.000	78.000
*					
KS24019-L112A	C	From Leg	3.000 0.000 1.000	0.000	65.000
Side Arm Mount [SO 701-1]	C	From Leg	1.500 0.000 0.000	0.000	65.000
2' x 2" Pipe Mount	C	From Leg	3.000 0.000 1.000	0.000	65.000
***					

Load Combinations

Comb. No.	Description
1	Dead Only
2	1.2 Dead+1.0 Wind 0 deg - No Ice
3	0.9 Dead+1.0 Wind 0 deg - No Ice
4	1.2 Dead+1.0 Wind 30 deg - No Ice
5	0.9 Dead+1.0 Wind 30 deg - No Ice
6	1.2 Dead+1.0 Wind 60 deg - No Ice
7	0.9 Dead+1.0 Wind 60 deg - No Ice
8	1.2 Dead+1.0 Wind 90 deg - No Ice
9	0.9 Dead+1.0 Wind 90 deg - No Ice
10	1.2 Dead+1.0 Wind 120 deg - No Ice
11	0.9 Dead+1.0 Wind 120 deg - No Ice
12	1.2 Dead+1.0 Wind 150 deg - No Ice
13	0.9 Dead+1.0 Wind 150 deg - No Ice
14	1.2 Dead+1.0 Wind 180 deg - No Ice
15	0.9 Dead+1.0 Wind 180 deg - No Ice
16	1.2 Dead+1.0 Wind 210 deg - No Ice
17	0.9 Dead+1.0 Wind 210 deg - No Ice
18	1.2 Dead+1.0 Wind 240 deg - No Ice
19	0.9 Dead+1.0 Wind 240 deg - No Ice
20	1.2 Dead+1.0 Wind 270 deg - No Ice
21	0.9 Dead+1.0 Wind 270 deg - No Ice
22	1.2 Dead+1.0 Wind 300 deg - No Ice
23	0.9 Dead+1.0 Wind 300 deg - No Ice
24	1.2 Dead+1.0 Wind 330 deg - No Ice
25	0.9 Dead+1.0 Wind 330 deg - No Ice
26	1.2 Dead+1.0 Ice+1.0 Temp
27	1.2 Dead+1.0 Wind 0 deg+1.0 Ice+1.0 Temp
28	1.2 Dead+1.0 Wind 30 deg+1.0 Ice+1.0 Temp
29	1.2 Dead+1.0 Wind 60 deg+1.0 Ice+1.0 Temp
30	1.2 Dead+1.0 Wind 90 deg+1.0 Ice+1.0 Temp
31	1.2 Dead+1.0 Wind 120 deg+1.0 Ice+1.0 Temp
32	1.2 Dead+1.0 Wind 150 deg+1.0 Ice+1.0 Temp
33	1.2 Dead+1.0 Wind 180 deg+1.0 Ice+1.0 Temp
34	1.2 Dead+1.0 Wind 210 deg+1.0 Ice+1.0 Temp
35	1.2 Dead+1.0 Wind 240 deg+1.0 Ice+1.0 Temp
36	1.2 Dead+1.0 Wind 270 deg+1.0 Ice+1.0 Temp
37	1.2 Dead+1.0 Wind 300 deg+1.0 Ice+1.0 Temp
38	1.2 Dead+1.0 Wind 330 deg+1.0 Ice+1.0 Temp

Comb. No.	Description
39	Dead+Wind 0 deg - Service
40	Dead+Wind 30 deg - Service
41	Dead+Wind 60 deg - Service
42	Dead+Wind 90 deg - Service
43	Dead+Wind 120 deg - Service
44	Dead+Wind 150 deg - Service
45	Dead+Wind 180 deg - Service
46	Dead+Wind 210 deg - Service
47	Dead+Wind 240 deg - Service
48	Dead+Wind 270 deg - Service
49	Dead+Wind 300 deg - Service
50	Dead+Wind 330 deg - Service

Maximum Member Forces

Section No.	Elevation ft	Component Type	Condition	Gov. Load Comb.	Axial K	Major Axis Moment kip-ft	Minor Axis Moment kip-ft
L1	136 - 130	Pole	Max Tension	8	0.000	0.000	-0.000
			Max. Compression	26	-0.164	-0.000	0.000
			Max. Mx	8	-0.067	-0.247	0.000
			Max. My	2	-0.068	0.000	0.247
			Max. Vy	8	0.082	-0.247	0.000
			Max. Vx	2	-0.082	0.000	0.247
L2	130 - 129.5	Pole	Max Tension	1	0.000	0.000	0.000
			Max. Compression	26	-0.185	-0.000	0.000
			Max. Mx	8	-0.077	-0.290	0.000
			Max. My	2	-0.078	-0.000	0.289
			Max. Vy	8	0.089	-0.290	0.000
			Max. Vx	2	-0.089	-0.000	0.289
			Max. Torque	10			-0.000
L3	129.5 - 120.5	Pole	Max Tension	1	0.000	0.000	0.000
			Max. Compression	26	-1.083	-0.000	0.676
			Max. Mx	8	-0.511	-2.794	0.137
			Max. My	2	-0.514	0.000	2.373
			Max. Vy	8	0.366	-2.794	0.137
			Max. Vx	2	-0.296	0.000	2.373
			Max. Torque	21			-0.281
L4	120.5 - 120	Pole	Max Tension	1	0.000	0.000	0.000
			Max. Compression	26	-1.138	-0.000	0.676
			Max. Mx	8	-0.544	-2.980	0.137
			Max. My	2	-0.547	-0.000	2.524
			Max. Vy	8	0.380	-2.980	0.137
			Max. Vx	2	-0.311	-0.000	2.524
			Max. Torque	21			-0.281
L5	120 - 87.5	Pole	Max Tension	1	0.000	0.000	0.000
			Max. Compression	26	-27.053	-0.789	0.220
			Max. Mx	8	-10.440	-181.276	-0.221
			Max. My	2	-10.447	0.112	178.173
			Max. Vy	20	-9.146	180.939	0.319
			Max. Vx	14	9.053	-0.427	-178.067
			Max. Torque	3			-0.347
L6	87.5 - 58.75	Pole	Max Tension	1	0.000	0.000	0.000
			Max. Compression	26	-39.837	0.157	-0.326
			Max. Mx	20	-17.212	505.813	0.444
			Max. My	14	-17.217	-0.400	-499.973
			Max. Vy	20	-13.951	505.813	0.444
			Max. Vx	14	13.857	-0.400	-499.973
			Max. Torque	3			-0.347
L7	58.75 - 32.25	Pole	Max Tension	1	0.000	0.000	0.000
			Max. Compression	26	-47.961	0.157	-0.326
			Max. Mx	20	-22.834	892.527	0.889
			Max. My	14	-22.838	-0.846	-884.283
			Max. Vy	20	-16.067	892.527	0.889
			Max. Vx	14	15.974	-0.846	-884.283

Section No.	Elevation ft	Component Type	Condition	Gov. Load Comb.	Axial K	Major Axis Moment kip-ft	Minor Axis Moment kip-ft
			Max. Torque	8			-0.113
L8	32.25 - 0	Pole	Max Tension	1	0.000	0.000	0.000
			Max. Compression	26	-62.663	0.157	-0.326
			Max. Mx	20	-33.903	1551.990	1.532
			Max. My	14	-33.903	-1.488	-1540.315
			Max. Vy	20	-19.099	1551.990	1.532
			Max. Vx	14	19.009	-1.488	-1540.315
			Max. Torque	8			-0.113

Maximum Reactions

Location	Condition	Gov. Load Comb.	Vertical K	Horizontal, X K	Horizontal, Z K
Pole	Max. Vert	30	62.663	-5.359	-0.006
	Max. H_x	20	33.910	19.087	0.017
	Max. H_z	2	33.910	0.017	18.997
	Max. M_x	2	1539.980	0.017	18.997
	Max. M_z	8	1551.569	-19.087	-0.017
	Max. Torsion	20	0.113	19.087	0.017
	Min. Vert	5	25.432	-9.529	16.444
	Min. H_x	8	33.910	-19.087	-0.017
	Min. H_z	14	33.910	-0.017	-18.997
	Min. M_x	14	-1540.315	-0.017	-18.997
	Min. M_z	20	-1551.990	19.087	0.017
	Min. Torsion	8	-0.113	-19.087	-0.017

Tower Mast Reaction Summary

Load Combination	Vertical K	$Shear_x$ K	$Shear_z$ K	Overturning Moment, M_x kip-ft	Overturning Moment, M_z kip-ft	Torque kip-ft
Dead Only	28.258	0.000	0.000	0.136	0.172	0.000
1.2 Dead+1.0 Wind 0 deg - No Ice	33.910	-0.017	-18.997	-1539.980	1.911	0.011
0.9 Dead+1.0 Wind 0 deg - No Ice	25.432	-0.017	-18.997	-1529.779	1.845	0.012
1.2 Dead+1.0 Wind 30 deg - No Ice	33.910	9.529	-16.444	-1332.790	-774.211	0.067
0.9 Dead+1.0 Wind 30 deg - No Ice	25.432	9.529	-16.444	-1323.967	-769.104	0.067
1.2 Dead+1.0 Wind 60 deg - No Ice	33.910	16.522	-9.484	-768.432	-1342.824	0.104
0.9 Dead+1.0 Wind 60 deg - No Ice	25.432	16.522	-9.484	-763.363	-1333.926	0.104
1.2 Dead+1.0 Wind 90 deg - No Ice	33.910	19.087	0.017	1.868	-1551.569	0.113
0.9 Dead+1.0 Wind 90 deg - No Ice	25.432	19.087	0.017	1.812	-1541.280	0.112
1.2 Dead+1.0 Wind 120 deg - No Ice	33.910	16.539	9.513	771.711	-1344.522	0.092
0.9 Dead+1.0 Wind 120 deg - No Ice	25.432	16.539	9.513	766.535	-1335.612	0.091
1.2 Dead+1.0 Wind 150 deg - No Ice	33.910	9.558	16.461	1334.824	-777.154	0.046
0.9 Dead+1.0 Wind 150 deg - No Ice	25.432	9.558	16.461	1325.902	-772.026	0.045
1.2 Dead+1.0 Wind 180 deg - No Ice	33.910	0.017	18.997	1540.315	-1.488	-0.011
0.9 Dead+1.0 Wind 180 deg - No Ice	25.432	0.017	18.997	1530.029	-1.530	-0.012

Load Combination	Vertical K	$Shear_x$ K	$Shear_z$ K	Overturning Moment, M_x kip-ft	Overturning Moment, M_z kip-ft	Torque kip-ft
1.2 Dead+1.0 Wind 210 deg - No Ice	33.910	-9.529	16.444	1333.125	774.634	-0.066
0.9 Dead+1.0 Wind 210 deg - No Ice	25.432	-9.529	16.444	1324.216	769.419	-0.066
1.2 Dead+1.0 Wind 240 deg - No Ice	33.910	-16.522	9.484	768.767	1343.246	-0.103
0.9 Dead+1.0 Wind 240 deg - No Ice	25.432	-16.522	9.484	763.613	1334.241	-0.102
1.2 Dead+1.0 Wind 270 deg - No Ice	33.910	-19.087	-0.017	-1.532	1551.990	-0.113
0.9 Dead+1.0 Wind 270 deg - No Ice	25.432	-19.087	-0.017	-1.563	1541.595	-0.112
1.2 Dead+1.0 Wind 300 deg - No Ice	33.910	-16.539	-9.513	-771.375	1344.944	-0.093
0.9 Dead+1.0 Wind 300 deg - No Ice	25.432	-16.539	-9.513	-766.285	1335.927	-0.092
1.2 Dead+1.0 Wind 330 deg - No Ice	33.910	-9.558	-16.461	-1334.488	777.577	-0.047
0.9 Dead+1.0 Wind 330 deg - No Ice	25.432	-9.558	-16.461	-1325.652	772.341	-0.046
1.2 Dead+1.0 Ice+1.0 Temp	62.663	0.000	0.000	0.326	0.157	0.000
1.2 Dead+1.0 Wind 0 deg+1.0 Ice+1.0 Temp	62.663	-0.006	-5.313	-451.333	0.654	-0.039
1.2 Dead+1.0 Wind 30 deg+1.0 Ice+1.0 Temp	62.663	2.674	-4.598	-390.560	-228.547	-0.072
1.2 Dead+1.0 Wind 60 deg+1.0 Ice+1.0 Temp	62.663	4.638	-2.651	-225.045	-396.473	-0.086
1.2 Dead+1.0 Wind 90 deg+1.0 Ice+1.0 Temp	62.663	5.359	0.006	0.863	-458.139	-0.077
1.2 Dead+1.0 Wind 120 deg+1.0 Ice+1.0 Temp	62.663	4.644	2.662	226.637	-397.002	-0.047
1.2 Dead+1.0 Wind 150 deg+1.0 Ice+1.0 Temp	62.663	2.685	4.605	391.767	-229.447	-0.005
1.2 Dead+1.0 Wind 180 deg+1.0 Ice+1.0 Temp	62.663	0.006	5.313	452.020	-0.385	0.039
1.2 Dead+1.0 Wind 210 deg+1.0 Ice+1.0 Temp	62.663	-2.674	4.598	391.248	228.816	0.073
1.2 Dead+1.0 Wind 240 deg+1.0 Ice+1.0 Temp	62.663	-4.638	2.651	225.737	396.752	0.087
1.2 Dead+1.0 Wind 270 deg+1.0 Ice+1.0 Temp	62.663	-5.359	-0.006	-0.176	458.408	0.077
1.2 Dead+1.0 Wind 300 deg+1.0 Ice+1.0 Temp	62.663	-4.644	-2.662	-225.950	397.271	0.047
1.2 Dead+1.0 Wind 330 deg+1.0 Ice+1.0 Temp	62.663	-2.685	-4.605	-391.080	229.716	0.005
Dead+Wind 0 deg - Service	28.258	-0.004	-4.148	-336.059	0.542	0.003
Dead+Wind 30 deg - Service	28.258	2.081	-3.591	-290.833	-168.862	0.014
Dead+Wind 60 deg - Service	28.258	3.608	-2.071	-167.642	-292.973	0.022
Dead+Wind 90 deg - Service	28.258	4.168	0.004	0.506	-338.536	0.024
Dead+Wind 120 deg - Service	28.258	3.611	2.077	168.556	-293.341	0.020
Dead+Wind 150 deg - Service	28.258	2.087	3.594	291.479	-169.498	0.010
Dead+Wind 180 deg - Service	28.258	0.004	4.148	336.337	-0.192	-0.003
Dead+Wind 210 deg - Service	28.258	-2.081	3.591	291.112	169.212	-0.014
Dead+Wind 240 deg - Service	28.258	-3.608	2.071	167.920	293.324	-0.022
Dead+Wind 270 deg - Service	28.258	-4.168	-0.004	-0.228	338.886	-0.024
Dead+Wind 300 deg - Service	28.258	-3.611	-2.077	-168.278	293.691	-0.020
Dead+Wind 330 deg - Service	28.258	-2.087	-3.594	-291.200	169.848	-0.010

Solution Summary

Load Comb.	Sum of Applied Forces PX K	PY K	PZ K	Sum of Reactions PX K	PY K	PZ K	% Error
1	0.000	-28.258	0.000	0.000	28.258	0.000	0.000%
2	-0.017	-33.910	-18.997	0.017	33.910	18.997	0.000%
3	-0.017	-25.432	-18.997	0.017	25.432	18.997	0.000%
4	9.529	-33.910	-16.444	-9.529	33.910	16.444	0.000%
5	9.529	-25.432	-16.444	-9.529	25.432	16.444	0.000%
6	16.522	-33.910	-9.484	-16.522	33.910	9.484	0.000%
7	16.522	-25.432	-9.484	-16.522	25.432	9.484	0.000%
8	19.087	-33.910	0.017	-19.087	33.910	-0.017	0.000%
9	19.087	-25.432	0.017	-19.087	25.432	-0.017	0.000%
10	16.539	-33.910	9.513	-16.539	33.910	-9.513	0.000%
11	16.539	-25.432	9.513	-16.539	25.432	-9.513	0.000%
12	9.558	-33.910	16.461	-9.558	33.910	-16.461	0.000%
13	9.558	-25.432	16.461	-9.558	25.432	-16.461	0.000%
14	0.017	-33.910	18.997	-0.017	33.910	-18.997	0.000%
15	0.017	-25.432	18.997	-0.017	25.432	-18.997	0.000%
16	-9.529	-33.910	16.444	9.529	33.910	-16.444	0.000%
17	-9.529	-25.432	16.444	9.529	25.432	-16.444	0.000%
18	-16.522	-33.910	9.484	16.522	33.910	-9.484	0.000%
19	-16.522	-25.432	9.484	16.522	25.432	-9.484	0.000%
20	-19.087	-33.910	-0.017	19.087	33.910	0.017	0.000%
21	-19.087	-25.432	-0.017	19.087	25.432	0.017	0.000%
22	-16.539	-33.910	-9.513	16.539	33.910	9.513	0.000%
23	-16.539	-25.432	-9.513	16.539	25.432	9.513	0.000%
24	-9.558	-33.910	-16.461	9.558	33.910	16.461	0.000%
25	-9.558	-25.432	-16.461	9.558	25.432	16.461	0.000%
26	0.000	-62.663	0.000	0.000	62.663	0.000	0.000%
27	-0.006	-62.663	-5.313	0.006	62.663	5.313	0.000%
28	2.674	-62.663	-4.598	-2.674	62.663	4.598	0.000%
29	4.638	-62.663	-2.651	-4.638	62.663	2.651	0.000%
30	5.359	-62.663	0.006	-5.359	62.663	-0.006	0.000%
31	4.644	-62.663	2.662	-4.644	62.663	-2.662	0.000%
32	2.685	-62.663	4.605	-2.685	62.663	-4.605	0.000%
33	0.006	-62.663	5.313	-0.006	62.663	-5.313	0.000%
34	-2.674	-62.663	4.598	2.674	62.663	-4.598	0.000%
35	-4.638	-62.663	2.651	4.638	62.663	-2.651	0.000%
36	-5.359	-62.663	-0.006	5.359	62.663	0.006	0.000%
37	-4.644	-62.663	-2.662	4.644	62.663	2.662	0.000%
38	-2.685	-62.663	-4.605	2.685	62.663	4.605	0.000%
39	-0.004	-28.258	-4.148	0.004	28.258	4.148	0.000%
40	2.081	-28.258	-3.591	-2.081	28.258	3.591	0.000%
41	3.608	-28.258	-2.071	-3.608	28.258	2.071	0.000%
42	4.168	-28.258	0.004	-4.168	28.258	-0.004	0.000%
43	3.611	-28.258	2.077	-3.611	28.258	-2.077	0.000%
44	2.087	-28.258	3.594	-2.087	28.258	-3.594	0.000%
45	0.004	-28.258	4.148	-0.004	28.258	-4.148	0.000%
46	-2.081	-28.258	3.591	2.081	28.258	-3.591	0.000%
47	-3.608	-28.258	2.071	3.608	28.258	-2.071	0.000%
48	-4.168	-28.258	-0.004	4.168	28.258	0.004	0.000%
49	-3.611	-28.258	-2.077	3.611	28.258	2.077	0.000%
50	-2.087	-28.258	-3.594	2.087	28.258	3.594	0.000%

Non-Linear Convergence Results

Load Combination	Converged?	Number of Cycles	Displacement Tolerance	Force Tolerance
1	Yes	4	0.00000001	0.00000001
2	Yes	4	0.00000001	0.00017537
3	Yes	4	0.00000001	0.00010886
4	Yes	5	0.00000001	0.00015279
5	Yes	5	0.00000001	0.00007402
6	Yes	5	0.00000001	0.00015245
7	Yes	5	0.00000001	0.00007380

8	Yes	4	0.00000001	0.00015757
9	Yes	4	0.00000001	0.00009553
10	Yes	5	0.00000001	0.00015050
11	Yes	5	0.00000001	0.00007274
12	Yes	5	0.00000001	0.00015555
13	Yes	5	0.00000001	0.00007539
14	Yes	4	0.00000001	0.00019334
15	Yes	4	0.00000001	0.00012172
16	Yes	5	0.00000001	0.00014988
17	Yes	5	0.00000001	0.00007255
18	Yes	5	0.00000001	0.00015211
19	Yes	5	0.00000001	0.00007362
20	Yes	4	0.00000001	0.00017100
21	Yes	4	0.00000001	0.00010542
22	Yes	5	0.00000001	0.00015629
23	Yes	5	0.00000001	0.00007571
24	Yes	5	0.00000001	0.00014934
25	Yes	5	0.00000001	0.00007221
26	Yes	4	0.00000001	0.00000001
27	Yes	5	0.00000001	0.00021856
28	Yes	5	0.00000001	0.00024073
29	Yes	5	0.00000001	0.00024396
30	Yes	5	0.00000001	0.00022404
31	Yes	5	0.00000001	0.00024340
32	Yes	5	0.00000001	0.00024204
33	Yes	5	0.00000001	0.00021871
34	Yes	5	0.00000001	0.00024058
35	Yes	5	0.00000001	0.00024212
36	Yes	5	0.00000001	0.00022322
37	Yes	5	0.00000001	0.00024404
38	Yes	5	0.00000001	0.00024053
39	Yes	4	0.00000001	0.00002087
40	Yes	4	0.00000001	0.00005753
41	Yes	4	0.00000001	0.00005645
42	Yes	4	0.00000001	0.00002066
43	Yes	4	0.00000001	0.00005414
44	Yes	4	0.00000001	0.00006014
45	Yes	4	0.00000001	0.00002097
46	Yes	4	0.00000001	0.00005452
47	Yes	4	0.00000001	0.00005610
48	Yes	4	0.00000001	0.00002073
49	Yes	4	0.00000001	0.00006018
50	Yes	4	0.00000001	0.00005369

Maximum Tower Deflections - Service Wind

Section No.	Elevation ft	Horz. Deflection in	Gov. Load Comb.	Tilt °	Twist °
L1	136 - 130	9.748	48	0.591	0.002
L2	130 - 129.5	9.008	48	0.585	0.002
L3	129.5 - 120.5	8.947	48	0.585	0.002
L4	120.5 - 120	7.850	48	0.578	0.001
L5	120 - 87.5	7.789	48	0.578	0.001
L6	91.25 - 58.75	4.501	48	0.484	0.000
L7	63.25 - 32.25	2.105	48	0.314	0.000
L8	37.5 - 0	0.745	48	0.180	0.000

Critical Deflections and Radius of Curvature - Service Wind

Elevation ft	Appurtenance	Gov. Load Comb.	Deflection in	Tilt °	Twist °	Radius of Curvature ft
129.000	CXL 900-3LW	48	8.886	0.585	0.002	62980

Elevation ft	Appurtenance	Gov. Load Comb.	Deflection in	Tilt °	Twist °	Radius of Curvature ft
118.000	APXVTM14-C-120 w/ Mount Pipe	48	7.548	0.577	0.001	62421
116.000	PCS 1900MHZ 4X45W 65MHZ	48	7.307	0.575	0.001	50963
106.000	LNX-6513DS-A1M w/ Mount Pipe	48	6.122	0.551	0.000	19017
78.000	MX08FRO665-21 w/ Mount Pipe	48	3.249	0.405	0.000	9931
65.000	KS24019-L112A	48	2.227	0.324	0.000	9996

Maximum Tower Deflections - Design Wind

Section No.	Elevation ft	Horz. Deflection in	Gov. Load Comb.	Tilt °	Twist °
L1	136 - 130	44.488	20	2.678	0.008
L2	130 - 129.5	41.131	20	2.657	0.008
L3	129.5 - 120.5	40.853	20	2.656	0.008
L4	120.5 - 120	35.866	20	2.631	0.003
L5	120 - 87.5	35.591	20	2.631	0.003
L6	91.25 - 58.75	20.587	20	2.212	0.001
L7	63.25 - 32.25	9.634	20	1.437	0.000
L8	37.5 - 0	3.412	20	0.824	0.000

Critical Deflections and Radius of Curvature - Design Wind

Elevation ft	Appurtenance	Gov. Load Comb.	Deflection in	Tilt °	Twist °	Radius of Curvature ft
129.000	CXL 900-3LW	20	40.576	2.656	0.008	19629
118.000	APXVTM14-C-120 w/ Mount Pipe	20	34.490	2.627	0.003	15894
116.000	PCS 1900MHZ 4X45W 65MHZ	20	33.392	2.619	0.003	12157
106.000	LNX-6513DS-A1M w/ Mount Pipe	20	27.991	2.514	0.002	4284
78.000	MX08FRO665-21 w/ Mount Pipe	20	14.868	1.852	0.001	2190
65.000	KS24019-L112A	20	10.193	1.484	0.000	2193

Compression Checks

Pole Design Data

Section No.	Elevation ft	Size	L ft	L_u ft	Kl/r	A in^2	P_u K	ϕP_n K	Ratio $\frac{P_u}{\phi P_n}$
L1	136 - 130 (1)	TP4.5x4.5x0.216	6.000	0.000	0.0	2.907	-0.067	91.572	0.001
L2	130 - 129.5 (2)	TP10.75x4.5x0.216	0.500	0.000	0.0	2.907	-0.073	91.572	0.001
L3	129.5 - 120.5 (3)	TP10.75x10.75x0.322	9.000	0.000	0.0	10.549	-0.511	332.290	0.002
L4	120.5 - 120 (4)	TP22x10.75x0.322	0.500	0.000	0.0	10.549	-0.511	332.290	0.002
L5	120 - 87.5 (5)	TP29.476x22x0.188	32.500	0.000	0.0	17.162	-10.440	901.992	0.012
L6	87.5 - 58.75 (6)	TP35.715x28.238x0.25	32.500	0.000	0.0	27.716	-17.212	1496.660	0.011
L7	58.75 - 32.25	TP41.311x34.18x0.375	31.000	0.000	0.0	47.972	-22.834	2806.360	0.008

Section No.	Elevation ft	Size	L ft	L_u ft	Kl/r	A in^2	P_u K	ϕP_n K	Ratio $\frac{P_u}{\phi P_n}$
L8	(7) 32.25 - 0 (8)	TP47.98x39.353x0.438	37.500	0.000	0.0	66.976	-33.903	3918.070	0.009

Pole Bending Design Data

Section No.	Elevation ft	Size	M_{ux} kip-ft	ϕM_{nx} kip-ft	Ratio $\frac{M_{ux}}{\phi M_{nx}}$	M_{uy} kip-ft	ϕM_{ny} kip-ft	Ratio $\frac{M_{uy}}{\phi M_{ny}}$
L1	136 - 130 (1)	TP4.5x4.5x0.216	0.247	10.415	0.024	0.000	10.415	0.000
L2	130 - 129.5 (2)	TP10.75x4.5x0.216	0.247	10.415	0.024	0.000	10.415	0.000
L3	129.5 - 120.5 (3)	TP10.75x10.75x0.322	2.797	91.944	0.030	0.000	91.944	0.000
L4	120.5 - 120 (4)	TP22x10.75x0.322	2.797	91.944	0.030	0.000	91.944	0.000
L5	120 - 87.5 (5)	TP29.476x22x0.188	181.276	523.042	0.347	0.000	523.042	0.000
L6	87.5 - 58.75 (6)	TP35.715x28.238x0.25	505.813	1085.442	0.466	0.000	1085.442	0.000
L7	58.75 - 32.25 (7)	TP41.311x34.18x0.375	892.525	2614.017	0.341	0.000	2614.017	0.000
L8	32.25 - 0 (8)	TP47.98x39.353x0.438	1551.992	4321.917	0.359	0.000	4321.917	0.000

Pole Shear Design Data

Section No.	Elevation ft	Size	Actual V_u K	ϕV_n K	Ratio $\frac{V_u}{\phi V_n}$	Actual T_u kip-ft	ϕT_n kip-ft	Ratio $\frac{T_u}{\phi T_n}$
L1	136 - 130 (1)	TP4.5x4.5x0.216	0.082	27.472	0.003	0.000	10.347	0.000
L2	130 - 129.5 (2)	TP10.75x4.5x0.216	0.089	27.472	0.003	0.000	10.347	0.000
L3	129.5 - 120.5 (3)	TP10.75x10.75x0.322	0.366	99.687	0.004	0.280	91.394	0.003
L4	120.5 - 120 (4)	TP22x10.75x0.322	0.380	207.232	0.002	0.280	91.394	0.003
L5	120 - 87.5 (5)	TP29.476x22x0.188	9.146	278.026	0.033	0.080	695.184	0.000
L6	87.5 - 58.75 (6)	TP35.715x28.238x0.25	13.951	448.999	0.031	0.113	1359.817	0.000
L7	58.75 - 32.25 (7)	TP41.311x34.18x0.375	16.067	841.907	0.019	0.113	2942.142	0.000
L8	32.25 - 0 (8)	TP47.98x39.353x0.438	19.099	1175.420	0.016	0.113	4915.583	0.000

Pole Interaction Design Data

Section No.	Elevation ft	Ratio $\frac{P_u}{\phi P_n}$	Ratio $\frac{M_{ux}}{\phi M_{nx}}$	Ratio $\frac{M_{uy}}{\phi M_{ny}}$	Ratio $\frac{V_u}{\phi V_n}$	Ratio $\frac{T_u}{\phi T_n}$	Comb. Stress Ratio	Allow. Stress Ratio	Criteria
L1	136 - 130 (1)	0.001	0.024	0.000	0.003	0.000	0.024	1.050	4.8.2
L2	130 - 129.5 (2)	0.001	0.024	0.000	0.003	0.000	0.025	1.050	4.8.2
L3	129.5 - 120.5 (3)	0.002	0.030	0.000	0.004	0.003	0.032	1.050	4.8.2
L4	120.5 - 120 (4)	0.002	0.030	0.000	0.002	0.003	0.032	1.050	4.8.2
L5	120 - 87.5 (5)	0.012	0.347	0.000	0.033	0.000	0.359	1.050	4.8.2
L6	87.5 - 58.75	0.011	0.466	0.000	0.031	0.000	0.478	1.050	4.8.2

Section No.	Elevation ft	Ratio $\frac{P_u}{\phi P_n}$	Ratio $\frac{M_{ux}}{\phi M_{nx}}$	Ratio $\frac{M_{uy}}{\phi M_{ny}}$	Ratio $\frac{V_u}{\phi V_n}$	Ratio $\frac{T_u}{\phi T_n}$	Comb. Stress Ratio	Allow. Stress Ratio	Criteria
L7	(6) 58.75 - 32.25	0.008	0.341	0.000	0.019	0.000	0.350	1.050	4.8.2
L8	(7) 32.25 - 0 (8)	0.009	0.359	0.000	0.016	0.000	0.368	1.050	4.8.2

Section Capacity Table

Section No.	Elevation ft	Component Type	Size	Critical Element	P K	$øP_{allow}$ K	% Capacity	Pass Fail
L1	136 - 130	Pole	TP4.5x4.5x0.216	1	-0.067	96.151	2.3	Pass
L2	130 - 129.5	Pole	TP10.75x4.5x0.216	2	-0.073	96.151	2.3	Pass
L3	129.5 - 120.5	Pole	TP10.75x10.75x0.322	3	-0.511	348.904	3.0	Pass
L4	120.5 - 120	Pole	TP22x10.75x0.322	4	-0.511	348.904	3.0	Pass
L5	120 - 87.5	Pole	TP29.476x22x0.188	5	-10.440	947.092	34.2	Pass
L6	87.5 - 58.75	Pole	TP35.715x28.238x0.25	6	-17.212	1571.493	45.6	Pass
L7	58.75 - 32.25	Pole	TP41.311x34.18x0.375	7	-22.834	2946.678	33.3	Pass
L8	32.25 - 0	Pole	TP47.98x39.353x0.438	8	-33.903	4113.973	35.0	Pass
							Summary	
						Pole (L6)	45.6	Pass
						RATING =	**45.6**	**Pass**

APPENDIX B

BASE LEVEL DRAWING

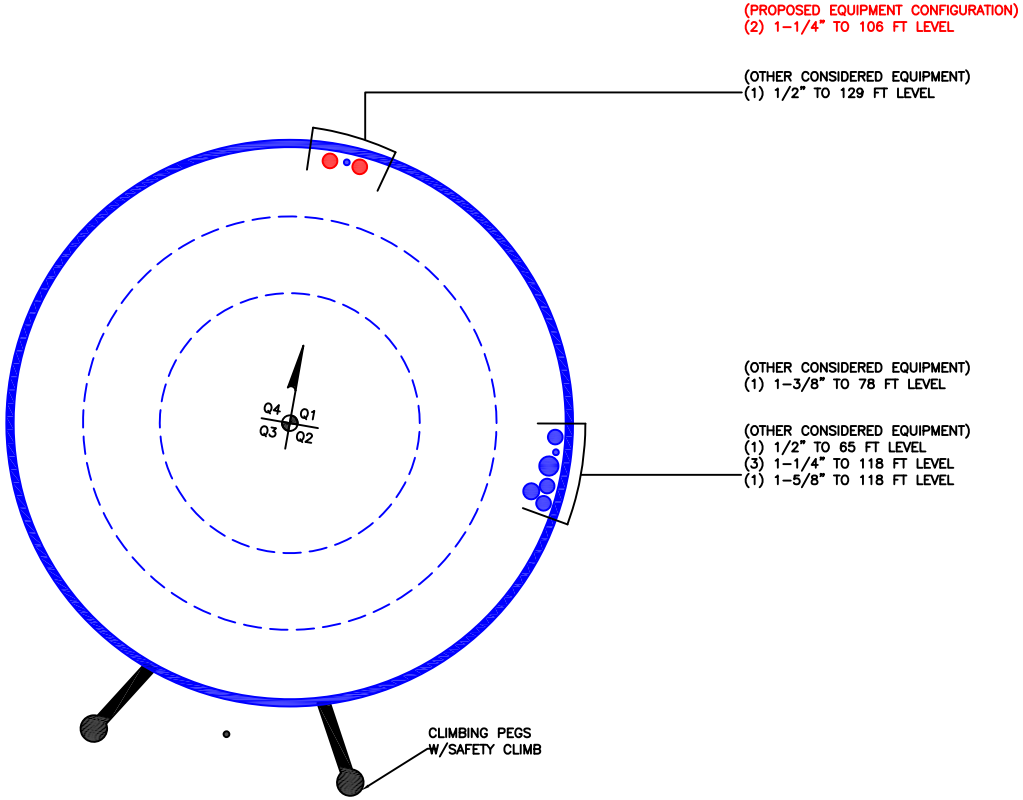
(PROPOSED EQUIPMENT CONFIGURATION)
(2) 1-1/4" TO 106 FT LEVEL
(OTHER CONSIDERED EQUIPMENT)
(1) 1/2" TO 129 FT LEVEL
(OTHER CONSIDERED EQUIPMENT)
(1) 1-3/8" TO 78 FT LEVEL
(OTHER CONSIDERED EQUIPMENT)
(1) 1/2" TO 65 FT LEVEL
(3) 1-1/4" TO 118 FT LEVEL
(1) 1-5/8" TO 118 FT LEVEL
Q4
Q1
Q3
Q2
CLIMBING PEGS
W/SAFETY CLIMB

APPENDIX C

ADDITIONAL CALCULATIONS

Monopole Flange Plate Connection

Elevation = 130 ft.

BU #	876332
Site Name	36 PROSPECT STREET
Order #	610891 Rev 0

TIA-222 Revision	H

Applied Loads	
Moment (kip-ft)	0.25
Axial Force (kips)	0.07
Shear Force (kips)	0.08

**TIA-222-H Section 15.5 Applied*

Top Plate - External

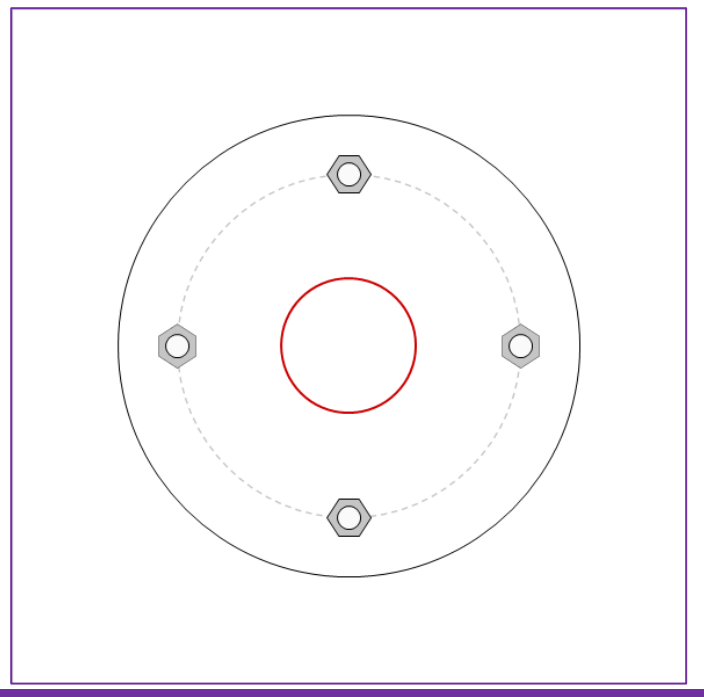

Bottom Plate - External

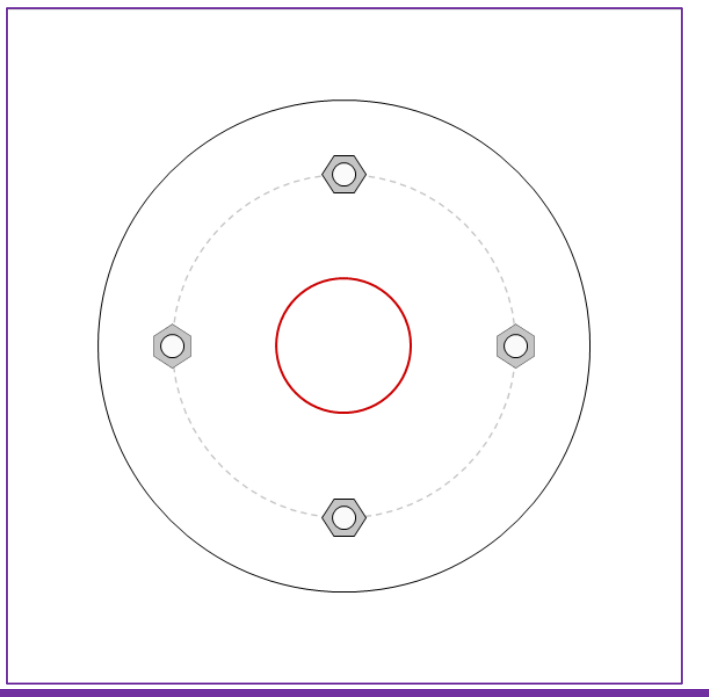

Connection Properties

Bolt Data

(4) 3/4" ø bolts (A325 N; Fy=92 ksi, Fu=120 ksi) on 11.5" BC

Top Plate Data

15.5" OD x 0.5" Plate (A36; Fy=36 ksi, Fu=58 ksi)

Bottom Plate Data

16.5" OD x 0.75" Plate (A36; Fy=36 ksi, Fu=58 ksi)

Top Stiffener Data

N/A

Bottom Stiffener Data

N/A

Top Pole Data

4.5" x 0.216" round pole (A53-B-35; Fy=35 ksi, Fu=60 ksi)

Bottom Pole Data

4.5" x 0.216" round pole (A53-B-35; Fy=35 ksi, Fu=60 ksi)

Analysis Results

Bolt Capacity

Max Load (kips)	0.24	
Allowable (kips)	30.06	
Stress Rating:	**0.8%**	Pass

Top Plate Capacity

Max Stress (ksi):	1.45	(Flexural)
Allowable Stress (ksi):	32.40	
Stress Rating:	**4.3%**	Pass
Tension Side Stress Rating:	**3.5%**	Pass

Bottom Plate Capacity

Max Stress (ksi):	0.64	(Flexural)
Allowable Stress (ksi):	32.40	
Stress Rating:	**1.9%**	Pass
Tension Side Stress Rating:	**1.6%**	Pass

Monopole Flange Plate Connection

Elevation = 120 ft.

BU #	876332
Site Name	36 PROSPECT STREET
Order #	610891 Rev 0

TIA-222 Revision	H

Applied Loads	
Moment (kip-ft)	2.98
Axial Force (kips)	0.54
Shear Force (kips)	0.38

**TIA-222-H Section 15.5 Applied*

Top Plate - Internal

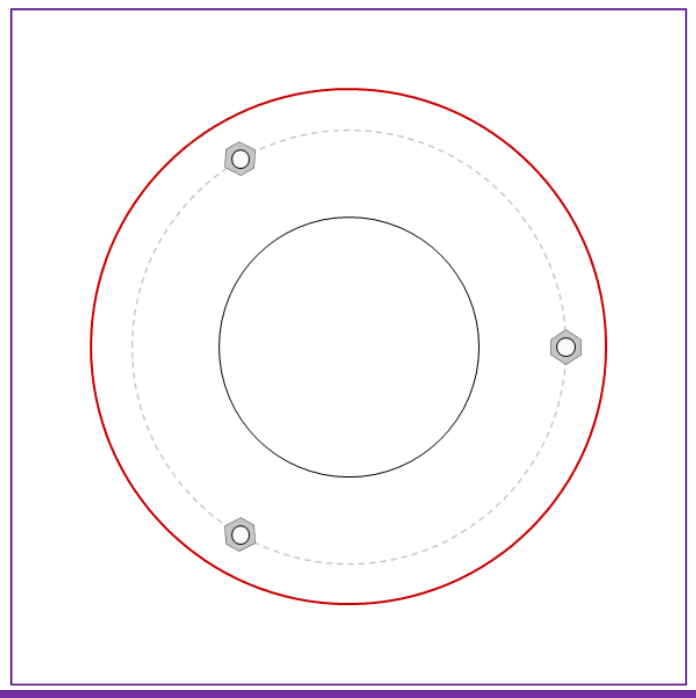

Bottom Plate - Internal

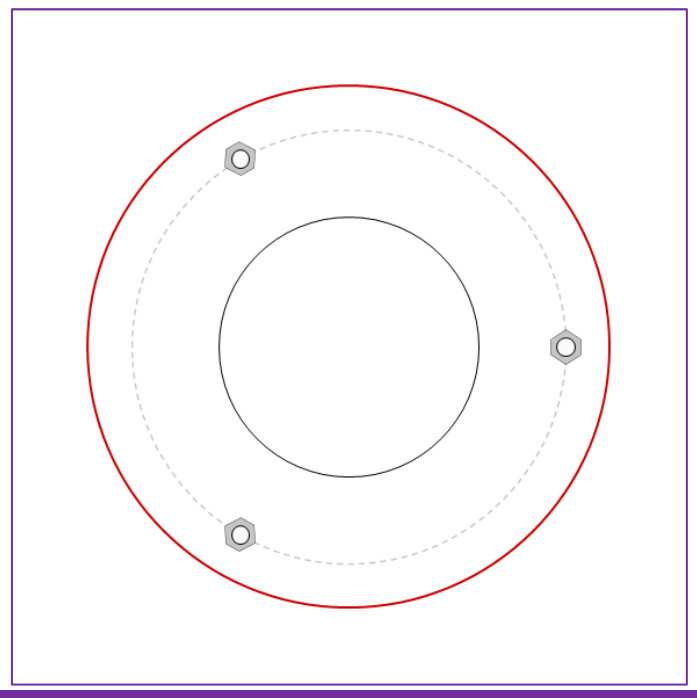

Connection Properties

Bolt Data

(3) 3/4" ø bolts (A325 N; Fy=92 ksi, Fu=120 ksi) on 18" BC

Top Plate Data

10.75" ID x 0.75" Plate (A36; Fy=36 ksi, Fu=58 ksi)

Bottom Plate Data

10.75" ID x 0.75" Plate (A36; Fy=36 ksi, Fu=58 ksi)

Top Stiffener Data

N/A

Bottom Stiffener Data

N/A

Top Pole Data

22" x 0.322" round pole (A53-B-35; Fy=35 ksi, Fu=60 ksi)

Bottom Pole Data

22" x 0.1875" 12-sided pole (A572-60; Fy=60 ksi, Fu=75 ksi)

Analysis Results

Bolt Capacity

Max Load (kips)	2.47	
Allowable (kips)	30.06	
Stress Rating:	**7.8%**	Pass

Top Plate Capacity

Max Stress (ksi):	4.53	(Flexural)
Allowable Stress (ksi):	32.40	
Stress Rating:	**13.3%**	Pass
Tension Side Stress Rating:	**3.0%**	Pass

Bottom Plate Capacity

Max Stress (ksi):	4.56	(Flexural)
Allowable Stress (ksi):	32.40	
Stress Rating:	**13.4%**	Pass
Tension Side Stress Rating:	**3.0%**	Pass

Monopole Base Plate Connection

Site Info	
BU #	876332
Site Name	36 PROSPECT STREET
Order #	610891 Rev 0

Analysis Considerations	
TIA-222 Revision	H
Grout Considered:	No
l_{ar} (in)	1

Applied Loads	
Moment (kip-ft)	1551.99
Axial Force (kips)	33.90
Shear Force (kips)	19.10

**TIA-222-H Section 15.5 Applied*

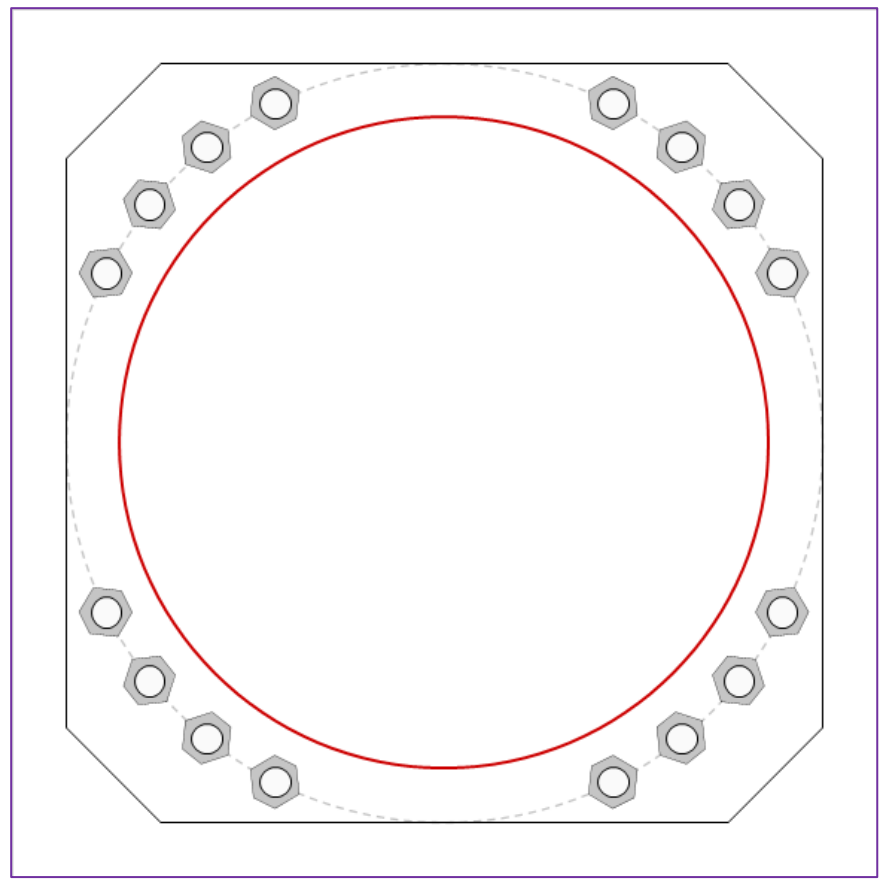

Connection Properties

Anchor Rod Data

(16) 2-1/4" ø bolts (A615-75 N; Fy=75 ksi, Fu=100 ksi) on 56" BC

Anchor Spacing: 6 in

Base Plate Data

56" W x 3" Plate (A572-50; Fy=50 ksi, Fu=65 ksi); Clip: 7 in

Stiffener Data

N/A

Pole Data

47.98" x 0.4375" 12-sided pole (A572-65; Fy=65 ksi, Fu=80 ksi)

Analysis Results

Anchor Rod Summary *(units of kips, kip-in)*

Pu_t = 80.97	ϕPn_t = 243.75	**Stress Rating**
Vu = 1.19	ϕVn = 149.1	**31.6%**
Mu = n/a	ϕMn = n/a	**Pass**

Base Plate Summary

Max Stress (ksi):	15.21	(Flexural)
Allowable Stress (ksi):	45	
Stress Rating:	**32.2%**	**Pass**

Monopole Base Reaction Comparison Test

BU # :	876332
Site Name:	36 PROSPECT STREET
Order Number:	610891 Rev 0
Design TIA:	TIA-222-F
Current TIA:	TIA-222-H
Component:	Monopole Base
Reference Doc ID:	1615432

TIA-222-F Compared To TIA-222-H

MONOPOLE BASE FOUNDATION REACTION COMPARISON

REACTIONS	DESIGN REACTIONS	*MODIFIED DESIGN REACTIONS	CURRENT REACTIONS	% CAPACITY
MOMENT (kip-ft)	3250.0	4387.5	1552.0	33.7%
SHEAR (kips)	31.0	41.9	19.1	43.5%

Deisgn loads from: CCIsites Doc #1615432

Although the shear capacity is at 43.5%, the moment reaction is the governing criteria for a monopole drilled pier foundation. Therefore, the overall capacity for this foundation is 33.7%.

*Design loads were multiplied by 1.35 for comparison as allowed by TIA-222-H, Section 15.6.

ASCE 7 Hazards Report

Address:
No Address at This Location

Standard: ASCE/SEI 7-10
Risk Category: II
Soil Class: D - Stiff Soil

Elevation: 259.63 ft (NAVD 88)
Latitude: 41.689906
Longitude: -72.705236

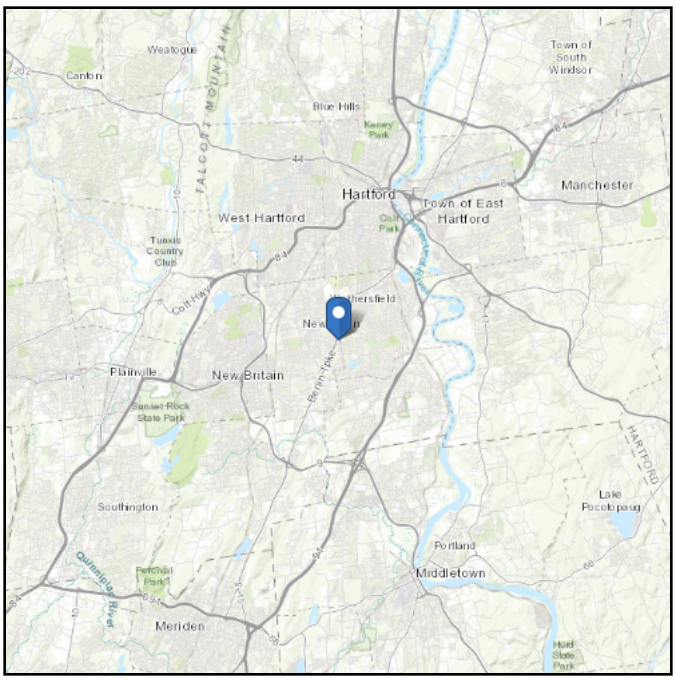

Wind

Results:

Wind Speed:	123 Vmph
10-year MRI	77 Vmph
25-year MRI	86 Vmph
50-year MRI	93 Vmph
100-year MRI	100 Vmph

Data Source: ASCE/SEI 7-10, Fig. 26.5-1A and Figs. CC-1–CC-4, and Section 26.5.2, incorporating errata of March 12, 2014

Date Accessed: Tue Apr 13 2021

Value provided is 3-second gust wind speeds at 33 ft above ground for Exposure C Category, based on linear interpolation between contours. Wind speeds are interpolated in accordance with the 7-10 Standard. Wind speeds correspond to approximately a 7% probability of exceedance in 50 years (annual exceedance probability = 0.00143, MRI = 700 years).

Site is in a hurricane-prone region as defined in ASCE/SEI 7-10 Section 26.2. Glazed openings need not be protected against wind-borne debris.

Seismic

Site Soil Class: D - Stiff Soil

Results:

S_S :	0.182	S_{DS} :	0.194
S_1 :	0.064	S_{D1} :	0.102
F_a :	1.6	T_L :	6
F_v :	2.4	PGA :	0.092
S_{MS} :	0.291	PGA_M :	0.147
S_{M1} :	0.153	F_{PGA} :	1.6
		I_e :	1

Seismic Design Category B

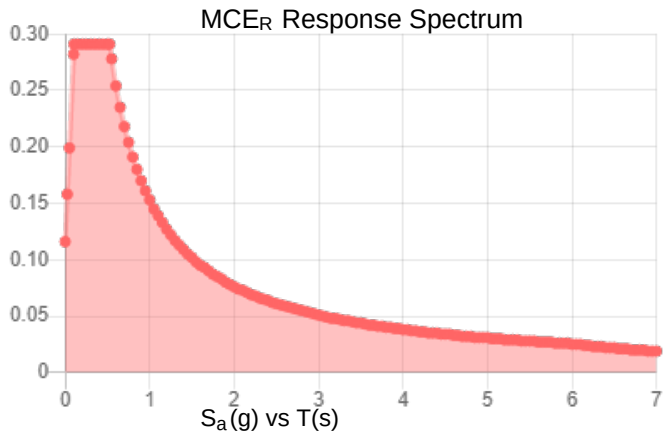

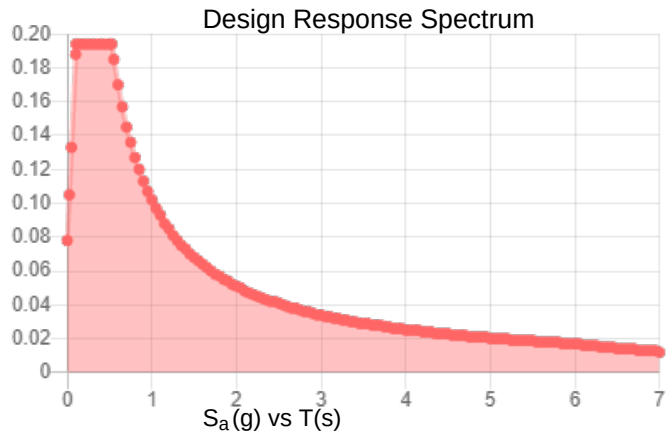

Data Accessed: Tue Apr 13 2021

Date Source: USGS Seismic Design Maps based on ASCE/SEI 7-10, incorporating Supplement 1 and errata of March 31, 2013, and ASCE/SEI 7-10 Table 1.5-2. Additional data for site-specific ground motion procedures in accordance with ASCE/SEI 7-10 Ch. 21 are available from USGS.

Ice

Results:

Ice Thickness:	1.00 in.
Concurrent Temperature:	5 F
Gust Speed:	50 mph
Data Source:	Standard ASCE/SEI 7-10, Figs. 10-2 through 10-8
Date Accessed:	Tue Apr 13 2021

Ice thicknesses on structures in exposed locations at elevations higher than the surrounding terrain and in valleys and gorges may exceed the mapped values.

Values provided are equivalent radial ice thicknesses due to freezing rain with concurrent 3-second gust speeds, for a 50-year mean recurrence interval, and temperatures concurrent with ice thicknesses due to freezing rain. Thicknesses for ice accretions caused by other sources shall be obtained from local meteorological studies. Ice thicknesses in exposed locations at elevations higher than the surrounding terrain and in valleys and gorges may exceed the mapped values.

The ASCE 7 Hazard Tool is provided for your convenience, for informational purposes only, and is provided “as is” and without warranties of any kind. The location data included herein has been obtained from information developed, produced, and maintained by third party providers; or has been extrapolated from maps incorporated in the ASCE 7 standard. While ASCE has made every effort to use data obtained from reliable sources or methodologies, ASCE does not make any representations or warranties as to the accuracy, completeness, reliability, currency, or quality of any data provided herein. Any third-party links provided by this Tool should not be construed as an endorsement, affiliation, relationship, or sponsorship of such third-party content by or from ASCE.

ASCE does not intend, nor should anyone interpret, the results provided by this Tool to replace the sound judgment of a competent professional, having knowledge and experience in the appropriate field(s) of practice, nor to substitute for the standard of care required of such professionals in interpreting and applying the contents of this Tool or the ASCE 7 standard.

In using this Tool, you expressly assume all risks associated with your use. Under no circumstances shall ASCE or its officers, directors, employees, members, affiliates, or agents be liable to you or any other person for any direct, indirect, special, incidental, or consequential damages arising from or related to your use of, or reliance on, the Tool or any information obtained therein. To the fullest extent permitted by law, you agree to release and hold harmless ASCE from any and all liability of any nature arising out of or resulting from any use of data provided by the ASCE 7 Hazard Tool.

Exhibit E

Mount Analysis

Maser Consulting Connecticut
2000 Midlantic Drive, Suite 100
Mt. Laurel, NJ 08054
856.797.0412
peter.albano@colliersengineering.com

Post-Mod Antenna Mount Analysis Report and PMI Requirements

Mount Fix

SMART Tool Project #: 10063097
Maser Consulting Connecticut Project #: 21777015A

May 26, 2021

Site Information	*Site ID:*	*468043-VZW / Newington CT*
	Site Name:	*Newington CT*
	Carrier Name:	*Verizon Wireless*
	Address:	*36 Prospect Street* *Newington, Connecticut 06111* *Hartford County*
	Latitude:	*41.689819°*
	Longitude:	*-72.705369°*
Structure Information	*Tower Type:*	*139.00-Ft Monopole*
	Mount Type:	*14.17-Ft Platform*

FUZE ID # 16232003

Analysis Results

Platform: **82.5% Pass**

******Contractor PMI Requirements*:**
Included at the end of this MA report
Available & Submitted via portal at https://pmi.vzwsmart.com
Contractor - Please Review Specific Site PMI Requirements Upon Award
Requirements also Noted on Mount Modification Drawings
Requirements may also be Noted on A & E drawings

Report Prepared By: Selene Chen

STATE OF CONNECTICUT
PETROS TSOUKALAS
32577
LICENSED
PROFESSIONAL ENGINEER

Executive Summary:

The objective of this report is to summarize the analysis results of the antenna support mount including the proposed modifications at the subject facility for the final wireless telecommunications configuration, per the applicable codes and standards.

This analysis is inclusive of the mount structure only and does not address the structural capacity of the supporting structure. This mounting frame was not analyzed as an anchor attachment point for fall protection. All climbing activities are required to have a fall protection plan completed by a competent person.

Sources of Information:

Document Type	Remarks
Radio Frequency Data Sheet (RFDS)	*Verizon RFDS Site ID: 324495, dated September 2, 2020*
Mount Mapping Report	*Structural Components, Site ID: 16232003, dated February 23, 2021*
Loading Configuration Email	*Email Correspondence with John Gavaletz dated March 31, 2021*
Mount Analysis Report	*Maser Consulting Connecticut, Project #: 21777015A, dated April 9, 2021*
Mount Modification Drawings	*Maser Consulting Connecticut, Project #: 21777015A, dated May 18, 2021*

Analysis Criteria:

Codes and Standards:	ANSI/TIA-222-H	
Wind Parameters:	Basic Wind Speed (Ultimate 3-sec. Gust), V_{ULT}:	118 mph
	Ice Wind Speed (3-sec. Gust):	50 mph
	Design Ice Thickness:	1.50 in
	Risk Category:	II
	Exposure Category:	B
	Topographic Category:	1
	Topographic Feature Considered:	N/A
	Topographic Method:	N/A
	Ground Elevation Factor, K_e:	0.991
Seismic Parameters:	S_S:	0.196
	S_1:	0.055
Maintenance Parameters:	Wind Speed (3-sec. Gust):	30 mph
	Maintenance Live Load, Lv:	250 lbs.
	Maintenance Live Load, Lm:	500 lbs.
Analysis Software:	RISA-3D (V17)	

Final Loading Configuration:

The following equipment has been considered for the analysis of the mount:

Mount Elevation (ft)	Equipment Elevation (ft)	Quantity	Manufacturer	Model	Status
104.50	107.50	3	Samsung	MT6407-77A	Added
	106.00	6	Andrew	SBNHH-1D65B	Retained
		3	Samsung	B2/B66A RRH-BR049	
		3	Samsung	B5/B13 RRH-BR04C	
		1	Raycap	RRFDC-3315-PF-48*	
		3	Andrew	LNX-6513DS-A1M	Added
	104.00	3	Samsung	XXDWMM-12.5-65-8T-CBRS	

* Equipment to be flush mounted directly to the Monopole. They are not mounted on platform mounts and are not included in this mount analysis.

Standard Conditions:

1. All engineering services are performed on the basis that the information provided to Maser Consulting Connecticut and used in this analysis is current and correct. The existing equipment loading has been applied at locations determined from the supplied documentation. Any deviation from the loading locations specified in this report shall be communicated to Maser Consulting Connecticut to verify deviation will not adversely impact the analysis.

2. Mounts are assumed to have been properly fabricated, installed and maintained in good condition, twist free and plumb in accordance with its original design and manufacturer's specifications.

   Obvious safety and structural issues/deficiencies noticed at the time of the mount mapping and reported in the Mount Mapping Report are assumed to be corrected and documented as part of the PMI process and are not considered in the mount analysis.

   The mount analysis and the mount mapping are not a condition assessment of the mount. Proper maintenance and condition assessments are still required post analysis.

3. For mount analyses completed from other data sources (including new replacement mounts) and not specifically mapped by Maser Consulting Connecticut, the mounts are assumed to have been properly fabricated, installed and maintained in good condition, twist free and plumb in accordance with its original design and manufacturer's specifications.

4. All member connections are assumed to have been designed to meet or exceed the load carrying capacity of the connected member unless otherwise specified in this report.

5. The mount was checked up to, and including, the bolts that fasten it to the mount collar/attachment and threaded rod connections in collar members if applicable. Local deformation and interaction between the mount collar/attachment and the supporting tower structure are outside the scope of this analysis.

6. All services are performed, results obtained, and recommendations made in accordance with generally accepted engineering principles and practices. Maser Consulting Connecticut is not responsible for the conclusion, opinions, and recommendations made by others based on the information supplied.

7. Structural Steel Grades have been assumed as follows, if applicable, unless otherwise noted in this analysis:
    - Channel, Solid Round, Angle, Plate — ASTM A36 (Gr. 36)
    - HSS (Rectangular) — ASTM 500 (Gr. B-46)
    - Pipe — ASTM A53 (Gr. B-35)
    - Threaded Rod — F1554 (Gr. 36)
    - Bolts — ASTM A325

8. Any mount modifications listed under Sources of Information are assumed to have been installed per the design specifications.

Discrepancies between in-field conditions and the assumptions listed above may render this analysis invalid unless explicitly approved by Maser Consulting Connecticut.

Analysis Results:

Component	Utilization %	Pass/Fail
Mount Pipe	*30.6%*	*Pass*
Dual Mount Pipe	*22.7%*	*Pass*
Support Rail Corner	*26.7%*	*Pass*
Support Rail	*25.4%*	*Pass*
Standoffs	*49.3%*	*Pass*
Face Horizontal	*82.5%*	*Pass*
Cross Members	*39.9%*	*Pass*
Grating Angle	*19.4%*	*Pass*
Support Rail Bracing	*8.1%*	*Pass*
Connection Check	*77.6%*	*Pass*

Structure Rating – *(Controlling Utilization of all Components)*	**82.5%**

Recommendation:

The existing mount will be **SUFFICIENT** for the final loading after the proposed modifications are successfully completed.

ANSI/ASSP rigging plan review services compliant with the requirements of ANSI/TIA 322 are available for a Construction Class IV site or other, if required. Separate review fees will apply.

Attachments:

1. Mount Photos
2. Mount Mapping Report (for reference only)
3. Analysis Calculations
4. **Contractor Required PMI Report Deliverables**
5. Antenna Placement Diagrams
6. TIA Adoption and Wind Speed Usage Letter

V3.0 Updated on 8-31-2020

Antenna Mount Mapping Form (PATENT PENDING)

FCC #
1273740

Tower Owner:	Crown Castle	**Mapping Date:**	2/23/2021
Site Name:	Newington	**Tower Type:**	Monopole
Site Number or ID:	16232003	**Tower Height (Ft.):**	139
Mapping Contractor:	Structural Components	**Mount Elevation (Ft.):**	106

This antenna mapping form is the property of TES and under **PATENT PENDING**. The formation contained herein is considered confidential in nature and is to be used only for the specific customer it was intended for. Reproduction, transmission, publication, modification or disclosure by any method is prohibited except by express written permission of TES. All means and methods are the responsibility of the contractor and the work shall be compliant with ANSI/ASSE A 10.48, OSHA, FCC, FAA and other safety requirements that may apply. TES is not warrantying the usability of the safety climb as it must be assessed prior to each use in compliance with OSHA requirements.

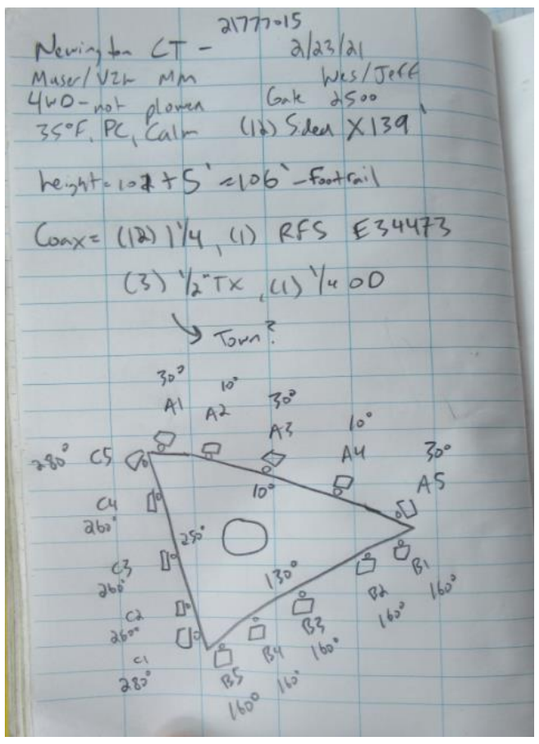

Mount Pipe Configuration and Geometries [Unit = Inches]

Sector / Position	Mount Pipe Size & Length	Vertical Offset Dimension "u"	Horizontal Offset "C1, C2, C3, etc."	Sector / Position	Mount Pipe Size & Length	Vertical Offset Dimension "u"	Horizontal Offset "C1, C2, C3, etc."
A1	2-3/8 x 0.154 x 72	61.00	14.00	C1	2-3/8 x 0.154 x 72	58.00	12.00
A2	2-3/8 x 0.154 x 72	67.00	44.00	C2	2-3/8 x 0.154 x 72	67.00	49.50
A3	2-3/8 x 0.154 x 72	61.00	79.00	C3	2-3/8 x 0.154 x 72	62.00	79.50
A4	2-3/8 x 0.154 x 72	61.00	135.00	C4	2-3/8 x 0.218 x 72	57.00	133.50
A5	2-3/8 x 0.154 x 72	61.00	159.00	C5	2-3/8 x 0.154 x 72	61.00	156.50
A6				C6			
B1	2-3/8 x 0.154 x 72	58.00	12.50	D1			
B2	2-3/8 x 0.154 x 72	67.00	41.00	D2			
B3	2-3/8 x 0.154 x 72	62.00	81.00	D3			
B4	2-3/8 x 0.154 x 72	64.00	135.00	D4			
B5	2-3/8 x 0.154 x 72	58.00	158.00	D5			
B6				D6			
Distance between bottom rail and mount CL elevation (dim d). Unit is inches. See 'Mount Elev Ref' tab for details. :							0.00
Distance from top of bottom support rail to lowest tip of ant./eqpt. of Carrier above. (N/A if > 10 ft.) :							6.4
Distance from top of bottom support rail to highest tip of ant./eqpt. of Carrier below. (N/A if > 10 ft.) :							
Please enter additional infomation or comments below.							
Tower Face Width at Mount Elev. (ft.):			Tower Leg Size or Pole Shaft Diameter at Mount Elev. (in.):				25

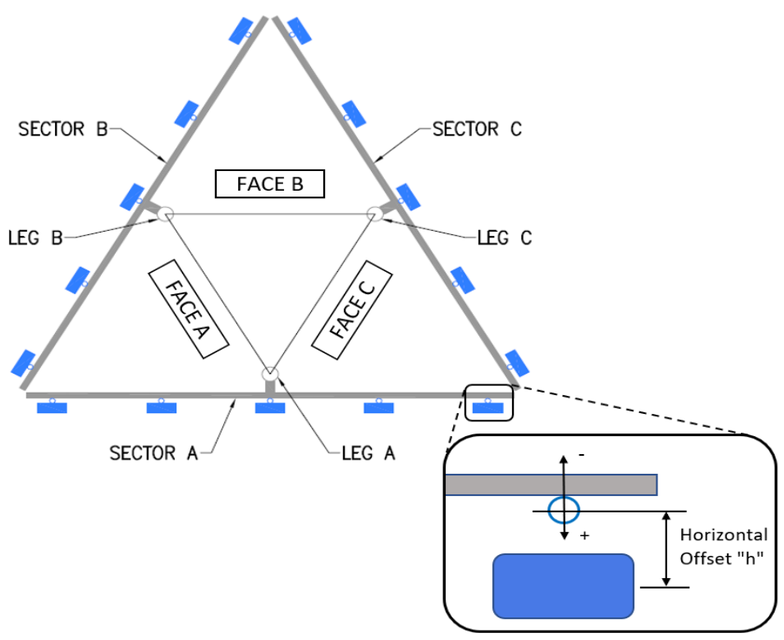

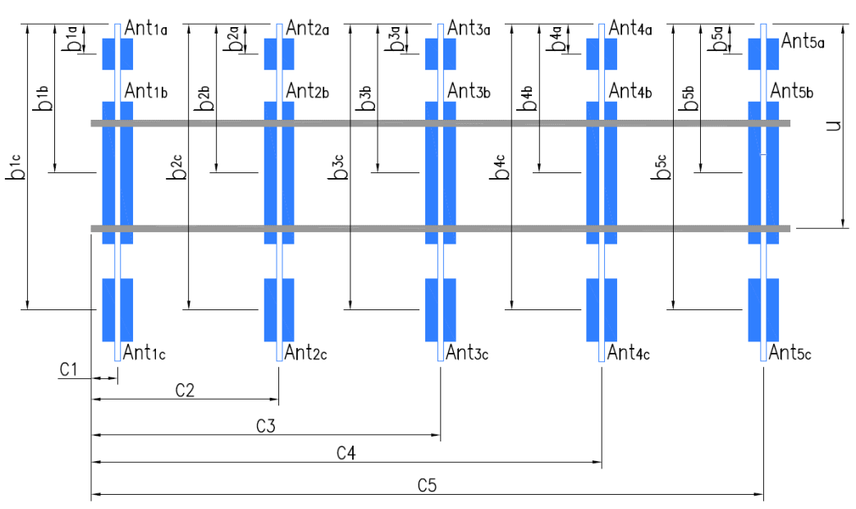

Antenna Layout (Looking Out From Tower)

Ants. Items	Enter antenna model. If not labeled, enter "Unknown".						Mounting Locations [Units are inches and degrees]			Photos of antennas
	Antenna Models if Known	Width (in.)	Depth (in.)	Height (in.)	Coax Size and Qty	Antenna Center-line (Ft.)	Vertical Distances"b_{1a}, b_{2a}, b_{3a}, b_{1b}...." (Inches)	Horiz. Offset "h" (Use "-" if Ant. is behind)	Antenna Azimuth (Degrees)	Photo Numbers
Sector A										
Ant_{1a}										
Ant_{1b}	Andrews db846 f65za	10.00	8.00	72.00	(1) 1.25 tx	108.333	33.00	9.00	30.00	6
Ant_{1c}										
Ant_{2a}	Alactel B4 RRH2x60-4	10.50	6.00	36.00	jumpers	110.333	15.00	-6.00	10.00	157
Ant_{2b}	Comm SBNHH-1D65B	12.00	7.00	73.00	jumpers	108.125	41.50	9.00	10.00	6
Ant_{2c}										
Ant_{3a}	Alcatel B13 RRH4x30	12.00	7.50	20.00	jumpers	108.333	33.00	-4.50	10.00	178
Ant_{3b}	Andrews LNX-6514DS	12.00	7.00	73.00	(2) 1.25 tx	108.083	36.00	11.00	30.00	165
Ant_{3c}										
Ant_{4a}										
Ant_{4b}	Comm SBNHH-1D65B	12.00	7.00	73.00	jumpers	107.625	41.50	11.00	10.00	186
Ant_{4c}										
Ant_{5a}										
Ant_{5b}	Andrews db846 f65za	10.00	8.00	72.00	(1) 1.25 tx	108.333	33.00	9.00	30.00	188
Ant_{5c}										
Ant on Standoff										
Ant on Standoff										
Ant on Tower	RRFDC-3315-pf-48	14.50	10.00	19.00	) 1.5 Hybrid		64.00	5.00	40.00	202
Ant on Tower										

Mount Azimuth (Degree) for Each Sector			Tower Leg Azimuth (Degree) for Each Sector		
Sector A:	10.00	Deg	Leg A:		Deg
Sector B:	130.00	Deg	Leg B:		Deg
Sector C:	250.00	Deg	Leg C:		Deg
Sector D:		Deg	Leg D:		Deg

Climbing Facility Information			
Location:	200.00	Deg	
Climbing Facility	Corrosion Type:		Good condition.
	Access:		Climbing path was unobstructed.
	Condition:		Good condition.

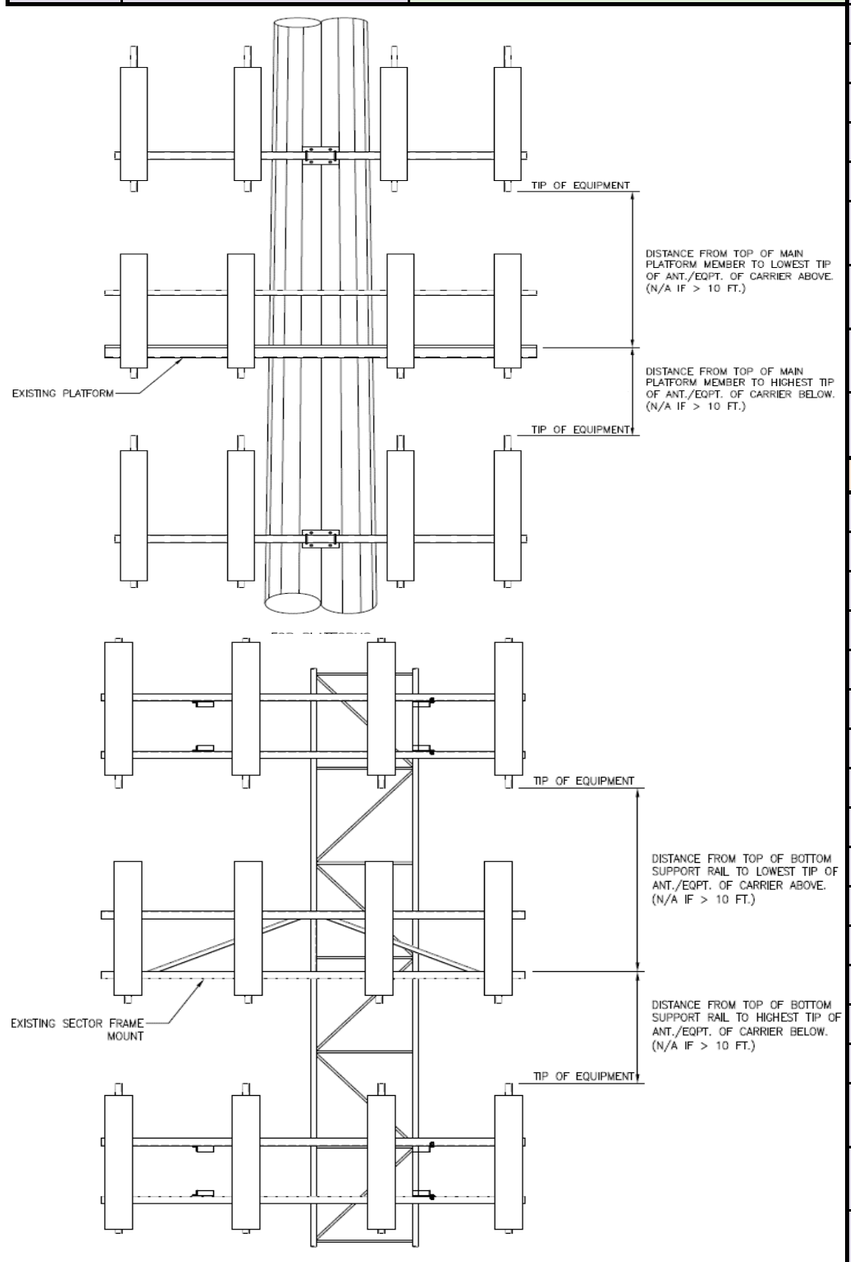

Sector B										
Ant_{1a}										
Ant_{1b}	Andrews db846 f65za	10.00	8.00	72.00	(1) 1.25 tx	108.083	33.00	9.00	160.00	209
Ant_{1c}										
Ant_{2a}	Alactel B4 RRH2x60-4	10.50	6.00	36.00	jumpers	110.5	13.00	-6.00	130.00	227
Ant_{2b}	Comm SBNHH-1D65B	12.00	7.00	73.00	jumpers	108.5	37.00	10.00	160.00	10
Ant_{2c}										
Ant_{3a}	Alcatel B13 RRH4x30	12.00	7.50	20.00	jumpers	108.417	33.00	-4.50	130.00	234
Ant_{3b}	Andrews LNX-6514DS	12.00	7.00	73.00	(2) 1.25 tx	108.083	37.00	11.00	160.00	10
Ant_{3c}										
Ant_{4a}										
Ant_{4b}	Comm SBNHH-1D65B	12.00	7.00	73.00	jumpers	107.833	42.00	11.00	160.00	10
Ant_{4c}										
Ant_{5a}										
Ant_{5b}	Andrews db846 f65za	10.00	8.00	72.00	(1) 1.25 tx	107.958	34.50	9.00	160.00	243
Ant_{5c}										
Ant on Standoff										
Ant on Standoff										
Ant on Tower										
Ant on Tower										

Sector C										
Ant_{1a}										
Ant_{1b}	Andrews db846 f65za	10.00	8.00	72.00	(1) 1.25 tx	107.917	35.00	9.00	280.00	249
Ant_{1c}										
Ant_{2a}	Alactel B4 RRH2x60-4	10.50	6.00	36.00	jumpers	110.417	14.00	-6.00	250.00	267
Ant_{2b}	Comm SBNHH-1D65B	12.00	7.00	73.00	jumpers	108.167	41.00	10.00	260.00	267
Ant_{2c}										
Ant_{3a}	Alcatel B13 RRH4x30	12.00	7.50	20.00	jumpers	108.5	32.00	-4.50	250.00	274
Ant_{3b}	Kathrein 80010735V0	12.00	4.00	76.00	(2) 1.25 tx	108.667	30.00	10.00	260.00	273
Ant_{3c}										
Ant_{4a}										
Ant_{4b}	Comm SBNHH-1D65B	12.00	7.00	73.00	jumpers	107.583	38.00	11.00	260.00	287
Ant_{4c}										
Ant_{5a}										
Ant_{5b}	Andrews db846 f65za	10.00	8.00	72.00	(1) 1.25 tx	108.25	34.00	9.00	280.00	288
Ant_{5c}										
Ant on Standoff										
Ant on Standoff										
Ant on Tower										
Ant on Tower										

Sector D										
Ant_{1a}										
Ant_{1b}										
Ant_{1c}										
Ant_{2a}										
Ant_{2b}										
Ant_{2c}										
Ant_{3a}										
Ant_{3b}										
Ant_{3c}										
Ant_{4a}										
Ant_{4b}										
Ant_{4c}										
Ant_{5a}										
Ant_{5b}										
Ant_{5c}										
Ant on Standoff										
Ant on Standoff										
Ant on Tower										
Ant on Tower										

Observed Safety and Structural Issues During the Mount Mapping		
Issue #	Description of Issue	Photo #

1		
2		
3		
4		
5		
6		
7		
8		

Mapping Notes
1. Please report any visible structural or safety issues observed on the antenna mounts (Damaged members, loose connections, tilting mounts, safety climb issues, etc.)
2. If the thickness of the existing pipes or tubing can't be obtained from a general tool (such as Caliper), please use an ultrasonic measurement tool (thickness gauge) to measure the thickness.
3. Please create all required detail sketches of the mounts and insert them into the "Sketches" tab.
4. Please measure and enter the bolt sizes and types under the Members Box in the spreadsheet of the mount type.
5. Take and label the photos of the tower, mounts, connections, antennas and all measurements. Minimum 50 photos are required.
6. Please measure and report the size and length of all existing antenna mounting pipes.
7. Please measure and report the antenna information for all sectors.
8. Don't delete or rearrange any sheet or contents of any sheet from this mapping form.

Standard Conditions
1. Obvious safety and structural issues/deficiencies noticed at the time of the mount mapping are to be reported in this mapping. However, this mount mapping is not a condition assessment of the mount.

V3.0 Updated on 8-31-2020

Antenna Mount Mapping Form (PATENT PENDING)

FCC #	1273740		
Tower Owner:	Crown Castle	**Mapping Date:**	2/23/2021
Site Name:	Newington	**Tower Type:**	Monopole
Site Number or ID:	16232003	**Tower Height (Ft.):**	139
Mapping Contractor:	Structural Components	**Mount Elevation (Ft.):**	106

This antenna mapping form is the property of TES and under **PATENT PENDING**. The formation contained herein is considered confidential in nature and is to be used only for the specific customer it was intended for. Reproduction, transmission, publication, modification or disclosure by any method is prohibited except by express written permission of TES. All means and methods are the responsibility of the contractor and the work shall be compliant with ANSI/ASSE A 10.48, OSHA, FCC, FAA and other safety requirements that may apply. TES is not warrantying the usability of the safety climb as it must be assessed prior to each use in compliance with OSHA requirements.

Please Insert Sketches of the Antenna Mount

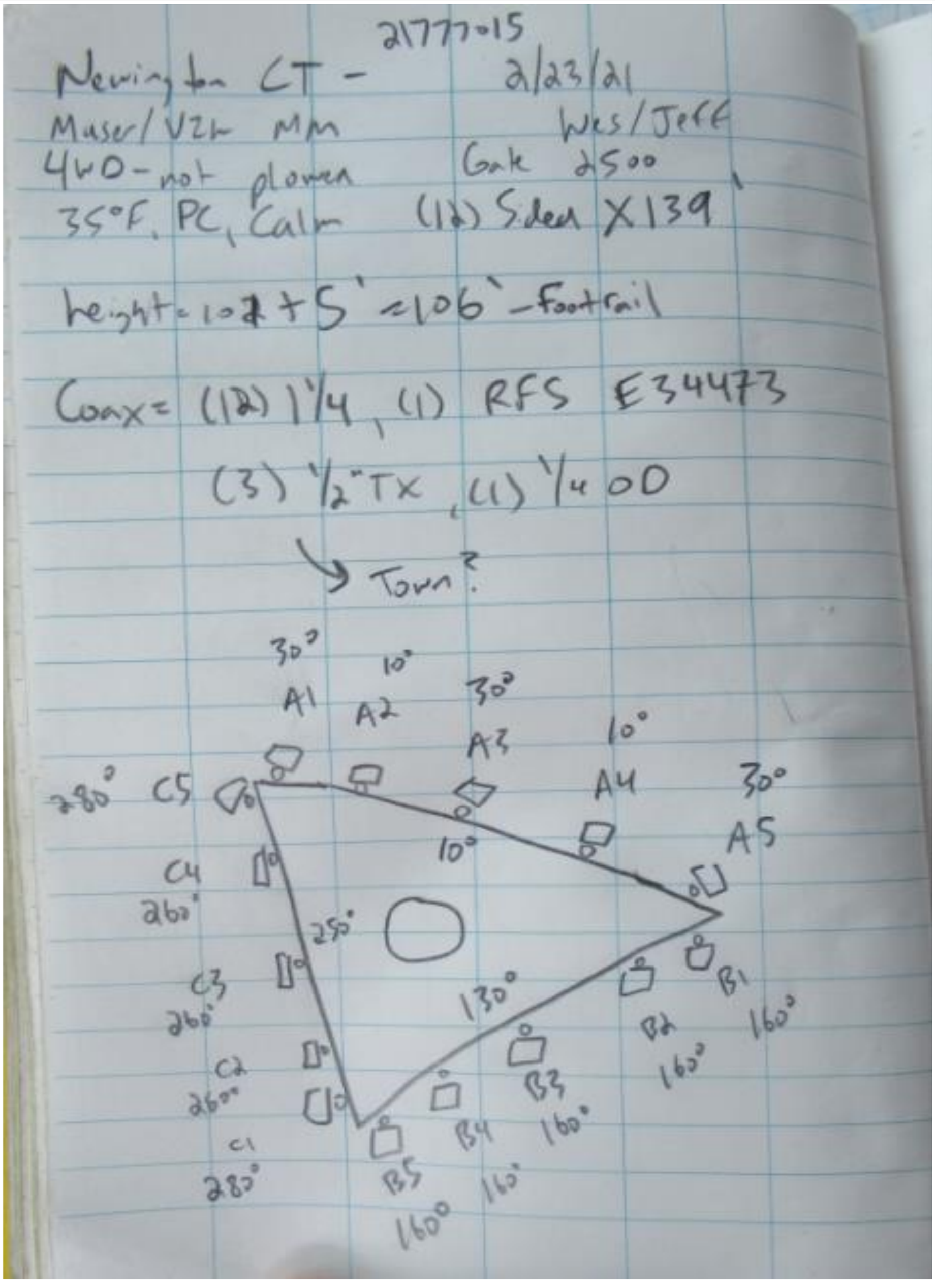

Please Insert Sketches of the Antenna Mount, cont'd

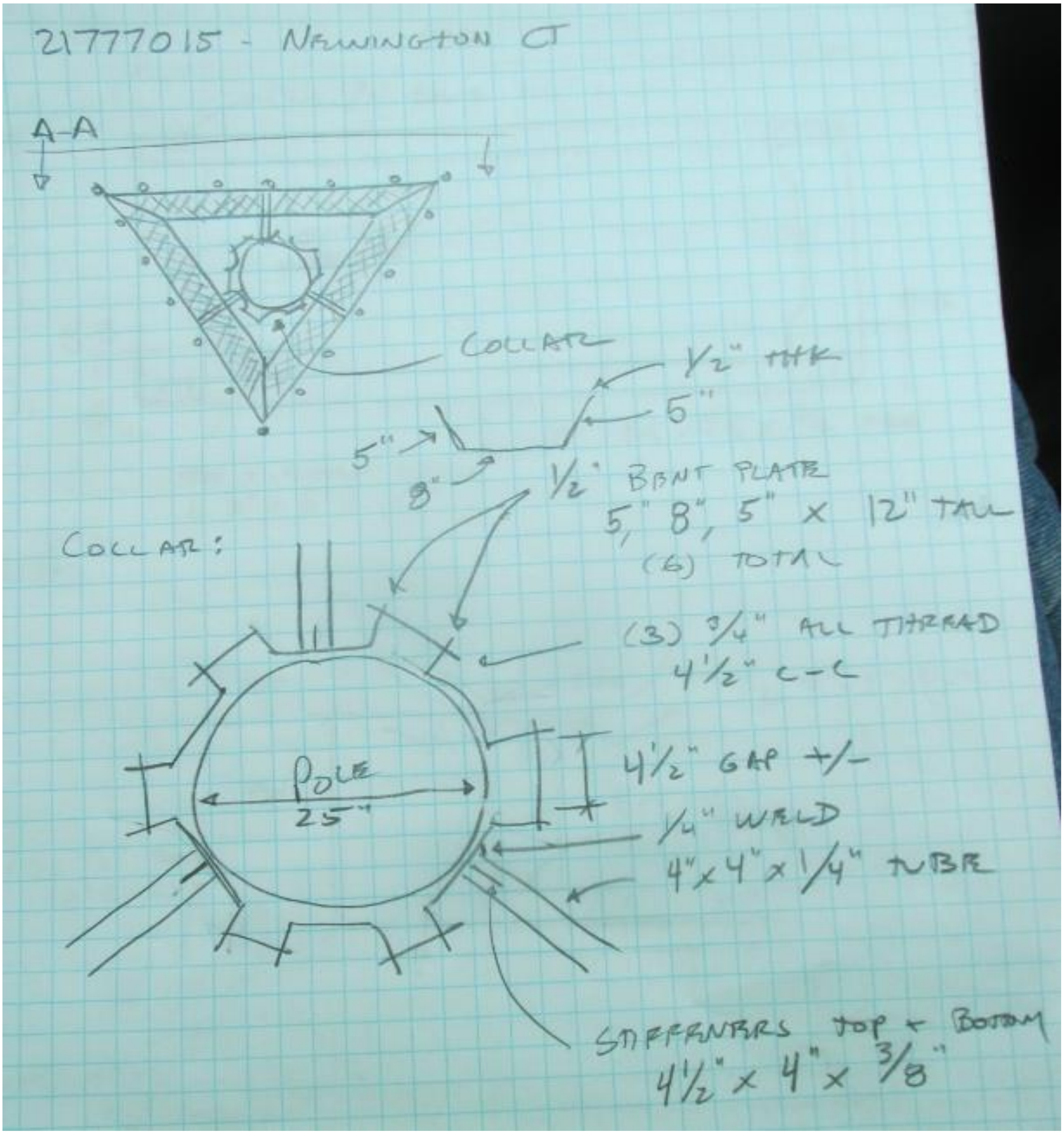

Please Insert Sketches of the Antenna Mount, cont'd

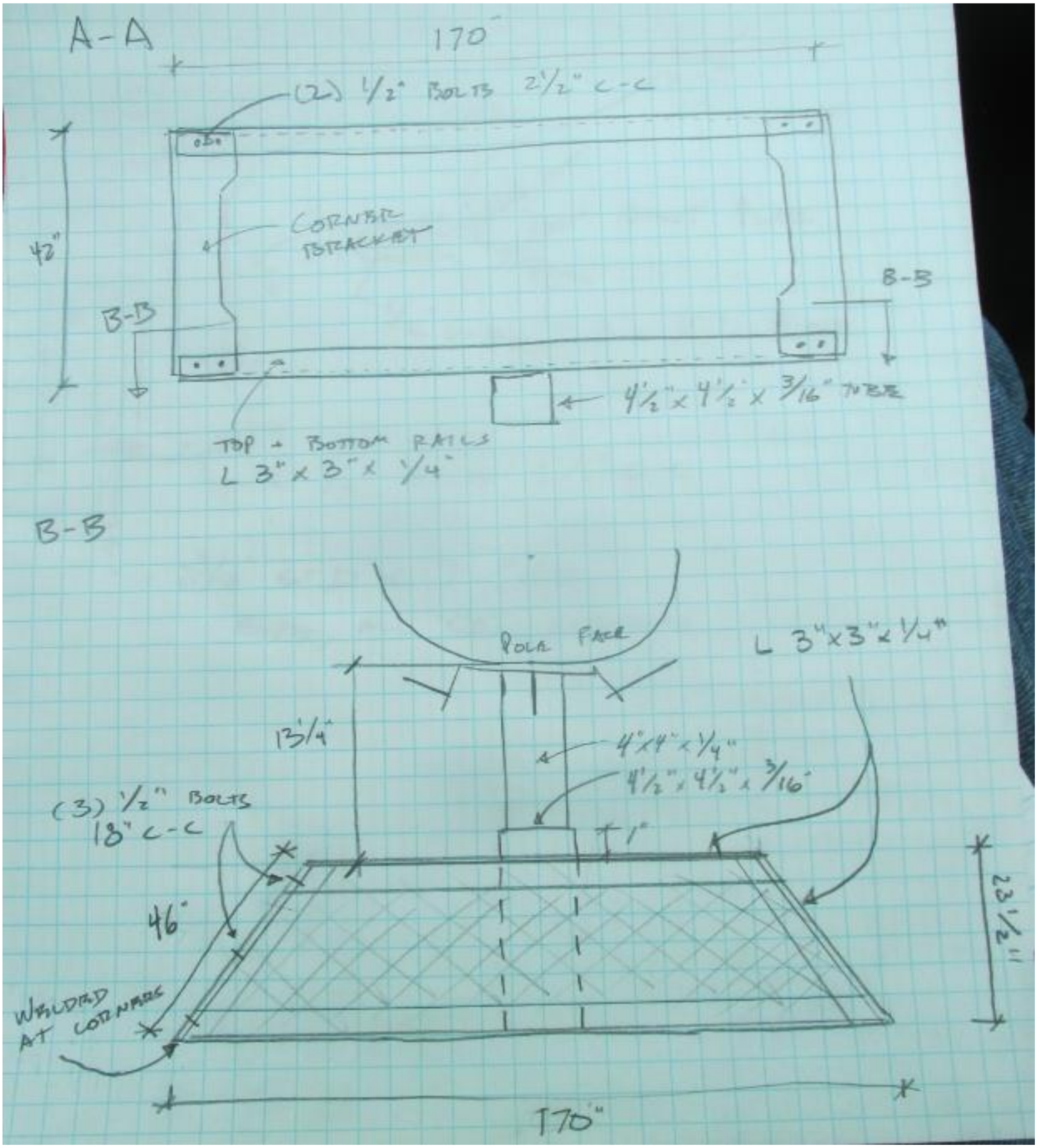

Please Insert Sketches of the Antenna Mount, cont'd

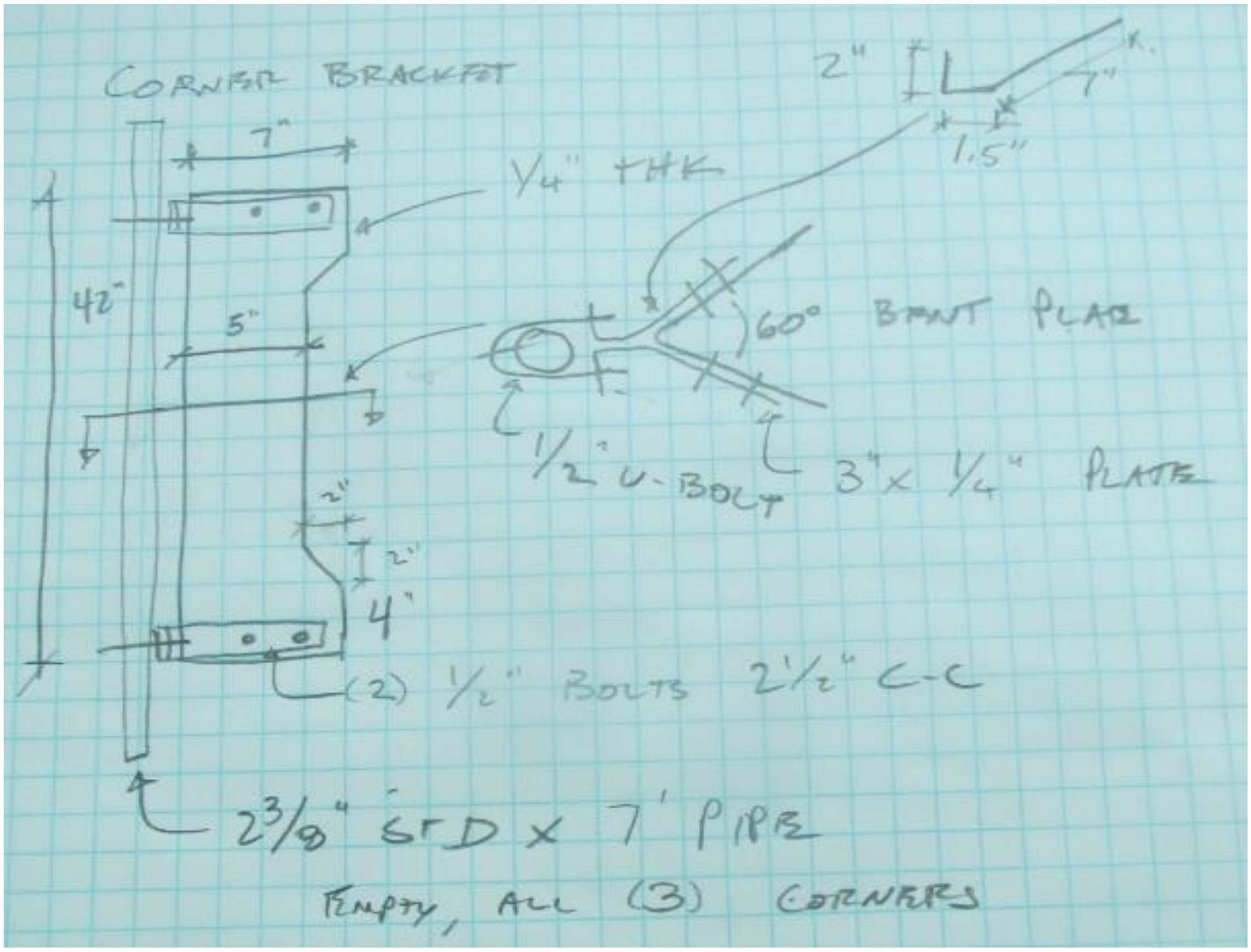

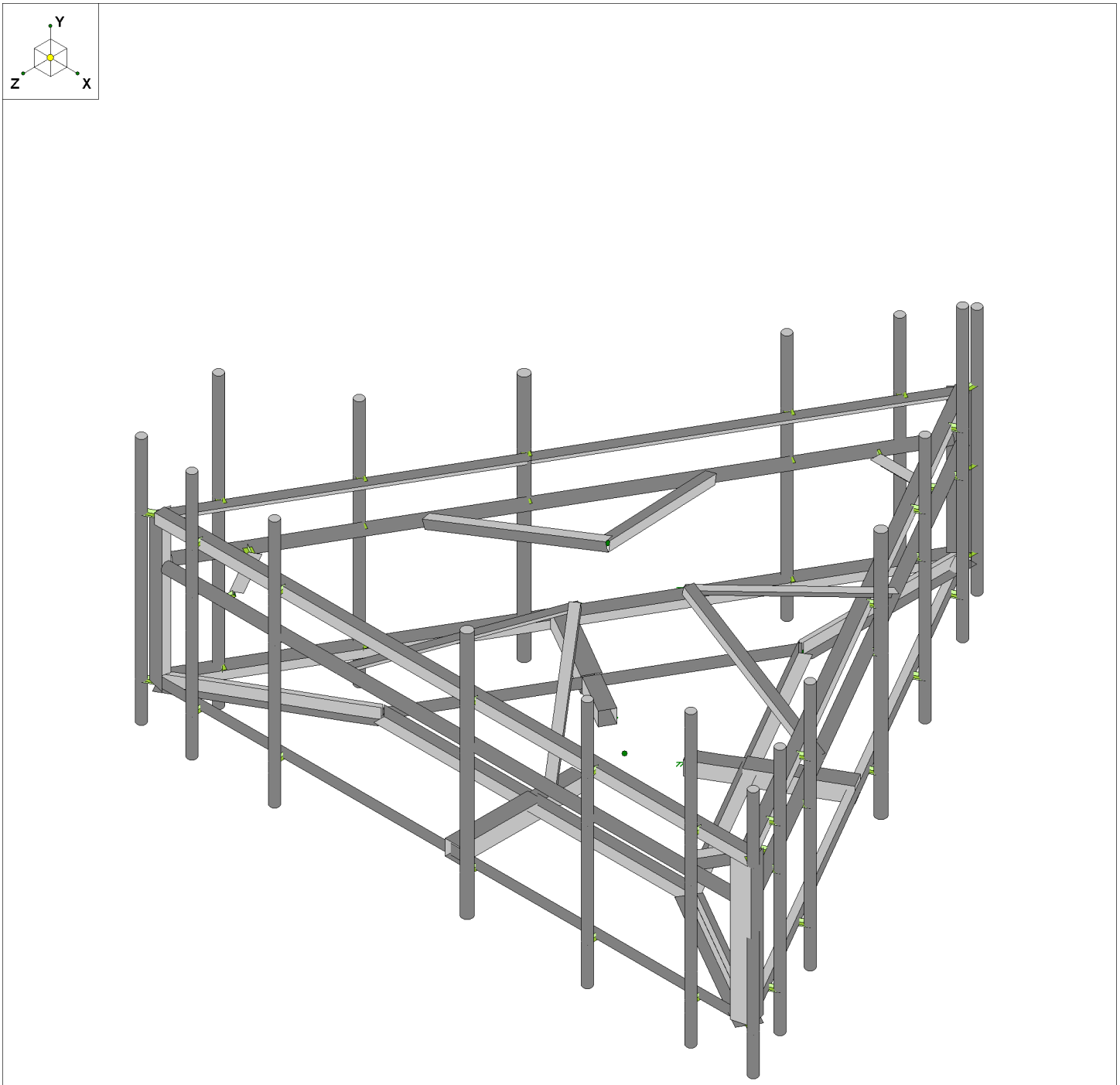

Envelope Only Solution

Maser Consulting	468043-VZW_MT_LO_H	SK - 1
		May 25, 2021 at 2:52 PM
Project No. 10063097		468043-VZW_MT_LO_H_LOADED....

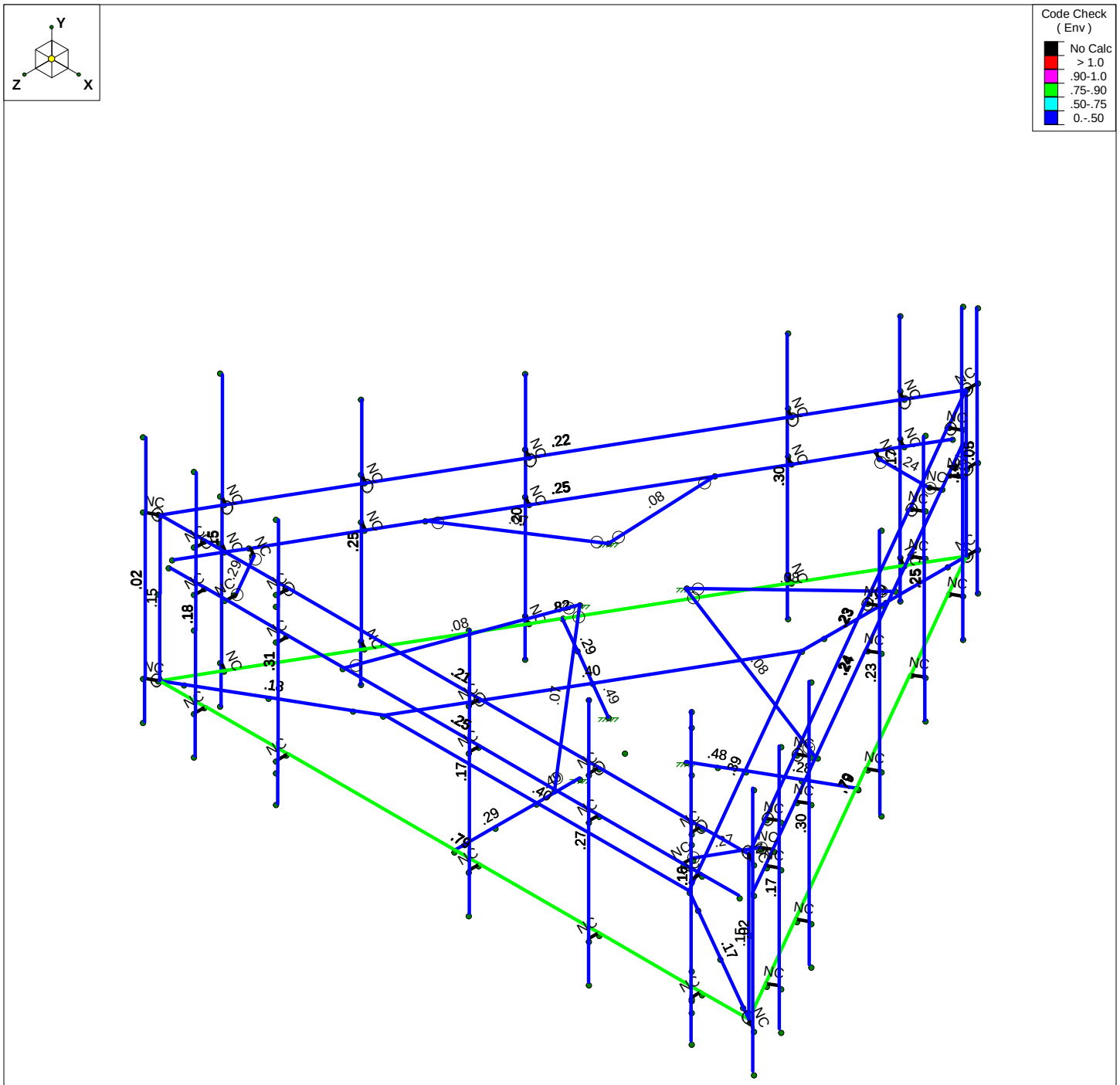

Member Code Checks Displayed (Enveloped)
Envelope Only Solution

Maser Consulting	468043-VZW_MT_LO_H	SK - 2
		May 25, 2021 at 2:52 PM
Project No. 10063097		468043-VZW_MT_LO_H_LOADED....

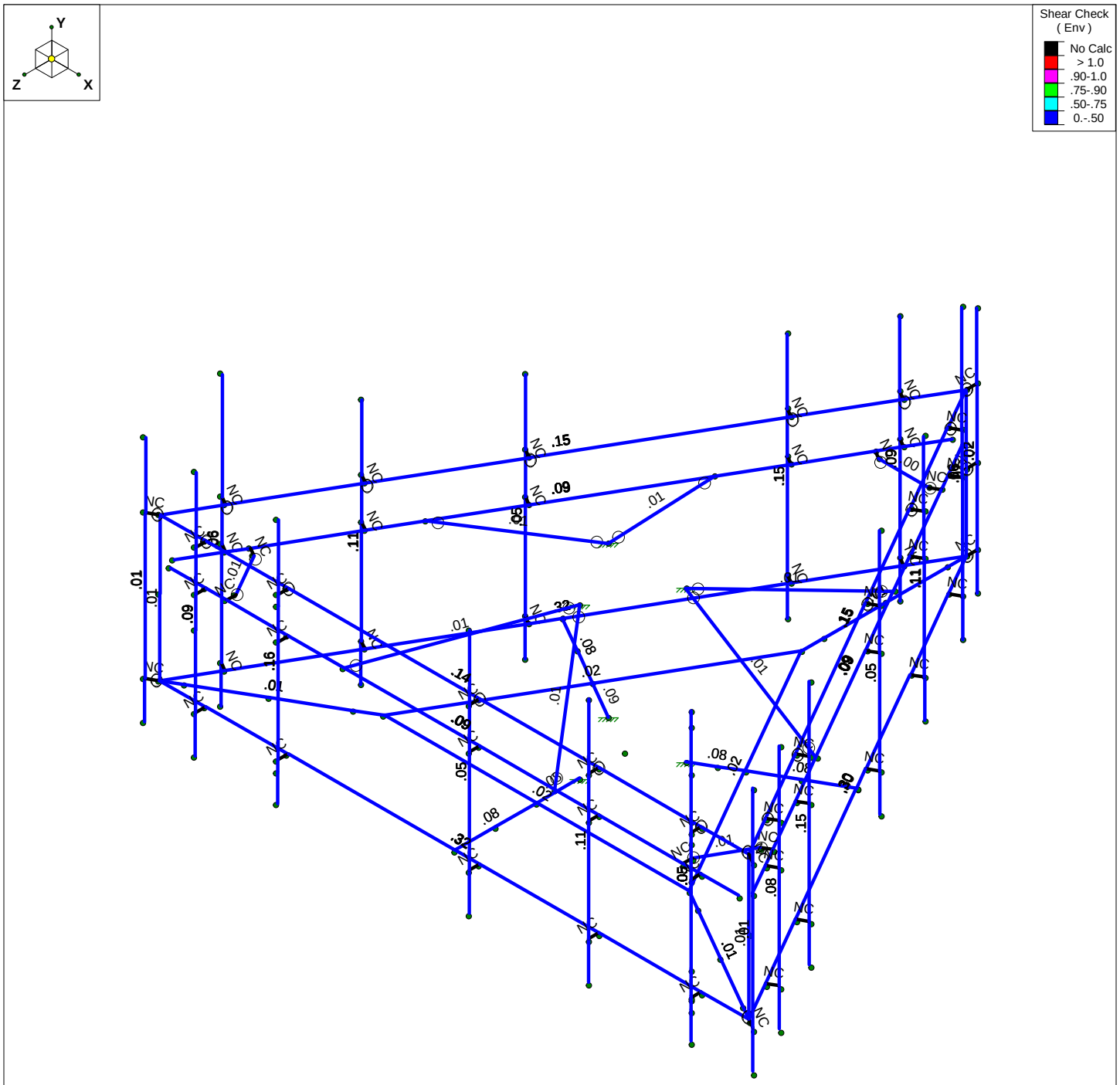

Member Shear Checks Displayed (Enveloped)
Envelope Only Solution

Maser Consulting	468043-VZW_MT_LO_H	SK - 3
		May 25, 2021 at 2:52 PM
Project No. 10063097		468043-VZW_MT_LO_H_LOADED....

Basic Load Cases

	BLC Description	Category	X Gravity	Y Gravity	Z Gravity	Joint	Point	Distributed	Area(Me...	Surface(P...
1	Antenna D	None					99			
2	Antenna Di	None					99			
3	Antenna Wo (0 Deg)	None					99			
4	Antenna Wo (30 Deg)	None					99			
5	Antenna Wo (60 Deg)	None					99			
6	Antenna Wo (90 Deg)	None					99			
7	Antenna Wo (120 Deg)	None					99			
8	Antenna Wo (150 Deg)	None					99			
9	Antenna Wo (180 Deg)	None					99			
10	Antenna Wo (210 Deg)	None					99			
11	Antenna Wo (240 Deg)	None					99			
12	Antenna Wo (270 Deg)	None					99			
13	Antenna Wo (300 Deg)	None					99			
14	Antenna Wo (330 Deg)	None					99			
15	Antenna Wi (0 Deg)	None					99			
16	Antenna Wi (30 Deg)	None					99			
17	Antenna Wi (60 Deg)	None					99			
18	Antenna Wi (90 Deg)	None					99			
19	Antenna Wi (120 Deg)	None					99			
20	Antenna Wi (150 Deg)	None					99			
21	Antenna Wi (180 Deg)	None					99			
22	Antenna Wi (210 Deg)	None					99			
23	Antenna Wi (240 Deg)	None					99			
24	Antenna Wi (270 Deg)	None					99			
25	Antenna Wi (300 Deg)	None					99			
26	Antenna Wi (330 Deg)	None					99			
27	Antenna Wm (0 Deg)	None					99			
28	Antenna Wm (30 Deg)	None					99			
29	Antenna Wm (60 Deg)	None					99			
30	Antenna Wm (90 Deg)	None					99			
31	Antenna Wm (120 De...	None					99			
32	Antenna Wm (150 De...	None					99			
33	Antenna Wm (180 De...	None					99			
34	Antenna Wm (210 De...	None					99			
35	Antenna Wm (240 De...	None					99			
36	Antenna Wm (270 De...	None					99			
37	Antenna Wm (300 De...	None					99			
38	Antenna Wm (330 De...	None					99			
39	Structure D	None		-1					3	
40	Structure Di	None						51	3	
41	Structure Wo (0 Deg)	None						102		
42	Structure Wo (30 Deg)	None						102		
43	Structure Wo (60 Deg)	None						102		
44	Structure Wo (90 Deg)	None						102		
45	Structure Wo (120 D...	None						102		
46	Structure Wo (150 D...	None						102		
47	Structure Wo (180 D...	None						102		
48	Structure Wo (210 D...	None						102		
49	Structure Wo (240 D...	None						102		
50	Structure Wo (270 D...	None						102		
51	Structure Wo (300 D...	None						102		

Basic Load Cases (Continued)

	BLC Description	Category	X Gravity	Y Gravity	Z Gravity	Joint	Point	Distributed	Area(Me...	Surface(P...
52	Structure Wo (330 D...	None						102		
53	Structure Wi (0 Deg)	None						102		
54	Structure Wi (30 Deg)	None						102		
55	Structure Wi (60 Deg)	None						102		
56	Structure Wi (90 Deg)	None						102		
57	Structure Wi (120 De...	None						102		
58	Structure Wi (150 De...	None						102		
59	Structure Wi (180 De...	None						102		
60	Structure Wi (210 De...	None						102		
61	Structure Wi (240 De...	None						102		
62	Structure Wi (270 De...	None						102		
63	Structure Wi (300 De...	None						102		
64	Structure Wi (330 De...	None						102		
65	Structure Wm (0 Deg)	None						102		
66	Structure Wm (30 D...	None						102		
67	Structure Wm (60 D...	None						102		
68	Structure Wm (90 D...	None						102		
69	Structure Wm (120 ...	None						102		
70	Structure Wm (150 ...	None						102		
71	Structure Wm (180 ...	None						102		
72	Structure Wm (210 ...	None						102		
73	Structure Wm (240 ...	None						102		
74	Structure Wm (270 ...	None						102		
75	Structure Wm (300 ...	None						102		
76	Structure Wm (330 ...	None						102		
77	Lm1	None					1			
78	Lm2	None					1			
79	Lv1	None					1			
80	Lv2	None					1			
81	BLC 39 Transient Are...	None						30		
82	BLC 40 Transient Are...	None						30		

Load Combinations

	Description	Solve	PDelta	S...	BLC	Fac...	BLC	Fac...	BLC	Fac...	BLC	Fac...	BLC	Fac...	BLC	Fac...	BLC	Fac...	BLC	Fac...	BLC	Fac...	BLC	Fac...
1	1.2D+1.0Wo (0...	Yes	Y		1	1.2	39	1.2	3	1	41	1												
2	1.2D+1.0Wo (3...	Yes	Y		1	1.2	39	1.2	4	1	42	1												
3	1.2D+1.0Wo (6...	Yes	Y		1	1.2	39	1.2	5	1	43	1												
4	1.2D+1.0Wo (9...	Yes	Y		1	1.2	39	1.2	6	1	44	1												
5	1.2D+1.0Wo (1...	Yes	Y		1	1.2	39	1.2	7	1	45	1												
6	1.2D+1.0Wo (1...	Yes	Y		1	1.2	39	1.2	8	1	46	1												
7	1.2D+1.0Wo (1...	Yes	Y		1	1.2	39	1.2	9	1	47	1												
8	1.2D+1.0Wo (2...	Yes	Y		1	1.2	39	1.2	10	1	48	1												
9	1.2D+1.0Wo (2...	Yes	Y		1	1.2	39	1.2	11	1	49	1												
10	1.2D+1.0Wo (2...	Yes	Y		1	1.2	39	1.2	12	1	50	1												
11	1.2D+1.0Wo (3...	Yes	Y		1	1.2	39	1.2	13	1	51	1												
12	1.2D+1.0Wo (3...	Yes	Y		1	1.2	39	1.2	14	1	52	1												
13	1.2D + 1.0Di + ...	Yes	Y		1	1.2	39	1.2	2	1	40	1	15	1	53	1								
14	1.2D + 1.0Di + ...	Yes	Y		1	1.2	39	1.2	2	1	40	1	16	1	54	1								
15	1.2D + 1.0Di + ...	Yes	Y		1	1.2	39	1.2	2	1	40	1	17	1	55	1								
16	1.2D + 1.0Di + ...	Yes	Y		1	1.2	39	1.2	2	1	40	1	18	1	56	1								

Load Combinations (Continued)

	Description	Solve	PDelta	S...	BLC	Fac...	BLC	Fac...	BLC	Fac...	BLC	Fac...	BLC	Fac...	BLC	Fac...	BLC	Fac...	BLC	Fac...	BLC	Fac...	BLC	Fac...
17	1.2D + 1.0Di + ...	Yes	Y		1	1.2	39	1.2	2	1	40	1	19	1	57	1								
18	1.2D + 1.0Di + ...	Yes	Y		1	1.2	39	1.2	2	1	40	1	20	1	58	1								
19	1.2D + 1.0Di + ...	Yes	Y		1	1.2	39	1.2	2	1	40	1	21	1	59	1								
20	1.2D + 1.0Di + ...	Yes	Y		1	1.2	39	1.2	2	1	40	1	22	1	60	1								
21	1.2D + 1.0Di + ...	Yes	Y		1	1.2	39	1.2	2	1	40	1	23	1	61	1								
22	1.2D + 1.0Di + ...	Yes	Y		1	1.2	39	1.2	2	1	40	1	24	1	62	1								
23	1.2D + 1.0Di + ...	Yes	Y		1	1.2	39	1.2	2	1	40	1	25	1	63	1								
24	1.2D + 1.0Di + ...	Yes	Y		1	1.2	39	1.2	2	1	40	1	26	1	64	1								
25	1.2D + 1.5Lm1 ...	Yes	Y		1	1.2	39	1.2	77	1.5	27	1	65	1										
26	1.2D + 1.5Lm1 ...	Yes	Y		1	1.2	39	1.2	77	1.5	28	1	66	1										
27	1.2D + 1.5Lm1 ...	Yes	Y		1	1.2	39	1.2	77	1.5	29	1	67	1										
28	1.2D + 1.5Lm1 ...	Yes	Y		1	1.2	39	1.2	77	1.5	30	1	68	1										
29	1.2D + 1.5Lm1 ...	Yes	Y		1	1.2	39	1.2	77	1.5	31	1	69	1										
30	1.2D + 1.5Lm1 ...	Yes	Y		1	1.2	39	1.2	77	1.5	32	1	70	1										
31	1.2D + 1.5Lm1 ...	Yes	Y		1	1.2	39	1.2	77	1.5	33	1	71	1										
32	1.2D + 1.5Lm1 ...	Yes	Y		1	1.2	39	1.2	77	1.5	34	1	72	1										
33	1.2D + 1.5Lm1 ...	Yes	Y		1	1.2	39	1.2	77	1.5	35	1	73	1										
34	1.2D + 1.5Lm1 ...	Yes	Y		1	1.2	39	1.2	77	1.5	36	1	74	1										
35	1.2D + 1.5Lm1 ...	Yes	Y		1	1.2	39	1.2	77	1.5	37	1	75	1										
36	1.2D + 1.5Lm1 ...	Yes	Y		1	1.2	39	1.2	77	1.5	38	1	76	1										
37	1.2D + 1.5Lm2 ...	Yes	Y		1	1.2	39	1.2	78	1.5	27	1	65	1										
38	1.2D + 1.5Lm2 ...	Yes	Y		1	1.2	39	1.2	78	1.5	28	1	66	1										
39	1.2D + 1.5Lm2 ...	Yes	Y		1	1.2	39	1.2	78	1.5	29	1	67	1										
40	1.2D + 1.5Lm2 ...	Yes	Y		1	1.2	39	1.2	78	1.5	30	1	68	1										
41	1.2D + 1.5Lm2 ...	Yes	Y		1	1.2	39	1.2	78	1.5	31	1	69	1										
42	1.2D + 1.5Lm2 ...	Yes	Y		1	1.2	39	1.2	78	1.5	32	1	70	1										
43	1.2D + 1.5Lm2 ...	Yes	Y		1	1.2	39	1.2	78	1.5	33	1	71	1										
44	1.2D + 1.5Lm2 ...	Yes	Y		1	1.2	39	1.2	78	1.5	34	1	72	1										
45	1.2D + 1.5Lm2 ...	Yes	Y		1	1.2	39	1.2	78	1.5	35	1	73	1										
46	1.2D + 1.5Lm2 ...	Yes	Y		1	1.2	39	1.2	78	1.5	36	1	74	1										
47	1.2D + 1.5Lm2 ...	Yes	Y		1	1.2	39	1.2	78	1.5	37	1	75	1										
48	1.2D + 1.5Lm2 ...	Yes	Y		1	1.2	39	1.2	78	1.5	38	1	76	1										
49	1.2D + 1.5Lv1	Yes	Y		1	1.2	39	1.2	79	1.5														
50	1.2D + 1.5Lv2	Yes	Y		1	1.2	39	1.2	80	1.5														
51	1.4D	Yes	Y		1	1.4	39	1.4																
52	Seismic Mass		Y		1	1	39	1																
53	1.2D + 1.0Ev + ...		Y		1	1.2	39	1.2	SX		SY	1	SZ	-1										
54	1.2D + 1.0Ev + ...		Y		1	1.2	39	1.2	SX	.5	SY	1	SZ	-.866										
55	1.2D + 1.0Ev + ...		Y		1	1.2	39	1.2	SX	.866	SY	1	SZ	-.5										
56	1.2D + 1.0Ev + ...		Y		1	1.2	39	1.2	SX	1	SY	1	SZ											
57	1.2D + 1.0Ev + ...		Y		1	1.2	39	1.2	SX	.866	SY	1	SZ	.5										
58	1.2D + 1.0Ev + ...		Y		1	1.2	39	1.2	SX	.5	SY	1	SZ	.866										
59	1.2D + 1.0Ev + ...		Y		1	1.2	39	1.2	SX		SY	1	SZ	1										
60	1.2D + 1.0Ev + ...		Y		1	1.2	39	1.2	SX	-.5	SY	1	SZ	.866										
61	1.2D + 1.0Ev + ...		Y		1	1.2	39	1.2	SX	-.866	SY	1	SZ	.5										
62	1.2D + 1.0Ev + ...		Y		1	1.2	39	1.2	SX	-1	SY	1	SZ											
63	1.2D + 1.0Ev + ...		Y		1	1.2	39	1.2	SX	-.866	SY	1	SZ	-.5										
64	1.2D + 1.0Ev + ...		Y		1	1.2	39	1.2	SX	-.5	SY	1	SZ	-.866										

Joint Coordinates and Temperatures

	Label	X [ft]	Y [ft]	Z [ft]	Temp [F]	Detach From Diap...
1	CP	0.	0	-0.	0	
2	N2	0.	0	1.095417	0	
3	N10	-0.	0	-4.291667	0	
4	N11	-0.	0	-4.833334	0	
5	N12	-0.	0	-6.333334	0	
6	N13	-0.	0	-7.833334	0	
7	N14	-0.	0	-8.291667	0	
8	N15	-3.716692	0	2.145833	0	
9	N16	-7.180794	0	4.145833	0	
10	N17	3.716693	0	2.145833	0	
11	N18	7.180794	0	4.145833	0	
12	N15A	0.	0	2.145833	0	
13	N16A	0.	0	4.145833	0	
14	N15B	-4.18579	0	2.416667	0	
15	N16B	-5.484828	0	3.166667	0	
16	N17A	-6.783866	0	3.916667	0	
17	N18A	4.18579	0	2.416666	0	
18	N19	5.484828	0	3.166666	0	
19	N20	6.783866	0	3.916666	0	
20	N35	6.014131	0	4.145833	0	
21	N37	6.014131	0	4.395833	0	
22	N49	6.014131	6.083333	4.395833	0	
23	N50	6.014131	-0.916667	4.395833	0	
24	N67	3.597461	0	-2.060682	0	
25	N77	0.948658	0	-0.547709	0	
26	N78	1.858346	0	-1.072917	0	
27	N91	-3.583333	0	-2.085151	0	
28	N109	-0.948659	0	-0.547708	0	
29	N110	-1.858346	0	-1.072917	0	
30	N108A	3.590397	0	-2.072917	0	
31	N110A	-3.590397	0	-2.072917	0	
32	N119B	1.425334	0	-0.822917	0	
33	N82	-0.	3.5	-8.291667	0	
34	N83B	-7.180794	3.5	4.145833	0	
35	N84A	7.180794	3.5	4.145833	0	
36	N36	6.014131	3.5	4.145833	0	
37	N37A	6.014131	3.75	4.395833	0	
38	N38	3.514131	0	4.145833	0	
39	N39	3.514131	0	4.395833	0	
40	N40	3.514131	5.083333	4.395833	0	
41	N41	3.514131	-0.916667	4.395833	0	
42	N42	3.514131	3.5	4.145833	0	
43	N43	3.514131	3.5	4.395833	0	
44	N44	0.597464	0	4.145833	0	
45	N45	0.597464	0	4.395833	0	
46	N46	0.597464	5.083333	4.395833	0	
47	N47	0.597464	-0.916667	4.395833	0	
48	N48	0.597464	3.5	4.145833	0	
49	N49A	0.597464	3.5	4.395833	0	
50	N50A	-4.069202	0	4.145833	0	
51	N51	-4.069202	0	4.395833	0	

Joint Coordinates and Temperatures (Continued)

	Label	X [ft]	Y [ft]	Z [ft]	Temp [F]	Detach From Diap...
52	N52	-4.069202	5.083333	4.395833	0	
53	N53	-4.069202	-0.916667	4.395833	0	
54	N54	-4.069202	3.5	4.145833	0	
55	N55	-4.069202	3.5	4.395833	0	
56	N56	-6.069202	0	4.145833	0	
57	N57	-6.069202	0	4.395833	0	
58	N58	-6.069202	5.083333	4.395833	0	
59	N59	-6.069202	-0.916667	4.395833	0	
60	N60	-6.069202	3.5	4.145833	0	
61	N61	-6.069202	3.5	4.395833	0	
62	N62	-0.	0	-8.558333	0	
63	N63	-0.	3.5	-8.558333	0	
64	N64	-0.	5.083333	-8.558333	0	
65	N65	-0.	-0.916667	-8.558333	0	
66	N69	-7.411734	0	4.279167	0	
67	N70	-7.411734	3.5	4.279167	0	
68	N71	-7.411734	5.083333	4.279167	0	
69	N72	-7.411734	-0.916667	4.279167	0	
70	N76	7.411735	0	4.279166	0	
71	N77A	7.411735	3.5	4.279166	0	
72	N78A	7.411735	5.083333	4.279166	0	
73	N79	7.411735	-0.916667	4.279166	0	
74	N75	0.583332	0	-7.281307	0	
75	N76A	0.799839	0	-7.406307	0	
76	N77B	0.799839	6.083333	-7.406307	0	
77	N78B	0.799839	-0.916667	-7.406307	0	
78	N79A	0.583332	3.5	-7.281307	0	
79	N80	0.799839	3.5	-7.406307	0	
80	N81	1.833332	0	-5.116243	0	
81	N82A	2.049839	0	-5.241243	0	
82	N83	2.049839	5.083333	-5.241243	0	
83	N84	2.049839	-0.916667	-5.241243	0	
84	N85	1.833332	3.5	-5.116243	0	
85	N86	2.049839	3.5	-5.241243	0	
86	N87	3.291665	0	-2.590336	0	
87	N88	3.508172	0	-2.715336	0	
88	N89	3.508172	5.083333	-2.715336	0	
89	N90	3.508172	-0.916667	-2.715336	0	
90	N91A	3.291665	3.5	-2.590336	0	
91	N92	3.508172	3.5	-2.715336	0	
92	N93	5.624998	0	1.451116	0	
93	N94	5.841505	0	1.326116	0	
94	N95	5.841505	5.083333	1.326116	0	
95	N96	5.841505	-0.916667	1.326116	0	
96	N97	5.624998	3.5	1.451116	0	
97	N98	5.841505	3.5	1.326116	0	
98	N99	6.624998	0	3.183167	0	
99	N100	6.841505	0	3.058167	0	
100	N101	6.841505	5.083333	3.058167	0	
101	N102	6.841505	-0.916667	3.058167	0	
102	N103	6.624998	3.5	3.183167	0	
103	N104	6.841505	3.5	3.058167	0	

Joint Coordinates and Temperatures (Continued)

	Label	X [ft]	Y [ft]	Z [ft]	Temp [F]	Detach From Diap...
104	N106	-6.597462	0	3.135473	0	
105	N107	-6.813968	0	3.010473	0	
106	N108	-6.813968	6.083333	3.010473	0	
107	N109A	-6.813968	-0.916667	3.010473	0	
108	N110B	-6.597462	3.5	3.135473	0	
109	N111	-6.813968	3.5	3.010473	0	
110	N112	-5.347462	0	0.970409	0	
111	N113	-5.563968	0	0.845409	0	
112	N114	-5.563968	5.083333	0.845409	0	
113	N115	-5.563968	-0.916667	0.845409	0	
114	N116	-5.347462	3.5	0.970409	0	
115	N117	-5.563968	3.5	0.845409	0	
116	N118	-3.889129	0	-1.555498	0	
117	N119	-4.105635	0	-1.680498	0	
118	N120	-4.105635	5.083333	-1.680498	0	
119	N121	-4.105635	-0.916667	-1.680498	0	
120	N122	-3.889129	3.5	-1.555498	0	
121	N123	-4.105635	3.5	-1.680498	0	
122	N124	-1.555796	0	-5.59695	0	
123	N125	-1.772302	0	-5.72195	0	
124	N126	-1.772302	5.083333	-5.72195	0	
125	N127	-1.772302	-0.916667	-5.72195	0	
126	N128	-1.555796	3.5	-5.59695	0	
127	N129	-1.772302	3.5	-5.72195	0	
128	N130	-0.555796	0	-7.329001	0	
129	N131	-0.772302	0	-7.454001	0	
130	N132	-0.772302	5.083333	-7.454001	0	
131	N133	-0.772302	-0.916667	-7.454001	0	
132	N134	-0.555796	3.5	-7.329001	0	
133	N135	-0.772302	3.5	-7.454001	0	
134	N134A	-4.069202	3.25	4.395833	0	
135	N135A	-4.069202	-.25	4.395833	0	
136	N136	6.014131	4.75	4.395833	0	
137	N137	-6.069202	1.75	4.395833	0	
138	N138	6.014131	5.75	4.395833	0	
139	N140	6.014131	3.2875	4.395833	0	
140	N141	6.014131	0.620833	4.395833	0	
141	N142	6.014131	0.041667	4.395833	0	
142	N143	6.014131	3.5	4.395833	0	
143	N143A	6.014131	-.25	4.395833	0	
144	N144	-0.	1.833333	-8.291667	0	
145	N145	-7.180794	1.833333	4.145833	0	
146	N146	7.180794	1.833333	4.145833	0	
147	N147	6.014131	2.5	4.145833	0	
148	N148	3.514131	2.5	4.145833	0	
149	N149	3.514131	2.5	4.395833	0	
150	N150	0.597464	2.5	4.145833	0	
151	N151	0.597464	2.5	4.395833	0	
152	N152	-4.069202	2.5	4.145833	0	
153	N153	-4.069202	2.5	4.395833	0	
154	N154	-6.069202	2.5	4.145833	0	
155	N155	-6.069202	2.5	4.395833	0	

Joint Coordinates and Temperatures (Continued)

	Label	X [ft]	Y [ft]	Z [ft]	Temp [F]	Detach From Diap...
156	N156	-0.	1.833333	-8.558333	0	
157	N157	0.583332	2.5	-7.281307	0	
158	N158	0.799839	2.5	-7.406307	0	
159	N159	1.833332	2.5	-5.116243	0	
160	N160	2.049839	2.5	-5.241243	0	
161	N161	3.291665	2.5	-2.590336	0	
162	N162	3.508172	2.5	-2.715336	0	
163	N163	5.624998	2.5	1.451116	0	
164	N164	5.841505	2.5	1.326116	0	
165	N165	6.624998	2.5	3.183167	0	
166	N166	6.841505	2.5	3.058167	0	
167	N167	-6.597462	2.5	3.135473	0	
168	N168	-6.813968	2.5	3.010473	0	
169	N169	-5.347462	2.5	0.970409	0	
170	N170	-5.563968	2.5	0.845409	0	
171	N171	-3.889129	2.5	-1.555498	0	
172	N172	-4.105635	2.5	-1.680498	0	
173	N173	-1.555796	2.5	-5.59695	0	
174	N174	-1.772302	2.5	-5.72195	0	
175	N175	-0.555796	2.5	-7.329001	0	
176	N176	-0.772302	2.5	-7.454001	0	
177	N177	6.014131	2.5	4.395833	0	
178	N178	0.	3.666667	1.095417	0	
179	N179	0.948658	3.666667	-0.547709	0	
180	N180	-0.948659	3.666667	-0.547708	0	
181	N181	-2.705651	2.5	4.145833	0	
182	N182	2.436159	2.5	4.145833	0	
183	N185	4.943223	2.5	0.270246	0	
184	N186	2.372318	2.5	-4.182692	0	
185	N189	-2.237571	2.5	-4.41608	0	
186	N190	-4.808476	2.5	0.036858	0	
187	N190A	0.	0	3.145833	0	
188	N193	2.724372	0	-1.572917	0	
189	N196	-2.724371	0	-1.572917	0	
190	N190B	-6.930794	2.5	4.145833	0	
191	N191	6.930794	2.5	4.145833	0	
192	N193A	7.055795	2.5	3.929327	0	
193	N194	0.125001	2.5	-8.07516	0	
194	N196A	-0.125	2.5	-8.075161	0	
195	N197	-7.055794	2.5	3.929327	0	
196	N196B	-5.569202	2.5	4.145833	0	
197	N197A	-5.569202	2.5	3.916667	0	
198	N198	5.569877	2.5	4.145833	0	
199	N200	5.569881	2.5	3.916667	0	
200	N201	6.374999	2.5	2.750154	0	
201	N202	6.176535	2.5	2.864737	0	
202	N203	0.805459	2.5	-6.896572	0	
203	N204	0.606993	2.5	-6.781992	0	
204	N206	-0.805795	2.5	-6.895988	0	
205	N207	-0.607331	2.5	-6.781405	0	
206	N208	-6.375335	2.5	2.750738	0	
207	N209	-6.176873	2.5	2.865324	0	

Hot Rolled Steel Section Sets

	Label	Shape	Type	Design List	Material	Design Rul...	A [in2]	Iyy [in4]	Izz [in4]	J [in4]
1	Mount Pipe	PIPE 2.0	Beam	Pipe	A53 Gr.B	Typical	1.02	.627	.627	1.25
2	Mod Face Horizontal	PIPE 2.5	Beam	Pipe	A53 Gr.B	Typical	1.61	1.45	1.45	2.89
3	P3 Dual Mount Pipe	PIPE 2.5	Beam	Pipe	A53 Gr.B	Typical	1.61	1.45	1.45	2.89
4	Support Rail	L3X3X4	Beam	Pipe	A53 Gr.B	Typical	1.44	1.23	1.23	.031
5	Bottom Corner Plate	L15X6.5X6	Beam	Single Angle	A36 Gr.36	Typical	7.922	24.473	192.705	.363
6	Standoff_2	HSS4.5X4...	Beam	Tube	A500 Gr.B ...	Typical	2.93	9.02	9.02	14.4
7	Cross Members	L3X3X4	Beam	Channel	A36 Gr.36	Typical	1.44	1.23	1.23	.031
8	Face Horizontal	L3X3X4	Beam	Single Angle	A36 Gr.36	Typical	1.44	1.23	1.23	.031
9	Mod Support Rail Co...	L3X3X4	Beam	Single Angle	A36 Gr.36	Typical	1.44	1.23	1.23	.031
10	Mod SFS kit	L2.5x2.5x3	Beam	Single Angle	A36 Gr.36	Typical	.901	.535	.535	.011
11	Mod Kicker Kit	LL3x3x3x3	Beam	Single Angle	A36 Gr.36	Typical	2.18	4.09	1.9	.027
12	Standoff_1	HSS4X4X4	Beam	Tube	A500 Gr.B ...	Typical	3.37	7.8	7.8	12.8
13	Grating Angle	LL3x3x4x0	Beam	Double Angle (...	A36 Gr.36	Typical	2.88	4.5	2.46	.063
14	Support Rail Corner	L5X5X4	Beam	Single Angle	A36 Gr.36	Typical	2.438	6.045	6.045	.049

Hot Rolled Steel Properties

	Label	E [ksi]	G [ksi]	Nu	Therm (/1E...	Density[k/ft...	Yield[ksi]	Ry	Fu[ksi]	Rt
1	A992	29000	11154	.3	.65	.49	50	1.1	65	1.1
2	A36 Gr.36	29000	11154	.3	.65	.49	36	1.5	58	1.2
3	A572 Gr.50	29000	11154	.3	.65	.49	50	1.1	65	1.1
4	A500 Gr.B RND	29000	11154	.3	.65	.527	42	1.4	58	1.3
5	A500 Gr.B Rect	29000	11154	.3	.65	.527	46	1.4	58	1.3
6	A53 Gr.B	29000	11154	.3	.65	.49	35	1.6	60	1.2
7	A1085	29000	11154	.3	.65	.49	50	1.4	65	1.3

Member Primary Data

	Label	I Joint	J Joint	K Joint	Rotate(deg)	Section/Shape	Type	Design List	Material	Design Rules
1	M1	N2	N15A			Standoff_1	Beam	Tube	A500 Gr.B...	Typical
2	M2	N15A	N16A			Standoff_2	Beam	Tube	A500 Gr.B...	Typical
3	M5	N14	N10		180	Grating Angle	Beam	Double Angle (...	A36 Gr.36	Typical
4	M6	N16	N15		180	Grating Angle	Beam	Double Angle (...	A36 Gr.36	Typical
5	M7	N18	N17		180	Grating Angle	Beam	Double Angle (...	A36 Gr.36	Typical
6	M6A	N17	N15		270	Cross Members	Beam	Channel	A36 Gr.36	Typical
7	M7A	N16	N18		270	Face Horizontal	Beam	Single Angle	A36 Gr.36	Typical
8	M15	N35	N37			RIGID	None	None	RIGID	Typical
9	MP1A	N49	N50		120	Mount Pipe	Beam	Pipe	A53 Gr.B	Typical
10	M23A	N10	N17		270	Cross Members	Beam	Channel	A36 Gr.36	Typical
11	M24	N18	N14		270	Face Horizontal	Beam	Single Angle	A36 Gr.36	Typical
12	M38	N77	N78			Standoff_1	Beam	Tube	A500 Gr.B...	Typical
13	M39A	N15	N10		270	Cross Members	Beam	Channel	A36 Gr.36	Typical
14	M40	N14	N16		270	Face Horizontal	Beam	Single Angle	A36 Gr.36	Typical
15	M54	N109	N110			Standoff_1	Beam	Tube	A500 Gr.B...	Typical
16	M55	N78	N108A			Standoff_2	Beam	Tube	A500 Gr.B...	Typical
17	M56	N110	N110A			Standoff_2	Beam	Tube	A500 Gr.B...	Typical
18	M42	N83B	N84A		180	Support Rail	Beam	Pipe	A53 Gr.B	Typical
19	M43A	N84A	N82		180	Support Rail	Beam	Pipe	A53 Gr.B	Typical
20	M44	N82	N83B		180	Support Rail	Beam	Pipe	A53 Gr.B	Typical
21	M21	N36	N143			RIGID	None	None	RIGID	Typical

Member Primary Data (Continued)

	Label	I Joint	J Joint	K Joint	Rotate(deg)	Section/Shape	Type	Design List	Material	Design Rules
22	M22	N38	N39			RIGID	None	None	RIGID	Typical
23	MP2A	N40	N41		120	Mount Pipe	Beam	Pipe	A53 Gr.B	Typical
24	M24A	N42	N43			RIGID	None	None	RIGID	Typical
25	M25	N44	N45			RIGID	None	None	RIGID	Typical
26	MP3A	N46	N47		120	P3 Dual Mount...	Beam	Pipe	A53 Gr.B	Typical
27	M27	N48	N49A			RIGID	None	None	RIGID	Typical
28	M28	N50A	N51			RIGID	None	None	RIGID	Typical
29	MP4A	N52	N53		120	Mount Pipe	Beam	Pipe	A53 Gr.B	Typical
30	M30	N54	N55			RIGID	None	None	RIGID	Typical
31	M31	N56	N57			RIGID	None	None	RIGID	Typical
32	MP5A	N58	N59		120	Mount Pipe	Beam	Pipe	A53 Gr.B	Typical
33	M33	N60	N61			RIGID	None	None	RIGID	Typical
34	M34	N82	N14		225	Support Rail C...	Beam	Single Angle	A36 Gr.36	Typical
35	M35	N82	N63			RIGID	None	None	RIGID	Typical
36	M36	N14	N62			RIGID	None	None	RIGID	Typical
37	M37	N64	N65			Mount Pipe	Beam	Pipe	A53 Gr.B	Typical
38	M38A	N83B	N16		105	Support Rail C...	Beam	Single Angle	A36 Gr.36	Typical
39	M39	N83B	N70			RIGID	None	None	RIGID	Typical
40	M40A	N16	N69			RIGID	None	None	RIGID	Typical
41	M41	N71	N72		240	Mount Pipe	Beam	Pipe	A53 Gr.B	Typical
42	M42A	N84A	N18		345	Support Rail C...	Beam	Single Angle	A36 Gr.36	Typical
43	M43	N84A	N77A			RIGID	None	None	RIGID	Typical
44	M44A	N18	N76			RIGID	None	None	RIGID	Typical
45	M45	N78A	N79		120	Mount Pipe	Beam	Pipe	A53 Gr.B	Typical
46	M46	N75	N76A			RIGID	None	None	RIGID	Typical
47	MP1C	N77B	N78B			Mount Pipe	Beam	Pipe	A53 Gr.B	Typical
48	M48	N79A	N80			RIGID	None	None	RIGID	Typical
49	M49	N81	N82A			RIGID	None	None	RIGID	Typical
50	MP2C	N83	N84			Mount Pipe	Beam	Pipe	A53 Gr.B	Typical
51	M51	N85	N86			RIGID	None	None	RIGID	Typical
52	M52	N87	N88			RIGID	None	None	RIGID	Typical
53	MP3C	N89	N90			P3 Dual Mount...	Beam	Pipe	A53 Gr.B	Typical
54	M54A	N91A	N92			RIGID	None	None	RIGID	Typical
55	M55A	N93	N94			RIGID	None	None	RIGID	Typical
56	MP4C	N95	N96			Mount Pipe	Beam	Pipe	A53 Gr.B	Typical
57	M57	N97	N98			RIGID	None	None	RIGID	Typical
58	M58	N99	N100			RIGID	None	None	RIGID	Typical
59	MP5C	N101	N102			Mount Pipe	Beam	Pipe	A53 Gr.B	Typical
60	M60	N103	N104			RIGID	None	None	RIGID	Typical
61	M61	N106	N107			RIGID	None	None	RIGID	Typical
62	MP1B	N108	N109A		240	Mount Pipe	Beam	Pipe	A53 Gr.B	Typical
63	M63	N110B	N111			RIGID	None	None	RIGID	Typical
64	M64	N112	N113			RIGID	None	None	RIGID	Typical
65	MP2B	N114	N115		240	Mount Pipe	Beam	Pipe	A53 Gr.B	Typical
66	M66	N116	N117			RIGID	None	None	RIGID	Typical
67	M67	N118	N119			RIGID	None	None	RIGID	Typical
68	MP3B	N120	N121		240	P3 Dual Mount...	Beam	Pipe	A53 Gr.B	Typical
69	M69	N122	N123			RIGID	None	None	RIGID	Typical
70	M70	N124	N125			RIGID	None	None	RIGID	Typical
71	MP4B	N126	N127		240	Mount Pipe	Beam	Pipe	A53 Gr.B	Typical
72	M72	N128	N129			RIGID	None	None	RIGID	Typical
73	M73	N130	N131			RIGID	None	None	RIGID	Typical

Member Primary Data (Continued)

	Label	I Joint	J Joint	K Joint	Rotate(deg)	Section/Shape	Type	Design List	Material	Design Rules
74	MP5B	N132	N133		240	Mount Pipe	Beam	Pipe	A53 Gr.B	Typical
75	M75	N134	N135			RIGID	None	None	RIGID	Typical
76	M76	N190B	N191		180	Mod Face Hori...	Beam	Pipe	A53 Gr.B	Typical
77	M77	N193A	N194		180	Mod Face Hori...	Beam	Pipe	A53 Gr.B	Typical
78	M78	N196A	N197		180	Mod Face Hori...	Beam	Pipe	A53 Gr.B	Typical
79	M79	N147	N177			RIGID	None	None	RIGID	Typical
80	M80	N148	N149			RIGID	None	None	RIGID	Typical
81	M81	N150	N151			RIGID	None	None	RIGID	Typical
82	M82	N152	N153			RIGID	None	None	RIGID	Typical
83	M83	N154	N155			RIGID	None	None	RIGID	Typical
84	M84	N144	N156			RIGID	None	None	RIGID	Typical
85	M85	N157	N158			RIGID	None	None	RIGID	Typical
86	M86	N159	N160			RIGID	None	None	RIGID	Typical
87	M87	N161	N162			RIGID	None	None	RIGID	Typical
88	M88	N163	N164			RIGID	None	None	RIGID	Typical
89	M89	N165	N166			RIGID	None	None	RIGID	Typical
90	M90	N167	N168			RIGID	None	None	RIGID	Typical
91	M91	N169	N170			RIGID	None	None	RIGID	Typical
92	M92	N171	N172			RIGID	None	None	RIGID	Typical
93	M93	N173	N174			RIGID	None	None	RIGID	Typical
94	M94	N175	N176			RIGID	None	None	RIGID	Typical
95	M95	N178	N181		180	Mod SFS kit	Beam	Single Angle	A36 Gr.36	Typical
96	M96	N178	N182		90	Mod SFS kit	Beam	Single Angle	A36 Gr.36	Typical
97	M97	N179	N185		180	Mod SFS kit	Beam	Single Angle	A36 Gr.36	Typical
98	M98	N179	N186		90	Mod SFS kit	Beam	Single Angle	A36 Gr.36	Typical
99	M99	N180	N189		180	Mod SFS kit	Beam	Single Angle	A36 Gr.36	Typical
100	M100	N180	N190		90	Mod SFS kit	Beam	Single Angle	A36 Gr.36	Typical
101	M101	N196B	N197A			RIGID	None	None	RIGID	Typical
102	M102	N198	N200			RIGID	None	None	RIGID	Typical
103	M103	N201	N202			RIGID	None	None	RIGID	Typical
104	M104	N203	N204			RIGID	None	None	RIGID	Typical
105	M105	N206	N207			RIGID	None	None	RIGID	Typical
106	M106	N208	N209			RIGID	None	None	RIGID	Typical
107	M107	N197A	N209		90	Mod Support ...	Beam	Single Angle	A36 Gr.36	Typical
108	M108	N202	N200		90	Mod Support ...	Beam	Single Angle	A36 Gr.36	Typical
109	M109	N207	N204		90	Mod Support ...	Beam	Single Angle	A36 Gr.36	Typical

Member Advanced Data

	Label	I Release	J Release	I Offset[in]	J Offset[in]	T/C Only	Physical	Defl Rat...	Analysis ...	Inactive	Seismic...
1	M1						Yes				None
2	M2						Yes				None
3	M5						Yes				None
4	M6						Yes				None
5	M7						Yes				None
6	M6A						Yes				None
7	M7A						Yes				None
8	M15						Yes	** NA **			None
9	MP1A						Yes				None
10	M23A						Yes				None
11	M24						Yes				None

Member Advanced Data (Continued)

	Label	I Release	J Release	I Offset[in]	J Offset[in]	T/C Only	Physical	Defl Rat...	Analysis ...	Inactive	Seismic...
12	M38						Yes				None
13	M39A						Yes				None
14	M40						Yes				None
15	M54						Yes				None
16	M55						Yes				None
17	M56						Yes				None
18	M42						Yes				None
19	M43A						Yes				None
20	M44						Yes				None
21	M21		OOOXOO				Yes	** NA **			None
22	M22						Yes	** NA **			None
23	MP2A						Yes				None
24	M24A		OOOXOO				Yes	** NA **			None
25	M25						Yes	** NA **			None
26	MP3A						Yes				None
27	M27		OOOXOO				Yes	** NA **			None
28	M28						Yes	** NA **			None
29	MP4A						Yes				None
30	M30		OOOXOO				Yes	** NA **			None
31	M31						Yes	** NA **			None
32	MP5A						Yes				None
33	M33		OOOXOO				Yes	** NA **			None
34	M34						Yes				None
35	M35		OOOXOO				Yes	** NA **			None
36	M36		OOOXOO				Yes	** NA **			None
37	M37						Yes				None
38	M38A						Yes				None
39	M39		OOOXOO				Yes	** NA **			None
40	M40A		OOOXOO				Yes	** NA **			None
41	M41						Yes				None
42	M42A						Yes				None
43	M43		OOOXOO				Yes	** NA **			None
44	M44A		OOOXOO				Yes	** NA **			None
45	M45						Yes				None
46	M46						Yes	** NA **			None
47	MP1C						Yes				None
48	M48		OOOXOO				Yes	** NA **			None
49	M49						Yes	** NA **			None
50	MP2C						Yes				None
51	M51		OOOXOO				Yes	** NA **			None
52	M52						Yes	** NA **			None
53	MP3C						Yes				None
54	M54A		OOOXOO				Yes	** NA **			None
55	M55A						Yes	** NA **			None
56	MP4C						Yes				None
57	M57		OOOXOO				Yes	** NA **			None
58	M58						Yes	** NA **			None
59	MP5C						Yes				None
60	M60		OOOXOO				Yes	** NA **			None
61	M61						Yes	** NA **			None
62	MP1B						Yes				None
63	M63		OOOXOO				Yes	** NA **			None

Member Advanced Data (Continued)

	Label	I Release	J Release	I Offset[in]	J Offset[in]	T/C Only	Physical	Defl Rat...	Analysis ...	Inactive	Seismic...
64	M64						Yes	** NA **			None
65	MP2B						Yes				None
66	M66		OOOXOO				Yes	** NA **			None
67	M67						Yes	** NA **			None
68	MP3B						Yes				None
69	M69		OOOXOO				Yes	** NA **			None
70	M70						Yes	** NA **			None
71	MP4B						Yes				None
72	M72		OOOXOO				Yes	** NA **			None
73	M73						Yes	** NA **			None
74	MP5B						Yes				None
75	M75		OOOXOO				Yes	** NA **			None
76	M76						Yes	Default			None
77	M77						Yes				None
78	M78						Yes				None
79	M79						Yes	** NA **			None
80	M80						Yes	** NA **			None
81	M81						Yes	** NA **			None
82	M82						Yes	** NA **			None
83	M83						Yes	** NA **			None
84	M84		OOOXOO				Yes	** NA **			None
85	M85						Yes	** NA **			None
86	M86						Yes	** NA **			None
87	M87						Yes	** NA **			None
88	M88						Yes	** NA **			None
89	M89						Yes	** NA **			None
90	M90						Yes	** NA **			None
91	M91						Yes	** NA **			None
92	M92						Yes	** NA **			None
93	M93						Yes	** NA **			None
94	M94						Yes	** NA **			None
95	M95	BenPIN	BenPIN				Yes				None
96	M96	BenPIN	BenPIN				Yes				None
97	M97	BenPIN	BenPIN				Yes				None
98	M98	BenPIN	BenPIN				Yes				None
99	M99	BenPIN	BenPIN				Yes				None
100	M100	BenPIN	BenPIN				Yes				None
101	M101	OOOOOX					Yes	** NA **			None
102	M102	OOOOOX					Yes	** NA **			None
103	M103	OOOOOX					Yes	** NA **			None
104	M104	OOOOOX					Yes	** NA **			None
105	M105	OOOOOX					Yes	** NA **			None
106	M106	OOOOOX					Yes	** NA **			None
107	M107						Yes				None
108	M108						Yes				None
109	M109						Yes				None

Member Point Loads (BLC 1 : Antenna D)

	Member Label	Direction	Magnitude[lb,k-ft]	Location[ft,%]
1	MP4A	Y	-15.2	2.33

Member Point Loads (BLC 1 : Antenna D) (Continued)

	Member Label	Direction	Magnitude[lb,k-ft]	Location[ft,%]
2	MP4A	My	-.013	2.33
3	MP4A	Mz	0	2.33
4	MP4A	Y	-15.2	4.33
5	MP4A	My	-.013	4.33
6	MP4A	Mz	0	4.33
7	MP4B	Y	-15.2	2.33
8	MP4B	My	.004	2.33
9	MP4B	Mz	-.012	2.33
10	MP4B	Y	-15.2	4.33
11	MP4B	My	.004	4.33
12	MP4B	Mz	-.012	4.33
13	MP4C	Y	-15.2	2.33
14	MP4C	My	.008	2.33
15	MP4C	Mz	.01	2.33
16	MP4C	Y	-15.2	4.33
17	MP4C	My	.008	4.33
18	MP4C	Mz	.01	4.33
19	MP1A	Y	-18.7	6.33
20	MP1A	My	-.008	6.33
21	MP1A	Mz	0	6.33
22	MP1B	Y	-18.7	6.33
23	MP1B	My	.003	6.33
24	MP1B	Mz	-.007	6.33
25	MP1C	Y	-18.7	6.33
26	MP1C	My	.005	6.33
27	MP1C	Mz	.006	6.33
28	MP1A	Y	-43.55	.33
29	MP1A	My	-.022	.33
30	MP1A	Mz	0	.33
31	MP1A	Y	-43.55	2.33
32	MP1A	My	-.022	2.33
33	MP1A	Mz	0	2.33
34	MP1B	Y	-43.55	.33
35	MP1B	My	.007	.33
36	MP1B	Mz	-.02	.33
37	MP1B	Y	-43.55	2.33
38	MP1B	My	.007	2.33
39	MP1B	Mz	-.02	2.33
40	MP1C	Y	-43.55	.33
41	MP1C	My	.014	.33
42	MP1C	Mz	.017	.33
43	MP1C	Y	-43.55	2.33
44	MP1C	My	.014	2.33
45	MP1C	Mz	.017	2.33
46	MP3A	Y	-20	1.83
47	MP3A	My	-.013	1.83
48	MP3A	Mz	.013	1.83
49	MP3A	Y	-20	5.33
50	MP3A	My	-.013	5.33
51	MP3A	Mz	.013	5.33
52	MP3B	Y	-20	1.83
53	MP3B	My	-.008	1.83

Member Point Loads (BLC 1 : Antenna D) (Continued)

	Member Label	Direction	Magnitude[lb,k-ft]	Location[ft,%]
54	MP3B	Mz	-.017	1.83
55	MP3B	Y	-20	5.33
56	MP3B	My	-.008	5.33
57	MP3B	Mz	-.017	5.33
58	MP3C	Y	-20	1.83
59	MP3C	My	.019	1.83
60	MP3C	Mz	.002	1.83
61	MP3C	Y	-20	5.33
62	MP3C	My	.019	5.33
63	MP3C	Mz	.002	5.33
64	MP3A	Y	-20	1.83
65	MP3A	My	-.013	1.83
66	MP3A	Mz	-.013	1.83
67	MP3A	Y	-20	5.33
68	MP3A	My	-.013	5.33
69	MP3A	Mz	-.013	5.33
70	MP3B	Y	-20	1.83
71	MP3B	My	.017	1.83
72	MP3B	Mz	-.008	1.83
73	MP3B	Y	-20	5.33
74	MP3B	My	.017	5.33
75	MP3B	Mz	-.008	5.33
76	MP3C	Y	-20	1.83
77	MP3C	My	-.002	1.83
78	MP3C	Mz	.019	1.83
79	MP3C	Y	-20	5.33
80	MP3C	My	-.002	5.33
81	MP3C	Mz	.019	5.33
82	MP2A	Y	-84.4	3.33
83	MP2A	My	.042	3.33
84	MP2A	Mz	0	3.33
85	MP2B	Y	-84.4	3.33
86	MP2B	My	-.014	3.33
87	MP2B	Mz	.04	3.33
88	MP2C	Y	-84.4	3.33
89	MP2C	My	-.027	3.33
90	MP2C	Mz	-.032	3.33
91	MP3A	Y	-70.3	3.33
92	MP3A	My	.035	3.33
93	MP3A	Mz	0	3.33
94	MP3B	Y	-70.3	3.33
95	MP3B	My	-.012	3.33
96	MP3B	Mz	.033	3.33
97	MP3C	Y	-70.3	3.33
98	MP3C	My	-.023	3.33
99	MP3C	Mz	-.027	3.33

Member Point Loads (BLC 2 : Antenna Di)

	Member Label	Direction	Magnitude[lb,k-ft]	Location[ft,%]
1	MP4A	Y	-72.257	2.33
2	MP4A	My	-.06	2.33

Member Point Loads (BLC 2 : Antenna Di) (Continued)

	Member Label	Direction	Magnitude[lb,k-ft]	Location[ft,%]
3	MP4A	Mz	0	2.33
4	MP4A	Y	-72.257	4.33
5	MP4A	My	-.06	4.33
6	MP4A	Mz	0	4.33
7	MP4B	Y	-72.257	2.33
8	MP4B	My	.021	2.33
9	MP4B	Mz	-.057	2.33
10	MP4B	Y	-72.257	4.33
11	MP4B	My	.021	4.33
12	MP4B	Mz	-.057	4.33
13	MP4C	Y	-72.257	2.33
14	MP4C	My	.039	2.33
15	MP4C	Mz	.046	2.33
16	MP4C	Y	-72.257	4.33
17	MP4C	My	.039	4.33
18	MP4C	Mz	.046	4.33
19	MP1A	Y	-35.268	6.33
20	MP1A	My	-.015	6.33
21	MP1A	Mz	0	6.33
22	MP1B	Y	-35.268	6.33
23	MP1B	My	.005	6.33
24	MP1B	Mz	-.014	6.33
25	MP1C	Y	-35.268	6.33
26	MP1C	My	.009	6.33
27	MP1C	Mz	.011	6.33
28	MP1A	Y	-54.69	.33
29	MP1A	My	-.027	.33
30	MP1A	Mz	0	.33
31	MP1A	Y	-54.69	2.33
32	MP1A	My	-.027	2.33
33	MP1A	Mz	0	2.33
34	MP1B	Y	-54.69	.33
35	MP1B	My	.009	.33
36	MP1B	Mz	-.026	.33
37	MP1B	Y	-54.69	2.33
38	MP1B	My	.009	2.33
39	MP1B	Mz	-.026	2.33
40	MP1C	Y	-54.69	.33
41	MP1C	My	.018	.33
42	MP1C	Mz	.021	.33
43	MP1C	Y	-54.69	2.33
44	MP1C	My	.018	2.33
45	MP1C	Mz	.021	2.33
46	MP3A	Y	-93.391	1.83
47	MP3A	My	-.062	1.83
48	MP3A	Mz	.062	1.83
49	MP3A	Y	-93.391	5.33
50	MP3A	My	-.062	5.33
51	MP3A	Mz	.062	5.33
52	MP3B	Y	-93.391	1.83
53	MP3B	My	-.037	1.83
54	MP3B	Mz	-.08	1.83

Member Point Loads (BLC 2 : Antenna Di) (Continued)

	Member Label	Direction	Magnitude[lb,k-ft]	Location[ft,%]
55	MP3B	Y	-93.391	5.33
56	MP3B	My	-.037	5.33
57	MP3B	Mz	-.08	5.33
58	MP3C	Y	-93.391	1.83
59	MP3C	My	.088	1.83
60	MP3C	Mz	.008	1.83
61	MP3C	Y	-93.391	5.33
62	MP3C	My	.088	5.33
63	MP3C	Mz	.008	5.33
64	MP3A	Y	-93.391	1.83
65	MP3A	My	-.062	1.83
66	MP3A	Mz	-.062	1.83
67	MP3A	Y	-93.391	5.33
68	MP3A	My	-.062	5.33
69	MP3A	Mz	-.062	5.33
70	MP3B	Y	-93.391	1.83
71	MP3B	My	.08	1.83
72	MP3B	Mz	-.037	1.83
73	MP3B	Y	-93.391	5.33
74	MP3B	My	.08	5.33
75	MP3B	Mz	-.037	5.33
76	MP3C	Y	-93.391	1.83
77	MP3C	My	-.008	1.83
78	MP3C	Mz	.088	1.83
79	MP3C	Y	-93.391	5.33
80	MP3C	My	-.008	5.33
81	MP3C	Mz	.088	5.33
82	MP2A	Y	-69.464	3.33
83	MP2A	My	.035	3.33
84	MP2A	Mz	0	3.33
85	MP2B	Y	-69.464	3.33
86	MP2B	My	-.012	3.33
87	MP2B	Mz	.033	3.33
88	MP2C	Y	-69.464	3.33
89	MP2C	My	-.022	3.33
90	MP2C	Mz	-.027	3.33
91	MP3A	Y	-62.697	3.33
92	MP3A	My	.031	3.33
93	MP3A	Mz	0	3.33
94	MP3B	Y	-62.697	3.33
95	MP3B	My	-.011	3.33
96	MP3B	Mz	.029	3.33
97	MP3C	Y	-62.697	3.33
98	MP3C	My	-.02	3.33
99	MP3C	Mz	-.024	3.33

Member Point Loads (BLC 3 : Antenna Wo (0 Deg))

	Member Label	Direction	Magnitude[lb,k-ft]	Location[ft,%]
1	MP4A	X	0	2.33
2	MP4A	Z	-88.072	2.33
3	MP4A	Mx	0	2.33

Member Point Loads (BLC 3 : Antenna Wo (0 Deg)) (Continued)

	Member Label	Direction	Magnitude[lb,k-ft]	Location[ft,%]
4	MP4A	X	0	4.33
5	MP4A	Z	-88.072	4.33
6	MP4A	Mx	0	4.33
7	MP4B	X	0	2.33
8	MP4B	Z	-61.514	2.33
9	MP4B	Mx	.048	2.33
10	MP4B	X	0	4.33
11	MP4B	Z	-61.514	4.33
12	MP4B	Mx	.048	4.33
13	MP4C	X	0	2.33
14	MP4C	Z	-70.423	2.33
15	MP4C	Mx	-.045	2.33
16	MP4C	X	0	4.33
17	MP4C	Z	-70.423	4.33
18	MP4C	Mx	-.045	4.33
19	MP1A	X	0	6.33
20	MP1A	Z	-30.213	6.33
21	MP1A	Mx	0	6.33
22	MP1B	X	0	6.33
23	MP1B	Z	-20.548	6.33
24	MP1B	Mx	.008	6.33
25	MP1C	X	0	6.33
26	MP1C	Z	-23.79	6.33
27	MP1C	Mx	-.008	6.33
28	MP1A	X	0	.33
29	MP1A	Z	-71.001	.33
30	MP1A	Mx	0	.33
31	MP1A	X	0	2.33
32	MP1A	Z	-71.001	2.33
33	MP1A	Mx	0	2.33
34	MP1B	X	0	.33
35	MP1B	Z	-32.851	.33
36	MP1B	Mx	.015	.33
37	MP1B	X	0	2.33
38	MP1B	Z	-32.851	2.33
39	MP1B	Mx	.015	2.33
40	MP1C	X	0	.33
41	MP1C	Z	-45.648	.33
42	MP1C	Mx	-.017	.33
43	MP1C	X	0	2.33
44	MP1C	Z	-45.648	2.33
45	MP1C	Mx	-.017	2.33
46	MP3A	X	0	1.83
47	MP3A	Z	-123.27	1.83
48	MP3A	Mx	-.082	1.83
49	MP3A	X	0	5.33
50	MP3A	Z	-123.27	5.33
51	MP3A	Mx	-.082	5.33
52	MP3B	X	0	1.83
53	MP3B	Z	-86.403	1.83
54	MP3B	Mx	.074	1.83
55	MP3B	X	0	5.33

Member Point Loads (BLC 3 : Antenna Wo (0 Deg)) (Continued)

	Member Label	Direction	Magnitude[lb,k-ft]	Location[ft,%]
56	MP3B	Z	-86.403	5.33
57	MP3B	Mx	.074	5.33
58	MP3C	X	0	1.83
59	MP3C	Z	-98.77	1.83
60	MP3C	Mx	-.008	1.83
61	MP3C	X	0	5.33
62	MP3C	Z	-98.77	5.33
63	MP3C	Mx	-.008	5.33
64	MP3A	X	0	1.83
65	MP3A	Z	-123.27	1.83
66	MP3A	Mx	.082	1.83
67	MP3A	X	0	5.33
68	MP3A	Z	-123.27	5.33
69	MP3A	Mx	.082	5.33
70	MP3B	X	0	1.83
71	MP3B	Z	-86.403	1.83
72	MP3B	Mx	.034	1.83
73	MP3B	X	0	5.33
74	MP3B	Z	-86.403	5.33
75	MP3B	Mx	.034	5.33
76	MP3C	X	0	1.83
77	MP3C	Z	-98.77	1.83
78	MP3C	Mx	-.093	1.83
79	MP3C	X	0	5.33
80	MP3C	Z	-98.77	5.33
81	MP3C	Mx	-.093	5.33
82	MP2A	X	0	3.33
83	MP2A	Z	-56.499	3.33
84	MP2A	Mx	0	3.33
85	MP2B	X	0	3.33
86	MP2B	Z	-39.958	3.33
87	MP2B	Mx	-.019	3.33
88	MP2C	X	0	3.33
89	MP2C	Z	-45.506	3.33
90	MP2C	Mx	.017	3.33
91	MP3A	X	0	3.33
92	MP3A	Z	-56.499	3.33
93	MP3A	Mx	0	3.33
94	MP3B	X	0	3.33
95	MP3B	Z	-33.622	3.33
96	MP3B	Mx	-.016	3.33
97	MP3C	X	0	3.33
98	MP3C	Z	-41.295	3.33
99	MP3C	Mx	.016	3.33

Member Point Loads (BLC 4 : Antenna Wo (30 Deg))

	Member Label	Direction	Magnitude[lb,k-ft]	Location[ft,%]
1	MP4A	X	40.276	2.33
2	MP4A	Z	-69.761	2.33
3	MP4A	Mx	-.034	2.33
4	MP4A	X	40.276	4.33

Member Point Loads (BLC 4 : Antenna Wo (30 Deg)) (Continued)

	Member Label	Direction	Magnitude[lb,k-ft]	Location[ft,%]
5	MP4A	Z	-69.761	4.33
6	MP4A	Mx	-.034	4.33
7	MP4B	X	29.452	2.33
8	MP4B	Z	-51.012	2.33
9	MP4B	Mx	.048	2.33
10	MP4B	X	29.452	4.33
11	MP4B	Z	-51.012	4.33
12	MP4B	Mx	.048	4.33
13	MP4C	X	42.277	2.33
14	MP4C	Z	-73.225	2.33
15	MP4C	Mx	-.024	2.33
16	MP4C	X	42.277	4.33
17	MP4C	Z	-73.225	4.33
18	MP4C	Mx	-.024	4.33
19	MP1A	X	13.738	6.33
20	MP1A	Z	-23.796	6.33
21	MP1A	Mx	-.006	6.33
22	MP1B	X	9.799	6.33
23	MP1B	Z	-16.972	6.33
24	MP1B	Mx	.008	6.33
25	MP1C	X	14.466	6.33
26	MP1C	Z	-25.057	6.33
27	MP1C	Mx	-.004	6.33
28	MP1A	X	30.1	.33
29	MP1A	Z	-52.135	.33
30	MP1A	Mx	-.015	.33
31	MP1A	X	30.1	2.33
32	MP1A	Z	-52.135	2.33
33	MP1A	Mx	-.015	2.33
34	MP1B	X	14.55	.33
35	MP1B	Z	-25.201	.33
36	MP1B	Mx	.014	.33
37	MP1B	X	14.55	2.33
38	MP1B	Z	-25.201	2.33
39	MP1B	Mx	.014	2.33
40	MP1C	X	32.974	.33
41	MP1C	Z	-57.112	.33
42	MP1C	Mx	-.011	.33
43	MP1C	X	32.974	2.33
44	MP1C	Z	-57.112	2.33
45	MP1C	Mx	-.011	2.33
46	MP3A	X	56.416	1.83
47	MP3A	Z	-97.716	1.83
48	MP3A	Mx	-.103	1.83
49	MP3A	X	56.416	5.33
50	MP3A	Z	-97.716	5.33
51	MP3A	Mx	-.103	5.33
52	MP3B	X	41.389	1.83
53	MP3B	Z	-71.688	1.83
54	MP3B	Mx	.045	1.83
55	MP3B	X	41.389	5.33
56	MP3B	Z	-71.688	5.33

Member Point Loads (BLC 4 : Antenna Wo (30 Deg)) (Continued)

	Member Label	Direction	Magnitude[lb,k-ft]	Location[ft,%]
57	MP3B	Mx	.045	5.33
58	MP3C	X	59.193	1.83
59	MP3C	Z	-102.525	1.83
60	MP3C	Mx	.047	1.83
61	MP3C	X	59.193	5.33
62	MP3C	Z	-102.525	5.33
63	MP3C	Mx	.047	5.33
64	MP3A	X	56.416	1.83
65	MP3A	Z	-97.716	1.83
66	MP3A	Mx	.028	1.83
67	MP3A	X	56.416	5.33
68	MP3A	Z	-97.716	5.33
69	MP3A	Mx	.028	5.33
70	MP3B	X	41.389	1.83
71	MP3B	Z	-71.688	1.83
72	MP3B	Mx	.064	1.83
73	MP3B	X	41.389	5.33
74	MP3B	Z	-71.688	5.33
75	MP3B	Mx	.064	5.33
76	MP3C	X	59.193	1.83
77	MP3C	Z	-102.525	1.83
78	MP3C	Mx	-.101	1.83
79	MP3C	X	59.193	5.33
80	MP3C	Z	-102.525	5.33
81	MP3C	Mx	-.101	5.33
82	MP2A	X	25.908	3.33
83	MP2A	Z	-44.874	3.33
84	MP2A	Mx	.013	3.33
85	MP2B	X	19.166	3.33
86	MP2B	Z	-33.196	3.33
87	MP2B	Mx	-.019	3.33
88	MP2C	X	27.154	3.33
89	MP2C	Z	-47.032	3.33
90	MP2C	Mx	.009	3.33
91	MP3A	X	25.011	3.33
92	MP3A	Z	-43.32	3.33
93	MP3A	Mx	.013	3.33
94	MP3B	X	15.686	3.33
95	MP3B	Z	-27.169	3.33
96	MP3B	Mx	-.015	3.33
97	MP3C	X	26.734	3.33
98	MP3C	Z	-46.305	3.33
99	MP3C	Mx	.009	3.33

Member Point Loads (BLC 5 : Antenna Wo (60 Deg))

	Member Label	Direction	Magnitude[lb,k-ft]	Location[ft,%]
1	MP4A	X	56.738	2.33
2	MP4A	Z	-32.758	2.33
3	MP4A	Mx	-.047	2.33
4	MP4A	X	56.738	4.33
5	MP4A	Z	-32.758	4.33

Member Point Loads (BLC 5 : Antenna Wo (60 Deg)) (Continued)

	Member Label	Direction	Magnitude[lb,k-ft]	Location[ft,%]
6	MP4A	Mx	-.047	4.33
7	MP4B	X	60.988	2.33
8	MP4B	Z	-35.211	2.33
9	MP4B	Mx	.045	2.33
10	MP4B	X	60.988	4.33
11	MP4B	Z	-35.211	4.33
12	MP4B	Mx	.045	4.33
13	MP4C	X	75.487	2.33
14	MP4C	Z	-43.582	2.33
15	MP4C	Mx	.013	2.33
16	MP4C	X	75.487	4.33
17	MP4C	Z	-43.582	4.33
18	MP4C	Mx	.013	4.33
19	MP1A	X	19.056	6.33
20	MP1A	Z	-11.002	6.33
21	MP1A	Mx	-.008	6.33
22	MP1B	X	20.603	6.33
23	MP1B	Z	-11.895	6.33
24	MP1B	Mx	.008	6.33
25	MP1C	X	25.88	6.33
26	MP1C	Z	-14.942	6.33
27	MP1C	Mx	.002	6.33
28	MP1A	X	33.427	.33
29	MP1A	Z	-19.299	.33
30	MP1A	Mx	-.017	.33
31	MP1A	X	33.427	2.33
32	MP1A	Z	-19.299	2.33
33	MP1A	Mx	-.017	2.33
34	MP1B	X	39.532	.33
35	MP1B	Z	-22.824	.33
36	MP1B	Mx	.017	.33
37	MP1B	X	39.532	2.33
38	MP1B	Z	-22.824	2.33
39	MP1B	Mx	.017	2.33
40	MP1C	X	60.361	.33
41	MP1C	Z	-34.849	.33
42	MP1C	Mx	.006	.33
43	MP1C	X	60.361	2.33
44	MP1C	Z	-34.849	2.33
45	MP1C	Mx	.006	2.33
46	MP3A	X	79.637	1.83
47	MP3A	Z	-45.978	1.83
48	MP3A	Mx	-.084	1.83
49	MP3A	X	79.637	5.33
50	MP3A	Z	-45.978	5.33
51	MP3A	Mx	-.084	5.33
52	MP3B	X	85.537	1.83
53	MP3B	Z	-49.385	1.83
54	MP3B	Mx	.008	1.83
55	MP3B	X	85.537	5.33
56	MP3B	Z	-49.385	5.33
57	MP3B	Mx	.008	5.33

Member Point Loads (BLC 5 : Antenna Wo (60 Deg)) (Continued)

	Member Label	Direction	Magnitude[lb,k-ft]	Location[ft,%]
58	MP3C	X	105.665	1.83
59	MP3C	Z	-61.006	1.83
60	MP3C	Mx	.094	1.83
61	MP3C	X	105.665	5.33
62	MP3C	Z	-61.006	5.33
63	MP3C	Mx	.094	5.33
64	MP3A	X	79.637	1.83
65	MP3A	Z	-45.978	1.83
66	MP3A	Mx	-.022	1.83
67	MP3A	X	79.637	5.33
68	MP3A	Z	-45.978	5.33
69	MP3A	Mx	-.022	5.33
70	MP3B	X	85.537	1.83
71	MP3B	Z	-49.385	1.83
72	MP3B	Mx	.093	1.83
73	MP3B	X	85.537	5.33
74	MP3B	Z	-49.385	5.33
75	MP3B	Mx	.093	5.33
76	MP3C	X	105.665	1.83
77	MP3C	Z	-61.006	1.83
78	MP3C	Mx	-.066	1.83
79	MP3C	X	105.665	5.33
80	MP3C	Z	-61.006	5.33
81	MP3C	Mx	-.066	5.33
82	MP2A	X	36.762	3.33
83	MP2A	Z	-21.225	3.33
84	MP2A	Mx	.018	3.33
85	MP2B	X	39.41	3.33
86	MP2B	Z	-22.753	3.33
87	MP2B	Mx	-.017	3.33
88	MP2C	X	48.44	3.33
89	MP2C	Z	-27.967	3.33
90	MP2C	Mx	-.005	3.33
91	MP3A	X	32.102	3.33
92	MP3A	Z	-18.534	3.33
93	MP3A	Mx	.016	3.33
94	MP3B	X	35.763	3.33
95	MP3B	Z	-20.648	3.33
96	MP3B	Mx	-.016	3.33
97	MP3C	X	48.253	3.33
98	MP3C	Z	-27.859	3.33
99	MP3C	Mx	-.005	3.33

Member Point Loads (BLC 6 : Antenna Wo (90 Deg))

	Member Label	Direction	Magnitude[lb,k-ft]	Location[ft,%]
1	MP4A	X	57.996	2.33
2	MP4A	Z	0	2.33
3	MP4A	Mx	-.048	2.33
4	MP4A	X	57.996	4.33
5	MP4A	Z	0	4.33
6	MP4A	Mx	-.048	4.33

Member Point Loads (BLC 6 : Antenna Wo (90 Deg)) (Continued)

	Member Label	Direction	Magnitude[lb,k-ft]	Location[ft,%]
7	MP4B	X	84.553	2.33
8	MP4B	Z	0	2.33
9	MP4B	Mx	.024	2.33
10	MP4B	X	84.553	4.33
11	MP4B	Z	0	4.33
12	MP4B	Mx	.024	4.33
13	MP4C	X	75.645	2.33
14	MP4C	Z	0	2.33
15	MP4C	Mx	.041	2.33
16	MP4C	X	75.645	4.33
17	MP4C	Z	0	4.33
18	MP4C	Mx	.041	4.33
19	MP1A	X	19.268	6.33
20	MP1A	Z	0	6.33
21	MP1A	Mx	-.008	6.33
22	MP1B	X	28.933	6.33
23	MP1B	Z	0	6.33
24	MP1B	Mx	.004	6.33
25	MP1C	X	25.691	6.33
26	MP1C	Z	0	6.33
27	MP1C	Mx	.007	6.33
28	MP1A	X	27.797	.33
29	MP1A	Z	0	.33
30	MP1A	Mx	-.014	.33
31	MP1A	X	27.797	2.33
32	MP1A	Z	0	2.33
33	MP1A	Mx	-.014	2.33
34	MP1B	X	65.947	.33
35	MP1B	Z	0	.33
36	MP1B	Mx	.011	.33
37	MP1B	X	65.947	2.33
38	MP1B	Z	0	2.33
39	MP1B	Mx	.011	2.33
40	MP1C	X	53.15	.33
41	MP1C	Z	0	.33
42	MP1C	Mx	.017	.33
43	MP1C	X	53.15	2.33
44	MP1C	Z	0	2.33
45	MP1C	Mx	.017	2.33
46	MP3A	X	81.519	1.83
47	MP3A	Z	0	1.83
48	MP3A	Mx	-.054	1.83
49	MP3A	X	81.519	5.33
50	MP3A	Z	0	5.33
51	MP3A	Mx	-.054	5.33
52	MP3B	X	118.386	1.83
53	MP3B	Z	0	1.83
54	MP3B	Mx	-.047	1.83
55	MP3B	X	118.386	5.33
56	MP3B	Z	0	5.33
57	MP3B	Mx	-.047	5.33
58	MP3C	X	106.02	1.83

Member Point Loads (BLC 6 : Antenna Wo (90 Deg)) (Continued)

	Member Label	Direction	Magnitude[lb,k-ft]	Location[ft,%]
59	MP3C	Z	0	1.83
60	MP3C	Mx	.1	1.83
61	MP3C	X	106.02	5.33
62	MP3C	Z	0	5.33
63	MP3C	Mx	.1	5.33
64	MP3A	X	81.519	1.83
65	MP3A	Z	0	1.83
66	MP3A	Mx	-.054	1.83
67	MP3A	X	81.519	5.33
68	MP3A	Z	0	5.33
69	MP3A	Mx	-.054	5.33
70	MP3B	X	118.386	1.83
71	MP3B	Z	0	1.83
72	MP3B	Mx	.101	1.83
73	MP3B	X	118.386	5.33
74	MP3B	Z	0	5.33
75	MP3B	Mx	.101	5.33
76	MP3C	X	106.02	1.83
77	MP3C	Z	0	1.83
78	MP3C	Mx	-.009	1.83
79	MP3C	X	106.02	5.33
80	MP3C	Z	0	5.33
81	MP3C	Mx	-.009	5.33
82	MP2A	X	37.767	3.33
83	MP2A	Z	0	3.33
84	MP2A	Mx	.019	3.33
85	MP2B	X	54.308	3.33
86	MP2B	Z	0	3.33
87	MP2B	Mx	-.009	3.33
88	MP2C	X	48.759	3.33
89	MP2C	Z	0	3.33
90	MP2C	Mx	-.016	3.33
91	MP3A	X	30.591	3.33
92	MP3A	Z	0	3.33
93	MP3A	Mx	.015	3.33
94	MP3B	X	53.468	3.33
95	MP3B	Z	0	3.33
96	MP3B	Mx	-.009	3.33
97	MP3C	X	45.794	3.33
98	MP3C	Z	0	3.33
99	MP3C	Mx	-.015	3.33

Member Point Loads (BLC 7 : Antenna Wo (120 Deg))

	Member Label	Direction	Magnitude[lb,k-ft]	Location[ft,%]
1	MP4A	X	56.738	2.33
2	MP4A	Z	32.758	2.33
3	MP4A	Mx	-.047	2.33
4	MP4A	X	56.738	4.33
5	MP4A	Z	32.758	4.33
6	MP4A	Mx	-.047	4.33
7	MP4B	X	75.487	2.33

Member Point Loads (BLC 7 : Antenna Wo (120 Deg)) (Continued)

	Member Label	Direction	Magnitude[lb,k-ft]	Location[ft,%]
8	MP4B	Z	43.582	2.33
9	MP4B	Mx	-.013	2.33
10	MP4B	X	75.487	4.33
11	MP4B	Z	43.582	4.33
12	MP4B	Mx	-.013	4.33
13	MP4C	X	53.273	2.33
14	MP4C	Z	30.757	2.33
15	MP4C	Mx	.048	2.33
16	MP4C	X	53.273	4.33
17	MP4C	Z	30.757	4.33
18	MP4C	Mx	.048	4.33
19	MP1A	X	19.056	6.33
20	MP1A	Z	11.002	6.33
21	MP1A	Mx	-.008	6.33
22	MP1B	X	25.88	6.33
23	MP1B	Z	14.942	6.33
24	MP1B	Mx	-.002	6.33
25	MP1C	X	17.795	6.33
26	MP1C	Z	10.274	6.33
27	MP1C	Mx	.008	6.33
28	MP1A	X	33.427	.33
29	MP1A	Z	19.299	.33
30	MP1A	Mx	-.017	.33
31	MP1A	X	33.427	2.33
32	MP1A	Z	19.299	2.33
33	MP1A	Mx	-.017	2.33
34	MP1B	X	60.361	.33
35	MP1B	Z	34.849	.33
36	MP1B	Mx	-.006	.33
37	MP1B	X	60.361	2.33
38	MP1B	Z	34.849	2.33
39	MP1B	Mx	-.006	2.33
40	MP1C	X	28.45	.33
41	MP1C	Z	16.425	.33
42	MP1C	Mx	.015	.33
43	MP1C	X	28.45	2.33
44	MP1C	Z	16.425	2.33
45	MP1C	Mx	.015	2.33
46	MP3A	X	79.637	1.83
47	MP3A	Z	45.978	1.83
48	MP3A	Mx	-.022	1.83
49	MP3A	X	79.637	5.33
50	MP3A	Z	45.978	5.33
51	MP3A	Mx	-.022	5.33
52	MP3B	X	105.665	1.83
53	MP3B	Z	61.006	1.83
54	MP3B	Mx	-.094	1.83
55	MP3B	X	105.665	5.33
56	MP3B	Z	61.006	5.33
57	MP3B	Mx	-.094	5.33
58	MP3C	X	74.827	1.83
59	MP3C	Z	43.202	1.83

Member Point Loads (BLC 7 : Antenna Wo (120 Deg)) (Continued)

	Member Label	Direction	Magnitude[lb,k-ft]	Location[ft,%]
60	MP3C	Mx	.074	1.83
61	MP3C	X	74.827	5.33
62	MP3C	Z	43.202	5.33
63	MP3C	Mx	.074	5.33
64	MP3A	X	79.637	1.83
65	MP3A	Z	45.978	1.83
66	MP3A	Mx	-.084	1.83
67	MP3A	X	79.637	5.33
68	MP3A	Z	45.978	5.33
69	MP3A	Mx	-.084	5.33
70	MP3B	X	105.665	1.83
71	MP3B	Z	61.006	1.83
72	MP3B	Mx	.066	1.83
73	MP3B	X	105.665	5.33
74	MP3B	Z	61.006	5.33
75	MP3B	Mx	.066	5.33
76	MP3C	X	74.827	1.83
77	MP3C	Z	43.202	1.83
78	MP3C	Mx	.034	1.83
79	MP3C	X	74.827	5.33
80	MP3C	Z	43.202	5.33
81	MP3C	Mx	.034	5.33
82	MP2A	X	36.762	3.33
83	MP2A	Z	21.225	3.33
84	MP2A	Mx	.018	3.33
85	MP2B	X	48.44	3.33
86	MP2B	Z	27.967	3.33
87	MP2B	Mx	.005	3.33
88	MP2C	X	34.604	3.33
89	MP2C	Z	19.979	3.33
90	MP2C	Mx	-.019	3.33
91	MP3A	X	32.102	3.33
92	MP3A	Z	18.534	3.33
93	MP3A	Mx	.016	3.33
94	MP3B	X	48.253	3.33
95	MP3B	Z	27.859	3.33
96	MP3B	Mx	.005	3.33
97	MP3C	X	29.117	3.33
98	MP3C	Z	16.811	3.33
99	MP3C	Mx	-.016	3.33

Member Point Loads (BLC 8 : Antenna Wo (150 Deg))

	Member Label	Direction	Magnitude[lb,k-ft]	Location[ft,%]
1	MP4A	X	40.276	2.33
2	MP4A	Z	69.761	2.33
3	MP4A	Mx	-.034	2.33
4	MP4A	X	40.276	4.33
5	MP4A	Z	69.761	4.33
6	MP4A	Mx	-.034	4.33
7	MP4B	X	37.823	2.33
8	MP4B	Z	65.511	2.33

Member Point Loads (BLC 8 : Antenna Wo (150 Deg)) (Continued)

	Member Label	Direction	Magnitude[lb,k-ft]	Location[ft,%]
9	MP4B	Mx	-.041	2.33
10	MP4B	X	37.823	4.33
11	MP4B	Z	65.511	4.33
12	MP4B	Mx	-.041	4.33
13	MP4C	X	29.452	2.33
14	MP4C	Z	51.012	2.33
15	MP4C	Mx	.048	2.33
16	MP4C	X	29.452	4.33
17	MP4C	Z	51.012	4.33
18	MP4C	Mx	.048	4.33
19	MP1A	X	13.738	6.33
20	MP1A	Z	23.796	6.33
21	MP1A	Mx	-.006	6.33
22	MP1B	X	12.845	6.33
23	MP1B	Z	22.249	6.33
24	MP1B	Mx	-.007	6.33
25	MP1C	X	9.799	6.33
26	MP1C	Z	16.972	6.33
27	MP1C	Mx	.008	6.33
28	MP1A	X	30.1	.33
29	MP1A	Z	52.135	.33
30	MP1A	Mx	-.015	.33
31	MP1A	X	30.1	2.33
32	MP1A	Z	52.135	2.33
33	MP1A	Mx	-.015	2.33
34	MP1B	X	26.575	.33
35	MP1B	Z	46.029	.33
36	MP1B	Mx	-.017	.33
37	MP1B	X	26.575	2.33
38	MP1B	Z	46.029	2.33
39	MP1B	Mx	-.017	2.33
40	MP1C	X	14.55	.33
41	MP1C	Z	25.201	.33
42	MP1C	Mx	.014	.33
43	MP1C	X	14.55	2.33
44	MP1C	Z	25.201	2.33
45	MP1C	Mx	.014	2.33
46	MP3A	X	56.416	1.83
47	MP3A	Z	97.716	1.83
48	MP3A	Mx	.028	1.83
49	MP3A	X	56.416	5.33
50	MP3A	Z	97.716	5.33
51	MP3A	Mx	.028	5.33
52	MP3B	X	53.01	1.83
53	MP3B	Z	91.816	1.83
54	MP3B	Mx	-.1	1.83
55	MP3B	X	53.01	5.33
56	MP3B	Z	91.816	5.33
57	MP3B	Mx	-.1	5.33
58	MP3C	X	41.389	1.83
59	MP3C	Z	71.688	1.83
60	MP3C	Mx	.045	1.83

Member Point Loads (BLC 8 : Antenna Wo (150 Deg)) (Continued)

	Member Label	Direction	Magnitude[lb,k-ft]	Location[ft,%]
61	MP3C	X	41.389	5.33
62	MP3C	Z	71.688	5.33
63	MP3C	Mx	.045	5.33
64	MP3A	X	56.416	1.83
65	MP3A	Z	97.716	1.83
66	MP3A	Mx	-.103	1.83
67	MP3A	X	56.416	5.33
68	MP3A	Z	97.716	5.33
69	MP3A	Mx	-.103	5.33
70	MP3B	X	53.01	1.83
71	MP3B	Z	91.816	1.83
72	MP3B	Mx	.009	1.83
73	MP3B	X	53.01	5.33
74	MP3B	Z	91.816	5.33
75	MP3B	Mx	.009	5.33
76	MP3C	X	41.389	1.83
77	MP3C	Z	71.688	1.83
78	MP3C	Mx	.064	1.83
79	MP3C	X	41.389	5.33
80	MP3C	Z	71.688	5.33
81	MP3C	Mx	.064	5.33
82	MP2A	X	25.908	3.33
83	MP2A	Z	44.874	3.33
84	MP2A	Mx	.013	3.33
85	MP2B	X	24.38	3.33
86	MP2B	Z	42.227	3.33
87	MP2B	Mx	.016	3.33
88	MP2C	X	19.166	3.33
89	MP2C	Z	33.196	3.33
90	MP2C	Mx	-.019	3.33
91	MP3A	X	25.011	3.33
92	MP3A	Z	43.32	3.33
93	MP3A	Mx	.013	3.33
94	MP3B	X	22.897	3.33
95	MP3B	Z	39.659	3.33
96	MP3B	Mx	.015	3.33
97	MP3C	X	15.686	3.33
98	MP3C	Z	27.169	3.33
99	MP3C	Mx	-.015	3.33

Member Point Loads (BLC 9 : Antenna Wo (180 Deg))

	Member Label	Direction	Magnitude[lb,k-ft]	Location[ft,%]
1	MP4A	X	0	2.33
2	MP4A	Z	88.072	2.33
3	MP4A	Mx	0	2.33
4	MP4A	X	0	4.33
5	MP4A	Z	88.072	4.33
6	MP4A	Mx	0	4.33
7	MP4B	X	0	2.33
8	MP4B	Z	61.514	2.33
9	MP4B	Mx	-.048	2.33

Member Point Loads (BLC 9 : Antenna Wo (180 Deg)) (Continued)

	Member Label	Direction	Magnitude[lb,k-ft]	Location[ft,%]
10	MP4B	X	0	4.33
11	MP4B	Z	61.514	4.33
12	MP4B	Mx	-.048	4.33
13	MP4C	X	0	2.33
14	MP4C	Z	70.423	2.33
15	MP4C	Mx	.045	2.33
16	MP4C	X	0	4.33
17	MP4C	Z	70.423	4.33
18	MP4C	Mx	.045	4.33
19	MP1A	X	0	6.33
20	MP1A	Z	30.213	6.33
21	MP1A	Mx	0	6.33
22	MP1B	X	0	6.33
23	MP1B	Z	20.548	6.33
24	MP1B	Mx	-.008	6.33
25	MP1C	X	0	6.33
26	MP1C	Z	23.79	6.33
27	MP1C	Mx	.008	6.33
28	MP1A	X	0	.33
29	MP1A	Z	71.001	.33
30	MP1A	Mx	0	.33
31	MP1A	X	0	2.33
32	MP1A	Z	71.001	2.33
33	MP1A	Mx	0	2.33
34	MP1B	X	0	.33
35	MP1B	Z	32.851	.33
36	MP1B	Mx	-.015	.33
37	MP1B	X	0	2.33
38	MP1B	Z	32.851	2.33
39	MP1B	Mx	-.015	2.33
40	MP1C	X	0	.33
41	MP1C	Z	45.648	.33
42	MP1C	Mx	.017	.33
43	MP1C	X	0	2.33
44	MP1C	Z	45.648	2.33
45	MP1C	Mx	.017	2.33
46	MP3A	X	0	1.83
47	MP3A	Z	123.27	1.83
48	MP3A	Mx	.082	1.83
49	MP3A	X	0	5.33
50	MP3A	Z	123.27	5.33
51	MP3A	Mx	.082	5.33
52	MP3B	X	0	1.83
53	MP3B	Z	86.403	1.83
54	MP3B	Mx	-.074	1.83
55	MP3B	X	0	5.33
56	MP3B	Z	86.403	5.33
57	MP3B	Mx	-.074	5.33
58	MP3C	X	0	1.83
59	MP3C	Z	98.77	1.83
60	MP3C	Mx	.008	1.83
61	MP3C	X	0	5.33

Member Point Loads (BLC 9 : Antenna Wo (180 Deg)) (Continued)

	Member Label	Direction	Magnitude[lb,k-ft]	Location[ft,%]
62	MP3C	Z	98.77	5.33
63	MP3C	Mx	.008	5.33
64	MP3A	X	0	1.83
65	MP3A	Z	123.27	1.83
66	MP3A	Mx	-.082	1.83
67	MP3A	X	0	5.33
68	MP3A	Z	123.27	5.33
69	MP3A	Mx	-.082	5.33
70	MP3B	X	0	1.83
71	MP3B	Z	86.403	1.83
72	MP3B	Mx	-.034	1.83
73	MP3B	X	0	5.33
74	MP3B	Z	86.403	5.33
75	MP3B	Mx	-.034	5.33
76	MP3C	X	0	1.83
77	MP3C	Z	98.77	1.83
78	MP3C	Mx	.093	1.83
79	MP3C	X	0	5.33
80	MP3C	Z	98.77	5.33
81	MP3C	Mx	.093	5.33
82	MP2A	X	0	3.33
83	MP2A	Z	56.499	3.33
84	MP2A	Mx	0	3.33
85	MP2B	X	0	3.33
86	MP2B	Z	39.958	3.33
87	MP2B	Mx	.019	3.33
88	MP2C	X	0	3.33
89	MP2C	Z	45.506	3.33
90	MP2C	Mx	-.017	3.33
91	MP3A	X	0	3.33
92	MP3A	Z	56.499	3.33
93	MP3A	Mx	0	3.33
94	MP3B	X	0	3.33
95	MP3B	Z	33.622	3.33
96	MP3B	Mx	.016	3.33
97	MP3C	X	0	3.33
98	MP3C	Z	41.295	3.33
99	MP3C	Mx	-.016	3.33

Member Point Loads (BLC 10 : Antenna Wo (210 Deg))

	Member Label	Direction	Magnitude[lb,k-ft]	Location[ft,%]
1	MP4A	X	-40.276	2.33
2	MP4A	Z	69.761	2.33
3	MP4A	Mx	.034	2.33
4	MP4A	X	-40.276	4.33
5	MP4A	Z	69.761	4.33
6	MP4A	Mx	.034	4.33
7	MP4B	X	-29.452	2.33
8	MP4B	Z	51.012	2.33
9	MP4B	Mx	-.048	2.33
10	MP4B	X	-29.452	4.33

Member Point Loads (BLC 10 : Antenna Wo (210 Deg)) (Continued)

	Member Label	Direction	Magnitude[lb,k-ft]	Location[ft,%]
11	MP4B	Z	51.012	4.33
12	MP4B	Mx	-.048	4.33
13	MP4C	X	-42.277	2.33
14	MP4C	Z	73.225	2.33
15	MP4C	Mx	.024	2.33
16	MP4C	X	-42.277	4.33
17	MP4C	Z	73.225	4.33
18	MP4C	Mx	.024	4.33
19	MP1A	X	-13.738	6.33
20	MP1A	Z	23.796	6.33
21	MP1A	Mx	.006	6.33
22	MP1B	X	-9.799	6.33
23	MP1B	Z	16.972	6.33
24	MP1B	Mx	-.008	6.33
25	MP1C	X	-14.466	6.33
26	MP1C	Z	25.057	6.33
27	MP1C	Mx	.004	6.33
28	MP1A	X	-30.1	.33
29	MP1A	Z	52.135	.33
30	MP1A	Mx	.015	.33
31	MP1A	X	-30.1	2.33
32	MP1A	Z	52.135	2.33
33	MP1A	Mx	.015	2.33
34	MP1B	X	-14.55	.33
35	MP1B	Z	25.201	.33
36	MP1B	Mx	-.014	.33
37	MP1B	X	-14.55	2.33
38	MP1B	Z	25.201	2.33
39	MP1B	Mx	-.014	2.33
40	MP1C	X	-32.974	.33
41	MP1C	Z	57.112	.33
42	MP1C	Mx	.011	.33
43	MP1C	X	-32.974	2.33
44	MP1C	Z	57.112	2.33
45	MP1C	Mx	.011	2.33
46	MP3A	X	-56.416	1.83
47	MP3A	Z	97.716	1.83
48	MP3A	Mx	.103	1.83
49	MP3A	X	-56.416	5.33
50	MP3A	Z	97.716	5.33
51	MP3A	Mx	.103	5.33
52	MP3B	X	-41.389	1.83
53	MP3B	Z	71.688	1.83
54	MP3B	Mx	-.045	1.83
55	MP3B	X	-41.389	5.33
56	MP3B	Z	71.688	5.33
57	MP3B	Mx	-.045	5.33
58	MP3C	X	-59.193	1.83
59	MP3C	Z	102.525	1.83
60	MP3C	Mx	-.047	1.83
61	MP3C	X	-59.193	5.33
62	MP3C	Z	102.525	5.33

Member Point Loads (BLC 10 : Antenna Wo (210 Deg)) (Continued)

	Member Label	Direction	Magnitude[lb,k-ft]	Location[ft,%]
63	MP3C	Mx	-.047	5.33
64	MP3A	X	-56.416	1.83
65	MP3A	Z	97.716	1.83
66	MP3A	Mx	-.028	1.83
67	MP3A	X	-56.416	5.33
68	MP3A	Z	97.716	5.33
69	MP3A	Mx	-.028	5.33
70	MP3B	X	-41.389	1.83
71	MP3B	Z	71.688	1.83
72	MP3B	Mx	-.064	1.83
73	MP3B	X	-41.389	5.33
74	MP3B	Z	71.688	5.33
75	MP3B	Mx	-.064	5.33
76	MP3C	X	-59.193	1.83
77	MP3C	Z	102.525	1.83
78	MP3C	Mx	.101	1.83
79	MP3C	X	-59.193	5.33
80	MP3C	Z	102.525	5.33
81	MP3C	Mx	.101	5.33
82	MP2A	X	-25.908	3.33
83	MP2A	Z	44.874	3.33
84	MP2A	Mx	-.013	3.33
85	MP2B	X	-19.166	3.33
86	MP2B	Z	33.196	3.33
87	MP2B	Mx	.019	3.33
88	MP2C	X	-27.154	3.33
89	MP2C	Z	47.032	3.33
90	MP2C	Mx	-.009	3.33
91	MP3A	X	-25.011	3.33
92	MP3A	Z	43.32	3.33
93	MP3A	Mx	-.013	3.33
94	MP3B	X	-15.686	3.33
95	MP3B	Z	27.169	3.33
96	MP3B	Mx	.015	3.33
97	MP3C	X	-26.734	3.33
98	MP3C	Z	46.305	3.33
99	MP3C	Mx	-.009	3.33

Member Point Loads (BLC 11 : Antenna Wo (240 Deg))

	Member Label	Direction	Magnitude[lb,k-ft]	Location[ft,%]
1	MP4A	X	-56.738	2.33
2	MP4A	Z	32.758	2.33
3	MP4A	Mx	.047	2.33
4	MP4A	X	-56.738	4.33
5	MP4A	Z	32.758	4.33
6	MP4A	Mx	.047	4.33
7	MP4B	X	-60.988	2.33
8	MP4B	Z	35.211	2.33
9	MP4B	Mx	-.045	2.33
10	MP4B	X	-60.988	4.33
11	MP4B	Z	35.211	4.33

Member Point Loads (BLC 11 : Antenna Wo (240 Deg)) (Continued)

	Member Label	Direction	Magnitude[lb,k-ft]	Location[ft,%]
12	MP4B	Mx	-.045	4.33
13	MP4C	X	-75.487	2.33
14	MP4C	Z	43.582	2.33
15	MP4C	Mx	-.013	2.33
16	MP4C	X	-75.487	4.33
17	MP4C	Z	43.582	4.33
18	MP4C	Mx	-.013	4.33
19	MP1A	X	-19.056	6.33
20	MP1A	Z	11.002	6.33
21	MP1A	Mx	.008	6.33
22	MP1B	X	-20.603	6.33
23	MP1B	Z	11.895	6.33
24	MP1B	Mx	-.008	6.33
25	MP1C	X	-25.88	6.33
26	MP1C	Z	14.942	6.33
27	MP1C	Mx	-.002	6.33
28	MP1A	X	-33.427	.33
29	MP1A	Z	19.299	.33
30	MP1A	Mx	.017	.33
31	MP1A	X	-33.427	2.33
32	MP1A	Z	19.299	2.33
33	MP1A	Mx	.017	2.33
34	MP1B	X	-39.532	.33
35	MP1B	Z	22.824	.33
36	MP1B	Mx	-.017	.33
37	MP1B	X	-39.532	2.33
38	MP1B	Z	22.824	2.33
39	MP1B	Mx	-.017	2.33
40	MP1C	X	-60.361	.33
41	MP1C	Z	34.849	.33
42	MP1C	Mx	-.006	.33
43	MP1C	X	-60.361	2.33
44	MP1C	Z	34.849	2.33
45	MP1C	Mx	-.006	2.33
46	MP3A	X	-79.637	1.83
47	MP3A	Z	45.978	1.83
48	MP3A	Mx	.084	1.83
49	MP3A	X	-79.637	5.33
50	MP3A	Z	45.978	5.33
51	MP3A	Mx	.084	5.33
52	MP3B	X	-85.537	1.83
53	MP3B	Z	49.385	1.83
54	MP3B	Mx	-.008	1.83
55	MP3B	X	-85.537	5.33
56	MP3B	Z	49.385	5.33
57	MP3B	Mx	-.008	5.33
58	MP3C	X	-105.665	1.83
59	MP3C	Z	61.006	1.83
60	MP3C	Mx	-.094	1.83
61	MP3C	X	-105.665	5.33
62	MP3C	Z	61.006	5.33
63	MP3C	Mx	-.094	5.33

Member Point Loads (BLC 11 : Antenna Wo (240 Deg)) (Continued)

	Member Label	Direction	Magnitude[lb,k-ft]	Location[ft,%]
64	MP3A	X	-79.637	1.83
65	MP3A	Z	45.978	1.83
66	MP3A	Mx	.022	1.83
67	MP3A	X	-79.637	5.33
68	MP3A	Z	45.978	5.33
69	MP3A	Mx	.022	5.33
70	MP3B	X	-85.537	1.83
71	MP3B	Z	49.385	1.83
72	MP3B	Mx	-.093	1.83
73	MP3B	X	-85.537	5.33
74	MP3B	Z	49.385	5.33
75	MP3B	Mx	-.093	5.33
76	MP3C	X	-105.665	1.83
77	MP3C	Z	61.006	1.83
78	MP3C	Mx	.066	1.83
79	MP3C	X	-105.665	5.33
80	MP3C	Z	61.006	5.33
81	MP3C	Mx	.066	5.33
82	MP2A	X	-36.762	3.33
83	MP2A	Z	21.225	3.33
84	MP2A	Mx	-.018	3.33
85	MP2B	X	-39.41	3.33
86	MP2B	Z	22.753	3.33
87	MP2B	Mx	.017	3.33
88	MP2C	X	-48.44	3.33
89	MP2C	Z	27.967	3.33
90	MP2C	Mx	.005	3.33
91	MP3A	X	-32.102	3.33
92	MP3A	Z	18.534	3.33
93	MP3A	Mx	-.016	3.33
94	MP3B	X	-35.763	3.33
95	MP3B	Z	20.648	3.33
96	MP3B	Mx	.016	3.33
97	MP3C	X	-48.253	3.33
98	MP3C	Z	27.859	3.33
99	MP3C	Mx	.005	3.33

Member Point Loads (BLC 12 : Antenna Wo (270 Deg))

	Member Label	Direction	Magnitude[lb,k-ft]	Location[ft,%]
1	MP4A	X	-57.996	2.33
2	MP4A	Z	0	2.33
3	MP4A	Mx	.048	2.33
4	MP4A	X	-57.996	4.33
5	MP4A	Z	0	4.33
6	MP4A	Mx	.048	4.33
7	MP4B	X	-84.553	2.33
8	MP4B	Z	0	2.33
9	MP4B	Mx	-.024	2.33
10	MP4B	X	-84.553	4.33
11	MP4B	Z	0	4.33
12	MP4B	Mx	-.024	4.33

Member Point Loads (BLC 12 : Antenna Wo (270 Deg)) (Continued)

	Member Label	Direction	Magnitude[lb,k-ft]	Location[ft,%]
13	MP4C	X	-75.645	2.33
14	MP4C	Z	0	2.33
15	MP4C	Mx	-.041	2.33
16	MP4C	X	-75.645	4.33
17	MP4C	Z	0	4.33
18	MP4C	Mx	-.041	4.33
19	MP1A	X	-19.268	6.33
20	MP1A	Z	0	6.33
21	MP1A	Mx	.008	6.33
22	MP1B	X	-28.933	6.33
23	MP1B	Z	0	6.33
24	MP1B	Mx	-.004	6.33
25	MP1C	X	-25.691	6.33
26	MP1C	Z	0	6.33
27	MP1C	Mx	-.007	6.33
28	MP1A	X	-27.797	.33
29	MP1A	Z	0	.33
30	MP1A	Mx	.014	.33
31	MP1A	X	-27.797	2.33
32	MP1A	Z	0	2.33
33	MP1A	Mx	.014	2.33
34	MP1B	X	-65.947	.33
35	MP1B	Z	0	.33
36	MP1B	Mx	-.011	.33
37	MP1B	X	-65.947	2.33
38	MP1B	Z	0	2.33
39	MP1B	Mx	-.011	2.33
40	MP1C	X	-53.15	.33
41	MP1C	Z	0	.33
42	MP1C	Mx	-.017	.33
43	MP1C	X	-53.15	2.33
44	MP1C	Z	0	2.33
45	MP1C	Mx	-.017	2.33
46	MP3A	X	-81.519	1.83
47	MP3A	Z	0	1.83
48	MP3A	Mx	.054	1.83
49	MP3A	X	-81.519	5.33
50	MP3A	Z	0	5.33
51	MP3A	Mx	.054	5.33
52	MP3B	X	-118.386	1.83
53	MP3B	Z	0	1.83
54	MP3B	Mx	.047	1.83
55	MP3B	X	-118.386	5.33
56	MP3B	Z	0	5.33
57	MP3B	Mx	.047	5.33
58	MP3C	X	-106.02	1.83
59	MP3C	Z	0	1.83
60	MP3C	Mx	-.1	1.83
61	MP3C	X	-106.02	5.33
62	MP3C	Z	0	5.33
63	MP3C	Mx	-.1	5.33
64	MP3A	X	-81.519	1.83

Member Point Loads (BLC 12 : Antenna Wo (270 Deg)) (Continued)

	Member Label	Direction	Magnitude[lb,k-ft]	Location[ft,%]
65	MP3A	Z	0	1.83
66	MP3A	Mx	.054	1.83
67	MP3A	X	-81.519	5.33
68	MP3A	Z	0	5.33
69	MP3A	Mx	.054	5.33
70	MP3B	X	-118.386	1.83
71	MP3B	Z	0	1.83
72	MP3B	Mx	-.101	1.83
73	MP3B	X	-118.386	5.33
74	MP3B	Z	0	5.33
75	MP3B	Mx	-.101	5.33
76	MP3C	X	-106.02	1.83
77	MP3C	Z	0	1.83
78	MP3C	Mx	.009	1.83
79	MP3C	X	-106.02	5.33
80	MP3C	Z	0	5.33
81	MP3C	Mx	.009	5.33
82	MP2A	X	-37.767	3.33
83	MP2A	Z	0	3.33
84	MP2A	Mx	-.019	3.33
85	MP2B	X	-54.308	3.33
86	MP2B	Z	0	3.33
87	MP2B	Mx	.009	3.33
88	MP2C	X	-48.759	3.33
89	MP2C	Z	0	3.33
90	MP2C	Mx	.016	3.33
91	MP3A	X	-30.591	3.33
92	MP3A	Z	0	3.33
93	MP3A	Mx	-.015	3.33
94	MP3B	X	-53.468	3.33
95	MP3B	Z	0	3.33
96	MP3B	Mx	.009	3.33
97	MP3C	X	-45.794	3.33
98	MP3C	Z	0	3.33
99	MP3C	Mx	.015	3.33

Member Point Loads (BLC 13 : Antenna Wo (300 Deg))

	Member Label	Direction	Magnitude[lb,k-ft]	Location[ft,%]
1	MP4A	X	-56.738	2.33
2	MP4A	Z	-32.758	2.33
3	MP4A	Mx	.047	2.33
4	MP4A	X	-56.738	4.33
5	MP4A	Z	-32.758	4.33
6	MP4A	Mx	.047	4.33
7	MP4B	X	-75.487	2.33
8	MP4B	Z	-43.582	2.33
9	MP4B	Mx	.013	2.33
10	MP4B	X	-75.487	4.33
11	MP4B	Z	-43.582	4.33
12	MP4B	Mx	.013	4.33
13	MP4C	X	-53.273	2.33

Member Point Loads (BLC 13 : Antenna Wo (300 Deg)) (Continued)

	Member Label	Direction	Magnitude[lb,k-ft]	Location[ft,%]
14	MP4C	Z	-30.757	2.33
15	MP4C	Mx	-.048	2.33
16	MP4C	X	-53.273	4.33
17	MP4C	Z	-30.757	4.33
18	MP4C	Mx	-.048	4.33
19	MP1A	X	-19.056	6.33
20	MP1A	Z	-11.002	6.33
21	MP1A	Mx	.008	6.33
22	MP1B	X	-25.88	6.33
23	MP1B	Z	-14.942	6.33
24	MP1B	Mx	.002	6.33
25	MP1C	X	-17.795	6.33
26	MP1C	Z	-10.274	6.33
27	MP1C	Mx	-.008	6.33
28	MP1A	X	-33.427	.33
29	MP1A	Z	-19.299	.33
30	MP1A	Mx	.017	.33
31	MP1A	X	-33.427	2.33
32	MP1A	Z	-19.299	2.33
33	MP1A	Mx	.017	2.33
34	MP1B	X	-60.361	.33
35	MP1B	Z	-34.849	.33
36	MP1B	Mx	.006	.33
37	MP1B	X	-60.361	2.33
38	MP1B	Z	-34.849	2.33
39	MP1B	Mx	.006	2.33
40	MP1C	X	-28.45	.33
41	MP1C	Z	-16.425	.33
42	MP1C	Mx	-.015	.33
43	MP1C	X	-28.45	2.33
44	MP1C	Z	-16.425	2.33
45	MP1C	Mx	-.015	2.33
46	MP3A	X	-79.637	1.83
47	MP3A	Z	-45.978	1.83
48	MP3A	Mx	.022	1.83
49	MP3A	X	-79.637	5.33
50	MP3A	Z	-45.978	5.33
51	MP3A	Mx	.022	5.33
52	MP3B	X	-105.665	1.83
53	MP3B	Z	-61.006	1.83
54	MP3B	Mx	.094	1.83
55	MP3B	X	-105.665	5.33
56	MP3B	Z	-61.006	5.33
57	MP3B	Mx	.094	5.33
58	MP3C	X	-74.827	1.83
59	MP3C	Z	-43.202	1.83
60	MP3C	Mx	-.074	1.83
61	MP3C	X	-74.827	5.33
62	MP3C	Z	-43.202	5.33
63	MP3C	Mx	-.074	5.33
64	MP3A	X	-79.637	1.83
65	MP3A	Z	-45.978	1.83

Member Point Loads (BLC 13 : Antenna Wo (300 Deg)) (Continued)

	Member Label	Direction	Magnitude[lb,k-ft]	Location[ft,%]
66	MP3A	Mx	.084	1.83
67	MP3A	X	-79.637	5.33
68	MP3A	Z	-45.978	5.33
69	MP3A	Mx	.084	5.33
70	MP3B	X	-105.665	1.83
71	MP3B	Z	-61.006	1.83
72	MP3B	Mx	-.066	1.83
73	MP3B	X	-105.665	5.33
74	MP3B	Z	-61.006	5.33
75	MP3B	Mx	-.066	5.33
76	MP3C	X	-74.827	1.83
77	MP3C	Z	-43.202	1.83
78	MP3C	Mx	-.034	1.83
79	MP3C	X	-74.827	5.33
80	MP3C	Z	-43.202	5.33
81	MP3C	Mx	-.034	5.33
82	MP2A	X	-36.762	3.33
83	MP2A	Z	-21.225	3.33
84	MP2A	Mx	-.018	3.33
85	MP2B	X	-48.44	3.33
86	MP2B	Z	-27.967	3.33
87	MP2B	Mx	-.005	3.33
88	MP2C	X	-34.604	3.33
89	MP2C	Z	-19.979	3.33
90	MP2C	Mx	.019	3.33
91	MP3A	X	-32.102	3.33
92	MP3A	Z	-18.534	3.33
93	MP3A	Mx	-.016	3.33
94	MP3B	X	-48.253	3.33
95	MP3B	Z	-27.859	3.33
96	MP3B	Mx	-.005	3.33
97	MP3C	X	-29.117	3.33
98	MP3C	Z	-16.811	3.33
99	MP3C	Mx	.016	3.33

Member Point Loads (BLC 14 : Antenna Wo (330 Deg))

	Member Label	Direction	Magnitude[lb,k-ft]	Location[ft,%]
1	MP4A	X	-40.276	2.33
2	MP4A	Z	-69.761	2.33
3	MP4A	Mx	.034	2.33
4	MP4A	X	-40.276	4.33
5	MP4A	Z	-69.761	4.33
6	MP4A	Mx	.034	4.33
7	MP4B	X	-37.823	2.33
8	MP4B	Z	-65.511	2.33
9	MP4B	Mx	.041	2.33
10	MP4B	X	-37.823	4.33
11	MP4B	Z	-65.511	4.33
12	MP4B	Mx	.041	4.33
13	MP4C	X	-29.452	2.33
14	MP4C	Z	-51.012	2.33

Member Point Loads (BLC 14 : Antenna Wo (330 Deg)) (Continued)

	Member Label	Direction	Magnitude[lb,k-ft]	Location[ft,%]
15	MP4C	Mx	-.048	2.33
16	MP4C	X	-29.452	4.33
17	MP4C	Z	-51.012	4.33
18	MP4C	Mx	-.048	4.33
19	MP1A	X	-13.738	6.33
20	MP1A	Z	-23.796	6.33
21	MP1A	Mx	.006	6.33
22	MP1B	X	-12.845	6.33
23	MP1B	Z	-22.249	6.33
24	MP1B	Mx	.007	6.33
25	MP1C	X	-9.799	6.33
26	MP1C	Z	-16.972	6.33
27	MP1C	Mx	-.008	6.33
28	MP1A	X	-30.1	.33
29	MP1A	Z	-52.135	.33
30	MP1A	Mx	.015	.33
31	MP1A	X	-30.1	2.33
32	MP1A	Z	-52.135	2.33
33	MP1A	Mx	.015	2.33
34	MP1B	X	-26.575	.33
35	MP1B	Z	-46.029	.33
36	MP1B	Mx	.017	.33
37	MP1B	X	-26.575	2.33
38	MP1B	Z	-46.029	2.33
39	MP1B	Mx	.017	2.33
40	MP1C	X	-14.55	.33
41	MP1C	Z	-25.201	.33
42	MP1C	Mx	-.014	.33
43	MP1C	X	-14.55	2.33
44	MP1C	Z	-25.201	2.33
45	MP1C	Mx	-.014	2.33
46	MP3A	X	-56.416	1.83
47	MP3A	Z	-97.716	1.83
48	MP3A	Mx	-.028	1.83
49	MP3A	X	-56.416	5.33
50	MP3A	Z	-97.716	5.33
51	MP3A	Mx	-.028	5.33
52	MP3B	X	-53.01	1.83
53	MP3B	Z	-91.816	1.83
54	MP3B	Mx	.1	1.83
55	MP3B	X	-53.01	5.33
56	MP3B	Z	-91.816	5.33
57	MP3B	Mx	.1	5.33
58	MP3C	X	-41.389	1.83
59	MP3C	Z	-71.688	1.83
60	MP3C	Mx	-.045	1.83
61	MP3C	X	-41.389	5.33
62	MP3C	Z	-71.688	5.33
63	MP3C	Mx	-.045	5.33
64	MP3A	X	-56.416	1.83
65	MP3A	Z	-97.716	1.83
66	MP3A	Mx	.103	1.83

Member Point Loads (BLC 14 : Antenna Wo (330 Deg)) (Continued)

	Member Label	Direction	Magnitude[lb,k-ft]	Location[ft,%]
67	MP3A	X	-56.416	5.33
68	MP3A	Z	-97.716	5.33
69	MP3A	Mx	.103	5.33
70	MP3B	X	-53.01	1.83
71	MP3B	Z	-91.816	1.83
72	MP3B	Mx	-.009	1.83
73	MP3B	X	-53.01	5.33
74	MP3B	Z	-91.816	5.33
75	MP3B	Mx	-.009	5.33
76	MP3C	X	-41.389	1.83
77	MP3C	Z	-71.688	1.83
78	MP3C	Mx	-.064	1.83
79	MP3C	X	-41.389	5.33
80	MP3C	Z	-71.688	5.33
81	MP3C	Mx	-.064	5.33
82	MP2A	X	-25.908	3.33
83	MP2A	Z	-44.874	3.33
84	MP2A	Mx	-.013	3.33
85	MP2B	X	-24.38	3.33
86	MP2B	Z	-42.227	3.33
87	MP2B	Mx	-.016	3.33
88	MP2C	X	-19.166	3.33
89	MP2C	Z	-33.196	3.33
90	MP2C	Mx	.019	3.33
91	MP3A	X	-25.011	3.33
92	MP3A	Z	-43.32	3.33
93	MP3A	Mx	-.013	3.33
94	MP3B	X	-22.897	3.33
95	MP3B	Z	-39.659	3.33
96	MP3B	Mx	-.015	3.33
97	MP3C	X	-15.686	3.33
98	MP3C	Z	-27.169	3.33
99	MP3C	Mx	.015	3.33

Member Point Loads (BLC 15 : Antenna Wi (0 Deg))

	Member Label	Direction	Magnitude[lb,k-ft]	Location[ft,%]
1	MP4A	X	0	2.33
2	MP4A	Z	-18.657	2.33
3	MP4A	Mx	0	2.33
4	MP4A	X	0	4.33
5	MP4A	Z	-18.657	4.33
6	MP4A	Mx	0	4.33
7	MP4B	X	0	2.33
8	MP4B	Z	-13.61	2.33
9	MP4B	Mx	.011	2.33
10	MP4B	X	0	4.33
11	MP4B	Z	-13.61	4.33
12	MP4B	Mx	.011	4.33
13	MP4C	X	0	2.33
14	MP4C	Z	-15.303	2.33
15	MP4C	Mx	-.01	2.33

Member Point Loads (BLC 15 : Antenna Wi (0 Deg)) (Continued)

	Member Label	Direction	Magnitude[lb,k-ft]	Location[ft,%]
16	MP4C	X	0	4.33
17	MP4C	Z	-15.303	4.33
18	MP4C	Mx	-.01	4.33
19	MP1A	X	0	6.33
20	MP1A	Z	-7.7	6.33
21	MP1A	Mx	0	6.33
22	MP1B	X	0	6.33
23	MP1B	Z	-5.737	6.33
24	MP1B	Mx	.002	6.33
25	MP1C	X	0	6.33
26	MP1C	Z	-6.396	6.33
27	MP1C	Mx	-.002	6.33
28	MP1A	X	0	.33
29	MP1A	Z	-15.195	.33
30	MP1A	Mx	0	.33
31	MP1A	X	0	2.33
32	MP1A	Z	-15.195	2.33
33	MP1A	Mx	0	2.33
34	MP1B	X	0	.33
35	MP1B	Z	-7.717	.33
36	MP1B	Mx	.004	.33
37	MP1B	X	0	2.33
38	MP1B	Z	-7.717	2.33
39	MP1B	Mx	.004	2.33
40	MP1C	X	0	.33
41	MP1C	Z	-10.225	.33
42	MP1C	Mx	-.004	.33
43	MP1C	X	0	2.33
44	MP1C	Z	-10.225	2.33
45	MP1C	Mx	-.004	2.33
46	MP3A	X	0	1.83
47	MP3A	Z	-25.525	1.83
48	MP3A	Mx	-.017	1.83
49	MP3A	X	0	5.33
50	MP3A	Z	-25.525	5.33
51	MP3A	Mx	-.017	5.33
52	MP3B	X	0	1.83
53	MP3B	Z	-18.81	1.83
54	MP3B	Mx	.016	1.83
55	MP3B	X	0	5.33
56	MP3B	Z	-18.81	5.33
57	MP3B	Mx	.016	5.33
58	MP3C	X	0	1.83
59	MP3C	Z	-21.062	1.83
60	MP3C	Mx	-.002	1.83
61	MP3C	X	0	5.33
62	MP3C	Z	-21.062	5.33
63	MP3C	Mx	-.002	5.33
64	MP3A	X	0	1.83
65	MP3A	Z	-25.525	1.83
66	MP3A	Mx	.017	1.83
67	MP3A	X	0	5.33

Member Point Loads (BLC 15 : Antenna Wi (0 Deg)) (Continued)

	Member Label	Direction	Magnitude[lb,k-ft]	Location[ft,%]
68	MP3A	Z	-25.525	5.33
69	MP3A	Mx	.017	5.33
70	MP3B	X	0	1.83
71	MP3B	Z	-18.81	1.83
72	MP3B	Mx	.007	1.83
73	MP3B	X	0	5.33
74	MP3B	Z	-18.81	5.33
75	MP3B	Mx	.007	5.33
76	MP3C	X	0	1.83
77	MP3C	Z	-21.062	1.83
78	MP3C	Mx	-.02	1.83
79	MP3C	X	0	5.33
80	MP3C	Z	-21.062	5.33
81	MP3C	Mx	-.02	5.33
82	MP2A	X	0	3.33
83	MP2A	Z	-13.133	3.33
84	MP2A	Mx	0	3.33
85	MP2B	X	0	3.33
86	MP2B	Z	-9.748	3.33
87	MP2B	Mx	-.005	3.33
88	MP2C	X	0	3.33
89	MP2C	Z	-10.883	3.33
90	MP2C	Mx	.004	3.33
91	MP3A	X	0	3.33
92	MP3A	Z	-13.133	3.33
93	MP3A	Mx	0	3.33
94	MP3B	X	0	3.33
95	MP3B	Z	-8.461	3.33
96	MP3B	Mx	-.004	3.33
97	MP3C	X	0	3.33
98	MP3C	Z	-10.028	3.33
99	MP3C	Mx	.004	3.33

Member Point Loads (BLC 16 : Antenna Wi (30 Deg))

	Member Label	Direction	Magnitude[lb,k-ft]	Location[ft,%]
1	MP4A	X	8.614	2.33
2	MP4A	Z	-14.92	2.33
3	MP4A	Mx	-.007	2.33
4	MP4A	X	8.614	4.33
5	MP4A	Z	-14.92	4.33
6	MP4A	Mx	-.007	4.33
7	MP4B	X	6.557	2.33
8	MP4B	Z	-11.357	2.33
9	MP4B	Mx	.011	2.33
10	MP4B	X	6.557	4.33
11	MP4B	Z	-11.357	4.33
12	MP4B	Mx	.011	4.33
13	MP4C	X	8.994	2.33
14	MP4C	Z	-15.579	2.33
15	MP4C	Mx	-.005	2.33
16	MP4C	X	8.994	4.33

Member Point Loads (BLC 16 : Antenna Wi (30 Deg)) (Continued)

	Member Label	Direction	Magnitude[lb,k-ft]	Location[ft,%]
17	MP4C	Z	-15.579	4.33
18	MP4C	Mx	-.005	4.33
19	MP1A	X	3.572	6.33
20	MP1A	Z	-6.187	6.33
21	MP1A	Mx	-.001	6.33
22	MP1B	X	2.772	6.33
23	MP1B	Z	-4.801	6.33
24	MP1B	Mx	.002	6.33
25	MP1C	X	3.72	6.33
26	MP1C	Z	-6.443	6.33
27	MP1C	Mx	-.001	6.33
28	MP1A	X	6.539	.33
29	MP1A	Z	-11.326	.33
30	MP1A	Mx	-.003	.33
31	MP1A	X	6.539	2.33
32	MP1A	Z	-11.326	2.33
33	MP1A	Mx	-.003	2.33
34	MP1B	X	3.491	.33
35	MP1B	Z	-6.046	.33
36	MP1B	Mx	.003	.33
37	MP1B	X	3.491	2.33
38	MP1B	Z	-6.046	2.33
39	MP1B	Mx	.003	2.33
40	MP1C	X	7.102	.33
41	MP1C	Z	-12.301	.33
42	MP1C	Mx	-.002	.33
43	MP1C	X	7.102	2.33
44	MP1C	Z	-12.301	2.33
45	MP1C	Mx	-.002	2.33
46	MP3A	X	11.812	1.83
47	MP3A	Z	-20.459	1.83
48	MP3A	Mx	-.022	1.83
49	MP3A	X	11.812	5.33
50	MP3A	Z	-20.459	5.33
51	MP3A	Mx	-.022	5.33
52	MP3B	X	9.075	1.83
53	MP3B	Z	-15.718	1.83
54	MP3B	Mx	.01	1.83
55	MP3B	X	9.075	5.33
56	MP3B	Z	-15.718	5.33
57	MP3B	Mx	.01	5.33
58	MP3C	X	12.318	1.83
59	MP3C	Z	-21.335	1.83
60	MP3C	Mx	.01	1.83
61	MP3C	X	12.318	5.33
62	MP3C	Z	-21.335	5.33
63	MP3C	Mx	.01	5.33
64	MP3A	X	11.812	1.83
65	MP3A	Z	-20.459	1.83
66	MP3A	Mx	.006	1.83
67	MP3A	X	11.812	5.33
68	MP3A	Z	-20.459	5.33

Member Point Loads (BLC 16 : Antenna Wi (30 Deg)) (Continued)

	Member Label	Direction	Magnitude[lb,k-ft]	Location[ft,%]
69	MP3A	Mx	.006	5.33
70	MP3B	X	9.075	1.83
71	MP3B	Z	-15.718	1.83
72	MP3B	Mx	.014	1.83
73	MP3B	X	9.075	5.33
74	MP3B	Z	-15.718	5.33
75	MP3B	Mx	.014	5.33
76	MP3C	X	12.318	1.83
77	MP3C	Z	-21.335	1.83
78	MP3C	Mx	-.021	1.83
79	MP3C	X	12.318	5.33
80	MP3C	Z	-21.335	5.33
81	MP3C	Mx	-.021	5.33
82	MP2A	X	6.087	3.33
83	MP2A	Z	-10.544	3.33
84	MP2A	Mx	.003	3.33
85	MP2B	X	4.707	3.33
86	MP2B	Z	-8.153	3.33
87	MP2B	Mx	-.005	3.33
88	MP2C	X	6.342	3.33
89	MP2C	Z	-10.985	3.33
90	MP2C	Mx	.002	3.33
91	MP3A	X	5.905	3.33
92	MP3A	Z	-10.228	3.33
93	MP3A	Mx	.003	3.33
94	MP3B	X	4.001	3.33
95	MP3B	Z	-6.93	3.33
96	MP3B	Mx	-.004	3.33
97	MP3C	X	6.257	3.33
98	MP3C	Z	-10.838	3.33
99	MP3C	Mx	.002	3.33

Member Point Loads (BLC 17 : Antenna Wi (60 Deg))

	Member Label	Direction	Magnitude[lb,k-ft]	Location[ft,%]
1	MP4A	X	12.445	2.33
2	MP4A	Z	-7.185	2.33
3	MP4A	Mx	-.01	2.33
4	MP4A	X	12.445	4.33
5	MP4A	Z	-7.185	4.33
6	MP4A	Mx	-.01	4.33
7	MP4B	X	13.253	2.33
8	MP4B	Z	-7.652	2.33
9	MP4B	Mx	.01	2.33
10	MP4B	X	13.253	4.33
11	MP4B	Z	-7.652	4.33
12	MP4B	Mx	.01	4.33
13	MP4C	X	16.008	2.33
14	MP4C	Z	-9.242	2.33
15	MP4C	Mx	.003	2.33
16	MP4C	X	16.008	4.33
17	MP4C	Z	-9.242	4.33

Member Point Loads (BLC 17 : Antenna Wi (60 Deg)) (Continued)

	Member Label	Direction	Magnitude[lb,k-ft]	Location[ft,%]
18	MP4C	Mx	.003	4.33
19	MP1A	X	5.225	6.33
20	MP1A	Z	-3.016	6.33
21	MP1A	Mx	-.002	6.33
22	MP1B	X	5.539	6.33
23	MP1B	Z	-3.198	6.33
24	MP1B	Mx	.002	6.33
25	MP1C	X	6.61	6.33
26	MP1C	Z	-3.817	6.33
27	MP1C	Mx	.000552	6.33
28	MP1A	X	7.659	.33
29	MP1A	Z	-4.422	.33
30	MP1A	Mx	-.004	.33
31	MP1A	X	7.659	2.33
32	MP1A	Z	-4.422	2.33
33	MP1A	Mx	-.004	2.33
34	MP1B	X	8.855	.33
35	MP1B	Z	-5.113	.33
36	MP1B	Mx	.004	.33
37	MP1B	X	8.855	2.33
38	MP1B	Z	-5.113	2.33
39	MP1B	Mx	.004	2.33
40	MP1C	X	12.938	.33
41	MP1C	Z	-7.47	.33
42	MP1C	Mx	.001	.33
43	MP1C	X	12.938	2.33
44	MP1C	Z	-7.47	2.33
45	MP1C	Mx	.001	2.33
46	MP3A	X	17.166	1.83
47	MP3A	Z	-9.911	1.83
48	MP3A	Mx	-.018	1.83
49	MP3A	X	17.166	5.33
50	MP3A	Z	-9.911	5.33
51	MP3A	Mx	-.018	5.33
52	MP3B	X	18.24	1.83
53	MP3B	Z	-10.531	1.83
54	MP3B	Mx	.002	1.83
55	MP3B	X	18.24	5.33
56	MP3B	Z	-10.531	5.33
57	MP3B	Mx	.002	5.33
58	MP3C	X	21.907	1.83
59	MP3C	Z	-12.648	1.83
60	MP3C	Mx	.02	1.83
61	MP3C	X	21.907	5.33
62	MP3C	Z	-12.648	5.33
63	MP3C	Mx	.02	5.33
64	MP3A	X	17.166	1.83
65	MP3A	Z	-9.911	1.83
66	MP3A	Mx	-.005	1.83
67	MP3A	X	17.166	5.33
68	MP3A	Z	-9.911	5.33
69	MP3A	Mx	-.005	5.33

Member Point Loads (BLC 17 : Antenna Wi (60 Deg)) (Continued)

	Member Label	Direction	Magnitude[lb,k-ft]	Location[ft,%]
70	MP3B	X	18.24	1.83
71	MP3B	Z	-10.531	1.83
72	MP3B	Mx	.02	1.83
73	MP3B	X	18.24	5.33
74	MP3B	Z	-10.531	5.33
75	MP3B	Mx	.02	5.33
76	MP3C	X	21.907	1.83
77	MP3C	Z	-12.648	1.83
78	MP3C	Mx	-.014	1.83
79	MP3C	X	21.907	5.33
80	MP3C	Z	-12.648	5.33
81	MP3C	Mx	-.014	5.33
82	MP2A	X	8.883	3.33
83	MP2A	Z	-5.129	3.33
84	MP2A	Mx	.004	3.33
85	MP2B	X	9.425	3.33
86	MP2B	Z	-5.442	3.33
87	MP2B	Mx	-.004	3.33
88	MP2C	X	11.274	3.33
89	MP2C	Z	-6.509	3.33
90	MP2C	Mx	-.001	3.33
91	MP3A	X	7.937	3.33
92	MP3A	Z	-4.582	3.33
93	MP3A	Mx	.004	3.33
94	MP3B	X	8.685	3.33
95	MP3B	Z	-5.014	3.33
96	MP3B	Mx	-.004	3.33
97	MP3C	X	11.236	3.33
98	MP3C	Z	-6.487	3.33
99	MP3C	Mx	-.001	3.33

Member Point Loads (BLC 18 : Antenna Wi (90 Deg))

	Member Label	Direction	Magnitude[lb,k-ft]	Location[ft,%]
1	MP4A	X	12.942	2.33
2	MP4A	Z	0	2.33
3	MP4A	Mx	-.011	2.33
4	MP4A	X	12.942	4.33
5	MP4A	Z	0	4.33
6	MP4A	Mx	-.011	4.33
7	MP4B	X	17.989	2.33
8	MP4B	Z	0	2.33
9	MP4B	Mx	.005	2.33
10	MP4B	X	17.989	4.33
11	MP4B	Z	0	4.33
12	MP4B	Mx	.005	4.33
13	MP4C	X	16.296	2.33
14	MP4C	Z	0	2.33
15	MP4C	Mx	.009	2.33
16	MP4C	X	16.296	4.33
17	MP4C	Z	0	4.33
18	MP4C	Mx	.009	4.33

Member Point Loads (BLC 18 : Antenna Wi (90 Deg)) (Continued)

	Member Label	Direction	Magnitude[lb,k-ft]	Location[ft,%]
19	MP1A	X	5.477	6.33
20	MP1A	Z	0	6.33
21	MP1A	Mx	-.002	6.33
22	MP1B	X	7.44	6.33
23	MP1B	Z	0	6.33
24	MP1B	Mx	.001	6.33
25	MP1C	X	6.782	6.33
26	MP1C	Z	0	6.33
27	MP1C	Mx	.002	6.33
28	MP1A	X	6.726	.33
29	MP1A	Z	0	.33
30	MP1A	Mx	-.003	.33
31	MP1A	X	6.726	2.33
32	MP1A	Z	0	2.33
33	MP1A	Mx	-.003	2.33
34	MP1B	X	14.204	.33
35	MP1B	Z	0	.33
36	MP1B	Mx	.002	.33
37	MP1B	X	14.204	2.33
38	MP1B	Z	0	2.33
39	MP1B	Mx	.002	2.33
40	MP1C	X	11.696	.33
41	MP1C	Z	0	.33
42	MP1C	Mx	.004	.33
43	MP1C	X	11.696	2.33
44	MP1C	Z	0	2.33
45	MP1C	Mx	.004	2.33
46	MP3A	X	17.92	1.83
47	MP3A	Z	0	1.83
48	MP3A	Mx	-.012	1.83
49	MP3A	X	17.92	5.33
50	MP3A	Z	0	5.33
51	MP3A	Mx	-.012	5.33
52	MP3B	X	24.635	1.83
53	MP3B	Z	0	1.83
54	MP3B	Mx	-.01	1.83
55	MP3B	X	24.635	5.33
56	MP3B	Z	0	5.33
57	MP3B	Mx	-.01	5.33
58	MP3C	X	22.383	1.83
59	MP3C	Z	0	1.83
60	MP3C	Mx	.021	1.83
61	MP3C	X	22.383	5.33
62	MP3C	Z	0	5.33
63	MP3C	Mx	.021	5.33
64	MP3A	X	17.92	1.83
65	MP3A	Z	0	1.83
66	MP3A	Mx	-.012	1.83
67	MP3A	X	17.92	5.33
68	MP3A	Z	0	5.33
69	MP3A	Mx	-.012	5.33
70	MP3B	X	24.635	1.83

Member Point Loads (BLC 18 : Antenna Wi (90 Deg)) (Continued)

	Member Label	Direction	Magnitude[lb,k-ft]	Location[ft,%]
71	MP3B	Z	0	1.83
72	MP3B	Mx	.021	1.83
73	MP3B	X	24.635	5.33
74	MP3B	Z	0	5.33
75	MP3B	Mx	.021	5.33
76	MP3C	X	22.383	1.83
77	MP3C	Z	0	1.83
78	MP3C	Mx	-.002	1.83
79	MP3C	X	22.383	5.33
80	MP3C	Z	0	5.33
81	MP3C	Mx	-.002	5.33
82	MP2A	X	9.299	3.33
83	MP2A	Z	0	3.33
84	MP2A	Mx	.005	3.33
85	MP2B	X	12.685	3.33
86	MP2B	Z	0	3.33
87	MP2B	Mx	-.002	3.33
88	MP2C	X	11.549	3.33
89	MP2C	Z	0	3.33
90	MP2C	Mx	-.004	3.33
91	MP3A	X	7.842	3.33
92	MP3A	Z	0	3.33
93	MP3A	Mx	.004	3.33
94	MP3B	X	12.514	3.33
95	MP3B	Z	0	3.33
96	MP3B	Mx	-.002	3.33
97	MP3C	X	10.947	3.33
98	MP3C	Z	0	3.33
99	MP3C	Mx	-.004	3.33

Member Point Loads (BLC 19 : Antenna Wi (120 Deg))

	Member Label	Direction	Magnitude[lb,k-ft]	Location[ft,%]
1	MP4A	X	12.445	2.33
2	MP4A	Z	7.185	2.33
3	MP4A	Mx	-.01	2.33
4	MP4A	X	12.445	4.33
5	MP4A	Z	7.185	4.33
6	MP4A	Mx	-.01	4.33
7	MP4B	X	16.008	2.33
8	MP4B	Z	9.242	2.33
9	MP4B	Mx	-.003	2.33
10	MP4B	X	16.008	4.33
11	MP4B	Z	9.242	4.33
12	MP4B	Mx	-.003	4.33
13	MP4C	X	11.787	2.33
14	MP4C	Z	6.805	2.33
15	MP4C	Mx	.011	2.33
16	MP4C	X	11.787	4.33
17	MP4C	Z	6.805	4.33
18	MP4C	Mx	.011	4.33
19	MP1A	X	5.225	6.33

Member Point Loads (BLC 19 : Antenna Wi (120 Deg)) (Continued)

	Member Label	Direction	Magnitude[lb,k-ft]	Location[ft,%]
20	MP1A	Z	3.016	6.33
21	MP1A	Mx	-.002	6.33
22	MP1B	X	6.61	6.33
23	MP1B	Z	3.817	6.33
24	MP1B	Mx	-.000553	6.33
25	MP1C	X	4.968	6.33
26	MP1C	Z	2.869	6.33
27	MP1C	Mx	.002	6.33
28	MP1A	X	7.659	.33
29	MP1A	Z	4.422	.33
30	MP1A	Mx	-.004	.33
31	MP1A	X	7.659	2.33
32	MP1A	Z	4.422	2.33
33	MP1A	Mx	-.004	2.33
34	MP1B	X	12.938	.33
35	MP1B	Z	7.47	.33
36	MP1B	Mx	-.001	.33
37	MP1B	X	12.938	2.33
38	MP1B	Z	7.47	2.33
39	MP1B	Mx	-.001	2.33
40	MP1C	X	6.683	.33
41	MP1C	Z	3.858	.33
42	MP1C	Mx	.004	.33
43	MP1C	X	6.683	2.33
44	MP1C	Z	3.858	2.33
45	MP1C	Mx	.004	2.33
46	MP3A	X	17.166	1.83
47	MP3A	Z	9.911	1.83
48	MP3A	Mx	-.005	1.83
49	MP3A	X	17.166	5.33
50	MP3A	Z	9.911	5.33
51	MP3A	Mx	-.005	5.33
52	MP3B	X	21.907	1.83
53	MP3B	Z	12.648	1.83
54	MP3B	Mx	-.02	1.83
55	MP3B	X	21.907	5.33
56	MP3B	Z	12.648	5.33
57	MP3B	Mx	-.02	5.33
58	MP3C	X	16.29	1.83
59	MP3C	Z	9.405	1.83
60	MP3C	Mx	.016	1.83
61	MP3C	X	16.29	5.33
62	MP3C	Z	9.405	5.33
63	MP3C	Mx	.016	5.33
64	MP3A	X	17.166	1.83
65	MP3A	Z	9.911	1.83
66	MP3A	Mx	-.018	1.83
67	MP3A	X	17.166	5.33
68	MP3A	Z	9.911	5.33
69	MP3A	Mx	-.018	5.33
70	MP3B	X	21.907	1.83
71	MP3B	Z	12.648	1.83

Member Point Loads (BLC 19 : Antenna Wi (120 Deg)) (Continued)

	Member Label	Direction	Magnitude[lb,k-ft]	Location[ft,%]
72	MP3B	Mx	.014	1.83
73	MP3B	X	21.907	5.33
74	MP3B	Z	12.648	5.33
75	MP3B	Mx	.014	5.33
76	MP3C	X	16.29	1.83
77	MP3C	Z	9.405	1.83
78	MP3C	Mx	.007	1.83
79	MP3C	X	16.29	5.33
80	MP3C	Z	9.405	5.33
81	MP3C	Mx	.007	5.33
82	MP2A	X	8.883	3.33
83	MP2A	Z	5.129	3.33
84	MP2A	Mx	.004	3.33
85	MP2B	X	11.274	3.33
86	MP2B	Z	6.509	3.33
87	MP2B	Mx	.001	3.33
88	MP2C	X	8.442	3.33
89	MP2C	Z	4.874	3.33
90	MP2C	Mx	-.005	3.33
91	MP3A	X	7.937	3.33
92	MP3A	Z	4.582	3.33
93	MP3A	Mx	.004	3.33
94	MP3B	X	11.236	3.33
95	MP3B	Z	6.487	3.33
96	MP3B	Mx	.001	3.33
97	MP3C	X	7.327	3.33
98	MP3C	Z	4.231	3.33
99	MP3C	Mx	-.004	3.33

Member Point Loads (BLC 20 : Antenna Wi (150 Deg))

	Member Label	Direction	Magnitude[lb,k-ft]	Location[ft,%]
1	MP4A	X	8.614	2.33
2	MP4A	Z	14.92	2.33
3	MP4A	Mx	-.007	2.33
4	MP4A	X	8.614	4.33
5	MP4A	Z	14.92	4.33
6	MP4A	Mx	-.007	4.33
7	MP4B	X	8.148	2.33
8	MP4B	Z	14.113	2.33
9	MP4B	Mx	-.009	2.33
10	MP4B	X	8.148	4.33
11	MP4B	Z	14.113	4.33
12	MP4B	Mx	-.009	4.33
13	MP4C	X	6.557	2.33
14	MP4C	Z	11.357	2.33
15	MP4C	Mx	.011	2.33
16	MP4C	X	6.557	4.33
17	MP4C	Z	11.357	4.33
18	MP4C	Mx	.011	4.33
19	MP1A	X	3.572	6.33
20	MP1A	Z	6.187	6.33

Member Point Loads (BLC 20 : Antenna Wi (150 Deg)) (Continued)

	Member Label	Direction	Magnitude[lb,k-ft]	Location[ft,%]
21	MP1A	Mx	-.001	6.33
22	MP1B	X	3.391	6.33
23	MP1B	Z	5.873	6.33
24	MP1B	Mx	-.002	6.33
25	MP1C	X	2.772	6.33
26	MP1C	Z	4.801	6.33
27	MP1C	Mx	.002	6.33
28	MP1A	X	6.539	.33
29	MP1A	Z	11.326	.33
30	MP1A	Mx	-.003	.33
31	MP1A	X	6.539	2.33
32	MP1A	Z	11.326	2.33
33	MP1A	Mx	-.003	2.33
34	MP1B	X	5.848	.33
35	MP1B	Z	10.129	.33
36	MP1B	Mx	-.004	.33
37	MP1B	X	5.848	2.33
38	MP1B	Z	10.129	2.33
39	MP1B	Mx	-.004	2.33
40	MP1C	X	3.491	.33
41	MP1C	Z	6.046	.33
42	MP1C	Mx	.003	.33
43	MP1C	X	3.491	2.33
44	MP1C	Z	6.046	2.33
45	MP1C	Mx	.003	2.33
46	MP3A	X	11.812	1.83
47	MP3A	Z	20.459	1.83
48	MP3A	Mx	.006	1.83
49	MP3A	X	11.812	5.33
50	MP3A	Z	20.459	5.33
51	MP3A	Mx	.006	5.33
52	MP3B	X	11.191	1.83
53	MP3B	Z	19.384	1.83
54	MP3B	Mx	-.021	1.83
55	MP3B	X	11.191	5.33
56	MP3B	Z	19.384	5.33
57	MP3B	Mx	-.021	5.33
58	MP3C	X	9.075	1.83
59	MP3C	Z	15.718	1.83
60	MP3C	Mx	.01	1.83
61	MP3C	X	9.075	5.33
62	MP3C	Z	15.718	5.33
63	MP3C	Mx	.01	5.33
64	MP3A	X	11.812	1.83
65	MP3A	Z	20.459	1.83
66	MP3A	Mx	-.022	1.83
67	MP3A	X	11.812	5.33
68	MP3A	Z	20.459	5.33
69	MP3A	Mx	-.022	5.33
70	MP3B	X	11.191	1.83
71	MP3B	Z	19.384	1.83
72	MP3B	Mx	.002	1.83

Member Point Loads (BLC 20 : Antenna Wi (150 Deg)) (Continued)

	Member Label	Direction	Magnitude[lb,k-ft]	Location[ft,%]
73	MP3B	X	11.191	5.33
74	MP3B	Z	19.384	5.33
75	MP3B	Mx	.002	5.33
76	MP3C	X	9.075	1.83
77	MP3C	Z	15.718	1.83
78	MP3C	Mx	.014	1.83
79	MP3C	X	9.075	5.33
80	MP3C	Z	15.718	5.33
81	MP3C	Mx	.014	5.33
82	MP2A	X	6.087	3.33
83	MP2A	Z	10.544	3.33
84	MP2A	Mx	.003	3.33
85	MP2B	X	5.775	3.33
86	MP2B	Z	10.002	3.33
87	MP2B	Mx	.004	3.33
88	MP2C	X	4.707	3.33
89	MP2C	Z	8.153	3.33
90	MP2C	Mx	-.005	3.33
91	MP3A	X	5.905	3.33
92	MP3A	Z	10.228	3.33
93	MP3A	Mx	.003	3.33
94	MP3B	X	5.474	3.33
95	MP3B	Z	9.48	3.33
96	MP3B	Mx	.004	3.33
97	MP3C	X	4.001	3.33
98	MP3C	Z	6.93	3.33
99	MP3C	Mx	-.004	3.33

Member Point Loads (BLC 21 : Antenna Wi (180 Deg))

	Member Label	Direction	Magnitude[lb,k-ft]	Location[ft,%]
1	MP4A	X	0	2.33
2	MP4A	Z	18.657	2.33
3	MP4A	Mx	0	2.33
4	MP4A	X	0	4.33
5	MP4A	Z	18.657	4.33
6	MP4A	Mx	0	4.33
7	MP4B	X	0	2.33
8	MP4B	Z	13.61	2.33
9	MP4B	Mx	-.011	2.33
10	MP4B	X	0	4.33
11	MP4B	Z	13.61	4.33
12	MP4B	Mx	-.011	4.33
13	MP4C	X	0	2.33
14	MP4C	Z	15.303	2.33
15	MP4C	Mx	.01	2.33
16	MP4C	X	0	4.33
17	MP4C	Z	15.303	4.33
18	MP4C	Mx	.01	4.33
19	MP1A	X	0	6.33
20	MP1A	Z	7.7	6.33
21	MP1A	Mx	0	6.33

Member Point Loads (BLC 21 : Antenna Wi (180 Deg)) (Continued)

	Member Label	Direction	Magnitude[lb,k-ft]	Location[ft,%]
22	MP1B	X	0	6.33
23	MP1B	Z	5.737	6.33
24	MP1B	Mx	-.002	6.33
25	MP1C	X	0	6.33
26	MP1C	Z	6.396	6.33
27	MP1C	Mx	.002	6.33
28	MP1A	X	0	.33
29	MP1A	Z	15.195	.33
30	MP1A	Mx	0	.33
31	MP1A	X	0	2.33
32	MP1A	Z	15.195	2.33
33	MP1A	Mx	0	2.33
34	MP1B	X	0	.33
35	MP1B	Z	7.717	.33
36	MP1B	Mx	-.004	.33
37	MP1B	X	0	2.33
38	MP1B	Z	7.717	2.33
39	MP1B	Mx	-.004	2.33
40	MP1C	X	0	.33
41	MP1C	Z	10.225	.33
42	MP1C	Mx	.004	.33
43	MP1C	X	0	2.33
44	MP1C	Z	10.225	2.33
45	MP1C	Mx	.004	2.33
46	MP3A	X	0	1.83
47	MP3A	Z	25.525	1.83
48	MP3A	Mx	.017	1.83
49	MP3A	X	0	5.33
50	MP3A	Z	25.525	5.33
51	MP3A	Mx	.017	5.33
52	MP3B	X	0	1.83
53	MP3B	Z	18.81	1.83
54	MP3B	Mx	-.016	1.83
55	MP3B	X	0	5.33
56	MP3B	Z	18.81	5.33
57	MP3B	Mx	-.016	5.33
58	MP3C	X	0	1.83
59	MP3C	Z	21.062	1.83
60	MP3C	Mx	.002	1.83
61	MP3C	X	0	5.33
62	MP3C	Z	21.062	5.33
63	MP3C	Mx	.002	5.33
64	MP3A	X	0	1.83
65	MP3A	Z	25.525	1.83
66	MP3A	Mx	-.017	1.83
67	MP3A	X	0	5.33
68	MP3A	Z	25.525	5.33
69	MP3A	Mx	-.017	5.33
70	MP3B	X	0	1.83
71	MP3B	Z	18.81	1.83
72	MP3B	Mx	-.007	1.83
73	MP3B	X	0	5.33

Member Point Loads (BLC 21 : Antenna Wi (180 Deg)) (Continued)

	Member Label	Direction	Magnitude[lb,k-ft]	Location[ft,%]
74	MP3B	Z	18.81	5.33
75	MP3B	Mx	-.007	5.33
76	MP3C	X	0	1.83
77	MP3C	Z	21.062	1.83
78	MP3C	Mx	.02	1.83
79	MP3C	X	0	5.33
80	MP3C	Z	21.062	5.33
81	MP3C	Mx	.02	5.33
82	MP2A	X	0	3.33
83	MP2A	Z	13.133	3.33
84	MP2A	Mx	0	3.33
85	MP2B	X	0	3.33
86	MP2B	Z	9.748	3.33
87	MP2B	Mx	.005	3.33
88	MP2C	X	0	3.33
89	MP2C	Z	10.883	3.33
90	MP2C	Mx	-.004	3.33
91	MP3A	X	0	3.33
92	MP3A	Z	13.133	3.33
93	MP3A	Mx	0	3.33
94	MP3B	X	0	3.33
95	MP3B	Z	8.461	3.33
96	MP3B	Mx	.004	3.33
97	MP3C	X	0	3.33
98	MP3C	Z	10.028	3.33
99	MP3C	Mx	-.004	3.33

Member Point Loads (BLC 22 : Antenna Wi (210 Deg))

	Member Label	Direction	Magnitude[lb,k-ft]	Location[ft,%]
1	MP4A	X	-8.614	2.33
2	MP4A	Z	14.92	2.33
3	MP4A	Mx	.007	2.33
4	MP4A	X	-8.614	4.33
5	MP4A	Z	14.92	4.33
6	MP4A	Mx	.007	4.33
7	MP4B	X	-6.557	2.33
8	MP4B	Z	11.357	2.33
9	MP4B	Mx	-.011	2.33
10	MP4B	X	-6.557	4.33
11	MP4B	Z	11.357	4.33
12	MP4B	Mx	-.011	4.33
13	MP4C	X	-8.994	2.33
14	MP4C	Z	15.579	2.33
15	MP4C	Mx	.005	2.33
16	MP4C	X	-8.994	4.33
17	MP4C	Z	15.579	4.33
18	MP4C	Mx	.005	4.33
19	MP1A	X	-3.572	6.33
20	MP1A	Z	6.187	6.33
21	MP1A	Mx	.001	6.33
22	MP1B	X	-2.772	6.33

Member Point Loads (BLC 22 : Antenna Wi (210 Deg)) (Continued)

	Member Label	Direction	Magnitude[lb,k-ft]	Location[ft,%]
23	MP1B	Z	4.801	6.33
24	MP1B	Mx	-.002	6.33
25	MP1C	X	-3.72	6.33
26	MP1C	Z	6.443	6.33
27	MP1C	Mx	.001	6.33
28	MP1A	X	-6.539	.33
29	MP1A	Z	11.326	.33
30	MP1A	Mx	.003	.33
31	MP1A	X	-6.539	2.33
32	MP1A	Z	11.326	2.33
33	MP1A	Mx	.003	2.33
34	MP1B	X	-3.491	.33
35	MP1B	Z	6.046	.33
36	MP1B	Mx	-.003	.33
37	MP1B	X	-3.491	2.33
38	MP1B	Z	6.046	2.33
39	MP1B	Mx	-.003	2.33
40	MP1C	X	-7.102	.33
41	MP1C	Z	12.301	.33
42	MP1C	Mx	.002	.33
43	MP1C	X	-7.102	2.33
44	MP1C	Z	12.301	2.33
45	MP1C	Mx	.002	2.33
46	MP3A	X	-11.812	1.83
47	MP3A	Z	20.459	1.83
48	MP3A	Mx	.022	1.83
49	MP3A	X	-11.812	5.33
50	MP3A	Z	20.459	5.33
51	MP3A	Mx	.022	5.33
52	MP3B	X	-9.075	1.83
53	MP3B	Z	15.718	1.83
54	MP3B	Mx	-.01	1.83
55	MP3B	X	-9.075	5.33
56	MP3B	Z	15.718	5.33
57	MP3B	Mx	-.01	5.33
58	MP3C	X	-12.318	1.83
59	MP3C	Z	21.335	1.83
60	MP3C	Mx	-.01	1.83
61	MP3C	X	-12.318	5.33
62	MP3C	Z	21.335	5.33
63	MP3C	Mx	-.01	5.33
64	MP3A	X	-11.812	1.83
65	MP3A	Z	20.459	1.83
66	MP3A	Mx	-.006	1.83
67	MP3A	X	-11.812	5.33
68	MP3A	Z	20.459	5.33
69	MP3A	Mx	-.006	5.33
70	MP3B	X	-9.075	1.83
71	MP3B	Z	15.718	1.83
72	MP3B	Mx	-.014	1.83
73	MP3B	X	-9.075	5.33
74	MP3B	Z	15.718	5.33

Member Point Loads (BLC 22 : Antenna Wi (210 Deg)) (Continued)

	Member Label	Direction	Magnitude[lb,k-ft]	Location[ft,%]
75	MP3B	Mx	-.014	5.33
76	MP3C	X	-12.318	1.83
77	MP3C	Z	21.335	1.83
78	MP3C	Mx	.021	1.83
79	MP3C	X	-12.318	5.33
80	MP3C	Z	21.335	5.33
81	MP3C	Mx	.021	5.33
82	MP2A	X	-6.087	3.33
83	MP2A	Z	10.544	3.33
84	MP2A	Mx	-.003	3.33
85	MP2B	X	-4.707	3.33
86	MP2B	Z	8.153	3.33
87	MP2B	Mx	.005	3.33
88	MP2C	X	-6.342	3.33
89	MP2C	Z	10.985	3.33
90	MP2C	Mx	-.002	3.33
91	MP3A	X	-5.905	3.33
92	MP3A	Z	10.228	3.33
93	MP3A	Mx	-.003	3.33
94	MP3B	X	-4.001	3.33
95	MP3B	Z	6.93	3.33
96	MP3B	Mx	.004	3.33
97	MP3C	X	-6.257	3.33
98	MP3C	Z	10.838	3.33
99	MP3C	Mx	-.002	3.33

Member Point Loads (BLC 23 : Antenna Wi (240 Deg))

	Member Label	Direction	Magnitude[lb,k-ft]	Location[ft,%]
1	MP4A	X	-12.445	2.33
2	MP4A	Z	7.185	2.33
3	MP4A	Mx	.01	2.33
4	MP4A	X	-12.445	4.33
5	MP4A	Z	7.185	4.33
6	MP4A	Mx	.01	4.33
7	MP4B	X	-13.253	2.33
8	MP4B	Z	7.652	2.33
9	MP4B	Mx	-.01	2.33
10	MP4B	X	-13.253	4.33
11	MP4B	Z	7.652	4.33
12	MP4B	Mx	-.01	4.33
13	MP4C	X	-16.008	2.33
14	MP4C	Z	9.242	2.33
15	MP4C	Mx	-.003	2.33
16	MP4C	X	-16.008	4.33
17	MP4C	Z	9.242	4.33
18	MP4C	Mx	-.003	4.33
19	MP1A	X	-5.225	6.33
20	MP1A	Z	3.016	6.33
21	MP1A	Mx	.002	6.33
22	MP1B	X	-5.539	6.33
23	MP1B	Z	3.198	6.33

Member Point Loads (BLC 23 : Antenna Wi (240 Deg)) (Continued)

	Member Label	Direction	Magnitude[lb,k-ft]	Location[ft,%]
24	MP1B	Mx	-.002	6.33
25	MP1C	X	-6.61	6.33
26	MP1C	Z	3.817	6.33
27	MP1C	Mx	-.000552	6.33
28	MP1A	X	-7.659	.33
29	MP1A	Z	4.422	.33
30	MP1A	Mx	.004	.33
31	MP1A	X	-7.659	2.33
32	MP1A	Z	4.422	2.33
33	MP1A	Mx	.004	2.33
34	MP1B	X	-8.855	.33
35	MP1B	Z	5.113	.33
36	MP1B	Mx	-.004	.33
37	MP1B	X	-8.855	2.33
38	MP1B	Z	5.113	2.33
39	MP1B	Mx	-.004	2.33
40	MP1C	X	-12.938	.33
41	MP1C	Z	7.47	.33
42	MP1C	Mx	-.001	.33
43	MP1C	X	-12.938	2.33
44	MP1C	Z	7.47	2.33
45	MP1C	Mx	-.001	2.33
46	MP3A	X	-17.166	1.83
47	MP3A	Z	9.911	1.83
48	MP3A	Mx	.018	1.83
49	MP3A	X	-17.166	5.33
50	MP3A	Z	9.911	5.33
51	MP3A	Mx	.018	5.33
52	MP3B	X	-18.24	1.83
53	MP3B	Z	10.531	1.83
54	MP3B	Mx	-.002	1.83
55	MP3B	X	-18.24	5.33
56	MP3B	Z	10.531	5.33
57	MP3B	Mx	-.002	5.33
58	MP3C	X	-21.907	1.83
59	MP3C	Z	12.648	1.83
60	MP3C	Mx	-.02	1.83
61	MP3C	X	-21.907	5.33
62	MP3C	Z	12.648	5.33
63	MP3C	Mx	-.02	5.33
64	MP3A	X	-17.166	1.83
65	MP3A	Z	9.911	1.83
66	MP3A	Mx	.005	1.83
67	MP3A	X	-17.166	5.33
68	MP3A	Z	9.911	5.33
69	MP3A	Mx	.005	5.33
70	MP3B	X	-18.24	1.83
71	MP3B	Z	10.531	1.83
72	MP3B	Mx	-.02	1.83
73	MP3B	X	-18.24	5.33
74	MP3B	Z	10.531	5.33
75	MP3B	Mx	-.02	5.33

Member Point Loads (BLC 23 : Antenna Wi (240 Deg)) (Continued)

	Member Label	Direction	Magnitude[lb,k-ft]	Location[ft,%]
76	MP3C	X	-21.907	1.83
77	MP3C	Z	12.648	1.83
78	MP3C	Mx	.014	1.83
79	MP3C	X	-21.907	5.33
80	MP3C	Z	12.648	5.33
81	MP3C	Mx	.014	5.33
82	MP2A	X	-8.883	3.33
83	MP2A	Z	5.129	3.33
84	MP2A	Mx	-.004	3.33
85	MP2B	X	-9.425	3.33
86	MP2B	Z	5.442	3.33
87	MP2B	Mx	.004	3.33
88	MP2C	X	-11.274	3.33
89	MP2C	Z	6.509	3.33
90	MP2C	Mx	.001	3.33
91	MP3A	X	-7.937	3.33
92	MP3A	Z	4.582	3.33
93	MP3A	Mx	-.004	3.33
94	MP3B	X	-8.685	3.33
95	MP3B	Z	5.014	3.33
96	MP3B	Mx	.004	3.33
97	MP3C	X	-11.236	3.33
98	MP3C	Z	6.487	3.33
99	MP3C	Mx	.001	3.33

Member Point Loads (BLC 24 : Antenna Wi (270 Deg))

	Member Label	Direction	Magnitude[lb,k-ft]	Location[ft,%]
1	MP4A	X	-12.942	2.33
2	MP4A	Z	0	2.33
3	MP4A	Mx	.011	2.33
4	MP4A	X	-12.942	4.33
5	MP4A	Z	0	4.33
6	MP4A	Mx	.011	4.33
7	MP4B	X	-17.989	2.33
8	MP4B	Z	0	2.33
9	MP4B	Mx	-.005	2.33
10	MP4B	X	-17.989	4.33
11	MP4B	Z	0	4.33
12	MP4B	Mx	-.005	4.33
13	MP4C	X	-16.296	2.33
14	MP4C	Z	0	2.33
15	MP4C	Mx	-.009	2.33
16	MP4C	X	-16.296	4.33
17	MP4C	Z	0	4.33
18	MP4C	Mx	-.009	4.33
19	MP1A	X	-5.477	6.33
20	MP1A	Z	0	6.33
21	MP1A	Mx	.002	6.33
22	MP1B	X	-7.44	6.33
23	MP1B	Z	0	6.33
24	MP1B	Mx	-.001	6.33

Member Point Loads (BLC 24 : Antenna Wi (270 Deg)) (Continued)

	Member Label	Direction	Magnitude[lb,k-ft]	Location[ft,%]
25	MP1C	X	-6.782	6.33
26	MP1C	Z	0	6.33
27	MP1C	Mx	-.002	6.33
28	MP1A	X	-6.726	.33
29	MP1A	Z	0	.33
30	MP1A	Mx	.003	.33
31	MP1A	X	-6.726	2.33
32	MP1A	Z	0	2.33
33	MP1A	Mx	.003	2.33
34	MP1B	X	-14.204	.33
35	MP1B	Z	0	.33
36	MP1B	Mx	-.002	.33
37	MP1B	X	-14.204	2.33
38	MP1B	Z	0	2.33
39	MP1B	Mx	-.002	2.33
40	MP1C	X	-11.696	.33
41	MP1C	Z	0	.33
42	MP1C	Mx	-.004	.33
43	MP1C	X	-11.696	2.33
44	MP1C	Z	0	2.33
45	MP1C	Mx	-.004	2.33
46	MP3A	X	-17.92	1.83
47	MP3A	Z	0	1.83
48	MP3A	Mx	.012	1.83
49	MP3A	X	-17.92	5.33
50	MP3A	Z	0	5.33
51	MP3A	Mx	.012	5.33
52	MP3B	X	-24.635	1.83
53	MP3B	Z	0	1.83
54	MP3B	Mx	.01	1.83
55	MP3B	X	-24.635	5.33
56	MP3B	Z	0	5.33
57	MP3B	Mx	.01	5.33
58	MP3C	X	-22.383	1.83
59	MP3C	Z	0	1.83
60	MP3C	Mx	-.021	1.83
61	MP3C	X	-22.383	5.33
62	MP3C	Z	0	5.33
63	MP3C	Mx	-.021	5.33
64	MP3A	X	-17.92	1.83
65	MP3A	Z	0	1.83
66	MP3A	Mx	.012	1.83
67	MP3A	X	-17.92	5.33
68	MP3A	Z	0	5.33
69	MP3A	Mx	.012	5.33
70	MP3B	X	-24.635	1.83
71	MP3B	Z	0	1.83
72	MP3B	Mx	-.021	1.83
73	MP3B	X	-24.635	5.33
74	MP3B	Z	0	5.33
75	MP3B	Mx	-.021	5.33
76	MP3C	X	-22.383	1.83

Member Point Loads (BLC 24 : Antenna Wi (270 Deg)) (Continued)

	Member Label	Direction	Magnitude[lb,k-ft]	Location[ft,%]
77	MP3C	Z	0	1.83
78	MP3C	Mx	.002	1.83
79	MP3C	X	-22.383	5.33
80	MP3C	Z	0	5.33
81	MP3C	Mx	.002	5.33
82	MP2A	X	-9.299	3.33
83	MP2A	Z	0	3.33
84	MP2A	Mx	-.005	3.33
85	MP2B	X	-12.685	3.33
86	MP2B	Z	0	3.33
87	MP2B	Mx	.002	3.33
88	MP2C	X	-11.549	3.33
89	MP2C	Z	0	3.33
90	MP2C	Mx	.004	3.33
91	MP3A	X	-7.842	3.33
92	MP3A	Z	0	3.33
93	MP3A	Mx	-.004	3.33
94	MP3B	X	-12.514	3.33
95	MP3B	Z	0	3.33
96	MP3B	Mx	.002	3.33
97	MP3C	X	-10.947	3.33
98	MP3C	Z	0	3.33
99	MP3C	Mx	.004	3.33

Member Point Loads (BLC 25 : Antenna Wi (300 Deg))

	Member Label	Direction	Magnitude[lb,k-ft]	Location[ft,%]
1	MP4A	X	-12.445	2.33
2	MP4A	Z	-7.185	2.33
3	MP4A	Mx	.01	2.33
4	MP4A	X	-12.445	4.33
5	MP4A	Z	-7.185	4.33
6	MP4A	Mx	.01	4.33
7	MP4B	X	-16.008	2.33
8	MP4B	Z	-9.242	2.33
9	MP4B	Mx	.003	2.33
10	MP4B	X	-16.008	4.33
11	MP4B	Z	-9.242	4.33
12	MP4B	Mx	.003	4.33
13	MP4C	X	-11.787	2.33
14	MP4C	Z	-6.805	2.33
15	MP4C	Mx	-.011	2.33
16	MP4C	X	-11.787	4.33
17	MP4C	Z	-6.805	4.33
18	MP4C	Mx	-.011	4.33
19	MP1A	X	-5.225	6.33
20	MP1A	Z	-3.016	6.33
21	MP1A	Mx	.002	6.33
22	MP1B	X	-6.61	6.33
23	MP1B	Z	-3.817	6.33
24	MP1B	Mx	.000553	6.33
25	MP1C	X	-4.968	6.33

Member Point Loads (BLC 25 : Antenna Wi (300 Deg)) (Continued)

	Member Label	Direction	Magnitude[lb,k-ft]	Location[ft,%]
26	MP1C	Z	-2.869	6.33
27	MP1C	Mx	-.002	6.33
28	MP1A	X	-7.659	.33
29	MP1A	Z	-4.422	.33
30	MP1A	Mx	.004	.33
31	MP1A	X	-7.659	2.33
32	MP1A	Z	-4.422	2.33
33	MP1A	Mx	.004	2.33
34	MP1B	X	-12.938	.33
35	MP1B	Z	-7.47	.33
36	MP1B	Mx	.001	.33
37	MP1B	X	-12.938	2.33
38	MP1B	Z	-7.47	2.33
39	MP1B	Mx	.001	2.33
40	MP1C	X	-6.683	.33
41	MP1C	Z	-3.858	.33
42	MP1C	Mx	-.004	.33
43	MP1C	X	-6.683	2.33
44	MP1C	Z	-3.858	2.33
45	MP1C	Mx	-.004	2.33
46	MP3A	X	-17.166	1.83
47	MP3A	Z	-9.911	1.83
48	MP3A	Mx	.005	1.83
49	MP3A	X	-17.166	5.33
50	MP3A	Z	-9.911	5.33
51	MP3A	Mx	.005	5.33
52	MP3B	X	-21.907	1.83
53	MP3B	Z	-12.648	1.83
54	MP3B	Mx	.02	1.83
55	MP3B	X	-21.907	5.33
56	MP3B	Z	-12.648	5.33
57	MP3B	Mx	.02	5.33
58	MP3C	X	-16.29	1.83
59	MP3C	Z	-9.405	1.83
60	MP3C	Mx	-.016	1.83
61	MP3C	X	-16.29	5.33
62	MP3C	Z	-9.405	5.33
63	MP3C	Mx	-.016	5.33
64	MP3A	X	-17.166	1.83
65	MP3A	Z	-9.911	1.83
66	MP3A	Mx	.018	1.83
67	MP3A	X	-17.166	5.33
68	MP3A	Z	-9.911	5.33
69	MP3A	Mx	.018	5.33
70	MP3B	X	-21.907	1.83
71	MP3B	Z	-12.648	1.83
72	MP3B	Mx	-.014	1.83
73	MP3B	X	-21.907	5.33
74	MP3B	Z	-12.648	5.33
75	MP3B	Mx	-.014	5.33
76	MP3C	X	-16.29	1.83
77	MP3C	Z	-9.405	1.83

Member Point Loads (BLC 25 : Antenna Wi (300 Deg)) (Continued)

	Member Label	Direction	Magnitude[lb,k-ft]	Location[ft,%]
78	MP3C	Mx	-.007	1.83
79	MP3C	X	-16.29	5.33
80	MP3C	Z	-9.405	5.33
81	MP3C	Mx	-.007	5.33
82	MP2A	X	-8.883	3.33
83	MP2A	Z	-5.129	3.33
84	MP2A	Mx	-.004	3.33
85	MP2B	X	-11.274	3.33
86	MP2B	Z	-6.509	3.33
87	MP2B	Mx	-.001	3.33
88	MP2C	X	-8.442	3.33
89	MP2C	Z	-4.874	3.33
90	MP2C	Mx	.005	3.33
91	MP3A	X	-7.937	3.33
92	MP3A	Z	-4.582	3.33
93	MP3A	Mx	-.004	3.33
94	MP3B	X	-11.236	3.33
95	MP3B	Z	-6.487	3.33
96	MP3B	Mx	-.001	3.33
97	MP3C	X	-7.327	3.33
98	MP3C	Z	-4.231	3.33
99	MP3C	Mx	.004	3.33

Member Point Loads (BLC 26 : Antenna Wi (330 Deg))

	Member Label	Direction	Magnitude[lb,k-ft]	Location[ft,%]
1	MP4A	X	-8.614	2.33
2	MP4A	Z	-14.92	2.33
3	MP4A	Mx	.007	2.33
4	MP4A	X	-8.614	4.33
5	MP4A	Z	-14.92	4.33
6	MP4A	Mx	.007	4.33
7	MP4B	X	-8.148	2.33
8	MP4B	Z	-14.113	2.33
9	MP4B	Mx	.009	2.33
10	MP4B	X	-8.148	4.33
11	MP4B	Z	-14.113	4.33
12	MP4B	Mx	.009	4.33
13	MP4C	X	-6.557	2.33
14	MP4C	Z	-11.357	2.33
15	MP4C	Mx	-.011	2.33
16	MP4C	X	-6.557	4.33
17	MP4C	Z	-11.357	4.33
18	MP4C	Mx	-.011	4.33
19	MP1A	X	-3.572	6.33
20	MP1A	Z	-6.187	6.33
21	MP1A	Mx	.001	6.33
22	MP1B	X	-3.391	6.33
23	MP1B	Z	-5.873	6.33
24	MP1B	Mx	.002	6.33
25	MP1C	X	-2.772	6.33
26	MP1C	Z	-4.801	6.33

Member Point Loads (BLC 26 : Antenna Wi (330 Deg)) (Continued)

	Member Label	Direction	Magnitude[lb,k-ft]	Location[ft,%]
27	MP1C	Mx	-.002	6.33
28	MP1A	X	-6.539	.33
29	MP1A	Z	-11.326	.33
30	MP1A	Mx	.003	.33
31	MP1A	X	-6.539	2.33
32	MP1A	Z	-11.326	2.33
33	MP1A	Mx	.003	2.33
34	MP1B	X	-5.848	.33
35	MP1B	Z	-10.129	.33
36	MP1B	Mx	.004	.33
37	MP1B	X	-5.848	2.33
38	MP1B	Z	-10.129	2.33
39	MP1B	Mx	.004	2.33
40	MP1C	X	-3.491	.33
41	MP1C	Z	-6.046	.33
42	MP1C	Mx	-.003	.33
43	MP1C	X	-3.491	2.33
44	MP1C	Z	-6.046	2.33
45	MP1C	Mx	-.003	2.33
46	MP3A	X	-11.812	1.83
47	MP3A	Z	-20.459	1.83
48	MP3A	Mx	-.006	1.83
49	MP3A	X	-11.812	5.33
50	MP3A	Z	-20.459	5.33
51	MP3A	Mx	-.006	5.33
52	MP3B	X	-11.191	1.83
53	MP3B	Z	-19.384	1.83
54	MP3B	Mx	.021	1.83
55	MP3B	X	-11.191	5.33
56	MP3B	Z	-19.384	5.33
57	MP3B	Mx	.021	5.33
58	MP3C	X	-9.075	1.83
59	MP3C	Z	-15.718	1.83
60	MP3C	Mx	-.01	1.83
61	MP3C	X	-9.075	5.33
62	MP3C	Z	-15.718	5.33
63	MP3C	Mx	-.01	5.33
64	MP3A	X	-11.812	1.83
65	MP3A	Z	-20.459	1.83
66	MP3A	Mx	.022	1.83
67	MP3A	X	-11.812	5.33
68	MP3A	Z	-20.459	5.33
69	MP3A	Mx	.022	5.33
70	MP3B	X	-11.191	1.83
71	MP3B	Z	-19.384	1.83
72	MP3B	Mx	-.002	1.83
73	MP3B	X	-11.191	5.33
74	MP3B	Z	-19.384	5.33
75	MP3B	Mx	-.002	5.33
76	MP3C	X	-9.075	1.83
77	MP3C	Z	-15.718	1.83
78	MP3C	Mx	-.014	1.83

Member Point Loads (BLC 26 : Antenna Wi (330 Deg)) (Continued)

	Member Label	Direction	Magnitude[lb,k-ft]	Location[ft,%]
79	MP3C	X	-9.075	5.33
80	MP3C	Z	-15.718	5.33
81	MP3C	Mx	-.014	5.33
82	MP2A	X	-6.087	3.33
83	MP2A	Z	-10.544	3.33
84	MP2A	Mx	-.003	3.33
85	MP2B	X	-5.775	3.33
86	MP2B	Z	-10.002	3.33
87	MP2B	Mx	-.004	3.33
88	MP2C	X	-4.707	3.33
89	MP2C	Z	-8.153	3.33
90	MP2C	Mx	.005	3.33
91	MP3A	X	-5.905	3.33
92	MP3A	Z	-10.228	3.33
93	MP3A	Mx	-.003	3.33
94	MP3B	X	-5.474	3.33
95	MP3B	Z	-9.48	3.33
96	MP3B	Mx	-.004	3.33
97	MP3C	X	-4.001	3.33
98	MP3C	Z	-6.93	3.33
99	MP3C	Mx	.004	3.33

Member Point Loads (BLC 27 : Antenna Wm (0 Deg))

	Member Label	Direction	Magnitude[lb,k-ft]	Location[ft,%]
1	MP4A	X	0	2.33
2	MP4A	Z	-5.693	2.33
3	MP4A	Mx	0	2.33
4	MP4A	X	0	4.33
5	MP4A	Z	-5.693	4.33
6	MP4A	Mx	0	4.33
7	MP4B	X	0	2.33
8	MP4B	Z	-3.976	2.33
9	MP4B	Mx	.003	2.33
10	MP4B	X	0	4.33
11	MP4B	Z	-3.976	4.33
12	MP4B	Mx	.003	4.33
13	MP4C	X	0	2.33
14	MP4C	Z	-4.552	2.33
15	MP4C	Mx	-.003	2.33
16	MP4C	X	0	4.33
17	MP4C	Z	-4.552	4.33
18	MP4C	Mx	-.003	4.33
19	MP1A	X	0	6.33
20	MP1A	Z	-1.953	6.33
21	MP1A	Mx	0	6.33
22	MP1B	X	0	6.33
23	MP1B	Z	-1.328	6.33
24	MP1B	Mx	.00052	6.33
25	MP1C	X	0	6.33
26	MP1C	Z	-1.538	6.33
27	MP1C	Mx	-.000491	6.33

Member Point Loads (BLC 27 : Antenna Wm (0 Deg)) (Continued)

	Member Label	Direction	Magnitude[lb,k-ft]	Location[ft,%]
28	MP1A	X	0	.33
29	MP1A	Z	-4.589	.33
30	MP1A	Mx	0	.33
31	MP1A	X	0	2.33
32	MP1A	Z	-4.589	2.33
33	MP1A	Mx	0	2.33
34	MP1B	X	0	.33
35	MP1B	Z	-2.123	.33
36	MP1B	Mx	.000997	.33
37	MP1B	X	0	2.33
38	MP1B	Z	-2.123	2.33
39	MP1B	Mx	.000997	2.33
40	MP1C	X	0	.33
41	MP1C	Z	-2.951	.33
42	MP1C	Mx	-.001	.33
43	MP1C	X	0	2.33
44	MP1C	Z	-2.951	2.33
45	MP1C	Mx	-.001	2.33
46	MP3A	X	0	1.83
47	MP3A	Z	-7.968	1.83
48	MP3A	Mx	-.005	1.83
49	MP3A	X	0	5.33
50	MP3A	Z	-7.968	5.33
51	MP3A	Mx	-.005	5.33
52	MP3B	X	0	1.83
53	MP3B	Z	-5.585	1.83
54	MP3B	Mx	.005	1.83
55	MP3B	X	0	5.33
56	MP3B	Z	-5.585	5.33
57	MP3B	Mx	.005	5.33
58	MP3C	X	0	1.83
59	MP3C	Z	-6.384	1.83
60	MP3C	Mx	-.000525	1.83
61	MP3C	X	0	5.33
62	MP3C	Z	-6.384	5.33
63	MP3C	Mx	-.000525	5.33
64	MP3A	X	0	1.83
65	MP3A	Z	-7.968	1.83
66	MP3A	Mx	.005	1.83
67	MP3A	X	0	5.33
68	MP3A	Z	-7.968	5.33
69	MP3A	Mx	.005	5.33
70	MP3B	X	0	1.83
71	MP3B	Z	-5.585	1.83
72	MP3B	Mx	.002	1.83
73	MP3B	X	0	5.33
74	MP3B	Z	-5.585	5.33
75	MP3B	Mx	.002	5.33
76	MP3C	X	0	1.83
77	MP3C	Z	-6.384	1.83
78	MP3C	Mx	-.006	1.83
79	MP3C	X	0	5.33

Member Point Loads (BLC 27 : Antenna Wm (0 Deg)) (Continued)

	Member Label	Direction	Magnitude[lb,k-ft]	Location[ft,%]
80	MP3C	Z	-6.384	5.33
81	MP3C	Mx	-.006	5.33
82	MP2A	X	0	3.33
83	MP2A	Z	-3.652	3.33
84	MP2A	Mx	0	3.33
85	MP2B	X	0	3.33
86	MP2B	Z	-2.583	3.33
87	MP2B	Mx	-.001	3.33
88	MP2C	X	0	3.33
89	MP2C	Z	-2.941	3.33
90	MP2C	Mx	.001	3.33
91	MP3A	X	0	3.33
92	MP3A	Z	-3.652	3.33
93	MP3A	Mx	0	3.33
94	MP3B	X	0	3.33
95	MP3B	Z	-2.173	3.33
96	MP3B	Mx	-.001	3.33
97	MP3C	X	0	3.33
98	MP3C	Z	-2.669	3.33
99	MP3C	Mx	.001	3.33

Member Point Loads (BLC 28 : Antenna Wm (30 Deg))

	Member Label	Direction	Magnitude[lb,k-ft]	Location[ft,%]
1	MP4A	X	2.603	2.33
2	MP4A	Z	-4.509	2.33
3	MP4A	Mx	-.002	2.33
4	MP4A	X	2.603	4.33
5	MP4A	Z	-4.509	4.33
6	MP4A	Mx	-.002	4.33
7	MP4B	X	1.904	2.33
8	MP4B	Z	-3.297	2.33
9	MP4B	Mx	.003	2.33
10	MP4B	X	1.904	4.33
11	MP4B	Z	-3.297	4.33
12	MP4B	Mx	.003	4.33
13	MP4C	X	2.733	2.33
14	MP4C	Z	-4.733	2.33
15	MP4C	Mx	-.002	2.33
16	MP4C	X	2.733	4.33
17	MP4C	Z	-4.733	4.33
18	MP4C	Mx	-.002	4.33
19	MP1A	X	.888	6.33
20	MP1A	Z	-1.538	6.33
21	MP1A	Mx	-.00037	6.33
22	MP1B	X	.633	6.33
23	MP1B	Z	-1.097	6.33
24	MP1B	Mx	.00052	6.33
25	MP1C	X	.935	6.33
26	MP1C	Z	-1.62	6.33
27	MP1C	Mx	-.000267	6.33
28	MP1A	X	1.946	.33

Member Point Loads (BLC 28 : Antenna Wm (30 Deg)) (Continued)

	Member Label	Direction	Magnitude[lb,k-ft]	Location[ft,%]
29	MP1A	Z	-3.37	.33
30	MP1A	Mx	-.000973	.33
31	MP1A	X	1.946	2.33
32	MP1A	Z	-3.37	2.33
33	MP1A	Mx	-.000973	2.33
34	MP1B	X	.94	.33
35	MP1B	Z	-1.629	.33
36	MP1B	Mx	.000926	.33
37	MP1B	X	.94	2.33
38	MP1B	Z	-1.629	2.33
39	MP1B	Mx	.000926	2.33
40	MP1C	X	2.131	.33
41	MP1C	Z	-3.692	.33
42	MP1C	Mx	-.000729	.33
43	MP1C	X	2.131	2.33
44	MP1C	Z	-3.692	2.33
45	MP1C	Mx	-.000729	2.33
46	MP3A	X	3.647	1.83
47	MP3A	Z	-6.316	1.83
48	MP3A	Mx	-.007	1.83
49	MP3A	X	3.647	5.33
50	MP3A	Z	-6.316	5.33
51	MP3A	Mx	-.007	5.33
52	MP3B	X	2.675	1.83
53	MP3B	Z	-4.634	1.83
54	MP3B	Mx	.003	1.83
55	MP3B	X	2.675	5.33
56	MP3B	Z	-4.634	5.33
57	MP3B	Mx	.003	5.33
58	MP3C	X	3.826	1.83
59	MP3C	Z	-6.627	1.83
60	MP3C	Mx	.003	1.83
61	MP3C	X	3.826	5.33
62	MP3C	Z	-6.627	5.33
63	MP3C	Mx	.003	5.33
64	MP3A	X	3.647	1.83
65	MP3A	Z	-6.316	1.83
66	MP3A	Mx	.002	1.83
67	MP3A	X	3.647	5.33
68	MP3A	Z	-6.316	5.33
69	MP3A	Mx	.002	5.33
70	MP3B	X	2.675	1.83
71	MP3B	Z	-4.634	1.83
72	MP3B	Mx	.004	1.83
73	MP3B	X	2.675	5.33
74	MP3B	Z	-4.634	5.33
75	MP3B	Mx	.004	5.33
76	MP3C	X	3.826	1.83
77	MP3C	Z	-6.627	1.83
78	MP3C	Mx	-.007	1.83
79	MP3C	X	3.826	5.33
80	MP3C	Z	-6.627	5.33

Member Point Loads (BLC 28 : Antenna Wm (30 Deg)) (Continued)

	Member Label	Direction	Magnitude[lb,k-ft]	Location[ft,%]
81	MP3C	Mx	-.007	5.33
82	MP2A	X	1.675	3.33
83	MP2A	Z	-2.9	3.33
84	MP2A	Mx	.000838	3.33
85	MP2B	X	1.239	3.33
86	MP2B	Z	-2.146	3.33
87	MP2B	Mx	-.001	3.33
88	MP2C	X	1.755	3.33
89	MP2C	Z	-3.04	3.33
90	MP2C	Mx	.0006	3.33
91	MP3A	X	1.617	3.33
92	MP3A	Z	-2.8	3.33
93	MP3A	Mx	.000808	3.33
94	MP3B	X	1.014	3.33
95	MP3B	Z	-1.756	3.33
96	MP3B	Mx	-.000998	3.33
97	MP3C	X	1.728	3.33
98	MP3C	Z	-2.993	3.33
99	MP3C	Mx	.000591	3.33

Member Point Loads (BLC 29 : Antenna Wm (60 Deg))

	Member Label	Direction	Magnitude[lb,k-ft]	Location[ft,%]
1	MP4A	X	3.667	2.33
2	MP4A	Z	-2.117	2.33
3	MP4A	Mx	-.003	2.33
4	MP4A	X	3.667	4.33
5	MP4A	Z	-2.117	4.33
6	MP4A	Mx	-.003	4.33
7	MP4B	X	3.942	2.33
8	MP4B	Z	-2.276	2.33
9	MP4B	Mx	.003	2.33
10	MP4B	X	3.942	4.33
11	MP4B	Z	-2.276	4.33
12	MP4B	Mx	.003	4.33
13	MP4C	X	4.879	2.33
14	MP4C	Z	-2.817	2.33
15	MP4C	Mx	.000815	2.33
16	MP4C	X	4.879	4.33
17	MP4C	Z	-2.817	4.33
18	MP4C	Mx	.000815	4.33
19	MP1A	X	1.232	6.33
20	MP1A	Z	-.711	6.33
21	MP1A	Mx	-.000513	6.33
22	MP1B	X	1.332	6.33
23	MP1B	Z	-.769	6.33
24	MP1B	Mx	.000491	6.33
25	MP1C	X	1.673	6.33
26	MP1C	Z	-.966	6.33
27	MP1C	Mx	.00014	6.33
28	MP1A	X	2.161	.33
29	MP1A	Z	-1.247	.33

Member Point Loads (BLC 29 : Antenna Wm (60 Deg)) (Continued)

	Member Label	Direction	Magnitude[lb,k-ft]	Location[ft,%]
30	MP1A	Mx	-.001	.33
31	MP1A	X	2.161	2.33
32	MP1A	Z	-1.247	2.33
33	MP1A	Mx	-.001	2.33
34	MP1B	X	2.555	.33
35	MP1B	Z	-1.475	.33
36	MP1B	Mx	.001	.33
37	MP1B	X	2.555	2.33
38	MP1B	Z	-1.475	2.33
39	MP1B	Mx	.001	2.33
40	MP1C	X	3.902	.33
41	MP1C	Z	-2.253	.33
42	MP1C	Mx	.000391	.33
43	MP1C	X	3.902	2.33
44	MP1C	Z	-2.253	2.33
45	MP1C	Mx	.000391	2.33
46	MP3A	X	5.147	1.83
47	MP3A	Z	-2.972	1.83
48	MP3A	Mx	-.005	1.83
49	MP3A	X	5.147	5.33
50	MP3A	Z	-2.972	5.33
51	MP3A	Mx	-.005	5.33
52	MP3B	X	5.529	1.83
53	MP3B	Z	-3.192	1.83
54	MP3B	Mx	.000524	1.83
55	MP3B	X	5.529	5.33
56	MP3B	Z	-3.192	5.33
57	MP3B	Mx	.000524	5.33
58	MP3C	X	6.83	1.83
59	MP3C	Z	-3.943	1.83
60	MP3C	Mx	.006	1.83
61	MP3C	X	6.83	5.33
62	MP3C	Z	-3.943	5.33
63	MP3C	Mx	.006	5.33
64	MP3A	X	5.147	1.83
65	MP3A	Z	-2.972	1.83
66	MP3A	Mx	-.001	1.83
67	MP3A	X	5.147	5.33
68	MP3A	Z	-2.972	5.33
69	MP3A	Mx	-.001	5.33
70	MP3B	X	5.529	1.83
71	MP3B	Z	-3.192	1.83
72	MP3B	Mx	.006	1.83
73	MP3B	X	5.529	5.33
74	MP3B	Z	-3.192	5.33
75	MP3B	Mx	.006	5.33
76	MP3C	X	6.83	1.83
77	MP3C	Z	-3.943	1.83
78	MP3C	Mx	-.004	1.83
79	MP3C	X	6.83	5.33
80	MP3C	Z	-3.943	5.33
81	MP3C	Mx	-.004	5.33

Member Point Loads (BLC 29 : Antenna Wm (60 Deg)) (Continued)

	Member Label	Direction	Magnitude[lb,k-ft]	Location[ft,%]
82	MP2A	X	2.376	3.33
83	MP2A	Z	-1.372	3.33
84	MP2A	Mx	.001	3.33
85	MP2B	X	2.547	3.33
86	MP2B	Z	-1.471	3.33
87	MP2B	Mx	-.001	3.33
88	MP2C	X	3.131	3.33
89	MP2C	Z	-1.808	3.33
90	MP2C	Mx	-.000314	3.33
91	MP3A	X	2.075	3.33
92	MP3A	Z	-1.198	3.33
93	MP3A	Mx	.001	3.33
94	MP3B	X	2.312	3.33
95	MP3B	Z	-1.335	3.33
96	MP3B	Mx	-.001	3.33
97	MP3C	X	3.119	3.33
98	MP3C	Z	-1.801	3.33
99	MP3C	Mx	-.000313	3.33

Member Point Loads (BLC 30 : Antenna Wm (90 Deg))

	Member Label	Direction	Magnitude[lb,k-ft]	Location[ft,%]
1	MP4A	X	3.749	2.33
2	MP4A	Z	0	2.33
3	MP4A	Mx	-.003	2.33
4	MP4A	X	3.749	4.33
5	MP4A	Z	0	4.33
6	MP4A	Mx	-.003	4.33
7	MP4B	X	5.465	2.33
8	MP4B	Z	0	2.33
9	MP4B	Mx	.002	2.33
10	MP4B	X	5.465	4.33
11	MP4B	Z	0	4.33
12	MP4B	Mx	.002	4.33
13	MP4C	X	4.889	2.33
14	MP4C	Z	0	2.33
15	MP4C	Mx	.003	2.33
16	MP4C	X	4.889	4.33
17	MP4C	Z	0	4.33
18	MP4C	Mx	.003	4.33
19	MP1A	X	1.245	6.33
20	MP1A	Z	0	6.33
21	MP1A	Mx	-.000519	6.33
22	MP1B	X	1.87	6.33
23	MP1B	Z	0	6.33
24	MP1B	Mx	.000266	6.33
25	MP1C	X	1.661	6.33
26	MP1C	Z	0	6.33
27	MP1C	Mx	.000445	6.33
28	MP1A	X	1.797	.33
29	MP1A	Z	0	.33
30	MP1A	Mx	-.000898	.33

Member Point Loads (BLC 30 : Antenna Wm (90 Deg)) (Continued)

	Member Label	Direction	Magnitude[lb,k-ft]	Location[ft,%]
31	MP1A	X	1.797	2.33
32	MP1A	Z	0	2.33
33	MP1A	Mx	-.000898	2.33
34	MP1B	X	4.263	.33
35	MP1B	Z	0	.33
36	MP1B	Mx	.000729	.33
37	MP1B	X	4.263	2.33
38	MP1B	Z	0	2.33
39	MP1B	Mx	.000729	2.33
40	MP1C	X	3.435	.33
41	MP1C	Z	0	.33
42	MP1C	Mx	.001	.33
43	MP1C	X	3.435	2.33
44	MP1C	Z	0	2.33
45	MP1C	Mx	.001	2.33
46	MP3A	X	5.269	1.83
47	MP3A	Z	0	1.83
48	MP3A	Mx	-.004	1.83
49	MP3A	X	5.269	5.33
50	MP3A	Z	0	5.33
51	MP3A	Mx	-.004	5.33
52	MP3B	X	7.652	1.83
53	MP3B	Z	0	1.83
54	MP3B	Mx	-.003	1.83
55	MP3B	X	7.652	5.33
56	MP3B	Z	0	5.33
57	MP3B	Mx	-.003	5.33
58	MP3C	X	6.853	1.83
59	MP3C	Z	0	1.83
60	MP3C	Mx	.006	1.83
61	MP3C	X	6.853	5.33
62	MP3C	Z	0	5.33
63	MP3C	Mx	.006	5.33
64	MP3A	X	5.269	1.83
65	MP3A	Z	0	1.83
66	MP3A	Mx	-.004	1.83
67	MP3A	X	5.269	5.33
68	MP3A	Z	0	5.33
69	MP3A	Mx	-.004	5.33
70	MP3B	X	7.652	1.83
71	MP3B	Z	0	1.83
72	MP3B	Mx	.007	1.83
73	MP3B	X	7.652	5.33
74	MP3B	Z	0	5.33
75	MP3B	Mx	.007	5.33
76	MP3C	X	6.853	1.83
77	MP3C	Z	0	1.83
78	MP3C	Mx	-.000563	1.83
79	MP3C	X	6.853	5.33
80	MP3C	Z	0	5.33
81	MP3C	Mx	-.000563	5.33
82	MP2A	X	2.441	3.33

Member Point Loads (BLC 30 : Antenna Wm (90 Deg)) (Continued)

	Member Label	Direction	Magnitude[lb,k-ft]	Location[ft,%]
83	MP2A	Z	0	3.33
84	MP2A	Mx	.001	3.33
85	MP2B	X	3.51	3.33
86	MP2B	Z	0	3.33
87	MP2B	Mx	-.0006	3.33
88	MP2C	X	3.152	3.33
89	MP2C	Z	0	3.33
90	MP2C	Mx	-.001	3.33
91	MP3A	X	1.977	3.33
92	MP3A	Z	0	3.33
93	MP3A	Mx	.000988	3.33
94	MP3B	X	3.456	3.33
95	MP3B	Z	0	3.33
96	MP3B	Mx	-.000591	3.33
97	MP3C	X	2.96	3.33
98	MP3C	Z	0	3.33
99	MP3C	Mx	-.000951	3.33

Member Point Loads (BLC 31 : Antenna Wm (120 Deg))

	Member Label	Direction	Magnitude[lb,k-ft]	Location[ft,%]
1	MP4A	X	3.667	2.33
2	MP4A	Z	2.117	2.33
3	MP4A	Mx	-.003	2.33
4	MP4A	X	3.667	4.33
5	MP4A	Z	2.117	4.33
6	MP4A	Mx	-.003	4.33
7	MP4B	X	4.879	2.33
8	MP4B	Z	2.817	2.33
9	MP4B	Mx	-.000815	2.33
10	MP4B	X	4.879	4.33
11	MP4B	Z	2.817	4.33
12	MP4B	Mx	-.000815	4.33
13	MP4C	X	3.443	2.33
14	MP4C	Z	1.988	2.33
15	MP4C	Mx	.003	2.33
16	MP4C	X	3.443	4.33
17	MP4C	Z	1.988	4.33
18	MP4C	Mx	.003	4.33
19	MP1A	X	1.232	6.33
20	MP1A	Z	.711	6.33
21	MP1A	Mx	-.000513	6.33
22	MP1B	X	1.673	6.33
23	MP1B	Z	.966	6.33
24	MP1B	Mx	-.00014	6.33
25	MP1C	X	1.15	6.33
26	MP1C	Z	.664	6.33
27	MP1C	Mx	.00052	6.33
28	MP1A	X	2.161	.33
29	MP1A	Z	1.247	.33
30	MP1A	Mx	-.001	.33
31	MP1A	X	2.161	2.33

Member Point Loads (BLC 31 : Antenna Wm (120 Deg)) (Continued)

	Member Label	Direction	Magnitude[lb,k-ft]	Location[ft,%]
32	MP1A	Z	1.247	2.33
33	MP1A	Mx	-.001	2.33
34	MP1B	X	3.902	.33
35	MP1B	Z	2.253	.33
36	MP1B	Mx	-.000391	.33
37	MP1B	X	3.902	2.33
38	MP1B	Z	2.253	2.33
39	MP1B	Mx	-.000391	2.33
40	MP1C	X	1.839	.33
41	MP1C	Z	1.062	.33
42	MP1C	Mx	.000998	.33
43	MP1C	X	1.839	2.33
44	MP1C	Z	1.062	2.33
45	MP1C	Mx	.000998	2.33
46	MP3A	X	5.147	1.83
47	MP3A	Z	2.972	1.83
48	MP3A	Mx	-.001	1.83
49	MP3A	X	5.147	5.33
50	MP3A	Z	2.972	5.33
51	MP3A	Mx	-.001	5.33
52	MP3B	X	6.83	1.83
53	MP3B	Z	3.943	1.83
54	MP3B	Mx	-.006	1.83
55	MP3B	X	6.83	5.33
56	MP3B	Z	3.943	5.33
57	MP3B	Mx	-.006	5.33
58	MP3C	X	4.837	1.83
59	MP3C	Z	2.792	1.83
60	MP3C	Mx	.005	1.83
61	MP3C	X	4.837	5.33
62	MP3C	Z	2.792	5.33
63	MP3C	Mx	.005	5.33
64	MP3A	X	5.147	1.83
65	MP3A	Z	2.972	1.83
66	MP3A	Mx	-.005	1.83
67	MP3A	X	5.147	5.33
68	MP3A	Z	2.972	5.33
69	MP3A	Mx	-.005	5.33
70	MP3B	X	6.83	1.83
71	MP3B	Z	3.943	1.83
72	MP3B	Mx	.004	1.83
73	MP3B	X	6.83	5.33
74	MP3B	Z	3.943	5.33
75	MP3B	Mx	.004	5.33
76	MP3C	X	4.837	1.83
77	MP3C	Z	2.792	1.83
78	MP3C	Mx	.002	1.83
79	MP3C	X	4.837	5.33
80	MP3C	Z	2.792	5.33
81	MP3C	Mx	.002	5.33
82	MP2A	X	2.376	3.33
83	MP2A	Z	1.372	3.33

Member Point Loads (BLC 31 : Antenna Wm (120 Deg)) (Continued)

	Member Label	Direction	Magnitude[lb,k-ft]	Location[ft,%]
84	MP2A	Mx	.001	3.33
85	MP2B	X	3.131	3.33
86	MP2B	Z	1.808	3.33
87	MP2B	Mx	.000314	3.33
88	MP2C	X	2.237	3.33
89	MP2C	Z	1.291	3.33
90	MP2C	Mx	-.001	3.33
91	MP3A	X	2.075	3.33
92	MP3A	Z	1.198	3.33
93	MP3A	Mx	.001	3.33
94	MP3B	X	3.119	3.33
95	MP3B	Z	1.801	3.33
96	MP3B	Mx	.000313	3.33
97	MP3C	X	1.882	3.33
98	MP3C	Z	1.087	3.33
99	MP3C	Mx	-.001	3.33

Member Point Loads (BLC 32 : Antenna Wm (150 Deg))

	Member Label	Direction	Magnitude[lb,k-ft]	Location[ft,%]
1	MP4A	X	2.603	2.33
2	MP4A	Z	4.509	2.33
3	MP4A	Mx	-.002	2.33
4	MP4A	X	2.603	4.33
5	MP4A	Z	4.509	4.33
6	MP4A	Mx	-.002	4.33
7	MP4B	X	2.445	2.33
8	MP4B	Z	4.234	2.33
9	MP4B	Mx	-.003	2.33
10	MP4B	X	2.445	4.33
11	MP4B	Z	4.234	4.33
12	MP4B	Mx	-.003	4.33
13	MP4C	X	1.904	2.33
14	MP4C	Z	3.297	2.33
15	MP4C	Mx	.003	2.33
16	MP4C	X	1.904	4.33
17	MP4C	Z	3.297	4.33
18	MP4C	Mx	.003	4.33
19	MP1A	X	.888	6.33
20	MP1A	Z	1.538	6.33
21	MP1A	Mx	-.00037	6.33
22	MP1B	X	.83	6.33
23	MP1B	Z	1.438	6.33
24	MP1B	Mx	-.000445	6.33
25	MP1C	X	.633	6.33
26	MP1C	Z	1.097	6.33
27	MP1C	Mx	.00052	6.33
28	MP1A	X	1.946	.33
29	MP1A	Z	3.37	.33
30	MP1A	Mx	-.000973	.33
31	MP1A	X	1.946	2.33
32	MP1A	Z	3.37	2.33

Member Point Loads (BLC 32 : Antenna Wm (150 Deg)) (Continued)

	Member Label	Direction	Magnitude[lb,k-ft]	Location[ft,%]
33	MP1A	Mx	-.000973	2.33
34	MP1B	X	1.718	.33
35	MP1B	Z	2.975	.33
36	MP1B	Mx	-.001	.33
37	MP1B	X	1.718	2.33
38	MP1B	Z	2.975	2.33
39	MP1B	Mx	-.001	2.33
40	MP1C	X	.94	.33
41	MP1C	Z	1.629	.33
42	MP1C	Mx	.000926	.33
43	MP1C	X	.94	2.33
44	MP1C	Z	1.629	2.33
45	MP1C	Mx	.000926	2.33
46	MP3A	X	3.647	1.83
47	MP3A	Z	6.316	1.83
48	MP3A	Mx	.002	1.83
49	MP3A	X	3.647	5.33
50	MP3A	Z	6.316	5.33
51	MP3A	Mx	.002	5.33
52	MP3B	X	3.426	1.83
53	MP3B	Z	5.935	1.83
54	MP3B	Mx	-.006	1.83
55	MP3B	X	3.426	5.33
56	MP3B	Z	5.935	5.33
57	MP3B	Mx	-.006	5.33
58	MP3C	X	2.675	1.83
59	MP3C	Z	4.634	1.83
60	MP3C	Mx	.003	1.83
61	MP3C	X	2.675	5.33
62	MP3C	Z	4.634	5.33
63	MP3C	Mx	.003	5.33
64	MP3A	X	3.647	1.83
65	MP3A	Z	6.316	1.83
66	MP3A	Mx	-.007	1.83
67	MP3A	X	3.647	5.33
68	MP3A	Z	6.316	5.33
69	MP3A	Mx	-.007	5.33
70	MP3B	X	3.426	1.83
71	MP3B	Z	5.935	1.83
72	MP3B	Mx	.000563	1.83
73	MP3B	X	3.426	5.33
74	MP3B	Z	5.935	5.33
75	MP3B	Mx	.000563	5.33
76	MP3C	X	2.675	1.83
77	MP3C	Z	4.634	1.83
78	MP3C	Mx	.004	1.83
79	MP3C	X	2.675	5.33
80	MP3C	Z	4.634	5.33
81	MP3C	Mx	.004	5.33
82	MP2A	X	1.675	3.33
83	MP2A	Z	2.9	3.33
84	MP2A	Mx	.000838	3.33

Member Point Loads (BLC 32 : Antenna Wm (150 Deg)) (Continued)

	Member Label	Direction	Magnitude[lb,k-ft]	Location[ft,%]
85	MP2B	X	1.576	3.33
86	MP2B	Z	2.729	3.33
87	MP2B	Mx	.001	3.33
88	MP2C	X	1.239	3.33
89	MP2C	Z	2.146	3.33
90	MP2C	Mx	-.001	3.33
91	MP3A	X	1.617	3.33
92	MP3A	Z	2.8	3.33
93	MP3A	Mx	.000808	3.33
94	MP3B	X	1.48	3.33
95	MP3B	Z	2.563	3.33
96	MP3B	Mx	.000951	3.33
97	MP3C	X	1.014	3.33
98	MP3C	Z	1.756	3.33
99	MP3C	Mx	-.000998	3.33

Member Point Loads (BLC 33 : Antenna Wm (180 Deg))

	Member Label	Direction	Magnitude[lb,k-ft]	Location[ft,%]
1	MP4A	X	0	2.33
2	MP4A	Z	5.693	2.33
3	MP4A	Mx	0	2.33
4	MP4A	X	0	4.33
5	MP4A	Z	5.693	4.33
6	MP4A	Mx	0	4.33
7	MP4B	X	0	2.33
8	MP4B	Z	3.976	2.33
9	MP4B	Mx	-.003	2.33
10	MP4B	X	0	4.33
11	MP4B	Z	3.976	4.33
12	MP4B	Mx	-.003	4.33
13	MP4C	X	0	2.33
14	MP4C	Z	4.552	2.33
15	MP4C	Mx	.003	2.33
16	MP4C	X	0	4.33
17	MP4C	Z	4.552	4.33
18	MP4C	Mx	.003	4.33
19	MP1A	X	0	6.33
20	MP1A	Z	1.953	6.33
21	MP1A	Mx	0	6.33
22	MP1B	X	0	6.33
23	MP1B	Z	1.328	6.33
24	MP1B	Mx	-.00052	6.33
25	MP1C	X	0	6.33
26	MP1C	Z	1.538	6.33
27	MP1C	Mx	.000491	6.33
28	MP1A	X	0	.33
29	MP1A	Z	4.589	.33
30	MP1A	Mx	0	.33
31	MP1A	X	0	2.33
32	MP1A	Z	4.589	2.33
33	MP1A	Mx	0	2.33

Member Point Loads (BLC 33 : Antenna Wm (180 Deg)) (Continued)

	Member Label	Direction	Magnitude[lb,k-ft]	Location[ft,%]
34	MP1B	X	0	.33
35	MP1B	Z	2.123	.33
36	MP1B	Mx	-.000997	.33
37	MP1B	X	0	2.33
38	MP1B	Z	2.123	2.33
39	MP1B	Mx	-.000997	2.33
40	MP1C	X	0	.33
41	MP1C	Z	2.951	.33
42	MP1C	Mx	.001	.33
43	MP1C	X	0	2.33
44	MP1C	Z	2.951	2.33
45	MP1C	Mx	.001	2.33
46	MP3A	X	0	1.83
47	MP3A	Z	7.968	1.83
48	MP3A	Mx	.005	1.83
49	MP3A	X	0	5.33
50	MP3A	Z	7.968	5.33
51	MP3A	Mx	.005	5.33
52	MP3B	X	0	1.83
53	MP3B	Z	5.585	1.83
54	MP3B	Mx	-.005	1.83
55	MP3B	X	0	5.33
56	MP3B	Z	5.585	5.33
57	MP3B	Mx	-.005	5.33
58	MP3C	X	0	1.83
59	MP3C	Z	6.384	1.83
60	MP3C	Mx	.000525	1.83
61	MP3C	X	0	5.33
62	MP3C	Z	6.384	5.33
63	MP3C	Mx	.000525	5.33
64	MP3A	X	0	1.83
65	MP3A	Z	7.968	1.83
66	MP3A	Mx	-.005	1.83
67	MP3A	X	0	5.33
68	MP3A	Z	7.968	5.33
69	MP3A	Mx	-.005	5.33
70	MP3B	X	0	1.83
71	MP3B	Z	5.585	1.83
72	MP3B	Mx	-.002	1.83
73	MP3B	X	0	5.33
74	MP3B	Z	5.585	5.33
75	MP3B	Mx	-.002	5.33
76	MP3C	X	0	1.83
77	MP3C	Z	6.384	1.83
78	MP3C	Mx	.006	1.83
79	MP3C	X	0	5.33
80	MP3C	Z	6.384	5.33
81	MP3C	Mx	.006	5.33
82	MP2A	X	0	3.33
83	MP2A	Z	3.652	3.33
84	MP2A	Mx	0	3.33
85	MP2B	X	0	3.33

Member Point Loads (BLC 33 : Antenna Wm (180 Deg)) (Continued)

	Member Label	Direction	Magnitude[lb,k-ft]	Location[ft,%]
86	MP2B	Z	2.583	3.33
87	MP2B	Mx	.001	3.33
88	MP2C	X	0	3.33
89	MP2C	Z	2.941	3.33
90	MP2C	Mx	-.001	3.33
91	MP3A	X	0	3.33
92	MP3A	Z	3.652	3.33
93	MP3A	Mx	0	3.33
94	MP3B	X	0	3.33
95	MP3B	Z	2.173	3.33
96	MP3B	Mx	.001	3.33
97	MP3C	X	0	3.33
98	MP3C	Z	2.669	3.33
99	MP3C	Mx	-.001	3.33

Member Point Loads (BLC 34 : Antenna Wm (210 Deg))

	Member Label	Direction	Magnitude[lb,k-ft]	Location[ft,%]
1	MP4A	X	-2.603	2.33
2	MP4A	Z	4.509	2.33
3	MP4A	Mx	.002	2.33
4	MP4A	X	-2.603	4.33
5	MP4A	Z	4.509	4.33
6	MP4A	Mx	.002	4.33
7	MP4B	X	-1.904	2.33
8	MP4B	Z	3.297	2.33
9	MP4B	Mx	-.003	2.33
10	MP4B	X	-1.904	4.33
11	MP4B	Z	3.297	4.33
12	MP4B	Mx	-.003	4.33
13	MP4C	X	-2.733	2.33
14	MP4C	Z	4.733	2.33
15	MP4C	Mx	.002	2.33
16	MP4C	X	-2.733	4.33
17	MP4C	Z	4.733	4.33
18	MP4C	Mx	.002	4.33
19	MP1A	X	-.888	6.33
20	MP1A	Z	1.538	6.33
21	MP1A	Mx	.00037	6.33
22	MP1B	X	-.633	6.33
23	MP1B	Z	1.097	6.33
24	MP1B	Mx	-.00052	6.33
25	MP1C	X	-.935	6.33
26	MP1C	Z	1.62	6.33
27	MP1C	Mx	.000267	6.33
28	MP1A	X	-1.946	.33
29	MP1A	Z	3.37	.33
30	MP1A	Mx	.000973	.33
31	MP1A	X	-1.946	2.33
32	MP1A	Z	3.37	2.33
33	MP1A	Mx	.000973	2.33
34	MP1B	X	-.94	.33

Member Point Loads (BLC 34 : Antenna Wm (210 Deg)) (Continued)

	Member Label	Direction	Magnitude[lb,k-ft]	Location[ft,%]
35	MP1B	Z	1.629	.33
36	MP1B	Mx	-.000926	.33
37	MP1B	X	-.94	2.33
38	MP1B	Z	1.629	2.33
39	MP1B	Mx	-.000926	2.33
40	MP1C	X	-2.131	.33
41	MP1C	Z	3.692	.33
42	MP1C	Mx	.000729	.33
43	MP1C	X	-2.131	2.33
44	MP1C	Z	3.692	2.33
45	MP1C	Mx	.000729	2.33
46	MP3A	X	-3.647	1.83
47	MP3A	Z	6.316	1.83
48	MP3A	Mx	.007	1.83
49	MP3A	X	-3.647	5.33
50	MP3A	Z	6.316	5.33
51	MP3A	Mx	.007	5.33
52	MP3B	X	-2.675	1.83
53	MP3B	Z	4.634	1.83
54	MP3B	Mx	-.003	1.83
55	MP3B	X	-2.675	5.33
56	MP3B	Z	4.634	5.33
57	MP3B	Mx	-.003	5.33
58	MP3C	X	-3.826	1.83
59	MP3C	Z	6.627	1.83
60	MP3C	Mx	-.003	1.83
61	MP3C	X	-3.826	5.33
62	MP3C	Z	6.627	5.33
63	MP3C	Mx	-.003	5.33
64	MP3A	X	-3.647	1.83
65	MP3A	Z	6.316	1.83
66	MP3A	Mx	-.002	1.83
67	MP3A	X	-3.647	5.33
68	MP3A	Z	6.316	5.33
69	MP3A	Mx	-.002	5.33
70	MP3B	X	-2.675	1.83
71	MP3B	Z	4.634	1.83
72	MP3B	Mx	-.004	1.83
73	MP3B	X	-2.675	5.33
74	MP3B	Z	4.634	5.33
75	MP3B	Mx	-.004	5.33
76	MP3C	X	-3.826	1.83
77	MP3C	Z	6.627	1.83
78	MP3C	Mx	.007	1.83
79	MP3C	X	-3.826	5.33
80	MP3C	Z	6.627	5.33
81	MP3C	Mx	.007	5.33
82	MP2A	X	-1.675	3.33
83	MP2A	Z	2.9	3.33
84	MP2A	Mx	-.000838	3.33
85	MP2B	X	-1.239	3.33
86	MP2B	Z	2.146	3.33

Member Point Loads (BLC 34 : Antenna Wm (210 Deg)) (Continued)

	Member Label	Direction	Magnitude[lb,k-ft]	Location[ft,%]
87	MP2B	Mx	.001	3.33
88	MP2C	X	-1.755	3.33
89	MP2C	Z	3.04	3.33
90	MP2C	Mx	-.0006	3.33
91	MP3A	X	-1.617	3.33
92	MP3A	Z	2.8	3.33
93	MP3A	Mx	-.000808	3.33
94	MP3B	X	-1.014	3.33
95	MP3B	Z	1.756	3.33
96	MP3B	Mx	.000998	3.33
97	MP3C	X	-1.728	3.33
98	MP3C	Z	2.993	3.33
99	MP3C	Mx	-.000591	3.33

Member Point Loads (BLC 35 : Antenna Wm (240 Deg))

	Member Label	Direction	Magnitude[lb,k-ft]	Location[ft,%]
1	MP4A	X	-3.667	2.33
2	MP4A	Z	2.117	2.33
3	MP4A	Mx	.003	2.33
4	MP4A	X	-3.667	4.33
5	MP4A	Z	2.117	4.33
6	MP4A	Mx	.003	4.33
7	MP4B	X	-3.942	2.33
8	MP4B	Z	2.276	2.33
9	MP4B	Mx	-.003	2.33
10	MP4B	X	-3.942	4.33
11	MP4B	Z	2.276	4.33
12	MP4B	Mx	-.003	4.33
13	MP4C	X	-4.879	2.33
14	MP4C	Z	2.817	2.33
15	MP4C	Mx	-.000815	2.33
16	MP4C	X	-4.879	4.33
17	MP4C	Z	2.817	4.33
18	MP4C	Mx	-.000815	4.33
19	MP1A	X	-1.232	6.33
20	MP1A	Z	.711	6.33
21	MP1A	Mx	.000513	6.33
22	MP1B	X	-1.332	6.33
23	MP1B	Z	.769	6.33
24	MP1B	Mx	-.000491	6.33
25	MP1C	X	-1.673	6.33
26	MP1C	Z	.966	6.33
27	MP1C	Mx	-.00014	6.33
28	MP1A	X	-2.161	.33
29	MP1A	Z	1.247	.33
30	MP1A	Mx	.001	.33
31	MP1A	X	-2.161	2.33
32	MP1A	Z	1.247	2.33
33	MP1A	Mx	.001	2.33
34	MP1B	X	-2.555	.33
35	MP1B	Z	1.475	.33

Member Point Loads (BLC 35 : Antenna Wm (240 Deg)) (Continued)

	Member Label	Direction	Magnitude[lb,k-ft]	Location[ft,%]
36	MP1B	Mx	-.001	.33
37	MP1B	X	-2.555	2.33
38	MP1B	Z	1.475	2.33
39	MP1B	Mx	-.001	2.33
40	MP1C	X	-3.902	.33
41	MP1C	Z	2.253	.33
42	MP1C	Mx	-.000391	.33
43	MP1C	X	-3.902	2.33
44	MP1C	Z	2.253	2.33
45	MP1C	Mx	-.000391	2.33
46	MP3A	X	-5.147	1.83
47	MP3A	Z	2.972	1.83
48	MP3A	Mx	.005	1.83
49	MP3A	X	-5.147	5.33
50	MP3A	Z	2.972	5.33
51	MP3A	Mx	.005	5.33
52	MP3B	X	-5.529	1.83
53	MP3B	Z	3.192	1.83
54	MP3B	Mx	-.000524	1.83
55	MP3B	X	-5.529	5.33
56	MP3B	Z	3.192	5.33
57	MP3B	Mx	-.000524	5.33
58	MP3C	X	-6.83	1.83
59	MP3C	Z	3.943	1.83
60	MP3C	Mx	-.006	1.83
61	MP3C	X	-6.83	5.33
62	MP3C	Z	3.943	5.33
63	MP3C	Mx	-.006	5.33
64	MP3A	X	-5.147	1.83
65	MP3A	Z	2.972	1.83
66	MP3A	Mx	.001	1.83
67	MP3A	X	-5.147	5.33
68	MP3A	Z	2.972	5.33
69	MP3A	Mx	.001	5.33
70	MP3B	X	-5.529	1.83
71	MP3B	Z	3.192	1.83
72	MP3B	Mx	-.006	1.83
73	MP3B	X	-5.529	5.33
74	MP3B	Z	3.192	5.33
75	MP3B	Mx	-.006	5.33
76	MP3C	X	-6.83	1.83
77	MP3C	Z	3.943	1.83
78	MP3C	Mx	.004	1.83
79	MP3C	X	-6.83	5.33
80	MP3C	Z	3.943	5.33
81	MP3C	Mx	.004	5.33
82	MP2A	X	-2.376	3.33
83	MP2A	Z	1.372	3.33
84	MP2A	Mx	-.001	3.33
85	MP2B	X	-2.547	3.33
86	MP2B	Z	1.471	3.33
87	MP2B	Mx	.001	3.33

Member Point Loads (BLC 35 : Antenna Wm (240 Deg)) (Continued)

	Member Label	Direction	Magnitude[lb,k-ft]	Location[ft,%]
88	MP2C	X	-3.131	3.33
89	MP2C	Z	1.808	3.33
90	MP2C	Mx	.000314	3.33
91	MP3A	X	-2.075	3.33
92	MP3A	Z	1.198	3.33
93	MP3A	Mx	-.001	3.33
94	MP3B	X	-2.312	3.33
95	MP3B	Z	1.335	3.33
96	MP3B	Mx	.001	3.33
97	MP3C	X	-3.119	3.33
98	MP3C	Z	1.801	3.33
99	MP3C	Mx	.000313	3.33

Member Point Loads (BLC 36 : Antenna Wm (270 Deg))

	Member Label	Direction	Magnitude[lb,k-ft]	Location[ft,%]
1	MP4A	X	-3.749	2.33
2	MP4A	Z	0	2.33
3	MP4A	Mx	.003	2.33
4	MP4A	X	-3.749	4.33
5	MP4A	Z	0	4.33
6	MP4A	Mx	.003	4.33
7	MP4B	X	-5.465	2.33
8	MP4B	Z	0	2.33
9	MP4B	Mx	-.002	2.33
10	MP4B	X	-5.465	4.33
11	MP4B	Z	0	4.33
12	MP4B	Mx	-.002	4.33
13	MP4C	X	-4.889	2.33
14	MP4C	Z	0	2.33
15	MP4C	Mx	-.003	2.33
16	MP4C	X	-4.889	4.33
17	MP4C	Z	0	4.33
18	MP4C	Mx	-.003	4.33
19	MP1A	X	-1.245	6.33
20	MP1A	Z	0	6.33
21	MP1A	Mx	.000519	6.33
22	MP1B	X	-1.87	6.33
23	MP1B	Z	0	6.33
24	MP1B	Mx	-.000266	6.33
25	MP1C	X	-1.661	6.33
26	MP1C	Z	0	6.33
27	MP1C	Mx	-.000445	6.33
28	MP1A	X	-1.797	.33
29	MP1A	Z	0	.33
30	MP1A	Mx	.000898	.33
31	MP1A	X	-1.797	2.33
32	MP1A	Z	0	2.33
33	MP1A	Mx	.000898	2.33
34	MP1B	X	-4.263	.33
35	MP1B	Z	0	.33
36	MP1B	Mx	-.000729	.33

Member Point Loads (BLC 36 : Antenna Wm (270 Deg)) (Continued)

	Member Label	Direction	Magnitude[lb,k-ft]	Location[ft,%]
37	MP1B	X	-4.263	2.33
38	MP1B	Z	0	2.33
39	MP1B	Mx	-.000729	2.33
40	MP1C	X	-3.435	.33
41	MP1C	Z	0	.33
42	MP1C	Mx	-.001	.33
43	MP1C	X	-3.435	2.33
44	MP1C	Z	0	2.33
45	MP1C	Mx	-.001	2.33
46	MP3A	X	-5.269	1.83
47	MP3A	Z	0	1.83
48	MP3A	Mx	.004	1.83
49	MP3A	X	-5.269	5.33
50	MP3A	Z	0	5.33
51	MP3A	Mx	.004	5.33
52	MP3B	X	-7.652	1.83
53	MP3B	Z	0	1.83
54	MP3B	Mx	.003	1.83
55	MP3B	X	-7.652	5.33
56	MP3B	Z	0	5.33
57	MP3B	Mx	.003	5.33
58	MP3C	X	-6.853	1.83
59	MP3C	Z	0	1.83
60	MP3C	Mx	-.006	1.83
61	MP3C	X	-6.853	5.33
62	MP3C	Z	0	5.33
63	MP3C	Mx	-.006	5.33
64	MP3A	X	-5.269	1.83
65	MP3A	Z	0	1.83
66	MP3A	Mx	.004	1.83
67	MP3A	X	-5.269	5.33
68	MP3A	Z	0	5.33
69	MP3A	Mx	.004	5.33
70	MP3B	X	-7.652	1.83
71	MP3B	Z	0	1.83
72	MP3B	Mx	-.007	1.83
73	MP3B	X	-7.652	5.33
74	MP3B	Z	0	5.33
75	MP3B	Mx	-.007	5.33
76	MP3C	X	-6.853	1.83
77	MP3C	Z	0	1.83
78	MP3C	Mx	.000563	1.83
79	MP3C	X	-6.853	5.33
80	MP3C	Z	0	5.33
81	MP3C	Mx	.000563	5.33
82	MP2A	X	-2.441	3.33
83	MP2A	Z	0	3.33
84	MP2A	Mx	-.001	3.33
85	MP2B	X	-3.51	3.33
86	MP2B	Z	0	3.33
87	MP2B	Mx	.0006	3.33
88	MP2C	X	-3.152	3.33

Member Point Loads (BLC 36 : Antenna Wm (270 Deg)) (Continued)

	Member Label	Direction	Magnitude[lb,k-ft]	Location[ft,%]
89	MP2C	Z	0	3.33
90	MP2C	Mx	.001	3.33
91	MP3A	X	-1.977	3.33
92	MP3A	Z	0	3.33
93	MP3A	Mx	-.000988	3.33
94	MP3B	X	-3.456	3.33
95	MP3B	Z	0	3.33
96	MP3B	Mx	.000591	3.33
97	MP3C	X	-2.96	3.33
98	MP3C	Z	0	3.33
99	MP3C	Mx	.000951	3.33

Member Point Loads (BLC 37 : Antenna Wm (300 Deg))

	Member Label	Direction	Magnitude[lb,k-ft]	Location[ft,%]
1	MP4A	X	-3.667	2.33
2	MP4A	Z	-2.117	2.33
3	MP4A	Mx	.003	2.33
4	MP4A	X	-3.667	4.33
5	MP4A	Z	-2.117	4.33
6	MP4A	Mx	.003	4.33
7	MP4B	X	-4.879	2.33
8	MP4B	Z	-2.817	2.33
9	MP4B	Mx	.000815	2.33
10	MP4B	X	-4.879	4.33
11	MP4B	Z	-2.817	4.33
12	MP4B	Mx	.000815	4.33
13	MP4C	X	-3.443	2.33
14	MP4C	Z	-1.988	2.33
15	MP4C	Mx	-.003	2.33
16	MP4C	X	-3.443	4.33
17	MP4C	Z	-1.988	4.33
18	MP4C	Mx	-.003	4.33
19	MP1A	X	-1.232	6.33
20	MP1A	Z	-.711	6.33
21	MP1A	Mx	.000513	6.33
22	MP1B	X	-1.673	6.33
23	MP1B	Z	-.966	6.33
24	MP1B	Mx	.00014	6.33
25	MP1C	X	-1.15	6.33
26	MP1C	Z	-.664	6.33
27	MP1C	Mx	-.00052	6.33
28	MP1A	X	-2.161	.33
29	MP1A	Z	-1.247	.33
30	MP1A	Mx	.001	.33
31	MP1A	X	-2.161	2.33
32	MP1A	Z	-1.247	2.33
33	MP1A	Mx	.001	2.33
34	MP1B	X	-3.902	.33
35	MP1B	Z	-2.253	.33
36	MP1B	Mx	.000391	.33
37	MP1B	X	-3.902	2.33

Member Point Loads (BLC 37 : Antenna Wm (300 Deg)) (Continued)

	Member Label	Direction	Magnitude[lb,k-ft]	Location[ft,%]
38	MP1B	Z	-2.253	2.33
39	MP1B	Mx	.000391	2.33
40	MP1C	X	-1.839	.33
41	MP1C	Z	-1.062	.33
42	MP1C	Mx	-.000998	.33
43	MP1C	X	-1.839	2.33
44	MP1C	Z	-1.062	2.33
45	MP1C	Mx	-.000998	2.33
46	MP3A	X	-5.147	1.83
47	MP3A	Z	-2.972	1.83
48	MP3A	Mx	.001	1.83
49	MP3A	X	-5.147	5.33
50	MP3A	Z	-2.972	5.33
51	MP3A	Mx	.001	5.33
52	MP3B	X	-6.83	1.83
53	MP3B	Z	-3.943	1.83
54	MP3B	Mx	.006	1.83
55	MP3B	X	-6.83	5.33
56	MP3B	Z	-3.943	5.33
57	MP3B	Mx	.006	5.33
58	MP3C	X	-4.837	1.83
59	MP3C	Z	-2.792	1.83
60	MP3C	Mx	-.005	1.83
61	MP3C	X	-4.837	5.33
62	MP3C	Z	-2.792	5.33
63	MP3C	Mx	-.005	5.33
64	MP3A	X	-5.147	1.83
65	MP3A	Z	-2.972	1.83
66	MP3A	Mx	.005	1.83
67	MP3A	X	-5.147	5.33
68	MP3A	Z	-2.972	5.33
69	MP3A	Mx	.005	5.33
70	MP3B	X	-6.83	1.83
71	MP3B	Z	-3.943	1.83
72	MP3B	Mx	-.004	1.83
73	MP3B	X	-6.83	5.33
74	MP3B	Z	-3.943	5.33
75	MP3B	Mx	-.004	5.33
76	MP3C	X	-4.837	1.83
77	MP3C	Z	-2.792	1.83
78	MP3C	Mx	-.002	1.83
79	MP3C	X	-4.837	5.33
80	MP3C	Z	-2.792	5.33
81	MP3C	Mx	-.002	5.33
82	MP2A	X	-2.376	3.33
83	MP2A	Z	-1.372	3.33
84	MP2A	Mx	-.001	3.33
85	MP2B	X	-3.131	3.33
86	MP2B	Z	-1.808	3.33
87	MP2B	Mx	-.000314	3.33
88	MP2C	X	-2.237	3.33
89	MP2C	Z	-1.291	3.33

Member Point Loads (BLC 37 : Antenna Wm (300 Deg)) (Continued)

	Member Label	Direction	Magnitude[lb,k-ft]	Location[ft,%]
90	MP2C	Mx	.001	3.33
91	MP3A	X	-2.075	3.33
92	MP3A	Z	-1.198	3.33
93	MP3A	Mx	-.001	3.33
94	MP3B	X	-3.119	3.33
95	MP3B	Z	-1.801	3.33
96	MP3B	Mx	-.000313	3.33
97	MP3C	X	-1.882	3.33
98	MP3C	Z	-1.087	3.33
99	MP3C	Mx	.001	3.33

Member Point Loads (BLC 38 : Antenna Wm (330 Deg))

	Member Label	Direction	Magnitude[lb,k-ft]	Location[ft,%]
1	MP4A	X	-2.603	2.33
2	MP4A	Z	-4.509	2.33
3	MP4A	Mx	.002	2.33
4	MP4A	X	-2.603	4.33
5	MP4A	Z	-4.509	4.33
6	MP4A	Mx	.002	4.33
7	MP4B	X	-2.445	2.33
8	MP4B	Z	-4.234	2.33
9	MP4B	Mx	.003	2.33
10	MP4B	X	-2.445	4.33
11	MP4B	Z	-4.234	4.33
12	MP4B	Mx	.003	4.33
13	MP4C	X	-1.904	2.33
14	MP4C	Z	-3.297	2.33
15	MP4C	Mx	-.003	2.33
16	MP4C	X	-1.904	4.33
17	MP4C	Z	-3.297	4.33
18	MP4C	Mx	-.003	4.33
19	MP1A	X	-.888	6.33
20	MP1A	Z	-1.538	6.33
21	MP1A	Mx	.00037	6.33
22	MP1B	X	-.83	6.33
23	MP1B	Z	-1.438	6.33
24	MP1B	Mx	.000445	6.33
25	MP1C	X	-.633	6.33
26	MP1C	Z	-1.097	6.33
27	MP1C	Mx	-.00052	6.33
28	MP1A	X	-1.946	.33
29	MP1A	Z	-3.37	.33
30	MP1A	Mx	.000973	.33
31	MP1A	X	-1.946	2.33
32	MP1A	Z	-3.37	2.33
33	MP1A	Mx	.000973	2.33
34	MP1B	X	-1.718	.33
35	MP1B	Z	-2.975	.33
36	MP1B	Mx	.001	.33
37	MP1B	X	-1.718	2.33
38	MP1B	Z	-2.975	2.33

Member Point Loads (BLC 38 : Antenna Wm (330 Deg)) (Continued)

	Member Label	Direction	Magnitude[lb,k-ft]	Location[ft,%]
39	MP1B	Mx	.001	2.33
40	MP1C	X	-.94	.33
41	MP1C	Z	-1.629	.33
42	MP1C	Mx	-.000926	.33
43	MP1C	X	-.94	2.33
44	MP1C	Z	-1.629	2.33
45	MP1C	Mx	-.000926	2.33
46	MP3A	X	-3.647	1.83
47	MP3A	Z	-6.316	1.83
48	MP3A	Mx	-.002	1.83
49	MP3A	X	-3.647	5.33
50	MP3A	Z	-6.316	5.33
51	MP3A	Mx	-.002	5.33
52	MP3B	X	-3.426	1.83
53	MP3B	Z	-5.935	1.83
54	MP3B	Mx	.006	1.83
55	MP3B	X	-3.426	5.33
56	MP3B	Z	-5.935	5.33
57	MP3B	Mx	.006	5.33
58	MP3C	X	-2.675	1.83
59	MP3C	Z	-4.634	1.83
60	MP3C	Mx	-.003	1.83
61	MP3C	X	-2.675	5.33
62	MP3C	Z	-4.634	5.33
63	MP3C	Mx	-.003	5.33
64	MP3A	X	-3.647	1.83
65	MP3A	Z	-6.316	1.83
66	MP3A	Mx	.007	1.83
67	MP3A	X	-3.647	5.33
68	MP3A	Z	-6.316	5.33
69	MP3A	Mx	.007	5.33
70	MP3B	X	-3.426	1.83
71	MP3B	Z	-5.935	1.83
72	MP3B	Mx	-.000563	1.83
73	MP3B	X	-3.426	5.33
74	MP3B	Z	-5.935	5.33
75	MP3B	Mx	-.000563	5.33
76	MP3C	X	-2.675	1.83
77	MP3C	Z	-4.634	1.83
78	MP3C	Mx	-.004	1.83
79	MP3C	X	-2.675	5.33
80	MP3C	Z	-4.634	5.33
81	MP3C	Mx	-.004	5.33
82	MP2A	X	-1.675	3.33
83	MP2A	Z	-2.9	3.33
84	MP2A	Mx	-.000838	3.33
85	MP2B	X	-1.576	3.33
86	MP2B	Z	-2.729	3.33
87	MP2B	Mx	-.001	3.33
88	MP2C	X	-1.239	3.33
89	MP2C	Z	-2.146	3.33
90	MP2C	Mx	.001	3.33

Member Point Loads (BLC 38 : Antenna Wm (330 Deg)) (Continued)

	Member Label	Direction	Magnitude[lb,k-ft]	Location[ft,%]
91	MP3A	X	-1.617	3.33
92	MP3A	Z	-2.8	3.33
93	MP3A	Mx	-.000808	3.33
94	MP3B	X	-1.48	3.33
95	MP3B	Z	-2.563	3.33
96	MP3B	Mx	-.000951	3.33
97	MP3C	X	-1.014	3.33
98	MP3C	Z	-1.756	3.33
99	MP3C	Mx	.000998	3.33

Member Point Loads (BLC 77 : Lm1)

	Member Label	Direction	Magnitude[lb,k-ft]	Location[ft,%]
1	M7A	Y	-500	%92

Member Point Loads (BLC 78 : Lm2)

	Member Label	Direction	Magnitude[lb,k-ft]	Location[ft,%]
1	M7A	Y	-500	%54

Member Point Loads (BLC 79 : Lv1)

	Member Label	Direction	Magnitude[lb,k-ft]	Location[ft,%]
1	M7A	Y	-250	%50

Member Point Loads (BLC 80 : Lv2)

	Member Label	Direction	Magnitude[lb,k-ft]	Location[ft,%]
1	M7A	Y	-250	0

Member Distributed Loads (BLC 40 : Structure Di)

	Member Label	Direction	Start Magnitude[lb/ft,...	End Magnitude[lb/ft,F...	Start Location[ft,%]	End Location[ft,%]
1	M1	Y	-15.095	-15.095	0	%100
2	M2	Y	-16.549	-16.549	0	%100
3	M5	Y	-15.801	-15.801	0	%100
4	M6	Y	-15.801	-15.801	0	%100
5	M7	Y	-15.801	-15.801	0	%100
6	M6A	Y	-12.187	-12.187	0	%100
7	M7A	Y	-12.187	-12.187	0	%100
8	MP1A	Y	-8.346	-8.346	0	%100
9	M23A	Y	-12.187	-12.187	0	%100
10	M24	Y	-12.187	-12.187	0	%100
11	M38	Y	-15.095	-15.095	0	%100
12	M39A	Y	-12.187	-12.187	0	%100
13	M40	Y	-12.187	-12.187	0	%100
14	M54	Y	-15.095	-15.095	0	%100
15	M55	Y	-16.549	-16.549	0	%100
16	M56	Y	-16.549	-16.549	0	%100
17	M42	Y	-12.187	-12.187	0	%100
18	M43A	Y	-12.187	-12.187	0	%100
19	M44	Y	-12.187	-12.187	0	%100
20	MP2A	Y	-8.346	-8.346	0	%100

Member Distributed Loads (BLC 40 : Structure Di) (Continued)

	Member Label	Direction	Start Magnitude[lb/ft,...	End Magnitude[lb/ft,F...	Start Location[ft,%]	End Location[ft,%]
21	MP3A	Y	-9.374	-9.374	0	%100
22	MP4A	Y	-8.346	-8.346	0	%100
23	MP5A	Y	-8.346	-8.346	0	%100
24	M34	Y	-18.003	-18.003	0	%100
25	M37	Y	-8.346	-8.346	0	%100
26	M38A	Y	-18.003	-18.003	0	%100
27	M41	Y	-8.346	-8.346	0	%100
28	M42A	Y	-18.003	-18.003	0	%100
29	M45	Y	-8.346	-8.346	0	%100
30	MP1C	Y	-8.346	-8.346	0	%100
31	MP2C	Y	-8.346	-8.346	0	%100
32	MP3C	Y	-9.374	-9.374	0	%100
33	MP4C	Y	-8.346	-8.346	0	%100
34	MP5C	Y	-8.346	-8.346	0	%100
35	MP1B	Y	-8.346	-8.346	0	%100
36	MP2B	Y	-8.346	-8.346	0	%100
37	MP3B	Y	-9.374	-9.374	0	%100
38	MP4B	Y	-8.346	-8.346	0	%100
39	MP5B	Y	-8.346	-8.346	0	%100
40	M76	Y	-9.374	-9.374	0	%100
41	M77	Y	-9.374	-9.374	0	%100
42	M78	Y	-9.374	-9.374	0	%100
43	M95	Y	-10.732	-10.732	0	%100
44	M96	Y	-10.732	-10.732	0	%100
45	M97	Y	-10.732	-10.732	0	%100
46	M98	Y	-10.732	-10.732	0	%100
47	M99	Y	-10.732	-10.732	0	%100
48	M100	Y	-10.732	-10.732	0	%100
49	M107	Y	-12.187	-12.187	0	%100
50	M108	Y	-12.187	-12.187	0	%100
51	M109	Y	-12.187	-12.187	0	%100

Member Distributed Loads (BLC 41 : Structure Wo (0 Deg))

	Member Label	Direction	Start Magnitude[lb/ft,...	End Magnitude[lb/ft,F...	Start Location[ft,%]	End Location[ft,%]
1	M1	X	0	0	0	%100
2	M1	Z	0	0	0	%100
3	M2	X	0	0	0	%100
4	M2	Z	0	0	0	%100
5	M5	X	0	0	0	%100
6	M5	Z	0	0	0	%100
7	M6	X	0	0	0	%100
8	M6	Z	-9.63	-9.63	0	%100
9	M7	X	0	0	0	%100
10	M7	Z	-9.63	-9.63	0	%100
11	M6A	X	0	0	0	%100
12	M6A	Z	-15.107	-15.107	0	%100
13	M7A	X	0	0	0	%100
14	M7A	Z	-15.107	-15.107	0	%100
15	MP1A	X	0	0	0	%100
16	MP1A	Z	-7.176	-7.176	0	%100
17	M23A	X	0	0	0	%100

Member Distributed Loads (BLC 41 : Structure Wo (0 Deg)) (Continued)

	Member Label	Direction	Start Magnitude[lb/ft,...	End Magnitude[lb/ft,F...	Start Location[ft,%]	End Location[ft,%]
18	M23A	Z	-3.777	-3.777	0	%100
19	M24	X	0	0	0	%100
20	M24	Z	-3.777	-3.777	0	%100
21	M38	X	0	0	0	%100
22	M38	Z	-6.475	-6.475	0	%100
23	M39A	X	0	0	0	%100
24	M39A	Z	-3.777	-3.777	0	%100
25	M40	X	0	0	0	%100
26	M40	Z	-3.777	-3.777	0	%100
27	M54	X	0	0	0	%100
28	M54	Z	-6.475	-6.475	0	%100
29	M55	X	0	0	0	%100
30	M55	Z	-8.435	-8.435	0	%100
31	M56	X	0	0	0	%100
32	M56	Z	-8.435	-8.435	0	%100
33	M42	X	0	0	0	%100
34	M42	Z	-15.107	-15.107	0	%100
35	M43A	X	0	0	0	%100
36	M43A	Z	-3.777	-3.777	0	%100
37	M44	X	0	0	0	%100
38	M44	Z	-3.777	-3.777	0	%100
39	MP2A	X	0	0	0	%100
40	MP2A	Z	-7.176	-7.176	0	%100
41	MP3A	X	0	0	0	%100
42	MP3A	Z	-8.686	-8.686	0	%100
43	MP4A	X	0	0	0	%100
44	MP4A	Z	-7.176	-7.176	0	%100
45	MP5A	X	0	0	0	%100
46	MP5A	Z	-7.176	-7.176	0	%100
47	M34	X	0	0	0	%100
48	M34	Z	-18.212	-18.212	0	%100
49	M37	X	0	0	0	%100
50	M37	Z	-7.176	-7.176	0	%100
51	M38A	X	0	0	0	%100
52	M38A	Z	-18.212	-18.212	0	%100
53	M41	X	0	0	0	%100
54	M41	Z	-7.176	-7.176	0	%100
55	M42A	X	0	0	0	%100
56	M42A	Z	-18.212	-18.212	0	%100
57	M45	X	0	0	0	%100
58	M45	Z	-7.176	-7.176	0	%100
59	MP1C	X	0	0	0	%100
60	MP1C	Z	-7.176	-7.176	0	%100
61	MP2C	X	0	0	0	%100
62	MP2C	Z	-7.176	-7.176	0	%100
63	MP3C	X	0	0	0	%100
64	MP3C	Z	-8.686	-8.686	0	%100
65	MP4C	X	0	0	0	%100
66	MP4C	Z	-7.176	-7.176	0	%100
67	MP5C	X	0	0	0	%100
68	MP5C	Z	-7.176	-7.176	0	%100
69	MP1B	X	0	0	0	%100

Member Distributed Loads (BLC 41 : Structure Wo (0 Deg)) (Continued)

	Member Label	Direction	Start Magnitude[lb/ft,...	End Magnitude[lb/ft,F...	Start Location[ft,%]	End Location[ft,%]
70	MP1B	Z	-7.176	-7.176	0	%100
71	MP2B	X	0	0	0	%100
72	MP2B	Z	-7.176	-7.176	0	%100
73	MP3B	X	0	0	0	%100
74	MP3B	Z	-8.686	-8.686	0	%100
75	MP4B	X	0	0	0	%100
76	MP4B	Z	-7.176	-7.176	0	%100
77	MP5B	X	0	0	0	%100
78	MP5B	Z	-7.176	-7.176	0	%100
79	M76	X	0	0	0	%100
80	M76	Z	-8.686	-8.686	0	%100
81	M77	X	0	0	0	%100
82	M77	Z	-2.172	-2.172	0	%100
83	M78	X	0	0	0	%100
84	M78	Z	-2.172	-2.172	0	%100
85	M95	X	0	0	0	%100
86	M95	Z	-5.606	-5.606	0	%100
87	M96	X	0	0	0	%100
88	M96	Z	-5.031	-5.031	0	%100
89	M97	X	0	0	0	%100
90	M97	Z	-11.183	-11.183	0	%100
91	M98	X	0	0	0	%100
92	M98	Z	-2.336	-2.336	0	%100
93	M99	X	0	0	0	%100
94	M99	Z	-1.952	-1.952	0	%100
95	M100	X	0	0	0	%100
96	M100	Z	-11.211	-11.211	0	%100
97	M107	X	0	0	0	%100
98	M107	Z	-2.468	-2.468	0	%100
99	M108	X	0	0	0	%100
100	M108	Z	-2.46	-2.46	0	%100
101	M109	X	0	0	0	%100
102	M109	Z	-9.855	-9.855	0	%100

Member Distributed Loads (BLC 42 : Structure Wo (30 Deg))

	Member Label	Direction	Start Magnitude[lb/ft,...	End Magnitude[lb/ft,F...	Start Location[ft,%]	End Location[ft,%]
1	M1	X	1.079	1.079	0	%100
2	M1	Z	-1.869	-1.869	0	%100
3	M2	X	1.406	1.406	0	%100
4	M2	Z	-2.435	-2.435	0	%100
5	M5	X	1.605	1.605	0	%100
6	M5	Z	-2.78	-2.78	0	%100
7	M6	X	1.605	1.605	0	%100
8	M6	Z	-2.78	-2.78	0	%100
9	M7	X	6.42	6.42	0	%100
10	M7	Z	-11.12	-11.12	0	%100
11	M6A	X	5.665	5.665	0	%100
12	M6A	Z	-9.812	-9.812	0	%100
13	M7A	X	5.665	5.665	0	%100
14	M7A	Z	-9.812	-9.812	0	%100
15	MP1A	X	3.588	3.588	0	%100

Member Distributed Loads (BLC 42 : Structure Wo (30 Deg)) (Continued)

	Member Label	Direction	Start Magnitude[lb/ft,...	End Magnitude[lb/ft,F...	Start Location[ft,%]	End Location[ft,%]
16	MP1A	Z	-6.214	-6.214	0	%100
17	M23A	X	5.665	5.665	0	%100
18	M23A	Z	-9.812	-9.812	0	%100
19	M24	X	5.665	5.665	0	%100
20	M24	Z	-9.812	-9.812	0	%100
21	M38	X	1.079	1.079	0	%100
22	M38	Z	-1.869	-1.869	0	%100
23	M39A	X	0	0	0	%100
24	M39A	Z	0	0	0	%100
25	M40	X	0	0	0	%100
26	M40	Z	0	0	0	%100
27	M54	X	4.317	4.317	0	%100
28	M54	Z	-7.477	-7.477	0	%100
29	M55	X	1.406	1.406	0	%100
30	M55	Z	-2.435	-2.435	0	%100
31	M56	X	5.623	5.623	0	%100
32	M56	Z	-9.739	-9.739	0	%100
33	M42	X	5.665	5.665	0	%100
34	M42	Z	-9.812	-9.812	0	%100
35	M43A	X	5.665	5.665	0	%100
36	M43A	Z	-9.812	-9.812	0	%100
37	M44	X	0	0	0	%100
38	M44	Z	0	0	0	%100
39	MP2A	X	3.588	3.588	0	%100
40	MP2A	Z	-6.214	-6.214	0	%100
41	MP3A	X	4.343	4.343	0	%100
42	MP3A	Z	-7.523	-7.523	0	%100
43	MP4A	X	3.588	3.588	0	%100
44	MP4A	Z	-6.214	-6.214	0	%100
45	MP5A	X	3.588	3.588	0	%100
46	MP5A	Z	-6.214	-6.214	0	%100
47	M34	X	9.106	9.106	0	%100
48	M34	Z	-15.772	-15.772	0	%100
49	M37	X	3.588	3.588	0	%100
50	M37	Z	-6.214	-6.214	0	%100
51	M38A	X	9.106	9.106	0	%100
52	M38A	Z	-15.772	-15.772	0	%100
53	M41	X	3.588	3.588	0	%100
54	M41	Z	-6.214	-6.214	0	%100
55	M42A	X	9.106	9.106	0	%100
56	M42A	Z	-15.772	-15.772	0	%100
57	M45	X	3.588	3.588	0	%100
58	M45	Z	-6.214	-6.214	0	%100
59	MP1C	X	3.588	3.588	0	%100
60	MP1C	Z	-6.214	-6.214	0	%100
61	MP2C	X	3.588	3.588	0	%100
62	MP2C	Z	-6.214	-6.214	0	%100
63	MP3C	X	4.343	4.343	0	%100
64	MP3C	Z	-7.523	-7.523	0	%100
65	MP4C	X	3.588	3.588	0	%100
66	MP4C	Z	-6.214	-6.214	0	%100
67	MP5C	X	3.588	3.588	0	%100

Member Distributed Loads (BLC 42 : Structure Wo (30 Deg)) (Continued)

	Member Label	Direction	Start Magnitude[lb/ft,...	End Magnitude[lb/ft,F...	Start Location[ft,%]	End Location[ft,%]
68	MP5C	Z	-6.214	-6.214	0	%100
69	MP1B	X	3.588	3.588	0	%100
70	MP1B	Z	-6.214	-6.214	0	%100
71	MP2B	X	3.588	3.588	0	%100
72	MP2B	Z	-6.214	-6.214	0	%100
73	MP3B	X	4.343	4.343	0	%100
74	MP3B	Z	-7.523	-7.523	0	%100
75	MP4B	X	3.588	3.588	0	%100
76	MP4B	Z	-6.214	-6.214	0	%100
77	MP5B	X	3.588	3.588	0	%100
78	MP5B	Z	-6.214	-6.214	0	%100
79	M76	X	3.257	3.257	0	%100
80	M76	Z	-5.642	-5.642	0	%100
81	M77	X	3.257	3.257	0	%100
82	M77	Z	-5.642	-5.642	0	%100
83	M78	X	0	0	0	%100
84	M78	Z	0	0	0	%100
85	M95	X	.655	.655	0	%100
86	M95	Z	-1.135	-1.135	0	%100
87	M96	X	5.025	5.025	0	%100
88	M96	Z	-8.703	-8.703	0	%100
89	M97	X	5.271	5.271	0	%100
90	M97	Z	-9.13	-9.13	0	%100
91	M98	X	.587	.587	0	%100
92	M98	Z	-1.017	-1.017	0	%100
93	M99	X	3.444	3.444	0	%100
94	M99	Z	-5.965	-5.965	0	%100
95	M100	X	3.677	3.677	0	%100
96	M100	Z	-6.369	-6.369	0	%100
97	M107	X	3.698	3.698	0	%100
98	M107	Z	-6.405	-6.405	0	%100
99	M108	X	1e-6	1e-6	0	%100
100	M108	Z	-2e-6	-2e-6	0	%100
101	M109	X	3.694	3.694	0	%100
102	M109	Z	-6.398	-6.398	0	%100

Member Distributed Loads (BLC 43 : Structure Wo (60 Deg))

	Member Label	Direction	Start Magnitude[lb/ft,...	End Magnitude[lb/ft,F...	Start Location[ft,%]	End Location[ft,%]
1	M1	X	5.607	5.607	0	%100
2	M1	Z	-3.237	-3.237	0	%100
3	M2	X	7.305	7.305	0	%100
4	M2	Z	-4.217	-4.217	0	%100
5	M5	X	8.34	8.34	0	%100
6	M5	Z	-4.815	-4.815	0	%100
7	M6	X	0	0	0	%100
8	M6	Z	0	0	0	%100
9	M7	X	8.34	8.34	0	%100
10	M7	Z	-4.815	-4.815	0	%100
11	M6A	X	3.271	3.271	0	%100
12	M6A	Z	-1.888	-1.888	0	%100
13	M7A	X	3.271	3.271	0	%100

Member Distributed Loads (BLC 43 : Structure Wo (60 Deg)) (Continued)

	Member Label	Direction	Start Magnitude[lb/ft,...	End Magnitude[lb/ft,F...	Start Location[ft,%]	End Location[ft,%]
14	M7A	Z	-1.888	-1.888	0	%100
15	MP1A	X	6.214	6.214	0	%100
16	MP1A	Z	-3.588	-3.588	0	%100
17	M23A	X	13.083	13.083	0	%100
18	M23A	Z	-7.553	-7.553	0	%100
19	M24	X	13.083	13.083	0	%100
20	M24	Z	-7.553	-7.553	0	%100
21	M38	X	0	0	0	%100
22	M38	Z	0	0	0	%100
23	M39A	X	3.271	3.271	0	%100
24	M39A	Z	-1.888	-1.888	0	%100
25	M40	X	3.271	3.271	0	%100
26	M40	Z	-1.888	-1.888	0	%100
27	M54	X	5.607	5.607	0	%100
28	M54	Z	-3.237	-3.237	0	%100
29	M55	X	0	0	0	%100
30	M55	Z	0	0	0	%100
31	M56	X	7.305	7.305	0	%100
32	M56	Z	-4.217	-4.217	0	%100
33	M42	X	3.271	3.271	0	%100
34	M42	Z	-1.888	-1.888	0	%100
35	M43A	X	13.083	13.083	0	%100
36	M43A	Z	-7.553	-7.553	0	%100
37	M44	X	3.271	3.271	0	%100
38	M44	Z	-1.888	-1.888	0	%100
39	MP2A	X	6.214	6.214	0	%100
40	MP2A	Z	-3.588	-3.588	0	%100
41	MP3A	X	7.523	7.523	0	%100
42	MP3A	Z	-4.343	-4.343	0	%100
43	MP4A	X	6.214	6.214	0	%100
44	MP4A	Z	-3.588	-3.588	0	%100
45	MP5A	X	6.214	6.214	0	%100
46	MP5A	Z	-3.588	-3.588	0	%100
47	M34	X	15.772	15.772	0	%100
48	M34	Z	-9.106	-9.106	0	%100
49	M37	X	6.214	6.214	0	%100
50	M37	Z	-3.588	-3.588	0	%100
51	M38A	X	15.772	15.772	0	%100
52	M38A	Z	-9.106	-9.106	0	%100
53	M41	X	6.214	6.214	0	%100
54	M41	Z	-3.588	-3.588	0	%100
55	M42A	X	15.772	15.772	0	%100
56	M42A	Z	-9.106	-9.106	0	%100
57	M45	X	6.214	6.214	0	%100
58	M45	Z	-3.588	-3.588	0	%100
59	MP1C	X	6.214	6.214	0	%100
60	MP1C	Z	-3.588	-3.588	0	%100
61	MP2C	X	6.214	6.214	0	%100
62	MP2C	Z	-3.588	-3.588	0	%100
63	MP3C	X	7.523	7.523	0	%100
64	MP3C	Z	-4.343	-4.343	0	%100
65	MP4C	X	6.214	6.214	0	%100

Member Distributed Loads (BLC 43 : Structure Wo (60 Deg)) (Continued)

	Member Label	Direction	Start Magnitude[lb/ft,...	End Magnitude[lb/ft,F...	Start Location[ft,%]	End Location[ft,%]
66	MP4C	Z	-3.588	-3.588	0	%100
67	MP5C	X	6.214	6.214	0	%100
68	MP5C	Z	-3.588	-3.588	0	%100
69	MP1B	X	6.214	6.214	0	%100
70	MP1B	Z	-3.588	-3.588	0	%100
71	MP2B	X	6.214	6.214	0	%100
72	MP2B	Z	-3.588	-3.588	0	%100
73	MP3B	X	7.523	7.523	0	%100
74	MP3B	Z	-4.343	-4.343	0	%100
75	MP4B	X	6.214	6.214	0	%100
76	MP4B	Z	-3.588	-3.588	0	%100
77	MP5B	X	6.214	6.214	0	%100
78	MP5B	Z	-3.588	-3.588	0	%100
79	M76	X	1.881	1.881	0	%100
80	M76	Z	-1.086	-1.086	0	%100
81	M77	X	7.523	7.523	0	%100
82	M77	Z	-4.343	-4.343	0	%100
83	M78	X	1.881	1.881	0	%100
84	M78	Z	-1.086	-1.086	0	%100
85	M95	X	1.69	1.69	0	%100
86	M95	Z	-.976	-.976	0	%100
87	M96	X	9.709	9.709	0	%100
88	M96	Z	-5.606	-5.606	0	%100
89	M97	X	4.855	4.855	0	%100
90	M97	Z	-2.803	-2.803	0	%100
91	M98	X	4.357	4.357	0	%100
92	M98	Z	-2.515	-2.515	0	%100
93	M99	X	9.684	9.684	0	%100
94	M99	Z	-5.591	-5.591	0	%100
95	M100	X	2.023	2.023	0	%100
96	M100	Z	-1.168	-1.168	0	%100
97	M107	X	8.535	8.535	0	%100
98	M107	Z	-4.928	-4.928	0	%100
99	M108	X	2.137	2.137	0	%100
100	M108	Z	-1.234	-1.234	0	%100
101	M109	X	2.13	2.13	0	%100
102	M109	Z	-1.23	-1.23	0	%100

Member Distributed Loads (BLC 44 : Structure Wo (90 Deg))

	Member Label	Direction	Start Magnitude[lb/ft,...	End Magnitude[lb/ft,F...	Start Location[ft,%]	End Location[ft,%]
1	M1	X	8.633	8.633	0	%100
2	M1	Z	0	0	0	%100
3	M2	X	11.246	11.246	0	%100
4	M2	Z	0	0	0	%100
5	M5	X	12.841	12.841	0	%100
6	M5	Z	0	0	0	%100
7	M6	X	3.21	3.21	0	%100
8	M6	Z	0	0	0	%100
9	M7	X	3.21	3.21	0	%100
10	M7	Z	0	0	0	%100
11	M6A	X	0	0	0	%100

Member Distributed Loads (BLC 44 : Structure Wo (90 Deg)) (Continued)

	Member Label	Direction	Start Magnitude[lb/ft,...	End Magnitude[lb/ft,F...	Start Location[ft,%]	End Location[ft,%]
12	M6A	Z	0	0	0	%100
13	M7A	X	0	0	0	%100
14	M7A	Z	0	0	0	%100
15	MP1A	X	7.176	7.176	0	%100
16	MP1A	Z	0	0	0	%100
17	M23A	X	11.33	11.33	0	%100
18	M23A	Z	0	0	0	%100
19	M24	X	11.33	11.33	0	%100
20	M24	Z	0	0	0	%100
21	M38	X	2.158	2.158	0	%100
22	M38	Z	0	0	0	%100
23	M39A	X	11.33	11.33	0	%100
24	M39A	Z	0	0	0	%100
25	M40	X	11.33	11.33	0	%100
26	M40	Z	0	0	0	%100
27	M54	X	2.158	2.158	0	%100
28	M54	Z	0	0	0	%100
29	M55	X	2.812	2.812	0	%100
30	M55	Z	0	0	0	%100
31	M56	X	2.812	2.812	0	%100
32	M56	Z	0	0	0	%100
33	M42	X	0	0	0	%100
34	M42	Z	0	0	0	%100
35	M43A	X	11.33	11.33	0	%100
36	M43A	Z	0	0	0	%100
37	M44	X	11.33	11.33	0	%100
38	M44	Z	0	0	0	%100
39	MP2A	X	7.176	7.176	0	%100
40	MP2A	Z	0	0	0	%100
41	MP3A	X	8.686	8.686	0	%100
42	MP3A	Z	0	0	0	%100
43	MP4A	X	7.176	7.176	0	%100
44	MP4A	Z	0	0	0	%100
45	MP5A	X	7.176	7.176	0	%100
46	MP5A	Z	0	0	0	%100
47	M34	X	18.212	18.212	0	%100
48	M34	Z	0	0	0	%100
49	M37	X	7.176	7.176	0	%100
50	M37	Z	0	0	0	%100
51	M38A	X	18.212	18.212	0	%100
52	M38A	Z	0	0	0	%100
53	M41	X	7.176	7.176	0	%100
54	M41	Z	0	0	0	%100
55	M42A	X	18.212	18.212	0	%100
56	M42A	Z	0	0	0	%100
57	M45	X	7.176	7.176	0	%100
58	M45	Z	0	0	0	%100
59	MP1C	X	7.176	7.176	0	%100
60	MP1C	Z	0	0	0	%100
61	MP2C	X	7.176	7.176	0	%100
62	MP2C	Z	0	0	0	%100
63	MP3C	X	8.686	8.686	0	%100

Member Distributed Loads (BLC 44 : Structure Wo (90 Deg)) (Continued)

	Member Label	Direction	Start Magnitude[lb/ft,...	End Magnitude[lb/ft,F...	Start Location[ft,%]	End Location[ft,%]
64	MP3C	Z	0	0	0	%100
65	MP4C	X	7.176	7.176	0	%100
66	MP4C	Z	0	0	0	%100
67	MP5C	X	7.176	7.176	0	%100
68	MP5C	Z	0	0	0	%100
69	MP1B	X	7.176	7.176	0	%100
70	MP1B	Z	0	0	0	%100
71	MP2B	X	7.176	7.176	0	%100
72	MP2B	Z	0	0	0	%100
73	MP3B	X	8.686	8.686	0	%100
74	MP3B	Z	0	0	0	%100
75	MP4B	X	7.176	7.176	0	%100
76	MP4B	Z	0	0	0	%100
77	MP5B	X	7.176	7.176	0	%100
78	MP5B	Z	0	0	0	%100
79	M76	X	0	0	0	%100
80	M76	Z	0	0	0	%100
81	M77	X	6.515	6.515	0	%100
82	M77	Z	0	0	0	%100
83	M78	X	6.515	6.515	0	%100
84	M78	Z	0	0	0	%100
85	M95	X	6.888	6.888	0	%100
86	M95	Z	0	0	0	%100
87	M96	X	7.355	7.355	0	%100
88	M96	Z	0	0	0	%100
89	M97	X	1.311	1.311	0	%100
90	M97	Z	0	0	0	%100
91	M98	X	10.049	10.049	0	%100
92	M98	Z	0	0	0	%100
93	M99	X	10.542	10.542	0	%100
94	M99	Z	0	0	0	%100
95	M100	X	1.174	1.174	0	%100
96	M100	Z	0	0	0	%100
97	M107	X	7.387	7.387	0	%100
98	M107	Z	0	0	0	%100
99	M108	X	7.396	7.396	0	%100
100	M108	Z	0	0	0	%100
101	M109	X	2e-6	2e-6	0	%100
102	M109	Z	0	0	0	%100

Member Distributed Loads (BLC 45 : Structure Wo (120 Deg))

	Member Label	Direction	Start Magnitude[lb/ft,...	End Magnitude[lb/ft,F...	Start Location[ft,%]	End Location[ft,%]
1	M1	X	5.607	5.607	0	%100
2	M1	Z	3.237	3.237	0	%100
3	M2	X	7.305	7.305	0	%100
4	M2	Z	4.217	4.217	0	%100
5	M5	X	8.34	8.34	0	%100
6	M5	Z	4.815	4.815	0	%100
7	M6	X	8.34	8.34	0	%100
8	M6	Z	4.815	4.815	0	%100
9	M7	X	0	0	0	%100

Member Distributed Loads (BLC 45 : Structure Wo (120 Deg)) (Continued)

	Member Label	Direction	Start Magnitude[lb/ft,...	End Magnitude[lb/ft,F...	Start Location[ft,%]	End Location[ft,%]
10	M7	Z	0	0	0	%100
11	M6A	X	3.271	3.271	0	%100
12	M6A	Z	1.888	1.888	0	%100
13	M7A	X	3.271	3.271	0	%100
14	M7A	Z	1.888	1.888	0	%100
15	MP1A	X	6.214	6.214	0	%100
16	MP1A	Z	3.588	3.588	0	%100
17	M23A	X	3.271	3.271	0	%100
18	M23A	Z	1.888	1.888	0	%100
19	M24	X	3.271	3.271	0	%100
20	M24	Z	1.888	1.888	0	%100
21	M38	X	5.607	5.607	0	%100
22	M38	Z	3.237	3.237	0	%100
23	M39A	X	13.083	13.083	0	%100
24	M39A	Z	7.553	7.553	0	%100
25	M40	X	13.083	13.083	0	%100
26	M40	Z	7.553	7.553	0	%100
27	M54	X	0	0	0	%100
28	M54	Z	0	0	0	%100
29	M55	X	7.305	7.305	0	%100
30	M55	Z	4.217	4.217	0	%100
31	M56	X	0	0	0	%100
32	M56	Z	0	0	0	%100
33	M42	X	3.271	3.271	0	%100
34	M42	Z	1.888	1.888	0	%100
35	M43A	X	3.271	3.271	0	%100
36	M43A	Z	1.888	1.888	0	%100
37	M44	X	13.083	13.083	0	%100
38	M44	Z	7.553	7.553	0	%100
39	MP2A	X	6.214	6.214	0	%100
40	MP2A	Z	3.588	3.588	0	%100
41	MP3A	X	7.523	7.523	0	%100
42	MP3A	Z	4.343	4.343	0	%100
43	MP4A	X	6.214	6.214	0	%100
44	MP4A	Z	3.588	3.588	0	%100
45	MP5A	X	6.214	6.214	0	%100
46	MP5A	Z	3.588	3.588	0	%100
47	M34	X	15.772	15.772	0	%100
48	M34	Z	9.106	9.106	0	%100
49	M37	X	6.214	6.214	0	%100
50	M37	Z	3.588	3.588	0	%100
51	M38A	X	15.772	15.772	0	%100
52	M38A	Z	9.106	9.106	0	%100
53	M41	X	6.214	6.214	0	%100
54	M41	Z	3.588	3.588	0	%100
55	M42A	X	15.772	15.772	0	%100
56	M42A	Z	9.106	9.106	0	%100
57	M45	X	6.214	6.214	0	%100
58	M45	Z	3.588	3.588	0	%100
59	MP1C	X	6.214	6.214	0	%100
60	MP1C	Z	3.588	3.588	0	%100
61	MP2C	X	6.214	6.214	0	%100

Member Distributed Loads (BLC 45 : Structure Wo (120 Deg)) (Continued)

	Member Label	Direction	Start Magnitude[lb/ft,...	End Magnitude[lb/ft,F...	Start Location[ft,%]	End Location[ft,%]
62	MP2C	Z	3.588	3.588	0	%100
63	MP3C	X	7.523	7.523	0	%100
64	MP3C	Z	4.343	4.343	0	%100
65	MP4C	X	6.214	6.214	0	%100
66	MP4C	Z	3.588	3.588	0	%100
67	MP5C	X	6.214	6.214	0	%100
68	MP5C	Z	3.588	3.588	0	%100
69	MP1B	X	6.214	6.214	0	%100
70	MP1B	Z	3.588	3.588	0	%100
71	MP2B	X	6.214	6.214	0	%100
72	MP2B	Z	3.588	3.588	0	%100
73	MP3B	X	7.523	7.523	0	%100
74	MP3B	Z	4.343	4.343	0	%100
75	MP4B	X	6.214	6.214	0	%100
76	MP4B	Z	3.588	3.588	0	%100
77	MP5B	X	6.214	6.214	0	%100
78	MP5B	Z	3.588	3.588	0	%100
79	M76	X	1.881	1.881	0	%100
80	M76	Z	1.086	1.086	0	%100
81	M77	X	1.881	1.881	0	%100
82	M77	Z	1.086	1.086	0	%100
83	M78	X	7.523	7.523	0	%100
84	M78	Z	4.343	4.343	0	%100
85	M95	X	9.684	9.684	0	%100
86	M95	Z	5.591	5.591	0	%100
87	M96	X	2.023	2.023	0	%100
88	M96	Z	1.168	1.168	0	%100
89	M97	X	1.69	1.69	0	%100
90	M97	Z	.976	.976	0	%100
91	M98	X	9.709	9.709	0	%100
92	M98	Z	5.606	5.606	0	%100
93	M99	X	4.855	4.855	0	%100
94	M99	Z	2.803	2.803	0	%100
95	M100	X	4.357	4.357	0	%100
96	M100	Z	2.515	2.515	0	%100
97	M107	X	2.13	2.13	0	%100
98	M107	Z	1.23	1.23	0	%100
99	M108	X	8.535	8.535	0	%100
100	M108	Z	4.928	4.928	0	%100
101	M109	X	2.137	2.137	0	%100
102	M109	Z	1.234	1.234	0	%100

Member Distributed Loads (BLC 46 : Structure Wo (150 Deg))

	Member Label	Direction	Start Magnitude[lb/ft,...	End Magnitude[lb/ft,F...	Start Location[ft,%]	End Location[ft,%]
1	M1	X	1.079	1.079	0	%100
2	M1	Z	1.869	1.869	0	%100
3	M2	X	1.406	1.406	0	%100
4	M2	Z	2.435	2.435	0	%100
5	M5	X	1.605	1.605	0	%100
6	M5	Z	2.78	2.78	0	%100
7	M6	X	6.42	6.42	0	%100

Member Distributed Loads (BLC 46 : Structure Wo (150 Deg)) (Continued)

	Member Label	Direction	Start Magnitude[lb/ft,...	End Magnitude[lb/ft,F...	Start Location[ft,%]	End Location[ft,%]
8	M6	Z	11.12	11.12	0	%100
9	M7	X	1.605	1.605	0	%100
10	M7	Z	2.78	2.78	0	%100
11	M6A	X	5.665	5.665	0	%100
12	M6A	Z	9.812	9.812	0	%100
13	M7A	X	5.665	5.665	0	%100
14	M7A	Z	9.812	9.812	0	%100
15	MP1A	X	3.588	3.588	0	%100
16	MP1A	Z	6.214	6.214	0	%100
17	M23A	X	0	0	0	%100
18	M23A	Z	0	0	0	%100
19	M24	X	0	0	0	%100
20	M24	Z	0	0	0	%100
21	M38	X	4.317	4.317	0	%100
22	M38	Z	7.477	7.477	0	%100
23	M39A	X	5.665	5.665	0	%100
24	M39A	Z	9.812	9.812	0	%100
25	M40	X	5.665	5.665	0	%100
26	M40	Z	9.812	9.812	0	%100
27	M54	X	1.079	1.079	0	%100
28	M54	Z	1.869	1.869	0	%100
29	M55	X	5.623	5.623	0	%100
30	M55	Z	9.739	9.739	0	%100
31	M56	X	1.406	1.406	0	%100
32	M56	Z	2.435	2.435	0	%100
33	M42	X	5.665	5.665	0	%100
34	M42	Z	9.812	9.812	0	%100
35	M43A	X	0	0	0	%100
36	M43A	Z	0	0	0	%100
37	M44	X	5.665	5.665	0	%100
38	M44	Z	9.812	9.812	0	%100
39	MP2A	X	3.588	3.588	0	%100
40	MP2A	Z	6.214	6.214	0	%100
41	MP3A	X	4.343	4.343	0	%100
42	MP3A	Z	7.523	7.523	0	%100
43	MP4A	X	3.588	3.588	0	%100
44	MP4A	Z	6.214	6.214	0	%100
45	MP5A	X	3.588	3.588	0	%100
46	MP5A	Z	6.214	6.214	0	%100
47	M34	X	9.106	9.106	0	%100
48	M34	Z	15.772	15.772	0	%100
49	M37	X	3.588	3.588	0	%100
50	M37	Z	6.214	6.214	0	%100
51	M38A	X	9.106	9.106	0	%100
52	M38A	Z	15.772	15.772	0	%100
53	M41	X	3.588	3.588	0	%100
54	M41	Z	6.214	6.214	0	%100
55	M42A	X	9.106	9.106	0	%100
56	M42A	Z	15.772	15.772	0	%100
57	M45	X	3.588	3.588	0	%100
58	M45	Z	6.214	6.214	0	%100
59	MP1C	X	3.588	3.588	0	%100

Member Distributed Loads (BLC 46 : Structure Wo (150 Deg)) (Continued)

	Member Label	Direction	Start Magnitude[lb/ft,...	End Magnitude[lb/ft,F...	Start Location[ft,%]	End Location[ft,%]
60	MP1C	Z	6.214	6.214	0	%100
61	MP2C	X	3.588	3.588	0	%100
62	MP2C	Z	6.214	6.214	0	%100
63	MP3C	X	4.343	4.343	0	%100
64	MP3C	Z	7.523	7.523	0	%100
65	MP4C	X	3.588	3.588	0	%100
66	MP4C	Z	6.214	6.214	0	%100
67	MP5C	X	3.588	3.588	0	%100
68	MP5C	Z	6.214	6.214	0	%100
69	MP1B	X	3.588	3.588	0	%100
70	MP1B	Z	6.214	6.214	0	%100
71	MP2B	X	3.588	3.588	0	%100
72	MP2B	Z	6.214	6.214	0	%100
73	MP3B	X	4.343	4.343	0	%100
74	MP3B	Z	7.523	7.523	0	%100
75	MP4B	X	3.588	3.588	0	%100
76	MP4B	Z	6.214	6.214	0	%100
77	MP5B	X	3.588	3.588	0	%100
78	MP5B	Z	6.214	6.214	0	%100
79	M76	X	3.257	3.257	0	%100
80	M76	Z	5.642	5.642	0	%100
81	M77	X	0	0	0	%100
82	M77	Z	0	0	0	%100
83	M78	X	3.257	3.257	0	%100
84	M78	Z	5.642	5.642	0	%100
85	M95	X	5.271	5.271	0	%100
86	M95	Z	9.13	9.13	0	%100
87	M96	X	.587	.587	0	%100
88	M96	Z	1.017	1.017	0	%100
89	M97	X	3.444	3.444	0	%100
90	M97	Z	5.965	5.965	0	%100
91	M98	X	3.677	3.677	0	%100
92	M98	Z	6.369	6.369	0	%100
93	M99	X	.655	.655	0	%100
94	M99	Z	1.135	1.135	0	%100
95	M100	X	5.025	5.025	0	%100
96	M100	Z	8.703	8.703	0	%100
97	M107	X	1e-6	1e-6	0	%100
98	M107	Z	2e-6	2e-6	0	%100
99	M108	X	3.694	3.694	0	%100
100	M108	Z	6.398	6.398	0	%100
101	M109	X	3.698	3.698	0	%100
102	M109	Z	6.405	6.405	0	%100

Member Distributed Loads (BLC 47 : Structure Wo (180 Deg))

	Member Label	Direction	Start Magnitude[lb/ft,...	End Magnitude[lb/ft,F...	Start Location[ft,%]	End Location[ft,%]
1	M1	X	0	0	0	%100
2	M1	Z	0	0	0	%100
3	M2	X	0	0	0	%100
4	M2	Z	0	0	0	%100
5	M5	X	0	0	0	%100

Member Distributed Loads (BLC 47 : Structure Wo (180 Deg)) (Continued)

	Member Label	Direction	Start Magnitude[lb/ft,...	End Magnitude[lb/ft,F...	Start Location[ft,%]	End Location[ft,%]
6	M5	Z	0	0	0	%100
7	M6	X	0	0	0	%100
8	M6	Z	9.63	9.63	0	%100
9	M7	X	0	0	0	%100
10	M7	Z	9.63	9.63	0	%100
11	M6A	X	0	0	0	%100
12	M6A	Z	15.107	15.107	0	%100
13	M7A	X	0	0	0	%100
14	M7A	Z	15.107	15.107	0	%100
15	MP1A	X	0	0	0	%100
16	MP1A	Z	7.176	7.176	0	%100
17	M23A	X	0	0	0	%100
18	M23A	Z	3.777	3.777	0	%100
19	M24	X	0	0	0	%100
20	M24	Z	3.777	3.777	0	%100
21	M38	X	0	0	0	%100
22	M38	Z	6.475	6.475	0	%100
23	M39A	X	0	0	0	%100
24	M39A	Z	3.777	3.777	0	%100
25	M40	X	0	0	0	%100
26	M40	Z	3.777	3.777	0	%100
27	M54	X	0	0	0	%100
28	M54	Z	6.475	6.475	0	%100
29	M55	X	0	0	0	%100
30	M55	Z	8.435	8.435	0	%100
31	M56	X	0	0	0	%100
32	M56	Z	8.435	8.435	0	%100
33	M42	X	0	0	0	%100
34	M42	Z	15.107	15.107	0	%100
35	M43A	X	0	0	0	%100
36	M43A	Z	3.777	3.777	0	%100
37	M44	X	0	0	0	%100
38	M44	Z	3.777	3.777	0	%100
39	MP2A	X	0	0	0	%100
40	MP2A	Z	7.176	7.176	0	%100
41	MP3A	X	0	0	0	%100
42	MP3A	Z	8.686	8.686	0	%100
43	MP4A	X	0	0	0	%100
44	MP4A	Z	7.176	7.176	0	%100
45	MP5A	X	0	0	0	%100
46	MP5A	Z	7.176	7.176	0	%100
47	M34	X	0	0	0	%100
48	M34	Z	18.212	18.212	0	%100
49	M37	X	0	0	0	%100
50	M37	Z	7.176	7.176	0	%100
51	M38A	X	0	0	0	%100
52	M38A	Z	18.212	18.212	0	%100
53	M41	X	0	0	0	%100
54	M41	Z	7.176	7.176	0	%100
55	M42A	X	0	0	0	%100
56	M42A	Z	18.212	18.212	0	%100
57	M45	X	0	0	0	%100

Member Distributed Loads (BLC 47 : Structure Wo (180 Deg)) (Continued)

	Member Label	Direction	Start Magnitude[lb/ft,...	End Magnitude[lb/ft,F...	Start Location[ft,%]	End Location[ft,%]
58	M45	Z	7.176	7.176	0	%100
59	MP1C	X	0	0	0	%100
60	MP1C	Z	7.176	7.176	0	%100
61	MP2C	X	0	0	0	%100
62	MP2C	Z	7.176	7.176	0	%100
63	MP3C	X	0	0	0	%100
64	MP3C	Z	8.686	8.686	0	%100
65	MP4C	X	0	0	0	%100
66	MP4C	Z	7.176	7.176	0	%100
67	MP5C	X	0	0	0	%100
68	MP5C	Z	7.176	7.176	0	%100
69	MP1B	X	0	0	0	%100
70	MP1B	Z	7.176	7.176	0	%100
71	MP2B	X	0	0	0	%100
72	MP2B	Z	7.176	7.176	0	%100
73	MP3B	X	0	0	0	%100
74	MP3B	Z	8.686	8.686	0	%100
75	MP4B	X	0	0	0	%100
76	MP4B	Z	7.176	7.176	0	%100
77	MP5B	X	0	0	0	%100
78	MP5B	Z	7.176	7.176	0	%100
79	M76	X	0	0	0	%100
80	M76	Z	8.686	8.686	0	%100
81	M77	X	0	0	0	%100
82	M77	Z	2.172	2.172	0	%100
83	M78	X	0	0	0	%100
84	M78	Z	2.172	2.172	0	%100
85	M95	X	0	0	0	%100
86	M95	Z	5.606	5.606	0	%100
87	M96	X	0	0	0	%100
88	M96	Z	5.031	5.031	0	%100
89	M97	X	0	0	0	%100
90	M97	Z	11.183	11.183	0	%100
91	M98	X	0	0	0	%100
92	M98	Z	2.336	2.336	0	%100
93	M99	X	0	0	0	%100
94	M99	Z	1.952	1.952	0	%100
95	M100	X	0	0	0	%100
96	M100	Z	11.211	11.211	0	%100
97	M107	X	0	0	0	%100
98	M107	Z	2.468	2.468	0	%100
99	M108	X	0	0	0	%100
100	M108	Z	2.46	2.46	0	%100
101	M109	X	0	0	0	%100
102	M109	Z	9.855	9.855	0	%100

Member Distributed Loads (BLC 48 : Structure Wo (210 Deg))

	Member Label	Direction	Start Magnitude[lb/ft,...	End Magnitude[lb/ft,F...	Start Location[ft,%]	End Location[ft,%]
1	M1	X	-1.079	-1.079	0	%100
2	M1	Z	1.869	1.869	0	%100
3	M2	X	-1.406	-1.406	0	%100

Member Distributed Loads (BLC 48 : Structure Wo (210 Deg)) (Continued)

	Member Label	Direction	Start Magnitude[lb/ft,...	End Magnitude[lb/ft,F...	Start Location[ft,%]	End Location[ft,%]
4	M2	Z	2.435	2.435	0	%100
5	M5	X	-1.605	-1.605	0	%100
6	M5	Z	2.78	2.78	0	%100
7	M6	X	-1.605	-1.605	0	%100
8	M6	Z	2.78	2.78	0	%100
9	M7	X	-6.42	-6.42	0	%100
10	M7	Z	11.12	11.12	0	%100
11	M6A	X	-5.665	-5.665	0	%100
12	M6A	Z	9.812	9.812	0	%100
13	M7A	X	-5.665	-5.665	0	%100
14	M7A	Z	9.812	9.812	0	%100
15	MP1A	X	-3.588	-3.588	0	%100
16	MP1A	Z	6.214	6.214	0	%100
17	M23A	X	-5.665	-5.665	0	%100
18	M23A	Z	9.812	9.812	0	%100
19	M24	X	-5.665	-5.665	0	%100
20	M24	Z	9.812	9.812	0	%100
21	M38	X	-1.079	-1.079	0	%100
22	M38	Z	1.869	1.869	0	%100
23	M39A	X	0	0	0	%100
24	M39A	Z	0	0	0	%100
25	M40	X	0	0	0	%100
26	M40	Z	0	0	0	%100
27	M54	X	-4.317	-4.317	0	%100
28	M54	Z	7.477	7.477	0	%100
29	M55	X	-1.406	-1.406	0	%100
30	M55	Z	2.435	2.435	0	%100
31	M56	X	-5.623	-5.623	0	%100
32	M56	Z	9.739	9.739	0	%100
33	M42	X	-5.665	-5.665	0	%100
34	M42	Z	9.812	9.812	0	%100
35	M43A	X	-5.665	-5.665	0	%100
36	M43A	Z	9.812	9.812	0	%100
37	M44	X	0	0	0	%100
38	M44	Z	0	0	0	%100
39	MP2A	X	-3.588	-3.588	0	%100
40	MP2A	Z	6.214	6.214	0	%100
41	MP3A	X	-4.343	-4.343	0	%100
42	MP3A	Z	7.523	7.523	0	%100
43	MP4A	X	-3.588	-3.588	0	%100
44	MP4A	Z	6.214	6.214	0	%100
45	MP5A	X	-3.588	-3.588	0	%100
46	MP5A	Z	6.214	6.214	0	%100
47	M34	X	-9.106	-9.106	0	%100
48	M34	Z	15.772	15.772	0	%100
49	M37	X	-3.588	-3.588	0	%100
50	M37	Z	6.214	6.214	0	%100
51	M38A	X	-9.106	-9.106	0	%100
52	M38A	Z	15.772	15.772	0	%100
53	M41	X	-3.588	-3.588	0	%100
54	M41	Z	6.214	6.214	0	%100
55	M42A	X	-9.106	-9.106	0	%100

Member Distributed Loads (BLC 48 : Structure Wo (210 Deg)) (Continued)

	Member Label	Direction	Start Magnitude[lb/ft,...	End Magnitude[lb/ft,F...	Start Location[ft,%]	End Location[ft,%]
56	M42A	Z	15.772	15.772	0	%100
57	M45	X	-3.588	-3.588	0	%100
58	M45	Z	6.214	6.214	0	%100
59	MP1C	X	-3.588	-3.588	0	%100
60	MP1C	Z	6.214	6.214	0	%100
61	MP2C	X	-3.588	-3.588	0	%100
62	MP2C	Z	6.214	6.214	0	%100
63	MP3C	X	-4.343	-4.343	0	%100
64	MP3C	Z	7.523	7.523	0	%100
65	MP4C	X	-3.588	-3.588	0	%100
66	MP4C	Z	6.214	6.214	0	%100
67	MP5C	X	-3.588	-3.588	0	%100
68	MP5C	Z	6.214	6.214	0	%100
69	MP1B	X	-3.588	-3.588	0	%100
70	MP1B	Z	6.214	6.214	0	%100
71	MP2B	X	-3.588	-3.588	0	%100
72	MP2B	Z	6.214	6.214	0	%100
73	MP3B	X	-4.343	-4.343	0	%100
74	MP3B	Z	7.523	7.523	0	%100
75	MP4B	X	-3.588	-3.588	0	%100
76	MP4B	Z	6.214	6.214	0	%100
77	MP5B	X	-3.588	-3.588	0	%100
78	MP5B	Z	6.214	6.214	0	%100
79	M76	X	-3.257	-3.257	0	%100
80	M76	Z	5.642	5.642	0	%100
81	M77	X	-3.257	-3.257	0	%100
82	M77	Z	5.642	5.642	0	%100
83	M78	X	0	0	0	%100
84	M78	Z	0	0	0	%100
85	M95	X	-.655	-.655	0	%100
86	M95	Z	1.135	1.135	0	%100
87	M96	X	-5.025	-5.025	0	%100
88	M96	Z	8.703	8.703	0	%100
89	M97	X	-5.271	-5.271	0	%100
90	M97	Z	9.13	9.13	0	%100
91	M98	X	-.587	-.587	0	%100
92	M98	Z	1.017	1.017	0	%100
93	M99	X	-3.444	-3.444	0	%100
94	M99	Z	5.965	5.965	0	%100
95	M100	X	-3.677	-3.677	0	%100
96	M100	Z	6.369	6.369	0	%100
97	M107	X	-3.698	-3.698	0	%100
98	M107	Z	6.405	6.405	0	%100
99	M108	X	-1e-6	-1e-6	0	%100
100	M108	Z	2e-6	2e-6	0	%100
101	M109	X	-3.694	-3.694	0	%100
102	M109	Z	6.398	6.398	0	%100

Member Distributed Loads (BLC 49 : Structure Wo (240 Deg))

	Member Label	Direction	Start Magnitude[lb/ft,...	End Magnitude[lb/ft,F...	Start Location[ft,%]	End Location[ft,%]
1	M1	X	-5.607	-5.607	0	%100

Member Distributed Loads (BLC 49 : Structure Wo (240 Deg)) (Continued)

	Member Label	Direction	Start Magnitude[lb/ft,...	End Magnitude[lb/ft,F...	Start Location[ft,%]	End Location[ft,%]
2	M1	Z	3.237	3.237	0	%100
3	M2	X	-7.305	-7.305	0	%100
4	M2	Z	4.217	4.217	0	%100
5	M5	X	-8.34	-8.34	0	%100
6	M5	Z	4.815	4.815	0	%100
7	M6	X	0	0	0	%100
8	M6	Z	0	0	0	%100
9	M7	X	-8.34	-8.34	0	%100
10	M7	Z	4.815	4.815	0	%100
11	M6A	X	-3.271	-3.271	0	%100
12	M6A	Z	1.888	1.888	0	%100
13	M7A	X	-3.271	-3.271	0	%100
14	M7A	Z	1.888	1.888	0	%100
15	MP1A	X	-6.214	-6.214	0	%100
16	MP1A	Z	3.588	3.588	0	%100
17	M23A	X	-13.083	-13.083	0	%100
18	M23A	Z	7.553	7.553	0	%100
19	M24	X	-13.083	-13.083	0	%100
20	M24	Z	7.553	7.553	0	%100
21	M38	X	0	0	0	%100
22	M38	Z	0	0	0	%100
23	M39A	X	-3.271	-3.271	0	%100
24	M39A	Z	1.888	1.888	0	%100
25	M40	X	-3.271	-3.271	0	%100
26	M40	Z	1.888	1.888	0	%100
27	M54	X	-5.607	-5.607	0	%100
28	M54	Z	3.237	3.237	0	%100
29	M55	X	0	0	0	%100
30	M55	Z	0	0	0	%100
31	M56	X	-7.305	-7.305	0	%100
32	M56	Z	4.217	4.217	0	%100
33	M42	X	-3.271	-3.271	0	%100
34	M42	Z	1.888	1.888	0	%100
35	M43A	X	-13.083	-13.083	0	%100
36	M43A	Z	7.553	7.553	0	%100
37	M44	X	-3.271	-3.271	0	%100
38	M44	Z	1.888	1.888	0	%100
39	MP2A	X	-6.214	-6.214	0	%100
40	MP2A	Z	3.588	3.588	0	%100
41	MP3A	X	-7.523	-7.523	0	%100
42	MP3A	Z	4.343	4.343	0	%100
43	MP4A	X	-6.214	-6.214	0	%100
44	MP4A	Z	3.588	3.588	0	%100
45	MP5A	X	-6.214	-6.214	0	%100
46	MP5A	Z	3.588	3.588	0	%100
47	M34	X	-15.772	-15.772	0	%100
48	M34	Z	9.106	9.106	0	%100
49	M37	X	-6.214	-6.214	0	%100
50	M37	Z	3.588	3.588	0	%100
51	M38A	X	-15.772	-15.772	0	%100
52	M38A	Z	9.106	9.106	0	%100
53	M41	X	-6.214	-6.214	0	%100

Member Distributed Loads (BLC 49 : Structure Wo (240 Deg)) (Continued)

	Member Label	Direction	Start Magnitude[lb/ft,...	End Magnitude[lb/ft,F...	Start Location[ft,%]	End Location[ft,%]
54	M41	Z	3.588	3.588	0	%100
55	M42A	X	-15.772	-15.772	0	%100
56	M42A	Z	9.106	9.106	0	%100
57	M45	X	-6.214	-6.214	0	%100
58	M45	Z	3.588	3.588	0	%100
59	MP1C	X	-6.214	-6.214	0	%100
60	MP1C	Z	3.588	3.588	0	%100
61	MP2C	X	-6.214	-6.214	0	%100
62	MP2C	Z	3.588	3.588	0	%100
63	MP3C	X	-7.523	-7.523	0	%100
64	MP3C	Z	4.343	4.343	0	%100
65	MP4C	X	-6.214	-6.214	0	%100
66	MP4C	Z	3.588	3.588	0	%100
67	MP5C	X	-6.214	-6.214	0	%100
68	MP5C	Z	3.588	3.588	0	%100
69	MP1B	X	-6.214	-6.214	0	%100
70	MP1B	Z	3.588	3.588	0	%100
71	MP2B	X	-6.214	-6.214	0	%100
72	MP2B	Z	3.588	3.588	0	%100
73	MP3B	X	-7.523	-7.523	0	%100
74	MP3B	Z	4.343	4.343	0	%100
75	MP4B	X	-6.214	-6.214	0	%100
76	MP4B	Z	3.588	3.588	0	%100
77	MP5B	X	-6.214	-6.214	0	%100
78	MP5B	Z	3.588	3.588	0	%100
79	M76	X	-1.881	-1.881	0	%100
80	M76	Z	1.086	1.086	0	%100
81	M77	X	-7.523	-7.523	0	%100
82	M77	Z	4.343	4.343	0	%100
83	M78	X	-1.881	-1.881	0	%100
84	M78	Z	1.086	1.086	0	%100
85	M95	X	-1.69	-1.69	0	%100
86	M95	Z	.976	.976	0	%100
87	M96	X	-9.709	-9.709	0	%100
88	M96	Z	5.606	5.606	0	%100
89	M97	X	-4.855	-4.855	0	%100
90	M97	Z	2.803	2.803	0	%100
91	M98	X	-4.357	-4.357	0	%100
92	M98	Z	2.515	2.515	0	%100
93	M99	X	-9.684	-9.684	0	%100
94	M99	Z	5.591	5.591	0	%100
95	M100	X	-2.023	-2.023	0	%100
96	M100	Z	1.168	1.168	0	%100
97	M107	X	-8.535	-8.535	0	%100
98	M107	Z	4.928	4.928	0	%100
99	M108	X	-2.137	-2.137	0	%100
100	M108	Z	1.234	1.234	0	%100
101	M109	X	-2.13	-2.13	0	%100
102	M109	Z	1.23	1.23	0	%100

Member Distributed Loads (BLC 50 : Structure Wo (270 Deg))

	Member Label	Direction	Start Magnitude[lb/ft,...	End Magnitude[lb/ft,F...	Start Location[ft,%]	End Location[ft,%]

Member Distributed Loads (BLC 50 : Structure Wo (270 Deg)) (Continued)

	Member Label	Direction	Start Magnitude[lb/ft,...	End Magnitude[lb/ft,F...	Start Location[ft,%]	End Location[ft,%]
1	M1	X	-8.633	-8.633	0	%100
2	M1	Z	0	0	0	%100
3	M2	X	-11.246	-11.246	0	%100
4	M2	Z	0	0	0	%100
5	M5	X	-12.841	-12.841	0	%100
6	M5	Z	0	0	0	%100
7	M6	X	-3.21	-3.21	0	%100
8	M6	Z	0	0	0	%100
9	M7	X	-3.21	-3.21	0	%100
10	M7	Z	0	0	0	%100
11	M6A	X	0	0	0	%100
12	M6A	Z	0	0	0	%100
13	M7A	X	0	0	0	%100
14	M7A	Z	0	0	0	%100
15	MP1A	X	-7.176	-7.176	0	%100
16	MP1A	Z	0	0	0	%100
17	M23A	X	-11.33	-11.33	0	%100
18	M23A	Z	0	0	0	%100
19	M24	X	-11.33	-11.33	0	%100
20	M24	Z	0	0	0	%100
21	M38	X	-2.158	-2.158	0	%100
22	M38	Z	0	0	0	%100
23	M39A	X	-11.33	-11.33	0	%100
24	M39A	Z	0	0	0	%100
25	M40	X	-11.33	-11.33	0	%100
26	M40	Z	0	0	0	%100
27	M54	X	-2.158	-2.158	0	%100
28	M54	Z	0	0	0	%100
29	M55	X	-2.812	-2.812	0	%100
30	M55	Z	0	0	0	%100
31	M56	X	-2.812	-2.812	0	%100
32	M56	Z	0	0	0	%100
33	M42	X	0	0	0	%100
34	M42	Z	0	0	0	%100
35	M43A	X	-11.33	-11.33	0	%100
36	M43A	Z	0	0	0	%100
37	M44	X	-11.33	-11.33	0	%100
38	M44	Z	0	0	0	%100
39	MP2A	X	-7.176	-7.176	0	%100
40	MP2A	Z	0	0	0	%100
41	MP3A	X	-8.686	-8.686	0	%100
42	MP3A	Z	0	0	0	%100
43	MP4A	X	-7.176	-7.176	0	%100
44	MP4A	Z	0	0	0	%100
45	MP5A	X	-7.176	-7.176	0	%100
46	MP5A	Z	0	0	0	%100
47	M34	X	-18.212	-18.212	0	%100
48	M34	Z	0	0	0	%100
49	M37	X	-7.176	-7.176	0	%100
50	M37	Z	0	0	0	%100
51	M38A	X	-18.212	-18.212	0	%100
52	M38A	Z	0	0	0	%100

Member Distributed Loads (BLC 50 : Structure Wo (270 Deg)) (Continued)

	Member Label	Direction	Start Magnitude[lb/ft,...	End Magnitude[lb/ft,F...	Start Location[ft,%]	End Location[ft,%]
53	M41	X	-7.176	-7.176	0	%100
54	M41	Z	0	0	0	%100
55	M42A	X	-18.212	-18.212	0	%100
56	M42A	Z	0	0	0	%100
57	M45	X	-7.176	-7.176	0	%100
58	M45	Z	0	0	0	%100
59	MP1C	X	-7.176	-7.176	0	%100
60	MP1C	Z	0	0	0	%100
61	MP2C	X	-7.176	-7.176	0	%100
62	MP2C	Z	0	0	0	%100
63	MP3C	X	-8.686	-8.686	0	%100
64	MP3C	Z	0	0	0	%100
65	MP4C	X	-7.176	-7.176	0	%100
66	MP4C	Z	0	0	0	%100
67	MP5C	X	-7.176	-7.176	0	%100
68	MP5C	Z	0	0	0	%100
69	MP1B	X	-7.176	-7.176	0	%100
70	MP1B	Z	0	0	0	%100
71	MP2B	X	-7.176	-7.176	0	%100
72	MP2B	Z	0	0	0	%100
73	MP3B	X	-8.686	-8.686	0	%100
74	MP3B	Z	0	0	0	%100
75	MP4B	X	-7.176	-7.176	0	%100
76	MP4B	Z	0	0	0	%100
77	MP5B	X	-7.176	-7.176	0	%100
78	MP5B	Z	0	0	0	%100
79	M76	X	0	0	0	%100
80	M76	Z	0	0	0	%100
81	M77	X	-6.515	-6.515	0	%100
82	M77	Z	0	0	0	%100
83	M78	X	-6.515	-6.515	0	%100
84	M78	Z	0	0	0	%100
85	M95	X	-6.888	-6.888	0	%100
86	M95	Z	0	0	0	%100
87	M96	X	-7.355	-7.355	0	%100
88	M96	Z	0	0	0	%100
89	M97	X	-1.311	-1.311	0	%100
90	M97	Z	0	0	0	%100
91	M98	X	-10.049	-10.049	0	%100
92	M98	Z	0	0	0	%100
93	M99	X	-10.542	-10.542	0	%100
94	M99	Z	0	0	0	%100
95	M100	X	-1.174	-1.174	0	%100
96	M100	Z	0	0	0	%100
97	M107	X	-7.387	-7.387	0	%100
98	M107	Z	0	0	0	%100
99	M108	X	-7.396	-7.396	0	%100
100	M108	Z	0	0	0	%100
101	M109	X	-2e-6	-2e-6	0	%100
102	M109	Z	0	0	0	%100

Member Distributed Loads (BLC 51 : Structure Wo (300 Deg))

	Member Label	Direction	Start Magnitude[lb/ft,...	End Magnitude[lb/ft,F...	Start Location[ft,%]	End Location[ft,%]
1	M1	X	-5.607	-5.607	0	%100
2	M1	Z	-3.237	-3.237	0	%100
3	M2	X	-7.305	-7.305	0	%100
4	M2	Z	-4.217	-4.217	0	%100
5	M5	X	-8.34	-8.34	0	%100
6	M5	Z	-4.815	-4.815	0	%100
7	M6	X	-8.34	-8.34	0	%100
8	M6	Z	-4.815	-4.815	0	%100
9	M7	X	0	0	0	%100
10	M7	Z	0	0	0	%100
11	M6A	X	-3.271	-3.271	0	%100
12	M6A	Z	-1.888	-1.888	0	%100
13	M7A	X	-3.271	-3.271	0	%100
14	M7A	Z	-1.888	-1.888	0	%100
15	MP1A	X	-6.214	-6.214	0	%100
16	MP1A	Z	-3.588	-3.588	0	%100
17	M23A	X	-3.271	-3.271	0	%100
18	M23A	Z	-1.888	-1.888	0	%100
19	M24	X	-3.271	-3.271	0	%100
20	M24	Z	-1.888	-1.888	0	%100
21	M38	X	-5.607	-5.607	0	%100
22	M38	Z	-3.237	-3.237	0	%100
23	M39A	X	-13.083	-13.083	0	%100
24	M39A	Z	-7.553	-7.553	0	%100
25	M40	X	-13.083	-13.083	0	%100
26	M40	Z	-7.553	-7.553	0	%100
27	M54	X	0	0	0	%100
28	M54	Z	0	0	0	%100
29	M55	X	-7.305	-7.305	0	%100
30	M55	Z	-4.217	-4.217	0	%100
31	M56	X	0	0	0	%100
32	M56	Z	0	0	0	%100
33	M42	X	-3.271	-3.271	0	%100
34	M42	Z	-1.888	-1.888	0	%100
35	M43A	X	-3.271	-3.271	0	%100
36	M43A	Z	-1.888	-1.888	0	%100
37	M44	X	-13.083	-13.083	0	%100
38	M44	Z	-7.553	-7.553	0	%100
39	MP2A	X	-6.214	-6.214	0	%100
40	MP2A	Z	-3.588	-3.588	0	%100
41	MP3A	X	-7.523	-7.523	0	%100
42	MP3A	Z	-4.343	-4.343	0	%100
43	MP4A	X	-6.214	-6.214	0	%100
44	MP4A	Z	-3.588	-3.588	0	%100
45	MP5A	X	-6.214	-6.214	0	%100
46	MP5A	Z	-3.588	-3.588	0	%100
47	M34	X	-15.772	-15.772	0	%100
48	M34	Z	-9.106	-9.106	0	%100
49	M37	X	-6.214	-6.214	0	%100
50	M37	Z	-3.588	-3.588	0	%100
51	M38A	X	-15.772	-15.772	0	%100
52	M38A	Z	-9.106	-9.106	0	%100

Member Distributed Loads (BLC 51 : Structure Wo (300 Deg)) (Continued)

	Member Label	Direction	Start Magnitude[lb/ft,...	End Magnitude[lb/ft,F...	Start Location[ft,%]	End Location[ft,%]
53	M41	X	-6.214	-6.214	0	%100
54	M41	Z	-3.588	-3.588	0	%100
55	M42A	X	-15.772	-15.772	0	%100
56	M42A	Z	-9.106	-9.106	0	%100
57	M45	X	-6.214	-6.214	0	%100
58	M45	Z	-3.588	-3.588	0	%100
59	MP1C	X	-6.214	-6.214	0	%100
60	MP1C	Z	-3.588	-3.588	0	%100
61	MP2C	X	-6.214	-6.214	0	%100
62	MP2C	Z	-3.588	-3.588	0	%100
63	MP3C	X	-7.523	-7.523	0	%100
64	MP3C	Z	-4.343	-4.343	0	%100
65	MP4C	X	-6.214	-6.214	0	%100
66	MP4C	Z	-3.588	-3.588	0	%100
67	MP5C	X	-6.214	-6.214	0	%100
68	MP5C	Z	-3.588	-3.588	0	%100
69	MP1B	X	-6.214	-6.214	0	%100
70	MP1B	Z	-3.588	-3.588	0	%100
71	MP2B	X	-6.214	-6.214	0	%100
72	MP2B	Z	-3.588	-3.588	0	%100
73	MP3B	X	-7.523	-7.523	0	%100
74	MP3B	Z	-4.343	-4.343	0	%100
75	MP4B	X	-6.214	-6.214	0	%100
76	MP4B	Z	-3.588	-3.588	0	%100
77	MP5B	X	-6.214	-6.214	0	%100
78	MP5B	Z	-3.588	-3.588	0	%100
79	M76	X	-1.881	-1.881	0	%100
80	M76	Z	-1.086	-1.086	0	%100
81	M77	X	-1.881	-1.881	0	%100
82	M77	Z	-1.086	-1.086	0	%100
83	M78	X	-7.523	-7.523	0	%100
84	M78	Z	-4.343	-4.343	0	%100
85	M95	X	-9.684	-9.684	0	%100
86	M95	Z	-5.591	-5.591	0	%100
87	M96	X	-2.023	-2.023	0	%100
88	M96	Z	-1.168	-1.168	0	%100
89	M97	X	-1.69	-1.69	0	%100
90	M97	Z	-.976	-.976	0	%100
91	M98	X	-9.709	-9.709	0	%100
92	M98	Z	-5.606	-5.606	0	%100
93	M99	X	-4.855	-4.855	0	%100
94	M99	Z	-2.803	-2.803	0	%100
95	M100	X	-4.357	-4.357	0	%100
96	M100	Z	-2.515	-2.515	0	%100
97	M107	X	-2.13	-2.13	0	%100
98	M107	Z	-1.23	-1.23	0	%100
99	M108	X	-8.535	-8.535	0	%100
100	M108	Z	-4.928	-4.928	0	%100
101	M109	X	-2.137	-2.137	0	%100
102	M109	Z	-1.234	-1.234	0	%100

Member Distributed Loads (BLC 52 : Structure Wo (330 Deg))

	Member Label	Direction	Start Magnitude[lb/ft,...	End Magnitude[lb/ft,F...	Start Location[ft,%]	End Location[ft,%]
1	M1	X	-1.079	-1.079	0	%100
2	M1	Z	-1.869	-1.869	0	%100
3	M2	X	-1.406	-1.406	0	%100
4	M2	Z	-2.435	-2.435	0	%100
5	M5	X	-1.605	-1.605	0	%100
6	M5	Z	-2.78	-2.78	0	%100
7	M6	X	-6.42	-6.42	0	%100
8	M6	Z	-11.12	-11.12	0	%100
9	M7	X	-1.605	-1.605	0	%100
10	M7	Z	-2.78	-2.78	0	%100
11	M6A	X	-5.665	-5.665	0	%100
12	M6A	Z	-9.812	-9.812	0	%100
13	M7A	X	-5.665	-5.665	0	%100
14	M7A	Z	-9.812	-9.812	0	%100
15	MP1A	X	-3.588	-3.588	0	%100
16	MP1A	Z	-6.214	-6.214	0	%100
17	M23A	X	0	0	0	%100
18	M23A	Z	0	0	0	%100
19	M24	X	0	0	0	%100
20	M24	Z	0	0	0	%100
21	M38	X	-4.317	-4.317	0	%100
22	M38	Z	-7.477	-7.477	0	%100
23	M39A	X	-5.665	-5.665	0	%100
24	M39A	Z	-9.812	-9.812	0	%100
25	M40	X	-5.665	-5.665	0	%100
26	M40	Z	-9.812	-9.812	0	%100
27	M54	X	-1.079	-1.079	0	%100
28	M54	Z	-1.869	-1.869	0	%100
29	M55	X	-5.623	-5.623	0	%100
30	M55	Z	-9.739	-9.739	0	%100
31	M56	X	-1.406	-1.406	0	%100
32	M56	Z	-2.435	-2.435	0	%100
33	M42	X	-5.665	-5.665	0	%100
34	M42	Z	-9.812	-9.812	0	%100
35	M43A	X	0	0	0	%100
36	M43A	Z	0	0	0	%100
37	M44	X	-5.665	-5.665	0	%100
38	M44	Z	-9.812	-9.812	0	%100
39	MP2A	X	-3.588	-3.588	0	%100
40	MP2A	Z	-6.214	-6.214	0	%100
41	MP3A	X	-4.343	-4.343	0	%100
42	MP3A	Z	-7.523	-7.523	0	%100
43	MP4A	X	-3.588	-3.588	0	%100
44	MP4A	Z	-6.214	-6.214	0	%100
45	MP5A	X	-3.588	-3.588	0	%100
46	MP5A	Z	-6.214	-6.214	0	%100
47	M34	X	-9.106	-9.106	0	%100
48	M34	Z	-15.772	-15.772	0	%100
49	M37	X	-3.588	-3.588	0	%100
50	M37	Z	-6.214	-6.214	0	%100
51	M38A	X	-9.106	-9.106	0	%100
52	M38A	Z	-15.772	-15.772	0	%100

Member Distributed Loads (BLC 52 : Structure Wo (330 Deg)) (Continued)

	Member Label	Direction	Start Magnitude[lb/ft,...	End Magnitude[lb/ft,F...	Start Location[ft,%]	End Location[ft,%]
53	M41	X	-3.588	-3.588	0	%100
54	M41	Z	-6.214	-6.214	0	%100
55	M42A	X	-9.106	-9.106	0	%100
56	M42A	Z	-15.772	-15.772	0	%100
57	M45	X	-3.588	-3.588	0	%100
58	M45	Z	-6.214	-6.214	0	%100
59	MP1C	X	-3.588	-3.588	0	%100
60	MP1C	Z	-6.214	-6.214	0	%100
61	MP2C	X	-3.588	-3.588	0	%100
62	MP2C	Z	-6.214	-6.214	0	%100
63	MP3C	X	-4.343	-4.343	0	%100
64	MP3C	Z	-7.523	-7.523	0	%100
65	MP4C	X	-3.588	-3.588	0	%100
66	MP4C	Z	-6.214	-6.214	0	%100
67	MP5C	X	-3.588	-3.588	0	%100
68	MP5C	Z	-6.214	-6.214	0	%100
69	MP1B	X	-3.588	-3.588	0	%100
70	MP1B	Z	-6.214	-6.214	0	%100
71	MP2B	X	-3.588	-3.588	0	%100
72	MP2B	Z	-6.214	-6.214	0	%100
73	MP3B	X	-4.343	-4.343	0	%100
74	MP3B	Z	-7.523	-7.523	0	%100
75	MP4B	X	-3.588	-3.588	0	%100
76	MP4B	Z	-6.214	-6.214	0	%100
77	MP5B	X	-3.588	-3.588	0	%100
78	MP5B	Z	-6.214	-6.214	0	%100
79	M76	X	-3.257	-3.257	0	%100
80	M76	Z	-5.642	-5.642	0	%100
81	M77	X	0	0	0	%100
82	M77	Z	0	0	0	%100
83	M78	X	-3.257	-3.257	0	%100
84	M78	Z	-5.642	-5.642	0	%100
85	M95	X	-5.271	-5.271	0	%100
86	M95	Z	-9.13	-9.13	0	%100
87	M96	X	-.587	-.587	0	%100
88	M96	Z	-1.017	-1.017	0	%100
89	M97	X	-3.444	-3.444	0	%100
90	M97	Z	-5.965	-5.965	0	%100
91	M98	X	-3.677	-3.677	0	%100
92	M98	Z	-6.369	-6.369	0	%100
93	M99	X	-.655	-.655	0	%100
94	M99	Z	-1.135	-1.135	0	%100
95	M100	X	-5.025	-5.025	0	%100
96	M100	Z	-8.703	-8.703	0	%100
97	M107	X	-1e-6	-1e-6	0	%100
98	M107	Z	-2e-6	-2e-6	0	%100
99	M108	X	-3.694	-3.694	0	%100
100	M108	Z	-6.398	-6.398	0	%100
101	M109	X	-3.698	-3.698	0	%100
102	M109	Z	-6.405	-6.405	0	%100

Member Distributed Loads (BLC 53 : Structure Wi (0 Deg))

	Member Label	Direction	Start Magnitude[lb/ft,...	End Magnitude[lb/ft,F...	Start Location[ft,%]	End Location[ft,%]
1	M1	X	0	0	0	%100
2	M1	Z	0	0	0	%100
3	M2	X	0	0	0	%100
4	M2	Z	0	0	0	%100
5	M5	X	0	0	0	%100
6	M5	Z	0	0	0	%100
7	M6	X	0	0	0	%100
8	M6	Z	-2.826	-2.826	0	%100
9	M7	X	0	0	0	%100
10	M7	Z	-2.826	-2.826	0	%100
11	M6A	X	0	0	0	%100
12	M6A	Z	-4.539	-4.539	0	%100
13	M7A	X	0	0	0	%100
14	M7A	Z	-4.539	-4.539	0	%100
15	MP1A	X	0	0	0	%100
16	MP1A	Z	-3.113	-3.113	0	%100
17	M23A	X	0	0	0	%100
18	M23A	Z	-1.135	-1.135	0	%100
19	M24	X	0	0	0	%100
20	M24	Z	-1.135	-1.135	0	%100
21	M38	X	0	0	0	%100
22	M38	Z	-1.993	-1.993	0	%100
23	M39A	X	0	0	0	%100
24	M39A	Z	-1.135	-1.135	0	%100
25	M40	X	0	0	0	%100
26	M40	Z	-1.135	-1.135	0	%100
27	M54	X	0	0	0	%100
28	M54	Z	-1.993	-1.993	0	%100
29	M55	X	0	0	0	%100
30	M55	Z	-2.431	-2.431	0	%100
31	M56	X	0	0	0	%100
32	M56	Z	-2.431	-2.431	0	%100
33	M42	X	0	0	0	%100
34	M42	Z	-4.539	-4.539	0	%100
35	M43A	X	0	0	0	%100
36	M43A	Z	-1.135	-1.135	0	%100
37	M44	X	0	0	0	%100
38	M44	Z	-1.135	-1.135	0	%100
39	MP2A	X	0	0	0	%100
40	MP2A	Z	-2.992	-2.992	0	%100
41	MP3A	X	0	0	0	%100
42	MP3A	Z	-3.264	-3.264	0	%100
43	MP4A	X	0	0	0	%100
44	MP4A	Z	-2.992	-2.992	0	%100
45	MP5A	X	0	0	0	%100
46	MP5A	Z	-2.992	-2.992	0	%100
47	M34	X	0	0	0	%100
48	M34	Z	-4.673	-4.673	0	%100
49	M37	X	0	0	0	%100
50	M37	Z	-2.992	-2.992	0	%100
51	M38A	X	0	0	0	%100
52	M38A	Z	-4.673	-4.673	0	%100

Member Distributed Loads (BLC 53 : Structure Wi (0 Deg)) (Continued)

	Member Label	Direction	Start Magnitude[lb/ft,...	End Magnitude[lb/ft,F...	Start Location[ft,%]	End Location[ft,%]
53	M41	X	0	0	0	%100
54	M41	Z	-2.992	-2.992	0	%100
55	M42A	X	0	0	0	%100
56	M42A	Z	-4.673	-4.673	0	%100
57	M45	X	0	0	0	%100
58	M45	Z	-2.992	-2.992	0	%100
59	MP1C	X	0	0	0	%100
60	MP1C	Z	-3.113	-3.113	0	%100
61	MP2C	X	0	0	0	%100
62	MP2C	Z	-2.992	-2.992	0	%100
63	MP3C	X	0	0	0	%100
64	MP3C	Z	-3.264	-3.264	0	%100
65	MP4C	X	0	0	0	%100
66	MP4C	Z	-2.992	-2.992	0	%100
67	MP5C	X	0	0	0	%100
68	MP5C	Z	-2.992	-2.992	0	%100
69	MP1B	X	0	0	0	%100
70	MP1B	Z	-3.113	-3.113	0	%100
71	MP2B	X	0	0	0	%100
72	MP2B	Z	-2.992	-2.992	0	%100
73	MP3B	X	0	0	0	%100
74	MP3B	Z	-3.264	-3.264	0	%100
75	MP4B	X	0	0	0	%100
76	MP4B	Z	-2.992	-2.992	0	%100
77	MP5B	X	0	0	0	%100
78	MP5B	Z	-2.992	-2.992	0	%100
79	M76	X	0	0	0	%100
80	M76	Z	-3.386	-3.386	0	%100
81	M77	X	0	0	0	%100
82	M77	Z	-.846	-.846	0	%100
83	M78	X	0	0	0	%100
84	M78	Z	-.846	-.846	0	%100
85	M95	X	0	0	0	%100
86	M95	Z	-1.727	-1.727	0	%100
87	M96	X	0	0	0	%100
88	M96	Z	-1.55	-1.55	0	%100
89	M97	X	0	0	0	%100
90	M97	Z	-3.444	-3.444	0	%100
91	M98	X	0	0	0	%100
92	M98	Z	-.72	-.72	0	%100
93	M99	X	0	0	0	%100
94	M99	Z	-.601	-.601	0	%100
95	M100	X	0	0	0	%100
96	M100	Z	-3.455	-3.455	0	%100
97	M107	X	0	0	0	%100
98	M107	Z	-.725	-.725	0	%100
99	M108	X	0	0	0	%100
100	M108	Z	-.723	-.723	0	%100
101	M109	X	0	0	0	%100
102	M109	Z	-2.897	-2.897	0	%100

Member Distributed Loads (BLC 54 : Structure Wi (30 Deg))

	Member Label	Direction	Start Magnitude[lb/ft,...	End Magnitude[lb/ft,F...	Start Location[ft,%]	End Location[ft,%]
1	M1	X	.332	.332	0	%100
2	M1	Z	-.575	-.575	0	%100
3	M2	X	.405	.405	0	%100
4	M2	Z	-.702	-.702	0	%100
5	M5	X	.471	.471	0	%100
6	M5	Z	-.816	-.816	0	%100
7	M6	X	.471	.471	0	%100
8	M6	Z	-.816	-.816	0	%100
9	M7	X	1.884	1.884	0	%100
10	M7	Z	-3.264	-3.264	0	%100
11	M6A	X	1.702	1.702	0	%100
12	M6A	Z	-2.948	-2.948	0	%100
13	M7A	X	1.702	1.702	0	%100
14	M7A	Z	-2.948	-2.948	0	%100
15	MP1A	X	1.556	1.556	0	%100
16	MP1A	Z	-2.696	-2.696	0	%100
17	M23A	X	1.702	1.702	0	%100
18	M23A	Z	-2.948	-2.948	0	%100
19	M24	X	1.702	1.702	0	%100
20	M24	Z	-2.948	-2.948	0	%100
21	M38	X	.332	.332	0	%100
22	M38	Z	-.575	-.575	0	%100
23	M39A	X	0	0	0	%100
24	M39A	Z	0	0	0	%100
25	M40	X	0	0	0	%100
26	M40	Z	0	0	0	%100
27	M54	X	1.329	1.329	0	%100
28	M54	Z	-2.301	-2.301	0	%100
29	M55	X	.405	.405	0	%100
30	M55	Z	-.702	-.702	0	%100
31	M56	X	1.621	1.621	0	%100
32	M56	Z	-2.807	-2.807	0	%100
33	M42	X	1.702	1.702	0	%100
34	M42	Z	-2.948	-2.948	0	%100
35	M43A	X	1.702	1.702	0	%100
36	M43A	Z	-2.948	-2.948	0	%100
37	M44	X	0	0	0	%100
38	M44	Z	0	0	0	%100
39	MP2A	X	1.496	1.496	0	%100
40	MP2A	Z	-2.591	-2.591	0	%100
41	MP3A	X	1.632	1.632	0	%100
42	MP3A	Z	-2.826	-2.826	0	%100
43	MP4A	X	1.496	1.496	0	%100
44	MP4A	Z	-2.591	-2.591	0	%100
45	MP5A	X	1.496	1.496	0	%100
46	MP5A	Z	-2.591	-2.591	0	%100
47	M34	X	2.336	2.336	0	%100
48	M34	Z	-4.047	-4.047	0	%100
49	M37	X	1.496	1.496	0	%100
50	M37	Z	-2.591	-2.591	0	%100
51	M38A	X	2.336	2.336	0	%100
52	M38A	Z	-4.047	-4.047	0	%100

Member Distributed Loads (BLC 54 : Structure Wi (30 Deg)) (Continued)

	Member Label	Direction	Start Magnitude[lb/ft,...	End Magnitude[lb/ft,F...	Start Location[ft,%]	End Location[ft,%]
53	M41	X	1.496	1.496	0	%100
54	M41	Z	-2.591	-2.591	0	%100
55	M42A	X	2.336	2.336	0	%100
56	M42A	Z	-4.047	-4.047	0	%100
57	M45	X	1.496	1.496	0	%100
58	M45	Z	-2.591	-2.591	0	%100
59	MP1C	X	1.556	1.556	0	%100
60	MP1C	Z	-2.696	-2.696	0	%100
61	MP2C	X	1.496	1.496	0	%100
62	MP2C	Z	-2.591	-2.591	0	%100
63	MP3C	X	1.632	1.632	0	%100
64	MP3C	Z	-2.826	-2.826	0	%100
65	MP4C	X	1.496	1.496	0	%100
66	MP4C	Z	-2.591	-2.591	0	%100
67	MP5C	X	1.496	1.496	0	%100
68	MP5C	Z	-2.591	-2.591	0	%100
69	MP1B	X	1.556	1.556	0	%100
70	MP1B	Z	-2.696	-2.696	0	%100
71	MP2B	X	1.496	1.496	0	%100
72	MP2B	Z	-2.591	-2.591	0	%100
73	MP3B	X	1.632	1.632	0	%100
74	MP3B	Z	-2.826	-2.826	0	%100
75	MP4B	X	1.496	1.496	0	%100
76	MP4B	Z	-2.591	-2.591	0	%100
77	MP5B	X	1.496	1.496	0	%100
78	MP5B	Z	-2.591	-2.591	0	%100
79	M76	X	1.27	1.27	0	%100
80	M76	Z	-2.199	-2.199	0	%100
81	M77	X	1.27	1.27	0	%100
82	M77	Z	-2.199	-2.199	0	%100
83	M78	X	0	0	0	%100
84	M78	Z	0	0	0	%100
85	M95	X	.202	.202	0	%100
86	M95	Z	-.35	-.35	0	%100
87	M96	X	1.548	1.548	0	%100
88	M96	Z	-2.682	-2.682	0	%100
89	M97	X	1.623	1.623	0	%100
90	M97	Z	-2.812	-2.812	0	%100
91	M98	X	.181	.181	0	%100
92	M98	Z	-.313	-.313	0	%100
93	M99	X	1.061	1.061	0	%100
94	M99	Z	-1.837	-1.837	0	%100
95	M100	X	1.133	1.133	0	%100
96	M100	Z	-1.963	-1.963	0	%100
97	M107	X	1.087	1.087	0	%100
98	M107	Z	-1.882	-1.882	0	%100
99	M108	X	0	0	0	%100
100	M108	Z	-1e-6	-1e-6	0	%100
101	M109	X	1.086	1.086	0	%100
102	M109	Z	-1.88	-1.88	0	%100

Member Distributed Loads (BLC 55 : Structure Wi (60 Deg))

	Member Label	Direction	Start Magnitude[lb/ft,...	End Magnitude[lb/ft,F...	Start Location[ft,%]	End Location[ft,%]
1	M1	X	1.726	1.726	0	%100
2	M1	Z	-.997	-.997	0	%100
3	M2	X	2.105	2.105	0	%100
4	M2	Z	-1.215	-1.215	0	%100
5	M5	X	2.448	2.448	0	%100
6	M5	Z	-1.413	-1.413	0	%100
7	M6	X	0	0	0	%100
8	M6	Z	0	0	0	%100
9	M7	X	2.448	2.448	0	%100
10	M7	Z	-1.413	-1.413	0	%100
11	M6A	X	.983	.983	0	%100
12	M6A	Z	-.567	-.567	0	%100
13	M7A	X	.983	.983	0	%100
14	M7A	Z	-.567	-.567	0	%100
15	MP1A	X	2.696	2.696	0	%100
16	MP1A	Z	-1.556	-1.556	0	%100
17	M23A	X	3.931	3.931	0	%100
18	M23A	Z	-2.269	-2.269	0	%100
19	M24	X	3.931	3.931	0	%100
20	M24	Z	-2.269	-2.269	0	%100
21	M38	X	0	0	0	%100
22	M38	Z	0	0	0	%100
23	M39A	X	.983	.983	0	%100
24	M39A	Z	-.567	-.567	0	%100
25	M40	X	.983	.983	0	%100
26	M40	Z	-.567	-.567	0	%100
27	M54	X	1.726	1.726	0	%100
28	M54	Z	-.997	-.997	0	%100
29	M55	X	0	0	0	%100
30	M55	Z	0	0	0	%100
31	M56	X	2.105	2.105	0	%100
32	M56	Z	-1.215	-1.215	0	%100
33	M42	X	.983	.983	0	%100
34	M42	Z	-.567	-.567	0	%100
35	M43A	X	3.931	3.931	0	%100
36	M43A	Z	-2.269	-2.269	0	%100
37	M44	X	.983	.983	0	%100
38	M44	Z	-.567	-.567	0	%100
39	MP2A	X	2.591	2.591	0	%100
40	MP2A	Z	-1.496	-1.496	0	%100
41	MP3A	X	2.826	2.826	0	%100
42	MP3A	Z	-1.632	-1.632	0	%100
43	MP4A	X	2.591	2.591	0	%100
44	MP4A	Z	-1.496	-1.496	0	%100
45	MP5A	X	2.591	2.591	0	%100
46	MP5A	Z	-1.496	-1.496	0	%100
47	M34	X	4.047	4.047	0	%100
48	M34	Z	-2.336	-2.336	0	%100
49	M37	X	2.591	2.591	0	%100
50	M37	Z	-1.496	-1.496	0	%100
51	M38A	X	4.047	4.047	0	%100
52	M38A	Z	-2.336	-2.336	0	%100

Member Distributed Loads (BLC 55 : Structure Wi (60 Deg)) (Continued)

	Member Label	Direction	Start Magnitude[lb/ft,...	End Magnitude[lb/ft,F...	Start Location[ft,%]	End Location[ft,%]
53	M41	X	2.591	2.591	0	%100
54	M41	Z	-1.496	-1.496	0	%100
55	M42A	X	4.047	4.047	0	%100
56	M42A	Z	-2.336	-2.336	0	%100
57	M45	X	2.591	2.591	0	%100
58	M45	Z	-1.496	-1.496	0	%100
59	MP1C	X	2.696	2.696	0	%100
60	MP1C	Z	-1.556	-1.556	0	%100
61	MP2C	X	2.591	2.591	0	%100
62	MP2C	Z	-1.496	-1.496	0	%100
63	MP3C	X	2.826	2.826	0	%100
64	MP3C	Z	-1.632	-1.632	0	%100
65	MP4C	X	2.591	2.591	0	%100
66	MP4C	Z	-1.496	-1.496	0	%100
67	MP5C	X	2.591	2.591	0	%100
68	MP5C	Z	-1.496	-1.496	0	%100
69	MP1B	X	2.696	2.696	0	%100
70	MP1B	Z	-1.556	-1.556	0	%100
71	MP2B	X	2.591	2.591	0	%100
72	MP2B	Z	-1.496	-1.496	0	%100
73	MP3B	X	2.826	2.826	0	%100
74	MP3B	Z	-1.632	-1.632	0	%100
75	MP4B	X	2.591	2.591	0	%100
76	MP4B	Z	-1.496	-1.496	0	%100
77	MP5B	X	2.591	2.591	0	%100
78	MP5B	Z	-1.496	-1.496	0	%100
79	M76	X	.733	.733	0	%100
80	M76	Z	-.423	-.423	0	%100
81	M77	X	2.932	2.932	0	%100
82	M77	Z	-1.693	-1.693	0	%100
83	M78	X	.733	.733	0	%100
84	M78	Z	-.423	-.423	0	%100
85	M95	X	.521	.521	0	%100
86	M95	Z	-.301	-.301	0	%100
87	M96	X	2.992	2.992	0	%100
88	M96	Z	-1.727	-1.727	0	%100
89	M97	X	1.495	1.495	0	%100
90	M97	Z	-.863	-.863	0	%100
91	M98	X	1.342	1.342	0	%100
92	M98	Z	-.775	-.775	0	%100
93	M99	X	2.983	2.983	0	%100
94	M99	Z	-1.722	-1.722	0	%100
95	M100	X	.623	.623	0	%100
96	M100	Z	-.36	-.36	0	%100
97	M107	X	2.509	2.509	0	%100
98	M107	Z	-1.448	-1.448	0	%100
99	M108	X	.628	.628	0	%100
100	M108	Z	-.363	-.363	0	%100
101	M109	X	.626	.626	0	%100
102	M109	Z	-.361	-.361	0	%100

Member Distributed Loads (BLC 56 : Structure Wi (90 Deg))

	Member Label	Direction	Start Magnitude[lb/ft,...	End Magnitude[lb/ft,F...	Start Location[ft,%]	End Location[ft,%]
1	M1	X	2.657	2.657	0	%100
2	M1	Z	0	0	0	%100
3	M2	X	3.241	3.241	0	%100
4	M2	Z	0	0	0	%100
5	M5	X	3.768	3.768	0	%100
6	M5	Z	0	0	0	%100
7	M6	X	.942	.942	0	%100
8	M6	Z	0	0	0	%100
9	M7	X	.942	.942	0	%100
10	M7	Z	0	0	0	%100
11	M6A	X	0	0	0	%100
12	M6A	Z	0	0	0	%100
13	M7A	X	0	0	0	%100
14	M7A	Z	0	0	0	%100
15	MP1A	X	3.113	3.113	0	%100
16	MP1A	Z	0	0	0	%100
17	M23A	X	3.404	3.404	0	%100
18	M23A	Z	0	0	0	%100
19	M24	X	3.404	3.404	0	%100
20	M24	Z	0	0	0	%100
21	M38	X	.664	.664	0	%100
22	M38	Z	0	0	0	%100
23	M39A	X	3.404	3.404	0	%100
24	M39A	Z	0	0	0	%100
25	M40	X	3.404	3.404	0	%100
26	M40	Z	0	0	0	%100
27	M54	X	.664	.664	0	%100
28	M54	Z	0	0	0	%100
29	M55	X	.81	.81	0	%100
30	M55	Z	0	0	0	%100
31	M56	X	.81	.81	0	%100
32	M56	Z	0	0	0	%100
33	M42	X	0	0	0	%100
34	M42	Z	0	0	0	%100
35	M43A	X	3.404	3.404	0	%100
36	M43A	Z	0	0	0	%100
37	M44	X	3.404	3.404	0	%100
38	M44	Z	0	0	0	%100
39	MP2A	X	2.992	2.992	0	%100
40	MP2A	Z	0	0	0	%100
41	MP3A	X	3.264	3.264	0	%100
42	MP3A	Z	0	0	0	%100
43	MP4A	X	2.992	2.992	0	%100
44	MP4A	Z	0	0	0	%100
45	MP5A	X	2.992	2.992	0	%100
46	MP5A	Z	0	0	0	%100
47	M34	X	4.673	4.673	0	%100
48	M34	Z	0	0	0	%100
49	M37	X	2.992	2.992	0	%100
50	M37	Z	0	0	0	%100
51	M38A	X	4.673	4.673	0	%100
52	M38A	Z	0	0	0	%100

Member Distributed Loads (BLC 56 : Structure Wi (90 Deg)) (Continued)

	Member Label	Direction	Start Magnitude[lb/ft,...	End Magnitude[lb/ft,F...	Start Location[ft,%]	End Location[ft,%]
53	M41	X	2.992	2.992	0	%100
54	M41	Z	0	0	0	%100
55	M42A	X	4.673	4.673	0	%100
56	M42A	Z	0	0	0	%100
57	M45	X	2.992	2.992	0	%100
58	M45	Z	0	0	0	%100
59	MP1C	X	3.113	3.113	0	%100
60	MP1C	Z	0	0	0	%100
61	MP2C	X	2.992	2.992	0	%100
62	MP2C	Z	0	0	0	%100
63	MP3C	X	3.264	3.264	0	%100
64	MP3C	Z	0	0	0	%100
65	MP4C	X	2.992	2.992	0	%100
66	MP4C	Z	0	0	0	%100
67	MP5C	X	2.992	2.992	0	%100
68	MP5C	Z	0	0	0	%100
69	MP1B	X	3.113	3.113	0	%100
70	MP1B	Z	0	0	0	%100
71	MP2B	X	2.992	2.992	0	%100
72	MP2B	Z	0	0	0	%100
73	MP3B	X	3.264	3.264	0	%100
74	MP3B	Z	0	0	0	%100
75	MP4B	X	2.992	2.992	0	%100
76	MP4B	Z	0	0	0	%100
77	MP5B	X	2.992	2.992	0	%100
78	MP5B	Z	0	0	0	%100
79	M76	X	0	0	0	%100
80	M76	Z	0	0	0	%100
81	M77	X	2.539	2.539	0	%100
82	M77	Z	0	0	0	%100
83	M78	X	2.539	2.539	0	%100
84	M78	Z	0	0	0	%100
85	M95	X	2.121	2.121	0	%100
86	M95	Z	0	0	0	%100
87	M96	X	2.266	2.266	0	%100
88	M96	Z	0	0	0	%100
89	M97	X	.404	.404	0	%100
90	M97	Z	0	0	0	%100
91	M98	X	3.097	3.097	0	%100
92	M98	Z	0	0	0	%100
93	M99	X	3.247	3.247	0	%100
94	M99	Z	0	0	0	%100
95	M100	X	.362	.362	0	%100
96	M100	Z	0	0	0	%100
97	M107	X	2.171	2.171	0	%100
98	M107	Z	0	0	0	%100
99	M108	X	2.174	2.174	0	%100
100	M108	Z	0	0	0	%100
101	M109	X	1e-6	1e-6	0	%100
102	M109	Z	0	0	0	%100

Member Distributed Loads (BLC 57 : Structure Wi (120 Deg))

	Member Label	Direction	Start Magnitude[lb/ft,...	End Magnitude[lb/ft,F...	Start Location[ft,%]	End Location[ft,%]
1	M1	X	1.726	1.726	0	%100
2	M1	Z	.997	.997	0	%100
3	M2	X	2.105	2.105	0	%100
4	M2	Z	1.215	1.215	0	%100
5	M5	X	2.448	2.448	0	%100
6	M5	Z	1.413	1.413	0	%100
7	M6	X	2.448	2.448	0	%100
8	M6	Z	1.413	1.413	0	%100
9	M7	X	0	0	0	%100
10	M7	Z	0	0	0	%100
11	M6A	X	.983	.983	0	%100
12	M6A	Z	.567	.567	0	%100
13	M7A	X	.983	.983	0	%100
14	M7A	Z	.567	.567	0	%100
15	MP1A	X	2.696	2.696	0	%100
16	MP1A	Z	1.556	1.556	0	%100
17	M23A	X	.983	.983	0	%100
18	M23A	Z	.567	.567	0	%100
19	M24	X	.983	.983	0	%100
20	M24	Z	.567	.567	0	%100
21	M38	X	1.726	1.726	0	%100
22	M38	Z	.997	.997	0	%100
23	M39A	X	3.931	3.931	0	%100
24	M39A	Z	2.269	2.269	0	%100
25	M40	X	3.931	3.931	0	%100
26	M40	Z	2.269	2.269	0	%100
27	M54	X	0	0	0	%100
28	M54	Z	0	0	0	%100
29	M55	X	2.105	2.105	0	%100
30	M55	Z	1.215	1.215	0	%100
31	M56	X	0	0	0	%100
32	M56	Z	0	0	0	%100
33	M42	X	.983	.983	0	%100
34	M42	Z	.567	.567	0	%100
35	M43A	X	.983	.983	0	%100
36	M43A	Z	.567	.567	0	%100
37	M44	X	3.931	3.931	0	%100
38	M44	Z	2.269	2.269	0	%100
39	MP2A	X	2.591	2.591	0	%100
40	MP2A	Z	1.496	1.496	0	%100
41	MP3A	X	2.826	2.826	0	%100
42	MP3A	Z	1.632	1.632	0	%100
43	MP4A	X	2.591	2.591	0	%100
44	MP4A	Z	1.496	1.496	0	%100
45	MP5A	X	2.591	2.591	0	%100
46	MP5A	Z	1.496	1.496	0	%100
47	M34	X	4.047	4.047	0	%100
48	M34	Z	2.336	2.336	0	%100
49	M37	X	2.591	2.591	0	%100
50	M37	Z	1.496	1.496	0	%100
51	M38A	X	4.047	4.047	0	%100
52	M38A	Z	2.336	2.336	0	%100

Member Distributed Loads (BLC 57 : Structure Wi (120 Deg)) (Continued)

	Member Label	Direction	Start Magnitude[lb/ft,...	End Magnitude[lb/ft,F...	Start Location[ft,%]	End Location[ft,%]
53	M41	X	2.591	2.591	0	%100
54	M41	Z	1.496	1.496	0	%100
55	M42A	X	4.047	4.047	0	%100
56	M42A	Z	2.336	2.336	0	%100
57	M45	X	2.591	2.591	0	%100
58	M45	Z	1.496	1.496	0	%100
59	MP1C	X	2.696	2.696	0	%100
60	MP1C	Z	1.556	1.556	0	%100
61	MP2C	X	2.591	2.591	0	%100
62	MP2C	Z	1.496	1.496	0	%100
63	MP3C	X	2.826	2.826	0	%100
64	MP3C	Z	1.632	1.632	0	%100
65	MP4C	X	2.591	2.591	0	%100
66	MP4C	Z	1.496	1.496	0	%100
67	MP5C	X	2.591	2.591	0	%100
68	MP5C	Z	1.496	1.496	0	%100
69	MP1B	X	2.696	2.696	0	%100
70	MP1B	Z	1.556	1.556	0	%100
71	MP2B	X	2.591	2.591	0	%100
72	MP2B	Z	1.496	1.496	0	%100
73	MP3B	X	2.826	2.826	0	%100
74	MP3B	Z	1.632	1.632	0	%100
75	MP4B	X	2.591	2.591	0	%100
76	MP4B	Z	1.496	1.496	0	%100
77	MP5B	X	2.591	2.591	0	%100
78	MP5B	Z	1.496	1.496	0	%100
79	M76	X	.733	.733	0	%100
80	M76	Z	.423	.423	0	%100
81	M77	X	.733	.733	0	%100
82	M77	Z	.423	.423	0	%100
83	M78	X	2.932	2.932	0	%100
84	M78	Z	1.693	1.693	0	%100
85	M95	X	2.983	2.983	0	%100
86	M95	Z	1.722	1.722	0	%100
87	M96	X	.623	.623	0	%100
88	M96	Z	.36	.36	0	%100
89	M97	X	.521	.521	0	%100
90	M97	Z	.301	.301	0	%100
91	M98	X	2.992	2.992	0	%100
92	M98	Z	1.727	1.727	0	%100
93	M99	X	1.495	1.495	0	%100
94	M99	Z	.863	.863	0	%100
95	M100	X	1.342	1.342	0	%100
96	M100	Z	.775	.775	0	%100
97	M107	X	.626	.626	0	%100
98	M107	Z	.361	.361	0	%100
99	M108	X	2.509	2.509	0	%100
100	M108	Z	1.448	1.448	0	%100
101	M109	X	.628	.628	0	%100
102	M109	Z	.363	.363	0	%100

Member Distributed Loads (BLC 58 : Structure Wi (150 Deg))

	Member Label	Direction	Start Magnitude[lb/ft,...	End Magnitude[lb/ft,F...	Start Location[ft,%]	End Location[ft,%]
1	M1	X	.332	.332	0	%100
2	M1	Z	.575	.575	0	%100
3	M2	X	.405	.405	0	%100
4	M2	Z	.702	.702	0	%100
5	M5	X	.471	.471	0	%100
6	M5	Z	.816	.816	0	%100
7	M6	X	1.884	1.884	0	%100
8	M6	Z	3.264	3.264	0	%100
9	M7	X	.471	.471	0	%100
10	M7	Z	.816	.816	0	%100
11	M6A	X	1.702	1.702	0	%100
12	M6A	Z	2.948	2.948	0	%100
13	M7A	X	1.702	1.702	0	%100
14	M7A	Z	2.948	2.948	0	%100
15	MP1A	X	1.556	1.556	0	%100
16	MP1A	Z	2.696	2.696	0	%100
17	M23A	X	0	0	0	%100
18	M23A	Z	0	0	0	%100
19	M24	X	0	0	0	%100
20	M24	Z	0	0	0	%100
21	M38	X	1.329	1.329	0	%100
22	M38	Z	2.301	2.301	0	%100
23	M39A	X	1.702	1.702	0	%100
24	M39A	Z	2.948	2.948	0	%100
25	M40	X	1.702	1.702	0	%100
26	M40	Z	2.948	2.948	0	%100
27	M54	X	.332	.332	0	%100
28	M54	Z	.575	.575	0	%100
29	M55	X	1.621	1.621	0	%100
30	M55	Z	2.807	2.807	0	%100
31	M56	X	.405	.405	0	%100
32	M56	Z	.702	.702	0	%100
33	M42	X	1.702	1.702	0	%100
34	M42	Z	2.948	2.948	0	%100
35	M43A	X	0	0	0	%100
36	M43A	Z	0	0	0	%100
37	M44	X	1.702	1.702	0	%100
38	M44	Z	2.948	2.948	0	%100
39	MP2A	X	1.496	1.496	0	%100
40	MP2A	Z	2.591	2.591	0	%100
41	MP3A	X	1.632	1.632	0	%100
42	MP3A	Z	2.826	2.826	0	%100
43	MP4A	X	1.496	1.496	0	%100
44	MP4A	Z	2.591	2.591	0	%100
45	MP5A	X	1.496	1.496	0	%100
46	MP5A	Z	2.591	2.591	0	%100
47	M34	X	2.336	2.336	0	%100
48	M34	Z	4.047	4.047	0	%100
49	M37	X	1.496	1.496	0	%100
50	M37	Z	2.591	2.591	0	%100
51	M38A	X	2.336	2.336	0	%100
52	M38A	Z	4.047	4.047	0	%100

Member Distributed Loads (BLC 58 : Structure Wi (150 Deg)) (Continued)

	Member Label	Direction	Start Magnitude[lb/ft,...	End Magnitude[lb/ft,F...	Start Location[ft,%]	End Location[ft,%]
53	M41	X	1.496	1.496	0	%100
54	M41	Z	2.591	2.591	0	%100
55	M42A	X	2.336	2.336	0	%100
56	M42A	Z	4.047	4.047	0	%100
57	M45	X	1.496	1.496	0	%100
58	M45	Z	2.591	2.591	0	%100
59	MP1C	X	1.556	1.556	0	%100
60	MP1C	Z	2.696	2.696	0	%100
61	MP2C	X	1.496	1.496	0	%100
62	MP2C	Z	2.591	2.591	0	%100
63	MP3C	X	1.632	1.632	0	%100
64	MP3C	Z	2.826	2.826	0	%100
65	MP4C	X	1.496	1.496	0	%100
66	MP4C	Z	2.591	2.591	0	%100
67	MP5C	X	1.496	1.496	0	%100
68	MP5C	Z	2.591	2.591	0	%100
69	MP1B	X	1.556	1.556	0	%100
70	MP1B	Z	2.696	2.696	0	%100
71	MP2B	X	1.496	1.496	0	%100
72	MP2B	Z	2.591	2.591	0	%100
73	MP3B	X	1.632	1.632	0	%100
74	MP3B	Z	2.826	2.826	0	%100
75	MP4B	X	1.496	1.496	0	%100
76	MP4B	Z	2.591	2.591	0	%100
77	MP5B	X	1.496	1.496	0	%100
78	MP5B	Z	2.591	2.591	0	%100
79	M76	X	1.27	1.27	0	%100
80	M76	Z	2.199	2.199	0	%100
81	M77	X	0	0	0	%100
82	M77	Z	0	0	0	%100
83	M78	X	1.27	1.27	0	%100
84	M78	Z	2.199	2.199	0	%100
85	M95	X	1.623	1.623	0	%100
86	M95	Z	2.812	2.812	0	%100
87	M96	X	.181	.181	0	%100
88	M96	Z	.313	.313	0	%100
89	M97	X	1.061	1.061	0	%100
90	M97	Z	1.837	1.837	0	%100
91	M98	X	1.133	1.133	0	%100
92	M98	Z	1.963	1.963	0	%100
93	M99	X	.202	.202	0	%100
94	M99	Z	.35	.35	0	%100
95	M100	X	1.548	1.548	0	%100
96	M100	Z	2.682	2.682	0	%100
97	M107	X	0	0	0	%100
98	M107	Z	1e-6	1e-6	0	%100
99	M108	X	1.086	1.086	0	%100
100	M108	Z	1.88	1.88	0	%100
101	M109	X	1.087	1.087	0	%100
102	M109	Z	1.882	1.882	0	%100

Member Distributed Loads (BLC 59 : Structure Wi (180 Deg))

	Member Label	Direction	Start Magnitude[lb/ft,...	End Magnitude[lb/ft,F...	Start Location[ft,%]	End Location[ft,%]
1	M1	X	0	0	0	%100
2	M1	Z	0	0	0	%100
3	M2	X	0	0	0	%100
4	M2	Z	0	0	0	%100
5	M5	X	0	0	0	%100
6	M5	Z	0	0	0	%100
7	M6	X	0	0	0	%100
8	M6	Z	2.826	2.826	0	%100
9	M7	X	0	0	0	%100
10	M7	Z	2.826	2.826	0	%100
11	M6A	X	0	0	0	%100
12	M6A	Z	4.539	4.539	0	%100
13	M7A	X	0	0	0	%100
14	M7A	Z	4.539	4.539	0	%100
15	MP1A	X	0	0	0	%100
16	MP1A	Z	3.113	3.113	0	%100
17	M23A	X	0	0	0	%100
18	M23A	Z	1.135	1.135	0	%100
19	M24	X	0	0	0	%100
20	M24	Z	1.135	1.135	0	%100
21	M38	X	0	0	0	%100
22	M38	Z	1.993	1.993	0	%100
23	M39A	X	0	0	0	%100
24	M39A	Z	1.135	1.135	0	%100
25	M40	X	0	0	0	%100
26	M40	Z	1.135	1.135	0	%100
27	M54	X	0	0	0	%100
28	M54	Z	1.993	1.993	0	%100
29	M55	X	0	0	0	%100
30	M55	Z	2.431	2.431	0	%100
31	M56	X	0	0	0	%100
32	M56	Z	2.431	2.431	0	%100
33	M42	X	0	0	0	%100
34	M42	Z	4.539	4.539	0	%100
35	M43A	X	0	0	0	%100
36	M43A	Z	1.135	1.135	0	%100
37	M44	X	0	0	0	%100
38	M44	Z	1.135	1.135	0	%100
39	MP2A	X	0	0	0	%100
40	MP2A	Z	2.992	2.992	0	%100
41	MP3A	X	0	0	0	%100
42	MP3A	Z	3.264	3.264	0	%100
43	MP4A	X	0	0	0	%100
44	MP4A	Z	2.992	2.992	0	%100
45	MP5A	X	0	0	0	%100
46	MP5A	Z	2.992	2.992	0	%100
47	M34	X	0	0	0	%100
48	M34	Z	4.673	4.673	0	%100
49	M37	X	0	0	0	%100
50	M37	Z	2.992	2.992	0	%100
51	M38A	X	0	0	0	%100
52	M38A	Z	4.673	4.673	0	%100

Member Distributed Loads (BLC 59 : Structure Wi (180 Deg)) (Continued)

	Member Label	Direction	Start Magnitude[lb/ft,...	End Magnitude[lb/ft,F...	Start Location[ft,%]	End Location[ft,%]
53	M41	X	0	0	0	%100
54	M41	Z	2.992	2.992	0	%100
55	M42A	X	0	0	0	%100
56	M42A	Z	4.673	4.673	0	%100
57	M45	X	0	0	0	%100
58	M45	Z	2.992	2.992	0	%100
59	MP1C	X	0	0	0	%100
60	MP1C	Z	3.113	3.113	0	%100
61	MP2C	X	0	0	0	%100
62	MP2C	Z	2.992	2.992	0	%100
63	MP3C	X	0	0	0	%100
64	MP3C	Z	3.264	3.264	0	%100
65	MP4C	X	0	0	0	%100
66	MP4C	Z	2.992	2.992	0	%100
67	MP5C	X	0	0	0	%100
68	MP5C	Z	2.992	2.992	0	%100
69	MP1B	X	0	0	0	%100
70	MP1B	Z	3.113	3.113	0	%100
71	MP2B	X	0	0	0	%100
72	MP2B	Z	2.992	2.992	0	%100
73	MP3B	X	0	0	0	%100
74	MP3B	Z	3.264	3.264	0	%100
75	MP4B	X	0	0	0	%100
76	MP4B	Z	2.992	2.992	0	%100
77	MP5B	X	0	0	0	%100
78	MP5B	Z	2.992	2.992	0	%100
79	M76	X	0	0	0	%100
80	M76	Z	3.386	3.386	0	%100
81	M77	X	0	0	0	%100
82	M77	Z	.846	.846	0	%100
83	M78	X	0	0	0	%100
84	M78	Z	.846	.846	0	%100
85	M95	X	0	0	0	%100
86	M95	Z	1.727	1.727	0	%100
87	M96	X	0	0	0	%100
88	M96	Z	1.55	1.55	0	%100
89	M97	X	0	0	0	%100
90	M97	Z	3.444	3.444	0	%100
91	M98	X	0	0	0	%100
92	M98	Z	.72	.72	0	%100
93	M99	X	0	0	0	%100
94	M99	Z	.601	.601	0	%100
95	M100	X	0	0	0	%100
96	M100	Z	3.455	3.455	0	%100
97	M107	X	0	0	0	%100
98	M107	Z	.725	.725	0	%100
99	M108	X	0	0	0	%100
100	M108	Z	.723	.723	0	%100
101	M109	X	0	0	0	%100
102	M109	Z	2.897	2.897	0	%100

Member Distributed Loads (BLC 60 : Structure Wi (210 Deg))

	Member Label	Direction	Start Magnitude[lb/ft,...	End Magnitude[lb/ft,F...	Start Location[ft,%]	End Location[ft,%]
1	M1	X	-.332	-.332	0	%100
2	M1	Z	.575	.575	0	%100
3	M2	X	-.405	-.405	0	%100
4	M2	Z	.702	.702	0	%100
5	M5	X	-.471	-.471	0	%100
6	M5	Z	.816	.816	0	%100
7	M6	X	-.471	-.471	0	%100
8	M6	Z	.816	.816	0	%100
9	M7	X	-1.884	-1.884	0	%100
10	M7	Z	3.264	3.264	0	%100
11	M6A	X	-1.702	-1.702	0	%100
12	M6A	Z	2.948	2.948	0	%100
13	M7A	X	-1.702	-1.702	0	%100
14	M7A	Z	2.948	2.948	0	%100
15	MP1A	X	-1.556	-1.556	0	%100
16	MP1A	Z	2.696	2.696	0	%100
17	M23A	X	-1.702	-1.702	0	%100
18	M23A	Z	2.948	2.948	0	%100
19	M24	X	-1.702	-1.702	0	%100
20	M24	Z	2.948	2.948	0	%100
21	M38	X	-.332	-.332	0	%100
22	M38	Z	.575	.575	0	%100
23	M39A	X	0	0	0	%100
24	M39A	Z	0	0	0	%100
25	M40	X	0	0	0	%100
26	M40	Z	0	0	0	%100
27	M54	X	-1.329	-1.329	0	%100
28	M54	Z	2.301	2.301	0	%100
29	M55	X	-.405	-.405	0	%100
30	M55	Z	.702	.702	0	%100
31	M56	X	-1.621	-1.621	0	%100
32	M56	Z	2.807	2.807	0	%100
33	M42	X	-1.702	-1.702	0	%100
34	M42	Z	2.948	2.948	0	%100
35	M43A	X	-1.702	-1.702	0	%100
36	M43A	Z	2.948	2.948	0	%100
37	M44	X	0	0	0	%100
38	M44	Z	0	0	0	%100
39	MP2A	X	-1.496	-1.496	0	%100
40	MP2A	Z	2.591	2.591	0	%100
41	MP3A	X	-1.632	-1.632	0	%100
42	MP3A	Z	2.826	2.826	0	%100
43	MP4A	X	-1.496	-1.496	0	%100
44	MP4A	Z	2.591	2.591	0	%100
45	MP5A	X	-1.496	-1.496	0	%100
46	MP5A	Z	2.591	2.591	0	%100
47	M34	X	-2.336	-2.336	0	%100
48	M34	Z	4.047	4.047	0	%100
49	M37	X	-1.496	-1.496	0	%100
50	M37	Z	2.591	2.591	0	%100
51	M38A	X	-2.336	-2.336	0	%100
52	M38A	Z	4.047	4.047	0	%100

Member Distributed Loads (BLC 60 : Structure Wi (210 Deg)) (Continued)

	Member Label	Direction	Start Magnitude[lb/ft,...	End Magnitude[lb/ft,F...	Start Location[ft,%]	End Location[ft,%]
53	M41	X	-1.496	-1.496	0	%100
54	M41	Z	2.591	2.591	0	%100
55	M42A	X	-2.336	-2.336	0	%100
56	M42A	Z	4.047	4.047	0	%100
57	M45	X	-1.496	-1.496	0	%100
58	M45	Z	2.591	2.591	0	%100
59	MP1C	X	-1.556	-1.556	0	%100
60	MP1C	Z	2.696	2.696	0	%100
61	MP2C	X	-1.496	-1.496	0	%100
62	MP2C	Z	2.591	2.591	0	%100
63	MP3C	X	-1.632	-1.632	0	%100
64	MP3C	Z	2.826	2.826	0	%100
65	MP4C	X	-1.496	-1.496	0	%100
66	MP4C	Z	2.591	2.591	0	%100
67	MP5C	X	-1.496	-1.496	0	%100
68	MP5C	Z	2.591	2.591	0	%100
69	MP1B	X	-1.556	-1.556	0	%100
70	MP1B	Z	2.696	2.696	0	%100
71	MP2B	X	-1.496	-1.496	0	%100
72	MP2B	Z	2.591	2.591	0	%100
73	MP3B	X	-1.632	-1.632	0	%100
74	MP3B	Z	2.826	2.826	0	%100
75	MP4B	X	-1.496	-1.496	0	%100
76	MP4B	Z	2.591	2.591	0	%100
77	MP5B	X	-1.496	-1.496	0	%100
78	MP5B	Z	2.591	2.591	0	%100
79	M76	X	-1.27	-1.27	0	%100
80	M76	Z	2.199	2.199	0	%100
81	M77	X	-1.27	-1.27	0	%100
82	M77	Z	2.199	2.199	0	%100
83	M78	X	0	0	0	%100
84	M78	Z	0	0	0	%100
85	M95	X	-.202	-.202	0	%100
86	M95	Z	.35	.35	0	%100
87	M96	X	-1.548	-1.548	0	%100
88	M96	Z	2.682	2.682	0	%100
89	M97	X	-1.623	-1.623	0	%100
90	M97	Z	2.812	2.812	0	%100
91	M98	X	-.181	-.181	0	%100
92	M98	Z	.313	.313	0	%100
93	M99	X	-1.061	-1.061	0	%100
94	M99	Z	1.837	1.837	0	%100
95	M100	X	-1.133	-1.133	0	%100
96	M100	Z	1.963	1.963	0	%100
97	M107	X	-1.087	-1.087	0	%100
98	M107	Z	1.882	1.882	0	%100
99	M108	X	0	0	0	%100
100	M108	Z	1e-6	1e-6	0	%100
101	M109	X	-1.086	-1.086	0	%100
102	M109	Z	1.88	1.88	0	%100

Member Distributed Loads (BLC 61 : Structure Wi (240 Deg))

	Member Label	Direction	Start Magnitude[lb/ft,...	End Magnitude[lb/ft,F...	Start Location[ft,%]	End Location[ft,%]
1	M1	X	-1.726	-1.726	0	%100
2	M1	Z	.997	.997	0	%100
3	M2	X	-2.105	-2.105	0	%100
4	M2	Z	1.215	1.215	0	%100
5	M5	X	-2.448	-2.448	0	%100
6	M5	Z	1.413	1.413	0	%100
7	M6	X	0	0	0	%100
8	M6	Z	0	0	0	%100
9	M7	X	-2.448	-2.448	0	%100
10	M7	Z	1.413	1.413	0	%100
11	M6A	X	-.983	-.983	0	%100
12	M6A	Z	.567	.567	0	%100
13	M7A	X	-.983	-.983	0	%100
14	M7A	Z	.567	.567	0	%100
15	MP1A	X	-2.696	-2.696	0	%100
16	MP1A	Z	1.556	1.556	0	%100
17	M23A	X	-3.931	-3.931	0	%100
18	M23A	Z	2.269	2.269	0	%100
19	M24	X	-3.931	-3.931	0	%100
20	M24	Z	2.269	2.269	0	%100
21	M38	X	0	0	0	%100
22	M38	Z	0	0	0	%100
23	M39A	X	-.983	-.983	0	%100
24	M39A	Z	.567	.567	0	%100
25	M40	X	-.983	-.983	0	%100
26	M40	Z	.567	.567	0	%100
27	M54	X	-1.726	-1.726	0	%100
28	M54	Z	.997	.997	0	%100
29	M55	X	0	0	0	%100
30	M55	Z	0	0	0	%100
31	M56	X	-2.105	-2.105	0	%100
32	M56	Z	1.215	1.215	0	%100
33	M42	X	-.983	-.983	0	%100
34	M42	Z	.567	.567	0	%100
35	M43A	X	-3.931	-3.931	0	%100
36	M43A	Z	2.269	2.269	0	%100
37	M44	X	-.983	-.983	0	%100
38	M44	Z	.567	.567	0	%100
39	MP2A	X	-2.591	-2.591	0	%100
40	MP2A	Z	1.496	1.496	0	%100
41	MP3A	X	-2.826	-2.826	0	%100
42	MP3A	Z	1.632	1.632	0	%100
43	MP4A	X	-2.591	-2.591	0	%100
44	MP4A	Z	1.496	1.496	0	%100
45	MP5A	X	-2.591	-2.591	0	%100
46	MP5A	Z	1.496	1.496	0	%100
47	M34	X	-4.047	-4.047	0	%100
48	M34	Z	2.336	2.336	0	%100
49	M37	X	-2.591	-2.591	0	%100
50	M37	Z	1.496	1.496	0	%100
51	M38A	X	-4.047	-4.047	0	%100
52	M38A	Z	2.336	2.336	0	%100

Member Distributed Loads (BLC 61 : Structure Wi (240 Deg)) (Continued)

	Member Label	Direction	Start Magnitude[lb/ft,...	End Magnitude[lb/ft,F...	Start Location[ft,%]	End Location[ft,%]
53	M41	X	-2.591	-2.591	0	%100
54	M41	Z	1.496	1.496	0	%100
55	M42A	X	-4.047	-4.047	0	%100
56	M42A	Z	2.336	2.336	0	%100
57	M45	X	-2.591	-2.591	0	%100
58	M45	Z	1.496	1.496	0	%100
59	MP1C	X	-2.696	-2.696	0	%100
60	MP1C	Z	1.556	1.556	0	%100
61	MP2C	X	-2.591	-2.591	0	%100
62	MP2C	Z	1.496	1.496	0	%100
63	MP3C	X	-2.826	-2.826	0	%100
64	MP3C	Z	1.632	1.632	0	%100
65	MP4C	X	-2.591	-2.591	0	%100
66	MP4C	Z	1.496	1.496	0	%100
67	MP5C	X	-2.591	-2.591	0	%100
68	MP5C	Z	1.496	1.496	0	%100
69	MP1B	X	-2.696	-2.696	0	%100
70	MP1B	Z	1.556	1.556	0	%100
71	MP2B	X	-2.591	-2.591	0	%100
72	MP2B	Z	1.496	1.496	0	%100
73	MP3B	X	-2.826	-2.826	0	%100
74	MP3B	Z	1.632	1.632	0	%100
75	MP4B	X	-2.591	-2.591	0	%100
76	MP4B	Z	1.496	1.496	0	%100
77	MP5B	X	-2.591	-2.591	0	%100
78	MP5B	Z	1.496	1.496	0	%100
79	M76	X	-.733	-.733	0	%100
80	M76	Z	.423	.423	0	%100
81	M77	X	-2.932	-2.932	0	%100
82	M77	Z	1.693	1.693	0	%100
83	M78	X	-.733	-.733	0	%100
84	M78	Z	.423	.423	0	%100
85	M95	X	-.521	-.521	0	%100
86	M95	Z	.301	.301	0	%100
87	M96	X	-2.992	-2.992	0	%100
88	M96	Z	1.727	1.727	0	%100
89	M97	X	-1.495	-1.495	0	%100
90	M97	Z	.863	.863	0	%100
91	M98	X	-1.342	-1.342	0	%100
92	M98	Z	.775	.775	0	%100
93	M99	X	-2.983	-2.983	0	%100
94	M99	Z	1.722	1.722	0	%100
95	M100	X	-.623	-.623	0	%100
96	M100	Z	.36	.36	0	%100
97	M107	X	-2.509	-2.509	0	%100
98	M107	Z	1.448	1.448	0	%100
99	M108	X	-.628	-.628	0	%100
100	M108	Z	.363	.363	0	%100
101	M109	X	-.626	-.626	0	%100
102	M109	Z	.361	.361	0	%100

Member Distributed Loads (BLC 62 : Structure Wi (270 Deg))

	Member Label	Direction	Start Magnitude[lb/ft,...	End Magnitude[lb/ft,F...	Start Location[ft,%]	End Location[ft,%]
1	M1	X	-2.657	-2.657	0	%100
2	M1	Z	0	0	0	%100
3	M2	X	-3.241	-3.241	0	%100
4	M2	Z	0	0	0	%100
5	M5	X	-3.768	-3.768	0	%100
6	M5	Z	0	0	0	%100
7	M6	X	-.942	-.942	0	%100
8	M6	Z	0	0	0	%100
9	M7	X	-.942	-.942	0	%100
10	M7	Z	0	0	0	%100
11	M6A	X	0	0	0	%100
12	M6A	Z	0	0	0	%100
13	M7A	X	0	0	0	%100
14	M7A	Z	0	0	0	%100
15	MP1A	X	-3.113	-3.113	0	%100
16	MP1A	Z	0	0	0	%100
17	M23A	X	-3.404	-3.404	0	%100
18	M23A	Z	0	0	0	%100
19	M24	X	-3.404	-3.404	0	%100
20	M24	Z	0	0	0	%100
21	M38	X	-.664	-.664	0	%100
22	M38	Z	0	0	0	%100
23	M39A	X	-3.404	-3.404	0	%100
24	M39A	Z	0	0	0	%100
25	M40	X	-3.404	-3.404	0	%100
26	M40	Z	0	0	0	%100
27	M54	X	-.664	-.664	0	%100
28	M54	Z	0	0	0	%100
29	M55	X	-.81	-.81	0	%100
30	M55	Z	0	0	0	%100
31	M56	X	-.81	-.81	0	%100
32	M56	Z	0	0	0	%100
33	M42	X	0	0	0	%100
34	M42	Z	0	0	0	%100
35	M43A	X	-3.404	-3.404	0	%100
36	M43A	Z	0	0	0	%100
37	M44	X	-3.404	-3.404	0	%100
38	M44	Z	0	0	0	%100
39	MP2A	X	-2.992	-2.992	0	%100
40	MP2A	Z	0	0	0	%100
41	MP3A	X	-3.264	-3.264	0	%100
42	MP3A	Z	0	0	0	%100
43	MP4A	X	-2.992	-2.992	0	%100
44	MP4A	Z	0	0	0	%100
45	MP5A	X	-2.992	-2.992	0	%100
46	MP5A	Z	0	0	0	%100
47	M34	X	-4.673	-4.673	0	%100
48	M34	Z	0	0	0	%100
49	M37	X	-2.992	-2.992	0	%100
50	M37	Z	0	0	0	%100
51	M38A	X	-4.673	-4.673	0	%100
52	M38A	Z	0	0	0	%100

Member Distributed Loads (BLC 62 : Structure Wi (270 Deg)) (Continued)

	Member Label	Direction	Start Magnitude[lb/ft,...	End Magnitude[lb/ft,F...	Start Location[ft,%]	End Location[ft,%]
53	M41	X	-2.992	-2.992	0	%100
54	M41	Z	0	0	0	%100
55	M42A	X	-4.673	-4.673	0	%100
56	M42A	Z	0	0	0	%100
57	M45	X	-2.992	-2.992	0	%100
58	M45	Z	0	0	0	%100
59	MP1C	X	-3.113	-3.113	0	%100
60	MP1C	Z	0	0	0	%100
61	MP2C	X	-2.992	-2.992	0	%100
62	MP2C	Z	0	0	0	%100
63	MP3C	X	-3.264	-3.264	0	%100
64	MP3C	Z	0	0	0	%100
65	MP4C	X	-2.992	-2.992	0	%100
66	MP4C	Z	0	0	0	%100
67	MP5C	X	-2.992	-2.992	0	%100
68	MP5C	Z	0	0	0	%100
69	MP1B	X	-3.113	-3.113	0	%100
70	MP1B	Z	0	0	0	%100
71	MP2B	X	-2.992	-2.992	0	%100
72	MP2B	Z	0	0	0	%100
73	MP3B	X	-3.264	-3.264	0	%100
74	MP3B	Z	0	0	0	%100
75	MP4B	X	-2.992	-2.992	0	%100
76	MP4B	Z	0	0	0	%100
77	MP5B	X	-2.992	-2.992	0	%100
78	MP5B	Z	0	0	0	%100
79	M76	X	0	0	0	%100
80	M76	Z	0	0	0	%100
81	M77	X	-2.539	-2.539	0	%100
82	M77	Z	0	0	0	%100
83	M78	X	-2.539	-2.539	0	%100
84	M78	Z	0	0	0	%100
85	M95	X	-2.121	-2.121	0	%100
86	M95	Z	0	0	0	%100
87	M96	X	-2.266	-2.266	0	%100
88	M96	Z	0	0	0	%100
89	M97	X	-.404	-.404	0	%100
90	M97	Z	0	0	0	%100
91	M98	X	-3.097	-3.097	0	%100
92	M98	Z	0	0	0	%100
93	M99	X	-3.247	-3.247	0	%100
94	M99	Z	0	0	0	%100
95	M100	X	-.362	-.362	0	%100
96	M100	Z	0	0	0	%100
97	M107	X	-2.171	-2.171	0	%100
98	M107	Z	0	0	0	%100
99	M108	X	-2.174	-2.174	0	%100
100	M108	Z	0	0	0	%100
101	M109	X	-1e-6	-1e-6	0	%100
102	M109	Z	0	0	0	%100

Member Distributed Loads (BLC 63 : Structure Wi (300 Deg))

	Member Label	Direction	Start Magnitude[lb/ft,...	End Magnitude[lb/ft,F...	Start Location[ft,%]	End Location[ft,%]
1	M1	X	-1.726	-1.726	0	%100
2	M1	Z	-.997	-.997	0	%100
3	M2	X	-2.105	-2.105	0	%100
4	M2	Z	-1.215	-1.215	0	%100
5	M5	X	-2.448	-2.448	0	%100
6	M5	Z	-1.413	-1.413	0	%100
7	M6	X	-2.448	-2.448	0	%100
8	M6	Z	-1.413	-1.413	0	%100
9	M7	X	0	0	0	%100
10	M7	Z	0	0	0	%100
11	M6A	X	-.983	-.983	0	%100
12	M6A	Z	-.567	-.567	0	%100
13	M7A	X	-.983	-.983	0	%100
14	M7A	Z	-.567	-.567	0	%100
15	MP1A	X	-2.696	-2.696	0	%100
16	MP1A	Z	-1.556	-1.556	0	%100
17	M23A	X	-.983	-.983	0	%100
18	M23A	Z	-.567	-.567	0	%100
19	M24	X	-.983	-.983	0	%100
20	M24	Z	-.567	-.567	0	%100
21	M38	X	-1.726	-1.726	0	%100
22	M38	Z	-.997	-.997	0	%100
23	M39A	X	-3.931	-3.931	0	%100
24	M39A	Z	-2.269	-2.269	0	%100
25	M40	X	-3.931	-3.931	0	%100
26	M40	Z	-2.269	-2.269	0	%100
27	M54	X	0	0	0	%100
28	M54	Z	0	0	0	%100
29	M55	X	-2.105	-2.105	0	%100
30	M55	Z	-1.215	-1.215	0	%100
31	M56	X	0	0	0	%100
32	M56	Z	0	0	0	%100
33	M42	X	-.983	-.983	0	%100
34	M42	Z	-.567	-.567	0	%100
35	M43A	X	-.983	-.983	0	%100
36	M43A	Z	-.567	-.567	0	%100
37	M44	X	-3.931	-3.931	0	%100
38	M44	Z	-2.269	-2.269	0	%100
39	MP2A	X	-2.591	-2.591	0	%100
40	MP2A	Z	-1.496	-1.496	0	%100
41	MP3A	X	-2.826	-2.826	0	%100
42	MP3A	Z	-1.632	-1.632	0	%100
43	MP4A	X	-2.591	-2.591	0	%100
44	MP4A	Z	-1.496	-1.496	0	%100
45	MP5A	X	-2.591	-2.591	0	%100
46	MP5A	Z	-1.496	-1.496	0	%100
47	M34	X	-4.047	-4.047	0	%100
48	M34	Z	-2.336	-2.336	0	%100
49	M37	X	-2.591	-2.591	0	%100
50	M37	Z	-1.496	-1.496	0	%100
51	M38A	X	-4.047	-4.047	0	%100
52	M38A	Z	-2.336	-2.336	0	%100

Member Distributed Loads (BLC 63 : Structure Wi (300 Deg)) (Continued)

	Member Label	Direction	Start Magnitude[lb/ft,...	End Magnitude[lb/ft,F...	Start Location[ft,%]	End Location[ft,%]
53	M41	X	-2.591	-2.591	0	%100
54	M41	Z	-1.496	-1.496	0	%100
55	M42A	X	-4.047	-4.047	0	%100
56	M42A	Z	-2.336	-2.336	0	%100
57	M45	X	-2.591	-2.591	0	%100
58	M45	Z	-1.496	-1.496	0	%100
59	MP1C	X	-2.696	-2.696	0	%100
60	MP1C	Z	-1.556	-1.556	0	%100
61	MP2C	X	-2.591	-2.591	0	%100
62	MP2C	Z	-1.496	-1.496	0	%100
63	MP3C	X	-2.826	-2.826	0	%100
64	MP3C	Z	-1.632	-1.632	0	%100
65	MP4C	X	-2.591	-2.591	0	%100
66	MP4C	Z	-1.496	-1.496	0	%100
67	MP5C	X	-2.591	-2.591	0	%100
68	MP5C	Z	-1.496	-1.496	0	%100
69	MP1B	X	-2.696	-2.696	0	%100
70	MP1B	Z	-1.556	-1.556	0	%100
71	MP2B	X	-2.591	-2.591	0	%100
72	MP2B	Z	-1.496	-1.496	0	%100
73	MP3B	X	-2.826	-2.826	0	%100
74	MP3B	Z	-1.632	-1.632	0	%100
75	MP4B	X	-2.591	-2.591	0	%100
76	MP4B	Z	-1.496	-1.496	0	%100
77	MP5B	X	-2.591	-2.591	0	%100
78	MP5B	Z	-1.496	-1.496	0	%100
79	M76	X	-.733	-.733	0	%100
80	M76	Z	-.423	-.423	0	%100
81	M77	X	-.733	-.733	0	%100
82	M77	Z	-.423	-.423	0	%100
83	M78	X	-2.932	-2.932	0	%100
84	M78	Z	-1.693	-1.693	0	%100
85	M95	X	-2.983	-2.983	0	%100
86	M95	Z	-1.722	-1.722	0	%100
87	M96	X	-.623	-.623	0	%100
88	M96	Z	-.36	-.36	0	%100
89	M97	X	-.521	-.521	0	%100
90	M97	Z	-.301	-.301	0	%100
91	M98	X	-2.992	-2.992	0	%100
92	M98	Z	-1.727	-1.727	0	%100
93	M99	X	-1.495	-1.495	0	%100
94	M99	Z	-.863	-.863	0	%100
95	M100	X	-1.342	-1.342	0	%100
96	M100	Z	-.775	-.775	0	%100
97	M107	X	-.626	-.626	0	%100
98	M107	Z	-.361	-.361	0	%100
99	M108	X	-2.509	-2.509	0	%100
100	M108	Z	-1.448	-1.448	0	%100
101	M109	X	-.628	-.628	0	%100
102	M109	Z	-.363	-.363	0	%100

Member Distributed Loads (BLC 64 : Structure Wi (330 Deg))

	Member Label	Direction	Start Magnitude[lb/ft,...	End Magnitude[lb/ft,F...	Start Location[ft,%]	End Location[ft,%]
1	M1	X	-.332	-.332	0	%100
2	M1	Z	-.575	-.575	0	%100
3	M2	X	-.405	-.405	0	%100
4	M2	Z	-.702	-.702	0	%100
5	M5	X	-.471	-.471	0	%100
6	M5	Z	-.816	-.816	0	%100
7	M6	X	-1.884	-1.884	0	%100
8	M6	Z	-3.264	-3.264	0	%100
9	M7	X	-.471	-.471	0	%100
10	M7	Z	-.816	-.816	0	%100
11	M6A	X	-1.702	-1.702	0	%100
12	M6A	Z	-2.948	-2.948	0	%100
13	M7A	X	-1.702	-1.702	0	%100
14	M7A	Z	-2.948	-2.948	0	%100
15	MP1A	X	-1.556	-1.556	0	%100
16	MP1A	Z	-2.696	-2.696	0	%100
17	M23A	X	0	0	0	%100
18	M23A	Z	0	0	0	%100
19	M24	X	0	0	0	%100
20	M24	Z	0	0	0	%100
21	M38	X	-1.329	-1.329	0	%100
22	M38	Z	-2.301	-2.301	0	%100
23	M39A	X	-1.702	-1.702	0	%100
24	M39A	Z	-2.948	-2.948	0	%100
25	M40	X	-1.702	-1.702	0	%100
26	M40	Z	-2.948	-2.948	0	%100
27	M54	X	-.332	-.332	0	%100
28	M54	Z	-.575	-.575	0	%100
29	M55	X	-1.621	-1.621	0	%100
30	M55	Z	-2.807	-2.807	0	%100
31	M56	X	-.405	-.405	0	%100
32	M56	Z	-.702	-.702	0	%100
33	M42	X	-1.702	-1.702	0	%100
34	M42	Z	-2.948	-2.948	0	%100
35	M43A	X	0	0	0	%100
36	M43A	Z	0	0	0	%100
37	M44	X	-1.702	-1.702	0	%100
38	M44	Z	-2.948	-2.948	0	%100
39	MP2A	X	-1.496	-1.496	0	%100
40	MP2A	Z	-2.591	-2.591	0	%100
41	MP3A	X	-1.632	-1.632	0	%100
42	MP3A	Z	-2.826	-2.826	0	%100
43	MP4A	X	-1.496	-1.496	0	%100
44	MP4A	Z	-2.591	-2.591	0	%100
45	MP5A	X	-1.496	-1.496	0	%100
46	MP5A	Z	-2.591	-2.591	0	%100
47	M34	X	-2.336	-2.336	0	%100
48	M34	Z	-4.047	-4.047	0	%100
49	M37	X	-1.496	-1.496	0	%100
50	M37	Z	-2.591	-2.591	0	%100
51	M38A	X	-2.336	-2.336	0	%100
52	M38A	Z	-4.047	-4.047	0	%100

Member Distributed Loads (BLC 64 : Structure Wi (330 Deg)) (Continued)

	Member Label	Direction	Start Magnitude[lb/ft,...	End Magnitude[lb/ft,F...	Start Location[ft,%]	End Location[ft,%]
53	M41	X	-1.496	-1.496	0	%100
54	M41	Z	-2.591	-2.591	0	%100
55	M42A	X	-2.336	-2.336	0	%100
56	M42A	Z	-4.047	-4.047	0	%100
57	M45	X	-1.496	-1.496	0	%100
58	M45	Z	-2.591	-2.591	0	%100
59	MP1C	X	-1.556	-1.556	0	%100
60	MP1C	Z	-2.696	-2.696	0	%100
61	MP2C	X	-1.496	-1.496	0	%100
62	MP2C	Z	-2.591	-2.591	0	%100
63	MP3C	X	-1.632	-1.632	0	%100
64	MP3C	Z	-2.826	-2.826	0	%100
65	MP4C	X	-1.496	-1.496	0	%100
66	MP4C	Z	-2.591	-2.591	0	%100
67	MP5C	X	-1.496	-1.496	0	%100
68	MP5C	Z	-2.591	-2.591	0	%100
69	MP1B	X	-1.556	-1.556	0	%100
70	MP1B	Z	-2.696	-2.696	0	%100
71	MP2B	X	-1.496	-1.496	0	%100
72	MP2B	Z	-2.591	-2.591	0	%100
73	MP3B	X	-1.632	-1.632	0	%100
74	MP3B	Z	-2.826	-2.826	0	%100
75	MP4B	X	-1.496	-1.496	0	%100
76	MP4B	Z	-2.591	-2.591	0	%100
77	MP5B	X	-1.496	-1.496	0	%100
78	MP5B	Z	-2.591	-2.591	0	%100
79	M76	X	-1.27	-1.27	0	%100
80	M76	Z	-2.199	-2.199	0	%100
81	M77	X	0	0	0	%100
82	M77	Z	0	0	0	%100
83	M78	X	-1.27	-1.27	0	%100
84	M78	Z	-2.199	-2.199	0	%100
85	M95	X	-1.623	-1.623	0	%100
86	M95	Z	-2.812	-2.812	0	%100
87	M96	X	-.181	-.181	0	%100
88	M96	Z	-.313	-.313	0	%100
89	M97	X	-1.061	-1.061	0	%100
90	M97	Z	-1.837	-1.837	0	%100
91	M98	X	-1.133	-1.133	0	%100
92	M98	Z	-1.963	-1.963	0	%100
93	M99	X	-.202	-.202	0	%100
94	M99	Z	-.35	-.35	0	%100
95	M100	X	-1.548	-1.548	0	%100
96	M100	Z	-2.682	-2.682	0	%100
97	M107	X	0	0	0	%100
98	M107	Z	-1e-6	-1e-6	0	%100
99	M108	X	-1.086	-1.086	0	%100
100	M108	Z	-1.88	-1.88	0	%100
101	M109	X	-1.087	-1.087	0	%100
102	M109	Z	-1.882	-1.882	0	%100

Member Distributed Loads (BLC 65 : Structure Wm (0 Deg))

	Member Label	Direction	Start Magnitude[lb/ft,...	End Magnitude[lb/ft,F...	Start Location[ft,%]	End Location[ft,%]
1	M1	X	0	0	0	%100
2	M1	Z	0	0	0	%100
3	M2	X	0	0	0	%100
4	M2	Z	0	0	0	%100
5	M5	X	0	0	0	%100
6	M5	Z	0	0	0	%100
7	M6	X	0	0	0	%100
8	M6	Z	-.622	-.622	0	%100
9	M7	X	0	0	0	%100
10	M7	Z	-.622	-.622	0	%100
11	M6A	X	0	0	0	%100
12	M6A	Z	-.976	-.976	0	%100
13	M7A	X	0	0	0	%100
14	M7A	Z	-.976	-.976	0	%100
15	MP1A	X	0	0	0	%100
16	MP1A	Z	-.464	-.464	0	%100
17	M23A	X	0	0	0	%100
18	M23A	Z	-.244	-.244	0	%100
19	M24	X	0	0	0	%100
20	M24	Z	-.244	-.244	0	%100
21	M38	X	0	0	0	%100
22	M38	Z	-.419	-.419	0	%100
23	M39A	X	0	0	0	%100
24	M39A	Z	-.244	-.244	0	%100
25	M40	X	0	0	0	%100
26	M40	Z	-.244	-.244	0	%100
27	M54	X	0	0	0	%100
28	M54	Z	-.419	-.419	0	%100
29	M55	X	0	0	0	%100
30	M55	Z	-.545	-.545	0	%100
31	M56	X	0	0	0	%100
32	M56	Z	-.545	-.545	0	%100
33	M42	X	0	0	0	%100
34	M42	Z	-.976	-.976	0	%100
35	M43A	X	0	0	0	%100
36	M43A	Z	-.244	-.244	0	%100
37	M44	X	0	0	0	%100
38	M44	Z	-.244	-.244	0	%100
39	MP2A	X	0	0	0	%100
40	MP2A	Z	-.464	-.464	0	%100
41	MP3A	X	0	0	0	%100
42	MP3A	Z	-.561	-.561	0	%100
43	MP4A	X	0	0	0	%100
44	MP4A	Z	-.464	-.464	0	%100
45	MP5A	X	0	0	0	%100
46	MP5A	Z	-.464	-.464	0	%100
47	M34	X	0	0	0	%100
48	M34	Z	-1.177	-1.177	0	%100
49	M37	X	0	0	0	%100
50	M37	Z	-.464	-.464	0	%100
51	M38A	X	0	0	0	%100
52	M38A	Z	-1.177	-1.177	0	%100

Member Distributed Loads (BLC 65 : Structure Wm (0 Deg)) (Continued)

	Member Label	Direction	Start Magnitude[lb/ft,...	End Magnitude[lb/ft,F...	Start Location[ft,%]	End Location[ft,%]
53	M41	X	0	0	0	%100
54	M41	Z	-.464	-.464	0	%100
55	M42A	X	0	0	0	%100
56	M42A	Z	-1.177	-1.177	0	%100
57	M45	X	0	0	0	%100
58	M45	Z	-.464	-.464	0	%100
59	MP1C	X	0	0	0	%100
60	MP1C	Z	-.464	-.464	0	%100
61	MP2C	X	0	0	0	%100
62	MP2C	Z	-.464	-.464	0	%100
63	MP3C	X	0	0	0	%100
64	MP3C	Z	-.561	-.561	0	%100
65	MP4C	X	0	0	0	%100
66	MP4C	Z	-.464	-.464	0	%100
67	MP5C	X	0	0	0	%100
68	MP5C	Z	-.464	-.464	0	%100
69	MP1B	X	0	0	0	%100
70	MP1B	Z	-.464	-.464	0	%100
71	MP2B	X	0	0	0	%100
72	MP2B	Z	-.464	-.464	0	%100
73	MP3B	X	0	0	0	%100
74	MP3B	Z	-.561	-.561	0	%100
75	MP4B	X	0	0	0	%100
76	MP4B	Z	-.464	-.464	0	%100
77	MP5B	X	0	0	0	%100
78	MP5B	Z	-.464	-.464	0	%100
79	M76	X	0	0	0	%100
80	M76	Z	-.561	-.561	0	%100
81	M77	X	0	0	0	%100
82	M77	Z	-.14	-.14	0	%100
83	M78	X	0	0	0	%100
84	M78	Z	-.14	-.14	0	%100
85	M95	X	0	0	0	%100
86	M95	Z	-.362	-.362	0	%100
87	M96	X	0	0	0	%100
88	M96	Z	-.325	-.325	0	%100
89	M97	X	0	0	0	%100
90	M97	Z	-.723	-.723	0	%100
91	M98	X	0	0	0	%100
92	M98	Z	-.151	-.151	0	%100
93	M99	X	0	0	0	%100
94	M99	Z	-.126	-.126	0	%100
95	M100	X	0	0	0	%100
96	M100	Z	-.725	-.725	0	%100
97	M107	X	0	0	0	%100
98	M107	Z	-.16	-.16	0	%100
99	M108	X	0	0	0	%100
100	M108	Z	-.159	-.159	0	%100
101	M109	X	0	0	0	%100
102	M109	Z	-.637	-.637	0	%100

Member Distributed Loads (BLC 66 : Structure Wm (30 Deg))

	Member Label	Direction	Start Magnitude[lb/ft,...	End Magnitude[lb/ft,F...	Start Location[ft,%]	End Location[ft,%]
1	M1	X	.07	.07	0	%100
2	M1	Z	-.121	-.121	0	%100
3	M2	X	.091	.091	0	%100
4	M2	Z	-.157	-.157	0	%100
5	M5	X	.104	.104	0	%100
6	M5	Z	-.18	-.18	0	%100
7	M6	X	.104	.104	0	%100
8	M6	Z	-.18	-.18	0	%100
9	M7	X	.415	.415	0	%100
10	M7	Z	-.719	-.719	0	%100
11	M6A	X	.366	.366	0	%100
12	M6A	Z	-.634	-.634	0	%100
13	M7A	X	.366	.366	0	%100
14	M7A	Z	-.634	-.634	0	%100
15	MP1A	X	.232	.232	0	%100
16	MP1A	Z	-.402	-.402	0	%100
17	M23A	X	.366	.366	0	%100
18	M23A	Z	-.634	-.634	0	%100
19	M24	X	.366	.366	0	%100
20	M24	Z	-.634	-.634	0	%100
21	M38	X	.07	.07	0	%100
22	M38	Z	-.121	-.121	0	%100
23	M39A	X	0	0	0	%100
24	M39A	Z	0	0	0	%100
25	M40	X	0	0	0	%100
26	M40	Z	0	0	0	%100
27	M54	X	.279	.279	0	%100
28	M54	Z	-.483	-.483	0	%100
29	M55	X	.091	.091	0	%100
30	M55	Z	-.157	-.157	0	%100
31	M56	X	.363	.363	0	%100
32	M56	Z	-.63	-.63	0	%100
33	M42	X	.366	.366	0	%100
34	M42	Z	-.634	-.634	0	%100
35	M43A	X	.366	.366	0	%100
36	M43A	Z	-.634	-.634	0	%100
37	M44	X	0	0	0	%100
38	M44	Z	0	0	0	%100
39	MP2A	X	.232	.232	0	%100
40	MP2A	Z	-.402	-.402	0	%100
41	MP3A	X	.281	.281	0	%100
42	MP3A	Z	-.486	-.486	0	%100
43	MP4A	X	.232	.232	0	%100
44	MP4A	Z	-.402	-.402	0	%100
45	MP5A	X	.232	.232	0	%100
46	MP5A	Z	-.402	-.402	0	%100
47	M34	X	.589	.589	0	%100
48	M34	Z	-1.019	-1.019	0	%100
49	M37	X	.232	.232	0	%100
50	M37	Z	-.402	-.402	0	%100
51	M38A	X	.589	.589	0	%100
52	M38A	Z	-1.019	-1.019	0	%100

Member Distributed Loads (BLC 66 : Structure Wm (30 Deg)) (Continued)

	Member Label	Direction	Start Magnitude[lb/ft,...	End Magnitude[lb/ft,F...	Start Location[ft,%]	End Location[ft,%]
53	M41	X	.232	.232	0	%100
54	M41	Z	-.402	-.402	0	%100
55	M42A	X	.589	.589	0	%100
56	M42A	Z	-1.019	-1.019	0	%100
57	M45	X	.232	.232	0	%100
58	M45	Z	-.402	-.402	0	%100
59	MP1C	X	.232	.232	0	%100
60	MP1C	Z	-.402	-.402	0	%100
61	MP2C	X	.232	.232	0	%100
62	MP2C	Z	-.402	-.402	0	%100
63	MP3C	X	.281	.281	0	%100
64	MP3C	Z	-.486	-.486	0	%100
65	MP4C	X	.232	.232	0	%100
66	MP4C	Z	-.402	-.402	0	%100
67	MP5C	X	.232	.232	0	%100
68	MP5C	Z	-.402	-.402	0	%100
69	MP1B	X	.232	.232	0	%100
70	MP1B	Z	-.402	-.402	0	%100
71	MP2B	X	.232	.232	0	%100
72	MP2B	Z	-.402	-.402	0	%100
73	MP3B	X	.281	.281	0	%100
74	MP3B	Z	-.486	-.486	0	%100
75	MP4B	X	.232	.232	0	%100
76	MP4B	Z	-.402	-.402	0	%100
77	MP5B	X	.232	.232	0	%100
78	MP5B	Z	-.402	-.402	0	%100
79	M76	X	.211	.211	0	%100
80	M76	Z	-.365	-.365	0	%100
81	M77	X	.211	.211	0	%100
82	M77	Z	-.365	-.365	0	%100
83	M78	X	0	0	0	%100
84	M78	Z	0	0	0	%100
85	M95	X	.042	.042	0	%100
86	M95	Z	-.073	-.073	0	%100
87	M96	X	.325	.325	0	%100
88	M96	Z	-.563	-.563	0	%100
89	M97	X	.341	.341	0	%100
90	M97	Z	-.59	-.59	0	%100
91	M98	X	.038	.038	0	%100
92	M98	Z	-.066	-.066	0	%100
93	M99	X	.223	.223	0	%100
94	M99	Z	-.386	-.386	0	%100
95	M100	X	.238	.238	0	%100
96	M100	Z	-.412	-.412	0	%100
97	M107	X	.239	.239	0	%100
98	M107	Z	-.414	-.414	0	%100
99	M108	X	0	0	0	%100
100	M108	Z	0	0	0	%100
101	M109	X	.239	.239	0	%100
102	M109	Z	-.414	-.414	0	%100

Member Distributed Loads (BLC 67 : Structure Wm (60 Deg))

	Member Label	Direction	Start Magnitude[lb/ft,...	End Magnitude[lb/ft,F...	Start Location[ft,%]	End Location[ft,%]
1	M1	X	.362	.362	0	%100
2	M1	Z	-.209	-.209	0	%100
3	M2	X	.472	.472	0	%100
4	M2	Z	-.273	-.273	0	%100
5	M5	X	.539	.539	0	%100
6	M5	Z	-.311	-.311	0	%100
7	M6	X	0	0	0	%100
8	M6	Z	0	0	0	%100
9	M7	X	.539	.539	0	%100
10	M7	Z	-.311	-.311	0	%100
11	M6A	X	.211	.211	0	%100
12	M6A	Z	-.122	-.122	0	%100
13	M7A	X	.211	.211	0	%100
14	M7A	Z	-.122	-.122	0	%100
15	MP1A	X	.402	.402	0	%100
16	MP1A	Z	-.232	-.232	0	%100
17	M23A	X	.846	.846	0	%100
18	M23A	Z	-.488	-.488	0	%100
19	M24	X	.846	.846	0	%100
20	M24	Z	-.488	-.488	0	%100
21	M38	X	0	0	0	%100
22	M38	Z	0	0	0	%100
23	M39A	X	.211	.211	0	%100
24	M39A	Z	-.122	-.122	0	%100
25	M40	X	.211	.211	0	%100
26	M40	Z	-.122	-.122	0	%100
27	M54	X	.362	.362	0	%100
28	M54	Z	-.209	-.209	0	%100
29	M55	X	0	0	0	%100
30	M55	Z	0	0	0	%100
31	M56	X	.472	.472	0	%100
32	M56	Z	-.273	-.273	0	%100
33	M42	X	.211	.211	0	%100
34	M42	Z	-.122	-.122	0	%100
35	M43A	X	.846	.846	0	%100
36	M43A	Z	-.488	-.488	0	%100
37	M44	X	.211	.211	0	%100
38	M44	Z	-.122	-.122	0	%100
39	MP2A	X	.402	.402	0	%100
40	MP2A	Z	-.232	-.232	0	%100
41	MP3A	X	.486	.486	0	%100
42	MP3A	Z	-.281	-.281	0	%100
43	MP4A	X	.402	.402	0	%100
44	MP4A	Z	-.232	-.232	0	%100
45	MP5A	X	.402	.402	0	%100
46	MP5A	Z	-.232	-.232	0	%100
47	M34	X	1.019	1.019	0	%100
48	M34	Z	-.589	-.589	0	%100
49	M37	X	.402	.402	0	%100
50	M37	Z	-.232	-.232	0	%100
51	M38A	X	1.019	1.019	0	%100
52	M38A	Z	-.589	-.589	0	%100

Member Distributed Loads (BLC 67 : Structure Wm (60 Deg)) (Continued)

	Member Label	Direction	Start Magnitude[lb/ft,...	End Magnitude[lb/ft,F...	Start Location[ft,%]	End Location[ft,%]
53	M41	X	.402	.402	0	%100
54	M41	Z	-.232	-.232	0	%100
55	M42A	X	1.019	1.019	0	%100
56	M42A	Z	-.589	-.589	0	%100
57	M45	X	.402	.402	0	%100
58	M45	Z	-.232	-.232	0	%100
59	MP1C	X	.402	.402	0	%100
60	MP1C	Z	-.232	-.232	0	%100
61	MP2C	X	.402	.402	0	%100
62	MP2C	Z	-.232	-.232	0	%100
63	MP3C	X	.486	.486	0	%100
64	MP3C	Z	-.281	-.281	0	%100
65	MP4C	X	.402	.402	0	%100
66	MP4C	Z	-.232	-.232	0	%100
67	MP5C	X	.402	.402	0	%100
68	MP5C	Z	-.232	-.232	0	%100
69	MP1B	X	.402	.402	0	%100
70	MP1B	Z	-.232	-.232	0	%100
71	MP2B	X	.402	.402	0	%100
72	MP2B	Z	-.232	-.232	0	%100
73	MP3B	X	.486	.486	0	%100
74	MP3B	Z	-.281	-.281	0	%100
75	MP4B	X	.402	.402	0	%100
76	MP4B	Z	-.232	-.232	0	%100
77	MP5B	X	.402	.402	0	%100
78	MP5B	Z	-.232	-.232	0	%100
79	M76	X	.122	.122	0	%100
80	M76	Z	-.07	-.07	0	%100
81	M77	X	.486	.486	0	%100
82	M77	Z	-.281	-.281	0	%100
83	M78	X	.122	.122	0	%100
84	M78	Z	-.07	-.07	0	%100
85	M95	X	.109	.109	0	%100
86	M95	Z	-.063	-.063	0	%100
87	M96	X	.628	.628	0	%100
88	M96	Z	-.362	-.362	0	%100
89	M97	X	.314	.314	0	%100
90	M97	Z	-.181	-.181	0	%100
91	M98	X	.282	.282	0	%100
92	M98	Z	-.163	-.163	0	%100
93	M99	X	.626	.626	0	%100
94	M99	Z	-.361	-.361	0	%100
95	M100	X	.131	.131	0	%100
96	M100	Z	-.075	-.075	0	%100
97	M107	X	.552	.552	0	%100
98	M107	Z	-.319	-.319	0	%100
99	M108	X	.138	.138	0	%100
100	M108	Z	-.08	-.08	0	%100
101	M109	X	.138	.138	0	%100
102	M109	Z	-.079	-.079	0	%100

Member Distributed Loads (BLC 68 : Structure Wm (90 Deg))

	Member Label	Direction	Start Magnitude[lb/ft,...	End Magnitude[lb/ft,F...	Start Location[ft,%]	End Location[ft,%]
1	M1	X	.558	.558	0	%100
2	M1	Z	0	0	0	%100
3	M2	X	.727	.727	0	%100
4	M2	Z	0	0	0	%100
5	M5	X	.83	.83	0	%100
6	M5	Z	0	0	0	%100
7	M6	X	.207	.207	0	%100
8	M6	Z	0	0	0	%100
9	M7	X	.207	.207	0	%100
10	M7	Z	0	0	0	%100
11	M6A	X	0	0	0	%100
12	M6A	Z	0	0	0	%100
13	M7A	X	0	0	0	%100
14	M7A	Z	0	0	0	%100
15	MP1A	X	.464	.464	0	%100
16	MP1A	Z	0	0	0	%100
17	M23A	X	.732	.732	0	%100
18	M23A	Z	0	0	0	%100
19	M24	X	.732	.732	0	%100
20	M24	Z	0	0	0	%100
21	M38	X	.14	.14	0	%100
22	M38	Z	0	0	0	%100
23	M39A	X	.732	.732	0	%100
24	M39A	Z	0	0	0	%100
25	M40	X	.732	.732	0	%100
26	M40	Z	0	0	0	%100
27	M54	X	.14	.14	0	%100
28	M54	Z	0	0	0	%100
29	M55	X	.182	.182	0	%100
30	M55	Z	0	0	0	%100
31	M56	X	.182	.182	0	%100
32	M56	Z	0	0	0	%100
33	M42	X	0	0	0	%100
34	M42	Z	0	0	0	%100
35	M43A	X	.732	.732	0	%100
36	M43A	Z	0	0	0	%100
37	M44	X	.732	.732	0	%100
38	M44	Z	0	0	0	%100
39	MP2A	X	.464	.464	0	%100
40	MP2A	Z	0	0	0	%100
41	MP3A	X	.561	.561	0	%100
42	MP3A	Z	0	0	0	%100
43	MP4A	X	.464	.464	0	%100
44	MP4A	Z	0	0	0	%100
45	MP5A	X	.464	.464	0	%100
46	MP5A	Z	0	0	0	%100
47	M34	X	1.177	1.177	0	%100
48	M34	Z	0	0	0	%100
49	M37	X	.464	.464	0	%100
50	M37	Z	0	0	0	%100
51	M38A	X	1.177	1.177	0	%100
52	M38A	Z	0	0	0	%100

Member Distributed Loads (BLC 68 : Structure Wm (90 Deg)) (Continued)

	Member Label	Direction	Start Magnitude[lb/ft,...	End Magnitude[lb/ft,F...	Start Location[ft,%]	End Location[ft,%]
53	M41	X	.464	.464	0	%100
54	M41	Z	0	0	0	%100
55	M42A	X	1.177	1.177	0	%100
56	M42A	Z	0	0	0	%100
57	M45	X	.464	.464	0	%100
58	M45	Z	0	0	0	%100
59	MP1C	X	.464	.464	0	%100
60	MP1C	Z	0	0	0	%100
61	MP2C	X	.464	.464	0	%100
62	MP2C	Z	0	0	0	%100
63	MP3C	X	.561	.561	0	%100
64	MP3C	Z	0	0	0	%100
65	MP4C	X	.464	.464	0	%100
66	MP4C	Z	0	0	0	%100
67	MP5C	X	.464	.464	0	%100
68	MP5C	Z	0	0	0	%100
69	MP1B	X	.464	.464	0	%100
70	MP1B	Z	0	0	0	%100
71	MP2B	X	.464	.464	0	%100
72	MP2B	Z	0	0	0	%100
73	MP3B	X	.561	.561	0	%100
74	MP3B	Z	0	0	0	%100
75	MP4B	X	.464	.464	0	%100
76	MP4B	Z	0	0	0	%100
77	MP5B	X	.464	.464	0	%100
78	MP5B	Z	0	0	0	%100
79	M76	X	0	0	0	%100
80	M76	Z	0	0	0	%100
81	M77	X	.421	.421	0	%100
82	M77	Z	0	0	0	%100
83	M78	X	.421	.421	0	%100
84	M78	Z	0	0	0	%100
85	M95	X	.445	.445	0	%100
86	M95	Z	0	0	0	%100
87	M96	X	.475	.475	0	%100
88	M96	Z	0	0	0	%100
89	M97	X	.085	.085	0	%100
90	M97	Z	0	0	0	%100
91	M98	X	.65	.65	0	%100
92	M98	Z	0	0	0	%100
93	M99	X	.681	.681	0	%100
94	M99	Z	0	0	0	%100
95	M100	X	.076	.076	0	%100
96	M100	Z	0	0	0	%100
97	M107	X	.477	.477	0	%100
98	M107	Z	0	0	0	%100
99	M108	X	.478	.478	0	%100
100	M108	Z	0	0	0	%100
101	M109	X	0	0	0	%100
102	M109	Z	0	0	0	%100

Member Distributed Loads (BLC 69 : Structure Wm (120 Deg))

	Member Label	Direction	Start Magnitude[lb/ft,...	End Magnitude[lb/ft,F...	Start Location[ft,%]	End Location[ft,%]
1	M1	X	.362	.362	0	%100
2	M1	Z	.209	.209	0	%100
3	M2	X	.472	.472	0	%100
4	M2	Z	.273	.273	0	%100
5	M5	X	.539	.539	0	%100
6	M5	Z	.311	.311	0	%100
7	M6	X	.539	.539	0	%100
8	M6	Z	.311	.311	0	%100
9	M7	X	0	0	0	%100
10	M7	Z	0	0	0	%100
11	M6A	X	.211	.211	0	%100
12	M6A	Z	.122	.122	0	%100
13	M7A	X	.211	.211	0	%100
14	M7A	Z	.122	.122	0	%100
15	MP1A	X	.402	.402	0	%100
16	MP1A	Z	.232	.232	0	%100
17	M23A	X	.211	.211	0	%100
18	M23A	Z	.122	.122	0	%100
19	M24	X	.211	.211	0	%100
20	M24	Z	.122	.122	0	%100
21	M38	X	.362	.362	0	%100
22	M38	Z	.209	.209	0	%100
23	M39A	X	.846	.846	0	%100
24	M39A	Z	.488	.488	0	%100
25	M40	X	.846	.846	0	%100
26	M40	Z	.488	.488	0	%100
27	M54	X	0	0	0	%100
28	M54	Z	0	0	0	%100
29	M55	X	.472	.472	0	%100
30	M55	Z	.273	.273	0	%100
31	M56	X	0	0	0	%100
32	M56	Z	0	0	0	%100
33	M42	X	.211	.211	0	%100
34	M42	Z	.122	.122	0	%100
35	M43A	X	.211	.211	0	%100
36	M43A	Z	.122	.122	0	%100
37	M44	X	.846	.846	0	%100
38	M44	Z	.488	.488	0	%100
39	MP2A	X	.402	.402	0	%100
40	MP2A	Z	.232	.232	0	%100
41	MP3A	X	.486	.486	0	%100
42	MP3A	Z	.281	.281	0	%100
43	MP4A	X	.402	.402	0	%100
44	MP4A	Z	.232	.232	0	%100
45	MP5A	X	.402	.402	0	%100
46	MP5A	Z	.232	.232	0	%100
47	M34	X	1.019	1.019	0	%100
48	M34	Z	.589	.589	0	%100
49	M37	X	.402	.402	0	%100
50	M37	Z	.232	.232	0	%100
51	M38A	X	1.019	1.019	0	%100
52	M38A	Z	.589	.589	0	%100

Member Distributed Loads (BLC 69 : Structure Wm (120 Deg)) (Continued)

	Member Label	Direction	Start Magnitude[lb/ft,...	End Magnitude[lb/ft,F...	Start Location[ft,%]	End Location[ft,%]
53	M41	X	.402	.402	0	%100
54	M41	Z	.232	.232	0	%100
55	M42A	X	1.019	1.019	0	%100
56	M42A	Z	.589	.589	0	%100
57	M45	X	.402	.402	0	%100
58	M45	Z	.232	.232	0	%100
59	MP1C	X	.402	.402	0	%100
60	MP1C	Z	.232	.232	0	%100
61	MP2C	X	.402	.402	0	%100
62	MP2C	Z	.232	.232	0	%100
63	MP3C	X	.486	.486	0	%100
64	MP3C	Z	.281	.281	0	%100
65	MP4C	X	.402	.402	0	%100
66	MP4C	Z	.232	.232	0	%100
67	MP5C	X	.402	.402	0	%100
68	MP5C	Z	.232	.232	0	%100
69	MP1B	X	.402	.402	0	%100
70	MP1B	Z	.232	.232	0	%100
71	MP2B	X	.402	.402	0	%100
72	MP2B	Z	.232	.232	0	%100
73	MP3B	X	.486	.486	0	%100
74	MP3B	Z	.281	.281	0	%100
75	MP4B	X	.402	.402	0	%100
76	MP4B	Z	.232	.232	0	%100
77	MP5B	X	.402	.402	0	%100
78	MP5B	Z	.232	.232	0	%100
79	M76	X	.122	.122	0	%100
80	M76	Z	.07	.07	0	%100
81	M77	X	.122	.122	0	%100
82	M77	Z	.07	.07	0	%100
83	M78	X	.486	.486	0	%100
84	M78	Z	.281	.281	0	%100
85	M95	X	.626	.626	0	%100
86	M95	Z	.361	.361	0	%100
87	M96	X	.131	.131	0	%100
88	M96	Z	.075	.075	0	%100
89	M97	X	.109	.109	0	%100
90	M97	Z	.063	.063	0	%100
91	M98	X	.628	.628	0	%100
92	M98	Z	.362	.362	0	%100
93	M99	X	.314	.314	0	%100
94	M99	Z	.181	.181	0	%100
95	M100	X	.282	.282	0	%100
96	M100	Z	.163	.163	0	%100
97	M107	X	.138	.138	0	%100
98	M107	Z	.079	.079	0	%100
99	M108	X	.552	.552	0	%100
100	M108	Z	.319	.319	0	%100
101	M109	X	.138	.138	0	%100
102	M109	Z	.08	.08	0	%100

Member Distributed Loads (BLC 70 : Structure Wm (150 Deg))

	Member Label	Direction	Start Magnitude[lb/ft,...	End Magnitude[lb/ft,F...	Start Location[ft,%]	End Location[ft,%]
1	M1	X	.07	.07	0	%100
2	M1	Z	.121	.121	0	%100
3	M2	X	.091	.091	0	%100
4	M2	Z	.157	.157	0	%100
5	M5	X	.104	.104	0	%100
6	M5	Z	.18	.18	0	%100
7	M6	X	.415	.415	0	%100
8	M6	Z	.719	.719	0	%100
9	M7	X	.104	.104	0	%100
10	M7	Z	.18	.18	0	%100
11	M6A	X	.366	.366	0	%100
12	M6A	Z	.634	.634	0	%100
13	M7A	X	.366	.366	0	%100
14	M7A	Z	.634	.634	0	%100
15	MP1A	X	.232	.232	0	%100
16	MP1A	Z	.402	.402	0	%100
17	M23A	X	0	0	0	%100
18	M23A	Z	0	0	0	%100
19	M24	X	0	0	0	%100
20	M24	Z	0	0	0	%100
21	M38	X	.279	.279	0	%100
22	M38	Z	.483	.483	0	%100
23	M39A	X	.366	.366	0	%100
24	M39A	Z	.634	.634	0	%100
25	M40	X	.366	.366	0	%100
26	M40	Z	.634	.634	0	%100
27	M54	X	.07	.07	0	%100
28	M54	Z	.121	.121	0	%100
29	M55	X	.363	.363	0	%100
30	M55	Z	.63	.63	0	%100
31	M56	X	.091	.091	0	%100
32	M56	Z	.157	.157	0	%100
33	M42	X	.366	.366	0	%100
34	M42	Z	.634	.634	0	%100
35	M43A	X	0	0	0	%100
36	M43A	Z	0	0	0	%100
37	M44	X	.366	.366	0	%100
38	M44	Z	.634	.634	0	%100
39	MP2A	X	.232	.232	0	%100
40	MP2A	Z	.402	.402	0	%100
41	MP3A	X	.281	.281	0	%100
42	MP3A	Z	.486	.486	0	%100
43	MP4A	X	.232	.232	0	%100
44	MP4A	Z	.402	.402	0	%100
45	MP5A	X	.232	.232	0	%100
46	MP5A	Z	.402	.402	0	%100
47	M34	X	.589	.589	0	%100
48	M34	Z	1.019	1.019	0	%100
49	M37	X	.232	.232	0	%100
50	M37	Z	.402	.402	0	%100
51	M38A	X	.589	.589	0	%100
52	M38A	Z	1.019	1.019	0	%100

Member Distributed Loads (BLC 70 : Structure Wm (150 Deg)) (Continued)

	Member Label	Direction	Start Magnitude[lb/ft,...	End Magnitude[lb/ft,F...	Start Location[ft,%]	End Location[ft,%]
53	M41	X	.232	.232	0	%100
54	M41	Z	.402	.402	0	%100
55	M42A	X	.589	.589	0	%100
56	M42A	Z	1.019	1.019	0	%100
57	M45	X	.232	.232	0	%100
58	M45	Z	.402	.402	0	%100
59	MP1C	X	.232	.232	0	%100
60	MP1C	Z	.402	.402	0	%100
61	MP2C	X	.232	.232	0	%100
62	MP2C	Z	.402	.402	0	%100
63	MP3C	X	.281	.281	0	%100
64	MP3C	Z	.486	.486	0	%100
65	MP4C	X	.232	.232	0	%100
66	MP4C	Z	.402	.402	0	%100
67	MP5C	X	.232	.232	0	%100
68	MP5C	Z	.402	.402	0	%100
69	MP1B	X	.232	.232	0	%100
70	MP1B	Z	.402	.402	0	%100
71	MP2B	X	.232	.232	0	%100
72	MP2B	Z	.402	.402	0	%100
73	MP3B	X	.281	.281	0	%100
74	MP3B	Z	.486	.486	0	%100
75	MP4B	X	.232	.232	0	%100
76	MP4B	Z	.402	.402	0	%100
77	MP5B	X	.232	.232	0	%100
78	MP5B	Z	.402	.402	0	%100
79	M76	X	.211	.211	0	%100
80	M76	Z	.365	.365	0	%100
81	M77	X	0	0	0	%100
82	M77	Z	0	0	0	%100
83	M78	X	.211	.211	0	%100
84	M78	Z	.365	.365	0	%100
85	M95	X	.341	.341	0	%100
86	M95	Z	.59	.59	0	%100
87	M96	X	.038	.038	0	%100
88	M96	Z	.066	.066	0	%100
89	M97	X	.223	.223	0	%100
90	M97	Z	.386	.386	0	%100
91	M98	X	.238	.238	0	%100
92	M98	Z	.412	.412	0	%100
93	M99	X	.042	.042	0	%100
94	M99	Z	.073	.073	0	%100
95	M100	X	.325	.325	0	%100
96	M100	Z	.563	.563	0	%100
97	M107	X	0	0	0	%100
98	M107	Z	0	0	0	%100
99	M108	X	.239	.239	0	%100
100	M108	Z	.414	.414	0	%100
101	M109	X	.239	.239	0	%100
102	M109	Z	.414	.414	0	%100

Member Distributed Loads (BLC 71 : Structure Wm (180 Deg))

	Member Label	Direction	Start Magnitude[lb/ft,...	End Magnitude[lb/ft,F...	Start Location[ft,%]	End Location[ft,%]
1	M1	X	0	0	0	%100
2	M1	Z	0	0	0	%100
3	M2	X	0	0	0	%100
4	M2	Z	0	0	0	%100
5	M5	X	0	0	0	%100
6	M5	Z	0	0	0	%100
7	M6	X	0	0	0	%100
8	M6	Z	.622	.622	0	%100
9	M7	X	0	0	0	%100
10	M7	Z	.622	.622	0	%100
11	M6A	X	0	0	0	%100
12	M6A	Z	.976	.976	0	%100
13	M7A	X	0	0	0	%100
14	M7A	Z	.976	.976	0	%100
15	MP1A	X	0	0	0	%100
16	MP1A	Z	.464	.464	0	%100
17	M23A	X	0	0	0	%100
18	M23A	Z	.244	.244	0	%100
19	M24	X	0	0	0	%100
20	M24	Z	.244	.244	0	%100
21	M38	X	0	0	0	%100
22	M38	Z	.419	.419	0	%100
23	M39A	X	0	0	0	%100
24	M39A	Z	.244	.244	0	%100
25	M40	X	0	0	0	%100
26	M40	Z	.244	.244	0	%100
27	M54	X	0	0	0	%100
28	M54	Z	.419	.419	0	%100
29	M55	X	0	0	0	%100
30	M55	Z	.545	.545	0	%100
31	M56	X	0	0	0	%100
32	M56	Z	.545	.545	0	%100
33	M42	X	0	0	0	%100
34	M42	Z	.976	.976	0	%100
35	M43A	X	0	0	0	%100
36	M43A	Z	.244	.244	0	%100
37	M44	X	0	0	0	%100
38	M44	Z	.244	.244	0	%100
39	MP2A	X	0	0	0	%100
40	MP2A	Z	.464	.464	0	%100
41	MP3A	X	0	0	0	%100
42	MP3A	Z	.561	.561	0	%100
43	MP4A	X	0	0	0	%100
44	MP4A	Z	.464	.464	0	%100
45	MP5A	X	0	0	0	%100
46	MP5A	Z	.464	.464	0	%100
47	M34	X	0	0	0	%100
48	M34	Z	1.177	1.177	0	%100
49	M37	X	0	0	0	%100
50	M37	Z	.464	.464	0	%100
51	M38A	X	0	0	0	%100
52	M38A	Z	1.177	1.177	0	%100

Member Distributed Loads (BLC 71 : Structure Wm (180 Deg)) (Continued)

	Member Label	Direction	Start Magnitude[lb/ft,...	End Magnitude[lb/ft,F...	Start Location[ft,%]	End Location[ft,%]
53	M41	X	0	0	0	%100
54	M41	Z	.464	.464	0	%100
55	M42A	X	0	0	0	%100
56	M42A	Z	1.177	1.177	0	%100
57	M45	X	0	0	0	%100
58	M45	Z	.464	.464	0	%100
59	MP1C	X	0	0	0	%100
60	MP1C	Z	.464	.464	0	%100
61	MP2C	X	0	0	0	%100
62	MP2C	Z	.464	.464	0	%100
63	MP3C	X	0	0	0	%100
64	MP3C	Z	.561	.561	0	%100
65	MP4C	X	0	0	0	%100
66	MP4C	Z	.464	.464	0	%100
67	MP5C	X	0	0	0	%100
68	MP5C	Z	.464	.464	0	%100
69	MP1B	X	0	0	0	%100
70	MP1B	Z	.464	.464	0	%100
71	MP2B	X	0	0	0	%100
72	MP2B	Z	.464	.464	0	%100
73	MP3B	X	0	0	0	%100
74	MP3B	Z	.561	.561	0	%100
75	MP4B	X	0	0	0	%100
76	MP4B	Z	.464	.464	0	%100
77	MP5B	X	0	0	0	%100
78	MP5B	Z	.464	.464	0	%100
79	M76	X	0	0	0	%100
80	M76	Z	.561	.561	0	%100
81	M77	X	0	0	0	%100
82	M77	Z	.14	.14	0	%100
83	M78	X	0	0	0	%100
84	M78	Z	.14	.14	0	%100
85	M95	X	0	0	0	%100
86	M95	Z	.362	.362	0	%100
87	M96	X	0	0	0	%100
88	M96	Z	.325	.325	0	%100
89	M97	X	0	0	0	%100
90	M97	Z	.723	.723	0	%100
91	M98	X	0	0	0	%100
92	M98	Z	.151	.151	0	%100
93	M99	X	0	0	0	%100
94	M99	Z	.126	.126	0	%100
95	M100	X	0	0	0	%100
96	M100	Z	.725	.725	0	%100
97	M107	X	0	0	0	%100
98	M107	Z	.16	.16	0	%100
99	M108	X	0	0	0	%100
100	M108	Z	.159	.159	0	%100
101	M109	X	0	0	0	%100
102	M109	Z	.637	.637	0	%100

Member Distributed Loads (BLC 72 : Structure Wm (210 Deg))

	Member Label	Direction	Start Magnitude[lb/ft,...	End Magnitude[lb/ft,F...	Start Location[ft,%]	End Location[ft,%]
1	M1	X	-.07	-.07	0	%100
2	M1	Z	.121	.121	0	%100
3	M2	X	-.091	-.091	0	%100
4	M2	Z	.157	.157	0	%100
5	M5	X	-.104	-.104	0	%100
6	M5	Z	.18	.18	0	%100
7	M6	X	-.104	-.104	0	%100
8	M6	Z	.18	.18	0	%100
9	M7	X	-.415	-.415	0	%100
10	M7	Z	.719	.719	0	%100
11	M6A	X	-.366	-.366	0	%100
12	M6A	Z	.634	.634	0	%100
13	M7A	X	-.366	-.366	0	%100
14	M7A	Z	.634	.634	0	%100
15	MP1A	X	-.232	-.232	0	%100
16	MP1A	Z	.402	.402	0	%100
17	M23A	X	-.366	-.366	0	%100
18	M23A	Z	.634	.634	0	%100
19	M24	X	-.366	-.366	0	%100
20	M24	Z	.634	.634	0	%100
21	M38	X	-.07	-.07	0	%100
22	M38	Z	.121	.121	0	%100
23	M39A	X	0	0	0	%100
24	M39A	Z	0	0	0	%100
25	M40	X	0	0	0	%100
26	M40	Z	0	0	0	%100
27	M54	X	-.279	-.279	0	%100
28	M54	Z	.483	.483	0	%100
29	M55	X	-.091	-.091	0	%100
30	M55	Z	.157	.157	0	%100
31	M56	X	-.363	-.363	0	%100
32	M56	Z	.63	.63	0	%100
33	M42	X	-.366	-.366	0	%100
34	M42	Z	.634	.634	0	%100
35	M43A	X	-.366	-.366	0	%100
36	M43A	Z	.634	.634	0	%100
37	M44	X	0	0	0	%100
38	M44	Z	0	0	0	%100
39	MP2A	X	-.232	-.232	0	%100
40	MP2A	Z	.402	.402	0	%100
41	MP3A	X	-.281	-.281	0	%100
42	MP3A	Z	.486	.486	0	%100
43	MP4A	X	-.232	-.232	0	%100
44	MP4A	Z	.402	.402	0	%100
45	MP5A	X	-.232	-.232	0	%100
46	MP5A	Z	.402	.402	0	%100
47	M34	X	-.589	-.589	0	%100
48	M34	Z	1.019	1.019	0	%100
49	M37	X	-.232	-.232	0	%100
50	M37	Z	.402	.402	0	%100
51	M38A	X	-.589	-.589	0	%100
52	M38A	Z	1.019	1.019	0	%100

Member Distributed Loads (BLC 72 : Structure Wm (210 Deg)) (Continued)

	Member Label	Direction	Start Magnitude[lb/ft,...	End Magnitude[lb/ft,F...	Start Location[ft,%]	End Location[ft,%]
53	M41	X	-.232	-.232	0	%100
54	M41	Z	.402	.402	0	%100
55	M42A	X	-.589	-.589	0	%100
56	M42A	Z	1.019	1.019	0	%100
57	M45	X	-.232	-.232	0	%100
58	M45	Z	.402	.402	0	%100
59	MP1C	X	-.232	-.232	0	%100
60	MP1C	Z	.402	.402	0	%100
61	MP2C	X	-.232	-.232	0	%100
62	MP2C	Z	.402	.402	0	%100
63	MP3C	X	-.281	-.281	0	%100
64	MP3C	Z	.486	.486	0	%100
65	MP4C	X	-.232	-.232	0	%100
66	MP4C	Z	.402	.402	0	%100
67	MP5C	X	-.232	-.232	0	%100
68	MP5C	Z	.402	.402	0	%100
69	MP1B	X	-.232	-.232	0	%100
70	MP1B	Z	.402	.402	0	%100
71	MP2B	X	-.232	-.232	0	%100
72	MP2B	Z	.402	.402	0	%100
73	MP3B	X	-.281	-.281	0	%100
74	MP3B	Z	.486	.486	0	%100
75	MP4B	X	-.232	-.232	0	%100
76	MP4B	Z	.402	.402	0	%100
77	MP5B	X	-.232	-.232	0	%100
78	MP5B	Z	.402	.402	0	%100
79	M76	X	-.211	-.211	0	%100
80	M76	Z	.365	.365	0	%100
81	M77	X	-.211	-.211	0	%100
82	M77	Z	.365	.365	0	%100
83	M78	X	0	0	0	%100
84	M78	Z	0	0	0	%100
85	M95	X	-.042	-.042	0	%100
86	M95	Z	.073	.073	0	%100
87	M96	X	-.325	-.325	0	%100
88	M96	Z	.563	.563	0	%100
89	M97	X	-.341	-.341	0	%100
90	M97	Z	.59	.59	0	%100
91	M98	X	-.038	-.038	0	%100
92	M98	Z	.066	.066	0	%100
93	M99	X	-.223	-.223	0	%100
94	M99	Z	.386	.386	0	%100
95	M100	X	-.238	-.238	0	%100
96	M100	Z	.412	.412	0	%100
97	M107	X	-.239	-.239	0	%100
98	M107	Z	.414	.414	0	%100
99	M108	X	0	0	0	%100
100	M108	Z	0	0	0	%100
101	M109	X	-.239	-.239	0	%100
102	M109	Z	.414	.414	0	%100

Member Distributed Loads (BLC 73 : Structure Wm (240 Deg))

	Member Label	Direction	Start Magnitude[lb/ft,...	End Magnitude[lb/ft,F...	Start Location[ft,%]	End Location[ft,%]
1	M1	X	-.362	-.362	0	%100
2	M1	Z	.209	.209	0	%100
3	M2	X	-.472	-.472	0	%100
4	M2	Z	.273	.273	0	%100
5	M5	X	-.539	-.539	0	%100
6	M5	Z	.311	.311	0	%100
7	M6	X	0	0	0	%100
8	M6	Z	0	0	0	%100
9	M7	X	-.539	-.539	0	%100
10	M7	Z	.311	.311	0	%100
11	M6A	X	-.211	-.211	0	%100
12	M6A	Z	.122	.122	0	%100
13	M7A	X	-.211	-.211	0	%100
14	M7A	Z	.122	.122	0	%100
15	MP1A	X	-.402	-.402	0	%100
16	MP1A	Z	.232	.232	0	%100
17	M23A	X	-.846	-.846	0	%100
18	M23A	Z	.488	.488	0	%100
19	M24	X	-.846	-.846	0	%100
20	M24	Z	.488	.488	0	%100
21	M38	X	0	0	0	%100
22	M38	Z	0	0	0	%100
23	M39A	X	-.211	-.211	0	%100
24	M39A	Z	.122	.122	0	%100
25	M40	X	-.211	-.211	0	%100
26	M40	Z	.122	.122	0	%100
27	M54	X	-.362	-.362	0	%100
28	M54	Z	.209	.209	0	%100
29	M55	X	0	0	0	%100
30	M55	Z	0	0	0	%100
31	M56	X	-.472	-.472	0	%100
32	M56	Z	.273	.273	0	%100
33	M42	X	-.211	-.211	0	%100
34	M42	Z	.122	.122	0	%100
35	M43A	X	-.846	-.846	0	%100
36	M43A	Z	.488	.488	0	%100
37	M44	X	-.211	-.211	0	%100
38	M44	Z	.122	.122	0	%100
39	MP2A	X	-.402	-.402	0	%100
40	MP2A	Z	.232	.232	0	%100
41	MP3A	X	-.486	-.486	0	%100
42	MP3A	Z	.281	.281	0	%100
43	MP4A	X	-.402	-.402	0	%100
44	MP4A	Z	.232	.232	0	%100
45	MP5A	X	-.402	-.402	0	%100
46	MP5A	Z	.232	.232	0	%100
47	M34	X	-1.019	-1.019	0	%100
48	M34	Z	.589	.589	0	%100
49	M37	X	-.402	-.402	0	%100
50	M37	Z	.232	.232	0	%100
51	M38A	X	-1.019	-1.019	0	%100
52	M38A	Z	.589	.589	0	%100

Member Distributed Loads (BLC 73 : Structure Wm (240 Deg)) (Continued)

	Member Label	Direction	Start Magnitude[lb/ft,...	End Magnitude[lb/ft,F...	Start Location[ft,%]	End Location[ft,%]
53	M41	X	-.402	-.402	0	%100
54	M41	Z	.232	.232	0	%100
55	M42A	X	-1.019	-1.019	0	%100
56	M42A	Z	.589	.589	0	%100
57	M45	X	-.402	-.402	0	%100
58	M45	Z	.232	.232	0	%100
59	MP1C	X	-.402	-.402	0	%100
60	MP1C	Z	.232	.232	0	%100
61	MP2C	X	-.402	-.402	0	%100
62	MP2C	Z	.232	.232	0	%100
63	MP3C	X	-.486	-.486	0	%100
64	MP3C	Z	.281	.281	0	%100
65	MP4C	X	-.402	-.402	0	%100
66	MP4C	Z	.232	.232	0	%100
67	MP5C	X	-.402	-.402	0	%100
68	MP5C	Z	.232	.232	0	%100
69	MP1B	X	-.402	-.402	0	%100
70	MP1B	Z	.232	.232	0	%100
71	MP2B	X	-.402	-.402	0	%100
72	MP2B	Z	.232	.232	0	%100
73	MP3B	X	-.486	-.486	0	%100
74	MP3B	Z	.281	.281	0	%100
75	MP4B	X	-.402	-.402	0	%100
76	MP4B	Z	.232	.232	0	%100
77	MP5B	X	-.402	-.402	0	%100
78	MP5B	Z	.232	.232	0	%100
79	M76	X	-.122	-.122	0	%100
80	M76	Z	.07	.07	0	%100
81	M77	X	-.486	-.486	0	%100
82	M77	Z	.281	.281	0	%100
83	M78	X	-.122	-.122	0	%100
84	M78	Z	.07	.07	0	%100
85	M95	X	-.109	-.109	0	%100
86	M95	Z	.063	.063	0	%100
87	M96	X	-.628	-.628	0	%100
88	M96	Z	.362	.362	0	%100
89	M97	X	-.314	-.314	0	%100
90	M97	Z	.181	.181	0	%100
91	M98	X	-.282	-.282	0	%100
92	M98	Z	.163	.163	0	%100
93	M99	X	-.626	-.626	0	%100
94	M99	Z	.361	.361	0	%100
95	M100	X	-.131	-.131	0	%100
96	M100	Z	.075	.075	0	%100
97	M107	X	-.552	-.552	0	%100
98	M107	Z	.319	.319	0	%100
99	M108	X	-.138	-.138	0	%100
100	M108	Z	.08	.08	0	%100
101	M109	X	-.138	-.138	0	%100
102	M109	Z	.079	.079	0	%100

Member Distributed Loads (BLC 74 : Structure Wm (270 Deg))

	Member Label	Direction	Start Magnitude[lb/ft,...	End Magnitude[lb/ft,F...	Start Location[ft,%]	End Location[ft,%]
1	M1	X	-.558	-.558	0	%100
2	M1	Z	0	0	0	%100
3	M2	X	-.727	-.727	0	%100
4	M2	Z	0	0	0	%100
5	M5	X	-.83	-.83	0	%100
6	M5	Z	0	0	0	%100
7	M6	X	-.207	-.207	0	%100
8	M6	Z	0	0	0	%100
9	M7	X	-.207	-.207	0	%100
10	M7	Z	0	0	0	%100
11	M6A	X	0	0	0	%100
12	M6A	Z	0	0	0	%100
13	M7A	X	0	0	0	%100
14	M7A	Z	0	0	0	%100
15	MP1A	X	-.464	-.464	0	%100
16	MP1A	Z	0	0	0	%100
17	M23A	X	-.732	-.732	0	%100
18	M23A	Z	0	0	0	%100
19	M24	X	-.732	-.732	0	%100
20	M24	Z	0	0	0	%100
21	M38	X	-.14	-.14	0	%100
22	M38	Z	0	0	0	%100
23	M39A	X	-.732	-.732	0	%100
24	M39A	Z	0	0	0	%100
25	M40	X	-.732	-.732	0	%100
26	M40	Z	0	0	0	%100
27	M54	X	-.14	-.14	0	%100
28	M54	Z	0	0	0	%100
29	M55	X	-.182	-.182	0	%100
30	M55	Z	0	0	0	%100
31	M56	X	-.182	-.182	0	%100
32	M56	Z	0	0	0	%100
33	M42	X	0	0	0	%100
34	M42	Z	0	0	0	%100
35	M43A	X	-.732	-.732	0	%100
36	M43A	Z	0	0	0	%100
37	M44	X	-.732	-.732	0	%100
38	M44	Z	0	0	0	%100
39	MP2A	X	-.464	-.464	0	%100
40	MP2A	Z	0	0	0	%100
41	MP3A	X	-.561	-.561	0	%100
42	MP3A	Z	0	0	0	%100
43	MP4A	X	-.464	-.464	0	%100
44	MP4A	Z	0	0	0	%100
45	MP5A	X	-.464	-.464	0	%100
46	MP5A	Z	0	0	0	%100
47	M34	X	-1.177	-1.177	0	%100
48	M34	Z	0	0	0	%100
49	M37	X	-.464	-.464	0	%100
50	M37	Z	0	0	0	%100
51	M38A	X	-1.177	-1.177	0	%100
52	M38A	Z	0	0	0	%100

Member Distributed Loads (BLC 74 : Structure Wm (270 Deg)) (Continued)

	Member Label	Direction	Start Magnitude[lb/ft,...	End Magnitude[lb/ft,F...	Start Location[ft,%]	End Location[ft,%]
53	M41	X	-.464	-.464	0	%100
54	M41	Z	0	0	0	%100
55	M42A	X	-1.177	-1.177	0	%100
56	M42A	Z	0	0	0	%100
57	M45	X	-.464	-.464	0	%100
58	M45	Z	0	0	0	%100
59	MP1C	X	-.464	-.464	0	%100
60	MP1C	Z	0	0	0	%100
61	MP2C	X	-.464	-.464	0	%100
62	MP2C	Z	0	0	0	%100
63	MP3C	X	-.561	-.561	0	%100
64	MP3C	Z	0	0	0	%100
65	MP4C	X	-.464	-.464	0	%100
66	MP4C	Z	0	0	0	%100
67	MP5C	X	-.464	-.464	0	%100
68	MP5C	Z	0	0	0	%100
69	MP1B	X	-.464	-.464	0	%100
70	MP1B	Z	0	0	0	%100
71	MP2B	X	-.464	-.464	0	%100
72	MP2B	Z	0	0	0	%100
73	MP3B	X	-.561	-.561	0	%100
74	MP3B	Z	0	0	0	%100
75	MP4B	X	-.464	-.464	0	%100
76	MP4B	Z	0	0	0	%100
77	MP5B	X	-.464	-.464	0	%100
78	MP5B	Z	0	0	0	%100
79	M76	X	0	0	0	%100
80	M76	Z	0	0	0	%100
81	M77	X	-.421	-.421	0	%100
82	M77	Z	0	0	0	%100
83	M78	X	-.421	-.421	0	%100
84	M78	Z	0	0	0	%100
85	M95	X	-.445	-.445	0	%100
86	M95	Z	0	0	0	%100
87	M96	X	-.475	-.475	0	%100
88	M96	Z	0	0	0	%100
89	M97	X	-.085	-.085	0	%100
90	M97	Z	0	0	0	%100
91	M98	X	-.65	-.65	0	%100
92	M98	Z	0	0	0	%100
93	M99	X	-.681	-.681	0	%100
94	M99	Z	0	0	0	%100
95	M100	X	-.076	-.076	0	%100
96	M100	Z	0	0	0	%100
97	M107	X	-.477	-.477	0	%100
98	M107	Z	0	0	0	%100
99	M108	X	-.478	-.478	0	%100
100	M108	Z	0	0	0	%100
101	M109	X	0	0	0	%100
102	M109	Z	0	0	0	%100

Member Distributed Loads (BLC 75 : Structure Wm (300 Deg))

	Member Label	Direction	Start Magnitude[lb/ft,...	End Magnitude[lb/ft,F...	Start Location[ft,%]	End Location[ft,%]
1	M1	X	-.362	-.362	0	%100
2	M1	Z	-.209	-.209	0	%100
3	M2	X	-.472	-.472	0	%100
4	M2	Z	-.273	-.273	0	%100
5	M5	X	-.539	-.539	0	%100
6	M5	Z	-.311	-.311	0	%100
7	M6	X	-.539	-.539	0	%100
8	M6	Z	-.311	-.311	0	%100
9	M7	X	0	0	0	%100
10	M7	Z	0	0	0	%100
11	M6A	X	-.211	-.211	0	%100
12	M6A	Z	-.122	-.122	0	%100
13	M7A	X	-.211	-.211	0	%100
14	M7A	Z	-.122	-.122	0	%100
15	MP1A	X	-.402	-.402	0	%100
16	MP1A	Z	-.232	-.232	0	%100
17	M23A	X	-.211	-.211	0	%100
18	M23A	Z	-.122	-.122	0	%100
19	M24	X	-.211	-.211	0	%100
20	M24	Z	-.122	-.122	0	%100
21	M38	X	-.362	-.362	0	%100
22	M38	Z	-.209	-.209	0	%100
23	M39A	X	-.846	-.846	0	%100
24	M39A	Z	-.488	-.488	0	%100
25	M40	X	-.846	-.846	0	%100
26	M40	Z	-.488	-.488	0	%100
27	M54	X	0	0	0	%100
28	M54	Z	0	0	0	%100
29	M55	X	-.472	-.472	0	%100
30	M55	Z	-.273	-.273	0	%100
31	M56	X	0	0	0	%100
32	M56	Z	0	0	0	%100
33	M42	X	-.211	-.211	0	%100
34	M42	Z	-.122	-.122	0	%100
35	M43A	X	-.211	-.211	0	%100
36	M43A	Z	-.122	-.122	0	%100
37	M44	X	-.846	-.846	0	%100
38	M44	Z	-.488	-.488	0	%100
39	MP2A	X	-.402	-.402	0	%100
40	MP2A	Z	-.232	-.232	0	%100
41	MP3A	X	-.486	-.486	0	%100
42	MP3A	Z	-.281	-.281	0	%100
43	MP4A	X	-.402	-.402	0	%100
44	MP4A	Z	-.232	-.232	0	%100
45	MP5A	X	-.402	-.402	0	%100
46	MP5A	Z	-.232	-.232	0	%100
47	M34	X	-1.019	-1.019	0	%100
48	M34	Z	-.589	-.589	0	%100
49	M37	X	-.402	-.402	0	%100
50	M37	Z	-.232	-.232	0	%100
51	M38A	X	-1.019	-1.019	0	%100
52	M38A	Z	-.589	-.589	0	%100

Member Distributed Loads (BLC 75 : Structure Wm (300 Deg)) (Continued)

	Member Label	Direction	Start Magnitude[lb/ft,...	End Magnitude[lb/ft,F...	Start Location[ft,%]	End Location[ft,%]
53	M41	X	-.402	-.402	0	%100
54	M41	Z	-.232	-.232	0	%100
55	M42A	X	-1.019	-1.019	0	%100
56	M42A	Z	-.589	-.589	0	%100
57	M45	X	-.402	-.402	0	%100
58	M45	Z	-.232	-.232	0	%100
59	MP1C	X	-.402	-.402	0	%100
60	MP1C	Z	-.232	-.232	0	%100
61	MP2C	X	-.402	-.402	0	%100
62	MP2C	Z	-.232	-.232	0	%100
63	MP3C	X	-.486	-.486	0	%100
64	MP3C	Z	-.281	-.281	0	%100
65	MP4C	X	-.402	-.402	0	%100
66	MP4C	Z	-.232	-.232	0	%100
67	MP5C	X	-.402	-.402	0	%100
68	MP5C	Z	-.232	-.232	0	%100
69	MP1B	X	-.402	-.402	0	%100
70	MP1B	Z	-.232	-.232	0	%100
71	MP2B	X	-.402	-.402	0	%100
72	MP2B	Z	-.232	-.232	0	%100
73	MP3B	X	-.486	-.486	0	%100
74	MP3B	Z	-.281	-.281	0	%100
75	MP4B	X	-.402	-.402	0	%100
76	MP4B	Z	-.232	-.232	0	%100
77	MP5B	X	-.402	-.402	0	%100
78	MP5B	Z	-.232	-.232	0	%100
79	M76	X	-.122	-.122	0	%100
80	M76	Z	-.07	-.07	0	%100
81	M77	X	-.122	-.122	0	%100
82	M77	Z	-.07	-.07	0	%100
83	M78	X	-.486	-.486	0	%100
84	M78	Z	-.281	-.281	0	%100
85	M95	X	-.626	-.626	0	%100
86	M95	Z	-.361	-.361	0	%100
87	M96	X	-.131	-.131	0	%100
88	M96	Z	-.075	-.075	0	%100
89	M97	X	-.109	-.109	0	%100
90	M97	Z	-.063	-.063	0	%100
91	M98	X	-.628	-.628	0	%100
92	M98	Z	-.362	-.362	0	%100
93	M99	X	-.314	-.314	0	%100
94	M99	Z	-.181	-.181	0	%100
95	M100	X	-.282	-.282	0	%100
96	M100	Z	-.163	-.163	0	%100
97	M107	X	-.138	-.138	0	%100
98	M107	Z	-.079	-.079	0	%100
99	M108	X	-.552	-.552	0	%100
100	M108	Z	-.319	-.319	0	%100
101	M109	X	-.138	-.138	0	%100
102	M109	Z	-.08	-.08	0	%100

Member Distributed Loads (BLC 76 : Structure Wm (330 Deg))

	Member Label	Direction	Start Magnitude[lb/ft,...	End Magnitude[lb/ft,F...	Start Location[ft,%]	End Location[ft,%]
1	M1	X	-.07	-.07	0	%100
2	M1	Z	-.121	-.121	0	%100
3	M2	X	-.091	-.091	0	%100
4	M2	Z	-.157	-.157	0	%100
5	M5	X	-.104	-.104	0	%100
6	M5	Z	-.18	-.18	0	%100
7	M6	X	-.415	-.415	0	%100
8	M6	Z	-.719	-.719	0	%100
9	M7	X	-.104	-.104	0	%100
10	M7	Z	-.18	-.18	0	%100
11	M6A	X	-.366	-.366	0	%100
12	M6A	Z	-.634	-.634	0	%100
13	M7A	X	-.366	-.366	0	%100
14	M7A	Z	-.634	-.634	0	%100
15	MP1A	X	-.232	-.232	0	%100
16	MP1A	Z	-.402	-.402	0	%100
17	M23A	X	0	0	0	%100
18	M23A	Z	0	0	0	%100
19	M24	X	0	0	0	%100
20	M24	Z	0	0	0	%100
21	M38	X	-.279	-.279	0	%100
22	M38	Z	-.483	-.483	0	%100
23	M39A	X	-.366	-.366	0	%100
24	M39A	Z	-.634	-.634	0	%100
25	M40	X	-.366	-.366	0	%100
26	M40	Z	-.634	-.634	0	%100
27	M54	X	-.07	-.07	0	%100
28	M54	Z	-.121	-.121	0	%100
29	M55	X	-.363	-.363	0	%100
30	M55	Z	-.63	-.63	0	%100
31	M56	X	-.091	-.091	0	%100
32	M56	Z	-.157	-.157	0	%100
33	M42	X	-.366	-.366	0	%100
34	M42	Z	-.634	-.634	0	%100
35	M43A	X	0	0	0	%100
36	M43A	Z	0	0	0	%100
37	M44	X	-.366	-.366	0	%100
38	M44	Z	-.634	-.634	0	%100
39	MP2A	X	-.232	-.232	0	%100
40	MP2A	Z	-.402	-.402	0	%100
41	MP3A	X	-.281	-.281	0	%100
42	MP3A	Z	-.486	-.486	0	%100
43	MP4A	X	-.232	-.232	0	%100
44	MP4A	Z	-.402	-.402	0	%100
45	MP5A	X	-.232	-.232	0	%100
46	MP5A	Z	-.402	-.402	0	%100
47	M34	X	-.589	-.589	0	%100
48	M34	Z	-1.019	-1.019	0	%100
49	M37	X	-.232	-.232	0	%100
50	M37	Z	-.402	-.402	0	%100
51	M38A	X	-.589	-.589	0	%100
52	M38A	Z	-1.019	-1.019	0	%100

Member Distributed Loads (BLC 76 : Structure Wm (330 Deg)) (Continued)

	Member Label	Direction	Start Magnitude[lb/ft,...	End Magnitude[lb/ft,F...	Start Location[ft,%]	End Location[ft,%]
53	M41	X	-.232	-.232	0	%100
54	M41	Z	-.402	-.402	0	%100
55	M42A	X	-.589	-.589	0	%100
56	M42A	Z	-1.019	-1.019	0	%100
57	M45	X	-.232	-.232	0	%100
58	M45	Z	-.402	-.402	0	%100
59	MP1C	X	-.232	-.232	0	%100
60	MP1C	Z	-.402	-.402	0	%100
61	MP2C	X	-.232	-.232	0	%100
62	MP2C	Z	-.402	-.402	0	%100
63	MP3C	X	-.281	-.281	0	%100
64	MP3C	Z	-.486	-.486	0	%100
65	MP4C	X	-.232	-.232	0	%100
66	MP4C	Z	-.402	-.402	0	%100
67	MP5C	X	-.232	-.232	0	%100
68	MP5C	Z	-.402	-.402	0	%100
69	MP1B	X	-.232	-.232	0	%100
70	MP1B	Z	-.402	-.402	0	%100
71	MP2B	X	-.232	-.232	0	%100
72	MP2B	Z	-.402	-.402	0	%100
73	MP3B	X	-.281	-.281	0	%100
74	MP3B	Z	-.486	-.486	0	%100
75	MP4B	X	-.232	-.232	0	%100
76	MP4B	Z	-.402	-.402	0	%100
77	MP5B	X	-.232	-.232	0	%100
78	MP5B	Z	-.402	-.402	0	%100
79	M76	X	-.211	-.211	0	%100
80	M76	Z	-.365	-.365	0	%100
81	M77	X	0	0	0	%100
82	M77	Z	0	0	0	%100
83	M78	X	-.211	-.211	0	%100
84	M78	Z	-.365	-.365	0	%100
85	M95	X	-.341	-.341	0	%100
86	M95	Z	-.59	-.59	0	%100
87	M96	X	-.038	-.038	0	%100
88	M96	Z	-.066	-.066	0	%100
89	M97	X	-.223	-.223	0	%100
90	M97	Z	-.386	-.386	0	%100
91	M98	X	-.238	-.238	0	%100
92	M98	Z	-.412	-.412	0	%100
93	M99	X	-.042	-.042	0	%100
94	M99	Z	-.073	-.073	0	%100
95	M100	X	-.325	-.325	0	%100
96	M100	Z	-.563	-.563	0	%100
97	M107	X	0	0	0	%100
98	M107	Z	0	0	0	%100
99	M108	X	-.239	-.239	0	%100
100	M108	Z	-.414	-.414	0	%100
101	M109	X	-.239	-.239	0	%100
102	M109	Z	-.414	-.414	0	%100

Member Distributed Loads (BLC 81 : BLC 39 Transient Area Loads)

	Member Label	Direction	Start Magnitude[lb/ft,...	End Magnitude[lb/ft,F...	Start Location[ft,%]	End Location[ft,%]
1	M2	Y	-9.581	-9.581	0	2
2	M6	Y	-1.09	-5.136	0	2
3	M6	Y	-5.136	-9.181	2	4
4	M7	Y	-1.09	-5.136	0	2
5	M7	Y	-5.136	-9.181	2	4
6	M6A	Y	-3.978	-3.978	.037	7.421
7	M7A	Y	-1.104	-2.754	0	2.394
8	M7A	Y	-2.754	-3.867	2.394	4.787
9	M7A	Y	-3.867	-4.104	4.787	7.181
10	M7A	Y	-4.104	-3.822	7.181	9.574
11	M7A	Y	-3.822	-2.792	9.574	11.968
12	M7A	Y	-2.792	-1.194	11.968	14.362
13	M5	Y	-1.09	-5.136	0	2
14	M5	Y	-5.136	-9.181	2	4
15	M23A	Y	-3.978	-3.978	.037	7.421
16	M24	Y	-1.104	-2.754	0	2.394
17	M24	Y	-2.754	-3.867	2.394	4.787
18	M24	Y	-3.867	-4.104	4.787	7.181
19	M24	Y	-4.104	-3.822	7.181	9.574
20	M24	Y	-3.822	-2.792	9.574	11.968
21	M24	Y	-2.792	-1.194	11.968	14.362
22	M55	Y	-9.581	-9.581	1.178e-7	2
23	M39A	Y	-3.978	-3.978	.037	7.421
24	M40	Y	-1.104	-2.754	0	2.394
25	M40	Y	-2.754	-3.867	2.394	4.787
26	M40	Y	-3.867	-4.104	4.787	7.181
27	M40	Y	-4.104	-3.822	7.181	9.574
28	M40	Y	-3.822	-2.792	9.574	11.968
29	M40	Y	-2.792	-1.194	11.968	14.362
30	M56	Y	-9.581	-9.581	0	2

Member Distributed Loads (BLC 82 : BLC 40 Transient Area Loads)

	Member Label	Direction	Start Magnitude[lb/ft,...	End Magnitude[lb/ft,F...	Start Location[ft,%]	End Location[ft,%]
1	M2	Y	-23.073	-23.073	0	2
2	M6	Y	-2.626	-12.367	0	2
3	M6	Y	-12.367	-22.109	2	4
4	M7	Y	-2.626	-12.367	0	2
5	M7	Y	-12.367	-22.109	2	4
6	M6A	Y	-9.579	-9.579	.037	7.421
7	M7A	Y	-2.658	-6.632	0	2.394
8	M7A	Y	-6.632	-9.312	2.394	4.787
9	M7A	Y	-9.312	-9.883	4.787	7.181
10	M7A	Y	-9.883	-9.205	7.181	9.574
11	M7A	Y	-9.205	-6.724	9.574	11.968
12	M7A	Y	-6.724	-2.876	11.968	14.362
13	M5	Y	-2.626	-12.367	0	2
14	M5	Y	-12.367	-22.109	2	4
15	M23A	Y	-9.579	-9.579	.037	7.421
16	M24	Y	-2.658	-6.632	0	2.394
17	M24	Y	-6.632	-9.312	2.394	4.787
18	M24	Y	-9.312	-9.883	4.787	7.181

Member Distributed Loads (BLC 82 : BLC 40 Transient Area Loads) (Continued)

	Member Label	Direction	Start Magnitude[lb/ft,...	End Magnitude[lb/ft,F...	Start Location[ft,%]	End Location[ft,%]
19	M24	Y	-9.883	-9.205	7.181	9.574
20	M24	Y	-9.205	-6.724	9.574	11.968
21	M24	Y	-6.724	-2.876	11.968	14.362
22	M55	Y	-23.073	-23.073	1.178e-7	2
23	M39A	Y	-9.579	-9.579	.037	7.421
24	M40	Y	-2.658	-6.632	0	2.394
25	M40	Y	-6.632	-9.312	2.394	4.787
26	M40	Y	-9.312	-9.883	4.787	7.181
27	M40	Y	-9.883	-9.205	7.181	9.574
28	M40	Y	-9.205	-6.724	9.574	11.968
29	M40	Y	-6.724	-2.876	11.968	14.362
30	M56	Y	-23.073	-23.073	0	2

Member Area Loads (BLC 39 : Structure D)

	Joint A	Joint B	Joint C	Joint D	Direction	Distribution	Magnitude[ksf]
1	N16	N15	N17	N18	Y	Two Way	-.005
2	N18	N17	N10	N14	Y	Two Way	-.005
3	N14	N10	N15	N16	Y	Two Way	-.005

Member Area Loads (BLC 40 : Structure Di)

	Joint A	Joint B	Joint C	Joint D	Direction	Distribution	Magnitude[ksf]
1	N16	N15	N17	N18	Y	Two Way	-.013
2	N18	N17	N10	N14	Y	Two Way	-.013
3	N14	N10	N15	N16	Y	Two Way	-.013

Envelope Joint Reactions

	Joint		X [lb]	LC	Y [lb]	LC	Z [lb]	LC	MX [k-ft]	LC	MY [k-ft]	LC	MZ [k-ft]	LC
1	N2	max	1106.318	11	2912.346	13	457.166	1	-2.195	7	1.088	8	.315	26
2		min	-1116.285	5	865.604	7	-258.365	7	-7.634	13	-1.105	2	-.108	50
3	N77	max	818.469	10	2846.251	21	990.798	1	3.838	21	1.094	8	6.37	21
4		min	-633.284	4	859.046	3	-1085.703	7	1.08	3	-1.111	2	1.888	3
5	N109	max	658.057	10	2908.598	17	933.764	12	3.657	17	1.064	4	-1.891	11
6		min	-812.69	4	862.844	11	-1056.435	6	1.093	11	-1.095	10	-6.677	17
7	N178	max	462.466	10	702.452	19	697.913	1	0	13	0	50	0	26
8		min	-430.055	4	-245.791	1	-1668.886	7	0	7	0	26	0	50
9	N179	max	571.673	9	761.804	15	978.511	2	0	2	0	27	0	3
10		min	-1586.497	15	-241.114	9	-514.706	8	0	32	0	22	0	21
11	N180	max	1443.797	11	702.736	23	934.724	12	0	11	0	11	0	17
12		min	-612.283	5	-239.729	5	-408.432	6	0	17	0	50	0	11
13	Totals:	max	4610.759	10	10340.364	24	4633.062	1						
14		min	-4610.765	4	3642.766	6	-4633.049	7						

Envelope AISC 15th(360-16): LRFD Steel Code Checks

	Member	Shape	Code C...	Loc[ft]	LC	Shear ...	Loc[ft]	Dir	LC	phi*Pnc [lb]	phi*Pnt [lb]	phi*Mn y-...	phi*Mn z-...	Cb	Eqn
1	M1	HSS4X4X4	.493	0	14	.083	0	y	14	138875.2...	139518	16.181	16.181	1....	H1-1b
2	M2	HSS4.5X4.5X3	.289	0	16	.080	0	y	13	119784.8...	121302	16.25	16.25	1....	H1-1b
3	M5	LL3x3x4x0	.194	0	21	.012	4	y	21	76288.155	93312	6.48	4.357	1....	H1-1b

Envelope AISC 15th(360-16): LRFD Steel Code Checks (Continued)

	Member	Shape	Code C...	Loc[ft]	LC	Shear ...	Loc[ft]	Dir	LC	phi*Pnc [lb]	phi*Pnt [lb]	phi*Mn y-...	phi*Mn z-...	Cb	Eqn
4	M6	LL3x3x4x0	.182	0	17	.012	4	y	17	76288.155	93312	6.48	4.357	1....	H1-1b
5	M7	LL3x3x4x0	.173	0	20	.012	4	y	13	76288.155	93312	6.48	4.357	2....	H1-1b
6	M6A	L3X3X4	.399	3.717	14	.024	3.717	z	24	13991.952	46656	1.688	3.179	1....	H2-1
7	M7A	L3X3X4	.793	7.181	18	.323	7.181	z	13	3748.406	46656	1.688	2.598	1....	H2-1
8	MP1A	PIPE_2.0	.164	3.573	21	.055	3.646		17	17855.085	32130	1.872	1.872	4....	H1-1b
9	M23A	L3X3X4	.392	3.717	20	.024	3.717	z	20	13991.953	46656	1.688	3.192	1....	H2-1
10	M24	L3X3X4	.788	7.181	14	.300	7.181	z	21	3748.406	46656	1.688	2.602	1....	H2-1
11	M38	HSS4X4X4	.477	0	22	.085	0	y	21	138875.2...	139518	16.181	16.181	1....	H1-1b
12	M39A	L3X3X4	.399	3.717	18	.024	3.717	z	16	13991.953	46656	1.688	3.18	1....	H2-1
13	M40	L3X3X4	.825	7.181	22	.324	7.181	z	17	3748.406	46656	1.688	2.625	1....	H2-1
14	M54	HSS4X4X4	.488	0	18	.089	0	y	17	138875.2...	139518	16.181	16.181	1....	H1-1b
15	M55	HSS4.5X4.5X3	.282	0	18	.080	0	y	21	119784.8...	121302	16.25	16.25	1....	H1-1b
16	M56	HSS4.5X4.5X3	.288	0	14	.085	0	y	17	119784.8...	121302	16.25	16.25	1....	H1-1b
17	M42	L3X3X4	.210	7.779	17	.142	7.779	z	18	3748.406	45360	1.641	2.84	1....	H2-1
18	M43A	L3X3X4	.230	13.165	14	.150	10.771	z	14	3748.406	45360	1.641	2.817	1....	H2-1
19	M44	L3X3X4	.225	7.779	21	.145	10.771	z	22	3748.406	45360	1.641	2.857	2	H2-1
20	MP2A	PIPE_2.0	.269	2.562	21	.113	2.625		19	20866.733	32130	1.872	1.872	2....	H1-1b
21	MP3A	PIPE_2.5	.173	5.062	23	.050	1.812		4	37773.818	50715	3.596	3.596	2....	H1-1b
22	MP4A	PIPE_2.0	.306	5.062	18	.159	5.062		18	20866.733	32130	1.872	1.872	1....	H1-1b
23	MP5A	PIPE_2.0	.183	2.625	21	.090	5.062		19	20866.733	32130	1.872	1.872	2....	H1-1b
24	M34	L5X5X4	.151	3.5	21	.013	3.5	z	21	47214.194	78975	5.181	8.986	2....	H2-1
25	M37	PIPE_2.0	.053	3.25	18	.020	1.625		15	20866.733	32130	1.872	1.872	1....	H1-1b
26	M38A	L5X5X4	.153	3.5	17	.010	3.5	z	17	47214.194	78975	5.181	8.986	2....	H2-1
27	M41	PIPE_2.0	.022	1.625	15	.012	1.625		23	20866.733	32130	1.872	1.872	1....	H1-1b
28	M42A	L5X5X4	.151	3.5	13	.009	3.5	z	13	47214.194	78975	5.181	8.986	2....	H2-1
29	M45	PIPE_2.0	.022	1.625	23	.010	1.625		7	20866.733	32130	1.872	1.872	1....	H1-1b
30	MP1C	PIPE_2.0	.137	3.573	17	.057	2.625		2	17855.085	32130	1.872	1.872	3....	H1-1b
31	MP2C	PIPE_2.0	.247	2.625	15	.109	2.625		15	20866.733	32130	1.872	1.872	2....	H1-1b
32	MP3C	PIPE_2.5	.227	5.062	19	.047	1.812		1	37773.818	50715	3.596	3.596	1....	H1-1b
33	MP4C	PIPE_2.0	.296	5.062	14	.147	5.062		14	20866.733	32130	1.872	1.872	1....	H1-1b
34	MP5C	PIPE_2.0	.170	2.625	17	.076	5.062		15	20866.733	32130	1.872	1.872	2....	H1-1b
35	MP1B	PIPE_2.0	.154	3.646	20	.059	3.646		21	17855.085	32130	1.872	1.872	2....	H1-1b
36	MP2B	PIPE_2.0	.254	2.625	24	.114	2.625		23	20866.733	32130	1.872	1.872	1....	H1-1b
37	MP3B	PIPE_2.5	.199	5.062	15	.049	1.812		8	37773.818	50715	3.596	3.596	4....	H1-1b
38	MP4B	PIPE_2.0	.296	5.062	22	.149	5.062		22	20866.733	32130	1.872	1.872	1....	H1-1b
39	MP5B	PIPE_2.0	.170	2.625	13	.086	5.062		23	20866.733	32130	1.872	1.872	2....	H1-1b
40	M76	PIPE_2.5	.248	7.653	21	.089	9.385		19	11839.119	50715	3.596	3.596	1....	H1-1b
41	M77	PIPE_2.5	.242	7.653	17	.090	4.187		15	11839.119	50715	3.596	3.596	1....	H1-1b
42	M78	PIPE_2.5	.254	7.653	13	.094	9.385		23	11839.119	50715	3.596	3.596	1....	H1-1b
43	M95	L2.5x2.5x3	.079	2.121	20	.009	4.241	y	13	16232.203	29192.4	.873	1.689	1....	H2-1
44	M96	L2.5x2.5x3	.072	2.037	18	.011	4.074	z	13	16982.99	29192.4	.873	1.706	1....	H2-1
45	M97	L2.5x2.5x3	.081	2.121	16	.009	4.241	y	21	16232.2	29192.4	.873	1.689	1....	H2-1
46	M98	L2.5x2.5x3	.077	2.037	14	.010	4.074	z	21	16982.99	29192.4	.873	1.706	1....	H2-1
47	M99	L2.5x2.5x3	.077	2.121	24	.009	4.241	y	17	16232.201	29192.4	.873	1.689	1....	H2-1
48	M100	L2.5x2.5x3	.074	2.037	22	.011	0	z	17	16982.992	29192.4	.873	1.706	1....	H2-1
49	M107	L3X3X4	.287	1.214	21	.010	1.214	y	13	45156.637	46656	1.688	3.756	1....	H2-1
50	M108	L3X3X4	.267	1.214	17	.012	1.214	y	33	45156.637	46656	1.688	3.756	1....	H2-1
51	M109	L3X3X4	.238	1.214	13	.004	1.214	y	11	45156.637	46656	1.688	3.756	1....	H2-1

Client:	Verizon Wireless	Date:	5/25/2021
Site Name:	Newington CT		
Project No.	21777015A		
Title:	Antenna Mount Analysis	Page:	1

Version 3.1

I. Mount-to-Tower Connection Check

RISA Model Data

Nodes *(labeled per RISA)*	Orientation *(per graphic of typical platform)*
n2	90
n77	210
n109	330

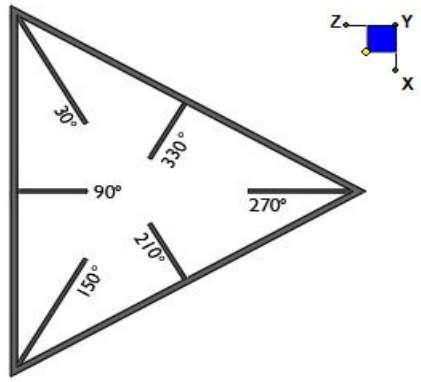

TYPICAL PLATFORM

Tower Connection Plate and Weld Check

Connecting Standoff Member Shape:	Rect
W1 (in):	4
W2 (in):	4
Weld Size (1/16 in):	4
Phi*Rn (kip/in):	5.57
Required Weld Strength (kip/in):	4.32
Weld Capacity:	**77.6%**

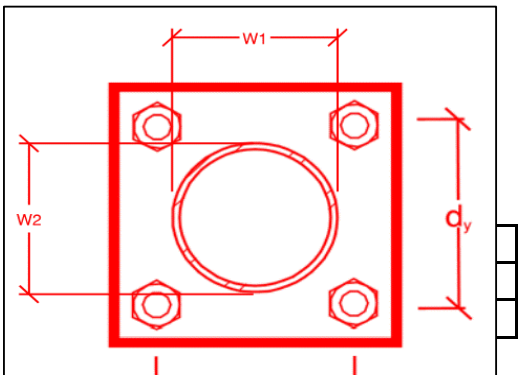

Mount Desktop – Post Modification Inspection (PMI) Report Requirements

Documents & Photos Required from Contractor – Mount Modification

Purpose – to provide Maser Consulting Connecticut the proper documentation in order to complete the required Mount Desktop review of the Post Modification Inspection Report.

- Contractor is responsible for making certain the photos provided as noted below provide confirmation that the modification was completed in accordance with the modification drawings.
- Contractor shall relay any data that can impact the performance of the mount or the mount modification, this includes safety issues.

Base Requirements:

- Any special photos outside of the standard requirements will be indicated on the drawings
- Provide "as built drawings" showing contractor's name, preparer's signature, and date. Any deviations from the drawings (proposed modification) must be shown.
- Notation that all hardware was properly installed, and the existing hardware was inspected for any issues.
- Verification that loading is as communicated in the modification drawings. NOTE If loading is different than what is conveyed in the modification drawing contact Maser Consulting Connecticut immediately.
- Each photo should be time and date stamped
- Photos should be high resolution and submitted in a Zip File and should be organized in the file structure as depicted in Schedule A attached.
- Contractor shall ensure that the safety climb wire rope is supported and not adversely impacted by the install of the modification components. This may involve the install of wire rope guides, or other items to protect the wire rope.
- The photos in the file structure should be uploaded **to** **https://pmi.vzwsmart.com** as depicted on the drawings

Photo Requirements:

- *Base and "During Installation Photos"*
  - Base pictures include
    - Photo of Gate Signs showing the tower owner, site name, and number
    - Photo of carrier shelter showing the carrier site name and number if available
    - Photos of the galvanizing compound and/or paint used (if applicable), clearly showing the label and name
  - "During Installation Photos if provided - must be placed only in this folder
- *Photos taken at ground level*
  - Overall tower structure before and after installation of the modifications
  - Photos of the appropriate mount before and after installation of the modifications; if the mounts are at different rad elevations, pictures must be provided for all elevations that the modifications were installed

- *Photos taken at Mount Elevation*
    - Photos showing each individual sector before and also after installation of modifications. Each entire sector must be in one photo to show in the inter-connection of members.
        - These photos should also certify that the placement and geometry of the equipment on the mount is as depicted on the sketch and table in the mount analysis
    - Close-up photos of each installed modification per the modification drawings; pictures should also include connection hardware (U-bolts, bolts, nuts, all-threaded rods, etc.)
    - Photos showing the measurements of the installed modification member sizes (i.e. lengths, widths, depths, diameters, thicknesses)
    - Photos showing the elevation or distances of the installed modifications from the appropriate reference locations shown in the modification drawings
    - Photos showing the installed modifications onto the tower with tape drop measurements (if applicable) (i.e. ring/collar mounts, tie-backs, V-bracing kits, etc.); if the existing mount elevation needs to be changed according to the modification drawings, a tape drop measurement shall be provided before the elevation change
    - Photos showing the safety climb wire rope above and below the mount prior to modification.
    - Photos showing the climbing facility and safety climb if present.

Material Certification:

- Materials utilized must be as per specification on the drawings or the equivalent as validated by Maser Consulting Connecticut.
    - If the drawings are as specified on the drawings
        - The contractor should provide the packing list or the materials utilized to perform the mount modification
    - If an equivalent is utilized
        - It is required that the Maser Consulting Connecticut certification of such is included in the contractor submission package. There may be an additional charge for this certification if the equivalent submission doesn't meet specifications as prescribed in the drawings.
- The contractor must certify that the materials meet these specifications by one of these methods.

☐ The Material utilized was as specified on the Maser Consulting Connecticut Mount Modification Drawings and included
in the Material certification folder is a packing list or invoice for these materials

☐ The material utilized was an "equivalent" and included as part of the contractor submission is the Maser Consulting Connecticut certification, invoices, or specifications validating accepted status

Certifying Individual: Company _____

Name _____

Signature _____

Antenna & equipment placement and Geometry Confirmation:

- The contractor must certify that the antenna & equipment placement and geometry is in accordance with the antenna placement diagrams as included in this mount analysis.

☐ The contractor certifies that the photos support and the equipment on the mount is as depicted on the antenna placement diagrams as included in this mount analysis.

☐ The contractor notes that the equipment on the mount is not in accordance with the antenna placement diagrams and has accordingly marked up the diagrams or provided a diagram outlining the differences.

Certifying Individual: Company _____

Name _____

Signature _____

Special Instructions / Validation as required from the MA or Mod Drawings:

Issue:

Contractor shall replace position 3 mount pipe with 72” long P2.5 STD pipe in all sectors. Contractor shall install top of mount pipe 19” from top support rail. Positions read from in front of the mount, position one starting on the right side. Contractor shall replace position 1 mount pipe with 84” long P2.0 STD pipe in all sectors.

Response:

Schedule A – Photo & Document File Structure

- VzW Site Number / Name
  - Base & “During Installation” Photos
  - Pre-Installation Photos
    - Alpha
    - Beta
    - Gamma
    - Ground Level
    - Tape Drop
  - Post-Installation Photos
    - Alpha
    - Beta
    - Gamma
    - Ground Level
    - Tape Drop
    - Photos of climbing facility and safety climb – If Present
  - Certifications – Submission of this document including certifications
  - Specific Required Additional Photos

Structure: 468043-VZW - Newington CT

Sector: **A** 5/25/2021

Structure Type: Monopole

Mount Elev: 104.50 Page: 1

Plan View

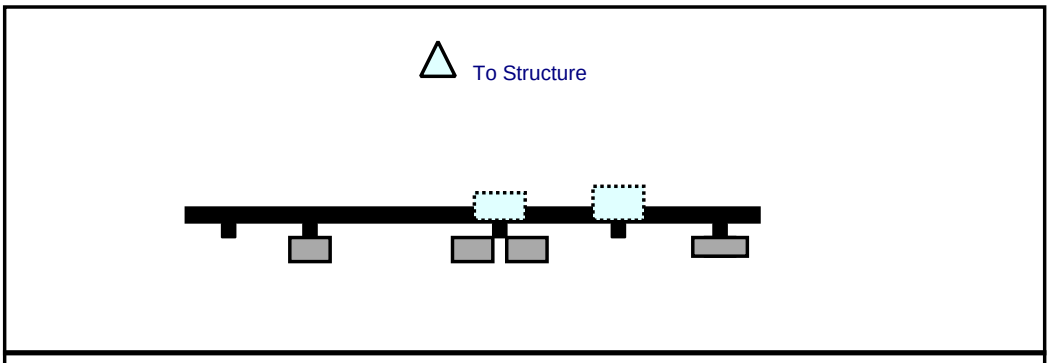

Front View
Looking at Structure

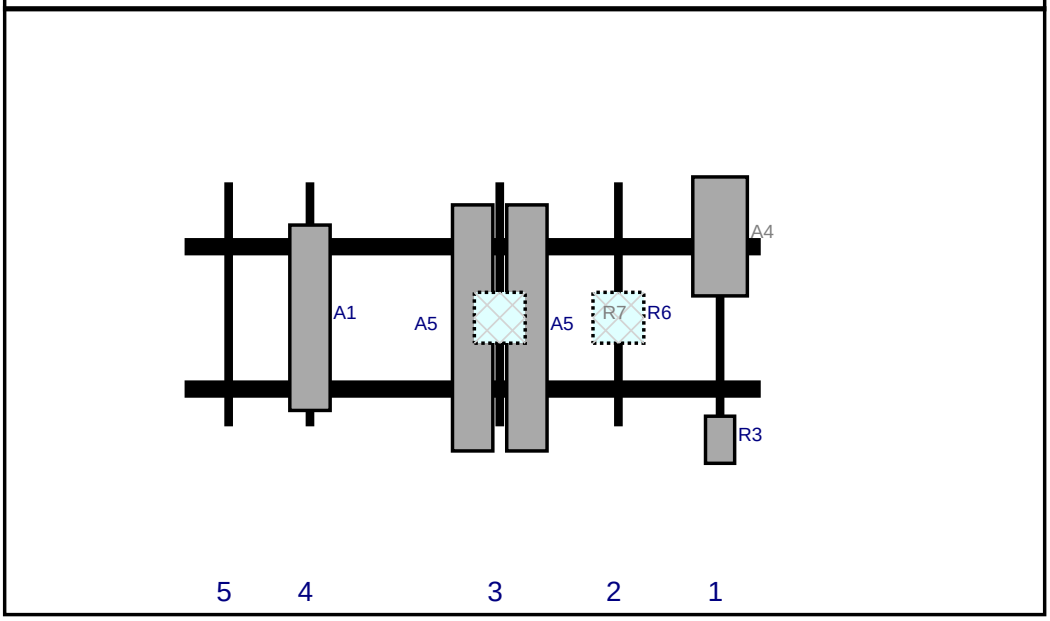

Ref#	Model	Height (in)	Width (in)	H Dist Frm L.	Pipe #	Pipe Pos V	Ant Pos	C. Ant Frm T.	Ant H Off	Status	Validation
A4	VZS01	35.1	16.1	158	1	a	Front	15.96	0	Added	
R3	XXDWMM-12.5-65-8T	13.9	8.6	158	1	a	Front	75.96	0	Added	
R6	B2/B66A RRH-BR049	15	15	128	2	a	Behind	39.96	0	Retained	
A5	SBNHH-1D65B	72.6	11.9	93	3	a	Front	42.96	8	Retained	02/23/2021
A5	SBNHH-1D65B	72.6	11.9	93	3	b	Front	42.96	-8	Retained	02/23/2021
R7	B5/B13 RRH-BR04C	15	15	93	3	a	Behind	39.96	0	Retained	
A1	LNX-6513DS-A1M	54.7	11.9	37	4	a	Front	39.96	0	Added	

Copyright 2019 by Tower Engineering Solutions, LLC. All Rights Reserved

Sector: **B** 5/25/2021

Structure Type: Monopole

Mount Elev: 104.50 Page: 2

Plan View

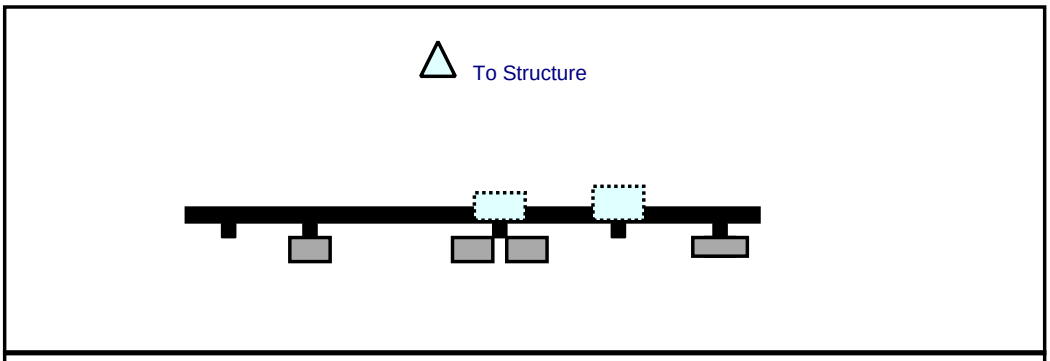

Front View
Looking at Structure

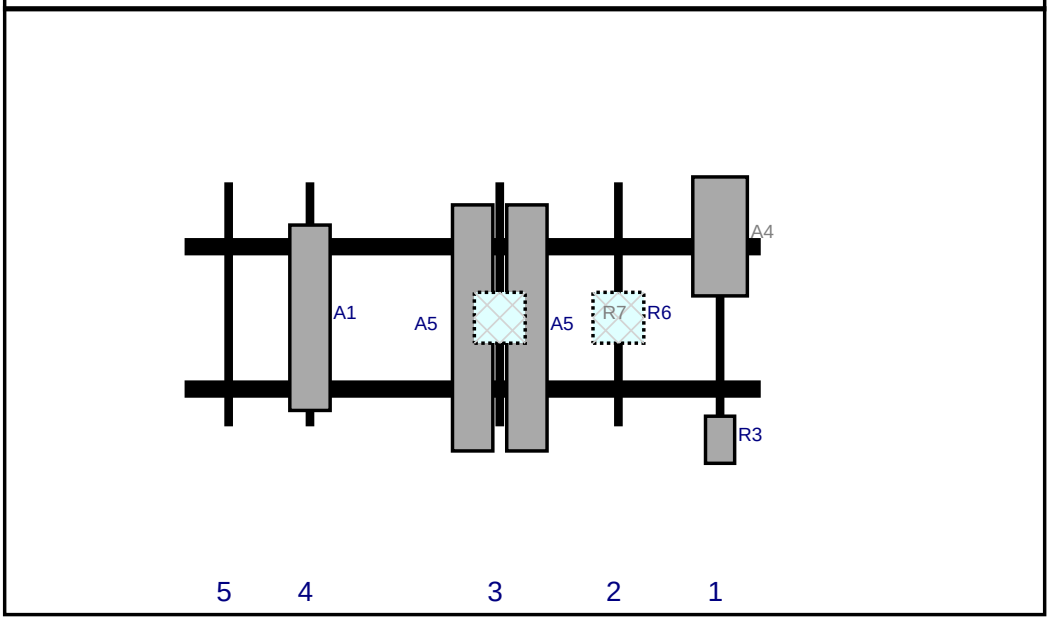

Ref#	Model	Height (in)	Width (in)	H Dist Frm L.	Pipe #	Pipe Pos V	Ant Pos	C. Ant Frm T.	Ant H Off	Status	Validation
A4	VZS01	35.1	16.1	158	1	a	Front	15.96	0	Added	
R3	XXDWMM-12.5-65-8T	13.9	8.6	158	1	a	Front	75.96	0	Added	
R6	B2/B66A RRH-BR049	15	15	128	2	a	Behind	39.96	0	Retained	
A5	SBNHH-1D65B	72.6	11.9	93	3	a	Front	42.96	8	Retained	02/23/2021
A5	SBNHH-1D65B	72.6	11.9	93	3	b	Front	42.96	-8	Retained	02/23/2021
R7	B5/B13 RRH-BR04C	15	15	93	3	a	Behind	39.96	0	Retained	
A1	LNX-6513DS-A1M	54.7	11.9	37	4	a	Front	39.96	0	Added	

Copyright 2019 by Tower Engineering Solutions, LLC. All Rights Reserved

Sector: **C** 5/25/2021

Structure Type: Monopole

Mount Elev: 104.50 Page: 3

Plan View

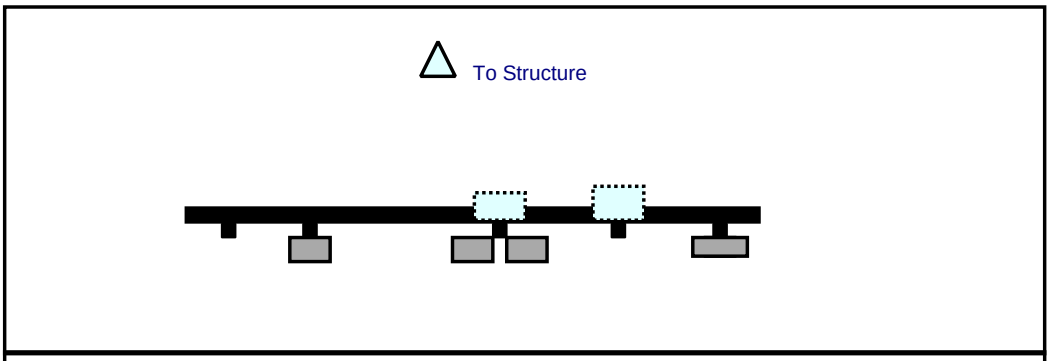

Front View
Looking at Structure

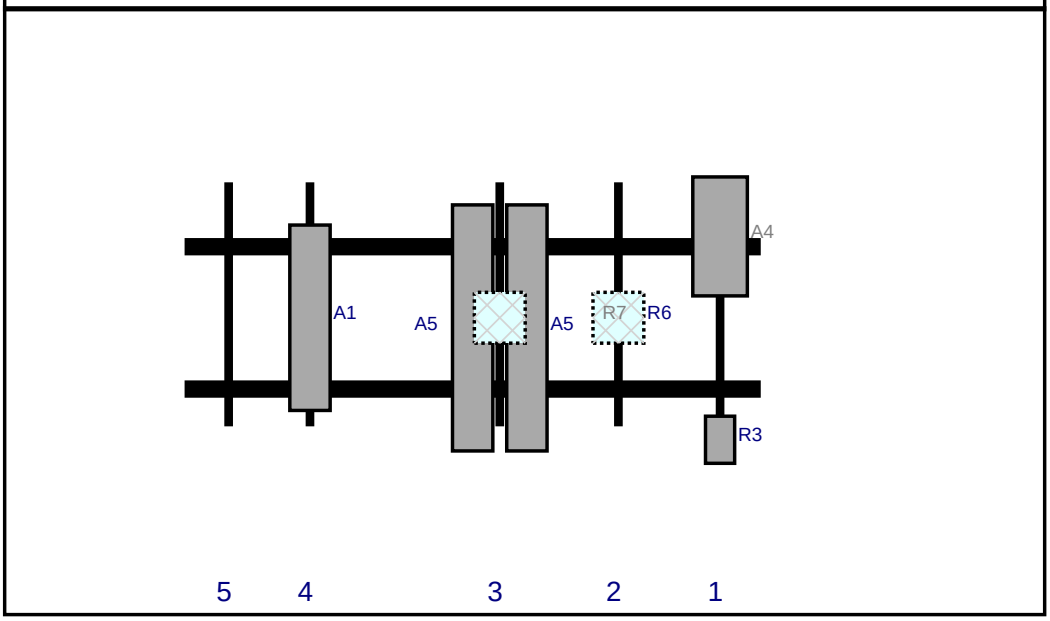

Ref#	Model	Height (in)	Width (in)	H Dist Frm L.	Pipe #	Pipe Pos V	Ant Pos	C. Ant Frm T.	Ant H Off	Status	Validation
A4	VZS01	35.1	16.1	158	1	a	Front	15.96	0	Added	
R3	XXDWMM-12.5-65-8T	13.9	8.6	158	1	a	Front	75.96	0	Added	
R6	B2/B66A RRH-BR049	15	15	128	2	a	Behind	39.96	0	Retained	
A5	SBNHH-1D65B	72.6	11.9	93	3	a	Front	42.96	8	Retained	02/23/2021
A5	SBNHH-1D65B	72.6	11.9	93	3	b	Front	42.96	-8	Retained	02/23/2021
R7	B5/B13 RRH-BR04C	15	15	93	3	a	Behind	39.96	0	Retained	
A1	LNX-6513DS-A1M	54.7	11.9	37	4	a	Front	39.96	0	Added	

Copyright 2019 by Tower Engineering Solutions, LLC. All Rights Reserved

Maser Consulting Connecticut

Subject		TIA-222-H Usage
Site Information	Site ID:	468043-VZW / Newington CT
	Site Name:	Newington CT
	Carrier Name:	Verizon Wireless
	Address:	36 Prospect Street Newington, Connecticut 06111 Hartford County
	Latitude:	41.689819°
	Longitude:	-72.705369°
Structure Information	Tower Type:	139.00-Ft Monopole
	Mount Type:	14.17-Ft Platform

To Whom It May Concern,

We respectfully submit the above referenced Antenna Mount Structural Analysis report in conformance with ANSI/TIA-222-H, Structural Standard for Antenna Supporting Structures and Antennas and Small Wind Turbine Support Structures.

The 2015 International Building Code states that, in Section 3108, telecommunication towers shall be designed and constructed in accordance with the provisions of TIA-222. The TIA-222-H is the latest revision of the TIA-222 Standard, effective as of January 01, 2018.

As with all ANSI standards and engineering best practice is to apply the most current revision of the standard. This ensures the engineer is applying all updates. As an example, the TIA-222-H standard includes updates to bring it in line with the latest AISC and ACI standards and it also incorporates the latest wind speed map by ASCE 7 based on updated studies of the wind data.

The TIA-222-H standard clarifies these specific requirements for the antenna mount analysis such as modeling method, seismic analysis, 30-degree increment wind direction and maintenance loading. Therefore, it is our opinion that TIA-222-H is the most appropriate standard for antenna mount structural analysis and is acceptable for use at this site to ensure the engineer is taking into account the most current engineering standard available.

Sincerely,

Petros Tsoukalas, PE

Exhibit F

Power Density/RF Emissions Report

Site Name: ***NEWINGTON CT***
Cumulative Power Density

Operator	Operating Frequency	Number of Trans.	ERP Per Trans.	Total ERP	Distance to Target	Calculated Power Density	Maximum Permissible Exposure*	Fraction of MPE
	(MHz)		(watts)	(watts)	(feet)	(mW/cm^2)	(mW/cm^2)	(%)
VZW 700	751	4	698	2792	106	0.0089	0.5007	1.78%
VZW CDMA	869	2	413	826	106	0.0026	0.5793	0.46%
VZW Cellular	869	4	826	3304	106	0.0106	0.5793	1.83%
VZW PCS	1980	4	1593	6372	106	0.0204	1.0000	2.04%
VZW AWS	2125	4	1581	6324	106	0.0202	1.0000	2.02%
VZW CBAND	3730	4	6531	26124	107.5	0.0813	1.0000	8.13%
VZW CBRS	3625	4	12	48	104	0.0002	1.0000	0.02%
Total Percentage of Maximum Permissible Exposure								16.28%

*Guidelines adopted by the FCC on August 1, 1996, 47 CFR Part 1 based on NCRP Report 86, 1986 and generally on ANSI/IEEE C95.1-1992
**Calculation includes a -10 dB Off Beam Antenna Pattern Adjustment pursuant to Attachments B and C of the Siting Council's November 10, 2015 Memorandum for Exempt Modification filings

MHz = Megahertz
mW/cm^2 = milliwatts per square centimeter
ERP = Effective Radiated Power

Absolute worst case maximum values used.

Exhibit G

Recipient Mailings

UNITED STATES POSTAL SERVICE®

Click-N-Ship®

9405 5036 9930 0244 7668 60 0089 5000 0010 6111

usps.com
$8.95
US POSTAGE
Flat Rate Env

U.S. POSTAGE PAID
Click-N-Ship®

05/09/2022

Mailed from 01566

P

PRIORITY MAIL 2-DAY™

DEBORAH CHASE
NORTHEAST SITE SOLUTIONS
420 MAIN ST
STE 1
STURBRIDGE MA 01566-1359

Expected Delivery Date: 05/12/22
Ref#: CR-876332
0006

C022

SHIP
TO: BETH DEL BUONO
MAYOR- TOWN OF NEWINGTON
131 CEDAR ST
NEWINGTON CT 06111-2644

USPS TRACKING #

9405 5036 9930 0244 7668 60

Electronic Rate Approved #038555749

Cut on dotted line.

Instructions

1. **Each Click-N-Ship® label is unique. Labels are to be used as printed and used only once. DO NOT PHOTO COPY OR ALTER LABEL.**
2. **Place your label so it does not wrap around the edge of the package.**
3. **Adhere your label to the package. A self-adhesive label is recommended. If tape or glue is used, DO NOT TAPE OVER BARCODE. Be sure all edges are secure.**
4. **To mail your package with PC Postage®, you may schedule a Package Pickup online, hand to your letter carrier, take to a Post Office™, or drop in a USPS collection box.**
5. **Mail your package on the "Ship Date" you selected when creating this label.**

Click-N-Ship® Label Record

USPS TRACKING # :
9405 5036 9930 0244 7668 60

Trans. #:	563150015	Priority Mail® Postage:	**$8.95**
Print Date:	05/09/2022	Total:	**$8.95**
Ship Date:	05/09/2022		
Expected Delivery Date:	05/12/2022		

From: DEBORAH CHASE
NORTHEAST SITE SOLUTIONS
420 MAIN ST
STE 1
STURBRIDGE MA 01566-1359

Ref#: CR-876332

To: BETH DEL BUONO
MAYOR- TOWN OF NEWINGTON
131 CEDAR ST
NEWINGTON CT 06111-2644

* Retail Pricing Priority Mail rates apply. There is no fee for USPS Tracking® service on Priority Mail service with use of this electronic rate shipping label. Refunds for unused postage paid labels can be requested online 30 days from the print date.

UNITED STATES POSTAL SERVICE® *Thank you for shipping with the United States Postal Service!*
Check the status of your shipment on the USPS Tracking® page at usps.com

UNITED STATES POSTAL SERVICE®

Click-N-Ship®

usps.com
$8.95
US POSTAGE
Flat Rate Env

9405 5036 9930 0244 7668 77 0089 5000 0010 6111

U.S. POSTAGE PAID
Click-N-Ship®

05/09/2022

Mailed from 01566

PRIORITY MAIL 2-DAY™

DEBORAH CHASE
NORTHEAST SITE SOLUTIONS
420 MAIN ST
STE 1
STURBRIDGE MA 01566-1359

Expected Delivery Date: 05/12/22
Ref#: CR-876332
0006

C022

SHIP
TO: RENATA BERTOTTI
TOWN PLANNER- TOWN OF NEWINGTON
131 CEDAR ST
NEWINGTON CT 06111-2644

USPS TRACKING #

9405 5036 9930 0244 7668 77

Electronic Rate Approved #038555749

Cut on dotted line.

Instructions

1. **Each Click-N-Ship® label is unique. Labels are to be used as printed and used only once. DO NOT PHOTO COPY OR ALTER LABEL.**
2. **Place your label so it does not wrap around the edge of the package.**
3. **Adhere your label to the package. A self-adhesive label is recommended. If tape or glue is used, DO NOT TAPE OVER BARCODE. Be sure all edges are secure.**
4. **To mail your package with PC Postage®, you may schedule a Package Pickup online, hand to your letter carrier, take to a Post Office™, or drop in a USPS collection box.**
5. **Mail your package on the "Ship Date" you selected when creating this label.**

Click-N-Ship® Label Record

USPS TRACKING # :
9405 5036 9930 0244 7668 77

Trans. #:	563150015	Priority Mail® Postage:	**$8.95**
Print Date:	05/09/2022	Total:	**$8.95**
Ship Date:	05/09/2022		
Expected Delivery Date:	05/12/2022		

From: DEBORAH CHASE
NORTHEAST SITE SOLUTIONS
420 MAIN ST
STE 1
STURBRIDGE MA 01566-1359

Ref#: CR-876332

To: RENATA BERTOTTI
TOWN PLANNER- TOWN OF NEWINGTON
131 CEDAR ST
NEWINGTON CT 06111-2644

* Retail Pricing Priority Mail rates apply. There is no fee for USPS Tracking® service on Priority Mail service with use of this electronic rate shipping label. Refunds for unused postage paid labels can be requested online 30 days from the print date.

UNITED STATES POSTAL SERVICE® *Thank you for shipping with the United States Postal Service!*
Check the status of your shipment on the USPS Tracking® page at usps.com

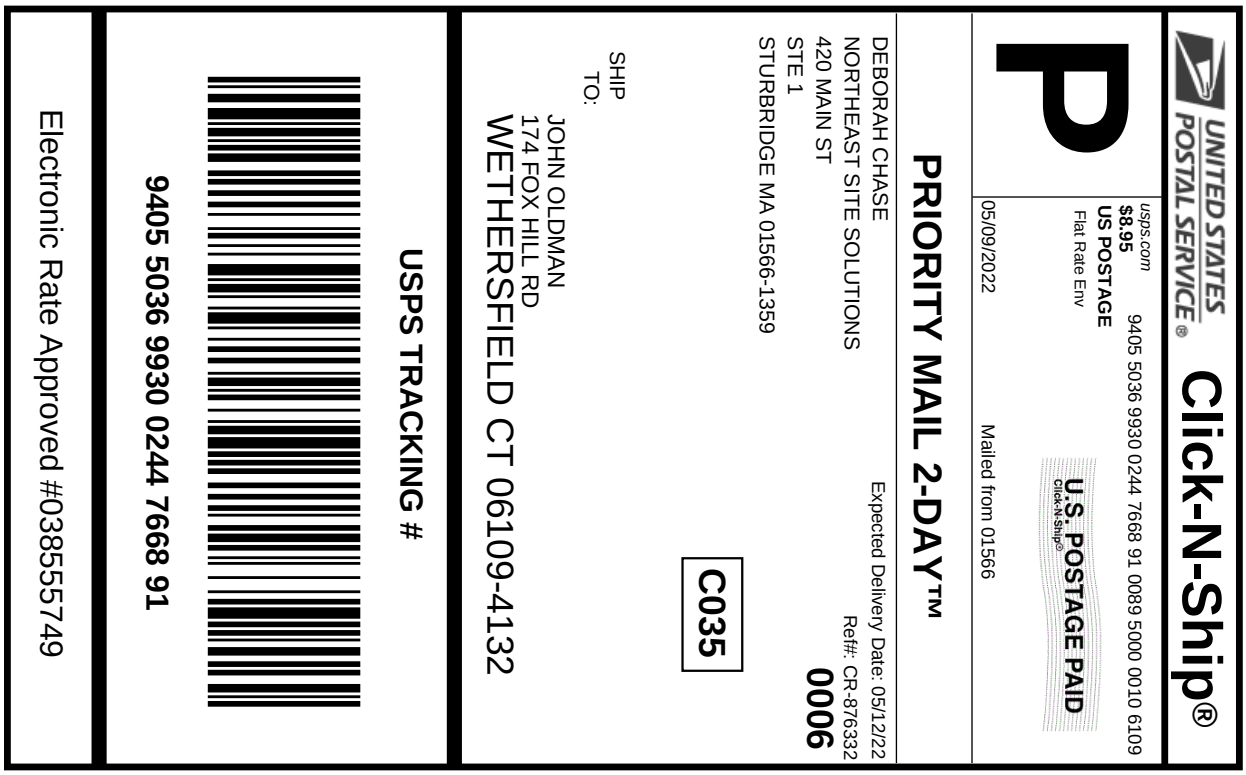

Cut on dotted line.

Instructions

1. **Each Click-N-Ship® label is unique. Labels are to be used as printed and used only once. DO NOT PHOTO COPY OR ALTER LABEL.**
2. **Place your label so it does not wrap around the edge of the package.**
3. **Adhere your label to the package. A self-adhesive label is recommended. If tape or glue is used, DO NOT TAPE OVER BARCODE. Be sure all edges are secure.**
4. **To mail your package with PC Postage®, you may schedule a Package Pickup online, hand to your letter carrier, take to a Post Office™, or drop in a USPS collection box.**
5. **Mail your package on the "Ship Date" you selected when creating this label.**

Click-N-Ship® Label Record

USPS TRACKING # :
9405 5036 9930 0244 7668 91

Trans. #:	563150015	Priority Mail® Postage:	**$8.95**
Print Date:	05/09/2022	Total:	**$8.95**
Ship Date:	05/09/2022		
Expected Delivery Date:	05/12/2022		

From: DEBORAH CHASE
NORTHEAST SITE SOLUTIONS
420 MAIN ST
STE 1
STURBRIDGE MA 01566-1359

Ref#: CR-876332

To: JOHN OLDMAN
174 FOX HILL RD
WETHERSFIELD CT 06109-4132

* Retail Pricing Priority Mail rates apply. There is no fee for USPS Tracking® service on Priority Mail service with use of this electronic rate shipping label. Refunds for unused postage paid labels can be requested online 30 days from the print date.

Thank you for shipping with the United States Postal Service!
Check the status of your shipment on the USPS Tracking® page at usps.com

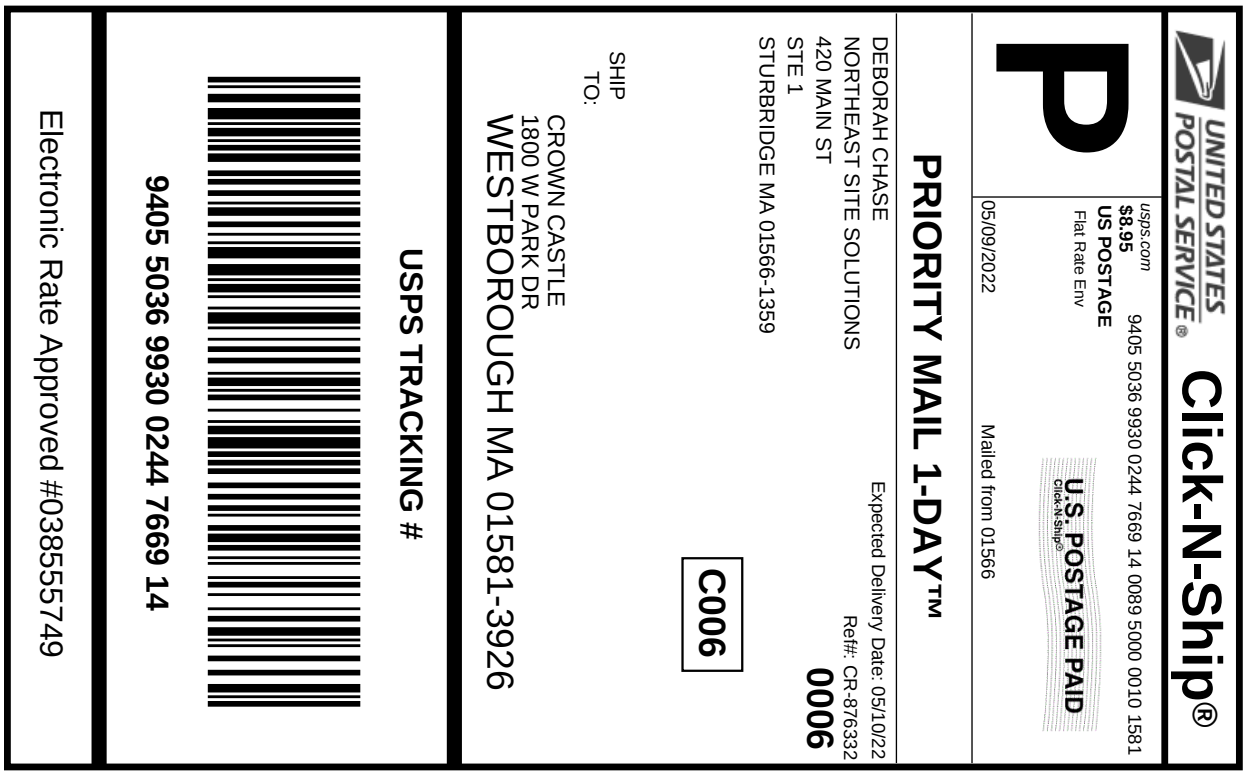

Cut on dotted line.

Instructions

1. **Each Click-N-Ship® label is unique. Labels are to be used as printed and used only once. DO NOT PHOTO COPY OR ALTER LABEL.**
2. **Place your label so it does not wrap around the edge of the package.**
3. **Adhere your label to the package. A self-adhesive label is recommended. If tape or glue is used, DO NOT TAPE OVER BARCODE. Be sure all edges are secure.**
4. **To mail your package with PC Postage®, you may schedule a Package Pickup online, hand to your letter carrier, take to a Post Office™, or drop in a USPS collection box.**
5. **Mail your package on the "Ship Date" you selected when creating this label.**

Click-N-Ship® Label Record

USPS TRACKING # :
9405 5036 9930 0244 7669 14

Trans. #:	563150015	Priority Mail® Postage:	**$8.95**
Print Date:	05/09/2022	Total:	**$8.95**
Ship Date:	05/09/2022		
Expected Delivery Date:	05/10/2022		

From: DEBORAH CHASE
NORTHEAST SITE SOLUTIONS
420 MAIN ST
STE 1
STURBRIDGE MA 01566-1359

Ref#: CR-876332

To: CROWN CASTLE
1800 W PARK DR
WESTBOROUGH MA 01581-3926

* Retail Pricing Priority Mail rates apply. There is no fee for USPS Tracking® service on Priority Mail service with use of this electronic rate shipping label. Refunds for unused postage paid labels can be requested online 30 days from the print date.

Thank you for shipping with the United States Postal Service!
Check the status of your shipment on the USPS Tracking® page at usps.com

876332 Crown V2W

UNITED STATES POSTAL SERVICE.

FARMINGTON
210 MAIN ST
FARMINGTON, CT 06032-9998
(800)275-8777

05/10/2022 12:22 PM

Product	Qty	Unit Price	Price
Prepaid Mail Westborough, MA 01581 Weight: 0 lb 2.00 oz Acceptance Date: Tue 05/10/2022 Tracking #: 9405 5036 9930 0244 7669 14	1		$0.00
Prepaid Mail Newington, CT 06111 Weight: 0 lb 8.40 oz Acceptance Date: Tue 05/10/2022 Tracking #: 9405 5036 9930 0244 7668 60	1		$0.00
Prepaid Mail Newington, CT 06111 Weight: 1 lb 0.80 oz Acceptance Date: Tue 05/10/2022 Tracking #: 9405 5036 9930 0244 7668 77	1		$0.00
Prepaid Mail Wethersfield, CT 06109 Weight: 0 lb 8.40 oz Acceptance Date: Tue 05/10/2022 Tracking #: 9405 5036 9930 0244 7668 91	1		$0.00
Grand Total:			$0.00

****
Every household in the U.S. is now
eligible to receive a second set
of 4 free test kits.
Go to www.covidtests.gov
****

Preview your Mail
Track your Packages
Sign up for FREE @
https://informeddelivery.usps.com

All sales final on stamps and postage.
Refunds for guaranteed services only.
Thank you for your business.

Tell us about your experience.
Go to: https://postalexperience.com/Pos
or scan this code with your mobile device,