SITE NUMBER: CTL02037

SITE NAME: NEW HAVEN WHEELER ST

FA CODE: 10035247

PACE ID: MRCTB052200, MRCTB051762, MRCTB051774

PROJECT: 5G NR RADIO, 4TXRX ANTENNA RETROFIT, 5G NR 1SR CBAND

PROJECT INFORMATION

SCOPE OF WORK:

ITEMS TO BE MOUNTED ON THE EXISTING MONOPOLE:
- PROPOSED AT&T LTE ANTENNAS (QD4616-7) @ POS. 2 (1 PER ALPHA SECTOR, TOTAL OF 1).
- PROPOSED AT&T LTE ANTENNAS (QD6616-7) @ POS. 2 (TYP. OF 1 PER BETA & GAMMA SECTOR, TOTAL OF 2).
- PROPOSED AT&T LTE ANTENNAS (AIR6419 N77G) @ POS. 3 (TYP. OF 1 PER SECTOR, TOTAL OF 3) (STACKED).
- PROPOSED AT&T LTE ANTENNAS (AIR6449 N77D) @ POS. 3 (TYP. OF 1 PER SECTOR, TOTAL OF 3) (STACKED).
- EXISTING AT&T LTE ANTENNA OPA-65R-BU4DA @ POS. 3 (ALPHA SECTOR, TOTAL OF 1) (TO BE RELOCATED TO POS. 4).
- EXISTING AT&T LTE ANTENNA OPA-65R-BU6DA @ POS. 3 (BETA & GAMMA SECTOR, TOTAL OF 2) (TO BE RELOCATED TO POS. 4).
- PROPOSED AT&T RRUS-4415 B25 (1900) (TYP. OF 1 PER SECTOR, TOTAL OF 3)
- PROPOSED AT&T RRUS 4449 B5/B12 (700/850) (TYP. OF 1 PER SECTOR, TOTAL OF 3)
- PROPOSED Y CABLE (TYP. OF 1 PER SECTOR, TOTAL OF 3).
- RELOCATE EXISTING RRUS 4426 B66 (AWS) FROM POS. 4 TO POS. 2.

ITEMS TO BE MOUNTED AT EQUIPMENT LOCATION:
- ADD 6648 + XCEDE CABLE.
- FINAL CONFIG. 5216+XMU/6630+IDLE/6648+XCEDE.

ITEMS TO BE REMOVED:
- EXISTING AT&T UMTS ANTENNA HPA-65R-BUU-H6 @ POS. 1 (GAMMA SECTOR, TOTAL OF 1).
- EXISTING AT&T LTE ANTENNA SBNHH-1D65A @ POS. 2 & 4 (ALPHA SECTOR, TOTAL OF 2).
- EXISTING AT&T UMTS ANTENNA SBNHH-1D65A @ POS. 1 (ALPHA SECTOR, TOTAL OF 1).
- EXISTING AT&T LTE ANTENNA HPA-65R-BUU-H6 @ POS. 2 (BETA & GAMMA SECTOR, TOTAL OF 2).
- EXISTING AT&T LTE ANTENNA QS66512-2 @ POS. 4 (BETA & GAMMA SECTOR, TOTAL OF 2).
- EXISTING RRUS-11 B12 (700) (TYP. OF 1 PER SECTOR, TOTAL OF 3).
- EXISTING RRUS-32 B2 (1900) (TYP. OF 1 PER SECTOR, TOTAL OF 3).
- EXISTING 4478 B5 (850) (TYP. OF 1 PER SECTOR, TOTAL OF 3).
- EXISTING DBCT108F1V92-1 DIPLEXERS (TYP. OF 2 PER SECTOR, TOTAL OF 6).

ITEMS TO REMAIN:
- (3) ANTENNAS, (12) RRU'S, (4) SURGE ARRESTORS, (8) DC POWER & (3) FIBER CABLES.

RFDS:	FINAL APPROVED V5 RFDS DATED 03/08/2022
SITE ADDRESS:	69 WHEELER STREET NEW HAVEN, CT 06512
LATITUDE:	41.2959919° N, 41° 17' 45.57" N
LONGITUDE:	72.8979431° W, 72° 53' 52.59" W
TYPE OF SITE:	MONOPOLE / OUTDOOR EQUIPMENT
STRUCTURE HEIGHT:	98'-0"±
RAD CENTER:	91'-0"±
CURRENT USE:	TELECOMMUNICATIONS FACILITY
PROPOSED USE:	TELECOMMUNICATIONS FACILITY

DRAWING INDEX

SHEET NO.	DESCRIPTION	REV.
T-1	TITLE SHEET	2
GN-1	GENERAL NOTES	2
A-1	COMPOUND & EQUIPMENT PLANS	2
A-2	ANTENNA LAYOUT PLANS & ELEVATION	2
A-3	DETAILS	2
G-1	GROUNDING DETAILS	2
RF-1	RF PLUMBING DIAGRAM	2

VICINITY MAP

DIRECTIONS TO SITE:

HEAD SOUTHEAST TOWARD CAPITAL BLVD, TURN LEFT ONTO CAPITAL BLVD, USE THE LEFT 2 LANES TO TURN LEFT ONTO STATE HWY 411, TURN LEFT TO MERGE WITH I-91 S, MERGE WITH I-91 S, TAKE EXIT 2 FOR HAMILTON STREET, CONTINUE ONTO IVES PL, TURN RIGHT ONTO EAST ST, TURN LEFT ONTO WATER ST, CONTINUE ONTO FORBES AVE, TURN LEFT ONTO GOODWIN ST/WHEELER ST DESTINATION WILL BE ON THE RIGHT.

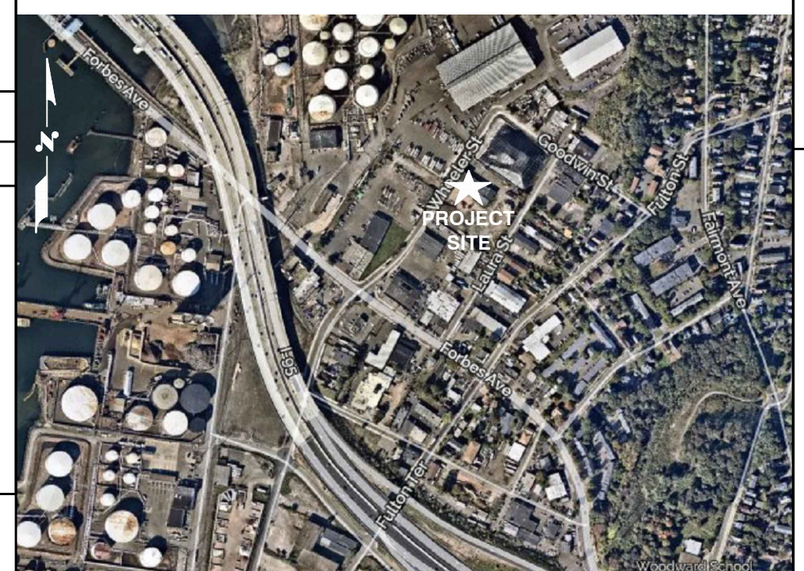

GENERAL NOTES

1. THIS DOCUMENT IS THE CREATION, DESIGN, PROPERTY AND COPYRIGHTED WORK OF AT&T. ANY DUPLICATION OR USE WITHOUT EXPRESS WRITTEN CONSENT IS STRICTLY PROHIBITED. DUPLICATION AND USE BY GOVERNMENT AGENCIES FOR THE PURPOSES OF CONDUCTING THEIR LAWFULLY AUTHORIZED REGULATORY AND ADMINISTRATIVE FUNCTIONS IS SPECIFICALLY ALLOWED.
2. THE FACILITY IS AN UNMANNED PRIVATE AND SECURED EQUIPMENT INSTALLATION. IT IS ONLY ACCESSED BY TRAINED TECHNICIANS FOR PERIODIC ROUTINE MAINTENANCE AND THEREFORE DOES NOT REQUIRE ANY WATER OR SANITARY SEWER SERVICE. THE FACILITY IS NOT GOVERNED BY REGULATIONS REQUIRING PUBLIC ACCESS PER ADA REQUIREMENTS.
3. CONTRACTOR SHALL VERIFY ALL PLANS AND EXISTING DIMENSIONS AND CONDITIONS ON THE JOB SITE AND SHALL IMMEDIATELY NOTIFY THE AT&T MOBILITY REPRESENTATIVE IN WRITING OF DISCREPANCIES BEFORE PROCEEDING WITH THE WORK OR BE RESPONSIBLE FOR SAME.
4. CONSTRUCTION DRAWINGS ARE VALID FOR SIX MONTHS AFTER ENGINEER OF RECORD'S STAMPED AND SIGNED SUBMITTAL DATE LISTED HEREIN.

72 HOURS

CALL
BEFORE YOU DIG
CALL TOLL FREE 1-800-922-4455
OR CALL 811

UNDERGROUND SERVICE ALERT

HUDSON Design Group LLC
45 BEECHWOOD DRIVE
NORTH ANDOVER, MA 01845
TEL: (978) 557-5553
FAX: (978) 336-5586

smartlink
SMARTLINK
1997 ANNAPOLIS EXCHANGE PKWY SUITE 200
ANNAPOLIS, MD 21401

SITE NUMBER: CTL02037
SITE NAME: NEW HAVEN WHEELER ST

69 WHEELER STREET
NEW HAVEN, CT 06512
NEW HAVEN COUNTY

at&t
500 ENTERPRISE DRIVE, SUITE 3A
ROCKY HILL, CT 06067

NO.	DATE	REVISIONS	BY	CHK	APP'D
2	03/21/22	ISSUED FOR CONSTRUCTION	SG	MT	DPH
1	03/01/22	ISSUED FOR CONSTRUCTION	MB	MT	DPH
0	02/04/22	ISSUED FOR REVIEW	GD	MT	DPH

SCALE: AS SHOWN | DESIGNED BY: AT | DRAWN BY: GD

STATE OF CONNECTICUT
DANIEL P. HAMM
No. 24178
LICENSED PROFESSIONAL ENGINEER

AT&T

TITLE SHEET
5G NR RADIO, 4TXRX ANTENNA RETROFIT, 5G NR 1SR CBAND

SITE NUMBER	DRAWING NUMBER	REV
CTL02037	T-1	2

GROUNDING NOTES

1. THE SUBCONTRACTOR SHALL REVIEW AND INSPECT THE EXISTING FACILITY GROUNDING SYSTEM AND LIGHTNING PROTECTION SYSTEM (AS DESIGNED AND INSTALLED) FOR STRICT COMPLIANCE WITH THE NEC (AS ADOPTED BY THE AHJ), THE SITE-SPECIFIC (UL, LPI, OR NFPA) LIGHTING PROTECTION CODE, AND GENERAL COMPLIANCE WITH TELCORDIA AND TIA GROUNDING STANDARDS. THE SUBCONTRACTOR SHALL REPORT ANY VIOLATIONS OR ADVERSE FINDINGS TO THE CONTRACTOR FOR RESOLUTION.
2. ALL GROUND ELECTRODE SYSTEMS (INCLUDING TELECOMMUNICATION, RADIO, LIGHTNING PROTECTION, AND AC POWER GES'S) SHALL BE BONDED TOGETHER, AT OR BELOW GRADE, BY TWO OR MORE COPPER BONDING CONDUCTORS IN ACCORDANCE WITH THE NEC.
3. THE SUBCONTRACTOR SHALL PERFORM IEEE FALL-OF-POTENTIAL RESISTANCE TO EARTH TESTING (PER IEEE 1100 AND 81 STANDARDS) FOR NEW GROUND ELECTRODE SYSTEMS. THE SUBCONTRACTOR SHALL FURNISH AND INSTALL SUPPLEMENTAL GROUND ELECTRODES AS NEEDED TO ACHIEVE A TEST RESULT OF 5 OHMS OR LESS.
4. METAL RACEWAY SHALL NOT BE USED AS THE NEC REQUIRED EQUIPMENT GROUND CONDUCTOR. STRANDED COPPER CONDUCTORS WITH GREEN INSULATION, SIZED IN ACCORDANCE WITH THE NEC, SHALL BE FURNISHED AND INSTALLED WITH THE POWER CIRCUITS TO BTS EQUIPMENT.
5. EACH BTS CABINET FRAME SHALL BE DIRECTLY CONNECTED TO THE MASTER GROUND BAR WITH GREEN INSULATED SUPPLEMENTAL EQUIPMENT GROUND WIRES, #6 AWG STRANDED COPPER OR LARGER FOR INDOOR BTS AND #2 AWG STRANDED COPPER FOR OUTDOOR BTS.
6. EXOTHERMIC WELDS SHALL BE USED FOR ALL GROUNDING CONNECTIONS BELOW GRADE.
7. APPROVED ANTIOXIDANT COATINGS (I.E., CONDUCTIVE GEL OR PASTE) SHALL BE USED ON ALL COMPRESSION AND BOLTED GROUND CONNECTIONS.
8. ICE BRIDGE BONDING CONDUCTORS SHALL BE EXOTHERMICALLY BONDED OR BOLTED TO GROUND BAR.
9. ALUMINUM CONDUCTOR OR COPPER CLAD STEEL CONDUCTOR SHALL NOT BE USED FOR GROUNDING CONNECTIONS.
10. MISCELLANEOUS ELECTRICAL AND NON-ELECTRICAL METAL BOXES, FRAMES AND SUPPORTS SHALL BE BONDED TO THE GROUND RING, IN ACCORDANCE WITH THE NEC.
11. METAL CONDUIT SHALL BE MADE ELECTRICALLY CONTINUOUS WITH LISTED BONDING FITTINGS OR BY BONDING ACROSS THE DISCONTINUITY WITH #6 AWG COPPER WIRE UL APPROVED GROUNDING TYPE CONDUIT CLAMPS.
12. ALL NEW STRUCTURES WITH A FOUNDATION AND/OR FOOTING HAVING 20 FT. OR MORE OF 1/2 IN. OR GREATER ELECTRICALLY CONDUCTIVE REINFORCING STEEL MUST HAVE IT BONDED TO THE GROUND RING USING AN EXOTHERMIC WELD CONNECTION USING #2 AWG SOLID BARE TINNED COPPER GROUND WIRE, PER NEC 250.50

GENERAL NOTES

1. FOR THE PURPOSE OF CONSTRUCTION DRAWING, THE FOLLOWING DEFINITIONS SHALL APPLY:

   CONTRACTOR – SMARTLINK
   SUBCONTRACTOR – GENERAL CONTRACTOR (CONSTRUCTION)
   OWNER – AT&T MOBILITY

2. PRIOR TO THE SUBMISSION OF BIDS, THE BIDDING SUBCONTRACTOR SHALL VISIT THE CELL SITE TO FAMILIARIZE WITH THE EXISTING CONDITIONS AND TO CONFIRM THAT THE WORK CAN BE ACCOMPLISHED AS SHOWN ON THE CONSTRUCTION DRAWINGS. ANY DISCREPANCY FOUND SHALL BE BROUGHT TO THE ATTENTION OF CONTRACTOR.
3. ALL MATERIALS FURNISHED AND INSTALLED SHALL BE IN STRICT ACCORDANCE WITH ALL APPLICABLE CODES, REGULATIONS, AND ORDINANCES. SUBCONTRACTOR SHALL ISSUE ALL APPROPRIATE NOTICES AND COMPLY WITH ALL LAWS, ORDINANCES, RULES, REGULATIONS, AND LAWFUL ORDERS OF ANY PUBLIC AUTHORITY REGARDING THE PERFORMANCE OF THE WORK. ALL WORK CARRIED OUT SHALL COMPLY WITH ALL APPLICABLE MUNICIPAL AND UTILITY COMPANY SPECIFICATIONS AND LOCAL JURISDICTIONAL CODES, ORDINANCES AND APPLICABLE REGULATIONS.
4. DRAWINGS PROVIDED HERE ARE NOT TO BE SCALED AND ARE INTENDED TO SHOW OUTLINE ONLY.
5. UNLESS NOTED OTHERWISE, THE WORK SHALL INCLUDE FURNISHING MATERIALS, EQUIPMENT, APPURTENANCES, AND LABOR NECESSARY TO COMPLETE ALL INSTALLATIONS AS INDICATED ON THE DRAWINGS.
6. "KITTING LIST" SUPPLIED WITH THE BID PACKAGE IDENTIFIES ITEMS THAT WILL BE SUPPLIED BY CONTRACTOR. ITEMS NOT INCLUDED IN THE BILL OF MATERIALS AND KITTING LIST SHALL BE SUPPLIED BY THE SUBCONTRACTOR.
7. THE SUBCONTRACTOR SHALL INSTALL ALL EQUIPMENT AND MATERIALS IN ACCORDANCE WITH MANUFACTURER'S RECOMMENDATIONS UNLESS SPECIFICALLY STATED OTHERWISE.
8. IF THE SPECIFIED EQUIPMENT CANNOT BE INSTALLED AS SHOWN ON THESE DRAWINGS, THE SUBCONTRACTOR SHALL PROPOSE AN ALTERNATIVE INSTALLATION SPACE FOR APPROVAL BY THE CONTRACTOR.
9. SUBCONTRACTOR SHALL DETERMINE ACTUAL ROUTING OF CONDUIT, POWER AND T1 CABLES, GROUNDING CABLES AS SHOWN ON THE POWER, GROUNDING AND TELCO PLAN DRAWING. SUBCONTRACTOR SHALL UTILIZE EXISTING TRAYS AND/OR SHALL ADD NEW TRAYS AS NECESSARY. SUBCONTRACTOR SHALL CONFIRM THE ACTUAL ROUTING WITH THE CONTRACTOR.
10. THE SUBCONTRACTOR SHALL PROTECT EXISTING IMPROVEMENTS, PAVEMENTS, CURBS, LANDSCAPING AND STRUCTURES. ANY DAMAGED PART SHALL BE REPAIRED AT SUBCONTRACTOR'S EXPENSE TO THE SATISFACTION OF OWNER.
11. SUBCONTRACTOR SHALL LEGALLY AND PROPERLY DISPOSE OF ALL SCRAP MATERIALS SUCH AS COAXIAL CABLES AND OTHER ITEMS REMOVED FROM THE EXISTING FACILITY. ANTENNAS REMOVED SHALL BE RETURNED TO THE OWNER'S DESIGNATED LOCATION.
12. SUBCONTRACTOR SHALL LEAVE PREMISES IN CLEAN CONDITION.
13. ALL CONCRETE REPAIR WORK SHALL BE DONE IN ACCORDANCE WITH AMERICAN CONCRETE INSTITUTE (ACI) 301.
14. ANY NEW CONCRETE NEEDED FOR THE CONSTRUCTION SHALL BE AIR-ENTRAINED AND SHALL HAVE 4000 PSI STRENGTH AT 28 DAYS. ALL CONCRETE WORK SHALL BE DONE IN ACCORDANCE WITH ACI 318 CODE REQUIREMENTS.
15. ALL STRUCTURAL STEEL WORK SHALL BE DETAILED, FABRICATED AND ERECTED IN ACCORDANCE WITH AISC SPECIFICATIONS. ALL STRUCTURAL STEEL SHALL BE ASTM A36 (Fy = 36 ksi) UNLESS OTHERWISE NOTED. PIPES SHALL BE ASTM A53 TYPE E (Fy = 36 ksi). ALL STEEL EXPOSED TO WEATHER SHALL BE HOT DIPPED GALVANIZED. TOUCH UP ALL SCRATCHES AND OTHER MARKS IN THE FIELD AFTER STEEL IS ERECTED USING A COMPATIBLE ZINC RICH PAINT.
16. CONSTRUCTION SHALL COMPLY WITH SPECIFICATIONS AND "GENERAL CONSTRUCTION SERVICES FOR CONSTRUCTION OF AT&T SITES."
17. SUBCONTRACTOR SHALL VERIFY ALL EXISTING DIMENSIONS AND CONDITIONS PRIOR TO COMMENCING ANY WORK. ALL DIMENSIONS OF EXISTING CONSTRUCTION SHOWN ON THE DRAWINGS MUST BE VERIFIED. SUBCONTRACTOR SHALL NOTIFY THE CONTRACTOR OF ANY DISCREPANCIES PRIOR TO ORDERING MATERIAL OR PROCEEDING WITH CONSTRUCTION.
18. THE EXISTING CELL SITE IS IN FULL COMMERCIAL OPERATION. ANY CONSTRUCTION WORK BY SUBCONTRACTOR SHALL NOT DISRUPT THE EXISTING NORMAL OPERATION. ANY WORK ON EXISTING EQUIPMENT MUST BE COORDINATED WITH CONTRACTOR. ALSO, WORK SHOULD BE SCHEDULED FOR AN APPROPRIATE MAINTENANCE WINDOW USUALLY IN LOW TRAFFIC PERIODS AFTER MIDNIGHT.
19. SINCE THE CELL SITE IS ACTIVE, ALL SAFETY PRECAUTIONS MUST BE TAKEN WHEN WORKING AROUND HIGH LEVELS OF ELECTROMAGNETIC RADIATION. EQUIPMENT SHOULD BE SHUTDOWN PRIOR TO PERFORMING ANY WORK THAT COULD EXPOSE THE WORKERS TO DANGER. PERSONAL RF EXPOSURE MONITORS ARE ADVISED TO BE WORN TO ALERT OF ANY DANGEROUS EXPOSURE LEVELS.
20. **APPLICABLE BUILDING CODES:**
    SUBCONTRACTOR'S WORK SHALL COMPLY WITH ALL APPLICABLE NATIONAL, STATE, AND LOCAL CODES AS ADOPTED BY THE LOCAL AUTHORITY HAVING JURISDICTION (AHJ) FOR THE LOCATION. THE EDITION OF THE AHJ ADOPTED CODES AND STANDARDS IN EFFECT ON THE DATE OF CONTRACT AWARD SHALL GOVERN THE DESIGN.

    BUILDING CODE: IBC 2015 WITH 2018 CT STATE BUILDING CODE AMENDMENTS
    ELECTRICAL CODE: 2017 NATIONAL ELECTRICAL CODE (NFPA 70-2017)

    SUBCONTRACTOR'S WORK SHALL COMPLY WITH THE LATEST EDITION OF THE FOLLOWING STANDARDS:

    AMERICAN CONCRETE INSTITUTE (ACI) 318; BUILDING CODE REQUIREMENTS FOR STRUCTURAL CONCRETE;

    AMERICAN INSTITUTE OF STEEL CONSTRUCTION (AISC) MANUAL OF STEEL CONSTRUCTION, ASD, FOURTEENTH EDITION;

    TELECOMMUNICATIONS INDUSTRY ASSOCIATION (TIA) 222-H, STRUCTURAL STANDARDS FOR STEEL

    FOR ANY CONFLICTS BETWEEN SECTIONS OF LISTED CODES AND STANDARDS REGARDING MATERIAL, METHODS OF CONSTRUCTION, OR OTHER REQUIREMENTS, THE MOST RESTRICTIVE REQUIREMENT SHALL GOVERN. WHERE THERE IS CONFLICT BETWEEN A GENERAL REQUIREMENT AND A SPECIFIC REQUIREMENT, THE SPECIFIC REQUIREMENT SHALL GOVERN.

ABBREVIATIONS

AGL	ABOVE GRADE LEVEL	EQ	EQUAL	REQ	REQUIRED
AWG	AMERICAN WIRE GAUGE	GC	GENERAL CONTRACTOR	RF	RADIO FREQUENCY
BBU	BATTERY BACKUP UNIT	GRC	GALVANIZED RIGID CONDUIT	TBD	TO BE DETERMINED
BTCW	BARE TINNED SOLID COPPER WIRE	MGB	MASTER GROUND BAR	TBR	TO BE REMOVED
BGR	BURIED GROUND RING	MIN	MINIMUM	TBRR	TO BE REMOVED AND REPLACED
BTS	BASE TRANSCEIVER STATION	P	PROPOSED	TYP	TYPICAL
E	EXISTING	NTS	NOT TO SCALE	UG	UNDER GROUND
EGB	EQUIPMENT GROUND BAR	RCL	RADIATION CENTER LINE ANTENNA	VIF	VERIFY IN FIELD
EGR	EQUIPMENT GROUND RING	REF	REFERENCE		

HUDSON Design Group LLC
45 BEECHWOOD DRIVE
NORTH ANDOVER, MA 01845
TEL: (978) 557-5553
FAX: (978) 336-5586

smartlink
SMARTLINK
1997 ANNAPOLIS EXCHANGE PKWY SUITE 200
ANNAPOLIS, MD 21401

SITE NUMBER: CTL02037
SITE NAME: NEW HAVEN WHEELER ST

69 WHEELER STREET
NEW HAVEN, CT 06512
NEW HAVEN COUNTY

at&t
500 ENTERPRISE DRIVE, SUITE 3A
ROCKY HILL, CT 06067

NO.	DATE	REVISIONS	BY	CHK	APP'D
2	03/21/22	ISSUED FOR CONSTRUCTION	SG	MT	DPH
1	03/01/22	ISSUED FOR CONSTRUCTION	NB	MT	DPH
0	02/04/22	ISSUED FOR REVIEW	GD	MT	DPH

SCALE: AS SHOWN | DESIGNED BY: AT | DRAWN BY: GD

STATE OF CONNECTICUT · DANIEL P. HAMM · No. 24128 · LICENSED PROFESSIONAL ENGINEER

AT&T

GENERAL NOTES
5G NR RADIO, 4TXRX ANTENNA RETROFIT,
5G NR 1SR CBAND

SITE NUMBER	DRAWING NUMBER	REV
CTL02037	GN-1	2

NOTE:

AN ANALYSIS FOR THE CAPACITY OF THE EXISTING STRUCTURES TO SUPPORT THE PROPOSED EQUIPMENT HAS BEEN COMPLETED BY: HUDSON DESIGN GROUP, LLC DATED: MARCH 15, 2022 (REV.1)

NOTE:

REFER TO FINAL APPROVED V5 RFDS DATED 03/08/2022

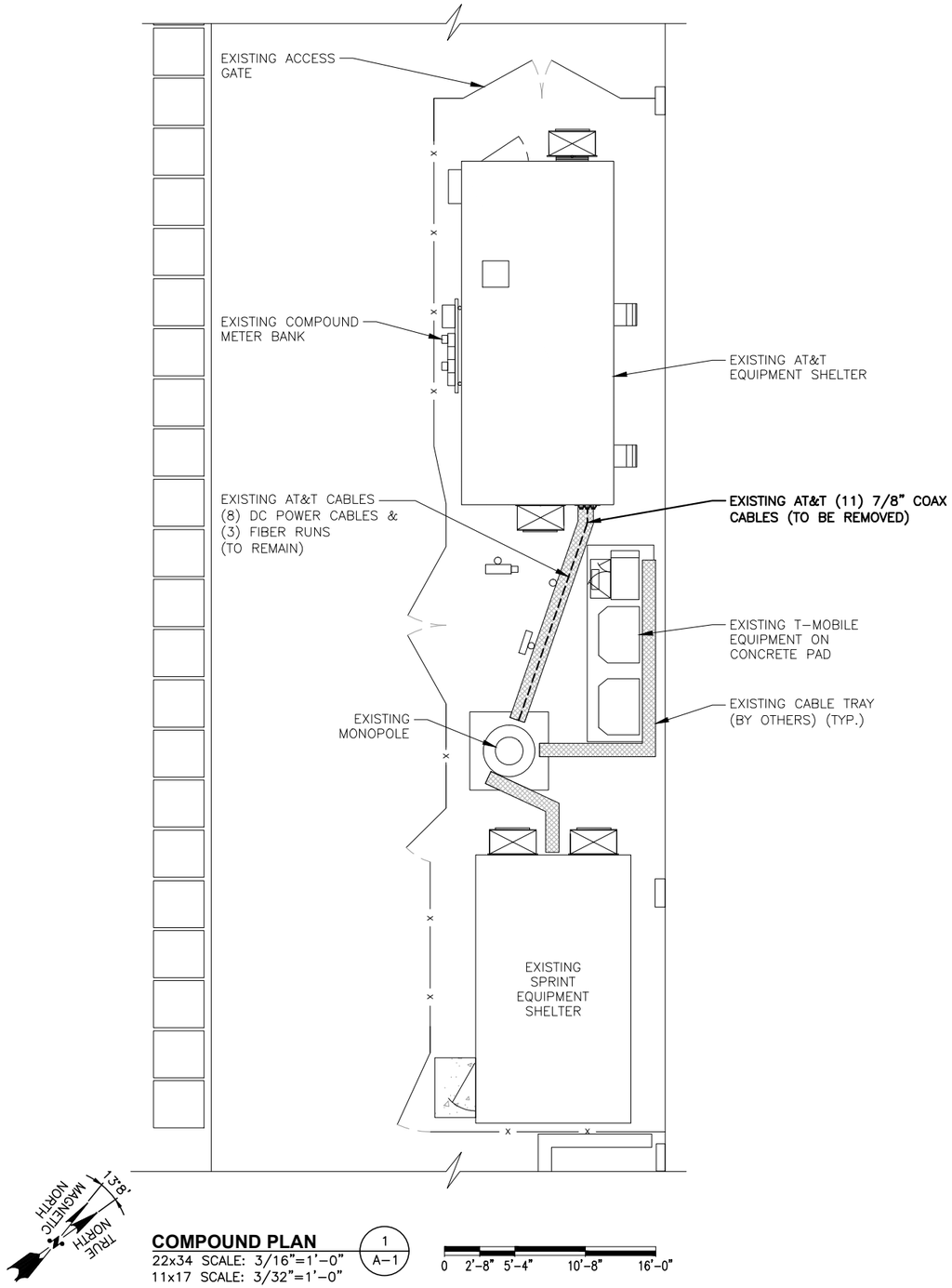

COMPOUND PLAN (1 / A-1)
22x34 SCALE: 3/16"=1'-0"
11x17 SCALE: 3/32"=1'-0"

0 2'-8" 5'-4" 10'-8" 16'-0"

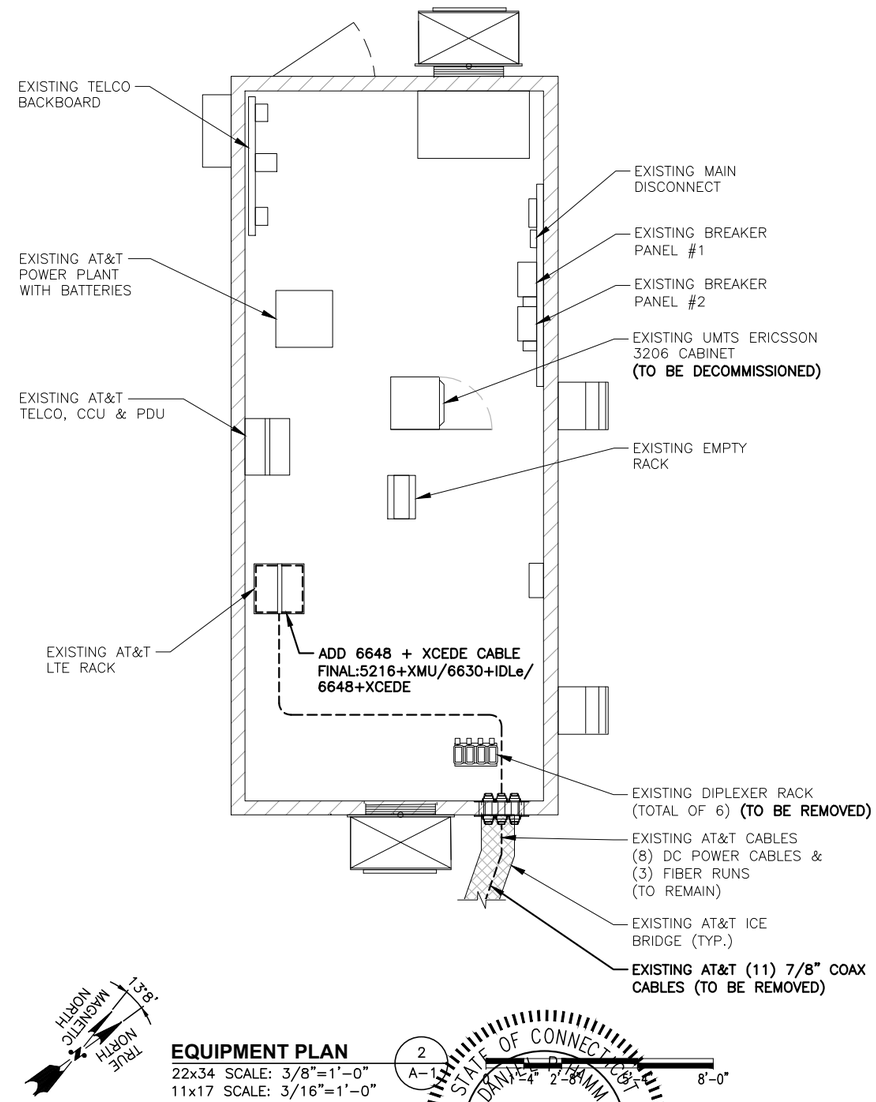

EQUIPMENT PLAN (2 / A-1)
22x34 SCALE: 3/8"=1'-0"
11x17 SCALE: 3/16"=1'-0"

0 1'-4" 2'-8" 4'-0" 8'-0"

STATE OF CONNECTICUT DANIEL P. HAMM No. 24178 LICENSED PROFESSIONAL ENGINEER

HUDSON Design Group LLC
45 BEECHWOOD DRIVE
NORTH ANDOVER, MA 01845
TEL: (978) 557-5553
FAX: (978) 336-5586

smartlink
SMARTLINK
1997 ANNAPOLIS EXCHANGE PKWY SUITE 200
ANNAPOLIS, MD 21401

SITE NUMBER: CTL02037
SITE NAME: NEW HAVEN WHEELER ST

69 WHEELER STREET
NEW HAVEN, CT 06512
NEW HAVEN COUNTY

at&t
500 ENTERPRISE DRIVE, SUITE 3A
ROCKY HILL, CT 06067

NO.	DATE	REVISIONS	BY	CHK	APP'D
2	03/21/22	ISSUED FOR CONSTRUCTION	SG	MT	DPH
1	03/01/22	ISSUED FOR CONSTRUCTION	NB	MT	DPH
0	02/04/22	ISSUED FOR REVIEW	GD	MT	DPH

SCALE: AS SHOWN | DESIGNED BY: AT | DRAWN BY: GD

AT&T

COMPOUND & EQUIPMENT PLANS
5G NR RADIO, 4TXRX ANTENNA RETROFIT,
5G NR 1SR CBAND

SITE NUMBER	DRAWING NUMBER	REV
CTL02037	A-1	2

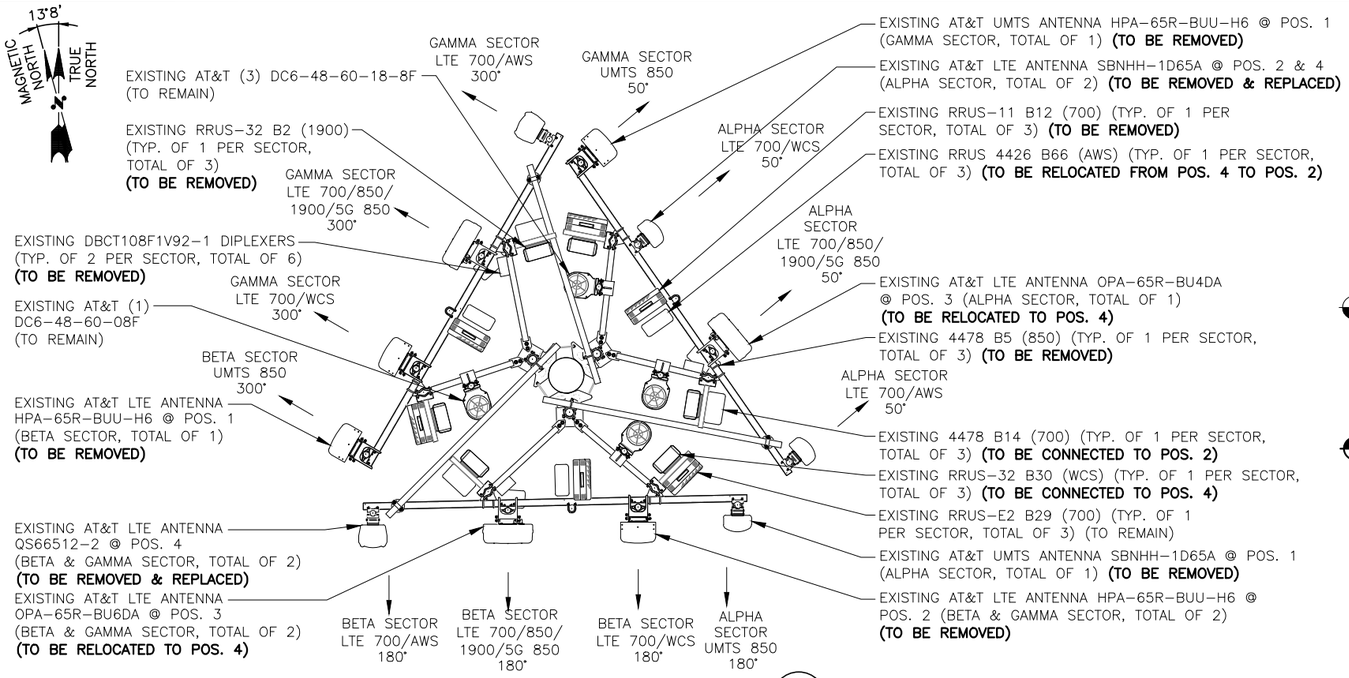

EXISTING ANTENNA LAYOUT (1 / A-2)
SCALE: N.T.S

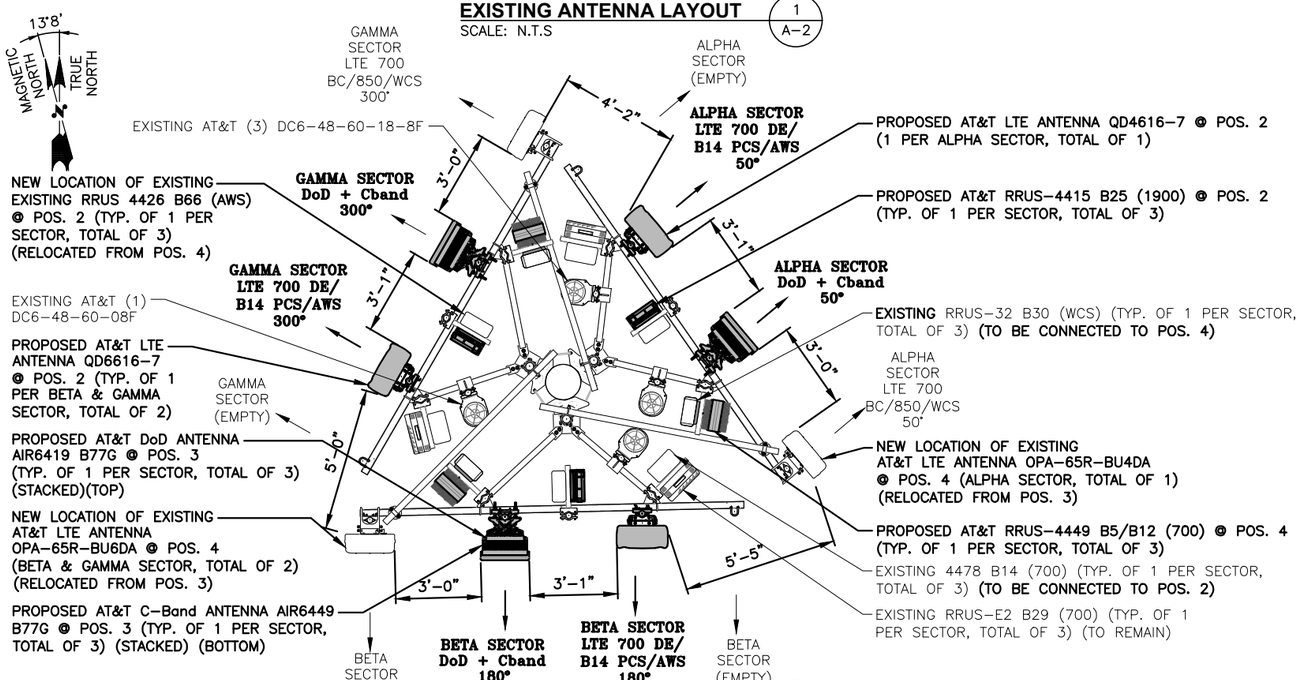

PROPOSED ANTENNA LAYOUT (2 / A-2)
SCALE: N.T.S

NOTE:
AN ANALYSIS FOR THE CAPACITY OF THE EXISTING STRUCTURES TO SUPPORT THE PROPOSED EQUIPMENT HAS BEEN COMPLETED BY: HUDSON DESIGN GROUP, LLC DATED: MARCH 15, 2022 (REV.1)

NOTE:
REFER TO FINAL APPROVED V5 RFDS DATED 03/08/2022

NOTE:
AN ANALYSIS FOR THE CAPACITY OF THE EXISTING **ANTENNA MOUNT** TO SUPPORT THE PROPOSED LOADING HAS BEEN COMPLETED BY: HUDSON DESIGN GROUP, LLC. DATED: MARCH 15, 2022 (REV.1)

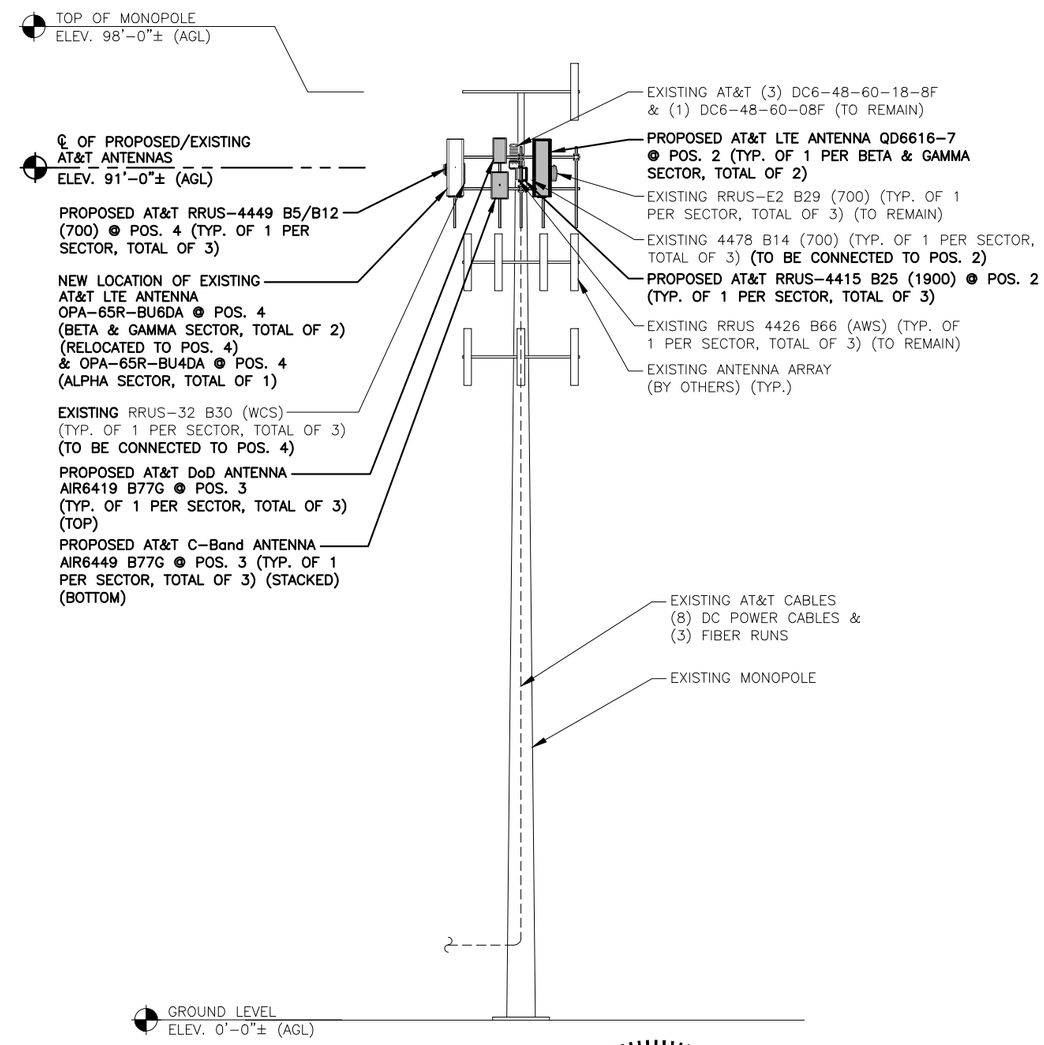

ELEVATION (3 / A-2)
22x34 SCALE: 1/8"=1'-0"
11x17 SCALE: 1/16"=1'-0"

HUDSON Design Group LLC
45 BEECHWOOD DRIVE
NORTH ANDOVER, MA 01845
TEL: (978) 557-5553
FAX: (978) 336-5586

smartlink
SMARTLINK
1997 ANNAPOLIS EXCHANGE PKWY SUITE 200
ANNAPOLIS, MD 21401

SITE NUMBER: CTL02037
SITE NAME: NEW HAVEN WHEELER ST

69 WHEELER STREET
NEW HAVEN, CT 06512
NEW HAVEN COUNTY

at&t
500 ENTERPRISE DRIVE, SUITE 3A
ROCKY HILL, CT 06067

NO.	DATE	REVISIONS	BY	CHK	APP'D
2	03/21/22	ISSUED FOR CONSTRUCTION	SG	MT	DPH
1	03/01/22	ISSUED FOR CONSTRUCTION	MB	MT	DPH
0	02/04/22	ISSUED FOR REVIEW	GD	MT	DPH

SCALE: AS SHOWN | DESIGNED BY: AT | DRAWN BY: GD

STATE OF CONNECTICUT · DANIEL P. HAMM · No. 24178 · LICENSED PROFESSIONAL ENGINEER

AT&T

ANTENNA LAYOUTS & ELEVATION
5G NR RADIO, 4TXRX ANTENNA RETROFIT, 5G NR 1SR CBAND

SITE NUMBER	DRAWING NUMBER	REV
CTL02037	A-2	2

ANTENNA SCHEDULE

FINAL APPROVED V5 RFDS DATED 03/08/2022

SECTOR	EXISTING/ PROPOSED	BAND	ANTENNA	SIZE (INCHES) (L x W x D)	ANTENNA ℄ HEIGHT	AZIMUTH	TMA/ DIPLEXER	RRU	SIZE (INCHES) (L x W x D)	FEEDER	RAYCAP
A1	–	–	–	–	–	–	–	–	–	–	(E) (1) RAYCAP DC6-48-60-18-8F
A2	PROPOSED	LTE 700 DE/ B14 PCS/AWS	QD4616-7	51.5"X22"X9.6"	91'-0"±	50°	–	(E)(1) 4478 B14 (700) (P)(1) 4415 B25 (PCS) (E)(1) 4426 B66 (AWS) (E)(1)RRUS-E2 B29 (700)	– 16.5x13.4x5.9 – –	(E)(1) 18-PAIR FIBER & (E)(2) 8 AWG DC POWER	
A3	PROPOSED	DoD C-BAND	AIR 6419 N77G AIR 6449 N77D	31.1"X16.1"X7.3" 30.4"X15.9"X8.1"	91'-0"±	50°	–	–	–	–	
A4	EXISTING	LTE 700 BC/ 850/WCS	OPA-65R-BU4DA	48"X21"X7.8"	91'-0"±	50°	–	(P)(1) 4449 B5/B12 (850/700) (E)(1)RRUS-32 B30 (WCS)	17.9x13.9x9.44 –	(P)(1)(Y-CABLE)	
B1	–	–	–	–	–	–	–	–	–	–	(E) (1) RAYCAP DC6-48-60-18-8F
B2	PROPOSED	LTE 700 DE/ B14 PCS/AWS	QD6616-7	72"X22"X9.6"	91'-0"±	180°	–	(E)(1) 4478 B14 (700) (P)(1) 4415 B25 (PCS) (E)(1) 4426 B66 (AWS) (E)(1)RRUS-E2 B29 (700)	– 16.5x13.4x5.9 – –	(E)(1) 18-PAIR FIBER & (E)(2) 8 AWG DC POWER	
B3	PROPOSED	DoD C-BAND	AIR 6419 N77G AIR 6449 N77D	31.1"X16.1"X7.3" 30.4"X15.9"X8.1"	91'-0"±	180°	–	–	–	–	
B4	EXISTING	LTE 700 BC/ 850/WCS	OPA-65R-BU6DA	71.2"X21"X7.8"	91'-0"±	180°	–	(P)(1) 4449 B5/B12 (850/700) (E)(1)RRUS-32 B30 (WCS)	17.9x13.9x9.44 –	(P)(1)(Y-CABLE)	
C1	–	–	–	–	–	–	–	–	–	–	(E) (1) RAYCAP DC6-48-60-18-8F (E) (1) RAYCAP DC6-48-60-08F
C2	PROPOSED	LTE 700 DE/ B14 PCS/AWS	QD6616-7	72"X22"X9.6"	91'-0"±	300°	–	(E)(1) 4478 B14 (700) (P)(1) 4415 B25 (PCS) (E)(1) 4426 B66 (AWS) (E)(1)RRUS-E2 B29 (700)	– 16.5x13.4x5.9 – –	(E)(1) 18-PAIR FIBER & (E)(4) 8 AWG DC POWER	
C3	PROPOSED	DoD C-BAND	AIR 6419 N77G AIR 6449 N77D	31.1"X16.1"X7.3" 30.4"X15.9"X8.1"	91'-0"±	300°	–	–	–	–	
C4	EXISTING	LTE 700 BC/ 850/WCS	OPA-65R-BU6DA	71.2"X21"X7.8"	91'-0"±	300°	–	(P)(1) 4449 B5/B12 (850/700) (E)(1)RRUS-32 B30 (WCS)	17.9x13.9x9.44 –	(P)(1)(Y-CABLE)	

FINAL ANTENNA SCHEDULE (1 / A-3)
SCALE: N.T.S

RRU CHART

QUANTITY	MODEL	SIZE (L x W x D)
(P)(3)	RRUS 4449 B5/B12 (850/700)	17.9"x13.9"x9.44"
(P)(3)	4415 B25 (PCS)	16.5"x13.4"x5.9"
(E)(3)	RRUS-32 B30 (WCS)	27.2"x12.1"x7.0"
(E)(3)	RRUS-4426 B66 (AWS)	14.9"x13.2"x5.8"
(E)(3)	RRUS-4478 B14 (700)	18.1"x13.4"x8.3"
(E)(3)	RRUS-E2 B29 (700)	18"x17"x7"

NOTE:
MOUNT PER MANUFACTURER'S SPECIFICATIONS

NOTE:
SEE RFDS FOR RRH FREQUENCY AND MODEL NUMBER

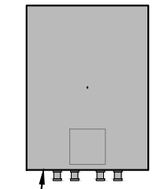

NOTE:
MOUNT PER MANUFACTURER'S SPECIFICATIONS.

PROPOSED RRU REFER TO THE FINAL RFDS AND CHART FOR QUANTITY, MODEL AND DIMENSIONS

PROPOSED RRUS DETAIL (2 / A-3)
SCALE: N.T.S

NOTE:
AN ANALYSIS FOR THE CAPACITY OF THE EXISTING STRUCTURES TO SUPPORT THE PROPOSED EQUIPMENT HAS BEEN COMPLETED BY: HUDSON DESIGN GROUP, LLC DATED: MARCH 15, 2022 (REV.1)

NOTE:
REFER TO FINAL APPROVED V5 RFDS DATED 03/08/2022

NOTE:
VERTICAL AND HORIZONTAL MOUNTING PIPES TO BE REARRANGED TO ACCOMMODATE PROPOSED ANTENNNAS.

NOTE:
AN ANALYSIS FOR THE CAPACITY OF THE EXISTING **ANTENNA MOUNT** TO SUPPORT THE PROPOSED LOADING HAS BEEN COMPLETED BY: HUDSON DESIGN GROUP, LLC. DATED: MARCH 15, 2022 (REV.1)

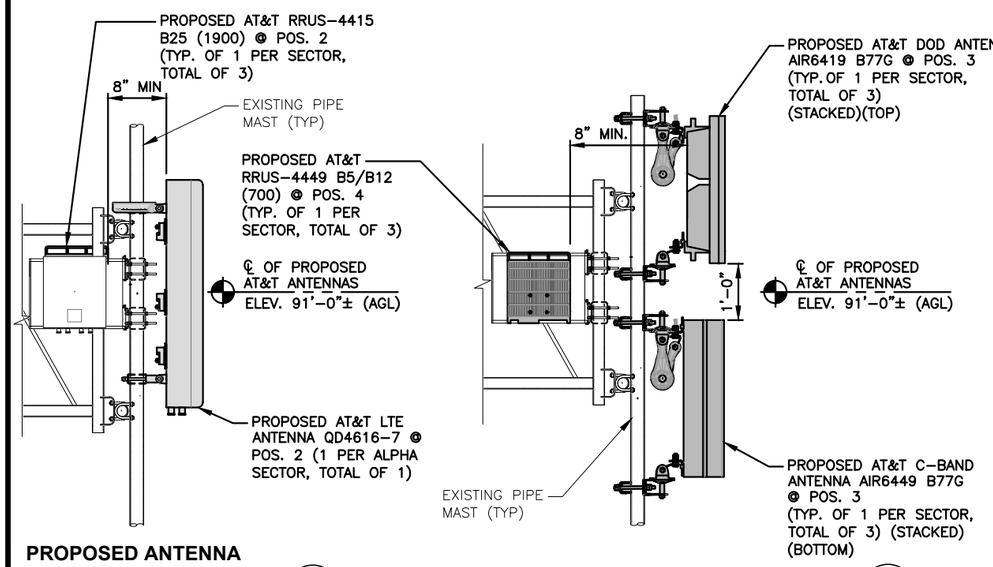

PROPOSED ANTENNA @ POS. 2 ALPHA SECTOR (3 / A-3)
22x34 SCALE: 3/4"=1'-0"
11x17 SCALE: 3/8"=1'-0"

PROPOSED ANTENNA @ POS. 3 (4 / A-3)
22x34 SCALE: 3/4"=1'-0"
11x17 SCALE: 3/8"=1'-0"

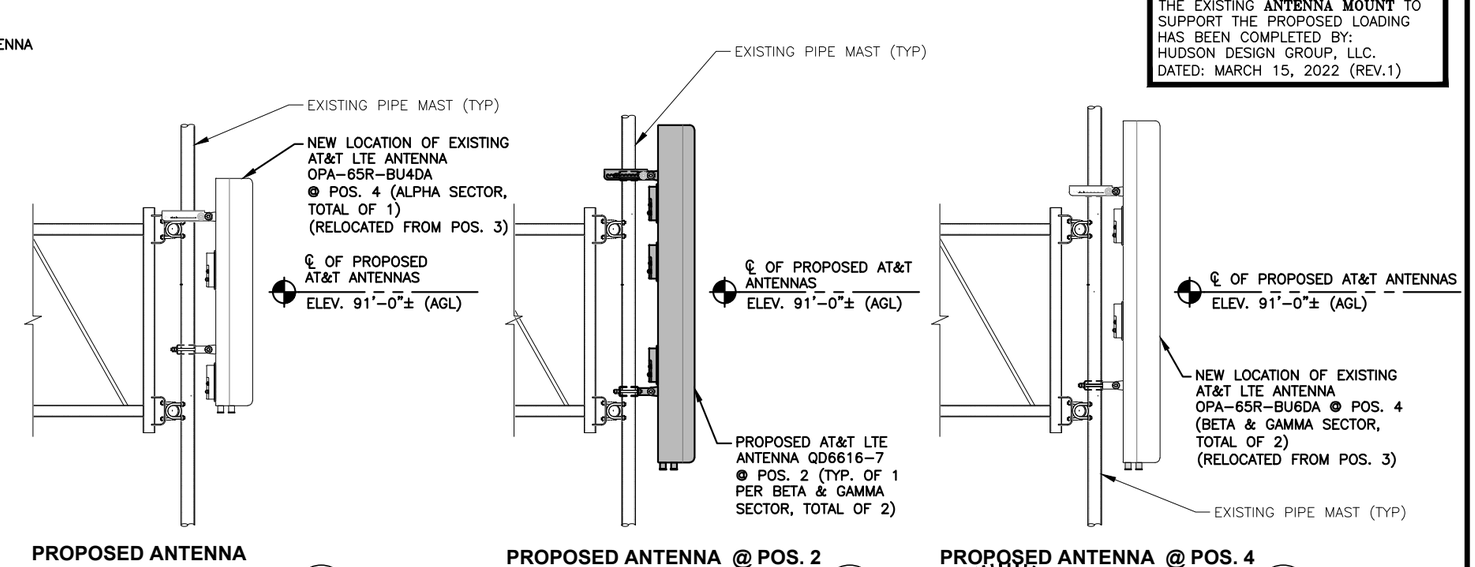

PROPOSED ANTENNA @ POS. 4 ALPHA SECTOR (5 / A-3)
22x34 SCALE: 3/4"=1'-0"
11x17 SCALE: 3/8"=1'-0"

PROPOSED ANTENNA @ POS. 2 BETA & GAMMA SECTOR (6 / A-3)
22x34 SCALE: 3/4"=1'-0"
11x17 SCALE: 3/8"=1'-0"

PROPOSED ANTENNA @ POS. 4 BETA & GAMMA SECTOR (7 / A-3)
22x34 SCALE: 3/4"=1'-0"
11x17 SCALE: 3/8"=1'-0"

0 8" 1'-4" 2'-8" 4'-0"

HUDSON Design Group LLC
45 BEECHWOOD DRIVE
NORTH ANDOVER, MA 01845
TEL: (978) 557-5553
FAX: (978) 336-5586

smartlink
SMARTLINK
1997 ANNAPOLIS EXCHANGE PKWY SUITE 200
ANNAPOLIS, MD 21401

SITE NUMBER: CTL02037
SITE NAME: NEW HAVEN WHEELER ST

69 WHEELER STREET
NEW HAVEN, CT 06512
NEW HAVEN COUNTY

at&t
500 ENTERPRISE DRIVE, SUITE 3A
ROCKY HILL, CT 06067

NO.	DATE	REVISIONS	BY	CHK	APP'D
2	03/21/22	ISSUED FOR CONSTRUCTION	SG	MT	DPH
1	03/01/22	ISSUED FOR CONSTRUCTION	NB	MT	DPH
0	02/04/22	ISSUED FOR REVIEW	GD	MT	DPH

SCALE: AS SHOWN | DESIGNED BY: AT | DRAWN BY: GD

STATE OF CONNECTICUT
DONTE' HAMM
No. 24178
LICENSED PROFESSIONAL ENGINEER

AT&T

DETAILS
5G NR RADIO, 4TXRX ANTENNA RETROFIT, 5G NR 1SR CBAND

SITE NUMBER	DRAWING NUMBER	REV
CTL02037	A-3	2

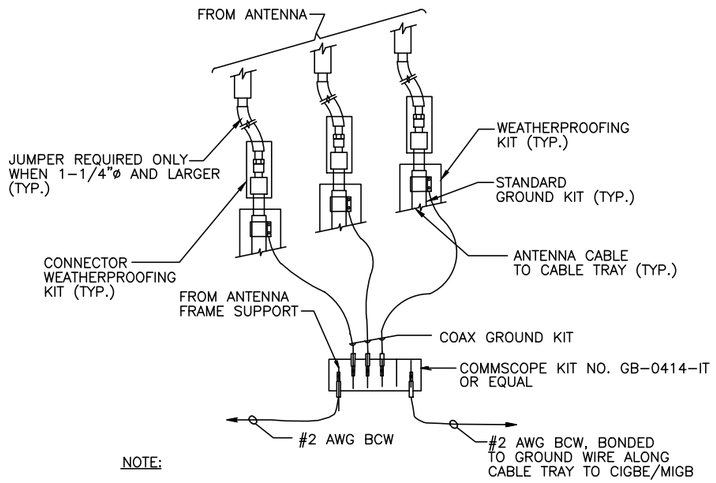

NOTE:

1. DO NOT INSTALL CABLE GROUND KIT AT A BEND AND ALWAYS DIRECT GROUND WIRE DOWN TO CIGBE.

GROUND WIRE TO GROUND BAR CONNECTION DETAIL (1 / G-1)

SCALE: N.T.S

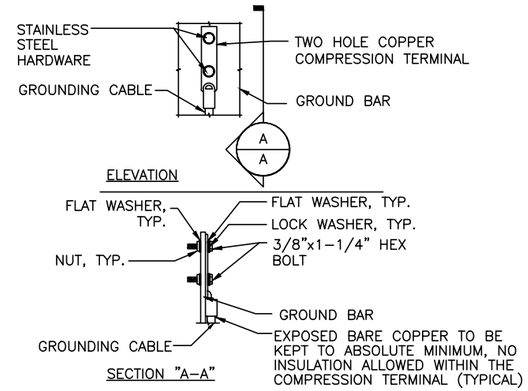

NOTES:

1. "DOUBLING UP" OR "STACKING" OF CONNECTION IS NOT PERMITTED.
2. OXIDE INHIBITING COMPOUND TO BE USED AT ALL LOCATION.
3. CADWELD DOWNLEADS FROM UPPER EGB, LOWER EGB, AND MGB

TYPICAL GROUND BAR CONNECTION DETAIL (3 / G-1)

SCALE: N.T.S

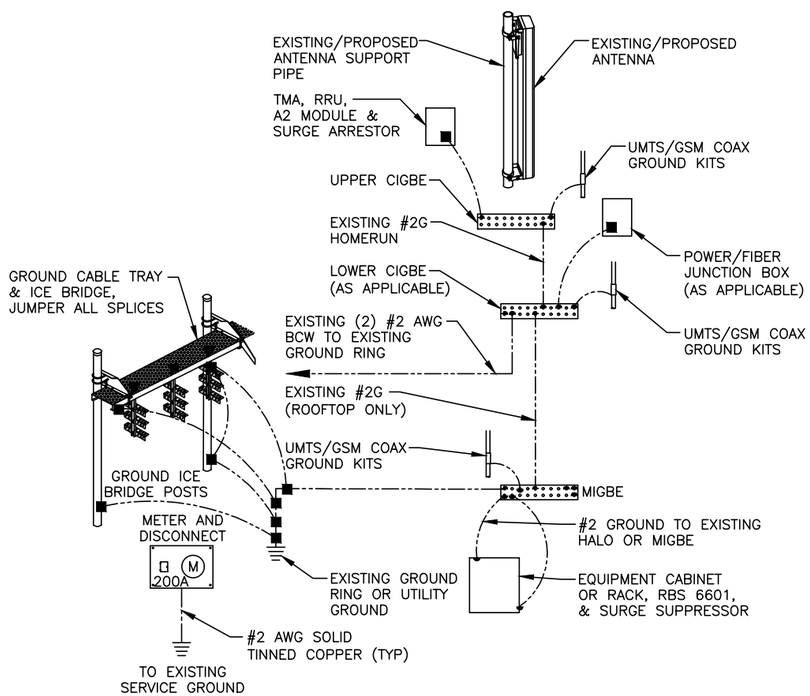

GROUNDING RISER DIAGRAM (2 / G-1)

SCALE: N.T.S

EACH GROUND CONDUCTOR TERMINATING ON ANY GROUND BAR SHALL HAVE AN IDENTIFICATION TAG ATTACHED AT EACH END THAT WILL IDENTIFY ITS ORIGIN AND DESTINATION.

SECTION "P" – SURGE PRODUCERS

CABLE ENTRY PORTS (HATCH PLATES) (#2 AWG)
GENERATOR FRAMEWORK (IF AVAILABLE) (#2 AWG)
TELCO GROUND BAR
COMMERCIAL POWER COMMON NEUTRAL/GROUND BOND (#2 AWG)
+24V POWER SUPPLY RETURN BAR (#2 AWG)
−48V POWER SUPPLY RETURN BAR (#2 AWG)
RECTIFIER FRAMES.

SECTION "A" – SURGE ABSORBERS

INTERIOR GROUND RING (#2 AWG)
EXTERNAL EARTH GROUND FIELD (BURIED GROUND RING) (#2 AWG)
METALLIC COLD WATER PIPE (IF AVAILABLE) (#2 AWG)
BUILDING STEEL (IF AVAILABLE) (#2 AWG)

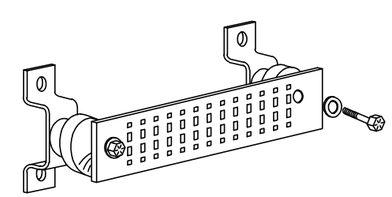

GROUND BAR - DETAIL (AS REQUIRED)

SCALE: N.T.S

HDG HUDSON Design Group LLC
45 BEECHWOOD DRIVE
NORTH ANDOVER, MA 01845
TEL: (978) 557-5553
FAX: (978) 336-5586

smartlink
SMARTLINK
1997 ANNAPOLIS EXCHANGE PKWY SUITE 200
ANNAPOLIS, MD 21401

SITE NUMBER: CTL02037
SITE NAME: NEW HAVEN WHEELER ST

69 WHEELER STREET
NEW HAVEN, CT 06512
NEW HAVEN COUNTY

at&t
500 ENTERPRISE DRIVE, SUITE 3A
ROCKY HILL, CT 06067

NO.	DATE	REVISIONS	BY	CHK	APP'D
2	03/21/22	ISSUED FOR CONSTRUCTION	SG	MT	DPH
1	03/01/22	ISSUED FOR CONSTRUCTION	NB	MT	DPH
0	02/04/22	ISSUED FOR REVIEW	GD	MT	DPH

SCALE: AS SHOWN | DESIGNED BY: AT | DRAWN BY: GD

STATE OF CONNECTICUT · DANIEL P. HAMM · No. 24178 · LICENSED PROFESSIONAL ENGINEER

AT&T

GROUNDING DETAILS
5G NR RADIO, 4TXRX ANTENNA RETROFIT, 5G NR 1SR CBAND

SITE NUMBER	DRAWING NUMBER	REV
CTL02037	G-1	2

FINAL APPROVED V5 RFDS DATED 03/08/2022

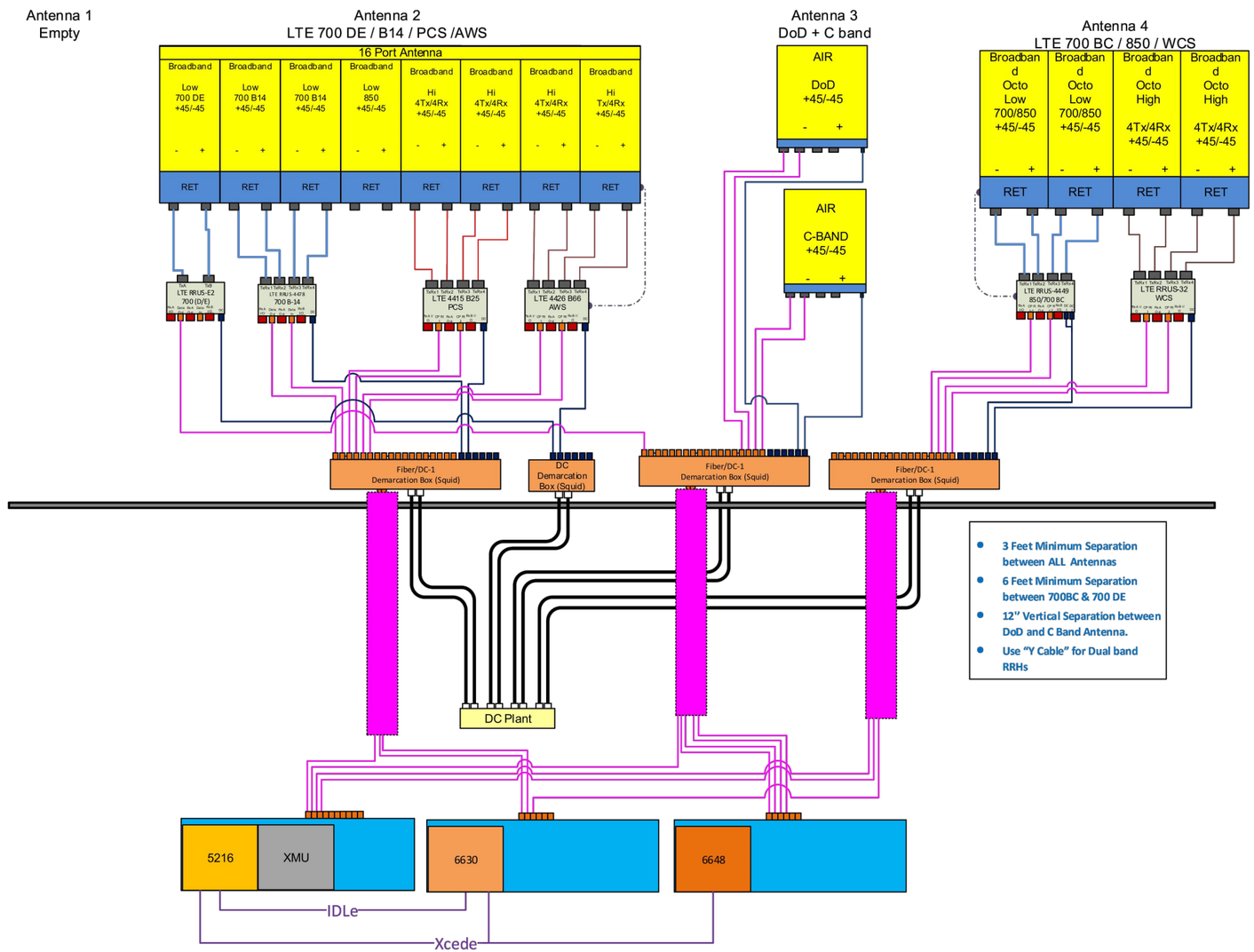

- 3 Feet Minimum Separation between ALL Antennas
- 6 Feet Minimum Separation between 700BC & 700 DE
- 12" Vertical Separation between DoD and C Band Antenna.
- Use "Y Cable" for Dual band RRHs

NOTE:
1. CONTRACTOR TO CONFIRM ALL PARTS.
2. INSTALL ALL EQUIPMENT TO MANUFACTURER'S RECOMMENDATIONS

NOTE:

REFER TO FINAL APPROVED V5 RFDS DATED 03/08/2022

RF PLUMBING DIAGRAM (1 / RF-1)
SCALE: N.T.S

STATE OF CONNECTICUT
DANIEL P. HAMM
No. 24178
LICENSED PROFESSIONAL ENGINEER

HUDSON Design Group LLC
45 BEECHWOOD DRIVE
NORTH ANDOVER, MA 01845
TEL: (978) 557-5553
FAX: (978) 336-5586

smartlink
SMARTLINK
1997 ANNAPOLIS EXCHANGE PKWY SUITE 200
ANNAPOLIS, MD 21401

SITE NUMBER: CTL02037
SITE NAME: NEW HAVEN WHEELER ST

69 WHEELER STREET
NEW HAVEN, CT 06512
NEW HAVEN COUNTY

at&t
500 ENTERPRISE DRIVE, SUITE 3A
ROCKY HILL, CT 06067

NO.	DATE	REVISIONS	BY	CHK	APP'D
2	03/21/22	ISSUED FOR CONSTRUCTION	SG	MT	DPH
1	03/01/22	ISSUED FOR CONSTRUCTION	NB	MT	DPH
0	02/04/22	ISSUED FOR REVIEW	GD	MT	DPH

SCALE: AS SHOWN | DESIGNED BY: AT | DRAWN BY: GD

AT&T

RF PLUMBING DIAGRAM
5G NR RADIO, 4TXRX ANTENNA RETROFIT, 5G NR 1SR CBAND

SITE NUMBER	DRAWING NUMBER	REV
CTL02037	RF-1	2