Rigorous Structural Analysis Report

AT&T | New Haven Wheeler St #CT2037 / FA 10035247

Owner: William Laydon & Elmer Laydon

New Haven, Connecticut

June 9, 2020

MEI PROJECT ID: CT06121M-20V0

MALOUF ENGINEERING INTL., INC.

STRUCTURAL CONSULTANTS

17950 PRESTON ROAD, SUITE 720 ▪ DALLAS, TEXAS 75252 ▪ TEL. 972 -783-2578 FAX 972-783-2583

www.maloufengineering.com

PROFESSIONAL MEMBER

ACEC MEMBER

MALOUF ENGINEERING INTL., INC.

STRUCTURAL CONSULTANTS

June 9, 2020

Mr. Miguel Nobre
Vertical Resources Group
Auburn, MA 01501

RIGOROUS STRUCTURAL ANALYSIS

Structure/Make/Model:	98 ft **Monopole**		EEI / 18-Sided	
Client/Site Name/#:	**Vertical Resources Group | AT&T**		**New Haven Wheeler St | #CT2037 / FA 10035247**	
Owner/Site Name/#:	William Laydon & Elmer Laydon		-	
MEI Project ID:	**CT06121M-20V0**			
Location:	69 Wheeler St New Haven, CT 06512		New Haven County FCC #1210659	
	LAT	41-17-45.6 N	LON	72-53-52.6 W

EXECUTIVE SUMMARY:

Malouf Engineering Int'l (MEI), as requested, has performed a rigorous structural analysis of the above-mentioned structure to assess the impact of the changed condition as noted in Table 1.

Based on the stress analysis performed, the existing structure **is in conformance** with the Int'l Building Code (IBC) / ANSI/TIA-**222-G** Standard for the loading considered under the criteria listed and referenced in the report sections – tower rated at 96.7% - Pole.

The installation of the proposed changed condition as noted in Table 1 is structurally acceptable. Please refer to Appendix 1 for Schematic Lines Layout.

MEI appreciates the opportunity of providing our continuing professional services to you. If you have any questions or need further assistance on this or other projects, please contact us.

Respectfully submitted,

MALOUF ENGINEERING INT'L, INC.

Analysis performed by:

Krishna Manda
Sr. Project Engineer

Reviewed & Approved by:

STATE OF CONNECTICUT
E. MARK MALOUF
No. 17715
LICENSED
PROFESSIONAL ENGINEER

E. Mark Malouf, PE
Connecticut #17715
972-783-2578 ext. 106
mmalouf@maloufengineering.com

6/9/2020

TABLE OF CONTENTS

1. INTRODUCTION & SCOPE ***4***

2. SOURCE OF DATA ***4***

Background Information: 4

3. ANALYSIS CRITERIA ***5***

Appurtenances Configuration 5

4. ANALYSIS PROCEDURE ***7***

Analysis Program 7

Assumptions 7

5. ANALYSIS RESULTS ***8***

6. FINDINGS & RECOMMENDATIONS ***9***

7. REPORT DISCLAIMER ***10***

APPENDIX 1 - ANALYSIS PRINTOUT & GRAPHICS ***11***

APPENDIX 2 – SOURCE / CHANGED CONDITION ***12***

This report is not to be reproduced or copied in whole or in part without MEI's written consent. **2020, MEI, Inc. ©**

1. INTRODUCTION & SCOPE

A rigorous structural analysis was performed by Malouf Engineering Int'l (MEI), as requested and authorized by Mr. Miguel Nobre, Vertical Resources Group, on behalf of AT&T, to determine the acceptance of the proposed changed conditions in conformance with the IBC / ANSI/TIA-222-G Standard, "*Structural Standard for Antenna Supporting Structures and Antennas*".

The scope of this independent analysis is to determine the overall stability and the adequacy of structural members, foundations, and member connections, as available and stated. This analysis considers the structure to have been properly installed and maintained with no structural defects. Installation procedures and related loading are not within the scope of this analysis and should be performed and evaluated by a competent person of the erection contractor.

The different report sections detail the applicable information used in this evaluation, relating to the tower data, the appurtenances configuration and the wind and ice loading considered.

2. SOURCE OF DATA

The following information has been used in this evaluation as source data that accurately represent the existing structure and the related appurtenances:

	Source	Information	Reference
STRUCTURE			
Tower	Vertical Resources / Mr. Miguel Nobre	Previous SA & Mods [Structural Components]	Job #120229 Dated 04/26/2012
		Modification Drawings [Bennett & Pless]	Job #16709.003 Dated 08/26/2016
Foundation	Vertical Resources / Mr. Miguel Nobre	Previous Structural Analysis report (SA) [Maser Consulting, CT]	Job #18963010A Dated 05/02/2019
Material Grade	Limited details available from supplied documents – Refer to Appendix		
CURRENT APPURTENANCES			
	Vertical Resources / Mr. Miguel Nobre	Previous Structural Analysis report (SA) [Maser Consulting, CT]	Job #18963010A Dated 05/02/2019
		Latest Photos	Dated 04/16/2020
CHANGED CONDITION			
	Vertical Resources / Mr. Miguel Nobre	AT&T RFDS	Dated 03/09/2020
		Email Instructions	Dated 05/27/2020

Background Information:

Based on available information, the following is known regarding this structure:

DESIGNER / FABRICATOR	EEI / 18-Sided
ORIGINAL DESIGN CRITERIA	TIA 222-Unknown
PRIOR STRUCTURAL MODIFICATIONS	Pole Mods as per Structural Components Job #120229 Dated 04/26/2012, Mods per Bennett & Pless Job #16709.003 Dated 08/26/2016 – Assumed to be installed properly and maintained.

This report is not to be reproduced or copied in whole or in part without MEI's written consent. 2020, MEI, Inc. ©

3. ANALYSIS CRITERIA

The structural analysis performed used the following criteria:

CODE / STANDARD	2018 CT Bldg. Code / 2015 Int'l Building Code / ANSI/TIA-222-G-4 Standard	
LOADING CASES	*Full Wind*:	126 Mph Ultimate gust [equiv. 97.6Mph (3-sec gust)] w/No Radial Ice**
	Iced Case:	50 Mph + 0.75" Radial Ice
	Service:	60 Mph
	Seismic:	S_s = 0.184 / S_1 = 0.062 / Site Class: D – Stiff Soil
STRUCTURE CRITERIA	*Risk Category (Structural Class)*: Class II	
	Exposure Category: 'C' – *Topographic Category*: 1	

Appurtenances Configuration

The following appurtenances configuration is denoted by the *summation of Tables 1 & 2*:

Table 1: Tenant with Changed Condition Appurtenances Final Configuration

Elev (ft)	Tenant	Ants Qty	Appurtenance Model / Description	Mount Description	Lines Qty	Line size & Location
91	AT&T / 50 Deg	1	HPA-65R-BUU-H6 Panel Antenna	(3) 14.5ft HD V-Frame Mounts (Commscope MCG23HDX-14)	6 6 2 2	7/8" DC Power Cables DC Power Cables Fiber Cables – (I)
		1	SBNHH-1D65A Panel Antenna			
		1	*OPA65R-BU4DA Panel Antenna*			
		1	QS46512-2 Panel Antenna			
		2	*DBCT108F1V92-1 Combiners*			
		1	RRUS-32 B30 Box			
		1	*RRUS-E2B29 Box*			
		1	RRUS-4478 B5 Box			
		1	*RRUS-4478 B14 Box*			
		1	RRUS-32 B2 Box			
		1	RRUS-11 B12 Box			
		1	RRUS-4426 B66 Box			
		1	Raycap DC6-48-60-18-8F OVP Box			
91	AT&T / 180 Deg	1	SBNHH-1D65A Panel Antenna			
		1	HPA-65R-BUU-H6 Panel Antenna			
		1	*OPA65R-BU6DA Panel Antenna*			
		1	QS66512-2 Panel Antenna			
		2	*DBCT108F1V92-1 Combiners*			
		1	RRUS-32 B30 Box			
		1	RRUS-E2B29 Box			
		1	RRUS-4478 B5 Box			
		1	*RRUS-4478 B14 Box*			
		1	RRUS-32 B2 Box			
		1	RRUS-11 B12 Box			
		1	RRUS-4426 B66 Box			
		1	Raycap DC6-48-60-18-8F OVP Box			
91	AT&T / 300 Deg	2	HPA-65R-BUU-H6 Panel Antennas			
		1	*OPA65R-BU6DA Panel Antenna*			
		1	QS66512-2 Panel Antenna			
		2	*DBCT108F1V92-1 Combiners*			
		1	RRUS-32 B30 Box			
		1	*RRUS-E2B29 Box*			
		1	RRUS-4478 B5 Box			
		1	*RRUS-4478 B14 Box*			
		1	RRUS-32 B2 Box			
		1	RRUS-11 B12 Box			
		1	RRUS-4426 B66 Box			
		2	Raycap *DC6-48-60-0-8F OVP* Boxes			

This report is not to be reproduced or copied in whole or in part without MEI's written consent. **2020, MEI, Inc. ©**

Table 2: Remaining Tenants Current and Reserved/Future Appurtenances

Elev (ft)	Tenant	Ants Qty	Appurtenance Model / Description	Mount Description	Lines Qty	Line size & Location
98		1	Lightning Rod			
98	T-Mobile	3	APX16DWV-16DWVS Panel Ants	Platform w/ Handrails	18	1-1/4"
		3	APX16PV-16PVL Panel Antennas		1	1/4" – (I)
		3	RRH Boxes			
		1	Raycap RNSDC-7771-PF-48 OVP			
91		1	8ft x 1" Dia Whip Antenna *	On Existing AT&T Mount		
80	Sprint	3	AAHC Panel Antennas	(3) T-Bar Mounts	6	7/8" *
		3	NNVV-65B-R4 Panel Antennas		3	1-1/4" Hybrid Cables – (I)
		3	LLPX310R-V1 Panel Antennas *			
		3	ALU FD-RRH 4x45W – 1900 Boxes			
		6	RRH 800 MHz Boxes			
		6	RRH Boxes *			
	Clearwire	1	2ft HP Dish (A-ANT-18G-2-C)		4	LMR400 / Cat5e *
		2	ODU Boxes			
		1	1ft HP Dish		2	2" Flex Cond. * – (I)
		2	ODU Boxes			

Notes:

1. *Appurtenances per the photos made available and previous analysis reports.
2. **As per 2015 IBC for ultimate 3-sec gust wind speed converted to nominal 3-sec gust wind speed as per Sect. 1609.3.1 as required to be used in ANSI/TIA-222-G Standard per exception 5 of Sect. 1609.1.1.
3. All elevations are measured from tower base.
4. Please note appurtenances not listed above are to be removed/not present as per data supplied.
5. (I) = Internal; (E) = External; (FZ) = Within Face Zone; (OFZ) = Outside Face Zone - as per TIA-222-G.
6. The above appurtenances represent MEI's understanding of the appurtenances configuration. If different than above, the analysis is invalid. Please contact MEI if any discrepancies are found.

This report is not to be reproduced or copied in whole or in part without MEI's written consent. **2020, MEI, Inc. ©**

4. ANALYSIS PROCEDURE

The subject structure is analyzed for feasibility of the installation of the proposed changed condition previously noted. The data records furnished were reviewed and a computer stress analysis was performed in accordance with the TIA-222 Standard provisions and with the agreed scope of work terms and the results of this analysis are reported.

Analysis Program

The computer program used to model the structure is a rigorous Finite Element Analysis program, tnxTower (ver. 8.07), a commercially available program by Tower Numerics Inc. The latticed structures members are modeled using beam/truss and cable members and the pole members using tubular beam elements. The structural parameters and geometry of the members are included in the model. The dead loads, temperature loads and the wind loads are internally calculated by the program for the different wind directions and then applied as external loads on the structure. Any applicable exemptions, as per Section 15.6 of the TIA-222-G Standard for existing structures originally designed in accordance with a previous revision of the TIA-222 Standard, have been taken.

Assumptions

This engineering study is based on the theoretical capacity of the members and is not a condition assessment of the structure. This analysis is based on information supplied, and therefore, its results are based on and as accurate as that supplied data. MEI has made no independent determination, nor is it required to, of its accuracy. The following assumptions were made for this structural stress analysis:

- This existing tower is assumed, for the purpose of this analysis, to have been properly maintained and to be in good condition with no structural defects and with no deterioration to its member capacities ('as-new' condition).
- The member sizes and configuration are considered accurate as supplied. The material grade is as per data supplied and/or as assumed and as stated.
- Limited details of Flange plate at 88ft are available and assumed to be acceptable.
- Due to limited details are available on the Switchblade pole reinforcement and foundation, splices, base shoes and anchor rod embedment are assumed acceptable.
- The appurtenances configuration is as supplied and/or as stated in the report. It is assumed to be complete and accurate. All antennas, mounts, feed lines are assumed to be properly installed and supported as per manufacturer requirements.
- Some assumptions are made regarding antennas and mounts sizes and their projected areas based on best interpretation of data supplied and of best knowledge of antenna type & industry practice.
- Mounts/Platforms are considered adequate to support the loading. No actual analysis of the platform/mount itself is performed, with the analysis being limited to analyzing the structure.
- The soil parameters are as per data supplied or as assumed and as stated. If no data is available, the foundation system is assumed to support the structure with its new reactions.
- All welds and connections are assumed to develop at least the member capacity, unless determined otherwise and explicitly stated in this report.
- All prior structural modifications, if any, are assumed to be as per data supplied/available, and to have been properly installed and to be fully effective.

If any of the above assumptions are not valid or have been made in error, this analysis results may be invalided, MEI should be contacted to review any contradictory information to determine its effect.

This report is not to be reproduced or copied in whole or in part without MEI's written consent. 2020, MEI, Inc. ©

5. ANALYSIS RESULTS

The results of the structural stress analysis based on data available and with the previous listed criteria, indicated the following:

Note: The Wind loading controls over the Seismic loading as per TIA Section 2.7.

Table 3: Stress Analysis Results

Component Type	Maximum Stress Ratio	Controlling Elev. (ft) / Component	Pass/Fail	Comment
POLE	**96.7%**	**5 - 0**	**Pass**	
BASE PLATE	94.0%	Bending	**Pass**	
ANCHOR RODS	66.0%	Tension	**Pass**	
FOUNDATION	76.5%	Overturning Moment	**Pass**	

Table 4: Serviceability Requirements

	Maximum Value	TIA Requirement (10dB)	Pass/Fail	Comment
TWIST / SWAY	1.2574 Deg.	1.9137 Deg.	**Pass**	1ft HP Dish Elev. 80.00ft
	1.2574 Deg.	1.0614 Deg.	**Marginal**	(A-ANT-18G-2-C) Elev. 80.00ft
	1.4717 Deg.	4 Deg. from Vert. or Horiz. Axis	**Pass**	
HORIZONTAL DISPLACEMENT	16.066 In./ 1.35% of Ht.	3.0% of Height	**Pass**	

Notes:

1. The Maximum Stress Ratio is the percentage that the maximum load in the member is relative to the allowable load as determined by Code requirements.
2. Refer to the Appendix 1 for more details on the member loads.
3. A maximum stress ratio between 100% and 105% may be considered as *Acceptable* according to industry standard practice.

This report is not to be reproduced or copied in whole or in part without MEI's written consent. **2020, MEI, Inc. ©**

6. FINDINGS & RECOMMENDATIONS

- Based on the rigorous stress analysis results, the subject structure is **rated at 96.7%** of its support capacity (controlling component: Pole) with the proposed changed condition considered. Please refer to Table 3 and to Appendix 1 for more details of the analysis results.
- Based on the stress analysis performed, the existing structure **is in conformance** with the IBC / ANSI/TIA **222-G** Standard for the loading considered under the criteria listed and referenced in the report sections.
- Please note that limited details were made available on the existing foundation and no geotechnical report was made available. Based on previous structural analysis and assumed soil parameters foundation is considered as acceptable.
- ***The installation of the proposed changed condition as noted in Table 1 is structurally acceptable***. Please refer to Appendix 1 for Schematic Lines Layout.
- This structure is at its support capacity for the appurtenances and loading criteria considered. Therefore, no changes to the configuration considered should be made without performing a new proper evaluation.

Rigging and temporary supports required for the erection/modification shall be determined, documented, furnished and installed by the erector/contractor accounting for the loads imposed on the structure due to the proposed construction method.

This report is not to be reproduced or copied in whole or in part without MEI's written consent. **2020, MEI, Inc. ©**

7. REPORT DISCLAIMER

The engineering services rendered by **M**alouf **E**ngineering **I**nternational, Inc. *('MEI') in connection with this Structural Analysis are limited to a computer analysis of the tower structure, size and capacity of its members. MEI does not analyze the fabrication, including welding and connection capacities, except as included in this Report.*

The analysis performed, and the conclusions contained herein are based on the assumption that the tower has been properly installed and maintained, including, but not limited to the following:

1. Proper alignment and plumbness.
2. Correct guy tensions, as applicable.
3. Correct bolt tightness or slip jacking of sleeved connections.
4. No significant deterioration or damage to any structural component.

Furthermore, the information and conclusions contained in this Report were determined by application of the current "state-of-the-art" engineering and analysis procedures and formulae. MALOUF ENGINEERING INTERNATIONAL, INC. assumes no obligation to revise any of the information or conclusions contained in this Report in the event that such engineering and analysis procedures and formulae are hereafter modified or revised. In addition, under no circumstances will MALOUF ENGINEERING INTERNATIONAL, INC. have any obligation or responsibility whatsoever for or on account of consequential or incidental damages sustained by any person, firm or organization as a result of any information or conclusions contained in the Report, and the maximum liability of MALOUF ENGINEERING INTERNATIONAL, INC., if any, pursuant to this Report shall be limited to the total funds actually received by MALOUF ENGINEERING INTERNATIONAL, INC. for preparation of this Report.

Customer has requested MALOUF ENGINEERING INTERNATIONAL, INC. to prepare and submit to Customer an engineering analysis with respect to the Subject Tower and has further requested MALOUF ENGINEERING INTERNATIONAL, INC. to make appropriate recommendations regarding suggested structural modifications and changes to the Subject Tower. In making such request of MALOUF ENGINEERING INTERNATIONAL, INC., Customer has informed MALOUF ENGINEERING INTERNATIONAL, INC. that Customer will make a determination as to whether or not to implement any of the changes or modifications which may be suggested by MALOUF ENGINEERING INTERNATIONAL, INC. and that Customer will have any such changes or modifications made by riggers, erectors and other subcontractors of Customer's choice. MALOUF ENGINEERING INTERNATIONAL, INC. shall have the right to rely upon the accuracy of the information supplied by the customer and shall not be held responsible for the Customer's misrepresentation or omission of relevant fact whether intentional or otherwise.

Customer hereby agrees and acknowledges that MALOUF ENGINEERING INTERNATIONAL, INC. shall have no liability whatsoever to Customer or to others for any work or services performed by any persons other than MALOUF ENGINEERING INTERNATIONAL, INC. in connection with the implementation of services including but not limited to any services rendered for Customer or for others by riggers, erectors or other subcontractors. Customer acknowledges and agrees that any riggers, erectors or subcontractors retained or employed by Customer shall be solely responsible to Customer and to others for the quality of work performed by them and that MALOUF ENGINEERING INTERNATIONAL, INC. shall have no liability or responsibility whatsoever as a result of any negligence or breach of contract by any such rigger, erector or subcontractor and that Customer and rigger, erector, or subcontractor will provide MALOUF ENGINEERING INTERNATIONAL, INC. with a Certificate of Insurance naming MALOUF ENGINEERING INTERNATIONAL, INC. as additional insured.

This report is not to be reproduced or copied in whole or in part without MEI's written consent. **2020, MEI, Inc. ©**

APPENDIX 1 - ANALYSIS PRINTOUT & GRAPHICS

This report is not to be reproduced or copied in whole or in part without MEI's written consent. 2020, MEI, Inc. ©

Section	Length (ft)	Number of Sides	Thickness (in)	Socket Length (ft)	Top Dia (in)	Bot Dia (in)	Grade	Weight (K)
1	10.00	18	0.1875		12.7500	16.5000	A572-65	0.3
2	8.00	18	0.1875		16.5000	18.1367		0.3
3	5.00	18	0.5010		18.1367	19.1596		0.5
4	5.00	18	0.4840		19.1596	20.1825		0.5
5	5.00	18	0.4680		20.1825	21.2054		0.5
6	5.00	18	0.4540		21.2054	22.2283		0.5
7	5.00	18	0.4410		22.2283	23.2512		0.5
8	9.33	18	0.5930	3.67	23.2512	25.1600		1.4
9	4.34	18	0.6440		23.2232	24.9108		0.7
10	5.00	18	0.6300		24.9108	25.9207	A572-55	0.8
11	5.00	18	0.6140		25.9207	26.9306		0.9
12	5.00	18	0.6000		26.9306	27.9405		0.9
13	5.00	18	0.5870		27.9405	28.9504		0.9
14	5.00	18	0.5750		28.9504	29.9604		0.9
15	5.00	18	0.5640		29.9604	30.9703		0.9
16	5.00	18	0.5530		30.9703	31.9802		0.9
17	5.00	18	0.5430		31.9802	32.9901		0.9
18	5.00	18	0.5340		32.9901	34.0000	A139-52	1.0
								13.3

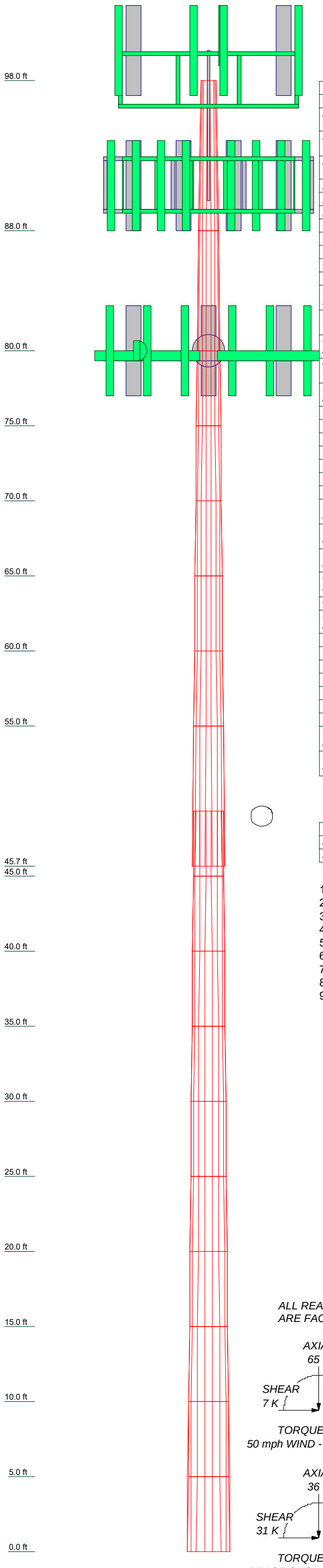

ALL REACTIONS ARE FACTORED

AXIAL 65 K

SHEAR 7 K — *MOMENT 601 kip-ft*

TORQUE 0 kip-ft
50 mph WIND - 0.7500 in ICE

AXIAL 36 K

SHEAR 31 K — *MOMENT 2201 kip-ft*

TORQUE 1 kip-ft
REACTIONS - 98 mph WIND

DESIGNED APPURTENANCE LOADING

TYPE	ELEVATION	TYPE	ELEVATION
Lightning Rod (E)	98	HPA-65R-BUU-H6 w/ Pipe Mounts (300 Deg P2 / ATT / E)	91
APX16DWV-16DWVS w / Pipe Mount (T-Mobile / E)	98	OPA65R-BU6DA w/ Pipe Mount (300 Deg P3 / ATT / P)	91
APX16DWV-16DWVS w / Pipe Mount (T-Mobile / E)	98	QS66512-2 w/ Pipe Mount (300 Deg P4 / ATT / E)	91
APX16DWV-16DWVS w / Pipe Mount (T-Mobile / E)	98	(2) DBCT108F1V92-1 Combiner (300 Deg P3 / ATT / P)	91
APX16PV-16PVL w / Pipe Mount (T-Mobile / E)	98	RRUS-32 B30 (300 Deg P2 / ATT / E)	91
APX16PV-16PVL w / Pipe Mount (T-Mobile / E)	98	RRUS-E2B29 (300 Deg P2 / ATT / P)	91
APX16PV-16PVL w / Pipe Mount (T-Mobile / E)	98	RRUS-4478 B5 (300 Deg P3 / ATT / E)	91
RRH (T-Mobile / E)	98	RRUS-4478 B14 (300 Deg P3 / ATT / P)	91
RRH (T-Mobile / E)	98	RRUS-32 B2 (300 Deg P3 / ATT / E)	91
RRH (T-Mobile / E)	98	RRUS-11 B12 (300 Deg P4 / ATT / E)	91
Raycap RNSDC-7771-PF-48 (T-Mobile / E)	98	RRUS-4426 B66 (300 Deg P4 / ATT / E)	91
Platform w/ Handrails (T-Mobile / E)	98	Raycap DC6-48-60-0-8F SUPRESSOR (300 Deg / ATT / E)	91
HPA-65R-BUU-H6 w/ Pipe Mounts (50 Deg P1 / ATT / E)	91	Raycap DC6-48-60-0-8F SUPRESSOR (300 Deg / ATT / P)	91
SBNHH-1D65A w/ pipe mount (50 Deg P2 / ATT / E)	91	14.5ft HD V-Frame Mount (Commscope MCG23HDX-14) (ATT / P)	91
OPA65R-BU4DA w/ Pipe Mount (50 Deg P3 / ATT / P)	91	14.5ft HD V-Frame Mount (Commscope MCG23HDX-14) (ATT / P)	91
QS46512-2 Panel Antenna w/ Pipe Mount (50 Deg P4 / ATT / E)	91	14.5ft HD V-Frame Mount (Commscope MCG23HDX-14) (ATT / P)	91
(2) DBCT108F1V92-1 Combiner (50 Deg P3 / ATT / P)	91	3-Way Close Contact Mount w/ Pipes (ATT / P)	91
RRUS-32 B30 (50 Deg P2 / ATT / E)	91	Miscl Jumper Cables (ATT / E)	91
RRUS-E2B29 (50 Deg P2 / ATT / P)	91	8ft x 1" Dia Whip (E)	91
RRUS-4478 B5 (50 Deg P3 / ATT / E)	91	Plate (E)	88
RRUS-4478 B14 (50 Deg P3 / ATT / P)	91	AAHC Panel w/ Pipe Mount (Sprint / E)	80
RRUS-32 B2 (50 Deg P3 / ATT / E)	91	AAHC Panel w/ Pipe Mount (Sprint / E)	80
RRUS-11 B12 (50 Deg P4 / ATT / E)	91	AAHC Panel w/ Pipe Mount (Sprint / E)	80
RRUS-4426 B66 (50 Deg P4 / ATT / E)	91	NNVV-65B-R4 w/ pipe mount (Sprint / E)	80
Raycap DC6-48-60-18-8F Supressor (50 Deg / ATT / E)	91	NNVV-65B-R4 w/ pipe mount (Sprint / E)	80
SBNHH-1D65A w/ pipe mount (180 Deg P1 / ATT / E)	91	NNVV-65B-R4 w/ pipe mount (Sprint / E)	80
HPA-65R-BUU-H6 w/ Pipe Mounts (180 Deg P2 / ATT / E)	91	LLPX310R-V1 w/ Pipe Mount (Sprint / E)	80
OPA65R-BU6DA w/ Pipe Mount (180 Deg P3 / ATT / P)	91	LLPX310R-V1 w/ Pipe Mount (Sprint / E)	80
QS66512-2 w/ Pipe Mount (180 Deg P4 / ATT / E)	91	LLPX310R-V1 w/ Pipe Mount (Sprint / E)	80
(2) DBCT108F1V92-1 Combiner (180 Deg P3 / ATT / P)	91	ALU FD-RRH 4x45W - 1900 (Sprint / E)	80
RRUS-32 B30 (180 Deg P2 / ATT / E)	91	ALU FD-RRH 4x45W - 1900 (Sprint / E)	80
RRUS-E2B29 (180 Deg P2 / ATT / P)	91	ALU FD-RRH 4x45W - 1900 (Sprint / E)	80
RRUS-4478 B5 (180 Deg P3 / ATT / E)	91	(2) RRH 800 MHz (Sprint / E)	80
RRUS-4478 B14 (180 Deg P3 / ATT / P)	91	(2) RRH 800 MHz (Sprint / E)	80
RRUS-32 B2 (180 Deg P3 / ATT / E)	91	(2) RRH 800 MHz (Sprint / E)	80
RRUS-11 B12 (180 Deg P4 / ATT / E)	91	(2) RRH Boxes (Sprint / E)	80
RRUS-4426 B66 (180 Deg P4 / ATT / E)	91	(2) RRH Boxes (Sprint / E)	80
Raycap DC6-48-60-18-8F Supressor (180 Deg / ATT / E)	91	(2) RRH Boxes (Sprint / E)	80
HPA-65R-BUU-H6 w/ Pipe Mounts (300 Deg P1 / ATT / E)	91	(2) ODU Boxes (Clearwire / E)	80
		(2) ODU Boxes (Clearwire / E)	80
		T-Bar Mount (Sprint/Clearwire / E)	80
		T-Bar Mount (Sprint/Clearwire / E)	80
		T-Bar Mount (Sprint/Clearwire / E)	80
		Miscl Jumper Cables (Sprint/Clearwire / E)	80
		2ft HP Dish (A-ANT-18G-2-C) (Clearwire / E)	80
		1ft HP Dish (Clearwire / E)	80

MATERIAL STRENGTH

GRADE	Fy	Fu	GRADE	Fy	Fu
A572-65	65 ksi	80 ksi	A139-52	52 ksi	66 ksi
A572-55	55 ksi	70 ksi			

TOWER DESIGN NOTES

1. Tower is located in New Haven County, Connecticut.
2. Tower designed for Exposure C to the TIA-222-G Standard.
3. Tower designed for a 98 mph basic wind in accordance with the TIA-222-G Standard.
4. Tower is also designed for a 50 mph basic wind with 0.75 in ice. Ice is considered to increase in thickness with height.
5. Deflections are based upon a 60 mph wind.
6. Tower Structure Class II.
7. Topographic Category 1 with Crest Height of 0.00 ft
8. 2018 CT SBC / 2015 IBC / 126Mph Ultimate Wind Speed
9. Previous pole modifications Elev 0 to 80ft are included

MALOUF ENGINEERING INTL., INC. STRUCTURAL CONSULTANTS
maloufengineering.com

Malouf Engineering Int'l Inc.
17950 Preston Road, STE 720
Dallas, Texas 75252
Phone: (972) 783 2578
FAX: (972) 783 2583

Job:	***98ft MONOPOLE - New Haven Wheeler ST #CT203***		
Project:	***CT06121M-20V0 / FA 10035247***		
Client: VRG / AT&T	Drawn by: KM	App'd:	
Code: TIA-222-G	Date: 06/09/20	Scale: NTS	
Path: C:\MEIProjects\2020\G2\CT06121M\CT06121M-20V0_VRGx_AT&T_New Haven Wheeler St_SA\2-Working Data\CT06121M-20V0.eri		Dwg No. E-1	

ALL RIGHTS RESERVED. THIS DRAWING SHALL REMAIN THE PROPERTY OF MALOUF ENGINEERING INTERNATIONAL, INC. NO PART THEREOF SHALL BE REPRODUCED, COPIED, ADAPTED, DISCLOSED, OR DISTRIBUTED TO OTHERS WITHOUT WRITTEN PERMISSION OF MEI, INC.

No.	QTY.	DESCRIPTION	ELEV.	TENANT
1	6	7/8"	91'	AT&T / E
2	6	DC POWER CABLE	91'	AT&T / E
3	2	DC POWER CABLE	91'	AT&T / P
4	2	FIBER CABLE	91'	AT&T / E
5	18	1 1/4"	98'	T-MOBILE / E
6	1	1/4"	98'	T-MOBILE / E
7	6	7/8"	80'	SPRINT / E
8	3	1-1/4" HYBRID CABLE	80'	SPRINT / E
9	2	2" FLEX CONDUIT	80'	CLEARWIRE / E
10	4	LMR400 / CAT5E	80'	CLEARWIRE / E

LEGEND:

E = EXISTING — #X

P = PROPOSED — #X

F = FUTURE — #X

R = REMOVE — #X

TO RELOCATE

CONTACT MEI IF LINE LAYOUT IS DIFFERENT FROM WHAT IS SHOWN BELOW.

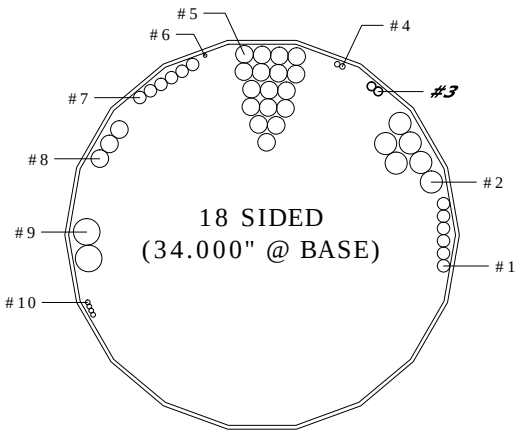

NOTE:
ALL LINES ARE INSIDE OF MONOPOLE AS SHOWN.

101 PLAN: SCHEMATIC Tx-LINE LAYOUT

SCALE: NOT TO SCALE

NOTE:
1. Tx LINE LAYOUT IS SCHEMATIC ONLY, BASED UPON LIMITED DATA AND PHOTOS PROVIDED.
2. NEW BRACKET SUPPORT SPECIFICATION BY OTHERS.

JUNE 08, 2020

MALOUF ENGINEERING INTERNATIONAL, INC.
STRUCTURAL CONSULTANTS
17950 PRESTON ROAD SUITE 720
DALLAS, TEXAS 75252-5635
972-783-2578 (fax: 2583)
www.maloufengineering.com
© MEI, INC. 2020

AT&T

98 FT± MNP / NEW HAVEN WHEELER ST #CT2037

MONOPOLE TX-LINE LAYOUT

MEI PROJECT ID	SHEET NUMBER	REV.
CT06121M-20V0	L01	0

TIA-222-G - Service - 60 mph

Maximum Values

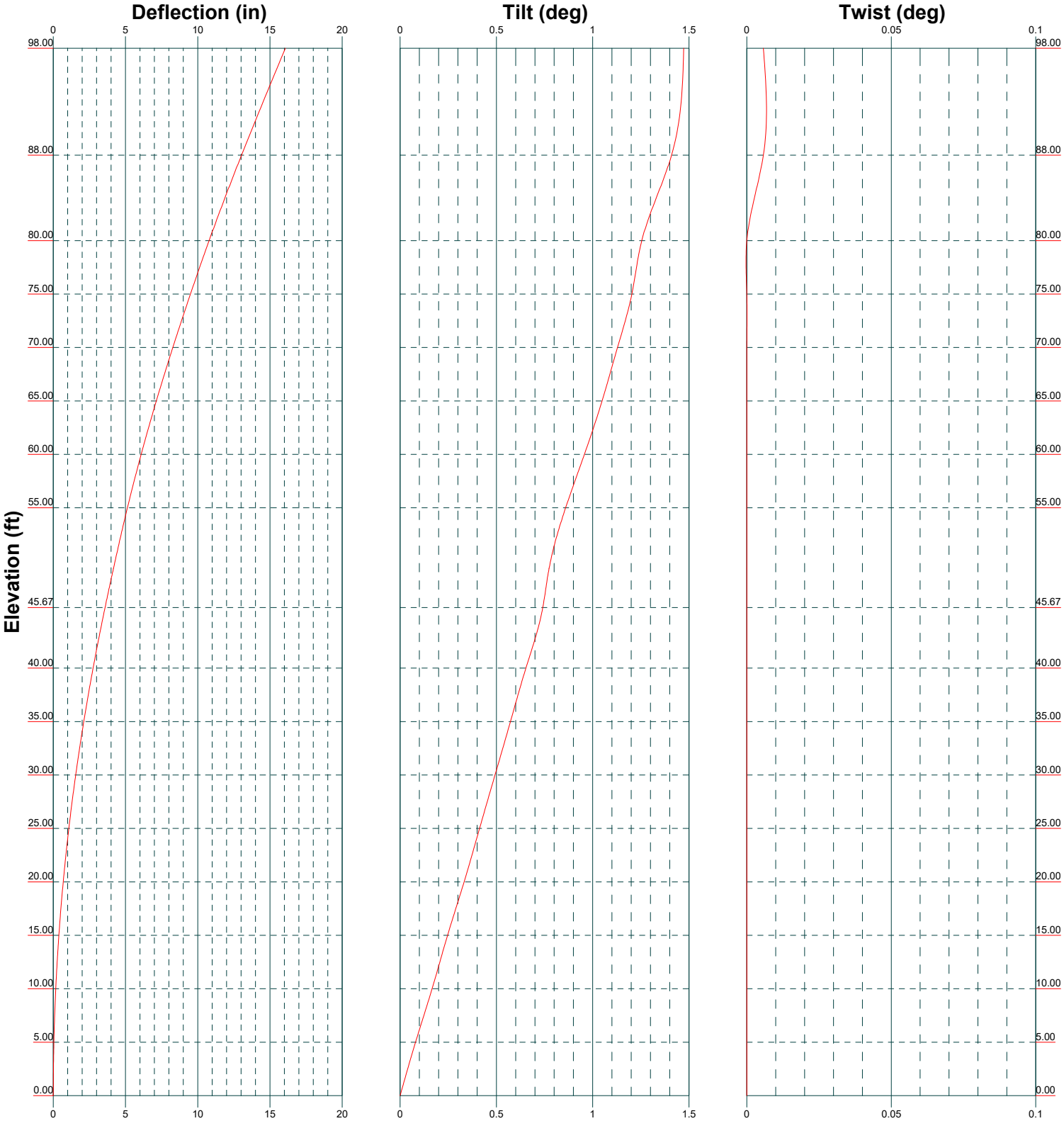

MALOUF ENGINEERING INTL., INC. STRUCTURAL CONSULTANTS

maloufengineering.com

Malouf Engineering Int'l Inc.
17950 Preston Road, STE 720
Dallas, Texas 75252
Phone: (972) 783 2578
FAX: (972) 783 2583

Job: ***98ft MONOPOLE - New Haven Wheeler ST #CT203***		
Project: ***CT06121M-20V0 / FA 10035247***		
Client: VRG / AT&T	Drawn by: KM	App'd:
Code: TIA-222-G	Date: 06/09/20	Scale: NTS
Path: C:\MEIProjects\2020\Q2\CT06121M\CT06121M-20V0_VRGx_AT&T_New Haven Wheeler St_SA\2-Working Data\CT06121M-20V0.eri		Dwg No. E-5

TIA-222-G - 98 mph/50 mph 0.7500 in Ice Exposure C

Vx Vz

Maximum Values

Mx Mz

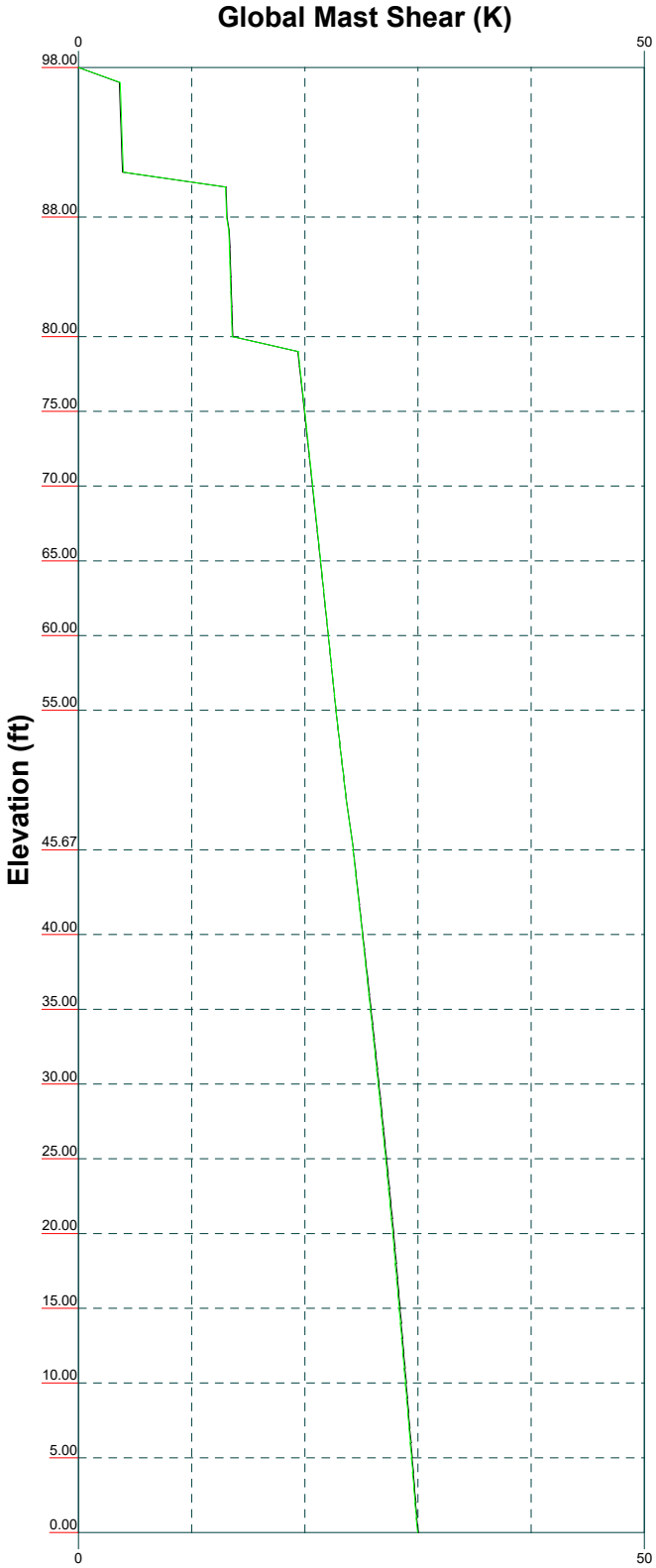

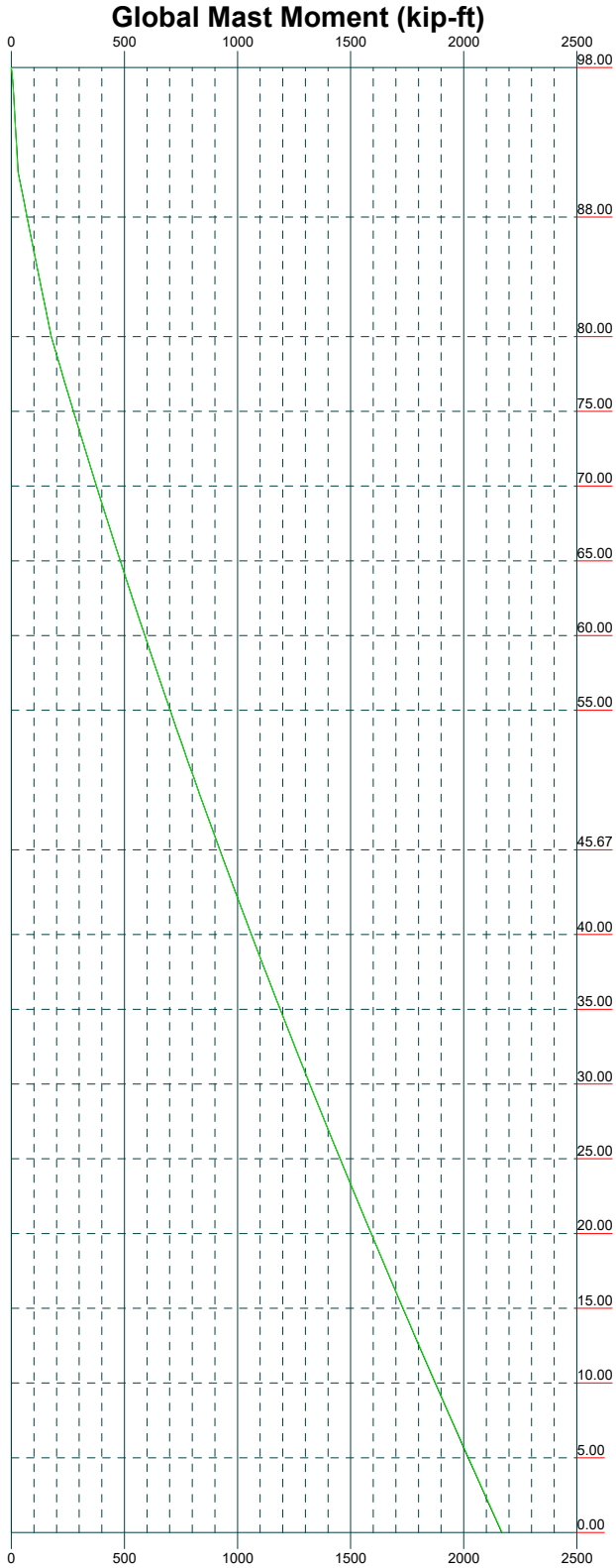

MALOUF ENGINEERING INTL., INC. STRUCTURAL CONSULTANTS

maloufengineering.com

Malouf Engineering Int'l Inc.
17950 Preston Road, STE 720
Dallas, Texas 75252
Phone: (972) 783 2578
FAX: (972) 783 2583

Job: ***98ft MONOPOLE - New Haven Wheeler ST #CT203***		
Project: ***CT06121M-20V0 / FA 10035247***		
Client: VRG / AT&T	Drawn by: KM	App'd:
Code: TIA-222-G	Date: 06/09/20	Scale: NTS
Path: C:\MEIProjects\2020\Q2\CT06121M\CT06121M-20V0_VRGx_AT&T_New Haven Wheeler St_SA\2-Working Data\CT06121M-20V0.eri		Dwg No. E-4

Tower Input Data

The tower is a monopole.
This tower is designed using the TIA-222-G standard.
The following design criteria apply:

Tower is located in New Haven County, Connecticut.
ASCE 7-10 Wind Data is used (wind speeds converted to nominal values).
Basic wind speed of 98 mph.
Structure Class II.
Exposure Category C.
Topographic Category 1.
Crest Height 0.00 ft.
Nominal ice thickness of 0.7500 in.
Ice thickness is considered to increase with height.
Ice density of 56 pcf.
A wind speed of 50 mph is used in combination with ice.
Temperature drop of 50 °F.
Deflections calculated using a wind speed of 60 mph.
2018 CT SBC / 2015 IBC / 126Mph Ultimate Wind Speed.
Previous pole modifications Elev 0 to 80ft are included.
A non-linear (P-delta) analysis was used.
Pressures are calculated at each section.
Stress ratio used in pole design is 1.
Local bending stresses due to climbing loads, feed line supports, and appurtenance mounts are not considered.

Feed Line/Linear Appurtenances - Entered As Area

Description	*Placement*	*Total Number*	*Weight*
	ft		*plf*
7/8	91.00 - 0.00	6	0.54
(AT&T / E)			0.54
			0.54
DC Power Cable	91.00 - 0.00	6	0.80
(AT&T / E)			0.80
			0.80
DC Power Cable	91.00 - 0.00	2	0.80
(AT&T / P)			0.80
			0.80
Fiber Cable	91.00 - 0.00	2	0.60
(AT&T / E)			0.60
			0.60
1 1/4	98.00 - 0.00	18	0.66
(T-Mobile / E)			0.66
			0.66
1/4	98.00 - 0.00	1	0.06
(T-Mobile / E)			0.06
			0.06

Description	*Placement*	*Total Number*	*Weight*
	ft		*plf*
7/8	80.00 - 0.00	6	0.54
(Sprint / E)			0.54
			0.54
1-1/4" Hybrid Cable	80.00 - 0.00	3	1.78
(Sprint / E)			1.78
			1.78
2" FLEX Conduit	80.00 - 0.00	2	0.71
(Clearwire / E)			0.71
			0.71
LMR400 / Cat5e	80.00 - 0.00	4	0.07
(Clearwire / E)			0.07
			0.07

Discrete Tower Loads

Description	Placement	Weight
	ft	K
Lightning Rod	98.00	0.00
(E)		0.01
		0.01
APX16DWV-16DWVS w /	98.00	0.04
Pipe Mount		0.09
(T-Mobile / E)		0.15
APX16DWV-16DWVS w /	98.00	0.04
Pipe Mount		0.09
(T-Mobile / E)		0.15
APX16DWV-16DWVS w /	98.00	0.04
Pipe Mount		0.09
(T-Mobile / E)		0.15
APX16PV-16PVL w / Pipe	98.00	0.06
Mount		0.11
(T-Mobile / E)		0.17
APX16PV-16PVL w / Pipe	98.00	0.06
Mount		0.11
(T-Mobile / E)		0.17
APX16PV-16PVL w / Pipe	98.00	0.06
Mount		0.11
(T-Mobile / E)		0.17
RRH	98.00	0.07
(T-Mobile / E)		0.09
		0.11
RRH	98.00	0.07
(T-Mobile / E)		0.09
		0.11
RRH	98.00	0.07
(T-Mobile / E)		0.09
		0.11
Raycap RNSDC-7771-PF-48	98.00	0.04
(T-Mobile / E)		0.06
		0.08
Platform w/ Handrails	98.00	1.75
(T-Mobile / E)		2.35
		2.95
HPA-65R-BUU-H6 w/ Pipe	91.00	0.09
Mounts		0.17
(50 Deg P1 / ATT / E)		0.26
SBNHH-1D65A w/ pipe	91.00	0.06
mount		0.12
(50 Deg P2 / ATT / E)		0.18
OPA65R-BU4DA w/ Pipe	91.00	0.10
Mount		0.18
(50 Deg P3 / ATT / P)		0.26
QS46512-2 Panel Antenna w/	91.00	0.12
Pipe Mount		0.18
(50 Deg P4 / ATT / E)		0.25
(2) DBCT108F1V92-1	91.00	0.03
Combiner		0.04
(50 Deg P3 / ATT / P)		0.05
RRUS-32 B30	91.00	0.06
(50 Deg P2 / ATT / E)		0.08
		0.11

Description	Placement	Weight
	ft	K
RRUS-E2B29	91.00	0.07
(50 Deg P2 / ATT / P)		0.10
		0.13
RRUS-4478 B5	91.00	0.06
(50 Deg P3 / ATT / E)		0.07
		0.09
RRUS-4478 B14	91.00	0.06
(50 Deg P3 / ATT / P)		0.07
		0.09
RRUS-32 B2	91.00	0.05
(50 Deg P3 / ATT / E)		0.07
		0.10
RRUS-11 B12	91.00	0.05
(50 Deg P4 / ATT / E)		0.07
		0.10
RRUS-4426 B66	91.00	0.05
(50 Deg P4 / ATT / E)		0.06
		0.08
Raycap DC6-48-60-18-8F	91.00	0.02
Supressor		0.04
(50 Deg / ATT / E)		0.05
SBNHH-1D65A w/ pipe	91.00	0.06
mount		0.12
(180 Deg P1 / ATT / E)		0.18
HPA-65R-BUU-H6 w/ Pipe	91.00	0.09
Mounts		0.17
(180 Deg P2 / ATT / E)		0.26
OPA65R-BU6DA w/ Pipe	91.00	0.11
Mount		0.20
(180 Deg P3 / ATT / P)		0.31
QS66512-2 w/ Pipe Mount	91.00	0.16
(180 Deg P4 / ATT / E)		0.23
		0.32
(2) DBCT108F1V92-1	91.00	0.03
Combiner		0.04
(180 Deg P3 / ATT / P)		0.05
RRUS-32 B30	91.00	0.06
(180 Deg P2 / ATT / E)		0.08
		0.11
RRUS-E2B29	91.00	0.07
(180 Deg P2 / ATT / P)		0.10
		0.13
RRUS-4478 B5	91.00	0.06
(180 Deg P3 / ATT / E)		0.07
		0.09
RRUS-4478 B14	91.00	0.06
(180 Deg P3 / ATT / P)		0.07
		0.09
RRUS-32 B2	91.00	0.05
(180 Deg P3 / ATT / E)		0.07
		0.10
RRUS-11 B12	91.00	0.05
(180 Deg P4 / ATT / E)		0.07
		0.10

Description	Placement	Weight
	ft	K
RRUS-4426 B66	91.00	0.05
(180 Deg P4 / ATT / E)		0.06
		0.08
Raycap DC6-48-60-18-8F	91.00	0.02
Supressor		0.04
(180 Deg / ATT / E)		0.05
HPA-65R-BUU-H6 w/ Pipe	91.00	0.09
Mounts		0.17
(300 Deg P1 / ATT / E)		0.26
HPA-65R-BUU-H6 w/ Pipe	91.00	0.09
Mounts		0.17
(300 Deg P2 / ATT / E)		0.26
OPA65R-BU6DA w/ Pipe	91.00	0.11
Mount		0.20
(300 Deg P3 / ATT / P)		0.31
QS66512-2 w/ Pipe Mount	91.00	0.16
(300 Deg P4 / ATT / E)		0.23
		0.32
(2) DBCT108F1V92-1	91.00	0.03
Combiner		0.04
(300 Deg P3 / ATT / P)		0.05
RRUS-32 B30	91.00	0.06
(300 Deg P2 / ATT / E)		0.08
		0.11
RRUS-E2B29	91.00	0.07
(300 Deg P2 / ATT / P)		0.10
		0.13
RRUS-4478 B5	91.00	0.06
(300 Deg P3 / ATT / E)		0.07
		0.09
RRUS-4478 B14	91.00	0.06
(300 Deg P3 / ATT / P)		0.07
		0.09
RRUS-32 B2	91.00	0.05
(300 Deg P3 / ATT / E)		0.07
		0.10
RRUS-11 B12	91.00	0.05
(300 Deg P4 / ATT / E)		0.07
		0.10
RRUS-4426 B66	91.00	0.05
(300 Deg P4 / ATT / E)		0.06
		0.08
Raycap DC6-48-60-0-8F	91.00	0.03
SUPRESSOR		0.05
(300 Deg / ATT / E)		0.07
Raycap DC6-48-60-0-8F	91.00	0.03
SUPRESSOR		0.05
(300 Deg / ATT / P)		0.07
14.5ft HD V-Frame Mount	91.00	0.55
(Commscope		0.78
MCG23HDX-14)		1.00
(ATT / P)		
14.5ft HD V-Frame Mount	91.00	0.55
(Commscope		0.78
MCG23HDX-14)		1.00
(ATT / P)		
14.5ft HD V-Frame Mount	91.00	0.55
(Commscope		0.78
MCG23HDX-14)		1.00

Description	Placement	Weight
	ft	K
(ATT / P)		
3-Way Close Contact Mount	91.00	0.70
w/ Pipes		0.95
(ATT / P)		1.20
Miscl Jumper Cables	91.00	0.09
(ATT / E)		0.13
		0.17
Plate	88.00	0.25
(E)		0.37
		0.49
8ft x 1" Dia Whip	91.00	0.01
(E)		0.02
		0.03
AAHC Panel w/ Pipe Mount	80.00	0.13
(Sprint / E)		0.17
		0.22
AAHC Panel w/ Pipe Mount	80.00	0.13
(Sprint / E)		0.17
		0.22
AAHC Panel w/ Pipe Mount	80.00	0.13
(Sprint / E)		0.17
		0.22
NNVV-65B-R4 w/ pipe	80.00	0.11
mount		0.20
(Sprint / E)		0.30
NNVV-65B-R4 w/ pipe	80.00	0.11
mount		0.20
(Sprint / E)		0.30
NNVV-65B-R4 w/ pipe	80.00	0.11
mount		0.20
(Sprint / E)		0.30
LLPX310R-V1 w/ Pipe	80.00	0.05
Mount		0.09
(Sprint / E)		0.14
LLPX310R-V1 w/ Pipe	80.00	0.05
Mount		0.09
(Sprint / E)		0.14
LLPX310R-V1 w/ Pipe	80.00	0.05
Mount		0.09
(Sprint / E)		0.14
ALU FD-RRH 4x45W - 1900	80.00	0.06
(Sprint / E)		0.08
		0.11
ALU FD-RRH 4x45W - 1900	80.00	0.06
(Sprint / E)		0.08
		0.11
ALU FD-RRH 4x45W - 1900	80.00	0.06
(Sprint / E)		0.08
		0.11
(2) RRH 800 MHz	80.00	0.07
(Sprint / E)		0.09
		0.12
(2) RRH 800 MHz	80.00	0.07
(Sprint / E)		0.09
		0.12
(2) RRH 800 MHz	80.00	0.07
(Sprint / E)		0.09
		0.12
(2) RRH Boxes	80.00	0.07

Description	Placement	Weight
	ft	K
(Sprint / E)		0.10
		0.13
(2) RRH Boxes	80.00	0.07
(Sprint / E)		0.10
		0.13
(2) RRH Boxes	80.00	0.07
(Sprint / E)		0.10
		0.13
(2) ODU Boxes	80.00	0.03
(Clearwire / E)		0.04
		0.05
(2) ODU Boxes	80.00	0.03
(Clearwire / E)		0.04
		0.05
T-Bar Mount	80.00	0.39

Description	Placement	Weight
	ft	K
(Sprint/Clearwire / E)		0.55
		0.71
T-Bar Mount	80.00	0.39
(Sprint/Clearwire / E)		0.55
		0.71
T-Bar Mount	80.00	0.39
(Sprint/Clearwire / E)		0.55
		0.71
Miscl Jumper Cables	80.00	0.09
(Sprint/Clearwire / E)		0.13
		0.17

Dishes

Description	Elevation	Weight
	ft	K
2ft HP Dish	80.00	0.03
(A-ANT-18G-2-C)		0.09
(Clearwire / E)		0.15
1ft HP Dish	80.00	0.02
(Clearwire / E)		0.07
		0.12

Maximum Tower Deflections - Service Wind

Section No.	Elevation ft	Horz. Deflection in	Gov. Load Comb.	Tilt °	Twist °
L1	98 - 88	16.066	49	1.4717	0.0039
L2	88 - 80	13.032	49	1.4095	0.0035
L3	80 - 75	10.786	49	1.2574	0.0021
L4	75 - 70	9.497	49	1.2013	0.0017
L5	70 - 65	8.275	49	1.1305	0.0014
L6	65 - 60	7.134	49	1.0482	0.0012
L7	60 - 55	6.084	49	0.9568	0.0009
L8	55 - 45.67	5.133	49	0.8584	0.0007
L9	49.34 - 45	4.167	49	0.7714	0.0006
L10	45 - 40	3.482	49	0.7321	0.0005
L11	40 - 35	2.756	49	0.6543	0.0004
L12	35 - 30	2.112	49	0.5747	0.0003
L13	30 - 25	1.553	49	0.4939	0.0003
L14	25 - 20	1.078	49	0.4122	0.0002
L15	20 - 15	0.690	49	0.3299	0.0002
L16	15 - 10	0.388	49	0.2474	0.0001
L17	10 - 5	0.172	49	0.1647	0.0001
L18	5 - 0	0.043	49	0.0822	0.0000

Critical Deflections and Radius of Curvature - Service Wind

Elevation ft	Appurtenance	Gov. Load Comb.	Deflection in	Tilt °	Twist °	Radius of Curvature ft
98.00	Lightning Rod	49	16.066	1.4717	0.0039	20946
91.00	HPA-65R-BUU-H6 w/ Pipe Mounts	49	13.925	1.4447	0.0038	5984
88.00	Plate	49	13.032	1.4095	0.0035	4258
80.00	2ft HP Dish (A-ANT-18G-2-C)	49	10.786	1.2574	0.0021	3098
				(3 dB)	(3 dB)	
				1.0614	1.0614	

Maximum Tower Deflections - Design Wind

Section No.	Elevation ft	Horz. Deflection in	Gov. Load Comb.	Tilt °	Twist °
L1	98 - 88	76.887	22	7.0531	0.0188
L2	88 - 80	62.403	22	6.7584	0.0168
L3	80 - 75	51.667	22	6.0298	0.0100
L4	75 - 70	45.506	22	5.7624	0.0083
L5	70 - 65	39.660	22	5.4239	0.0068
L6	65 - 60	34.197	22	5.0294	0.0055
L7	60 - 55	29.167	22	4.5915	0.0044
L8	55 - 45.67	24.612	22	4.1195	0.0034
L9	49.34 - 45	19.982	22	3.7018	0.0027
L10	45 - 40	16.696	22	3.5132	0.0024
L11	40 - 35	13.216	22	3.1399	0.0019
L12	35 - 30	10.130	22	2.7578	0.0016
L13	30 - 25	7.447	22	2.3698	0.0014
L14	25 - 20	5.172	22	1.9775	0.0011
L15	20 - 15	3.309	22	1.5826	0.0009
L16	15 - 10	1.860	22	1.1866	0.0007
L17	10 - 5	0.825	22	0.7901	0.0004
L18	5 - 0	0.206	22	0.3942	0.0002

Base Plate Design Data

Plate Thickness in	Number of Anchor Bolts	Anchor Bolt Size in	Actual / Allowable Ratio Bolt Tension K	Actual / Allowable Ratio Plate Stress ksi	Controlling Condition	Ratio
1.5000	6	2.2500	147.50	50.74	Plate	0.94
			223.65	54.00		
			0.66	0.94		

*Pole Base is reinforced previously with base shoes and (5) 2-3/4" Anchor rods

Section Capacity Table

Section No.	Elevation ft	Component Type	Size	Critical Element	P K	$øP_{allow}$ K	% Capacity	Pass Fail
L1	98 - 88	Pole	TP16.5x12.75x0.1875	1	-8.03	721.25	30.1	Pass
L2	88 - 80	Pole	TP18.1367x16.5x0.1875	2	-8.97	793.62	62.0	Pass
L3	80 - 75	Pole	TP19.1596x18.1367x0.1875*	3	-13.31	1865.23	40.1	Pass
L4	75 - 70	Pole	TP20.1825x19.1596x0.1875*	4	-14.26	1902.37	50.7	Pass
L5	70 - 65	Pole	TP21.2054x20.1825x0.1875*	5	-15.26	1936.49	60.4	Pass
L6	65 - 60	Pole	TP22.2283x21.2054x0.1875*	6	-16.30	1972.50	69.1	Pass
L7	60 - 55	Pole	TP23.2512x22.2283x0.1875*	7	-17.39	2007.17	77.0	Pass
L8	55 - 45.67	Pole	TP25.16x23.2512x0.1875**	8	-18.95	2818.01	62.7	Pass
L9	45.67 - 45	Pole	TP24.9108x23.2232x0.25**	9	-20.69	3084.80	63.0	Pass
L10	45 - 40	Pole	TP25.9207x24.9108x0.25**	10	-22.38	3179.20	66.7	Pass
L11	40 - 35	Pole	TP26.9306x25.9207x0.25**	11	-23.93	3224.14	70.8	Pass
L12	35 - 30	Pole	TP27.9405x26.9306x0.25**	12	-25.51	3273.21	74.4	Pass
L13	30 - 25	Pole	TP28.9504x27.9405x0.25**	13	-27.12	3322.10	77.8	Pass
L14	25 - 20	Pole	TP29.9604x28.9504x0.25**	14	-28.76	3371.44	80.9	Pass
L15	20 - 15	Pole	TP30.9703x29.9604x0.25**	15	-30.43	3421.83	83.8	Pass
L16	15 - 10	Pole	TP31.9802x30.9703x0.25**	16	-32.12	3467.74	86.6	Pass
L17	10 - 5	Pole	TP32.9901x31.9802x0.25**	17	-33.84	3515.54	89.1	Pass
L18	5 - 0	Pole	TP34x32.9901x0.25**	18	-35.56	3371.33	96.7	Pass
							Summary	
						Pole (L18)	96.7	Pass
						RATING =	**96.7**	**Pass**

*Pole reinforced with (3) Switchblade channels
**Pole reinforced with (5) Switchblade channels

APPENDIX 2 – SOURCE / CHANGED CONDITION

This report is not to be reproduced or copied in whole or in part without MEI's written consent. 2020, MEI, Inc. ©

From: Vertical Resources Group <mnobre@verticalresourcesgrp.com>
Sent: Wednesday, May 27, 2020 1:46 PM
To: Mark Malouf <mmalouf@maloufengineering.com>
Subject: RE: Request for new tower SA New Haven, CT

You got it Mark see attached PO as discussed.
Changed the sector designation to degrees instead of alpha/beta/gamma
AT&T final Loading to be:
Sector azimuth 50 degrees:
Elev 91' (e1) CCI HPA65RBUUH6 (umts850 pos#1)
Elev 91' (e1) Andrew SBNHH1D65A (LTE700de/WCS pos#2)
Elev 91' (P1) CCI OPA 65RBU4DA (LTE700b14/850/PCS pos#3)
Elev 91' (e1) Quintel QS465122 (LTE700bc/AWS pos#4)
Elev 91' (P2) CCI DBCT108F1V921 combiner (LTE700b14/850 pos#3)
Elev 91' (e1) RRUS-32b30 behind panel #2(LTEWCS pos#2)
Elev 91' (P1) RRUS-E2b29 behind panel #2(LTE700de pos#2)
Elev 91' (e1) RRUS-4478b5 behind panel #3(LTE850 pos#3)
Elev 91' (P1) RRUS-4478b14 behind panel #3(LTE700b14 pos#3)
Elev 91' (e1) RRUS-32b2 behind panel #3(LTEPCS pos#3)
Elev 91' (e1) RRUS-11b12 behind panel #4(LTE700bc pos#4)
Elev 91' (e1) RRUS-4426b66 behind panel #4(LTEAWS pos#4)
Elev 91' (e1) Raycap DC64860188F
Sector Azimuth 180 degrees:
Elev 91' (e1) Andrew SBNHH1D65A (umts850 pos#1)
Elev 91' (e1) CCI HPA65RBUUH6 (LTE700de/WCS pos#2)
Elev 91' (P1) CCI OPA 65RBU6DA (LTE700b14/850/PCS pos#3)
Elev 91' (e1) Quintel QS665122 (LTE700bc/AWS pos#4)
Elev 91' (P2) CCI DBCT108F1V921 combiner (LTE700b14/850 pos#3)
Elev 91' (e1) RRUS-32b30 behind panel #2(LTEWCS pos#2)
Elev 91' (P1) RRUS-E2b29 behind panel #2(LTE700de pos#2)
Elev 91' (e1) RRUS-4478b5 behind panel #3(LTE850 pos#3)
Elev 91' (P1) RRUS-4478b14 behind panel #3(LTE700b14 pos#3)
Elev 91' (e1) RRUS-32b2 behind panel #3(LTEPCS pos#3)
Elev 91' (e1) RRUS-11b12 behind panel #4(LTE700bc pos#4)
Elev 91' (e1) RRUS-4426b66 behind panel #4(LTEAWS pos#4)
Elev 91' (e1) Raycap DC64860188F
Sector Azimuth 300 degrees:
Elev 91' (e1) CCI HPA65RBUUH6 (umts850 pos#1)
Elev 91' (e1) CCI HPA65RBUUH6 (LTE700de/WCS pos#2 az)
Elev 91' (P1) CCI OPA 65RBU6DA (LTE700b14/850/PCS pos#3)
Elev 91' (e1) Quintel QS665122 (LTE700bc/AWS pos#4)
Elev 91' (P2) CCI DBCT108F1V921 combiner (LTE700b14/850 pos#3)
Elev 91' (e1) RRUS-32b30 behind panel #2(LTEWCS pos#2)
Elev 91' (P1) RRUS-E2b29 behind panel #2(LTE700de pos#2)
Elev 91' (e1) RRUS-4478b5 behind panel #3(LTE850 pos#3)
Elev 91' (P1) RRUS-4478b14 behind panel #3(LTE700b14 pos#3)
Elev 91' (e1) RRUS-32b2 behind panel #3(LTEPCS pos#3)
Elev 91' (e1) RRUS-11b12 behind panel #4(LTE700bc pos#4)

Elev 91’ (e1) RRUS-4426b66 behind panel #4(LTEAWS pos#4)
Elev 91’ (e1) Raycap DC6486008F
Elev 91’ (P1) Raycap DC6486008F

Miguel Nobre
Vertical Resources Group
23 MidState Dr., #210
Auburn, MA 01501
P: 508-981-9590
F: 508-519-8939

……

NEW 14’ Platform mount Commscope MCG22HDX14
……..
(e6) 7/8” coaxial cables to 120’
(e6,P2) DC trunks
(e2) Fiber trunks

Section 1 - RFDS GENERAL INFORMATION

RFDS NAME:	CTL02037	DATE:	03/09/2020	RF DESIGN ENG:	Mohammed Rahman
ISSUE:	Bronze Standard	Approved? (Y/N):	Yes	RF DESIGN PHONE:	860-997-9698
REVISION:	Preliminary	RF MANAGER:	Benedetto John	RF DESIGN EMAIL:	MR673A@ATT.COM
INITIATIVE /PROJECT:	LTE 6C[700 UPPER D], LTE 7C[700 D-E]				

RF PERF ENG:		RFDS PROGRAM TYPE:	2021 LTE Next Carrier		
RF PERF PHONE:		RFDS TECHNOLOGY:	LTE		
RF PERF EMAIL:		STATE/STATUS:	As Built/In Progress		
ADDITIONAL WORKFLOW NOTIFICATIONS:		RFDS ID:	3719955		
RFDS VERSION:	3.00	Created By:	MR673A	Updated By:	mr673a
UMTS FREQUENCY:	850	Date Created:	3/9/2020 6:09:03 PM	Date Updated:	5/5/2020 4:40:20 PM
LTE FREQUENCY:	700, 850, 1900, AWS, WCS	EXPIRATION DATE:			
5G FREQUENCY:	850	ESTIMATED SQIN:		Calculation ID:	
I-PLAN JOB # 1:	NER-RCTB-20-01312	IPLAN PRD GRP || SUB GRP #1:	LTE Next Carrier || LTE 6C		
I-PLAN JOB # 2:	NER-RCTB-20-01326	IPLAN PRD GRP || SUB GRP #2:	LTE Next Carrier || LTE 7C		
I-PLAN JOB # 3:		IPLAN PRD GRP || SUB GRP #3:			
I-PLAN JOB # 4:		IPLAN PRD GRP || SUB GRP #4:			
I-PLAN JOB # 5:		IPLAN PRD GRP || SUB GRP #5:			
I-PLAN JOB # 6:		IPLAN PRD GRP || SUB GRP #6:			
I-PLAN JOB # 7:		IPLAN PRD GRP || SUB GRP #7:			
I-PLAN JOB # 8:		IPLAN PRD GRP || SUB GRP #8:			

Section 2 - LOCATION INFORMATION

USID:	61168	FA LOCATION CODE:	10035247	LOCATION NAME:	NEW HAVEN WHEELER ST
REGION:	NORTHEAST	MARKET CLUSTER:	NEW ENGLAND	MARKET:	CONNECTICUT
ADDRESS:	69 WHEELER STREET	CITY:	NEW HAVEN	STATE:	CT
ZIP CODE:	06512	COUNTY:	NEW HAVEN	LONG (DEC. DEG.):	-72.8979431
LATITUDE (D-M-S):	41d 17m45.57084s	LONGITUDE (D-M-S):	-72d -53m-52.59516s	LAT (DEC. DEG.):	41.2959919
DIRECTIONS, ACCESS AND EQUIPMENT LOCATION:	CT2037 NEW HAVEN CONTRUCTION WHEELER STREET I 95 SOUTH TO EXIT 51 TURN RIGHT AT 5TH LIGHT DEMARC IS LOCATED INSIDE SHELTERLTE RADIOS ARE ON TOP OF TOWER METER: UNITED ILLUMINATING #041026272AT&T IS RESPONSIBLE FOR SITE OVERGROWTH				

ORACLE PTN # 1:	2051A0V74Q	PACE JOB # 1:	MRCTB047055
ORACLE PTN # 2:	2051A0V6P3	PACE JOB # 2:	MRCTB047042
ORACLE PTN # 3:		PACE JOB # 3:	
ORACLE PTN # 4:		PACE JOB # 4:	
ORACLE PTN # 5:		PACE JOB # 5:	
ORACLE PTN # 6:		PACE JOB # 6:	
ORACLE PTN # 7:		PACE JOB # 7:	
ORACLE PTN # 8:		PACE JOB # 8:	
BORDER CELL WITH CONTOUR COORD:		SEARCH RING NAME:	
AM STUDY REQ'D (Y/N):	No	SEARCH_RING_ID:	
FREQ COORD:		BTA:	MSA / RSA:
		LAC(UMTS):	05988
RF DISTRICT:	TBD		
RF ZONE:	TBD	RNC(UMTS):	BRPTCT04CRBR07
		MME POOL ID(LTE):	FF01
PARENT NAME(UMTS):	BRIDGEPORT RNC07 ERICSSON 3820		

Section 3 - LICENSE COVERAGE/FILING INFORMATION

CGSA - NO FILING TRIGGERED (Yes/No):	No	CGSA LOSS:		PCS REDUCED - UPS ZIP:	
CGSA - MINOR FILING NEEDED (Yes/No)::	No	CGSA EXT AGMT NEEDED:		PCS POPS REDUCED:	
CGSA - MAJOR FILING NEEDED (Yes/No):	Yes	CGSA SCORECARD UPDATED:			

CGSA CALL SIGNS:	

Section 4 - TOWER/REGULATORY INFORMATION

STRUCTURE AT&T OWNED?:	No	GROUND ELEVATION (ft):	0	STRUCTURE TYPE:	MONOPOLE
ADDITIONAL REGULATORY?:	No	HEIGHT OVERALL (ft):	0.00	FCC ASR NUMBER:	1210659
SUB-LEASE RIGHTS?:	No	STRUCTURE HEIGHT (ft):	90.00		
LIGHTING TYPE:	NOT REQUIRED				

MARKET LOCATION 700 MHz Band:			
MARKET LOCATION 850 MHz Band:			
MARKET LOCATION 1900 MHz Band:			
MARKET LOCATION AWS Band:			
MARKET LOCATION WCS Band:			
MARKET LOCATION Future Band:			

Section 5 - E-911 INFORMATION - existing

	PSAP NAME:	PSAP ID:	E911 PHASE:	MPC SVC PROVIDER:	LMU REQUIRED:	ESRN:	DATE LIVE PH1:	DATE LIVE PH2:		
SECTOR A E-911				INTRADO_MIAMI		0				
SECTOR B				INTRADO		0				
SECTOR C				INTRADO		0				
SECTOR D										
SECTOR E										
SECTOR F										
OMNI										

Section 5 - E-911 INFORMATION - final

	PSAP NAME:	PSAP ID:	E911 PHASE:	MPC SVC PROVIDER:	LMU REQUIRED:	ESRN:	DATE LIVE PH1:	DATE LIVE PH2:		
SECTOR A E-911				INTRADO_MIAMI		0				
SECTOR B				INTRADO		0				
SECTOR C				INTRADO		0				
SECTOR D										
SECTOR E										
SECTOR F										
OMNI										

SECTION 6/7 - BBU INFORMATION - existing

	BBU 1	BBU 2	BBU 3	BBU 4	BBU 5				
BBU RBS ID:	172557	247012	366015	556349	718757				
TECHNOLOGY:	UMTS	UMTS	LTE	LTE	5G				
BBU NAME:	CTU2037	CTV2037	CTL02037	CTL06037R	CTCN002037				
CELL ID / BCF:	CTU2037	CTU2037	CTL02037	CTL06037R	CTN0002037				
BTA/TID:	318V	318U	318L	318L	318N				
4-9 DIGIT SITE ID:	2037	2037	2037	6037	2037				
COW OR TOY?:	No	No	No	No	No				
CELL SITE TYPE:	SECTORIZED	SECTORIZED	SECTORIZED	SECTORIZED	SECTORIZED				
SITE TYPE:	MACRO-CONVENTIONAL	MACRO-CONVENTIONAL	MACRO-CONVENTIONAL	MACRO-CONVENTIONAL	MACRO-CONVENTIONAL				
BTS LOCATION ID:	INTERNAL	INTERNAL	INTERNAL	INTERNAL	INTERNAL				
BASE STATION TYPE:	BASE	OVERLAY	BASE	BASE	BASE				
EQUIPMENT NAME:	NEW HAVEN WHEELER ST	NEW HAVEN - WHEELER ST	NEW HAVEN WHEELER ST	NEW HAVEN WHEELER ST	NEW HAVEN WHEELER ST				
DISASTER PRIORITY:	2	0	3	3	3				
EQUIPMENT VENDOR:	ERICSSON	ERICSSON	ERICSSON	ERICSSON	ERICSSON				
EQUIPMENT TYPE (Model):	3206 INDOOR	3206 INDOOR	6601 INDOOR MU	6601 INDOOR MU	BASEBAND 6630				
BASEBAND CONFIGURATION:									
MARKET STATE CODE:			CT	CT	CTC				
NODE B NUMBER:	0	0	2037	6037	2037				
SIDEHAUL SWITCH VENDOR:									
SIDEHAUL SWITCH MODEL:									
SIDEHAUL SWITCH NAME:									
CSS - CTS COMMON ID:	CTU2037	CTV2037	CTL02037	CTL06037R	CTCN002037				
CSS - SECONDARY FUNCTION ID:									

SECTION 6/7 - BBU INFORMATION - final

	BBU 1	BBU 2	BBU 3	BBU 4					
BBU RBS ID:	247012	366015	556349	718757					
TECHNOLOGY:	UMTS	LTE	LTE	5G					
BBU NAME:	CTV2037	CTL02037	CTL06037R	CTCN002037					
CELL ID / BCF:	CTU2037	CTL02037	CTL06037R	CTN0002037					
BTA/TID:	318W	318L	318L	318N					
4-9 DIGIT SITE ID:	2037	2037	6037	2037					
COW OR TOY?:	No	No	No	No					
CELL SITE TYPE:	SECTORIZED	SECTORIZED	SECTORIZED	SECTORIZED					
SITE TYPE:	MACRO-CONVENTIONAL	MACRO-CONVENTIONAL	MACRO-CONVENTIONAL	MACRO-CONVENTIONAL					
BTS LOCATION ID:	INTERNAL	INTERNAL	INTERNAL	INTERNAL					
BASE STATION TYPE:	OVERLAY	BASE	BASE	BASE					
EQUIPMENT NAME:	NEW HAVEN - WHEELER ST	NEW HAVEN WHEELER ST	NEW HAVEN WHEELER ST	NEW HAVEN WHEELER ST					
DISASTER PRIORITY:	0	3	3	3					
EQUIPMENT VENDOR:	ERICSSON	ERICSSON	ERICSSON	ERICSSON					
EQUIPMENT TYPE (Model):	3206 INDOOR	6601 RADIONODE 5216	6601 RADIONODE 5216	BASEBAND 6630					
BASEBAND CONFIGURATION:			1x6601 / 1x5216 / 1xXMU03 / 1x6630 + IDLe						
MARKET STATE CODE:		CT	CT	CTC					
NODE B NUMBER:	0	2037	6037	2037					
SIDEHAUL SWITCH VENDOR:									
SIDEHAUL SWITCH MODEL:									
SIDEHAUL SWITCH NAME:									
CSS - CTS COMMON ID:	CTV2037	CTL02037	CTL06037R	CTCN002037					
CSS - SECONDARY FUNCTION ID:									

Section 8 - RBS/SECTOR ASSOCIATION - existing

	BBU 1	BBU 2	BBU 3	BBU 4	BBU 5															
CTS Common ID	CTU2037	CTV2037	CTL02037	CTL06037R	CTCN002037															
Soft Sector IDs	CTU20374	CTV20371	CTL02037_2A_2	CTL06037_3A_1	CTCN002037_N005A_1															
	CTU20375	CTV20372	CTL02037_2B_2	CTL06037_7A_1	CTCN002037_N005B_1															
	CTU20376	CTV20373	CTL02037_2C_2	CTL06037_9A_1	CTCN002037_N005C_1															
	CTU20377	CTV2037A	CTL02037_3A_1																	
	CTU20378	CTV2037B	CTL02037_3B_1																	
	CTU20379	CTV2037C	CTL02037_3C_1																	
			CTL02037_7A_1																	
			CTL02037_7B_1																	
			CTL02037_7C_1																	
			CTL02037_8A_1																	
			CTL02037_8B_1																	
			CTL02037_8C_1																	
			CTL02037_9A_1																	
			CTL02037_9A_2																	
			CTL02037_9B_1																	
			CTL02037_9B_2																	
			CTL02037_9C_1																	
			CTL02037_9C_2																	

Section 8 - RBS/SECTOR ASSOCIATION - final

	BBU 1	BBU 2	BBU 3	BBU 4																
CTS Common ID	CTV2037	CTL02037	CTL06037R	CTCN002037																
Soft Sector IDs	CTV20371	CTL02037_3A_1	CTL06037_2A_2	CTCN002037_N005A_1																
	CTV20372	CTL02037_3B_1	CTL06037_2B_2	CTCN002037_N005B_1																
	CTV20373	CTL02037_3C_1	CTL06037_2C_2	CTCN002037_N005C_1																
		CTL02037_7A_1	CTL06037_9A_1																	
		CTL02037_7A_2_E	CTL06037_9A_2																	
		CTL02037_7A_3_F	CTL06037_9B_1																	
		CTL02037_7B_1	CTL06037_9B_2																	
		CTL02037_7B_2_E	CTL06037_9C_1																	
		CTL02037_7B_3_F	CTL06037_9C_2																	
		CTL02037_7C_1																		
		CTL02037_7C_2_E																		
		CTL02037_7C_3_F																		
		CTL02037_8A_1																		
		CTL02037_8B_1																		
		CTL02037_8C_1																		

Section 9 - SOFT SECTOR ID - existing

	UMTS 1ST 850	UMTS 1ST 1900	UMTS 2ND 850	UMTS 2ND 1900	LTE 1ST 700	LTE 1ST 850	LTE 1ST 1900	LTE 1ST AWS	LTE 1ST WCS	LTE 2ND 700	LTE 2ND 1900	LTE 2ND WCS	LTE 3RD 1900	LTE 4TH 700	LTE 4TH 1900	LTE 4TH AWS	LTE 5TH 700	5G 1ST 850								
USEID (excluding Hard Sector)	61168.850.3G.1	61168.1900.3G.1	61168.850.3G.2	61168.1900.3G.2																						
SECTOR A SOFT SECTOR ID	CTV20371	CTU20377	CTV2037A	CTU20374	CTL02037_7A_1	CTL02037_8A_1	CTL02037_9A_1	CTL02037_2A_2	CTL02037_3A_1	CTL06037_7A_1	CTL02037_9A_2	CTL06037_3A_1	CTL06037_9A_1					CTCN002037_N005A_1								
SECTOR B	CTV20372	CTU20378	CTV2037B	CTU20375	CTL02037_7B_1	CTL02037_8B_1	CTL02037_9B_1	CTL02037_2B_2	CTL02037_3B_1		CTL02037_9B_2							CTCN002037_N005B_1								
SECTOR C	CTV20373	CTU20379	CTV2037C	CTU20376	CTL02037_7C_1	CTL02037_8C_1	CTL02037_9C_1	CTL02037_2C_2	CTL02037_3C_1		CTL02037_9C_2							CTCN002037_N005C_1								
SECTOR D																										
SECTOR E																										
SECTOR F																										
OMNI																										

Section 9 - SOFT SECTOR ID - final

	UMTS 1ST 850	UMTS 1ST 1900	UMTS 2ND 850	UMTS 2ND 1900	LTE 1ST 700	LTE 1ST 850	LTE 1ST 1900	LTE 1ST AWS	LTE 1ST WCS	LTE 2ND 700	LTE 2ND 1900	LTE 2ND WCS	LTE 3RD 1900	LTE 4TH 700	LTE 4TH 1900	LTE 4TH AWS	LTE 5TH 700	5G 1ST 850								
USEID (excluding Hard Sector)	61168.850.3G.1																									
SECTOR A SOFT SECTOR ID	CTV20371				CTL02037_7A_1	CTL02037_8A_1	CTL06037_9A_1		CTL02037_3A_1					CTL02037_7A_2_E	CTL06037_9A_2	CTL06037_2A_2	CTL02037_7A_3_F	CTCN002037_N005A_1								
SECTOR B	CTV20372				CTL02037_7B_1	CTL02037_8B_1	CTL06037_9B_1		CTL02037_3B_1					CTL02037_7B_2_E	CTL06037_9B_2	CTL06037_2B_2	CTL02037_7B_3_F	CTCN002037_N005B_1								
SECTOR C	CTV20373				CTL02037_7C_1	CTL02037_8C_1	CTL06037_9C_1		CTL02037_3C_1					CTL02037_7C_2_E	CTL06037_9C_2	CTL06037_2C_2	CTL02037_7C_3_F	CTCN002037_N005C_1								
SECTOR D																										
SECTOR E																										
SECTOR F																										
OMNI																										

Section 9 - Cell Number - existing

	UMTS 1ST 850	UMTS 1ST 1900	UMTS 2ND 850	UMTS 2ND 1900	LTE 1ST 700	LTE 1ST 850	LTE 1ST 1900	LTE 1ST AWS	LTE 1ST WCS	LTE 2ND 700	LTE 2ND 1900	LTE 2ND WCS	LTE 3RD 1900	LTE 4TH 700	LTE 4TH 1900	LTE 4TH AWS	LTE 5TH 700	5G 1ST 850								
USEID (excluding Hard Sector)	61168.850.3G.1	61168.1900.3G.1	61168.850.3G.2	61168.1900.3G.2																						
SECTOR A CELL NUMBER					15	1	8	192	149	15	178	149	8					25								
SECTOR B					16	2	9	193	150		179							49								
SECTOR C					17	3	10	194	151		180							73								
SECTOR D																										
SECTOR E																										
SECTOR F																										
OMNI																										

Section 9 - Cell Number - final

	UMTS 1ST 850	UMTS 1ST 1900	UMTS 2ND 850	UMTS 2ND 1900	LTE 1ST 700	LTE 1ST 850	LTE 1ST 1900	LTE 1ST AWS	LTE 1ST WCS	LTE 2ND 700	LTE 2ND 1900	LTE 2ND WCS	LTE 3RD 1900	LTE 4TH 700	LTE 4TH 1900	LTE 4TH AWS	LTE 5TH 700	5G 1ST 850								
USEID (excluding Hard Sector)	61168.850.3G.1																									
SECTOR A CELL NUMBER					15	1	8		149					185	178	192	171	25								
SECTOR B					16	2	9		150					186	179	193	172	49								
SECTOR C					17	3	10		151					187	180	194	173	73								
SECTOR D																										
SECTOR E																										
SECTOR F																										
OMNI																										

Section 10 - CID/SAC - existing

		UMTS 1ST 850	UMTS 1ST 1900	UMTS 2ND 850	UMTS 2ND 1900	LTE 1ST 700	LTE 1ST 850	LTE 1ST 1900	LTE 1ST AWS	LTE 1ST WCS	LTE 2ND 700	LTE 2ND 1900	LTE 2ND WCS	LTE 3RD 1900	LTE 4TH 700	LTE 4TH 1900	LTE 4TH AWS	LTE 5TH 700	5G 1ST 850									
SECTOR A	CID/SAC	20371	20377	60371	20374																							
SECTOR B		20372	20378	60372	20375																							
SECTOR C		20373	20379	60373	20376																							
SECTOR D																												
SECTOR E																												
SECTOR F																												
OMNI																												

Section 10 - CID/SAC - final

		UMTS 1ST 850	UMTS 1ST 1900	UMTS 2ND 850	UMTS 2ND 1900	LTE 1ST 700	LTE 1ST 850	LTE 1ST 1900	LTE 1ST AWS	LTE 1ST WCS	LTE 2ND 700	LTE 2ND 1900	LTE 2ND WCS	LTE 3RD 1900	LTE 4TH 700	LTE 4TH 1900	LTE 4TH AWS	LTE 5TH 700	5G 1ST 850									
SECTOR A	CID/SAC	20371																										
SECTOR B		20372																										
SECTOR C		20373																										
SECTOR D																												
SECTOR E																												
SECTOR F																												
OMNI																												

Section 15A - CURRENT TOWER CONFIGURATION - SECTOR A (OR OMNI)

ANTENNA POSITION is LEFT to RIGHT from BACK OF ANTENNA (unless otherwise specified)	ANTENNA POSITION 1		ANTENNA POSITION 2		ANTENNA POSITION 3		ANTENNA POSITION 4		ANTENNA POSITION 5		ANTENNA POSITION 6		ANTENNA POSITION 7	
ANTENNA MAKE - MODEL	7750		SBNHH-1D65A		SBNHH-1D65A		QS46512-2							
ANTENNA VENDOR	Powerwave		Andrew		Andrew		Quintel							
ANTENNA SIZE (H x W x D)	57X11X5		55X11.9X7.1		55X11.9X7.1		52X12X10.8							
ANTENNA WEIGHT	35		33.5		33.5		75							
AZIMUTH	180		50		50		50							
MAGNETIC DECLINATION														
RADIATION CENTER (feet)	91		91		91		91							
ANTENNA TIP HEIGHT	93		93		93		93							
MECHANICAL DOWNTILT	3		0		0		0							
FEEDER AMOUNT	2		Fiber + 2 Coax											
VERTICAL SEPARATION from ANTENNA ABOVE (TIP to TIP)														
VERTICAL SEPARATION from ANTENNA BELOW (TIP to TIP)														
HORIZONTAL SEPARATION from CLOSEST ANTENNA to LEFT (CENTERLINE to CENTERLINE)														
HORIZONTAL SEPARATION from CLOSEST ANTENNA to RIGHT (CENTERLINE to CENTERLINE)														
HORIZONTAL SEPARATION from ANOTHER ANTENNA (which antenna # / # of inches)														
Antenna RET Motor (QTY/MODEL)	2	Kathrein / 860-10025		Built-in		Built-in		Built-in						
SURGE ARRESTOR (QTY/MODEL)					1	DC Squid	2	DC/Fiber Squid						
DIPLEXER (QTY/MODEL)	2	Powerwave / LGP 21901												
DUPLEXER (QTY/MODEL)														
Antenna RET CONTROL UNIT (QTY/MODEL)	1	Kathrein / 860-10006		LTE RRH		LTE RRH		LTE RRH						
DC BLOCK (QTY/MODEL)														
TMA/LNA (QTY/MODEL)	2	Powerwave / LGP 21401 (Dual Band - 850 Bypass)												
CURRENT INJECTORS FOR TMA (QTY/MODEL)	2	Polyphaser / 1000860												
PDU FOR TMAS (QTY/MODEL)	1	Powerwave LGP 12104												
FILTER (QTY/MODEL)														
SQUID (QTY/MODEL)														
FIBER TRUNK (QTY/MODEL)														
DC TRUNK (QTY/MODEL)														
REPEATER (QTY/MODEL)														
RRH - 700 band (QTY/MODEL)							1	RRUS-11 B12 (REUSE ONLY)						
RRH - 850 band (QTY/MODEL)					1	4478 B5								
RRH - 1900 band (QTY/MODEL)					1	RRUS-32 B2								
RRH - AWS band (QTY/MODEL)							1	4426 B66						
RRH - WCS band (QTY/MODEL)			1	RRUS-32 B30										
Additional RRH #1 - any band (QTY/MODEL)														
Additional RRH #2 - any band (QTY/MODEL)														
Additional Component 1 (QTY/MODEL)			2	Pwav 1001983 (1) & 1001940 (1)										
Additional Component 2 (QTY/MODEL)														
Additional Component 3 (QTY/MODEL)														
Local Market Note 1														
Local Market Note 2														
Local Market Note 3														

PORT SPECIFIC FIELDS	PORT NUMBER	USEID (CSSng)	USEID (Atoll)	ATOLL TXID	ATOLL CELL ID	TX/RX ?	TECHNOLOGY/FREQUENCY	ANTENNA ATOLL	ANTENNA GAIN	ELECTRICAL AZIMUTH	ELECTRICAL TILT	RRH LOCATION (Top/Bottom/Integrated/None)	FEEDERS TYPE	FEEDER LENGTH (feet)	RXAIT KIT MODULE?	TRIPLEXER or LLC (QTY)	TRIPLEXER or LLC (MODEL)	SCPA/MCPA MODULE?	HATCHPLATE POWER (Watts)	ERP (Watts)	Antenna RET Name	CABLE NUMBER	CABLE ID (CSSNG)
ANTENNA POSITION 1	PORT 1			CTV20371	CTV20371		UMTS 850	7750.00.800.04	14.5	180	5	None	7/8 850 MHz	120.03						356.45		1	
ANTENNA POSITION 2	PORT 3			CTL02037_3A_1	CTL02037_3A_1		LTE WCS	SBNHH-1D65A_2355MHz_03DT	17.3	50	3	Top	FIBER	0						1285.2866		4	
ANTENNA POSITION 3	PORT 1			CTL02037_8A_1	CTL02037_8A_1		LTE 850	SBNHH-1D65A_851MHz_03DT	13	50	3	Top	FIBER	0						1000		5	

	PORT 2			CTCN002037_N005A_1	CTCN002037_N005A_1		5G 850	SBNHH-1D65A_851MHz_03DT	13	50	3	Top	FIBER	0						1000		5	
	PORT 3			CTL02037_9A_1	CTL02037_9A_1		LTE 1900	SBNHH-1D65A_1930MHz_02DT	16.8	50	2	Top	FIBER	0						3664.3757		6	
	PORT 4			CTL02037_9A_2	CTL02037_9A_2		LTE 1900	SBNHH-1D65A_1930MHz_02DT	16.8	50	2	Top	FIBER	0						3664.3757		6	
ANTENNA POSITION 4	**PORT 1**			CTL02037_7A_1	CTL02037_7A_1		LTE 700	SBNHH-1D65A_722MHz_03DT	13.1	50	3	Top	FIBER	0						1475.7065		7	
	PORT 3			CTL02037_2A_2	CTL02037_2A_2		LTE AWS	SBNHH-1D65A_2170MHz_02DT	17.1	50	2	Top	FIBER	0						3837.0724		8	

Section 15B - CURRENT TOWER CONFIGURATION - SECTOR B

ANTENNA POSITION is LEFT to RIGHT from BACK OF ANTENNA (unless otherwise specified)	ANTENNA POSITION 1		ANTENNA POSITION 2		ANTENNA POSITION 3		ANTENNA POSITION 4		ANTENNA POSITION 5		ANTENNA POSITION 6		ANTENNA POSITION 7	
ANTENNA MAKE - MODEL	7750		HPA-65R-BUU-H6		HPA-65R-BUU-H6		QS66512-2							
ANTENNA VENDOR	Powerwave		CCI Products		CCI Products		Quintel							
ANTENNA SIZE (H x W x D)	57X11X5		72X14.8X9		72X14.8X9		72X12X9.6							
ANTENNA WEIGHT	35		50.7		50.7		111							
AZIMUTH	300		180		180		180							
MAGNETIC DECLINATION														
RADIATION CENTER (feet)	91		91		91		91							
ANTENNA TIP HEIGHT	93		94		94		94							
MECHANICAL DOWNTILT	3		0		0		0							
FEEDER AMOUNT	2		Fiber + 2 Coax											
VERTICAL SEPARATION from ANTENNA ABOVE (TIP to TIP)														
VERTICAL SEPARATION from ANTENNA BELOW (TIP to TIP)														
HORIZONTAL SEPARATION from CLOSEST ANTENNA to LEFT (CENTERLINE to CENTERLINE)														
HORIZONTAL SEPARATION from CLOSEST ANTENNA to RIGHT (CENTERLINE to CENTERLINE)														
HORIZONTAL SEPARATION from ANOTHER ANTENNA (which antenna # / # of inches)														
Antenna RET Motor (QTY/MODEL)	2	Kathrein / 860-10025		Built-in		Built-in		Built-in						
SURGE ARRESTOR (QTY/MODEL)														
DIPLEXER (QTY/MODEL)	2	Powerwave / LGP 21901												
DUPLEXER (QTY/MODEL)														
Antenna RET CONTROL UNIT (QTY/MODEL)				LTE RRH		LTE RRH		LTE RRH						
DC BLOCK (QTY/MODEL)														
TMA/LNA (QTY/MODEL)	2	Powerwave / LGP 21401 (Dual Band - 850 Bypass)												
CURRENT INJECTORS FOR TMA (QTY/MODEL)	2	Polyphaser / 1000860												
PDU FOR TMAS (QTY/MODEL)														
FILTER (QTY/MODEL)														
SQUID (QTY/MODEL)														
FIBER TRUNK (QTY/MODEL)														
DC TRUNK (QTY/MODEL)														
REPEATER (QTY/MODEL)														
RRH - 700 band (QTY/MODEL)							1	RRUS-11 B12 (REUSE ONLY)						
RRH - 850 band (QTY/MODEL)					1	4478 B5								
RRH - 1900 band (QTY/MODEL)					1	RRUS-32 B2								
RRH - AWS band (QTY/MODEL)							1	4426 B66						
RRH - WCS band (QTY/MODEL)			1	RRUS-32 B30										
Additional RRH #1 - any band (QTY/MODEL)														
Additional RRH #2 - any band (QTY/MODEL)														
Additional Component 1 (QTY/MODEL)			2	Pwav 1001983 (1) & 1001940 (1)										
Additional Component 2 (QTY/MODEL)														
Additional Component 3 (QTY/MODEL)														
Local Market Note 1														
Local Market Note 2														
Local Market Note 3														

PORT SPECIFIC FIELDS	PORT NUMBER	USEID (CSSng)	USEID (Atoll)	ATOLL TXID	ATOLL CELL ID	TX/RX ?	TECHNOLOGY/FREQUENCY	ANTENNA ATOLL	ANTENNA GAIN	ELECTRICAL AZIMUTH	ELECTRICAL TILT	RRH LOCATION (Top/Bottom/Integrated/None)	FEEDERS TYPE	FEEDER LENGTH (feet)	RXAIT KIT MODULE?	TRIPLEXER or LLC (QTY)	TRIPLEXER or LLC (MODEL)	SCPA/MCPA MODULE?	HATCHPLATE POWER (Watts)	ERP (Watts)	Antenna RET Name	CABLE NUMBER	CABLE ID (CSSNG)
ANTENNA POSITION 1	PORT 1			CTV20372	CTV20372		UMTS 850	7750.00.800.02	14.5	300	2	None	7/8 850 MHz	120.03						356.45		9	
ANTENNA POSITION 2	PORT 3			CTL02037_3B_1	CTL02037_3B_1		LTE WCS	HPA-65R-BUU-H6_2360MHz_01DT	17.27	180	1	Top	FIBER	0						1285.2866		12	
ANTENNA POSITION 3	PORT 1			CTL02037_8B_1	CTL02037_8B_1		LTE 850	HPA-65R-BUU-H6_849MHz_03DT	14.94	180	3	Top	FIBER	0						1000		13	
	PORT 2			CTCN002037_N005B	CTCN002037_N005B		5G 850	HPA-65R-BUU-	14.94	180	3	Top	FIBER	0						1000		13	

				_1	_1			H6_849MHz_03DT															
	PORT 3			CTL02037_9B_1	CTL02037_9B_1		LTE 1900	HPA-65R-BUU-H6_1930MHz_05DT	17.17	180	5	Top	FIBER	0						3664.3757		14	
	PORT 4			CTL02037_9B_2	CTL02037_9B_2		LTE 1900	HPA-65R-BUU-H6_1930MHz_05DT	17.17	180	5	Top	FIBER	0						3664.3757		14	
ANTENNA POSITION 4	**PORT 1**			CTL02037_7B_1	CTL02037_7B_1		LTE 700	QS66512-2_722MHz_03DT	13.5	180	3	Top	FIBER	0						1475.7065		15	
	PORT 3			CTL02037_2B_2	CTL02037_2B_2		LTE AWS	QS66512-2_2170MHz_03DT	16.4	180	3	Top	FIBER	0						3837.0724		16	

Section 15C - CURRENT TOWER CONFIGURATION - SECTOR C

ANTENNA POSITION is LEFT to RIGHT from BACK OF ANTENNA (unless otherwise specified)	ANTENNA POSITION 1		ANTENNA POSITION 2		ANTENNA POSITION 3		ANTENNA POSITION 4		ANTENNA POSITION 5		ANTENNA POSITION 6		ANTENNA POSITION 7	
ANTENNA MAKE - MODEL	7750		HPA-65R-BUU-H6		HPA-65R-BUU-H6		QS66512-2							
ANTENNA VENDOR	Powerwave		CCI Products		CCI Products		Quintel							
ANTENNA SIZE (H x W x D)	57X11X5		72X14.8X9		72X14.8X9		72X12X9.6							
ANTENNA WEIGHT	35		50.7		50.7		111							
AZIMUTH	50		300		300		300							
MAGNETIC DECLINATION														
RADIATION CENTER (feet)	91		91		91		91							
ANTENNA TIP HEIGHT	93		94		94		94							
MECHANICAL DOWNTILT	0		0		0		0							
FEEDER AMOUNT	2		Fiber + 2 Coax											
VERTICAL SEPARATION from ANTENNA ABOVE (TIP to TIP)														
VERTICAL SEPARATION from ANTENNA BELOW (TIP to TIP)														
HORIZONTAL SEPARATION from CLOSEST ANTENNA to LEFT (CENTERLINE to CENTERLINE)														
HORIZONTAL SEPARATION from CLOSEST ANTENNA to RIGHT (CENTERLINE to CENTERLINE)														
HORIZONTAL SEPARATION from ANOTHER ANTENNA (which antenna # / # of inches)														
Antenna RET Motor (QTY/MODEL)	2	Kathrein / 860-10025		Built-in		Built-in		Built-in						
SURGE ARRESTOR (QTY/MODEL)														
DIPLEXER (QTY/MODEL)	2	Powerwave / LGP 21901												
DUPLEXER (QTY/MODEL)														
Antenna RET CONTROL UNIT (QTY/MODEL)				LTE RRH		LTE RRH		LTE RRH						
DC BLOCK (QTY/MODEL)														
TMA/LNA (QTY/MODEL)	2	Powerwave / LGP 21401 (Dual Band - 850 Bypass)												
CURRENT INJECTORS FOR TMA (QTY/MODEL)	2	Polyphaser / 1000860												
PDU FOR TMAS (QTY/MODEL)														
FILTER (QTY/MODEL)														
SQUID (QTY/MODEL)														
FIBER TRUNK (QTY/MODEL)														
DC TRUNK (QTY/MODEL)														
REPEATER (QTY/MODEL)														
RRH - 700 band (QTY/MODEL)							1	RRUS-11 B12 (REUSE ONLY)						
RRH - 850 band (QTY/MODEL)					1	4478 B5								
RRH - 1900 band (QTY/MODEL)					1	RRUS-32 B2								
RRH - AWS band (QTY/MODEL)							1	4426 B66						
RRH - WCS band (QTY/MODEL)			1	RRUS-32 B30										
Additional RRH #1 - any band (QTY/MODEL)														
Additional RRH #2 - any band (QTY/MODEL)														
Additional Component 1 (QTY/MODEL)			2	Pwav 1001983 (1) & 1001940 (1)										
Additional Component 2 (QTY/MODEL)														
Additional Component 3 (QTY/MODEL)														
Local Market Note 1														
Local Market Note 2														
Local Market Note 3														

PORT SPECIFIC FIELDS	PORT NUMBER	USEID (CSSng)	USEID (Atoll)	ATOLL TXID	ATOLL CELL ID	TX/RX ?	TECHNOLOGY/FREQUENCY	ANTENNA ATOLL	ANTENNA GAIN	ELECTRICAL AZIMUTH	ELECTRICAL TILT	RRH LOCATION (Top/Bottom/Integrated/None)	FEEDERS TYPE	FEEDER LENGTH (feet)	RXAIT KIT MODULE?	TRIPLEXER or LLC (QTY)	TRIPLEXER or LLC (MODEL)	SCPA/MCPA MODULE?	HATCHPLATE POWER (Watts)	ERP (Watts)	Antenna RET Name	CABLE NUMBER	CABLE ID (CSSNG)
ANTENNA POSITION 1	PORT 1			CTV20373	CTV20373		UMTS 850	7750.00.800.02	14.5	50	2	None	7/8 850 MHz	120.03						356.45		17	
ANTENNA POSITION 2	PORT 3			CTL02037_3C_1	CTL02037_3C_1		LTE WCS	HPA-65R-BUU-H6_2360MHz_03DT	17.45	300	3	Top	FIBER	0						1285.2866		20	
ANTENNA POSITION 3	PORT 1			CTL02037_8C_1	CTL02037_8C_1		LTE 850	HPA-65R-BUU-H6_849MHz_05DT	14.89	300	5	Top	FIBER	0						1000		21	
	PORT 2			CTCN002037_N005C	CTCN002037_N005C		5G 850	HPA-65R-BUU-	14.89	300	5	Top	FIBER	0						1000		21	

				_1	_1			H6_849MHz_05DT															
	PORT 3			CTL02037_9C_1	CTL02037_9C_1		LTE 1900	HPA-65R-BUU-H6_1930MHz_06DT	17.18	300	6	Top	FIBER	0						3664.3757		22	
	PORT 4			CTL02037_9C_2	CTL02037_9C_2		LTE 1900	HPA-65R-BUU-H6_1930MHz_06DT	17.18	300	6	Top	FIBER	0						3664.3757		22	
ANTENNA POSITION 4	**PORT 1**			CTL02037_7C_1	CTL02037_7C_1		LTE 700	QS66512-2_722MHz_05DT	13.2	300	5	Top	FIBER	0						1475.7065		23	
	PORT 3			CTL02037_2C_2	CTL02037_2C_2		LTE AWS	QS66512-2_2170MHz_06DT	16.5	300	6	Top	FIBER	0						3837.0724		24	

Section 16A - PLANNED/PROPOSED TOWER CONFIGURATION - SECTOR A (OR OMNI)

ANTENNA POSITION is LEFT to RIGHT from BACK OF ANTENNA (unless otherwise specified)	ANTENNA POSITION 1		ANTENNA POSITION 2		ANTENNA POSITION 3		ANTENNA POSITION 4		ANTENNA POSITION 5		ANTENNA POSITION 6		ANTENNA POSITION 7	
Existing Antenna?			Yes											
ANTENNA MAKE - MODEL					OPA65R-BU4DA									
ANTENNA VENDOR					CCI									
ANTENNA SIZE (H x W x D)					48.2X21X7.8									
ANTENNA WEIGHT					52.5									
AZIMUTH					50									
MAGNETIC DECLINATION														
RADIATION CENTER (feet)					91									
ANTENNA TIP HEIGHT					93									
MECHANICAL DOWNTILT					0									
FEEDER AMOUNT														
VERTICAL SEPARATION from ANTENNA ABOVE (TIP to TIP)														
VERTICAL SEPARATION from ANTENNA BELOW (TIP to TIP)														
HORIZONTAL SEPARATION from CLOSEST ANTENNA to LEFT (CENTERLINE to CENTERLINE)														
HORIZONTAL SEPARATION from CLOSEST ANTENNA to RIGHT (CENTERLINE to CENTERLINE)														
HORIZONTAL SEPARATION from ANOTHER ANTENNA (which antenna # / # of inches)														
Antenna RET Motor (QTY/MODEL)						Built-in								
SURGE ARRESTOR (QTY/MODEL)			1	DC Only Squid										
DIPLEXER (QTY/MODEL)					2	DBCT108F1V92-1								
DUPLEXER (QTY/MODEL)														
Antenna RET CONTROL UNIT (QTY/MODEL)						LTE RRH								
DC BLOCK (QTY/MODEL)														
TMA/LNA (QTY/MODEL)														
CURRENT INJECTORS FOR TMA (QTY/MODEL)														
PDU FOR TMAS (QTY/MODEL)														
FILTER (QTY/MODEL)														
SQUID (QTY/MODEL)														
FIBER TRUNK (QTY/MODEL)														
DC TRUNK (QTY/MODEL)														
REPEATER (QTY/MODEL)														
RRH - 700 band (QTY/MODEL)			1	RRUS-E2 B29	1	4478 B14								
RRH - 850 band (QTY/MODEL)														
RRH - 1900 band (QTY/MODEL)														
RRH - AWS band (QTY/MODEL)														
RRH - WCS band (QTY/MODEL)														
Additional RRH #1 - any band (QTY/MODEL)														
Additional RRH #2 - any band (QTY/MODEL)														
Additional Component 1 (QTY/MODEL)														
Additional Component 2 (QTY/MODEL)														
Additional Component 3 (QTY/MODEL)														
Local Market Note 1	Rev-6 - LTE 7C - Antennae and Radios as per PD - Replace LTE Antenna with Octo - Reuse Hex antenna to UMTS - Remove Unused Coax and elements - Add B14 4478, RRUS-E2 - Add 1xDC only squid per sector - Add LBCs top - Remove 1xXMU - Add 6630 + IDLe													
Local Market Note 2														
Local Market Note 3	1x6601 / 1x5216 / 1xXMU03 / 1x6630 + IDLe													

PORT SPECIFIC FIELDS	PORT NUMBER	USEID (CSSng)	USEID (Atoll)	ATOLL TXID	ATOLL CELL ID	TX/RX ?	TECHNOLOGY/FREQUENCY	ANTENNA ATOLL	ANTENNA GAIN	ELECTRICAL AZIMUTH	ELECTRICAL TILT	RRH LOCATION (Top/Bottom/Integrated/None)	FEEDERS TYPE	FEEDER LENGTH (feet)	RXAIT KIT MODULE?	TRIPLEXER or LLC (QTY)	TRIPLEXER or LLC (MODEL)	SCPA/MCPA MODULE?	HATCHPLATE POWER (Watts)	ERP (Watts)	Antenna RET Name	CABLE NUMBER	CABLE ID (CSSNG)
ANTENNA POSITION 2	PORT 2		61168.A.700.4G.4	CTL02037_7A_2_E	CTL02037_7A_2_E		LTE 700	SBNHH-1D65A_722MHz_03DT	13.1	50	3	Top	FIBER	0						1475.7065		3	

ANTENNA POSITION 3	**PORT 5**		61168.A.700.4G.5	CTL02037_7A_3_F	CTL02037_7A_3_F		LTE 700	OPA65R-BU4DA _770MHz_03DT	11.9	50	3	Top	FIBER	0						2951.413		5	

Section 16B - PLANNED/PROPOSED TOWER CONFIGURATION - SECTOR B

ANTENNA POSITION is LEFT to RIGHT from BACK OF ANTENNA (unless otherwise specified)	ANTENNA POSITION 1		ANTENNA POSITION 2		ANTENNA POSITION 3		ANTENNA POSITION 4		ANTENNA POSITION 5		ANTENNA POSITION 6		ANTENNA POSITION 7	
Existing Antenna?			Yes											
ANTENNA MAKE - MODEL					OPA65R-BU6DA									
ANTENNA VENDOR					CCI									
ANTENNA SIZE (H x W x D)					71.2X21X7.8									
ANTENNA WEIGHT					60.2									
AZIMUTH					180									
MAGNETIC DECLINATION														
RADIATION CENTER (feet)					91									
ANTENNA TIP HEIGHT					94									
MECHANICAL DOWNTILT					0									
FEEDER AMOUNT														
VERTICAL SEPARATION from ANTENNA ABOVE (TIP to TIP)														
VERTICAL SEPARATION from ANTENNA BELOW (TIP to TIP)														
HORIZONTAL SEPARATION from CLOSEST ANTENNA to LEFT (CENTERLINE to CENTERLINE)														
HORIZONTAL SEPARATION from CLOSEST ANTENNA to RIGHT (CENTERLINE to CENTERLINE)														
HORIZONTAL SEPARATION from ANOTHER ANTENNA (which antenna # / # of inches)														
Antenna RET Motor (QTY/MODEL)						Built-in								
SURGE ARRESTOR (QTY/MODEL)														
DIPLEXER (QTY/MODEL)					2	DBCT108F1V92-1								
DUPLEXER (QTY/MODEL)														
Antenna RET CONTROL UNIT (QTY/MODEL)						LTE RRH								
DC BLOCK (QTY/MODEL)														
TMA/LNA (QTY/MODEL)														
CURRENT INJECTORS FOR TMA (QTY/MODEL)														
PDU FOR TMAS (QTY/MODEL)														
FILTER (QTY/MODEL)														
SQUID (QTY/MODEL)														
FIBER TRUNK (QTY/MODEL)														
DC TRUNK (QTY/MODEL)														
REPEATER (QTY/MODEL)														
RRH - 700 band (QTY/MODEL)			1	RRUS-E2 B29	1	4478 B14								
RRH - 850 band (QTY/MODEL)														
RRH - 1900 band (QTY/MODEL)														
RRH - AWS band (QTY/MODEL)														
RRH - WCS band (QTY/MODEL)														
Additional RRH #1 - any band (QTY/MODEL)														
Additional RRH #2 - any band (QTY/MODEL)														
Additional Component 1 (QTY/MODEL)														
Additional Component 2 (QTY/MODEL)														
Additional Component 3 (QTY/MODEL)														
Local Market Note 1	Rev-6 - LTE 7C - Antennae and Radios as per PD - Replace LTE Antenna with Octo - Reuse Hex antenna to UMTS - Remove Unused Coax and elements - Add B14 4478, RRUS-E2 - Add 1xDC only squid per sector - Add LBCs top - Remove 1xXMU - Add 6630 + IDLe													
Local Market Note 2														
Local Market Note 3	1x6601 / 1x5216 / 1xXMU03 / 1x6630 + IDLe													

PORT SPECIFIC FIELDS	PORT NUMBER	USEID (CSSng)	USEID (Atoll)	ATOLL TXID	ATOLL CELL ID	TX/RX ?	TECHNOLOGY/FREQUENCY	ANTENNA ATOLL	ANTENNA GAIN	ELECTRICAL AZIMUTH	ELECTRICAL TILT	RRH LOCATION (Top/Bottom/Integrated/None)	FEEDERS TYPE	FEEDER LENGTH (feet)	RXAIT KIT MODULE?	TRIPLEXER or LLC (QTY)	TRIPLEXER or LLC (MODEL)	SCPA/MCPA MODULE?	HATCHPLATE POWER (Watts)	ERP (Watts)	Antenna RET Name	CABLE NUMBER	CABLE ID (CSSNG)
ANTENNA POSITION 2	PORT 2		61168.B.700.4G.4	CTL02037_7B_2_E	CTL02037_7B_2_E		LTE 700	HPA-65R-BUU-H6_719MHz_03DT	14.22	180	3	Top	FIBER	0						1475.7065		11	

ANTENNA POSITION 3	**PORT 5**		61168.B.700.4G.5	CTL02037_7B_3_F	CTL02037_7B_3_F		LTE 700	OPA65R-BU6DA_770MHz_03DT	13.6	180	3	Top	FIBER	0						2951.413		13	

Section 16C - PLANNED/PROPOSED TOWER CONFIGURATION - SECTOR C

ANTENNA POSITION is LEFT to RIGHT from BACK OF ANTENNA (unless otherwise specified)	ANTENNA POSITION 1		ANTENNA POSITION 2		ANTENNA POSITION 3		ANTENNA POSITION 4		ANTENNA POSITION 5		ANTENNA POSITION 6		ANTENNA POSITION 7	
Existing Antenna?			Yes											
ANTENNA MAKE - MODEL					OPA65R-BU6DA									
ANTENNA VENDOR					CCI									
ANTENNA SIZE (H x W x D)					71.2X21X7.8									
ANTENNA WEIGHT					60.2									
AZIMUTH					300									
MAGNETIC DECLINATION														
RADIATION CENTER (feet)					91									
ANTENNA TIP HEIGHT					94									
MECHANICAL DOWNTILT					0									
FEEDER AMOUNT														
VERTICAL SEPARATION from ANTENNA ABOVE (TIP to TIP)														
VERTICAL SEPARATION from ANTENNA BELOW (TIP to TIP)														
HORIZONTAL SEPARATION from CLOSEST ANTENNA to LEFT (CENTERLINE to CENTERLINE)														
HORIZONTAL SEPARATION from CLOSEST ANTENNA to RIGHT (CENTERLINE to CENTERLINE)														
HORIZONTAL SEPARATION from ANOTHER ANTENNA (which antenna # / # of inches)														
Antenna RET Motor (QTY/MODEL)						Built-in								
SURGE ARRESTOR (QTY/MODEL)														
DIPLEXER (QTY/MODEL)					2	DBCT108F1V92-1								
DUPLEXER (QTY/MODEL)														
Antenna RET CONTROL UNIT (QTY/MODEL)						LTE RRH								
DC BLOCK (QTY/MODEL)														
TMA/LNA (QTY/MODEL)														
CURRENT INJECTORS FOR TMA (QTY/MODEL)														
PDU FOR TMAS (QTY/MODEL)														
FILTER (QTY/MODEL)														
SQUID (QTY/MODEL)														
FIBER TRUNK (QTY/MODEL)														
DC TRUNK (QTY/MODEL)														
REPEATER (QTY/MODEL)														
RRH - 700 band (QTY/MODEL)			1	RRUS-E2 B29	1	4478 B14								
RRH - 850 band (QTY/MODEL)														
RRH - 1900 band (QTY/MODEL)														
RRH - AWS band (QTY/MODEL)														
RRH - WCS band (QTY/MODEL)														
Additional RRH #1 - any band (QTY/MODEL)														
Additional RRH #2 - any band (QTY/MODEL)														
Additional Component 1 (QTY/MODEL)														
Additional Component 2 (QTY/MODEL)														
Additional Component 3 (QTY/MODEL)														
Local Market Note 1	Rev-6 - LTE 7C - Antennae and Radios as per PD - Replace LTE Antenna with Octo - Reuse Hex antenna to UMTS - Remove Unused Coax and elements - Add B14 4478, RRUS-E2 - Add 1xDC only squid per sector - Add LBCs top - Remove 1xXMU - Add 6630 + IDLe													
Local Market Note 2														
Local Market Note 3	1x6601 / 1x5216 / 1xXMU03 / 1x6630 + IDLe													

PORT SPECIFIC FIELDS	PORT NUMBER	USEID (CSSng)	USEID (Atoll)	ATOLL TXID	ATOLL CELL ID	TX/RX ?	TECHNOLOGY/FREQUENCY	ANTENNA ATOLL	ANTENNA GAIN	ELECTRICAL AZIMUTH	ELECTRICAL TILT	RRH LOCATION (Top/Bottom/Integrated/None)	FEEDERS TYPE	FEEDER LENGTH (feet)	RXAIT KIT MODULE?	TRIPLEXER or LLC (QTY)	TRIPLEXER or LLC (MODEL)	SCPA/MCPA MODULE?	HATCHPLATE POWER (Watts)	ERP (Watts)	Antenna RET Name	CABLE NUMBER	CABLE ID (CSSNG)
ANTENNA POSITION 2	PORT 2		61168.C.700.4G.4	CTL02037_7C_2_E	CTL02037_7C_2_E		LTE 700	HPA-65R-BUU-H6_719MHz_03DT	14.22	300	3	Top	FIBER	0						1475.7065		19	

ANTENNA POSITION 3	**PORT 5**		61168.C.700.4G.5	CTL02037_7C_3_F	CTL02037_7C_3_F		LTE 700	OPA65R-BU6DA _770MHz_05DT	13.4	300	5	Top	FIBER	0						2951.413		21	

Section 17A - FINAL TOWER CONFIGURATION - SECTOR A (OR OMNI)

ANTENNA POSITION is LEFT to RIGHT from BACK OF ANTENNA (unless otherwise specified)	ANTENNA POSITION 1		ANTENNA POSITION 2		ANTENNA POSITION 3		ANTENNA POSITION 4		ANTENNA POSITION 5		ANTENNA POSITION 6		ANTENNA POSITION 7	
ANTENNA MAKE - MODEL	SBNHH-1D65A		SBNHH-1D65A		OPA65R-BU4DA		QS46512-2							
ANTENNA VENDOR	Andrew		Andrew		CCI		Quintel							
ANTENNA SIZE (H x W x D)	55X11.9X7.1		55X11.9X7.1		48.2X21X7.8		52X12X10.8							
ANTENNA WEIGHT	33.5		33.5		52.5		75							
AZIMUTH	180		50		50		50							
MAGNETIC DECLINATION														
RADIATION CENTER (feet)	91		91		91		91							
ANTENNA TIP HEIGHT	93		93		93		93							
MECHANICAL DOWNTILT	3		0		0		0							
FEEDER AMOUNT	2													
VERTICAL SEPARATION from ANTENNA ABOVE (TIP to TIP)														
VERTICAL SEPARATION from ANTENNA BELOW (TIP to TIP)														
HORIZONTAL SEPARATION from CLOSEST ANTENNA to LEFT (CENTERLINE to CENTERLINE)														
HORIZONTAL SEPARATION from CLOSEST ANTENNA to RIGHT (CENTERLINE to CENTERLINE)														
HORIZONTAL SEPARATION from ANOTHER ANTENNA (which antenna # / # of inches)														
Antenna RET Motor (QTY/MODEL)		Built-in		Built-in		Built-in		Built-in						
SURGE ARRESTOR (QTY/MODEL)			1	DC Only Squid	1	DC Squid	2	DC/Fiber Squid						
DIPLEXER (QTY/MODEL)					2	DBCT108F1V92-1								
DUPLEXER (QTY/MODEL)														
Antenna RET CONTROL UNIT (QTY/MODEL)	1	Kathrein / 860-10006		LTE RRH		LTE RRH		LTE RRH						
DC BLOCK (QTY/MODEL)														
TMA/LNA (QTY/MODEL)														
CURRENT INJECTORS FOR TMA (QTY/MODEL)														
PDU FOR TMAS (QTY/MODEL)														
FILTER (QTY/MODEL)														
SQUID (QTY/MODEL)														
FIBER TRUNK (QTY/MODEL)														
DC TRUNK (QTY/MODEL)														
REPEATER (QTY/MODEL)														
RRH - 700 band (QTY/MODEL)			1	RRUS-E2 B29	1	4478 B14	1	RRUS-11 B12 (REUSE ONLY)						
RRH - 850 band (QTY/MODEL)					1	4478 B5								
RRH - 1900 band (QTY/MODEL)					1	RRUS-32 B2								
RRH - AWS band (QTY/MODEL)							1	4426 B66						
RRH - WCS band (QTY/MODEL)			1	RRUS-32 B30										
Additional RRH #1 - any band (QTY/MODEL)														
Additional RRH #2 - any band (QTY/MODEL)														
Additional Component 1 (QTY/MODEL)	2	Pwav 1001983 & 1001940												
Additional Component 2 (QTY/MODEL)														
Additional Component 3 (QTY/MODEL)														
Local Market Note 1	Rev-6 - LTE 7C - Antennae and Radios as per PD - Replace LTE Antenna with Octo - Reuse Hex antenna to UMTS - Remove Unused Coax and elements - Add B14 4478, RRUS-E2 - Add 1xDC only squid per sector - Add LBCs top - Remove 1xXMU - Add 6630 + IDLe													
Local Market Note 2														
Local Market Note 3	1x6601 / 1x5216 / 1xXMU03 / 1x6630 + IDLe													

PORT SPECIFIC FIELDS	PORT NUMBER	USEID (CSSng)	USEID (Atoll)	ATOLL TXID	ATOLL CELL ID	TX/RX ?	TECHNOLOGY/FREQUENCY	ANTENNA ATOLL	ANTENNA GAIN	ELECTRICAL AZIMUTH	ELECTRICAL TILT	RRH LOCATION (Top/Bottom/Integrated/None)	FEEDERS TYPE	FEEDER LENGTH (feet)	RXAIT KIT MODULE?	TRIPLEXER or LLC (QTY)	TRIPLEXER or LLC (MODEL)	SCPA/MCPA MODULE?	HATCHPLATE POWER (Watts)	ERP (Watts)	Antenna RET Name	CABLE NUMBER	CABLE ID (CSSNG)
ANTENNA POSITION 1	PORT 1	61168.A.850.3G.1		CTV20371	CTV20371		UMTS 850	SBNHH-1D65A_851MHz_05DT	12.9	180	5	None	7/8 850 MHz	120.03						356.45		1	

ANTENNA POSITION 2	**PORT 2**	61168.A.700.4G.4	61168.A.700.4G.4	CTL02037_7A_2_E	CTL02037_7A_2_E		LTE 700	SBNHH-1D65A_722MHz_03DT	13.1	50	3	Top	FIBER	0						1475.7065		3	
	PORT 3	61168.A.WCS.4G.1	61168.A.WCS.4G.1	CTL02037_3A_1	CTL02037_3A_1		LTE WCS	SBNHH-1D65A_2355MHz_03DT	17.3	50	3	Top	FIBER	0						1285.2866		4	
ANTENNA POSITION 3	**PORT 1**	61168.A.850.4G.1	61168.A.850.4G.1	CTL02037_8A_1	CTL02037_8A_1		LTE 850	OPA65R-BU4DA_850MHz_03DT	12.5	50	3	Top	FIBER	0						1000		5	
	PORT 2	61168.A.850.5G.1	61168.A.850.5G.1	CTCN002037_N005A_1	CTCN002037_N005A_1		5G 850	OPA65R-BU4DA_850MHz_03DT	12.5	50	3	Top	FIBER	0						1000		5	
	PORT 3	61168.A.1900.4G.2	61168.A.1900.4G.1	CTL06037_9A_1	CTL06037_9A_1		LTE 1900	OPA65R-BU4DA_1930MHz_02DT	15.6	50	2	Top	FIBER	0						4842.058		6	
	PORT 4	61168.A.1900.4G.5	61168.A.1900.4G.4	CTL06037_9A_2	CTL06037_9A_2		LTE 1900	OPA65R-BU4DA_1930MHz_02DT	15.6	50	2	Top	FIBER	0						4842.058		6	
	PORT 5	61168.A.700.4G.5	61168.A.700.4G.5	CTL02037_7A_3_F	CTL02037_7A_3_F		LTE 700	OPA65R-BU4DA_770MHz_03DT	11.9	50	3	Top	FIBER	0						2951.413		5	
ANTENNA POSITION 4	**PORT 1**	61168.A.700.4G.1	61168.A.700.4G.1	CTL02037_7A_1	CTL02037_7A_1		LTE 700	QS46512-2_722MHz_03DT	12.7	50	3	Top	FIBER	0						1475.7065		7	
	PORT 3	61168.A.AWS.4G.5	61168.A.AWS.4G.4	CTL06037_2A_2	CTL06037_2A_2		LTE AWS	QS46512-2_2170MHz_02DT	15.9	50	2	Top	FIBER	0						5070.2572		8	

Section 17B - FINAL TOWER CONFIGURATION - SECTOR B

ANTENNA POSITION is LEFT to RIGHT from BACK OF ANTENNA (unless otherwise specified)	ANTENNA POSITION 1		ANTENNA POSITION 2		ANTENNA POSITION 3		ANTENNA POSITION 4		ANTENNA POSITION 5		ANTENNA POSITION 6		ANTENNA POSITION 7	
ANTENNA MAKE - MODEL	HPA-65R-BUU-H6		HPA-65R-BUU-H6		OPA65R-BU6DA		QS66512-2							
ANTENNA VENDOR	CCI Products		CCI Products		CCI		Quintel							
ANTENNA SIZE (H x W x D)	72X14.8X9		72X14.8X9		71.2X21X7.8		72X12X9.6							
ANTENNA WEIGHT	50.7		50.7		60.2		111							
AZIMUTH	300		180		180		180							
MAGNETIC DECLINATION														
RADIATION CENTER (feet)	91		91		91		91							
ANTENNA TIP HEIGHT	94		94		94		94							
MECHANICAL DOWNTILT	3		0		0		0							
FEEDER AMOUNT	2													
VERTICAL SEPARATION from ANTENNA ABOVE (TIP to TIP)														
VERTICAL SEPARATION from ANTENNA BELOW (TIP to TIP)														
HORIZONTAL SEPARATION from CLOSEST ANTENNA to LEFT (CENTERLINE to CENTERLINE)														
HORIZONTAL SEPARATION from CLOSEST ANTENNA to RIGHT (CENTERLINE to CENTERLINE)														
HORIZONTAL SEPARATION from ANOTHER ANTENNA (which antenna # / # of inches)														
Antenna RET Motor (QTY/MODEL)		Built-in		Built-in		Built-in		Built-in						
SURGE ARRESTOR (QTY/MODEL)														
DIPLEXER (QTY/MODEL)					2	DBCT108F1V92-1								
DUPLEXER (QTY/MODEL)														
Antenna RET CONTROL UNIT (QTY/MODEL)				LTE RRH		LTE RRH		LTE RRH						
DC BLOCK (QTY/MODEL)														
TMA/LNA (QTY/MODEL)														
CURRENT INJECTORS FOR TMA (QTY/MODEL)														
PDU FOR TMAS (QTY/MODEL)														
FILTER (QTY/MODEL)														
SQUID (QTY/MODEL)														
FIBER TRUNK (QTY/MODEL)														
DC TRUNK (QTY/MODEL)														
REPEATER (QTY/MODEL)														
RRH - 700 band (QTY/MODEL)			1	RRUS-E2 B29	1	4478 B14	1	RRUS-11 B12 (REUSE ONLY)						
RRH - 850 band (QTY/MODEL)					1	4478 B5								
RRH - 1900 band (QTY/MODEL)					1	RRUS-32 B2								
RRH - AWS band (QTY/MODEL)							1	4426 B66						
RRH - WCS band (QTY/MODEL)			1	RRUS-32 B30										
Additional RRH #1 - any band (QTY/MODEL)														
Additional RRH #2 - any band (QTY/MODEL)														
Additional Component 1 (QTY/MODEL)	2	Pwav 1001983 & 1001940												
Additional Component 2 (QTY/MODEL)														
Additional Component 3 (QTY/MODEL)														
Local Market Note 1	Rev-6 - LTE 7C - Antennae and Radios as per PD - Replace LTE Antenna with Octo - Reuse Hex antenna to UMTS - Remove Unused Coax and elements - Add B14 4478, RRUS-E2 - Add 1xDC only squid per sector - Add LBCs top - Remove 1xXMU - Add 6630 + IDLe													
Local Market Note 2														
Local Market Note 3	1x6601 / 1x5216 / 1xXMU03 / 1x6630 + IDLe													

PORT SPECIFIC FIELDS	PORT NUMBER	USEID (CSSng)	USEID (Atoll)	ATOLL TXID	ATOLL CELL ID	TX/RX ?	TECHNOLOGY/FREQUENCY	ANTENNA ATOLL	ANTENNA GAIN	ELECTRICAL AZIMUTH	ELECTRICAL TILT	RRH LOCATION (Top/Bottom/Integrated/None)	FEEDERS TYPE	FEEDER LENGTH (feet)	RXAIT KIT MODULE?	TRIPLEXER or LLC (QTY)	TRIPLEXER or LLC (MODEL)	SCPA/MCPA MODULE?	HATCHPLATE POWER (Watts)	ERP (Watts)	Antenna RET Name	CABLE NUMBER	CABLE ID (CSSNG)
ANTENNA POSITION 1	**PORT 1**	61168.B.850.3G.1		CTV20372	CTV20372		UMTS 850	HPA-65R-BUU-H6_849MHz_02DT	15.01	300	2	None	7/8 850 MHz	120.03						356.45		9	

ANTENNA POSITION 2	**PORT 2**	61168.B.700.4G.4	61168.B.700.4G.4	CTL02037_7B_2_E	CTL02037_7B_2_E		LTE 700	HPA-65R-BUU-H6_719MHz_03DT	14.22	180	3	Top	FIBER	0						1475.7065		11	
	PORT 3	61168.B.WCS.4G.1	61168.B.WCS.4G.1	CTL02037_3B_1	CTL02037_3B_1		LTE WCS	HPA-65R-BUU-H6_2360MHz_01DT	17.27	180	1	Top	FIBER	0						1285.2866		12	
ANTENNA POSITION 3	**PORT 1**	61168.B.850.4G.1	61168.B.850.4G.1	CTL02037_8B_1	CTL02037_8B_1		LTE 850	OPA65R-BU6DA_850MHz_03DT	13.1	180	3	Top	FIBER	0						1000		13	
	PORT 2	61168.B.850.5G.1	61168.B.850.5G.1	CTCN002037_N005B_1	CTCN002037_N005B_1		5G 850	OPA65R-BU6DA_850MHz_03DT	13.1	180	3	Top	FIBER	0						1000		13	
	PORT 3	61168.B.1900.4G.2	61168.B.1900.4G.1	CTL06037_9B_1	CTL06037_9B_1		LTE 1900	OPA65R-BU6DA_1930MHz_05DT	17.1	180	5	Top	FIBER	0						4842.058		14	
	PORT 4	61168.B.1900.4G.5	61168.B.1900.4G.4	CTL06037_9B_2	CTL06037_9B_2		LTE 1900	OPA65R-BU6DA_1930MHz_05DT	17.1	180	5	Top	FIBER	0						4842.058		14	
	PORT 5	61168.B.700.4G.5	61168.B.700.4G.5	CTL02037_7B_3_F	CTL02037_7B_3_F		LTE 700	OPA65R-BU6DA_770MHz_03DT	13.6	180	3	Top	FIBER	0						2951.413		13	
ANTENNA POSITION 4	**PORT 1**	61168.B.700.4G.1	61168.B.700.4G.1	CTL02037_7B_1	CTL02037_7B_1		LTE 700	QS66512-2_722MHz_03DT	13.5	180	3	Top	FIBER	0						1475.7065		15	
	PORT 3	61168.B.AWS.4G.5	61168.B.AWS.4G.4	CTL06037_2B_2	CTL06037_2B_2		LTE AWS	QS66512-2_2170MHz_05DT	0	180	5	Top	FIBER	0						5070.2572		16	

Section 17C - FINAL TOWER CONFIGURATION - SECTOR C

ANTENNA POSITION is LEFT to RIGHT from BACK OF ANTENNA (unless otherwise specified)	ANTENNA POSITION 1		ANTENNA POSITION 2		ANTENNA POSITION 3		ANTENNA POSITION 4		ANTENNA POSITION 5		ANTENNA POSITION 6		ANTENNA POSITION 7	
ANTENNA MAKE - MODEL	HPA-65R-BUU-H6		HPA-65R-BUU-H6		OPA65R-BU6DA		QS66512-2							
ANTENNA VENDOR	CCI Products		CCI Products		CCI		Quintel							
ANTENNA SIZE (H x W x D)	72X14.8X9		72X14.8X9		71.2X21X7.8		72X12X9.6							
ANTENNA WEIGHT	50.7		50.7		60.2		111							
AZIMUTH	50		300		300		300							
MAGNETIC DECLINATION														
RADIATION CENTER (feet)	91		91		91		91							
ANTENNA TIP HEIGHT	94		94		94		94							
MECHANICAL DOWNTILT	0		0		0		0							
FEEDER AMOUNT	2													
VERTICAL SEPARATION from ANTENNA ABOVE (TIP to TIP)														
VERTICAL SEPARATION from ANTENNA BELOW (TIP to TIP)														
HORIZONTAL SEPARATION from CLOSEST ANTENNA to LEFT (CENTERLINE to CENTERLINE)														
HORIZONTAL SEPARATION from CLOSEST ANTENNA to RIGHT (CENTERLINE to CENTERLINE)														
HORIZONTAL SEPARATION from ANOTHER ANTENNA (which antenna # / # of inches)														
Antenna RET Motor (QTY/MODEL)		Built-in		Built-in		Built-in		Built-in						
SURGE ARRESTOR (QTY/MODEL)														
DIPLEXER (QTY/MODEL)					2	DBCT108F1V92-1								
DUPLEXER (QTY/MODEL)														
Antenna RET CONTROL UNIT (QTY/MODEL)				LTE RRH		LTE RRH		LTE RRH						
DC BLOCK (QTY/MODEL)														
TMA/LNA (QTY/MODEL)														
CURRENT INJECTORS FOR TMA (QTY/MODEL)														
PDU FOR TMAS (QTY/MODEL)														
FILTER (QTY/MODEL)														
SQUID (QTY/MODEL)														
FIBER TRUNK (QTY/MODEL)														
DC TRUNK (QTY/MODEL)														
REPEATER (QTY/MODEL)														
RRH - 700 band (QTY/MODEL)			1	RRUS-E2 B29	1	4478 B14	1	RRUS-11 B12 (REUSE ONLY)						
RRH - 850 band (QTY/MODEL)					1	4478 B5								
RRH - 1900 band (QTY/MODEL)					1	RRUS-32 B2								
RRH - AWS band (QTY/MODEL)							1	4426 B66						
RRH - WCS band (QTY/MODEL)			1	RRUS-32 B30										
Additional RRH #1 - any band (QTY/MODEL)														
Additional RRH #2 - any band (QTY/MODEL)														
Additional Component 1 (QTY/MODEL)	2	Pwav 1001983 & 1001940												
Additional Component 2 (QTY/MODEL)														
Additional Component 3 (QTY/MODEL)														
Local Market Note 1	Rev-6 - LTE 7C - Antennae and Radios as per PD - Replace LTE Antenna with Octo - Reuse Hex antenna to UMTS - Remove Unused Coax and elements - Add B14 4478, RRUS-E2 - Add 1xDC only squid per sector - Add LBCs top - Remove 1xXMU - Add 6630 + IDLe													
Local Market Note 2														
Local Market Note 3	1x6601 / 1x5216 / 1xXMU03 / 1x6630 + IDLe													

PORT SPECIFIC FIELDS	PORT NUMBER	USEID (CSSng)	USEID (Atoll)	ATOLL TXID	ATOLL CELL ID	TX/RX ?	TECHNOLOGY/FREQUENCY	ANTENNA ATOLL	ANTENNA GAIN	ELECTRICAL AZIMUTH	ELECTRICAL TILT	RRH LOCATION (Top/Bottom/Integrated/None)	FEEDERS TYPE	FEEDER LENGTH (feet)	RXAIT KIT MODULE?	TRIPLEXER or LLC (QTY)	TRIPLEXER or LLC (MODEL)	SCPA/MCPA MODULE?	HATCHPLATE POWER (Watts)	ERP (Watts)	Antenna RET Name	CABLE NUMBER	CABLE ID (CSSNG)
ANTENNA POSITION 1	PORT 1	61168.C.850.3G.1		CTV20373	CTV20373		UMTS 850	HPA-65R-BUU-H6_849MHz_02DT	15.01	50	2	None	7/8 850 MHz	120.03						356.45		17	

ANTENNA POSITION 2	**PORT 2**	61168.C.700.4G.4	61168.C.700.4G.4	CTL02037_7C_2_E	CTL02037_7C_2_E		LTE 700	HPA-65R-BUU-H6_719MHz_03DT	14.22	300	3	Top	FIBER	0						1475.7065		19	
	PORT 3	61168.C.WCS.4G.1	61168.C.WCS.4G.1	CTL02037_3C_1	CTL02037_3C_1		LTE WCS	HPA-65R-BUU-H6_2360MHz_03DT	17.45	300	3	Top	FIBER	0						1285.2866		20	
ANTENNA POSITION 3	**PORT 1**	61168.C.850.4G.1	61168.C.850.4G.1	CTL02037_8C_1	CTL02037_8C_1		LTE 850	OPA65R-BU6DA_850MHz_05DT	13.1	300	5	Top	FIBER	0						1000		21	
	PORT 2	61168.C.850.5G.1	61168.C.850.5G.1	CTCN002037_N005C_1	CTCN002037_N005C_1		5G 850	OPA65R-BU6DA_850MHz_05DT	13.1	300	5	Top	FIBER	0						1000		21	
	PORT 3	61168.C.1900.4G.2	61168.C.1900.4G.1	CTL06037_9C_1	CTL06037_9C_1		LTE 1900	OPA65R-BU6DA_1930MHz_06DT	17.2	300	6	Top	FIBER	0						4842.058		22	
	PORT 4	61168.C.1900.4G.5	61168.C.1900.4G.4	CTL06037_9C_2	CTL06037_9C_2		LTE 1900	OPA65R-BU6DA_1930MHz_06DT	17.2	300	6	Top	FIBER	0						4842.058		22	
	PORT 5	61168.C.700.4G.5	61168.C.700.4G.5	CTL02037_7C_3_F	CTL02037_7C_3_F		LTE 700	OPA65R-BU6DA_770MHz_05DT	13.4	300	5	Top	FIBER	0						2951.413		21	
ANTENNA POSITION 4	**PORT 1**	61168.C.700.4G.1	61168.C.700.4G.1	CTL02037_7C_1	CTL02037_7C_1		LTE 700	QS66512-2_722MHz_05DT	13.2	300	5	Top	FIBER	0						1475.7065		23	
	PORT 3	61168.C.AWS.4G.5	61168.C.AWS.4G.4	CTL06037_2C_2	CTL06037_2C_2		LTE AWS	QS66512-2_2170MHz_06DT	16.5	300	6	Top	FIBER	0						5070.2572		24	

Diagram - Sector A Diagram File Name - CT2037_ABC_B14_700 DE_d1.vsd

Atoll Site Name - CTL02037 Location Name - NEW HAVEN WHEELER ST Market - CONNECTICUT Market Cluster - NEW ENGLAND

Comments: Important Note: For detailed radio to antenna wiring refer to the latest field notice - Antenna_Radio Connection Drawings Playbook v6.0_Ericsson

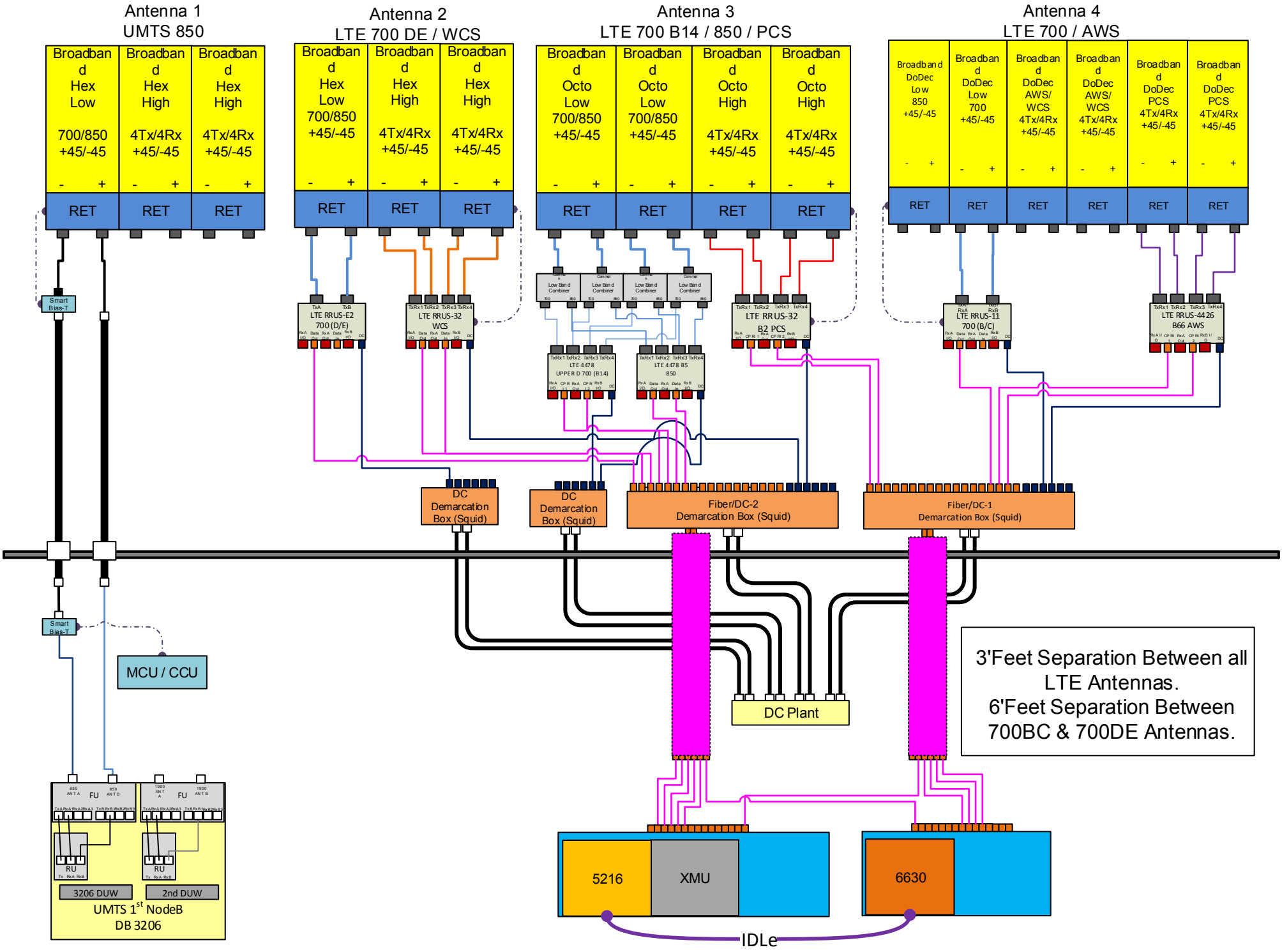

Diagram - Sector	B	Diagram File Name - CT2037_ABC_B14_700 DE_d1.vsd					
Atoll Site Name -	CTL02037	Location Name -	NEW HAVEN WHEELER ST	Market -	CONNECTICUT	Market Cluster -	NEW ENGLAND

Comments: Important Note: For detailed radio to antenna wiring refer to the latest field notice - Antenna_Radio Connection Drawings Playbook v6.0_Ericsson

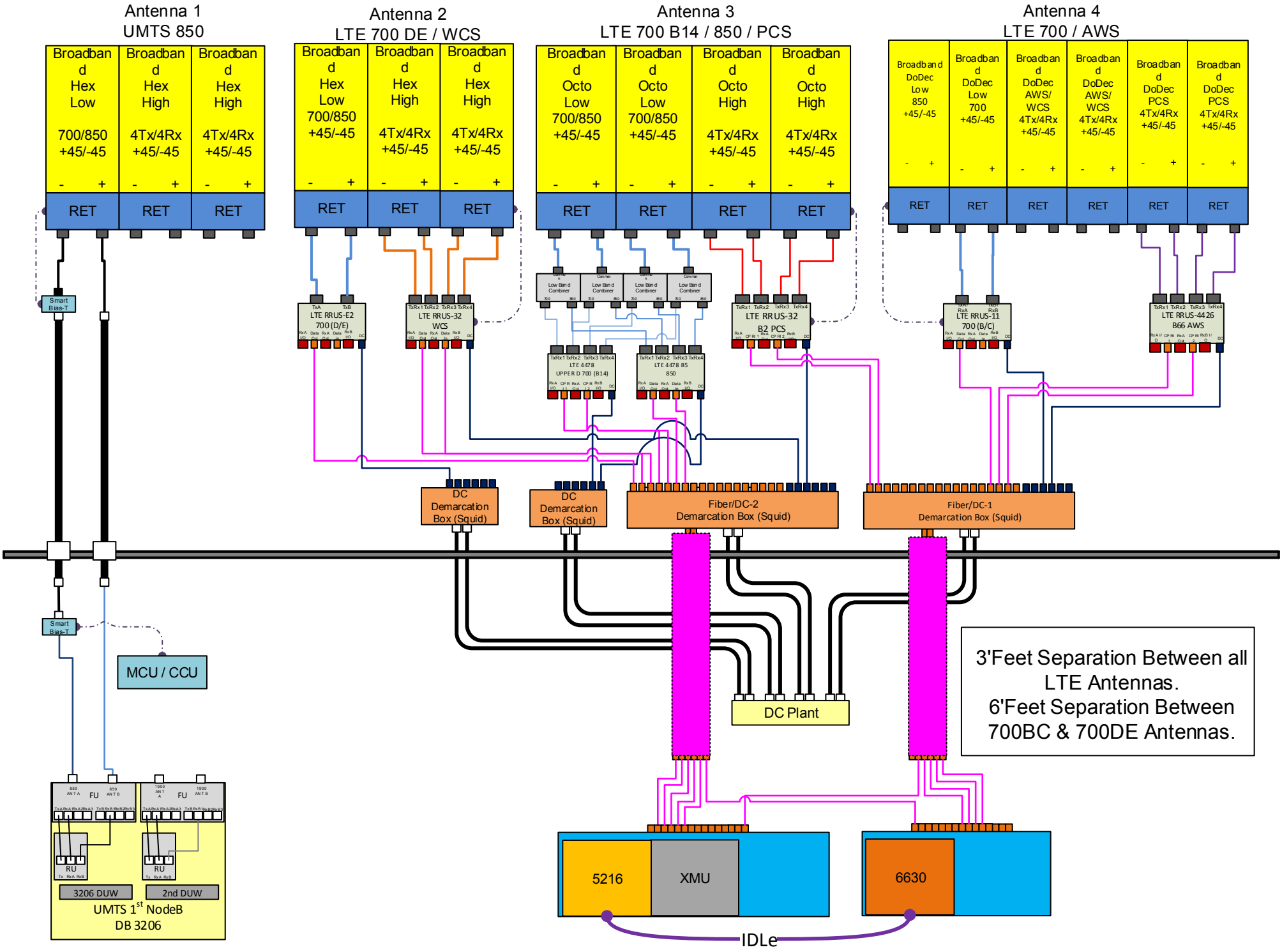

Diagram - Sector	C	Diagram File Name - CT2037_ABC_B14_700 DE_d1.vsd					
Atoll Site Name -	CTL02037	Location Name -	NEW HAVEN WHEELER ST	Market -	CONNECTICUT	Market Cluster -	NEW ENGLAND

Comments: Important Note: For detailed radio to antenna wiring refer to the latest field notice - Antenna_Radio Connection Drawings Playbook v6.0_Ericsson

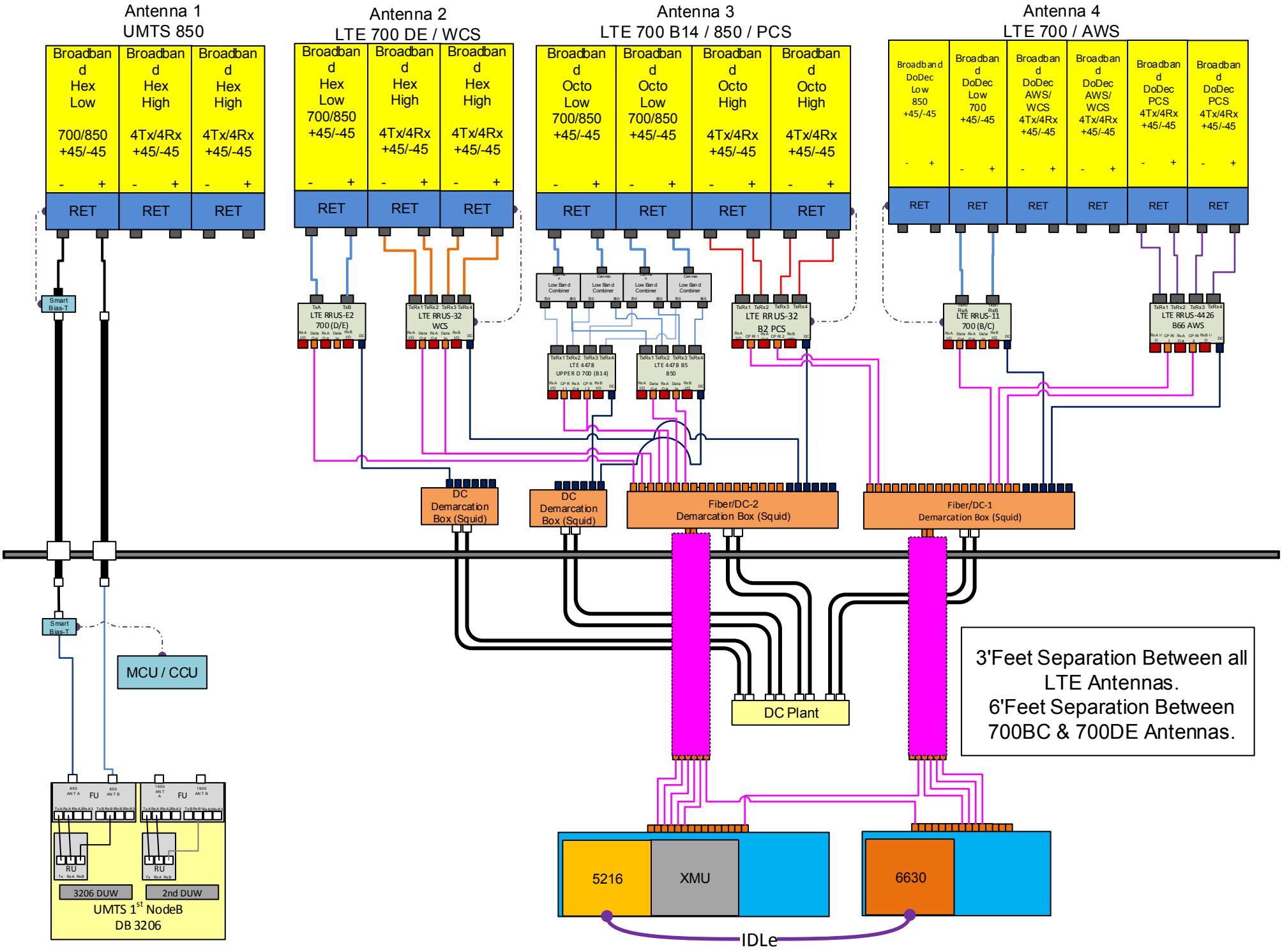

NOTES			
Date Time (Eastern)	Version	ATTUID	Note
4/22/2020 3:07:22 PM	2.00	mr673a	RFDS VERSION incremented.
4/22/2020 3:13:03 PM	2.00	mr673a	RFDS updated to swap DMP with OPA.
5/5/2020 4:34:52 PM	3.00	mr673a	RFDS VERSION incremented.
5/5/2020 4:40:20 PM	3.00	mr673a	LBC model updated.

WORKFLOW SUMMARY							
Date	FROM State / Status	FROM ATTUID	TO State / Status	TO ATTUID	Operation	Comments	PACE Status
03/27/2020	Preliminary In Progress	MR673A	Preliminary Submitted for Approval	KG0839	Promote	LTE Preliminary	NER-RCTB-20-01312 MRCTB047055 SUCCESS 03/27/2020 3:20:30 PM NER-RCTB-20-01326 MRCTB047042 SUCCESS 03/27/2020 3:20:31 PM
04/08/2020	Preliminary Submitted for Approval	KG0839	Preliminary Approved	KC965A	Promote	4/8/2020 - promoted without review, please demote if issues or errors are found	
04/22/2020	Preliminary Approved	KC965A	Preliminary In Progress	mr673a	Pull Back	To swap DMP with OPA antenna	
04/22/2020	Preliminary In Progress	mr673a	Preliminary Submitted for Approval	KG0839	Promote	RFDS updated to swap DMP with OPA.	NER-RCTB-20-01312 PENDING 04/22/2020 3:14:34 PM NER-RCTB-20-01326 PENDING 04/22/2020 3:14:34 PM
04/23/2020	Preliminary Submitted for Approval	KG0839	Preliminary Approved	KC965A	Promote	4/23/2020 - re-promoted after pullback	
05/04/2020	Preliminary Approved	KC965A	Preliminary Modification Recommended	OM636A	Demote	Demoting RFDS for Low Band Combiner Model change pe scoping call.	
05/05/2020	Preliminary Modification Recommended	OM636A	Preliminary Modification Recommended	MR673A	Reassign		
05/05/2020	Preliminary Modification Recommended	MR673A	Preliminary Submitted for Approval	KG0839	Promote	LBC model updated.	
05/06/2020	Preliminary Submitted for Approval	KG0839	Preliminary Approved	KD602N	Promote	5/6/2020 - re-promoting without review	
05/06/2020	Preliminary Approved	KD602N	Preliminary Approved	KC965A	Reassign	Successfully Reassigned	
05/06/2020	Preliminary Approved	KC965A	Preliminary Approved	OM636A	Promote	Promoting RFDS for Final RF Approval	
05/06/2020	Preliminary Approved	KC965A	Final RF Approval	OM636A	Promote	Promoting RFDS for Final RF Approval	
05/07/2020	Final RF Approval	OM636A	Final Approved	kc965a	Promote	Final RFDS	NER-RCTB-20-01312 PENDING 05/07/2020 12:13:54 PM NER-RCTB-20-01326 PENDING 05/07/2020 12:13:54 PM
05/07/2020	Final Approved	kc965a	As Built In Progress	JI625B	Promote	Promoting RFDS to As Built in Progress.	NER-RCTB-20-01312 PENDING 05/07/2020 12:23:57 PM NER-RCTB-20-01326 PENDING 05/07/2020 12:23:57 PM