March 8, 2024

Melanie A. Bachman Executive
Director Connecticut Siting Council
10 Franklin Square
New Britain, CT 06051

Re: **Notice of Exempt Modification – Antenna and RRU Swap/Add**
Property Address: **142 Baldwin Drive New Haven, CT 06514**
Applicant: **AT&T Mobility, LLC**

Dear Ms. Bachman:

On behalf of AT&T, please accept this application as notification pursuant to R.C.S.A. §16-50j-73, for construction that constitutes an exempt modification pursuant to R.C.S.A. §16- 50j-72(b) (2).

AT&T currently maintains a wireless telecommunications facility consisting of nine (9) wireless telecommunication antennas at an antenna center line height of 84-foot level on an existing 120-foot self-support tower, owned by State of Connecticut Department of Energy and Environmental Protection.

AT&T desires to modify its existing telecommunications facility by swapping six (6) antennas, six (6) remote radio units and adding six (6) new remote radio units and associated lines. The centerline height of said antennas and remote radio units is and will remain at 84' on the existing antenna mount.

Attached is a summary of the planned modifications including power density calculations reflecting the change in AT&T's operations at the site. Also included is documentation of the structural sufficiency of the tower to accommodate the revised antenna configuration.

Please accept this letter pursuant to Regulation of Connecticut State Agencies §16-50j-73, for construction that constitutes an exempt modification pursuant to R.C.S.A. § 16-5I0j-72(b) (2). In accordance with R.C.S.A., a copy of this letter is being sent to The Honorable Justin Elicker, Mayor, City of New Haven, Michael Piscitelli, Deputy Economic Development Administrator, City Plan Department, City of New Haven and Brian Benito, Bureau of Police Support-Telecommunications, Connecticut Department of Emergency Services and Public Protection, Tower, and Property Owner.

The following is a list of subsequent decisions by the Connecticut Siting Council:

- **EM-AT&T-093-180912** – AT&T Mobility, LLC notice of intent to modify an existing telecommunications facility located at 142 Baldwin Drive New Haven, Connecticut.

The planned modifications to AT&T's facility fall squarely within those activities explicitly provided for in R.C.S.A. §16-50j-72(b) (2).

1. The proposed modifications will not result in an increase in the height of the existing tower. AT&T's replacement antennas will be installed at the 84-foot level of the 120-foot Self Support Tower.
2. The proposed modifications will not involve any changes to ground-mounted equipment and, therefore, will not require and extension of the site boundary.
3. The proposed modifications will not increase the noise levels at the facility by six decibels or more, or to levels that exceed state and local criteria.
4. The operation of the modified facility will not increase radio frequency (RF) emissions at the facility to a level at or above the Federal Communications Commission (FCC) safety standard. A cumulative worst-case RF emissions calculation for AT&T's modified facility is provided in the RF Emissions Compliance Report, included in Tab 2.
5. The proposed modifications will not cause a change or alteration in the physical or environmental

characteristics of the site.

6. The tower and its foundation can support AT&T's proposed modifications. (See Structural Analysis Report included in Tab 3).

For the foregoing reasons, AT&T respectfully submits that the proposed modifications to the above referenced telecommunications facility constitutes an exempt modification under R.C.S.A. §16-50j-72(b) (2).

Sincerely,

Carolyn Seeley
Real Estate Specialist II
Smartlink on behalf of AT&T
(978) 760-5577
Carolyn.seeley@smartlinkgroup.com

CC w/enclosures:

The Honorable Justin Elicker, Mayor, City of New Haven
Michael Piscitelli, Deputy Economic Development Administrator, City Plan Department, City of New Haven
Brian Benito, Bureau of Police Support-Telecommunications, Connecticut Department of Emergency Services and Public Protection, Property Owner & Tower Owner

WINTERGREEN AV

Location	WINTERGREEN AV	**Mblu**	368/ 1166/ 00400/ /
Acct#	368 1166 00400	**Owner**	STATE OF CONNECTICUT
Assessment	$45,570	**Appraisal**	$65,100
PID	23555	**Building Count**	1

Current Value

Appraisal			
Valuation Year	**Improvements**	**Land**	**Total**
2022	$0	$65,100	$65,100
Assessment			
Valuation Year	**Improvements**	**Land**	**Total**
2022	$0	$45,570	$45,570

Owner of Record

Owner	STATE OF CONNECTICUT	**Sale Price**	$0
Co-Owner	C/O DEPT OF TRANSPORTATION	**Certificate**	
Address	PO BOX 317546 NEWINGTON, CT 06131-7546	**Book & Page**	3357/0061
		Sale Date	10/17/1985
		Instrument	

Ownership History

Ownership History					
Owner	**Sale Price**	**Certificate**	**Book & Page**	**Instrument**	**Sale Date**
STATE OF CONNECTICUT	$0		3357/0061		10/17/1985

Building Information

Building 1 : Section 1

Year Built:	
Living Area:	0
Replacement Cost:	$0
Building Percent Good:	
Replacement Cost Less Depreciation:	$0

Building Photo

Building Photo (https://images.vgsi.com/photos/NewHavenCTPhotos//default.jpg)

Building Attributes	
Field	**Description**
Style:	Vacant Land
Model	
Grade:	
Stories:	
Occupancy	
Exterior Wall 1	
Exterior Wall 2	
Roof Structure:	
Roof Cover	
Interior Wall 1	
Interior Wall 2	
Interior Flr 1	
Interior Flr 2	
Heat Fuel	
Heat Type:	
AC Type:	
Total Bedrooms:	
Total Bthrms:	
Total Half Baths:	
Total Xtra Fixtrs:	
Total Rooms:	
Bath Style:	
Kitchen Style:	
Num Kitchens	
Cndtn	
Interior Condition	
Fin Bsmnt Area	
Fin Bsmnt Qual	
Num Park	
Fireplaces	
NBHD Code	
Fndtn Cndtn	
Basement	

Building Layout

(ParcelSketch.ashx?pid=23555&bid=28227)

Building Sub-Areas (sq ft)	Legend
No Data for Building Sub-Areas	

Extra Features

Extra Features	Legend
No Data for Extra Features	

Land

Land Use

Use Code	901V
Description	STATE MDL-00
Zone	CEM
Neighborhood	2600
Alt Land Appr	No
Category	

Land Line Valuation

Size (Acres)	0.57
Frontage	0
Depth	0
Assessed Value	$45,570
Appraised Value	$65,100

Outbuildings

Outbuildings	Legend
No Data for Outbuildings	

Valuation History

Appraisal			
Valuation Year	**Improvements**	**Land**	**Total**
2022	$0	$65,100	$65,100
2021	$0	$65,100	$65,100
2020	$0	$52,100	$52,100

Assessment			
Valuation Year	**Improvements**	**Land**	**Total**
2022	$0	$45,570	$45,570
2021	$0	$45,570	$45,570
2020	$0	$36,470	$36,470

STATE OF CONNECTICUT
DEPARTMENT OF TRANSPORTATION

ARTHUR B. POWERS
COMMISSIONER

May 29, 1981

RECEIVED
JUN 2 1981
POWER FACILITY
EVALUATION COUNCIL

Ms. Gloria Dibble Pond, Chairperson
State of Connecticut
Department of Business Regulation
Power Facility Evaluation Council
State Office Building, Room 24
165 Capitol Avenue
Hartford, Connecticut 06115

Dear Ms. Dibble Pond:

Enclosed is a Petition for Declaratory Ruling that no Certificate of Environmental Compatibility and Public Need is required for our proposal to install a 6' to 8' microwave parabolic antenna on our existing telecommunications tower located on West Rock Montain in New Haven, and two 6' to 8' microwave dish antennas on the existing telecommunications tower located on Buckley Hill Road in Colchester, which is owned by the Colchester Emergency Communications, Incorporated.

Fifteen copies of the Petition are included along with the $50 filing fee. Should you have any questions or wish additional information, please contact Mr. Thomas F. Kirker, Regional Transit Manager at 566-4904.

Very truly yours,

Arthur B. Powers
Commissioner

Encls. (16)

cc: Mr. John F. Sweeney, Connecticut Transit

Telephone 566-3477
24 Wolcott Hill Road • P.O. Drawer A • Wethersfield, Connecticut 06109

STATE OF CONNECTICUT

POWER FACILITY EVALUATION COUNCIL

PETITION FOR DECLARATORY RULING

Ms. Gloria Dibble Pond, Chairperson
Power Facility Evaluation Council
State Office Building, Room 24
165 Capitol Avenue
Hartford, Connecticut 06115

Dear Ms. Dibble Pond:

Pursuant to Section 4-176 of the Connecticut General Statutes and Section 16-50j-39 of the Regulations of Connecticut State Agencies, the State Department of Transportation hereby petitions for a Declaratory Ruling that no Certificate of Environmental Compatibility and Public Need is required pursuant to Section 16-50k(a) of the Connecticut General Statutes for our installation of a 6' to 8' microwave parabolic antenna on our existing telecommunications tower located on West Rock Mountain in New Haven, and two 6' to 8' microwave parabolic antennas on the existing telecommunications tower located on Buckley Hill Road in Colchester, which is owned by the Colchester Emergency Communications, Incorporated. Communications and correspondence should be addressed to Mr. Thomas F. Kirker, Regional Transit Manager, Bureau of Public Transportation, at 24 Wolcott Hill Road, Wethersfield, Connecticut 06109, telephone number 566-4904.

I. New Haven - West Rock Tower Antenna Addition (See Attachment A)

It is submitted that no Certificate of Environmental Compatibility and Public Need is required for this project since; (1) the proposed microwave parabolic antenna will be attached to an existing telecommunications tower owned by the Department of Transportation which has been determined to be structurally capable to support the added antenna by its manufacturer, and (2) that the proposed antenna will not have any substantial adverse environmental effect pursuant to Section 16-50k(d). This antenna will be a necessary component of the microwave link route to our Connecticut Transit bus property in New Haven. The link will provide necessary transit communications, operating data and will also be capable of transmitting emergency alarms for the greater New Haven bus system. No alteration and/or clearing to the existing site will be required.

The antennas proposed will be 6' to 8' in diameter. The exact dimension will be determined when bids for the Connecticut Transit Radio System are received and an award made.

The following telecommunications tower inventory is provided as required.

a) Ground Elevation: 450' based on U.S.G.S. datum
b) Tower Height: 120'
c) Latitude: 41°-20'-43"
d) Longitude: 72°-58'-17"
e) U.S.G.S. Quadrangle Map: New Haven Quadrangle N4115
f) 8½" x 11" Map Copy of Tower Location(See Attachment B)
g) Tower Use: Telecommunications
h) Tower Type: Rhon Model SSV Heavy Duty Series with 11N through 6N Sections
i) Strength of Signal: See Item III

II. Colchester - Buckley Hill Tower Antenna Addition (See Attachment A)

It is submitted that no Certificate of Environmental Compatibility and Public Need is required for this project since; (1) the proposed microwave parabolic antennas will be attached to an existing telecommunications tower owned by the Colchester Emergency Communications, Inc.; address, State Police Barracks, Old Hartford Road, P.O. Box 317, Colchester, Connecticut 06415. This tower has been determined to be structurally capable to support the added antennas, and (2) that the proposed antennas will not have any substantial adverse environmental effect pursuant to Section 16-50k(d), (3) that it is in the mutual benefit of all parties concerned that shared use of existing telecommunications towers, where possible, be explored, and (4) that the Colchester Emergency Communications, Inc., through its Board of Directors, has authorized our mutual shared use of the Buckley Hill Tower.

This antennas will be a necessary component of the microwave link routes to our Connecticut Transit Hartford bus property. The link will provide necessary transit communications, operating data and will also be capable of transmitting emergency alarms for the greater Hartford bus system. No alteration and/or clearing to the existing site will be required. The antennas proposed will be 6' to 8' in diameter. The exact dimension will be determined when bids for the Connecticut Transit Radio system are received and an award made.

The following telecommunications tower inventory is provided as required.

a) Ground Elevation: 605'
b) Tower Height: 200'
c) Latitude: 41°-31'-54'
d) Longitude: 72°-21'-26'
e) U.S.G.S. Quadrangle Map: Colchester Quadrangle N4130
f) 8½" x 11" Map Coy of Tower Location: (See Attachment C)
g) Tower Use: Telecommunications
h) Tower Type: Rhon Model SSV Heavy Duty Series with 15N through 7N Sections
i) Strength of Signal: See Item III
j) Owner: Colchester Emergency Communications, Inc.
State Police Barracks
Old Hartford Road
P.O. Box 317
Colchester, Connecticut 06415
Norman Gustafson, President
Tele. No. 537-2512 or 537-5353

III. Signal Strength Data: West Rock and Buckley Hill Telecommunications Tower Antenna Additions.

The following microwave antenna data - strength of signal - are requirements of our radio system specifications and must be adhered to by prospective bidders in order to be qualified for award consideration:

The near field values of power density will be less than the U.S. Bureau of Radiological Health (BRH) density limit of one milliwatt per square centimeter. The power density to be expected at a maximum field point is 0.85 milliwatts per square centimeter obtained at a distance of 16.4 feet for a 6 foot parabolic dish antenna. All far field levels are below the U.S.B.R.H. limit for the antennas and transmitters proposed.

One milliwatt per square centimeter is obtained at a distance of 20'-0" from the horn opening.

One milliwatt per square centimeter is obtained at a distance of 4.5" from the feedhorn.

The actual power densities or distances to be expected, whichever the case may be, will be less than the above calculated values due to transmission line losses.

Considering that antennas will be mounted approximately at the top of the towers, it can be stated that the installation of the proposed microwave system will pose no potential radiation hazzard. The power density limit intended for use in these matters, as noted above, are far less than the OSHA power density limit of 10 milliwatts per square centimeter.

The proposed signal strength stated above indicates that at each location the power density levels will be below the OSHA power density limit requirements. The installation of these microwave antennas are needed to provide a vital method of radio communications between transit properties in Hartford and New Haven and their fleet of buses, respectively in order to lessen maintenance requirements and retrieve transit data. This communication system is also an essential public need in view of the relationship of the passengers (general public) carried to the systems intent and purpose (public conveyance), especially during emergency purposes. The proposed communications system will also be capable of reacting to other major emergency situations; ie., fixed nuclear facililty incidents or crisis relocation through the immediate deployment of buses to emergency evacuation areas.

Analysis has determined that microwave will provide the lowest cost alternate to meet the demands, as described herein, of the Connecticut Transit radio systems proposed for Hartford and New Haven. Its quickness to retrieve information and potential for minimal service problems versus lease lines is a major factor in our selection of system design.

As previously mentioned herein, no clearing or construction is required, and no scenic or historic values will be affected by our proposals. The Department of Transportation therefore submits that no substantial adverse environmental effect will result and that no certificate of environmental compatibility and public need is required in these matters.

IV. Conclusion

For the above reasons the Connecticut Department of Transportation respectfully requests a declaratory ruling to the effect that no certificate of environmental compatibililty and public need is required for the use of microwave antennas in the Copnnecticut Transit Hartford and New Haven radio systems, specifically at; (1) the New Haven, West Park Telecommunications Tower, and (2) the Colchester, Buckley Hill Telecommunications Tower. Such certificate is not necessary because there will be no substantial adverse environmental impact as a result of either antenna installation.

Respectfully submitted,

Thomas F. Kirker

Thomas F. Kirker
Regional Transit Manager
Bureau of Public Transportation
Connecticut Department of Transportation

cc: Mr. John F. Sweeney, Connecticut Transit

RADIO FREQUENCY EMISSIONS ANALYSIS REPORT
EVALUATION OF HUMAN EXPOSURE POTENTIAL TO NON-IONIZING EMISSIONS

Site Name:	NEW HAVEN WEST ROCK
AT&T Mobility FA#	10035296
Site ID:	CTL02013
Project Name:	5G NR 1DR-1
Address:	142 BALDWIN DRIVE, NEW HAVEN, CT 06514
County:	NEW HAVEN
Latitude:	41.3454361
Longitude:	-72.9706931
Structure Type:	SELF-SUPPORT
Property Owner:	NA
Property Contact:	NA

AT&T Existing Facility

Report Information

Report Writer: Monti Kumar

Report Generated Date: 05-02-2023

Site Compliance Statement

Compliance Status	Compliant
Cumulative General Population % MPE (Ground Level)	0.5685%

May 02, 2023

Emissions Analysis for Site: **CTL02013– NEW HAVEN WEST ROCK**

MobileComm Professionals, Inc was directed to analyze the proposed AT&T facility located at **142 BALDWIN DRIVE, NEW HAVEN, CT 06514**, for the purpose of determining whether the emissions from the Proposed AT&T Antenna Installation located on this property are within specified federal limits.

All information used in this report was analyzed as a percentage of current Maximum Permissible Exposure (% MPE) as listed in the FCC OET Bulletin 65 Edition 97-01 and ANSI/IEEE Std C95.1. The FCC regulates Maximum Permissible Exposure in units of milliwatts per square centimeter (mW/cm^2) or microwatts per square centimeter (µW/cm2). The number of mW/cm^2 or µW/cm2 calculated at each sample point is called the power density. The exposure limit for power density varies depending upon the frequencies being utilized. Wireless Carriers and Paging Services use different frequency bands each with different exposure limits, therefore it is necessary to report results and limits in terms of percent MPE rather than power density.

All results were compared to the FCC (Federal Communications Commission) radio frequency exposure rules, 47 CFR 1.1307(b)(1) – (b)(3), to determine compliance with the Maximum Permissible Exposure (MPE) limits for General Population/Uncontrolled environments as defined below.

General population/uncontrolled exposure limits apply to situations in which the general public may be exposed or in which persons who are exposed as a consequence of their employment may not be made fully aware of the potential for exposure or cannot exercise control over their exposure. Therefore, members of the general public would always be considered under this category when exposure is not employment related, for example, in the case of a telecommunications tower that exposes persons in a nearby residential area.

Public exposure to radio frequencies is regulated and enforced in units of milliwatts per square centimeter (mW/cm^2). The general population exposure limits for the 700 and 850 MHz Bands are approximately 0.467 mW/cm^2 and 0.567 mW/cm^2 respectively or 466.667 µW/cm2 and 566.667 µW/cm2 respectively. The general population exposure limit for the 1900 MHz (PCS), 2100 MHz (AWS), 2300 MHz (WCS), 3540 MHz (DoD Band) and 3840 MHz (C-Band) bands is 1 mW/cm^2 or 1000 µW/cm2. Because each carrier will be using different frequency bands, and each frequency band has different exposure limits, it is necessary to report percent of MPE rather than power density.

Occupational/controlled exposure limits apply to situations in which persons are exposed as a consequence of their employment and in which those persons who are exposed have been made fully aware of the potential for exposure and can exercise control over their exposure. Occupational/controlled exposure limits also apply where exposure is of a transient nature as a result of incidental passage through a location where exposure levels may be above general population/uncontrolled limits (see below), as long as the exposed person has been made fully aware of the potential for exposure and can exercise control over his or her exposure by leaving the area or by some other appropriate means.

Additional details can be found in FCC OET 65.

1. Theoretical Calculations: Methods and Procedures

MobileComm Professionals, Inc has performed theoretical modeling of the site using a software tool, RoofMaster® Version 40.12.23.2022, which incorporates calculation methodologies detailed in FCC OET 65. RoofMaster® uses a cylindrical model for conservative power density predictions within the near field of the antenna where the antenna pattern has not truly formed yet. Within this area power density values tend to decrease based upon an inverse distance function. At the point where it is appropriate for modeling to change from near-field calculations to far-field calculations, the power decreases inversely with the square of the distance. The modeling is based on worst-case assumptions in terms of transmitter power and duty cycle. No losses were included in the power calculations unless they were specifically provided for the project.

In OET 65, a far field model is presented to calculate the spatial peak power density. The RoofMaster® implementation of this model incorporates antenna manufacturer's horizontal and vertical pattern data to determine the power density in all directions. This model yields the power density at a single point in space. In order to determine the spatial power density for comparison to the FCC limits, the average of several points calculated within the human profile (0-6') must be conducted. RoofMaster® calculates seven power density values between 0-6' above the specified study plane and performs a linear spatial average.

The following table details the antennas and operating parameters for the AT&T antenna system as well as any other antenna systems at the site. This is based on antenna information provided by the client and data compiled from other sources where necessary. The data below was input into Roofmaster® to perform the theoretical exposure calculations at the ground.

The theoretical calculations performed in Roofmaster® determine the cumulative exposure at all sample points at ground level (0-6' spatial average). The results from highest cumulative sample point at ground level surrounding the site are displayed in the table below. The contribution from directional antennas to the maximum cumulative totals varies greatly depending on location; therefore, the contribution from one antenna sector at the highest calculated exposure point may be greater or less than other sectors since sectorized directional antennas are pointed in different directions and there is not much overlapping exposure.

The contribution to the cumulative power density and % MPE for each antenna/frequency band is listed in the table. The cumulative power density and cumulative % MPE are displayed at the bottom of the table.

2. Antenna Inventory & Power Data

Sector	Ant ID	Operator	Antenna Mfg	Antenna Model	Antenna Type	FREQ. (MHz)	TECH.	AZ. (^{0})	HBW (^{0})	Antenna Gain (dBd)	Antenna Aperture (ft)	#of Channels	Transmitter Power Per Channel (Watts)	Total ERP (Watts)	Total EIRP (Watts)	Height (ft)	Calculated Power Density ($\mu W/cm^2$)	Allowable MPE ($\mu W/cm^2$)	Calculated MPE%
A	1	AT&T	Quintel	QD8616-7	Panel	700(FN)	LTE	10	72	12.75	8	4	40.00	2686.09	4406.77	84.00	0.143268	466.67	0.030700
A	1	AT&T	Quintel	QD8616-7	Panel	700(B29)	LTE	10	72	12.75	8	2	40.00	1343.04	2203.38	84.00	0.071634	466.67	0.015350
A	1	AT&T	Quintel	QD8616-7	Panel	1900	LTE/5G	10	62	15.05	8	4	40.00	4561.63	7483.76	84.00	0.173204	1000.00	0.017320
A	1	AT&T	Quintel	QD8616-7	Panel	2100	LTE/5G	10	62	15.35	8	4	40.00	4887.87	8019.00	84.00	0.174271	1000.00	0.017427
A	2	AT&T	Kathrein	80010966	Panel	700(B12)	LTE	10	66	13.55	8	4	40.00	3229.39	5298.10	84.00	0.172070	466.67	0.036872
A	2	AT&T	Kathrein	80010966	Panel	850	5G	10	65	14.25	8	4	40.00	3794.20	6224.72	84.00	0.171868	566.67	0.030330
A	2	AT&T	Kathrein	80010966	Panel	2300	LTE	10	57	15.95	8	4	25.00	3507.52	5754.40	84.00	0.084872	1000.00	0.008487
B	3	AT&T	Quintel	QD8616-7	Panel	700(FN)	LTE	120	72	12.75	8	4	40.00	2686.09	4406.77	84.00	0.000089	466.67	0.000019
B	3	AT&T	Quintel	QD8616-7	Panel	700(B29)	LTE	120	72	12.75	8	2	40.00	1343.04	2203.38	84.00	0.000044	466.67	0.000010
B	3	AT&T	Quintel	QD8616-7	Panel	1900	LTE/5G	120	62	15.05	8	4	40.00	4561.63	7483.76	84.00	0.000076	1000.00	0.000008
B	3	AT&T	Quintel	QD8616-7	Panel	2100	LTE/5G	120	62	15.35	8	4	40.00	4887.87	8019.00	84.00	0.000056	1000.00	0.000006
B	4	AT&T	Kathrein	80010966	Panel	700(B12)	LTE	120	66	13.55	8	4	40.00	3229.39	5298.10	84.00	0.000370	466.67	0.000079
B	4	AT&T	Kathrein	80010966	Panel	850	5G	120	65	14.25	8	4	40.00	3794.20	6224.72	84.00	0.000846	566.67	0.000149
B	4	AT&T	Kathrein	80010966	Panel	2300	LTE	120	57	15.95	8	4	25.00	3507.52	5754.40	84.00	0.000004	1000.00	0.000000
C	5	AT&T	Quintel	QD6616-7	Panel	700(FN)	LTE	250	71	12.05	6	4	40.00	2286.23	3750.77	84.00	0.000644	466.67	0.000138
C	5	AT&T	Quintel	QD6616-7	Panel	700(B29)	LTE	250	71	12.05	6	2	40.00	1143.12	1875.38	84.00	0.000322	466.67	0.000069
C	5	AT&T	Quintel	QD6616-7	Panel	1900	LTE/5G	250	67	15.05	6	4	40.00	4561.63	7483.76	84.00	0.000406	1000.00	0.000041
C	5	AT&T	Quintel	QD6616-7	Panel	2100	LTE/5G	250	62	15.55	6	4	40.00	5118.23	8396.92	84.00	0.000243	1000.00	0.000024
C	6	AT&T	Kathrein	80010965	Panel	700(B12)	LTE	250	62	12.65	6.5	4	40.00	2624.94	4306.46	84.00	0.000668	466.67	0.000143
C	6	AT&T	Kathrein	80010965	Panel	850	5G	250	60	13.45	6.5	4	40.00	3155.88	5177.50	84.00	0.000126	566.67	0.000022
C	6	AT&T	Kathrein	80010965	Panel	2300	LTE	250	56	15.95	6.5	4	25.00	3507.52	5754.40	84.00	0.000038	1000.00	0.000004
A	7	T-Mobile	Ericsson	KRD901146-1_A	Panel	1900	LTE	80	63.3	15.35	4.94	2	40.00	2742.14	4498.73	95.00	0.048124	1000.00	0.004812
A	8	T-Mobile	RFS	APXVAARR24_43-U-NA20	Panel	600	LTE	80	69	13.25	8	2	40.00	1506.92	2472.24	95.00	0.024508	400.00	0.006127
A	8	T-Mobile	RFS	APXVAARR24_43-U-NA20	Panel	700	LTE	80	64	13.65	8	2	20.00	826.15	1355.38	95.00	0.008128	466.67	0.001742
A	8	T-Mobile	RFS	APXVAARR24_43-U-NA20	Panel	1900	GSM	80	63	16.05	8	1	15.00	2153.53	3533.06	95.00	0.015761	1000.00	0.001576
A	8	T-Mobile	RFS	APXVAARR24_43-U-NA20	Panel	1900	UMTS	80	63	16.05	8	1	40.00	1435.69	2355.37	95.00	0.010507	1000.00	0.001051
A	8	T-Mobile	RFS	APXVAARR24_43-U-NA20	Panel	2100	UMTS	80	65	16.45	8	1	40.00	1574.20	2582.62	95.00	0.004993	1000.00	0.000499
A	9	T-Mobile	Ericsson	AIR 3246	Panel	2100	LTE	80	31	19.3	4.88	4	40.00	12137.24	19912.23	95.00	0.013408	1000.00	0.001341
B	10	T-Mobile	Ericsson	KRD901146-1_A	Panel	1900	LTE	210	63.3	15.35	4.94	2	40.00	2742.14	4498.73	95.00	0.000041	1000.00	0.000004
B	11	T-Mobile	RFS	APXVAARR24_43-U-NA20	Panel	600	LTE	210	69	13.25	8	2	40.00	1506.92	2472.24	95.00	0.000012	400.00	0.000003
B	11	T-Mobile	RFS	APXVAARR24_43-U-NA20	Panel	700	LTE	210	64	13.65	8	2	20.00	826.15	1355.38	95.00	0.000102	466.67	0.000022
B	11	T-Mobile	RFS	APXVAARR24_43-U-NA20	Panel	1900	GSM	210	63	16.05	8	1	15.00	2153.53	3533.06	95.00	0.000030	1000.00	0.000003
B	11	T-Mobile	RFS	APXVAARR24_43-U-NA20	Panel	1900	UMTS	210	63	16.05	8	1	40.00	1435.69	2355.37	95.00	0.000020	1000.00	0.000002
B	11	T-Mobile	RFS	APXVAARR24_43-U-NA20	Panel	2100	UMTS	210	65	16.45	8	1	40.00	1574.20	2582.62	95.00	0.000010	1000.00	0.000001
B	12	T-Mobile	Ericsson	AIR 3246	Panel	2100	LTE	210	31	19.3	4.88	4	40.00	12137.24	19912.23	95.00	0.000473	1000.00	0.000047
C	13	T-Mobile	Ericsson	KRD901146-1_A	Panel	1900	LTE	320	63.3	15.35	4.94	2	40.00	2742.14	4498.73	95.00	0.084661	1000.00	0.008466
C	14	T-Mobile	RFS	APXVAARR24_43-U-NA20	Panel	600	LTE	320	69	13.25	8	2	40.00	1506.92	2472.24	95.00	0.003878	400.00	0.000970
C	14	T-Mobile	RFS	APXVAARR24_43-U-NA20	Panel	700	LTE	320	64	13.65	8	2	20.00	826.15	1355.38	95.00	0.003534	466.67	0.000757
C	14	T-Mobile	RFS	APXVAARR24_43-U-NA20	Panel	1900	GSM	320	63	16.05	8	1	15.00	2153.53	3533.06	95.00	0.003540	1000.00	0.000354
C	14	T-Mobile	RFS	APXVAARR24_43-U-NA20	Panel	1900	UMTS	320	63	16.05	8	1	40.00	1435.69	2355.37	95.00	0.002360	1000.00	0.000236
C	14	T-Mobile	RFS	APXVAARR24_43-U-NA20	Panel	2100	UMTS	320	65	16.45	8	1	40.00	1574.20	2582.62	95.00	0.000597	1000.00	0.000060
C	15	T-Mobile	Ericsson	AIR 3246	Panel	2100	LTE	320	31	19.3	4.88	4	40.00	12137.24	19912.23	95.00	0.010959	1000.00	0.001096

Table 2.1: Antenna Inventory & Power Data

**NOTE: 75% Duty Cycle and adjusted power reduction factor of 0.32 was applied to the AIR6449 & AIR6449 antennas per guidance from AT&T. Specifications were not available for the Ericsson AIR 6449 antenna. Per AT&T, specifications for the AIR 6449 antenna were used to model the 6449 due to its similarity.*

Sector	Ant ID	Operator	Antenna Mfg	Antenna Model	Antenna Type	FREQ. (MHz)	TECH.	AZ. (^{0})	H B W (^{0})	Antenna Gain (dBd)	Antenna Aperture (ft)	#of Channels	Transmitter Power Per Channel (Watts)	Total ERP (Watts)	Total EIRP (Watts)	Height (ft)	Calculated Power Density ($\mu W/cm^2$)	Allowable MPE ($\mu W/cm^2$)	Calculated MPE%
A	16	Sprint	Nokia	AAHC_B41	Panel	2500	LTE	20	65	13.05	2.13	8	20.00	975.36	1600.17	71.00	0.208141	1000.00	0.020814
A	16	Sprint	CommScope	NNVV-65B-R4	Panel	850	CDMA	20	64	12.75	6	1	20.00	335.76	550.85	71.00	0.106774	566.67	0.018842
A	16	Sprint	CommScope	NNVV-65B-R4	Panel	850	LTE	20	64	12.75	6	2	50.00	1678.80	2754.23	71.00	0.533828	566.67	0.094205
A	16	Sprint	CommScope	NNVV-65B-R4	Panel	1900	CDMA	20	60	15.05	6	5	16.00	2280.81	3741.88	71.00	0.492964	1000.00	0.049296
A	17	Sprint	CommScope	NNVV-65B-R4	Panel	1900	LTE	20	60	15.05	6	2	40.00	2280.81	3741.88	71.00	0.124879	1000.00	0.012488
B	18	Sprint	Nokia	AAHC_B41	Panel	2500	LTE	110	65	13.05	2.13	8	20.00	975.36	1600.17	71.00	0.000804	1000.00	0.000080
B	18	Sprint	CommScope	NNVV-65B-R4	Panel	850	CDMA	110	64	12.75	6	1	20.00	335.76	550.85	71.00	0.000297	566.67	0.000052
B	18	Sprint	CommScope	NNVV-65B-R4	Panel	850	LTE	110	64	12.75	6	2	50.00	1678.80	2754.23	71.00	0.001486	566.67	0.000262
B	18	Sprint	CommScope	NNVV-65B-R4	Panel	1900	CDMA	110	60	15.05	6	5	16.00	2280.81	3741.88	71.00	0.000001	1000.00	0.000000
B	19	Sprint	CommScope	NNVV-65B-R4	Panel	1900	LTE	110	60	15.05	6	2	40.00	2280.81	3741.88	71.00	0.000136	1000.00	0.000014
C	20	Sprint	Nokia	AAHC_B41	Panel	2500	LTE	210	65	13.05	2.13	8	20.00	975.36	1600.17	71.00	0.000122	1000.00	0.000012
C	20	Sprint	CommScope	NNVV-65B-R4	Panel	850	CDMA	210	64	12.75	6	1	20.00	335.76	550.85	71.00	0.000011	566.67	0.000002
C	20	Sprint	CommScope	NNVV-65B-R4	Panel	850	LTE	210	64	12.75	6	2	50.00	1678.80	2754.23	71.00	0.000055	566.67	0.000010
C	20	Sprint	CommScope	NNVV-65B-R4	Panel	1900	CDMA	210	60	15.05	6	5	16.00	2280.81	3741.88	71.00	0.000000	1000.00	0.000000
C	21	Sprint	CommScope	NNVV-65B-R4	Panel	1900	LTE	210	60	15.05	6	2	40.00	2280.81	3741.88	71.00	0.000001	1000.00	0.000000
A	22	CSP	SINCLAIR	SC479-HF1LDF	Omni	2100	LTE	360	360	2.85	16	1	60.00	2129.65	3492.62	112.75	0.003278	1000.00	0.000328
A	23	CSP	SINCLAIR	SC479-HF1LDF	Omni	2100	LTE	360	360	2.85	16	1	60.00	2129.65	3492.62	112.75	0.003300	1000.00	0.000330
A	24	CSP	SINCLAIR	SC479-HF1LDF	Omni	850	LTE	360	360	9.5	14	2	60.00	1343.72	2203.69	113.50	0.004142	566.67	0.000731
A	25	CSP	SINCLAIR	SC479-HF1LDF	Omni	850	LTE	360	360	9.5	14	1	60.00	1343.72	2203.69	120.00	0.003679	566.67	0.000649
A	26	CSP	Kathrein	OGT9-840	Omni	850	LTE	360	360	9	12	2	60.00	422.82	693.67	120.00	0.003757	566.67	0.000663
A	27	CSP	Kathrein	OGT9-840	Omni	850	LTE	360	360	9	12	2	60.00	422.82	693.67	120.00	0.003720	566.67	0.000656
A	28	CSP	Radio Structures	UHF3	Omni	850	LTE	360	360	8.96	12	4	60.00	422.82	693.67	120.00	0.003914	566.67	0.000691
A	29	CSP	SINCLAIR	SC479-HF1LDF	Omni	850	LTE	360	360	9.5	14	2	60.00	1343.72	2203.69	110.00	0.004130	566.67	0.000729
A	30	CSP	Generic	Generic	Microwave	7800	Unknown	0	6	37.85	6	2	0.30	1706.56	2799.76	117.00	0.000139	1000.00	0.000014
A	31	CSP	Generic	Generic	Microwave	7800	Unknown	0	6	37.85	6	2	0.30	1706.56	2799.76	115.00	0.000148	1000.00	0.000015
A	32	CSP	Generic	Generic	Omni	850	LTE	360	360	8.96	12	1	60.00	422.82	693.67	113.50	0.005120	566.67	0.000904
A	33	CSP	SINCLAIR	SC479-HF1LDF	Omni	850	LTE	360	360	9.5	14	1	60.00	422.82	693.67	114.00	0.004700	566.67	0.000829
A	34	CSP	SINCLAIR	SC479-HF1LDF	Omni	2100	LTE	360	360	2.85	16	2	60.00	2129.65	3492.62	112.00	0.003760	1000.00	0.000376
A	35	CSP	CABLEWAVE	PA6-65	Microwave	7800	Unknown	90	6	37.85	6	1	0.30	1706.56	2799.76	107.00	0.000024	1000.00	0.000002

Table 2.2: Antenna Inventory & Power Data

**NOTE: 75% Duty Cycle and adjusted power reduction factor of 0.32 was applied to the AIR6449 & AIR6449 antennas per guidance from AT&T. Specifications were not available for the Ericsson AIR 6449 antenna. Per AT&T, specifications for the AIR 6449 antenna were used to model the 6449 due to its similarity.*

Sector	Ant ID	Operator	Antenna Mfg	Antenna Model	Antenna Type	FREQ. (MHz)	TECH.	AZ. (^{0})	HBW (^{0})	Antenna Gain (dBd)	Antenna Aperture (ft)	#of Channels	Transmitter Power Per Channel (Watts)	Total ERP (Watts)	Total EIRP (Watts)	Height (ft)	Calculated Power Density ($\mu W/cm^2$)	Allowable MPE ($\mu W/cm^2$)	Calculated MPE%
A	36	CSP	SINCLAIR	SC479-HF1LDF	Omni	850	LTE	360	360	9.5	14	2	60.00	422.82	693.67	110.00	0.000023	566.67	0.000004
A	37	CSP	SINCLAIR	SC479-HF1LDF	Omni	850	LTE	360	360	9.5	14	2	60.00	422.82	693.67	110.00	0.000022	566.67	0.000004
A	38	CSP	Amphenol	WPA-70040-4CF-EDIN	Panel	700	LTE	0	42	14	4	4	60.00	1343.72	2203.69	110.00	0.034544	466.67	0.007402
A	39	CSP	SINCLAIR	SE419-SWBPALDF	Panel	700	LTE	0	42	14	4	2	60.00	755.63	1239.23	105.00	0.133520	466.67	0.028611
A	40	CSP	SINCLAIR	SE419-SWBPALDF	Panel	700	LTE	0	42	14	4	2	60.00	755.63	1239.23	101.00	0.128261	466.67	0.027485
A	41	CSP	Kathrein	OGT9-806	Omni	850	LTE	360	360	9.5	14	2	60.00	422.82	693.67	92.00	0.006414	566.67	0.001132
A	42	CSP	Generic	Generic	Omni	2100	LTE	360	360	2.85	20	1	60.00	5349.43	8773.06	86.00	0.005738	1000.00	0.000574
A	43	CSP	Generic	Generic	Omni	850	LTE	360	360	2.6	3	1	60.00	104.51	171.46	82.00	0.005737	566.67	0.001012
A	44	CSP	Generic	Generic	Omni	850	LTE	360	360	2.6	3	2	60.00	104.51	171.46	81.00	0.024563	566.67	0.004335
A	45	CSP	Generic	Generic	Omni	2100	LTE	360	360	2.85	20	1	60.00	5349.43	8773.06	77.00	0.007327	1000.00	0.000733
A	46	CSP	Generic	Generic	Omni	850	LTE	360	360	5.96	6	2	60.00	242.19	397.33	65.00	0.027125	566.67	0.004787
A	47	CSP	Generic	Generic	Omni	2100	LTE	360	360	2.85	20	2	60.00	5349.43	8773.06	55.00	0.015287	1000.00	0.001529
A	48	CSP	Generic	Generic	Omni	850	LTE	360	360	2.85	1	2	60.00	242.19	397.33	53.00	0.071874	1000.00	0.007187
A	49	CSP	Generic	Generic	Omni	850	LTE	360	360	8.96	12	2	60.00	422.82	693.67	48.00	0.028848	566.67	0.005091
A	50	CSP	Generic	Generic	Omni	850	LTE	360	360	2.6	3	2	60.00	106.74	175.05	48.00	0.086407	566.67	0.015248
A	51	CSP	Generic	Generic	Omni	850	LTE	360	360	5.96	5	2	60.00	169.16	277.43	47.00	0.147993	566.67	0.026116
A	52	CSP	Generic	Generic	Omni	850	LTE	360	360	2.6	3	2	60.00	106.74	175.05	43.00	0.104697	566.67	0.018476
A	53	CSP	Generic	Generic	Microwave	11200	Unknown	90	4	36.85	4	2	0.30	1355.57	2223.93	41.00	0.000000	1000.00	0.000000
A	54	CSP	Generic	Generic	Panel	850	LTE	90	57	16.39	1	2	60.00	2438.66	4000.84	40.00	0.083988	566.67	0.014821
A	55	CSP	Generic	Generic	Omni	850	LTE	360	360	5.96	6	2	60.00	242.19	397.33	39.00	0.082808	566.67	0.014613
																Calculated Power Density ($\mu W/cm^2$)	**3.739251%**	**Calculated MPE%**	**0.5685%**

Table 2.3: Antenna Inventory & Power Data

**NOTE: 75% Duty Cycle and adjusted power reduction factor of 0.32 was applied to the AIR6449 & AIR6449 antennas per guidance from AT&T. Specifications were not available for the Ericsson AIR 6449 antenna. Per AT&T, specifications for the AIR 6449 antenna were used to model the 6449 due to its similarity.*

3. Compliance Summary

The theoretical calculations performed for this analysis yielded results that were **within** the allowable limits for general public exposure to RF Emissions.

The anticipated composite MPE value for this site assuming all carriers present is 0.5685% of the allowable FCC established general public limit sampled at the ground level.

FCC guidelines state that if a site is found to be out of compliance (over allowable thresholds), that carriers over a 5% contribution to the composite value will require measures to bring the site into compliance. For this facility, the composite values calculated were within the allowable 100% threshold standard per the federal government.

MOUNT ANALYSIS REPORT

July 13, 2023

AT&T Site Name	New Haven West Rock
AT&T Site Number	CTL02013
AT&T FA Number	10035296
Infinigy Job Number	1106-A0001-B
Client	Smartlink
Carrier	AT&T
Site Location	142 Baldwin Drive New Haven, CT 06514 New Haven County 41° 20' 43.57" N NAD83 72° 58' 14.50" W NAD83
Structure Type	Self-Support Tower
Structure Height	120.0 ft
Mount Type	12.5 ft Sector Frame
Mount Elevation	84.0 ft AGL
Structural Usage Ratio	**61.2%**
Overall Result	**Pass**

The enclosed mount structural analysis has been performed in accordance with the 2018 Connecticut State Building Code based on an ultimate 3-second gust wind speed of 119 mph. The evaluation criteria and applicable codes are presented in the next section of this report.

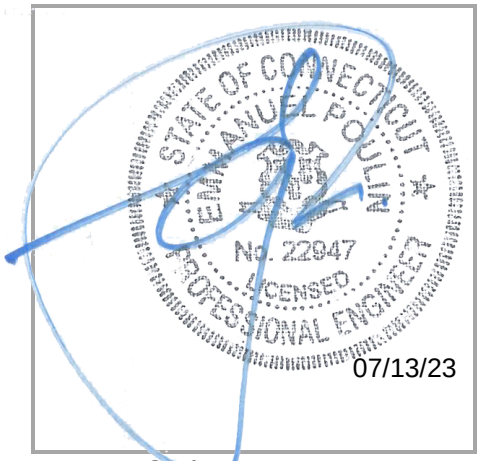

structural@infinigy.com

CONTENTS

1. INTRODUCTION

Infinigy performed a structural analysis on the AT&T proposed telecommunication equipment supporting sector frame mounted to the existing self support tower structure located at the aforementioned address. All referenced supporting documents have been obtained from the client and are assumed to be accurate and applicable to this site. The mount was analyzed using RISA-3D version 20.0.1 analysis software.

2. DESIGN/ANALYSIS PARAMETERS

Wind Speed	119 mph (3-Second Gust)
Wind Speed w/ ice	50 mph (3-Second Gust) w/ 1.0” ice
Code / Standard	TIA-222-H
Adopted Code	2015 IBC / 2018 Connecticut State Building Code
Risk Category	II
Exposure Category	B
Topographic Category	2
Calculated Crest Height	378 ft.
Seismic Spectral Response	S_s = 0.201 g / S_1 = 0.054 g
Live Load Wind Speed	30 mph
Man Live Load at Mid/End Points	250 lbs
Man Live Load at Mount Pipes	500 lbs

3. PROPOSED LOADING CONFIGURATION - 84.0 ft. AGL sector frame

Antenna Centerline (ft)	Qty.	Appurtenance Manufacturers	Appurtenance Models
84.0	2	QUINTEL TECHNOLOGY	QD8616-7
	1	QUINTEL TECHNOLOGY	QD6616-7
	2	KATHREIN	800-10966
	1	KATHREIN	800-10965
	3	ERICSSON	RRUS 4478 B14
	3	ERICSSON	RADIO 8843 B2/B66A
	3	ERICSSON	RADIO 2012 B29
	3	ERICSSON	RADIO 4449 B5/B12
	3	ERICSSON	RRUS-32 B30
	3	RAYCAP	DC6-48-60-18

4. SUPPORTING DOCUMENTATION

Construction Drawings	Infinigy, Site Number: CTL02013, dated September, 2022
Loading RFDS	AT&T RFDS ID: 2586608, dated August 18, 2022
Mount Manufacturer Drawings	Site Pro 1, Part No. VFA12-WLL-30120, dated January 25, 2017
Mount Analysis Report	Infinigy, Site Number: CTL02013, dated April 23, 2019

5. RESULTS

Components	Capacity	Pass/Fail
Mount Pipe(s)	37.9%	Pass
Brace(s)	25.4%	Pass
Horizontal(s)	61.2%	Pass
Standoff(s)	42.1%	Pass
Tie Back(s)	50.8%	Pass
Mount Connection(s)	18.4%	Pass
MOUNT RATING =	**61.2%**	**Pass**

Notes:

1. See additional documentation in Appendix for calculations supporting the capacity consumed and detailed mount connection calculations.
2. Results table usages reflect worst case sector mount.

6. RECOMMENDATIONS

Infinigy recommends installing AT&T's proposed equipment loading configuration on the mount at 84.0 ft. The installation shall be performed in accordance with the construction documents issued for this site.

If you have any questions, require additional information, or believe the actual conditions differ from those detailed in this report, please contact us immediately.

Iker Moreno, E.I.T.
Project Engineer | **INFINIGY**

7. ASSUMPTIONS

The antenna mounting system was properly fabricated, installed and maintained in accordance with its original design and manufacturer's specifications.
The configuration of antennas, mounts, and other appurtenances are as specified in the proposed loading configuration table.
All member connections are assumed to have been designed to meet or exceed the load carrying capacity of the connected member unless otherwise specified in this report.
The analysis will require revisions if the existing conditions in the field differ from those shown in the above-referenced documents or assumed in this analysis. No allowance was made for any damaged, missing, or rusted members.
Steel grades have been assumed as follows, unless noted otherwise: Channel, Solid Round, Angle, Plate — Q345 HSS (Rectangular) — Q235-GB HSS (Circular) — Q235-GB Pipe — Q235-GB Connection Bolts — ASTM A325 / SAE GR. 5 U-Bolts / Threaded Rods — SAE Gr 5
All bolted connections are pretensioned in accordance with Table 8.2 of the RCSC 2014 Standard.

8. LIABILITY WAIVER AND LIMITATIONS

Our structural calculations are completed assuming all information provided to Infinigy is accurate and applicable to this site. For the purposes of calculations, we assume an overall structure condition as erected and all members and connections to be free of corrosion and/or structural defects. The structure owner and/or contractor shall verify the structure's condition prior to installation of any proposed equipment. If actual conditions differ from those described in this report, Infinigy should be notified immediately to assess the impact on the results of this report.

Our evaluation is completed using industry standard methods and procedures. The structural results, conclusions and recommendations contained in this report are proprietary and should not be used by others as their own. Infinigy is not responsible for decisions made by others that are or are not based on the stated assumptions and conclusions in this report.

This report is an evaluation of the mount structure only and does not determine the adequacy of the supporting structure, other carrier mounts or cable mounting attachments. The analysis of these elements is outside the scope of this analysis, are assumed to be adequate for the purpose of this report and to have been installed per their manufacturer requirements. This document is not for construction purposes.

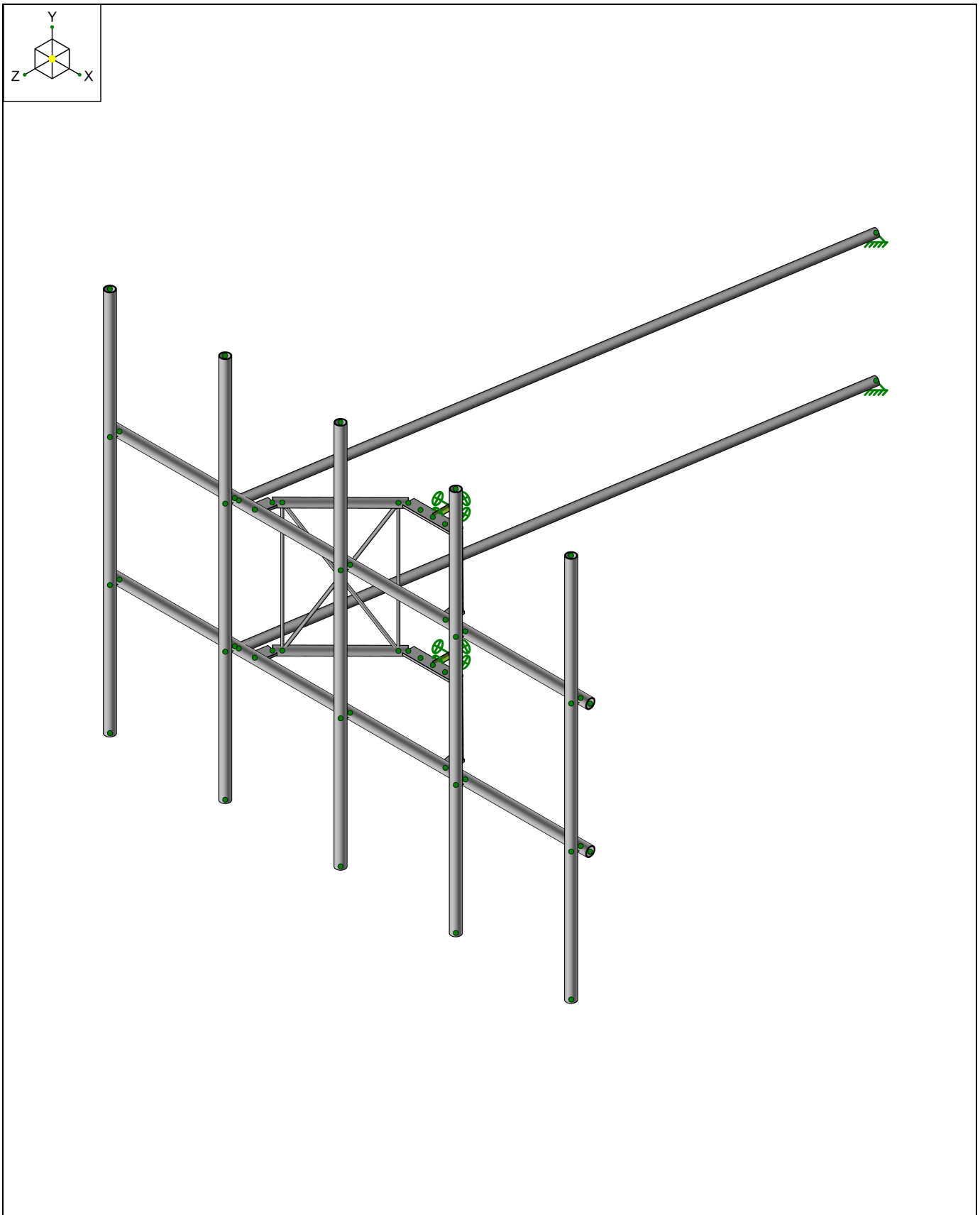

Infinigy	CTL02013	Render1
IM		Jul 12, 2023
1106-A0001-B		CTL02013_loaded.r3d

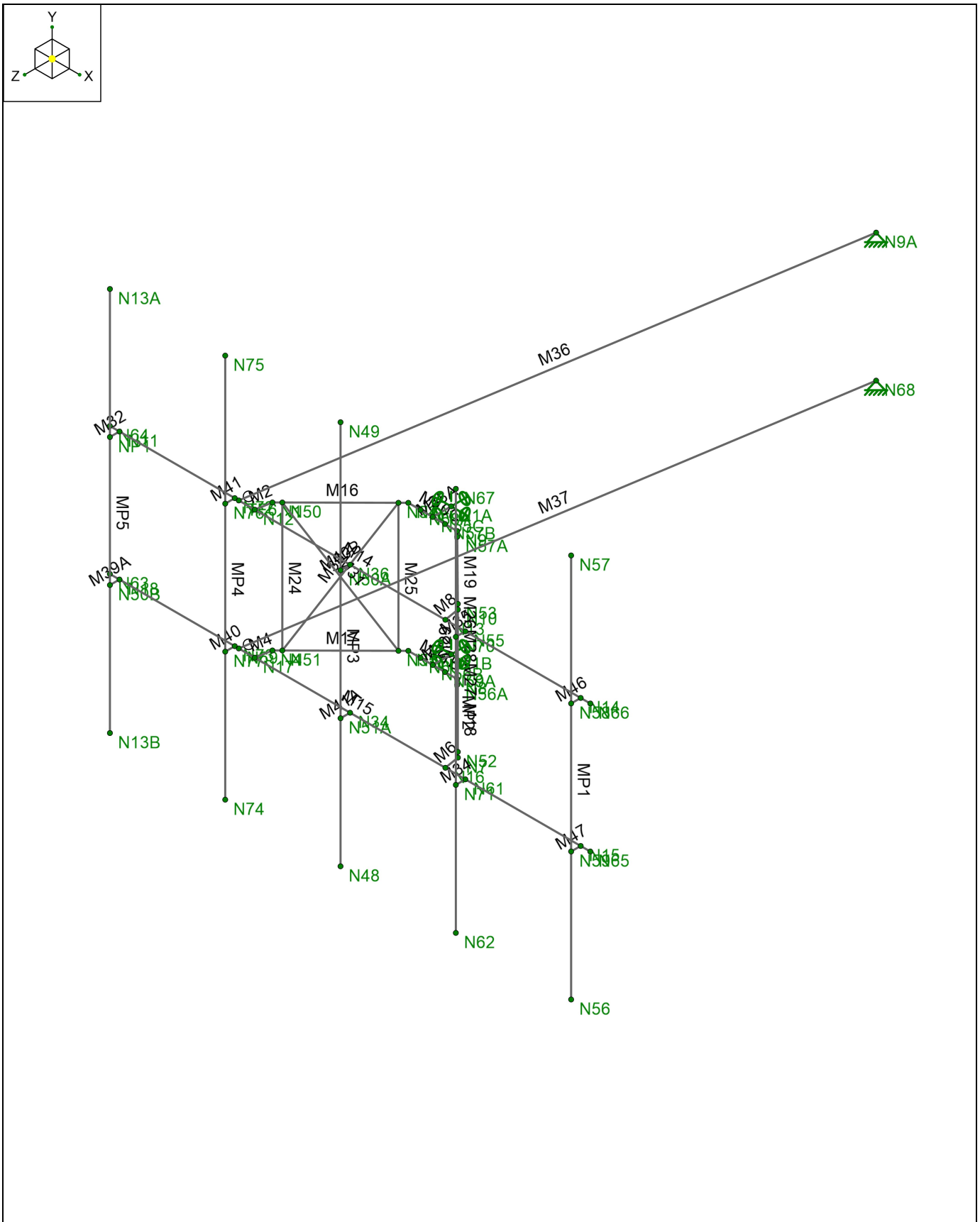

Infinigy	CTL02013	Wireframe2
IM		Jul 12, 2023
1106-A0001-B		CTL02013_loaded.r3d

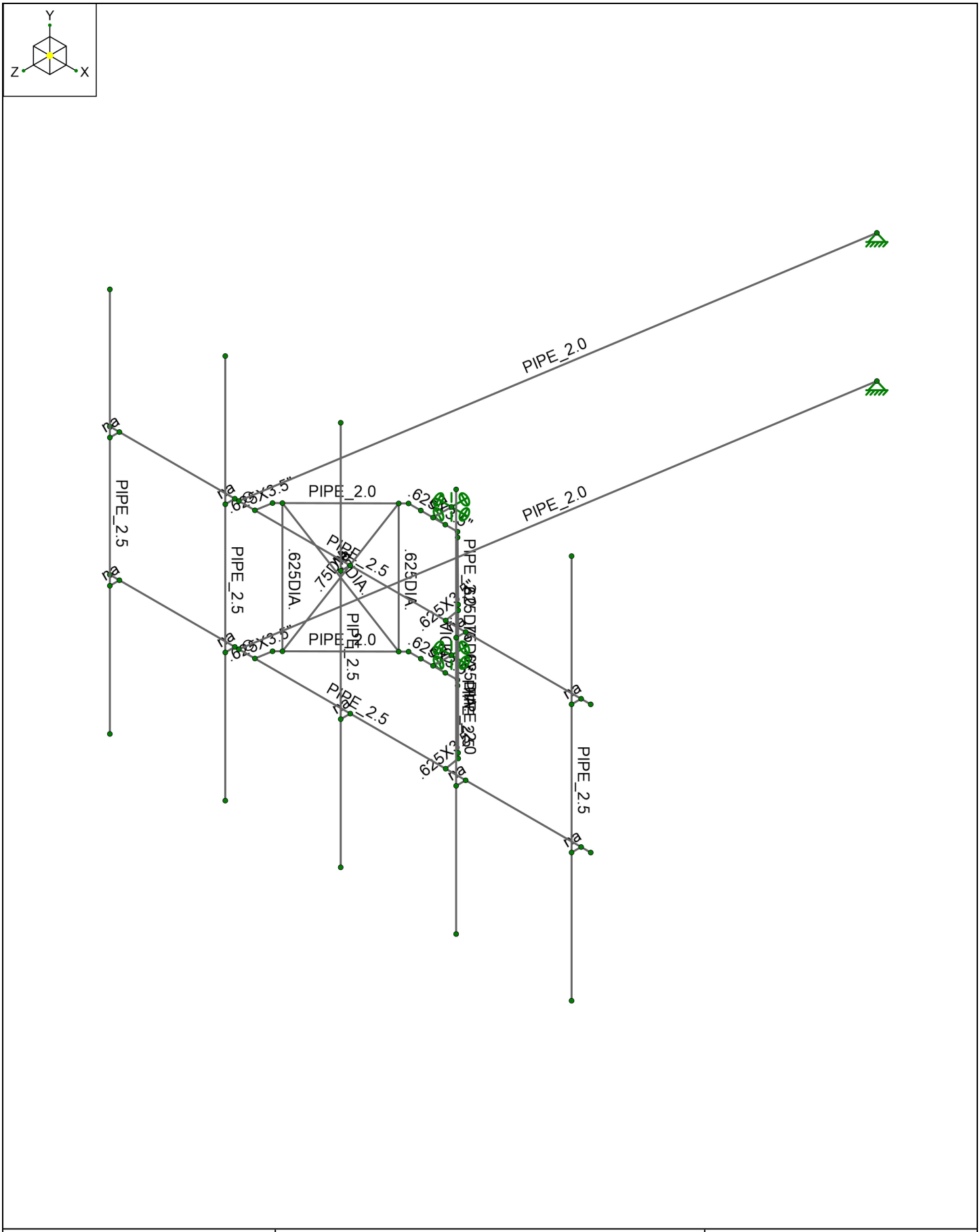

Infinigy	CTL02013	Shape1
IM		Jul 12, 2023
1106-A0001-B		CTL02013_loaded.r3d

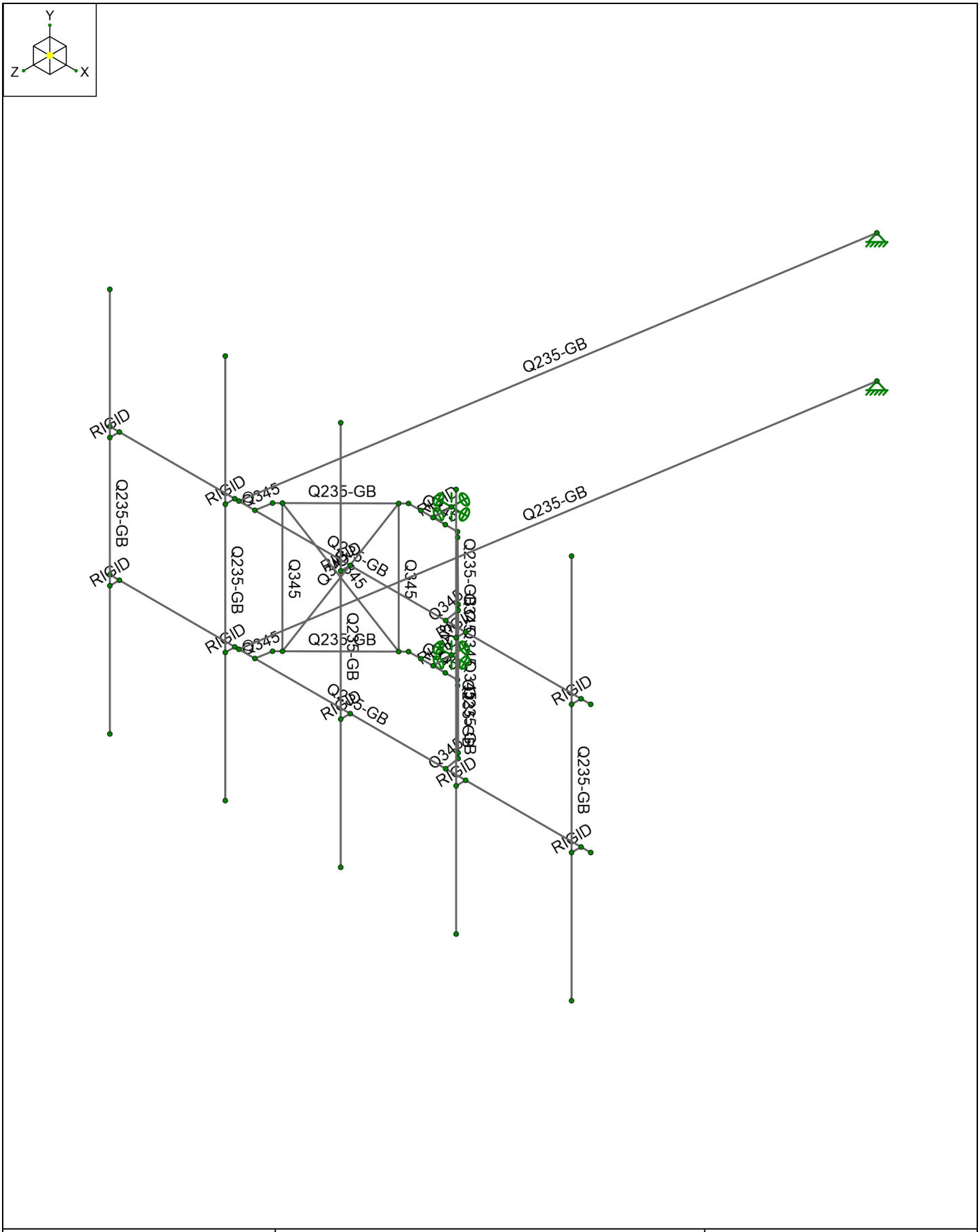

Infinigy	CTL02013	Material2
IM		Jul 12, 2023
1106-A0001-B		CTL02013_loaded.r3d

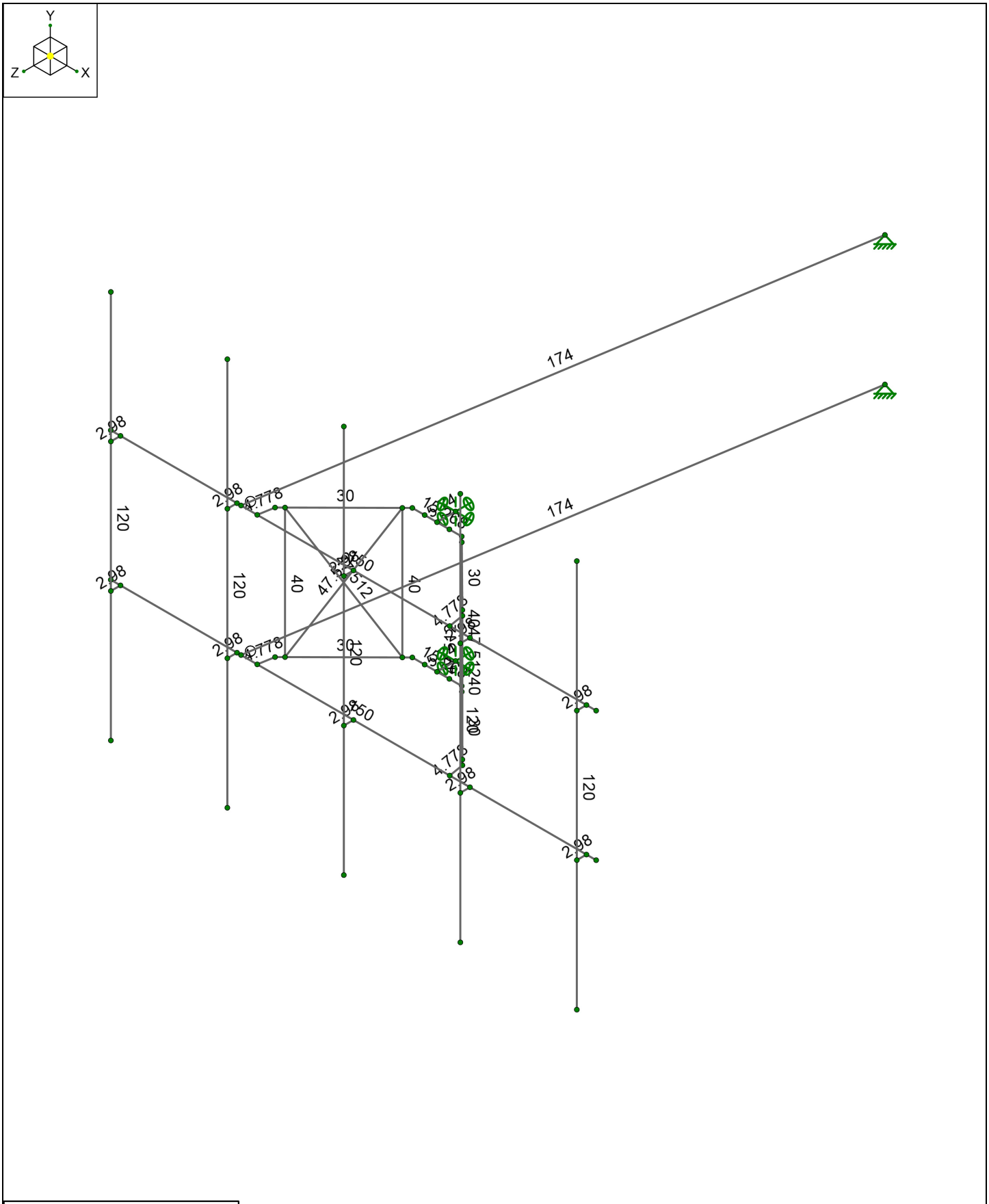

Member Length (in) Displayed

Infinigy	CTL02013	Length3
IM		Jul 12, 2023
1106-A0001-B		CTL02013_loaded.r3d

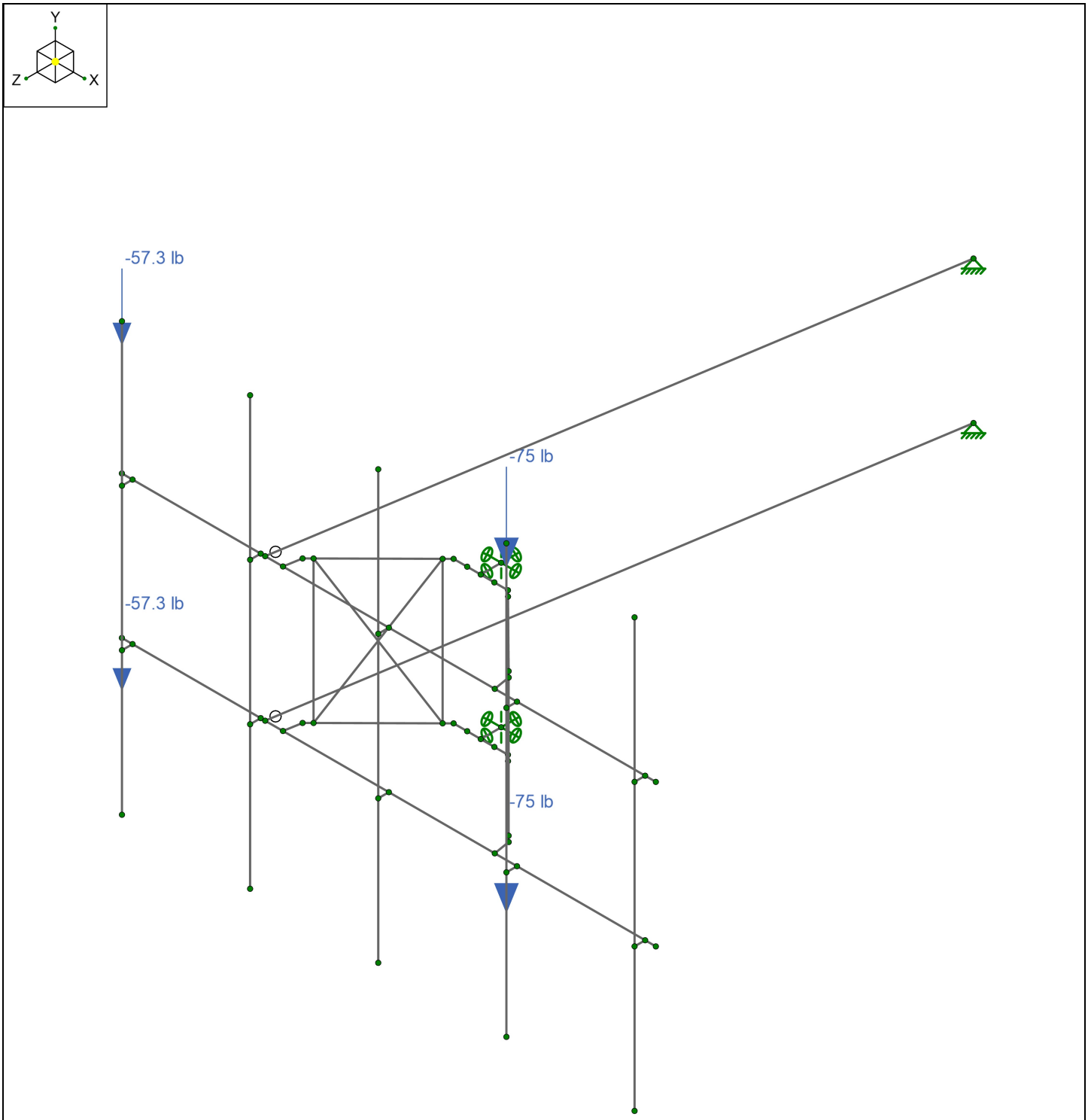

Loads: BLC 1, Self Weight

Infinigy	CTL02013	Self Weight4
IM		Jul 12, 2023
1106-A0001-B		CTL02013_loaded.r3d

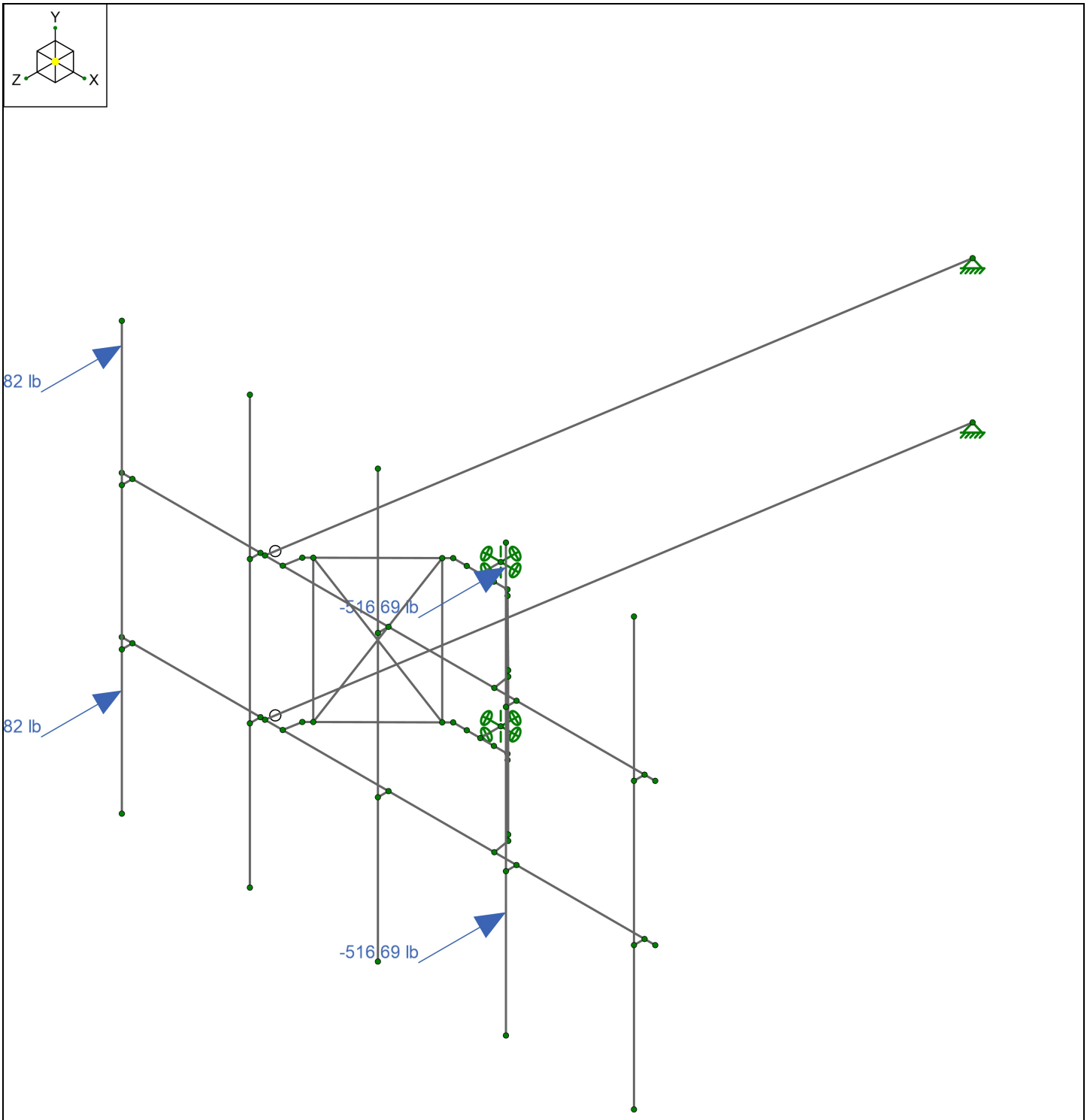

Loads: BLC 2, Wind Load AZI 0

Infinigy	CTL02013	Wind 0 Deg1
IM		Jul 12, 2023
1106-A0001-B		CTL02013_loaded.r3d

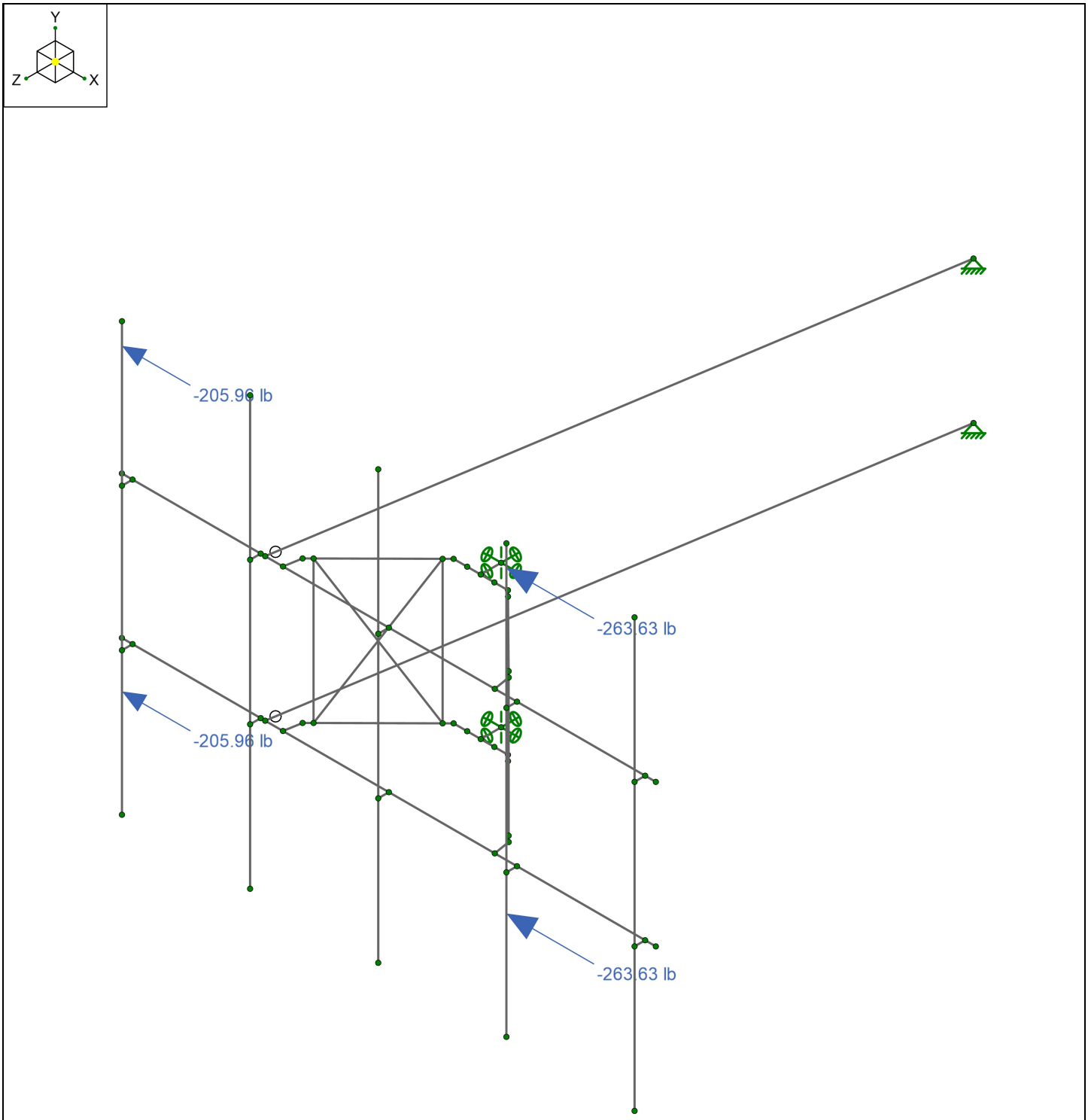

Loads: BLC 5, Wind Load AZI 90

Infinigy	CTL02013	Wind 90 Deg2
IM		Jul 12, 2023
1106-A0001-B		CTL02013_loaded.r3d

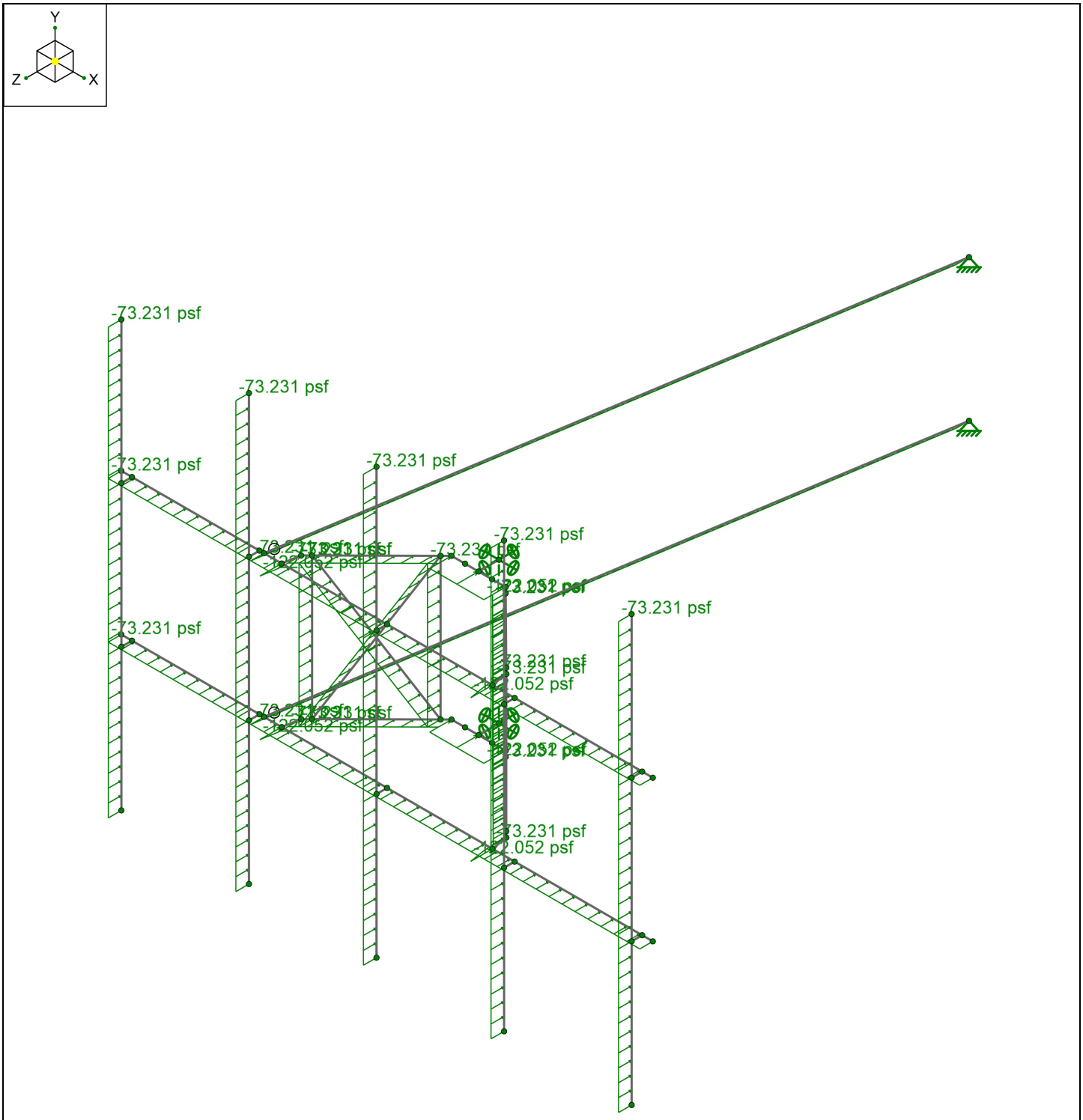

Loads: BLC 14, Distr. Wind Load Z

Infinigy	CTL02013	Distributed Wind Z3
IM		Jul 12, 2023
1106-A0001-B		CTL02013_loaded.r3d

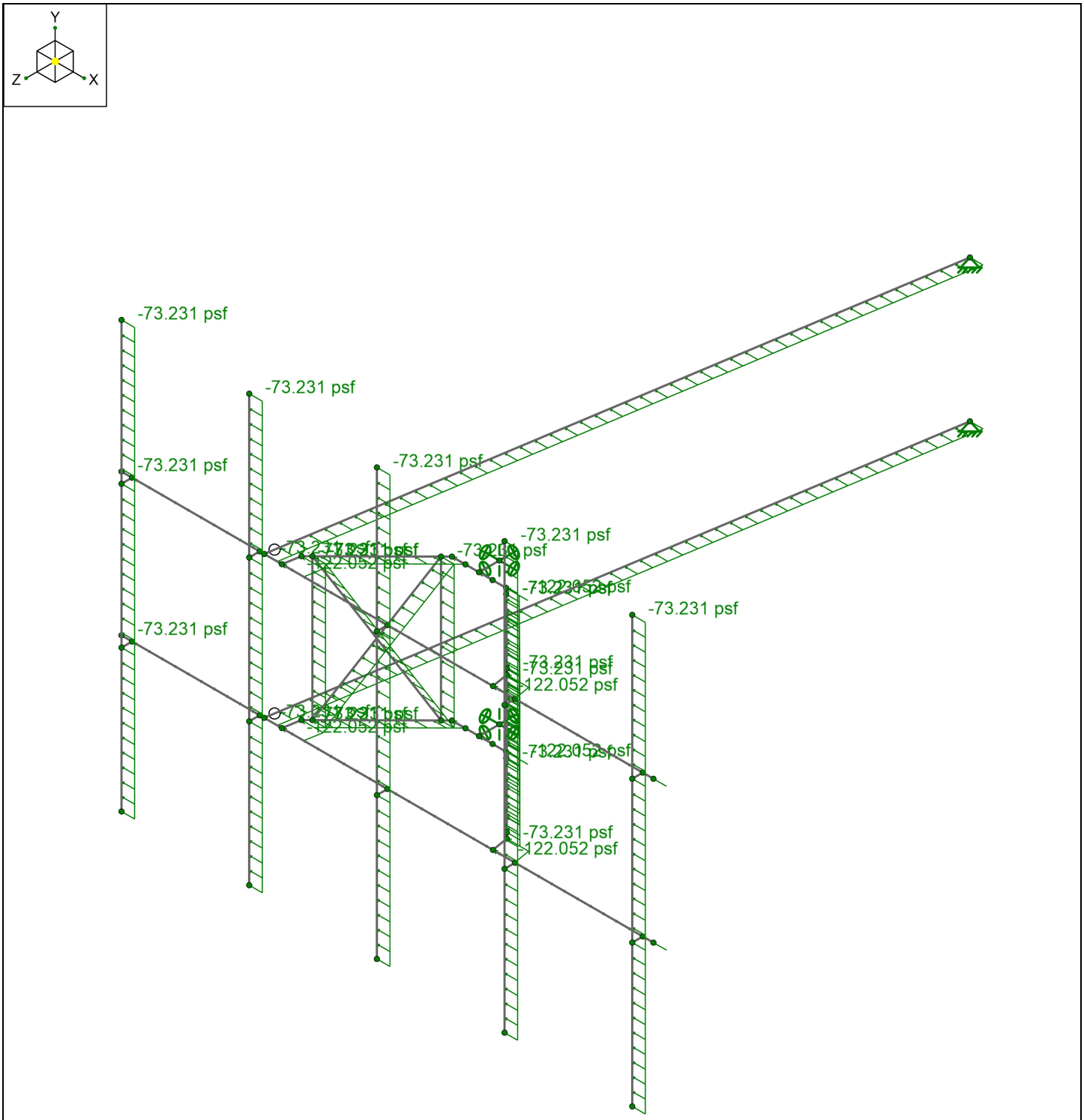

Loads: BLC 15, Distr. Wind Load X

Infinigy	CTL02013	Distributed Wind X4
IM		Jul 12, 2023
1106-A0001-B		CTL02013_loaded.r3d

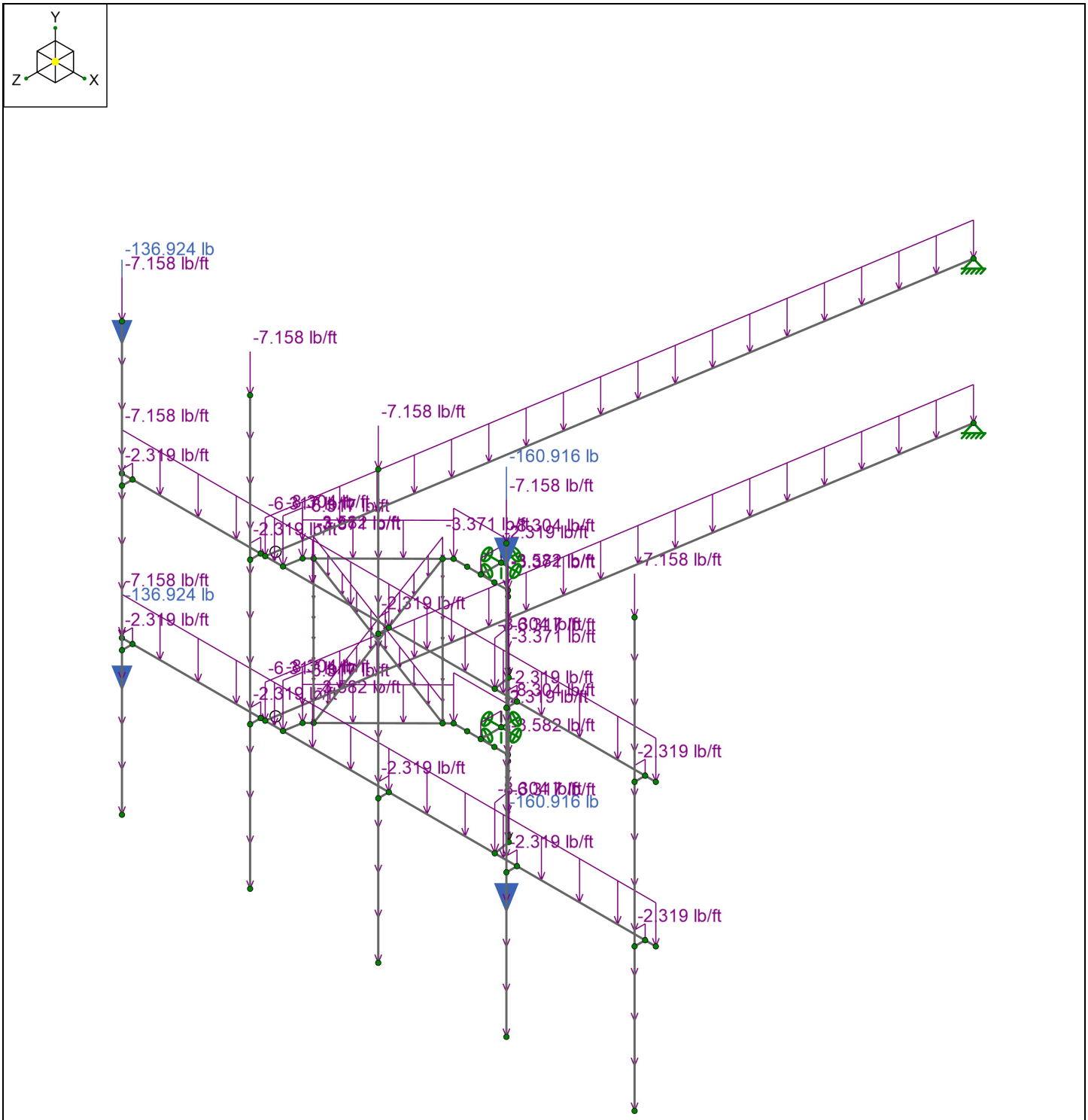

Loads: BLC 16, Ice Weight

Infinigy	CTL02013	Ice Weight5
IM		Jul 12, 2023
1106-A0001-B		CTL02013_loaded.r3d

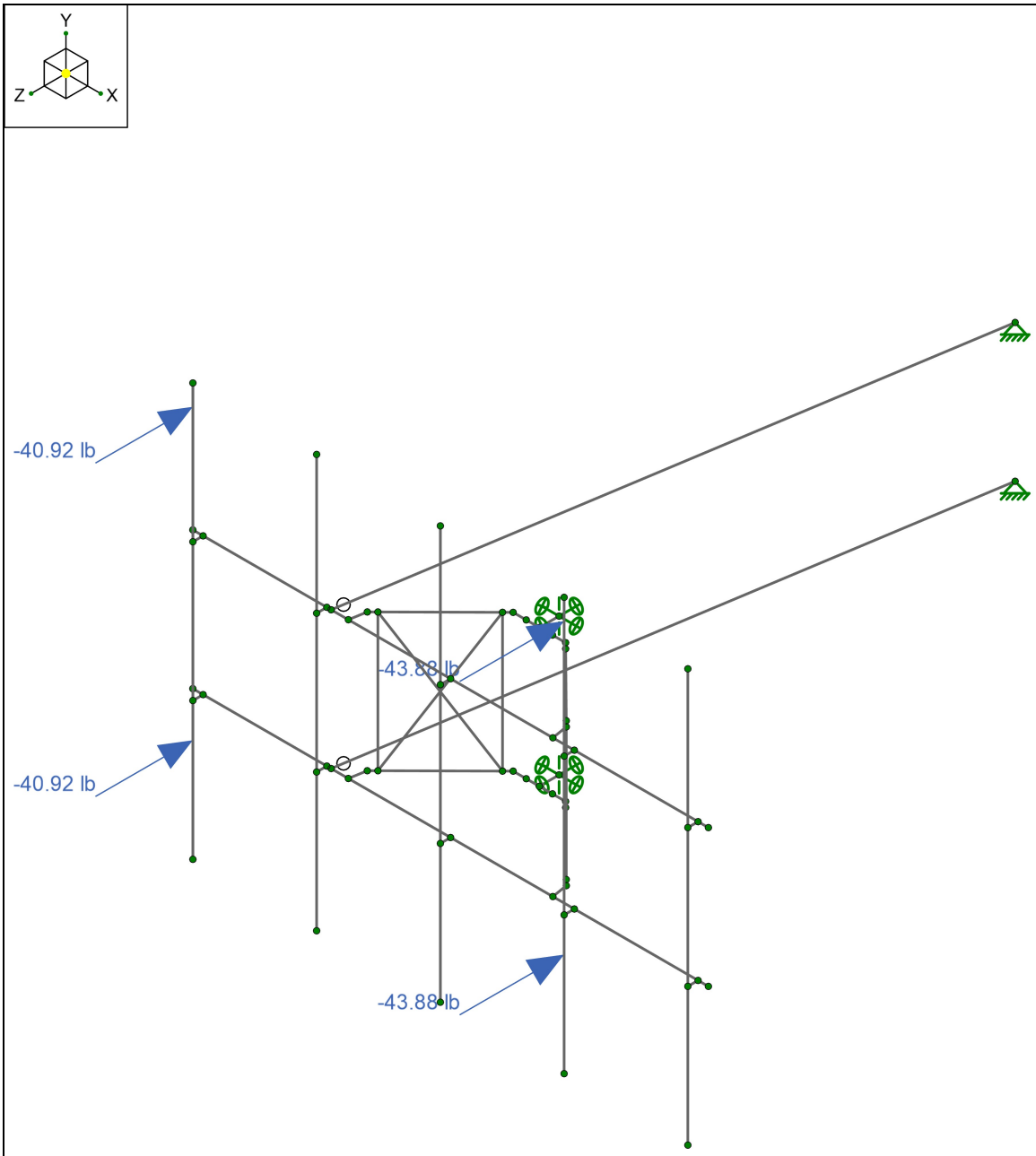

Loads: BLC 17, Ice Wind Load AZI 0

Infinigy	CTL02013	Ice Wind 0 Deg6
IM		Jul 12, 2023
1106-A0001-B		CTL02013_loaded.r3d

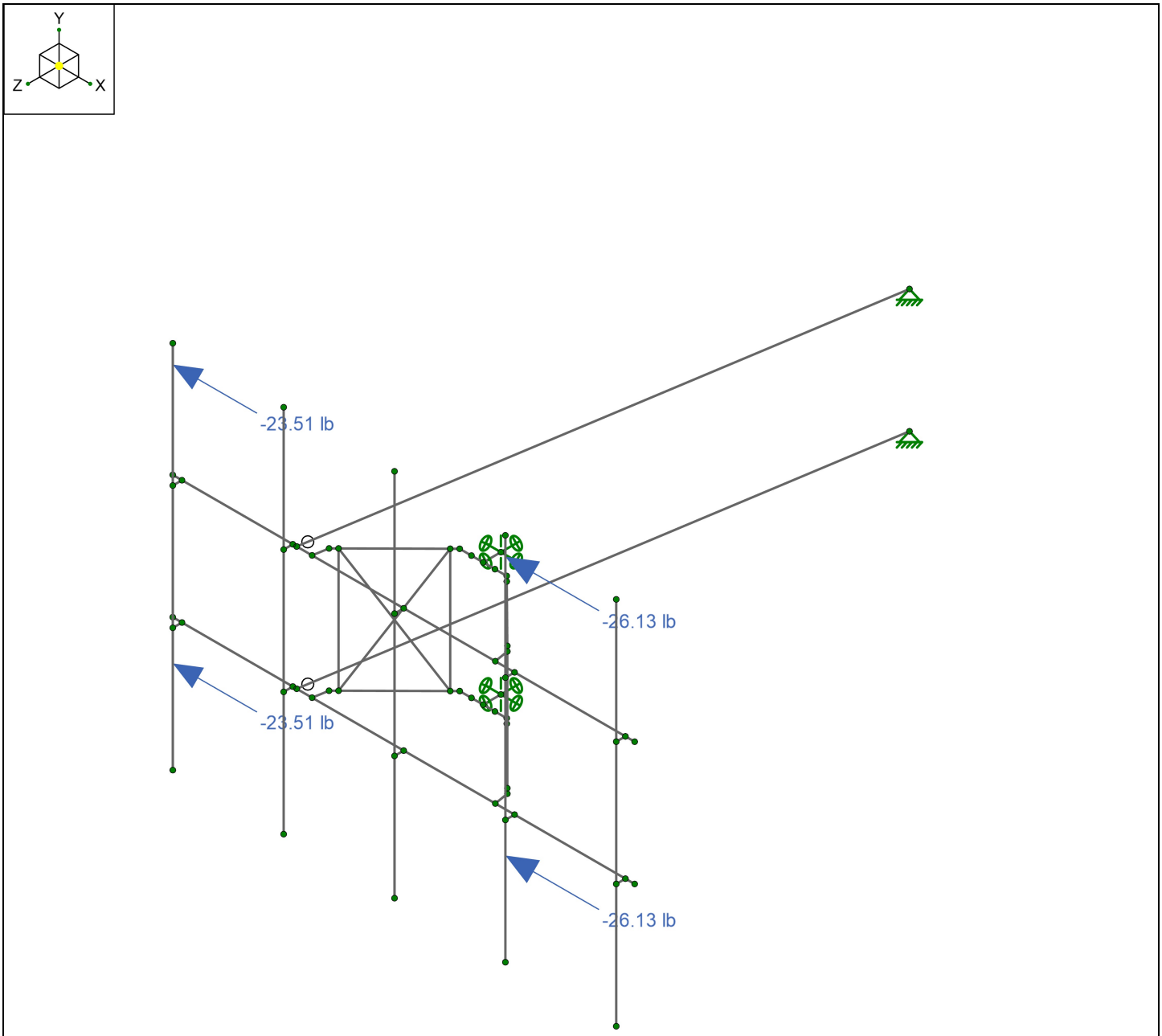

Loads: BLC 20, Ice Wind Load AZI 90

Infinigy	CTL02013	Ice Wind 90 Deg7
IM		Jul 12, 2023
1106-A0001-B		CTL02013_loaded.r3d

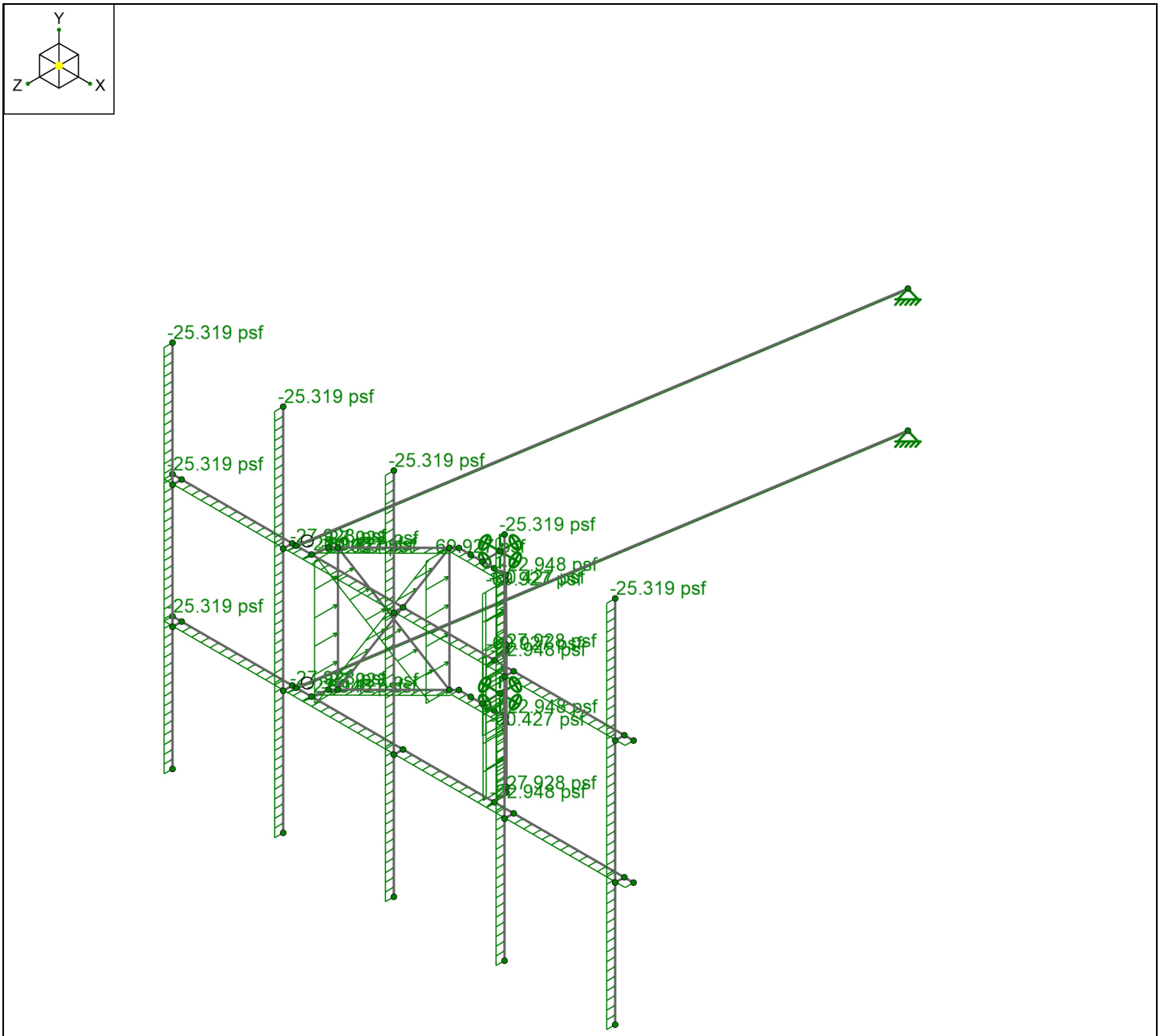

Loads: BLC 29, Distr. Ice Wind Load Z

Infinigy	CTL02013	Distributed Ice Wind Z8
IM		Jul 12, 2023
1106-A0001-B		CTL02013_loaded.r3d

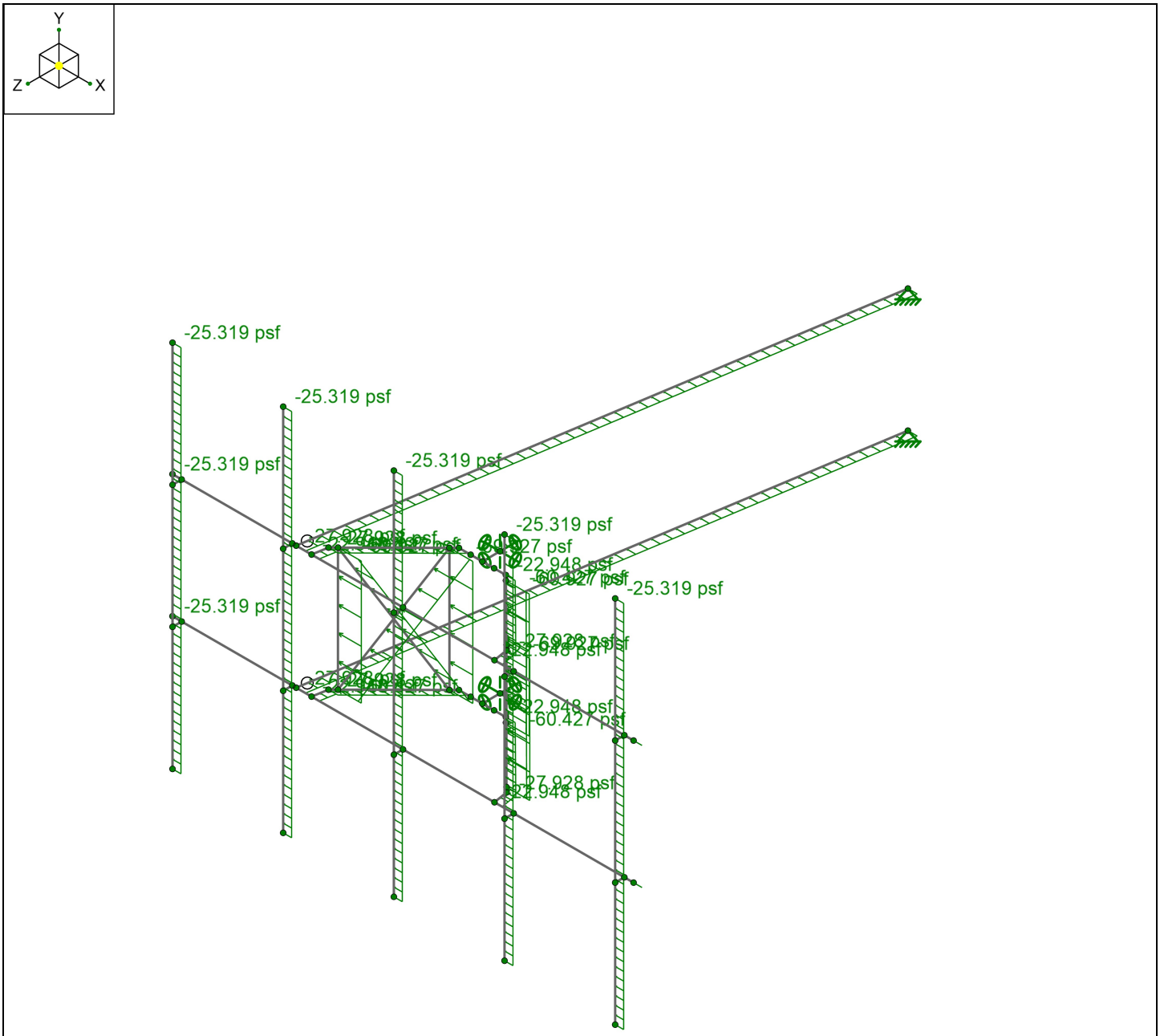

Loads: BLC 30, Distr. Ice Wind Load X

Infinigy	CTL02013	Distributed Ice Wind X9
IM		Jul 12, 2023
1106-A0001-B		CTL02013_loaded.r3d

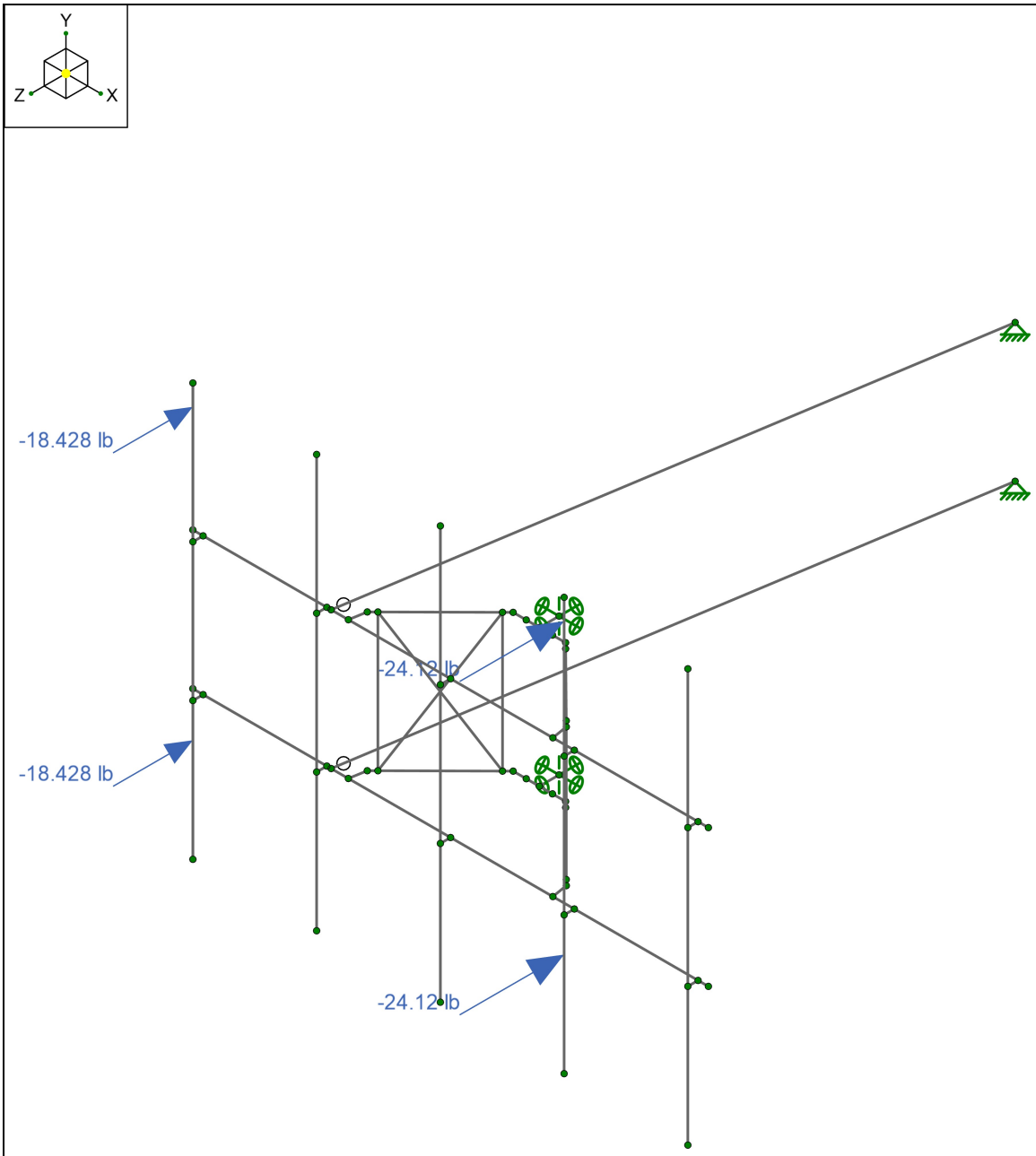

Loads: BLC 31, Seismic Load Z

Infinigy	CTL02013	Seismic Z10
IM		Jul 12, 2023
1106-A0001-B		CTL02013_loaded.r3d

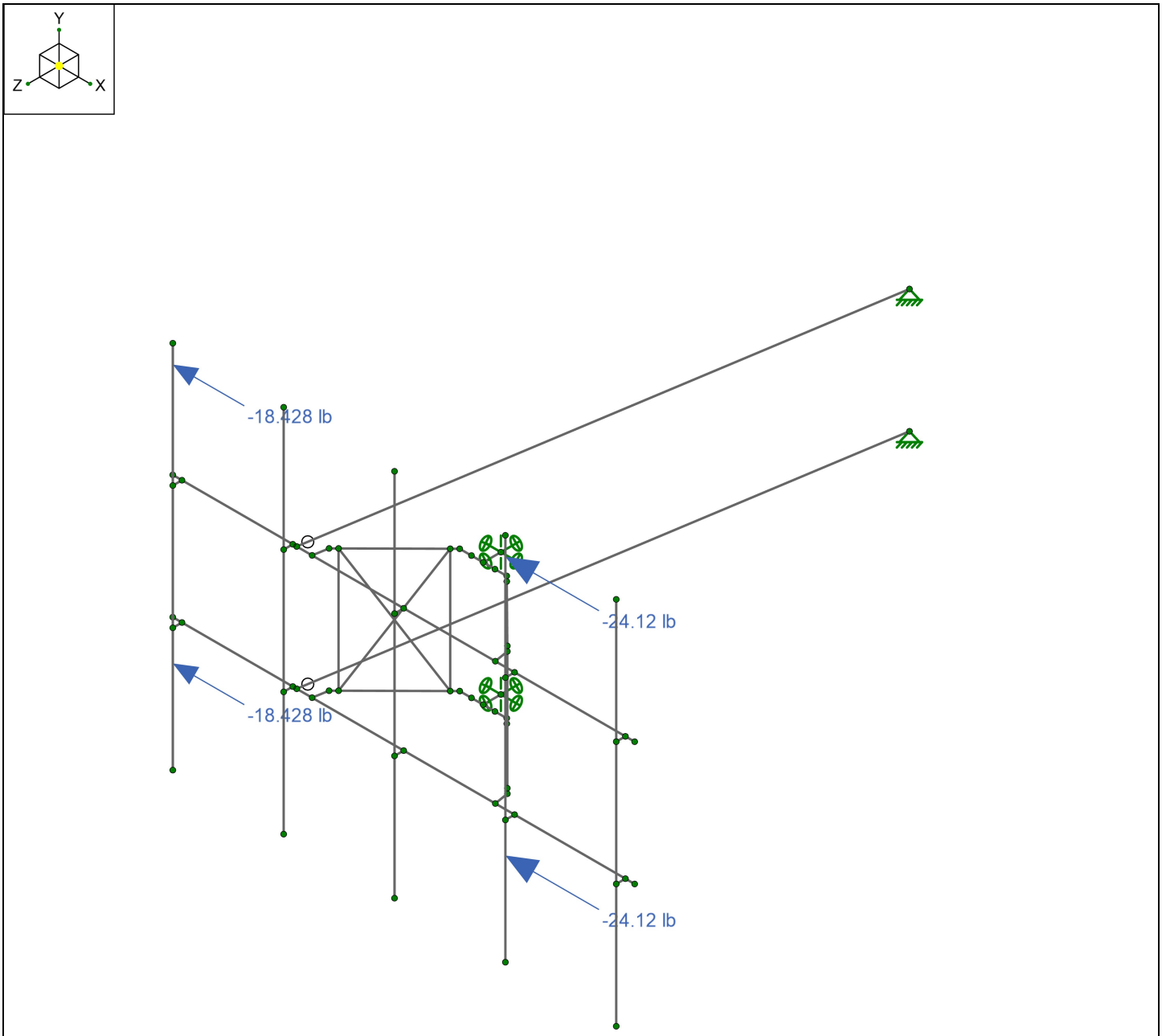

Loads: BLC 32, Seismic Load X

Infinigy	CTL02013	Seismic X11
IM		Jul 12, 2023
1106-A0001-B		CTL02013_loaded.r3d

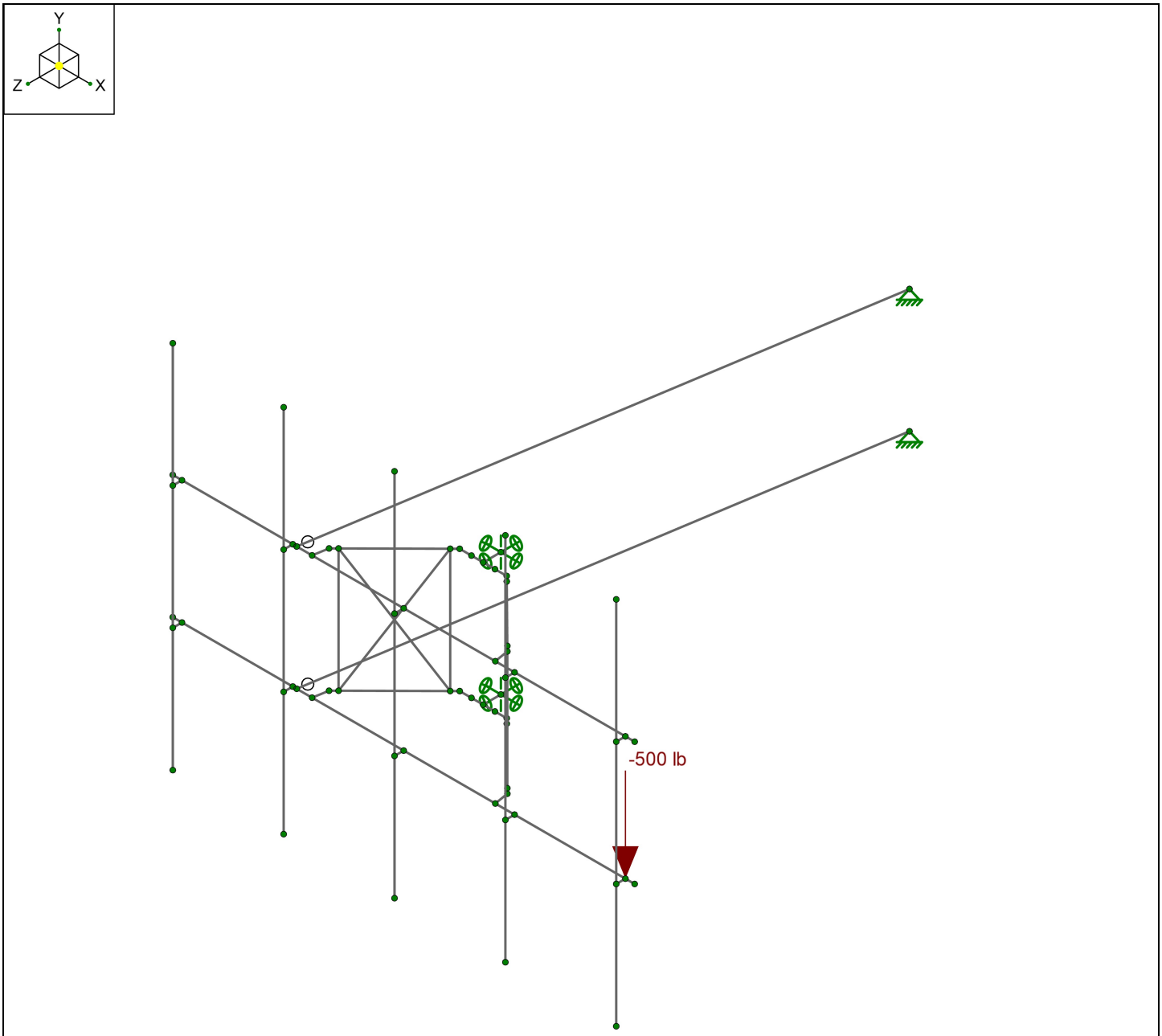

Loads: BLC 36, Maintenance Load Lm3

Infinigy	CTL02013	Maintenance Load1
IM		Jul 12, 2023
1106-A0001-B		CTL02013_loaded.r3d

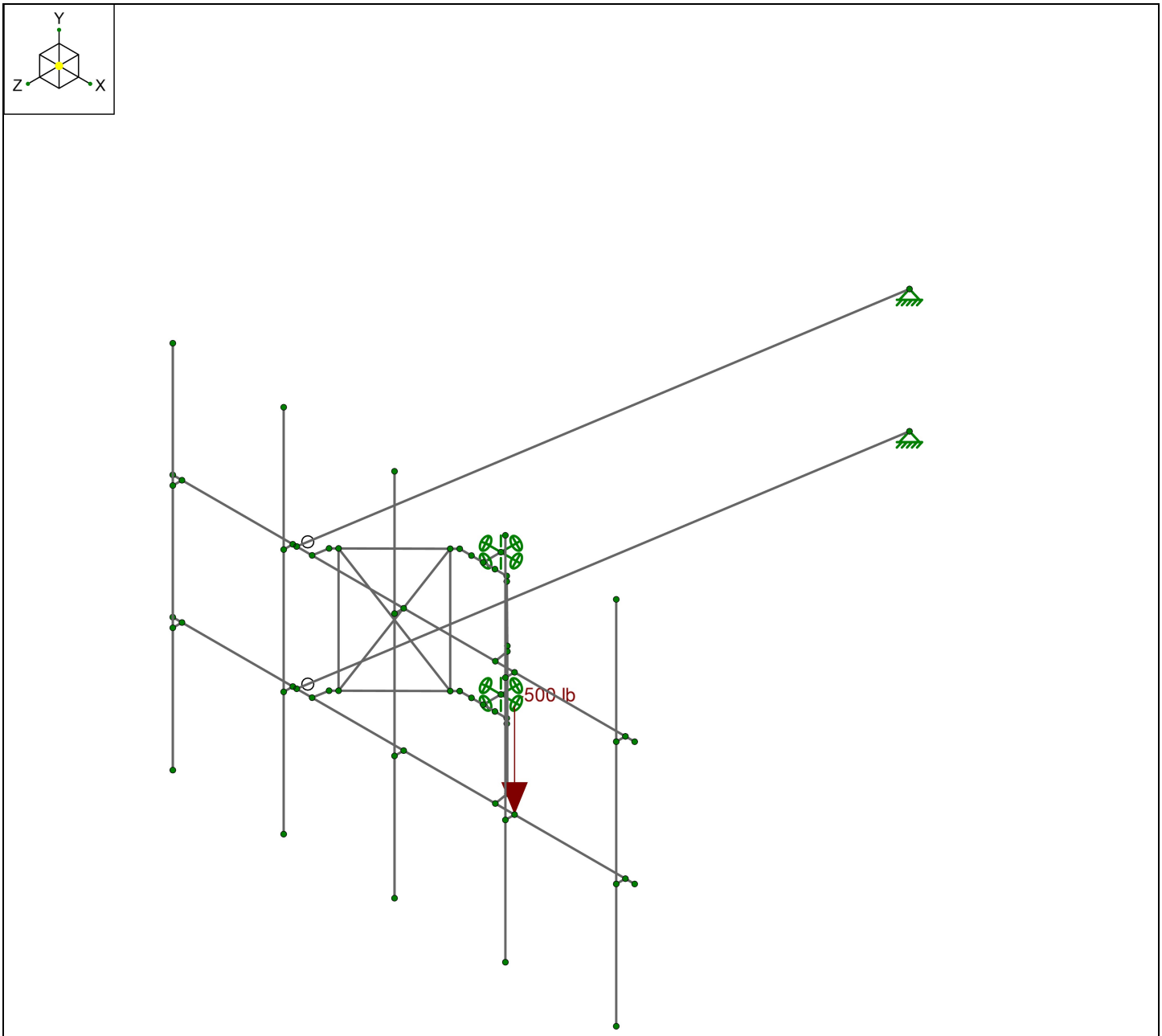

Loads: BLC 37, Maintenance Load Lm4

Infinigy	CTL02013	Maintenance Load2
IM		Jul 12, 2023
1106-A0001-B		CTL02013_loaded.r3d

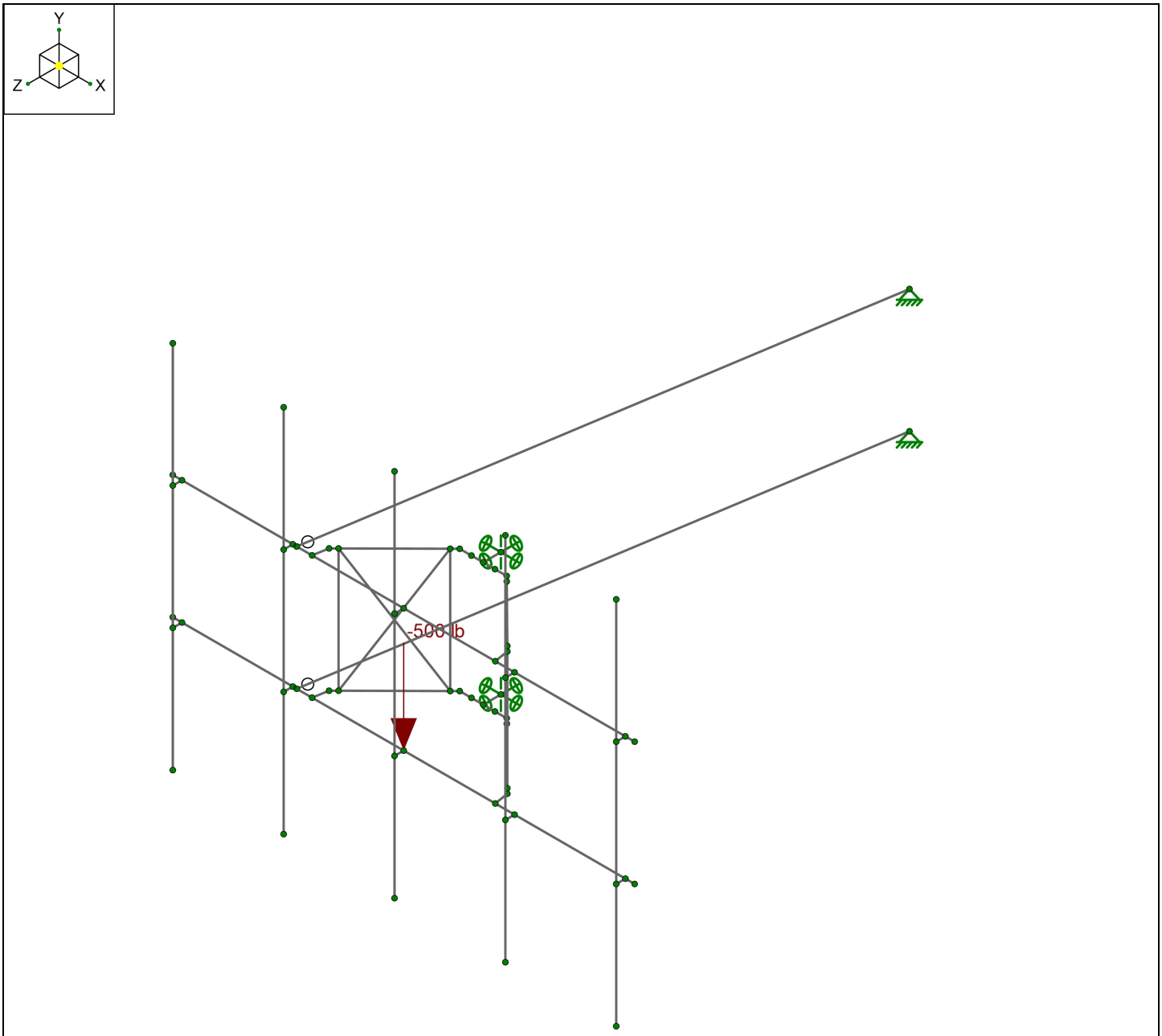

Loads: BLC 35, Maintenance Load Lm2

Infinigy	CTL02013	Maintenance Load3
IM		Jul 12, 2023
1106-A0001-B		CTL02013_loaded.r3d

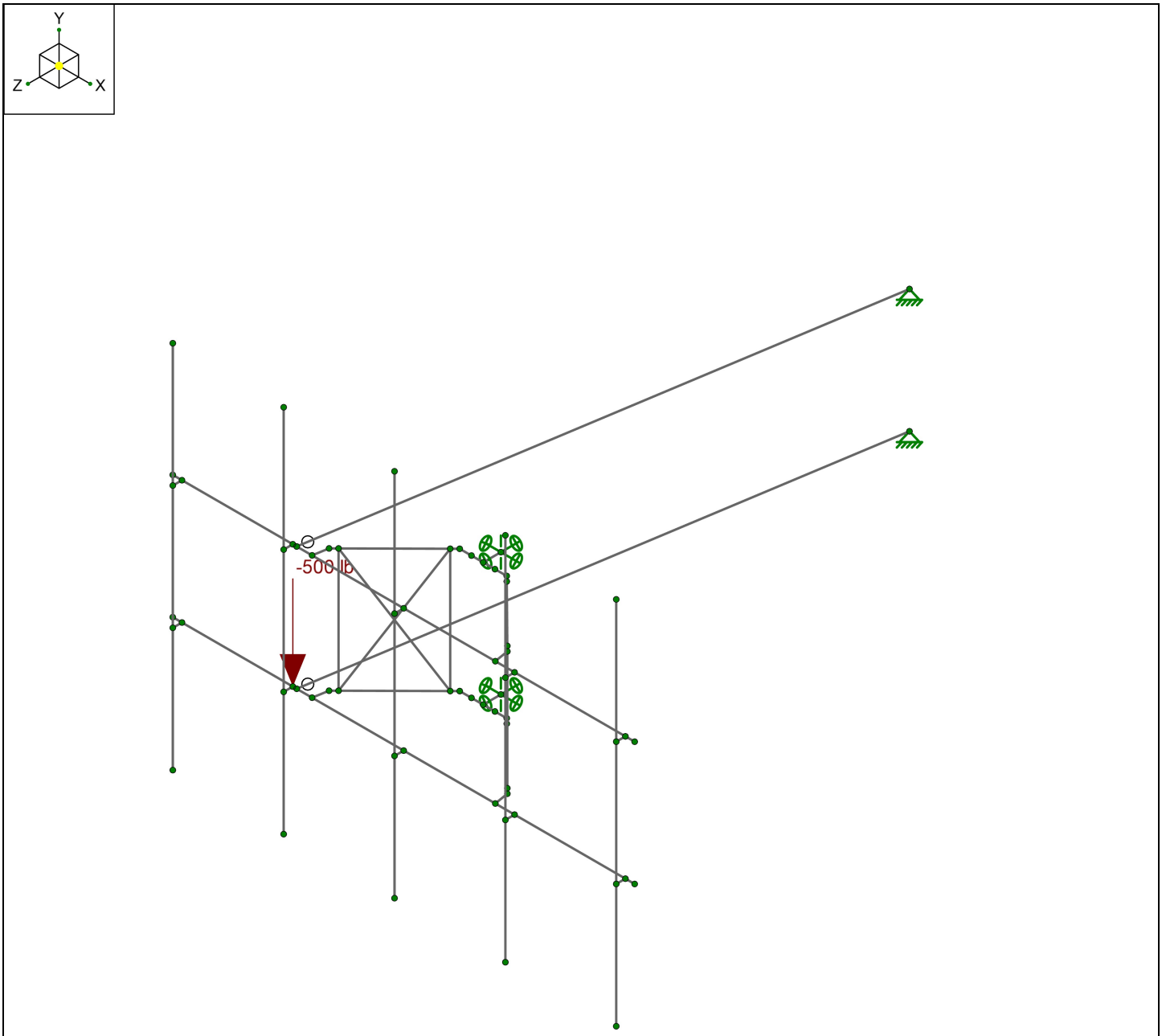

Loads: BLC 38, Maintenance Load Lm5

Infinigy	CTL02013	Maintenance Load4
IM		Jul 12, 2023
1106-A0001-B		CTL02013_loaded.r3d

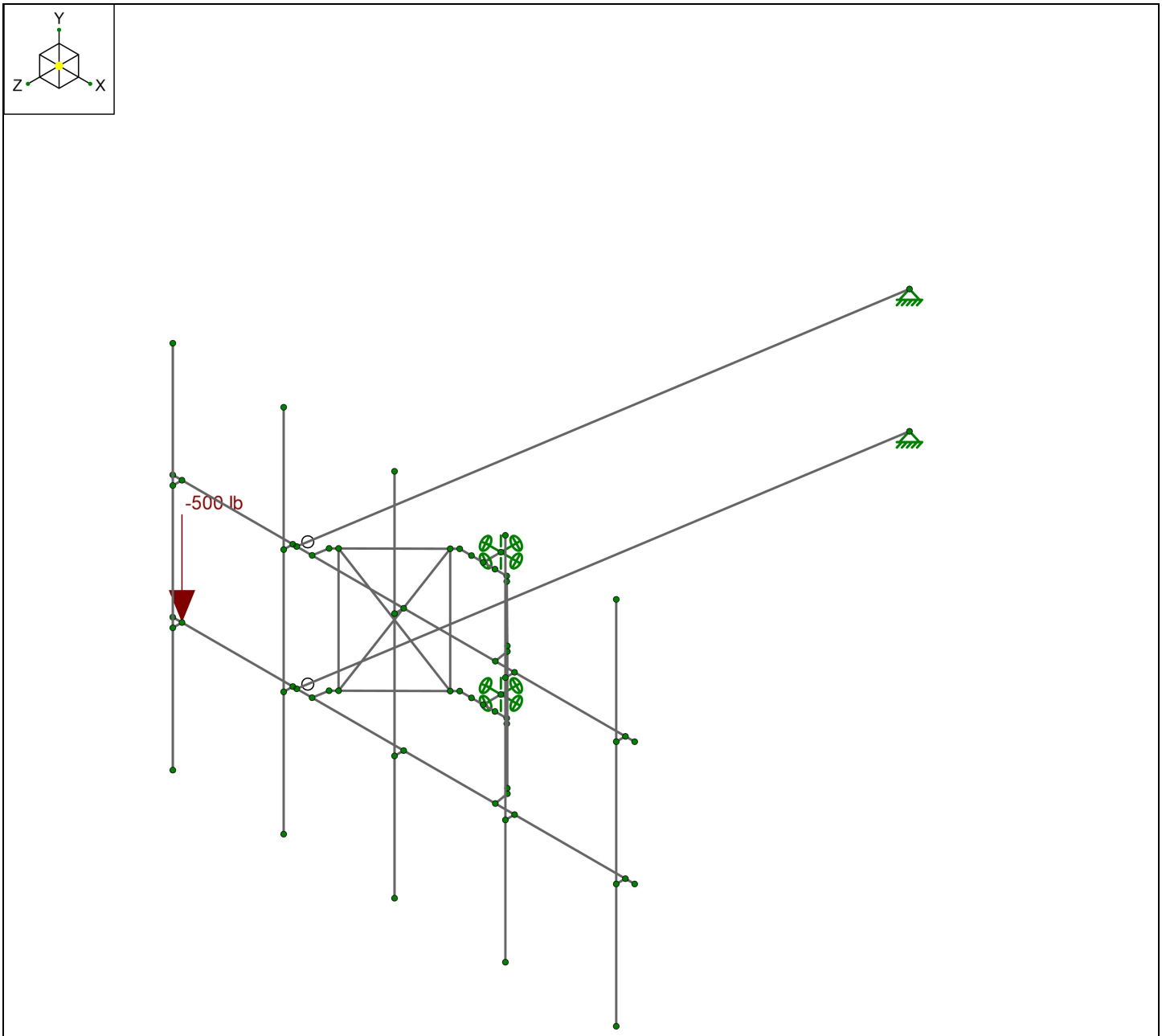

Loads: BLC 34, Maintenance Load Lm1

Infinigy	CTL02013	Maintenance Load5
IM		Jul 12, 2023
1106-A0001-B		CTL02013_loaded.r3d

Program Inputs

INFINIGY

Infinigy Load Calculator V2.3.4

PROJECT INFORMATION	
Site Name:	New Haven West Rock
Carrier:	AT&T
Engineer:	Iker Moreno

SITE INFORMATION		
Risk Category:	II	
Exposure Category:	B	
Topo Factor Procedure:	Method 2	
Site Class:	D - Stiff Soil (Assumed)	
Ground Elevation:	411.27	ft *Rev H

MOUNT INFORMATION		
Mount Type:	Sector Frame	
Num Sectors:	1	
Centerline AGL:	84.00	ft
Tower Height AGL:	120.00	ft

TOPOGRAPHIC DATA		
Topo Feature:	Ridge	
Slope Distance:	1534.0	ft
Crest Distance:	195.0	ft
Crest Height:	378.0	ft

FACTORS		
Directionality Fact. (K_d):	0.950	
Ground Ele. Factor (K_e):	0.985	*Rev H Only
Rooftop Speed-Up (K_s):	1.000	*Rev H Only
Topographic Factor (K_{zt}):	1.913	
Height Esc. Fact. (K_{iz}):	1.098	
Gust Effect Factor (G_h):	1.000	
Shielding Factor (K_a):	0.900	
Velocity Pressure Co.(K_z):	0.940	(Mount Elev)

CODE STANDARDS		
Building Code:	2021 IBC	
TIA Standard:	TIA-222-H	
ASCE Standard:	ASCE 7-16	

WIND AND ICE DATA		
Ultimate Wind (V_{ult}):	119	mph
Design Wind (V):	N/A	mph
Ice Wind (V_{ice}):	50	mph
Base Ice Thickness (t_i):	1	in
Radial Ice Thickness (t_{iz}):	1.378	in
Flat Pressure:	122.052	psf
Round Pressure:	73.231	psf
Ice Wind Pressure:	12.928	psf

SEISMIC DATA		
Short-Period Accel. (S_s):	0.201	g
1-Second Accel. (S_1):	0.054	g
Short-Period Design (S_{DS}):	0.214	
1-Second Design (S_{D1}):	0.086	
Short-Period Coeff. (F_a):	1.600	
1-Second Coeff. (F_v):	2.400	
Amplification Factor (A_s):	3.000	
Response Mod. Coeff. (R):	2.000	
Seismic Importance (I_e):	1.000	
Seismic Response Co. (C_s):	0.107	
Total App. Weight:	855.100	lb
Total Shear Force (V_s):	91.667	lb
Hor. Seismic Load (E_h):	91.667	lb
Vert. Seismic Load (E_v):	36.667	lb *

*For reference only. Per TIA rev H section 16.7, Ev is not applicable to mounts

Program Inputs

INFINIGY

Infinigy Load Calculator V2.3.4

ELEVATION VIEW

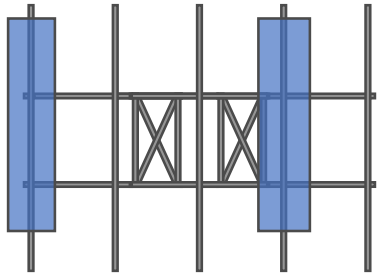

MP5 MP4 MP3 MP2 MP1

PLAN VIEW

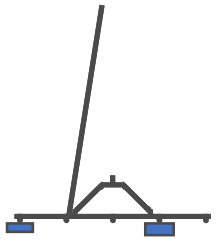

MP5MP4MP3MP2MP1

APPURTENANCE INFORMATION

Appurtenance Name	Elevation	Qty.	Height (in)	Width (in)	Depth (in)	Weight (lbs)	EPA_N (ft^2)	EPA_T (ft^2)	Member (α sector)
QUINTEL TECHNOLOGY QD8616-7	84.0	1	96.00	22.00	9.60	150.00	18.81	9.60	MP2
QUINTEL TECHNOLOGY QD6616-7	84.0	1	72.00	22.00	9.60	130.00	13.58	6.80	Leg/Flush
KATHREIN 800-10966	84.0	1	96.00	20.00	6.90	114.60	17.36	7.50	MP5
KATHREIN 800-10965	84.0	1	78.70	20.00	6.90	108.60	13.81	5.83	Leg/Flush
ERICSSON RRUS 4478 B14	84.0	1	16.50	13.40	7.70	59.90	1.84	1.06	Leg/Flush
ERICSSON RADIO 8843 B2/B66A	84.0	1	14.96	13.19	11.10	75.00	1.64	1.38	Leg/Flush
ERICSSON RADIO 2012 B29	84.0	1	16.50	13.50	4.90	43.10	1.86	0.70	Leg/Flush
ERICSSON RADIO 4449 B5/B12	84.0	1	14.96	13.19	10.43	73.00	1.64	1.30	Leg/Flush
ERICSSON RRUS 32 B30	84.0	1	27.20	12.05	7.00	52.90	2.73	1.67	Leg/Flush
RAYCAP DC6-48-60-18	84.0	1	27.40	16.70	5.50	48.00	3.81	1.37	Leg/Flush

Node Coordinates

	Label	X [in]	Y [in]	Z [in]	Detach From Diaphragm
1	N1B	0	-40	0	
2	N1A	0	0	0	
3	N9A	-7.634	0	-140.314	
4	TF6	-34.75	0	31.56	
5	N13B	-72	-80	34.54	
6	N13A	-72	40	34.54	
7	NP1	-72	0	34.54	
8	N57A	9.183083	0	7.273968	
9	N56A	9.183083	-40	7.273968	
10	N55A	-9.183083	-40	7.273968	
11	N54A	-9.183083	0	7.273968	
12	N53	27.401968	0	25.315083	
13	N52	27.401968	-40	25.315083	
14	N51	-27.401968	-40	25.315083	
15	N50	-27.401968	0	25.315083	
16	N36	0	0	31.56	
17	N34	0	-40	31.56	
18	N18	-72	-40	31.56	
19	N17	-29.75	-40	31.56	
20	N16	29.75	-40	31.56	
21	N15	72	-40	31.56	
22	N14	72	0	31.56	
23	N13	29.75	0	31.56	
24	N12	-29.75	0	31.56	
25	N11	-72	0	31.56	
26	N10	28.951	0	26.849	
27	N9	7.634	0	5.74	
28	N8	7.634	-40	5.74	
29	N7	28.951	-40	26.849	
30	N4	-28.951	-40	26.849	
31	N3	-7.634	-40	5.74	
32	N2	-7.634	0	5.74	
33	N1	-28.951	0	26.849	
34	N50B	-72	-40	34.54	
35	N48	0	-80	34.54	
36	N49	0	40	34.54	
37	N50A	0	0	34.54	
38	N51A	0	-40	34.54	
39	N56	72	-80	34.54	
40	N57	72	40	34.54	
41	N58	72	0	34.54	
42	N59	72	-40	34.54	
43	N55C	0	0	5.74	
44	N56B	0	-40	5.74	
45	N57B	3.817	0	5.74	
46	N58A	-3.817	0	5.74	
47	N59A	3.817	-40	5.74	
48	N60	-3.817	-40	5.74	
49	N69	-34.75	-40	31.56	
50	N68	-7.634	-40	-140.314	
51	N63	-75	-40	31.56	
52	N64	-75	0	31.56	
53	N65	75	-40	31.56	
54	N66	75	0	31.56	
55	N55	36	0	31.56	

Node Coordinates (Continued)

	Label	X [in]	Y [in]	Z [in]	Detach From Diaphragm
56	N61	36	-40	31.56	
57	N62	36	-80	34.54	
58	N67	36	40	34.54	
59	N70	36	0	34.54	
60	N71	36	-40	34.54	
61	N72	-36	0	31.56	
62	N73	-36	-40	31.56	
63	N74	-36	-80	34.54	
64	N75	-36	40	34.54	
65	N76	-36	0	34.54	
66	N77	-36	-40	34.54	

Node Boundary Conditions

	Node Label	X [lb/in]	Y [lb/in]	Z [lb/in]	X Rot [k-ft/rad]	Z Rot [k-ft/rad]
1	N1A	Reaction	Reaction	Reaction	Reaction	Reaction
2	N1B	Reaction	Reaction	Reaction	Reaction	Reaction
3	N9A	Reaction	Reaction	Reaction		
4	N68	Reaction	Reaction	Reaction		

Hot Rolled Steel Properties

	Label	E [psi]	G [psi]	Nu	Therm. Coeff. [1e⁵°F⁻¹]	Density [lb/ft³]	Yield [psi]	Ry	Fu [psi]	Rt
1	A36 Gr.36	2.9e+7	1.115e+7	0.3	0.65	490	36000	1.5	58000	1.2
2	A572 Gr.50	2.9e+7	1.115e+7	0.3	0.65	490	50000	1.1	58000	1.2
3	A992	2.9e+7	1.115e+7	0.3	0.65	490	50000	1.1	58000	1.2
4	A500 Gr.42	2.9e+7	1.115e+7	0.3	0.65	490	42000	1.3	58000	1.1
5	A500 Gr.46	2.9e+7	1.115e+7	0.3	0.65	490	46000	1.2	58000	1.1
6	A53-b	2.9e+7	1.115e+7	0.3	0.65	490	35000	1.5	58000	1.2
7	Q235-GB	2.9e+7	1.115e+7	0.3	0.65	490	35000	1.5	58000	1.2
8	Q345	2.9e+7	1.115e+7	0.3	0.65	490	36000	1.5	58000	1.2

Hot Rolled Steel Section Sets

	Label	Shape	Type	Design List	Material	Design Rule	Area [in²]	Iyy [in⁴]	Izz [in⁴]	J [in⁴]
1	Main Horizontal	PIPE_2.5	None	None	Q235-GB	Typical	1.61	1.45	1.45	2.89
2	SR 3/4"	.75DIA.	None	None	Q345	Typical	0.442	0.016	0.016	0.031
3	SR 5/8"	.625DIA.	None	None	Q345	Typical	0.307	0.007	0.007	0.015
4	.625"x3.5"	.625X3.5"	None	None	Q345	Typical	2.188	0.071	2.233	0.253
5	Std 2" Pipe	PIPE_2.0	None	None	Q235-GB	Typical	1.02	0.627	0.627	1.25
6	Mount Pipe	PIPE_2.5	None	None	Q235-GB	Typical	1.61	1.45	1.45	2.89

Member Primary Data

	Label	I Node	J Node	Rotate(deg)	Section/Shape	Type	Design List	Material	Design Rule
1	M32	NP1	N11		RIGID	None	None	RIGID	Typical
2	M2	N12	N1	90	.625"x3.5"	None	None	Q345	Typical
3	M4	N17	N4	90	.625"x3.5"	None	None	Q345	Typical
4	M6	N16	N7	90	.625"x3.5"	None	None	Q345	Typical
5	M8	N13	N10	90	.625"x3.5"	None	None	Q345	Typical
6	M14	N64	N66		Main Horizontal	None	None	Q235-GB	Typical
7	M15	N63	N65		Main Horizontal	None	None	Q235-GB	Typical
8	M16	N1	N2		Std 2" Pipe	None	None	Q235-GB	Typical
9	M17	N4	N3		Std 2" Pipe	None	None	Q235-GB	Typical

Member Primary Data (Continued)

	Label	I Node	J Node	Rotate(deg)	Section/Shape	Type	Design List	Material	Design Rule
10	M18	N7	N8		Std 2" Pipe	None	None	Q235-GB	Typical
11	M19	N10	N9		Std 2" Pipe	None	None	Q235-GB	Typical
12	M24	N50	N51		SR 5/8"	None	None	Q345	Typical
13	M25	N54A	N55A		SR 5/8"	None	None	Q345	Typical
14	M26	N57A	N56A		SR 5/8"	None	None	Q345	Typical
15	M27	N53	N52		SR 5/8"	None	None	Q345	Typical
16	M28	N57A	N52		SR 3/4"	None	None	Q345	Typical
17	M29	N56A	N53		SR 3/4"	None	None	Q345	Typical
18	M30	N51	N54A		SR 3/4"	None	None	Q345	Typical
19	M31	N50	N55A		SR 3/4"	None	None	Q345	Typical
20	M39A	N50B	N18		RIGID	None	None	RIGID	Typical
21	MP5	N13A	N13B		Mount Pipe	None	None	Q235-GB	Typical
22	M40B	N50A	N36		RIGID	None	None	RIGID	Typical
23	M41A	N51A	N34		RIGID	None	None	RIGID	Typical
24	MP3	N49	N48		Mount Pipe	None	None	Q235-GB	Typical
25	M46	N58	N14		RIGID	None	None	RIGID	Typical
26	M47	N59	N15		RIGID	None	None	RIGID	Typical
27	MP1	N57	N56		Mount Pipe	None	None	Q235-GB	Typical
28	M40C	N9	N2	90	.625"x3.5"	None	None	Q345	Typical
29	M41B	N8	N3	90	.625"x3.5"	None	None	Q345	Typical
30	M36	TF6	N9A		Std 2" Pipe	None	None	Q235-GB	Typical
31	M37	N69	N68		Std 2" Pipe	None	None	Q235-GB	Typical
32	M38A	N1A	N55C		RIGID	None	None	RIGID	Typical
33	M39	N1B	N56B		RIGID	None	None	RIGID	Typical
34	M34	N71	N61		RIGID	None	None	RIGID	Typical
35	M35	N70	N55		RIGID	None	None	RIGID	Typical
36	MP2	N67	N62		Mount Pipe	None	None	Q235-GB	Typical
37	M40	N77	N73		RIGID	None	None	RIGID	Typical
38	M41	N76	N72		RIGID	None	None	RIGID	Typical
39	MP4	N75	N74		Mount Pipe	None	None	Q235-GB	Typical

Member Advanced Data

	Label	I Release	T/C Only	Physical	Deflection Ratio Options	Seismic DR
1	M32			Yes	** NA **	None
2	M2			Yes	** NA **	None
3	M4			Yes	** NA **	None
4	M6			Yes	** NA **	None
5	M8			Yes	** NA **	None
6	M14			Yes	** NA **	None
7	M15			Yes	** NA **	None
8	M16			Yes	** NA **	None
9	M17			Yes	** NA **	None
10	M18			Yes	** NA **	None
11	M19			Yes	** NA **	None
12	M24			Yes	** NA **	None
13	M25			Yes	** NA **	None
14	M26			Yes	** NA **	None
15	M27			Yes	** NA **	None
16	M28			Yes	** NA **	None
17	M29		Tension Only	Yes	** NA **	None
18	M30			Yes	** NA **	None
19	M31		Tension Only	Yes	** NA **	None
20	M39A			Yes	** NA **	None
21	MP5			Yes	** NA **	None
22	M40B			Yes	** NA **	None

Member Advanced Data (Continued)

	Label	I Release	T/C Only	Physical	Deflection Ratio Options	Seismic DR
23	M41A			Yes	** NA **	None
24	MP3			Yes	** NA **	None
25	M46			Yes	** NA **	None
26	M47			Yes	** NA **	None
27	MP1			Yes	** NA **	None
28	M40C			Yes	** NA **	None
29	M41B			Yes	** NA **	None
30	M36	BenPIN		Yes	** NA **	None
31	M37	BenPIN		Yes	** NA **	None
32	M38A			Yes	** NA **	None
33	M39			Yes	** NA **	None
34	M34			Yes	** NA **	None
35	M35			Yes	** NA **	None
36	MP2			Yes	** NA **	None
37	M40			Yes	** NA **	None
38	M41			Yes	** NA **	None
39	MP4			Yes	** NA **	None

Hot Rolled Steel Design Parameters

	Label	Shape	Length [in]	Lb y-y [in]	Lb z-z [in]	Lcomp top [in]	K y-y	K z-z	Channel Conn.	a [in]	Function
1	M2	.625"x3.5"	4.778			Lbyy	0.65	0.65	N/A	N/A	Lateral
2	M4	.625"x3.5"	4.778			Lbyy	0.65	0.65	N/A	N/A	Lateral
3	M6	.625"x3.5"	4.778			Lbyy	0.65	0.65	N/A	N/A	Lateral
4	M8	.625"x3.5"	4.778			Lbyy	0.65	0.65	N/A	N/A	Lateral
5	M14	Main Horizontal	150			Lbyy	0.65	0.65	N/A	N/A	Lateral
6	M15	Main Horizontal	150			Lbyy	0.65	0.65	N/A	N/A	Lateral
7	M16	Std 2" Pipe	30			Lbyy	0.65	0.65	N/A	N/A	Lateral
8	M17	Std 2" Pipe	30			Lbyy	0.65	0.65	N/A	N/A	Lateral
9	M18	Std 2" Pipe	30			Lbyy	0.65	0.65	N/A	N/A	Lateral
10	M19	Std 2" Pipe	30			Lbyy	0.65	0.65	N/A	N/A	Lateral
11	M24	SR 5/8"	40	30	30	Lbyy	0.65	0.65	N/A	N/A	Lateral
12	M25	SR 5/8"	40	30	30	Lbyy	0.65	0.65	N/A	N/A	Lateral
13	M26	SR 5/8"	40	30	30	Lbyy	0.65	0.65	N/A	N/A	Lateral
14	M27	SR 5/8"	40	30	30	Lbyy	0.65	0.65	N/A	N/A	Lateral
15	M28	SR 3/4"	47.512			Lbyy	0.65	0.65	N/A	N/A	Lateral
16	M29	SR 3/4"	47.512			Lbyy	0.65	0.65	N/A	N/A	Lateral
17	M30	SR 3/4"	47.512			Lbyy	0.65	0.65	N/A	N/A	Lateral
18	M31	SR 3/4"	47.512			Lbyy	0.65	0.65	N/A	N/A	Lateral
19	MP5	Mount Pipe	120			Lbyy			N/A	N/A	Lateral
20	MP3	Mount Pipe	120			Lbyy			N/A	N/A	Lateral
21	MP1	Mount Pipe	120			Lbyy			N/A	N/A	Lateral
22	M40C	.625"x3.5"	15.268						N/A	N/A	Lateral
23	M41B	.625"x3.5"	15.268						N/A	N/A	Lateral
24	M36	Std 2" Pipe	174			Lbyy			N/A	N/A	Lateral
25	M37	Std 2" Pipe	174			Lbyy			N/A	N/A	Lateral
26	MP2	Mount Pipe	120			Lbyy			N/A	N/A	Lateral
27	MP4	Mount Pipe	120			Lbyy			N/A	N/A	Lateral

Node Loads and Enforced Displacements (BLC 34 : Maintenance Load Lm1)

	Node Label	L, D, M	Direction	Magnitude [(lb, lb-ft), (in, rad), (lb*s²/in, lb*s²*in)]
1	N18	L	Y	-500

Node Loads and Enforced Displacements (BLC 35 : Maintenance Load Lm2)

	Node Label	L, D, M	Direction	Magnitude [(lb, lb-ft), (in, rad), (lb*s²/in, lb*s²*in)]
1	N34	L	Y	-500

Node Loads and Enforced Displacements (BLC 36 : Maintenance Load Lm3)

	Node Label	L, D, M	Direction	Magnitude [(lb, lb-ft), (in, rad), (lb*s²/in, lb*s²*in)]
1	N15	L	Y	-500

Node Loads and Enforced Displacements (BLC 37 : Maintenance Load Lm4)

	Node Label	L, D, M	Direction	Magnitude [(lb, lb-ft), (in, rad), (lb*s²/in, lb*s²*in)]
1	N61	L	Y	-500

Node Loads and Enforced Displacements (BLC 38 : Maintenance Load Lm5)

	Node Label	L, D, M	Direction	Magnitude [(lb, lb-ft), (in, rad), (lb*s²/in, lb*s²*in)]
1	N73	L	Y	-500

Member Point Loads (BLC 1 : Self Weight)

	Member Label	Direction	Magnitude [lb, lb-ft]	Location [(in, %)]
1	MP2	Y	-75	6
2	MP2	Y	-75	90
3	MP5	Y	-57.3	6
4	MP5	Y	-57.3	90

Member Point Loads (BLC 2 : Wind Load AZI 0)

	Member Label	Direction	Magnitude [lb, lb-ft]	Location [(in, %)]
1	MP2	X	0	6
2	MP2	Z	-516.69	6
3	MP2	X	0	90
4	MP2	Z	-516.69	90
5	MP5	X	0	6
6	MP5	Z	-476.82	6
7	MP5	X	0	90
8	MP5	Z	-476.82	90

Member Point Loads (BLC 3 : Wind Load AZI 30)

	Member Label	Direction	Magnitude [lb, lb-ft]	Location [(in, %)]
1	MP2	X	-226.71	6
2	MP2	Z	-392.67	6
3	MP2	X	-226.71	90
4	MP2	Z	-392.67	90
5	MP5	X	-204.55	6
6	MP5	Z	-354.29	6
7	MP5	X	-204.55	90
8	MP5	Z	-354.29	90

Member Point Loads (BLC 4 : Wind Load AZI 60)

	Member Label	Direction	Magnitude [lb, lb-ft]	Location [(in, %)]
1	MP2	X	-283.1	6
2	MP2	Z	-163.45	6
3	MP2	X	-283.1	90
4	MP2	Z	-163.45	90
5	MP5	X	-237.01	6
6	MP5	Z	-136.84	6
7	MP5	X	-237.01	90
8	MP5	Z	-136.84	90

Member Point Loads (BLC 5 : Wind Load AZI 90)

	Member Label	Direction	Magnitude [lb, lb-ft]	Location [(in, %)]
1	MP2	X	-263.63	6
2	MP2	Z	0	6
3	MP2	X	-263.63	90
4	MP2	Z	0	90
5	MP5	X	-205.96	6
6	MP5	Z	0	6
7	MP5	X	-205.96	90
8	MP5	Z	0	90

Member Point Loads (BLC 6 : Wind Load AZI 120)

	Member Label	Direction	Magnitude [lb, lb-ft]	Location [(in, %)]
1	MP2	X	-283.1	6
2	MP2	Z	163.45	6
3	MP2	X	-283.1	90
4	MP2	Z	163.45	90
5	MP5	X	-237.01	6
6	MP5	Z	136.84	6
7	MP5	X	-237.01	90
8	MP5	Z	136.84	90

Member Point Loads (BLC 7 : Wind Load AZI 150)

	Member Label	Direction	Magnitude [lb, lb-ft]	Location [(in, %)]
1	MP2	X	-226.71	6
2	MP2	Z	392.67	6
3	MP2	X	-226.71	90
4	MP2	Z	392.67	90
5	MP5	X	-204.55	6
6	MP5	Z	354.29	6
7	MP5	X	-204.55	90
8	MP5	Z	354.29	90

Member Point Loads (BLC 8 : Wind Load AZI 180)

	Member Label	Direction	Magnitude [lb, lb-ft]	Location [(in, %)]
1	MP2	X	0	6
2	MP2	Z	516.69	6
3	MP2	X	0	90
4	MP2	Z	516.69	90
5	MP5	X	0	6

Member Point Loads (BLC 8 : Wind Load AZI 180) (Continued)

	Member Label	Direction	Magnitude [lb, lb-ft]	Location [(in, %)]
6	MP5	Z	476.82	6
7	MP5	X	0	90
8	MP5	Z	476.82	90

Member Point Loads (BLC 9 : Wind Load AZI 210)

	Member Label	Direction	Magnitude [lb, lb-ft]	Location [(in, %)]
1	MP2	X	226.71	6
2	MP2	Z	392.67	6
3	MP2	X	226.71	90
4	MP2	Z	392.67	90
5	MP5	X	204.55	6
6	MP5	Z	354.29	6
7	MP5	X	204.55	90
8	MP5	Z	354.29	90

Member Point Loads (BLC 10 : Wind Load AZI 240)

	Member Label	Direction	Magnitude [lb, lb-ft]	Location [(in, %)]
1	MP2	X	283.1	6
2	MP2	Z	163.45	6
3	MP2	X	283.1	90
4	MP2	Z	163.45	90
5	MP5	X	237.01	6
6	MP5	Z	136.84	6
7	MP5	X	237.01	90
8	MP5	Z	136.84	90

Member Point Loads (BLC 11 : Wind Load AZI 270)

	Member Label	Direction	Magnitude [lb, lb-ft]	Location [(in, %)]
1	MP2	X	263.63	6
2	MP2	Z	0	6
3	MP2	X	263.63	90
4	MP2	Z	0	90
5	MP5	X	205.96	6
6	MP5	Z	0	6
7	MP5	X	205.96	90
8	MP5	Z	0	90

Member Point Loads (BLC 12 : Wind Load AZI 300)

	Member Label	Direction	Magnitude [lb, lb-ft]	Location [(in, %)]
1	MP2	X	283.1	6
2	MP2	Z	-163.45	6
3	MP2	X	283.1	90
4	MP2	Z	-163.45	90
5	MP5	X	237.01	6
6	MP5	Z	-136.84	6
7	MP5	X	237.01	90
8	MP5	Z	-136.84	90

Member Point Loads (BLC 13 : Wind Load AZI 330)

	Member Label	Direction	Magnitude [lb, lb-ft]	Location [(in, %)]
1	MP2	X	226.71	6
2	MP2	Z	-392.67	6
3	MP2	X	226.71	90
4	MP2	Z	-392.67	90
5	MP5	X	204.55	6
6	MP5	Z	-354.29	6
7	MP5	X	204.55	90
8	MP5	Z	-354.29	90

Member Point Loads (BLC 16 : Ice Weight)

	Member Label	Direction	Magnitude [lb, lb-ft]	Location [(in, %)]
1	MP2	Y	-160.916	6
2	MP2	Y	-160.916	90
3	MP5	Y	-136.924	6
4	MP5	Y	-136.924	90

Member Point Loads (BLC 17 : Ice Wind Load AZI 0)

	Member Label	Direction	Magnitude [lb, lb-ft]	Location [(in, %)]
1	MP2	X	0	6
2	MP2	Z	-43.88	6
3	MP2	X	0	90
4	MP2	Z	-43.88	90
5	MP5	X	0	6
6	MP5	Z	-40.92	6
7	MP5	X	0	90
8	MP5	Z	-40.92	90

Member Point Loads (BLC 18 : Ice Wind Load AZI 30)

	Member Label	Direction	Magnitude [lb, lb-ft]	Location [(in, %)]
1	MP2	X	-19.72	6
2	MP2	Z	-34.16	6
3	MP2	X	-19.72	90
4	MP2	Z	-34.16	90
5	MP5	X	-18.29	6
6	MP5	Z	-31.67	6
7	MP5	X	-18.29	90
8	MP5	Z	-31.67	90

Member Point Loads (BLC 19 : Ice Wind Load AZI 60)

	Member Label	Direction	Magnitude [lb, lb-ft]	Location [(in, %)]
1	MP2	X	-26.47	6
2	MP2	Z	-15.28	6
3	MP2	X	-26.47	90
4	MP2	Z	-15.28	90
5	MP5	X	-24.13	6
6	MP5	Z	-13.93	6
7	MP5	X	-24.13	90
8	MP5	Z	-13.93	90

Member Point Loads (BLC 20 : Ice Wind Load AZI 90)

	Member Label	Direction	Magnitude [lb, lb-ft]	Location [(in, %)]
1	MP2	X	-26.13	6
2	MP2	Z	0	6
3	MP2	X	-26.13	90
4	MP2	Z	0	90
5	MP5	X	-23.51	6
6	MP5	Z	0	6
7	MP5	X	-23.51	90
8	MP5	Z	0	90

Member Point Loads (BLC 21 : Ice Wind Load AZI 120)

	Member Label	Direction	Magnitude [lb, lb-ft]	Location [(in, %)]
1	MP2	X	-26.47	6
2	MP2	Z	15.28	6
3	MP2	X	-26.47	90
4	MP2	Z	15.28	90
5	MP5	X	-24.13	6
6	MP5	Z	13.93	6
7	MP5	X	-24.13	90
8	MP5	Z	13.93	90

Member Point Loads (BLC 22 : Ice Wind Load AZI 150)

	Member Label	Direction	Magnitude [lb, lb-ft]	Location [(in, %)]
1	MP2	X	-19.72	6
2	MP2	Z	34.16	6
3	MP2	X	-19.72	90
4	MP2	Z	34.16	90
5	MP5	X	-18.29	6
6	MP5	Z	31.67	6
7	MP5	X	-18.29	90
8	MP5	Z	31.67	90

Member Point Loads (BLC 23 : Ice Wind Load AZI 180)

	Member Label	Direction	Magnitude [lb, lb-ft]	Location [(in, %)]
1	MP2	X	0	6
2	MP2	Z	43.88	6
3	MP2	X	0	90
4	MP2	Z	43.88	90
5	MP5	X	0	6
6	MP5	Z	40.92	6
7	MP5	X	0	90
8	MP5	Z	40.92	90

Member Point Loads (BLC 24 : Ice Wind Load AZI 210)

	Member Label	Direction	Magnitude [lb, lb-ft]	Location [(in, %)]
1	MP2	X	19.72	6
2	MP2	Z	34.16	6
3	MP2	X	19.72	90
4	MP2	Z	34.16	90
5	MP5	X	18.29	6

Member Point Loads (BLC 24 : Ice Wind Load AZI 210) (Continued)

	Member Label	Direction	Magnitude [lb, lb-ft]	Location [(in, %)]
6	MP5	Z	31.67	6
7	MP5	X	18.29	90
8	MP5	Z	31.67	90

Member Point Loads (BLC 25 : Ice Wind Load AZI 240)

	Member Label	Direction	Magnitude [lb, lb-ft]	Location [(in, %)]
1	MP2	X	26.47	6
2	MP2	Z	15.28	6
3	MP2	X	26.47	90
4	MP2	Z	15.28	90
5	MP5	X	24.13	6
6	MP5	Z	13.93	6
7	MP5	X	24.13	90
8	MP5	Z	13.93	90

Member Point Loads (BLC 26 : Ice Wind Load AZI 270)

	Member Label	Direction	Magnitude [lb, lb-ft]	Location [(in, %)]
1	MP2	X	26.13	6
2	MP2	Z	0	6
3	MP2	X	26.13	90
4	MP2	Z	0	90
5	MP5	X	23.51	6
6	MP5	Z	0	6
7	MP5	X	23.51	90
8	MP5	Z	0	90

Member Point Loads (BLC 27 : Ice Wind Load AZI 300)

	Member Label	Direction	Magnitude [lb, lb-ft]	Location [(in, %)]
1	MP2	X	26.47	6
2	MP2	Z	-15.28	6
3	MP2	X	26.47	90
4	MP2	Z	-15.28	90
5	MP5	X	24.13	6
6	MP5	Z	-13.93	6
7	MP5	X	24.13	90
8	MP5	Z	-13.93	90

Member Point Loads (BLC 28 : Ice Wind Load AZI 330)

	Member Label	Direction	Magnitude [lb, lb-ft]	Location [(in, %)]
1	MP2	X	19.72	6
2	MP2	Z	-34.16	6
3	MP2	X	19.72	90
4	MP2	Z	-34.16	90
5	MP5	X	18.29	6
6	MP5	Z	-31.67	6
7	MP5	X	18.29	90
8	MP5	Z	-31.67	90

Member Point Loads (BLC 31 : Seismic Load Z)

	Member Label	Direction	Magnitude [lb, lb-ft]	Location [(in, %)]
1	MP2	Z	-24.12	6
2	MP2	Z	-24.12	90
3	MP5	Z	-18.428	6
4	MP5	Z	-18.428	90

Member Point Loads (BLC 32 : Seismic Load X)

	Member Label	Direction	Magnitude [lb, lb-ft]	Location [(in, %)]
1	MP2	X	-24.12	6
2	MP2	X	-24.12	90
3	MP5	X	-18.428	6
4	MP5	X	-18.428	90

Member Distributed Loads (BLC 14 : Distr. Wind Load Z)

	Member Label	Direction	Start Magnitude [lb/ft, F, psf, lb-ft/in]	End Magnitude [lb/ft, F, psf, lb-ft/in]	Start Location [(in, %)]	End Location [(in, %)]
1	M32	SZ	0	0	0	%100
2	M2	SZ	-122.052	-122.052	0	%100
3	M4	SZ	-122.052	-122.052	0	%100
4	M6	SZ	-122.052	-122.052	0	%100
5	M8	SZ	-122.052	-122.052	0	%100
6	M14	SZ	-73.231	-73.231	0	%100
7	M15	SZ	-73.231	-73.231	0	%100
8	M16	SZ	-73.231	-73.231	0	%100
9	M17	SZ	-73.231	-73.231	0	%100
10	M18	SZ	-73.231	-73.231	0	%100
11	M19	SZ	-73.231	-73.231	0	%100
12	M24	SZ	-73.231	-73.231	0	%100
13	M25	SZ	-73.231	-73.231	0	%100
14	M26	SZ	-73.231	-73.231	0	%100
15	M27	SZ	-73.231	-73.231	0	%100
16	M28	SZ	-73.231	-73.231	0	%100
17	M29	SZ	-73.231	-73.231	0	%100
18	M30	SZ	-73.231	-73.231	0	%100
19	M31	SZ	-73.231	-73.231	0	%100
20	M39A	SZ	0	0	0	%100
21	MP5	SZ	-73.231	-73.231	0	%100
22	M40B	SZ	0	0	0	%100
23	M41A	SZ	0	0	0	%100
24	MP3	SZ	-73.231	-73.231	0	%100
25	M46	SZ	0	0	0	%100
26	M47	SZ	0	0	0	%100
27	MP1	SZ	-73.231	-73.231	0	%100
28	M40C	SZ	-122.052	-122.052	0	%100
29	M41B	SZ	-122.052	-122.052	0	%100
30	M36	SZ	-73.231	-73.231	0	%100
31	M37	SZ	-73.231	-73.231	0	%100
32	M38A	SZ	0	0	0	%100
33	M39	SZ	0	0	0	%100
34	M34	SZ	0	0	0	%100
35	M35	SZ	0	0	0	%100
36	MP2	SZ	-73.231	-73.231	0	%100
37	M40	SZ	0	0	0	%100
38	M41	SZ	0	0	0	%100

Member Distributed Loads (BLC 14 : Distr. Wind Load Z) (Continued)

	Member Label	Direction	Start Magnitude [lb/ft, F, psf, lb-ft/in]	End Magnitude [lb/ft, F, psf, lb-ft/in]	Start Location [(in, %)]	End Location [(in, %)]
39	MP4	SZ	-73.231	-73.231	0	%100

Member Distributed Loads (BLC 15 : Distr. Wind Load X)

	Member Label	Direction	Start Magnitude [lb/ft, F, psf, lb-ft/in]	End Magnitude [lb/ft, F, psf, lb-ft/in]	Start Location [(in, %)]	End Location [(in, %)]
1	M32	SX	0	0	0	%100
2	M2	SX	-122.052	-122.052	0	%100
3	M4	SX	-122.052	-122.052	0	%100
4	M6	SX	-122.052	-122.052	0	%100
5	M8	SX	-122.052	-122.052	0	%100
6	M14	SX	-73.231	-73.231	0	%100
7	M15	SX	-73.231	-73.231	0	%100
8	M16	SX	-73.231	-73.231	0	%100
9	M17	SX	-73.231	-73.231	0	%100
10	M18	SX	-73.231	-73.231	0	%100
11	M19	SX	-73.231	-73.231	0	%100
12	M24	SX	-73.231	-73.231	0	%100
13	M25	SX	-73.231	-73.231	0	%100
14	M26	SX	-73.231	-73.231	0	%100
15	M27	SX	-73.231	-73.231	0	%100
16	M28	SX	-73.231	-73.231	0	%100
17	M29	SX	-73.231	-73.231	0	%100
18	M30	SX	-73.231	-73.231	0	%100
19	M31	SX	-73.231	-73.231	0	%100
20	M39A	SX	0	0	0	%100
21	MP5	SX	-73.231	-73.231	0	%100
22	M40B	SX	0	0	0	%100
23	M41A	SX	0	0	0	%100
24	MP3	SX	-73.231	-73.231	0	%100
25	M46	SX	0	0	0	%100
26	M47	SX	0	0	0	%100
27	MP1	SX	-73.231	-73.231	0	%100
28	M40C	SX	-122.052	-122.052	0	%100
29	M41B	SX	-122.052	-122.052	0	%100
30	M36	SX	-73.231	-73.231	0	%100
31	M37	SX	-73.231	-73.231	0	%100
32	M38A	SX	0	0	0	%100
33	M39	SX	0	0	0	%100
34	M34	SX	0	0	0	%100
35	M35	SX	0	0	0	%100
36	MP2	SX	-73.231	-73.231	0	%100
37	M40	SX	0	0	0	%100
38	M41	SX	0	0	0	%100
39	MP4	SX	-73.231	-73.231	0	%100

Member Distributed Loads (BLC 16 : Ice Weight)

	Member Label	Direction	Start Magnitude [lb/ft, F, psf, lb-ft/in]	End Magnitude [lb/ft, F, psf, lb-ft/in]	Start Location [(in, %)]	End Location [(in, %)]
1	M32	Y	-2.319	-2.319	0	%100
2	M2	Y	-8.304	-8.304	0	%100
3	M4	Y	-8.304	-8.304	0	%100
4	M6	Y	-8.304	-8.304	0	%100
5	M8	Y	-8.304	-8.304	0	%100
6	M14	Y	-7.158	-7.158	0	%100
7	M15	Y	-7.158	-7.158	0	%100

Member Distributed Loads (BLC 16 : Ice Weight) (Continued)

	Member Label	Direction	Start Magnitude [lb/ft, F, psf, lb-ft/in]	End Magnitude [lb/ft, F, psf, lb-ft/in]	Start Location [(in, %)]	End Location [(in, %)]
8	M16	Y	-6.317	-6.317	0	%100
9	M17	Y	-6.317	-6.317	0	%100
10	M18	Y	-6.317	-6.317	0	%100
11	M19	Y	-6.317	-6.317	0	%100
12	M24	Y	-3.371	-3.371	0	%100
13	M25	Y	-3.371	-3.371	0	%100
14	M26	Y	-3.371	-3.371	0	%100
15	M27	Y	-3.371	-3.371	0	%100
16	M28	Y	-3.582	-3.582	0	%100
17	M29	Y	-3.582	-3.582	0	%100
18	M30	Y	-3.582	-3.582	0	%100
19	M31	Y	-3.582	-3.582	0	%100
20	M39A	Y	-2.319	-2.319	0	%100
21	MP5	Y	-7.158	-7.158	0	%100
22	M40B	Y	-2.319	-2.319	0	%100
23	M41A	Y	-2.319	-2.319	0	%100
24	MP3	Y	-7.158	-7.158	0	%100
25	M46	Y	-2.319	-2.319	0	%100
26	M47	Y	-2.319	-2.319	0	%100
27	MP1	Y	-7.158	-7.158	0	%100
28	M40C	Y	-8.304	-8.304	0	%100
29	M41B	Y	-8.304	-8.304	0	%100
30	M36	Y	-6.317	-6.317	0	%100
31	M37	Y	-6.317	-6.317	0	%100
32	M38A	Y	-2.319	-2.319	0	%100
33	M39	Y	-2.319	-2.319	0	%100
34	M34	Y	-2.319	-2.319	0	%100
35	M35	Y	-2.319	-2.319	0	%100
36	MP2	Y	-7.158	-7.158	0	%100
37	M40	Y	-2.319	-2.319	0	%100
38	M41	Y	-2.319	-2.319	0	%100
39	MP4	Y	-7.158	-7.158	0	%100

Member Distributed Loads (BLC 29 : Distr. Ice Wind Load Z)

	Member Label	Direction	Start Magnitude [lb/ft, F, psf, lb-ft/in]	End Magnitude [lb/ft, F, psf, lb-ft/in]	Start Location [(in, %)]	End Location [(in, %)]
1	M32	SZ	0	0	0	%100
2	M2	SZ	-22.948	-22.948	0	%100
3	M4	SZ	-22.948	-22.948	0	%100
4	M6	SZ	-22.948	-22.948	0	%100
5	M8	SZ	-22.948	-22.948	0	%100
6	M14	SZ	-25.319	-25.319	0	%100
7	M15	SZ	-25.319	-25.319	0	%100
8	M16	SZ	-27.928	-27.928	0	%100
9	M17	SZ	-27.928	-27.928	0	%100
10	M18	SZ	-27.928	-27.928	0	%100
11	M19	SZ	-27.928	-27.928	0	%100
12	M24	SZ	-69.927	-69.927	0	%100
13	M25	SZ	-69.927	-69.927	0	%100
14	M26	SZ	-69.927	-69.927	0	%100
15	M27	SZ	-69.927	-69.927	0	%100
16	M28	SZ	-60.427	-60.427	0	%100
17	M29	SZ	-60.427	-60.427	0	%100
18	M30	SZ	-60.427	-60.427	0	%100
19	M31	SZ	-60.427	-60.427	0	%100
20	M39A	SZ	0	0	0	%100

Member Distributed Loads (BLC 29 : Distr. Ice Wind Load Z) (Continued)

	Member Label	Direction	Start Magnitude [lb/ft, F, psf, lb-ft/in]	End Magnitude [lb/ft, F, psf, lb-ft/in]	Start Location [(in, %)]	End Location [(in, %)]
21	MP5	SZ	-25.319	-25.319	0	%100
22	M40B	SZ	0	0	0	%100
23	M41A	SZ	0	0	0	%100
24	MP3	SZ	-25.319	-25.319	0	%100
25	M46	SZ	0	0	0	%100
26	M47	SZ	0	0	0	%100
27	MP1	SZ	-25.319	-25.319	0	%100
28	M40C	SZ	-22.948	-22.948	0	%100
29	M41B	SZ	-22.948	-22.948	0	%100
30	M36	SZ	-27.928	-27.928	0	%100
31	M37	SZ	-27.928	-27.928	0	%100
32	M38A	SZ	0	0	0	%100
33	M39	SZ	0	0	0	%100
34	M34	SZ	0	0	0	%100
35	M35	SZ	0	0	0	%100
36	MP2	SZ	-25.319	-25.319	0	%100
37	M40	SZ	0	0	0	%100
38	M41	SZ	0	0	0	%100
39	MP4	SZ	-25.319	-25.319	0	%100

Member Distributed Loads (BLC 30 : Distr. Ice Wind Load X)

	Member Label	Direction	Start Magnitude [lb/ft, F, psf, lb-ft/in]	End Magnitude [lb/ft, F, psf, lb-ft/in]	Start Location [(in, %)]	End Location [(in, %)]
1	M32	SX	0	0	0	%100
2	M2	SX	-22.948	-22.948	0	%100
3	M4	SX	-22.948	-22.948	0	%100
4	M6	SX	-22.948	-22.948	0	%100
5	M8	SX	-22.948	-22.948	0	%100
6	M14	SX	-25.319	-25.319	0	%100
7	M15	SX	-25.319	-25.319	0	%100
8	M16	SX	-27.928	-27.928	0	%100
9	M17	SX	-27.928	-27.928	0	%100
10	M18	SX	-27.928	-27.928	0	%100
11	M19	SX	-27.928	-27.928	0	%100
12	M24	SX	-69.927	-69.927	0	%100
13	M25	SX	-69.927	-69.927	0	%100
14	M26	SX	-69.927	-69.927	0	%100
15	M27	SX	-69.927	-69.927	0	%100
16	M28	SX	-60.427	-60.427	0	%100
17	M29	SX	-60.427	-60.427	0	%100
18	M30	SX	-60.427	-60.427	0	%100
19	M31	SX	-60.427	-60.427	0	%100
20	M39A	SX	0	0	0	%100
21	MP5	SX	-25.319	-25.319	0	%100
22	M40B	SX	0	0	0	%100
23	M41A	SX	0	0	0	%100
24	MP3	SX	-25.319	-25.319	0	%100
25	M46	SX	0	0	0	%100
26	M47	SX	0	0	0	%100
27	MP1	SX	-25.319	-25.319	0	%100
28	M40C	SX	-22.948	-22.948	0	%100
29	M41B	SX	-22.948	-22.948	0	%100
30	M36	SX	-27.928	-27.928	0	%100
31	M37	SX	-27.928	-27.928	0	%100
32	M38A	SX	0	0	0	%100
33	M39	SX	0	0	0	%100

Member Distributed Loads (BLC 30 : Distr. Ice Wind Load X) (Continued)

	Member Label	Direction	Start Magnitude [lb/ft, F, psf, lb-ft/in]	End Magnitude [lb/ft, F, psf, lb-ft/in]	Start Location [(in, %)]	End Location [(in, %)]
34	M34	SX	0	0	0	%100
35	M35	SX	0	0	0	%100
36	MP2	SX	-25.319	-25.319	0	%100
37	M40	SX	0	0	0	%100
38	M41	SX	0	0	0	%100
39	MP4	SX	-25.319	-25.319	0	%100

Basic Load Cases

	BLC Description	Category	X Gravity	Y Gravity	Z Gravity	Nodal	Point	Distributed
1	Self Weight	DL		-1			4	
2	Wind Load AZI 0	WLZ					8	
3	Wind Load AZI 30	None					8	
4	Wind Load AZI 60	None					8	
5	Wind Load AZI 90	WLX					8	
6	Wind Load AZI 120	None					8	
7	Wind Load AZI 150	None					8	
8	Wind Load AZI 180	None					8	
9	Wind Load AZI 210	None					8	
10	Wind Load AZI 240	None					8	
11	Wind Load AZI 270	None					8	
12	Wind Load AZI 300	None					8	
13	Wind Load AZI 330	None					8	
14	Distr. Wind Load Z	WLZ						39
15	Distr. Wind Load X	WLX						39
16	Ice Weight	OL1					4	39
17	Ice Wind Load AZI 0	OL2					8	
18	Ice Wind Load AZI 30	None					8	
19	Ice Wind Load AZI 60	None					8	
20	Ice Wind Load AZI 90	OL3					8	
21	Ice Wind Load AZI 120	None					8	
22	Ice Wind Load AZI 150	None					8	
23	Ice Wind Load AZI 180	None					8	
24	Ice Wind Load AZI 210	None					8	
25	Ice Wind Load AZI 240	None					8	
26	Ice Wind Load AZI 270	None					8	
27	Ice Wind Load AZI 300	None					8	
28	Ice Wind Load AZI 330	None					8	
29	Distr. Ice Wind Load Z	OL2						39
30	Distr. Ice Wind Load X	OL3						39
31	Seismic Load Z	ELZ			-0.322		4	
32	Seismic Load X	ELX	-0.322				4	
33	Service Live Loads	LL						
34	Maintenance Load Lm1	LL				1		
35	Maintenance Load Lm2	LL				1		
36	Maintenance Load Lm3	LL				1		
37	Maintenance Load Lm4	LL				1		
38	Maintenance Load Lm5	LL				1		

Load Combinations

	Description	Solve	P-Delta	BLC	Factor	BLC	Factor	BLC	Factor	BLC	Factor	BLC	Factor
1	1.4DL	Yes	Y	1	1.4								
2	1.2DL + 1WL AZI 0	Yes	Y	1	1.2	2	1	14	1	15			
3	1.2DL + 1WL AZI 30	Yes	Y	1	1.2	3	1	14	0.866	15	0.5		

Load Combinations (Continued)

	Description	Solve	P-Delta	BLC	Factor	BLC	Factor	BLC	Factor	BLC	Factor	BLC	Factor
4	1.2DL + 1WL AZI 60	Yes	Y	1	1.2	4	1	14	0.5	15	0.866		
5	1.2DL + 1WL AZI 90	Yes	Y	1	1.2	5	1	14		15	1		
6	1.2DL + 1WL AZI 120	Yes	Y	1	1.2	6	1	14	-0.5	15	0.866		
7	1.2DL + 1WL AZI 150	Yes	Y	1	1.2	7	1	14	-0.866	15	0.5		
8	1.2DL + 1WL AZI 180	Yes	Y	1	1.2	8	1	14	-1	15			
9	1.2DL + 1WL AZI 210	Yes	Y	1	1.2	9	1	14	-0.866	15	-0.5		
10	1.2DL + 1WL AZI 240	Yes	Y	1	1.2	10	1	14	-0.5	15	-0.866		
11	1.2DL + 1WL AZI 270	Yes	Y	1	1.2	11	1	14		15	-1		
12	1.2DL + 1WL AZI 300	Yes	Y	1	1.2	12	1	14	0.5	15	-0.866		
13	1.2DL + 1WL AZI 330	Yes	Y	1	1.2	13	1	14	0.866	15	-0.5		
14	0.9DL + 1WL AZI 0	Yes	Y	1	0.9	2	1	14	1	15			
15	0.9DL + 1WL AZI 30	Yes	Y	1	0.9	3	1	14	0.866	15	0.5		
16	0.9DL + 1WL AZI 60	Yes	Y	1	0.9	4	1	14	0.5	15	0.866		
17	0.9DL + 1WL AZI 90	Yes	Y	1	0.9	5	1	14		15	1		
18	0.9DL + 1WL AZI 120	Yes	Y	1	0.9	6	1	14	-0.5	15	0.866		
19	0.9DL + 1WL AZI 150	Yes	Y	1	0.9	7	1	14	-0.866	15	0.5		
20	0.9DL + 1WL AZI 180	Yes	Y	1	0.9	8	1	14	-1	15			
21	0.9DL + 1WL AZI 210	Yes	Y	1	0.9	9	1	14	-0.866	15	-0.5		
22	0.9DL + 1WL AZI 240	Yes	Y	1	0.9	10	1	14	-0.5	15	-0.866		
23	0.9DL + 1WL AZI 270	Yes	Y	1	0.9	11	1	14		15	-1		
24	0.9DL + 1WL AZI 300	Yes	Y	1	0.9	12	1	14	0.5	15	-0.866		
25	0.9DL + 1WL AZI 330	Yes	Y	1	0.9	13	1	14	0.866	15	-0.5		
26	1.2D + 1.0Di	Yes	Y	1	1.2	16	1						
27	1.2D + 1.0Di +1.0Wi AZI 0	Yes	Y	1	1.2	16	1	17	1	29	1	30	
28	1.2D + 1.0Di +1.0Wi AZI 30	Yes	Y	1	1.2	16	1	18	1	29	0.866	30	0.5
29	1.2D + 1.0Di +1.0Wi AZI 60	Yes	Y	1	1.2	16	1	19	1	29	0.5	30	0.866
30	1.2D + 1.0Di +1.0Wi AZI 90	Yes	Y	1	1.2	16	1	20	1	29		30	1
31	1.2D + 1.0Di +1.0Wi AZI 120	Yes	Y	1	1.2	16	1	21	1	29	-0.5	30	0.866
32	1.2D + 1.0Di +1.0Wi AZI 150	Yes	Y	1	1.2	16	1	22	1	29	-0.866	30	0.5
33	1.2D + 1.0Di +1.0Wi AZI 180	Yes	Y	1	1.2	16	1	23	1	29	-1	30	
34	1.2D + 1.0Di +1.0Wi AZI 210	Yes	Y	1	1.2	16	1	24	1	29	-0.866	30	-0.5
35	1.2D + 1.0Di +1.0Wi AZI 240	Yes	Y	1	1.2	16	1	25	1	29	-0.5	30	-0.866
36	1.2D + 1.0Di +1.0Wi AZI 270	Yes	Y	1	1.2	16	1	26	1	29		30	-1
37	1.2D + 1.0Di +1.0Wi AZI 300	Yes	Y	1	1.2	16	1	27	1	29	0.5	30	-0.866
38	1.2D + 1.0Di +1.0Wi AZI 330	Yes	Y	1	1.2	16	1	28	1	29	0.866	30	-0.5
39	(1.2 + 0.2Sds)DL + 1.0E AZI 0	Yes	Y	1	1.243	31	1	32					
40	(1.2 + 0.2Sds)DL + 1.0E AZI 30	Yes	Y	1	1.243	31	0.866	32	0.5				
41	(1.2 + 0.2Sds)DL + 1.0E AZI 60	Yes	Y	1	1.243	31	0.5	32	0.866				
42	(1.2 + 0.2Sds)DL + 1.0E AZI 90	Yes	Y	1	1.243	31		32	1				
43	(1.2 + 0.2Sds)DL + 1.0E AZI 120	Yes	Y	1	1.243	31	-0.5	32	0.866				
44	(1.2 + 0.2Sds)DL + 1.0E AZI 150	Yes	Y	1	1.243	31	-0.866	32	0.5				
45	(1.2 + 0.2Sds)DL + 1.0E AZI 180	Yes	Y	1	1.243	31	-1	32					
46	(1.2 + 0.2Sds)DL + 1.0E AZI 210	Yes	Y	1	1.243	31	-0.866	32	-0.5				
47	(1.2 + 0.2Sds)DL + 1.0E AZI 240	Yes	Y	1	1.243	31	-0.5	32	-0.866				
48	(1.2 + 0.2Sds)DL + 1.0E AZI 270	Yes	Y	1	1.243	31		32	-1				
49	(1.2 + 0.2Sds)DL + 1.0E AZI 300	Yes	Y	1	1.243	31	0.5	32	-0.866				
50	(1.2 + 0.2Sds)DL + 1.0E AZI 330	Yes	Y	1	1.243	31	0.866	32	-0.5				
51	(0.9 - 0.2Sds)DL + 1.0E AZI 0	Yes	Y	1	0.857	31	1	32					
52	(0.9 - 0.2Sds)DL + 1.0E AZI 30	Yes	Y	1	0.857	31	0.866	32	0.5				
53	(0.9 - 0.2Sds)DL + 1.0E AZI 60	Yes	Y	1	0.857	31	0.5	32	0.866				
54	(0.9 - 0.2Sds)DL + 1.0E AZI 90	Yes	Y	1	0.857	31		32	1				
55	(0.9 - 0.2Sds)DL + 1.0E AZI 120	Yes	Y	1	0.857	31	-0.5	32	0.866				
56	(0.9 - 0.2Sds)DL + 1.0E AZI 150	Yes	Y	1	0.857	31	-0.866	32	0.5				
57	(0.9 - 0.2Sds)DL + 1.0E AZI 180	Yes	Y	1	0.857	31	-1	32					
58	(0.9 - 0.2Sds)DL + 1.0E AZI 210	Yes	Y	1	0.857	31	-0.866	32	-0.5				

Load Combinations (Continued)

	Description	Solve	P-Delta	BLC	Factor	BLC	Factor	BLC	Factor	BLC	Factor	BLC	Factor
59	(0.9 - 0.2Sds)DL + 1.0E AZI 240	Yes	Y	1	0.857	31	-0.5	32	-0.866				
60	(0.9 - 0.2Sds)DL + 1.0E AZI 270	Yes	Y	1	0.857	31		32	-1				
61	(0.9 - 0.2Sds)DL + 1.0E AZI 300	Yes	Y	1	0.857	31	0.5	32	-0.866				
62	(0.9 - 0.2Sds)DL + 1.0E AZI 330	Yes	Y	1	0.857	31	0.866	32	-0.5				
63	1.0DL + 1.5LL + 1.0SWL (60 mph) AZI 0	Yes	Y	1	1	2	0.254	14	0.254	15		33	1.5
64	1.0DL + 1.5LL + 1.0SWL (60 mph) AZI 30	Yes	Y	1	1	3	0.254	14	0.22	15	0.127	33	1.5
65	1.0DL + 1.5LL + 1.0SWL (60 mph) AZI 60	Yes	Y	1	1	4	0.254	14	0.127	15	0.22	33	1.5
66	1.0DL + 1.5LL + 1.0SWL (60 mph) AZI 90	Yes	Y	1	1	5	0.254	14		15	0.254	33	1.5
67	1.0DL + 1.5LL + 1.0SWL (60 mph) AZI 120	Yes	Y	1	1	6	0.254	14	-0.127	15	0.22	33	1.5
68	1.0DL + 1.5LL + 1.0SWL (60 mph) AZI 150	Yes	Y	1	1	7	0.254	14	-0.22	15	0.127	33	1.5
69	1.0DL + 1.5LL + 1.0SWL (60 mph) AZI 180	Yes	Y	1	1	8	0.254	14	-0.254	15		33	1.5
70	1.0DL + 1.5LL + 1.0SWL (60 mph) AZI 210	Yes	Y	1	1	9	0.254	14	-0.22	15	-0.127	33	1.5
71	1.0DL + 1.5LL + 1.0SWL (60 mph) AZI 240	Yes	Y	1	1	10	0.254	14	-0.127	15	-0.22	33	1.5
72	1.0DL + 1.5LL + 1.0SWL (60 mph) AZI 270	Yes	Y	1	1	11	0.254	14		15	-0.254	33	1.5
73	1.0DL + 1.5LL + 1.0SWL (60 mph) AZI 300	Yes	Y	1	1	12	0.254	14	0.127	15	-0.22	33	1.5
74	1.0DL + 1.5LL + 1.0SWL (60 mph) AZI 330	Yes	Y	1	1	13	0.254	14	0.22	15	-0.127	33	1.5
75	1.2DL + 1.5LL	Yes	Y	1	1.2	33	1.5						
76	1.2DL + 1.5LM-MP1 + 1SWL (30 mph) AZI 0	Yes	Y	1	1.2	34	1.5	2	0.064	14	0.064	15	
77	1.2DL + 1.5LM-MP1 + 1SWL (30 mph) AZI 30	Yes	Y	1	1.2	34	1.5	3	0.064	14	0.055	15	0.032
78	1.2DL + 1.5LM-MP1 + 1SWL (30 mph) AZI 60	Yes	Y	1	1.2	34	1.5	4	0.064	14	0.032	15	0.055
79	1.2DL + 1.5LM-MP1 + 1SWL (30 mph) AZI 90	Yes	Y	1	1.2	34	1.5	5	0.064	14		15	0.064
80	1.2DL + 1.5LM-MP1 + 1SWL (30 mph) AZI 120	Yes	Y	1	1.2	34	1.5	6	0.064	14	-0.032	15	0.055
81	1.2DL + 1.5LM-MP1 + 1SWL (30 mph) AZI 150	Yes	Y	1	1.2	34	1.5	7	0.064	14	-0.055	15	0.032
82	1.2DL + 1.5LM-MP1 + 1SWL (30 mph) AZI 180	Yes	Y	1	1.2	34	1.5	8	0.064	14	-0.064	15	
83	1.2DL + 1.5LM-MP1 + 1SWL (30 mph) AZI 210	Yes	Y	1	1.2	34	1.5	9	0.064	14	-0.055	15	-0.032
84	1.2DL + 1.5LM-MP1 + 1SWL (30 mph) AZI 240	Yes	Y	1	1.2	34	1.5	10	0.064	14	-0.032	15	-0.055
85	1.2DL + 1.5LM-MP1 + 1SWL (30 mph) AZI 270	Yes	Y	1	1.2	34	1.5	11	0.064	14		15	-0.064
86	1.2DL + 1.5LM-MP1 + 1SWL (30 mph) AZI 300	Yes	Y	1	1.2	34	1.5	12	0.064	14	0.032	15	-0.055
87	1.2DL + 1.5LM-MP1 + 1SWL (30 mph) AZI 330	Yes	Y	1	1.2	34	1.5	13	0.064	14	0.055	15	-0.032
88	1.2DL + 1.5LM-MP2 + 1SWL (30 mph) AZI 0	Yes	Y	1	1.2	35	1.5	2	0.064	14	0.064	15	
89	1.2DL + 1.5LM-MP2 + 1SWL (30 mph) AZI 30	Yes	Y	1	1.2	35	1.5	3	0.064	14	0.055	15	0.032
90	1.2DL + 1.5LM-MP2 + 1SWL (30 mph) AZI 60	Yes	Y	1	1.2	35	1.5	4	0.064	14	0.032	15	0.055
91	1.2DL + 1.5LM-MP2 + 1SWL (30 mph) AZI 90	Yes	Y	1	1.2	35	1.5	5	0.064	14		15	0.064
92	1.2DL + 1.5LM-MP2 + 1SWL (30 mph) AZI 120	Yes	Y	1	1.2	35	1.5	6	0.064	14	-0.032	15	0.055
93	1.2DL + 1.5LM-MP2 + 1SWL (30 mph) AZI 150	Yes	Y	1	1.2	35	1.5	7	0.064	14	-0.055	15	0.032
94	1.2DL + 1.5LM-MP2 + 1SWL (30 mph) AZI 180	Yes	Y	1	1.2	35	1.5	8	0.064	14	-0.064	15	
95	1.2DL + 1.5LM-MP2 + 1SWL (30 mph) AZI 210	Yes	Y	1	1.2	35	1.5	9	0.064	14	-0.055	15	-0.032
96	1.2DL + 1.5LM-MP2 + 1SWL (30 mph) AZI 240	Yes	Y	1	1.2	35	1.5	10	0.064	14	-0.032	15	-0.055
97	1.2DL + 1.5LM-MP2 + 1SWL (30 mph) AZI 270	Yes	Y	1	1.2	35	1.5	11	0.064	14		15	-0.064
98	1.2DL + 1.5LM-MP2 + 1SWL (30 mph) AZI 300	Yes	Y	1	1.2	35	1.5	12	0.064	14	0.032	15	-0.055
99	1.2DL + 1.5LM-MP2 + 1SWL (30 mph) AZI 330	Yes	Y	1	1.2	35	1.5	13	0.064	14	0.055	15	-0.032
100	1.2DL + 1.5LM-MP3 + 1SWL (30 mph) AZI 0	Yes	Y	1	1.2	36	1.5	2	0.064	14	0.064	15	
101	1.2DL + 1.5LM-MP3 + 1SWL (30 mph) AZI 30	Yes	Y	1	1.2	36	1.5	3	0.064	14	0.055	15	0.032
102	1.2DL + 1.5LM-MP3 + 1SWL (30 mph) AZI 60	Yes	Y	1	1.2	36	1.5	4	0.064	14	0.032	15	0.055
103	1.2DL + 1.5LM-MP3 + 1SWL (30 mph) AZI 90	Yes	Y	1	1.2	36	1.5	5	0.064	14		15	0.064
104	1.2DL + 1.5LM-MP3 + 1SWL (30 mph) AZI 120	Yes	Y	1	1.2	36	1.5	6	0.064	14	-0.032	15	0.055
105	1.2DL + 1.5LM-MP3 + 1SWL (30 mph) AZI 150	Yes	Y	1	1.2	36	1.5	7	0.064	14	-0.055	15	0.032
106	1.2DL + 1.5LM-MP3 + 1SWL (30 mph) AZI 180	Yes	Y	1	1.2	36	1.5	8	0.064	14	-0.064	15	
107	1.2DL + 1.5LM-MP3 + 1SWL (30 mph) AZI 210	Yes	Y	1	1.2	36	1.5	9	0.064	14	-0.055	15	-0.032
108	1.2DL + 1.5LM-MP3 + 1SWL (30 mph) AZI 240	Yes	Y	1	1.2	36	1.5	10	0.064	14	-0.032	15	-0.055
109	1.2DL + 1.5LM-MP3 + 1SWL (30 mph) AZI 270	Yes	Y	1	1.2	36	1.5	11	0.064	14		15	-0.064
110	1.2DL + 1.5LM-MP3 + 1SWL (30 mph) AZI 300	Yes	Y	1	1.2	36	1.5	12	0.064	14	0.032	15	-0.055
111	1.2DL + 1.5LM-MP3 + 1SWL (30 mph) AZI 330	Yes	Y	1	1.2	36	1.5	13	0.064	14	0.055	15	-0.032
112	1.2DL + 1.5LM-MP4 + 1SWL (30 mph) AZI 0	Yes	Y	1	1.2	37	1.5	2	0.064	14	0.064	15	
113	1.2DL + 1.5LM-MP4 + 1SWL (30 mph) AZI 30	Yes	Y	1	1.2	37	1.5	3	0.064	14	0.055	15	0.032

Load Combinations (Continued)

	Description	Solve	P-Delta	BLC	Factor	BLC	Factor	BLC	Factor	BLC	Factor	BLC	Factor
114	1.2DL + 1.5LM-MP4 + 1SWL (30 mph) AZI 60	Yes	Y	1	1.2	37	1.5	4	0.064	14	0.032	15	0.055
115	1.2DL + 1.5LM-MP4 + 1SWL (30 mph) AZI 90	Yes	Y	1	1.2	37	1.5	5	0.064	14		15	0.064
116	1.2DL + 1.5LM-MP4 + 1SWL (30 mph) AZI 120	Yes	Y	1	1.2	37	1.5	6	0.064	14	-0.032	15	0.055
117	1.2DL + 1.5LM-MP4 + 1SWL (30 mph) AZI 150	Yes	Y	1	1.2	37	1.5	7	0.064	14	-0.055	15	0.032
118	1.2DL + 1.5LM-MP4 + 1SWL (30 mph) AZI 180	Yes	Y	1	1.2	37	1.5	8	0.064	14	-0.064	15	
119	1.2DL + 1.5LM-MP4 + 1SWL (30 mph) AZI 210	Yes	Y	1	1.2	37	1.5	9	0.064	14	-0.055	15	-0.032
120	1.2DL + 1.5LM-MP4 + 1SWL (30 mph) AZI 240	Yes	Y	1	1.2	37	1.5	10	0.064	14	-0.032	15	-0.055
121	1.2DL + 1.5LM-MP4 + 1SWL (30 mph) AZI 270	Yes	Y	1	1.2	37	1.5	11	0.064	14		15	-0.064
122	1.2DL + 1.5LM-MP4 + 1SWL (30 mph) AZI 300	Yes	Y	1	1.2	37	1.5	12	0.064	14	0.032	15	-0.055
123	1.2DL + 1.5LM-MP4 + 1SWL (30 mph) AZI 330	Yes	Y	1	1.2	37	1.5	13	0.064	14	0.055	15	-0.032
124	1.2DL + 1.5LM-MP5 + 1SWL (30 mph) AZI 0	Yes	Y	1	1.2	38	1.5	2	0.064	14	0.064	15	
125	1.2DL + 1.5LM-MP5 + 1SWL (30 mph) AZI 30	Yes	Y	1	1.2	38	1.5	3	0.064	14	0.055	15	0.032
126	1.2DL + 1.5LM-MP5 + 1SWL (30 mph) AZI 60	Yes	Y	1	1.2	38	1.5	4	0.064	14	0.032	15	0.055
127	1.2DL + 1.5LM-MP5 + 1SWL (30 mph) AZI 90	Yes	Y	1	1.2	38	1.5	5	0.064	14		15	0.064
128	1.2DL + 1.5LM-MP5 + 1SWL (30 mph) AZI 120	Yes	Y	1	1.2	38	1.5	6	0.064	14	-0.032	15	0.055
129	1.2DL + 1.5LM-MP5 + 1SWL (30 mph) AZI 150	Yes	Y	1	1.2	38	1.5	7	0.064	14	-0.055	15	0.032
130	1.2DL + 1.5LM-MP5 + 1SWL (30 mph) AZI 180	Yes	Y	1	1.2	38	1.5	8	0.064	14	-0.064	15	
131	1.2DL + 1.5LM-MP5 + 1SWL (30 mph) AZI 210	Yes	Y	1	1.2	38	1.5	9	0.064	14	-0.055	15	-0.032
132	1.2DL + 1.5LM-MP5 + 1SWL (30 mph) AZI 240	Yes	Y	1	1.2	38	1.5	10	0.064	14	-0.032	15	-0.055
133	1.2DL + 1.5LM-MP5 + 1SWL (30 mph) AZI 270	Yes	Y	1	1.2	38	1.5	11	0.064	14		15	-0.064
134	1.2DL + 1.5LM-MP5 + 1SWL (30 mph) AZI 300	Yes	Y	1	1.2	38	1.5	12	0.064	14	0.032	15	-0.055
135	1.2DL + 1.5LM-MP5 + 1SWL (30 mph) AZI 330	Yes	Y	1	1.2	38	1.5	13	0.064	14	0.055	15	-0.032

Envelope Node Reactions

	Node Label		X [lb]	LC	Y [lb]	LC	Z [lb]	LC	MX [lb-ft]	LC	MY [lb-ft]	LC	MZ [lb-ft]	LC
1	N1A	max	1733.257	4	1301.797	27	1842.48	25	-147.533	21	0	135	191.536	111
2		min	-1500.911	22	331.342	21	-3064	7	-593.574	27	0	1	-240.258	81
3	N1B	max	1253.894	103	1159.378	33	2142.095	38	-125.394	15	0	135	168.903	110
4		min	-1511.57	85	289.725	15	-875.74	18	-534.69	33	0	1	-212.137	80
5	N9A	max	178.255	21	76.045	36	1599.952	4	0	135	0	135	0	135
6		min	-190.309	3	21.55	54	-1522.356	22	0	1	0	1	0	1
7	N68	max	109.354	9	76.139	36	1069.24	16	0	135	0	135	0	135
8		min	-95.442	15	21.559	54	-1155.476	10	0	1	0	1	0	1
9	Totals:	max	2394.574	5	2578.165	34	3591.566	2						
10		min	-2394.574	23	753.728	53	-3591.565	20						

Envelope AISC 15TH (360-16): LRFD Member Steel Code Checks

	Member	Shape	Code Check	Loc[in]	LC	Shear Check	Loc[in]	Dir	LC	phi*Pnc [lb]	phi*Pnt [lb]	phi*Mn y-y [lb-ft]	phi*Mn z-z [lb-ft]	Cb	Eqn
1	M14	PIPE_2.5	0.612	43.421	8	0.212	106.579		2	29547.045	50715	3596.25	3596.25	1	H1-1b
2	M40C	.625X3.5"	0.528	7.634	80	0.1	7.634	y	80	48614.526	70875	922.852	5167.97	1.524	H1-1b
3	M36	PIPE_2.0	0.508	87	4	0.011	174		5	4678.532	32130	1871.625	1871.625	1	H1-1a
4	M41B	.625X3.5"	0.489	7.634	85	0.092	11.652	y	86	48614.526	70875	922.852	5167.97	1.516	H1-1b
5	M8	.625X3.5"	0.483	0	2	0.074	0	y	8	69777.888	70875	922.852	5167.97	1.259	H1-1b
6	M15	PIPE_2.5	0.473	43.421	2	0.139	106.579		8	29547.045	50715	3596.25	3596.25	1	H1-1b
7	M16	PIPE_2.0	0.421	0	8	0.131	30		28	31128.673	32130	1871.625	1871.625	1	H1-1b
8	MP2	PIPE_2.5	0.409	37.895	8	0.043	41.053		111	22373.407	50715	3596.25	3596.25	1	H1-1b
9	M37	PIPE_2.0	0.399	87	5	0.011	174		11	4678.532	32130	1871.625	1871.625	1	H1-1a
10	M6	.625X3.5"	0.397	0	8	0.066	0	y	2	69777.888	70875	922.852	5167.97	1.2	H1-1b
11	MP5	PIPE_2.5	0.379	37.895	8	0.071	41.053		8	22373.407	50715	3596.25	3596.25	1	H1-1b
12	M2	.625X3.5"	0.379	0	13	0.085	4.778	y	7	69777.888	70875	922.852	5167.97	1.263	H1-1b
13	M17	PIPE_2.0	0.347	0	2	0.119	30		33	31128.673	32130	1871.625	1871.625	1	H1-1b
14	M4	.625X3.5"	0.323	0	7	0.059	4.778	y	13	69777.888	70875	922.852	5167.97	1.224	H1-1b
15	M19	PIPE_2.0	0.259	0	2	0.12	30		100	31128.673	32130	1871.625	1871.625	1	H1-1b

Envelope AISC 15TH (360-16): LRFD Member Steel Code Checks (Continued)

	Member	Shape	Code Check	Loc[in]	LC	Shear Check	Loc[in]	Dir	LC	phi*Pnc [lb]	phi*Pnt [lb]	phi*Mn y-y [lb-ft]	phi*Mn z-z [lb-ft]	Cb	Eqn
16	M27	.625DIA.	0.254	0	2	0.004	40		111	4378.175	9940.19	103.542	103.542	1	H1-1a
17	M18	PIPE_2.0	0.223	1.579	8	0.112	1.579		106	31128.673	32130	1871.625	1871.625	1	H1-1b
18	MP4	PIPE_2.5	0.207	78.947	82	0.045	41.053		2	22373.407	50715	3596.25	3596.25	1	H1-1b
19	M25	.625DIA.	0.197	40	81	0.003	0		2	4378.175	9940.19	103.542	103.542	1	H1-1b*
20	M24	.625DIA.	0.192	40	76	0.006	40		77	4378.175	9940.19	103.542	103.542	1	H1-1b*
21	M26	.625DIA.	0.184	40	107	0.005	40		33	4378.175	9940.19	103.542	103.542	1	H1-1b*
22	MP1	PIPE_2.5	0.175	41.053	106	0.04	41.053		111	22373.407	50715	3596.25	3596.25	1	H1-1b
23	M30	.75DIA.	0.149	47.512	80	0.017	0		8	3679.003	14313.866	178.929	178.929	1	H1-1b*
24	M28	.75DIA.	0.138	0	110	0.007	47.512		106	3679.003	14313.866	178.929	178.929	1	H1-1b*
25	MP3	PIPE_2.5	0.077	41.053	8	0.015	41.053		8	22373.407	50715	3596.25	3596.25	1	H1-1b
26	M29	.75DIA.	0	0	20	0.004	0		20	3679.003	14313.866	178.929	178.929	1	H1-1b*
27	M31	.75DIA.	0	47.512	135	0	47.512		135	3679.003	14313.866	178.929	178.929	1	H1-1a

Material Take-Off

	Material	Size	Pieces	Length[in]	Weight[LB]
1	General Members				
2	RIGID		12	41.3	0
3	Total General		12	41.3	0
4					
5	Hot Rolled Steel				
6	Q235-GB	PIPE_2.5	7	900	410.885
7	Q235-GB	PIPE_2.0	6	468	135.363
8	Q345	.625DIA.	4	160	13.919
9	Q345	.625X3.5"	6	49.6	30.797
10	Q345	.75DIA.	4	190	23.808
11	Total HR Steel		27	1767.7	614.773

INFINIGY

Bolt Calculation Tool, V1.6.5

PROJECT DATA	
Site Name:	New Haven West Rock
Site Number:	CTL02013
Connection Description:	Mount to Tower

ENVELOPE BOLT LOADS		
(LC32 M38A) Bolt Tension:	1414.17	lbs
(LC78 M38A) Bolt Shear:	637.48	lbs

MAX BOLT USAGE LOADS[1]		
Bolt Tension:	1414.17	lbs
Bolt Shear:	406.50	lbs

MAX CONNECTION SLIP USAGE LOADS[2]		
Sliding Force:	739.63	lbs
Torsion About Leg:	588.83	lbs-ft

BOLT PROPERTIES		
Bolt Type:	Threaded Rod	-
Bolt Diameter:	0.625	in
Bolt Grade:	SAE Grade 5	-
# of Threaded Rods:	4	-
Leg Diameter:	5.625	in
Threads Excluded?	No	-

[1] *Max bolt usage loads correspond to Load combination #32 on member M38A in RISA-3D, which causes the maximum demand on the bolts.*

[2] *Max slip usage loads correspond to Load combination #29 on member M38A in*

Member Information
I nodes of M38A, M39,

BOLT CHECK		
Tensile Strength	20340.15	
Shear Strength	13805.83	
Max Tensile Usage	7.0%	
Max Shear Usage	4.6%	
Interaction Check (Max Usage)	0.01	***≤1.05***
Result	Pass	

SLIP CHECK			
Torsional Slip Resistance		3191.87	
Sliding Resistance		13618.66	
Torsional Slip Usage		18.4%	
Sliding Usage		5.4%	
Interaction Check		0.04	***≤1.05***
Result		Pass	

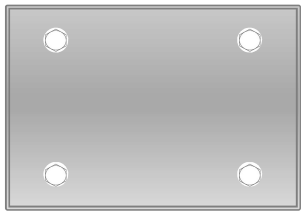

LC	Axial	y Shear	Z Shear	Torque	y-y Moment	z-z Moment
	lb	lb	lb	lb-ft	lb-ft	lb-ft
(LC32 M38A)	-2227.56	1270.92	-605.56	-66.15	0.00	571.52
(LC78 M38A)	-1784.53	929.62	-1549.48	-239.40	0.00	571.52

ASCE 7 Hazards Report

Address:
No Address at This Location

Standard: ASCE/SEI 7-16
Risk Category: II
Soil Class: D - Default (see Section 11.4.3)

Elevation: 411.27 ft (NAVD 88)
Latitude: 41.345436
Longitude: -72.970694

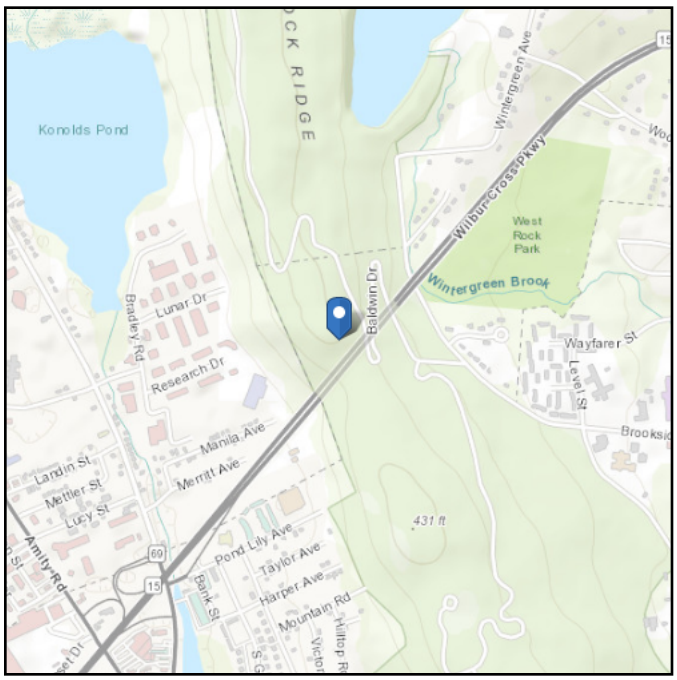

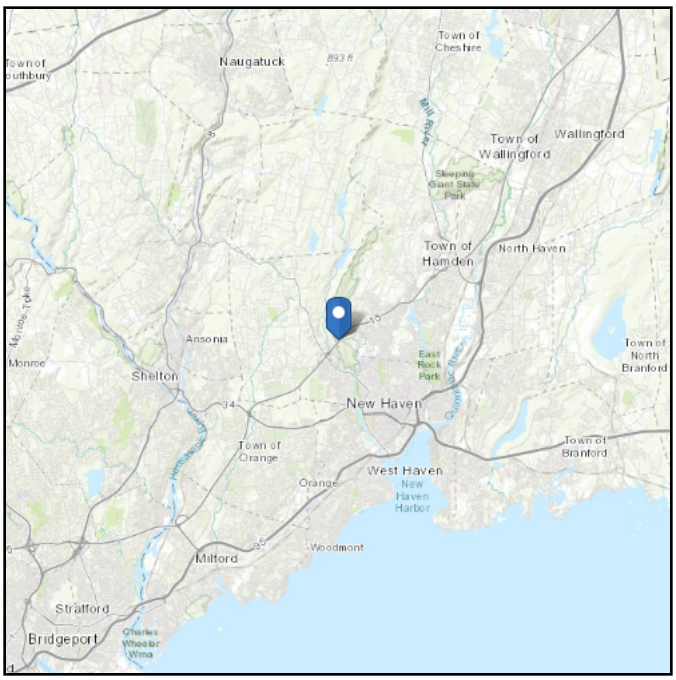

Wind

Results:

Wind Speed	119 Vmph
10-year MRI	75 Vmph
25-year MRI	85 Vmph
50-year MRI	90 Vmph
100-year MRI	98 Vmph

Data Source:	ASCE/SEI 7-16, Fig. 26.5-1B and Figs. CC.2-1–CC.2-4, and Section 26.5.2
Date Accessed:	Thu Apr 14 2022

Value provided is 3-second gust wind speeds at 33 ft above ground for Exposure C Category, based on linear interpolation between contours. Wind speeds are interpolated in accordance with the 7-16 Standard. Wind speeds correspond to approximately a 7% probability of exceedance in 50 years (annual exceedance probability = 0.00143, MRI = 700 years).

Site is in a hurricane-prone region as defined in ASCE/SEI 7-16 Section 26.2. Glazed openings need not be protected against wind-borne debris.

Seismic

Site Soil Class: D - Default (see Section 11.4.3)

Results:

S_S :	0.201	S_{D1} :	0.086
S_1 :	0.054	T_L :	6
F_a :	1.6	PGA :	0.112
F_v :	2.4	PGA_M :	0.177
S_{MS} :	0.321	F_{PGA} :	1.576
S_{M1} :	0.129	I_e :	1
S_{DS} :	0.214	C_v :	0.701

Seismic Design Category B

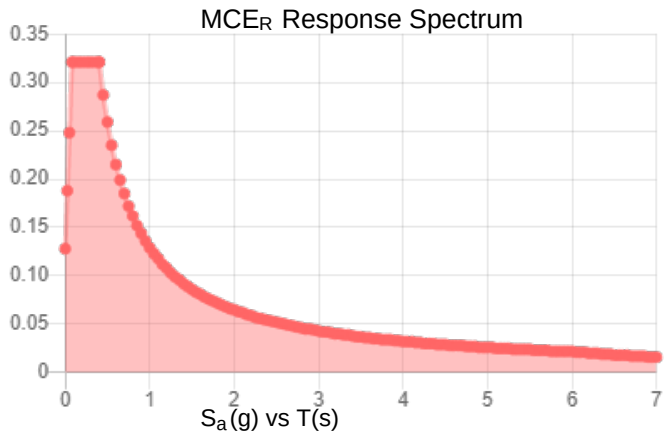

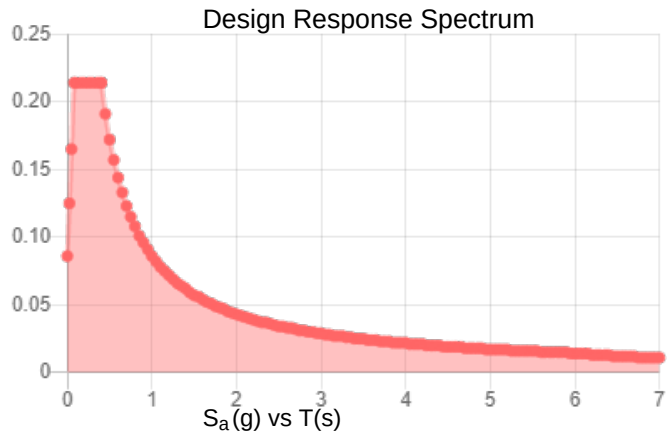

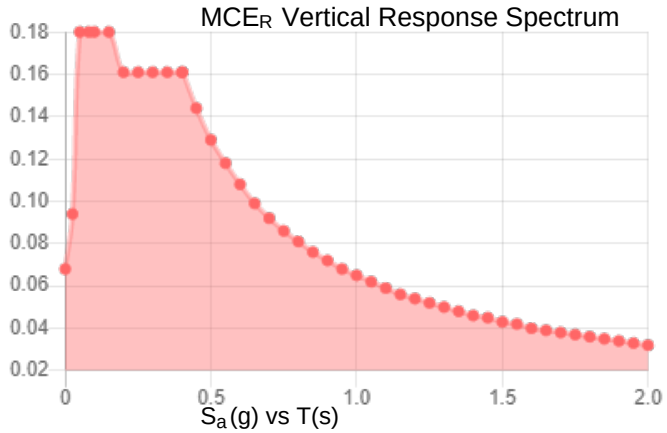

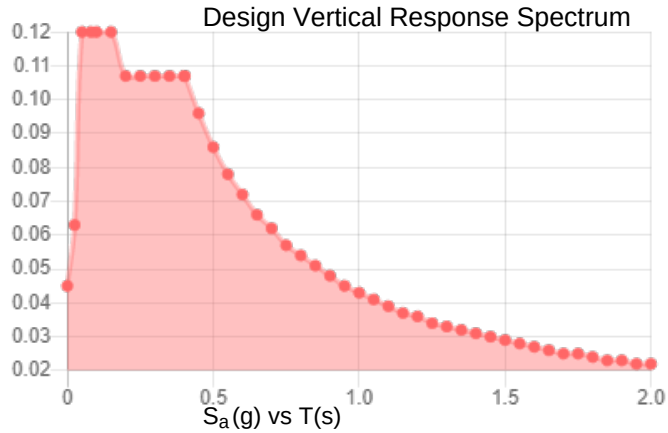

Data Accessed: **Thu Apr 14 2022**

Date Source:

USGS Seismic Design Maps based on ASCE/SEI 7-16 and ASCE/SEI 7-16 Table 1.5-2. Additional data for site-specific ground motion procedures in accordance with ASCE/SEI 7-16 Ch. 21 are available from USGS.

Ice

Results:

Ice Thickness:	1.00 in.
Concurrent Temperature:	15 F
Gust Speed	50 mph
Data Source:	Standard ASCE/SEI 7-16, Figs. 10-2 through 10-8
Date Accessed:	Thu Apr 14 2022

Ice thicknesses on structures in exposed locations at elevations higher than the surrounding terrain and in valleys and gorges may exceed the mapped values.

Values provided are equivalent radial ice thicknesses due to freezing rain with concurrent 3-second gust speeds, for a 500-year mean recurrence interval, and temperatures concurrent with ice thicknesses due to freezing rain. Thicknesses for ice accretions caused by other sources shall be obtained from local meteorological studies. Ice thicknesses in exposed locations at elevations higher than the surrounding terrain and in valleys and gorges may exceed the mapped values.

Topographic Factors for use in tnxTower

(v. 3.1, effecitve 10.14.13)

per SEAW RSM-03 Figure 3-3

BU#:	
Site Name:	
App#:	

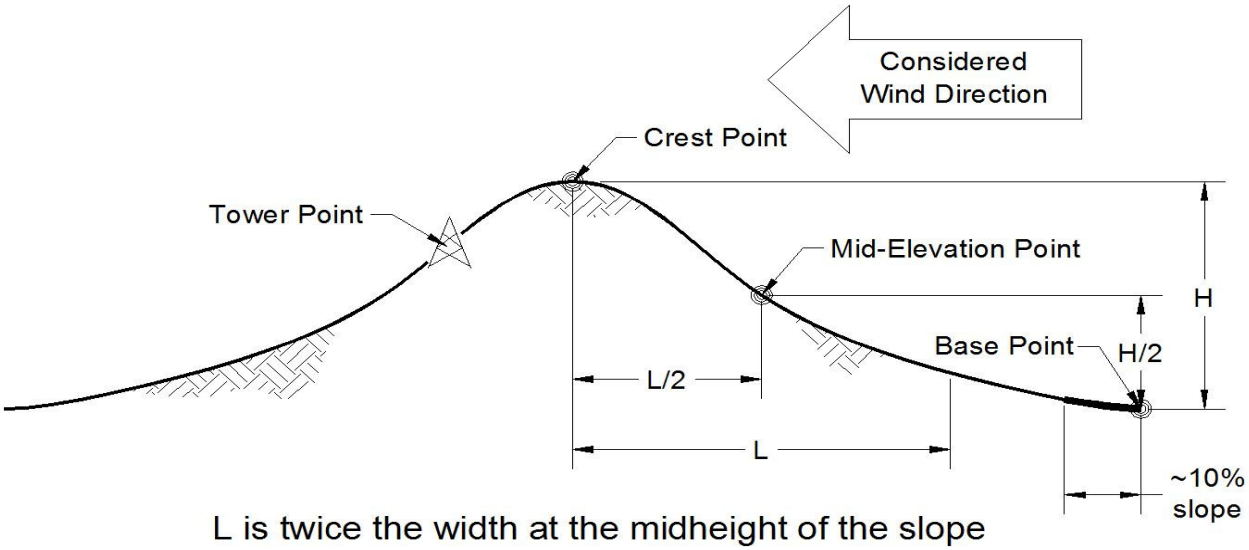

L is twice the width at the midheight of the slope

Topographic Feature

- (●) Continuous Ridge
- ( ) Flat Topped Ridge
- ( ) Hill
- ( ) Flat Topped Hill
- ( ) Continuous Escarpment

Exposure Category

- (●) Exposure B
- ( ) Exposure C
- ( ) Exposure D

Notes:
1) Feature is assumed to be isolated per section 1.8 of the Crown Castle standard for the Determination of Topographic Factors (ENG-PRC-10040).
2) Base Kzt may differ slightly from TNX value due to differences in where the base line is established. This does not effect the results in anyway.

Topographic Input	
Crest Point Elevation (ft. AMSL)	476
Base Point Elevation (ft. AMSL)	98
Mid-Height Elevation (ft. AMSL)	287
Crest to Mid-Height Distance (L/2) (ft.)	767
Tower Point Elevation (ft. AMSL)	428
Structure Upwind/Downwind Distance (x)(ft.)	195

tnxTower Input		K_{ZT} (RSM-03)
Topographic Category	5	**At Base:**
Crest Height, H (ft.)	378	**2.348²**
Slope Distance, L (ft.)	1534	
Distance from Crest, x (ft.)	195	

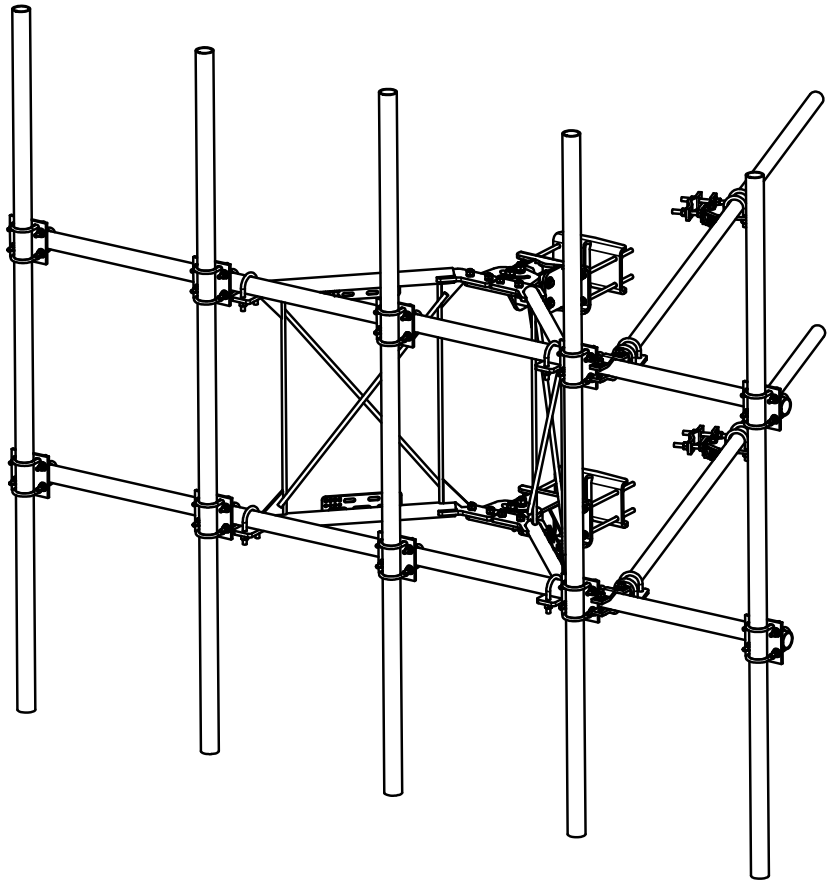

PARTS LIST

ITEM	QTY	PART NO.	PART DESCRIPTION	LENGTH	UNIT WT.	NET WT.
1	2	X-VFAW	SUPPORT ARM		71.41	142.81
2	1	X-HDCAMTBW	CLAMP WELDMENT FOR BCAM-HD		33.86	33.86
3	1	X-MHTPHD	MULTI-HOLE TAPER PLATE WELDMENT		36.24	36.24
4	1	X-HDCAMSS	ANGLE ADJUSTMENT WELDMENT FOR BCAM-HD		16.39	16.39
5	2	X-VFAPL4	VFA-HD PIVOT PLATE	12 in	15.88	31.77
6	2	X-LCBP4	BENT BACKING PLATE	13 in	19.00	38.01
7	4	X-SPTB	SLIDING PIPE TIE BACK PLATE	5 1/2 in	5.87	23.49
8	1	X-HDCAMSP	POSITIONING PLATE WELDMENT FOR BCAM-HD		2.58	2.58
9	4	X-TBCA	TIE BACK CLIP ANGLE		2.01	8.02
10	10	SCX2	CROSSOVER PLATE	7 in	4.80	47.96
11	4	MCP	CLAMP HALF 1/2" THICK, 11-5/8" LONG	12 1/16 in	3.59	14.37
12	8	DCP	1/2" THICK, 5-3/4" CNTER TO CENTER CLAMP HALF	8 1/8 in	2.36	18.90
13	2	P2126	2-3/8" X 126" (2" SCH. 40) GALVANIZED PIPE	126 in	40.75	81.50
14	2	P30150	2-7/8" X 150" (2-1/2" SCH. 40) GALVANIZED PIPE	150 in	76.94	153.87
15	4	A34212	3/4" x 2-1/2" UNC HEX BOLT (A325)	2 1/2 in	0.48	1.92
16	4	G34FW	3/4" HDG USS FLATWASHER		0.06	0.24
17	4	G34LW	3/4" HDG LOCKWASHER		0.04	0.17
18	4	G34NUT	3/4" HDG HEAVY 2H HEX NUT		0.21	0.85
19	8	G58R-18	5/8" x 18" THREADED ROD (HDG.)		1.57	12.54
20	4	G58R-12	5/8" x 12" THREADED ROD (HDG.)		1.05	4.18
21	4	G58R-8	5/8" x 8" THREADED ROD (HDG.)		0.70	2.79
22	4	X-UB5300	5/8" X 3" X 5-1/4" X 2-1/2" U-BOLT (HDG.)		1.15	4.60
23	8	X-UB5258	5/8" X 2-5/8" X 4-1/2" X 2" U-BOLT (HDG.)		1.00	8.00
24	2	G5807	5/8" x 7" HDG HEX BOLT GR5 FULL THREAD	7 in	0.70	1.41
25	1	G5806	5/8" x 6" HDG HEX BOLT GR5 FULL THREAD	6 in	0.62	0.62
26	8	G5804	5/8" x 4" HDG HEX BOLT GR5		0.44	3.55
27	4	G5802	5/8" x 2" HDG HEX BOLT GR5		0.27	1.08
28	8	A582114	5/8" x 2-1/4" HDG A325 HEX BOLT	2 1/4 in	0.31	2.50
29	25	G58FW	5/8" HDG USS FLATWASHER	1/8 in	0.07	1.76
30	66	G58LW	5/8" HDG LOCKWASHER		0.03	1.72
31	71	G58NUT	5/8" HDG HEAVY 2H HEX NUT		0.13	9.22
32	48	X-UB1300	1/2" X 3" X 5" X 2" GALV U-BOLT		0.74	35.45
33	20	X-UB1212	1/2" X 2-1/2" X 4-1/2" X 2" GALV. U-BOLT		0.66	13.13
34	80	G12FW	1/2" HDG USS FLATWASHER	3/32 in	0.03	2.73
35	80	G12LW	1/2" HDG LOCKWASHER	1/8 in	0.01	1.11
36	80	G12NUT	1/2" HDG HEAVY 2H HEX NUT		0.07	5.73
37	5	P30120	2-7/8" x 120" (2-1/2" SCH. 40) GALVANIZED PIPE	120 in	58.07	290.33
					TOTAL WT. #	1055.41

REV	DESCRIPTION OF REVISIONS	CPD	BY	DATE
A	UPDATED BCAM VERSION 1 TO BCAM VERSION 2	SP1	CSL	7/2/2018

REVISION HISTORY

TOLERANCE NOTES

TOLERANCES ON DIMENSIONS, UNLESS OTHERWISE NOTED ARE:
SAWED, SHEARED AND GAS CUT EDGES *(± 0.030")*
DRILLED AND GAS CUT HOLES *(± 0.030")* - NO CONING OF HOLES
LASER CUT EDGES AND HOLES *(± 0.010")* - NO CONING OF HOLES
BENDS ARE ± 1/2 DEGREE
ALL OTHER MACHINING *(± 0.030")*
ALL OTHER ASSEMBLY *(± 0.060")*

DESCRIPTION: 12' 6" HEAVY DUTY V-FRAME ASSEMBLY W/ 2 STIFF ARMS & MOUNT PIPES

SITE PRO 1 — A valmont COMPANY

Engineering Support Team: 1-888-753-7446

Locations: New York, NY; Atlanta, GA; Los Angeles, CA; Plymouth, IN; Salem, OR; Dallas, TX

CPD NO.	DRAWN BY	ENG. APPROVAL	PART NO.
SP1	CSL 1/25/2017		VFA12-WLL-30120

CLASS	SUB	DRAWING USAGE	CHECKED BY	DWG. NO.
87	02	CUSTOMER	BMC 5/3/2018	VFA12-WLL-30120

TIE-BACK POSITIONS

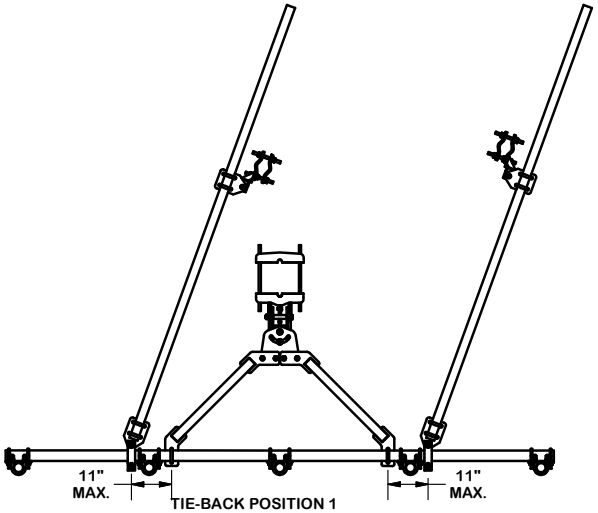

TIE-BACK POSITION 1
-20° / +20° TOP PARALLEL

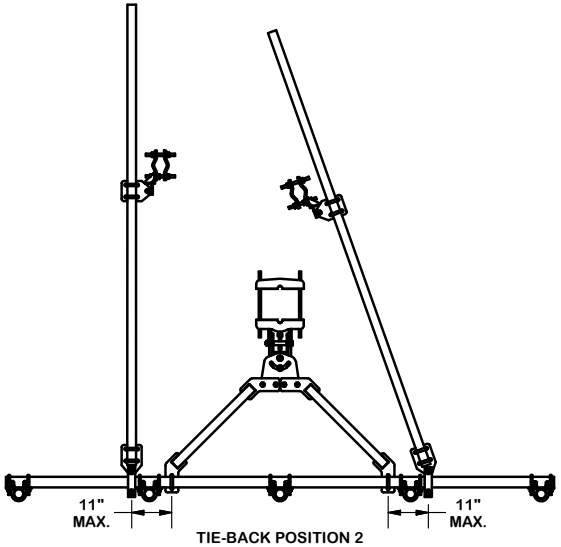

TIE-BACK POSITION 2
-20° / -20° TOP CROSS

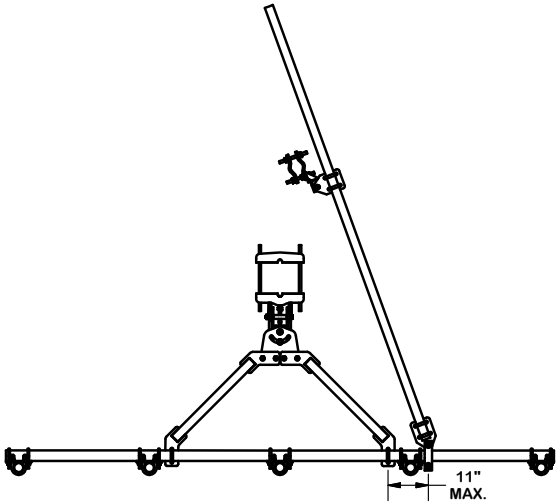

TIE-BACK POSITION 3
-20° SAME SIDE STACKED

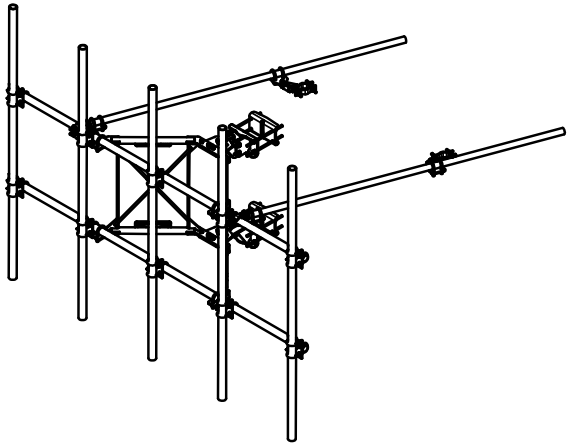

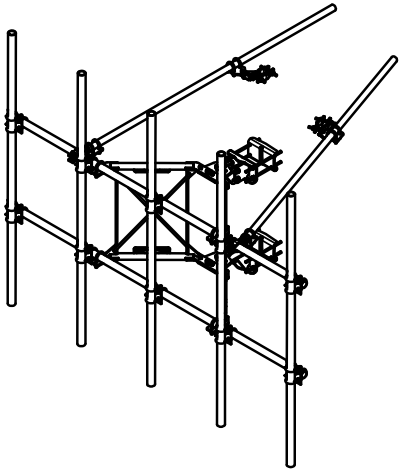

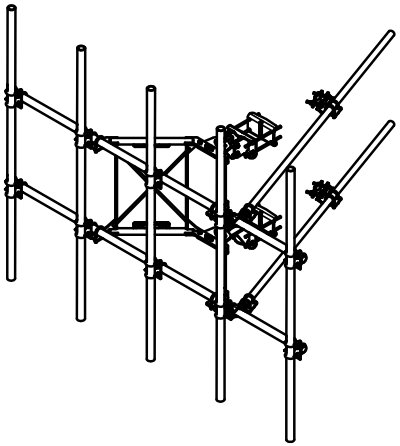

REV	DESCRIPTION OF REVISIONS	CPD	BY	DATE
A	UPDATED BCAM VERSION 1 TO BCAM VERSION 2	SP1	CSL	7/2/2018

REVISION HISTORY

TOLERANCE NOTES

TOLERANCES ON DIMENSIONS, UNLESS OTHERWISE NOTED ARE:
SAWED, SHEARED AND GAS CUT EDGES *(± 0.030")*
DRILLED AND GAS CUT HOLES *(± 0.030")* - NO CONING OF HOLES
LASER CUT EDGES AND HOLES *(± 0.010")* - NO CONING OF HOLES
BENDS ARE ± 1/2 DEGREE
ALL OTHER MACHINING *(± 0.030")*
ALL OTHER ASSEMBLY *(± 0.060")*

DESCRIPTION: 12' 6" HEAVY DUTY V-FRAME ASSEMBLY W/ 2 STIFF ARMS & MOUNT PIPES

CPD NO.	DRAWN BY	ENG. APPROVAL	PART NO.
SP1	CSL 1/25/2017		VFA12-WLL-30120

CLASS	SUB	DRAWING USAGE	CHECKED BY	DWG. NO.
87	02	CUSTOMER	BMC 5/3/2018	VFA12-WLL-30120

SITE PRO 1
A valmont COMPANY
Engineering Support Team:
1-888-753-7446
Locations:
New York, NY
Atlanta, GA
Los Angeles, CA
Plymouth, IN
Salem, OR
Dallas, TX

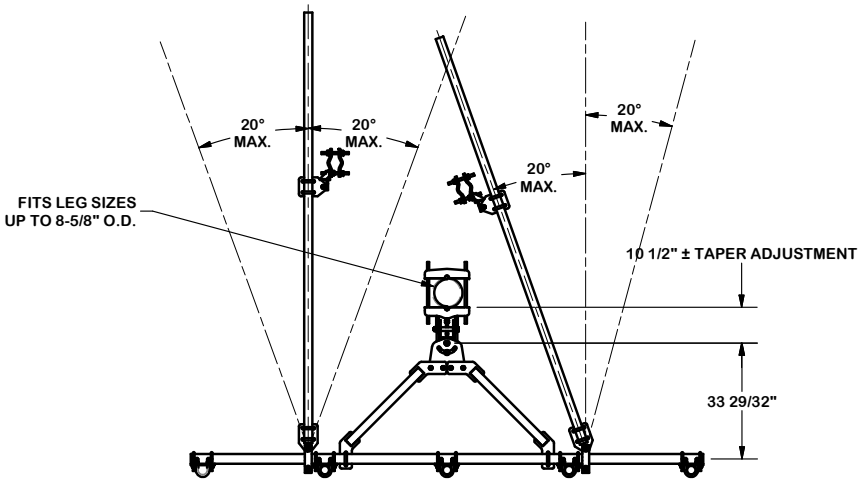

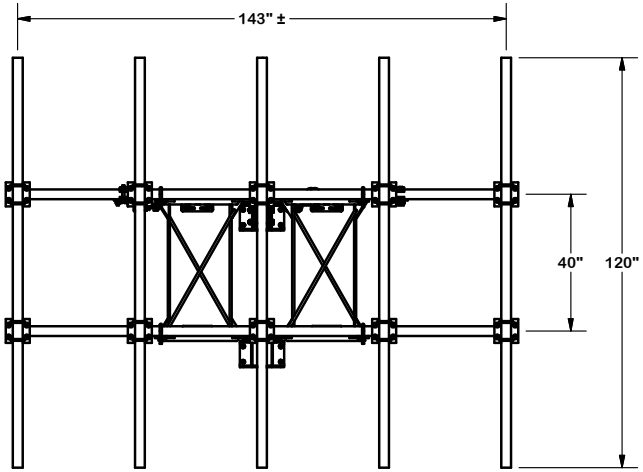

ANGLE CALIBRATING PROCEDURE:

1. MEASURE TOWER TAPER AND PICK LOWER BRACKET HOLE:
   - HOLE A = -2.6° TO 2.6°
   - HOLE B = 1.6° TO 6.8°
2. USE CALIBRATING BOLT TO ADJUST FRAME TO DESIRED TAPER
3. TORQUE LOCKING BOLTS TO 100 ft.-lbs.
4. ADVANCE LOCKING NUT TO POSITIONING PLATE, THEN TIGHTEN.

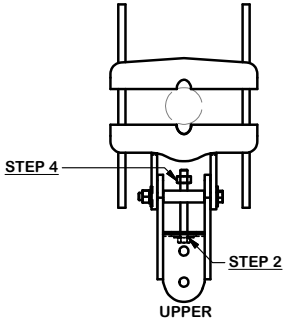

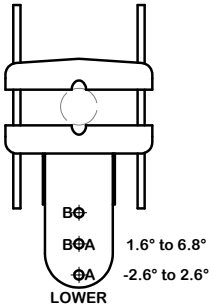

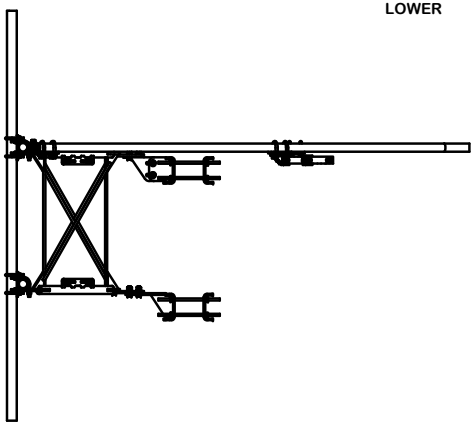

REV	DESCRIPTION OF REVISIONS	CPD	BY	DATE
A	UPDATED BCAM VERSION 1 TO BCAM VERSION 2	SP1	CSL	7/2/2018

REVISION HISTORY

TOLERANCE NOTES

TOLERANCES ON DIMENSIONS, UNLESS OTHERWISE NOTED ARE:
SAWED, SHEARED AND GAS CUT EDGES *(± 0.030")*
DRILLED AND GAS CUT HOLES *(± 0.030")* - NO CONING OF HOLES
LASER CUT EDGES AND HOLES *(± 0.010")* - NO CONING OF HOLES
BENDS ARE ± 1/2 DEGREE
ALL OTHER MACHINING *(± 0.030")*
ALL OTHER ASSEMBLY *(± 0.060")*

DESCRIPTION: 12' 6" HEAVY DUTY V-FRAME ASSEMBLY W/ 2 STIFF ARMS & MOUNT PIPES

CPD NO.	DRAWN BY	ENG. APPROVAL	PART NO.
SP1	CSL 1/25/2017		VFA12-WLL-30120

CLASS	SUB	DRAWING USAGE	CHECKED BY	DWG. NO.
87	02	CUSTOMER	BMC 5/3/2018	VFA12-WLL-30120

SITE PRO 1
A valmont COMPANY
Engineering Support Team: 1-888-753-7446
Locations: New York, NY; Atlanta, GA; Los Angeles, CA; Plymouth, IN; Salem, OR; Dallas, TX

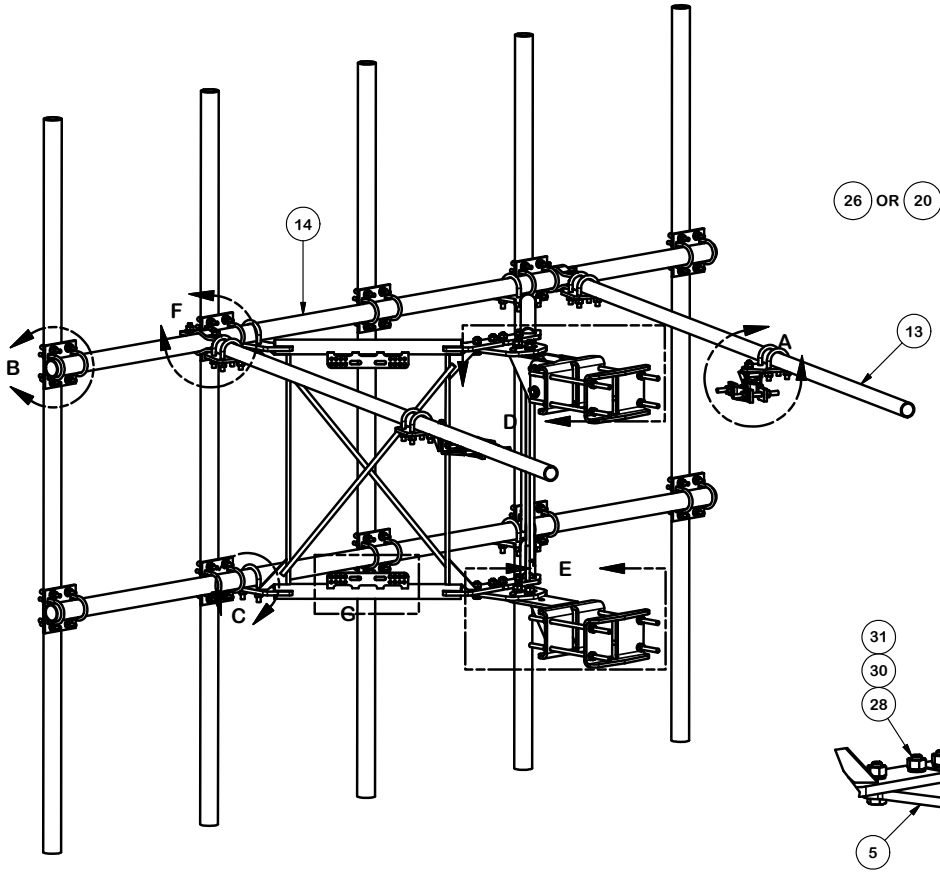

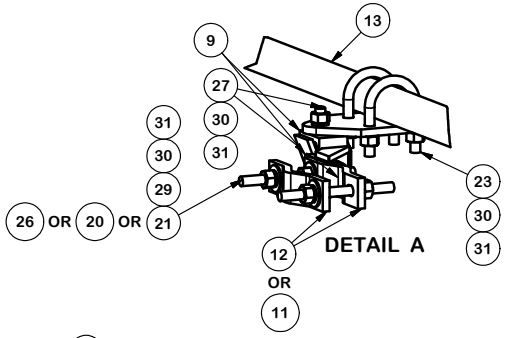

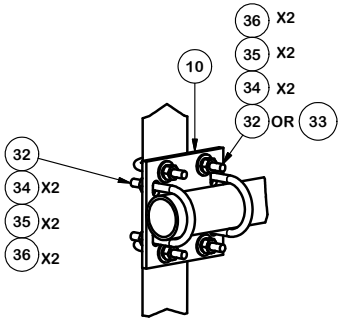

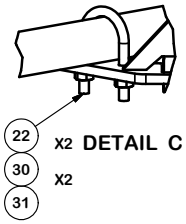

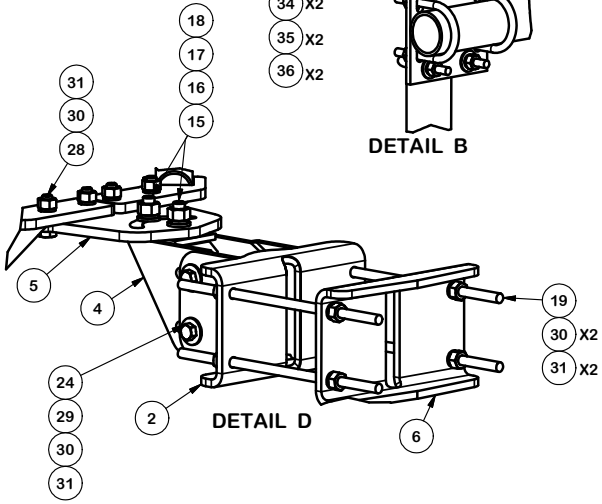

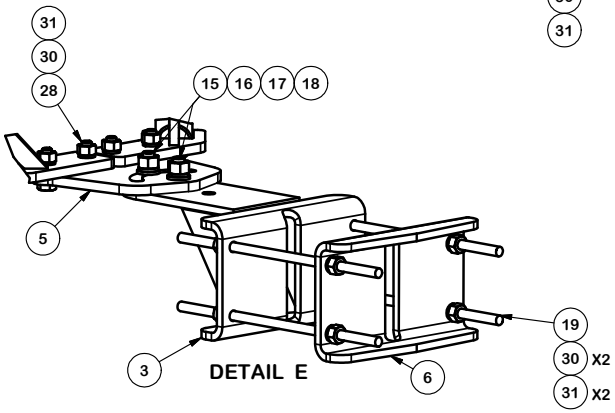

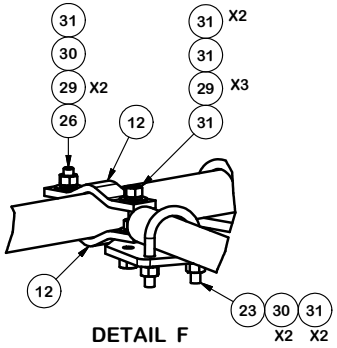

7/16" LUG HOLES

REVIEW CARRIER STANDARDS FOR PROPER SURFACE PREPARTION AND ASSEMBLY OF ELECTRICAL CONNECTIONS

9/16" SLOTTED HOLE FOR EQUIPMENT PIPE U-BOLT

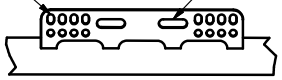

DETAIL G

TOLERANCE NOTES

TOLERANCES ON DIMENSIONS, UNLESS OTHERWISE NOTED ARE:
SAWED, SHEARED AND GAS CUT EDGES *(± 0.030")*
DRILLED AND GAS CUT HOLES *(± 0.030")* - NO CONING OF HOLES
LASER CUT EDGES AND HOLES *(± 0.010")* - NO CONING OF HOLES
BENDS ARE ± 1/2 DEGREE
ALL OTHER MACHINING *(± 0.030")*
ALL OTHER ASSEMBLY *(± 0.060")*

REV	DESCRIPTION OF REVISIONS	CPD	BY	DATE
A	UPDATED BCAM VERSION 1 TO BCAM VERSION 2	SP1	CSL	7/2/2018

REVISION HISTORY

DESCRIPTION: 12' 6" HEAVY DUTY V-FRAME ASSEMBLY W/ 2 STIFF ARMS & MOUNT PIPES

CPD NO.	DRAWN BY	ENG. APPROVAL	PART NO.
SP1	CSL 1/25/2017		VFA12-WLL-30120

CLASS	SUB	DRAWING USAGE	CHECKED BY	DWG. NO.
87	02	CUSTOMER	BMC 5/3/2018	VFA12-WLL-30120

SITE PRO 1
A valmont COMPANY
Engineering Support Team: 1-888-753-7446
Locations: New York, NY; Atlanta, GA; Los Angeles, CA; Plymouth, IN; Salem, OR; Dallas, TX

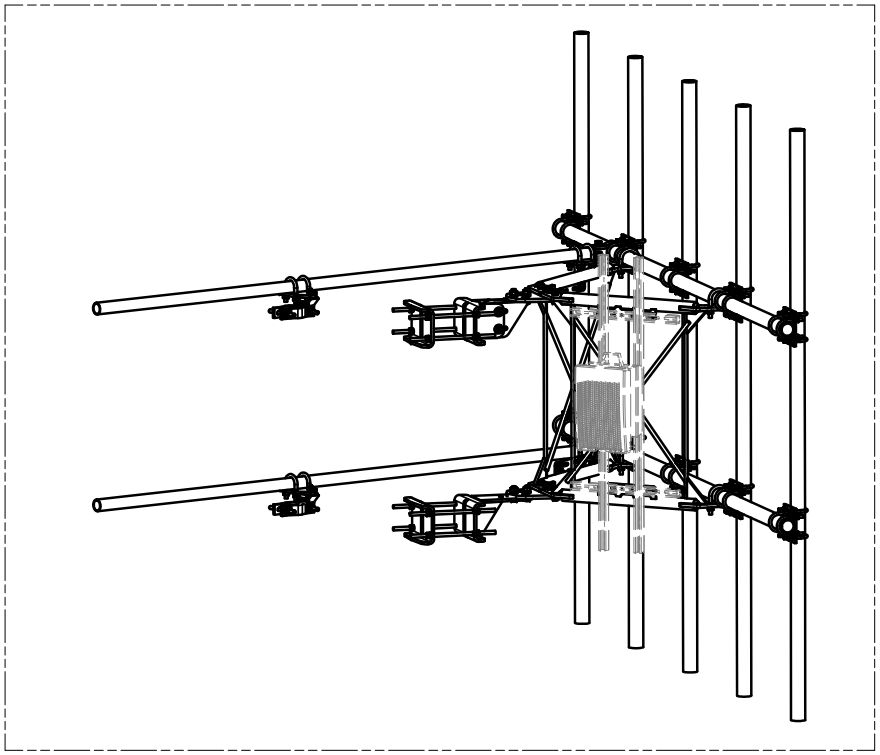

UNISTRUT AND HARDWARE
SOLD SEPARATELY.

REQUIRES 3/8" HARDWARE

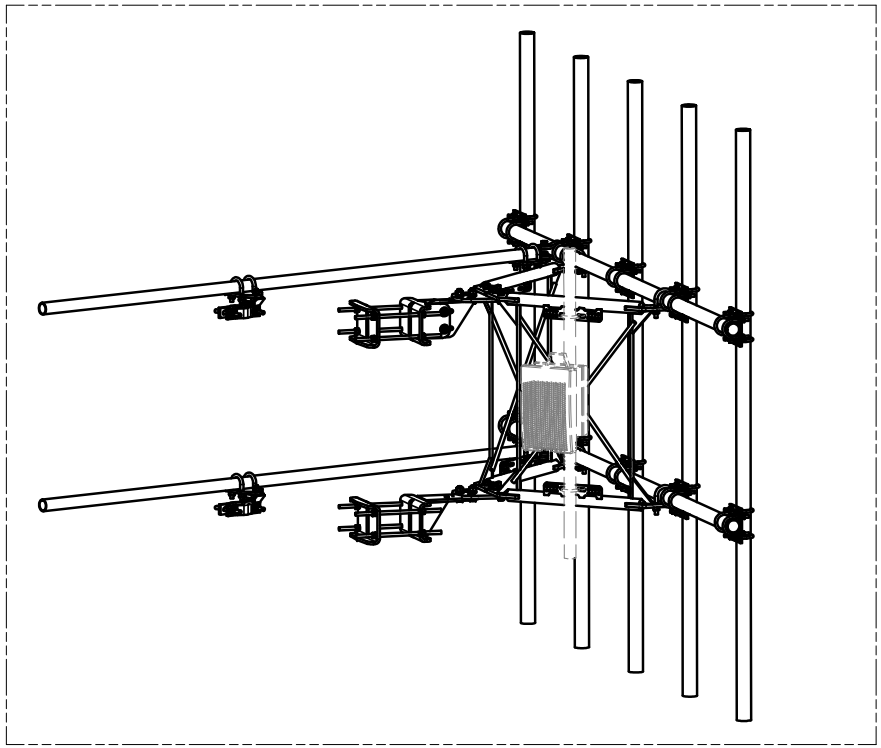

EQUIPMENT PIPE AND HARDWARE
SOLD SEPARATELY.

REQUIRES 1/2" HARDWARE
AND 2-3/8" TO 4-1/2" O.D. PIPE

REV	DESCRIPTION OF REVISIONS	CPD	BY	DATE
A	UPDATED BCAM VERSION 1 TO BCAM VERSION 2	SP1	CSL	7/2/2018

REVISION HISTORY

TOLERANCE NOTES

TOLERANCES ON DIMENSIONS, UNLESS OTHERWISE NOTED ARE:
SAWED, SHEARED AND GAS CUT EDGES *(± 0.030")*
DRILLED AND GAS CUT HOLES *(± 0.030")* - NO CONING OF HOLES
LASER CUT EDGES AND HOLES *(± 0.010")* - NO CONING OF HOLES
BENDS ARE ± 1/2 DEGREE
ALL OTHER MACHINING *(± 0.030")*
ALL OTHER ASSEMBLY *(± 0.060")*

DESCRIPTION: 12' 6" HEAVY DUTY V-FRAME ASSEMBLY W/ 2 STIFF ARMS & MOUNT PIPES

CPD NO.	DRAWN BY	ENG. APPROVAL	PART NO.
SP1	CSL 1/25/2017		VFA12-WLL-30120

CLASS	SUB	DRAWING USAGE	CHECKED BY	DWG. NO.
87	02	CUSTOMER	BMC 5/3/2018	VFA12-WLL-30120

SITE PRO 1
A valmont COMPANY
Engineering Support Team:
1-888-753-7446
Locations:
New York, NY
Atlanta, GA
Los Angeles, CA
Plymouth, IN
Salem, OR
Dallas, TX

CENTEK engineering

Centered on Solutions℠

Structural Analysis Report

120' Existing Lattice Tower

AT&T Equipment Upgrade – CT2013

CSP Tower Ref: #27

142 Baldwin Drive
New Haven, CT

CENTEK Project No. 23158.00

~~Date: January 19, 2024~~
Rev 2: February 22, 2024

Max Stress Ratio = 98.9%

STATE OF CONNECTICUT
TIMOTHY J. LYNN
No. 29336
LICENSED
PROFESSIONAL ENGINEER

Prepared for:

AT&T Mobility
500 Enterprise Drive, Suite 3A
Rocky Hill, CT 06067

63-2 North Branford Road, Branford, CT 06405 203.488.0580 Fax 203.488.8587 www.CentekEng.com

Table of Contents

Introduction

The purpose of this report is to summarize the results of the non-linear, P-Δ structural analysis of the equipment upgrade by AT&T on the existing lattice tower located in New Haven, Connecticut.

The host tower is a 120-ft, three legged, lattice tower originally designed and manufactured by Stainless, Inc. report no. 358810 dated Mach 3, 1995. The original design documents were unavailable for use in this report. The tower geometry, structure member sizes and foundation information were taken from a previous structural analysis report prepared by AECOM job no. SAI-089/TWM-006 dated June 6, 2016. The tower has been previously reinforced. All previous reinforcements are assumed to be installed. See Primary Assumptions Section below for detailed reinforcement reference reports.

Antenna and appurtenance inventory was taken from the aforementioned structural analysis and information provided by AT&T.

The tower consists of five (5) vertical sections consisting of steel pipe legs conforming to ASTM A572-50 / A572-60 and steel pipe lateral bracing. The vertical tower sections are connected by bolted flange plates with the diagonal and horizontal bracing to pipe legs consisting of bolted connections. The width of the tower face is 11.41-ft at the top and 21.02-ft at the bottom.

Antenna and Appurtenance Summary

The existing and proposed loads considered in the analysis consist of the following:

Antenna Type	Carrier	Mount	Elevation	Cable
(1) Lightning Rod	Tower (existing)	Leg Mount	120’	N/A
(1) 12’ Omni Antenna	CSP-7 (existing)	Leg Mount	120’	(2) 1-5/8” coax cable
(1) 8’ Omni Antenna	CSP-8 (existing)	Leg Mount	120’	(1) 7/8” coax cable
(1) 6’ Omni Antenna	CSP-1 (existing)	Leg Mount	120’	(1) 7/8” coax cable
(1) 8’ Dipole Antenna	CSP-15 (existing)	Leg Mount	120’	(2) 1-1/4” coax cable
(1) Antel WPA-70040CF panel antenna	CSP-28 (existing)	Face Mount	118’	(1) 1-5/8” coax cable
(1) 6’ Dish Antenna	CSP-5 (existing)	Pipe mounted to Leg	113’	(1) EW63 Elliptical Cable
(3) SC479-HF1LDF Omni Antennas [1 upright / 2 inverted] and (1) TTA	CSP-17 / 22 &23 (existing)	7’ T-frame	110’	(3) 1-5/8” coax cable and (1) 1/2” coax cable
(3) SC479-HF1LDF Omni Antennas [1 upright / 2 inverted] and (1) TTA	CSP-17 / 22 &23 (existing)	7’ T-frame	113’	(3) 1-5/8” coax cable and (1) 1/2” coax cable
(1) 6’ Dish Antenna	CSP-6 (existing)	Pipe mounted to Leg	109’	(1) EW63 Elliptical Cable
(1) 6’ Dish Antenna	CSP-3 (existing)	Pipe mounted to Leg	109’	(1) EW63 Elliptical Cable

Antenna Type	Carrier	Mount	Elevation	Cable
(1) AP13-850 and (1) SE419-SWBPALDF panel antennas and (1) TTA	CSP-12 / 13 & 32 (existing)	Face Mount	102'	(3) 1/2" coax cable
(1) 12' Omni Antenna	(existing)	3' Side Arm Mount	95'	(1) 7/8" coax cable
(3) LNX-6515DS (3) AIR21 (3) AIR32 (3) RRUS-11 (3) TMAs	T-Mobile (existing)	(3) 10' T-frames (existing)	95'	(6) 1 5/8" coax cables (1) Hybrid Cable (existing)
(1) VHLP3-11W Dish	(Reserved)	Leg Mount	89'	(1) EW90 cable
(1) 20' Dipole Antenna	(existing)	3' Side Arm Mount	87'	(1) 7/8" coax cable
(1) ANT450F6 Omni Antenna	CSP-10 (existing)	4' Side Arm Mount	84'	(2) 7/8" coax cables
(2) QD8616-7 Antennas (1) QD6616-7 Antennas (2) 80010966 Antennas (1) 80010965 Antennas (3) 4478-B14 RRUs (3) 8843 B2/B66 RRUs (3) 4449 B5/B12 RRUs (3) RRUs-32 RRUs (3) 2012B29 RRUs (3) DC6-48-60-0-8C Surge Arrestors	**AT&T (final config)**	**(3) 12-ft V-Frames**	**84'**	**(3) Fiber Optic Cable & (6) DC Cables within two (2) 2" Conduits**
(1) 20' Dipole Antenna	(existing)	4' Side Arm Mount	77'	(1) 1/2" coax cable
(2) 6' Yagi Antennas	(existing)	2' Side Arm Mount	67'	(1) 1/2" coax cable
(1) DB264 Dipole Antenna	CSP-4 (existing)	2' Side Arm Mount	54'	(1) 7/8" coax cable
(1) DB803 Omni Antenna	CSP-16 (existing)	2' Side Arm Mount	54.5'	(1) 7/8" coax cable
(1) 12' Dipole Antenna	(existing)	3' Side Arm Mount	51'	(1) 7/8" coax cable
(1) 3' Yagi Antennas	(existing)	Leg Mount	49'	(1) 1/2" coax cable
(1) ANT790F2 Omni Antenna	(existing)	2' Side Arm Mount	44'	(1) 7/8" coax cable
(1) 4' Dish Antenna and (1) 1'x1' panel antenna	CSP-5 (existing)	4' Side Arm Mount	43'	(2) 7/8" coax cables and (2) CAT5 cables
(1) 6' Omni Antenna	CSP-14 (existing)	1' Standoff Mount	38'	(1) 1/2" coax cable

Primary Assumptions Used in the Analysis

- The tower structure's theoretical capacity not including any assessment of the condition of the tower.
- The tower carries the horizontal and vertical loads due to the weight of antennas, ice load and wind.
- Tower is properly installed and maintained.
- Tower is in plumb condition.
- Tower loading for antennas and mounts as listed in this report.
- All bolts are appropriately tightened providing the necessary connection continuity.
- All welds are fabricated with ER-70S-6 electrodes.
- All members are assumed to be as specified in the original tower design documents.
- All members are "hot dipped" galvanized in accordance with ASTM A123 and ASTM A153 Standards.
- All member protective coatings are in good condition.
- All tower members were properly designed, detailed, fabricated, installed and have been properly maintained since erection.
- Any deviation from the analyzed antenna loading will require a new analysis for verification of structural adequacy.
- All coax cables should be routed as specified in section 3 of this report.
- **All previous reinforcements per the below listed structural analysis and modification reports are assumed to be installed.**
    - **Structural report prepared by URS Corp for AT&T project no. CTK-003 / 36939367.00001 dated 9/20/12.**
    - **Structural report prepared by AECOM Corp for AT&T and T-Mobile project no. SAI-089 / TWM-006 dated 6/6/16.**
- **The AT&T antenna mount information was taken from the mount analysis report prepared by Infinigy job no. 1106-A0001-B dated July 13, 2023.**

Analysis

The existing tower was analyzed using a comprehensive computer program entitled tnxTower. The program analyzes the tower, considering the worst case loading condition. The tower is considered as loaded by concentric forces along the tower, and the model assumes that the tower members are subjected to bending, axial, and shear forces.

The existing tower was analyzed for the controlling basic wind speed with no ice and the applicable wind and ice combination to determine stresses in members as per guidelines of TIA-222-H entitled "Structural Standard for Antenna Support Structures, Antennas and Small Wind Turbine Support Structures", the American Institute of Steel Construction (AISC) and the Manual of Steel Construction; Load and Resistance Factor Design (LRFD).

The controlling wind speed is determined by evaluating the local available wind speed data as provided in Appendix P of the CSBC[1] and the wind speed data available in the TIA-222-H Standard.

Tower Loading

Tower loading was determined by the basic wind speed as applied to projected surface areas with modification factors per TIA-222-H, gravity loads of the tower structure and its components, and the application of 1.0" radial ice on the tower structure and its components.

Load Cases:	Load Case 1; 135 mph (Risk Cat IV) wind speed w/ no ice plus gravity load – used in calculation of tower stresses and rotation.	*[Appendix P of the 2022 CT Building Code]*
	Load Case 2; 50 mph wind speed w/ 1.00" radial ice plus gravity load – used in calculation of tower stresses.	*[Annex B of TIA-222-H]*
	Load Case 3; 90 mph wind speed w/ 0.5" radial ice plus gravity load – used in calculation of tower twist and sway.	*[TIA-222-F used for calculation of tower twist and sway per the requirements of the CSP]*

[1] The 2021 International Building Code as amended by the 2022 Connecticut State Building Code (CSBC).

Tower Capacity

- Calculated stresses **with the reinforcements detailed in section 4 of this report were found to be within allowable limits**.

Tower Section	Elevation	Stress Ratio (percentage of capacity)	Result
Leg (T8)	25.0' - 50.0'	90.7%	**PASS**
Diagonal (T9)	0.0' - 25.0'	88.9%	**PASS**
Horizontal (T9)	0.0' - 25.0'	98.9%	**PASS**

- The tower combined deflection **was found to be within allowable limits**.

Deflection Criteria	Proposed (degrees)	Allowable (degrees)	Result
Sway (Tilt)	0.3427	n/a	**n/a**
Twist	0.0906	n/a	**n/a**
Combined	0.4333	0.75	**PASS**

TIA-222-F standard used for calculation of tower twist and sway per the requirements of the CSP.

Foundation and Anchors

The existing foundation consists of three (3) rock anchored reinforced concrete pad and piers bearing directly on existing sub grade. The sub-grade conditions used in the analysis of the existing foundation were obtained from the aforementioned AECOM structural report. The tower legs are connected to the foundation by means of six (6) 1.5"∅ anchor bolts per leg, embedded into the concrete foundation structure.

- The tower reactions developed from the governing Load Case were used in the verification of the foundation and anchor bolts:

Load Effect	Proposed Tower Reactions
Leg Shear	60 kips
Leg Compression	411 kips
Leg Tension	368 kips
Base Moment	7,207 ft-kips
Base Shear	111 kips

- The anchor bolts **with the reinforcements detailed in section 4 of this report were found** to be within allowable limits.

Tower Section	Component	Stress Ratio (percentage of capacity)	Result
Anchor Bolts	Combined Compression and Shear	98.2%	**PASS**

- The foundation was found to be within allowable limits.

Foundation	Design Limit	(percentage of capacity)	Result
Rock Anchored Pad and Pier (x3)	Uplift	79%	**PASS**
	Bearing	58%	**PASS**
	Rock Anchor	88%	**PASS**

Conclusion

This analysis shows that the subject tower **with the reinforcements detailed in section 4 of this report was found to be structurally adequate** to support the proposed antenna configuration.

The analysis is based, in part, on the information provided to this office by AT&T and the CSP. If the existing conditions are different than the information in this report, Centek Engineering, Inc. must be contacted for resolution of any potential issues.

Please feel free to call with any questions or comments.

Respectfully Submitted by:

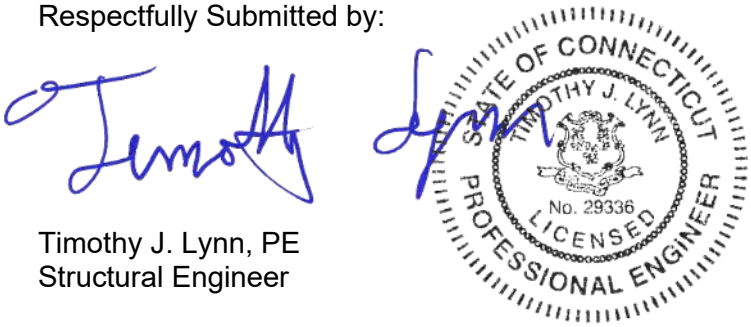

Timothy J. Lynn, PE
Structural Engineer

Standard Conditions for Furnishing of Professional Engineering Services on Existing Structures

All engineering services are performed on the basis that the information used is current and correct. This information may consist of, but is not necessarily limited to:

- Information supplied by the client regarding the structure itself, its foundations, the soil conditions, the antenna and feed line loading on the structure and its components, or other relevant information.
- Information from the field and/or drawings in the possession of Centek Engineering, Inc. or generated by field inspections or measurements of the structure.
- It is the responsibility of the client to ensure that the information provided to Centek Engineering, Inc. and used in the performance of our engineering services is correct and complete. In the absence of information to the contrary, we assume that all structures were constructed in accordance with the drawings and specifications and are in an un-corroded condition and have not deteriorated. It is therefore assumed that its capacity has not significantly changed from the “as new” condition.
- All services will be performed to the codes specified by the client, and we do not imply to meet any other codes or requirements unless explicitly agreed in writing. If wind and ice loads or other relevant parameters are to be different from the minimum values recommended by the codes, the client shall specify the exact requirement. In the absence of information to the contrary, all work will be performed in accordance with the latest revision of ANSI/ASCE10 & ANSI/EIA-222
- All services performed, results obtained, and recommendations made are in accordance with generally accepted engineering principles and practices. Centek Engineering, Inc. is not responsible for the conclusions, opinions and recommendations made by others based on the information we supply.

GENERAL DESCRIPTION OF STRUCTURAL ANALYSIS PROGRAM

tnxTower, is an integrated structural analysis and design software package for Designed specifically for the telecommunications industry, tnxTower, formerly RISA Tower, automates much of the tower analysis and design required by the TIA/EIA 222 Standard.

tnxTower Features:

- tnxTower can analyze and design 3- and 4-sided guyed towers, 3- and 4-sided self-supporting towers and either round or tapered ground mounted poles with or without guys.
- The program analyzes towers using the TIA-222-H standard or any of the previous TIA/EIA standards back to RS-222 (1959). Steel design is checked using the AISC ASD or the AISC LRFD specifications.
- Linear and non-linear (P-delta) analyses can be used in determining displacements and forces in the structure. Wind pressures and forces are automatically calculated.
- Extensive graphics plots include material take-off, shear-moment, leg compression, displacement, twist, feed line, guy anchor and stress plots.
- tnxTower contains unique features such as True Cable behavior, hog rod take-up, foundation stiffness and much more.

Section	T1	T2	T3	T4	T5	T6	T7	T8	T9
Legs	P5x0.25						P5x0.375	P5x.400	P6.875x.400
Leg Grade	A572-50								A572-60
Diagonals	2L2 1/2x2x3/16				2L2 1/2x2x5/16	2L2 1/2x2x3/8	2L3 1/2x2x3/8		2L3 1/2x3x3/8
Diagonal Grade	A						A36		
Top Girts	N.A.							L3x3x5/16	L4x4x3/8
Horizontals	N.A.	L2 1/2x2 1/2x3/16			N.A.		L3x3x3/8	L3x3x1/2	L4x4x3/8
Red. Horizontals					N.A.				L2 1/2x2 1/2x3/16
Red. Diagonals					N.A.				L2 1/2x2 1/2x3/16
Inner Bracing					L2 1/2x2x3/16				L2 1/2x2 1/2x3/16
Face Width (ft)	11.41	11.68	12.35	13.02	13.6667	14.3533	15.02	17.02	19.02
# Panels @ (ft)	1 @ 3.34	2 @ 8.33					9 @ 8.33333		2 @ 12.5
Weight (K)	0.5	0.8	0.8	0.9	1.2	1.3	5.2	6.5	6.9

Total Weight (K): 24.2

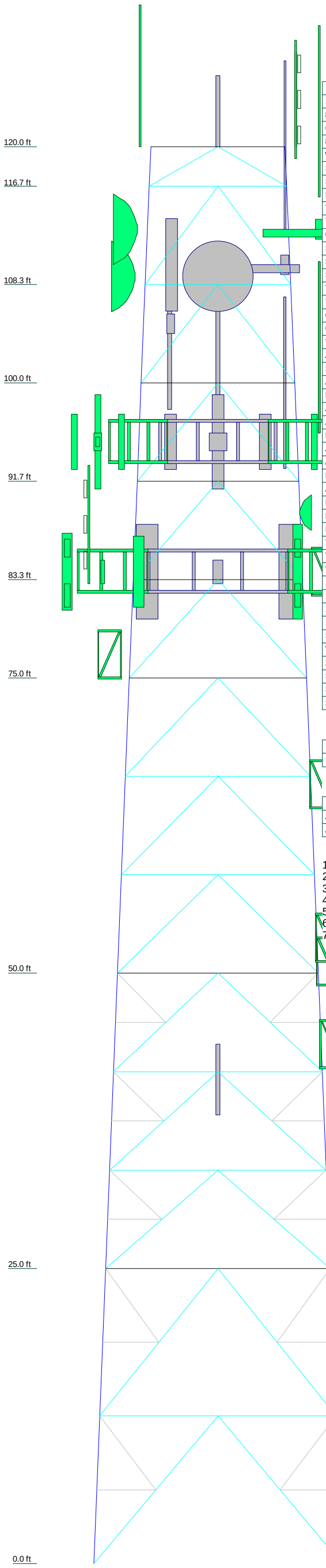

DESIGNED APPURTENANCE LOADING

TYPE	ELEVATION	TYPE	ELEVATION
12' x 3" Dia Omni	120	SitePro VFA12-HD (ATI)	84
8' x 3" Dia Omni	120	ANT450F6 (#16 (CSP-10))	84
6' x 3" Dia Omni	120	ROHN 4-ft Side Arm	84
8' dipole antenna	120	RRUW (ATI)	84
WPA-70040-4CF (CSP-28)	118 - 102	RRUW (ATI)	84
SC479-HF1LDF (CSP-17)	113	RRUW (ATI)	84
SC479-HF1LDF (CSP-22 (inverted))	113	DC6-48-60-0-8C-EV (ATI)	84
SC479-HF1LDF (CSP-23 (inverted))	113	DC6-48-60-0-8C-EV (ATI)	84
Tower Top Amplifier	113	8843 B2/B66A (ATI)	84
7-ft T-Frame	113	RRUS-32 (ATI)	84
6' Dish (#21 (CSP-5))	113	RRUS-32 (ATI)	84
SC479-HF1LDF (CSP-18)	110	RRUS-32 (ATI)	84
SC479-HF1LDF (CSP-9 (inverted))	110	4449 B5/B12 (ATI)	84
SC479-HF1LDF (CSP-19 (inverted))	110	80010965 (ATI)	84
Tower Top Amplifier (CSP-20)	110	4478 B14 (ATI)	84
7-ft T-Frame	110	4478 B14 (ATI)	84
6' Dish (#19 (CSP-6))	109	4478 B14 (ATI)	84
6' Dish (#20 (CSP-3))	109	8843 B2/B66A (ATI)	84
Tower Top Amplifier (CSP-32)	105	QD6616-7 (ATI)	84
AP13-850/065 (#18A (CSP-12))	102	QD8616-7 (ATI)	84
SE419-SWBPALDF (#18B (CSP-13))	102	80010966 (ATI)	84
AIR21 B2A/B4P (T-Mobile)	95	QD8616-7 (ATI)	84
LNX-6515DS (T-Mobile)	95	80010966 (ATI)	84
AIR32 (T-Mobile)	95	4449 B5/B12 (ATI)	84
AIR21 B2A/B4P (T-Mobile)	95	4449 B5/B12 (ATI)	84
LNX-6515DS (T-Mobile)	95	8843 B2/B66A (ATI)	84
AIR32 (T-Mobile)	95	DC6-48-60-0-8C-EV (ATI)	84
AIR21 B2A/B4P (T-Mobile)	95	20' 4-Bay Dipole (#14)	77
LNX-6515DS (T-Mobile)	95	ROHN 4-ft Side Arm	77
AIR32 (T-Mobile)	95	(2) 6' Yagi (#9)	67
RRUS-11 (T-Mobile)	95	Sabre 2' Sidearm	66
RRUS-11 (T-Mobile)	95	DB803M-Y (#6 (CSP-16))	54.5
RRUS-11 (T-Mobile)	95	Sabre 2' Sidearm	54
TMA 10"x8"x5" (T-Mobile)	95	DB264-A (#7 (CSP-4))	54
TMA 10"x8"x5" (T-Mobile)	95	Sabre 2' Sidearm	53
TMA 10"x8"x5" (T-Mobile)	95	12' Dipole (#4A)	51
10-ft T-Frame (T-Mobile)	95	Sabre 3' Sidearm	51
10-ft T-Frame (T-Mobile)	95	3' Yagi (#4B)	49
10-ft T-Frame (T-Mobile)	95	Sabre 2' Sidearm	44
12' x 3" Dia Omni	95	ANT790F2 (#2)	44
Sabre 3' Sidearm	95	4' Dish (#1A)	43
VHLP3-11W (Reserved)	89	ROHN 4-ft Side Arm	43
20' 4-Bay Dipole (#15)	87	1' x 1' Panel (#1B)	40
Sabre 3' Sidearm	87	1' Standoff Pipe	38
SitePro VFA12-HD (ATI)	84	6' x 3" Dia Omni (#5 (CSP-14))	38
SitePro VFA12-HD (ATI)	84		

SYMBOL LIST

MARK	SIZE	MARK	SIZE
A	L2 1/2x2 1/2x3/16		

MATERIAL STRENGTH

GRADE	Fy	Fu	GRADE	Fy	Fu
A572-50	50 ksi	65 ksi	A572-60	60 ksi	75 ksi
A36	36 ksi	58 ksi			

TOWER DESIGN NOTES

1. Tower designed for Exposure C to the TIA-222-H Standard.
2. Tower designed for a 135 mph basic wind in accordance with the TIA-222-H Standard.
3. Tower is also designed for a 50 mph basic wind with 1.00 in ice. Ice is considered to increase in thickness with height.
4. Deflections are based upon a 60 mph wind.
5. Tower Risk Category IV.
6. Topographic Category 4 with Crest Height of 150.00 ft
7. TOWER RATING: 98.9%

ALL REACTIONS ARE FACTORED

MAX. CORNER REACTIONS AT BASE:
DOWN: 411 K
SHEAR: 60 K

UPLIFT: -368 K
SHEAR: 55 K

AXIAL 115 K
SHEAR 28 K
MOMENT 1748 kip-ft
TORQUE 31 kip-ft
50 mph WIND - 1.0000 in ICE

AXIAL 44 K
SHEAR 111 K
MOMENT 7207 kip-ft
TORQUE 84 kip-ft
REACTIONS - 135 mph WIND

Centek Engineering Inc.
63-2 North Branford Rd.
Branford, CT 06405
Phone: (203) 488-0580
FAX: (203) 488-8587

Job: 23158.00 - CT2013			
Project: 120-ft Lattice Tower (CSP #27)			
Client: AT&T	Drawn by: TJL	App'd:	
Code: TIA-222-H	Date: 02/22/24	Scale: NTS	
Path: J:\Jobs\2315800.W\05_Structural\Backup Documentation\Rev (2)\Tnxtower\120-ft Tower #27.eri		Dwg No. E-1	

Feed Line Plan

Round Flat App In Face App Out Face

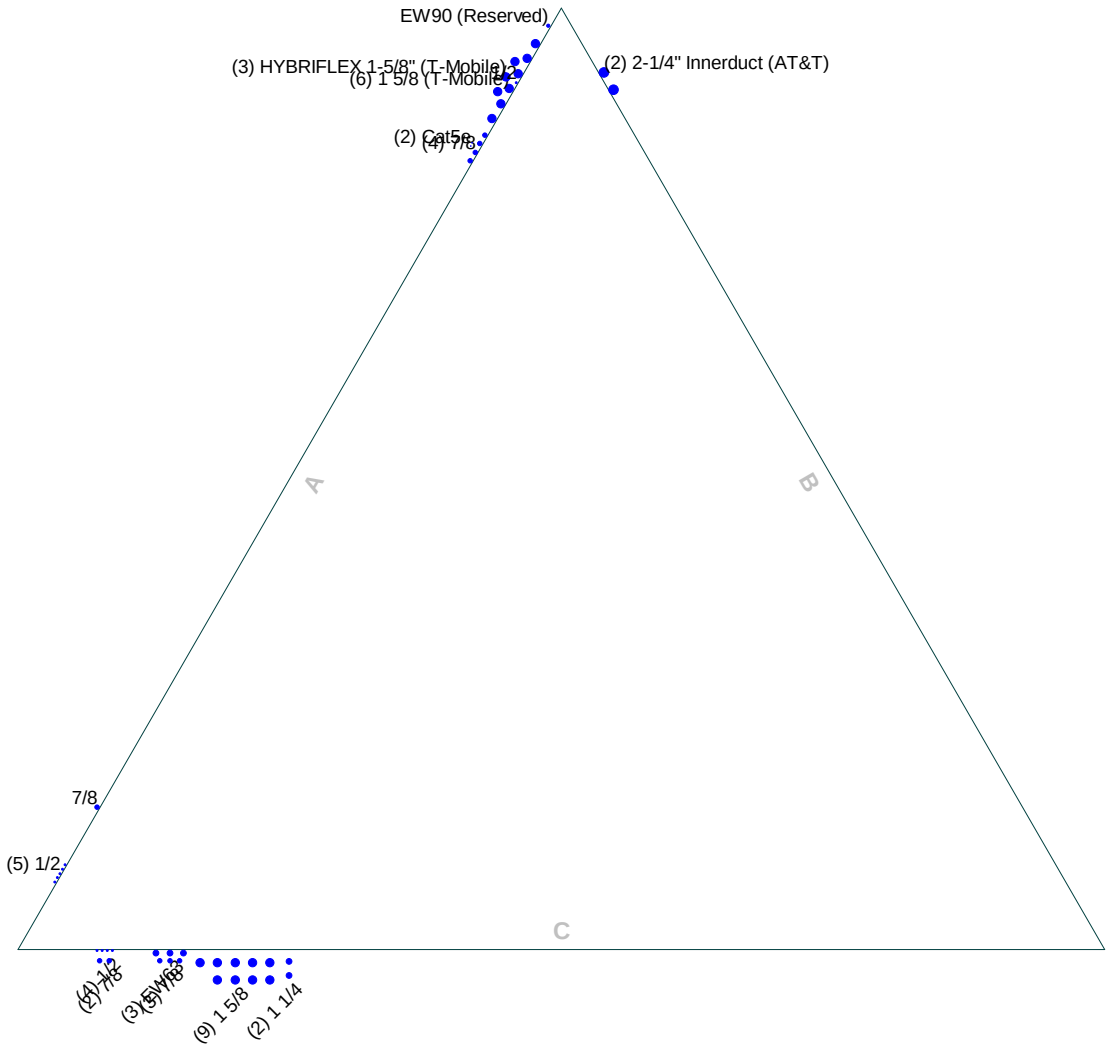

Centek Engineering Inc. 63-2 North Branford Rd. Branford, CT 06405 Phone: (203) 488-0580 FAX: (203) 488-8587	Job: ***23158.00 - CT2013***		
	Project: ***120-ft Lattice Tower (CSP #27)***		
	Client: AT&T	Drawn by: TJL	App'd:
	Code: TIA-222-H	Date: 02/22/24	Scale: NTS
	Path: J:\Jobs\2315800.W\05_Structural\Backup Documentation\Rev (2)\Tnxtower\120-ft Tower #27.er		Dwg No. E-7

Feed Line Distribution Chart
0' - 120'

Round | Flat | App In Face | App Out Face | Truss Leg

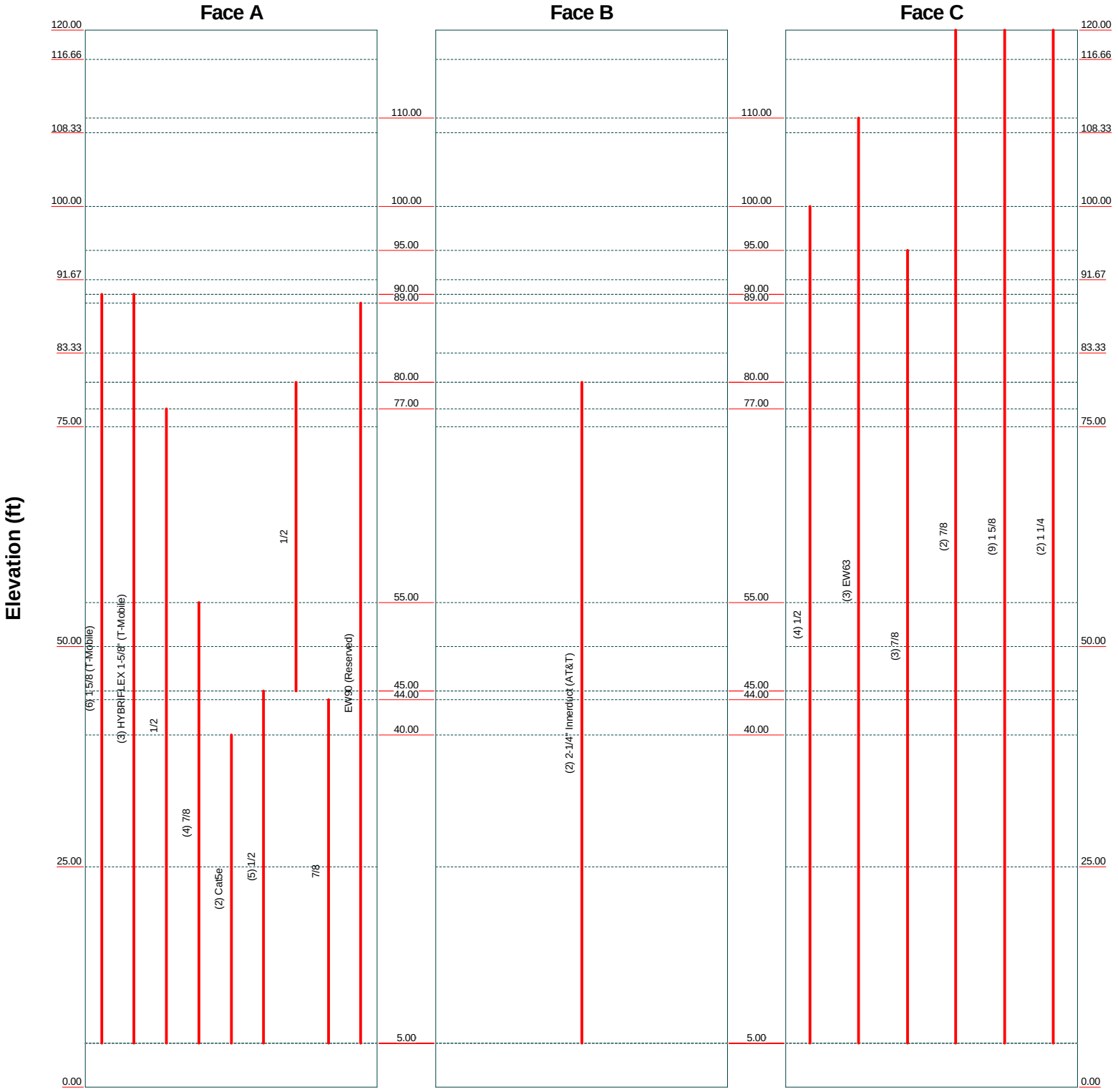

Centek Engineering Inc. 63-2 North Branford Rd. Branford, CT 06405 Phone: (203) 488-0580 FAX: (203) 488-8587	Job: ***23158.00 - CT2013***		
	Project: ***120-ft Lattice Tower (CSP #27)***		
	Client: AT&T	Drawn by: TJL	App'd:
	Code: TIA-222-H	Date: 02/22/24	Scale: NTS
	Path: J:\Jobs\2315800.W\05_Structural\Backup Documentation\Rev (2)\Tnxtower\120-ft Tower #27.er		Dwg No. E-7

Tower Input Data

The main tower is a 3x free standing tower with an overall height of 120.00 ft above the ground line.
The base of the tower is set at an elevation of 0.00 ft above the ground line.
The face width of the tower is 11.41 ft at the top and 21.02 ft at the base.
This tower is designed using the TIA-222-H standard.
The following design criteria apply:

Tower base elevation above sea level: 0.00 ft.
Basic wind speed of 135 mph.
Risk Category IV.
Exposure Category C.
Simplified Topographic Factor Procedure for wind speed-up calculations is used.
Topographic Category: 4.
Crest Height: 150.00 ft.
Nominal ice thickness of 1.0000 in.
Ice thickness is considered to increase with height.
Ice density of 56 pcf.
A wind speed of 50 mph is used in combination with ice.
Temperature drop of 50 °F.
Deflections calculated using a wind speed of 60 mph.
Pressures are calculated at each section.
Stress ratio used in tower member design is 1.
Local bending stresses due to climbing loads, feed line supports, and appurtenance mounts are not considered.

Options

- Consider Moments - Legs
- Consider Moments - Horizontals
- Consider Moments - Diagonals
- Use Moment Magnification
- √ Use Code Stress Ratios
- √ Use Code Safety Factors - Guys
- Escalate Ice
- Always Use Max Kz
- Use Special Wind Profile
- √ Include Bolts In Member Capacity
- Leg Bolts Are At Top Of Section
- √ Secondary Horizontal Braces Leg
- Use Diamond Inner Bracing (4 Sided)
- √ SR Members Have Cut Ends
- SR Members Are Concentric
- Distribute Leg Loads As Uniform
- Assume Legs Pinned
- √ Assume Rigid Index Plate
- √ Use Clear Spans For Wind Area
- √ Use Clear Spans For KL/r
- Retension Guys To Initial Tension
- √ Bypass Mast Stability Checks
- Use Azimuth Dish Coefficients
- Project Wind Area of Appurtenances
- Alternative Appurt. EPA Calculation
- Autocalc Torque Arm Areas
- Add IBC .6D+W Combination
- √ Sort Capacity Reports By Component
- Triangulate Diamond Inner Bracing
- Treat Feed Line Bundles As Cylinder
- Ignore KL/ry For 60 Deg. Angle Legs
- Use ASCE 10 X-Brace Ly Rules
- √ Calculate Redundant Bracing Forces
- Ignore Redundant Members in FEA
- √ SR Leg Bolts Resist Compression
- √ All Leg Panels Have Same Allowable
- Offset Girt At Foundation
- √ Consider Feed Line Torque
- √ Include Angle Block Shear Check
- Use TIA-222-H Bracing Resist. Exemption
- Use TIA-222-H Tension Splice Exemption

Poles

- Include Shear-Torsion Interaction
- Always Use Sub-Critical Flow
- Use Top Mounted Sockets
- Pole Without Linear Attachments
- Pole With Shroud Or No Appurtenances
- Outside and Inside Corner Radii Are Known

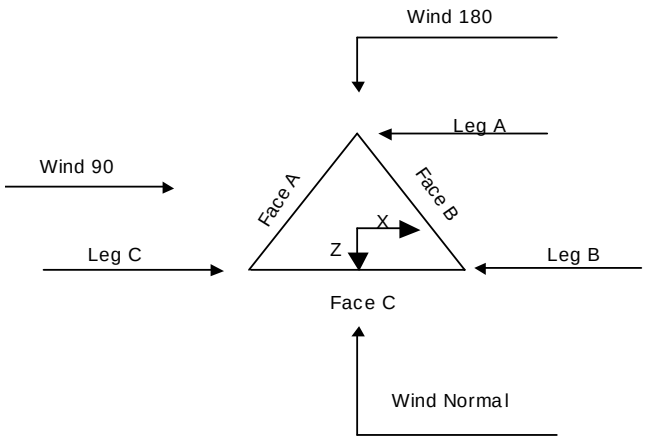

Triangular Tower

Tower Section Geometry

Tower Section	Tower Elevation ft	Assembly Database	Description	Section Width ft	Number of Sections	Section Length ft
T1	120.00-116.66			11.41	1	3.34
T2	116.66-108.33			11.68	1	8.33
T3	108.33-100.00			12.35	1	8.33
T4	100.00-91.67			13.02	1	8.33
T5	91.67-83.33			13.69	1	8.33
T6	83.33-75.00			14.35	1	8.33
T7	75.00-50.00			15.02	1	25.00
T8	50.00-25.00			17.02	1	25.00
T9	25.00-0.00			19.02	1	25.00

Tower Section Geometry *(cont'd)*

Tower Section	Tower Elevation ft	Diagonal Spacing ft	Bracing Type	Has K Brace End Panels	Has Horizontals	Top Girt Offset in	Bottom Girt Offset in
T1	120.00-116.66	3.34	K Brace Down	No	Yes	0.0000	0.0000
T2	116.66-108.33	8.33	K Brace Down	No	Yes	0.0000	0.0000
T3	108.33-100.00	8.33	K Brace Down	No	Yes	0.0000	0.0000
T4	100.00-91.67	8.33	K Brace Down	No	Yes	0.0000	0.0000
T5	91.67-83.33	8.33	K Brace Down	No	Yes	0.0000	0.0000
T6	83.33-75.00	8.33	K Brace Down	No	Yes	0.0000	0.0000

Tower Section	Tower Elevation ft	Diagonal Spacing ft	Bracing Type	Has K Brace End Panels	Has Horizontals	Top Girt Offset in	Bottom Girt Offset in
T7	75.00-50.00	8.33	K Brace Down	No	Yes	0.0000	0.0000
T8	50.00-25.00	8.33	K1 Down	No	Yes	0.0000	0.0000
T9	25.00-0.00	12.50	K1 Down	No	Yes	0.0000	0.0000

Tower Section Geometry *(cont'd)*

Tower Elevation ft	Leg Type	Leg Size	Leg Grade	Diagonal Type	Diagonal Size	Diagonal Grade
T1 120.00-116.66	Pipe	P5x0.25	A572-50 (50 ksi)	Double Angle	2L2 1/2x2x3/16	A36 (36 ksi)
T2 116.66-108.33	Pipe	P5x0.25	A572-50 (50 ksi)	Double Angle	2L2 1/2x2x3/16	A36 (36 ksi)
T3 108.33-100.00	Pipe	P5x0.25	A572-50 (50 ksi)	Double Angle	2L2 1/2x2x3/16	A36 (36 ksi)
T4 100.00-91.67	Pipe	P5x0.25	A572-50 (50 ksi)	Double Angle	2L2 1/2x2x3/16	A36 (36 ksi)
T5 91.67-83.33	Pipe	P5x0.25	A572-50 (50 ksi)	Double Angle	2L2 1/2x2x5/16	A36 (36 ksi)
T6 83.33-75.00	Pipe	P5x0.25	A572-50 (50 ksi)	Double Angle	2L2 1/2x2x3/8	A36 (36 ksi)
T7 75.00-50.00	Pipe	P5x0.375	A572-50 (50 ksi)	Double Angle	2L3x2 1/2x3/8	A36 (36 ksi)
T8 50.00-25.00	Pipe	P5x.400	A572-60 (60 ksi)	Double Angle	2L3x2 1/2x3/8	A36 (36 ksi)
T9 25.00-0.00	Pipe	P6.875x.400	A572-60 (60 ksi)	Double Angle	2L3 1/2x3x3/8	A36 (36 ksi)

Tower Section Geometry *(cont'd)*

Tower Elevation ft	Top Girt Type	Top Girt Size	Top Girt Grade	Bottom Girt Type	Bottom Girt Size	Bottom Girt Grade
T1 120.00-116.66	Equal Angle	L2 1/2x2 1/2x3/16	A36 (36 ksi)	Solid Round		A36 (36 ksi)
T4 100.00-91.67	Equal Angle	L3x3x1/4	A36 (36 ksi)	Solid Round		A36 (36 ksi)
T5 91.67-83.33	Single Angle	L3x3x1/4	A36 (36 ksi)	Solid Round		A36 (36 ksi)
T6 83.33-75.00	Single Angle	L3x3x1/4	A36 (36 ksi)	Solid Round		A36 (36 ksi)
T7 75.00-50.00	Equal Angle	L3x3x1/4	A36 (36 ksi)	Solid Round		A36 (36 ksi)
T8 50.00-25.00	Equal Angle	L3x3x5/16	A36 (36 ksi)	Solid Round		A36 (36 ksi)
T9 25.00-0.00	Equal Angle	L4x4x3/8	A36 (36 ksi)	Solid Round		A36 (36 ksi)

Tower Section Geometry *(cont'd)*

Tower Elevation ft	No. of Mid Girts	Mid Girt Type	Mid Girt Size	Mid Girt Grade	Horizontal Type	Horizontal Size	Horizontal Grade
T1 120.00-116.66	None	Flat Bar		A36 (36 ksi)	Single Angle	L2 1/2x2 1/2x3/16	A36 (36 ksi)
T2 116.66-108.33	None	Flat Bar		A36 (36 ksi)	Single Angle	L2 1/2x2 1/2x3/16	A36 (36 ksi)
T3 108.33-100.00	None	Flat Bar		A36 (36 ksi)	Single Angle	L2 1/2x2 1/2x3/16	A36 (36 ksi)
T4 100.00-91.67	None	Flat Bar		A36 (36 ksi)	Single Angle	L3x3x1/4	A36 (36 ksi)
T5 91.67-83.33	None	Flat Bar		A36 (36 ksi)	Single Angle	L3x3x1/4	A36 (36 ksi)
T6 83.33-75.00	None	Flat Bar		A36 (36 ksi)	Single Angle	L3x3x1/4	A36 (36 ksi)
T7 75.00-50.00	None	Flat Bar		A36 (36 ksi)	Single Angle	L3x3x3/8	A36 (36 ksi)
T8 50.00-25.00	None	Flat Bar		A36 (36 ksi)	Single Angle	L3x3x1/2	A36 (36 ksi)
T9 25.00-0.00	None	Flat Bar		A36 (36 ksi)	Single Angle	L4x4x3/8	A36 (36 ksi)

Tower Section Geometry *(cont'd)*

Tower Elevation ft	Secondary Horizontal Type	Secondary Horizontal Size	Secondary Horizontal Grade	Inner Bracing Type	Inner Bracing Size	Inner Bracing Grade
T1 120.00-116.66	Solid Round		A572-50 (50 ksi)	Single Angle	L2 1/2x2x3/16	A36 (36 ksi)
T2 116.66-108.33	Solid Round		A572-50 (50 ksi)	Single Angle	L2 1/2x2x3/16	A36 (36 ksi)
T3 108.33-100.00	Solid Round		A572-50 (50 ksi)	Single Angle	L2 1/2x2x3/16	A36 (36 ksi)
T4 100.00-91.67	Solid Round		A572-50 (50 ksi)	Single Angle	L2 1/2x2x3/16	A36 (36 ksi)
T5 91.67-83.33	Solid Round		A572-50 (50 ksi)	Single Angle	L2 1/2x2x3/16	A36 (36 ksi)
T6 83.33-75.00	Solid Round		A572-50 (50 ksi)	Single Angle	L2 1/2x2x3/16	A36 (36 ksi)
T7 75.00-50.00	Solid Round		A572-50 (50 ksi)	Single Angle	L2 1/2x2x3/16	A36 (36 ksi)
T8 50.00-25.00	Single Angle		A572-50 (50 ksi)	Single Angle	L2 1/2x2x3/16	A36 (36 ksi)
T9 25.00-0.00	Single Angle		A572-50 (50 ksi)	Single Angle	L2 1/2x2 1/2x3/16	A36 (36 ksi)

Tower Section Geometry *(cont'd)*

Tower Elevation ft	Redundant Bracing Grade		Redundant Type	Redundant Size	K Factor
T8	A36 (36 ksi)	Horizontal (1)	Single Angle	L2 1/2x2 1/2x3/16	1
50.00-25.00	A36 (36 ksi)	Diagonal (1)	Single Angle	L2 1/2x2 1/2x3/16	1
T9 25.00-0.00	A36 (36 ksi)	Horizontal (1)	Single Angle	L2 1/2x2 1/2x3/16	1
	A36 (36 ksi)	Diagonal (1)	Single Angle	L2 1/2x2 1/2x3/16	1

Tower Section Geometry *(cont'd)*

Tower Elevation ft	Gusset Area (per face) ft^2	Gusset Thickness in	Gusset Grade	Adjust. Factor A_f	Adjust. Factor A_r	Weight Mult.	Double Angle Stitch Bolt Spacing Diagonals in	Double Angle Stitch Bolt Spacing Horizontals in	Double Angle Stitch Bolt Spacing Redundants in
T1	0.00	0.0000	A36	1	1	1	36.0000	36.0000	36.0000
120.00-116.66			(36 ksi)						
T2	0.00	0.0000	A36	1	1	1	36.0000	36.0000	36.0000
116.66-108.33			(36 ksi)						
T3	0.00	0.0000	A36	1	1	1	36.0000	36.0000	36.0000
108.33-100.00			(36 ksi)						
T4	0.00	0.0000	A36	1	1	1	36.0000	36.0000	36.0000
100.00-91.67			(36 ksi)						
T5 91.67-83.33	0.00	0.0000	A36	1	1	1	36.0000	36.0000	36.0000
			(36 ksi)						
T6 83.33-75.00	0.00	0.0000	A36	1	1	1	36.0000	36.0000	36.0000
			(36 ksi)						
T7 75.00-50.00	0.00	0.0000	A36	1	1	1	36.0000	36.0000	36.0000
			(36 ksi)						
T8 50.00-25.00	0.00	0.0000	A36	1	1	1	36.0000	36.0000	36.0000
			(36 ksi)						
T9 25.00-0.00	0.00	0.0000	A36	1	1	1	36.0000	36.0000	36.0000
			(36 ksi)						

Tower Section Geometry *(cont'd)*

Tower Elevation ft	Calc K Single Angles	Calc K Solid Rounds	K Factors[1] Legs	X Brace Diags X Y	K Brace Diags X Y	Single Diags X Y	Girts X Y	Horiz. X Y	Sec. Horiz. X Y	Inner Brace X Y
T1	Yes	No	1	1	1	1	1	1	1	1
120.00-116.66				1	1	1	1	1	1	1
T2	Yes	No	1	1	1	1	1	1	1	1
116.66-108.33				1	1	1	1	1	1	1
T3	Yes	No	1	1	1	1	1	1	1	1
108.33-100.00				1	1	1	1	1	1	1
T4	Yes	No	1	1	1	1	1	1	1	1
100.00-91.67				1	1	1	1	1	1	1
T5	Yes	No	1	1	1	1	1	1	1	1
91.67-83.33				1	1	1	1	1	1	1
T6	Yes	No	1	1	1	1	1	1	1	1
83.33-75.00				1	1	1	1	1	1	1
T7	Yes	No	1	1	1	1	1	1	1	1
75.00-50.00				1	1	1	1	1	1	1

Tower Elevation ft	Calc K Single Angles	Calc K Solid Rounds	K Factors[1] Legs	X Brace Diags X Y	K Brace Diags X Y	Single Diags X Y	Girts X Y	Horiz. X Y	Sec. Horiz. X Y	Inner Brace X Y
T8	Yes	No	1	1	1	1	1	1	1	1
50.00-25.00				1	1	1	1	1	1	1
T9 25.00-0.00	Yes	No	1	1	1	1	1	1	1	1
				1	1	1	1	1	1	1

[1]*Note: K factors are applied to member segment lengths. K-braces without inner supporting members will have the K factor in the out-of-plane direction applied to the overall length.*

Tower Section Geometry *(cont'd)*

Tower Elevation ft	Leg Net Width Deduct in	Leg U	Diagonal Net Width Deduct in	Diagonal U	Top Girt Net Width Deduct in	Top Girt U	Bottom Girt Net Width Deduct in	Bottom Girt U	Mid Girt Net Width Deduct in	Mid Girt U	Long Horizontal Net Width Deduct in	Long Horizontal U	Short Horizontal Net Width Deduct in	Short Horizontal U
T1 120.00-116.66	0.0000	1	0.0000	0.75	0.0000	0.75	0.0000	0.75	0.0000	0.75	0.0000	0.75	0.0000	0.75
T2 116.66-108.33	0.0000	1	0.0000	0.75	0.0000	0.75	0.0000	0.75	0.0000	0.75	0.0000	0.75	0.0000	0.75
T3 108.33-100.00	0.0000	1	0.0000	0.75	0.0000	0.75	0.0000	0.75	0.0000	0.75	0.0000	0.75	0.0000	0.75
T4 100.00-91.67	0.0000	1	0.0000	0.75	0.0000	0.75	0.0000	0.75	0.0000	0.75	0.0000	0.75	0.0000	0.75
T5 91.67-83.33	0.0000	1	0.0000	0.75	0.0000	0.75	0.0000	0.75	0.0000	0.75	0.0000	0.75	0.0000	0.75
T6 83.33-75.00	0.0000	1	0.0000	0.75	0.0000	0.75	0.0000	0.75	0.0000	0.75	0.0000	0.75	0.0000	0.75
T7 75.00-50.00	0.0000	1	0.0000	0.75	0.0000	0.75	0.0000	0.75	0.0000	0.75	0.0000	0.75	0.0000	0.75
T8 50.00-25.00	0.0000	1	0.0000	0.75	0.0000	0.75	0.0000	0.75	0.0000	0.75	0.0000	0.75	0.0000	0.75
T9 25.00-0.00	0.0000	1	0.0000	0.75	0.0000	0.75	0.0000	0.75	0.0000	0.75	0.0000	0.75	0.0000	0.75

Tower Elevation ft	Redundant Horizontal Net Width Deduct in	Redundant Horizontal U	Redundant Diagonal Net Width Deduct in	Redundant Diagonal U	Redundant Sub-Diagonal Net Width Deduct in	Redundant Sub-Diagonal U	Redundant Sub-Horizontal Net Width Deduct in	Redundant Sub-Horizontal U	Redundant Vertical Net Width Deduct in	Redundant Vertical U	Redundant Hip Net Width Deduct in	Redundant Hip U	Redundant Hip Diagonal Net Width Deduct in	Redundant Hip Diagonal U
T1 120.00-116.66	0.0000	0.75 (1)	0.0000	0.75 (1)	0.0000	0.75	0.0000	0.75	0.0000	0.75	0.0000	0.75 (1)	0.0000	0.75 (1)
	0.0000	0.75 (2)	0.0000	0.75 (2)							0.0000	0.75 (2)	0.0000	0.75 (2)
	0.0000	0.75 (3)	0.0000	0.75 (3)							0.0000	0.75 (3)	0.0000	0.75 (3)
	0.0000	0.75 (4)	0.0000	0.75 (4)							0.0000	0.75 (4)	0.0000	0.75 (4)
T2 116.66-108.33	0.0000	0.75 (1)	0.0000	0.75 (1)	0.0000	0.75	0.0000	0.75	0.0000	0.75	0.0000	0.75 (1)	0.0000	0.75 (1)
	0.0000	0.75 (2)	0.0000	0.75 (2)							0.0000	0.75 (2)	0.0000	0.75 (2)
	0.0000	0.75 (3)	0.0000	0.75 (3)							0.0000	0.75 (3)	0.0000	0.75 (3)

Tower Elevation ft	Redundant Horizontal		Redundant Diagonal		Redundant Sub-Diagonal		Redundant Sub-Horizontal		Redundant Vertical		Redundant Hip		Redundant Hip Diagonal	
	Net Width Deduct in	U	Net Width Deduct in	U	Net Width Deduct in	U	Net Width Deduct in	U	Net Width Deduct in	U	Net Width Deduct in	U	Net Width Deduct in	U
	0.0000	0.75 (4)	0.0000	0.75 (4)							0.0000	0.75 (4)	0.0000	0.75 (4)
T3 108.33-100.00	0.0000	0.75 (1)	0.0000	0.75 (1)	0.0000	0.75	0.0000	0.75	0.0000	0.75	0.0000	0.75 (1)	0.0000	0.75 (1)
	0.0000	0.75 (2)	0.0000	0.75 (2)							0.0000	0.75 (2)	0.0000	0.75 (2)
	0.0000	0.75 (3)	0.0000	0.75 (3)							0.0000	0.75 (3)	0.0000	0.75 (3)
	0.0000	0.75 (4)	0.0000	0.75 (4)							0.0000	0.75 (4)	0.0000	0.75 (4)
T4 100.00-91.67	0.0000	0.75 (1)	0.0000	0.75 (1)	0.0000	0.75	0.0000	0.75	0.0000	0.75	0.0000	0.75 (1)	0.0000	0.75 (1)
	0.0000	0.75 (2)	0.0000	0.75 (2)							0.0000	0.75 (2)	0.0000	0.75 (2)
	0.0000	0.75 (3)	0.0000	0.75 (3)							0.0000	0.75 (3)	0.0000	0.75 (3)
	0.0000	0.75 (4)	0.0000	0.75 (4)							0.0000	0.75 (4)	0.0000	0.75 (4)
T5 91.67-83.33	0.0000	0.75 (1)	0.0000	0.75 (1)	0.0000	0.75	0.0000	0.75	0.0000	0.75	0.0000	0.75 (1)	0.0000	0.75 (1)
	0.0000	0.75 (2)	0.0000	0.75 (2)							0.0000	0.75 (2)	0.0000	0.75 (2)
	0.0000	0.75 (3)	0.0000	0.75 (3)							0.0000	0.75 (3)	0.0000	0.75 (3)
	0.0000	0.75 (4)	0.0000	0.75 (4)							0.0000	0.75 (4)	0.0000	0.75 (4)
T6 83.33-75.00	0.0000	0.75 (1)	0.0000	0.75 (1)	0.0000	0.75	0.0000	0.75	0.0000	0.75	0.0000	0.75 (1)	0.0000	0.75 (1)
	0.0000	0.75 (2)	0.0000	0.75 (2)							0.0000	0.75 (2)	0.0000	0.75 (2)
	0.0000	0.75 (3)	0.0000	0.75 (3)							0.0000	0.75 (3)	0.0000	0.75 (3)
	0.0000	0.75 (4)	0.0000	0.75 (4)							0.0000	0.75 (4)	0.0000	0.75 (4)
T7 75.00-50.00	0.0000	0.75 (1)	0.0000	0.75 (1)	0.0000	0.75	0.0000	0.75	0.0000	0.75	0.0000	0.75 (1)	0.0000	0.75 (1)
	0.0000	0.75 (2)	0.0000	0.75 (2)							0.0000	0.75 (2)	0.0000	0.75 (2)
	0.0000	0.75 (3)	0.0000	0.75 (3)							0.0000	0.75 (3)	0.0000	0.75 (3)
	0.0000	0.75 (4)	0.0000	0.75 (4)							0.0000	0.75 (4)	0.0000	0.75 (4)
T8 50.00-25.00	0.0000	0.75 (1)	0.0000	0.75 (1)	0.0000	0.75	0.0000	0.75	0.0000	0.75	0.0000	0.75 (1)	0.0000	0.75 (1)
	0.0000	0.75 (2)	0.0000	0.75 (2)							0.0000	0.75 (2)	0.0000	0.75 (2)
	0.0000	0.75 (3)	0.0000	0.75 (3)							0.0000	0.75 (3)	0.0000	0.75 (3)
	0.0000	0.75 (4)	0.0000	0.75 (4)							0.0000	0.75 (4)	0.0000	0.75 (4)
T9 25.00-0.00	0.0000	0.75 (1)	0.0000	0.75 (1)	0.0000	0.75	0.0000	0.75	0.0000	0.75	0.0000	0.75 (1)	0.0000	0.75 (1)
	0.0000	0.75 (2)	0.0000	0.75 (2)							0.0000	0.75 (2)	0.0000	0.75 (2)

	0.0000	0.75 (3)	0.0000	0.75 (3)				0.0000	0.75 (3)	0.0000	0.75 (3)
	0.0000	0.75 (4)	0.0000	0.75 (4)				0.0000	0.75 (4)	0.0000	0.75 (4)

Tower Section Geometry *(cont'd)*

Tower Elevation ft	Leg Connection Type	Leg Bolt Size in	Leg No.	Diagonal Bolt Size in	Diagonal No.	Top Girt Bolt Size in	Top Girt No.	Bottom Girt Bolt Size in	Bottom Girt No.	Mid Girt Bolt Size in	Mid Girt No.	Long Horizontal Bolt Size in	Long Horizontal No.	Short Horizontal Bolt Size in	Short Horizontal No.
T1 120.00-116.66	Flange	0.7500 A325N	0	0.7500 A325X	1	0.6250 A325N	2	0.0000 A325N	0	0.6250 A325N	0	0.6250 A325N	2	0.6250 A325N	0
T2 116.66-108.33	Flange	0.7500 A325N	0	0.7500 A325X	1	0.6250 A325N	2	0.6250 A325N	0	0.6250 A325N	0	0.6250 A325N	2	0.6250 A325N	0
T3 108.33-100.00	Flange	0.7500 A325N	6	0.7500 A325X	1	0.6250 A325N	2	0.6250 A325N	0	0.6250 A325N	0	0.6250 A325N	2	0.6250 A325N	0
T4 100.00-91.67	Flange	0.7500 A325N	0	0.7500 A325X	1	0.6250 A325N	2	0.6250 A325N	0	0.6250 A325N	0	0.6250 A325N	2	0.6250 A325N	0
T5 91.67-83.33	Flange	0.7500 A36	0	1.0000 A325X	1	0.6250 A325N	2	0.6250 A325N	0	0.6250 A325N	0	0.6250 A325N	2	0.6250 A325N	0
T6 83.33-75.00	Flange	0.7500 A325N	6	0.7500 A325X	1	0.6250 A325N	2	0.6250 A325N	0	0.6250 A325N	0	0.6250 A325N	2	0.6250 A325N	0
T7 75.00-50.00	Flange	0.7500 A325N	6	0.7500 A325X	1	0.6250 A325N	2	0.6250 A325N	0	0.6250 A325N	0	0.6250 A325N	2	0.6250 A325N	0
T8 50.00-25.00	Flange	1.0000 A325N	8	0.7500 A325X	1	0.6250 A325N	2	0.6250 A325N	0	0.6250 A325N	0	0.6250 A325N	2	0.6250 A325N	0
T9 25.00-0.00	Flange	1.5000 A36	6	1.0000 A325X	1	0.6250 A325N	2	0.6250 A325N	0	0.6250 A325N	0	0.6250 A325N	2	0.6250 A325N	0

Feed Line/Linear Appurtenances - Entered As Round Or Flat

Description	Face or Leg	Allow Shield	Exclude From Torque Calculation	Component Type	Placement ft	Face Offset in	Lateral Offset (Frac FW)	#	# Per Row	Clear Spacing in	Width or Diameter in	Perimeter in	Weight plf
2-1/4" Innerduct (AT&T)	B	No	No	Ar (CaAa)	80.00 - 5.00	0.0000	-0.42	2	2	2.2500	2.2500		4.00
1 5/8 (T-Mobile)	A	No	No	Ar (CaAa)	90.00 - 5.00	0.0000	0.42	6	6	1.9800	1.9800		1.04
HYBRIFLEX 1-5/8" (T-Mobile)	A	No	No	Ar (CaAa)	90.00 - 5.00	2.0000	0.42	3	3	1.9800	1.9800		1.90
1/2	A	No	No	Ar (CaAa)	77.00 - 5.00	0.0000	0.42	1	1	0.5800	0.5800		0.25
7/8	A	No	No	Ar (CaAa)	55.00 - 5.00	0.0000	0.35	4	4	1.1100	1.1100		0.54
Cat5e	A	No	No	Ar (CaAa)	40.00 - 5.00	2.0000	0.35	2	2	0.3600	0.3600		0.06
1/2	A	No	No	Ar (CaAa)	45.00 - 5.00	0.0000	-0.42	5	5	0.5800	0.5800		0.25
1/2	A	No	No	Ar (CaAa)	80.00 -	0.0000	-0.42	1	1	0.5800	0.5800		0.25

Description	Face or Leg	Allow Shield	Exclude From Torque Calculation	Component Type	Placement ft	Face Offset in	Lateral Offset (Frac FW)	#	# Per Row	Clear Spacing in	Width or Diameter in	Perimeter in	Weight plf
					45.00								
7/8	A	No	No	Ar (CaAa)	44.00 - 5.00	0.0000	-0.35	1	1	1.1100	1.1100		0.54
1/2	C	No	No	Ar (CaAa)	100.00 - 5.00	0.0000	0.42	4	4	0.5800	0.5800		0.25
EW63	C	No	No	Ar (CaAa)	110.00 - 5.00	0.0000	0.36	3	3	1.5742	1.5742		0.51
7/8	C	No	No	Ar (CaAa)	95.00 - 5.00	2.0000	0.36	3	3	1.1100	1.1100		0.54
7/8	C	No	No	Ar (CaAa)	120.00 - 5.00	2.0000	0.42	2	2	1.1100	1.1100		0.54
1 5/8	C	No	No	Ar (CaAa)	120.00 - 5.00	2.0000	0.3	9	5	1.9800	1.9800		1.04
1 1/4	C	No	No	Ar (CaAa)	120.00 - 5.00	2.0000	0.25	2	1	1.5500	1.5500		0.66
EW90 (Reserved)	A	No	No	Ar (CaAa)	89.00 - 5.00	0.0000	0.48	1	1	0.9869	0.9869		0.32

Feed Line/Linear Appurtenances Section Areas

Tower Section	Tower Elevation ft	Face	A_R ft^2	A_F ft^2	C_AA_A In Face ft^2	C_AA_A Out Face ft^2	Weight K
T1	120.00-116.66	A	0.000	0.000	0.000	0.000	0.00
		B	0.000	0.000	0.000	0.000	0.00
		C	0.000	0.000	7.729	0.000	0.04
T2	116.66-108.33	A	0.000	0.000	0.000	0.000	0.00
		B	0.000	0.000	0.000	0.000	0.00
		C	0.000	0.000	20.064	0.000	0.10
T3	108.33-100.00	A	0.000	0.000	0.000	0.000	0.00
		B	0.000	0.000	0.000	0.000	0.00
		C	0.000	0.000	23.210	0.000	0.11
T4	100.00-91.67	A	0.000	0.000	0.000	0.000	0.00
		B	0.000	0.000	0.000	0.000	0.00
		C	0.000	0.000	26.262	0.000	0.12
T5	91.67-83.33	A	0.000	0.000	12.439	0.000	0.08
		B	0.000	0.000	0.000	0.000	0.00
		C	0.000	0.000	27.927	0.000	0.13
T6	83.33-75.00	A	0.000	0.000	16.078	0.000	0.10
		B	0.000	0.000	2.250	0.000	0.04
		C	0.000	0.000	27.927	0.000	0.13
T7	75.00-50.00	A	0.000	0.000	52.137	0.000	0.33
		B	0.000	0.000	11.250	0.000	0.20
		C	0.000	0.000	83.782	0.000	0.40
T8	50.00-25.00	A	0.000	0.000	68.846	0.000	0.41
		B	0.000	0.000	11.250	0.000	0.20
		C	0.000	0.000	83.782	0.000	0.40
T9	25.00-0.00	A	0.000	0.000	57.114	0.000	0.33
		B	0.000	0.000	9.000	0.000	0.16
		C	0.000	0.000	67.025	0.000	0.32

Feed Line/Linear Appurtenances Section Areas - With Ice

Tower Section	Tower Elevation ft	Face or Leg	Ice Thickness in	A_R ft^2	A_F ft^2	C_AA_A In Face ft^2	C_AA_A Out Face ft^2	Weight K
T1	120.00-116.66	A	1.633	0.000	0.000	0.000	0.000	0.00
		B		0.000	0.000	0.000	0.000	0.00
		C		0.000	0.000	16.779	0.000	0.30
T2	116.66-108.33	A	1.637	0.000	0.000	0.000	0.000	0.00
		B		0.000	0.000	0.000	0.000	0.00
		C		0.000	0.000	44.418	0.000	0.77
T3	108.33-100.00	A	1.643	0.000	0.000	0.000	0.000	0.00
		B		0.000	0.000	0.000	0.000	0.00
		C		0.000	0.000	54.605	0.000	0.90
T4	100.00-91.67	A	1.649	0.000	0.000	0.000	0.000	0.00
		B		0.000	0.000	0.000	0.000	0.00
		C		0.000	0.000	67.483	0.000	1.04
T5	91.67-83.33	A	1.656	0.000	0.000	35.666	0.000	0.53
		B		0.000	0.000	0.000	0.000	0.00
		C		0.000	0.000	73.772	0.000	1.11
T6	83.33-75.00	A	1.662	0.000	0.000	47.898	0.000	0.71
		B		0.000	0.000	7.197	0.000	0.12
		C		0.000	0.000	73.881	0.000	1.11
T7	75.00-50.00	A	1.674	0.000	0.000	162.856	0.000	2.38
		B		0.000	0.000	36.081	0.000	0.61
		C		0.000	0.000	222.225	0.000	3.36
T8	50.00-25.00	A	1.678	0.000	0.000	227.990	0.000	3.10
		B		0.000	0.000	36.111	0.000	0.61
		C		0.000	0.000	222.407	0.000	3.36
T9	25.00-0.00	A	1.601	0.000	0.000	190.034	0.000	2.47
		B		0.000	0.000	28.366	0.000	0.47
		C		0.000	0.000	174.815	0.000	2.59

Feed Line Center of Pressure

Section	Elevation ft	CP_X in	CP_Z in	CP_X Ice in	CP_Z Ice in
T1	120.00-116.66	-9.3636	10.9217	-12.4135	13.3195
T2	116.66-108.33	-13.7870	15.4770	-17.0447	17.7733
T3	108.33-100.00	-16.1054	17.3622	-20.5153	20.4359
T4	100.00-91.67	-18.0511	18.6886	-24.7175	23.2289
T5	91.67-83.33	-17.8339	3.9345	-23.1964	2.8322
T6	83.33-75.00	-17.5831	-1.7197	-22.6099	-4.8152
T7	75.00-50.00	-17.5980	-4.1461	-23.2154	-8.7180
T8	50.00-25.00	-17.7922	-5.6009	-24.9403	-11.6210
T9	25.00-0.00	-17.1599	-5.3213	-25.1753	-11.9850

Shielding Factor Ka

Tower Section	Feed Line Record No.	Description	Feed Line Segment Elev.	K_a No Ice	K_a Ice
T1	13	7/8	116.66 - 120.00	0.6000	0.6000
T1	14	1 5/8	116.66 - 120.00	0.6000	0.6000

Tower Section	Feed Line Record No.	Description	Feed Line Segment Elev.	K_a No Ice	K_a Ice
T1	15	1 1/4	116.66 - 120.00	0.6000	0.6000
T2	11	EW63	108.33 - 110.00	0.6000	0.6000
T2	13	7/8	108.33 - 116.66	0.6000	0.6000
T2	14	1 5/8	108.33 - 116.66	0.6000	0.6000
T2	15	1 1/4	108.33 - 116.66	0.6000	0.6000
T3	11	EW63	100.00 - 108.33	0.6000	0.6000
T3	13	7/8	100.00 - 108.33	0.6000	0.6000
T3	14	1 5/8	100.00 - 108.33	0.6000	0.6000
T3	15	1 1/4	100.00 - 108.33	0.6000	0.6000
T4	10	1/2	91.67 - 100.00	0.6000	0.6000
T4	11	EW63	91.67 - 100.00	0.6000	0.6000
T4	12	7/8	91.67 - 95.00	0.6000	0.6000
T4	13	7/8	91.67 - 100.00	0.6000	0.6000
T4	14	1 5/8	91.67 - 100.00	0.6000	0.6000
T4	15	1 1/4	91.67 - 100.00	0.6000	0.6000
T5	2	1 5/8	83.33 - 90.00	0.6000	0.6000
T5	3	HYBRIFLEX 1-5/8"	83.33 - 90.00	0.6000	0.6000
T5	10	1/2	83.33 - 91.67	0.6000	0.6000
T5	11	EW63	83.33 - 91.67	0.6000	0.6000
T5	12	7/8	83.33 - 91.67	0.6000	0.6000
T5	13	7/8	83.33 - 91.67	0.6000	0.6000
T5	14	1 5/8	83.33 - 91.67	0.6000	0.6000
T5	15	1 1/4	83.33 - 91.67	0.6000	0.6000
T5	16	EW90	83.33 - 89.00	1.0000	1.0000
T6	1	2-1/4" Innerduct	75.00 - 80.00	0.6000	0.6000
T6	2	1 5/8	75.00 - 83.33	0.6000	0.6000
T6	3	HYBRIFLEX 1-5/8"	75.00 - 83.33	0.6000	0.6000
T6	4	1/2	75.00 - 77.00	0.6000	0.6000
T6	8	1/2	75.00 - 80.00	0.6000	0.6000
T6	10	1/2	75.00 - 83.33	0.6000	0.6000
T6	11	EW63	75.00 - 83.33	0.6000	0.6000
T6	12	7/8	75.00 - 83.33	0.6000	0.6000
T6	13	7/8	75.00 - 83.33	0.6000	0.6000
T6	14	1 5/8	75.00 - 83.33	0.6000	0.6000
T6	15	1 1/4	75.00 - 83.33	0.6000	0.6000
T6	16	EW90	75.00 - 83.33	1.0000	1.0000
T7	1	2-1/4" Innerduct	50.00 - 75.00	0.6000	0.6000
T7	2	1 5/8	50.00 - 75.00	0.6000	0.6000
T7	3	HYBRIFLEX 1-5/8"	50.00 - 75.00	0.6000	0.6000
T7	4	1/2	50.00 - 75.00	0.6000	0.6000
T7	5	7/8	50.00 - 55.00	0.6000	0.6000
T7	8	1/2	50.00 - 75.00	0.6000	0.6000
T7	10	1/2	50.00 - 75.00	0.6000	0.6000
T7	11	EW63	50.00 - 75.00	0.6000	0.6000
T7	12	7/8	50.00 - 75.00	0.6000	0.6000
T7	13	7/8	50.00 - 75.00	0.6000	0.6000
T7	14	1 5/8	50.00 - 75.00	0.6000	0.6000
T7	15	1 1/4	50.00 - 75.00	0.6000	0.6000
T7	16	EW90	50.00 - 75.00	1.0000	1.0000
T8	1	2-1/4" Innerduct	25.00 - 50.00	0.6000	0.6000
T8	2	1 5/8	25.00 - 50.00	0.6000	0.6000
T8	3	HYBRIFLEX 1-5/8"	25.00 - 50.00	0.6000	0.6000
T8	4	1/2	25.00 - 50.00	0.6000	0.6000

Tower Section	Feed Line Record No.	Description	Feed Line Segment Elev.	K_a No Ice	K_a Ice
T8	5	7/8	25.00 - 50.00	0.6000	0.6000
T8	6	Cat5e	25.00 - 40.00	0.6000	0.6000
T8	7	1/2	25.00 - 45.00	0.6000	0.6000
T8	8	1/2	45.00 - 50.00	0.6000	0.6000
T8	9	7/8	25.00 - 44.00	0.6000	0.6000
T8	10	1/2	25.00 - 50.00	0.6000	0.6000
T8	11	EW63	25.00 - 50.00	0.6000	0.6000
T8	12	7/8	25.00 - 50.00	0.6000	0.6000
T8	13	7/8	25.00 - 50.00	0.6000	0.6000
T8	14	1 5/8	25.00 - 50.00	0.6000	0.6000
T8	15	1 1/4	25.00 - 50.00	0.6000	0.6000
T8	16	EW90	25.00 - 50.00	1.0000	1.0000
T9	1	2-1/4" Innerduct	5.00 - 25.00	0.6000	0.6000
T9	2	1 5/8	5.00 - 25.00	0.6000	0.6000
T9	3	HYBRIFLEX 1-5/8"	5.00 - 25.00	0.6000	0.6000
T9	4	1/2	5.00 - 25.00	0.6000	0.6000
T9	5	7/8	5.00 - 25.00	0.6000	0.6000
T9	6	Cat5e	5.00 - 25.00	0.6000	0.6000
T9	7	1/2	5.00 - 25.00	0.6000	0.6000
T9	9	7/8	5.00 - 25.00	0.6000	0.6000
T9	10	1/2	5.00 - 25.00	0.6000	0.6000
T9	11	EW63	5.00 - 25.00	0.6000	0.6000
T9	12	7/8	5.00 - 25.00	0.6000	0.6000
T9	13	7/8	5.00 - 25.00	0.6000	0.6000
T9	14	1 5/8	5.00 - 25.00	0.6000	0.6000
T9	15	1 1/4	5.00 - 25.00	0.6000	0.6000
T9	16	EW90	5.00 - 25.00	1.0000	1.0000

Discrete Tower Loads

Description	Face or Leg	Offset Type	Offsets: Horz Lateral Vert ft ft ft	Azimuth Adjustment °	Placement ft		C_AA_A Front ft^2	C_AA_A Side ft^2	Weight K
QD8616-7	A	From Leg	3.00	0.0000	84.00	No Ice	18.81	9.60	0.13
(AT&T)			-6.00			1/2" Ice	19.45	10.20	0.24
			0.00			1" Ice	20.10	10.81	0.36
80010966	A	From Leg	3.00	0.0000	84.00	No Ice	17.36	7.50	0.13
(AT&T)			6.00			1/2" Ice	17.99	8.09	0.22
			0.00			1" Ice	18.63	8.69	0.32
QD8616-7	B	From Leg	3.00	0.0000	84.00	No Ice	18.81	9.60	0.13
(AT&T)			-6.00			1/2" Ice	19.45	10.20	0.24
			0.00			1" Ice	20.10	10.81	0.36
80010966	B	From Leg	3.00	0.0000	84.00	No Ice	17.36	7.50	0.13
(AT&T)			6.00			1/2" Ice	17.99	8.09	0.22
			0.00			1" Ice	18.63	8.69	0.32
QD6616-7	C	From Leg	3.00	0.0000	84.00	No Ice	13.58	6.80	0.13
(AT&T)			-6.00			1/2" Ice	14.08	7.27	0.21
			0.00			1" Ice	14.60	7.72	0.30
80010965	C	From Leg	3.00	0.0000	84.00	No Ice	13.81	5.83	0.11
(AT&T)			6.00			1/2" Ice	14.35	6.32	0.19
			0.00			1" Ice	14.89	6.82	0.27

Description	Face or Leg	Offset Type	Offsets: Horz Lateral Vert ft ft ft	Azimuth Adjustment °	Placement ft		C_AA_A Front ft^2	C_AA_A Side ft^2	Weight K
4478 B14	A	From Leg	3.00	0.0000	84.00	No Ice	1.84	1.06	0.06
(AT&T)			-6.00			1/2" Ice	2.01	1.20	0.08
			2.00			1" Ice	2.19	1.34	0.09
4478 B14	B	From Leg	3.00	0.0000	84.00	No Ice	1.84	1.06	0.06
(AT&T)			-6.00			1/2" Ice	2.01	1.20	0.08
			2.00			1" Ice	2.19	1.34	0.09
4478 B14	C	From Leg	3.00	0.0000	84.00	No Ice	1.84	1.06	0.06
(AT&T)			-6.00			1/2" Ice	2.01	1.20	0.08
			2.00			1" Ice	2.19	1.34	0.09
8843 B2/B66A	A	From Leg	3.00	0.0000	84.00	No Ice	1.64	1.35	0.07
(AT&T)			-6.00			1/2" Ice	1.80	1.50	0.09
			-2.00			1" Ice	1.97	1.65	0.11
8843 B2/B66A	B	From Leg	3.00	0.0000	84.00	No Ice	1.64	1.35	0.07
(AT&T)			-6.00			1/2" Ice	1.80	1.50	0.09
			-2.00			1" Ice	1.97	1.65	0.11
8843 B2/B66A	C	From Leg	3.00	0.0000	84.00	No Ice	1.64	1.35	0.07
(AT&T)			-6.00			1/2" Ice	1.80	1.50	0.09
			-2.00			1" Ice	1.97	1.65	0.11
RRUS-32	A	From Leg	3.00	0.0000	84.00	No Ice	3.31	2.42	0.08
(AT&T)			-6.00			1/2" Ice	3.56	2.64	0.10
			0.00			1" Ice	3.81	2.86	0.14
RRUS-32	B	From Leg	3.00	0.0000	84.00	No Ice	3.31	2.42	0.08
(AT&T)			-6.00			1/2" Ice	3.56	2.64	0.10
			0.00			1" Ice	3.81	2.86	0.14
RRUS-32	C	From Leg	3.00	0.0000	84.00	No Ice	3.31	2.42	0.08
(AT&T)			-6.00			1/2" Ice	3.56	2.64	0.10
			0.00			1" Ice	3.81	2.86	0.14
4449 B5/B12	A	From Leg	3.00	0.0000	84.00	No Ice	1.97	1.41	0.07
(AT&T)			6.00			1/2" Ice	2.14	1.56	0.09
			2.00			1" Ice	2.33	1.73	0.11
4449 B5/B12	B	From Leg	3.00	0.0000	84.00	No Ice	1.97	1.41	0.07
(AT&T)			6.00			1/2" Ice	2.14	1.56	0.09
			2.00			1" Ice	2.33	1.73	0.11
4449 B5/B12	C	From Leg	3.00	0.0000	84.00	No Ice	1.97	1.41	0.07
(AT&T)			6.00			1/2" Ice	2.14	1.56	0.09
			2.00			1" Ice	2.33	1.73	0.11
RRUW	A	From Leg	3.00	0.0000	84.00	No Ice	2.71	0.96	0.04
(AT&T)			6.00			1/2" Ice	2.92	1.11	0.06
			-2.00			1" Ice	3.14	1.28	0.08
RRUW	B	From Leg	3.00	0.0000	84.00	No Ice	2.71	0.96	0.04
(AT&T)			6.00			1/2" Ice	2.92	1.11	0.06
			-2.00			1" Ice	3.14	1.28	0.08
RRUW	C	From Leg	3.00	0.0000	84.00	No Ice	2.71	0.96	0.04
(AT&T)			6.00			1/2" Ice	2.92	1.11	0.06
			-2.00			1" Ice	3.14	1.28	0.08
DC6-48-60-0-8C-EV	A	From Leg	3.00	0.0000	84.00	No Ice	1.91	1.91	0.02
(AT&T)			0.00			1/2" Ice	2.10	2.10	0.04
			0.00			1" Ice	2.29	2.29	0.06
DC6-48-60-0-8C-EV	B	From Leg	3.00	0.0000	84.00	No Ice	1.91	1.91	0.02
(AT&T)			0.00			1/2" Ice	2.10	2.10	0.04
			0.00			1" Ice	2.29	2.29	0.06
DC6-48-60-0-8C-EV	C	From Leg	3.00	0.0000	84.00	No Ice	1.91	1.91	0.02
(AT&T)			0.00			1/2" Ice	2.10	2.10	0.04
			0.00			1" Ice	2.29	2.29	0.06
SitePro VFA12-HD	A	From Leg	2.00	0.0000	84.00	No Ice	21.00	21.00	0.75
(AT&T)			0.00			1/2" Ice	25.00	25.00	0.90
			0.00			1" Ice	29.00	29.00	1.05

Description	Face or Leg	Offset Type	Offsets: Horz Lateral Vert ft ft ft	Azimuth Adjustment °	Placement ft		C_AA_A Front ft^2	C_AA_A Side ft^2	Weight K
SitePro VFA12-HD	B	From Leg	2.00	0.0000	84.00	No Ice	21.00	21.00	0.75
(AT&T)			0.00			1/2" Ice	25.00	25.00	0.90
			0.00			1" Ice	29.00	29.00	1.05
SitePro VFA12-HD	C	From Leg	2.00	0.0000	84.00	No Ice	21.00	21.00	0.75
(AT&T)			0.00			1/2" Ice	25.00	25.00	0.90
			0.00			1" Ice	29.00	29.00	1.05
AIR21 B2A/B4P	A	From Leg	4.00	0.0000	95.00	No Ice	6.05	4.36	0.08
(T-Mobile)			-4.00			1/2" Ice	6.42	4.70	0.12
			0.00			1" Ice	6.80	5.06	0.17
LNX-6515DS	A	From Leg	4.00	0.0000	95.00	No Ice	11.45	7.70	0.06
(T-Mobile)			0.00			1/2" Ice	12.06	8.29	0.12
			0.00			1" Ice	12.69	8.89	0.19
AIR32	A	From Leg	4.00	0.0000	95.00	No Ice	6.51	4.71	0.13
(T-Mobile)			4.00			1/2" Ice	6.89	5.07	0.18
			0.00			1" Ice	7.27	5.43	0.23
AIR21 B2A/B4P	B	From Leg	4.00	0.0000	95.00	No Ice	6.05	4.36	0.08
(T-Mobile)			-4.00			1/2" Ice	6.42	4.70	0.12
			0.00			1" Ice	6.80	5.06	0.17
LNX-6515DS	B	From Leg	4.00	0.0000	95.00	No Ice	11.45	7.70	0.06
(T-Mobile)			0.00			1/2" Ice	12.06	8.29	0.12
			0.00			1" Ice	12.69	8.89	0.19
AIR32	B	From Leg	4.00	0.0000	95.00	No Ice	6.51	4.71	0.13
(T-Mobile)			4.00			1/2" Ice	6.89	5.07	0.18
			0.00			1" Ice	7.27	5.43	0.23
AIR21 B2A/B4P	C	From Leg	4.00	0.0000	95.00	No Ice	6.05	4.36	0.08
(T-Mobile)			-4.00			1/2" Ice	6.42	4.70	0.12
			0.00			1" Ice	6.80	5.06	0.17
LNX-6515DS	C	From Leg	4.00	0.0000	95.00	No Ice	11.45	7.70	0.06
(T-Mobile)			0.00			1/2" Ice	12.06	8.29	0.12
			0.00			1" Ice	12.69	8.89	0.19
AIR32	C	From Leg	4.00	0.0000	95.00	No Ice	6.51	4.71	0.13
(T-Mobile)			4.00			1/2" Ice	6.89	5.07	0.18
			0.00			1" Ice	7.27	5.43	0.23
RRUS-11	A	From Leg	4.00	0.0000	95.00	No Ice	2.57	1.07	0.05
(T-Mobile)			0.00			1/2" Ice	2.76	1.21	0.07
			0.00			1" Ice	2.97	1.36	0.09
RRUS-11	B	From Leg	4.00	0.0000	95.00	No Ice	2.57	1.07	0.05
(T-Mobile)			0.00			1/2" Ice	2.76	1.21	0.07
			0.00			1" Ice	2.97	1.36	0.09
RRUS-11	C	From Leg	4.00	0.0000	95.00	No Ice	2.57	1.07	0.05
(T-Mobile)			0.00			1/2" Ice	2.76	1.21	0.07
			0.00			1" Ice	2.97	1.36	0.09
TMA 10"x8"x5"	A	From Leg	4.00	0.0000	95.00	No Ice	0.67	0.42	0.02
(T-Mobile)			0.00			1/2" Ice	0.77	0.50	0.03
			0.00			1" Ice	0.88	0.60	0.03
TMA 10"x8"x5"	B	From Leg	4.00	0.0000	95.00	No Ice	0.67	0.42	0.02
(T-Mobile)			0.00			1/2" Ice	0.77	0.50	0.03
			0.00			1" Ice	0.88	0.60	0.03
TMA 10"x8"x5"	C	From Leg	4.00	0.0000	95.00	No Ice	0.67	0.42	0.02
(T-Mobile)			0.00			1/2" Ice	0.77	0.50	0.03
			0.00			1" Ice	0.88	0.60	0.03
10-ft T-Frame	A	From Leg	0.00	0.0000	95.00	No Ice	13.60	13.60	0.38
(T-Mobile)			0.00			1/2" Ice	17.50	17.50	0.53
			0.00			1" Ice	21.40	21.40	0.68
10-ft T-Frame	B	From Leg	0.00	0.0000	95.00	No Ice	13.60	13.60	0.38
(T-Mobile)			0.00			1/2" Ice	17.50	17.50	0.53
			0.00			1" Ice	21.40	21.40	0.68

Description	Face or Leg	Offset Type	Offsets: Horz Lateral Vert ft ft ft	Azimuth Adjustment °	Placement ft		C_AA_A Front ft^2	C_AA_A Side ft^2	Weight K
10-ft T-Frame	C	From Leg	0.00	0.0000	95.00	No Ice	13.60	13.60	0.38
(T-Mobile)			0.00			1/2" Ice	17.50	17.50	0.53
			0.00			1" Ice	21.40	21.40	0.68
1' x 1' Panel	B	From Leg	4.00	0.0000	40.00	No Ice	1.20	0.32	0.02
(#1B)			0.00			1/2" Ice	1.34	0.40	0.03
			0.00			1" Ice	1.48	0.49	0.04
ROHN 4-ft Side Arm	B	From Leg	2.00	0.0000	43.00	No Ice	5.28	5.28	0.07
			0.00			1/2" Ice	7.88	7.88	0.08
			0.00			1" Ice	10.48	10.48	0.10
6' x 3" Dia Omni	A	From Leg	1.00	0.0000	38.00	No Ice	1.36	1.36	0.02
(#5 (CSP-14))			0.00			1/2" Ice	2.13	2.13	0.03
			3.00			1" Ice	2.50	2.50	0.05
1' Standoff Pipe	A	From Leg	0.50	0.0000	38.00	No Ice	0.16	0.16	0.01
			0.00			1/2" Ice	0.23	0.23	0.01
			3.00			1" Ice	0.30	0.30	0.01
ANT790F2	B	From Leg	2.00	0.0000	44.00	No Ice	0.61	0.61	0.01
(#2)			0.00			1/2" Ice	0.89	0.89	0.01
			2.00			1" Ice	1.10	1.10	0.02
Sabre 2' Sidearm	B	From Leg	1.00	0.0000	44.00	No Ice	3.90	3.90	0.09
			0.00			1/2" Ice	4.40	4.40	0.10
			0.00			1" Ice	4.90	4.90	0.11
3' Yagi	C	From Leg	1.00	0.0000	49.00	No Ice	2.07	2.07	0.03
(#4B)			0.00			1/2" Ice	3.79	3.79	0.05
			0.00			1" Ice	5.52	5.52	0.09
12' Dipole	B	From Leg	3.00	0.0000	51.00	No Ice	6.00	6.00	0.07
(#4A)			0.00			1/2" Ice	8.00	8.00	0.09
			6.00			1" Ice	10.00	10.00	0.11
Sabre 3' Sidearm	B	From Leg	1.00	0.0000	51.00	No Ice	5.90	5.90	0.13
			0.00			1/2" Ice	6.60	6.60	0.15
			0.00			1" Ice	7.30	7.30	0.16
DB803M-Y	B	From Leg	2.00	0.0000	54.50	No Ice	0.50	0.50	0.00
(#6 (CSP-16))			0.00			1/2" Ice	0.68	0.68	0.01
			2.00			1" Ice	0.87	0.87	0.02
Sabre 2' Sidearm	B	From Leg	1.00	0.0000	53.00	No Ice	3.90	3.90	0.09
			0.00			1/2" Ice	4.40	4.40	0.10
			0.00			1" Ice	4.90	4.90	0.11
DB264-A	A	From Leg	2.00	0.0000	54.00	No Ice	3.16	3.16	0.04
(#7 (CSP-4))			0.00			1/2" Ice	5.69	5.69	0.05
			10.00			1" Ice	8.22	8.22	0.06
Sabre 2' Sidearm	A	From Leg	1.00	0.0000	54.00	No Ice	3.90	3.90	0.09
			0.00			1/2" Ice	4.40	4.40	0.10
			0.00			1" Ice	4.90	4.90	0.11
(2) 6' Yagi	B	From Leg	2.00	0.0000	67.00	No Ice	5.00	5.00	0.04
(#9)			0.00			1/2" Ice	6.50	6.50	0.06
			10.00			1" Ice	8.00	8.00	0.08
Sabre 2' Sidearm	B	From Leg	1.00	0.0000	66.00	No Ice	3.90	3.90	0.09
			0.00			1/2" Ice	4.40	4.40	0.10
			0.00			1" Ice	4.90	4.90	0.11
20' 4-Bay Dipole	C	From Leg	4.00	0.0000	77.00	No Ice	4.00	4.00	0.06
(#14)			0.00			1/2" Ice	6.00	6.00	0.10
			11.00			1" Ice	8.00	8.00	0.14
ROHN 4-ft Side Arm	C	From Leg	2.00	0.0000	77.00	No Ice	5.28	5.28	0.07
			0.00			1/2" Ice	7.88	7.88	0.08
			0.00			1" Ice	10.48	10.48	0.10
20' 4-Bay Dipole	A	From Leg	3.00	0.0000	87.00	No Ice	4.00	4.00	0.06
(#15)			0.00			1/2" Ice	6.00	6.00	0.10
			10.00			1" Ice	8.00	8.00	0.14

Description	Face or Leg	Offset Type	Offsets: Horz Lateral Vert ft ft ft	Azimuth Adjustment °	Placement ft		C_AA_A Front ft^2	C_AA_A Side ft^2	Weight K
Sabre 3' Sidearm	A	From Leg	1.00	0.0000	87.00	No Ice	5.90	5.90	0.13
			0.00			1/2" Ice	6.60	6.60	0.15
			0.00			1" Ice	7.30	7.30	0.16
ANT450F6	B	From Leg	4.00	0.0000	84.00	No Ice	1.86	1.86	0.02
(#16 (CSP-10))			0.00			1/2" Ice	2.67	2.67	0.04
			3.00			1" Ice	3.30	3.30	0.05
ROHN 4-ft Side Arm	B	From Leg	2.00	0.0000	84.00	No Ice	5.28	5.28	0.07
			0.00			1/2" Ice	7.88	7.88	0.08
			0.00			1" Ice	10.48	10.48	0.10
AP13-850/065	A	From Face	1.00	0.0000	102.00	No Ice	3.54	3.54	0.02
(#18A (CSP-12))			0.00			1/2" Ice	3.97	3.97	0.04
			0.00			1" Ice	4.40	4.40	0.07
SE419-SWBPALDF	A	From Face	1.00	0.0000	102.00	No Ice	9.13	9.55	0.09
(#18B (CSP-13))			0.00			1/2" Ice	9.77	10.19	0.15
			0.00			1" Ice	10.41	10.83	0.22
Tower Top Amplifier	A	From Face	1.00	0.0000	105.00	No Ice	2.67	1.03	0.04
(CSP-32)			0.00			1/2" Ice	2.87	1.17	0.06
			0.00			1" Ice	3.08	1.32	0.08
12' x 3" Dia Omni	A	From Leg	3.00	0.0000	95.00	No Ice	2.91	2.91	0.04
			0.00			1/2" Ice	4.83	4.83	0.06
			6.00			1" Ice	6.08	6.08	0.09
Sabre 3' Sidearm	A	From Leg	1.00	0.0000	95.00	No Ice	5.90	5.90	0.13
			0.00			1/2" Ice	6.60	6.60	0.15
			0.00			1" Ice	7.30	7.30	0.16
SC479-HF1LDF	B	From Face	3.00	0.0000	110.00	No Ice	3.56	3.56	0.03
(CSP-18)			0.00			1/2" Ice	6.54	6.54	0.07
			10.00			1" Ice	8.04	8.04	0.11
SC479-HF1LDF	B	From Face	3.00	0.0000	110.00	No Ice	3.56	3.56	0.03
(CSP-9 (inverted))			0.00			1/2" Ice	6.54	6.54	0.07
			-10.00			1" Ice	8.04	8.04	0.11
SC479-HF1LDF	B	From Face	3.00	0.0000	110.00	No Ice	3.56	3.56	0.03
(CSP-19 (inverted))			0.00			1/2" Ice	6.54	6.54	0.07
			-10.00			1" Ice	8.04	8.04	0.11
Tower Top Amplifier	B	From Face	3.00	0.0000	110.00	No Ice	2.67	1.03	0.04
(CSP-20)			0.00			1/2" Ice	2.87	1.17	0.06
			0.00			1" Ice	3.08	1.32	0.08
7-ft T-Frame	B	From Face	1.00	0.0000	110.00	No Ice	13.60	13.60	0.38
			0.00			1/2" Ice	17.50	17.50	0.53
			0.00			1" Ice	21.40	21.40	0.68
SC479-HF1LDF	B	From Leg	3.00	0.0000	113.00	No Ice	3.57	3.57	0.03
(CSP-17)			0.00			1/2" Ice	6.54	6.54	0.07
			10.00			1" Ice	8.04	8.04	0.11
SC479-HF1LDF	B	From Leg	3.00	0.0000	113.00	No Ice	3.57	3.57	0.03
(CSP-22 (inverted))			0.00			1/2" Ice	6.54	6.54	0.07
			-10.00			1" Ice	8.04	8.04	0.11
SC479-HF1LDF	B	From Leg	3.00	0.0000	113.00	No Ice	3.57	3.57	0.03
(CSP-23 (inverted))			0.00			1/2" Ice	6.54	6.54	0.07
			-10.00			1" Ice	8.04	8.04	0.11
Tower Top Amplifier	B	From Leg	3.00	0.0000	113.00	No Ice	2.67	1.03	0.04
			0.00			1/2" Ice	2.87	1.17	0.06
			0.00			1" Ice	3.08	1.32	0.08
7-ft T-Frame	B	From Leg	1.00	0.0000	113.00	No Ice	13.60	13.60	0.38
			0.00			1/2" Ice	17.50	17.50	0.53
			0.00			1" Ice	21.40	21.40	0.68
WPA-70040-4CF	A	From Face	1.00	0.0000	102.00 - 118.00	No Ice	19.88	8.14	0.05
(CSP-28)			0.00			1/2" Ice	20.52	8.72	0.15
			0.00			1" Ice	21.17	9.32	0.27

Description	Face or Leg	Offset Type	Offsets: Horz Lateral Vert ft ft ft	Azimuth Adjustment °	Placement ft		C_AA_A Front ft^2	C_AA_A Side ft^2	Weight K
12' x 3" Dia Omni	C	From Leg	1.00	0.0000	120.00	No Ice	2.98	2.98	0.04
			0.00			1/2" Ice	4.83	4.83	0.06
			6.00			1" Ice	6.08	6.08	0.09
8' x 3" Dia Omni	B	From Leg	1.00	0.0000	120.00	No Ice	1.99	1.99	0.03
			0.00			1/2" Ice	3.19	3.19	0.04
			4.00			1" Ice	3.67	3.67	0.07
6' x 3" Dia Omni	A	From Leg	1.00	0.0000	120.00	No Ice	1.47	1.47	0.02
			0.00			1/2" Ice	2.13	2.13	0.03
			3.00			1" Ice	2.50	2.50	0.05
8' dipole antenna	B	From Leg	1.00	0.0000	120.00	No Ice	2.00	2.00	0.01
			0.00			1/2" Ice	3.00	3.00	0.02
			4.00			1" Ice	4.00	4.00	0.03

Dishes

Description	Face or Leg	Dish Type	Offset Type	Offsets: Horz Lateral Vert ft	Azimuth Adjustment °	3 dB Beam Width °	Elevation ft	Outside Diameter ft		Aperture Area ft^2	Weight K
4' Dish (#1A)	B	Paraboloid w/Radome	From Leg	1.00	Worst		43.00	4.00	No Ice	12.57	0.08
				0.00					1/2" Ice	13.10	0.14
				0.00					1" Ice	13.62	0.21
6' Dish (#19 (CSP-6))	A	Paraboloid w/o Radome	From Leg	1.00	Worst		109.00	6.00	No Ice	28.27	0.08
				0.00					1/2" Ice	29.07	0.10
				0.00					1" Ice	29.87	0.12
6' Dish (#20 (CSP-3))	C	Paraboloid w/o Radome	From Leg	1.00	Worst		109.00	6.00	No Ice	28.27	0.08
				0.00					1/2" Ice	29.07	0.10
				0.00					1" Ice	29.87	0.12
6' Dish (#21 (CSP-5))	C	Paraboloid w/o Radome	From Leg	1.00	Worst		113.00	6.00	No Ice	28.27	0.08
				0.00					1/2" Ice	29.07	0.10
				0.00					1" Ice	29.87	0.12
VHLP3-11W (Reserved)	B	Paraboloid w/o Radome	From Leg	0.00	Worst		89.00	3.00	No Ice	7.07	0.04
				0.00					1/2" Ice	7.47	0.08
				0.00					1" Ice	7.86	0.11

222-H Verification Constants

Constant	Value
K_d	0.85
Ice Thickness Importance Factor	1.25
Z_g	900
α	9.5
K_{zmin}	0.85
K_c	1
K_t	0.72
f	1.5

Constant	Value
K_e	1

222-H Section Verification ArRr By Element

Section Elevation ft	Elem. Num.	Size	C	C w/Ice	Face	e	e w/Ice	A_r ft^2	A_r w/Ice ft^2	A_rR_r ft^2	A_rR_r w/Ice ft^2
T1	1	P5x0.25	78.616	48.135	C	0.195	0.395	1.393	2.303	0.617	1.460
120.00-116.66											
	1	P5x0.25	78.616	48.135	A	0.195	0.395	1.393	2.303	0.617	1.460
	2	P5x0.25	78.616	48.135	C	0.195	0.395	1.393	2.303	0.617	1.460
	2	P5x0.25	78.616	48.135	B	0.195	0.395	1.393	2.303	0.617	1.460
	3	P5x0.25	78.616	48.135	B	0.195	0.395	1.393	2.303	0.617	1.460
	3	P5x0.25	78.616	48.135	A	0.195	0.395	1.393	2.303	0.617	1.460
					A		Sum:	2.786	4.606	1.234	2.920
					B			2.786	4.606	1.234	2.920
					C			2.786	4.606	1.234	2.920
T2	16	P5x0.25	79.047	48.447	C	0.13	0.251	3.475	5.750	1.421	3.365
116.66-108.33											
	16	P5x0.25	79.047	48.447	A	0.13	0.251	3.475	5.750	1.421	3.365
	17	P5x0.25	79.047	48.447	C	0.13	0.251	3.475	5.750	1.421	3.365
	17	P5x0.25	79.047	48.447	B	0.13	0.251	3.475	5.750	1.421	3.365
	18	P5x0.25	79.047	48.447	B	0.13	0.251	3.475	5.750	1.421	3.365
	18	P5x0.25	79.047	48.447	A	0.13	0.251	3.475	5.750	1.421	3.365
					A		Sum:	6.949	11.499	2.841	6.730
					B			6.949	11.499	2.841	6.730
					C			6.949	11.499	2.841	6.730
T3	31	P5x0.25	79.7	48.919	C	0.126	0.244	3.475	5.758	1.413	3.360
108.33-100.00											
	31	P5x0.25	79.7	48.919	A	0.126	0.244	3.475	5.758	1.413	3.360
	32	P5x0.25	79.7	48.919	C	0.126	0.244	3.475	5.758	1.413	3.360
	32	P5x0.25	79.7	48.919	B	0.126	0.244	3.475	5.758	1.413	3.360
	33	P5x0.25	79.7	48.919	B	0.126	0.244	3.475	5.758	1.413	3.360
	33	P5x0.25	79.7	48.919	A	0.126	0.244	3.475	5.758	1.413	3.360
					A		Sum:	6.949	11.516	2.826	6.719
					B			6.949	11.516	2.826	6.719
					C			6.949	11.516	2.826	6.719
T4 100.00-91.67	46	P5x0.25	80.395	49.421	C	0.126	0.241	3.476	5.769	1.414	3.363
	46	P5x0.25	80.395	49.421	A	0.126	0.241	3.476	5.769	1.414	3.363
	47	P5x0.25	80.395	49.421	C	0.126	0.241	3.476	5.769	1.414	3.363
	47	P5x0.25	80.395	49.421	B	0.126	0.241	3.476	5.769	1.414	3.363
	48	P5x0.25	80.395	49.421	B	0.126	0.241	3.476	5.769	1.414	3.363
	48	P5x0.25	80.395	49.421	A	0.126	0.241	3.476	5.769	1.414	3.363
					A		Sum:	6.952	11.539	2.829	6.726
					B			6.952	11.539	2.829	6.726
					C			6.952	11.539	2.829	6.726
T5 91.67-83.33	61	P5x0.25	81.126	49.949	C	0.122	0.236	3.476	5.778	1.408	3.361
	61	P5x0.25	81.126	49.949	A	0.122	0.236	3.476	5.778	1.408	3.361
	62	P5x0.25	81.126	49.949	C	0.122	0.236	3.476	5.778	1.408	3.361
	62	P5x0.25	81.126	49.949	B	0.122	0.236	3.476	5.778	1.408	3.361
	63	P5x0.25	81.126	49.949	B	0.122	0.236	3.476	5.778	1.408	3.361
	63	P5x0.25	81.126	49.949	A	0.122	0.236	3.476	5.778	1.408	3.361
					A		Sum:	6.952	11.557	2.817	6.721
					B			6.952	11.557	2.817	6.721
					C			6.952	11.557	2.817	6.721
T6 83.33-75.00	76	P5x0.25	81.886	50.496	C	0.119	0.23	3.476	5.787	1.403	3.359
	76	P5x0.25	81.886	50.496	A	0.119	0.23	3.476	5.787	1.403	3.359
	77	P5x0.25	81.886	50.496	C	0.119	0.23	3.476	5.787	1.403	3.359
	77	P5x0.25	81.886	50.496	B	0.119	0.23	3.476	5.787	1.403	3.359

Section Elevation ft	Elem. Num.	Size	C	C w/Ice	Face	e	e w/Ice	A_r ft^2	A_r w/Ice ft^2	A_rR_r ft^2	A_rR_r w/Ice ft^2
	78	P5x0.25	81.886	50.496	B	0.119	0.23	3.476	5.787	1.403	3.359
	78	P5x0.25	81.886	50.496	A	0.119	0.23	3.476	5.787	1.403	3.359
					A		Sum:	6.952	11.575	2.806	6.718
					B			6.952	11.575	2.806	6.718
					C			6.952	11.575	2.806	6.718
T7 75.00-50.00	91	P5x0.375	83.437	51.595	C	0.12	0.228	10.428	17.410	4.214	10.096
	91	P5x0.375	83.437	51.595	A	0.12	0.228	10.428	17.410	4.214	10.096
	92	P5x0.375	83.437	51.595	C	0.12	0.228	10.428	17.410	4.214	10.096
	92	P5x0.375	83.437	51.595	B	0.12	0.228	10.428	17.410	4.214	10.096
	93	P5x0.375	83.437	51.595	B	0.12	0.228	10.428	17.410	4.214	10.096
	93	P5x0.375	83.437	51.595	A	0.12	0.228	10.428	17.410	4.214	10.096
					A		Sum:	20.856	34.820	8.429	20.192
					B			20.856	34.820	8.429	20.192
					C			20.856	34.820	8.429	20.192
T8 50.00-25.00	130	P5x.400	85.316	52.802	C	0.14	0.277	10.428	17.425	4.312	10.319
	130	P5x.400	85.316	52.802	A	0.14	0.277	10.428	17.425	4.312	10.319
	131	P5x.400	85.316	52.802	C	0.14	0.277	10.428	17.425	4.312	10.319
	131	P5x.400	85.316	52.802	B	0.14	0.277	10.428	17.425	4.312	10.319
	132	P5x.400	85.316	52.802	B	0.14	0.277	10.428	17.425	4.312	10.319
	132	P5x.400	85.316	52.802	A	0.14	0.277	10.428	17.425	4.312	10.319
					A		Sum:	20.856	34.850	8.623	20.637
					B			20.856	34.850	8.623	20.637
					C			20.856	34.850	8.623	20.637
T9 25.00-0.00	205	P6.875x.400	116.616	63.302	C	0.135	0.235	14.338	21.015	5.897	12.219
	205	P6.875x.400	116.616	63.302	A	0.135	0.235	14.338	21.015	5.897	12.219
	206	P6.875x.400	116.616	63.302	C	0.135	0.235	14.338	21.015	5.897	12.219
	206	P6.875x.400	116.616	63.302	B	0.135	0.235	14.338	21.015	5.897	12.219
	207	P6.875x.400	116.616	63.302	B	0.135	0.235	14.338	21.015	5.897	12.219
	207	P6.875x.400	116.616	63.302	A	0.135	0.235	14.338	21.015	5.897	12.219
					A		Sum:	28.676	42.029	11.794	24.438
					B			28.676	42.029	11.794	24.438
					C			28.676	42.029	11.794	24.438

222-H Section Verification Tables - No Ice

Section Elevation ft	z_{wind} ft	z_{ice} ft	K_z	K_h	K_{zt}	t_z in	q_z psf	Face	e	A_rR_r ft^2
T1 120.00-116.66	118.33		1.311	3.265	1.49		77	A	0.195	1.234
								B	0.195	1.234
								C	0.195	1.234
T2 116.66-108.33	112.50		1.297	3.08	1.522		78	A	0.13	2.841
								B	0.13	2.841
								C	0.13	2.841
T3 108.33-100.00	104.17		1.277	2.834	1.573		80	A	0.126	2.826
								B	0.126	2.826
								C	0.126	2.826
T4 100.00-91.67	95.83		1.254	2.607	1.629		81	A	0.126	2.829
								B	0.126	2.829
								C	0.126	2.829
T5 91.67-83.33	87.50		1.231	2.399	1.69		82	A	0.122	2.817
								B	0.122	2.817

Section Elevation ft	z_{wind} ft	z_{ice} ft	K_z	K_h	K_{zt}	t_z in	q_z psf	Face	e	A_rR_r ft^2
								C	0.122	2.817
T6 83.33-75.00	79.17		1.205	2.207	1.759		84	A	0.119	2.806
								B	0.119	2.806
								C	0.119	2.806
T7 75.00-50.00	62.50		1.146	1.868	1.919		87	A	0.12	8.429
								B	0.12	8.429
								C	0.12	8.429
T8 50.00-25.00	37.50		1.029	1.455	2.235		91	A	0.14	8.623
								B	0.14	8.623
								C	0.14	8.623
T9 25.00-0.00	12.50		0.85	1.133	2.675		90	A	0.135	11.794
								B	0.135	11.794
								C	0.135	11.794

222-H Section Verification Tables - Ice

Section Elevation ft	z_{wind} ft	z_{ice} ft	K_z	K_h	K_{zt}	t_z in	q_z psf	Face	e	A_rR_r ft^2
T1 120.00-116.66	118.33	118.33	1.311	3.265	1.49	1.6329	11	A	0.395	7.055
								B	0.395	7.055
								C	0.395	7.055
T2 116.66-108.33	112.50	112.50	1.297	3.08	1.522	1.6369	11	A	0.251	11.728
								B	0.251	11.728
								C	0.251	11.728
T3 108.33-100.00	104.17	104.17	1.277	2.834	1.573	1.6431	11	A	0.244	11.897
								B	0.244	11.897
								C	0.244	11.897
T4 100.00-91.67	95.83	95.83	1.254	2.607	1.629	1.6495	11	A	0.241	12.098
								B	0.241	12.098
								C	0.241	12.098
T5 91.67-83.33	87.50	87.50	1.231	2.399	1.69	1.6560	11	A	0.236	12.280
								B	0.236	12.280
								C	0.236	12.280
T6 83.33-75.00	79.17	79.17	1.205	2.207	1.759	1.6624	12	A	0.23	12.468
								B	0.23	12.468
								C	0.23	12.468
T7 75.00-50.00	62.50	62.50	1.146	1.868	1.919	1.6740	12	A	0.228	38.650
								B	0.228	38.650
								C	0.228	38.650
T8 50.00-25.00	37.50	37.50	1.029	1.455	2.235	1.6776	13	A	0.277	51.065
								B	0.277	51.065
								C	0.277	51.065
T9 25.00-0.00	12.50	12.50	0.85	1.133	2.675	1.6006	12	A	0.235	47.450
								B	0.235	47.450
								C	0.235	47.450

222-H Section Verification Tables - Service

Section Elevation ft	z_{wind} ft	z_{ice} ft	K_z	K_h	K_{zt}	t_z in	q_z psf	Face	e	A_rR_r ft^2

Section Elevation ft	z_{wind} ft	z_{ice} ft	K_z	K_h	K_{zt}	t_z in	q_z psf	Face	e	A_rR_r ft²
T1 120.00-116.66	118.33		1.311	3.265	1.49		15	A	0.195	1.598
								B	0.195	1.598
								C	0.195	1.598
T2 116.66-108.33	112.50		1.297	3.08	1.522		15	A	0.13	3.932
								B	0.13	3.932
								C	0.13	3.932
T3 108.33-100.00	104.17		1.277	2.834	1.573		16	A	0.126	3.930
								B	0.126	3.930
								C	0.126	3.930
T4 100.00-91.67	95.83		1.254	2.607	1.629		16	A	0.126	3.932
								B	0.126	3.932
								C	0.126	3.932
T5 91.67-83.33	87.50		1.231	2.399	1.69		16	A	0.122	3.930
								B	0.122	3.930
								C	0.122	3.930
T6 83.33-75.00	79.17		1.205	2.207	1.759		17	A	0.119	3.929
								B	0.119	3.929
								C	0.119	3.929
T7 75.00-50.00	62.50		1.146	1.868	1.919		17	A	0.12	11.787
								B	0.12	11.787
								C	0.12	11.787
T8 50.00-25.00	37.50		1.029	1.455	2.235		18	A	0.14	11.816
								B	0.14	11.816
								C	0.14	11.816
T9 25.00-0.00	12.50		0.85	1.133	2.675		18	A	0.135	14.775
								B	0.135	14.775
								C	0.135	14.775

Tower Pressures - No Ice

$G_H = 0.850$

Section Elevation ft	z ft	K_Z	q_z psf	A_G ft²	Face	A_F ft²	A_R ft²	A_{leg} ft²	Leg %	C_AA_A In Face ft²	C_AA_A Out Face ft²
T1	118.33	1.311	77	39.953	A	4.994	2.786	2.786	35.81	0.000	0.000
120.00-116.66					B	4.994	2.786		35.81	0.000	0.000
					C	4.994	2.786		35.81	7.729	0.000
T2	112.50	1.297	78	103.559	A	6.522	6.949	6.949	51.59	0.000	0.000
116.66-108.33					B	6.522	6.949		51.59	0.000	0.000
					C	6.522	6.949		51.59	20.064	0.000
T3	104.17	1.277	80	109.140	A	6.751	6.949	6.949	50.72	0.000	0.000
108.33-100.00					B	6.751	6.949		50.72	0.000	0.000
					C	6.751	6.949		50.72	23.210	0.000
T4	95.83	1.254	81	114.753	A	7.508	6.952	6.952	48.08	0.000	0.000
100.00-91.67					B	7.508	6.952		48.08	0.000	0.000
					C	7.508	6.952		48.08	26.262	0.000
T5 91.67-83.33	87.50	1.231	82	120.308	A	7.768	6.952	6.952	47.23	12.439	0.000
					B	7.768	6.952		47.23	0.000	0.000
					C	7.768	6.952		47.23	27.927	0.000
T6 83.33-75.00	79.17	1.205	84	125.864	A	8.029	6.952	6.952	46.40	16.078	0.000
					B	8.029	6.952		46.40	2.250	0.000
					C	8.029	6.952		46.40	27.927	0.000
T7 75.00-50.00	62.50	1.146	87	410.925	A	28.523	20.856	20.856	42.24	52.137	0.000
					B	28.523	20.856		42.24	11.250	0.000

Section Elevation ft	z ft	K_Z	q_z psf	A_G ft²	Face	A_F ft²	A_R ft²	A_{leg} ft²	Leg %	C_AA_A In Face ft²	C_AA_A Out Face ft²
					C	28.523	20.856		42.24	83.782	0.000
T8 50.00-25.00	37.50	1.029	91	460.925	A	43.476	20.856	20.856	32.42	68.846	0.000
					B	43.476	20.856		32.42	11.250	0.000
					C	43.476	20.856		32.42	83.782	0.000
T9 25.00-0.00	12.50	0.85	90	514.834	A	40.886	28.676	28.676	41.22	57.114	0.000
					B	40.886	28.676		41.22	9.000	0.000
					C	40.886	28.676		41.22	67.025	0.000

Tower Pressure - With Ice

$G_H = 0.850$

Section Elevation ft	z ft	K_Z	q_z psf	t_Z in	A_G ft²	Face	A_F ft²	A_R ft²	A_{leg} ft²	Leg %	C_AA_A In Face ft²	C_AA_A Out Face ft²
T1	118.33	1.311	11	1.6329	40.863	A	4.994	11.129	4.606	28.57	0.000	0.000
120.00-116.66						B	4.994	11.129		28.57	0.000	0.000
						C	4.994	11.129		28.57	16.779	0.000
T2	112.50	1.297	11	1.6369	105.833	A	6.522	20.040	11.499	43.29	0.000	0.000
116.66-108.33						B	6.522	20.040		43.29	0.000	0.000
						C	6.522	20.040		43.29	44.418	0.000
T3	104.17	1.277	11	1.6431	111.423	A	6.751	20.390	11.516	42.43	0.000	0.000
108.33-100.00						B	6.751	20.390		42.43	0.000	0.000
						C	6.751	20.390		42.43	54.605	0.000
T4 100.00-91.67	95.83	1.254	11	1.6495	117.046	A	7.508	20.753	11.539	40.83	0.000	0.000
						B	7.508	20.753		40.83	0.000	0.000
						C	7.508	20.753		40.83	67.483	0.000
T5 91.67-83.33	87.50	1.231	11	1.6560	122.610	A	7.768	21.114	11.557	40.01	35.666	0.000
						B	7.768	21.114		40.01	0.000	0.000
						C	7.768	21.114		40.01	73.772	0.000
T6 83.33-75.00	79.17	1.205	12	1.6624	128.175	A	8.029	21.481	11.575	39.22	47.898	0.000
						B	8.029	21.481		39.22	7.197	0.000
						C	8.029	21.481		39.22	73.881	0.000
T7 75.00-50.00	62.50	1.146	12	1.6740	417.905	A	28.523	66.651	34.820	36.59	162.856	0.000
						B	28.523	66.651		36.59	36.081	0.000
						C	28.523	66.651		36.59	222.225	0.000
T8 50.00-25.00	37.50	1.029	13	1.6776	467.920	A	43.476	86.235	34.850	26.87	227.990	0.000
						B	43.476	86.235		26.87	36.111	0.000
						C	43.476	86.235		26.87	222.407	0.000
T9 25.00-0.00	12.50	0.85	12	1.6006	521.509	A	40.886	81.606	42.029	34.31	190.034	0.000
						B	40.886	81.606		34.31	28.366	0.000
						C	40.886	81.606		34.31	174.815	0.000

Tower Pressure - Service

$G_H = 0.850$

Section Elevation ft	z ft	K_Z	q_z psf	A_G ft²	Face	A_F ft²	A_R ft²	A_{leg} ft²	Leg %	C_AA_A In Face ft²	C_AA_A Out Face ft²

Section Elevation ft	z ft	K_Z	q_z psf	A_G ft²	Face	A_F ft²	A_R ft²	A_{leg} ft²	Leg %	C_AA_A In Face ft²	C_AA_A Out Face ft²
T1	118.33	1.311	15	39.953	A	4.994	2.786	2.786	35.81	0.000	0.000
120.00-116.66					B	4.994	2.786		35.81	0.000	0.000
					C	4.994	2.786		35.81	7.729	0.000
T2	112.50	1.297	15	103.559	A	6.522	6.949	6.949	51.59	0.000	0.000
116.66-108.33					B	6.522	6.949		51.59	0.000	0.000
					C	6.522	6.949		51.59	20.064	0.000
T3	104.17	1.277	16	109.140	A	6.751	6.949	6.949	50.72	0.000	0.000
108.33-100.00					B	6.751	6.949		50.72	0.000	0.000
					C	6.751	6.949		50.72	23.210	0.000
T4	95.83	1.254	16	114.753	A	7.508	6.952	6.952	48.08	0.000	0.000
100.00-91.67					B	7.508	6.952		48.08	0.000	0.000
					C	7.508	6.952		48.08	26.262	0.000
T5 91.67-83.33	87.50	1.231	16	120.308	A	7.768	6.952	6.952	47.23	12.439	0.000
					B	7.768	6.952		47.23	0.000	0.000
					C	7.768	6.952		47.23	27.927	0.000
T6 83.33-75.00	79.17	1.205	17	125.864	A	8.029	6.952	6.952	46.40	16.078	0.000
					B	8.029	6.952		46.40	2.250	0.000
					C	8.029	6.952		46.40	27.927	0.000
T7 75.00-50.00	62.50	1.146	17	410.925	A	28.523	20.856	20.856	42.24	52.137	0.000
					B	28.523	20.856		42.24	11.250	0.000
					C	28.523	20.856		42.24	83.782	0.000
T8 50.00-25.00	37.50	1.029	18	460.925	A	43.476	20.856	20.856	32.42	68.846	0.000
					B	43.476	20.856		32.42	11.250	0.000
					C	43.476	20.856		32.42	83.782	0.000
T9 25.00-0.00	12.50	0.85	18	514.834	A	40.886	28.676	28.676	41.22	57.114	0.000
					B	40.886	28.676		41.22	9.000	0.000
					C	40.886	28.676		41.22	67.025	0.000

Tower Forces - No Ice - Wind Normal To Face

Section Elevation ft	Add Weight K	Self Weight K	Face	e	C_F	q_z psf	D_F	D_R	A_E ft²	F K	w plf	Ctrl. Face
T1	0.04	0.50	A	0.195	2.614	77	1	1	6.227	1.38	412.29	C
120.00-116.66			B	0.195	2.614		1	1	6.227			
			C	0.195	2.614		1	1	6.227			
T2	0.10	0.82	A	0.13	2.846	78	1	1	9.363	2.58	309.17	C
116.66-108.33			B	0.13	2.846		1	1	9.363			
			C	0.13	2.846		1	1	9.363			
T3	0.11	0.83	A	0.126	2.864	80	1	1	9.577	2.80	335.94	C
108.33-100.00			B	0.126	2.864		1	1	9.577			
			C	0.126	2.864		1	1	9.577			
T4	0.12	0.92	A	0.126	2.862	81	1	1	10.336	3.12	374.63	C
100.00-91.67			B	0.126	2.862		1	1	10.336			
			C	0.126	2.862		1	1	10.336			
T5	0.21	1.16	A	0.122	2.876	82	1	1	10.584	3.85	461.78	C
91.67-83.33			B	0.122	2.876		1	1	10.584			
			C	0.122	2.876		1	1	10.584			
T6	0.28	1.30	A	0.119	2.889	84	1	1	10.835	4.24	509.06	C
83.33-75.00			B	0.119	2.889		1	1	10.835			
			C	0.119	2.889		1	1	10.835			
T7	0.93	5.24	A	0.12	2.884	87	1	1	36.952	14.53	581.09	C
75.00-50.00			B	0.12	2.884		1	1	36.952			
			C	0.12	2.884		1	1	36.952			
T8	1.00	6.51	A	0.14	2.81	91	1	1	52.099	19.06	762.21	C
50.00-25.00			B	0.14	2.81		1	1	52.099			

Section Elevation ft	Add Weight K	Self Weight K	Face	e	C_F	q_z psf	D_F	D_R	A_E ft^2	F K	w plf	Ctrl. Face
			C	0.14	2.81		1	1	52.099			
T9 25.00-0.00	0.81	6.90	A	0.135	2.827	90	1	1	52.680	17.59	703.79	C
			B	0.135	2.827		1	1	52.680			
			C	0.135	2.827		1	1	52.680			
Sum Weight:	3.61	24.18						OTM	3558.36 kip-ft	69.14		

Tower Forces - No Ice - Wind 45 To Face

Section Elevation ft	Add Weight K	Self Weight K	Face	e	C_F	q_z psf	D_F	D_R	A_E ft^2	F K	w plf	Ctrl. Face
T1	0.04	0.50	A	0.195	2.614	77	0.825	1	5.353	1.23	367.26	C
120.00-116.66			B	0.195	2.614		0.825	1	5.353			
			C	0.195	2.614		0.825	1	5.353			
T2	0.10	0.82	A	0.13	2.846	78	0.825	1	8.222	2.36	283.21	C
116.66-108.33			B	0.13	2.846		0.825	1	8.222			
			C	0.13	2.846		0.825	1	8.222			
T3	0.11	0.83	A	0.126	2.864	80	0.825	1	8.396	2.57	308.45	C
108.33-100.00			B	0.126	2.864		0.825	1	8.396			
			C	0.126	2.864		0.825	1	8.396			
T4	0.12	0.92	A	0.126	2.862	81	0.825	1	9.023	2.86	343.56	C
100.00-91.67			B	0.126	2.862		0.825	1	9.023			
			C	0.126	2.862		0.825	1	9.023			
T5	0.21	1.16	A	0.122	2.876	82	0.825	1	9.225	3.57	428.89	C
91.67-83.33			B	0.122	2.876		0.825	1	9.225			
			C	0.122	2.876		0.825	1	9.225			
T6	0.28	1.30	A	0.119	2.889	84	0.825	1	9.430	3.95	474.26	C
83.33-75.00			B	0.119	2.889		0.825	1	9.430			
			C	0.119	2.889		0.825	1	9.430			
T7	0.93	5.24	A	0.12	2.884	87	0.825	1	31.960	13.46	538.38	C
75.00-50.00			B	0.12	2.884		0.825	1	31.960			
			C	0.12	2.884		0.825	1	31.960			
T8	1.00	6.51	A	0.14	2.81	91	0.825	1	44.491	17.40	695.89	C
50.00-25.00			B	0.14	2.81		0.825	1	44.491			
			C	0.14	2.81		0.825	1	44.491			
T9 25.00-0.00	0.81	6.90	A	0.135	2.827	90	0.825	1	45.525	16.04	641.79	C
			B	0.135	2.827		0.825	1	45.525			
			C	0.135	2.827		0.825	1	45.525			
Sum Weight:	3.61	24.18						OTM	3272.34 kip-ft	63.45		

Tower Forces - No Ice - Wind 60 To Face

Section Elevation ft	Add Weight K	Self Weight K	Face	e	C_F	q_z psf	D_F	D_R	A_E ft^2	F K	w plf	Ctrl. Face

Section Elevation ft	Add Weight K	Self Weight K	Face	e	C_F	q_z psf	D_F	D_R	A_E ft^2	F K	w plf	Ctrl. Face
T1	0.04	0.50	A	0.195	2.614	77	0.8	1	5.229	1.21	360.83	C
120.00-116.66			B	0.195	2.614		0.8	1	5.229			
			C	0.195	2.614		0.8	1	5.229			
T2	0.10	0.82	A	0.13	2.846	78	0.8	1	8.059	2.33	279.50	C
116.66-108.33			B	0.13	2.846		0.8	1	8.059			
			C	0.13	2.846		0.8	1	8.059			
T3	0.11	0.83	A	0.126	2.864	80	0.8	1	8.227	2.54	304.52	C
108.33-100.00			B	0.126	2.864		0.8	1	8.227			
			C	0.126	2.864		0.8	1	8.227			
T4	0.12	0.92	A	0.126	2.862	81	0.8	1	8.835	2.83	339.12	C
100.00-91.67			B	0.126	2.862		0.8	1	8.835			
			C	0.126	2.862		0.8	1	8.835			
T5	0.21	1.16	A	0.122	2.876	82	0.8	1	9.031	3.53	424.19	C
91.67-83.33			B	0.122	2.876		0.8	1	9.031			
			C	0.122	2.876		0.8	1	9.031			
T6	0.28	1.30	A	0.119	2.889	84	0.8	1	9.229	3.91	469.29	C
83.33-75.00			B	0.119	2.889		0.8	1	9.229			
			C	0.119	2.889		0.8	1	9.229			
T7	0.93	5.24	A	0.12	2.884	87	0.8	1	31.247	13.31	532.28	C
75.00-50.00			B	0.12	2.884		0.8	1	31.247			
			C	0.12	2.884		0.8	1	31.247			
T8	1.00	6.51	A	0.14	2.81	91	0.8	1	43.404	17.16	686.42	C
50.00-25.00			B	0.14	2.81		0.8	1	43.404			
			C	0.14	2.81		0.8	1	43.404			
T9 25.00-0.00	0.81	6.90	A	0.135	2.827	90	0.8	1	44.503	15.82	632.93	C
			B	0.135	2.827		0.8	1	44.503			
			C	0.135	2.827		0.8	1	44.503			
Sum Weight:	3.61	24.18						OTM	3231.48 kip-ft	62.63		

Tower Forces - No Ice - Wind 90 To Face

Section Elevation ft	Add Weight K	Self Weight K	Face	e	C_F	q_z psf	D_F	D_R	A_E ft^2	F K	w plf	Ctrl. Face
T1	0.04	0.50	A	0.195	2.614	77	0.85	1	5.478	1.25	373.70	C
120.00-116.66			B	0.195	2.614		0.85	1	5.478			
			C	0.195	2.614		0.85	1	5.478			
T2	0.10	0.82	A	0.13	2.846	78	0.85	1	8.385	2.39	286.92	C
116.66-108.33			B	0.13	2.846		0.85	1	8.385			
			C	0.13	2.846		0.85	1	8.385			
T3	0.11	0.83	A	0.126	2.864	80	0.85	1	8.564	2.60	312.38	C
108.33-100.00			B	0.126	2.864		0.85	1	8.564			
			C	0.126	2.864		0.85	1	8.564			
T4	0.12	0.92	A	0.126	2.862	81	0.85	1	9.210	2.90	348.00	C
100.00-91.67			B	0.126	2.862		0.85	1	9.210			
			C	0.126	2.862		0.85	1	9.210			
T5	0.21	1.16	A	0.122	2.876	82	0.85	1	9.419	3.61	433.59	C
91.67-83.33			B	0.122	2.876		0.85	1	9.419			
			C	0.122	2.876		0.85	1	9.419			
T6	0.28	1.30	A	0.119	2.889	84	0.85	1	9.631	3.99	479.23	C
83.33-75.00			B	0.119	2.889		0.85	1	9.631			
			C	0.119	2.889		0.85	1	9.631			

Section Elevation ft	Add Weight K	Self Weight K	Face	e	C_F	q_z psf	D_F	D_R	A_E ft^2	F K	w plf	Ctrl. Face
T7	0.93	5.24	A	0.12	2.884	87	0.85	1	32.674	13.61	544.48	C
75.00-50.00			B	0.12	2.884		0.85	1	32.674			
			C	0.12	2.884		0.85	1	32.674			
T8	1.00	6.51	A	0.14	2.81	91	0.85	1	45.578	17.63	705.36	C
50.00-25.00			B	0.14	2.81		0.85	1	45.578			
			C	0.14	2.81		0.85	1	45.578			
T9 25.00-0.00	0.81	6.90	A	0.135	2.827	90	0.85	1	46.547	16.27	650.65	C
			B	0.135	2.827		0.85	1	46.547			
			C	0.135	2.827		0.85	1	46.547			
Sum Weight:	3.61	24.18						OTM	3313.20 kip-ft	64.26		

Tower Forces - With Ice - Wind Normal To Face

Section Elevation ft	Add Weight K	Self Weight K	Face	e	C_F	q_z psf	D_F	D_R	A_E ft^2	F K	w plf	Ctrl. Face
T1	0.30	1.69	A	0.395	2.075	11	1	1	12.049	0.32	94.83	C
120.00-116.66			B	0.395	2.075		1	1	12.049			
			C	0.395	2.075		1	1	12.049			
T2	0.77	2.51	A	0.251	2.435	11	1	1	18.250	0.65	77.92	C
116.66-108.33			B	0.251	2.435		1	1	18.250			
			C	0.251	2.435		1	1	18.250			
T3	0.90	2.58	A	0.244	2.457	11	1	1	18.648	0.73	87.57	C
108.33-100.00			B	0.244	2.457		1	1	18.648			
			C	0.244	2.457		1	1	18.648			
T4	1.04	2.78	A	0.241	2.463	11	1	1	19.606	0.84	100.64	C
100.00-91.67			B	0.241	2.463		1	1	19.606			
			C	0.241	2.463		1	1	19.606			
T5	1.64	3.08	A	0.236	2.482	11	1	1	20.048	1.12	134.33	C
91.67-83.33			B	0.236	2.482		1	1	20.048			
			C	0.236	2.482		1	1	20.048			
T6	1.94	3.27	A	0.23	2.498	12	1	1	20.498	1.27	152.90	C
83.33-75.00			B	0.23	2.498		1	1	20.498			
			C	0.23	2.498		1	1	20.498			
T7	6.34	11.98	A	0.228	2.506	12	1	1	67.173	4.33	173.11	C
75.00-50.00			B	0.228	2.506		1	1	67.173			
			C	0.228	2.506		1	1	67.173			
T8	7.07	15.77	A	0.277	2.358	13	1	1	94.542	5.52	220.92	C
50.00-25.00			B	0.277	2.358		1	1	94.542			
			C	0.277	2.358		1	1	94.542			
T9 25.00-0.00	5.53	15.18	A	0.235	2.484	12	1	1	88.336	4.82	192.86	C
			B	0.235	2.484		1	1	88.336			
			C	0.235	2.484		1	1	88.336			
Sum Weight:	25.53	58.83						OTM	1003.54 kip-ft	19.60		

Tower Forces - With Ice - Wind 45 To Face

Section Elevation ft	Add Weight K	Self Weight K	Face	e	C_F	q_z psf	D_F	D_R	A_E ft^2	F K	w plf	Ctrl. Face
T1	0.30	1.69	A	0.395	2.075	11	0.825	1	11.175	0.30	89.92	C
120.00-116.66			B	0.395	2.075		0.825	1	11.175			
			C	0.395	2.075		0.825	1	11.175			
T2	0.77	2.51	A	0.251	2.435	11	0.825	1	17.109	0.62	74.88	C
116.66-108.33			B	0.251	2.435		0.825	1	17.109			
			C	0.251	2.435		0.825	1	17.109			
T3	0.90	2.58	A	0.244	2.457	11	0.825	1	17.466	0.70	84.33	C
108.33-100.00			B	0.244	2.457		0.825	1	17.466			
			C	0.244	2.457		0.825	1	17.466			
T4	1.04	2.78	A	0.241	2.463	11	0.825	1	18.292	0.81	96.97	C
100.00-91.67			B	0.241	2.463		0.825	1	18.292			
			C	0.241	2.463		0.825	1	18.292			
T5	1.64	3.08	A	0.236	2.482	11	0.825	1	18.689	1.09	130.44	C
91.67-83.33			B	0.236	2.482		0.825	1	18.689			
			C	0.236	2.482		0.825	1	18.689			
T6	1.94	3.27	A	0.23	2.498	12	0.825	1	19.092	1.24	148.77	C
83.33-75.00			B	0.23	2.498		0.825	1	19.092			
			C	0.23	2.498		0.825	1	19.092			
T7	6.34	11.98	A	0.228	2.506	12	0.825	1	62.182	4.20	168.02	C
75.00-50.00			B	0.228	2.506		0.825	1	62.182			
			C	0.228	2.506		0.825	1	62.182			
T8	7.07	15.77	A	0.277	2.358	13	0.825	1	86.933	5.33	213.29	C
50.00-25.00			B	0.277	2.358		0.825	1	86.933			
			C	0.277	2.358		0.825	1	86.933			
T9 25.00-0.00	5.53	15.18	A	0.235	2.484	12	0.825	1	81.181	4.63	185.39	C
			B	0.235	2.484		0.825	1	81.181			
			C	0.235	2.484		0.825	1	81.181			
Sum Weight:	25.53	58.83						OTM	970.00 kip-ft	18.93		

Tower Forces - With Ice - Wind 60 To Face

Section Elevation ft	Add Weight K	Self Weight K	Face	e	C_F	q_z psf	D_F	D_R	A_E ft^2	F K	w plf	Ctrl. Face
T1	0.30	1.69	A	0.395	2.075	11	0.8	1	11.050	0.30	89.22	C
120.00-116.66			B	0.395	2.075		0.8	1	11.050			
			C	0.395	2.075		0.8	1	11.050			
T2	0.77	2.51	A	0.251	2.435	11	0.8	1	16.946	0.62	74.44	C
116.66-108.33			B	0.251	2.435		0.8	1	16.946			
			C	0.251	2.435		0.8	1	16.946			
T3	0.90	2.58	A	0.244	2.457	11	0.8	1	17.298	0.70	83.87	C
108.33-100.00			B	0.244	2.457		0.8	1	17.298			
			C	0.244	2.457		0.8	1	17.298			
T4	1.04	2.78	A	0.241	2.463	11	0.8	1	18.104	0.80	96.44	C
100.00-91.67			B	0.241	2.463		0.8	1	18.104			
			C	0.241	2.463		0.8	1	18.104			
T5	1.64	3.08	A	0.236	2.482	11	0.8	1	18.494	1.08	129.88	C
91.67-83.33			B	0.236	2.482		0.8	1	18.494			
			C	0.236	2.482		0.8	1	18.494			
T6	1.94	3.27	A	0.23	2.498	12	0.8	1	18.892	1.23	148.18	C
83.33-75.00			B	0.23	2.498		0.8	1	18.892			

Section Elevation ft	Add Weight K	Self Weight K	Face	e	C_F	q_z psf	D_F	D_R	A_E ft^2	F K	w plf	Ctrl. Face
			C	0.23	2.498		0.8	1	18.892			
T7	6.34	11.98	A	0.228	2.506	12	0.8	1	61.469	4.18	167.29	C
75.00-50.00			B	0.228	2.506		0.8	1	61.469			
			C	0.228	2.506		0.8	1	61.469			
T8	7.07	15.77	A	0.277	2.358	13	0.8	1	85.846	5.30	212.20	C
50.00-25.00			B	0.277	2.358		0.8	1	85.846			
			C	0.277	2.358		0.8	1	85.846			
T9 25.00-0.00	5.53	15.18	A	0.235	2.484	12	0.8	1	80.159	4.61	184.32	C
			B	0.235	2.484		0.8	1	80.159			
			C	0.235	2.484		0.8	1	80.159			
Sum Weight:	25.53	58.83						OTM	965.21 kip-ft	18.83		

Tower Forces - With Ice - Wind 90 To Face

Section Elevation ft	Add Weight K	Self Weight K	Face	e	C_F	q_z psf	D_F	D_R	A_E ft^2	F K	w plf	Ctrl. Face
T1	0.30	1.69	A	0.395	2.075	11	0.85	1	11.300	0.30	90.63	C
120.00-116.66			B	0.395	2.075		0.85	1	11.300			
			C	0.395	2.075		0.85	1	11.300			
T2	0.77	2.51	A	0.251	2.435	11	0.85	1	17.272	0.63	75.31	C
116.66-108.33			B	0.251	2.435		0.85	1	17.272			
			C	0.251	2.435		0.85	1	17.272			
T3	0.90	2.58	A	0.244	2.457	11	0.85	1	17.635	0.71	84.80	C
108.33-100.00			B	0.244	2.457		0.85	1	17.635			
			C	0.244	2.457		0.85	1	17.635			
T4	1.04	2.78	A	0.241	2.463	11	0.85	1	18.479	0.81	97.49	C
100.00-91.67			B	0.241	2.463		0.85	1	18.479			
			C	0.241	2.463		0.85	1	18.479			
T5	1.64	3.08	A	0.236	2.482	11	0.85	1	18.883	1.09	130.99	C
91.67-83.33			B	0.236	2.482		0.85	1	18.883			
			C	0.236	2.482		0.85	1	18.883			
T6	1.94	3.27	A	0.23	2.498	12	0.85	1	19.293	1.24	149.36	C
83.33-75.00			B	0.23	2.498		0.85	1	19.293			
			C	0.23	2.498		0.85	1	19.293			
T7	6.34	11.98	A	0.228	2.506	12	0.85	1	62.895	4.22	168.74	C
75.00-50.00			B	0.228	2.506		0.85	1	62.895			
			C	0.228	2.506		0.85	1	62.895			
T8	7.07	15.77	A	0.277	2.358	13	0.85	1	88.020	5.36	214.38	C
50.00-25.00			B	0.277	2.358		0.85	1	88.020			
			C	0.277	2.358		0.85	1	88.020			
T9 25.00-0.00	5.53	15.18	A	0.235	2.484	12	0.85	1	82.203	4.66	186.46	C
			B	0.235	2.484		0.85	1	82.203			
			C	0.235	2.484		0.85	1	82.203			
Sum Weight:	25.53	58.83						OTM	974.79 kip-ft	19.02		

Tower Forces - Service - Wind Normal To Face

Section Elevation ft	Add Weight K	Self Weight K	Face	e	C_F	q_z psf	D_F	D_R	A_E ft²	F K	w plf	Ctrl. Face
T1	0.04	0.50	A	0.195	2.614	15	1	1	6.592	0.28	85.15	C
120.00-116.66			B	0.195	2.614		1	1	6.592			
			C	0.195	2.614		1	1	6.592			
T2	0.10	0.82	A	0.13	2.846	15	1	1	10.454	0.55	65.97	C
116.66-108.33			B	0.13	2.846		1	1	10.454			
			C	0.13	2.846		1	1	10.454			
T3	0.11	0.83	A	0.126	2.864	16	1	1	10.681	0.60	71.43	C
108.33-100.00			B	0.126	2.864		1	1	10.681			
			C	0.126	2.864		1	1	10.681			
T4	0.12	0.92	A	0.126	2.862	16	1	1	11.439	0.66	79.15	C
100.00-91.67			B	0.126	2.862		1	1	11.439			
			C	0.126	2.862		1	1	11.439			
T5	0.21	1.16	A	0.122	2.876	16	1	1	11.697	0.80	96.54	C
91.67-83.33			B	0.122	2.876		1	1	11.697			
			C	0.122	2.876		1	1	11.697			
T6	0.28	1.30	A	0.119	2.889	17	1	1	11.958	0.88	106.05	C
83.33-75.00			B	0.119	2.889		1	1	11.958			
			C	0.119	2.889		1	1	11.958			
T7	0.93	5.24	A	0.12	2.884	17	1	1	40.310	3.01	120.46	C
75.00-50.00			B	0.12	2.884		1	1	40.310			
			C	0.12	2.884		1	1	40.310			
T8	1.00	6.51	A	0.14	2.81	18	1	1	55.292	3.90	156.06	C
50.00-25.00			B	0.14	2.81		1	1	55.292			
			C	0.14	2.81		1	1	55.292			
T9 25.00-0.00	0.81	6.90	A	0.135	2.827	18	1	1	55.661	3.60	144.12	C
			B	0.135	2.827		1	1	55.661			
			C	0.135	2.827		1	1	55.661			
Sum Weight:	3.61	24.18						OTM	740.58 kip-ft	14.29		

Tower Forces - Service - Wind 45 To Face

Section Elevation ft	Add Weight K	Self Weight K	Face	e	C_F	q_z psf	D_F	D_R	A_E ft²	F K	w plf	Ctrl. Face
T1	0.04	0.50	A	0.195	2.614	15	0.825	1	5.718	0.25	76.26	C
120.00-116.66			B	0.195	2.614		0.825	1	5.718			
			C	0.195	2.614		0.825	1	5.718			
T2	0.10	0.82	A	0.13	2.846	15	0.825	1	9.313	0.51	60.84	C
116.66-108.33			B	0.13	2.846		0.825	1	9.313			
			C	0.13	2.846		0.825	1	9.313			
T3	0.11	0.83	A	0.126	2.864	16	0.825	1	9.499	0.55	66.00	C
108.33-100.00			B	0.126	2.864		0.825	1	9.499			
			C	0.126	2.864		0.825	1	9.499			
T4	0.12	0.92	A	0.126	2.862	16	0.825	1	10.125	0.61	73.01	C
100.00-91.67			B	0.126	2.862		0.825	1	10.125			
			C	0.126	2.862		0.825	1	10.125			
T5	0.21	1.16	A	0.122	2.876	16	0.825	1	10.338	0.75	90.04	C
91.67-83.33			B	0.122	2.876		0.825	1	10.338			
			C	0.122	2.876		0.825	1	10.338			

Section Elevation ft	Add Weight K	Self Weight K	Face	e	C_F	q_z psf	D_F	D_R	A_E ft^2	F K	w plf	Ctrl. Face
T6	0.28	1.30	A	0.119	2.889	17	0.825	1	10.553	0.83	99.17	C
83.33-75.00			B	0.119	2.889		0.825	1	10.553			
			C	0.119	2.889		0.825	1	10.553			
T7	0.93	5.24	A	0.12	2.884	17	0.825	1	35.319	2.80	112.02	C
75.00-50.00			B	0.12	2.884		0.825	1	35.319			
			C	0.12	2.884		0.825	1	35.319			
T8	1.00	6.51	A	0.14	2.81	18	0.825	1	47.684	3.57	142.96	C
50.00-25.00			B	0.14	2.81		0.825	1	47.684			
			C	0.14	2.81		0.825	1	47.684			
T9 25.00-0.00	0.81	6.90	A	0.135	2.827	18	0.825	1	48.506	3.30	131.88	C
			B	0.135	2.827		0.825	1	48.506			
			C	0.135	2.827		0.825	1	48.506			
Sum Weight:	3.61	24.18						OTM	684.08 kip-ft	13.17		

Tower Forces - Service - Wind 60 To Face

Section Elevation ft	Add Weight K	Self Weight K	Face	e	C_F	q_z psf	D_F	D_R	A_E ft^2	F K	w plf	Ctrl. Face
T1	0.04	0.50	A	0.195	2.614	15	0.8	1	5.593	0.25	74.99	C
120.00-116.66			B	0.195	2.614		0.8	1	5.593			
			C	0.195	2.614		0.8	1	5.593			
T2	0.10	0.82	A	0.13	2.846	15	0.8	1	9.150	0.50	60.11	C
116.66-108.33			B	0.13	2.846		0.8	1	9.150			
			C	0.13	2.846		0.8	1	9.150			
T3	0.11	0.83	A	0.126	2.864	16	0.8	1	9.331	0.54	65.22	C
108.33-100.00			B	0.126	2.864		0.8	1	9.331			
			C	0.126	2.864		0.8	1	9.331			
T4	0.12	0.92	A	0.126	2.862	16	0.8	1	9.938	0.60	72.14	C
100.00-91.67			B	0.126	2.862		0.8	1	9.938			
			C	0.126	2.862		0.8	1	9.938			
T5	0.21	1.16	A	0.122	2.876	16	0.8	1	10.144	0.74	89.11	C
91.67-83.33			B	0.122	2.876		0.8	1	10.144			
			C	0.122	2.876		0.8	1	10.144			
T6	0.28	1.30	A	0.119	2.889	17	0.8	1	10.352	0.82	98.19	C
83.33-75.00			B	0.119	2.889		0.8	1	10.352			
			C	0.119	2.889		0.8	1	10.352			
T7	0.93	5.24	A	0.12	2.884	17	0.8	1	34.606	2.77	110.82	C
75.00-50.00			B	0.12	2.884		0.8	1	34.606			
			C	0.12	2.884		0.8	1	34.606			
T8	1.00	6.51	A	0.14	2.81	18	0.8	1	46.597	3.53	141.09	C
50.00-25.00			B	0.14	2.81		0.8	1	46.597			
			C	0.14	2.81		0.8	1	46.597			
T9 25.00-0.00	0.81	6.90	A	0.135	2.827	18	0.8	1	47.484	3.25	130.13	C
			B	0.135	2.827		0.8	1	47.484			
			C	0.135	2.827		0.8	1	47.484			
Sum Weight:	3.61	24.18						OTM	676.01 kip-ft	13.01		

Tower Forces - Service - Wind 90 To Face

Section Elevation ft	Add Weight K	Self Weight K	Face	e	C_F	q_z psf	D_F	D_R	A_E ft^2	F K	w plf	Ctrl. Face
T1	0.04	0.50	A	0.195	2.614	15	0.85	1	5.843	0.26	77.53	C
120.00-116.66			B	0.195	2.614		0.85	1	5.843			
			C	0.195	2.614		0.85	1	5.843			
T2	0.10	0.82	A	0.13	2.846	15	0.85	1	9.476	0.51	61.58	C
116.66-108.33			B	0.13	2.846		0.85	1	9.476			
			C	0.13	2.846		0.85	1	9.476			
T3	0.11	0.83	A	0.126	2.864	16	0.85	1	9.668	0.56	66.78	C
108.33-100.00			B	0.126	2.864		0.85	1	9.668			
			C	0.126	2.864		0.85	1	9.668			
T4	0.12	0.92	A	0.126	2.862	16	0.85	1	10.313	0.62	73.89	C
100.00-91.67			B	0.126	2.862		0.85	1	10.313			
			C	0.126	2.862		0.85	1	10.313			
T5	0.21	1.16	A	0.122	2.876	16	0.85	1	10.532	0.76	90.97	C
91.67-83.33			B	0.122	2.876		0.85	1	10.532			
			C	0.122	2.876		0.85	1	10.532			
T6	0.28	1.30	A	0.119	2.889	17	0.85	1	10.754	0.83	100.15	C
83.33-75.00			B	0.119	2.889		0.85	1	10.754			
			C	0.119	2.889		0.85	1	10.754			
T7	0.93	5.24	A	0.12	2.884	17	0.85	1	36.032	2.83	113.23	C
75.00-50.00			B	0.12	2.884		0.85	1	36.032			
			C	0.12	2.884		0.85	1	36.032			
T8	1.00	6.51	A	0.14	2.81	18	0.85	1	48.771	3.62	144.83	C
50.00-25.00			B	0.14	2.81		0.85	1	48.771			
			C	0.14	2.81		0.85	1	48.771			
T9 25.00-0.00	0.81	6.90	A	0.135	2.827	18	0.85	1	49.528	3.34	133.63	C
			B	0.135	2.827		0.85	1	49.528			
			C	0.135	2.827		0.85	1	49.528			
Sum Weight:	3.61	24.18						OTM	692.15 kip-ft	13.33		

Force Totals

Load Case	Vertical Forces K	Sum of Forces X K	Sum of Forces Z K	Sum of Overturning Moments, M_x kip-ft	Sum of Overturning Moments, M_z kip-ft	Sum of Torques kip-ft
Leg Weight	6.66					
Bracing Weight	17.51					
Total Member Self-Weight	24.18			-5.61	-0.49	
Total Weight	37.02			-5.61	-0.49	
Wind 0 deg - No Ice		0.00	-111.00	-7447.21	-0.49	-83.84
Wind 30 deg - No Ice		53.06	-91.90	-6237.92	-3598.71	-72.13
Wind 45 deg - No Ice		74.46	-74.46	-5065.38	-5060.25	-58.61
Wind 60 deg - No Ice		90.49	-52.24	-3562.98	-6162.02	-41.09
Wind 90 deg - No Ice		106.12	0.00	-5.61	-7196.93	0.96
Wind 120 deg - No Ice		96.13	55.50	3715.18	-6445.10	42.75
Wind 135 deg - No Ice		76.76	76.76	5169.71	-5175.82	59.96
Wind 150 deg - No Ice		53.06	91.90	6226.69	-3598.71	73.08
Wind 180 deg - No Ice		0.00	104.49	7109.11	-0.49	83.84
Wind 210 deg - No Ice		-53.06	91.90	6226.69	3597.73	72.13

Load Case	Vertical Forces K	Sum of Forces X K	Sum of Forces Z K	Sum of Overturning Moments, M_x kip-ft	Sum of Overturning Moments, M_z kip-ft	Sum of Torques kip-ft
Wind 225 deg - No Ice		-74.46	74.46	5054.15	5059.27	58.61
Wind 240 deg - No Ice		-96.13	55.50	3715.18	6444.12	41.09
Wind 270 deg - No Ice		-106.12	0.00	-5.61	7195.95	-0.96
Wind 300 deg - No Ice		-90.49	-52.24	-3562.98	6161.04	-42.75
Wind 315 deg - No Ice		-74.46	-74.46	-5065.38	5059.27	-59.96
Wind 330 deg - No Ice		-53.06	-91.90	-6237.92	3597.73	-73.08
Member Ice	34.66					
Total Weight Ice	107.21			-11.53	62.95	
Wind 0 deg - Ice		0.00	-28.04	-1787.99	62.95	-30.67
Wind 30 deg - Ice		13.73	-23.78	-1525.10	-810.91	-29.78
Wind 45 deg - Ice		19.35	-19.35	-1243.96	-1169.49	-26.25
Wind 60 deg - Ice		23.62	-13.64	-880.60	-1442.32	-20.92
Wind 90 deg - Ice		27.46	0.00	-11.53	-1684.77	-6.45
Wind 120 deg - Ice		24.28	14.02	876.70	-1475.52	9.75
Wind 135 deg - Ice		19.62	19.62	1234.46	-1183.04	17.12
Wind 150 deg - Ice		13.73	23.78	1502.04	-810.91	23.33
Wind 180 deg - Ice		0.00	27.27	1726.61	62.95	30.67
Wind 210 deg - Ice		-13.73	23.78	1502.04	936.81	29.78
Wind 225 deg - Ice		-19.35	19.35	1220.91	1295.38	26.25
Wind 240 deg - Ice		-24.28	14.02	876.70	1601.41	20.92
Wind 270 deg - Ice		-27.46	0.00	-11.53	1810.67	6.45
Wind 300 deg - Ice		-23.62	-13.64	-880.60	1568.22	-9.75
Wind 315 deg - Ice		-19.35	-19.35	-1243.96	1295.38	-17.12
Wind 330 deg - Ice		-13.73	-23.78	-1525.10	936.81	-23.33
Total Weight	37.02			-5.61	-0.49	
Wind 0 deg - Service		0.00	-22.71	-1522.85	-10.84	-15.72
Wind 30 deg - Service		10.88	-18.84	-1276.75	-748.58	-13.54
Wind 45 deg - Service		15.27	-15.27	-1036.57	-1048.45	-11.01
Wind 60 deg - Service		18.56	-10.71	-728.62	-1274.66	-7.73
Wind 90 deg - Service		21.75	0.00	1.05	-1486.32	0.14
Wind 120 deg - Service		19.67	11.36	762.99	-1330.58	7.98
Wind 135 deg - Service		15.72	15.72	1061.48	-1071.28	11.22
Wind 150 deg - Service		10.88	18.84	1278.84	-748.58	13.69
Wind 180 deg - Service		0.00	21.43	1460.38	-10.84	15.72
Wind 210 deg - Service		-10.88	18.84	1278.84	726.89	13.54
Wind 225 deg - Service		-15.27	15.27	1038.66	1026.77	11.01
Wind 240 deg - Service		-19.67	11.36	762.99	1308.89	7.73
Wind 270 deg - Service		-21.75	0.00	1.05	1464.63	-0.14
Wind 300 deg - Service		-18.56	-10.71	-728.62	1252.97	-7.98
Wind 315 deg - Service		-15.27	-15.27	-1036.57	1026.77	-11.22
Wind 330 deg - Service		-10.88	-18.84	-1276.75	726.89	-13.69

Load Combinations

Comb. No.	Description
1	Dead Only
2	1.2 Dead+1.0 Wind 0 deg - No Ice
3	0.9 Dead+1.0 Wind 0 deg - No Ice
4	1.2 Dead+1.0 Wind 30 deg - No Ice
5	0.9 Dead+1.0 Wind 30 deg - No Ice
6	1.2 Dead+1.0 Wind 45 deg - No Ice
7	0.9 Dead+1.0 Wind 45 deg - No Ice
8	1.2 Dead+1.0 Wind 60 deg - No Ice
9	0.9 Dead+1.0 Wind 60 deg - No Ice
10	1.2 Dead+1.0 Wind 90 deg - No Ice

Comb. No.	Description
11	0.9 Dead+1.0 Wind 90 deg - No Ice
12	1.2 Dead+1.0 Wind 120 deg - No Ice
13	0.9 Dead+1.0 Wind 120 deg - No Ice
14	1.2 Dead+1.0 Wind 135 deg - No Ice
15	0.9 Dead+1.0 Wind 135 deg - No Ice
16	1.2 Dead+1.0 Wind 150 deg - No Ice
17	0.9 Dead+1.0 Wind 150 deg - No Ice
18	1.2 Dead+1.0 Wind 180 deg - No Ice
19	0.9 Dead+1.0 Wind 180 deg - No Ice
20	1.2 Dead+1.0 Wind 210 deg - No Ice
21	0.9 Dead+1.0 Wind 210 deg - No Ice
22	1.2 Dead+1.0 Wind 225 deg - No Ice
23	0.9 Dead+1.0 Wind 225 deg - No Ice
24	1.2 Dead+1.0 Wind 240 deg - No Ice
25	0.9 Dead+1.0 Wind 240 deg - No Ice
26	1.2 Dead+1.0 Wind 270 deg - No Ice
27	0.9 Dead+1.0 Wind 270 deg - No Ice
28	1.2 Dead+1.0 Wind 300 deg - No Ice
29	0.9 Dead+1.0 Wind 300 deg - No Ice
30	1.2 Dead+1.0 Wind 315 deg - No Ice
31	0.9 Dead+1.0 Wind 315 deg - No Ice
32	1.2 Dead+1.0 Wind 330 deg - No Ice
33	0.9 Dead+1.0 Wind 330 deg - No Ice
34	1.2 Dead+1.0 Ice+1.0 Temp
35	1.2 Dead+1.0 Wind 0 deg+1.0 Ice+1.0 Temp
36	1.2 Dead+1.0 Wind 30 deg+1.0 Ice+1.0 Temp
37	1.2 Dead+1.0 Wind 45 deg+1.0 Ice+1.0 Temp
38	1.2 Dead+1.0 Wind 60 deg+1.0 Ice+1.0 Temp
39	1.2 Dead+1.0 Wind 90 deg+1.0 Ice+1.0 Temp
40	1.2 Dead+1.0 Wind 120 deg+1.0 Ice+1.0 Temp
41	1.2 Dead+1.0 Wind 135 deg+1.0 Ice+1.0 Temp
42	1.2 Dead+1.0 Wind 150 deg+1.0 Ice+1.0 Temp
43	1.2 Dead+1.0 Wind 180 deg+1.0 Ice+1.0 Temp
44	1.2 Dead+1.0 Wind 210 deg+1.0 Ice+1.0 Temp
45	1.2 Dead+1.0 Wind 225 deg+1.0 Ice+1.0 Temp
46	1.2 Dead+1.0 Wind 240 deg+1.0 Ice+1.0 Temp
47	1.2 Dead+1.0 Wind 270 deg+1.0 Ice+1.0 Temp
48	1.2 Dead+1.0 Wind 300 deg+1.0 Ice+1.0 Temp
49	1.2 Dead+1.0 Wind 315 deg+1.0 Ice+1.0 Temp
50	1.2 Dead+1.0 Wind 330 deg+1.0 Ice+1.0 Temp
51	Dead+Wind 0 deg - Service
52	Dead+Wind 30 deg - Service
53	Dead+Wind 45 deg - Service
54	Dead+Wind 60 deg - Service
55	Dead+Wind 90 deg - Service
56	Dead+Wind 120 deg - Service
57	Dead+Wind 135 deg - Service
58	Dead+Wind 150 deg - Service
59	Dead+Wind 180 deg - Service
60	Dead+Wind 210 deg - Service
61	Dead+Wind 225 deg - Service
62	Dead+Wind 240 deg - Service
63	Dead+Wind 270 deg - Service
64	Dead+Wind 300 deg - Service
65	Dead+Wind 315 deg - Service
66	Dead+Wind 330 deg - Service

Maximum Member Forces

Section No.	Elevation ft	Component Type	Condition	Gov. Load Comb.	Axial K	Major Axis Moment kip-ft	Minor Axis Moment kip-ft
T1	120 - 116.66	Leg	Max Tension	19	0.25	0.00	0.00
			Max. Compression	46	-0.58	0.45	0.15
			Max. Mx	28	0.18	-2.36	0.82
			Max. My	14	-0.07	-0.61	-2.95
			Max. Vy	28	0.79	-2.36	0.82
			Max. Vx	14	1.01	-0.61	-2.95
		Diagonal	Max Tension	27	0.60	0.00	0.00
			Max. Compression	26	-0.76	0.00	0.00
			Max. Mx	34	-0.28	0.10	0.00
			Max. My	34	-0.29	0.00	0.00
			Max. Vy	34	-0.06	0.00	0.00
			Max. Vx	34	0.00	0.00	0.00
		Top Girt	Max Tension	13	0.66	0.01	-0.00
			Max. Compression	28	-0.67	0.00	0.00
			Max. Mx	43	0.06	0.06	-0.00
			Max. My	18	0.12	0.02	-0.00
			Max. Vy	43	-0.05	0.06	-0.00
			Max. Vx	43	0.00	0.06	-0.00
		Inner Bracing	Max Tension	1	0.00	0.00	0.00
			Max. Compression	46	-0.00	0.00	0.00
			Max. Mx	34	-0.00	-0.05	0.00
			Max. Vy	34	0.04	0.00	0.00
T2	116.66 - 108.33	Leg	Max Tension	3	0.07	2.33	0.42
			Max. Compression	48	-4.07	-0.43	0.07
			Max. Mx	28	-0.54	2.89	0.82
			Max. My	15	-0.30	-0.61	4.09
			Max. Vy	28	3.37	-1.92	0.51
			Max. Vx	32	-3.99	-0.00	2.38
		Diagonal	Max Tension	27	4.66	0.00	0.00
			Max. Compression	26	-4.80	0.00	0.00
			Max. Mx	34	-0.12	0.16	0.00
			Max. My	34	-0.18	0.00	-0.01
			Max. Vy	34	0.06	0.00	0.00
			Max. Vx	34	0.00	0.00	0.00
		Horizontal	Max Tension	28	3.39	0.01	-0.00
			Max. Compression	13	-3.36	0.00	0.00
			Max. Mx	43	-0.11	0.06	0.00
			Max. My	2	1.95	0.01	-0.01
			Max. Vy	43	-0.05	0.06	0.00
			Max. Vx	2	0.00	0.01	-0.01
		Inner Bracing	Max Tension	3	0.00	0.00	0.00
			Max. Compression	48	-0.01	0.00	0.00
			Max. Mx	34	-0.01	-0.06	0.00
			Max. Vy	34	0.04	0.00	0.00
T3	108.33 - 100	Leg	Max Tension	9	3.69	-1.90	-0.05
			Max. Compression	12	-6.27	1.18	-0.02
			Max. Mx	25	-5.12	1.92	0.05
			Max. My	16	-0.83	-0.00	-2.39
			Max. Vy	3	0.46	1.92	0.46
			Max. Vx	16	-0.66	-0.00	-2.39
		Diagonal	Max Tension	21	12.13	0.00	0.00
			Max. Compression	20	-12.27	0.00	0.00
			Max. Mx	34	-0.17	0.17	0.00
			Max. My	34	-0.21	0.00	-0.01
			Max. Vy	34	0.06	0.00	0.00
			Max. Vx	34	0.00	0.00	0.00
		Horizontal	Max Tension	18	8.24	0.00	0.00
			Max. Compression	3	-8.35	0.02	0.01
			Max. Mx	43	-0.33	0.07	0.00
			Max. My	2	0.99	0.02	-0.02

Section No.	Elevation ft	Component Type	Condition	Gov. Load Comb.	Axial K	Major Axis Moment kip-ft	Minor Axis Moment kip-ft
			Max. Vy	43	-0.05	0.07	0.00
			Max. Vx	2	0.00	0.02	-0.02
		Inner Bracing	Max Tension	3	0.01	0.00	0.00
			Max. Compression	28	-0.01	0.00	0.00
			Max. Mx	34	-0.01	-0.06	0.00
			Max. Vy	34	0.04	0.00	0.00
T4	100 - 91.6667	Leg	Max Tension	9	17.22	-1.19	0.25
			Max. Compression	12	-21.96	2.75	0.13
			Max. Mx	18	15.89	3.03	0.06
			Max. My	26	-2.61	-0.05	3.12
			Max. Vy	18	1.81	-2.81	0.06
			Max. Vx	26	1.82	-0.05	-2.90
		Diagonal	Max Tension	21	14.69	0.00	0.00
			Max. Compression	20	-14.86	0.00	0.00
			Max. Mx	34	-0.18	0.18	0.00
			Max. My	34	-0.20	0.00	0.01
			Max. Vy	34	-0.07	0.00	0.00
			Max. Vx	34	-0.00	0.00	0.00
		Top Girt	Max Tension	20	9.37	0.00	0.00
			Max. Compression	3	-9.37	0.03	0.01
			Max. Mx	43	-0.34	0.10	0.00
			Max. My	24	1.85	0.02	-0.03
			Max. Vy	43	0.07	0.10	0.00
			Max. Vx	24	-0.00	0.02	-0.03
		Inner Bracing	Max Tension	25	0.01	0.00	0.00
			Max. Compression	28	-0.01	0.00	0.00
			Max. Mx	34	-0.01	-0.07	0.00
			Max. Vy	34	0.04	0.00	0.00
T5	91.6667 - 83.3333	Leg	Max Tension	9	32.87	-2.79	0.08
			Max. Compression	12	-41.50	1.30	0.03
			Max. Mx	18	32.03	-2.81	0.06
			Max. My	10	-2.92	-0.05	2.90
			Max. Vy	18	3.85	-1.30	-0.05
			Max. Vx	4	3.98	-0.02	-1.16
		Diagonal	Max Tension	21	18.78	0.00	0.00
			Max. Compression	20	-19.01	0.00	0.00
			Max. Mx	34	-0.21	0.24	0.00
			Max. My	34	-0.24	0.00	-0.01
			Max. Vy	34	-0.09	0.00	0.00
			Max. Vx	34	0.00	0.00	0.00
		Top Girt	Max Tension	20	12.31	0.00	0.00
			Max. Compression	3	-12.34	0.04	0.02
			Max. Mx	43	-0.11	0.12	0.00
			Max. My	24	1.32	0.01	-0.04
			Max. Vy	43	-0.08	0.12	0.00
			Max. Vx	24	0.01	0.01	-0.04
		Inner Bracing	Max Tension	25	0.01	0.00	0.00
			Max. Compression	28	-0.01	0.00	0.00
			Max. Mx	34	-0.01	-0.08	0.00
			Max. Vy	34	0.04	0.00	0.00
T6	83.3333 - 75	Leg	Max Tension	9	53.29	-0.26	0.11
			Max. Compression	12	-64.47	0.30	-0.29
			Max. Mx	13	-62.80	1.30	0.03
			Max. My	10	-5.32	-0.02	1.29
			Max. Vy	13	0.34	1.30	0.03
			Max. Vx	32	-0.58	-0.01	0.72
		Diagonal	Max Tension	21	24.81	0.00	0.00
			Max. Compression	20	-25.08	0.00	0.00
			Max. Mx	34	-0.25	0.28	0.00
			Max. My	34	-0.26	0.00	-0.01

Section No.	Elevation ft	Component Type	Condition	Gov. Load Comb.	Axial K	Major Axis Moment kip-ft	Minor Axis Moment kip-ft
			Max. Vy	34	-0.10	0.00	0.00
			Max. Vx	34	0.00	0.00	0.00
		Top Girt	Max Tension	20	16.68	0.00	0.00
			Max. Compression	21	-16.63	0.00	0.00
			Max. Mx	43	-0.29	0.14	0.01
			Max. My	24	3.62	0.01	-0.05
			Max. Vy	43	-0.08	0.14	0.01
			Max. Vx	24	0.01	0.01	-0.05
		Inner Bracing	Max Tension	25	0.01	0.00	0.00
			Max. Compression	28	-0.02	0.00	0.00
			Max. Mx	34	-0.01	-0.08	0.00
			Max. Vy	34	0.05	0.00	0.00
T7	75 - 50	Leg	Max Tension	9	141.41	0.03	0.02
			Max. Compression	12	-159.87	-0.16	0.08
			Max. Mx	12	-159.00	0.99	0.04
			Max. My	10	-8.13	-0.09	1.36
			Max. Vy	28	0.48	-0.01	-0.08
			Max. Vx	4	0.91	-0.09	-1.32
		Diagonal	Max Tension	21	27.56	0.00	0.00
			Max. Compression	20	-27.96	0.00	0.00
			Max. Mx	34	-0.38	0.40	0.00
			Max. My	34	-0.41	0.00	0.01
			Max. Vy	34	-0.13	0.00	0.00
			Max. Vx	34	-0.00	0.00	0.00
		Horizontal	Max Tension	20	19.90	0.00	0.00
			Max. Compression	21	-19.67	0.00	0.00
			Max. Mx	48	0.32	0.20	0.01
			Max. My	24	0.64	0.01	-0.04
			Max. Vy	48	0.11	0.20	0.01
			Max. Vx	24	0.01	0.01	-0.04
		Top Girt	Max Tension	20	17.75	0.00	0.00
			Max. Compression	21	-17.60	0.00	0.00
			Max. Mx	43	-0.48	0.14	0.01
			Max. My	24	1.72	0.01	-0.04
			Max. Vy	43	0.09	0.14	0.01
			Max. Vx	24	-0.01	0.01	-0.04
		Inner Bracing	Max Tension	25	0.01	0.00	0.00
			Max. Compression	28	-0.02	0.00	0.00
			Max. Mx	34	-0.01	-0.11	0.00
			Max. Vy	34	-0.05	0.00	0.00
T8	50 - 25	Leg	Max Tension	9	233.01	2.64	0.10
			Max. Compression	2	-260.67	4.55	-0.13
			Max. Mx	2	-260.67	4.55	-0.13
			Max. My	32	-10.68	-0.36	3.33
			Max. Vy	12	2.27	4.55	0.08
			Max. Vx	4	1.43	-0.24	-2.23
		Diagonal	Max Tension	21	32.20	-0.18	-0.01
			Max. Compression	20	-32.89	0.00	0.00
			Max. Mx	6	19.57	-0.30	-0.01
			Max. My	48	-0.90	-0.03	-0.02
			Max. Vy	44	-0.10	-0.13	0.02
			Max. Vx	35	0.01	0.00	0.00
		Horizontal	Max Tension	20	23.97	0.00	0.00
			Max. Compression	21	-23.79	0.00	0.00
			Max. Mx	48	-0.36	0.29	0.00
			Max. My	24	1.32	0.03	-0.05
			Max. Vy	48	-0.14	0.29	0.00
			Max. Vx	24	0.01	0.03	-0.05
		Top Girt	Max Tension	20	21.04	0.00	0.00
			Max. Compression	21	-20.93	0.00	0.00
			Max. Mx	48	-0.48	0.20	0.01

Section No.	Elevation ft	Component Type	Condition	Gov. Load Comb.	Axial K	Major Axis Moment kip-ft	Minor Axis Moment kip-ft
			Max. My	24	0.63	0.01	-0.05
			Max. Vy	48	-0.11	0.20	0.01
			Max. Vx	24	-0.01	0.01	-0.05
		Redund Horz 1 Bracing	Max Tension	10	2.95	0.00	0.00
			Max. Compression	11	-2.67	0.00	0.00
			Max. Mx	34	0.39	-0.04	0.00
			Max. My	34	0.43	0.00	0.00
			Max. Vy	34	0.03	0.00	0.00
			Max. Vx	34	0.00	0.00	0.00
		Redund Diag 1 Bracing	Max Tension	10	1.93	0.00	0.00
			Max. Compression	10	-1.94	0.00	0.00
			Max. Mx	34	-0.01	-0.05	0.00
			Max. My	34	-0.02	0.00	-0.00
			Max. Vy	34	0.03	0.00	0.00
			Max. Vx	34	-0.00	0.00	0.00
		Inner Bracing	Max Tension	25	0.01	0.00	0.00
			Max. Compression	28	-0.02	0.00	0.00
			Max. Mx	34	-0.01	-0.14	0.00
			Max. Vy	34	0.06	0.00	0.00
T9	25 - 0	Leg	Max Tension	9	314.78	6.05	0.24
			Max. Compression	2	-352.26	0.00	0.00
			Max. Mx	2	-351.99	8.83	-0.22
			Max. My	32	-11.99	-0.53	5.00
			Max. Vy	2	-2.75	8.83	-0.22
			Max. Vx	32	-1.40	-0.53	5.00
		Diagonal	Max Tension	21	43.39	-0.39	-0.01
			Max. Compression	20	-44.14	0.00	0.00
			Max. Mx	6	26.86	-0.57	-0.02
			Max. My	38	0.32	-0.03	0.04
			Max. Vy	48	0.12	-0.23	-0.04
			Max. Vx	40	-0.01	0.00	0.00
		Horizontal	Max Tension	20	27.31	0.00	0.00
			Max. Compression	21	-27.24	0.00	0.00
			Max. Mx	8	-3.09	0.39	0.08
			Max. My	24	1.26	-0.07	-0.09
			Max. Vy	48	-0.16	0.35	0.01
			Max. Vx	24	0.01	-0.07	-0.09
		Top Girt	Max Tension	20	25.63	0.00	0.00
			Max. Compression	21	-25.44	0.00	0.00
			Max. Mx	48	-0.41	0.39	0.01
			Max. My	24	0.56	-0.07	-0.09
			Max. Vy	48	-0.16	0.39	0.01
			Max. Vx	24	-0.01	-0.07	-0.09
		Redund Horz 1 Bracing	Max Tension	10	3.31	0.00	0.00
			Max. Compression	11	-3.02	0.00	0.00
			Max. Mx	34	0.22	-0.04	0.00
			Max. My	34	0.25	0.00	0.00
			Max. Vy	34	0.03	0.00	0.00
			Max. Vx	34	-0.00	0.00	0.00
		Redund Diag 1 Bracing	Max Tension	10	2.65	0.00	0.00
			Max. Compression	10	-2.67	0.00	0.00
			Max. Mx	34	0.14	-0.06	0.00
			Max. My	34	0.12	0.00	-0.00
			Max. Vy	34	-0.03	0.00	0.00
			Max. Vx	34	0.00	0.00	0.00
		Inner Bracing	Max Tension	25	0.02	0.00	0.00
			Max. Compression	18	-0.03	0.00	0.00

Section No.	Elevation ft	Component Type	Condition	Gov. Load Comb.	Axial K	Major Axis Moment kip-ft	Minor Axis Moment kip-ft
			Max. Mx	34	-0.01	-0.17	0.00
			Max. Vy	34	0.07	0.00	0.00

Maximum Reactions

Location	Condition	Gov. Load Comb.	Vertical K	Horizontal, X K	Horizontal, Z K
Leg C	Max. Vert	24	410.11	51.64	-31.12
	Max. H_x	24	410.11	51.64	-31.12
	Max. H_z	5	-320.56	-37.36	31.95
	Min. Vert	9	-367.61	-47.15	28.52
	Min. H_x	9	-367.61	-47.15	28.52
	Min. H_z	20	346.10	38.95	-32.88
Leg B	Max. Vert	12	410.17	-52.79	-29.13
	Max. H_x	29	-367.57	48.30	26.53
	Max. H_z	33	-320.52	39.36	28.50
	Min. Vert	29	-367.57	48.30	26.53
	Min. H_x	12	410.17	-52.79	-29.13
	Min. H_z	14	390.55	-48.37	-30.33
Leg A	Max. Vert	2	410.69	-2.30	60.29
	Max. H_x	26	15.18	14.00	1.06
	Max. H_z	2	410.69	-2.30	60.29
	Min. Vert	19	-367.17	2.30	-55.09
	Min. H_x	11	11.38	-14.00	0.79
	Min. H_z	19	-367.17	2.30	-55.09

Tower Mast Reaction Summary

Load Combination	Vertical K	$Shear_x$ K	$Shear_z$ K	Overturning Moment, M_x kip-ft	Overturning Moment, M_z kip-ft	Torque kip-ft
Dead Only	37.02	0.00	0.00	-5.61	-0.49	0.00
1.2 Dead+1.0 Wind 0 deg - No Ice	44.42	0.00	-111.00	-7206.67	-0.58	-83.84
0.9 Dead+1.0 Wind 0 deg - No Ice	33.32	0.00	-111.00	-7204.98	-0.44	-83.84
1.2 Dead+1.0 Wind 30 deg - No Ice	44.42	53.06	-91.90	-6041.49	-3484.75	-72.13
0.9 Dead+1.0 Wind 30 deg - No Ice	33.32	53.06	-91.90	-6039.80	-3484.60	-72.13
1.2 Dead+1.0 Wind 45 deg - No Ice	44.42	74.46	-74.46	-4906.79	-4900.64	-58.61
0.9 Dead+1.0 Wind 45 deg - No Ice	33.32	74.46	-74.46	-4905.11	-4900.50	-58.61
1.2 Dead+1.0 Wind 60 deg - No Ice	44.42	90.49	-52.24	-3452.30	-5968.48	-41.09
0.9 Dead+1.0 Wind 60 deg - No Ice	33.32	90.49	-52.24	-3450.62	-5968.33	-41.09
1.2 Dead+1.0 Wind 90 deg - No Ice	44.42	106.12	0.00	-6.74	-6968.91	0.95
0.9 Dead+1.0 Wind 90 deg - No Ice	33.32	106.12	0.00	-5.05	-6968.77	0.95

Load Combination	Vertical K	$Shear_x$ K	$Shear_z$ K	Overturning Moment, M_x kip-ft	Overturning Moment, M_z kip-ft	Torque kip-ft
1.2 Dead+1.0 Wind 120 deg - No Ice	44.42	96.13	55.50	3593.23	-6235.91	42.75
0.9 Dead+1.0 Wind 120 deg - No Ice	33.32	96.13	55.50	3594.91	-6235.76	42.75
1.2 Dead+1.0 Wind 135 deg - No Ice	44.42	76.76	76.76	5002.50	-5009.82	59.96
0.9 Dead+1.0 Wind 135 deg - No Ice	33.32	76.76	76.76	5004.18	-5009.67	59.96
1.2 Dead+1.0 Wind 150 deg - No Ice	44.42	53.06	91.90	6028.01	-3484.75	73.08
0.9 Dead+1.0 Wind 150 deg - No Ice	33.32	53.06	91.90	6029.70	-3484.60	73.08
1.2 Dead+1.0 Wind 180 deg - No Ice	44.42	-0.00	104.49	6884.39	-0.58	83.84
0.9 Dead+1.0 Wind 180 deg - No Ice	33.32	-0.00	104.49	6886.07	-0.44	83.84
1.2 Dead+1.0 Wind 210 deg - No Ice	44.42	-53.06	91.90	6028.01	3483.58	72.13
0.9 Dead+1.0 Wind 210 deg - No Ice	33.32	-53.06	91.90	6029.70	3483.73	72.13
1.2 Dead+1.0 Wind 225 deg - No Ice	44.42	-74.46	74.46	4893.32	4899.47	58.61
0.9 Dead+1.0 Wind 225 deg - No Ice	33.32	-74.46	74.46	4895.00	4899.62	58.61
1.2 Dead+1.0 Wind 240 deg - No Ice	44.42	-96.13	55.50	3593.23	6234.74	41.09
0.9 Dead+1.0 Wind 240 deg - No Ice	33.32	-96.13	55.50	3594.91	6234.89	41.09
1.2 Dead+1.0 Wind 270 deg - No Ice	44.42	-106.12	-0.00	-6.74	6967.74	-0.95
0.9 Dead+1.0 Wind 270 deg - No Ice	33.32	-106.12	-0.00	-5.05	6967.89	-0.95
1.2 Dead+1.0 Wind 300 deg - No Ice	44.42	-90.49	-52.24	-3452.30	5967.31	-42.75
0.9 Dead+1.0 Wind 300 deg - No Ice	33.32	-90.49	-52.24	-3450.62	5967.45	-42.75
1.2 Dead+1.0 Wind 315 deg - No Ice	44.42	-74.46	-74.46	-4906.79	4899.47	-59.96
0.9 Dead+1.0 Wind 315 deg - No Ice	33.32	-74.46	-74.46	-4905.11	4899.62	-59.96
1.2 Dead+1.0 Wind 330 deg - No Ice	44.42	-53.06	-91.90	-6041.49	3483.58	-73.08
0.9 Dead+1.0 Wind 330 deg - No Ice	33.32	-53.06	-91.90	-6039.80	3483.73	-73.08
1.2 Dead+1.0 Ice+1.0 Temp	114.62	0.00	0.00	-12.65	62.85	-0.00
1.2 Dead+1.0 Wind 0 deg+1.0 Ice+1.0 Temp	114.62	0.00	-28.04	-1712.40	62.85	-30.67
1.2 Dead+1.0 Wind 30 deg+1.0 Ice+1.0 Temp	114.62	13.73	-23.78	-1461.32	-773.53	-29.78
1.2 Dead+1.0 Wind 45 deg+1.0 Ice+1.0 Temp	114.62	19.35	-19.35	-1192.30	-1116.80	-26.25
1.2 Dead+1.0 Wind 60 deg+1.0 Ice+1.0 Temp	114.62	23.62	-13.64	-844.54	-1378.03	-20.92
1.2 Dead+1.0 Wind 90 deg+1.0 Ice+1.0 Temp	114.62	27.46	0.00	-12.65	-1609.92	-6.45
1.2 Dead+1.0 Wind 120 deg+1.0 Ice+1.0 Temp	114.62	24.28	14.02	837.22	-1409.17	9.75
1.2 Dead+1.0 Wind 135 deg+1.0 Ice+1.0 Temp	114.62	19.62	19.62	1179.71	-1129.51	17.12
1.2 Dead+1.0 Wind 150 deg+1.0 Ice+1.0 Temp	114.62	13.73	23.78	1436.01	-773.53	23.33

Load Combination	Vertical K	$Shear_x$ K	$Shear_z$ K	Overturning Moment, M_x kip-ft	Overturning Moment, M_z kip-ft	Torque kip-ft
1.2 Dead+1.0 Wind 180 deg+1.0 Ice+1.0 Temp	114.62	0.00	27.27	1651.13	62.85	30.67
1.2 Dead+1.0 Wind 210 deg+1.0 Ice+1.0 Temp	114.62	-13.73	23.78	1436.01	899.24	29.78
1.2 Dead+1.0 Wind 225 deg+1.0 Ice+1.0 Temp	114.62	-19.35	19.35	1167.00	1242.50	26.25
1.2 Dead+1.0 Wind 240 deg+1.0 Ice+1.0 Temp	114.62	-24.28	14.02	837.22	1534.87	20.92
1.2 Dead+1.0 Wind 270 deg+1.0 Ice+1.0 Temp	114.62	-27.46	0.00	-12.65	1735.62	6.45
1.2 Dead+1.0 Wind 300 deg+1.0 Ice+1.0 Temp	114.62	-23.62	-13.64	-844.54	1503.73	-9.75
1.2 Dead+1.0 Wind 315 deg+1.0 Ice+1.0 Temp	114.62	-19.35	-19.35	-1192.30	1242.50	-17.12
1.2 Dead+1.0 Wind 330 deg+1.0 Ice+1.0 Temp	114.62	-13.73	-23.78	-1461.32	899.24	-23.33
Dead+Wind 0 deg - Service	37.02	0.00	-22.71	-1480.11	-0.49	-15.72
Dead+Wind 30 deg - Service	37.02	10.88	-18.84	-1242.94	-714.86	-13.54
Dead+Wind 45 deg - Service	37.02	15.27	-15.27	-1010.50	-1005.37	-11.01
Dead+Wind 60 deg - Service	37.02	18.56	-10.71	-712.36	-1224.61	-7.73
Dead+Wind 90 deg - Service	37.02	21.75	0.00	-5.61	-1429.23	0.14
Dead+Wind 120 deg - Service	37.02	19.67	11.36	731.63	-1277.43	7.98
Dead+Wind 135 deg - Service	37.02	15.72	15.72	1020.83	-1026.94	11.22
Dead+Wind 150 deg - Service	37.02	10.88	18.84	1231.71	-714.86	13.69
Dead+Wind 180 deg - Service	37.02	-0.00	21.43	1407.88	-0.49	15.72
Dead+Wind 210 deg - Service	37.02	-10.88	18.84	1231.71	713.88	13.54
Dead+Wind 225 deg - Service	37.02	-15.27	15.27	999.27	1004.39	11.01
Dead+Wind 240 deg - Service	37.02	-19.67	11.36	731.63	1276.46	7.73
Dead+Wind 270 deg - Service	37.02	-21.75	0.00	-5.61	1428.25	-0.14
Dead+Wind 300 deg - Service	37.02	-18.56	-10.71	-712.36	1223.63	-7.98
Dead+Wind 315 deg - Service	37.02	-15.27	-15.27	-1010.50	1004.39	-11.22
Dead+Wind 330 deg - Service	37.02	-10.88	-18.84	-1242.94	713.88	-13.69

Solution Summary

	Sum of Applied Forces			Sum of Reactions			
Load Comb.	PX K	PY K	PZ K	PX K	PY K	PZ K	% Error
1	0.00	-37.02	0.00	0.00	37.02	0.00	0.000%
2	0.00	-44.42	-111.00	-0.00	44.42	111.00	0.000%
3	0.00	-33.32	-111.00	-0.00	33.32	111.00	0.000%
4	53.06	-44.42	-91.90	-53.06	44.42	91.90	0.000%
5	53.06	-33.32	-91.90	-53.06	33.32	91.90	0.000%
6	74.46	-44.42	-74.46	-74.46	44.42	74.46	0.000%
7	74.46	-33.32	-74.46	-74.46	33.32	74.46	0.000%
8	90.49	-44.42	-52.24	-90.49	44.42	52.24	0.000%
9	90.49	-33.32	-52.24	-90.49	33.32	52.24	0.000%
10	106.12	-44.42	0.00	-106.12	44.42	-0.00	0.000%
11	106.12	-33.32	0.00	-106.12	33.32	-0.00	0.000%
12	96.13	-44.42	55.50	-96.13	44.42	-55.50	0.000%
13	96.13	-33.32	55.50	-96.13	33.32	-55.50	0.000%
14	76.76	-44.42	76.76	-76.76	44.42	-76.76	0.000%
15	76.76	-33.32	76.76	-76.76	33.32	-76.76	0.000%
16	53.06	-44.42	91.90	-53.06	44.42	-91.90	0.000%
17	53.06	-33.32	91.90	-53.06	33.32	-91.90	0.000%
18	0.00	-44.42	104.49	0.00	44.42	-104.49	0.000%
19	0.00	-33.32	104.49	0.00	33.32	-104.49	0.000%
20	-53.06	-44.42	91.90	53.06	44.42	-91.90	0.000%

Load Comb.	Sum of Applied Forces PX K	PY K	PZ K	Sum of Reactions PX K	PY K	PZ K	% Error
21	-53.06	-33.32	91.90	53.06	33.32	-91.90	0.000%
22	-74.46	-44.42	74.46	74.46	44.42	-74.46	0.000%
23	-74.46	-33.32	74.46	74.46	33.32	-74.46	0.000%
24	-96.13	-44.42	55.50	96.13	44.42	-55.50	0.000%
25	-96.13	-33.32	55.50	96.13	33.32	-55.50	0.000%
26	-106.12	-44.42	0.00	106.12	44.42	0.00	0.000%
27	-106.12	-33.32	0.00	106.12	33.32	0.00	0.000%
28	-90.49	-44.42	-52.24	90.49	44.42	52.24	0.000%
29	-90.49	-33.32	-52.24	90.49	33.32	52.24	0.000%
30	-74.46	-44.42	-74.46	74.46	44.42	74.46	0.000%
31	-74.46	-33.32	-74.46	74.46	33.32	74.46	0.000%
32	-53.06	-44.42	-91.90	53.06	44.42	91.90	0.000%
33	-53.06	-33.32	-91.90	53.06	33.32	91.90	0.000%
34	0.00	-114.62	0.00	-0.00	114.62	0.00	0.000%
35	0.00	-114.62	-28.04	-0.00	114.62	28.04	0.000%
36	13.73	-114.62	-23.78	-13.73	114.62	23.78	0.000%
37	19.35	-114.62	-19.35	-19.35	114.62	19.35	0.000%
38	23.62	-114.62	-13.64	-23.62	114.62	13.64	0.000%
39	27.46	-114.62	0.00	-27.46	114.62	-0.00	0.000%
40	24.28	-114.62	14.02	-24.28	114.62	-14.02	0.000%
41	19.62	-114.62	19.62	-19.62	114.62	-19.62	0.000%
42	13.73	-114.62	23.78	-13.73	114.62	-23.78	0.000%
43	0.00	-114.62	27.27	-0.00	114.62	-27.27	0.000%
44	-13.73	-114.62	23.78	13.73	114.62	-23.78	0.000%
45	-19.35	-114.62	19.35	19.35	114.62	-19.35	0.000%
46	-24.28	-114.62	14.02	24.28	114.62	-14.02	0.000%
47	-27.46	-114.62	0.00	27.46	114.62	0.00	0.000%
48	-23.62	-114.62	-13.64	23.62	114.62	13.64	0.000%
49	-19.35	-114.62	-19.35	19.35	114.62	19.35	0.000%
50	-13.73	-114.62	-23.78	13.73	114.62	23.78	0.000%
51	0.00	-37.02	-22.71	0.00	37.02	22.71	0.000%
52	10.88	-37.02	-18.84	-10.88	37.02	18.84	0.000%
53	15.27	-37.02	-15.27	-15.27	37.02	15.27	0.000%
54	18.56	-37.02	-10.71	-18.56	37.02	10.71	0.000%
55	21.75	-37.02	0.00	-21.75	37.02	-0.00	0.000%
56	19.67	-37.02	11.36	-19.67	37.02	-11.36	0.000%
57	15.72	-37.02	15.72	-15.72	37.02	-15.72	0.000%
58	10.88	-37.02	18.84	-10.88	37.02	-18.84	0.000%
59	0.00	-37.02	21.43	0.00	37.02	-21.43	0.000%
60	-10.88	-37.02	18.84	10.88	37.02	-18.84	0.000%
61	-15.27	-37.02	15.27	15.27	37.02	-15.27	0.000%
62	-19.67	-37.02	11.36	19.67	37.02	-11.36	0.000%
63	-21.75	-37.02	0.00	21.75	37.02	0.00	0.000%
64	-18.56	-37.02	-10.71	18.56	37.02	10.71	0.000%
65	-15.27	-37.02	-15.27	15.27	37.02	15.27	0.000%
66	-10.88	-37.02	-18.84	10.88	37.02	18.84	0.000%

Maximum Tower Deflections - Service Wind

Section No.	Elevation ft	Horz. Deflection in	Gov. Load Comb.	Tilt °	Twist °
T1	120 - 116.66	1.869	51	0.1050	0.0228
T2	116.66 - 108.33	1.797	51	0.1050	0.0229
T3	108.33 - 100	1.610	51	0.1051	0.0221
T4	100 - 91.6667	1.414	51	0.1047	0.0186

Section No.	Elevation ft	Horz. Deflection in	Gov. Load Comb.	Tilt °	Twist °
T5	91.6667 - 83.3333	1.220	51	0.1027	0.0150
T6	83.3333 - 75	1.034	51	0.0989	0.0128
T7	75 - 50	0.854	51	0.0928	0.0112
T8	50 - 25	0.397	51	0.0693	0.0066
T9	25 - 0	0.100	51	0.0334	0.0033

Critical Deflections and Radius of Curvature - Service Wind

Elevation ft	Appurtenance	Gov. Load Comb.	Deflection in	Tilt °	Twist °	Radius of Curvature ft
120.00	12' x 3" Dia Omni	51	1.869	0.1050	0.0228	77133
118.00	WPA-70040-4CF	51	1.826	0.1050	0.0229	77133
113.00	6' Dish	51	1.716	0.1051	0.0228	70032
112.67	WPA-70040-4CF	51	1.709	0.1051	0.0228	69473
110.00	SC479-HF1LDF	51	1.648	0.1051	0.0224	69254
109.00	6' Dish	51	1.625	0.1051	0.0222	72109
107.33	WPA-70040-4CF	51	1.587	0.1051	0.0218	84910
105.00	Tower Top Amplifier	51	1.532	0.1051	0.0209	146747
102.00	AP13-850/065	51	1.461	0.1049	0.0195	849723
95.00	AIR21 B2A/B4P	51	1.297	0.1037	0.0163	110441
89.00	VHLP3-11W	51	1.160	0.1017	0.0141	115149
87.00	20' 4-Bay Dipole	51	1.115	0.1009	0.0136	136036
84.00	QD8616-7	51	1.049	0.0993	0.0129	158411
77.00	20' 4-Bay Dipole	51	0.896	0.0944	0.0115	72468
67.00	(2) 6' Yagi	51	0.693	0.0863	0.0096	56412
66.00	Sabre 2' Sidearm	51	0.674	0.0855	0.0094	56153
54.50	DB803M-Y	51	0.469	0.0745	0.0073	53248
54.00	DB264-A	51	0.461	0.0739	0.0072	53117
53.00	Sabre 2' Sidearm	51	0.445	0.0728	0.0070	52806
51.00	12' Dipole	51	0.413	0.0705	0.0067	51799
49.00	3' Yagi	51	0.382	0.0680	0.0064	50002
44.00	ANT790F2	51	0.309	0.0614	0.0057	43832
43.00	4' Dish	51	0.295	0.0600	0.0055	42695
40.00	1' x 1' Panel	51	0.255	0.0557	0.0052	39576
38.00	6' x 3" Dia Omni	51	0.230	0.0528	0.0049	37738

Maximum Tower Deflections - Design Wind

Section No.	Elevation ft	Horz. Deflection in	Gov. Load Comb.	Tilt °	Twist °
T1	120 - 116.66	9.093	2	0.5086	0.1284
T2	116.66 - 108.33	8.743	2	0.5086	0.1292
T3	108.33 - 100	7.835	2	0.5094	0.1236
T4	100 - 91.6667	6.881	2	0.5082	0.1032
T5	91.6667 - 83.3333	5.941	2	0.4991	0.0830
T6	83.3333 - 75	5.036	2	0.4808	0.0705
T7	75 - 50	4.160	2	0.4516	0.0612
T8	50 - 25	1.936	2	0.3372	0.0358
T9	25 - 0	0.490	2	0.1625	0.0180

Critical Deflections and Radius of Curvature - Design Wind

Elevation ft	Appurtenance	Gov. Load Comb.	Deflection in	Tilt °	Twist °	Radius of Curvature ft
120.00	12' x 3" Dia Omni	2	9.093	0.5086	0.1284	16504
118.00	WPA-70040-4CF	2	8.884	0.5086	0.1290	16504
113.00	6' Dish	2	8.351	0.5089	0.1285	14886
112.67	WPA-70040-4CF	2	8.314	0.5089	0.1284	14763
110.00	SC479-HF1LDF	2	8.021	0.5093	0.1260	14694
109.00	6' Dish	2	7.910	0.5094	0.1246	15305
107.33	WPA-70040-4CF	2	7.722	0.5095	0.1218	18049
105.00	Tower Top Amplifier	2	7.456	0.5096	0.1166	31407
102.00	AP13-850/065	2	7.111	0.5091	0.1087	243223
95.00	AIR21 B2A/B4P	2	6.313	0.5038	0.0903	23438
89.00	VHLP3-11W	2	5.648	0.4944	0.0783	24665
87.00	20' 4-Bay Dipole	2	5.430	0.4902	0.0752	29705
84.00	QD8616-7	2	5.107	0.4827	0.0713	35321
77.00	20' 4-Bay Dipole	2	4.366	0.4591	0.0634	14969
67.00	(2) 6' Yagi	2	3.377	0.4201	0.0526	11563
66.00	Sabre 2' Sidearm	2	3.283	0.4160	0.0515	11513
54.50	DB803M-Y	2	2.287	0.3624	0.0398	10966
54.00	DB264-A	2	2.247	0.3598	0.0394	10941
53.00	Sabre 2' Sidearm	2	2.167	0.3543	0.0384	10881
51.00	12' Dipole	2	2.012	0.3431	0.0366	10680
49.00	3' Yagi	2	1.861	0.3312	0.0349	10308
44.00	ANT790F2	2	1.504	0.2990	0.0309	9019
43.00	4' Dish	2	1.436	0.2922	0.0302	8782
40.00	1' x 1' Panel	2	1.242	0.2713	0.0280	8138
38.00	6' x 3" Dia Omni	2	1.120	0.2570	0.0266	7758

Bolt Design Data

Section No.	Elevation ft	Component Type	Bolt Grade	Bolt Size in	Number Of Bolts	Maximum Load per Bolt K	Allowable Load per Bolt K	Ratio Load / Allowable	Allowable Ratio	Criteria
T1	120	Diagonal	A325X	0.7500	1	0.60	17.94	0.034 ✔	1	Member Block Shear
		Top Girt	A325N	0.6250	2	0.33	7.19	0.046 ✔	1	Member Block Shear
T2	116.66	Diagonal	A325X	0.7500	1	4.66	17.94	0.260 ✔	1	Member Block Shear
		Horizontal	A325N	0.6250	2	1.69	7.19	0.236 ✔	1	Member Block Shear
T3	108.33	Leg	A325N	0.7500	6	0.61	30.10	0.020 ✔	1	Bolt Tension
		Diagonal	A325X	0.7500	1	12.13	17.94	0.676 ✔	1	Member Block Shear
		Horizontal	A325N	0.6250	2	4.12	7.19	0.573 ✔	1	Member Block Shear
T4	100	Diagonal	A325X	0.7500	1	14.69	17.94	0.819 ✔	1	Member Block Shear
		Top Girt	A325N	0.6250	2	4.69	10.26	0.457 ✔	1	Member Block Shear
T5	91.6667	Diagonal	A325X	1.0000	1	18.78	30.48	0.616 ✔	1	Member Block

Section No.	Elevation ft	Component Type	Bolt Grade	Bolt Size in	Number Of Bolts	Maximum Load per Bolt K	Allowable Load per Bolt K	Ratio Load / Allowable	Allowable Ratio	Criteria
		Top Girt	A325N	0.6250	2	6.16	10.26	0.600 ✔	1	Shear Member Block Shear
T6	83.3333	Leg	A325N	0.7500	6	8.88	30.10	0.295 ✔	1	Bolt Tension
		Diagonal	A325X	0.7500	1	24.81	35.89	0.691 ✔	1	Member Block Shear
		Top Girt	A325N	0.6250	2	8.34	10.26	0.812 ✔	1	Member Block Shear
T7	75	Leg	A325N	0.7500	6	23.57	30.10	0.783 ✔	1	Bolt Tension
		Diagonal	A325X	0.7500	1	27.56	37.84	0.728 ✔	1	Member Bearing
		Horizontal	A325N	0.6250	2	9.95	13.81	0.721 ✔	1	Bolt Shear
		Top Girt	A325N	0.6250	2	8.87	10.26	0.865 ✔	1	Member Block Shear
T8	50	Leg	A325N	1.0000	8	29.10	54.52	0.534 ✔	1	Bolt Tension
		Diagonal	A325X	0.7500	1	32.20	37.84	0.851 ✔	1	Member Bearing
		Horizontal	A325N	0.6250	2	11.99	13.81	0.868 ✔	1	Bolt Shear
		Top Girt	A325N	0.6250	2	10.52	12.83	0.820 ✔	1	Member Block Shear
T9	25	Leg	A36	1.5000	6	52.41	61.13	0.857 ✔	1	Bolt Tension
		Diagonal	A325X	1.0000	1	43.39	48.81	0.889 ✔	1	Member Block Shear
		Horizontal	A325N	0.6250	2	13.66	13.81	0.989 ✔	1	Bolt Shear
		Top Girt	A325N	0.6250	2	12.82	13.81	0.928 ✔	1	Bolt Shear

Compression Checks

Leg Design Data (Compression)

Section No.	Elevation ft	Size	L ft	L_u ft	Kl/r	A in^2	P_u K	ϕP_n K	Ratio $\frac{P_u}{\phi P_n}$
T1	120 - 116.66	P5x0.25	3.34	3.34	23.9 K=1.00	3.7306	-0.58	161.03	0.004 [1] ✔
T2	116.66 - 108.33	P5x0.25	8.34	8.34	59.5 K=1.00	3.7306	-4.07	129.59	0.031 [1] ✔
T3	108.33 - 100	P5x0.25	8.34	8.34	59.5 K=1.00	3.7306	-6.27	129.59	0.048 [1] ✔
T4	100 - 91.6667	P5x0.25	8.34	8.34	59.5 K=1.00	3.7306	-21.96	129.56	0.170 [1] ✔
T5	91.6667 - 83.3333	P5x0.25	8.34	8.34	59.5 K=1.00	3.7306	-41.50	129.56	0.320 [1] ✔
T6	83.3333 - 75	P5x0.25	8.34	8.34	59.5 K=1.00	3.7306	-64.47	129.56	0.498 [1] ✔
T7	75 - 50	P5x0.375	25.03	8.34	61.0 K=1.00	5.4487	-159.87	186.75	0.856 [1] ✔

Section No.	Elevation ft	Size	L ft	L_u ft	Kl/r	A in^2	P_u K	ϕP_n K	Ratio $\frac{P_u}{\phi P_n}$
T8	50 - 25	P5x.400	25.03	4.17	30.7 K=1.00	5.7805	-260.67	287.44	0.907 [1] ✔
T9	25 - 0	P6.875x.400	25.03	6.26	32.7 K=1.00	8.1367	-352.26	399.96	0.881 [1] ✔

[1] P_u / ϕP_n controls

Diagonal Design Data (Compression)

Section No.	Elevation ft	Size	L ft	L_u ft	Kl/r	A in^2	P_u K	ϕP_n K	Ratio $\frac{P_u}{\phi P_n}$
T1	120 - 116.66	2L2 1/2x2x3/16	6.73	6.22	94.4 K=1.00	1.6200	-0.76	41.96	0.018 [1] ✔
T2	116.66 - 108.33	2L2 1/2x2x3/16	10.37	9.75	148.1 K=1.00	1.6200	-4.80	21.14	0.227 [1] ✔
T3	108.33 - 100	2L2 1/2x2x3/16	10.57	9.96	151.4 K=1.00	1.6200	-12.27	20.24	0.606 [1] ✔
T4	100 - 91.6667	2L2 1/2x2x3/16	10.78	10.19	154.7 K=1.00	1.6200	-14.86	19.37	0.767 [1] ✔
T5	91.6667 - 83.3333	2L2 1/2x2x5/16	11.00	10.35	160.0 K=1.00	2.6200	-19.01	29.29	0.649 [1] ✔
T6	83.3333 - 75	2L2 1/2x2x3/8	11.22	10.64	166.2 K=1.00	3.0900	-25.08	32.01	0.784 [1] ✔
T7	75 - 50	2L3x2 1/2x3/8	11.91	11.35	146.8 K=1.00	3.8400	-27.96	51.02	0.548 [1] ✔
T8	50 - 25	2L3x2 1/2x3/8	12.65	12.10	142.3 K=1.00	3.8400	-32.89	54.25	0.606 [1] ✔
T9	25 - 0	2L3 1/2x3x3/8	16.33	15.56	153.0 K=1.00	4.5900	-44.14	56.12	0.787 [1] ✔

[1] P_u / ϕP_n controls

Horizontal Design Data (Compression)

Section No.	Elevation ft	Size	L ft	L_u ft	Kl/r	A in^2	P_u K	ϕP_n K	Ratio $\frac{P_u}{\phi P_n}$
T2	116.66 - 108.33	L2 1/2x2 1/2x3/16	11.68	5.43	129.0 K=0.98	0.9020	-3.36	15.52	0.217 [1] ✔
T3	108.33 - 100	L2 1/2x2 1/2x3/16	12.35	5.77	135.2 K=0.97	0.9020	-8.35	14.13	0.591 [1] ✔
T7	75 - 50	L3x3x3/8	16.35	7.77	149.6 K=0.94	2.1100	-19.67	26.97	0.729 [1] ✔
T8	50 - 25	L3x3x1/2	18.35	8.77	165.9 K=0.92	2.7500	-23.79	28.59	0.832 [1] ✔
T9	25 - 0	L4x4x3/8	20.02	9.53	139.1	2.8600	-27.24	42.28	0.644 [1]

Section No.	Elevation ft	Size	L ft	L_u ft	Kl/r	A in^2	P_u K	ϕP_n K	Ratio $\frac{P_u}{\phi P_n}$
					K=0.96				✔

[1] P_u / ϕP_n controls

Top Girt Design Data (Compression)

Section No.	Elevation ft	Size	L ft	L_u ft	Kl/r	A in^2	P_u K	ϕP_n K	Ratio $\frac{P_u}{\phi P_n}$
T1	120 - 116.66	L2 1/2x2 1/2x3/16	11.41	5.30	126.5 K=0.98	0.9020	-0.67	16.14	0.042 [1] ✔
T4	100 - 91.6667	L3x3x1/4	13.02	6.10	122.9 K=0.99	1.4400	-9.37	27.23	0.344 [1] ✔
T5	91.6667 - 83.3333	L3x3x1/4	13.69	6.44	128.0 K=0.98	1.4400	-12.34	25.15	0.491 [1] ✔
T6	83.3333 - 75	L3x3x1/4	14.35	6.77	133.2 K=0.97	1.4400	-16.63	23.24	0.716 [1] ✔
T7	75 - 50	L3x3x1/4	15.02	7.10	138.3 K=0.96	1.4400	-17.60	21.54	0.817 [1] ✔
T8	50 - 25	L3x3x5/16	17.02	8.10	154.4 K=0.94	1.7800	-20.93	21.37	0.979 [1] ✔
T9	25 - 0	L4x4x3/8	19.02	9.03	133.3 K=0.97	2.8600	-25.44	46.05	0.553 [1] ✔

[1] P_u / ϕP_n controls

Redundant Horizontal (1) Design Data (Compression)

Section No.	Elevation ft	Size	L ft	L_u ft	Kl/r	A in^2	P_u K	ϕP_n K	Ratio $\frac{P_u}{\phi P_n}$
T8	50 - 25	L2 1/2x2 1/2x3/16	4.59	4.38	113.1 K=1.07	0.9020	-4.52	19.41	0.233 [1] ✔
T9	25 - 0	L2 1/2x2 1/2x3/16	5.01	4.72	117.2 K=1.02	0.9020	-6.11	18.45	0.331 [1] ✔

[1] P_u / ϕP_n controls

Redundant Diagonal (1) Design Data (Compression)

Section No.	Elevation ft	Size	L ft	L_u ft	Kl/r	A in^2	P_u K	ϕP_n K	Ratio $\frac{P_u}{\phi P_n}$

Section No.	Elevation ft	Size	L ft	L_u ft	Kl/r	A in^2	P_u K	ϕP_n K	Ratio $\frac{P_u}{\phi P_n}$
T8	50 - 25	L2 1/2x2 1/2x3/16	6.08	5.79	140.4 K=1.00	0.9020	-2.99	13.10	0.228 [1] ✔
T9	25 - 0	L2 1/2x2 1/2x3/16	7.85	7.38	178.9 K=1.00	0.9020	-4.79	8.06	0.594 [1] ✔

[1] P_u / ϕP_n controls

Inner Bracing Design Data (Compression)

Section No.	Elevation ft	Size	L ft	L_u ft	Kl/r	A in^2	P_u K	ϕP_n K	Ratio $\frac{P_u}{\phi P_n}$
T1	120 - 116.66	L2 1/2x2x3/16	5.70	5.70	160.3 K=1.00	0.8090	-0.00	9.01	0.000 [1] ✔
T2	116.66 - 108.33	L2 1/2x2x3/16	5.84	5.84	164.1 K=1.00	0.8090	-0.01	8.60	0.001 [1] ✔
T3	108.33 - 100	L2 1/2x2x3/16	6.17	6.17	173.5 K=1.00	0.8090	-0.01	7.69	0.001 [1] ✔
T4	100 - 91.6667	L2 1/2x2x3/16	6.51	6.51	183.0 K=1.00	0.8090	-0.01	6.92	0.002 [1] ✔
T5	91.6667 - 83.3333	L2 1/2x2x3/16	6.84	6.84	192.3 K=1.00	0.8090	-0.01	6.26	0.002 [1] ✔
T6	83.3333 - 75	L2 1/2x2x3/16	7.18	7.18	201.7 K=1.00	0.8090	-0.02	5.69	0.003 [1] ✔
T7	75 - 50	L2 1/2x2x3/16	8.18	8.18	229.8 K=1.00	0.8090	-0.01	4.39	0.003 [1] ✔
T8	50 - 25	L2 1/2x2x3/16	9.18	9.18	257.9 K=1.00	0.8090	-0.02	3.48	0.004 [1] ✔
T9	25 - 0	KL/R > 250 (C) - 157 L2 1/2x2 1/2x3/16	10.01	10.01	242.7 K=1.00	0.9020	-0.03	4.38	0.006 [1] ✔

[1] P_u / ϕP_n controls

Tension Checks

Leg Design Data (Tension)

Section No.	Elevation ft	Size	L ft	L_u ft	Kl/r	A in^2	P_u K	ϕP_n K	Ratio $\frac{P_u}{\phi P_n}$
T1	120 - 116.66	P5x0.25	3.34	3.34	23.9	3.7306	0.25	167.88	0.002 [1] ✔
T2	116.66 - 108.33	P5x0.25	8.34	8.34	59.5	3.7306	0.07	167.88	0.000 [1] ✔

Section No.	Elevation ft	Size	L ft	L_u ft	Kl/r	A in^2	P_u K	ϕP_n K	Ratio $\frac{P_u}{\phi P_n}$
T3	108.33 - 100	P5x0.25	8.34	8.34	59.5	3.7306	3.69	167.88	0.022 [1] ✔
T4	100 - 91.6667	P5x0.25	8.34	8.34	59.5	3.7306	17.22	167.88	0.103 [1] ✔
T5	91.6667 - 83.3333	P5x0.25	8.34	8.34	59.5	3.7306	32.87	167.88	0.196 [1] ✔
T6	83.3333 - 75	P5x0.25	8.34	8.34	59.5	3.7306	53.29	167.88	0.317 [1] ✔
T7	75 - 50	P5x0.375	25.03	8.34	61.0	5.4487	141.41	245.19	0.577 [1] ✔
T8	50 - 25	P5x.400	25.03	4.17	30.7	5.7805	233.01	312.15	0.746 [1] ✔
T9	25 - 0	P6.875x.400	25.03	6.26	32.7	8.1367	314.78	439.38	0.716 [1] ✔

[1] P_u / ϕP_n controls

Diagonal Design Data (Tension)

Section No.	Elevation ft	Size	L ft	L_u ft	Kl/r	A in^2	P_u K	ϕP_n K	Ratio $\frac{P_u}{\phi P_n}$
T1	120 - 116.66	2L2 1/2x2x3/16	6.73	6.22	98.6	0.9689	0.60	42.15	0.014 [1] ✔
T2	116.66 - 108.33	2L2 1/2x2x3/16	10.37	9.75	152.2	0.9689	4.66	42.15	0.111 [1] ✔
T3	108.33 - 100	2L2 1/2x2x3/16	10.57	9.96	155.5	0.9689	12.13	42.15	0.288 [1] ✔
T4	100 - 91.6667	2L2 1/2x2x3/16	10.78	10.19	158.8	0.9689	14.69	42.15	0.349 [1] ✔
T5	91.6667 - 83.3333	2L2 1/2x2x5/16	11.00	10.35	165.2	1.4377	18.78	62.54	0.300 [1] ✔
T6	83.3333 - 75	2L2 1/2x2x3/8	11.22	10.64	170.4	1.8253	24.81	79.40	0.312 [1] ✔
T7	75 - 50	2L3x2 1/2x3/8	11.91	11.35	150.3	2.3878	27.56	103.87	0.265 [1] ✔
T8	50 - 25	2L3x2 1/2x3/8	12.65	12.10	145.5	2.3878	32.20	103.87	0.310 [1] ✔
T9	25 - 0	2L3 1/2x3x3/8	16.33	15.56	156.3	2.8097	43.39	122.22	0.355 [1] ✔

[1] P_u / ϕP_n controls

Horizontal Design Data (Tension)

Section No.	Elevation ft	Size	L ft	L_u ft	Kl/r	A in^2	P_u K	ϕP_n K	Ratio $\frac{P_u}{\phi P_n}$
T2	116.66 - 108.33	L2 1/2x2 1/2x3/16	11.68	5.43	86.9	0.5710	3.39	24.84	0.136 [1] ✔
T3	108.33 - 100	L2 1/2x2 1/2x3/16	12.35	5.77	92.0	0.5710	8.24	24.84	0.332 [1] ✔
T7	75 - 50	L3x3x3/8	16.35	7.77	104.7	1.3716	19.90	59.66	0.333 [1] ✔
T8	50 - 25	L3x3x1/2	18.35	8.77	119.8	1.7812	23.97	77.48	0.309 [1] ✔
T9	25 - 0	L4x4x3/8	20.02	9.53	94.9	1.9341	27.31	84.13	0.325 [1] ✔

[1] P_u / ϕP_n controls

Top Girt Design Data (Tension)

Section No.	Elevation ft	Size	L ft	L_u ft	Kl/r	A in^2	P_u K	ϕP_n K	Ratio $\frac{P_u}{\phi P_n}$
T1	120 - 116.66	L2 1/2x2 1/2x3/16	11.41	5.30	84.8	0.5710	0.66	24.84	0.027 [1] ✔
T4	100 - 91.6667	L3x3x1/4	13.02	6.10	81.3	0.9394	9.37	40.86	0.229 [1] ✔
T5	91.6667 - 83.3333	L3x3x1/4	13.69	6.44	85.6	0.9394	12.31	40.86	0.301 [1] ✔
T6	83.3333 - 75	L3x3x1/4	14.35	6.77	89.9	0.9394	16.68	40.86	0.408 [1] ✔
T7	75 - 50	L3x3x1/4	15.02	7.10	94.2	0.9394	17.75	40.86	0.434 [1] ✔
T8	50 - 25	L3x3x5/16	17.02	8.10	108.0	1.1592	21.04	50.43	0.417 [1] ✔
T9	25 - 0	L4x4x3/8	19.02	9.03	90.0	1.9341	25.63	84.13	0.305 [1] ✔

[1] P_u / ϕP_n controls

Redundant Horizontal (1) Design Data (Tension)

Section No.	Elevation ft	Size	L ft	L_u ft	Kl/r	A in^2	P_u K	ϕP_n K	Ratio $\frac{P_u}{\phi P_n}$
T8	50 - 25	L2 1/2x2 1/2x3/16	4.59	4.38	67.6	0.9020	4.52	29.22	0.155 [1] ✔
T9	25 - 0	L2 1/2x2 1/2x3/16	5.01	4.72	72.8	0.9020	6.11	29.22	0.209 [1] ✔

[1] P_u / ϕP_n controls

Redundant Diagonal (1) Design Data (Tension)

Section No.	Elevation ft	Size	L ft	L_u ft	Kl/r	A in^2	P_u K	ϕP_n K	Ratio $\frac{P_u}{\phi P_n}$
T8	50 - 25	L2 1/2x2 1/2x3/16	5.84	5.55	85.6	0.9020	3.10	29.22	0.106 [1] ✔
T9	25 - 0	L2 1/2x2 1/2x3/16	7.71	7.23	111.6	0.9020	4.95	29.22	0.169 [1] ✔

[1] P_u / ϕP_n controls

Inner Bracing Design Data (Tension)

Section No.	Elevation ft	Size	L ft	L_u ft	Kl/r	A in^2	P_u K	ϕP_n K	Ratio $\frac{P_u}{\phi P_n}$
T2	116.66 - 108.33	L2 1/2x2x3/16	5.84	5.84	116.8	0.8090	0.00	26.21	0.000 [1] ✔
T3	108.33 - 100	L2 1/2x2x3/16	6.17	6.17	123.6	0.8090	0.01	26.21	0.000 [1] ✔
T4	100 - 91.6667	L2 1/2x2x3/16	6.51	6.51	130.3	0.8090	0.01	26.21	0.000 [1] ✔
T5	91.6667 - 83.3333	L2 1/2x2x3/16	6.84	6.84	136.9	0.8090	0.01	26.21	0.000 [1] ✔
T6	83.3333 - 75	L2 1/2x2x3/16	7.18	7.18	143.6	0.8090	0.01	26.21	0.000 [1] ✔
T7	75 - 50	L2 1/2x2x3/16	7.51	7.51	150.3	0.8090	0.01	26.21	0.000 [1] ✔
T8	50 - 25	L2 1/2x2x3/16	8.51	8.51	170.3	0.8090	0.01	26.21	0.000 [1] ✔
T9	25 - 0	L2 1/2x2 1/2x3/16	9.51	9.51	146.7	0.9020	0.02	29.22	0.001 [1] ✔

[1] P_u / ϕP_n controls

Section Capacity Table

Section No.	Elevation ft	Component Type	Size	Critical Element	P K	ϕP_{allow} K	% Capacity	Pass Fail
T1	120 - 116.66	Leg	P5x0.25	1	-0.58	161.03	2.1	Pass
		Leg	P5x0.25	2	-0.40	161.03	1.8	Pass
		Leg	P5x0.25	3	-0.36	161.03	1.6	Pass
T2	116.66 - 108.33	Leg	P5x0.25	16	-1.86	129.59	8.3	Pass
		Leg	P5x0.25	17	-4.07	129.59	6.8	Pass
		Leg	P5x0.25	18	-1.93	129.59	8.0	Pass

Section No.	Elevation ft	Component Type	Size	Critical Element	P K	$øP_{allow}$ K	% Capacity	Pass Fail
T3	108.33 - 100	Leg	P5x0.25	31	-5.67	129.59	4.4	Pass
		Leg	P5x0.25	32	-6.27	129.59	4.8	Pass
		Leg	P5x0.25	33	-5.71	129.59	4.4	Pass
T4	100 - 91.6667	Leg	P5x0.25	46	-21.50	129.56	16.6	Pass
		Leg	P5x0.25	47	-21.96	129.56	17.0	Pass
		Leg	P5x0.25	48	-21.65	129.56	16.7	Pass
T5	91.6667 - 83.3333	Leg	P5x0.25	61	-40.95	129.56	31.6	Pass
		Leg	P5x0.25	62	-41.50	129.56	32.0	Pass
		Leg	P5x0.25	63	-41.33	129.56	31.9	Pass
T6	83.3333 - 75	Leg	P5x0.25	76	-64.24	129.56	49.6	Pass
		Leg	P5x0.25	77	-64.47	129.56	49.8	Pass
		Leg	P5x0.25	78	-64.43	129.56	49.7	Pass
T7	75 - 50	Leg	P5x0.375	91	-159.37	186.75	85.3	Pass
		Leg	P5x0.375	92	-159.87	186.75	85.6	Pass
		Leg	P5x0.375	93	-159.83	186.75	85.6	Pass
T8	50 - 25	Leg	P5x.400	130	-260.15	287.44	90.5	Pass
		Leg	P5x.400	131	-260.61	287.44	90.7	Pass
		Leg	P5x.400	132	-260.67	287.44	90.7	Pass
T9	25 - 0	Leg	P6.875x.400	205	-351.65	399.96	87.9	Pass
		Leg	P6.875x.400	206	-351.73	399.96	87.9	Pass
		Leg	P6.875x.400	207	-352.26	399.96	88.1	Pass
T1	120 - 116.66	Diagonal	2L2 1/2x2x3/16	7	-0.76	41.96	1.8 3.4 (b)	Pass
		Diagonal	2L2 1/2x2x3/16	8	-0.76	41.96	1.8 3.3 (b)	Pass
		Diagonal	2L2 1/2x2x3/16	9	-0.44	41.96	1.0 1.4 (b)	Pass
		Diagonal	2L2 1/2x2x3/16	10	-0.42	41.96	1.0 1.4 (b)	Pass
		Diagonal	2L2 1/2x2x3/16	11	-0.67	41.96	1.6 2.8 (b)	Pass
		Diagonal	2L2 1/2x2x3/16	12	-0.67	41.96	1.6 2.9 (b)	Pass
T2	116.66 - 108.33	Diagonal	2L2 1/2x2x3/16	20	-4.80	21.14	22.7 25.9 (b)	Pass
		Diagonal	2L2 1/2x2x3/16	21	-4.78	21.14	22.6 26.0 (b)	Pass
		Diagonal	2L2 1/2x2x3/16	23	-2.61	21.14	12.3 14.1 (b)	Pass
		Diagonal	2L2 1/2x2x3/16	24	-2.67	21.14	12.6 13.8 (b)	Pass
		Diagonal	2L2 1/2x2x3/16	26	-3.98	21.14	18.8 20.8 (b)	Pass
		Diagonal	2L2 1/2x2x3/16	27	-3.86	21.14	18.3 21.4 (b)	Pass
T3	108.33 - 100	Diagonal	2L2 1/2x2x3/16	35	-11.00	20.24	54.4 60.4 (b)	Pass
		Diagonal	2L2 1/2x2x3/16	36	-10.97	20.24	54.2 60.5 (b)	Pass
		Diagonal	2L2 1/2x2x3/16	38	-7.97	20.24	39.4 43.7 (b)	Pass
		Diagonal	2L2 1/2x2x3/16	39	-7.98	20.24	39.4 43.7 (b)	Pass
		Diagonal	2L2 1/2x2x3/16	41	-12.26	20.24	60.6 67.6 (b)	Pass
		Diagonal	2L2 1/2x2x3/16	42	-12.27	20.24	60.6 67.6 (b)	Pass
T4	100 - 91.6667	Diagonal	2L2 1/2x2x3/16	52	-13.01	19.37	67.2 71.5 (b)	Pass
		Diagonal	2L2 1/2x2x3/16	53	-12.99	19.37	67.1	Pass

Section No.	Elevation ft	Component Type	Size	Critical Element	P K	øP$_{allow}$ K	% Capacity	Pass Fail
							71.6 (b)	
		Diagonal	2L2 1/2x2x3/16	54	-9.95	19.37	51.4 54.1 (b)	Pass
		Diagonal	2L2 1/2x2x3/16	55	-9.88	19.37	51.0 54.5 (b)	Pass
		Diagonal	2L2 1/2x2x3/16	56	-14.86	19.37	76.7 81.9 (b)	Pass
		Diagonal	2L2 1/2x2x3/16	57	-14.86	19.37	76.7 81.9 (b)	Pass
T5	91.6667 - 83.3333	Diagonal	2L2 1/2x2x5/16	67	-17.18	29.29	58.7	Pass
		Diagonal	2L2 1/2x2x5/16	68	-17.16	29.29	58.6	Pass
		Diagonal	2L2 1/2x2x5/16	69	-14.45	29.29	49.3	Pass
		Diagonal	2L2 1/2x2x5/16	70	-14.46	29.29	49.4	Pass
		Diagonal	2L2 1/2x2x5/16	71	-19.00	29.29	64.9	Pass
		Diagonal	2L2 1/2x2x5/16	72	-19.01	29.29	64.9	Pass
T6	83.3333 - 75	Diagonal	2L2 1/2x2x3/8	82	-23.35	32.01	72.9	Pass
		Diagonal	2L2 1/2x2x3/8	83	-23.33	32.01	72.9	Pass
		Diagonal	2L2 1/2x2x3/8	84	-21.23	32.01	66.3	Pass
		Diagonal	2L2 1/2x2x3/8	85	-21.23	32.01	66.3	Pass
		Diagonal	2L2 1/2x2x3/8	86	-25.07	32.01	78.3	Pass
		Diagonal	2L2 1/2x2x3/8	87	-25.08	32.01	78.4	Pass
T7	75 - 50	Diagonal	2L3x2 1/2x3/8	98	-26.09	51.02	51.1 67.9 (b)	Pass
		Diagonal	2L3x2 1/2x3/8	99	-26.08	51.02	51.1 67.9 (b)	Pass
		Diagonal	2L3x2 1/2x3/8	101	-23.46	51.02	46.0 60.9 (b)	Pass
		Diagonal	2L3x2 1/2x3/8	102	-23.45	51.02	46.0 60.9 (b)	Pass
		Diagonal	2L3x2 1/2x3/8	104	-27.95	51.02	54.8 72.8 (b)	Pass
		Diagonal	2L3x2 1/2x3/8	105	-27.96	51.02	54.8 72.8 (b)	Pass
		Diagonal	2L3x2 1/2x3/8	110	-25.32	53.21	47.6 65.9 (b)	Pass
		Diagonal	2L3x2 1/2x3/8	111	-25.31	53.21	47.6 65.9 (b)	Pass
		Diagonal	2L3x2 1/2x3/8	113	-22.49	53.21	42.3 58.4 (b)	Pass
		Diagonal	2L3x2 1/2x3/8	114	-22.50	53.21	42.3 58.4 (b)	Pass
		Diagonal	2L3x2 1/2x3/8	116	-26.80	53.21	50.4 69.8 (b)	Pass
		Diagonal	2L3x2 1/2x3/8	117	-26.81	53.21	50.4 69.8 (b)	Pass
		Diagonal	2L3x2 1/2x3/8	121	-24.01	55.50	43.3 62.6 (b)	Pass
		Diagonal	2L3x2 1/2x3/8	122	-24.01	55.50	43.3 62.6 (b)	Pass
		Diagonal	2L3x2 1/2x3/8	123	-21.15	55.50	38.1 55.0 (b)	Pass
		Diagonal	2L3x2 1/2x3/8	124	-21.15	55.50	38.1 55.0 (b)	Pass
		Diagonal	2L3x2 1/2x3/8	125	-26.02	55.50	46.9 67.9 (b)	Pass
		Diagonal	2L3x2 1/2x3/8	126	-26.03	55.50	46.9 67.9 (b)	Pass
T8	50 - 25	Diagonal	2L3x2 1/2x3/8	137	-31.52	54.25	58.1 81.5 (b)	Pass
		Diagonal	2L3x2 1/2x3/8	140	-31.51	54.25	58.1	Pass

Section No.	Elevation ft	Component Type	Size	Critical Element	P K	øP$_{allow}$ K	% Capacity	Pass Fail
							81.5 (b)	
		Diagonal	2L3x2 1/2x3/8	144	-29.34	54.25	54.1	Pass
							74.9 (b)	
		Diagonal	2L3x2 1/2x3/8	147	-29.05	54.25	53.5	Pass
							74.9 (b)	
		Diagonal	2L3x2 1/2x3/8	151	-32.87	54.25	60.6	Pass
							85.1 (b)	
		Diagonal	2L3x2 1/2x3/8	154	-32.89	54.25	60.6	Pass
							85.1 (b)	
		Diagonal	2L3x2 1/2x3/8	161	-30.40	56.55	53.8	Pass
							78.6 (b)	
		Diagonal	2L3x2 1/2x3/8	164	-30.38	56.55	53.7	Pass
							78.6 (b)	
		Diagonal	2L3x2 1/2x3/8	168	-28.04	56.55	49.6	Pass
							72.1 (b)	
		Diagonal	2L3x2 1/2x3/8	171	-27.94	56.55	49.4	Pass
							72.1 (b)	
		Diagonal	2L3x2 1/2x3/8	175	-31.32	56.55	55.4	Pass
							81.1 (b)	
		Diagonal	2L3x2 1/2x3/8	178	-31.33	56.55	55.4	Pass
							81.1 (b)	
		Diagonal	2L3x2 1/2x3/8	184	-28.25	58.96	47.9	Pass
							73.3 (b)	
		Diagonal	2L3x2 1/2x3/8	187	-28.24	58.96	47.9	Pass
							73.3 (b)	
		Diagonal	2L3x2 1/2x3/8	190	-25.76	58.96	43.7	Pass
							66.6 (b)	
		Diagonal	2L3x2 1/2x3/8	193	-25.73	58.96	43.6	Pass
							66.6 (b)	
		Diagonal	2L3x2 1/2x3/8	196	-29.51	58.96	50.1	Pass
							76.7 (b)	
		Diagonal	2L3x2 1/2x3/8	199	-29.53	58.96	50.1	Pass
							76.6 (b)	
T9	25 - 0	Diagonal	2L3 1/2x3x3/8	212	-41.18	56.12	73.4	Pass
							82.8 (b)	
		Diagonal	2L3 1/2x3x3/8	215	-41.18	56.12	73.4	Pass
							82.8 (b)	
		Diagonal	2L3 1/2x3x3/8	219	-38.54	56.12	68.7	Pass
							76.3 (b)	
		Diagonal	2L3 1/2x3x3/8	222	-37.98	56.12	67.7	Pass
							76.3 (b)	
		Diagonal	2L3 1/2x3x3/8	226	-44.12	56.12	78.6	Pass
							88.9 (b)	
		Diagonal	2L3 1/2x3x3/8	229	-44.14	56.12	78.7	Pass
							88.9 (b)	
		Diagonal	2L3 1/2x3x3/8	235	-40.35	58.48	69.0	Pass
							81.0 (b)	
		Diagonal	2L3 1/2x3x3/8	238	-40.34	58.48	69.0	Pass
							81.0 (b)	
		Diagonal	2L3 1/2x3x3/8	241	-37.78	58.48	64.6	Pass
							74.7 (b)	
		Diagonal	2L3 1/2x3x3/8	244	-37.24	58.48	63.7	Pass
							74.7 (b)	
		Diagonal	2L3 1/2x3x3/8	247	-42.62	58.48	72.9	Pass
							85.7 (b)	
		Diagonal	2L3 1/2x3x3/8	250	-42.64	58.48	72.9	Pass
							85.7 (b)	
T2	116.66 - 108.33	Horizontal	L2 1/2x2 1/2x3/16	19	-3.36	15.52	21.7	Pass
							23.6 (b)	
		Horizontal	L2 1/2x2 1/2x3/16	22	-2.29	15.52	14.7	Pass
							16.6 (b)	

Section No.	Elevation ft	Component Type	Size	Critical Element	P K	øP$_{allow}$ K	% Capacity	Pass Fail
		Horizontal	L2 1/2x2 1/2x3/16	25	-3.01	15.52	19.4 21.4 (b)	Pass
T3	108.33 - 100	Horizontal	L2 1/2x2 1/2x3/16	34	-7.89	14.13	55.8	Pass
		Horizontal	L2 1/2x2 1/2x3/16	37	-5.75	14.13	40.7	Pass
		Horizontal	L2 1/2x2 1/2x3/16	40	-8.35	14.13	59.1	Pass
T7	75 - 50	Horizontal	L3x3x3/8	97	-18.33	26.97	68.0	Pass
		Horizontal	L3x3x3/8	100	-16.58	26.97	61.5	Pass
		Horizontal	L3x3x3/8	103	-19.67	26.97	72.9	Pass
		Horizontal	L3x3x3/8	109	-17.46	28.94	60.3 63.9 (b)	Pass
		Horizontal	L3x3x3/8	112	-15.62	28.94	54.0 56.7 (b)	Pass
		Horizontal	L3x3x3/8	115	-18.50	28.94	63.9 67.6 (b)	Pass
T8	50 - 25	Horizontal	L3x3x1/2	136	-22.79	28.59	79.7 83.2 (b)	Pass
		Horizontal	L3x3x1/2	143	-21.00	28.59	73.5 76.3 (b)	Pass
		Horizontal	L3x3x1/2	150	-23.79	28.59	83.2 86.8 (b)	Pass
		Horizontal	L3x3x1/2	160	-21.79	30.48	71.5 79.3 (b)	Pass
		Horizontal	L3x3x1/2	167	-20.09	30.48	65.9 72.7 (b)	Pass
		Horizontal	L3x3x1/2	174	-22.38	30.48	73.4 81.4 (b)	Pass
T9	25 - 0	Horizontal	L4x4x3/8	211	-25.39	42.28	60.1 92.3 (b)	Pass
		Horizontal	L4x4x3/8	218	-23.96	42.28	56.7 86.8 (b)	Pass
		Horizontal	L4x4x3/8	225	-27.24	42.28	64.4 98.9 (b)	Pass
T1	120 - 116.66	Top Girt	L2 1/2x2 1/2x3/16	4	-0.67	16.14	4.2 4.6 (b)	Pass
		Top Girt	L2 1/2x2 1/2x3/16	5	-0.38	16.14	2.4 2.7 (b)	Pass
		Top Girt	L2 1/2x2 1/2x3/16	6	-0.61	16.14	3.8 4.2 (b)	Pass
T4	100 - 91.6667	Top Girt	L3x3x1/4	49	-8.69	27.23	31.9 41.5 (b)	Pass
		Top Girt	L3x3x1/4	50	-6.50	27.23	23.9 31.4 (b)	Pass
		Top Girt	L3x3x1/4	51	-9.37	27.23	34.4 45.7 (b)	Pass
T5	91.6667 - 83.3333	Top Girt	L3x3x1/4	64	-11.64	25.15	46.3 55.5 (b)	Pass
		Top Girt	L3x3x1/4	65	-9.79	25.15	38.9 47.1 (b)	Pass
		Top Girt	L3x3x1/4	66	-12.34	25.15	49.1 60.0 (b)	Pass
T6	83.3333 - 75	Top Girt	L3x3x1/4	79	-15.86	23.24	68.2 75.6 (b)	Pass
		Top Girt	L3x3x1/4	80	-14.64	23.24	63.0 70.6 (b)	Pass
		Top Girt	L3x3x1/4	81	-16.63	23.24	71.6 81.2 (b)	Pass
T7	75 - 50	Top Girt	L3x3x1/4	94	-16.22	21.54	75.3 79.7 (b)	Pass
		Top Girt	L3x3x1/4	95	-14.37	21.54	66.7 70.2 (b)	Pass
		Top Girt	L3x3x1/4	96	-17.60	21.54	81.7	Pass

Section No.	Elevation ft	Component Type	Size	Critical Element	P K	øP$_{allow}$ K	% Capacity	Pass Fail
							86.5 (b)	
T8	50 - 25	Top Girt	L3x3x5/16	133	-19.90	21.37	93.1	Pass
		Top Girt	L3x3x5/16	134	-18.23	21.37	85.3	Pass
		Top Girt	L3x3x5/16	135	-20.93	21.37	97.9	Pass
T9	25 - 0	Top Girt	L4x4x3/8	208	-24.05	46.05	52.2	Pass
							87.8 (b)	
		Top Girt	L4x4x3/8	209	-22.33	46.05	48.5	Pass
							80.9 (b)	
		Top Girt	L4x4x3/8	210	-25.44	46.05	55.3	Pass
							92.8 (b)	
T8	50 - 25	Redund Horz 1 Bracing	L2 1/2x2 1/2x3/16	138	-4.51	19.41	23.2	Pass
		Redund Horz 1 Bracing	L2 1/2x2 1/2x3/16	141	-4.52	19.41	23.3	Pass
		Redund Horz 1 Bracing	L2 1/2x2 1/2x3/16	145	-4.52	19.41	23.3	Pass
		Redund Horz 1 Bracing	L2 1/2x2 1/2x3/16	148	-4.52	19.41	23.3	Pass
		Redund Horz 1 Bracing	L2 1/2x2 1/2x3/16	152	-4.52	19.41	23.3	Pass
		Redund Horz 1 Bracing	L2 1/2x2 1/2x3/16	155	-4.51	19.41	23.2	Pass
		Redund Horz 1 Bracing	L2 1/2x2 1/2x3/16	162	-4.51	19.88	22.7	Pass
		Redund Horz 1 Bracing	L2 1/2x2 1/2x3/16	165	-4.52	19.88	22.7	Pass
		Redund Horz 1 Bracing	L2 1/2x2 1/2x3/16	169	-4.52	19.88	22.7	Pass
		Redund Horz 1 Bracing	L2 1/2x2 1/2x3/16	172	-4.52	19.88	22.7	Pass
		Redund Horz 1 Bracing	L2 1/2x2 1/2x3/16	176	-4.52	19.88	22.7	Pass
		Redund Horz 1 Bracing	L2 1/2x2 1/2x3/16	179	-4.51	19.88	22.7	Pass
		Redund Horz 1 Bracing	L2 1/2x2 1/2x3/16	185	-4.51	20.33	22.2	Pass
		Redund Horz 1 Bracing	L2 1/2x2 1/2x3/16	188	-4.52	20.33	22.2	Pass
		Redund Horz 1 Bracing	L2 1/2x2 1/2x3/16	191	-4.52	20.33	22.2	Pass
		Redund Horz 1 Bracing	L2 1/2x2 1/2x3/16	194	-4.52	20.33	22.2	Pass
		Redund Horz 1 Bracing	L2 1/2x2 1/2x3/16	197	-4.52	20.33	22.2	Pass
		Redund Horz 1 Bracing	L2 1/2x2 1/2x3/16	200	-4.51	20.33	22.2	Pass
T9	25 - 0	Redund Horz 1 Bracing	L2 1/2x2 1/2x3/16	213	-6.10	18.45	33.0	Pass
		Redund Horz 1 Bracing	L2 1/2x2 1/2x3/16	216	-6.10	18.45	33.0	Pass
		Redund Horz 1 Bracing	L2 1/2x2 1/2x3/16	220	-6.10	18.45	33.0	Pass
		Redund Horz 1 Bracing	L2 1/2x2 1/2x3/16	223	-6.11	18.45	33.1	Pass
		Redund Horz 1 Bracing	L2 1/2x2 1/2x3/16	227	-6.11	18.45	33.1	Pass
		Redund Horz 1 Bracing	L2 1/2x2 1/2x3/16	230	-6.10	18.45	33.0	Pass
		Redund Horz 1 Bracing	L2 1/2x2 1/2x3/16	236	-6.10	19.16	31.8	Pass
		Redund Horz 1	L2 1/2x2 1/2x3/16	239	-6.10	19.16	31.8	Pass

Section No.	Elevation ft	Component Type	Size	Critical Element	P K	øP$_{allow}$ K	% Capacity	Pass Fail
		Bracing						
		Redund Horz 1 Bracing	L2 1/2x2 1/2x3/16	242	-6.10	19.16	31.8	Pass
		Redund Horz 1 Bracing	L2 1/2x2 1/2x3/16	245	-6.11	19.16	31.9	Pass
		Redund Horz 1 Bracing	L2 1/2x2 1/2x3/16	248	-6.11	19.16	31.9	Pass
		Redund Horz 1 Bracing	L2 1/2x2 1/2x3/16	251	-6.10	19.16	31.8	Pass
T8	50 - 25	Redund Diag 1 Bracing	L2 1/2x2 1/2x3/16	139	-2.99	13.10	22.8	Pass
		Redund Diag 1 Bracing	L2 1/2x2 1/2x3/16	142	-2.99	13.10	22.8	Pass
		Redund Diag 1 Bracing	L2 1/2x2 1/2x3/16	146	-2.99	13.10	22.8	Pass
		Redund Diag 1 Bracing	L2 1/2x2 1/2x3/16	149	-2.99	13.10	22.8	Pass
		Redund Diag 1 Bracing	L2 1/2x2 1/2x3/16	153	-2.99	13.10	22.8	Pass
		Redund Diag 1 Bracing	L2 1/2x2 1/2x3/16	156	-2.99	13.10	22.8	Pass
		Redund Diag 1 Bracing	L2 1/2x2 1/2x3/16	163	-3.04	13.66	22.2	Pass
		Redund Diag 1 Bracing	L2 1/2x2 1/2x3/16	166	-3.04	13.66	22.3	Pass
		Redund Diag 1 Bracing	L2 1/2x2 1/2x3/16	170	-3.04	13.66	22.3	Pass
		Redund Diag 1 Bracing	L2 1/2x2 1/2x3/16	173	-3.04	13.66	22.3	Pass
		Redund Diag 1 Bracing	L2 1/2x2 1/2x3/16	177	-3.04	13.66	22.3	Pass
		Redund Diag 1 Bracing	L2 1/2x2 1/2x3/16	180	-3.04	13.66	22.2	Pass
		Redund Diag 1 Bracing	L2 1/2x2 1/2x3/16	186	-3.09	14.25	21.7	Pass
		Redund Diag 1 Bracing	L2 1/2x2 1/2x3/16	189	-3.10	14.25	21.7	Pass
		Redund Diag 1 Bracing	L2 1/2x2 1/2x3/16	192	-3.10	14.25	21.7	Pass
		Redund Diag 1 Bracing	L2 1/2x2 1/2x3/16	195	-3.10	14.25	21.8	Pass
		Redund Diag 1 Bracing	L2 1/2x2 1/2x3/16	198	-3.10	14.25	21.8	Pass
		Redund Diag 1 Bracing	L2 1/2x2 1/2x3/16	201	-3.09	14.25	21.7	Pass
T9	25 - 0	Redund Diag 1 Bracing	L2 1/2x2 1/2x3/16	214	-4.78	8.06	59.3	Pass
		Redund Diag 1 Bracing	L2 1/2x2 1/2x3/16	217	-4.78	8.06	59.3	Pass
		Redund Diag 1 Bracing	L2 1/2x2 1/2x3/16	221	-4.78	8.06	59.3	Pass
		Redund Diag 1 Bracing	L2 1/2x2 1/2x3/16	224	-4.79	8.06	59.4	Pass
		Redund Diag 1 Bracing	L2 1/2x2 1/2x3/16	228	-4.79	8.06	59.4	Pass
		Redund Diag 1 Bracing	L2 1/2x2 1/2x3/16	231	-4.78	8.06	59.3	Pass
		Redund Diag 1 Bracing	L2 1/2x2 1/2x3/16	237	-4.94	8.40	58.8	Pass
		Redund Diag 1 Bracing	L2 1/2x2 1/2x3/16	240	-4.94	8.40	58.8	Pass

Section No.	Elevation ft	Component Type	Size	Critical Element	P K	øP$_{allow}$ K	% Capacity	Pass Fail
		Redund Diag 1 Bracing	L2 1/2x2 1/2x3/16	243	-4.94	8.40	58.8	Pass
		Redund Diag 1 Bracing	L2 1/2x2 1/2x3/16	246	-4.95	8.40	58.9	Pass
		Redund Diag 1 Bracing	L2 1/2x2 1/2x3/16	249	-4.95	8.40	58.9	Pass
		Redund Diag 1 Bracing	L2 1/2x2 1/2x3/16	252	-4.94	8.40	58.8	Pass
T1	120 - 116.66	Inner Bracing	L2 1/2x2x3/16	13	-0.00	9.01	0.4	Pass
		Inner Bracing	L2 1/2x2x3/16	14	-0.00	9.01	0.4	Pass
		Inner Bracing	L2 1/2x2x3/16	15	-0.00	9.01	0.4	Pass
T2	116.66 - 108.33	Inner Bracing	L2 1/2x2x3/16	28	-0.01	8.60	0.4	Pass
		Inner Bracing	L2 1/2x2x3/16	29	-0.01	8.60	0.4	Pass
		Inner Bracing	L2 1/2x2x3/16	30	-0.01	8.60	0.4	Pass
T3	108.33 - 100	Inner Bracing	L2 1/2x2x3/16	43	-0.01	7.69	0.4	Pass
		Inner Bracing	L2 1/2x2x3/16	44	-0.01	7.69	0.4	Pass
		Inner Bracing	L2 1/2x2x3/16	45	-0.01	7.69	0.4	Pass
T4	100 - 91.6667	Inner Bracing	L2 1/2x2x3/16	58	-0.01	6.92	0.5	Pass
		Inner Bracing	L2 1/2x2x3/16	59	-0.01	6.92	0.5	Pass
		Inner Bracing	L2 1/2x2x3/16	60	-0.01	6.92	0.5	Pass
T5	91.6667 - 83.3333	Inner Bracing	L2 1/2x2x3/16	73	-0.01	6.26	0.5	Pass
		Inner Bracing	L2 1/2x2x3/16	74	-0.01	6.26	0.5	Pass
		Inner Bracing	L2 1/2x2x3/16	75	-0.01	6.26	0.5	Pass
T6	83.3333 - 75	Inner Bracing	L2 1/2x2x3/16	88	-0.02	5.69	0.5	Pass
		Inner Bracing	L2 1/2x2x3/16	89	-0.02	5.69	0.5	Pass
		Inner Bracing	L2 1/2x2x3/16	90	-0.02	5.69	0.5	Pass
T7	75 - 50	Inner Bracing	L2 1/2x2x3/16	106	-0.01	4.39	0.6	Pass
		Inner Bracing	L2 1/2x2x3/16	107	-0.01	4.39	0.6	Pass
		Inner Bracing	L2 1/2x2x3/16	108	-0.01	4.39	0.6	Pass
		Inner Bracing	L2 1/2x2x3/16	118	-0.02	4.77	0.6	Pass
		Inner Bracing	L2 1/2x2x3/16	119	-0.02	4.77	0.6	Pass
		Inner Bracing	L2 1/2x2x3/16	120	-0.02	4.77	0.6	Pass
		Inner Bracing	L2 1/2x2x3/16	127	-0.02	5.20	0.5	Pass
		Inner Bracing	L2 1/2x2x3/16	128	-0.02	5.20	0.5	Pass
		Inner Bracing	L2 1/2x2x3/16	129	-0.02	5.20	0.5	Pass
T8	50 - 25	Inner Bracing	L2 1/2x2x3/16	157	-0.02	3.48	0.7	Pass
		Inner Bracing	L2 1/2x2x3/16	158	-0.02	3.48	0.7	Pass
		Inner Bracing	L2 1/2x2x3/16	159	-0.02	3.48	0.7	Pass
		Inner Bracing	L2 1/2x2x3/16	181	-0.02	3.75	0.6	Pass
		Inner Bracing	L2 1/2x2x3/16	182	-0.02	3.75	0.6	Pass
		Inner Bracing	L2 1/2x2x3/16	183	-0.02	3.75	0.6	Pass
		Inner Bracing	L2 1/2x2x3/16	202	-0.02	4.05	0.6	Pass
		Inner Bracing	L2 1/2x2x3/16	203	-0.02	4.05	0.6	Pass
		Inner Bracing	L2 1/2x2x3/16	204	-0.02	4.05	0.6	Pass
T9	25 - 0	Inner Bracing	L2 1/2x2 1/2x3/16	232	-0.03	4.38	0.8	Pass
		Inner Bracing	L2 1/2x2 1/2x3/16	233	-0.03	4.38	0.8	Pass
		Inner Bracing	L2 1/2x2 1/2x3/16	234	-0.03	4.38	0.8	Pass
		Inner Bracing	L2 1/2x2 1/2x3/16	253	-0.03	4.86	0.7	Pass
		Inner Bracing	L2 1/2x2 1/2x3/16	254	-0.03	4.86	0.7	Pass
		Inner Bracing	L2 1/2x2 1/2x3/16	255	-0.03	4.86	0.7	Pass
							Summary	
						Leg (T8)	90.7	Pass
						Diagonal (T9)	88.9	Pass
						Horizontal (T9)	98.9	Pass
						Top Girt (T8)	97.9	Pass
						Redund Horz 1	33.1	Pass

Section No.	Elevation ft	Component Type	Size	Critical Element	P K	$øP_{allow}$ K	% Capacity	Pass Fail
						Bracing (T9) Redund Diag 1	59.4	Pass
						Bracing (T9) Inner	0.8	Pass
						Bracing (T9) Bolt Checks	98.9	Pass
						RATING =	**98.9**	**Pass**

Section	T1	T2	T3	T4	T5	T6	T7	T8	T9
Legs	P5x0.25						P5x0.375	P5x.400	P6.875x.400
Leg Grade				A572-50					A572-60
Diagonals			2L2 1/2x2x3/16		2L2 1/2x2x5/16	2L2 1/2x2x3/8	2L3 1/2x2 1/2x3/8		2L3 1/2x3x3/8
Diagonal Grade							A36		
Top Girts	A	N.A.						L3x3x5/16	L4x4x3/8
Horizontals	N.A.	L2 1/2x2 1/2x3/16			N.A.		L3x3x3/8	L3x3x1/2	L4x4x3/8
Red. Horizontals					N.A.	L3x3x1/4			L2 1/2x2 1/2x3/16
Red. Diagonals					N.A.				L2 1/2x2 1/2x3/16
Inner Bracing							L2 1/2x2x3/16		L2 1/2x2 1/2x3/16
Face Width (ft)	11.41	11.68	12.35	13.02	13.6667	14.3533	15.02	17.02	19.02
# Panels @ (ft)	1 @ 3.34	2 @ 8.33					9 @ 8.33333		2 @ 12.5
Weight (K)	0.5	0.8	0.8	0.9	1.2	1.3	5.2	6.5	6.9

Total Weight (K): 24.2

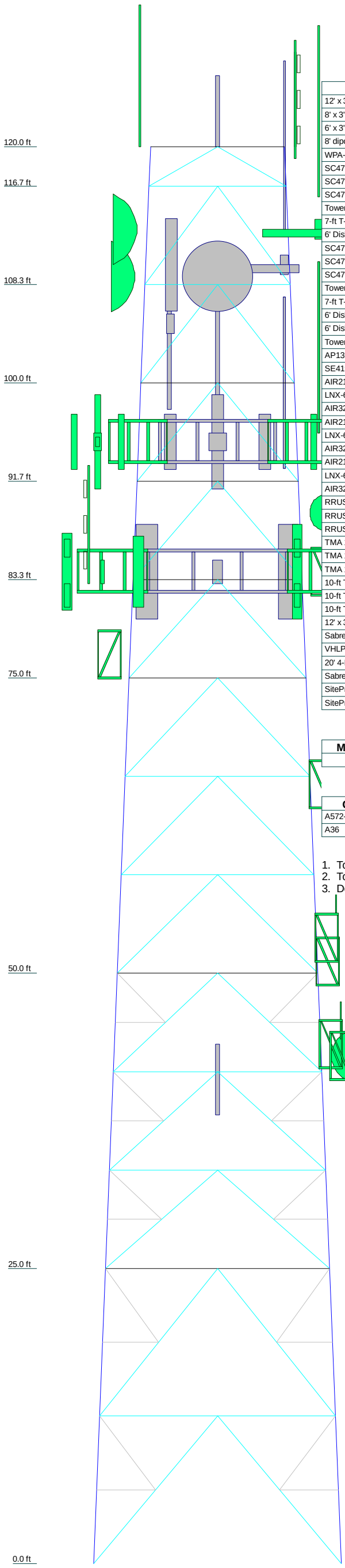

DESIGNED APPURTENANCE LOADING

TYPE	ELEVATION	TYPE	ELEVATION
12' x 3" Dia Omni	120	SitePro VFA12-HD (ATI)	84
8' x 3" Dia Omni	120	ANT450F6 (#16 (CSP-10))	84
6' x 3" Dia Omni	120	ROHN 4-ft Side Arm	84
8' dipole antenna	120	RRUW (ATI)	84
WPA-70040-4CF (CSP-28)	118 - 102	RRUW (ATI)	84
SC479-HF1LDF (CSP-17)	113	RRUW (ATI)	84
SC479-HF1LDF (CSP-22 (inverted))	113	DC6-48-60-0-8C-EV (ATI)	84
SC479-HF1LDF (CSP-23 (inverted))	113	DC6-48-60-0-8C-EV (ATI)	84
Tower Top Amplifier	113	8843 B2/B66A (ATI)	84
7-ft T-Frame	113	RRUS-32 (ATI)	84
6' Dish (#21 (CSP-5))	113	RRUS-32 (ATI)	84
SC479-HF1LDF (CSP-18)	110	RRUS-32 (ATI)	84
SC479-HF1LDF (CSP-9 (inverted))	110	4449 B5/B12 (ATI)	84
SC479-HF1LDF (CSP-19 (inverted))	110	80010965 (ATI)	84
Tower Top Amplifier (CSP-20)	110	4478 B14 (ATI)	84
7-ft T-Frame	110	4478 B14 (ATI)	84
6' Dish (#19 (CSP-6))	109	4478 B14 (ATI)	84
6' Dish (#20 (CSP-3))	109	8843 B2/B66A (ATI)	84
Tower Top Amplifier (CSP-32)	105	QD6616-7 (ATI)	84
AP13-850/065 (#18A (CSP-13))	102	QD8616-7 (ATI)	84
SE419-SWBPALDF (#18B (CSP-13))	102	80010966 (ATI)	84
AIR21 B2A/B4P (T-Mobile)	95	QD8616-7 (ATI)	84
LNX-6515DS (T-Mobile)	95	80010966 (ATI)	84
AIR32 (T-Mobile)	95	4449 B5/B12 (ATI)	84
AIR21 B2A/B4P (T-Mobile)	95	4449 B5/B12 (ATI)	84
LNX-6515DS (T-Mobile)	95	8843 B2/B66A (ATI)	84
AIR32 (T-Mobile)	95	DC6-48-60-0-8C-EV (ATI)	84
AIR21 B2A/B4P (T-Mobile)	95	20' 4-Bay Dipole (#14)	77
LNX-6515DS (T-Mobile)	95	ROHN 4-ft Side Arm	77
AIR32 (T-Mobile)	95	(2) 6' Yagi (#9)	67
RRUS-11 (T-Mobile)	95	Sabre 2' Sidearm	66
RRUS-11 (T-Mobile)	95	DB803M-Y (#6 (CSP-16))	54.5
RRUS-11 (T-Mobile)	95	Sabre 2' Sidearm	54
TMA 10"x8"x5" (T-Mobile)	95	DB264-A (#7 (CSP-4))	54
TMA 10"x8"x5" (T-Mobile)	95	Sabre 2' Sidearm	53
TMA 10"x8"x5" (T-Mobile)	95	12' Dipole (#4A)	51
10-ft T-Frame (T-Mobile)	95	Sabre 3' Sidearm	51
10-ft T-Frame (T-Mobile)	95	3' Yagi (#4B)	49
10-ft T-Frame (T-Mobile)	95	Sabre 2' Sidearm	44
12' x 3" Dia Omni	95	ANT790F2 (#2)	44
Sabre 3' Sidearm	95	4' Dish (#1A)	43
VHLP3-11W (Reserved)	89	ROHN 4-ft Side Arm	43
20' 4-Bay Dipole (#15)	87	1' x 1' Panel (#1B)	40
Sabre 3' Sidearm	87	1' Standoff Pipe	38
SitePro VFA12-HD (ATI)	84	6' x 3" Dia Omni (#5 (CSP-14))	38
SitePro VFA12-HD (ATI)	84		

SYMBOL LIST

MARK	SIZE	MARK	SIZE
A	L2 1/2x2 1/2x3/16		

MATERIAL STRENGTH

GRADE	Fy	Fu	GRADE	Fy	Fu
A572-50	50 ksi	65 ksi	A572-60	60 ksi	75 ksi
A36	36 ksi	58 ksi			

TOWER DESIGN NOTES

1. Tower designed for a 90 mph basic wind in accordance with the TIA/EIA-222-F Standard.
2. Tower is also designed for a 90 mph basic wind with 0.50 in ice.
3. Deflections are based upon a 90 mph wind.

MAX. CORNER REACTIONS AT BASE:
DOWN: 282 K
SHEAR: 39 K

UPLIFT: -240 K
SHEAR: 36 K

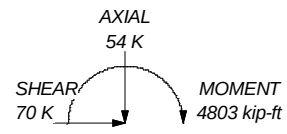

TORQUE 79 kip-ft
90 mph WIND - 0.5000 in ICE

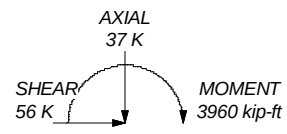

TORQUE 54 kip-ft
REACTIONS - 90 mph WIND

Centek Engineering Inc.
63-2 North Branford Rd.
Branford, CT 06405
Phone: (203) 488-0580
FAX: (203) 488-8587

Job: **23158.00 - CT2013**		
Project: **120-ft Lattice Tower (CSP #27)**		
Client: AT&T	Drawn by: TJL	App'd:
Code: TIA/EIA-222-F	Date: 02/22/24	Scale: NTS
Path: J:\Jobs\2315800 WI\05_Structural\Backup Documentation\Rev (2)\Tnstower\Twist and Sway\120-ft Tower #27.eri		Dwg No. E-1

Load Combinations

Comb. No.	Description
1	Dead Only
2	Dead+Wind 0 deg - No Ice
3	Dead+Wind 30 deg - No Ice
4	Dead+Wind 45 deg - No Ice
5	Dead+Wind 60 deg - No Ice
6	Dead+Wind 90 deg - No Ice
7	Dead+Wind 120 deg - No Ice
8	Dead+Wind 135 deg - No Ice
9	Dead+Wind 150 deg - No Ice
10	Dead+Wind 180 deg - No Ice
11	Dead+Wind 210 deg - No Ice
12	Dead+Wind 225 deg - No Ice
13	Dead+Wind 240 deg - No Ice
14	Dead+Wind 270 deg - No Ice
15	Dead+Wind 300 deg - No Ice
16	Dead+Wind 315 deg - No Ice
17	Dead+Wind 330 deg - No Ice
18	Dead+Ice+Temp
19	Dead+Wind 0 deg+Ice+Temp
20	Dead+Wind 30 deg+Ice+Temp
21	Dead+Wind 45 deg+Ice+Temp
22	Dead+Wind 60 deg+Ice+Temp
23	Dead+Wind 90 deg+Ice+Temp
24	Dead+Wind 120 deg+Ice+Temp
25	Dead+Wind 135 deg+Ice+Temp
26	Dead+Wind 150 deg+Ice+Temp
27	Dead+Wind 180 deg+Ice+Temp
28	Dead+Wind 210 deg+Ice+Temp
29	Dead+Wind 225 deg+Ice+Temp
30	Dead+Wind 240 deg+Ice+Temp
31	Dead+Wind 270 deg+Ice+Temp
32	Dead+Wind 300 deg+Ice+Temp
33	Dead+Wind 315 deg+Ice+Temp
34	Dead+Wind 330 deg+Ice+Temp
35	Dead+Wind 0 deg - Service
36	Dead+Wind 30 deg - Service
37	Dead+Wind 45 deg - Service
38	Dead+Wind 60 deg - Service
39	Dead+Wind 90 deg - Service
40	Dead+Wind 120 deg - Service
41	Dead+Wind 135 deg - Service
42	Dead+Wind 150 deg - Service
43	Dead+Wind 180 deg - Service
44	Dead+Wind 210 deg - Service
45	Dead+Wind 225 deg - Service
46	Dead+Wind 240 deg - Service
47	Dead+Wind 270 deg - Service
48	Dead+Wind 300 deg - Service
49	Dead+Wind 315 deg - Service
50	Dead+Wind 330 deg - Service

Maximum Tower Deflections - Service Wind

Section No.	Elevation ft	Horz. Deflection in	Gov. Load Comb.	Tilt °	Twist °
T1	120 - 116.66	5.165	35	0.2913	0.0772
T2	116.66 - 108.33	4.965	35	0.2912	0.0774
T3	108.33 - 100	4.444	35	0.2917	0.0746
T4	100 - 91.6667	3.900	35	0.2908	0.0645
T5	91.6667 - 83.3333	3.361	35	0.2855	0.0537
T6	83.3333 - 75	2.842	35	0.2751	0.0466
T7	75 - 50	2.340	35	0.2582	0.0409
T8	50 - 25	1.071	35	0.1917	0.0251
T9	25 - 0	0.261	35	0.0913	0.0121

Critical Deflections and Radius of Curvature - Service Wind

Elevation ft	Appurtenance	Gov. Load Comb.	Deflection in	Tilt °	Twist °	Radius of Curvature ft
120.00	12' x 3" Dia Omni	35	5.165	0.2913	0.0772	28252
118.00	WPA-70040-4CF	35	5.045	0.2912	0.0774	28252
113.00	6' Dish	35	4.740	0.2914	0.0770	26295
112.67	WPA-70040-4CF	35	4.719	0.2914	0.0769	26232
110.00	SC479-HF1LDF	35	4.551	0.2916	0.0758	27184
109.00	6' Dish	35	4.487	0.2916	0.0751	28602
107.33	WPA-70040-4CF	35	4.380	0.2917	0.0737	33992
105.00	Tower Top Amplifier	35	4.228	0.2917	0.0712	58216
102.00	AP13-850/065	35	4.031	0.2914	0.0673	698068
95.00	AIR21 B2A/B4P	35	3.574	0.2882	0.0577	42840
89.00	VHLP3-11W	35	3.193	0.2829	0.0511	43548
87.00	20' 4-Bay Dipole	35	3.069	0.2805	0.0494	52986
84.00	QD8616-7	35	2.883	0.2761	0.0471	63759
77.00	20' 4-Bay Dipole	35	2.458	0.2626	0.0423	25746
67.00	(2) 6' Yagi	35	1.892	0.2399	0.0357	19589
66.00	Sabre 2' Sidearm	35	1.839	0.2375	0.0350	19485
54.50	DB803M-Y	35	1.270	0.2063	0.0278	18357
54.00	DB264-A	35	1.247	0.2048	0.0275	18308
53.00	Sabre 2' Sidearm	35	1.202	0.2016	0.0269	18195
51.00	12' Dipole	35	1.114	0.1951	0.0257	17854
49.00	3' Yagi	35	1.029	0.1882	0.0245	17275
44.00	ANT790F2	35	0.827	0.1696	0.0217	15305
43.00	4' Dish	35	0.789	0.1657	0.0212	14939
40.00	1' x 1' Panel	35	0.680	0.1536	0.0196	13933
38.00	6' x 3" Dia Omni	35	0.611	0.1454	0.0185	13335

Maximum Tower Deflections - Design Wind

Section No.	Elevation ft	Horz. Deflection in	Gov. Load Comb.	Tilt °	Twist °
T1	120 - 116.66	6.131	30	0.3427	0.0906
T2	116.66 - 108.33	5.895	30	0.3427	0.0908
T3	108.33 - 100	5.282	30	0.3431	0.0885
T4	100 - 91.6667	4.642	30	0.3425	0.0796
T5	91.6667 - 83.3333	4.009	30	0.3367	0.0689
T6	83.3333 - 75	3.398	30	0.3248	0.0614

Section No.	Elevation ft	Horz. Deflection in	Gov. Load Comb.	Tilt °	Twist °
T7	75 - 50	2.805	30	0.3056	0.0551
T8	50 - 25	1.296	30	0.2283	0.0354
T9	25 - 0	0.321	30	0.1096	0.0174

Critical Deflections and Radius of Curvature - Design Wind

Elevation ft	Appurtenance	Gov. Load Comb.	Deflection in	Tilt °	Twist °	Radius of Curvature ft
120.00	12' x 3" Dia Omni	30	6.131	0.3427	0.0906	24897
118.00	WPA-70040-4CF	30	5.990	0.3427	0.0908	24897
113.00	6' Dish	30	5.630	0.3429	0.0904	23386
112.67	WPA-70040-4CF	30	5.606	0.3429	0.0903	23372
110.00	SC479-HF1LDF	30	5.408	0.3430	0.0894	24565
109.00	6' Dish	30	5.333	0.3431	0.0889	25915
107.33	WPA-70040-4CF	30	5.207	0.3431	0.0878	30831
105.00	Tower Top Amplifier	30	5.028	0.3432	0.0857	52189
102.00	AP13-850/065	30	4.797	0.3430	0.0822	698068
95.00	AIR21 B2A/B4P	30	4.260	0.3397	0.0730	39129
89.00	VHLP3-11W	30	3.812	0.3337	0.0662	39005
87.00	20' 4-Bay Dipole	30	3.665	0.3310	0.0644	47223
84.00	QD8616-7	30	3.446	0.3261	0.0619	56338
77.00	20' 4-Bay Dipole	30	2.944	0.3106	0.0566	22789
67.00	(2) 6' Yagi	30	2.274	0.2846	0.0488	17182
66.00	Sabre 2' Sidearm	30	2.210	0.2818	0.0480	17074
54.50	DB803M-Y	30	1.534	0.2455	0.0388	15915
54.00	DB264-A	30	1.507	0.2437	0.0384	15866
53.00	Sabre 2' Sidearm	30	1.453	0.2400	0.0377	15755
51.00	12' Dipole	30	1.347	0.2323	0.0361	15427
49.00	3' Yagi	30	1.245	0.2242	0.0346	14883
44.00	ANT790F2	30	1.004	0.2023	0.0309	13074
43.00	4' Dish	30	0.958	0.1977	0.0301	12741
40.00	1' x 1' Panel	30	0.827	0.1835	0.0280	11836
38.00	6' x 3" Dia Omni	30	0.745	0.1738	0.0265	11302

Anchor Bolt Analysis:

Input Data:

Tower Reactions:

Tension Force =	$Tension := 368 \cdot kips$	(Input From tnxTower)
Compression Force =	$Compression := 411 \cdot kips$	(Input From tnxTower)
Shear Force =	$Shear := 60 \cdot kips$	(Input From tnxTower)

Anchor Bolt Data - Original Anchors:

ASTM A36	Assumed	
Number of Anchor Bolts =	$N_A := 6$	(User Input)
Bolt Ultimate Strength =	$F_{u.A} := 58 \cdot ksi$	(User Input)
Bolt Yield Strength =	$F_{y.A} := 36 \cdot ksi$	(User Input)
Bolt Modulus =	$E_A := 29000 \cdot ksi$	(User Input)
Diameter of Anchor Bolts =	$D_A := 1.5 \cdot in$	(User Input)
Threads per Inch =	$n_A := 6$	(User Input)

Anchor Bolt Data - New Anchors:

Williams 150ksi Threaded Bar		
Number of Anchor Bolts =	$N_B := 2$	(User Input)
Bolt Ultimate Strength =	$F_{u.B} := 150 \cdot ksi$	(User Input)
Bolt Yield Strength =	$F_{y.B} := 120 \cdot ksi$	(User Input)
Bolt Modulus =	$E_B := 29000 \cdot ksi$	(User Input)
Diameter of Anchor Bolts =	$D_B := 1.42 \cdot in$	(User Input)
Threads per Inch =	$n_B := 7$	(User Input)

Resistance Factor for Flexure = $\phi_f := 0.9$

Resistance Factor for Compression = $\phi_c := 0.9$

Resistance Factor for Tension = $\phi_t := 0.75$

Resistance Factor for Shear = $\phi_v := 0.75$

Original Anchor Bolts:

Calculated Anchor Bolt Properties:

Gross Area of Bolt = $A_{g.A} := \frac{\pi}{4} \cdot D_A^2 = 1.767\ in^2$

Net Area of Bolt = $A_{n.A} := \frac{\pi}{4} \cdot \left(D_A - \frac{0.9743 \cdot in}{n_A}\right)^2 = 1.405\ in^2$

Anchor Bolt Design Strength:

Design Tensile Strength = $\Phi R_{nt.A} := \phi_t \cdot F_{u.A} \cdot A_{n.A} = 61.1\ k$

Design Compression Strength = $\Phi R_{nc.A} := \phi_c \cdot F_{y.A} \cdot A_{g.A} = 57.3\ k$

Design Shear Strength (Tension) = $\Phi R_{nv.A} := \phi_v \cdot 0.5 \cdot F_{u.A} \cdot A_{g.A} = 38.4\ k$

Design Shear Strength (Compression) = $\Phi R_{nvc.A} := \phi_c \cdot 0.6 \cdot F_{y.A} \cdot A_{g.A} \cdot 0.75 = 25.8\ k$

New Anchor Bolts:

Calculated Anchor Bolt Properties:

Gross Area of Bolt = $A_{g.B} := \frac{\pi}{4} \cdot D_B^2 = 1.584\ in^2$

Net Area of Bolt = $A_{n.B} := \frac{\pi}{4} \cdot \left(D_B - \frac{0.9743 \cdot in}{n_B}\right)^2 = 1.288\ in^2$

Anchor Bolt Design Strength:

Design Tensile Strength = $\Phi R_{nt.B} := \phi_t \cdot F_{u.B} \cdot A_{n.B} = 144.9\ k$

Design Compression Strength = $\Phi R_{nc.B} := \phi_c \cdot F_{y.B} \cdot A_{g.B} = 171\ k$

Design Shear Strength (Tension) = $\Phi R_{nv.B} := \phi_v \cdot 0.5 \cdot F_{u.B} \cdot A_{g.B} = 89.1\ k$

Design Shear Strength (Compression) = $\Phi R_{nvc.B} := \phi_c \cdot 0.6 \cdot F_{y.B} \cdot A_{g.B} \cdot 0.75 = 77\ k$

Check Anchor Bolts - Original:

Maximum Tensile Force = $P_{ut} := \frac{Tension}{N_A + N_B} = 46\ kip$

Maximum Compressive Force = $P_{uc} := \frac{Compression}{N_A + N_B} = 51.4\ kip$

Maximum Shear Force = $V_u := \frac{Shear}{N_A + N_B} = 7.5\ kip$

Condition1 = $Condition1 := \text{if}\left(\left(\left(\frac{P_{ut}}{\Phi R_{nt.A}}\right)^2 + \left(\frac{V_u}{\Phi R_{nv.A}}\right)^2\right) \le 1.00, \text{"OK"}, \text{"Overstressed"}\right)$

$Condition1 = \text{"OK"}$

Condition2 = $Condition2 := \text{if}\left(\left(\left(\frac{P_{uc}}{\Phi R_{nc.A}}\right) + \left(\frac{V_u}{\Phi R_{nvc.A}}\right)^2\right) \le 1.00, \text{"OK"}, \text{"Overstressed"}\right)$

$Condition2 = \text{"OK"}$

Bolt % of Capacity = $\max\left(\left(\frac{P_{ut}}{\Phi R_{nt.A}}\right)^2 + \left(\frac{V_u}{\Phi R_{nv.A}}\right)^2, \left(\frac{P_{uc}}{\Phi R_{nc.A}}\right) + \left(\frac{V_u}{\Phi R_{nvc.A}}\right)^2\right) = 98.2\%$

Check Anchor Bolts - Original:

Maximum Tensile Force = $P_{ut} := \frac{Tension}{N_A + N_B} = 46\ kip$

Maximum Compressive Force = $P_{uc} := \frac{Compression}{N_A + N_B} = 51.4\ kip$

Maximum Shear Force = $V_u := \frac{Shear}{N_A + N_B} = 7.5\ kip$

Condition1 = $Condition1 := \text{if}\left(\left(\left(\frac{P_{ut}}{\Phi R_{nt.B}}\right)^2 + \left(\frac{V_u}{\Phi R_{nv.B}}\right)^2\right) \le 1.00, \text{"OK"}, \text{"Overstressed"}\right)$

$Condition1 = \text{"OK"}$

Condition2 = $Condition2 := \text{if}\left(\left(\left(\frac{P_{uc}}{\Phi R_{nc.B}}\right) + \left(\frac{V_u}{\Phi R_{nvc.B}}\right)^2\right) \le 1.00, \text{"OK"}, \text{"Overstressed"}\right)$

$Condition2 = \text{"OK"}$

Bolt % of Capacity = $\max\left(\left(\frac{P_{ut}}{\Phi R_{nt.B}}\right)^2 + \left(\frac{V_u}{\Phi R_{nv.B}}\right)^2, \left(\frac{P_{uc}}{\Phi R_{nc.B}}\right) + \left(\frac{V_u}{\Phi R_{nvc.B}}\right)^2\right) = 31\%$

Rock Anchor Foundation Analysis:

Input Data:

Max Pier Reactions:

Uplift =	$Uplift := 368 \cdot kips$	user input	
Shear =	$Shear := 60 \cdot kips$	user input	
Compression =	$Axial := 411 \cdot kips$	user input	

Structure:

Footing Width =	$B_{ftg} := 6 \cdot ft$	user input	
Footing Length =	$L_{ftg} := 6 \cdot ft$	user input	
Footing Thickness =	$T_{ftg} := 2.5 \cdot ft$	user input	
Pier Length/Width =	$L_{pier} := 0 \cdot ft$	user input	
Pier Height =	$T_{pier} := 0 \cdot ft$	user input	
Pier Projection Above Grade =	$P_p := 0.5 \cdot ft$	user input	

Depths:

Depth to Bottom of Footing =	$D_{ftg} := 4.0 \cdot ft$	user input	(from grade line)
Depth to Suitable Rock =	$D_{rock} := 2.0 \cdot ft$	user input	(from grade line)
Depth to Suitable Earth =	$D_{earth} := 0 \cdot ft$	user input	(from grade line)
Anchor Length =	$L_{anchor} := 24.0 \cdot ft$	user input	(from grade line)
Depth to Top of Submerged Anchor =	$D_{anchortop} := 0 \cdot ft$	user input	(from grade line)
Anchor Depth =	$D_{anchor} := D_{anchortop} + L_{anchor} = 24\ ft$		(from grade line)

Subgrade Properties:

Internal Friction Angle =	$\phi := 45 \cdot deg$	user input	
Unit Weight of Earth =	$\gamma_{earth} := 100 \cdot \frac{lb}{ft^3}$	user input	
Unit Weight of Rock =	$\gamma_{rock} := 178 \cdot \frac{lb}{ft^3}$	user input	
Unit Weight of Conc =	$\gamma_{conc} := 150 \cdot \frac{lb}{ft^3}$	user input	
Ultimate Bearing =	$Bearing := 50000 \cdot psf$	user input	

Rock Anchor Properties:

Number of Anchors =	$N_{anchor} := 4$	user input	
Hole Diameter =	$hole_d := 2.5 \cdot in$	user input	
Allowable Bond Stress Between Rock and Grout =	$\sigma_{bond} := 100 \cdot psi$	user input	Working bond Strength based on Weathered Rock/Sandstone
Grout Allowable Compressive Stress =	$fc_g := 5000 \cdot psi$	user input	
Anchor Spacing* (along length) =	$S_{anchor} := 3 \cdot ft$	user input	
Required Factor of Safety =	$F_S := 1.0$	user input	
Rock Anchor Ultimate Strength =	$Fu_{anchor} := 150.0 \cdot ksi$	user input	Williams R71-11 1" dia. 150ksi
Rock Anchor Yield Strength =	$Fy_{anchor} := 127.7 \cdot ksi$	user input	Per Recommendation of PTI For Prestressed Rock Anchors and Soil Anchors Section 6.6 Design Load Should not be more than 60% of Specified Minimum Tensile Strength.
Rock Anchor Diameter =	$d_{ra} := 1.0 \cdot in$	user input	
Rock Anchor Area per Group =	$A_g := 0.85 \cdot in^2$	user input	
Rock Anchor Ultimate Tensile Load =	$T_u := 128 \cdot kips$		
Rock Anchor Allowable Tension =	$T_{all} := 0.60 \cdot T_u = 76.8\ kips$		
Rock Anchor Maximum Working Load to Yield =	$T_y := 0.80 \cdot T_u = 102.4\ kips$		
Rock Anchor Shear Capacity =	$Sh := 0.4 \cdot T_y = 40.96\ kips$		
Total Volume of Concrete =	$V_{conc} := B_{ftg} \cdot L_{ftg} \cdot T_{ftg} + \frac{\pi \cdot L_{pier}^2}{4} \cdot T_{pier} = 90\ ft^3$		
Weight of Pad =	$W_{pad} := (B_{ftg} \cdot L_{ftg} \cdot T_{ftg}) \cdot \gamma_{conc} = 13.5\ kips$		
Weight of Pier =	$W_{pier} := (L_{pier}^2 \cdot T_{pier}) \cdot \gamma_{conc} = 0\ kips$		
Total Weight of Concrete =	$W_{conc} := W_{pad} + W_{pier} = 13.5\ kips$		

Rock Anchor Tension/Shear Check:

Actual Tension Force per Anchor = $T_a := \frac{Uplift - W_{conc}}{N_{anchor}} = 88.6\ kips$

Design Shear Force per Anchor = $S_a := \frac{Shear}{N_{anchor}} = 15\ kips$

Reduced Tension For Tension/Shear Combination = $T_{allr} := \left(1 - \left(\frac{S_a}{T_y}\right)^2\right) \cdot T_y = 100.2\ kips$

Tension Check = $TensionCheck := \text{if}\left(T_{allr} \geq T_a, \text{"OK"}, \text{"IncreaseSize"}\right) = \text{"OK"}$

Shear Check = $ShearCheck := \text{if}\left(Sh \geq S_a, \text{"OK"}, \text{"IncreaseSize"}\right) = \text{"OK"}$

$SafetyFactor := \text{if}\left(\frac{T_{allr}}{T_a} \geq 1.0, \text{"OK"}, \text{"Overstressed"}\right)$

$SafetyFactor = \text{"OK"}$ $\frac{T_a}{T_{allr}} = 88.4\%$

Rock Anchor Req'd Development Length in Rock:

Required Rock/Grout Bond Length: $L_b := \frac{T_a}{\pi \cdot hole_d \cdot \sigma_{bond}} = 9.4\ ft$

Controlling Length: $L_{bprov} := D_{anchor} - D_{earth} - D_{rock} = 22\ ft$

$Bond\_Length\_Check := \text{if}\left(\frac{L_b}{L_{bprov}} \leq 1.00, \text{"OK"}, \text{"Increase Length"}\right)$

$Bond\_Length\_Check = \text{"OK"}$ $\frac{L_b}{L_{bprov}} = 42.7\%$

Calculated Uplift Resistance:

Intermediate Dimension:

Suitable Earth Height = $H := D_{rock} - D_{earth} = 2\ ft$

Suitable Rock Height = $Z := (D_{anchor} - D_{rock}) = 22\ ft$

Total Anchor Width = $W := S_{anchor} = 3\ ft$

Volumes:

Base Area 1 of Resisting Pyramid = $B_1 := W^2 = 9\ ft^2$

Base Area 2 of Resisting Pyramid = $B_2 := (\tan(\phi) \cdot (Z \cdot 0.5) \cdot 2 + W)^2 = 625\ ft^2$

Note: Rock Cone Taken At Half Suitable Rock Height - See Rock Volume Calculations.

Base Area 3 of Resisting Pyramid = $B_3 := (\tan(\phi) \cdot (Z \cdot 0.5 + H) \cdot 2 + W)^2 = 841\ ft^2$

Total Volume of Resisting Material = $V_{tot} := \frac{\left((H + (Z \cdot 0.5)) \cdot \left(B_1 + B_3 + \sqrt{B_1 \cdot B_3}\right)\right)}{3} = 4060.3\ ft^3$

Volume of Rock = $V_{rock} := \frac{\left((Z \cdot 0.5) \cdot \left(B_1 + B_2 + \sqrt{B_1 \cdot B_2}\right)\right)}{3} = 2599.7\ ft^3$

Volume of Earth = $V_{earth} := V_{tot} - V_{rock} - V_{conc} = 1370.7\ ft^3$

Resisting Forces:

Resisting Rock Force = $W_{rock} := V_{rock} \cdot \gamma_{rock} = 462.7\ kips$

Resisting Earth Force = $W_{earth} := V_{earth} \cdot \gamma_{earth} = 137.1\ kips$

Total Resisting Force = $W_{total} := 0.75 \cdot W_{rock} + 0.75 \cdot W_{earth} + 0.9 \cdot W_{conc} = 462\ kips$

Foundation Uplift Check:

Factor of Safety = $Uplift\_Check := \text{if}\left(\frac{W_{total}}{Uplift} \geq F_S, \text{"OK"}, \text{"Overstressed"}\right)$

$Uplift\_Check = \text{"OK"}$ $\quad \frac{W_{total}}{Uplift} = 1.26$

Rock Bearing Capacity Check:

Bearing Force = $MaxBearing := \left(\frac{(Axial + W_{conc}) + (N_{anchor} \cdot T_a)}{B_{ftg} \cdot L_{ftg}}\right) = (2.2 \cdot 10^4)\ psf$

$Rock\_Bearing\_Check := \text{if}\left(\frac{MaxBearing}{0.75 \cdot Bearing} \leq 1.00, \text{"OK"}, \text{"Overstressed"}\right)$

$Rock\_Bearing\_Check = \text{"OK"}$ $\quad \frac{MaxBearing}{0.75 \cdot Bearing} = 57.7\%$

TOWER REINFORCEMENT DESIGN

CT2013
CSP #27
142 BALDWIN DRIVE
NEW HAVEN, CT 06515

VICINITY MAP

NORTH

PROJECT SUMMARY

SITE ADDRESS:	142 BALDWIN DRIVE NEW HAVEN, CT 06515
PROJECT COORDINATES:	LAT: 41°–20'–43.60N LON: 72°–58'–14.50W ELEV:±415' AMSL
AT&T SITE REF.:	CT2013
AT&T CONTACT:	KRISTINA ROBINSON 978.551.8627
ENGINEER OF RECORD:	CENTEK ENGINEERING, INC. 63–2 NORTH BRANFORD ROAD BRANFORD, CT 06405
CENTEK CONTACT:	TIMOTHY J. LYNN, PE 203.433.7507

SHEET INDEX

SHT. NO.	DESCRIPTION	REV.
T–1	TITLE SHEET	0
N–1	DESIGN BASIS & GENERAL NOTES	0
N–2	STRUCTURAL STEEL NOTES	0
MI–1	MODIFICATION INSPECTION REQUIREMENTS	0
S–1	TOWER REINFORCEMENT ELEVATION & NOTES	0
S–2	TOWER REINFORCEMENT DETAILS	0

REV.	DATE	DRAWN BY	CHK'D BY	DESCRIPTION
0	2/22/24	TJL	CFC	ISSUED FOR CONSTRUCTION

PROFESSIONAL ENGINEER SEAL

CENTEK engineering
Centered on Solutions™
www.CentekEng.com
(203) 488-0580
(203) 488-8587 Fax
63-2 North Branford Road, Branford, CT 06405

AT&T MOBILITY
TOWER REINFORCEMENT DESIGN

CT2013
CSP #27

142 BALDWIN DRIVE
NEW HAVEN, CT 06515

DATE:	2/22/2024
SCALE:	AS SHOWN
JOB NO.	23158.00

TITLE SHEET

SHEET NO.
T–1
Sheet No. 1 of 6

DESIGN BASIS

GOVERNING CODE: 2021 INTERNATIONAL BUILDING CODE AS MODIFIED BY THE 2022 CT STATE BUILDING CODE.

1. TIA–222–H, "STRUCTURAL STANDARD FOR ANTENNA SUPPORTING STRUCTURES, ANTENNAS AND SMALL WIND TURBINE SUPPORT STRUCTURES"

2. DESIGN CRITERIA

   WIND LOAD:
   ULTIMATE DESIGN WIND SPEED (Vult) = 135 MPH (2022 CSBC: APPENDIX 'P')

GENERAL NOTES

1. REFER TO STRUCTURAL ANALYSIS AND REINFORCEMENT DESIGN PREPARED BY CENTEK ENGINEERING, INC., MARKED REV 2 DATED 2/22/24.

2. PROVIDE TEMPORARY ANCHORS, GUYING AND/OR BRACING AS REQUIRED TO SAFELY CONDUCT THE WORK.

3. ALL WORK SHALL BE IN ACCORDANCE WITH TIA–222–H "STRUCTURAL STANDARDS FOR STEEL ANTENNA TOWERS AND ANTENNA SUPPORTING STRUCTURES".

4. IT IS THE CONTRACTOR'S SOLE RESPONSIBILITY TO DETERMINE ERECTION PROCEDURE AND SEQUENCE AND TO INSURE THE SAFETY OF THE TOWER STRUCTURE AND ITS COMPONENT PARTS DURING ERECTION. THIS INCLUDES THE ADDITION OF WHATEVER SHORING, TEMPORARY BRACING, GUYS OR TIE–DOWNS, WHICH MIGHT BE NECESSARY.

5. DRAWINGS INDICATE THE MINIMUM STANDARDS, BUT IF ANY WORK SHOULD BE INDICATED TO BE SUBSTANDARD TO ANY ORDINANCES, LAWS, CODES, RULES, OR REGULATIONS BEARING ON THE WORK, THE CONTRACTOR SHALL INCLUDE IN HIS SCOPE OF WORK AND SHALL EXECUTE THE WORK CORRECTLY IN ACCORDANCE WITH SUCH ORDINANCES, LAWS, CODES, RULES OR REGULATIONS WITH NO INCREASE IN COSTS.

6. THE CONTRACTOR SHALL FIELD VERIFY ALL DIMENSIONS, ELEVATIONS, ANGLES, AND EXISTING CONDITIONS AT THE SITE, PRIOR TO FABRICATION AND/OR INSTALLATION OF ANY WORK IN THE CONTRACT AREA.

7. ALL DAMAGE CAUSED TO ANY EXISTING STRUCTURE SHALL BE THE SOLE RESPONSIBILITY OF THE CONTRACTOR. THE CONTRACTOR WILL BE HELD LIABLE FOR ALL REPAIRS REQUIRED FOR EXISTING STRUCTURES IF DAMAGED DURING CONSTRUCTION ACTIVITIES.

8. CONTRACTOR SHALL BE RESPONSIBLE FOR ALL ON–SITE SAFETY FROM THE TIME THE JOB IS AWARDED UNTIL ALL WORK IS COMPLETE AND ACCEPTED BY THE OWNER.

11. TOWER REINFORCING SHALL BE CONDUCTED BY FIELD CREWS EXPERIENCED IN THE ASSEMBLY AND ERECTION OF RADIO ANTENNAS AND SUPPORT STRUCTURES. ALL SAFETY PROCEDURES, RIGGING AND ERECTION METHODS SHALL BE STANDARD TO THE INDUSTRY AND IN COMPLIANCE WITH OSHA.

12. EXISTING COAXIAL CABLES AND ALL ACCESSORIES SHALL BE RELOCATED AS NECESSARY AND REINSTALLED BY THE CONTRACTOR WITHOUT INTERRUPTION IN SERVICE WHERE THEY ARE IN CONFLICT WITH TOWER REINFORCEMENT.

13. IF ANY FIELD CONDITIONS EXIST WHICH PRECLUDE COMPLIANCE WITH THE DRAWINGS, THE CONTRACTOR SHALL IMMEDIATELY NOTIFY THE ENGINEER AND SHALL PROCEED WITH AFFECTED WORK AFTER CONFLICT IS SATISFACTORILY RESOLVED.

REV.	DATE	DRAWN BY	CHK'D BY	DESCRIPTION
0	2/22/24	TJL	CFC	ISSUED FOR CONSTRUCTION

PROFESSIONAL ENGINEER SEAL

CENTEK engineering
Centered on Solutions™
www.CentekEng.com
(203) 488-0580
(203) 488-8587 Fax
63-2 North Branford Road, Branford, CT 06405

AT&T MOBILITY
TOWER REINFORCEMENT DESIGN

CT2013
CSP #27

162 BALDWIN DRIVE
NORTHFORD, CT 06472

DATE:	2/22/2024
SCALE:	AS SHOWN
JOB NO.	23158.00

DESIGN BASIS & GENERAL NOTES

SHEET NO.
N–1
Sheet No. 2 of 6

STRUCTURAL STEEL

1. ALL STRUCTURAL STEEL IS DESIGNED BY ALLOWABLE STRESS DESIGN (ASD).

2. MATERIAL SPECIFICATIONS

   A. STRUCTURAL STEEL (W SHAPES)---ASTM A992 (FY = 50 KSI)
   B. STRUCTURAL STEEL (OTHER SHAPES)---ASTM A36 (FY = 36 KSI).
   C. STRUCTURAL STEEL (TOWER REINF. PLATES)--- ASTM A572 GR50 (FY = 50 KSI)
   D. STRUCTURAL HSS (RECTANGULAR SHAPES)---ASTM A500 GRADE B, (FY = 46 KSI)
   E. STRUCTURAL HSS (ROUND SHAPES)---ASTM A500 GRADE B, (FY = 42 KSI)
   F. PIPE ---ASTM A53 GRADE B (FY = 35 KSI)

3. FASTENER SPECIFICATIONS

   A. CONNECTION BOLTS---ASTM A325-N, UNLESS OTHERWISE SCHEDULED.
   B. U-BOLTS---ASTM A307
   C. ANCHOR RODS---ASTM F1554
   D. WELDING ELECTRODES---ASTM E70XX FOR A36 & A572_GR50 STEELS, ASTM E80XX FOR A572_GR65 STEEL.
   E. BLIND BOLTS---AS1252 PROPERTY CLASS 8.8 (FU=120 KSI).

4. CONTRACTOR TO REVIEW ALL SHOP DRAWINGS AND SUBMIT COPY TO ENGINEER FOR APPROVAL. DRAWINGS MUST BEAR THE CHECKER'S INITIALS BEFORE SUBMITTING TO THE ENGINEER FOR REVIEW. SHOP DRAWINGS SHALL INCLUDE THE FOLLOWING: SECTION PROFILES, SIZES, CONNECTION ATTACHMENTS, REINFORCING, ANCHORAGE, SIZE AND TYPE OF FASTENERS AND ACCESSORIES. INCLUDE ERECTION DRAWINGS, ELEVATIONS AND DETAILS.

5. STRUCTURAL STEEL SHALL BE DETAILED, FABRICATED AND ERECTED IN ACCORDANCE WITH THE LATEST PROVISIONS OF AISC MANUAL OF STEEL CONSTRUCTION.

6. PROVIDE ALL PLATES, CLIP ANGLES, CLOSURE PIECES, STRAP ANCHORS, MISCELLANEOUS PIECES AND HOLES REQUIRED TO COMPLETE THE STRUCTURE.

7. FIT AND SHOP ASSEMBLE FABRICATIONS IN THE LARGEST PRACTICAL SECTIONS FOR DELIVERY TO SITE.

8. INSTALL FABRICATIONS PLUMB AND LEVEL, ACCURATELY FITTED, AND FREE FROM DISTORTIONS OR DEFECTS.

9. AFTER ERECTION OF STRUCTURES, TOUCHUP ALL WELDS, ABRASIONS AND NON-GALVANIZED SURFACES WITH A 95% ORGANIC ZINC RICH PAINT IN ACCORDANCE WITH ASTM 780.

10. ALL STEEL MATERIAL (EXPOSED TO WEATHER) SHALL BE GALVANIZED AFTER FABRICATION IN ACCORDANCE WITH ASTM A123 "ZINC (HOT DIPPED GALVANIZED) COATINGS" ON IRONS AND STEEL PRODUCTS.

11. ALL BOLTS, ANCHORS AND MISCELLANEOUS HARDWARE SHALL BE GALVANIZED IN ACCORDANCE WITH ASTM A153 "ZINC COATING (HOT-DIP) ON IRON AND STEEL HARDWARE".

12. CONTRACTOR SHALL COMPLY WITH AWS CODE FOR PROCEDURES APPEARANCE AND QUALITY OF WELDS, AND WELDING PROCESSES SHALL BE QUALIFIED IN ACCORDANCE WITH AWS "STANDARD QUALIFICATION PROCEDURES". ALL WELDING SHALL BE DONE USING THE SCHEDULED ELECTRODES AND WELDING SHALL CONFORM TO AISC AND D1.1 WHERE FILLET WELD SIZES ARE NOT SHOWN, PROVIDE THE MINIMUM SIZE PER TABLET J2.4 IN THE AISC "MANUAL OF STEEL CONSTRUCTION" 14TH EDITION. AT THE COMPLETION OF WELDING, ALL DAMAGE TO GALVANIZED COATING SHALL BE REPAIRED.

13. THE ENGINEER SHALL BE NOTIFIED OF ANY INCORRECTLY FABRICATED, DAMAGED OR OTHERWISE MISFITTING OR NON CONFORMING MATERIALS OR CONDITIONS TO REMEDIAL OR CORRECTIVE ACTION. ANY SUCH ACTION SHALL REQUIRE ENGINEER REVIEW.

14. CONNECTION ANGLES SHALL HAVE A MINIMUM THICKNESS OF 1/4 INCHES.

15. STRUCTURAL CONNECTION BOLTS SHALL CONFORM TO ASTM A325. ALL BOLTS SHALL BE 3/4" DIAMETER MINIMUM AND SHALL HAVE A MINIMUM OF TWO BOLTS, UNLESS OTHERWISE ON THE DRAWINGS.

16. LOCK WASHER ARE NOT PERMITTED FOR A325 BOLTED STEEL ASSEMBLIES.

17. SHOP CONNECTIONS SHALL BE WELDED OR HIGH STRENGTH BOLTED.

18. MILL BEARING ENDS OF COLUMNS, STIFFENERS, AND OTHER BEARING SURFACES TO TRANSFER LOAD OVER ENTIRE CROSS SECTION.

19. FABRICATE BEAMS WITH MILL CAMBER UP.

20. LEVEL AND PLUMB INDIVIDUAL MEMBERS OF THE STRUCTURE TO AN ACCURACY OF 1:500, BUT NOT TO EXCEED 1/4" IN THE FULL HEIGHT OF THE COLUMN.

21. COMMENCEMENT OF STRUCTURAL STEEL WORK WITHOUT NOTIFYING THE ENGINEER OF ANY DISCREPANCIES WILL BE CONSIDERED ACCEPTANCE OF PRECEDING WORK.

REV.	DATE	DRAWN BY	CHK'D BY	DESCRIPTION
0	2/22/24	TJL	CFC	ISSUED FOR CONSTRUCTION

PROFESSIONAL ENGINEER SEAL

CENTEK engineering
Centered on Solutions℠
www.CentekEng.com
(203) 488-0580
(203) 488-8587 Fax
63-2 North Branford Road, Branford, CT 06405

AT&T MOBILITY
TOWER REINFORCEMENT DESIGN

CT2013
CSP #27

142 BALDWIN DRIVE
NEW HAVEN, CT 06515

DATE:	2/22/2024
SCALE:	AS SHOWN
JOB NO.	23158.00

STRUCTURAL STEEL NOTES

SHEET NO.
N-2
Sheet No. 3 of 6

MODIFICATION INSPECTION REPORT REQUIREMENTS

PRE-CONSTUCTION		DURING CONSTRUCTION		POST-CONSTRUCTION	
SCHEDULED ITEM	REPORT ITEM	SCHEDULED ITEM	REPORT ITEM	SCHEDULED ITEM	REPORT ITEM
X	EOR MODIFICATION INSPECTION DRAWING	–	FOUNDATIONS	X	MODIFICATION INSPECTOR RECORD REDLINE DRAWING
X	EOR APPROVED SHOP DRAWINGS	–	EARTHWORK: BACKFILL MATERIAL & COMPACTION	–	POST–INSTALLED ANCHOR ROD PULL–OUT TEST
–	EOR APPROVED POST–INSTALLED ANCHOR MPII	–	CONCRETE TESTING	X	PHOTOGRAPHS
–	FABRICATION INSPECTION	X	STEEL INSPECTION		
–	FABRICATOR CERTIFIED WELDER INSPECTION	X	POST INSTALLED ANCHOR ROD VERIFICATION		
X	MATERIAL CERTIFICATIONS	–	BASE PLATE GROUT VERIFICATION		
		–	CONTRACTOR'S CERTIFIED WELD INSPECTION		
		X	ON–SITE COLD GALVANIZING VERIFICATION		
		–	GUY WIRE TENSION REPORT		
		X	CONTRACTOR AS–BUILT REDLINE DRAWINGS		

NOTES:
1. REFER TO MODIFICATION INSPECTION NOTES FOR ADDITIONAL REQUIREMENTS
2. "X" DENOTES DOCUMENT REQUIRED FOR INCLUSION IN MODIFICATION INSPECTION FINAL REPORT.
3. "–" DENOTES DOCUMENT NOT REQUIRED FOR INCLUSION IN MODIFICATION INSPECTION FINAL REPORT.
4. EOR – ENGINEER OF RECORD
4. MPII – "MANUFACTURER'S PRINTED INSTALLATION GUIDELINES"

GENERAL

1. THE MODIFICATION INSPECTION IS A VISUAL INSPECTION OF STRUCTURAL MODIFICATIONS, TO INCLUDE A REVIEW AND COMPILATION OF SPECIFIED SUBMITTALS AND CONSTRUCTION INSPECTIONS, AS AN ASSURANCE OF COMPLIANCE WITH THE CONSTRUCTION DOCUMENTS PREPARED UNDER THE DIRECTION OF THE ENGINEER OF RECORD (EOR).

2. THE MODIFICATION INSPECTION IS TO CONFIRM INSTALLATION CONFIGURATION AND GENERAL WORKMANSHIP AND IS NOT A REVIEW OF THE MODIFICATION DESIGN. OWNERSHIP OF THE MODIFICATION DESIGN EFFECTIVENESS AND INTENT RESIDES WITH THE ENGINEER OF RECORD.

3. TO ENSURE COMPLIANCE WITH THE MODIFICATION INSPECTION REQUIREMENTS THE GENERAL CONTRACTOR (GC) AND THE MODIFICATION INSPECTOR (MI) COMMENCE COMMUNICATION UPON AUTHORIZATION TO PROCEED BY THE CLIENT. EACH PARTY SHALL BE PROACTIVE IN CONTACTING THE OTHER. THE EOR SHALL BE CONTACTED IF SPECIFIC GC/MI CONTACT INFORMATION IS NOT MADE AVAILABLE.

4. THE GC SHALL PROVIDE THE MI WITH A MINIMUM OF 5 BUSINESS DAYS NOTICE OF IMPENDING INSPECTIONS.

5. WHEN POSSIBLE, THE GC AND MI SHALL BE ON SITE DURING THE MODIFICATION INSPECTION TO HAVE ANY NOTED DEFICIENCIES ADDRESSED DURING THE INITIAL MODIFICATION INSPECTION.

MODIFICATION INSPECTOR (MI)

1. THE MI SHALL CONTACT THE GC UPON AUTHORIZATION BY THE CLIENT TO:

   – REVIEW THE MODIFICATION INSPECTION REPORT REQUIREMENTS.
   – WORK WITH THE GC IN DEVELOPMENT OF A SCHEDULE FOR ON–SITE INSPECTIONS.
   – DISCUSS CRITICAL INSPECTIONS AND PROJECT CONCERNS.

2. THE MI IS RESPONSIBLE FOR COLLECTION OF ALL INSPECTION AND TEST REPORTS, REVIEWING REPORTS FOR ADHERENCE TO THE CONTRACT DOCUMENTS, CONDUCTING ON–SITE INSPECTIONS AND COMPILATION & SUBMISSION OF THE MODIFICATION INSPECTION REPORT TO THE CLIENT AND THE EOR.

GENERAL CONTRACTOR (GC)

1. THE GC IS REQUIRED TO CONTACT THE GC UPON AUTHORIZATION TO PROCEED WITH CONSTRUCTION BY THE CLIENT TO:

   – REVIEW THE MODIFICATION INSPECTION REPORT REQUIREMENTS.
   – WORK WITH THE MI IN DEVELOPMENT OF A SCHEDULE FOR ON–SITE INSPECTIONS.
   – DISCUSS CRITICAL INSPECTIONS AND PROJECT CONCERNS.

2. THE GC IS RESPONSIBLE FOR COORDINATING AND SCHEDULING IN ADVANCE ALL REQUIRED INSPECTIONS AND TESTS WITH THE MI.

CORRECTION OF FAILING MODIFICATION INSPECTION

1. SHOULD THE STRUCTURAL MODIFICATION NOT COMPLY WITH THE REQUIREMENTS OF THE CONSTRUCTION DOCUMENTS, THE GC SHALL WORK WITH THE MODIFICATION INSPECTOR IN A VIABLE REMEDIATION PLAN AS FOLLOWS:

   – CORRECT ALL DEFICIENCIES TO COMPLY WITH THE CONTRACT DOCUMENTS AND COORDINATE WITH THE MI FOR A FOLLOW UP INSPECTION.
   – WITH CLIENT AUTHORIZATION, THE GC MAY WORK WITH THE EOR TO REANALYZE THE MODIFICATION USING THE AS–BUILT CONDITION.

REQUIRED PHOTOGRAPHS

1. THE GC AND MI SHALL AT MINIMUM PHOTO DOCUMENT THE FOLLOWING FOR INCLUSION IN THE MODIFICATION INSPECTION REPORT:

   – PRE–CONSTRUCTION: GENERAL CONDITION OF THE SITE.
   – DURING CONSTRUCTION: RAW MATERIALS, CRITICAL DETAILS, WELD PREPARATION, BOLT INSTALLATION & TORQUE, FINAL INSTALLED CONDITION & SURFACE COATING REPAIRS.
   – POST–CONSTRUCTION: FINAL CONDITION OF THE SITE

REV.	DATE	DRAWN BY	CHK'D BY	DESCRIPTION
0	2/22/24	TJL	CFC	ISSUED FOR CONSTRUCTION

PROFESSIONAL ENGINEER SEAL

CENTEK engineering
Centered on Solutions℠
www.CentekEng.com
(203) 488-0580
(203) 488-8587 Fax
63-2 North Branford Road, Branford, CT 06405

AT&T MOBILITY
TOWER REINFORCEMENT DESIGN

CT2013
CSP #27

142 BALDWIN DRIVE
NEW HAVEN, CT 06515

DATE:	2/22/2024
SCALE:	AS SHOWN
JOB NO.	23158.00

MODIFICATION INSPECTION REQUIREMENTS

SHEET NO.
MI–1
Sheet No. 4 of 6

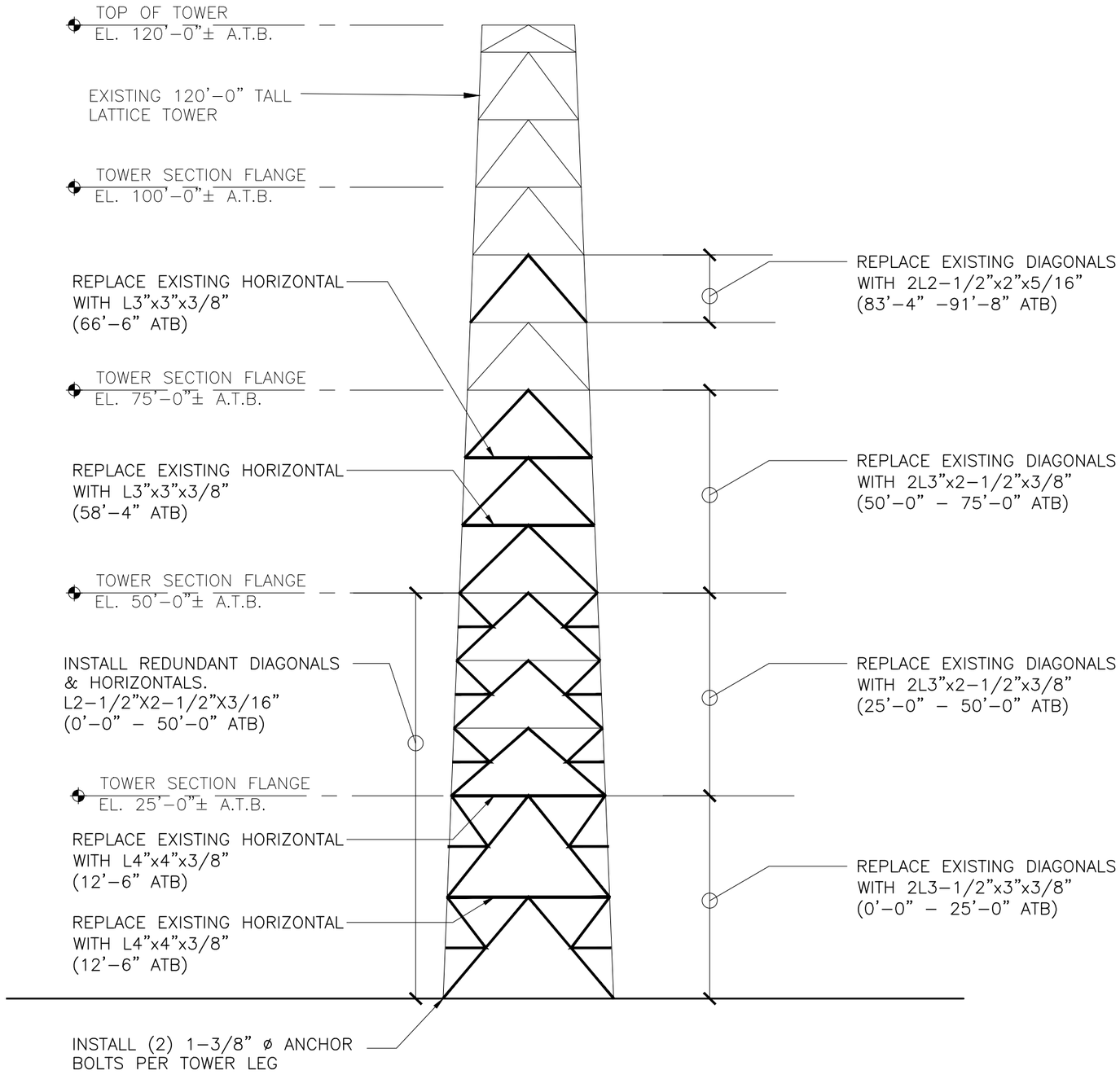

1 / S-1 **TOWER ELEVATION - PROPOSED**

SCALE: NOT TO SCALE

NOTES

1. WHERE REINFORCEMENT INSTALLATION COINCIDES WITH EXIST. EXTERIOR COAX CABLE PLACEMENT. GC. TO TEMPORARILY DETACH COAX TO PERMIT THE INSTALLATION OF THE REINFORCEMENT THEN REINSTATE COAX PRE-EXISTING CONDITION
2. ANTENNAS, APPURTENANCES AND MOUNTS NOT SHOWN FOR CLARITY
3. FIELD VERIFY ALL REPLACEMENT MEMBER DIMENSIONS PRIOR TO FABRICATION
4. REFER TO SHEET S-2 FOR REINFORCEMENT DETAILS

REV.	DATE	DRAWN BY	CHK'D BY	DESCRIPTION
0	2/22/24	TJL	CFC	ISSUED FOR CONSTRUCTION

PROFESSIONAL ENGINEER SEAL

CENTEK engineering
Centered on Solutions™
www.CentekEng.com
(203) 488-0580
(203) 488-8587 Fax
63-2 North Branford Road, Branford, CT 06405

AT&T MOBILITY
TOWER REINFORCEMENT DESIGN

CT2013
CSP #27

142 BALDWIN DRIVE
NEW HAVEN, CT 06515

DATE:	2/22/2024
SCALE:	AS SHOWN
JOB NO.	23158.00

TOWER REINFORCEMENT ELEVATION & NOTES

SHEET NO. S-1

Sheet No. 5 of 6

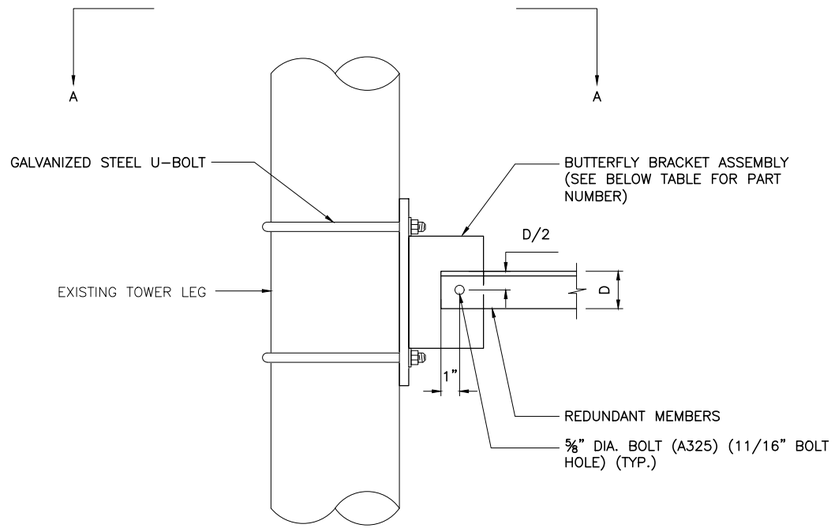

2 / S-2 LEG CONN. REDUNDANT HORIZONTAL

SCALE: 1 1/2" = 1'-0"

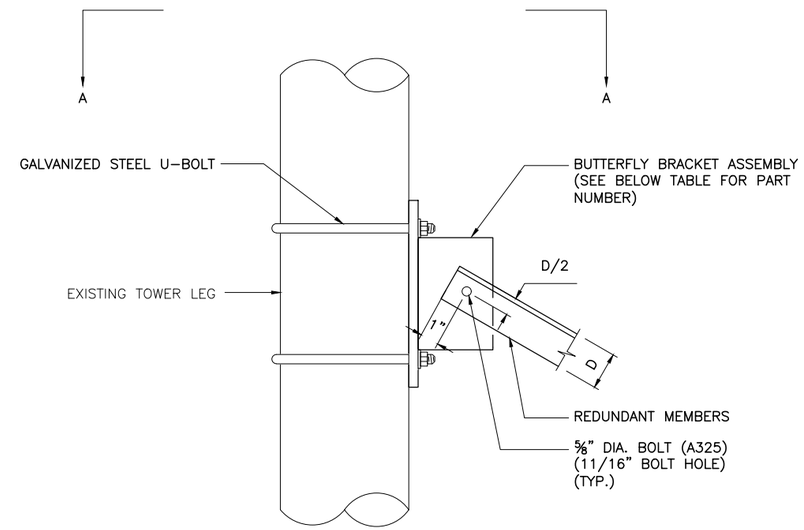

1 / S-2 LEG CONN. REDUNDANT DIAGONAL

SCALE: 1 1/2" = 1'-0"

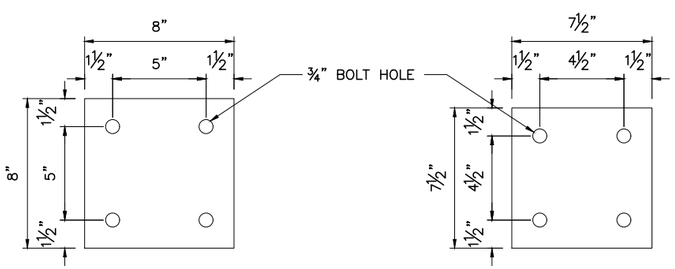

MEMBER CONNECTION PLATE ABOVE 25'

MEMBER CONNECTION PLATE ABOVE 0-25'

5 / S-2 CONNECTION PLATES

SCALE: 1 1/2" = 1'-0"

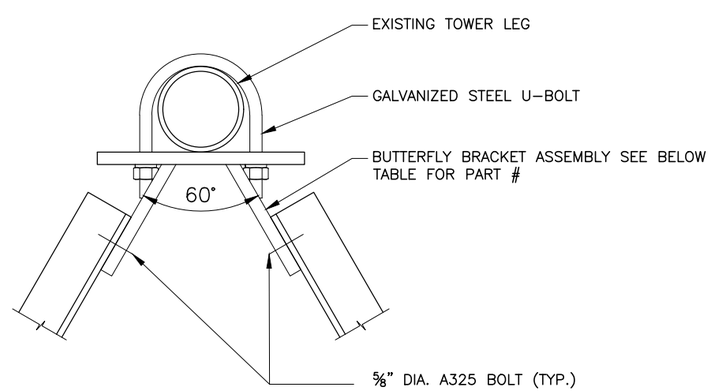

4 / S-2 SECTION A

SCALE: N.T.S.

ELEVATION	LEG BUTTERFLY BRACKET #
0-25'	RSH-0568-86
25-50'	RSH-0545-68

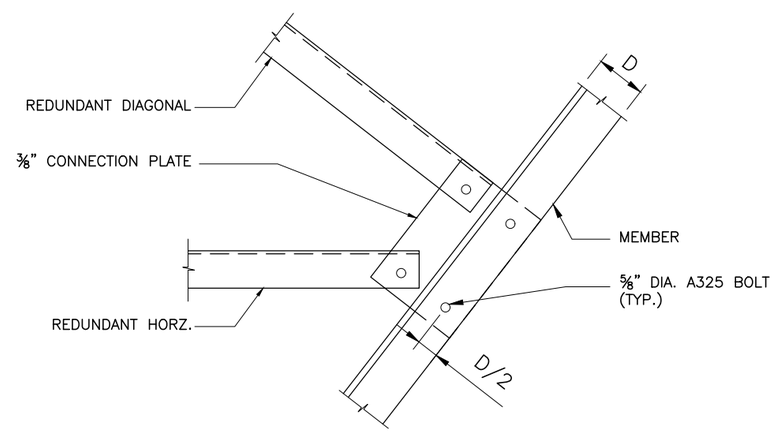

3 / S-2 REDUNDANT MEMBER CONNECTION

SCALE: 1/2" = 1'-0"

REV.	DATE	DRAWN BY	CHK'D BY	DESCRIPTION
0	2/22/24	TJL	CFC	ISSUED FOR CONSTRUCTION

PROFESSIONAL ENGINEER SEAL

CENTEK engineering
Centered on Solutions™
www.CentekEng.com
(203) 488-0580
(203) 488-8587 Fax
63-2 North Branford Road, Branford, CT 06405

AT&T MOBILITY
TOWER REINFORCEMENT DESIGN

CT2013
CSP #27

142 BALDWIN DRIVE
NEW HAVEN, CT 06515

DATE:	2/22/2024
SCALE:	AS SHOWN
JOB NO.	23158.00

TOWER REINFORCEMENT DETAILS

SHEET NO.
S-2
Sheet No. 6 of 6

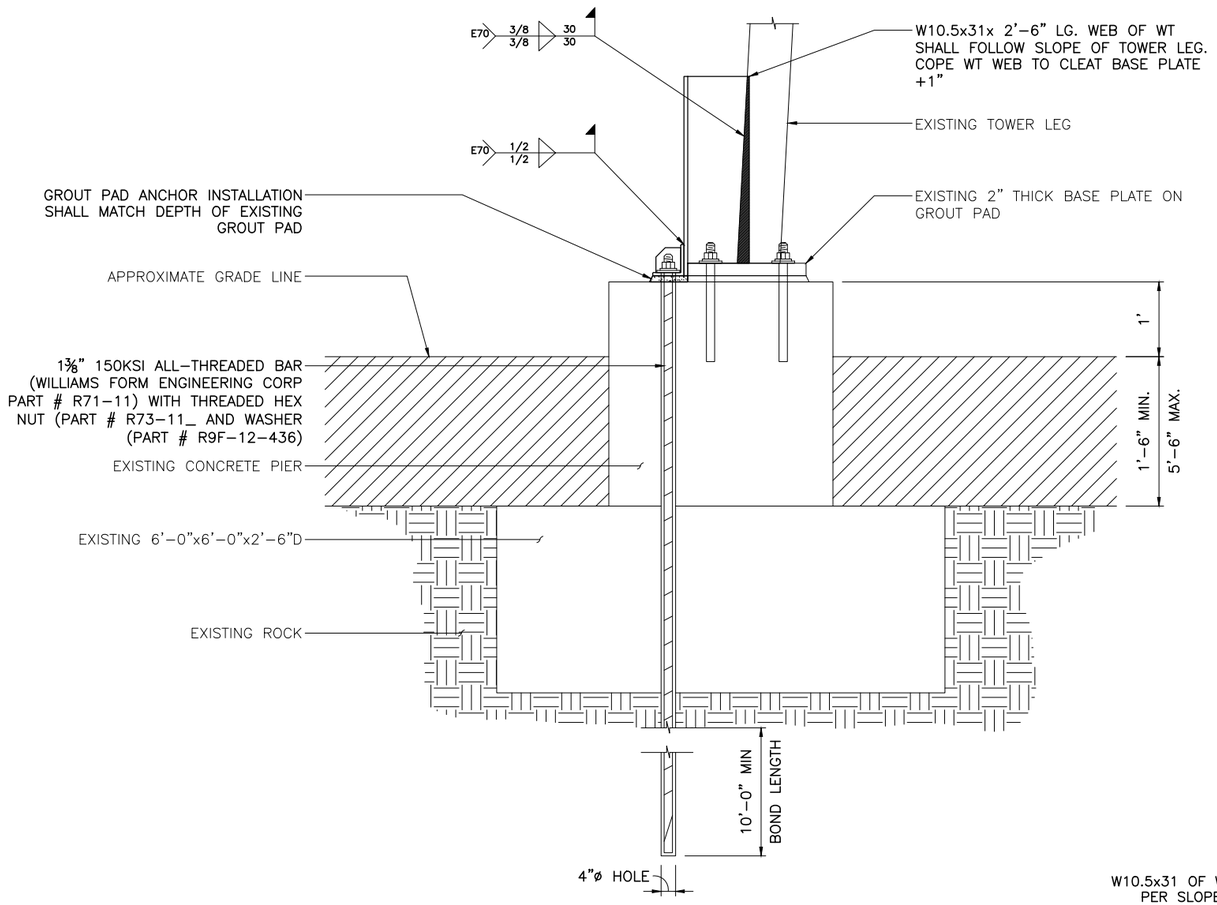

1 / S-3 **ANCHOR ELEVATION AT LEGS A,B + C**

SCALE: 1/2" = 1'-0"

1. AVOID EXISTING CONCRETE PIER REBAR WHEN DRILLING 4" DIAMETER HOLE FOR NEW ANCHORS.
2. FILL DRILLED HOLE WITH 5,000psi NON-SHRINK GROUT

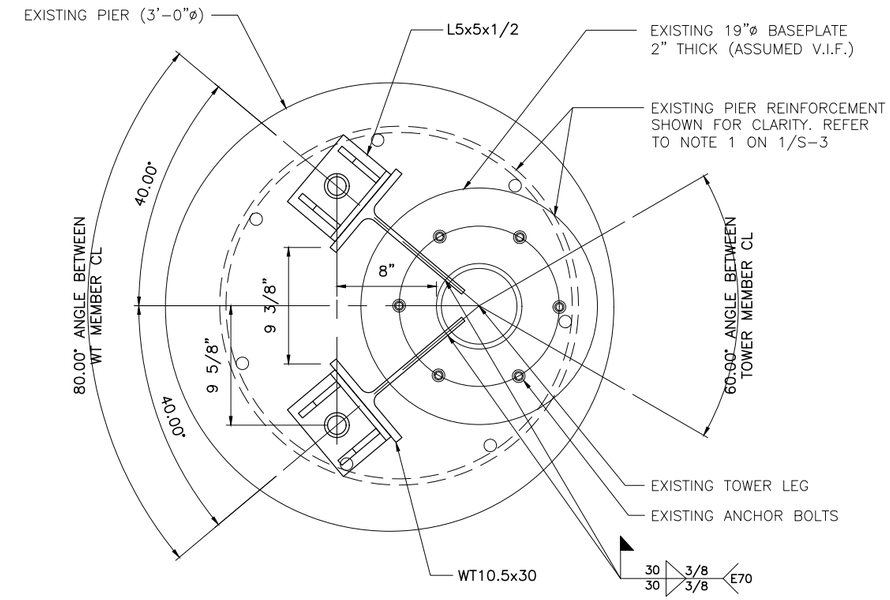

2 / S-3 **ANCHOR LAYOUT AT LEGS A,B + C**

SCALE: 1" = 1'-0"

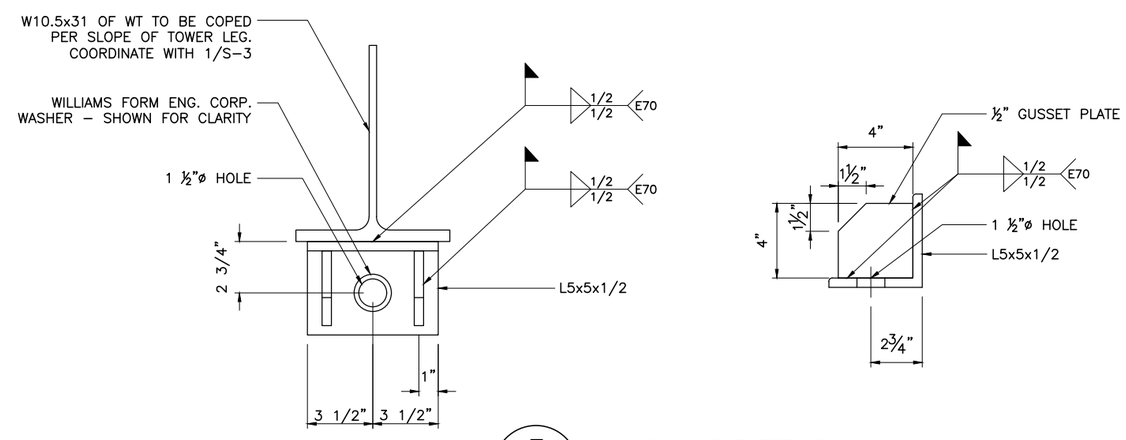

3 / S-3 **ANCHOR DETAIL**

SCALE: 1 1/2" = 1'-0"

REV.	DATE	DRAWN BY	CHK'D BY	DESCRIPTION
0	2/22/24	TJL	CFC	ISSUED FOR CONSTRUCTION

PROFESSIONAL ENGINEER SEAL

CENTEK engineering
Centered on Solutions™
www.CentekEng.com
(203) 488-0580
(203) 488-8587 Fax
63-2 North Branford Road, Branford, CT 06405

AT&T MOBILITY
TOWER REINFORCEMENT DESIGN

CT2013
CSP #27

142 BALDWIN DRIVE
NORTH HAVEN, CT 06473

DATE:	2/22/2024
SCALE:	AS SHOWN
JOB NO.	23158.00

ANCHOR BOLT REINFORCEMENT DETAILS

SHEET NO.
S-3
Sheet No. 6 of 6

Section 1 - RFDS GENERAL INFORMATION

RFDS NAME:	CTL02013	DATE:	10/01/2018	RF DESIGN ENG:	Mateen Mohammed
ISSUE:	Bronze Standard	Approved? (Y/N):	Yes	RF DESIGN PHONE:	5107767382
REVISION:	Final	RF MANAGER:	John Benedetoo	RF DESIGN EMAIL:	mm093q@att.com
INITIATIVE /PROJECT:	RFDS "1839933 & 2586608" to combine SOW in this New RFDS.CBand + DoD Suspended and removed from the RFDS.Ticket tcreated to deactivate RBS 824701.				

RF PERF ENG:		RFDS PROGRAM TYPE:	2021 5G NR Radio		
RF PERF PHONE:		RFDS TECHNOLOGY:	5G NR Activation		
RF PERF EMAIL:		STATE/STATUS:	As Built/In Progress		
ADDITIONAL WORKFLOW NOTIFICATIONS:		RFDS ID:	4541287		
RFDS VERSION:	5.00	Created By:	mm093q	Updated By:	mh705r
UMTS FREQUENCY:		Date Created:	5/17/2021 4:28:42 PM	Date Updated:	8/1/2023 2:27:54 PM
LTE FREQUENCY:	700, 1900, AWS, WCS	Estimated SQIN:	15,990	Expiration :	
5G FREQUENCY:	850, 1900, AWS	RER Initiative:		Calculation ID:	20230801141625814 0
I-PLAN JOB # 1:	ER_-RCTB-21-05199	IPLAN PRD GRP || SUB GRP #1:	5G NR Software Radio || 5G NR Activation		
I-PLAN JOB # 2:	ER_-RCTB-21-04360	IPLAN PRD GRP || SUB GRP #2:	Cell Site RF Modifications || BBU reconfiguration with new IDs		
I-PLAN JOB # 3:	ER_-RCTB-21-05197	IPLAN PRD GRP || SUB GRP #3:	5G NR Software Radio || 5G NR Activation		
I-PLAN JOB # 4:	NER-RCTB-18-07407	IPLAN PRD GRP || SUB GRP #4:	Cell Site RF Modifications || 5G NR Upgrade		
I-PLAN JOB # 5:	NER-RCTB-18-07474	IPLAN PRD GRP || SUB GRP #5:	Antenna Modifications || 4TX4RX Software Retrofit		
I-PLAN JOB # 6:	NER-RCTB-18-07341	IPLAN PRD GRP || SUB GRP #6:	LTE Next Carrier || LTE 7C		
I-PLAN JOB # 7:	NER-RCTB-18-07473	IPLAN PRD GRP || SUB GRP #7:	Antenna Modifications || 4TX4RX Software Retrofit		
I-PLAN JOB # 8:	NER-RCTB-18-07306	IPLAN PRD GRP || SUB GRP #8:	LTE Next Carrier || LTE 6C		
I-PLAN JOB # 9:	NER-RCTB-17-06709	IPLAN PRD GRP || SUB GRP #8:	LTE Next Carrier || LTE 5C		
I-PLAN JOB # 10:	NER-RCTB-17-03362	IPLAN PRD GRP || SUB GRP #8:	LTE Next Carrier || LTE 4C		
I-PLAN JOB # 11:	NER-RCTB-19-06273	IPLAN PRD GRP || SUB GRP #8:	Cell Site RF Modifications || UL Activation		
I-PLAN JOB # 12:		IPLAN PRD GRP || SUB GRP #8:			
I-PLAN JOB # 13:		IPLAN PRD GRP || SUB GRP #8:			
I-PLAN JOB # 14:		IPLAN PRD GRP || SUB GRP #8:			
I-PLAN JOB # 15:		IPLAN PRD GRP || SUB GRP #8:			
I-PLAN JOB # 16:		IPLAN PRD GRP || SUB GRP #8:			

Section 2 - LOCATION INFORMATION

USID:	61157	FA LOCATION CODE:	10035296	LOCATION NAME:	NEW HAVEN WEST ROCK
REGION:	NORTHEAST	MARKET CLUSTER:	NEW ENGLAND	MARKET:	CONNECTICUT
ADDRESS:	142 BALDWIN DRIVE	CITY:	NEW HAVEN	STATE:	CT
ZIP CODE:	06514	COUNTY:	NEW HAVEN	LONG (DEC. DEG.):	-72.9706931
LATITUDE (D-M-S):	41d 20m43.56996s	LONGITUDE (D-M-S):	-72d -58m-14.49516s	LAT (DEC. DEG.):	41.3454361
DIRECTIONS, ACCESS AND EQUIPMENT LOCATION:	UPDATD 11/22/2021 MD987X NEW HAVEN WEST ROCK (IF LOCKED IN CALL 24HR RADIO DISPATCH (8604243200) RT 15 SOUTH TO EXIT 59 TAKE A RIGHT A END OF RAMP RT69 SOUTH (WHALLEY AVE) LEFT AT 7TH LIGHT ONTO BLAKE STREET LEFT AT 4TH LIGHT ONTO FITCH STREET NEXT LIGHT LEFT ONTO WINTERGREEN AVE LEFT AT FORK NEXT RIGHT & FOLLOW SINGS TO WEST RIDGE STATE PARK LEFT AT STOP SIGN LEFT INTO PARK LOCK BOX LOCATED ON RIGHT GATE POST OK NOW PAY ATTENTIONTHE LOCK BOX COMBO# 043 THERE ARE 2 KEYS IN LOCK BOX 1 IS FOR THE MAIN GATE AND THE OTHER IS FOR THE STATE POLICE COMPOUND BE SURE TO LOCK THE LOWER GATE BEHIND YOU BEAR RIGHT AT GUARD SHACK COMBO LOCK FOR NEXT GATE IS 0043 GO 8 MILES UP WINDING ACCESS ROAD THEN TAKE FIRST LEFT AND FOLLOW TO SITE OUR SHELTER IS INSIDE COMPOUND DEMARC LOCATED OUTSIDE SHELTER TWO MAN SITE NOT ADVISABLE AFTER DARK				

ORACLE PTN # 1:		PACE JOB # 1:	MRCTB053707		
ORACLE PTN # 2:	2051A11LNN	PACE JOB # 2:	MRCTB055992		
ORACLE PTN # 3:		PACE JOB # 3:	MRCTB053924		
ORACLE PTN # 4:	2051A0KE0N	PACE JOB # 4:	MRCTB034946		
ORACLE PTN # 5:	2051A0KDXA	PACE JOB # 5:	MRCTB034921		
ORACLE PTN # 6:	2051A0KD6V	PACE JOB # 6:	MRCTB035008		
ORACLE PTN # 7:	2051A0KDX8	PACE JOB # 7:	MRCTB034915		
ORACLE PTN # 8:	2051A0KGAX	PACE JOB # 8:	MRCTB034929		
ORACLE PTN # 9:	2051A0EFP6	PACE JOB # 9:	MRCTB026816		
ORACLE PTN # 10:	2051A0DAXJ	PACE JOB # 10:	MRCTB025570		
ORACLE PTN # 11:		PACE JOB # 11:	MRCTB044864		
ORACLE PTN # 12:		PACE JOB # 12:			
ORACLE PTN # 13:		PACE JOB # 13:			
ORACLE PTN # 14:		PACE JOB # 14:			
ORACLE PTN # 15:		PACE JOB # 15:			
ORACLE PTN # 16:		PACE JOB # 16:			
BORDER CELL WITH CONTOUR COORD:		SEARCH RING NAME:			
AM STUDY REQ'D (Y/N):	No	SEARCH_RING_ID:			
FREQ COORD:		BTA:		MSA / RSA:	
		LAC(UMTS):			
RF DISTRICT:	NPO TRIAGE				
RF ZONE:	HOTSEAT	RNC(UMTS):			
		MME POOL ID(LTE):	FF01		
PARENT NAME(UMTS):					

Section 3 - LICENSE COVERAGE/FILING INFORMATION

CGSA - NO FILING TRIGGERED (Yes/No):	Yes	CGSA LOSS:		PCS REDUCED - UPS ZIP:	
CGSA - MINOR FILING NEEDED (Yes/No):	No	CGSA EXT AGMT NEEDED:		PCS POPS REDUCED:	
CGSA - MAJOR FILING NEEDED (Yes/No):	No	CGSA SCORECARD UPDATED:			

CGSA CALL SIGNS:	

Section 4 - TOWER/REGULATORY INFORMATION

STRUCTURE AT&T OWNED?:	No	**GROUND ELEVATION (ft):**	0	**STRUCTURE TYPE:**	SELF SUPPORT
ADDITIONAL REGULATORY?:	Yes	**HEIGHT OVERALL (ft):**	0.00	**FCC ASR NUMBER:**	
SUB-LEASE RIGHTS?:	No	**STRUCTURE HEIGHT (ft):**	120.00		
LIGHTING TYPE:	NOT REQUIRED				

MARKET LOCATION 700 MHz Band:			
MARKET LOCATION 850 MHz Band:	On-Air		
MARKET LOCATION 1900 MHz Band:	On-Air		
MARKET LOCATION AWS Band:			
MARKET LOCATION WCS Band:			
MARKET LOCATION Future Band:			

Section 5 - E-911 INFORMATION - existing

	PSAP NAME:	PSAP ID:	E911 PHASE:	MPC SVC PROVIDER:	LMU REQUIRED:	ESRN:	DATE LIVE PH1:	DATE LIVE PH2:		
SECTOR A E-911				INTRADO		0				
SECTOR B				INTRADO		0				
SECTOR C				INTRADO		0				
SECTOR D										
SECTOR E										
SECTOR F										
OMNI										

Section 5 - E-911 INFORMATION - final

	PSAP NAME:	PSAP ID:	E911 PHASE:	MPC SVC PROVIDER:	LMU REQUIRED:	ESRN:	DATE LIVE PH1:	DATE LIVE PH2:		
SECTOR A E-911				INTRADO		0				
SECTOR B				INTRADO		0				
SECTOR C				INTRADO		0				
SECTOR D										
SECTOR E										
SECTOR F										
OMNI										

SECTION 6/7 - BBU INFORMATION - existing

	BBU 1	BBU 2							
BBU RBS ID:	662681	366893							
TECHNOLOGY:	LTE	LTE							
BBU NAME:	CTL00813R	CTL02013							
BBU USID:	61157	61157							
CELL ID / BCF:	CTL00813R	CTL02013							
BTA/TID:	318L	318L							
4-9 DIGIT SITE ID:	00813	2013							
COW OR TOY?:	No	No							
CELL SITE TYPE:	SECTORIZED	SECTORIZED							
SITE TYPE:	MACRO-CONVENTIONAL	MACRO-CONVENTIONAL							
BTS LOCATION ID:	INTERNAL								
BASE STATION TYPE:	BASE	BASE							
EQUIPMENT NAME:	NEW HAVEN WEST ROCK	NEW HAVEN WEST ROCK							
DISASTER PRIORITY:	3	3							
EQUIPMENT VENDOR:	ERICSSON	ERICSSON							
EQUIPMENT TYPE (Model):	6601 RADIONODE 5216	6601 RADIONODE 5216							
BASEBAND CONFIGURATION:									
MARKET STATE CODE:	CT	CT							
NODE B NUMBER:	813	2013							
SIDEHAUL SWITCH VENDOR:									
SIDEHAUL SWITCH MODEL:									
SIDEHAUL SWITCH NAME:									
SIDEHAUL SWITCH ADDITIONAL CARDS:									
UL-CoMP:									
CSS - CTS COMMON ID:	CTL00813R	CTL02013							
CSS - SECONDARY FUNCTION ID:	CTCN002013								

SECTION 6/7 - BBU INFORMATION - final

	BBU 1	BBU 2							
BBU RBS ID:	366893	662681							
TECHNOLOGY:	LTE	LTE,5G							
BBU NAME:	CTL02013	CTL00813R,CTCN002013							
BBU USID:	61157	61157							
CELL ID / BCF:	CTL02013	CTL00813R							
BTA/TID:	318L	318L							
4-9 DIGIT SITE ID:	2013	00813							
COW OR TOY?:	No	No							
CELL SITE TYPE:	SECTORIZED	SECTORIZED							
SITE TYPE:	MACRO-CONVENTIONAL	MACRO-CONVENTIONAL							
BTS LOCATION ID:	INTERNAL	INTERNAL							
BASE STATION TYPE:	BASE	BASE							
EQUIPMENT NAME:	NEW HAVEN WEST ROCK	NEW HAVEN WEST ROCK							
DISASTER PRIORITY:	3	3							
EQUIPMENT VENDOR:	ERICSSON	ERICSSON							
EQUIPMENT TYPE (Model):	6601 RADIONODE 5216	BASEBAND 6648							
BASEBAND CONFIGURATION:	1x6601 / 1x5216 / 1xXMU + IDLe	xxxxx / 1x6648 / xxxxx + IDLe							
MARKET STATE CODE:	CT	CT,CTC							
NODE B NUMBER:	2013	813,2013							
SIDEHAUL SWITCH VENDOR:									
SIDEHAUL SWITCH MODEL:									
SIDEHAUL SWITCH NAME:									
SIDEHAUL SWITCH ADDITIONAL CARDS:									
UL-CoMP:									
CSS - CTS COMMON ID:	CTL02013	CTL00813R							
CSS - SECONDARY FUNCTION ID:		CTCN002013							

Section 8 - RBS/SECTOR ASSOCIATION - existing

	BBU 1	BBU 2
CTS Common ID	CTL00813R	CTL02013
Soft Sector IDs	CTL00813_2A_2	CTL02013_3A_1
	CTL00813_2B_2	CTL02013_3B_1
	CTL00813_2C_2	CTL02013_3C_1
	CTL00813_7A_2_E	CTL02013_7A_1
	CTL00813_7A_3_F	CTL02013_7A_3_F
	CTL00813_7B_2_E	CTL02013_7B_1
	CTL00813_7B_3_F	CTL02013_7B_3_F
	CTL00813_7C_2_E	CTL02013_7C_1
	CTL00813_7C_3_F	CTL02013_7C_3_F
	CTL00813_9A_1	CTL02013_8A_1
	CTL00813_9A_2	CTL02013_8B_1
	CTL00813_9B_1	CTL02013_8C_1
	CTL00813_9B_2	CTL02013_9A_1
	CTL00813_9C_1	CTL02013_9A_2
	CTL00813_9C_2	CTL02013_9B_1
		CTL02013_9B_2
		CTL02013_9C_1
		CTL02013_9C_2

Section 8 - RBS/SECTOR ASSOCIATION - final

	BBU 1	BBU 2
CTS Common ID	CTL02013	CTL00813R,CTCN002013
Soft Sector IDs	CTL02013_3A_1	CTCN002013_N002A_1
	CTL02013_3B_1	CTCN002013_N002B_1
	CTL02013_3C_1	CTCN002013_N002C_1
	CTL02013_7A_1	CTCN002013_N005A_1
	CTL02013_7A_2_E	CTCN002013_N005B_1
	CTL02013_7A_3_F	CTCN002013_N005C_1
	CTL02013_7B_1	CTCN002013_N066A_1
	CTL02013_7B_2_E	CTCN002013_N066B_1
	CTL02013_7B_3_F	CTCN002013_N066C_1
	CTL02013_7C_1	CTL00813_2A_2
	CTL02013_7C_2_E	CTL00813_2B_2
	CTL02013_7C_3_F	CTL00813_2C_2
		CTL00813_9A_1
		CTL00813_9A_2
		CTL00813_9B_1
		CTL00813_9B_2
		CTL00813_9C_1
		CTL00813_9C_2

Section 9 - SOFT SECTOR ID - existing

	LTE 1ST 700	LTE 1ST 850	LTE 1ST 1900	LTE 1ST AWS	LTE 1ST WCS	LTE 2ND 700	LTE 2ND 1900	LTE 3RD 700	LTE 3RD 1900	LTE 4TH 700	LTE 4TH 1900	5G 1ST 850	5G 1ST 1900	5G 1ST AWS
USEID (excluding Hard Sector)														
SECTOR A SOFT SECTOR ID	CTL02013_7A_1	CTL02013_8A_1	CTL02013_9A_1	CTL00813_2A_2	CTL02013_3A_1	CTL00813_7A_2_E	CTL00813_9A_2	CTL00813_7A_3_F	CTL00813_9A_1	CTL02013_7A_3_F	CTL02013_9A_2			
SECTOR B	CTL02013_7B_1	CTL02013_8B_1	CTL02013_9B_1	CTL00813_2B_2	CTL02013_3B_1	CTL00813_7B_2_E	CTL00813_9B_2	CTL00813_7B_3_F	CTL00813_9B_1	CTL02013_7B_3_F	CTL02013_9B_2			
SECTOR C	CTL02013_7C_1	CTL02013_8C_1	CTL02013_9C_1	CTL00813_2C_2	CTL02013_3C_1	CTL00813_7C_2_E	CTL00813_9C_2	CTL00813_7C_3_F	CTL00813_9C_1	CTL02013_7C_3_F	CTL02013_9C_2			
SECTOR D														
SECTOR E														
SECTOR F														
OMNI														

Section 9 - SOFT SECTOR ID - final

	LTE 1ST 700	LTE 1ST 850	LTE 1ST 1900	LTE 1ST AWS	LTE 1ST WCS	LTE 2ND 700	LTE 2ND 1900	LTE 3RD 700	LTE 3RD 1900	LTE 4TH 700	LTE 4TH 1900	5G 1ST 850	5G 1ST 1900	5G 1ST AWS
USEID (excluding Hard Sector)														
SECTOR A SOFT SECTOR ID	CTL02013_7A_1			CTL00813_2A_2	CTL02013_3A_1	CTL02013_7A_2_E	CTL00813_9A_2		CTL00813_9A_1	CTL02013_7A_3_F		CTCN002013_N005A_1	CTCN002013_N002A_1	CTCN002013_N066A_1
SECTOR B	CTL02013_7B_1			CTL00813_2B_2	CTL02013_3B_1	CTL02013_7B_2_E	CTL00813_9B_2		CTL00813_9B_1	CTL02013_7B_3_F		CTCN002013_N005B_1	CTCN002013_N002B_1	CTCN002013_N066B_1
SECTOR C	CTL02013_7C_1			CTL00813_2C_2	CTL02013_3C_1	CTL02013_7C_2_E	CTL00813_9C_2		CTL00813_9C_1	CTL02013_7C_3_F		CTCN002013_N005C_1	CTCN002013_N002C_1	CTCN002013_N066C_1
SECTOR D														
SECTOR E														
SECTOR F														
OMNI														

Section 9 - Cell Number - existing

	LTE 1ST 700	LTE 1ST 850	LTE 1ST 1900	LTE 1ST AWS	LTE 1ST WCS	LTE 2ND 700	LTE 2ND 1900	LTE 3RD 700	LTE 3RD 1900	LTE 4TH 700	LTE 4TH 1900	5G 1ST 850	5G 1ST 1900	5G 1ST AWS												
USEID (excluding Hard Sector)																										
SECTOR A CELL NUMBER	15	1	8	192	149	185	178	171	8	171	178															
SECTOR B	16	2	9	193	150	186	179	172	9	172	179															
SECTOR C	17	3	10	194	151	187	180	173	10	173	180															
SECTOR D																										
SECTOR E																										
SECTOR F																										
OMNI																										

Section 9 - Cell Number - final

	LTE 1ST 700	LTE 1ST 850	LTE 1ST 1900	LTE 1ST AWS	LTE 1ST WCS	LTE 2ND 700	LTE 2ND 1900	LTE 3RD 700	LTE 3RD 1900	LTE 4TH 700	LTE 4TH 1900	5G 1ST 850	5G 1ST 1900	5G 1ST AWS												
USEID (excluding Hard Sector)																										
SECTOR A CELL NUMBER	15			192	149	185	178		8	171		28	27	26												
SECTOR B	16			193	150	186	179		9	172		52	51	50												
SECTOR C	17			194	151	187	180		10	173		76	75	74												
SECTOR D																										
SECTOR E																										
SECTOR F																										
OMNI																										

Section 10 - CID/SAC - existing

	LTE 1ST 700	LTE 1ST 850	LTE 1ST 1900	LTE 1ST AWS	LTE 1ST WCS	LTE 2ND 700	LTE 2ND 1900	LTE 3RD 700	LTE 3RD 1900	LTE 4TH 700	LTE 4TH 1900	5G 1ST 850	5G 1ST 1900	5G 1ST AWS													
SECTOR A CID/SAC																											
SECTOR B																											
SECTOR C																											
SECTOR D																											
SECTOR E																											
SECTOR F																											
OMNI																											

Section 10 - CID/SAC - final

	LTE 1ST 700	LTE 1ST 850	LTE 1ST 1900	LTE 1ST AWS	LTE 1ST WCS	LTE 2ND 700	LTE 2ND 1900	LTE 3RD 700	LTE 3RD 1900	LTE 4TH 700	LTE 4TH 1900	5G 1ST 850	5G 1ST 1900	5G 1ST AWS													
SECTOR A CID/SAC																											
SECTOR B																											
SECTOR C																											
SECTOR D																											
SECTOR E																											
SECTOR F																											
OMNI																											

Section 15A - CURRENT TOWER CONFIGURATION - SECTOR A (OR OMNI)

ANTENNA POSITION is LEFT to RIGHT from BACK OF ANTENNA (unless otherwise specified)	ANTENNA POSITION 1	ANTENNA POSITION 2	ANTENNA POSITION 3	ANTENNA POSITION 4	ANTENNA POSITION 5	ANTENNA POSITION 6	ANTENNA POSITION 7
ANTENNA MAKE - MODEL	TPA-65R-LCUUUU-H8		HPA-65R-BUU-H8	SBNH-1D6565C			
ANTENNA VENDOR	CCI		CCI Products	Andrew			
ANTENNA SIZE (H x W x D)	96X14.4X8.6		92.4X14.8X7.4	96.4X11.9X7.1			
ANTENNA WEIGHT	94.2		68	60.8			
AZIMUTH	10		10	40			
MAGNETIC DECLINATION							
RADIATION CENTER (feet)	80		80	80			
ANTENNA TIP HEIGHT	84		84	84			
MECHANICAL DOWNTILT	0		0	0			
FEEDER AMOUNT				2			
VERTICAL SEPARATION from ANTENNA ABOVE (TIP to TIP)							
VERTICAL SEPARATION from ANTENNA BELOW (TIP to TIP)							
HORIZONTAL SEPARATION from CLOSEST ANTENNA to LEFT (CENTERLINE to CENTERLINE)							
HORIZONTAL SEPARATION from CLOSEST ANTENNA to RIGHT (CENTERLINE to CENTERLINE)							
HORIZONTAL SEPARATION from ANOTHER ANTENNA (which antenna # / # of inches)							
Antenna RET Motor (QTY/MODEL)	Internal		Internal	Internal			
SURGE ARRESTOR (QTY/MODEL)				1 1000860			
DIPLEXER (QTY/MODEL)				2 CM1007-DBPXBC-003			
DUPLEXER (QTY/MODEL)							
Antenna RET CONTROL UNIT (QTY/MODEL)	RRH CONTROLLED		RRH CONTROLLED	1 860-10006			
DC BLOCK (QTY/MODEL)							
TMA/LNA (QTY/MODEL)				1 DTMABP7819VG12A			
CURRENT INJECTORS FOR TMA (QTY/MODEL)							
PDU FOR TMAS (QTY/MODEL)							
FILTER (QTY/MODEL)							
SQUID (QTY/MODEL)	1 DC6-48-60-18-8F						
FIBER TRUNK (QTY/MODEL)							
DC TRUNK (QTY/MODEL)							
REPEATER (QTY/MODEL)							
RRH - 700 band (QTY/MODEL)	1 RRUS-11 B12						
RRH - 850 band (QTY/MODEL)							
RRH - 1900 band (QTY/MODEL)	1 RRUS-32 B2						
RRH - AWS band (QTY/MODEL)							
RRH - WCS band (QTY/MODEL)			1 RRUS-32 B30				
Additional RRH #1 - any band (QTY/MODEL)							
Additional RRH #2 - any band (QTY/MODEL)							
RRH 7B 1 (QTY/MODEL)							
RRH 7B 2 (QTY/MODEL)							
RRH 7B 3 (QTY/MODEL)							
Additional Component 1 (QTY/MODEL)							
Additional Component 2 (QTY/MODEL)							
Additional Component 3 (QTY/MODEL)							
Local Market Note 1							
Local Market Note 2							
Local Market Note 3							

PORT SPECIFIC FIELDS	PORT NUMBER	USEID (CSSng)	USEID (Atoll)	ATOLL TXID	ATOLL CELL ID	TX/RX ?	TECHNOLOGY/FREQUENCY	ANTENNA ATOLL	ANTENNA GAIN	ELECTRICAL AZIMUTH	ELECTRICAL TILT	RRH LOCATION (Top/Bottom/Integrated/None)	FEEDERS TYPE	FEEDER LENGTH (feet)	RXAIT KIT MODULE?	TRIPLEXER or LLC (QTY)	TRIPLEXER or LLC (MODEL)	SCPA/MCPA MODULE?	HATCHPLATE POWER (Watts)	ERP (Watts)	Antenna RET Name	CABLE NUMBER	CABLE ID (CSSNG)
ANTENNA POSITION 1	PORT 1		61157.A.700.4G.1	CTL02013_7A_1	CTL02013_7A_1		LTE 700	TPA-65R-LCUUUU-H8_719MHz_06DT	14.7	10	6	Top	Fiber	0						1475.7065		1	
	PORT 3		61157.A.1900.4G.1	CTL02013_9A_1	CTL02013_9A_1		LTE 1900	TPA-65R-LCUUUU-H8_1930MHz_07DT	17.4	10	7	Top	Fiber	0						3664.3757		2	
ANTENNA POSITION 3	PORT 3		61157.A.WCS.4G.1	CTL02013_3A_1	CTL02013_3A_1		LTE WCS	HPA-65R-BUU-H8_2350MHz_03DT	17.7	10	3	Top	Fiber	0						1285.2866		2	

ANTENNA POSITION 4	**PORT 1**		61157.A.850.3G.1	CTV20131	CTV20131		UMTS 850	SBNH-1D6565C_850MHz_00DT	16.2	40	0	None	Fiber	0						263.63		2	
	PORT 2		61157.A.850.3G.2	CTV20131	CTV2013A		UMTS 850	SBNH-1D6565C_850MHz_00DT	16.2	40	0	None	1-1/4 Andrew	95						263.63		3	
	PORT 3		61157.A.1900.3G.1	CTU60137	CTU60137		UMTS 1900	SBNH-1D6565C_1930MHz_00DT	18	40	0	None	1-1/4 Andrew	95						503.5			
	PORT 4		61157.A.1900.3G.2	CTU60137	CTU60134		UMTS 1900	SBNH-1D6565C_1930MHz_00DT	18	40	0	None	1-1/4 Andrew	95						503.5			
	PORT 5		61157.A.850.25G.1	318G20131WE	318G20131WE		GSM 850	SBNH-1D6565C_850MHz_00DT	16.2	40	0	None	1-1/4 Andrew	95	RxAIT - 850	1	LLC - 850	YES		263.63			

Section 15B - CURRENT TOWER CONFIGURATION - SECTOR B

ANTENNA POSITION is LEFT to RIGHT from BACK OF ANTENNA (unless otherwise specified)	ANTENNA POSITION 1		ANTENNA POSITION 2		ANTENNA POSITION 3		ANTENNA POSITION 4		ANTENNA POSITION 5		ANTENNA POSITION 6		ANTENNA POSITION 7	
ANTENNA MAKE - MODEL	TPA-65R-LCUUUU-H8				HPA-65R-BUU-H8		SBNH-1D6565C							
ANTENNA VENDOR	CCI				CCI Products		Andrew							
ANTENNA SIZE (H x W x D)	96X14.4X8.6				92.4X14.8X7.4		96.4X11.9X7.1							
ANTENNA WEIGHT	94.2				68		60.8							
AZIMUTH	120				120		210							
MAGNETIC DECLINATION														
RADIATION CENTER (feet)	80				80		80							
ANTENNA TIP HEIGHT	84				84		84							
MECHANICAL DOWNTILT	0				0		0							
FEEDER AMOUNT							2							
VERTICAL SEPARATION from ANTENNA ABOVE (TIP to TIP)														
VERTICAL SEPARATION from ANTENNA BELOW (TIP to TIP)														
HORIZONTAL SEPARATION from CLOSEST ANTENNA to LEFT (CENTERLINE to CENTERLINE)														
HORIZONTAL SEPARATION from CLOSEST ANTENNA to RIGHT (CENTERLINE to CENTERLINE)														
HORIZONTAL SEPARATION from ANOTHER ANTENNA (which antenna # / # of inches)														
Antenna RET Motor (QTY/MODEL)		Internal				Internal		Internal						
SURGE ARRESTOR (QTY/MODEL)							1	1000860						
DIPLEXER (QTY/MODEL)							2	CM1007-DBPXBC-003						
DUPLEXER (QTY/MODEL)														
Antenna RET CONTROL UNIT (QTY/MODEL)		RRH CONTROLLED				RRH CONTROLLED								
DC BLOCK (QTY/MODEL)														
TMA/LNA (QTY/MODEL)							1	DTMABP7819VG12A						
CURRENT INJECTORS FOR TMA (QTY/MODEL)														
PDU FOR TMAS (QTY/MODEL)														
FILTER (QTY/MODEL)														
SQUID (QTY/MODEL)	1	DC6-48-60-18-8F												
FIBER TRUNK (QTY/MODEL)														
DC TRUNK (QTY/MODEL)														
REPEATER (QTY/MODEL)														
RRH - 700 band (QTY/MODEL)	1	RRUS-11 B12												
RRH - 850 band (QTY/MODEL)														
RRH - 1900 band (QTY/MODEL)	1	RRUS-32 B2												
RRH - AWS band (QTY/MODEL)														
RRH - WCS band (QTY/MODEL)					1	RRUS-32 B30								
Additional RRH #1 - any band (QTY/MODEL)														
Additional RRH #2 - any band (QTY/MODEL)														
RRH 7B 1 (QTY/MODEL)														
RRH 7B 2 (QTY/MODEL)														
RRH 7B 3 (QTY/MODEL)														
Additional Component 1 (QTY/MODEL)														
Additional Component 2 (QTY/MODEL)														
Additional Component 3 (QTY/MODEL)														
Local Market Note 1														
Local Market Note 2														
Local Market Note 3														

PORT SPECIFIC FIELDS	PORT NUMBER	USEID (CSSng)	USEID (Atoll)	ATOLL TXID	ATOLL CELL ID	TX/RX ?	TECHNOLOGY/FREQUENCY	ANTENNA ATOLL	ANTENNA GAIN	ELECTRICAL AZIMUTH	ELECTRICAL TILT	RRH LOCATION (Top/Bottom/Integrated/None)	FEEDERS TYPE	FEEDER LENGTH (feet)	RXAIT KIT MODULE?	TRIPLEXER or LLC (QTY)	TRIPLEXER or LLC (MODEL)	SCPA/MCPA MODULE?	HATCHPLATE POWER (Watts)	ERP (Watts)	Antenna RET Name	CABLE NUMBER	CABLE ID (CSSNG)
ANTENNA POSITION 1	PORT 1		61157.B.700.4G.1	CTL02013_7B_1	CTL02013_7B_1		LTE 700	TPA-65R-LCUUUU-H8_719MHz_06DT	14.7	120	6	Top	Fiber	0						1475.7065			
	PORT 3		61157.B.1900.4G.1	CTL02013_9B_1	CTL02013_9B_1		LTE 1900	TPA-65R-LCUUUU-H8_1930MHz_07DT	17.4	120	7	Top	Fiber	0						3664.3757			
ANTENNA POSITION 3	PORT 3		61157.B.WCS.4G.1	CTL02013_3B_1	CTL02013_3B_1		LTE WCS	HPA-65R-BUU-H8_2350MHz_03DT	17.7	120	3	Top	Fiber	0						1285.2866			

ANTENNA POSITION 4	**PORT 1**		61157.B.850.3G.1	CTV20132	CTV20132		UMTS 850	SBNH-1D6565C_850MHz_00DT	16.2	210	0	None	1-1/4 Andrew	95						263.63		5	
	PORT 2		61157.B.850.3G.2	CTV20132	CTV2013B		UMTS 850	SBNH-1D6565C_850MHz_00DT	16.2	210	0	None	1-1/4 Andrew	95						263.63		5	
	PORT 3		61157.B.1900.3G.1	CTU60138	CTU60138		UMTS 1900	SBNH-1D6565C_1930MHz_00DT	18	210	0	None	1-1/4 Andrew	95						503.5		6	
	PORT 4		61157.B.1900.3G.2	CTU60138	CTU60135		UMTS 1900	SBNH-1D6565C_1930MHz_00DT	18	210	0	None	1-1/4 Andrew	95						503.5		5	
	PORT 5		61157.B.850.25G.1	318G20132WE	318G20132WE		GSM 850	SBNH-1D6565C_850MHz_00DT	16.2	210	0	None	1-1/4 Andrew	95	RxAIT - 850	1	LLC - 850	YES		263.63		7	

Section 15C - CURRENT TOWER CONFIGURATION - SECTOR C

ANTENNA POSITION is LEFT to RIGHT from BACK OF ANTENNA (unless otherwise specified)	ANTENNA POSITION 1	ANTENNA POSITION 2	ANTENNA POSITION 3	ANTENNA POSITION 4	ANTENNA POSITION 5	ANTENNA POSITION 6	ANTENNA POSITION 7
ANTENNA MAKE - MODEL	QS66512-2		HPA-65R-BUU-H6				
ANTENNA VENDOR	Quintel		CCI Products				
ANTENNA SIZE (H x W x D)	72X12X9.6		72X14.8X9				
ANTENNA WEIGHT	111		50.7				
AZIMUTH	250		250				
MAGNETIC DECLINATION							
RADIATION CENTER (feet)	80		80				
ANTENNA TIP HEIGHT	83		83				
MECHANICAL DOWNTILT	0		0				
FEEDER AMOUNT							
VERTICAL SEPARATION from ANTENNA ABOVE (TIP to TIP)							
VERTICAL SEPARATION from ANTENNA BELOW (TIP to TIP)							
HORIZONTAL SEPARATION from CLOSEST ANTENNA to LEFT (CENTERLINE to CENTERLINE)							
HORIZONTAL SEPARATION from CLOSEST ANTENNA to RIGHT (CENTERLINE to CENTERLINE)							
HORIZONTAL SEPARATION from ANOTHER ANTENNA (which antenna # / # of inches)							
Antenna RET Motor (QTY/MODEL)	Internal		Internal				
SURGE ARRESTOR (QTY/MODEL)							
DIPLEXER (QTY/MODEL)							
DUPLEXER (QTY/MODEL)							
Antenna RET CONTROL UNIT (QTY/MODEL)	RRH CONTROLLED		RRH CONTROLLED				
DC BLOCK (QTY/MODEL)							
TMA/LNA (QTY/MODEL)							
CURRENT INJECTORS FOR TMA (QTY/MODEL)							
PDU FOR TMAS (QTY/MODEL)							
FILTER (QTY/MODEL)			1 WCS-IMFQ-AMT				
SQUID (QTY/MODEL)							
FIBER TRUNK (QTY/MODEL)							
DC TRUNK (QTY/MODEL)							
REPEATER (QTY/MODEL)							
RRH - 700 band (QTY/MODEL)	1 RRUS-11 B12						
RRH - 850 band (QTY/MODEL)							
RRH - 1900 band (QTY/MODEL)	1 RRUS-32 B2						
RRH - AWS band (QTY/MODEL)							
RRH - WCS band (QTY/MODEL)			1 RRUS-32 B30				
Additional RRH #1 - any band (QTY/MODEL)							
Additional RRH #2 - any band (QTY/MODEL)							
RRH 7B 1 (QTY/MODEL)							
RRH 7B 2 (QTY/MODEL)							
RRH 7B 3 (QTY/MODEL)							
Additional Component 1 (QTY/MODEL)							
Additional Component 2 (QTY/MODEL)							
Additional Component 3 (QTY/MODEL)							
Local Market Note 1							
Local Market Note 2							
Local Market Note 3							

PORT SPECIFIC FIELDS	PORT NUMBER	USEID (CSSng)	USEID (Atoll)	ATOLL TXID	ATOLL CELL ID	TX/RX ?	TECHNOLOGY/FREQUENCY	ANTENNA ATOLL	ANTENNA GAIN	ELECTRICAL AZIMUTH	ELECTRICAL TILT	RRH LOCATION (Top/Bottom/Integrated/None)	FEEDERS TYPE	FEEDER LENGTH (feet)	RXAIT KIT MODULE?	TRIPLEXER or LLC (QTY)	TRIPLEXER or LLC (MODEL)	SCPA/MCPA MODULE?	HATCHPLATE POWER (Watts)	ERP (Watts)	Antenna RET Name	CABLE NUMBER	CABLE ID (CSSNG)
ANTENNA POSITION 1	PORT 1		61157.C.700.4G.1	CTL02013_7C_1	CTL02013_7C_1		LTE 700	QS66512-2_722MHz_07DT	13	250	7	Top	Fiber	0						1119.4378			
	PORT 3		61157.C.1900.4G.1	CTL02013_9C_1	CTL02013_9C_1		LTE 1900	QS66512-2_1930MHz_02DT	16	250	2	Top	Fiber	0						3303.6954			
ANTENNA POSITION 3	PORT 3		61157.C.WCS.4G.1	CTL02013_3C_1	CTL02013_3C_1		LTE WCS	HPA-65R-BUU-H6_2360MHz_03DT	17.45	250	3	Top	Fiber	0						1183.0415		9	

Section 16A - PLANNED/PROPOSED TOWER CONFIGURATION - SECTOR A (OR OMNI)

ANTENNA POSITION is LEFT to RIGHT from BACK OF ANTENNA (unless otherwise specified)	ANTENNA POSITION 1	ANTENNA POSITION 2	ANTENNA POSITION 3	ANTENNA POSITION 4	ANTENNA POSITION 5	ANTENNA POSITION 6	ANTENNA POSITION 7
Existing Antenna?							
ANTENNA MAKE - MODEL		QD8616-7		800-10966			
ANTENNA VENDOR		Quintel		Kathrien			
ANTENNA SIZE (H x W x D)		96X22X9.6		96X20X6.9			
ANTENNA WEIGHT		68.2		114.6			
AZIMUTH		10		10			
MAGNETIC DECLINATION							
RADIATION CENTER (feet)		84		84			
ANTENNA TIP HEIGHT		88		88			
MECHANICAL DOWNTILT		0		0			
FEEDER AMOUNT							
VERTICAL SEPARATION from ANTENNA ABOVE (TIP to TIP)							
VERTICAL SEPARATION from ANTENNA BELOW (TIP to TIP)							
HORIZONTAL SEPARATION from CLOSEST ANTENNA to LEFT (CENTERLINE to CENTERLINE)							
HORIZONTAL SEPARATION from CLOSEST ANTENNA to RIGHT (CENTERLINE to CENTERLINE)							
HORIZONTAL SEPARATION from ANOTHER ANTENNA (which antenna # / # of inches)							
Antenna RET Motor (QTY/MODEL)							
SURGE ARRESTOR (QTY/MODEL)							
DIPLEXER (QTY/MODEL)							
DUPLEXER (QTY/MODEL)							
Antenna RET CONTROL UNIT (QTY/MODEL)							
DC BLOCK (QTY/MODEL)							
TMA/LNA (QTY/MODEL)							
CURRENT INJECTORS FOR TMA (QTY/MODEL)							
PDU FOR TMAS (QTY/MODEL)							
FILTER (QTY/MODEL)							
SQUID (QTY/MODEL)							
FIBER TRUNK (QTY/MODEL)							
DC TRUNK (QTY/MODEL)							
REPEATER (QTY/MODEL)							
RRH - 700 band (QTY/MODEL)		1 4478 B14		1 4449 B5/B12			
RRH - 850 band (QTY/MODEL)				RRH is shared with another band			
RRH - 1900 band (QTY/MODEL)		1 8843 B2/B66A					
RRH - AWS band (QTY/MODEL)		1 RRH is shared with another band					
RRH - WCS band (QTY/MODEL)							
Additional RRH #1 - any band (QTY/MODEL)		1 2012 B29					
Additional RRH #2 - any band (QTY/MODEL)							
RRH 7B 1 (QTY/MODEL)							
RRH 7B 2 (QTY/MODEL)							
RRH 7B 3 (QTY/MODEL)							
Additional Component 1 (QTY/MODEL)		1 Y-cable		1 Y-cable			
Additional Component 2 (QTY/MODEL)							
Additional Component 3 (QTY/MODEL)							
Local Market Note 1	SOW: - Follow Antenna/RRHs positions as per PDs.-Keep Pos-1 Empty for future SOW.-Replace antennas.-Replace/Add RRHs.-Add 6651,Add IDLe Cable Xcede.-Add Y Cable for Dual band radio-Swap DC only squid with DC Fiber squid.-Decom UMTS and remove unused line elements.-Follow final BB Configuration from LM3/PDs.						
Local Market Note 2							
Local Market Note 3	5216-XMU03-6651-IDLe Xcede.						

PORT SPECIFIC FIELDS	PORT NUMBER	USEID (CSSng)	USEID (Atoll)	ATOLL TXID	ATOLL CELL ID	TX/RX ?	TECHNOLOGY/FREQUENCY	ANTENNA ATOLL	ANTENNA GAIN	ELECTRICAL AZIMUTH	ELECTRICAL TILT	RRH LOCATION (Top/Bottom/Integrated/None)	FEEDERS TYPE	FEEDER LENGTH (feet)	RXAIT KIT MODULE?	TRIPLEXER or LLC (QTY)	TRIPLEXER or LLC (MODEL)	SCPA/MCPA MODULE?	HATCHPLATE POWER (Watts)	ERP (Watts)	Antenna RET Name	CABLE NUMBER	CABLE ID (CSSNG)
ANTENNA POSITION 2	PORT 1			CTL02013_7A_2_E	CTL02013_7A_2_E		LTE 700	QD8616-7_719MHz_03DT		10	3	TOP	FIBER	0									
	PORT 2			CTL02013_7A_3_F	CTL02013_7A_3_F		LTE 700	QD8616-7_719MHz_03DT		10	3	TOP	FIBER	0									

	PORT 3			CTL00813_9A_1	CTL00813_9A_1		LTE 1900	QD8616-7_1930MHz_03DT		10	3	TOP	FIBER	0									
	PORT 4			CTL00813_9A_2	CTL00813_9A_2		LTE 1900	QD8616-7_1930MHz_03DT		10	3	TOP	FIBER	0									
	PORT 8			CTL00813_2A_2	CTL00813_2A_2		LTE AWS	QD8616-7_2170MHz_05DT		10	5	TOP	FIBER	0									
	PORT 11			CTCN002013_N002A_1	CTCN002013_N002A_1		5G 1900	QD8616-7_1930MHz_05DT		10	5	TOP	FIBER	0									
	PORT 12			CTCN002013_N066A_1	CTCN002013_N066A_1		5G AWS	QD8616-7_2170MHz_05DT		10	5	TOP	FIBER	0									
ANTENNA POSITION 4	**PORT 1**			CTL02013_7A_1	CTL02013_7A_1		LTE 700	800-10966_719MHz_08DT		10	8	TOP	FIBER	0									
	PORT 3			CTL02013_3A_1	CTL02013_3A_1		LTE WCS	800-10966_2355MHz_03DT		10	3	TOP	FIBER	0									
	PORT 5			CTCN002013_N005A_1	CTCN002013_N005A_1		5G 850	800-10966_849MHz_04DT		10	4	TOP	FIBER	0									

Section 16B - PLANNED/PROPOSED TOWER CONFIGURATION - SECTOR B

ANTENNA POSITION is LEFT to RIGHT from BACK OF ANTENNA (unless otherwise specified)	ANTENNA POSITION 1	ANTENNA POSITION 2	ANTENNA POSITION 3	ANTENNA POSITION 4	ANTENNA POSITION 5	ANTENNA POSITION 6	ANTENNA POSITION 7
Existing Antenna?							
ANTENNA MAKE - MODEL		QD8616-7		800-10966			
ANTENNA VENDOR		Quintel		Kathrien			
ANTENNA SIZE (H x W x D)		96X22X9.6		96X20X6.9			
ANTENNA WEIGHT		68.2		114.6			
AZIMUTH		120		120			
MAGNETIC DECLINATION							
RADIATION CENTER (feet)		84		84			
ANTENNA TIP HEIGHT		88		88			
MECHANICAL DOWNTILT		0		0			
FEEDER AMOUNT							
VERTICAL SEPARATION from ANTENNA ABOVE (TIP to TIP)							
VERTICAL SEPARATION from ANTENNA BELOW (TIP to TIP)							
HORIZONTAL SEPARATION from CLOSEST ANTENNA to LEFT (CENTERLINE to CENTERLINE)							
HORIZONTAL SEPARATION from CLOSEST ANTENNA to RIGHT (CENTERLINE to CENTERLINE)							
HORIZONTAL SEPARATION from ANOTHER ANTENNA (which antenna # / # of inches)							
Antenna RET Motor (QTY/MODEL)							
SURGE ARRESTOR (QTY/MODEL)							
DIPLEXER (QTY/MODEL)							
DUPLEXER (QTY/MODEL)							
Antenna RET CONTROL UNIT (QTY/MODEL)							
DC BLOCK (QTY/MODEL)							
TMA/LNA (QTY/MODEL)							
CURRENT INJECTORS FOR TMA (QTY/MODEL)							
PDU FOR TMAS (QTY/MODEL)							
FILTER (QTY/MODEL)							
SQUID (QTY/MODEL)							
FIBER TRUNK (QTY/MODEL)							
DC TRUNK (QTY/MODEL)							
REPEATER (QTY/MODEL)							
RRH - 700 band (QTY/MODEL)		1 4478 B14		1 4449 B5/B12			
RRH - 850 band (QTY/MODEL)				RRH is shared with another band			
RRH - 1900 band (QTY/MODEL)		1 8843 B2/B66A					
RRH - AWS band (QTY/MODEL)		1 RRH is shared with another band					
RRH - WCS band (QTY/MODEL)							
Additional RRH #1 - any band (QTY/MODEL)		1 2012 B29					
Additional RRH #2 - any band (QTY/MODEL)							
RRH 7B 1 (QTY/MODEL)							
RRH 7B 2 (QTY/MODEL)							
RRH 7B 3 (QTY/MODEL)							
Additional Component 1 (QTY/MODEL)		1 Y-cable		1 Y-cable			
Additional Component 2 (QTY/MODEL)							
Additional Component 3 (QTY/MODEL)							
Local Market Note 1	SOW: - Follow Antenna/RRHs positions as per PDs.-Keep Pos-1 Empty for future SOW.-Replace antennas.-Replace/Add RRHs.-Add 6651,Add IDLe Cable Xcede.-Add Y Cable for Dual band radio-Swap DC only squid with DC Fiber squid.-Decom UMTS and remove unused line elements.-Follow final BB Configuration from LM3/PDs.						
Local Market Note 2							
Local Market Note 3	5216-XMU03-6651-IDLe Xcede.						

PORT SPECIFIC FIELDS	PORT NUMBER	USEID (CSSng)	USEID (Atoll)	ATOLL TXID	ATOLL CELL ID	TX/RX ?	TECHNOLOGY/FREQUENCY	ANTENNA ATOLL	ANTENNA GAIN	ELECTRICAL AZIMUTH	ELECTRICAL TILT	RRH LOCATION (Top/Bottom/Integrated/None)	FEEDERS TYPE	FEEDER LENGTH (feet)	RXAIT KIT MODULE?	TRIPLEXER or LLC (QTY)	TRIPLEXER or LLC (MODEL)	SCPA/MCPA MODULE?	HATCHPLATE POWER (Watts)	ERP (Watts)	Antenna RET Name	CABLE NUMBER	CABLE ID (CSSNG)
ANTENNA POSITION 2	PORT 1			CTL02013_7B_2_E	CTL02013_7B_2_E		LTE 700	QD8616-7_719MHz_03DT		120	3	TOP	FIBER	0									
	PORT 2			CTL02013_7B_3_F	CTL02013_7B_3_F		LTE 700	QD8616-7_719MHz_03DT		120	3	TOP	FIBER	0									

	PORT 3			CTL00813_9B_1	CTL00813_9B_1		LTE 1900	QD8616-7_1930MHz_03DT		120	3	TOP	FIBER	0									
	PORT 4			CTL00813_9B_2	CTL00813_9B_2		LTE 1900	QD8616-7_1930MHz_03DT		120	3	TOP	FIBER	0									
	PORT 8			CTL00813_2B_2	CTL00813_2B_2		LTE AWS	QD8616-7_2170MHz_05DT		120	5	TOP	FIBER	0									
	PORT 11			CTCN002013_N002B_1	CTCN002013_N002B_1		5G 1900	QD8616-7_1930MHz_05DT		120	5	TOP	FIBER	0									
	PORT 12			CTCN002013_N066B_1	CTCN002013_N066B_1		5G AWS	QD8616-7_2170MHz_05DT		120	5	TOP	FIBER	0									
ANTENNA POSITION 4	**PORT 1**			CTL02013_7B_1	CTL02013_7B_1		LTE 700	800-10966_719MHz_08DT		120	8	TOP	FIBER	0									
	PORT 3			CTL02013_3B_1	CTL02013_3B_1		LTE WCS	800-10966_2355MHz_03DT		120	3	TOP	FIBER	0									
	PORT 5			CTCN002013_N005B_1	CTCN002013_N005B_1		5G 850	800-10966_849MHz_04DT		120	4	TOP	FIBER	0									

Section 16C - PLANNED/PROPOSED TOWER CONFIGURATION - SECTOR C

ANTENNA POSITION is LEFT to RIGHT from BACK OF ANTENNA (unless otherwise specified)	ANTENNA POSITION 1		ANTENNA POSITION 2		ANTENNA POSITION 3		ANTENNA POSITION 4		ANTENNA POSITION 5		ANTENNA POSITION 6		ANTENNA POSITION 7	
Existing Antenna?														
ANTENNA MAKE - MODEL			QD6616-7				800-10965							
ANTENNA VENDOR			Quintel				Kathrien							
ANTENNA SIZE (H x W x D)			72X22X9.6				78.7X20X6.9							
ANTENNA WEIGHT			59.1				108.6							
AZIMUTH			250				250							
MAGNETIC DECLINATION														
RADIATION CENTER (feet)			84				84							
ANTENNA TIP HEIGHT			87				87							
MECHANICAL DOWNTILT			0				0							
FEEDER AMOUNT														
VERTICAL SEPARATION from ANTENNA ABOVE (TIP to TIP)														
VERTICAL SEPARATION from ANTENNA BELOW (TIP to TIP)														
HORIZONTAL SEPARATION from CLOSEST ANTENNA to LEFT (CENTERLINE to CENTERLINE)														
HORIZONTAL SEPARATION from CLOSEST ANTENNA to RIGHT (CENTERLINE to CENTERLINE)														
HORIZONTAL SEPARATION from ANOTHER ANTENNA (which antenna # / # of inches)														
Antenna RET Motor (QTY/MODEL)														
SURGE ARRESTOR (QTY/MODEL)														
DIPLEXER (QTY/MODEL)														
DUPLEXER (QTY/MODEL)														
Antenna RET CONTROL UNIT (QTY/MODEL)														
DC BLOCK (QTY/MODEL)														
TMA/LNA (QTY/MODEL)														
CURRENT INJECTORS FOR TMA (QTY/MODEL)														
PDU FOR TMAS (QTY/MODEL)														
FILTER (QTY/MODEL)														
SQUID (QTY/MODEL)			1	DC6-48-60-18										
FIBER TRUNK (QTY/MODEL)														
DC TRUNK (QTY/MODEL)														
REPEATER (QTY/MODEL)														
RRH - 700 band (QTY/MODEL)			1	4478 B14			1	4449 B5/B12						
RRH - 850 band (QTY/MODEL)								RRH is shared with another band						
RRH - 1900 band (QTY/MODEL)			1	8843 B2/B66A										
RRH - AWS band (QTY/MODEL)			1	RRH is shared with another band										
RRH - WCS band (QTY/MODEL)														
Additional RRH #1 - any band (QTY/MODEL)			1	2012 B29										
Additional RRH #2 - any band (QTY/MODEL)														
RRH 7B 1 (QTY/MODEL)														
RRH 7B 2 (QTY/MODEL)														
RRH 7B 3 (QTY/MODEL)														
Additional Component 1 (QTY/MODEL)			1	Y-cable			1	Y-cable						
Additional Component 2 (QTY/MODEL)														
Additional Component 3 (QTY/MODEL)														
Local Market Note 1	SOW: - Follow Antenna/RRHs positions as per PDs.-Keep Pos-1 Empty for future SOW.-Replace antennas.-Replace/Add RRHs.-Add 6651,Add IDLe Cable Xcede.-Add Y Cable for Dual band radio-Swap DC only squid with DC Fiber squid.-Decom UMTS and remove unused line elements.-Follow final BB Configuration from LM3/PDs.													
Local Market Note 2														
Local Market Note 3	5216-XMU03-6651-IDLe Xcede.													

PORT SPECIFIC FIELDS	PORT NUMBER	USEID (CSSng)	USEID (Atoll)	ATOLL TXID	ATOLL CELL ID	TX/RX ?	TECHNOLOGY/FREQUENCY	ANTENNA ATOLL	ANTENNA GAIN	ELECTRICAL AZIMUTH	ELECTRICAL TILT	RRH LOCATION (Top/Bottom/Integrated/None)	FEEDERS TYPE	FEEDER LENGTH (feet)	RXAIT KIT MODULE?	TRIPLEXER or LLC (QTY)	TRIPLEXER or LLC (MODEL)	SCPA/MCPA MODULE?	HATCHPLATE POWER (Watts)	ERP (Watts)	Antenna RET Name	CABLE NUMBER	CABLE ID (CSSNG)
ANTENNA POSITION 2	PORT 1			CTL02013_7C_2_E	CTL02013_7C_2_E		LTE 700	QD8616-7_719MHz_03DT		250	3	TOP	FIBER	0									
	PORT 2			CTL02013_7C_3_F	CTL02013_7C_3_F		LTE 700	QD8616-7_719MHz_03DT		250	3	TOP	FIBER	0									

	PORT 3			CTL00813_9C_1	CTL00813_9C_1		LTE 1900	QD8616-7_1930MHz_03DT		250	3	TOP	FIBER	0									
	PORT 4			CTL00813_9C_2	CTL00813_9C_2		LTE 1900	QD8616-7_1930MHz_03DT		250	3	TOP	FIBER	0									
	PORT 8			CTL00813_2C_2	CTL00813_2C_2		LTE AWS	QD8616-7_2170MHz_05DT		250	5	TOP	FIBER	0									
	PORT 11			CTCN002013_N002C_1	CTCN002013_N002C_1		5G 1900	QD8616-7_1930MHz_05DT		250	5	TOP	FIBER	0									
	PORT 12			CTCN002013_N066C_1	CTCN002013_N066C_1		5G AWS	QD8616-7_2170MHz_05DT		250	5	TOP	FIBER	0									
ANTENNA POSITION 4	**PORT 1**			CTL02013_7C_1	CTL02013_7C_1		LTE 700	800-10965_719MHz_08DT		250	8	TOP	FIBER	0									
	PORT 3			CTL02013_3C_1	CTL02013_3C_1		LTE WCS	800-10965_2355MHz_03DT		250	3	TOP	FIBER	0									
	PORT 5			CTCN002013_N005C_1	CTCN002013_N005C_1		5G 850	800-10965_849MHz_04DT		250	4	TOP	FIBER	0									

Section 17A - FINAL TOWER CONFIGURATION - SECTOR A (OR OMNI)

ANTENNA POSITION is LEFT to RIGHT from BACK OF ANTENNA (unless otherwise specified)	ANTENNA POSITION 1	ANTENNA POSITION 2	ANTENNA POSITION 3	ANTENNA POSITION 4	ANTENNA POSITION 5	ANTENNA POSITION 6	ANTENNA POSITION 7
ANTENNA MAKE - MODEL		QD8616-7		800-10966			
ANTENNA VENDOR		Quintel		Kathrien			
ANTENNA SIZE (H x W x D)		96X22X9.6		96X20X6.9			
ANTENNA WEIGHT		68.2		114.6			
AZIMUTH		10		10			
MAGNETIC DECLINATION							
RADIATION CENTER (feet)		84		84			
ANTENNA TIP HEIGHT		88		88			
MECHANICAL DOWNTILT		0		0			
FEEDER AMOUNT							
VERTICAL SEPARATION from ANTENNA ABOVE (TIP to TIP)							
VERTICAL SEPARATION from ANTENNA BELOW (TIP to TIP)							
HORIZONTAL SEPARATION from CLOSEST ANTENNA to LEFT (CENTERLINE to CENTERLINE)							
HORIZONTAL SEPARATION from CLOSEST ANTENNA to RIGHT (CENTERLINE to CENTERLINE)							
HORIZONTAL SEPARATION from ANOTHER ANTENNA (which antenna # / # of inches)							
Antenna RET Motor (QTY/MODEL)							
SURGE ARRESTOR (QTY/MODEL)							
DIPLEXER (QTY/MODEL)							
DUPLEXER (QTY/MODEL)							
Antenna RET CONTROL UNIT (QTY/MODEL)							
DC BLOCK (QTY/MODEL)							
TMA/LNA (QTY/MODEL)							
CURRENT INJECTORS FOR TMA (QTY/MODEL)							
PDU FOR TMAS (QTY/MODEL)							
FILTER (QTY/MODEL)							
SQUID (QTY/MODEL)		1 DC6-48-60-18					
FIBER TRUNK (QTY/MODEL)							
DC TRUNK (QTY/MODEL)							
REPEATER (QTY/MODEL)							
RRH - 700 band (QTY/MODEL)		1 4478 B14		1 4449 B5/B12			
RRH - 850 band (QTY/MODEL)				RRH is shared with another band			
RRH - 1900 band (QTY/MODEL)		1 8843 B2/B66A					
RRH - AWS band (QTY/MODEL)		1 RRH is shared with another band					
RRH - WCS band (QTY/MODEL)				1 RRUS-32 B30			
Additional RRH #1 - any band (QTY/MODEL)		1 2012 B29					
Additional RRH #2 - any band (QTY/MODEL)							
RRH 7B 1 (QTY/MODEL)							
RRH 7B 2 (QTY/MODEL)							
RRH 7B 3 (QTY/MODEL)							
Additional Component 1 (QTY/MODEL)		1 Y-cable		1 Y-cable			
Additional Component 2 (QTY/MODEL)							
Additional Component 3 (QTY/MODEL)							
Local Market Note 1	SOW: - Follow Antenna/RRHs positions as per PDs.-Keep Pos-1 Empty for future SOW.-Replace antennas.-Replace/Add RRHs.-Add 6651,Add IDLe Cable Xcede.-Add Y Cable for Dual band radio-Swap DC only squid with DC Fiber squid.-Decom UMTS and remove unused line elements.-Follow final BB Configuration from LM3/PDs.						
Local Market Note 2							
Local Market Note 3	5216-XMU03-6651-IDLe Xcede.						

PORT SPECIFIC FIELDS	PORT NUMBER	USEID (CSSng)	USEID (Atoll)	ATOLL TXID	ATOLL CELL ID	TX/RX ?	TECHNOLOGY/FREQUENCY	ANTENNA ATOLL	ANTENNA GAIN	ELECTRICAL AZIMUTH	ELECTRICAL TILT	RRH LOCATION (Top/Bottom/Integrated/None)	FEEDERS TYPE	FEEDER LENGTH (feet)	RXAIT KIT MODULE?	TRIPLEXER or LLC (QTY)	TRIPLEXER or LLC (MODEL)	SCPA/MCPA MODULE?	HATCHPLATE POWER (Watts)	ERP (Watts)	Antenna RET Name	CABLE NUMBER	CABLE ID (CSSNG)
ANTENNA POSITION 2	PORT 1	61157.A.700.4G.8		CTL02013_7A_2_E	CTL02013_7A_2_E		LTE 700	QD8616-7_719MHz_03DT		10	3	TOP	FIBER	0									
	PORT 2	61157.A.700.4G.5		CTL02013_7A_3_F	CTL02013_7A_3_F		LTE 700	QD8616-7_719MHz_03DT		10	3	TOP	FIBER	0									
	PORT 3	61157.A.1900.4G.5		CTL00813_9A_1	CTL00813_9A_1		LTE 1900	QD8616-		10	3	TOP	FIBER	0									

								7_1930MHz_03DT															
	PORT 4	61157.A.1900.4G.6		CTL00813_9A_2	CTL00813_9A_2		LTE 1900	QD8616-7_1930MHz_03DT		10	3	TOP	FIBER	0									
	PORT 8	61157.A.AWS.4G.4		CTL00813_2A_2	CTL00813_2A_2		LTE AWS	QD8616-7_2170MHz_05DT		10	5	TOP	FIBER	0									
	PORT 11	61157.A.1900.5G.1		CTCN002013_N002A_1	CTCN002013_N002A_1		5G 1900	QD8616-7_1930MHz_05DT		10	5	TOP	FIBER	0									
	PORT 12	61157.A.AWS.5G.4		CTCN002013_N066A_1	CTCN002013_N066A_1		5G AWS	QD8616-7_2170MHz_05DT		10	5	TOP	FIBER	0									
ANTENNA POSITION 4	**PORT 1**	61157.A.700.4G.1		CTL02013_7A_1	CTL02013_7A_1		LTE 700	800-10966_719MHz_08DT		10	8	TOP	FIBER	0									
	PORT 3	61157.A.WCS.4G.1		CTL02013_3A_1	CTL02013_3A_1		LTE WCS	800-10966_2355MHz_03DT		10	3	TOP	FIBER	0									
	PORT 5	61157.A.850.5G.2		CTCN002013_N005A_1	CTCN002013_N005A_1		5G 850	800-10966_849MHz_04DT		10	4	TOP	FIBER	0									

Section 17B - FINAL TOWER CONFIGURATION - SECTOR B

ANTENNA POSITION is LEFT to RIGHT from BACK OF ANTENNA (unless otherwise specified)	ANTENNA POSITION 1	ANTENNA POSITION 2	ANTENNA POSITION 3	ANTENNA POSITION 4	ANTENNA POSITION 5	ANTENNA POSITION 6	ANTENNA POSITION 7
ANTENNA MAKE - MODEL		QD8616-7		800-10966			
ANTENNA VENDOR		Quintel		Kathrien			
ANTENNA SIZE (H x W x D)		96X22X9.6		96X20X6.9			
ANTENNA WEIGHT		68.2		114.6			
AZIMUTH		120		120			
MAGNETIC DECLINATION							
RADIATION CENTER (feet)		84		84			
ANTENNA TIP HEIGHT		88		88			
MECHANICAL DOWNTILT		0		0			
FEEDER AMOUNT							
VERTICAL SEPARATION from ANTENNA ABOVE (TIP to TIP)							
VERTICAL SEPARATION from ANTENNA BELOW (TIP to TIP)							
HORIZONTAL SEPARATION from CLOSEST ANTENNA to LEFT (CENTERLINE to CENTERLINE)							
HORIZONTAL SEPARATION from CLOSEST ANTENNA to RIGHT (CENTERLINE to CENTERLINE)							
HORIZONTAL SEPARATION from ANOTHER ANTENNA (which antenna # / # of inches)							
Antenna RET Motor (QTY/MODEL)							
SURGE ARRESTOR (QTY/MODEL)							
DIPLEXER (QTY/MODEL)							
DUPLEXER (QTY/MODEL)							
Antenna RET CONTROL UNIT (QTY/MODEL)							
DC BLOCK (QTY/MODEL)							
TMA/LNA (QTY/MODEL)							
CURRENT INJECTORS FOR TMA (QTY/MODEL)							
PDU FOR TMAS (QTY/MODEL)							
FILTER (QTY/MODEL)							
SQUID (QTY/MODEL)		1 DC6-48-60-18					
FIBER TRUNK (QTY/MODEL)							
DC TRUNK (QTY/MODEL)							
REPEATER (QTY/MODEL)							
RRH - 700 band (QTY/MODEL)		1 4478 B14		1 4449 B5/B12			
RRH - 850 band (QTY/MODEL)				RRH is shared with another band			
RRH - 1900 band (QTY/MODEL)		1 8843 B2/B66A					
RRH - AWS band (QTY/MODEL)		1 RRH is shared with another band					
RRH - WCS band (QTY/MODEL)				1 RRUS-32 B30			
Additional RRH #1 - any band (QTY/MODEL)		1 2012 B29					
Additional RRH #2 - any band (QTY/MODEL)							
RRH 7B 1 (QTY/MODEL)							
RRH 7B 2 (QTY/MODEL)							
RRH 7B 3 (QTY/MODEL)							
Additional Component 1 (QTY/MODEL)		1 Y-cable		1 Y-cable			
Additional Component 2 (QTY/MODEL)							
Additional Component 3 (QTY/MODEL)							
Local Market Note 1	SOW: - Follow Antenna/RRHs positions as per PDs.-Keep Pos-1 Empty for future SOW.-Replace antennas.-Replace/Add RRHs.-Add 6651,Add IDLe Cable Xcede.-Add Y Cable for Dual band radio-Swap DC only squid with DC Fiber squid.-Decom UMTS and remove unused line elements.-Follow final BB Configuration from LM3/PDs.						
Local Market Note 2							
Local Market Note 3	5216-XMU03-6651-IDLe Xcede.						

PORT SPECIFIC FIELDS	PORT NUMBER	USEID (CSSng)	USEID (Atoll)	ATOLL TXID	ATOLL CELL ID	TX/RX ?	TECHNOLOGY/FREQUENCY	ANTENNA ATOLL	ANTENNA GAIN	ELECTRICAL AZIMUTH	ELECTRICAL TILT	RRH LOCATION (Top/Bottom/Integrated/None)	FEEDERS TYPE	FEEDER LENGTH (feet)	RXAIT KIT MODULE?	TRIPLEXER or LLC (QTY)	TRIPLEXER or LLC (MODEL)	SCPA/MCPA MODULE?	HATCHPLATE POWER (Watts)	ERP (Watts)	Antenna RET Name	CABLE NUMBER	CABLE ID (CSSNG)
ANTENNA POSITION 2	PORT 1	61157.B.700.4G.8		CTL02013_7B_2_E	CTL02013_7B_2_E		LTE 700	QD8616-7_719MHz_03DT		120	3	TOP	FIBER	0									
	PORT 2	61157.B.700.4G.5		CTL02013_7B_3_F	CTL02013_7B_3_F		LTE 700	QD8616-7_719MHz_03DT		120	3	TOP	FIBER	0									
	PORT 3	61157.B.1900.4G.5		CTL00813_9B_1	CTL00813_9B_1		LTE 1900	QD8616-		120	3	TOP	FIBER	0									

								7_1930MHz_03DT															
	PORT 4	61157.B.1900.4G.6		CTL00813_9B_2	CTL00813_9B_2		LTE 1900	QD8616-7_1930MHz_03DT		120	3	TOP	FIBER	0									
	PORT 8	61157.B.AWS.4G.4		CTL00813_2B_2	CTL00813_2B_2		LTE AWS	QD8616-7_2170MHz_05DT		120	5	TOP	FIBER	0									
	PORT 11	61157.B.1900.5G.1		CTCN002013_N002B_1	CTCN002013_N002B_1		5G 1900	QD8616-7_1930MHz_05DT		120	5	TOP	FIBER	0									
	PORT 12	61157.B.AWS.5G.4		CTCN002013_N066B_1	CTCN002013_N066B_1		5G AWS	QD8616-7_2170MHz_05DT		120	5	TOP	FIBER	0									
ANTENNA POSITION 4	**PORT 1**	61157.B.700.4G.1		CTL02013_7B_1	CTL02013_7B_1		LTE 700	800-10966_719MHz_08DT		120	8	TOP	FIBER	0									
	PORT 3	61157.B.WCS.4G.1		CTL02013_3B_1	CTL02013_3B_1		LTE WCS	800-10966_2355MHz_03DT		120	3	TOP	FIBER	0									
	PORT 5	61157.B.850.5G.1		CTCN002013_N005B_1	CTCN002013_N005B_1		5G 850	800-10966_849MHz_04DT		120	4	TOP	FIBER	0									

Section 17C - FINAL TOWER CONFIGURATION - SECTOR C

ANTENNA POSITION is LEFT to RIGHT from BACK OF ANTENNA (unless otherwise specified)	ANTENNA POSITION 1	ANTENNA POSITION 2	ANTENNA POSITION 3	ANTENNA POSITION 4	ANTENNA POSITION 5	ANTENNA POSITION 6	ANTENNA POSITION 7
ANTENNA MAKE - MODEL		QD6616-7		800-10965			
ANTENNA VENDOR		Quintel		Kathrien			
ANTENNA SIZE (H x W x D)		72X22X9.6		78.7X20X6.9			
ANTENNA WEIGHT		59.1		108.6			
AZIMUTH		250		250			
MAGNETIC DECLINATION							
RADIATION CENTER (feet)		84		84			
ANTENNA TIP HEIGHT		87		87			
MECHANICAL DOWNTILT		0		0			
FEEDER AMOUNT							
VERTICAL SEPARATION from ANTENNA ABOVE (TIP to TIP)							
VERTICAL SEPARATION from ANTENNA BELOW (TIP to TIP)							
HORIZONTAL SEPARATION from CLOSEST ANTENNA to LEFT (CENTERLINE to CENTERLINE)							
HORIZONTAL SEPARATION from CLOSEST ANTENNA to RIGHT (CENTERLINE to CENTERLINE)							
HORIZONTAL SEPARATION from ANOTHER ANTENNA (which antenna # / # of inches)							
Antenna RET Motor (QTY/MODEL)							
SURGE ARRESTOR (QTY/MODEL)							
DIPLEXER (QTY/MODEL)							
DUPLEXER (QTY/MODEL)							
Antenna RET CONTROL UNIT (QTY/MODEL)							
DC BLOCK (QTY/MODEL)							
TMA/LNA (QTY/MODEL)							
CURRENT INJECTORS FOR TMA (QTY/MODEL)							
PDU FOR TMAS (QTY/MODEL)							
FILTER (QTY/MODEL)							
SQUID (QTY/MODEL)		1 DC6-48-60-18					
FIBER TRUNK (QTY/MODEL)							
DC TRUNK (QTY/MODEL)							
REPEATER (QTY/MODEL)							
RRH - 700 band (QTY/MODEL)		1 4478 B14		1 4449 B5/B12			
RRH - 850 band (QTY/MODEL)				RRH is shared with another band			
RRH - 1900 band (QTY/MODEL)		1 8843 B2/B66A					
RRH - AWS band (QTY/MODEL)		1 RRH is shared with another band					
RRH - WCS band (QTY/MODEL)				1 RRUS-32 B30			
Additional RRH #1 - any band (QTY/MODEL)		1 2012 B29					
Additional RRH #2 - any band (QTY/MODEL)							
RRH 7B 1 (QTY/MODEL)							
RRH 7B 2 (QTY/MODEL)							
RRH 7B 3 (QTY/MODEL)							
Additional Component 1 (QTY/MODEL)		1 Y-cable		1 Y-cable			
Additional Component 2 (QTY/MODEL)							
Additional Component 3 (QTY/MODEL)							
Local Market Note 1	SOW: - Follow Antenna/RRHs positions as per PDs.-Keep Pos-1 Empty for future SOW.-Replace antennas.-Replace/Add RRHs.-Add 6651,Add IDLe Cable Xcede.-Add Y Cable for Dual band radio-Swap DC only squid with DC Fiber squid.-Decom UMTS and remove unused line elements.-Follow final BB Configuration from LM3/PDs.						
Local Market Note 2							
Local Market Note 3	5216-XMU03-6651-IDLe Xcede.						

PORT SPECIFIC FIELDS	PORT NUMBER	USEID (CSSng)	USEID (Atoll)	ATOLL TXID	ATOLL CELL ID	TX/RX ?	TECHNOLOGY/FREQUENCY	ANTENNA ATOLL	ANTENNA GAIN	ELECTRICAL AZIMUTH	ELECTRICAL TILT	RRH LOCATION (Top/Bottom/Integrated/None)	FEEDERS TYPE	FEEDER LENGTH (feet)	RXAIT KIT MODULE?	TRIPLEXER or LLC (QTY)	TRIPLEXER or LLC (MODEL)	SCPA/MCPA MODULE?	HATCHPLATE POWER (Watts)	ERP (Watts)	Antenna RET Name	CABLE NUMBER	CABLE ID (CSSNG)
ANTENNA POSITION 2	PORT 1	61157.C.700.4G.8		CTL02013_7C_2_E	CTL02013_7C_2_E		LTE 700	QD8616-7_719MHz_03DT		250	3	TOP	FIBER	0									
	PORT 2	61157.C.700.4G.5		CTL02013_7C_3_F	CTL02013_7C_3_F		LTE 700	QD8616-7_719MHz_03DT		250	3	TOP	FIBER	0									
	PORT 3	61157.C.1900.4G.5		CTL00813_9C_1	CTL00813_9C_1		LTE 1900	QD8616-		250	3	TOP	FIBER	0									

								7_1930MHz_03DT															
	PORT 4	61157.C.1900.4G.6		CTL00813_9C_2	CTL00813_9C_2		LTE 1900	QD8616-7_1930MHz_03DT		250	3	TOP	FIBER	0									
	PORT 8	61157.C.AWS.4G.4		CTL00813_2C_2	CTL00813_2C_2		LTE AWS	QD8616-7_2170MHz_05DT		250	5	TOP	FIBER	0									
	PORT 11	61157.C.1900.5G.1		CTCN002013_N002C_1	CTCN002013_N002C_1		5G 1900	QD8616-7_1930MHz_05DT		250	5	TOP	FIBER	0									
	PORT 12	61157.C.AWS.5G.4		CTCN002013_N066C_1	CTCN002013_N066C_1		5G AWS	QD8616-7_2170MHz_05DT		250	5	TOP	FIBER	0									
ANTENNA POSITION 4	**PORT 1**	61157.C.700.4G.1		CTL02013_7C_1	CTL02013_7C_1		LTE 700	800-10965_719MHz_08DT		250	8	TOP	FIBER	0									
	PORT 3	61157.C.WCS.4G.1		CTL02013_3C_1	CTL02013_3C_1		LTE WCS	800-10965_2355MHz_03DT		250	3	TOP	FIBER	0									
	PORT 5	61157.C.850.5G.1		CTCN002013_N005C_1	CTCN002013_N005C_1		5G 850	800-10965_849MHz_04DT		250	4	TOP	FIBER	0									

Diagram - Sector	A	Diagram File Name - CT2013_A_B_C_DeScope_Rev.3.vsd					
Atoll Site Name -	CTL02013	Location Name -	NEW HAVEN WEST ROCK	Market -	CONNECTICUT	Market Cluster -	NEW ENGLAND

Comments: "Important Note: For detailed radio to antenna wiring refer to the latest field notice - Antenna_Radio Connection Drawings Playbook v6.0_Ericsson "

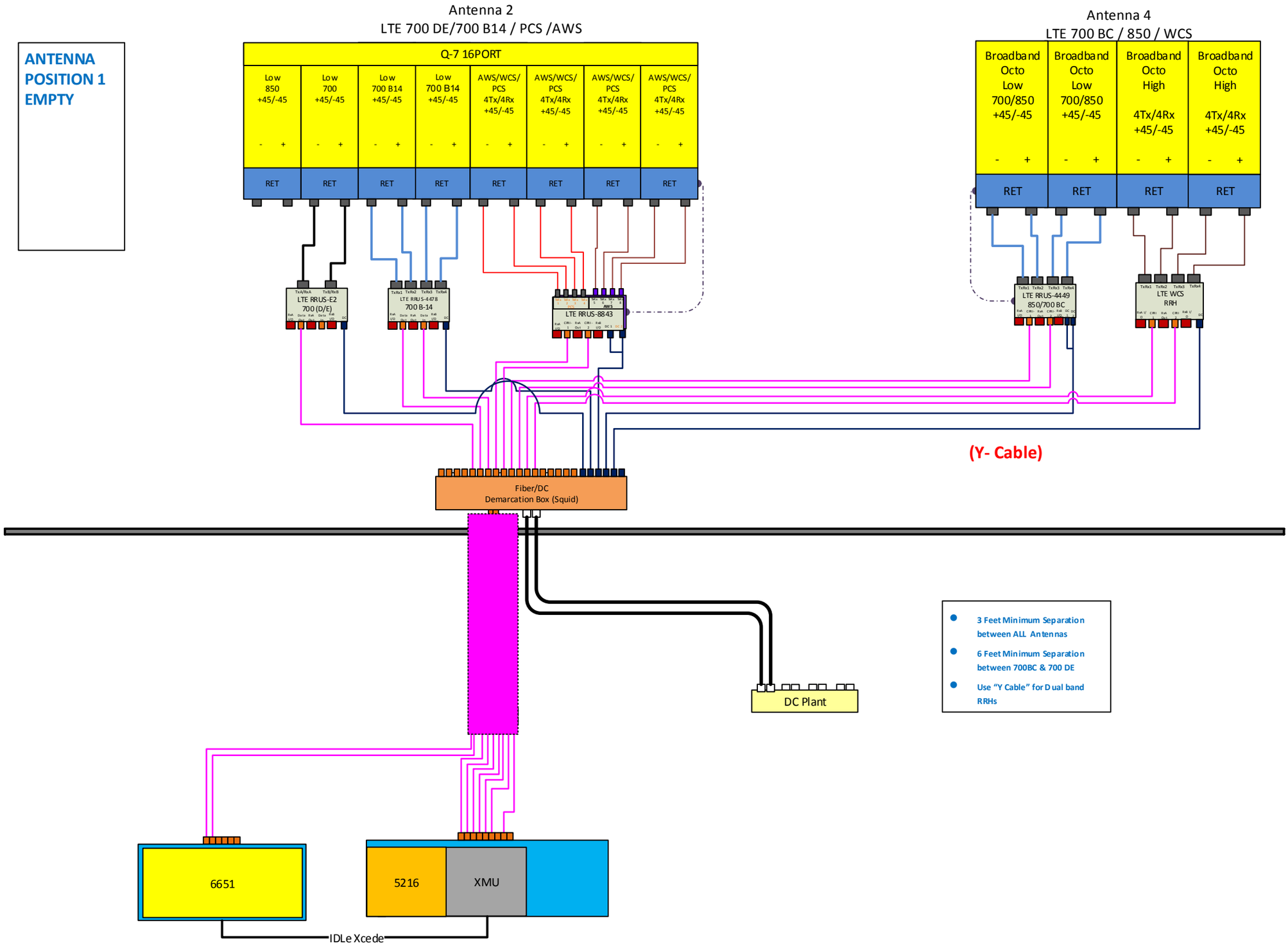

Diagram - Sector	B	Diagram File Name - CT2013_A_B_C_DeScope_Rev.3.vsd					
Atoll Site Name -	CTL02013	Location Name -	NEW HAVEN WEST ROCK	Market -	CONNECTICUT	Market Cluster -	NEW ENGLAND

Comments: "Important Note: For detailed radio to antenna wiring refer to the latest field notice - Antenna_Radio Connection Drawings Playbook v6.0_Ericsson "

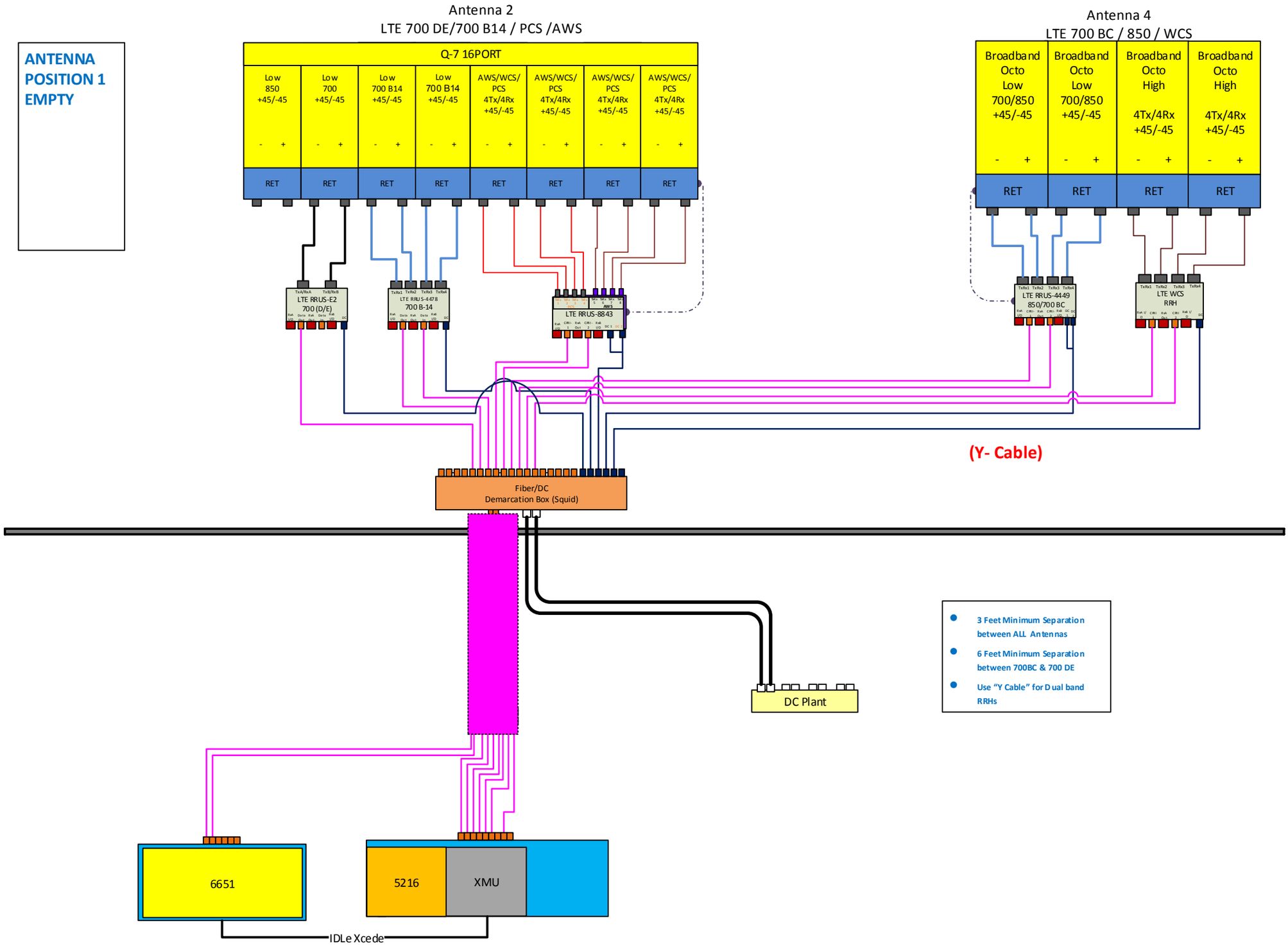

Diagram - Sector	C	Diagram File Name - CT2013_A_B_C_DeScope_Rev.3.vsd					
Atoll Site Name -	CTL02013	Location Name -	NEW HAVEN WEST ROCK	Market -	CONNECTICUT	Market Cluster -	NEW ENGLAND

Comments: "Important Note: For detailed radio to antenna wiring refer to the latest field notice - Antenna_Radio Connection Drawings Playbook v6.0_Ericsson "

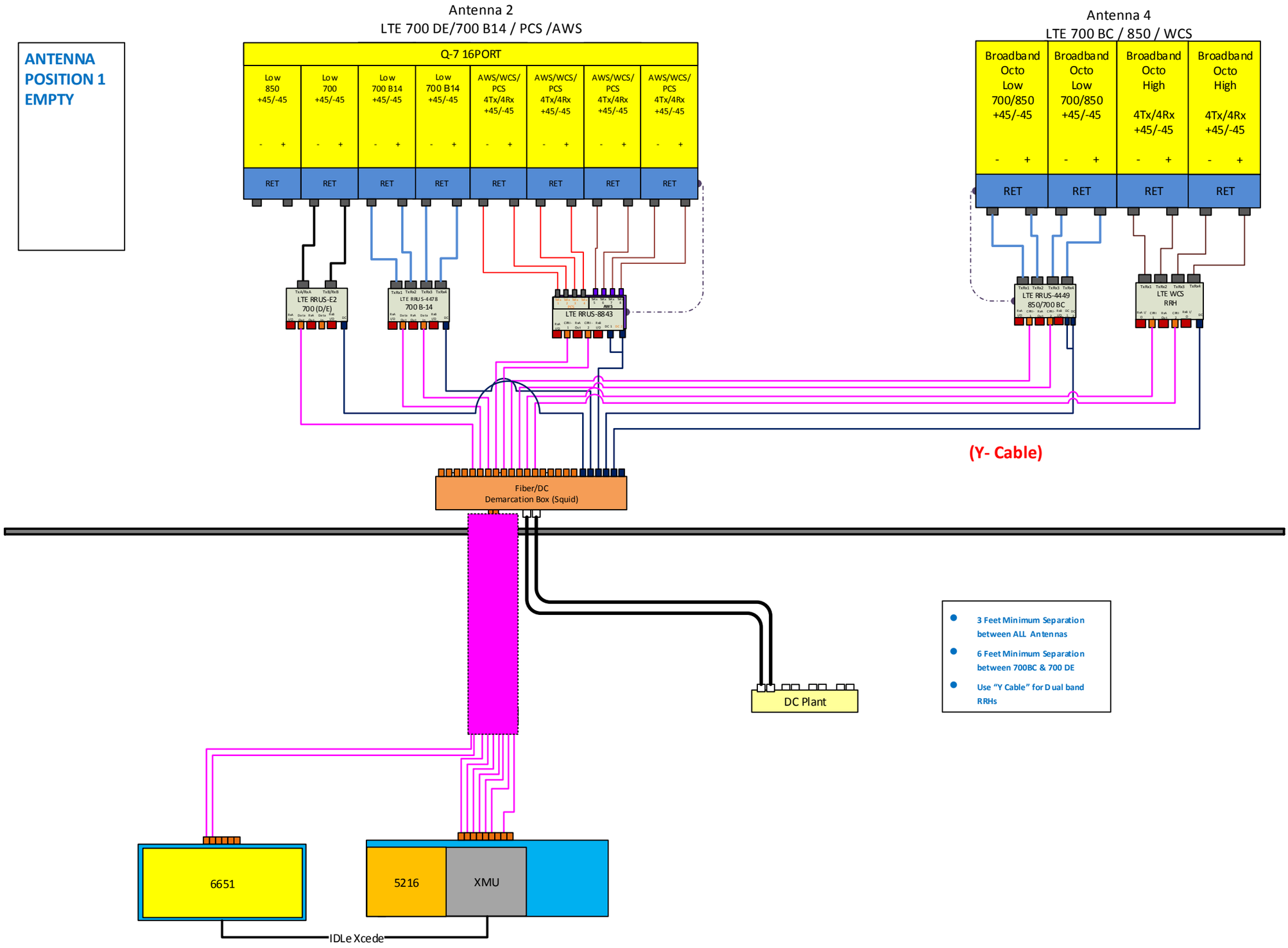

NOTES			
Date Time (Eastern)	Version	ATTUID	Note
10/28/2021 5:15:20 PM	2.00	mm093q	RFDS VERSION incremented.
6/9/2022 5:05:04 PM	3.00	mm093q	RFDS VERSION incremented.
6/24/2022 5:29:07 PM	4.00	mm093q	RFDS VERSION incremented.
8/1/2023 2:16:11 PM	5.00	mh705r	RFDS VERSION incremented.

WORKFLOW SUMMARY							
Date	FROM State / Status	FROM ATTUID	TO State / Status	TO ATTUID	Operation	Comments	PACE Status
11/08/2021	Preliminary In Progress	mm093q	Preliminary Submitted for Approval	KG0839	Promote	Preliminary RFDS CBand + DoD	ER_-RCTB-21-05108 MRCTB055372 SUCCESS 11/08/2021 2:30:26 PM ER_-RCTB-21-05199 MRCTB053707 SUCCESS 11/08/2021 2:30:26 PM ER_-RCTB-21-05197 MRCTB053924 SUCCESS 11/08/2021 2:30:26 PM ER_-RCTB-21-05106 MRCTB055362 SUCCESS 11/08/2021 2:30:26 PM ER_-RCTB-21-04360 PENDING 11/08/2021 2:30:26 PM
11/30/2021	Preliminary Submitted for Approval	KG0839	Preliminary In Progress	mm093q	Pull Back	iPLAN REFRESH	
11/30/2021	Preliminary In Progress	mm093q	Preliminary Submitted for Approval	KG0839	Promote	Preliminary RFDS CBand + DoD	ER_-RCTB-21-04360 PENDING 11/30/2021 12:49:02 PM ER_-RCTB-21-05199 PENDING 11/30/2021 12:49:02 PM ER_-RCTB-21-05197 FAILURE 11/30/2021 12:49:02 PM
12/01/2021	Preliminary Submitted for Approval	KG0839	Preliminary Approved	KD602N	Promote	12/1/21 - promoted without review	
05/03/2022	Preliminary Approved	KD602N	Preliminary Modification Recommended	DR701E	Demote	Per CD review; The RFDS needs to be demoted as the Existing 12 port CCI panels on P1 will not be able to provide 4T4R capability on Alpha & Beta as the low band ports have separate 700 & 850 ports and needs to be swapped as demotion notes, remove the 700 DE for C sector in 17C port section, Are we missing 2 (P) APTDC-BDFDM-DB on Alpha and Beta for the proposed ground mounted 2012 B29? Per RF and AT&T we are combining the MRCTB034929 RFDS and MRCTB026816 RFDS.	
05/04/2022	Preliminary Modification Recommended	DR701E	Preliminary Modification Recommended	MM093Q	Reassign	Successfully Reassigned	
08/11/2022	Preliminary Modification Recommended	MM093Q	Preliminary Submitted for Approval	KG0839	Promote	Fixed CSS Error.	
08/11/2022	Preliminary Submitted for Approval	KG0839	Preliminary Approved	KD602N	Promote	8/11/22 - promoted without review	
08/16/2022	Preliminary Approved	KD602N	Final RF Approval	DR701E	Promote	sending to final:	
08/17/2022	Final RF Approval	DR701E	Final RF Approval	MM093Q	Reassign	Successfully Reassigned	
08/18/2022	Final RF Approval	MM093Q	Final Approved	KD602N	Promote	Final RFDS	ER_-RCTB-21-05199 PENDING 08/18/2022 2:58:21 PM ER_-RCTB-21-04360 PENDING 08/18/2022 2:58:21 PM ER_-RCTB-21-05197 MRCTB053924 SUCCESS 08/18/2022 2:58:21 PM NER-RCTB-18-07407 FAILURE 08/18/2022 2:58:21 PM NER-RCTB-18-07474 PENDING 08/18/2022 2:58:21 PM NER-RCTB-18-07341 FAILURE 08/18/2022 2:58:21 PM NER-RCTB-18-07473 FAILURE 08/18/2022 2:58:21 PM NER-RCTB-18-07306 PENDING 08/18/2022 2:58:21 PM
01/20/2023	Final Approved	KD602N	Final Approved	WK467H	Reassign	Successfully Reassigned	
07/12/2023	Final Approved	WK467H	As Built In Progress	AC846C	Promote	Promoted to CIVIL/ Push to CSS	ER_-RCTB-21-05199 PENDING 07/12/2023 8:47:26 AM ER_-RCTB-21-04360 FAILURE 07/12/2023 8:47:26 AM

							ER_-RCTB-21-05197 FAILURE 07/12/2023 8:47:26 AM NER-RCTB-18-07407 FAILURE 07/12/2023 8:47:26 AM NER-RCTB-18-07474 FAILURE 07/12/2023 8:47:26 AM NER-RCTB-18-07341 PENDING 07/12/2023 8:47:26 AM NER-RCTB-18-07473 FAILURE 07/12/2023 8:47:26 AM NER-RCTB-18-07306 FAILURE 07/12/2023 8:47:26 AM
07/31/2023	As Built In Progress	AC846C	As Built In Progress	WK467H	Reassign	Successfully Reassigned	
07/31/2023	As Built In Progress	WK467H	Final Modification Recommended	SP656B	Demote	Update RFDS to show 6651 Basebands.	
07/31/2023	Final Modification Recommended	SP656B	Final Modification Recommended	MH705R	Reassign	Successfully Reassigned	
08/01/2023	Final Modification Recommended	MH705R	Final Approved	WK467H	Promote	Final RFDS updated for demotion comments SOW	
08/04/2023	Final Approved	WK467H	As Built In Progress	AC846C	Promote	Promoted to CIVIL/ Push to CSS	ER_-RCTB-21-05199 FAILURE 08/04/2023 10:38:25 AM ER_-RCTB-21-04360 PENDING 08/04/2023 10:38:25 AM ER_-RCTB-21-05197 PENDING 08/04/2023 10:38:25 AM NER-RCTB-18-07407 PENDING 08/04/2023 10:38:25 AM NER-RCTB-18-07474 FAILURE 08/04/2023 10:38:25 AM NER-RCTB-18-07341 PENDING 08/04/2023 10:38:25 AM NER-RCTB-18-07473 FAILURE 08/04/2023 10:38:25 AM NER-RCTB-18-07306 FAILURE 08/04/2023 10:38:25 AM

FedEx

FedEx® Tracking

DELIVERED

Wednesday

3/13/24 at 10:12 AM

Signed for by: M.MARIA

Obtain proof of delivery

How was your delivery?

DELIVERY STATUS

Delivered

Report missing package

TRACKING ID

775493660512

FROM
Smartlink LLC
Carolyn Seeley
6 Jasmine Rd
Oxford, MA US 01540
9787605577

Label Created
3/11/24 11:00 AM

WE HAVE YOUR PACKAGE
WEST BOYLSTON, MA
3/11/24 5:27 PM

ON THE WAY
NORTH HAVEN, CT
3/13/24 8:33 AM

OUT FOR DELIVERY
NORTH HAVEN, CT
3/13/24 8:52 AM

DELIVERED

FedEx

NEW HAVEN, CT US 06510
2039468200

Delivered
3/13/24 at 10:12 AM

View travel history

Want updates on this shipment? Enter your email and we will do the rest!

YOUR EMAIL SUBMIT

MORE OPTIONS

Shipment facts

Shipment overview

TRACKING NUMBER 775493660512

DELIVERED TO Receptionist/Front Desk

SHIPPER REFERENCE CTL02013

SHIP DATE 3/11/24

STANDARD TRANSIT 3/13/24 before 10:30 AM

DELIVERED 3/13/24 at 10:12 AM

Services

SERVICE FedEx 2Day AM

TERMS Shipper

SPECIAL HANDLING SECTION Deliver Weekday

Package details

WEIGHT 1 lbs / 0.45 kgs

TOTAL PIECES 1

TOTAL SHIPMENT WEIGHT 1 lbs / 0.45 kgs

PACKAGING FedEx Envelope

FedEx

FedEx® Tracking

DELIVERED

Wednesday

3/13/24 at 10:12 AM

Signed for by: S.SANTO

Obtain proof of delivery

How was your delivery?

DELIVERY STATUS

Delivered

Report missing package

signature proof

TRACKING ID

775493943139

FROM
Smartlink LLC
Carolyn Seeley
6 Jasmine Rd
Oxford, MA US 01540
9787605577

Label Created
3/11/24 11:12 AM

WE HAVE YOUR PACKAGE
WEST BOYLSTON, MA
3/11/24 5:27 PM

ON THE WAY
WINDSOR LOCKS, CT
3/13/24 8:01 AM

OUT FOR DELIVERY
WINDSOR LOCKS, CT
3/13/24 8:59 AM

DELIVERED
Brian Benito
Department of Emergency Services a
1111 COUNTRY CLUB RD

FedEx

3/13/24 at 10:12 AM

View travel history

Want updates on this shipment? Enter your email and we will do the rest!

YOUR EMAIL SUBMIT

MORE OPTIONS

Shipment facts

Shipment overview

TRACKING NUMBER 775493943139

DELIVERED TO Receptionist/Front Desk

SHIPPER REFERENCE CTL02013

SHIP DATE 3/11/24

STANDARD TRANSIT 3/13/24 before 10:30 AM

DELIVERED 3/13/24 at 10:12 AM

Services

SERVICE FedEx 2Day AM

TERMS Shipper

SPECIAL HANDLING SECTION Deliver Weekday

Package details

WEIGHT 1 lbs / 0.45 kgs

TOTAL PIECES 1

TOTAL SHIPMENT WEIGHT 1 lbs / 0.45 kgs

PACKAGING FedEx Envelope

Back to to

FedEx

FedEx® Tracking

DELIVERED

Monday

3/18/24 at 9:41 AM

Signed for by: M.MYA

Obtain proof of delivery

DELIVERY STATUS

Delivered

Report missing package

TRACKING ID

775551745831

FROM
Smartlink LLC
Carolyn Seeley
6 Jasmine Rd
Oxford, MA US 01540
9787605577

Label Created
3/14/24 4:09 PM

WE HAVE YOUR PACKAGE
WEST BOYLSTON, MA
3/15/24 5:34 PM

ON THE WAY
NORTH HAVEN, CT
3/18/24 8:31 AM

OUT FOR DELIVERY
NORTH HAVEN, CT
3/18/24 8:47 AM

DELIVERED
The Honorable Justin Elicker
City of New Haven
165 CHURCH

FedEx

Delivered
3/18/24 at 9:41 AM

↓ View travel history

Want updates on this shipment? Enter your email and we will do the rest!

YOUR EMAIL SUBMIT

MORE OPTIONS

Shipment facts

Shipment overview

TRACKING NUMBER 775551745831

DELIVERED TO Receptionist/Front Desk

SHIPPER REFERENCE CTL02013

SHIP DATE ? 3/15/24

STANDARD TRANSIT ? 3/19/24 before 10:30 AM

DELIVERED 3/18/24 at 9:41 AM

Services

SERVICE FedEx 2Day AM

TERMS Shipper

SPECIAL HANDLING SECTION Deliver Weekday

Package details

WEIGHT 0.5 lbs / 0.23 kgs

TOTAL PIECES 1

TOTAL SHIPMENT WEIGHT 0.5 lbs / 0.23 kgs

PACKAGING FedEx Envelope

↑ Back to to

SHEET INDEX

DRIVING DIRECTIONS

FROM 550 COCHITUATE RD.:

GET ON I-90 WEST/MASSACHUSETTS TURNPIKE. HEAD NORTHEAST TOWARD LEGGATT MCCALL CONN. TURN LEFT ONTO LEGGATT MCCALL CONN. CONTINUE ONTO BURR STREET. TURN LEFT ONTO COCHITUATE ROAD. USE THE RIGHT LANE TO TAKE THE RAMP TO I-90 EAST/MASSPIKE WEST/SPRINGFIELD/BOSTON. KEEP LEFT AT THE FORK, FOLLOW SIGNS FOR I-90 WEST/MASSACHUETTS TURNPIKE/WORCESTER/SPRINGFIELD AND MERGE ONTO I-90 WEST/MASSACHUETTS TURNPIKE. CONTINUE ON I-90 WEST/MASSACHUETTS TURNPIKE. TAKE I-84, I-91 SOUTH AND CT-15 SOUTH/WILBUR CROSS PKWY TO CT-10 SOUTH IN HAMDEN. TAKE EXIT CT-15 SOUTH/WILBUR CROSS PKWY. MERGE ONTO I-90 WEST/MASSACHUETTS TURNPIKE. USE THE RIGHT 2 LANES TO TAKE EXIT 9 FOR I-84 TOWARD US-20/HARTFORD/NEW YORK CITY. CONTINUE ONTO I-84. USE THE LEFT 2 LANES TO TAKE EXIT 57 FOR CT-15 SOUTH TOWARD I-91 SOUTH/CHARTER OAK BRIDGE/NEW YORK CITY. CONTINUE ONTO CT-15 SOUTH. CONTINUE ONTO CT-15 SOUTH/US-5 SOUTH. TAKE EXIT 86 TO MERGE ONTO I-91 SOUTH TOWARD NEW HAVEN/NEW YORK CITY. TAKE EXIT 17 TO MERGE ONTO CT-15 SOUTH/WILBUR CROSS PKWY. TAKE EXIT 60 FOR CT-10 TOWARD HAMDEN/NEW HAVEN. TAKE BENHEM STREET TO WINTERGREEN AVE. TURN RIGHT ONTO CT-10 SOUTH. TURN RIGHT ONTO BENHAM STREET. TURN LEFT ONTO LANE STREET. CONTINUE ONTO BROOK STREET. TURN RIGHT ONTO WINTERGREEN AVE.

LOCATION MAP

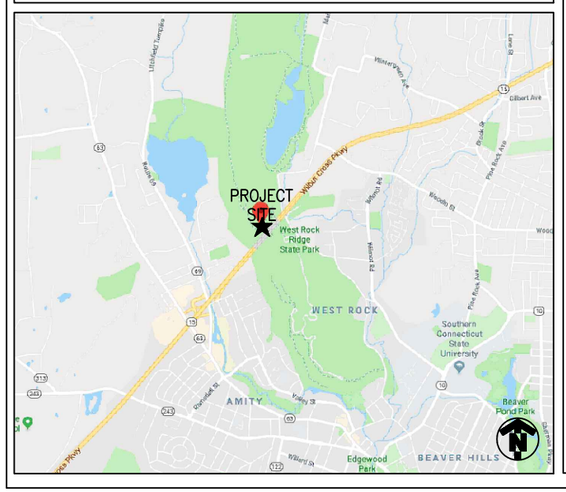

at&t

PROJECT

5G NR ACTIV./BBU RECONFIGURATION/
ACTIV./5G NR UPGRADE/4TX4RX SOFT. RETRO./LTE
7C/ LTE 6C/LTE 5C/LTE 4C/UL ACTIVATION

SITE NAME

NEW HAVEN WEST ROCK

CELL SITE ID

CTL02013

FA SITE NUMBER

10035296

PACE ID

MRCTB053707/MRCTB055992/MRCTB053924
MRCTB034946/MRCTB034921/MRCTB035008/MRCTB034915
MRCTB034929/MRCTB026816/MRCTB025570/MRCTB044864

SITE ADDRESS

142 BALDWIN DRIVE
NEW HAVEN, CT 06514

STRUCTURE TYPE

SELF SUPPORT

PROJECT TEAM

smartlink

PROJECT MANAGER

INFINIGY

1033 Watervliet Shaker Rd
Albany, NY 12205
Office # (518) 690-0790
Fax # (518) 690-0793

ENGINEER

SCOPE OF WORK (PER LTE RFDS, DATED: 08/01/2023, V5.00):

- HANDICAP ACCESS REQUIREMENTS ARE NOT REQUIRED.
- FACILITY IS UNMANNED AND NOT FOR HUMAN HABITATION.
- FACILITY HAS NO PLUMBING OR REFRIGERANTS.
- THIS FACILITY SHALL MEET OR EXCEED ALL FAA AND FCC REGULATORY REQUIREMENTS.
- ALL NEW MATERIAL SHALL BE FURNISHED AND INSTALLED BY CONTRACTOR UNLESS NOTED OTHERWISE. EQUIPMENT, ANTENNAS/RRU AND CABLES FURNISHED BY OWNER AND INSTALLED BY CONTRACTOR.

TOWER

- REMOVE (2) PANEL ANTENNAS (SBNH-1D6565C)
- REMOVE (2) PANEL ANTENNAS (TPA-65R-LCUUUU-H8)
- REMOVE (2) PANEL ANTENNAS (HPA-65R-BUU-H8)
- REMOVE (1) PANEL ANTENNAS (QS66512-2)
- REMOVE (1) PANEL ANTENNAS (HPA-65R-BUU-H6)
- REMOVE (2) CCI - DTMABP7819VG12A TMAS
- REMOVE (3) RRUS-11 B12
- REMOVE (3) RRUS-32 B2
- REMOVE (1) WCS-IMFQ-AMT FILTER
- INSTALL (2) QUINTEL QD8616-7 ANTENNAS
- INSTALL (1) QUINTEL QD6616-7 ANTENNAS
- INSTALL (2) KATHREIN 800-10966 ANTENNAS
- INSTALL (1) KATHREIN 800-10965 ANTENNAS
- INSTALL (3) RRUS-4449 B5/B12 AND (6) Y-CABLES
- INSTALL (3) RRUS-8843 B2/B66A
- INSTALL (3) RRUS-2012 B29
- INSTALL (3) RRUS-4478 B14
- INSTALL (1) DC6-48-60-18 'SQUID'
- INSTALL (1) 18-PAIR FIBER CABLES AND (2) 6AWG DC CABLES

GROUND

- REMOVE (6) POWERWAVE - CM1007-DBPXBC-003 DIPLEXERS
- ADD 6651 AND XCEDE CABLE
- FINAL BBU CONFIG: (1) 5216, (1) XMU WITH IDLE, (1) 6651 WITH XCEDE CABLE CABLE

PROJECT SUMMARY

SITE NAME:	NEW HAVEN WEST ROCK	
CELL SITE ID:	CTL02013	
FA SITE #:	10035296	
SITE ADDRESS:	142 BALDWIN DRIVE NEW HAVEN, CT 06514	
COUNTY:	NEW HAVEN	
SITE COORDINATES: LATITUDE:	41.3454361° N	(NAD 83)
LONGITUDE:	72.9706931° W	(NAD 83)
ELEVATION:	±545'	(AMSL)
RAD CENTER	±84'	(AGL)
LANDLORD:	STATE OF CONNECTICUT DEPARTMENT OF PUBLIC SAFETY	
APPLICANT:	AT&T MOBILITY 550 COCHITUATE RD. FRAMINGHAM, MA 01701	
CLIENT REPRESENTATIVE:	SMARTLINK, LLC 85 RANGEWAY RD. SUITE 102 NORTH BILLERICA, MA 01862	
CONTACT:	KRISTINA COTTONE KRISTINA.COTTONE@SMARTLINKGROUP.COM	
ENGINEER:	INFINIGY ENGINEERING, PLLC 500 WEST OFFICE CENTER DR. SUITE 150 FORT WASHINGTON, PA 19034	
CONTACT:	ALEXANDRE MATOUT AMATOUT@INFINIGY.COM	
BUILDING CODE:	2021 IBC/2021 CONNECTICUT STATE BUILDING CODE (ANSI/TIA-222-H) UNIFORM BUILDING CODE BUILDING OFFICIALS & CODE ADMINISTRATORS UNIFORM MECHANICAL CODE UNIFORM PLUMBING CODE LOCAL BUILDING CODE CITY/COUNTY ORDINANCES	
ELECTRICAL CODE:	2020 NATIONAL ELECTRICAL CODE	

811 Know what's below. Call before you dig.

TO OBTAIN LOCATION OF PARTICIPANTS UNDERGROUND FACILITIES BEFORE YOU DIG IN CONNECTICUT, CONTACT CALL BEFORE YOU DIG
TOLL FREE: 1-800-922-4455 OR www.cbyd.com
CONNECTICUT STATUTE REQUIRES MIN OF 2 WORKING DAYS NOTICE BEFORE YOU EXCAVATE

INFINIGY ENGINEERING, PLLC
500 WEST OFFICE CENTER DR.
SUITE 150
FORT WASHINGTON, PA 19034

at&t

STATE OF CONNECTICUT
CHRISTOPHER J. WARREN
No. 23544
10/27/23
LICENSED
PROFESSIONAL ENGINEER

UNAUTHORIZED ALTERATION OR ADDITION TO THIS DOCUMENT IS A VIOLATION OF APPLICABLE STATE AND/OR LOCAL LAWS

No.	Submittal / Revision	App'd	Date
5	ISSUED FOR CONSTRUCTION	DGD	10/17/23
4	ISSUED FOR CONSTRUCTION	DGD	09/07/23
3	ISSUED FOR CONSTRUCTION	CES	08/10/23
2	ISSUED FOR CONSTRUCTION	CES	07/03/23
1	ISSUED FOR CONSTRUCTION	CES	09/16/22
0	ISSUED FOR REVIEW	BMM	04/19/22

Drawn: RCD Date: 04/06/22
Designed: ASW Date: 04/06/22
Checked: AJD Date: 04/06/22

Project Number: 1106-A0001-C

Project Title:
NEW HAVEN WEST ROCK
CTL02013
FA# 10035296
142 BALDWIN DRIVE
NEW HAVEN, CT 06514

Prepared For: smartlink

Drawing Scale: AS NOTED
Date: 04/06/22
CD

Drawing Title
TITLE PAGE

Drawing Number
T1

GENERAL NOTES

PART 1 – GENERAL REQUIREMENTS

1.1 THE WORK SHALL COMPLY WITH APPLICABLE NATIONAL CODES AND STANDARDS, LATEST EDITION, AND PORTIONS THEREOF, INCLUDED BUT NOT LIMITED TO THE FOLLOWING:
A. GR-63-CORE NEBS REQUIREMENTS: PHYSICAL PROTECTION
B. GR-78-CORE GENERIC REQUIREMENTS FOR THE PHYSICAL DESIGN AND MANUFACTURE OF TELECOMMUNICATIONS EQUIPMENT.
C. NATIONAL FIRE PROTECTION ASSOCIATION CODES AND STANDARDS (NFPA) INCLUDING NFPA 70 (NATIONAL ELECTRICAL CODE – "NEC").
D. AND NFPA 101 (LIFE SAFETY CODE).
E. AMERICAN SOCIETY FOR TESTING OF MATERIALS (ASTM).
F. INSTITUTE OF ELECTRONIC AND ELECTRICAL ENGINEERS (IEEE).

1.2 DEFINITIONS:
A: WORK: THE SUM OF TASKS AND RESPONSIBILITIES IDENTIFIED IN THE CONTRACT DOCUMENTS.
B: COMPANY: AT&T CORPORATION
C. ENGINEER: SYNONYMOUS WITH ARCHITECT & ENGINEER AND "A&E". THE DESIGN PROFESSIONAL HAVING PROFESSIONAL RESPONSIBILITY FOR DESIGN OF THE PROJECT.
D: CONTRACTOR: CONSTRUCTION CONTRACTOR; CONSTRUCTION VENDOR; INDIVIDUAL OR ENTITY WHO AFTER EXECUTION OF A CONTRACT IS BOUND TO ACCOMPLISH THE WORK.
E: THIRD PARTY VENDOR OR AGENCY: A VENDOR OR AGENCY ENGAGED SEPARATELY BY THE COMPANY, A&E, OR CONTRACTOR TO PROVIDE MATERIALS OR TO ACCOMPLISH SPECIFIC TASKS RELATED TO BUT NOT INCLUDED IN THE WORK.

1.3 POINT OF CONTACT: COMMUNICATION BETWEEN THE COMPANY AND THE CONTRACTOR SHALL FLOW THROUGH THE SINGLE COMPANY SITE DEVELOPMENT SPECIALIST OR OTHER PROJECT COORDINATOR APPOINTED TO MANAGE THE PROJECT FOR THE COMPANY.

1.4 ON-SITE SUPERVISION: THE CONTRACTOR SHALL SUPERVISE AND DIRECT THE WORK AND SHALL BE RESPONSIBLE FOR CONSTRUCTION MEANS, METHODS, TECHNIQUES, SEQUENCES, AND PROCEDURES IN ACCORDANCE WITH THE CONTRACT DOCUMENTS. THE CONTRACTOR SHALL EMPLOY A COMPETENT SUPERINTENDENT WHO SHALL BE IN ATTENDANCE AT THE SITE AT ALL TIMES DURING PERFORMANCE OF THE WORK.

1.5 DRAWINGS, SPECIFICATIONS AND DETAILS REQUIRED AT JOBSITE: THE CONSTRUCTION CONTRACTOR SHALL MAINTAIN A FULL SET OF THE CONSTRUCTION DRAWINGS, STANDARD CONSTRUCTION DETAILS FOR WIRELESS SITES, AND THE STANDARD CONSTRUCTION SPECIFICATIONS FOR WIRELESS SITES AT THE JOBSITE FROM MOBILIZATION THROUGH CONSTRUCTION COMPLETION.
A. THE JOBSITE DRAWINGS, SPECIFICATIONS AND DETAILS SHALL BE CLEARLY MARKED DAILY IN PENCIL WITH ANY CHANGES IN CONSTRUCTION OVER WHAT IS DEPICTED IN THE DOCUMENTS. AT CONSTRUCTION COMPLETION, THIS JOBSITE MARKUP SET SHALL BE DELIVERED TO THE COMPANY OR COMPANY'S DESIGNATED REPRESENTATIVE TO BE FORWARDED TO THE COMPANY'S A&E VENDOR FOR PRODUCTION OF "AS-BUILT" DRAWINGS.

1.6 USE OF JOB SITE: THE CONTRACTOR SHALL CONFINE ALL CONSTRUCTION AND RELATED OPERATIONS INCLUDING STAGING AND STORAGE OF MATERIALS AND EQUIPMENT, PARKING, TEMPORARY FACILITIES, AND WASTE STORAGE TO THE LEASE PARCEL UNLESS OTHERWISE PERMITTED BY THE CONTRACT DOCUMENTS.

1.7 NOTICE TO PROCEED:
A. NO WORK SHALL COMMENCE PRIOR TO COMPANY'S WRITTEN NOTICE TO PROCEED.
B. UPON RECEIVING NOTICE TO PROCEED, CONTRACTOR SHALL FULLY PERFORM ALL WORK NECESSARY TO PROVIDE AT&T WITH AN OPERATIONAL WIRELESS FACILITY.

PART 2 – EXECUTION

2.1 TEMPORARY UTILITIES AND FACILITIES: THE CONTRACTOR SHALL BE RESPONSIBLE FOR ALL TEMPORARY UTILITIES AND FACILITIES NECESSARY EXCEPT AS OTHERWISE INDICATED IN THE CONSTRUCTION DOCUMENTS. TEMPORARY UTILITIES AND FACILITIES INCLUDE, POTABLE WATER, HEAT, HVAC, ELECTRICITY, SANITARY FACILITIES, WASTE DISPOSAL FACILITIES, AND TELEPHONE/COMMUNICATION SERVICES. PROVIDE TEMPORARY UTILITIES AND FACILITIES IN ACCORDANCE WITH OSHA AND THE AUTHORITY HAVING JURISDICTION. CONTRACTOR MAY UTILIZE THE COMPANY ELECTRICAL SERVICE IN THE COMPLETION OF THE WORK WHEN IT BECOMES AVAILABLE. USE OF THE LESSORS OR SITE OWNER'S UTILITIES OR FACILITIES IS EXPRESSLY FORBIDDEN EXCEPT AS OTHERWISE ALLOWED IN THE CONTRACT DOCUMENTS.

2.2 ACCESS TO WORK: THE CONTRACTOR SHALL PROVIDE ACCESS TO THE JOB SITE FOR AUTHORIZED COMPANY PERSONNEL AND AUTHORIZED REPRESENTATIVES OF THE ARCHITECT/ENGINEER DURING ALL PHASES OF THE WORK.

2.3 TESTING: REQUIREMENTS FOR TESTING BY THIS CONTRACTOR SHALL BE AS INDICATED HEREWITH, ON THE CONSTRUCTION DRAWINGS, AND IN THE INDIVIDUAL SECTIONS OF THESE SPECIFICATIONS. SHOULD COMPANY CHOOSE TO ENGAGE ANY THIRD-PARTY TO CONDUCT ADDITIONAL TESTING, THE CONTRACTOR SHALL COOPERATE WITH AND PROVIDE A WORK AREA FOR COMPANY'S TEST AGENCY.

2.4 COMPANY FURNISHED MATERIAL AND EQUIPMENT: ALL HANDLING, STORAGE AND INSTALLATION OF COMPANY FURNISHED MATERIAL AND EQUIPMENT SHALL BE IN ACCORDANCE WITH THE REQUIREMENTS OF THE CONTRACT DOCUMENTS AND WITH THE MANUFACTURER'S INSTRUCTIONS AND RECOMMENDATIONS.
A. CONTRACTOR SHALL PROCURE ALL OTHER REQUIRED WORK RELATED MATERIALS NOT PROVIDED BY AT&T TO SUCCESSFULLY CONSTRUCT A WIRELESS FACILITY.

2.5 DIMENSIONS: VERIFY DIMENSIONS INDICATED ON DRAWINGS WITH FIELD DIMENSIONS BEFORE FABRICATION OR ORDERING OF MATERIALS. DO NOT SCALE DRAWINGS.

2.6 EXISTING CONDITIONS: NOTIFY THE COMPANY REPRESENTATIVE OF EXISTING CONDITIONS DIFFERING FROM THOSE INDICATED ON THE DRAWINGS. DO NOT REMOVE OR ALTER STRUCTURAL COMPONENTS WITHOUT PRIOR WRITTEN APPROVAL FROM THE ARCHITECT AND ENGINEER.

PART 3 – RECEIPT OF MATERIAL & EQUIPMENT

3.1 RECEIPT OF MATERIAL AND EQUIPMENT: CONTRACTOR IS RESPONSIBLE FOR AT&T PROVIDED MATERIAL AND EQUIPMENT AND UPON RECEIPT SHALL:
A. ACCEPT DELIVERIES AS SHIPPED AND TAKE RECEIPT.
B. VERIFY COMPLETENESS AND CONDITION OF ALL DELIVERIES.
C. TAKE RESPONSIBILITY FOR EQUIPMENT AND PROVIDE INSURANCE PROTECTION AS REQUIRED IN AGREEMENT.
D. RECORD ANY DEFECTS OR DAMAGES AND WITHIN TWENTY-FOUR HOURS AFTER RECEIPT, REPORT TO AT&T OR ITS DESIGNATED PROJECT REPRESENTATIVE OF SUCH.
E. PROVIDE SECURE AND NECESSARY WEATHER PROTECTED WAREHOUSING.
F. COORDINATE SAFE AND SECURE TRANSPORTATION OF MATERIAL AND EQUIPMENT, DELIVERING AND OFF-LOADING FROM CONTRACTOR'S WAREHOUSE TO SITE.

PART 4 – GENERAL REQUIREMENTS FOR CONSTRUCTION

4.1 CONTRACTOR SHALL KEEP THE SITE FREE FROM ACCUMULATING WASTE MATERIAL, DEBRIS, AND TRASH. AT THE COMPLETION OF THE WORK, CONTRACTOR SHALL REMOVE FROM THE SITE ALL REMAINING RUBBISH, IMPLEMENTS, TEMPORARY FACILITIES, AND SURPLUS MATERIALS.

4.2 EQUIPMENT ROOMS SHALL AT ALL TIMES BE MAINTAINED "BROOM CLEAN" AND CLEAR OF DEBRIS.

4.3 CONTRACTOR SHALL TAKE ALL REASONABLE PRECAUTIONS TO DISCOVER AND LOCATE ANY HAZARDOUS CONDITION.
A. IN THE EVENT CONTRACTOR ENCOUNTERS ANY HAZARDOUS CONDITION WHICH HAS NOT BEEN ABATED OR OTHERWISE MITIGATED, CONTRACTOR AND ALL OTHER PERSONS SHALL IMMEDIATELY STOP WORK IN THE AFFECTED AREA AND NOTIFY COMPANY IN WRITING. THE WORK IN THE AFFECTED AREA SHALL NOT BE RESUMED EXCEPT BY WRITTEN NOTIFICATION BY COMPANY.
B. CONTRACTOR AGREES TO USE CARE WHILE ON THE SITE AND SHALL NOT TAKE ANY ACTION THAT WILL OR MAY RESULT IN OR CAUSE THE HAZARDOUS CONDITION TO BE FURTHER RELEASED IN THE ENVIRONMENT, OR TO FURTHER EXPOSE INDIVIDUALS TO THE HAZARD.

4.4 CONTRACTOR'S ACTIVITIES SHALL BE RESTRICTED TO THE PROJECT LIMITS. SHOULD AREAS OUTSIDE THE PROJECT LIMITS BE AFFECTED BY CONTRACTOR'S ACTIVITIES, CONTRACTOR SHALL IMMEDIATELY RETURN THEM TO ORIGINAL CONDITION.

4.5 CONDUCT TESTING AS REQUIRED HEREIN.

PART 5 – TESTS AND INSPECTIONS

5.1 TESTS AND INSPECTIONS:
A. THE CONTRACTOR SHALL BE RESPONSIBLE FOR ALL CONSTRUCTION TESTS, INSPECTIONS AND PROJECT DOCUMENTATION.

B. CONTRACTOR SHALL COORDINATE TEST AND INSPECTION SCHEDULES WITH COMPANY'S REPRESENTATIVE WHO MUST BE ON SITE TO WITNESS SUCH TESTS AND INSPECTIONS.

C. WHEN THE USE OF A THIRD PARTY INDEPENDENT TESTING AGENCY IS REQUIRED, THE AGENCY THAT IS SELECTED MUST PERFORM SUCH WORK ON A REGULAR BASIS IN THE STATE WHERE THE PROJECT IS LOCATED AND HAVE A THOROUGH UNDERSTANDING OF LOCAL AVAILABLE MATERIALS, INCLUDING THE SOIL, ROCK, AND GROUNDWATER CONDITIONS.

D. THE THIRD PARTY TESTING AGENCY IS TO BE FAMILIAR WITH THE APPLICABLE REQUIREMENTS FOR THE TESTS TO BE DONE, EQUIPMENT TO BE USED, AND ASSOCIATED HEALTH AND SAFETY ISSUES.

E. SITE RESISTANCE TO EARTH TESTING PER EXHIBIT: CELL SITE GROUNDING SYSTEM DESIGN.

F. ANTENNA AND COAX SWEEP TESTS PER EXHIBIT: ANTENNA TRANSMISSION LINE ACCEPTANCE STANDARDS.

G. ALL OTHER TESTS REQUIRED BY COMPANY OR JURISDICTION.

PART 6 – TRENCHING AND BACKFILLING

6.1 TRENCHING AND BACKFILLING: THE CONTRACTOR SHALL PERFORM ALL EXCAVATION OF EVERY DESCRIPTION AND OF WHATEVER SUBSTANCES ENCOUNTERED, TO THE DEPTHS INDICATED ON THE CONSTRUCTION DRAWINGS OR AS OTHERWISE SPECIFIED.

A. PROTECTION OF EXISTING UTILITIES: THE CONTRACTOR SHALL CHECK WITH THE LOCAL UTILITIES AND THE RESPECTIVE UTILITY LOCATOR COMPANIES PRIOR TO STARTING EXCAVATION OPERATIONS IN EACH RESPECTIVE AREA TO ASCERTAIN THE LOCATIONS OF KNOWN UTILITY LINES. THE LOCATIONS, NUMBER AND TYPES OF EXISTING UTILITY LINES DETAILED ON THE CONSTRUCTION DRAWINGS ARE APPROXIMATE AND DO NOT REPRESENT EXACT INFORMATION. THE CONTRACTOR SHALL BE RESPONSIBLE FOR REPAIRING ALL LINES DAMAGED DURING EXCAVATION AND ALL ASSOCIATED OPERATIONS. ALL UTILITY LINES UNCOVERED DURING THE EXCAVATION OPERATIONS, SHALL BE PROTECTED FROM DAMAGE DURING EXCAVATION AND ASSOCIATED OPERATIONS. ALL REPAIRS SHALL BE APPROVED BY THE UTILITY COMPANY.

B. HAND DIGGING: UNLESS APPROVED IN WRITING OTHERWISE, ALL DIGGING WITHIN AN EXISTING CELL SITE COMPOUND IS TO BE DONE BY HAND.

C. DURING EXCAVATION, MATERIAL SUITABLE FOR BACKFILLING SHALL BE STOCKPILED IN AN ORDERLY MANNER A SUFFICIENT DISTANCE FROM THE BANKS OF THE TRENCH TO AVOID OVERLOADING AND TO PREVENT SLIDES OR CAVE-INS. ALL EXCAVATED MATERIALS NOT REQUIRED OR SUITABLE FOR BACKFILL SHALL BE REMOVED AND DISPOSED OF AT THE CONTRACTOR'S EXPENSE.

D. GRADING SHALL BE DONE AS MAY BE NECESSARY TO PREVENT SURFACE WATER FROM FLOWING INTO TRENCHES OR OTHER EXCAVATIONS, AND ANY WATER ACCUMULATING THEREIN SHALL BE REMOVED BY PUMPING OR BY OTHER APPROVED METHOD.

E. SHEETING AND SHORING SHALL BE DONE AS NECESSARY FOR THE PROTECTION OF THE WORK AND FOR THE SAFETY OF PERSONNEL. UNLESS OTHERWISE INDICATED, EXCAVATION SHALL BE BY OPEN CUT, EXCEPT THAT SHORT SECTIONS OF A TRENCH MAY BE TUNNELED IF, THE CONDUIT CAN BE SAFELY AND PROPERLY INSTALLED AND BACKFILL CAN BE PROPERLY TAMPED IN SUCH TUNNEL SECTIONS. EARTH EXCAVATION SHALL COMPRISE ALL MATERIALS AND SHALL INCLUDE CLAY, SILT, SAND, MUCK, GRAVEL, HARDPAN, LOOSE SHALE, AND LOOSE STONE.

F. TRENCHES SHALL BE OF NECESSARY WIDTH FOR THE PROPER LAYING OF THE CONDUIT OR CABLE, AND THE BANKS SHALL BE AS NEARLY VERTICAL AS PRACTICABLE. THE BOTTOM OF THE TRENCHES SHALL BE ACCURATELY GRADED TO PROVIDE UNIFORM BEARING AND SUPPORT FOR EACH SECTION OF THE CONDUIT OR CABLE ON UNDISTURBED SOIL AT EVERY POINT ALONG ITS ENTIRE LENGTH. EXCEPT WHERE ROCK IS ENCOUNTERED, CARE SHALL BE TAKEN NOT TO EXCAVATE BELOW THE DEPTHS INDICATED. WHERE ROCK EXCAVATIONS ARE NECESSARY, THE ROCK SHALL BE EXCAVATED TO A MINIMUM OVER DEPTH OF 6 INCHES BELOW THE TRENCH DEPTHS INDICATED ON THE CONSTRUCTION DRAWINGS OR SPECIFIED. OVER DEPTHS IN THE ROCK EXCAVATION AND UNAUTHORIZED OVER DEPTHS SHALL BE THOROUGHLY BACK FILLED AND TAMPED TO THE APPROPRIATE GRADE. WHENEVER WET OR OTHERWISE UNSTABLE SOIL THAT IS INCAPABLE OF PROPERLY SUPPORTING THE CONDUIT OR CABLE IS ENCOUNTERED IN THE BOTTOM OF THE TRENCH, SUCH SOLID SHALL BE REMOVED TO A MINIMUM OVER DEPTH OF 6 INCHES AND THE TRENCH BACKFILLED TO THE PROPER GRADE WITH EARTH OF OTHER SUITABLE MATERIAL, AS HEREINAFTER SPECIFIED.

G. BACKFILLING OF TRENCHES. TRENCHES SHALL NOT BE BACKFILLED UNTIL ALL SPECIFIED TESTS HAVE BEEN PERFORMED AND ACCEPTED. WHERE COMPACTED BACKFILL IS NOT INDICATED THE TRENCHES SHALL BE CAREFULLY BACKFILLED WITH SELECT MATERIAL SUCH AS EXCAVATED SOILS THAT ARE FREE OF ROOTS, SOD, RUBBISH OR STONES, DEPOSITED IN 6 INCH LAYERS AND THOROUGHLY AND CAREFULLY RAMMED UNTIL THE CONDUIT OR CABLE HAS A COVER OF NOT LESS THAN 1 FOOT. THE REMAINDER OF THE BACKFILL MATERIAL SHALL BE GRANULAR IN NATURE AND SHALL NOT CONTAIN ROOTS, SOD, RUBBING, OR STONES OF 2-1/2 INCH MAXIMUM DIMENSION. BACKFILL SHALL BE CAREFULLY PLACED IN THE TRENCH AND IN 1 FOOT LAYERS AND EACH LAYER TAMPED. SETTLING THE BACKFILL WITH WATER WILL BE PERMITTED. THE SURFACE SHALL BE GRADED TO A REASONABLE UNIFORMITY AND THE MOUNDING OVER THE TRENCHES LEFT IN A UNIFORM AND NEAT CONDITION.

SYMBOL	DESCRIPTION
	CIRCUIT BREAKER
	NON-FUSIBLE DISCONNECT SWITCH
F	FUSIBLE DISCONNECT SWITCH
	SURFACE MOUNTED PANEL BOARD
T	TRANSFORMER
M	KILOWATT HOUR METER
JB	JUNCTION BOX
PB	PULL BOX TO NEC/TELCO STANDARDS
	UNDERGROUND UTILITIES
	EXOTHERMIC WELD CONNECTION
	MECHANICAL CONNECTION
OR	GROUND ROD
OR	GROUND ROD WITH INSPECTION SLEEVE
	GROUND BAR
	120AC DUPLEX RECEPTACLE
G	GROUND CONDUCTOR
	DC POWER AND FIBER OPTIC TRUNK CABLES
	DC POWER CABLES
# / #	REPRESENTS DETAIL NUMBER / REF. DRAWING NUMBER

ABBREVIATIONS

CIGBE	COAX ISOLATED GROUND BAR EXTERNAL
MIGB	MASTER ISOLATED GROUND BAR
SST	SELF SUPPORTING TOWER
GPS	GLOBAL POSITIONING SYSTEM
TYP.	TYPICAL
DWG	DRAWING
BCW	BARE COPPER WIRE
BFG	BELOW FINISH GRADE
PVC	POLYVINYL CHLORIDE
CAB	CABINET
C	CONDUIT
SS	STAINLESS STEEL
G	GROUND
AWG	AMERICAN WIRE GAUGE
RGS	RIGID GALVANIZED STEEL
AHJ	AUTHORITY HAVING JURISDICTION
TTLNA	TOWER TOP LOW NOISE AMPLIFIER
UNO	UNLESS NOTED OTHERWISE
EMT	ELECTRICAL METALLIC TUBING
AGL	ABOVE GROUND LEVEL

INFINIGY ENGINEERING, PLLC
500 WEST OFFICE CENTER DR.
SUITE 150
FORT WASHINGTON, PA 19034

at&t

STATE OF CONNECTICUT
CHRISTOPHER J. WARREN
No. 23544
10/27/23
LICENSED
PROFESSIONAL ENGINEER

No.	Submittal / Revision	App'd	Date
5	ISSUED FOR CONSTRUCTION	DGD	10/17/23
4	ISSUED FOR CONSTRUCTION	DGD	09/07/23
3	ISSUED FOR CONSTRUCTION	CES	08/10/23
2	ISSUED FOR CONSTRUCTION	CES	07/03/23
1	ISSUED FOR CONSTRUCTION	CES	09/16/22
0	ISSUED FOR REVIEW	BMM	04/19/22

Drawn: RCD Date: 04/06/22
Designed: ASW Date: 04/06/22
Checked: AJD Date: 04/06/22

Project Number: 1106-A0001-C

Project Title:
NEW HAVEN
WEST ROCK
CTL02013
FA# 10035296
142 BALDWIN DRIVE
NEW HAVEN, CT 06514

Prepared For: smartlink

Drawing Scale: AS NOTED
Date: 04/06/22
CD

Drawing Title
GENERAL NOTES

Drawing Number
C1

CONTRACTOR TO REFER TO:
ATT-CEM-23001
ATT-TP-76416
ATT-TP-76300
ATT-CEM-18002
ATT-002-290-531
ATT-002-290-701

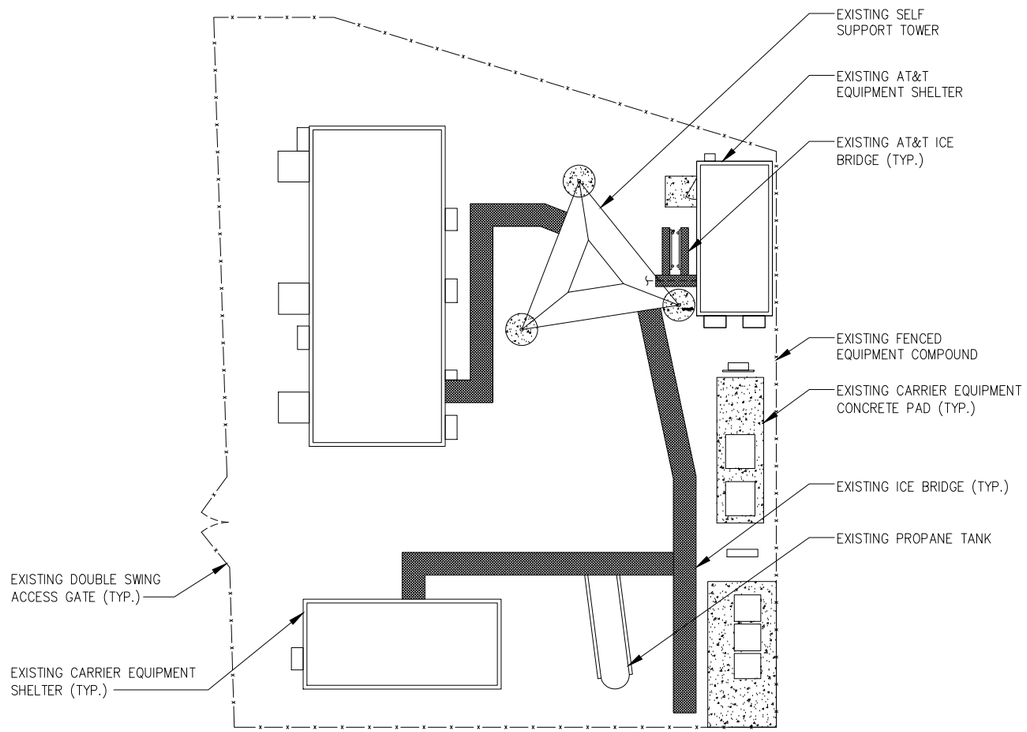

BASEMAPPING PREPARED FROM A SITE WALK PERFORMED BY INFINIGY ENGINEERING ON 11/17/18 AND PROVIDED INFORMATION, AND DOES NOT REPRESENT AN ACTUAL FIELD SURVEY.

TRUE NORTH

1 SITE PLAN
SCALE: AS NOTED

GRAPHIC SCALE:
20' 10' 0 10' 20'
SCALE (11x17): 1" = 20'-0"
SCALE (22x34): 1" = 10'-0"

FINAL BBU CONFIGURATION:
(1) 5216
(1) XMU WITH IDLE
(1) 6651 WITH XCEDE CABLE

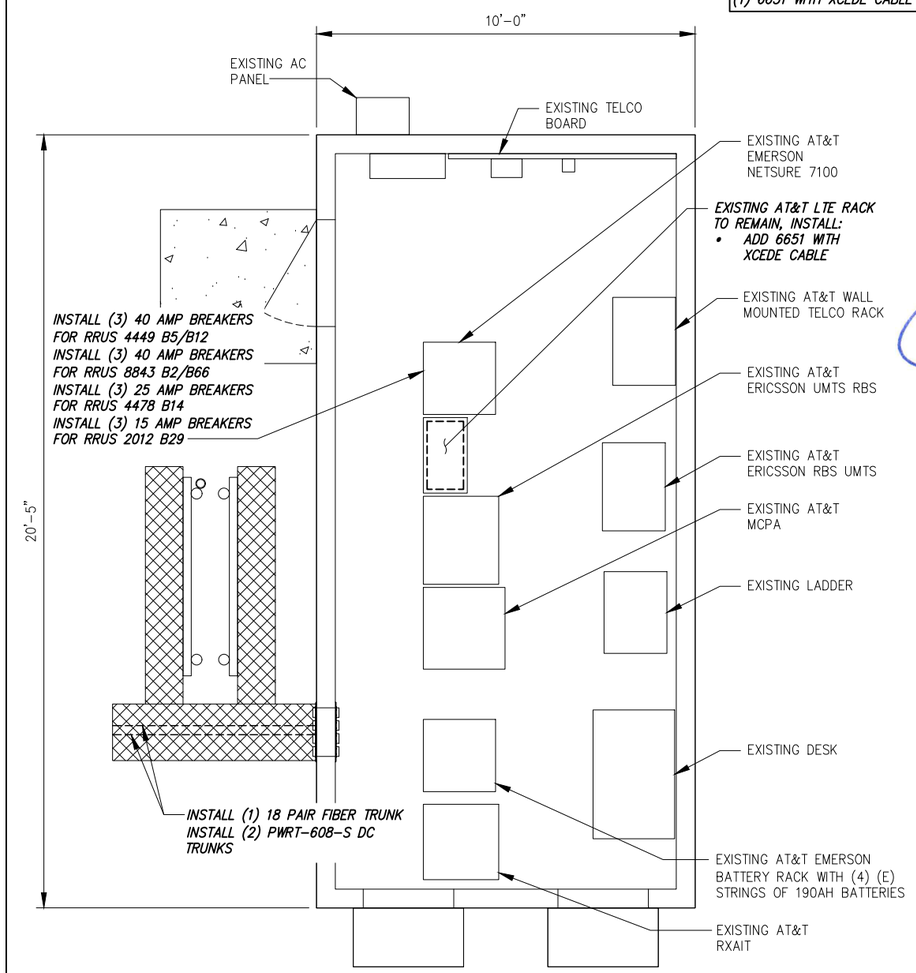

TRUE NORTH

2 ENLARGED EQUIPMENT PLAN
SCALE: AS NOTED

GRAPHIC SCALE:
4' 2' 0 2' 4'
SCALE (11x17): 1" = 4'-0"
SCALE (22x34): 1" = 2'-0"

INFINIGY ENGINEERING, PLLC
500 WEST OFFICE CENTER DR.
SUITE 150
FORT WASHINGTON, PA 19034

at&t

STATE OF CONNECTICUT
CHRISTOPHER J. WARREN
No. 23544
10/27/23
LICENSED
PROFESSIONAL ENGINEER

UNAUTHORIZED ALTERATION OR ADDITION TO THIS DOCUMENT IS A VIOLATION OF APPLICABLE STATE AND/OR LOCAL LAWS

No.	Submittal / Revision	App'd	Date
5	ISSUED FOR CONSTRUCTION	DGD	10/17/23
4	ISSUED FOR CONSTRUCTION	DGD	09/07/23
3	ISSUED FOR CONSTRUCTION	CES	08/10/23
2	ISSUED FOR CONSTRUCTION	CES	07/03/23
1	ISSUED FOR CONSTRUCTION	CES	09/16/22
0	ISSUED FOR REVIEW	BMM	04/19/22

Drawn: RCD Date: 04/06/22
Designed: ASW Date: 04/06/22
Checked: AJD Date: 04/06/22

Project Number: 1106-A0001-C

Project Title:
NEW HAVEN
WEST ROCK
CTL02013
FA# 10035296
142 BALDWIN DRIVE
NEW HAVEN, CT 06514

Prepared For: smartlink

Drawing Scale: AS NOTED
Date: 04/06/22
CD

Drawing Title
OVERALL & ENLARGED SITE PLAN

Drawing Number
C2

THESE PLANS HAVE BEEN DEVELOPED FOR THE MODIFICATION OF AN EXISTING UNMANNED TELECOMMUNICATIONS FACILITY OWNED OR LEASED BY AT&T IN ACCORDANCE WITH THE SCOPE OF WORK PROVIDED BY AT&T. INFINIGY HAS INCORPORATED THIS SCOPE OF WORK IN THE PLANS. THESE PLANS ARE NOT FOR CONSTRUCTION UNLESS ACCOMPANIED BY A PASSING STRUCTURAL STABILITY ANALYSIS PREPARED BY A LICENSED STRUCTURAL ENGINEER. STRUCTURAL ANALYSIS MUST INCLUDE BOTH TOWER AND MOUNT.

SEPARATION NOTE:
- 3 FEET MINIMUM SEPARATION BETWEEN LTE ANTENNA
- 6 FEET MINIMUM SEPARATION BETWEEN 700BC & 700 DE
- GENERAL CONTRACTOR TO VERIFY IN FIELD VERTICAL SEPERATION BETWEEN BOTTOM OF AT&T ANTENNAS AND TOP OF ANTENNAS BY OTHERS TO ENSURE NO OVERLAPPING

SEE MOUNT ANALYSIS BY INFINIGY ENGINEERING DATED 07/13/23 PRIOR TO CONSTRUCTION.

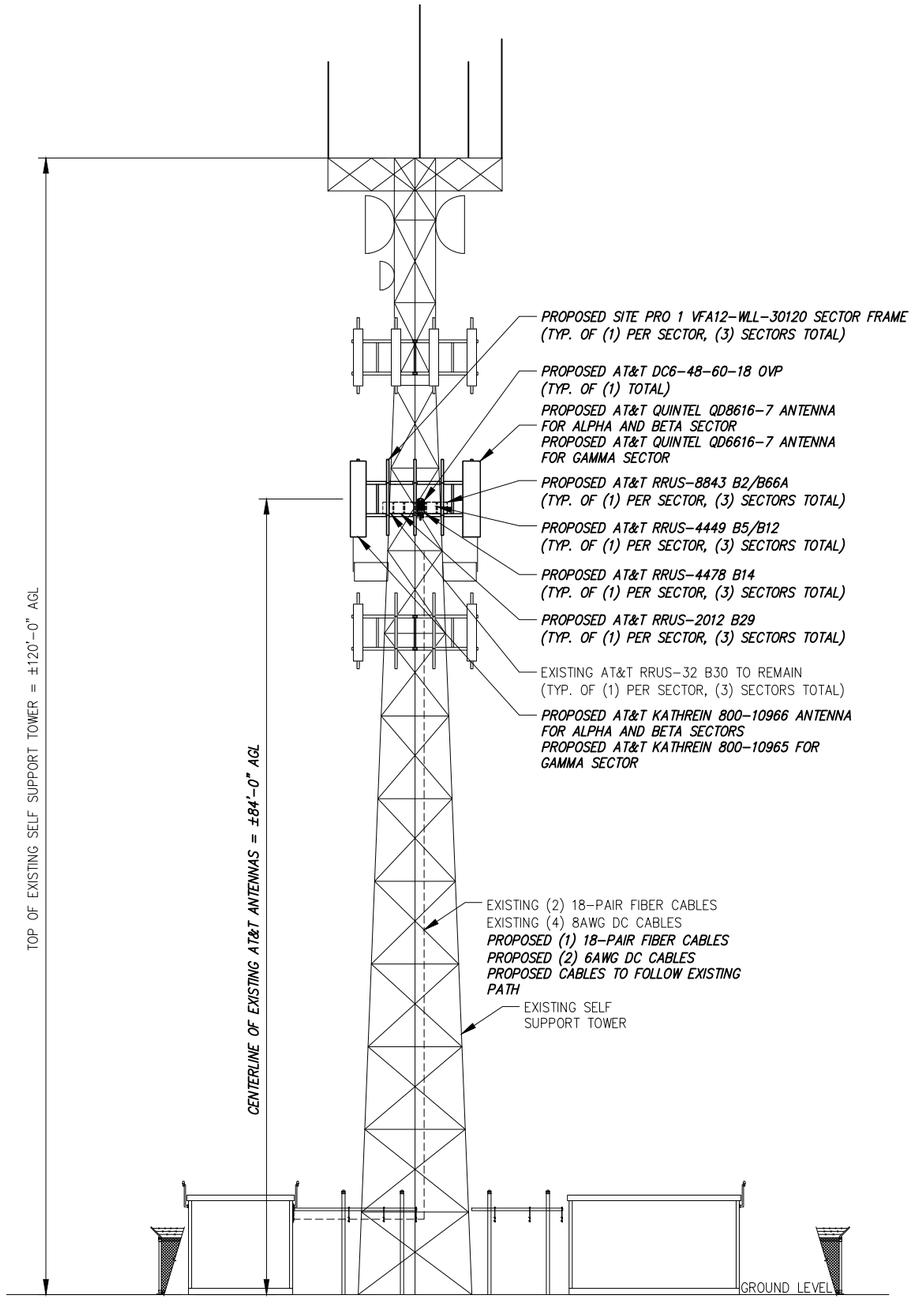

1 ELEVATION VIEW
-- NOT TO SCALE

FINAL ANTENNA CONFIGURATION & CABLE SCHEDULE BASED ON LTE RFDS DATED 08/01/2023, V5.00

SECTOR	ANTENNA POSITION	ANTENNA STATUS & TECHNOLOGY	ANTENNA MANF/MODEL	TMA/DIPLEXER/ FILTER	RRUS	AZIMUTH	ANTENNA ℄ HEIGHT	CABLE FEEDER TYPE	CABLE FEEDER LENGTH	RAYCAP UNIT
ALPHA	A-1	--	--	--	--	--	--	--	--	(2) (E) DC6-48-60-18 'SQUID' (1) (P) DC6-48-60-18 'SQUID'
	A-2	(P) LTE 700/1900/AWS 5G 1900/5G AWS	QUINTEL QD8616-7	--	(1) (P) 4478 B14 (1) (P) 2012 B29 (1) (P) 8843 B2/B66A	10°	±84'	(1) (E) 18-PAIR FIBER CABLE (2) (E) 8AWG DC CABLES (1) (P) Y-CABLE	±95'	
	A-3	--	--	--	--	--	--	--	--	
	A-4	(P) LTE 700/WCS 5G 850	KATHREIN 800-10966	--	(1) (E) RRUS-32 B30 (1) (P) 4449 B5/B12	10°	±84'	(1) (P) Y-CABLE	±95'	
BETA	B-1	--	--	--	--	--	--	--	--	
	B-2	(P) LTE 700/1900/AWS 5G 1900/5G AWS	QUINTEL QD8616-7	--	(1) (P) 4478 B14 (1) (P) 2012 B29 (1) (P) 8843 B2/B66A	120°	±84'	(1) (E) 18-PAIR FIBER CABLE (2) (E) 8AWG DC CABLES (1) (P) Y-CABLE	±95'	
	B-3	--	--	--	--	--	--	--	--	
	B-4	(P) LTE 700/WCS 5G 850	KATHREIN 800-10966	--	(1) (E) RRUS-32 B30 (1) (P) 4449 B5/B12	120°	±84'	(1) (P) Y-CABLE	±95'	
GAMMA	G-1	--	--	--	--	--	--	--	--	
	G-2	(P) LTE 700/1900/AWS 5G 1900/5G AWS	QUINTEL QD6616-7	--	(1) (P) 4478 B14 (1) (P) 2012 B29 (1) (P) 8843 B2/B66A	250°	±84'	(1) (P) 18-PAIR FIBER CABLE (2) (P) 6AWG DC CABLES (1) (P) Y-CABLE	±95'	
	G-3	--	--	--	--	--	--	--	--	
	G-4	(P) LTE 700/WCS 5G 850	KATHREIN 800-10965	--	(1) (E) RRUS-32 B30 (1) (P) 4449 B5/B12	250°	±84'	(1) (P) Y-CABLE	±95'	

2 AT&T ANTENNA SCHEDULE
-- NOT TO SCALE

INFINIGY ENGINEERING, PLLC
500 WEST OFFICE CENTER DR.
SUITE 150
FORT WASHINGTON, PA 19034

at&t

STATE OF CONNECTICUT
CHRISTOPHER J. WARREN
No. 23544
10/27/23
LICENSED
PROFESSIONAL ENGINEER

UNAUTHORIZED ALTERATION OR ADDITION TO THIS DOCUMENT IS A VIOLATION OF APPLICABLE STATE AND/OR LOCAL LAWS

No.	Submittal / Revision	App'd	Date
5	ISSUED FOR CONSTRUCTION	DGD	10/17/23
4	ISSUED FOR CONSTRUCTION	DGD	09/07/23
3	ISSUED FOR CONSTRUCTION	CES	08/10/23
2	ISSUED FOR CONSTRUCTION	CES	07/03/23
1	ISSUED FOR CONSTRUCTION	CES	09/16/22
0	ISSUED FOR REVIEW	BMM	04/19/22

Drawn: RCD Date: 04/06/22
Designed: ASW Date: 04/06/22
Checked: AJD Date: 04/06/22

Project Number: 1106-A0001-C

Project Title:
NEW HAVEN
WEST ROCK
CTL02013
FA# 10035296
142 BALDWIN DRIVE
NEW HAVEN, CT 06514

Prepared For: smartlink

Drawing Scale: AS NOTED
Date: 04/06/22
CD

Drawing Title
ELEVATION VIEW

Drawing Number
C3

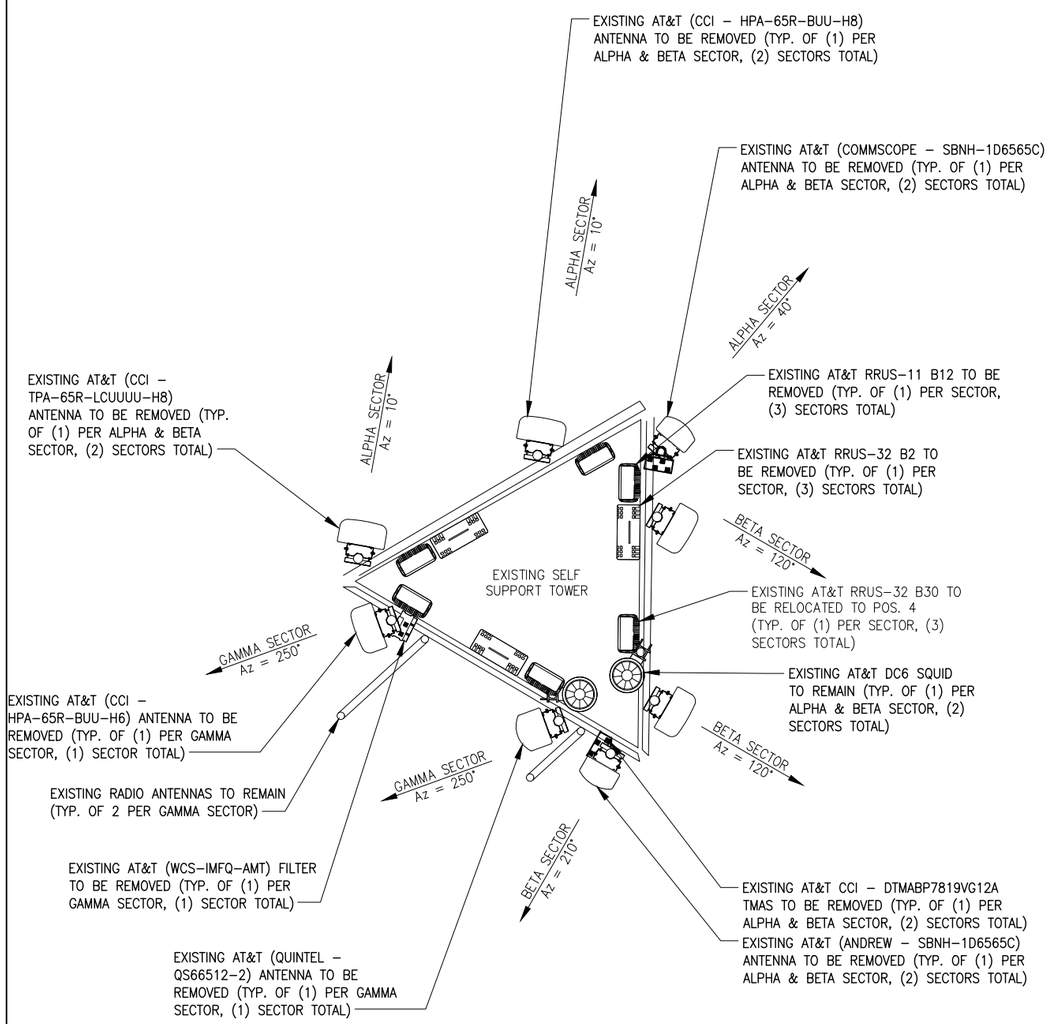

1 ANTENNA ORIENTATION PLAN (EXISTING)
NOT TO SCALE

SEPARATION NOTE:
- 3 FEET MINIMUM SEPARATION BETWEEN LTE ANTENNA
- 6 FEET MINIMUM SEPARATION BETWEEN 700BC & 700 DE

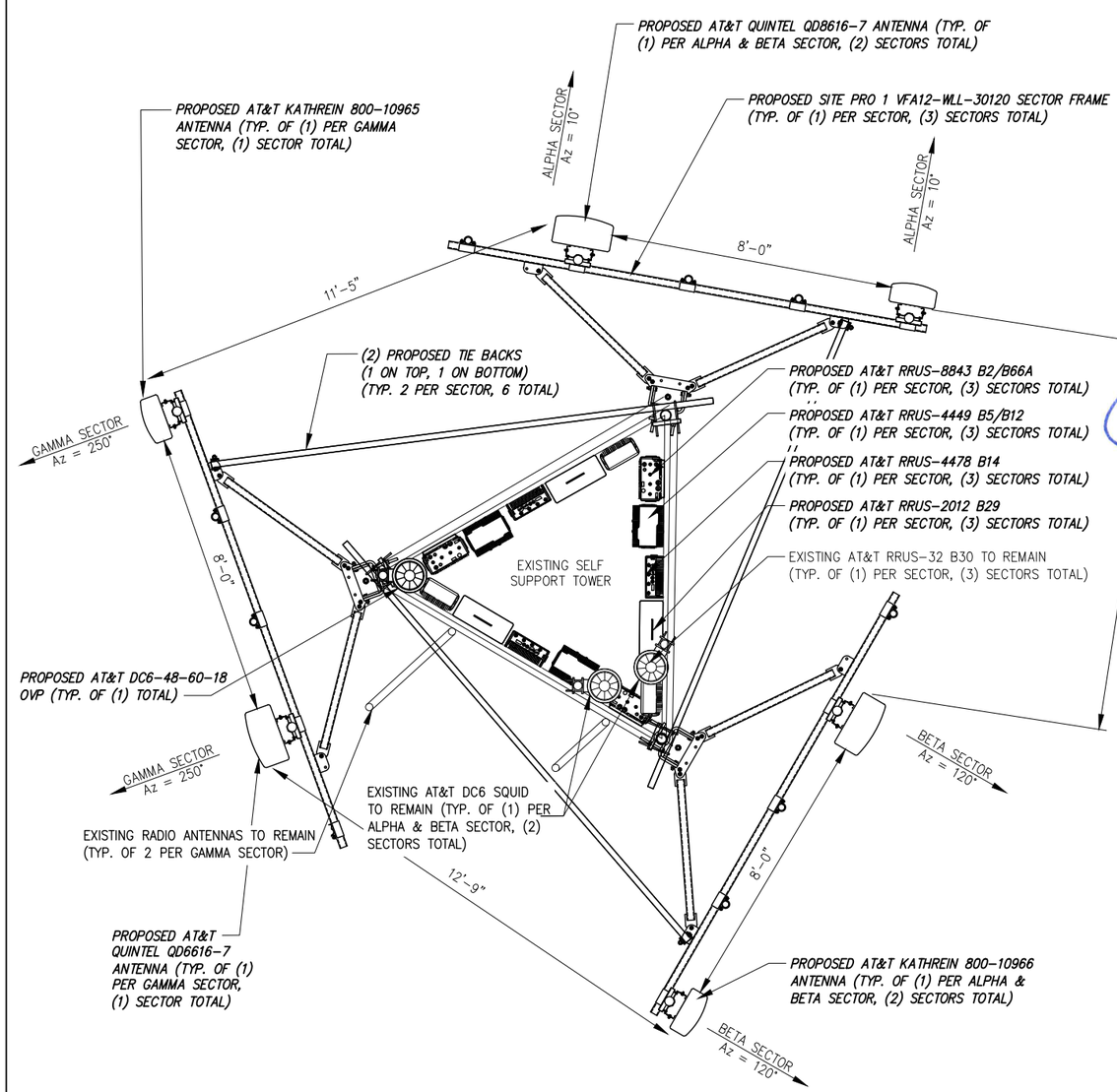

2 PROPOSED ANTENNA ORIENTATION PLAN
NOT TO SCALE

INFINIGY ENGINEERING, PLLC
500 WEST OFFICE CENTER DR.
SUITE 150
FORT WASHINGTON, PA 19034

at&t

STATE OF CONNECTICUT
CHRISTOPHER J. WARREN
No. 23544
10/27/23
LICENSED
PROFESSIONAL ENGINEER

No.	Submittal / Revision	App'd	Date
5	ISSUED FOR CONSTRUCTION	DGD	10/17/23
4	ISSUED FOR CONSTRUCTION	DGD	09/07/23
3	ISSUED FOR CONSTRUCTION	CES	08/10/23
2	ISSUED FOR CONSTRUCTION	CES	07/03/23
1	ISSUED FOR CONSTRUCTION	CES	09/16/22
0	ISSUED FOR REVIEW	BMM	04/19/22

Drawn: RCD Date: 04/06/22
Designed: ASW Date: 04/06/22
Checked: AJD Date: 04/06/22

Project Number: 1106-A0001-C

Project Title:
NEW HAVEN
WEST ROCK
CTL02013
FA# 10035296
142 BALDWIN DRIVE
NEW HAVEN, CT 06514

Prepared For: smartlink

Drawing Scale: AS NOTED
Date: 04/06/22
CD

Drawing Title
ANTENNA ORIENTATION PLAN

Drawing Number
C4

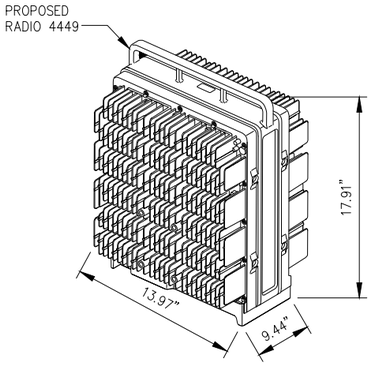

RADIO 4449 B5/B12 SPECIFICATIONS

- HxWxD, (INCHES) : 17.91"x13.97"x9.44"
- WEIGHT (LBS) : 70.54
- COLOR : GRAY

1 ERICSSON RADIO 4449 B5/B12 DETAIL
NOT TO SCALE

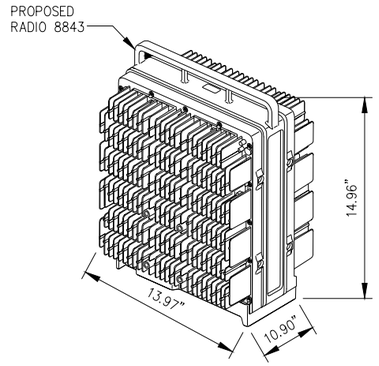

RADIO 8843 B2/B66A SPECIFICATIONS

- HxWxD, (INCHES) : 14.96"x13.97"x10.90"
- WEIGHT (LBS) : 71.87
- COLOR : GRAY

2 ERICSSON RADIO 8843 B2/B66A DETAIL
NOT TO SCALE

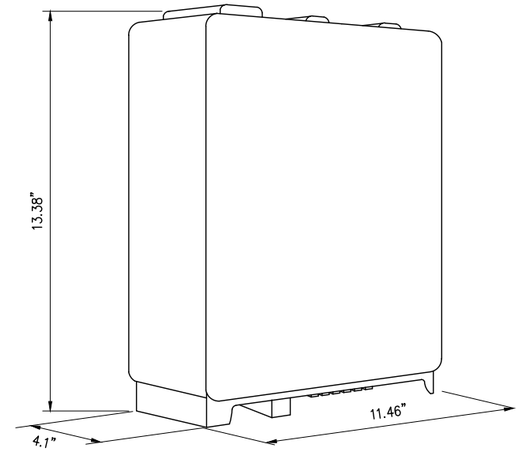

ERICSSON 2012 B29 SPECIFICATIONS

- HxWxD, (INCHES) : 13.38"x11.46"x4.1"
- WEIGHT (LBS) : 26.45
- COLOR : GRAY

3 ERICSSON RADIO 2012 B29 DETAIL
NOT TO SCALE

ERICSSON RRUS-4478 B14

DIMENSIONS, HxWxD: 420x340x196mm (16.5"x13.4"x7.7")
DC POWER CONSUMPTION: 670W
TOTAL WEIGHT: 59.9 LBS

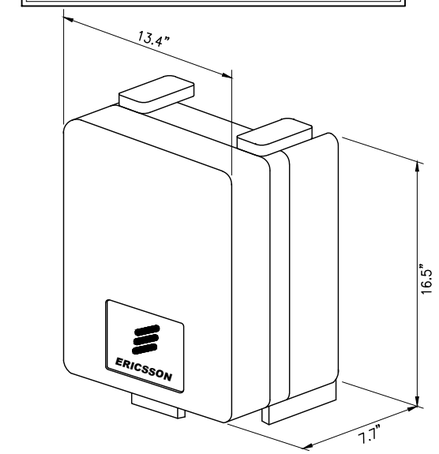

5 ERICSSON RADIO 4478 B14 DETAIL
NOT TO SCALE

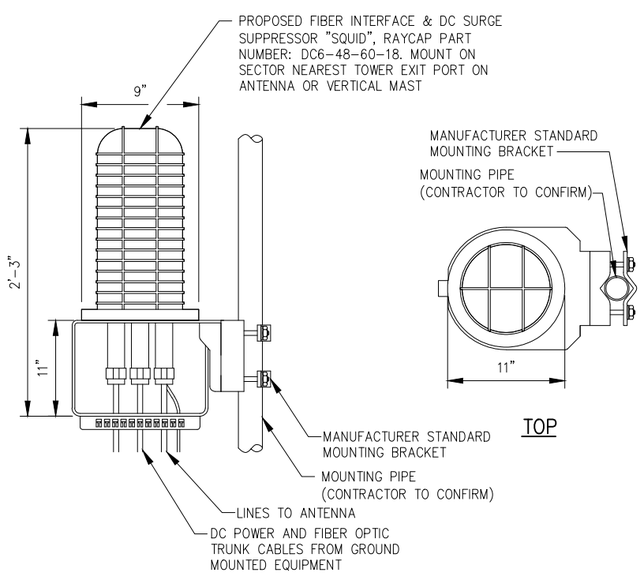

6 SURGE PROTECTOR RAYCAP DC6-48-60-18 MOUNTING DETAIL
NOT TO SCALE

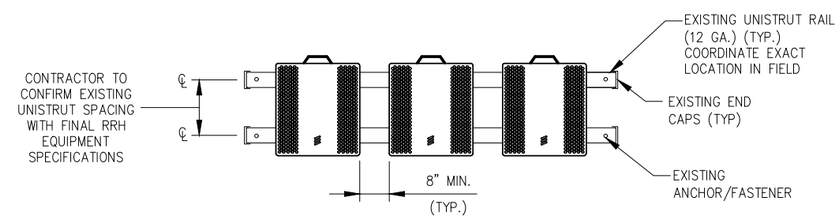

NOTES:

1. A SUPPORT FOR A SINGLE RRH SHALL HAVE A MINIMUM OF TWO ANCHORS/FASTENERS FOR EACH UNISTRUT CHANNEL.
2. MOUNT RRH TO UNISTRUT WITH 3/8"ø UNISTRUT BOLTING HARDWARE AND SPRING NUTS. TYPICAL FOUR PER BRACKET. SUBCONTRACTOR SHALL SUPPLY.
3. GENERAL CONTRACTOR TO VERIFY IN FIELD EXISTING CONDITIONS OF EXISTING UNISTRUTS AND REPLACE WITH NEW UNISTRUTS AS REQUIRED.

7 TYPICAL RRU MOUNTING DETAIL
NOT TO SCALE

INFINIGY ENGINEERING, PLLC
500 WEST OFFICE CENTER DR.
SUITE 150
FORT WASHINGTON, PA 19034

at&t

STATE OF CONNECTICUT
CHRISTOPHER J. WARREN
No. 23544
10/27/23
LICENSED
PROFESSIONAL ENGINEER

No.	Submittal / Revision	App'd	Date
5	ISSUED FOR CONSTRUCTION	DGD	10/17/23
4	ISSUED FOR CONSTRUCTION	DGD	09/07/23
3	ISSUED FOR CONSTRUCTION	CES	08/10/23
2	ISSUED FOR CONSTRUCTION	CES	07/03/23
1	ISSUED FOR CONSTRUCTION	CES	09/16/22
0	ISSUED FOR REVIEW	BMM	04/19/22

Drawn: RCD Date: 04/06/22
Designed: ASW Date: 04/06/22
Checked: AJD Date: 04/06/22

Project Number: 1106-A0001-C

Project Title:
NEW HAVEN
WEST ROCK
CTL02013
FA# 10035296
142 BALDWIN DRIVE
NEW HAVEN, CT 06514

Prepared For: smartlink

Drawing Scale: AS NOTED
Date: 04/06/22
CD

Drawing Title
EQUIPMENT DETAILS

Drawing Number
C5

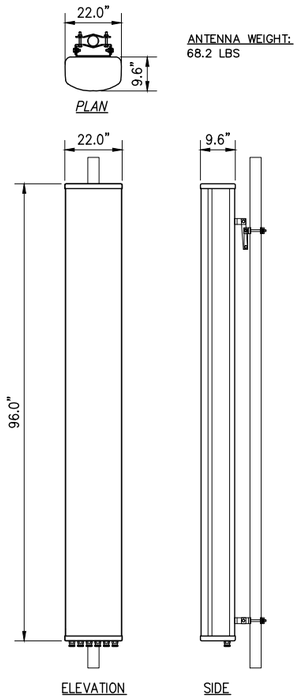

1 QUINTEL QD8616-7 ANTENNA DETAIL
-- NOT TO SCALE

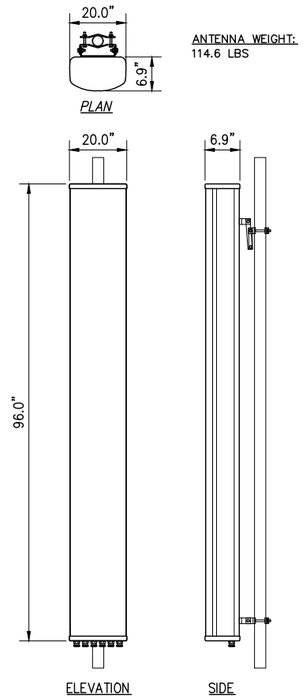

2 KATHREIN 800-10966 ANTENNA DETAIL
-- NOT TO SCALE

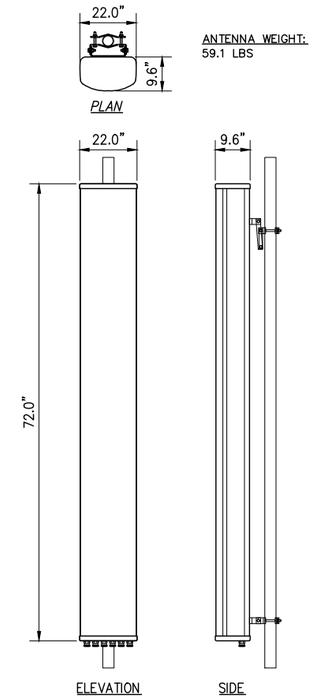

3 QUINTEL QD6616-7 ANTENNA DETAIL
-- NOT TO SCALE

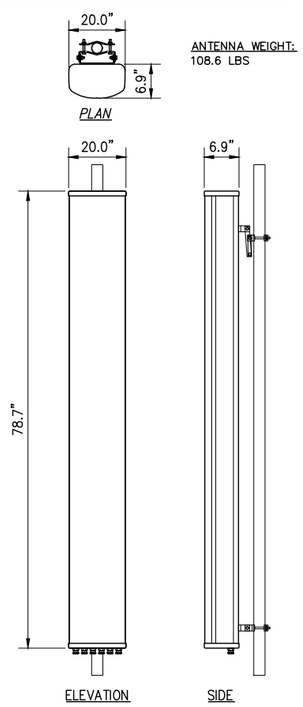

4 KATHREIN 800-10965 ANTENNA DETAIL
-- NOT TO SCALE

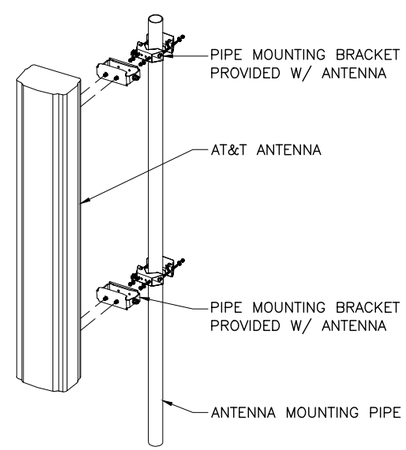

5 PROPOSED ANTENNA MOUNTING DETAIL
-- NOT TO SCALE

NOTES:

1. REFER TO CURRENT RFDS FOR ADDITIONAL INFO.
2. ADJUST ANTENNA MOUNTS AS REQUIRED TO ACHIEVE THE AZIMUTH SPECIFIED AND LIMIT RF SHADOWING
3. UNLESS NOTED OTHERWISE THE CONTRACTOR MUST PROVIDE ALL MATERIAL NECESSARY.
4. CONTRACTOR TO RETURN ALL EXISTING ANTENNAS BEING REMOVED TO AT&T.
5. ALL DOWN TILT AZIMUTHS TO BE VERIFIED BY CURRENT RFDS. SEE CONSTRUCTION MANAGER FOR INFORMATION

NOTE:
ALL DOWN TILT AZIMUTHS TO BE VERIFIED BY RF SITE DATA SHEET. SEE CONSTRUCTION MANAGER FOR INFORMATION.

INFINIGY ENGINEERING, PLLC
500 WEST OFFICE CENTER DR.
SUITE 150
FORT WASHINGTON, PA 19034

at&t

STATE OF CONNECTICUT
CHRISTOPHER J. WARREN
No. 23544
10/27/23
LICENSED
PROFESSIONAL ENGINEER

No.	Submittal / Revision	App'd	Date
5	ISSUED FOR CONSTRUCTION	DGD	10/17/23
4	ISSUED FOR CONSTRUCTION	DGD	09/07/23
3	ISSUED FOR CONSTRUCTION	CES	08/10/23
2	ISSUED FOR CONSTRUCTION	CES	07/03/23
1	ISSUED FOR CONSTRUCTION	CES	09/16/22
0	ISSUED FOR REVIEW	BMM	04/19/22

Drawn: RCD Date: 04/06/22
Designed: ASW Date: 04/06/22
Checked: AJD Date: 04/06/22

Project Number: 1106-A0001-C

Project Title:
NEW HAVEN
WEST ROCK
CTL02013
FA# 10035296
142 BALDWIN DRIVE
NEW HAVEN, CT 06514

Prepared For: smartlink

Drawing Scale: AS NOTED
Date: 04/06/22
CD

Drawing Title
EQUIPMENT DETAILS

Drawing Number
C5.1

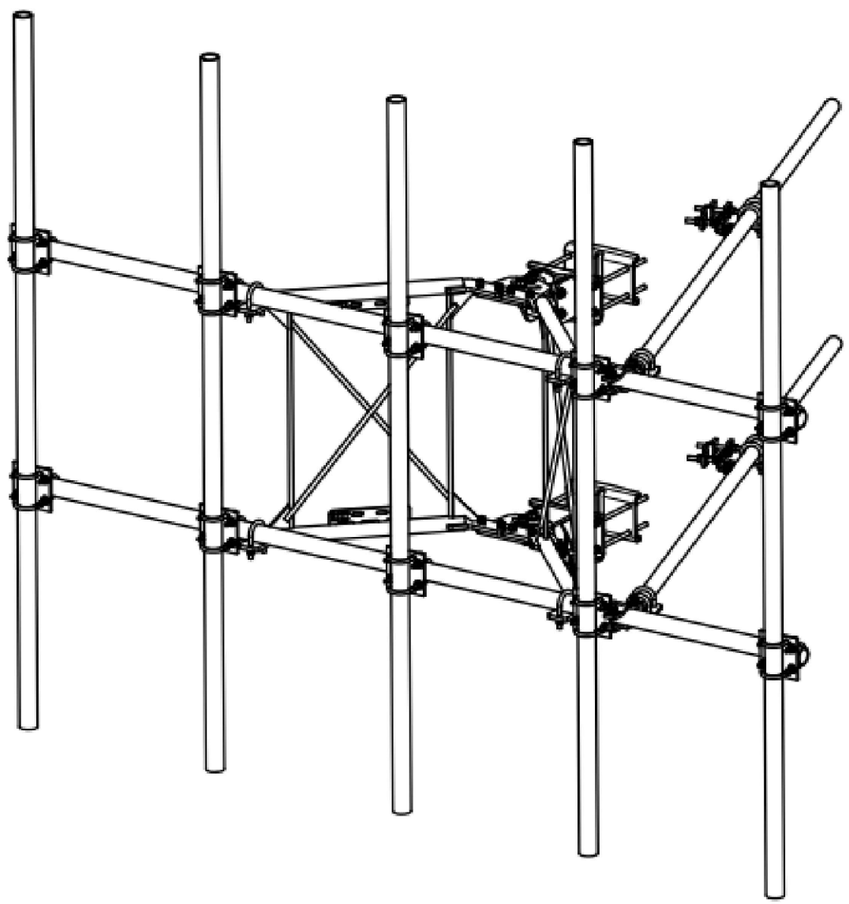

PARTS LIST

ITEM	QTY	PART NO.	PART DESCRIPTION	LENGTH	UNIT WT.	NET WT.
1	2	X-VFAW	SUPPORT ARM		71.41	142.81
2	1	X-HDCAMTBW	CLAMP WELDMENT FOR BCAM-HD		33.86	33.86
3	1	X-MHTPHD	MULTI-HOLE TAPER PLATE WELDMENT		36.24	36.24
4	1	X-HDCAMSS	ANGLE ADJUSTMENT WELDMENT FOR BCAM-HD		16.39	16.39
5	2	X-VFAPL4	VFA-HD PIVOT PLATE	12 in	15.88	31.77
6	2	X-LCBP4	BENT BACKING PLATE	13 in	19.00	38.01
7	4	X-SPTB	SLIDING PIPE TIE BACK PLATE	5 1/2 in	5.87	23.49
8	1	X-HDCAMSP	POSITIONING PLATE WELDMENT FOR BCAM-HD		2.58	2.58
9	4	X-TBCA	TIE BACK CLIP ANGLE		2.01	8.02
10	10	SCX2	CROSSOVER PLATE	7 in	4.80	47.96
11	4	MCP	CLAMP HALF 1/2" THICK, 11-5/8" LONG	12 1/16 in	3.59	14.37
12	8	DCP	1/2" THICK, 5-3/4" CNTER TO CENTER CLAMP HALF	8 1/8 in	2.36	18.90
13	2	P2126	2-3/8" X 126" (2" SCH. 40) GALVANIZED PIPE	126 in	40.75	81.50
14	2	P30150	2-7/8" X 150" (2-1/2" SCH. 40) GALVANIZED PIPE	150 in	76.94	153.87
15	4	A34212	3/4" x 2-1/2" UNC HEX BOLT (A325)	2 1/2 in	0.48	1.92
16	4	G34FW	3/4" HDG USS FLATWASHER		0.06	0.24
17	4	G34LW	3/4" HDG LOCKWASHER		0.04	0.17
18	4	G34NUT	3/4" HDG HEAVY 2H HEX NUT		0.21	0.85
19	8	G58R-18	5/8" x 18" THREADED ROD (HDG.)		1.57	12.54
20	4	G58R-12	5/8" x 12" THREADED ROD (HDG.)		1.05	4.18
21	4	G58R-8	5/8" x 8" THREADED ROD (HDG.)		0.70	2.79
22	4	X-UB5300	5/8" X 3" X 5-1/4" X 2-1/2" U-BOLT (HDG.)		1.15	4.60
23	8	X-UB5258	5/8" X 2-5/8" X 4-1/2" X 2" U-BOLT (HDG.)		1.00	8.00
24	2	G5807	5/8" x 7" HDG HEX BOLT GR5 FULL THREAD	7 in	0.70	1.41
25	1	G5806	5/8" x 6" HDG HEX BOLT GR5 FULL THREAD	6 in	0.62	0.62
26	8	G5804	5/8" x 4" HDG HEX BOLT GR5		0.44	3.55
27	4	G5802	5/8" x 2" HDG HEX BOLT GR5		0.27	1.08
28	8	A582114	5/8" x 2-1/4" HDG A325 HEX BOLT	2 1/4 in	0.31	2.50
29	25	G58FW	5/8" HDG USS FLATWASHER	1/8 in	0.07	1.76
30	66	G58LW	5/8" HDG LOCKWASHER		0.03	1.72
31	71	G58NUT	5/8" HDG HEAVY 2H HEX NUT		0.13	9.22
32	48	X-UB1300	1/2" X 3" X 5" X 2" GALV U-BOLT		0.74	35.45
33	20	X-UB1212	1/2" X 2-1/2" X 4-1/2" X 2" GALV. U-BOLT		0.66	13.13
34	80	G12FW	1/2" HDG USS FLATWASHER	3/32 in	0.03	2.73
35	80	G12LW	1/2" HDG LOCKWASHER	1/8 in	0.01	1.11
36	80	G12NUT	1/2" HDG HEAVY 2H HEX NUT		0.07	5.73
37	5	P30120	2-7/8" x 120" (2-1/2" SCH. 40) GALVANIZED PIPE	120 in	58.07	290.33
					TOTAL WT. #	1055.41

REV	DESCRIPTION OF REVISIONS	CPD	BY	DATE
A	UPDATED BCAM VERSION 1 TO BCAM VERSION 2	SP1	CSL	7/2/2018

REVISION HISTORY

TOLERANCE NOTES

TOLERANCES ON DIMENSIONS, UNLESS OTHERWISE NOTED ARE:
SAWED, SHEARED AND GAS CUT EDGES *(± 0.030")*
DRILLED AND GAS CUT HOLES *(± 0.030")* - NO CONING OF HOLES
LASER CUT EDGES AND HOLES *(± 0.010")* - NO CONING OF HOLES
BENDS ARE ± 1/2 DEGREE
ALL OTHER MACHINING *(± 0.030")*
ALL OTHER ASSEMBLY *(± 0.060")*

DESCRIPTION: 12' 6" HEAVY DUTY V-FRAME ASSEMBLY W/ 2 STIFF ARMS & MOUNT PIPES

SITE PRO 1 — a valmont company

Engineering Support Team: 1-888-753-7446

Locations: New York, NY; Atlanta, GA; Los Angeles, CA; Plymouth, IN; Salem, OR; Dallas, TX

CPD NO.	DRAWN BY	ENG. APPROVAL	PART NO.
SP1	CSL 1/25/2017		VFA12-WLL-30120

CLASS	SUB	DRAWING USAGE	CHECKED BY	DWG. NO.
87	02	CUSTOMER	BMC 5/3/2018	VFA12-WLL-30120

PAGE 1 OF 5

1 -- SITE PRO 1 VFA12-WLL-30120 SECTOR FRAME
NOT TO SCALE

INFINIGY ENGINEERING, PLLC
500 WEST OFFICE CENTER DR.
SUITE 150
FORT WASHINGTON, PA 19034

at&t

STATE OF CONNECTICUT — CHRISTOPHER J. WARREN — No. 23544 — 10/27/23 — LICENSED PROFESSIONAL ENGINEER

No.	Submittal / Revision	App'd	Date
5	ISSUED FOR CONSTRUCTION	DGD	10/17/23
4	ISSUED FOR CONSTRUCTION	DGD	09/07/23
3	ISSUED FOR CONSTRUCTION	CES	08/10/23
2	ISSUED FOR CONSTRUCTION	CES	07/03/23
1	ISSUED FOR CONSTRUCTION	CES	09/16/22
0	ISSUED FOR REVIEW	BMM	04/19/22

Drawn: RCD Date: 04/06/22
Designed: ASW Date: 04/06/22
Checked: AJD Date: 04/06/22

Project Number: 1106-A0001-C

Project Title: NEW HAVEN WEST ROCK CTL02013
FA# 10035296
142 BALDWIN DRIVE
NEW HAVEN, CT 06514

Prepared For: smartlink

Drawing Scale: AS NOTED
Date: 04/06/22
CD

Drawing Title: **EQUIPMENT DETAILS**

Drawing Number: **C5.2**

Diagram - Sector	A	Diagram File Name - CT2013_A_B_C_DeScope_Rev.3.vsd					
Atoll Site Name -	CTL02013	Location Name -	NEW HAVEN WEST ROCK	Market -	CONNECTICUT	Market Cluster -	NEW ENGLAND

Comments: "Important Note: For detailed radio to antenna wiring refer to the latest field notice - Antenna_Radio Connection Drawings Playbook v6.0_Ericsson "

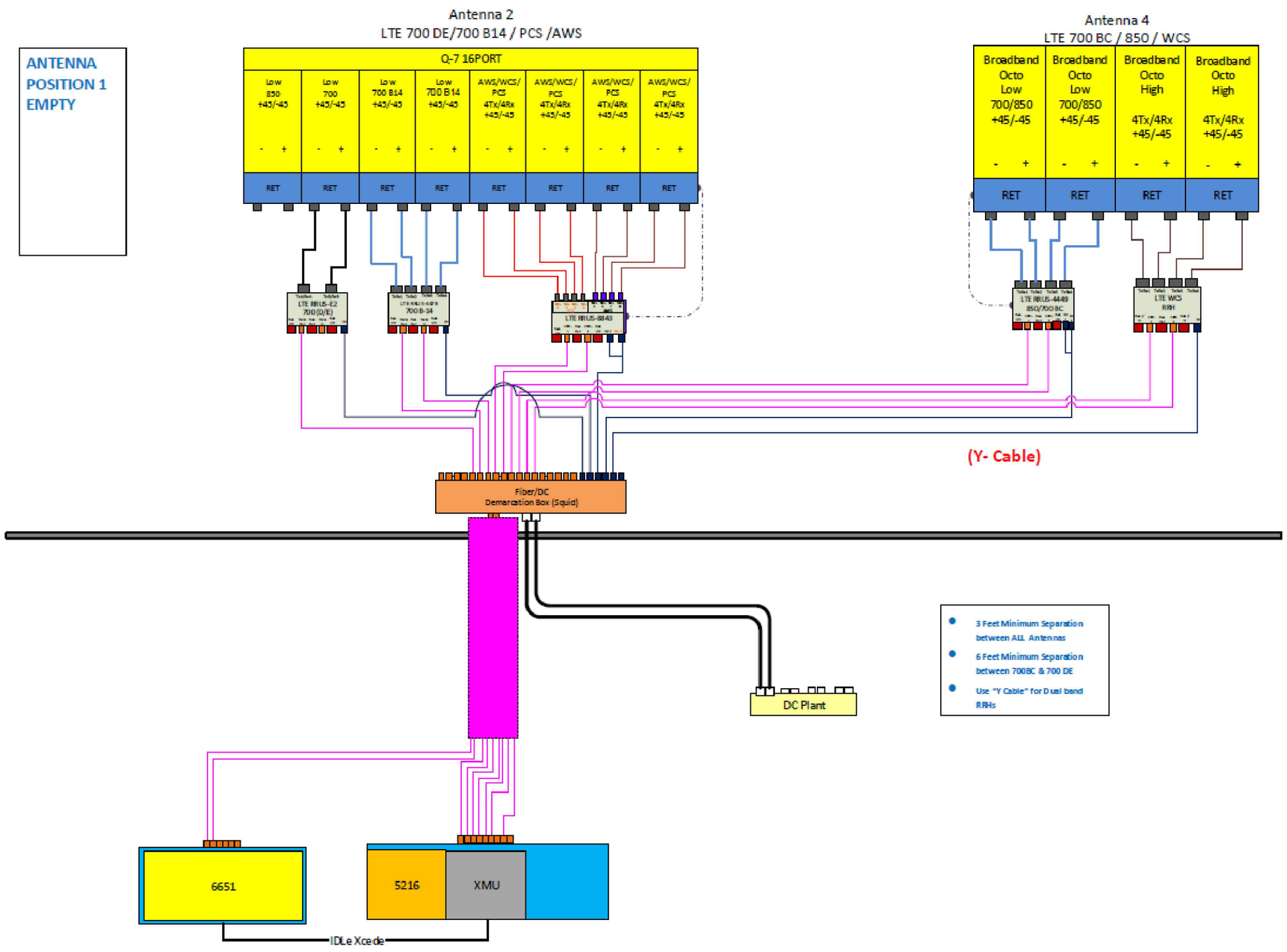

- 3 Feet Minimum Separation between ALL Antennas
- 6 Feet Minimum Separation between 700BC & 700 DE
- Use "Y Cable" for Dual band RRHs

ALPHA/BETA/GAMMA SECTOR

1 PLUMBING DIAGRAM (FINAL CONFIGURATION)
-- NOT TO SCALE

*BASED ON LTE RFDS, DATED 08/01/2023, V5.00

INFINIGY ENGINEERING, PLLC
500 WEST OFFICE CENTER DR. SUITE 150
FORT WASHINGTON, PA 19034

at&t

STATE OF CONNECTICUT
CHRISTOPHER J. WARREN
No. 23544
10/27/23
LICENSED
PROFESSIONAL ENGINEER

UNAUTHORIZED ALTERATION OR ADDITION TO THIS DOCUMENT IS A VIOLATION OF APPLICABLE STATE AND/OR LOCAL LAWS

No.	Submittal / Revision	App'd	Date
5	ISSUED FOR CONSTRUCTION	DGD	10/17/23
4	ISSUED FOR CONSTRUCTION	DGD	09/07/23
3	ISSUED FOR CONSTRUCTION	CES	08/10/23
2	ISSUED FOR CONSTRUCTION	CES	07/03/23
1	ISSUED FOR CONSTRUCTION	CES	09/16/22
0	ISSUED FOR REVIEW	BMM	04/19/22

Drawn: RCD Date: 04/06/22
Designed: ASW Date: 04/06/22
Checked: AJD Date: 04/06/22

Project Number: 1106-A0001-C

Project Title:
NEW HAVEN
WEST ROCK
CTL02013
FA# 10035296
142 BALDWIN DRIVE
NEW HAVEN, CT 06514

Prepared For: smartlink

Drawing Scale: AS NOTED
Date: 04/06/22
CD

Drawing Title
PLUMBING DIAGRAM

Drawing Number
C6

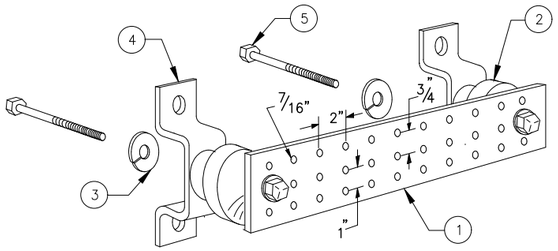

LEGEND

1 – SOLID TINNED COPPER GROUND BAR, 1/4"x 4"x 20" MIN., NEWTON INSTRUMENT CO. HOLE CENTERS TO MATCH NEMA DOUBLE LUG CONFIGURATION
2 – INSULATORS, NEWTON INSTRUMENT CAT. NO. 3061-4
3 – 5/8" LOCKWASHERS, NEWTON INSTRUMENT CO. CAT. NO. 3015-8
4 – WALL MOUNTING BRACKET, NEWTON INSTRUMENT CO. CAT NO. A-6056
5 – 5/8-11 X 1" H.H.C.S. BOLTS, NEWTON INSTRUMENT CO. CAT NO. 3012-1
6 – GROUND BAR SHALL BE SIZED TO ACCOMODATE ALL GROUNDING CONNECTIONS REQUIRED PLUS PROVIDE 50% SPARE CAPACITY
7 – GROUND BARS SHALL NEITHER BE FIELD FABRICATED NOR NEW HOLES DRILLED
8 – GROUND LUGS SHALL MATCH THE HOLE SPACING ON THE BAR
9 – HARDWARE DIAMETER SHALL BE MINIMUM 3/8"

1 -- GROUND BAR
NOT TO SCALE

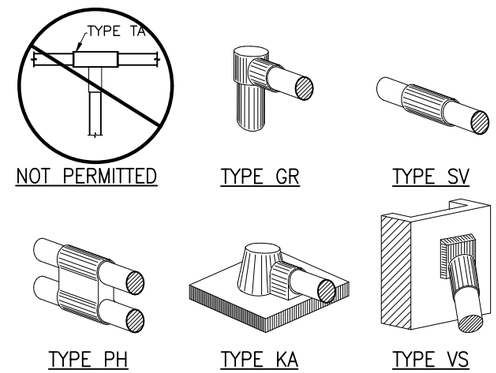

2 -- CADWELDS (TYPICAL)
NOT TO SCALE

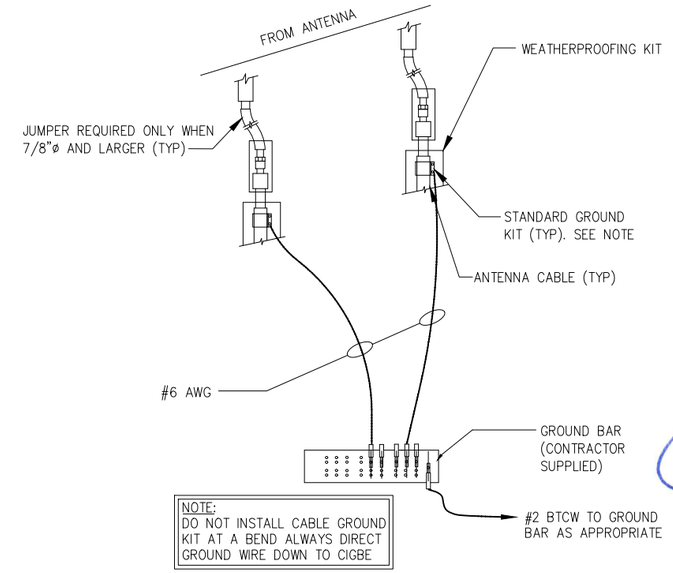

3 -- CONNECTION OF GROUND WIRES TO GROUNDING BARS @ ANTENNAS
NOT TO SCALE

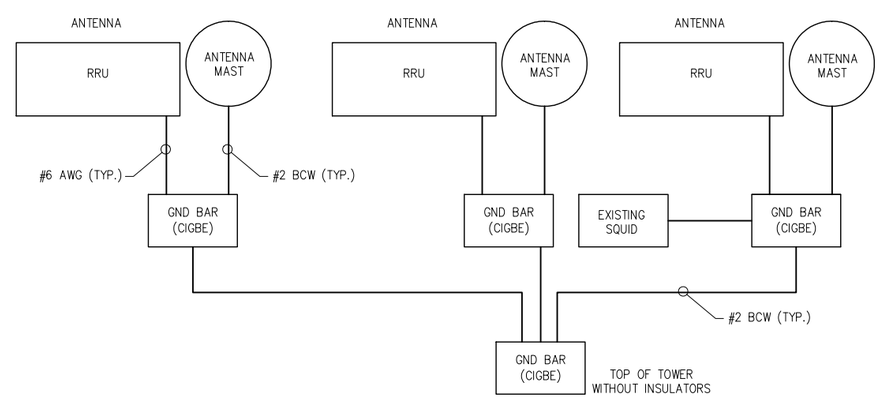

4 -- SCHEMATIC DIAGRAM GROUNDING SYSTEM
NOT TO SCALE

INFINIGY ENGINEERING, PLLC
500 WEST OFFICE CENTER DR.
SUITE 150
FORT WASHINGTON, PA 19034

at&t

STATE OF CONNECTICUT
CHRISTOPHER J. WARREN
No. 23544
10/27/23
LICENSED
PROFESSIONAL ENGINEER

No.	Submittal / Revision	App'd	Date
5	ISSUED FOR CONSTRUCTION	DGD	10/17/23
4	ISSUED FOR CONSTRUCTION	DGD	09/07/23
3	ISSUED FOR CONSTRUCTION	CES	08/10/23
2	ISSUED FOR CONSTRUCTION	CES	07/03/23
1	ISSUED FOR CONSTRUCTION	CES	09/16/22
0	ISSUED FOR REVIEW	BMM	04/19/22

Drawn: RCD Date: 04/06/22
Designed: ASW Date: 04/06/22
Checked: AJD Date: 04/06/22

Project Number: 1106-A0001-C

Project Title:
NEW HAVEN
WEST ROCK
CTL02013
FA# 10035296
142 BALDWIN DRIVE
NEW HAVEN, CT 06514

Prepared For: smartlink

Drawing Scale: AS NOTED
Date: 04/06/22
CD

Drawing Title
GROUNDING DETAILS

Drawing Number
C7