NORTHEAST SITE SOLUTIONS
Turnkey Wireless Development

Northeast Site Solutions
Denise Sabo
4 Angela's Way, Burlington CT 06013
203-435-3640
denise@northeastsitesolutions.com

November 18, 2021

Members of the Siting Council
Connecticut Siting Council
Ten Franklin Square
New Britain, CT 06051

RE: Exempt Modification Application
474 Main Street, Monroe, CT 06468
Latitude: 41.325555
Longitude: -73.265833
Site #: 876355_Crown_VZW

Dear Ms. Bachman:

Verizon Wireless is requesting to file an exempt modification for an existing tower located at 474 Main Street, Monroe, CT 06468. Verizon Wireless currently maintains twelve (12) antennas at the 160-foot level of the existing 190-foot tower. The property is owned by the Sprint/Global Signal Acquisition II LLC (a Crown Castle subsidiary) and the tower is owned by Crown Castle. Verizon now intends to add three (3) antennas. The new antennas would be installed at the 160-foot level of the tower. This modification includes B2, B5 hardware that is both 4G (LTE), and 5G capable.

Verizon Planned Modifications:

Remove: None

Remove and Replace:
(3) Nokia B66A RRH (REMOVE) - (3) Samsung RFV01U-D1A (REPLACE)
(3) Nokia B13 RRH (REMOVE) - (3) Samsung RFV01U-D2A (REPLACE)
(1) OVP (REMOVE) – (1) RFS-DB-C1-12C-24AB-OZ OVP (REPLACE)
(1) Hybrid Line (REMOVE) - (1) Hybrid Line (1-5/8") (REPLACE)

Install New:
(3) MT6407-77A Antennas

Existing to Remain:
(6) ANDREW Antennas
(4) AMPHENOL Antennas
(2) ANTEL Antennas
(6) 1-5/8" Coax

The facility was approved by the Town of Monroe on October 27, 2000 in No. 10461. Please see attached.

NORTHEAST SITE SOLUTIONS

Turnkey Wireless Development

Please accept this letter as notification pursuant to Regulations of Connecticut State Agencies§ 16- SOj-73, for construction that constitutes an exempt modification pursuant to R.C.S.A. § 16-50j-72(b)(2). In accordance with R.C.SA. § 16-SOj-73, a copy of this letter is being sent to Ken Kellogg, First Selectman, and Rick Shultz, Town Planner for the Town of Monroe. A copy is also being sent to the tower owner and property owner.

The planned modifications to the facility fall squarely within those activities explicitly provided for in R.C.S.A. § 16-50j-72(b)(2).

1. The proposed modifications will not result in an increase in the height of the existing structure.

2. The proposed modifications will not require the extension of the site boundary.

3. The proposed modifications will not increase noise levels at the facility by six decibels or more, or to levels that exceed state and local criteria.

4. The operation of the replacement antennas will not increase radio frequency emissions at the facility to a level at or above the Federal Communications Commission safety standard.

5. The proposed modifications will not cause a change or alteration in the physical or environmental characteristics of the site.

6. The existing structure and its foundation can support the proposed loading.

For the foregoing reasons, Verizon Wireless respectfully submits that the proposed modifications to the above referenced telecommunications facility constitute an exempt modification under R.C.S.A. § 16-50j-72(b)(2).

Sincerely,

Denise Sabo
Mobile: 203-435-3640
Fax: 413-521-0558
Office: 4 Angela's Way, Burlington CT 06013
E-mail: denise@northeastsitesolutions.com

NORTHEAST SITE SOLUTIONS
Turnkey Wireless Development

Attachments

Cc: Ken Kellogg, First Selectman
Town of Monroe
7 Fan Hill Road, Monroe, Connecticut 06468

Rick Shultz, Town Planner
Town of Monroe
7 Fan Hill Road, Monroe, Connecticut 06468

Church of St. Mark the Evangelist Corp.
471 South Quaker Lane, West Hartford, CT 06110

Sprint/Crown Castle, Property Owner

Crown Castle, Tower Owner

Exhibit A

Original Facility Approval

11/03/00 FRI 09:14 FAX 914+986+1902 TLL Enterprise 003

TOWN OF MONROE, CONNECTICUT
PROVISIONAL CERTIFICATE OF ZONING COMPLIANCE

This is to certify that the proposed Communication Tower - equipment compound
(structure, ~~addition, use~~)

located at No. 480 (Lot No. ____) Main (Street, ~~Road, Drive~~)

Application dated 10/17 2000, made by Andrew Schaffe

has been examined and based on the information contained in said application the proposal conforms to the Zoning Regulations of the Town of Monroe, dated 7-31-00.
(Effective date of last amendment)

This provisional certificate expires one year from the date herein, or upon issuance of a permanent certificate of zoning compliance, whichever is first. Failure to obtain said permanent certificate prior to use shall constitute a violation of the Zoning Regulations of the Town of Monroe.

Dated at Monroe, Connecticut this 27th day of October, 2000

№ 10461

By: _____
(Zoning Enforcement Officer) ~~(Planning Administrator)~~

Town of Monroe

OFFICE OF THE TOWN
ENGINEERING DEPARTMENT
Town Hall
7 Fan Hill Road
Monroe, Connecticut 06468
Phone: (203) 452-5437
(203) 452-5438

July 10,2000

Paul T. Tusch
Cacase, Tusch, Santagam
777 Summer Street
P.O. Box 15859
Stamford, CT. 06901-0859

Re: Sprint PCS
474-480 Main Street
Special Exception Permit

Dear Mr. Tusch:

Please be advised that this department has reviewed the plans (4 pages) submitted for the above project and, although the design concept is generally acceptable, the following item should be addressed:

1) if the access roadway is to have a gravel surface (ie; not asphalt paved), construct the road using a minimum 6" depth of 3/4" medium coarse process gravel, shaped and crowned to control water runoff and compacted to 95%. Construct sufficient riprap leak offs to control erosion in road shoulder areas.

It is required that installation of the security fencing commence immediately following erection of the tower and continue non stop (without interruption) until completely installed.

If you have any questions, please contact my office at (203) 452-5438.

Very Truly Yours,

Sherwood Lovejoy, P.E.
Director of Public Works
Town Engineer

SL/fjm

Town Hall
7 Fan Hill Road
Monroe, Connecticut 06468-1800

Phone (203) 452-5489
Pager (203) 396-7778

TOWN OF MONROE

OFFICE OF THE FIRE MARSHAL

June 27, 2000

Attorney Paul T. Tusch
Cacase, Tusch, Santagata
777 Summer Street
P. O. Box 15859
Stamford, CT 06901-0859

RE: Sprint PCS Tower , 474-480 Main Street

Dear Attorney Tusch,

I have reviewed the proposed Sprint PCS Tower located at TLC, 474-480 Main Street, and my only requirements would be:

- Knox box system
- Access road be at least 20' wide

If you have any questions, please call me.

Sincerely,

Anthony Carpenter
Fire Marshal

cd

Town of Monroe
conservation and
water resources
commission/inland
wetland
commission

TOWN HALL
7 Fan Hill Road
Monroe, Connecticut 06468
Phone (203) 452-5467
Fax (203) 261-6197

November 16, 2000

CERTIFIED MAIL RETURN RECEIPT REQUESTED **7009 3400 0007 9991 7695**

Sprint PCS
1 International Blvd
Suite 800
Mahwah, NJ 07495

CONDITIONAL APPROVAL
Inland Wetlands Permit No. 00-23

Applicant: Sprint PCS

Property Owner " "

Property Location: 474-480 Main Street Assessor's Map No. 45 Parcel No. 21A & 22B

Plans & Preparer: URS Corporation AES 500 Enterprise Drive, Rocky Hill CT

PERMIT APPROVED (date): October 25, 2000. All appropriate conditions must be satisfied prior to site disturbance. THIS APPROVAL IS NOT AN AUTHORIZATION TO START CONSTRUCTION.

PERMIT EXPIRES: October 25, 2005
Permit duration is five (5) years. Additional extensions must be requested prior to expiration. A renewal fee will be required. **THIS PERMIT CANNOT BE REINSTATED IF IT EXPIRES.**

THIS PERMIT IS NOT TRANSFERABLE UNLESS THE NEW OWNER PROVIDES THE COMMISSION WITH A SIGNED ACKNOWLEDGMENT THAT HE UNDERSTANDS AND ACCEPTS THE CONDITIONS OF APPROVAL.

Commission's findings and resolution: The following resolution was adopted by the Inland Wetlands Commission.

Be it resolved that Inland Wetland Permit Application No. 00-23 is hereby approved based upon the findings and subject to the modifications and conditions hereinafter set forth.

The Commission reviewed the application and the site plan and determined there will be no significant impact and the application does not warrant a public hearing. There was also no public interest demonstrated.

The Commission finds that the proposed activities are located entirely within the regulated setback and there will be no direct wetland disturbance.

MODIFICATIONS AND CONDITIONS:

1) The excavated trench shall be refilled, seeded and stabilized immediately after completion of the utility installation.
2) Access to the construction area will be by existing roads.

STANDARD CONDITIONS:

1) Regulated activities herein shall be implemented by the permittee in accordance with the timing, location, duration and intent proposed and approved by the Commission.
2) Notice of assignment or transfer of the permit must be given to the Commission immediately. Failure to do so may invalidate your permit.
3) Install sediment and erosion controls prior to soil disturbance and maintain them during construction and remove them prior to requesting final inspection.
4) Any changes in the approved plans must be approved by the Commission. This includes changes required by any other agency.
5) The posting of a cash or passbook savings account may be required at any time during construction by the Inland Wetlands Commission for erosion controls or any required wetland mitigation measures, in an amount to be determined by the Commission or its agent.
6) For the purpose of making site inspections of sediment and erosion controls, the permittee shall provide forty-eight (48) hours notice prior to site disturbance.
7) Anti tracking aprons shall be installed on all road and driveway exits with six (6) inches in depth of crushed stone spread to the traveled width, forty (40) feet long and underlain with construction fabric.
8) In the event an appeal is taken from this decision the applicant shall provide the Commission with three (3) sets of all plans, reports and documents in support of the application within thirty (30) days.
9) Heating oil tanks will not be buried anywhere on the property.

This application is approved with the above conditions and/or modifications. This decision and these conditions are consistent with the purposes of the wetland regulations which are designed to protect the citizens of Monroe by providing a balance between the need for growth, development and enjoyment of the Town's natural resources with the need to protect its' environment and ecological stability.

cc: Dean Gustafson, Applicants Agent

James P. White, Jr.
Chairman of the Commission

Town of Monroe
conservation and
water resources
commission/inland
wetland
commission

TOWN HALL
7 Fan Hill Road
Monroe, Connecticut 06458
Phone (203) 452-5467
Fax (203) 261-6197

July 11, 2000

URS Greiner Woodward Clyde
500 Enterprise Drive
Rocky Hill, CT 06067

RE: Sprint PCS Upper Stepney

Dear Mr. Clyde:

Based on my review of the site plan for Sprint PCS Upper Stepney dated June 29, 2000. An Inland Wetland permit will not be required for this project.

Please contact me if you have any questions.

Yours truly,

Richard Jacobson

Richard B. Jacobson
Wetland Consultant

gw
cc: Planning and Zoning

Rjclyde

Exhibit B

Property Card

474 MAIN ST

Location	474 MAIN ST	**Map/Lot**	045/ 022/ 0Z/ /
Acct#	0450220Z	**Owner**	SPRINT PCS
Assessment	$239,700	**Appraisal**	$342,400
PID	16240	**Building Count**	1
Survey	1676 B	**Affordable**	

Current Value

Appraisal			
Valuation Year	**Improvements**	**Land**	**Total**
2014	$125,000	$217,400	$342,400
Assessment			
Valuation Year	**Improvements**	**Land**	**Total**
2014	$87,500	$152,200	$239,700

Owner of Record

Owner	SPRINT PCS
Co-Owner	GLOBAL SIGNAL ACQ II LLC
Address	PMB 331 4017 WASHINGTON RD MCMURRAY, PA 15317

Sale Price	$0
Certificate	1
Book & Page	943/ 187
Sale Date	04/27/2001
Instrument	

Ownership History

Ownership History					
Owner	**Sale Price**	**Certificate**	**Book & Page**	**Instrument**	**Sale Date**
SPRINT PCS	$0	1	943/ 187		04/27/2001

Building Information

Building 1 : Section 1

Year Built:
Living Area: 0

Building Attributes	
Field	**Description**
Style	Vacant Land

Model	
Stories:	
Occupancy	
Exterior Wall 1	
Heat Fuel	
Heat Type:	
AC Type:	
Total Bedrooms:	
Total Bthrms:	
Total Half Baths:	
Total Rooms:	
Fireplaces	
Basement Gar.	
Basement	
In Law Apt	

Building Photo

(http://images.vgsi.com/photos/MonroeCTPhotos//\00\00\64/02.

Building Layout

(http://images.vgsi.com/photos/MonroeCTPhotos//Sketches/162

Building Sub-Areas (sq ft)	Legend
No Data for Building Sub-Areas	

Extra Features

Extra Features	Legend
No Data for Extra Features	

Land

Land Use

Use Code 431
Description TEL REL TW
Zone B1
Neighborhood
Alt Land Approved No
Category

Land Line Valuation

Size (Acres) 0.06
Appraised Value $217,400

Outbuildings

Outbuildings						Legend
Code	Description	Sub Code	Sub Description	Size	Value	Bldg #
TT4	TOWER MONOPOLE			1 UNITS	$125,000	1

Valuation History

Appraisal			
Valuation Year	Improvements	Land	Total

2018	$125,000	$217,400	$342,400
2017	$125,000	$217,400	$342,400

Assessment			
Valuation Year	**Improvements**	**Land**	**Total**
2018	$87,500	$152,200	$239,700
2017	$87,500	$152,200	$239,700

(c) 2016 Vision Government Solutions, Inc. All rights reserved.

Town of Monroe

Map Title

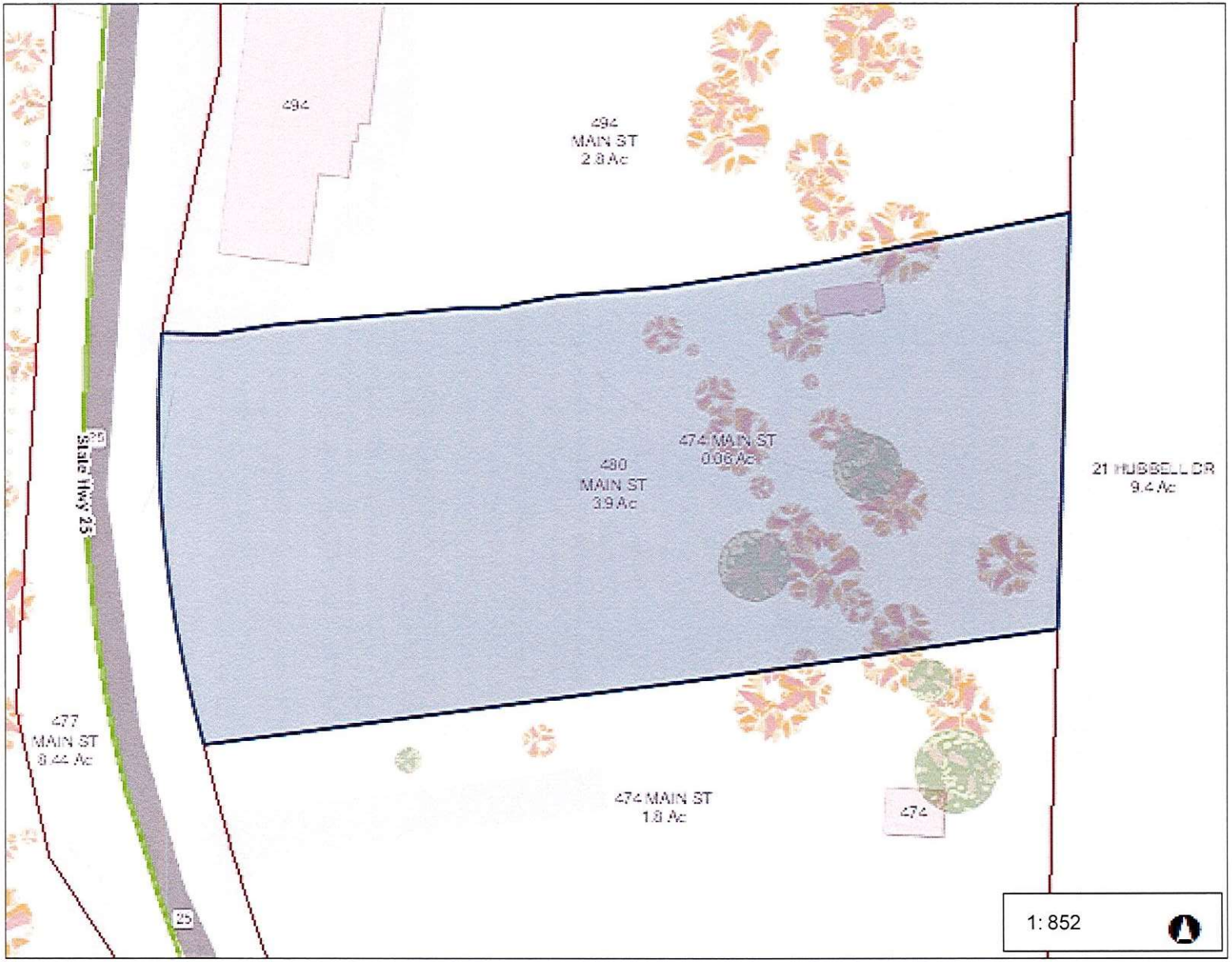

Legend

- Parcels
- Streetname
- Roadways
  - Local
  - Collector
  - Minor Collector
  - Minor Arterial
  - Major Collector
  - PA Other
  - PA Other Expwy
  - PA Interstate

141.9 0 70.97 141.9 Feet

WGS_1984_Web_Mercator_Auxiliary_Sphere
Created by Greater Bridgeport Regional Council

This map is a user generated static output from an Internet mapping site and is for reference only. Data layers that appear on this map may or may not be accurate, current, or otherwise reliable.
THIS MAP IS NOT TO BE USED FOR NAVIGATION

METROCOG
Connecticut Metropolitan Council of Governments

Exhibit C

Construction Drawings

verizon

VERIZON SITE NUMBER: 324395
VERIZON SITE NAME: MONROE WEST CT
SITE TYPE: MONOPOLE
TOWER HEIGHT: 190'-0"

BUSINESS UNIT #: 876355
SITE ADDRESS: 474-480 MAIN ST. MONROE, CT 06468
COUNTY: FAIRFIELD
JURISDICTION: TOWN OF MONROE

VERIZON PCS ADD / FUZE ID 16244642

SITE INFORMATION

CROWN CASTLE USA INC. SITE NAME:	UPPER STEPNEY - TLC
SITE ADDRESS:	474-480 MAIN ST. MONROE, CT 06468
COUNTY:	FAIRFIELD
MAP/PARCEL #:	----
AREA OF CONSTRUCTION:	EXISTING
LATITUDE:	41° 19' 31.99" N
LONGITUDE:	73° 15' 57.05" W
LAT/LONG TYPE:	NAD83
GROUND ELEVATION:	----
CURRENT ZONING:	CONNECTICUT SITTING COUNCIL
JURISDICTION:	TOWN OF MONROE
OCCUPANCY CLASSIFICATION:	----
TYPE OF CONSTRUCTION:	----
A.D.A. COMPLIANCE:	FACILITY IS UNMANNED AND NOT FOR HUMAN HABITATION
PROPERTY OWNER:	GLOBAL SIGNAL ACQ II LLC PMB 331 4017 WASINGTON RD MCMURRAY, PA 15317
TOWER OWNER:	CROWN CASTLE MU LLC 2000 CORPORATE DRIVE CANONSBURG, PA 15317
CARRIER/APPLICANT:	VERIZON WIRELESS 1515 E. WOODFIELD ROAD SCHAUMBURG, IL 60173
ELECTRIC PROVIDER:	CONNECTICUT LIGHT AND POWER CO (800) 286-2000
TELCO PROVIDER:	CROWN CASTLE FIBE (855) 913-4237

PROJECT TEAM

A&E FIRM:	TECTONIC ENGINEERING & SURVEYING CONSULTANTS P.C. 1279 ROUTE 300 NEWBURGH, NY 12550 PHONE: (845) 567-6656
CROWN CASTLE USA INC. DISTRICT CONTACTS:	1200 MACARTHUR BLVD, SUITE 200 MAHWAH, NJ 07430 ---- - PROJECT MANAGER ---- ---- - CONSTRUCTION MANAGER ----
VERIZON CONTACT:	---- ----

DRAWING INDEX

SHEET #	SHEET DESCRIPTION
T-1	TITLE SHEET
T-2	GENERAL NOTES
C-1	SITE PLAN
C-2	TOWER ELEVATION & ANTENNA PLANS
C-3	EQUIPMENT SCHEDULES
C-4	EQUIPMENT DETAILS
C-5	EQUIPMENT DETAILS
C-6	PLUMBING DIAGRAM
G-1	GROUNDING DETAILS
G-2	GROUNDING DETAILS

ALL DRAWINGS CONTAINED HEREIN ARE FORMATTED FOR ----. CONTRACTOR SHALL VERIFY ALL PLANS AND EXISTING DIMENSIONS AND CONDITIONS ON THE JOB SITE AND SHALL IMMEDIATELY NOTIFY THE ENGINEER IN WRITING OF ANY DISCREPANCIES BEFORE PROCEEDING WITH THE WORK OR BE RESPONSIBLE FOR SAME.

APPROVALS

SIGNATURE	DATE

CONTRACTOR PMI REQUIREMENTS

PMI ACCESSED AT	https://pmi.vxwsmart.com
SMART TOOL VENDOR PROJECT NUMBER	10037964
VzW LOCATION CODE (PSLC)	469337

*** PMI AND REQUIREMENTS ALSO EMBEDDED IN MOUNT ANALYSIS REPORT

MOUNT MODIFICATION REQUIRED	**Y**

VzW APPROVED SMART KIT VENDORS

REFER TO MOUNT MODIFICATION DRAWINGS PAGE FOR VzW SMART KIT APPROVED VENDORS

LOCATION MAP

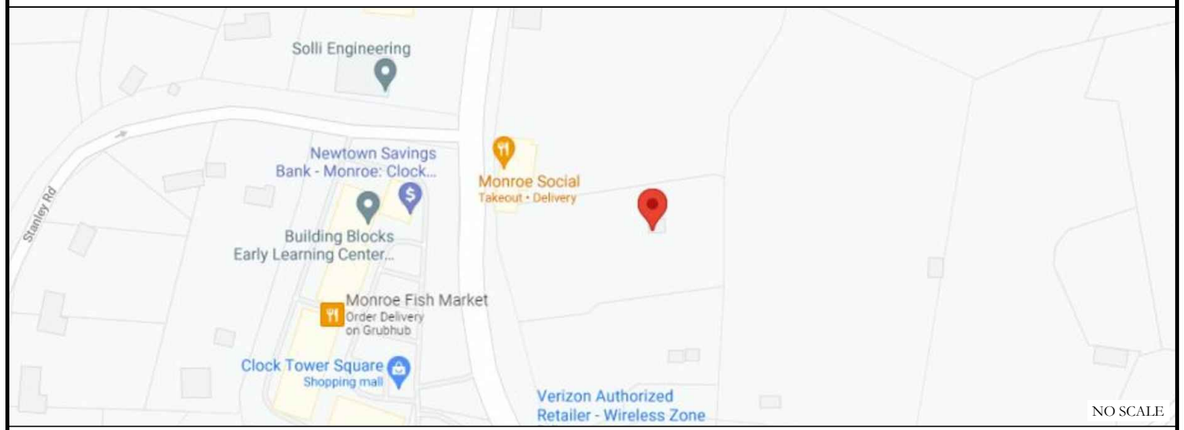

NO SCALE

DRIVING DIRECTIONS FROM VERIZON LOCAL OFFICE (180 WASHINGTON VALLEY RD, BEDMINSTER, NJ 07921)

HEAD NORTHWEST. SLIGHT LEFT. TURN RIGHT ONTO US-202 N/US-206 N. TURN RIGHT ONTO SCHLEY MOUNTAIN RD. MERGE WITH I-287 N. ENTERING NEW YORK. KEEP LEFT AT THE Y JUNCTION, FOLLOW SIGNS FOR HUTCHINSON PKWY AND MERGE WITH CROSS COUNTY PKWY.MERGE WITH HUTCHINSON RIVER PKWY N. KEEP RIGHT AT THE Y JUNCTION TO STAY ON HUTCHINSON RIVER PKWY N. ENTERING CONNECTICUT. CONTINUE ONTO CT-15 N. TAKE EXIT 46 TOWARD CT-59/FAIRFIELD/EASTON. TURN RIGHT ONTO JEFFERSON ST. TURN RIGHT AT THE 1ST CROSS STREET ONTO CT-59 N.TURN RIGHT TO STAY ON CT-59 N.USE THE LEFT 2 LANES TO TURN LEFT ONTO CT-25 N.

APPLICABLE CODES/REFERENCE DOCUMENTS

ALL WORK SHALL BE PERFORMED AND MATERIALS INSTALLED IN ACCORDANCE WITH THE CURRENT EDITIONS OF THE FOLLOWING CODES AS ADOPTED BY THE LOCAL GOVERNING AUTHORITIES. NOTHING IN THESE PLANS IS TO BE CONSTRUED TO PERMIT WORK NOT CONFORMING TO THESE CODES:

CODE TYPE	CODE
BUILDING	2018 CT SBC
MECHANICAL	2018 CT SBC
ELECTRICAL	2017 NEC

REFERENCE DOCUMENTS:

STRUCTURAL ANALYSIS:	----
DATED:	
MOUNT ANALYSIS:	MASTER CONSULTING
DATED:	05/03/21
RFDS REVISION:	0
DATED:	12/10/20
ORDER ID:	552663
REVISION:	0

CALL CONNECTICUT ONE CALL
(800) 922-4455 CBYD.COM
CALL 2 WORKING DAYS BEFORE YOU DIG!

PROJECT DESCRIPTION

THE PURPOSE OF THIS PROJECT IS TO ENHANCE BROADBAND CONNECTIVITY AND CAPACITY TO THE EXISTING ELIGIBLE WIRELESS FACILITY.

TOWER SCOPE OF WORK:
- REMOVE (6) RRHs
- REMOVE (1) OVP
- REMOVE (1) HYBRID CABLE
- INSTALL (3) ANTENNAS
- INSTALL (6) RRHs
- INSTALL (3) DIPLEXER
- INSTALL (1) OVP
- INSTALL (1) HYBRID CABLE

GROUND SCOPE OF WORK:
- NONE

NOTE:
PRIOR TO ACCESSING/ENTERING THE SITE YOU MUST CONTACT THE CROWN NOC AT (800) 788-7011 & CROWN CONSTRUCTION MANAGER

verizon
180 WASHINGTON VALLEY ROAD
BEDMINSTER, NJ 07921

CROWN CASTLE
1200 MACARTHUR BLVD, SUITE 200
MAHWAH, NJ 07430

Tectonic
PRACTICAL SOLUTIONS. EXCEPTIONAL SERVICE.
Tectonic Engineering & Surveying Consultants P.C.
70 Pleasant Hill Road Phone: (845) 534-5959
P.O. Box 37 (800) 833-8831
Mountainville, NY 10953 www.tectonicengineering.com
Regional Contact Info
1279 Route 300 Phone: (845) 567-6656
Newburgh, NY 12550
10548.MONROEWEST CT

VERIZON SITE NUMBER:
324395

BU #: **876355**
UPPER STEPNEY - TLC

474-480 MAIN ST.
MONROE, CT 0646

EXISTING 190'-0" MONOPOLE

ISSUED FOR:

REV	DATE	DRWN	DESCRIPTION	DES./QA
0	05/03/21	VM	CONSTRUCTION	----
1	11/10/21	VM	PER COMMENTS	----

STATE OF CONNECTICUT
ANTONIO A. GUALTIERI
PEN.0025406
LICENSED
PROFESSIONAL ENGINEER
11/10/21

IT IS A VIOLATION OF LAW FOR ANY PERSON, UNLESS THEY ARE ACTING UNDER THE DIRECTION OF A LICENSED PROFESSIONAL ENGINEER, TO ALTER THIS DOCUMENT.

SHEET NUMBER: T-1
REVISION: 1

CROWN CASTLE USA INC. SITE ACTIVITY REQUIREMENTS:

1. NOTICE TO PROCEED– NO WORK SHALL COMMENCE PRIOR TO CROWN CASTLE USA INC. WRITTEN NOTICE TO PROCEED (NTP) AND THE ISSUANCE OF A PURCHASE ORDER. PRIOR TO ACCESSING/ENTERING THE SITE YOU MUST CONTACT THE CROWN CASTLE USA INC. NOC AT 800–788–7011 & THE CROWN CASTLE USA INC. CONSTRUCTION MANAGER.
2. "LOOK UP" – CROWN CASTLE USA INC. SAFETY CLIMB REQUIREMENT:
THE INTEGRITY OF THE SAFETY CLIMB AND ALL COMPONENTS OF THE CLIMBING FACILITY SHALL BE CONSIDERED DURING ALL STAGES OF DESIGN, INSTALLATION, AND INSPECTION. TOWER MODIFICATION, MOUNT REINFORCEMENTS, AND/OR EQUIPMENT INSTALLATIONS SHALL NOT COMPROMISE THE INTEGRITY OR FUNCTIONAL USE OF THE SAFETY CLIMB OR ANY COMPONENTS OF THE CLIMBING FACILITY ON THE STRUCTURE. THIS SHALL INCLUDE, BUT NOT BE LIMITED TO: PINCHING OF THE WIRE ROPE, BENDING OF THE WIRE ROPE FROM ITS SUPPORTS, DIRECT CONTACT OR CLOSE PROXIMITY TO THE WIRE ROPE WHICH MAY CAUSE FRICTIONAL WEAR, IMPACT TO THE ANCHORAGE POINTS IN ANY WAY, OR TO IMPEDE/BLOCK ITS INTENDED USE. ANY COMPROMISED SAFETY CLIMB, INCLUDING EXISTING CONDITIONS MUST BE TAGGED OUT AND REPORTED TO YOUR CROWN CASTLE USA INC. POC OR CALL THE NOC TO GENERATE A SAFETY CLIMB MAINTENANCE AND CONTRACTOR NOTICE TICKET.
3. PRIOR TO THE START OF CONSTRUCTION, ALL REQUIRED JURISDICTIONAL PERMITS SHALL BE OBTAINED. THIS INCLUDES, BUT IS NOT LIMITED TO, BUILDING, ELECTRICAL, MECHANICAL, FIRE, FLOOD ZONE, ENVIRONMENTAL, AND ZONING. AFTER ONSITE ACTIVITIES AND CONSTRUCTION ARE COMPLETED, ALL REQUIRED PERMITS SHALL BE SATISFIED AND CLOSED OUT ACCORDING TO LOCAL JURISDICTIONAL REQUIREMENTS.
4. ALL CONSTRUCTION MEANS AND METHODS; INCLUDING BUT NOT LIMITED TO, ERECTION PLANS, RIGGING PLANS, CLIMBING PLANS, AND RESCUE PLANS SHALL BE THE RESPONSIBILITY OF THE GENERAL CONTRACTOR RESPONSIBLE FOR THE EXECUTION OF THE WORK CONTAINED HEREIN, AND SHALL MEET ANSI/ASSE A10.48 (LATEST EDITION); FEDERAL, STATE, AND LOCAL REGULATIONS; AND ANY APPLICABLE INDUSTRY CONSENSUS STANDARDS RELATED TO THE CONSTRUCTION ACTIVITIES BEING PERFORMED. ALL RIGGING PLANS SHALL ADHERE TO ANSI/ASSE A10.48 (LATEST EDITION) AND CROWN CASTLE USA INC. STANDARD CED–STD–10253, INCLUDING THE REQUIRED INVOLVEMENT OF A QUALIFIED ENGINEER FOR CLASS IV CONSTRUCTION, TO CERTIFY THE SUPPORTING STRUCTURE(S) IN ACCORDANCE WITH ANSI/TIA–322 (LATEST EDITION).
5. ALL SITE WORK TO COMPLY WITH QAS–STD–10068 "INSTALLATION STANDARDS FOR CONSTRUCTION ACTIVITIES ON CROWN CASTLE USA INC. TOWER SITE," CED–STD–10294 "STANDARD FOR INSTALLATION OF MOUNTS AND APPURTENANCES," AND LATEST VERSION OF ANSI/TIA–1019–A–2012 "STANDARD FOR INSTALLATION, ALTERATION, AND MAINTENANCE OF ANTENNA SUPPORTING STRUCTURES AND ANTENNAS."
6. IF THE SPECIFIED EQUIPMENT CAN NOT BE INSTALLED AS SHOWN ON THESE DRAWINGS, THE CONTRACTOR SHALL PROPOSE AN ALTERNATIVE INSTALLATION FOR APPROVAL BY CROWN CASTLE USA INC. PRIOR TO PROCEEDING WITH ANY SUCH CHANGE OF INSTALLATION.
7. ALL MATERIALS FURNISHED AND INSTALLED SHALL BE IN STRICT ACCORDANCE WITH ALL APPLICABLE CODES, REGULATIONS AND ORDINANCES. CONTRACTOR SHALL ISSUE ALL APPROPRIATE NOTICES AND COMPLY WITH ALL LAWS, ORDINANCES, RULES, REGULATIONS AND LAWFUL ORDERS OF ANY PUBLIC AUTHORITY REGARDING THE PERFORMANCE OF THE WORK. ALL WORK CARRIED OUT SHALL COMPLY WITH ALL APPLICABLE MUNICIPAL AND UTILITY COMPANY SPECIFICATIONS AND LOCAL JURISDICTIONAL CODES, ORDINANCES AND APPLICABLE REGULATIONS.
8. THE CONTRACTOR SHALL INSTALL ALL EQUIPMENT AND MATERIALS IN ACCORDANCE WITH MANUFACTURER'S RECOMMENDATIONS UNLESS SPECIFICALLY STATED OTHERWISE.
9. THE CONTRACTOR SHALL CONTACT UTILITY LOCATING SERVICES PRIOR TO THE START OF CONSTRUCTION.
10. ALL EXISTING ACTIVE SEWER, WATER, GAS, ELECTRIC AND OTHER UTILITIES WHERE ENCOUNTERED IN THE WORK, SHALL BE PROTECTED AT ALL TIMES AND WHERE REQUIRED FOR THE PROPER EXECUTION OF THE WORK, SHALL BE RELOCATED AS DIRECTED BY CONTRACTOR. EXTREME CAUTION SHOULD BE USED BY THE CONTRACTOR WHEN EXCAVATING OR DRILLING PIERS AROUND OR NEAR UTILITIES. CONTRACTOR SHALL PROVIDE SAFETY TRAINING FOR THE WORKING CREW. THIS WILL INCLUDE BUT NOT BE LIMITED TO A) FALL PROTECTION B) CONFINED SPACE C) ELECTRICAL SAFETY D) TRENCHING AND EXCAVATION E) CONSTRUCTION SAFETY PROCEDURES.
11. ALL SITE WORK SHALL BE AS INDICATED ON THE STAMPED CONSTRUCTION DRAWINGS AND PROJECT SPECIFICATIONS, LATEST APPROVED REVISION.
12. CONTRACTOR SHALL KEEP THE SITE FREE FROM ACCUMULATING WASTE MATERIAL, DEBRIS, AND TRASH AT THE COMPLETION OF THE WORK. IF NECESSARY, RUBBISH, STUMPS, DEBRIS, STICKS, STONES AND OTHER REFUSE SHALL BE REMOVED FROM THE SITE AND DISPOSED OF LEGALLY.
13. ALL EXISTING INACTIVE SEWER, WATER, GAS, ELECTRIC AND OTHER UTILITIES, WHICH INTERFERE WITH THE EXECUTION OF THE WORK, SHALL BE REMOVED AND/OR CAPPED, PLUGGED OR OTHERWISE DISCONTINUED AT POINTS WHICH WILL NOT INTERFERE WITH THE EXECUTION OF THE WORK, SUBJECT TO THE APPROVAL OF CONTRACTOR, TOWER OWNER, CROWN CASTLE USA INC., AND/OR LOCAL UTILITIES.
14. THE CONTRACTOR SHALL PROVIDE SITE SIGNAGE IN ACCORDANCE WITH THE TECHNICAL SPECIFICATION FOR SITE SIGNAGE REQUIRED BY LOCAL JURISDICTION AND SIGNAGE REQUIRED ON INDIVIDUAL PIECES OF EQUIPMENT, ROOMS, AND SHELTERS.
15. THE SITE SHALL BE GRADED TO CAUSE SURFACE WATER TO FLOW AWAY FROM THE CARRIER'S EQUIPMENT AND TOWER AREAS.
16. THE SUB GRADE SHALL BE COMPACTED AND BROUGHT TO A SMOOTH UNIFORM GRADE PRIOR TO FINISHED SURFACE APPLICATION.
17. THE AREAS OF THE OWNERS PROPERTY DISTURBED BY THE WORK AND NOT COVERED BY THE TOWER, EQUIPMENT OR DRIVEWAY, SHALL BE GRADED TO A UNIFORM SLOPE, AND STABILIZED TO PREVENT EROSION AS SPECIFIED ON THE CONSTRUCTION DRAWINGS AND/OR PROJECT SPECIFICATIONS.
18. CONTRACTOR SHALL MINIMIZE DISTURBANCE TO EXISTING SITE DURING CONSTRUCTION. EROSION CONTROL MEASURES, IF REQUIRED DURING CONSTRUCTION, SHALL BE IN CONFORMANCE WITH THE LOCAL GUIDELINES FOR EROSION AND SEDIMENT CONTROL.
19. THE CONTRACTOR SHALL PROTECT EXISTING IMPROVEMENTS, PAVEMENTS, CURBS, LANDSCAPING AND STRUCTURES. ANY DAMAGED PART SHALL BE REPAIRED AT CONTRACTOR'S EXPENSE TO THE SATISFACTION OF OWNER.
20. CONTRACTOR SHALL LEGALLY AND PROPERLY DISPOSE OF ALL SCRAP MATERIALS SUCH AS COAXIAL CABLES AND OTHER ITEMS REMOVED FROM THE EXISTING FACILITY. ANTENNAS REMOVED SHALL BE RETURNED TO THE OWNER'S DESIGNATED LOCATION.
21. CONTRACTOR SHALL LEAVE PREMISES IN CLEAN CONDITION. TRASH AND DEBRIS SHOULD BE REMOVED FROM SITE ON A DAILY BASIS.
22. NO FILL OR EMBANKMENT MATERIAL SHALL BE PLACED ON FROZEN GROUND. FROZEN MATERIALS, SNOW OR ICE SHALL NOT BE PLACED IN ANY FILL OR EMBANKMENT.

GENERAL NOTES:

1. FOR THE PURPOSE OF CONSTRUCTION DRAWING, THE FOLLOWING DEFINITIONS SHALL APPLY:
CONTRACTOR: GENERAL CONTRACTOR RESPONSIBLE FOR CONSTRUCTION
CARRIER: VERIZON
TOWER OWNER: CROWN CASTLE USA INC.
2. THESE DRAWINGS HAVE BEEN PREPARED USING STANDARDS OF PROFESSIONAL CARE AND COMPLETENESS NORMALLY EXERCISED UNDER SIMILAR CIRCUMSTANCES BY REPUTABLE ENGINEERS IN THIS OR SIMILAR LOCALITIES. IT IS ASSUMED THAT THE WORK DEPICTED WILL BE PERFORMED BY AN EXPERIENCED CONTRACTOR AND/OR WORKPEOPLE WHO HAVE A WORKING KNOWLEDGE OF THE APPLICABLE CODE STANDARDS AND REQUIREMENTS AND OF INDUSTRY ACCEPTED STANDARD GOOD PRACTICE. AS NOT EVERY CONDITION OR ELEMENT IS (OR CAN BE) EXPLICITLY SHOWN ON THESE DRAWINGS, THE CONTRACTOR SHALL USE INDUSTRY ACCEPTED STANDARD GOOD PRACTICE FOR MISCELLANEOUS WORK NOT EXPLICITLY SHOWN.
3. THESE DRAWINGS REPRESENT THE FINISHED STRUCTURE. THEY DO NOT INDICATE THE MEANS OR METHODS OF CONSTRUCTION. THE CONTRACTOR SHALL BE SOLELY RESPONSIBLE FOR THE CONSTRUCTION MEANS, METHODS, TECHNIQUES, SEQUENCES, AND PROCEDURES. THE CONTRACTOR SHALL PROVIDE ALL MEASURES NECESSARY FOR PROTECTION OF LIFE AND PROPERTY DURING CONSTRUCTION. SUCH MEASURES SHALL INCLUDE, BUT NOT BE LIMITED TO, BRACING, FORMWORK, SHORING, ETC. SITE VISITS BY THE ENGINEER OR HIS REPRESENTATIVE WILL NOT INCLUDE INSPECTION OF THESE ITEMS AND IS FOR STRUCTURAL OBSERVATION OF THE FINISHED STRUCTURE ONLY.
4. NOTES AND DETAILS IN THE CONSTRUCTION DRAWINGS SHALL TAKE PRECEDENCE OVER GENERAL NOTES AND TYPICAL DETAILS. WHERE NO DETAILS ARE SHOWN, CONSTRUCTION SHALL CONFORM TO SIMILAR WORK ON THE PROJECT, AND/OR AS PROVIDED FOR IN THE CONTRACT DOCUMENTS. WHERE DISCREPANCIES OCCUR BETWEEN PLANS, DETAILS, GENERAL NOTES, AND SPECIFICATIONS, THE GREATER, MORE STRICT REQUIREMENTS, SHALL GOVERN. IF FURTHER CLARIFICATION IS REQUIRED CONTACT THE ENGINEER OF RECORD.
5. SUBSTANTIAL EFFORT HAS BEEN MADE TO PROVIDE ACCURATE DIMENSIONS AND MEASUREMENTS ON THE DRAWINGS TO ASSIST IN THE FABRICATION AND/OR PLACEMENT OF CONSTRUCTION ELEMENTS BUT IT IS THE SOLE RESPONSIBILITY OF THE CONTRACTOR TO FIELD VERIFY THE DIMENSIONS, MEASUREMENTS, AND/OR CLEARANCES SHOWN IN THE CONSTRUCTION DRAWINGS PRIOR TO FABRICATION OR CUTTING OF ANY NEW OR EXISTING CONSTRUCTION ELEMENTS. IF IT IS DETERMINED THAT THERE ARE DISCREPANCIES AND/OR CONFLICTS WITH THE CONSTRUCTION DRAWINGS THE ENGINEER OF RECORD IS TO BE NOTIFIED AS SOON AS POSSIBLE.
6. PRIOR TO THE SUBMISSION OF BIDS, THE BIDDING CONTRACTOR SHALL VISIT THE CELL SITE TO FAMILIARIZE WITH THE EXISTING CONDITIONS AND TO CONFIRM THAT THE WORK CAN BE ACCOMPLISHED AS SHOWN ON THE CONSTRUCTION DRAWINGS. ANY DISCREPANCY FOUND SHALL BE BROUGHT TO THE ATTENTION OF CROWN CASTLE.
7. ALL MATERIALS FURNISHED AND INSTALLED SHALL BE IN STRICT ACCORDANCE WITH ALL APPLICABLE CODES, REGULATIONS AND ORDINANCES. CONTRACTOR SHALL ISSUE ALL APPROPRIATE NOTICES AND COMPLY WITH ALL LAWS, ORDINANCES, RULES, REGULATIONS AND LAWFUL ORDERS OF ANY PUBLIC AUTHORITY REGARDING THE PERFORMANCE OF THE WORK. ALL WORK CARRIED OUT SHALL COMPLY WITH ALL APPLICABLE MUNICIPAL AND UTILITY COMPANY SPECIFICATIONS AND LOCAL JURISDICTIONAL CODES, ORDINANCES AND APPLICABLE REGULATIONS.
8. UNLESS NOTED OTHERWISE, THE WORK SHALL INCLUDE FURNISHING MATERIALS, EQUIPMENT, APPURTENANCES AND LABOR NECESSARY TO COMPLETE ALL INSTALLATIONS AS INDICATED ON THE DRAWINGS.
9. THE CONTRACTOR SHALL INSTALL ALL EQUIPMENT AND MATERIALS IN ACCORDANCE WITH MANUFACTURER'S RECOMMENDATIONS UNLESS SPECIFICALLY STATED OTHERWISE.
10. IF THE SPECIFIED EQUIPMENT CAN NOT BE INSTALLED AS SHOWN ON THESE DRAWINGS, THE CONTRACTOR SHALL PROPOSE AN ALTERNATIVE INSTALLATION FOR APPROVAL BY THE CARRIER AND CROWN CASTLE PRIOR TO PROCEEDING WITH ANY SUCH CHANGE OF INSTALLATION.
11. CONTRACTOR IS TO PERFORM A SITE INVESTIGATION AND IS TO DETERMINE THE BEST ROUTING OF ALL CONDUITS FOR POWER, AND TELCO AND FOR GROUNDING CABLES AS SHOWN IN THE POWER, TELCO, AND GROUNDING PLAN DRAWINGS.
12. THE CONTRACTOR SHALL PROTECT EXISTING IMPROVEMENTS, PAVEMENTS, CURBS, LANDSCAPING AND STRUCTURES. ANY DAMAGED PART SHALL BE REPAIRED AT CONTRACTOR'S EXPENSE TO THE SATISFACTION OF CROWN CASTLE USA INC.
13. CONTRACTOR SHALL LEGALLY AND PROPERLY DISPOSE OF ALL SCRAP MATERIALS SUCH AS COAXIAL CABLES AND OTHER ITEMS REMOVED FROM THE EXISTING FACILITY. ANTENNAS REMOVED SHALL BE RETURNED TO THE OWNER'S DESIGNATED LOCATION.
14. CONTRACTOR SHALL LEAVE PREMISES IN CLEAN CONDITION. TRASH AND DEBRIS SHOULD BE REMOVED FROM SITE ON A DAILY BASIS.

CONCRETE, FOUNDATIONS, AND REINFORCING STEEL:

1. ALL CONCRETE WORK SHALL BE IN ACCORDANCE WITH THE ACI 301, ACI 318, ACI 336, ASTM A184, ASTM A185 AND THE DESIGN AND CONSTRUCTION SPECIFICATION FOR CAST–IN–PLACE CONCRETE.
2. UNLESS NOTED OTHERWISE, SOIL BEARING PRESSURE USED FOR DESIGN OF SLABS AND FOUNDATIONS IS ASSUMED TO BE 1000 psf.
3. ALL CONCRETE SHALL HAVE A MINIMUM COMPRESSIVE STRENGTH (f'c) OF 3000 psi AT 28 DAYS, UNLESS NOTED OTHERWISE. NO MORE THAN 90 MINUTES SHALL ELAPSE FROM BATCH TIME TO TIME OF PLACEMENT UNLESS APPROVED BY THE ENGINEER OF RECORD. TEMPERATURE OF CONCRETE SHALL NOT EXCEED 90°f AT TIME OF PLACEMENT.
4. CONCRETE EXPOSED TO FREEZE–THAW CYCLES SHALL CONTAIN AIR ENTRAINING ADMIXTURES. AMOUNT OF AIR ENTRAINMENT TO BE BASED ON SIZE OF AGGREGATE AND F3 CLASS EXPOSURE (VERY SEVERE). CEMENT USED TO BE TYPE II PORTLAND CEMENT WITH A MAXIMUM WATER–TO–CEMENT RATIO (W/C) OF 0.45.
5. ALL STEEL REINFORCING SHALL CONFORM TO ASTM A615. ALL WELDED WIRE FABRIC (WWF) SHALL CONFORM TO ASTM A185. ALL SPLICES SHALL BE CLASS "B" TENSION SPLICES, UNLESS NOTED OTHERWISE. ALL HOOKS SHALL BE STANDARD 90 DEGREE HOOKS, UNLESS NOTED OTHERWISE. YIELD STRENGTH (Fy) OF STANDARD DEFORMED BARS ARE AS FOLLOWS:
#4 BARS AND SMALLER..... 40 ksi
#5 BARS AND LARGER..... 60 ksi
6. THE FOLLOWING MINIMUM CONCRETE COVER SHALL BE PROVIDED FOR REINFORCING STEEL UNLESS SHOWN OTHERWISE ON DRAWINGS:
CONCRETE CAST AGAINST AND PERMANENTLY EXPOSED TO EARTH.....3"
CONCRETE EXPOSED TO EARTH OR WEATHER:
#6 BARS AND LARGER.....2"
#5 BARS AND SMALLER.....1–1/2"
CONCRETE NOT EXPOSED TO EARTH OR WEATHER:
SLAB AND WALLS.....3/4"
BEAMS AND COLUMNS.....1–1/2"
7. A TOOLED EDGE OR A 3/4" CHAMFER SHALL BE PROVIDED AT ALL EXPOSED EDGES OF CONCRETE, UNLESS NOTED OTHERWISE, IN ACCORDANCE WITH ACI 301 SECTION 4.2.4.

GREENFIELD GROUNDING NOTES:

1. ALL GROUND ELECTRODE SYSTEMS (INCLUDING TELECOMMUNICATION, RADIO, LIGHTNING PROTECTION AND AC POWER GES'S) SHALL BE BONDED TOGETHER AT OR BELOW GRADE, BY TWO OR MORE COPPER BONDING CONDUCTORS IN ACCORDANCE WITH THE NEC.
2. THE CONTRACTOR SHALL PERFORM IEEE FALL–OF–POTENTAL RESISTANCE TO EARTH TESTING (PER IEEE 1100 AND 81) FOR GROUND ELECTRODE SYSTEMS, THE CONTRACTOR SHALL FURNISH AND INSTALL SUPPLEMENTAL GROUND ELECTRODES AS NEEDED TO ACHIEVE A TEST RESULT OF 5 OHMS OR LESS.
3. THE CONTRACTOR IS RESPONSIBLE FOR PROPERLY SEQUENCING GROUNDING AND UNDERGROUND CONDUIT INSTALLATION AS TO PREVENT ANY LOSS OF CONTINUITY IN THE GROUNDING SYSTEM OR DAMAGE TO THE CONDUIT AND PROVIDE TESTING RESULTS.
4. METAL CONDUIT AND TRAY SHALL BE GROUNDED AND MADE ELECTRICALLY CONTINUOUS WITH LISTED BONDING FITTINGS OR BY BONDING ACROSS THE DISCONTINUITY WITH #6 COPPER WIRE UL APPROVED GROUNDING TYPE CONDUIT CLAMPS.
5. METAL RACEWAY SHALL NOT BE USED AS THE NEC REQUIRED EQUIPMENT GROUND CONDUCTOR. STRANDED COPPER CONDUCTORS WITH GREEN INSULATION, SIZED IN ACCORDANCE WITH THE NEC, SHALL BE FURNISHED AND INSTALLED WITH THE POWER CIRCUITS TO BTS EQUIPMENT.
6. EACH CABINET FRAME SHALL BE DIRECTLY CONNECTED TO THE MASTER GROUND BAR WITH GREEN INSULATED SUPPLEMENTAL EQUIPMENT GROUND WIRES, #6 STRANDED COPPER OR LARGER FOR INDOOR BTS; #2 BARE SOLID TINNED COPPER FOR OUTDOOR BTS.
7. CONNECTIONS TO THE GROUND BUS SHALL NOT BE DOUBLED UP OR STACKED BACK TO BACK CONNECTIONS ON OPPOSITE SIDE OF THE GROUND BUS ARE PERMITTED.
8. ALL EXTERIOR GROUND CONDUCTORS BETWEEN EQUIPMENT/GROUND BARS AND THE GROUND RING SHALL BE #2 SOLID TINNED COPPER UNLESS OTHERWISE INDICATED.
9. ALUMINUM CONDUCTOR OR COPPER CLAD STEEL CONDUCTOR SHALL NOT BE USED FOR GROUNDING CONNECTIONS.
10. USE OF 90° BENDS IN THE PROTECTION GROUNDING CONDUCTORS SHALL BE AVOIDED WHEN 45° BENDS CAN BE ADEQUATELY SUPPORTED.
11. EXOTHERMIC WELDS SHALL BE USED FOR ALL GROUNDING CONNECTIONS BELOW GRADE.
12. ALL GROUND CONNECTIONS ABOVE GRADE (INTERIOR AND EXTERIOR) SHALL BE FORMED USING HIGH PRESS CRIMPS.
13. COMPRESSION GROUND CONNECTIONS MAY BE REPLACED BY EXOTHERMIC WELD CONNECTIONS.
14. ICE BRIDGE BONDING CONDUCTORS SHALL BE EXOTHERMICALLY BONDED OR BOLTED TO THE BRIDGE AND THE TOWER GROUND BAR.
15. APPROVED ANTIOXIDANT COATINGS (i.e. CONDUCTIVE GEL OR PASTE) SHALL BE USED ON ALL COMPRESSION AND BOLTED GROUND CONNECTIONS.
16. ALL EXTERIOR GROUND CONNECTIONS SHALL BE COATED WITH A CORROSION RESISTANT MATERIAL.
17. MISCELLANEOUS ELECTRICAL AND NON–ELECTRICAL METAL BOXES, FRAMES AND SUPPORTS SHALL BE BONDED TO THE GROUND RING, IN ACCORDANCE WITH THE NEC.
18. BOND ALL METALLIC OBJECTS WITHIN 6 ft OF MAIN GROUND RING WITH (1) #2 BARE SOLID TINNED COPPER GROUND CONDUCTOR.
19. GROUND CONDUCTORS USED FOR THE FACILITY GROUNDING AND LIGHTNING PROTECTION SYSTEMS SHALL NOT BE ROUTED THROUGH METALLIC OBJECTS THAT FORM A RING AROUND THE CONDUCTOR, SUCH AS METALLIC CONDUITS, METAL SUPPORT CLIPS OR SLEEVES THROUGH WALLS OR FLOORS. WHEN IT IS REQUIRED TO BE HOUSED IN CONDUIT TO MEET CODE REQUIREMENTS OR LOCAL CONDITIONS, NON–METALLIC MATERIAL SUCH AS PVC CONDUIT SHALL BE USED. WHERE USE OF METAL CONDUIT IS UNAVOIDABLE (i.e., NONMETALLIC CONDUIT PROHIBITED BY LOCAL CODE) THE GROUND CONDUCTOR SHALL BE BONDED TO EACH END OF THE METAL CONDUIT.
20. ALL GROUNDS THAT TRANSITION FROM BELOW GRADE TO ABOVE GRADE MUST BE #2 BARE SOLID TINNED COPPER IN 3/4" NON–METALLIC, FLEXIBLE CONDUIT FROM 24" BELOW GRADE TO WITHIN 3" TO 6" OF CAD–WELD TERMINATION POINT. THE EXPOSED END OF THE CONDUIT MUST BE SEALED WITH SILICONE CAULK. (ADD TRANSITIONING GROUND STANDARD DETAIL AS WELL).
21. BUILDINGS WHERE THE MAIN GROUNDING CONDUCTORS ARE REQUIRED TO BE ROUTED TO GRADE, THE CONTRACTOR SHALL ROUTE TWO GROUNDING CONDUCTORS FROM THE ROOFTOP, TOWERS, AND WATER TOWERS GROUNDING RING, TO THE EXISTING GROUNDING SYSTEM, THE GROUNDING CONDUCTORS SHALL NOT BE SMALLER THAN 2/0 COPPER. ROOFTOP GROUNDING RING SHALL BE BONDED TO THE EXISTING GROUNDING SYSTEM, THE BUILDING STEEL COLUMNS, LIGHTNING PROTECTION SYSTEM, AND BUILDING MAIN WATER LINE (FERROUS OR NONFERROUS METAL PIPING ONLY).

ELECTRICAL INSTALLATION NOTES:

1. ALL ELECTRICAL WORK SHALL BE PERFORMED IN ACCORDANCE WITH THE PROJECT SPECIFICATIONS, NEC AND ALL APPLICABLE FEDERAL, STATE, AND LOCAL CODES/ORDINANCES.
2. CONDUIT ROUTINGS ARE SCHEMATIC. CONTRACTOR SHALL INSTALL CONDUITS SO THAT ACCESS TO EQUIPMENT IS NOT BLOCKED AND TRIP HAZARDS ARE ELIMINATED.
3. WIRING, RACEWAY AND SUPPORT METHODS AND MATERIALS SHALL COMPLY WITH THE REQUIREMENTS OF THE NEC.
4. ALL CIRCUITS SHALL BE SEGREGATED AND MAINTAIN MINIMUM CABLE SEPARATION AS REQUIRED BY THE NEC.
4.1. ALL EQUIPMENT SHALL BEAR THE UNDERWRITERS LABORATORIES LABEL OF APPROVAL, AND SHALL CONFORM TO REQUIREMENT OF THE NATIONAL ELECTRICAL CODE.
4.2. ALL OVERCURRENT DEVICES SHALL HAVE AN INTERRUPTING CURRENT RATING THAT SHALL BE GREATER THAN THE SHORT CIRCUIT CURRENT TO WHICH THEY ARE SUBJECTED, 22,000 AIC MINIMUM. VERYIFY AVAILABLE SHORT CIRCUIT CURRENT DOES NOT EXCEED THE RATING OF ELECTRICAL EQUIPMENT IN ACCORDANCE WITH ARTICLE 110.24 NEC OR THE MOST CURRENT ADOPTED CODE PRE THE GOVERNING JURISDICTION.
5. EACH END OF EVERY POWER PHASE CONDUCTOR, GROUNDING CONDUCTOR, AND TELCO CONDUCTOR OR CABLE SHALL BE LABELED WITH COLOR–CODED INSULATION OR ELECTRICAL TAPE (3M BRAND, 1/2" PLASTIC ELECTRICAL TAPE WITH UV PROTECTION, OR EQUAL). THE IDENTIFICATION METHOD SHALL CONFORM WITH NEC AND OSHA.
6. ALL ELECTRICAL COMPONENTS SHALL BE CLEARLY LABELED WITH LAMICOID TAGS SHOWING THEIR RATED VOLTAGE, PHASE CONFIGURATION, WIRE CONFIGURATION, POWER OR AMPACITY RATING AND BRANCH CIRCUIT ID NUMBERS (i.e. PANEL BOARD AND CIRCUIT ID'S).
7. PANEL BOARDS (ID NUMBERS) SHALL BE CLEARLY LABELED WITH PLASTIC LABELS.
8. ALL TIE WRAPS SHALL BE CUT FLUSH WITH APPROVED CUTTING TOOL TO REMOVE SHARP EDGES.
9. ALL POWER AND EQUIPMENT GROUND WIRING IN TUBING OR CONDUIT SHALL BE SINGLE COPPER CONDUCTOR (#14 OR LARGER) WITH TYPE THHW, THWN, THWN–2, XHHW, XHHW–2, THW, THW–2, RHW, OR RHW–2 INSULATION UNLESS OTHERWISE SPECIFIED.
10. SUPPLEMENTAL EQUIPMENT GROUND WIRING LOCATED INDOORS SHALL BE SINGLE COPPER CONDUCTOR (#6 OR LARGER) WITH TYPE THHW, THWN, THWN–2, XHHW, XHHW–2, THW, THW–2, RHW, OR RHW–2 INSULATION UNLESS OTHERWISE SPECIFIED.
11. POWER AND CONTROL WIRING IN FLEXIBLE CORD SHALL BE MULTI–CONDUCTOR, TYPE SOOW CORD (#14 OR LARGER) UNLESS OTHERWISE SPECIFIED.
12. POWER AND CONTROL WIRING FOR USE IN CABLE TRAY SHALL BE MULTI–CONDUCTOR, TYPE TC CABLE (#14 OR LARGER), WITH TYPE THHW, THWN, THWN–2, XHHW, XHHW–2, THW, THW–2, RHW, OR RHW–2 INSULATION UNLESS OTHERWISE SPECIFIED.
13. ALL POWER AND GROUNDING CONNECTIONS SHALL BE CRIMP–STYLE, COMPRESSION WIRE LUGS AND WIRE NUTS BY THOMAS AND BETTS (OR EQUAL). LUGS AND WIRE NUTS SHALL BE RATED FOR OPERATION NOT LESS THAN 75° C (90° C IF AVAILABLE).
14. RACEWAY AND CABLE TRAY SHALL BE LISTED OR LABELED FOR ELECTRICAL USE IN ACCORDANCE WITH NEMA, UL, ANSI/IEEE AND NEC.
15. ELECTRICAL METALLIC TUBING (EMT), INTERMEDIATE METAL CONDUIT (IMC), OR RIGID METAL CONDUIT (RMC) SHALL BE USED FOR EXPOSED INDOOR LOCATIONS.
16. ELECTRICAL METALLIC TUBING (EMT) OR METAL–CLAD CABLE (MC) SHALL BE USED FOR CONCEALED INDOOR LOCATIONS.
17. SCHEDULE 40 PVC UNDERGROUND ON STRAIGHTS AND SCHEDULE 80 PVC FOR ALL ELBOWS/90s AND ALL APPROVED ABOVE GRADE PVC CONDUIT.
18. LIQUID–TIGHT FLEXIBLE METALLIC CONDUIT (LIQUID–TITE FLEX) SHALL BE USED INDOORS AND OUTDOORS, WHERE VIBRATION OCCURS OR FLEXIBILITY IS NEEDED.
19. CONDUIT AND TUBING FITTINGS SHALL BE THREADED OR COMPRESSION–TYPE AND APPROVED FOR THE LOCATION USED. SET SCREW FITTINGS ARE NOT ACCEPTABLE.
20. CABINETS, BOXES AND WIRE WAYS SHALL BE LABELED FOR ELECTRICAL USE IN ACCORDANCE WITH NEMA, UL, ANSI/IEEE AND THE NEC.
21. WIREWAYS SHALL BE METAL WITH AN ENAMEL FINISH AND INCLUDE A HINGED COVER, DESIGNED TO SWING OPEN DOWNWARDS (WIREMOLD SPECMATE WIREWAY).
22. SLOTTED WIRING DUCT SHALL BE PVC AND INCLUDE COVER (PANDUIT TYPE E OR EQUAL).
23. CONDUITS SHALL BE FASTENED SECURELY IN PLACE WITH APPROVED NON–PERFORATED STRAPS AND HANGERS. EXPLOSIVE DEVICES (i.e. POWDER–ACTUATED) FOR ATTACHING HANGERS TO STRUCTURE WILL NOT BE PERMITTED. CLOSELY FOLLOW THE LINES OF THE STRUCTURE, MAINTAIN CLOSE PROXIMITY TO THE STRUCTURE AND KEEP CONDUITS IN TIGHT ENVELOPES. CHANGES IN DIRECTION TO ROUTE AROUND OBSTACLES SHALL BE MADE WITH CONDUIT OUTLET BODIES. CONDUIT SHALL BE INSTALLED IN A NEAT AND WORKMANLIKE MANNER. PARALLEL AND PERPENDICULAR TO STRUCTURE WALL AND CEILING LINES. ALL CONDUIT SHALL BE FISHED TO CLEAR OBSTRUCTIONS. ENDS OF CONDUITS SHALL BE TEMPORARILY CAPPED FLUSH TO FINISH GRADE TO PREVENT CONCRETE, PLASTER OR DIRT FROM ENTERING. CONDUITS SHALL BE RIGIDLY CLAMPED TO BOXES BY GALVANIZED MALLEABLE IRON BUSHING ON INSIDE AND GALVANIZED MALLEABLE IRON LOCKNUT ON OUTSIDE AND INSIDE.
24. EQUIPMENT CABINETS, TERMINAL BOXES, JUNCTION BOXES AND PULL BOXES SHALL BE GALVANIZED OR EPOXY–COATED SHEET STEEL. SHALL MEET OR EXCEED UL 50 AND BE RATED NEMA 1 (OR BETTER) FOR INTERIOR LOCATIONS AND NEMA 3R (OR BETTER) FOR EXTERIOR LOCATIONS.
25. METAL RECEPTACLE, SWITCH AND DEVICE BOXES SHALL BE GALVANIZED, EPOXY–COATED OR NON–CORRODING; SHALL MEET OR EXCEED UL 514A AND NEMA OS 1 AND BE RATED NEMA 1 (OR BETTER) FOR INTERIOR LOCATIONS AND WEATHER PROTECTED (WP OR BETTER) FOR EXTERIOR LOCATIONS.
26. NONMETALLIC RECEPTACLE, SWITCH AND DEVICE BOXES SHALL MEET OR EXCEED NEMA OS 2 (NEWEST REVISION) AND BE RATED NEMA 1 (OR BETTER) FOR INTERIOR LOCATIONS AND WEATHER PROTECTED (WP OR BETTER) FOR EXTERIOR LOCATIONS.
27. THE CONTRACTOR SHALL NOTIFY AND OBTAIN NECESSARY AUTHORIZATION FROM THE CARRIER AND/OR CROWN CASTLE USA INC. BEFORE COMMENCING WORK ON THE AC POWER DISTRIBUTION PANELS.
28. THE CONTRACTOR SHALL PROVIDE NECESSARY TAGGING ON THE BREAKERS, CABLES AND DISTRIBUTION PANELS IN ACCORDANCE WITH THE APPLICABLE CODES AND STANDARDS TO SAFEGUARD LIFE AND PROPERTY.
29. INSTALL LAMICOID LABEL ON THE METER CENTER TO SHOW "VERIZON".
30. ALL EMPTY/SPARE CONDUITS THAT ARE INSTALLED ARE TO HAVE A METERED MULE TAPE PULL CORD INSTALLED.

CONDUCTOR COLOR CODE		
SYSTEM	CONDUCTOR	COLOR
120/240V, 1Ø	A PHASE	BLACK
	B PHASE	RED
	NEUTRAL	WHITE
	GROUND	GREEN
120/208V, 3Ø	A PHASE	BLACK
	B PHASE	RED
	C PHASE	BLUE
	NEUTRAL	WHITE
	GROUND	GREEN
277/480V, 3Ø	A PHASE	BROWN
	B PHASE	ORANGE OR PURPLE
	C PHASE	YELLOW
	NEUTRAL	GREY
	GROUND	GREEN
DC VOLTAGE	POS (+)	RED**
	NEG (–)	BLACK**

* SEE NEC 210.5(C)(1) AND (2)
** POLARITY MARKED AT TERMINATION

APWA UNIFORM COLOR CODE:

WHITE	PROPOSED EXCAVATION
	TEMPORARY SURVEY MARKINGS
	ELECTRIC POWER LINES, CABLES, CONDUIT, AND LIGHTING CABLES
YELLOW	GAS, OIL, STEAM, PETROLEUM, OR GASEOUS MATERIALS

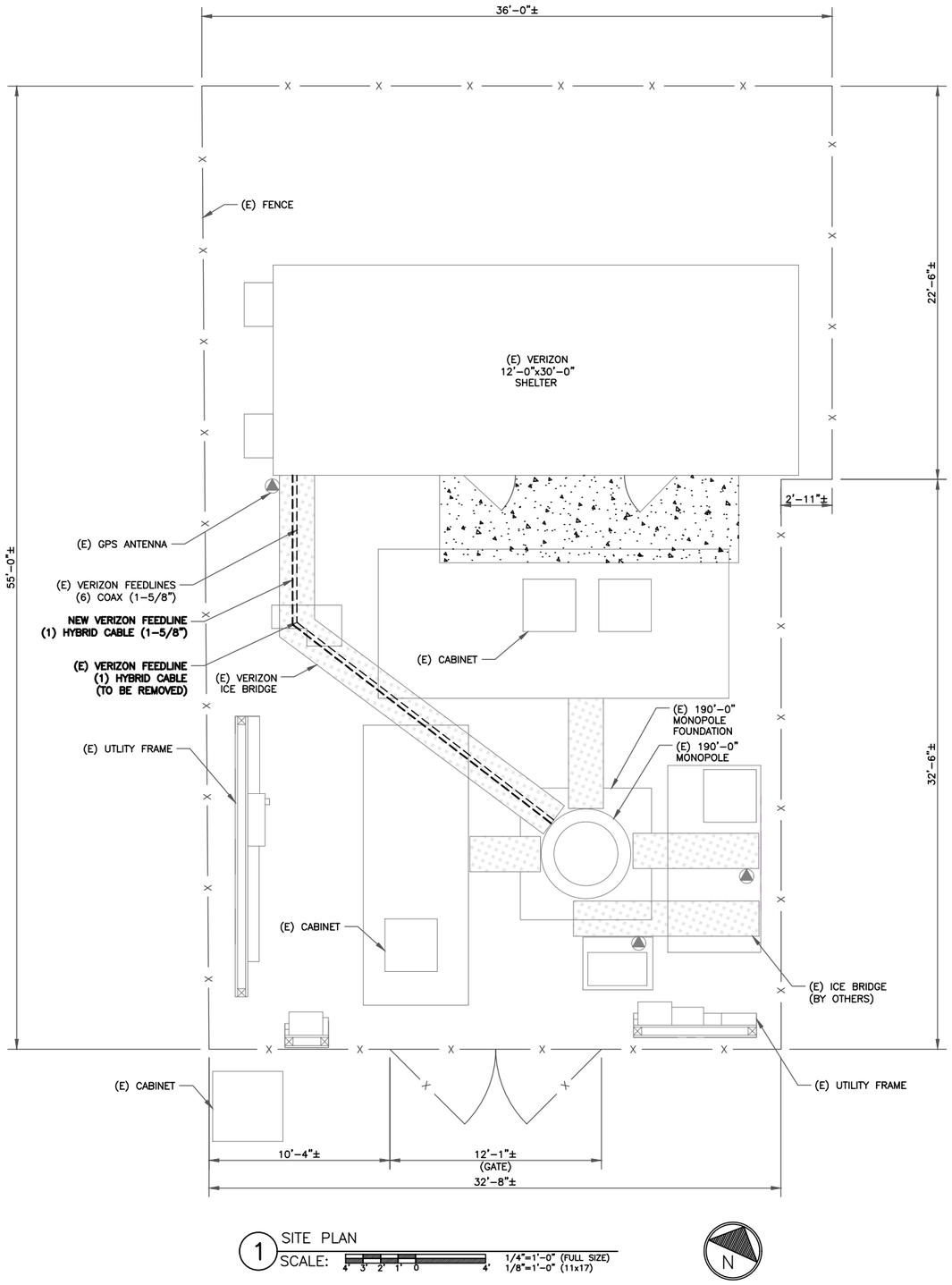

1 SITE PLAN
SCALE: 4' 3' 2' 1' 0 4' 1/4"=1'-0" (FULL SIZE) 1/8"=1'-0" (11x17)

N

verizon
180 WASHINGTON VALLEY ROAD
BEDMINSTER, NJ 07921

CROWN CASTLE
1200 MACARTHUR BLVD, SUITE 200
MAHWAH, NJ 07430

Tectonic
PRACTICAL SOLUTIONS. EXCEPTIONAL SERVICE.
Tectonic Engineering & Surveying Consultants P.C.
70 Pleasant Hill Road Phone: (845) 534-5959
P.O. Box 37 (800) 520-8831
Mountainville, NY 10953 www.tectonicengineering.com
Project Content Info
1279 Route 300
Newburgh, NY 12550 Phone: (845) 567-3656
10546.MONROEWEST CT

VERIZON SITE NUMBER:
324395

BU #: **876355**
UPPER STEPNEY - TLC

474-480 MAIN ST.
MONROE, CT 0646

EXISTING 190'-0" MONOPOLE

ISSUED FOR:

REV	DATE	DRWN	DESCRIPTION	DES./QA
0	05/03/21	VM	CONSTRUCTION	----
1	11/10/21	VM	PER COMMENTS	----

STATE OF CONNECTICUT
ANTONIO A. GUALTIERI
PEN.0025406
LICENSED
PROFESSIONAL ENGINEER
11/10/21

IT IS A VIOLATION OF LAW FOR ANY PERSON, UNLESS THEY ARE ACTING UNDER THE DIRECTION OF A LICENSED PROFESSIONAL ENGINEER, TO ALTER THIS DOCUMENT.

SHEET NUMBER: C-1

REVISION: 1

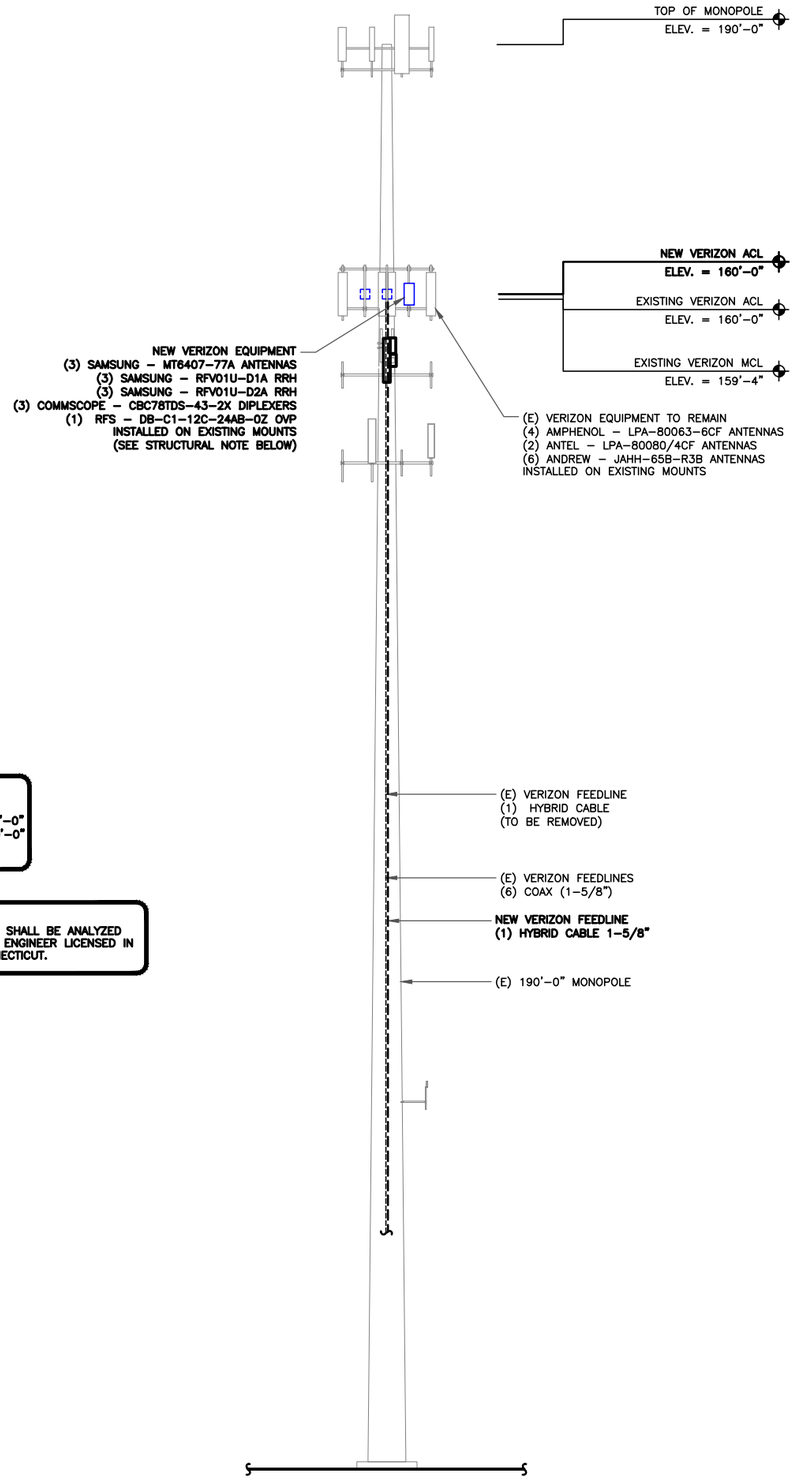

VERIZON EQUIPMENT

(E) ANTENNA CL: 160'-0"
(N) ANTENNA CL: 160'-0"
MOUNT CL: 159'-4"

TOWER NOTE:
EXISTING STRUCTURE SHALL BE ANALYZED BY A PROFESSIONAL ENGINEER LICENSED IN THE STATE OF CONNECTICUT.

1 TOWER ELEVATION
SCALE: NOT TO SCALE

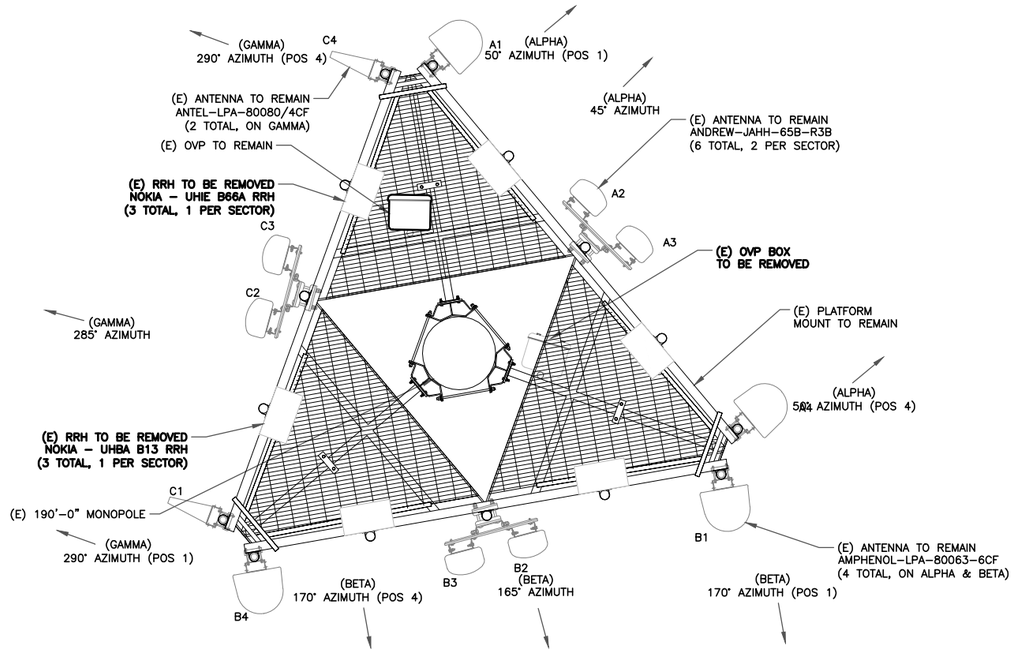

2 EXISTING ANTENNA PLAN
SCALE: NOT TO SCALE

N

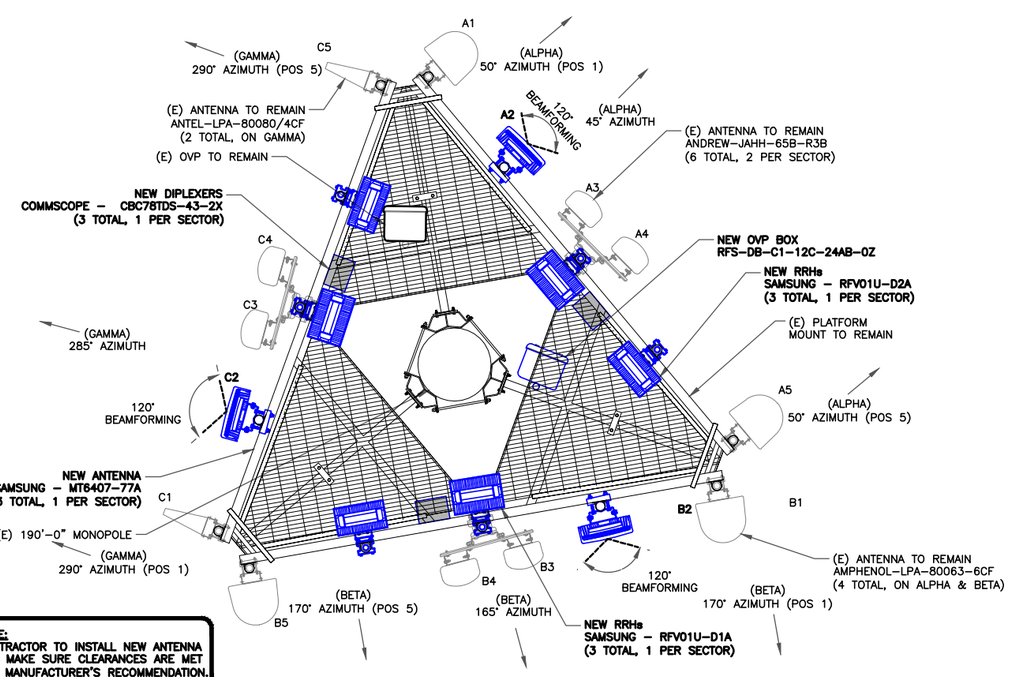

NOTE:
CONTRACTOR TO INSTALL NEW ANTENNA AND MAKE SURE CLEARANCES ARE MET PER MANUFACTURER'S RECOMMENDATION.

STRUCTURAL NOTE:
EXISTING PLATFORM MOUNT IS STRUCTURALLY SUITABLE FOR THE PROPOSED INSTALLATION PER A MOUNT ANALYSIS PERFORMED BY MASER CONSULTING, CONNETICUT DATED 05/03/2021.

3 NEW ANTENNA PLAN
SCALE: NOT TO SCALE

N

verizon
180 WASHINGTON VALLEY ROAD
BEDMINSTER, NJ 07921

CROWN CASTLE
1200 MACARTHUR BLVD, SUITE 200
MAHWAH, NJ 07430

Tectonic
PRACTICAL SOLUTIONS. EXCEPTIONAL SERVICE.
Tectonic Engineering & Surveying Consultants P.C.
70 Pleasant Hill Road Phone: (845) 534-5959
P.O. Box 37 (800) 520-8321
Mountainville, NY 10953 www.tectonicengineering.com
Regional Contact Info
1279 Route 300 Phone: (845) 567-3656
Newburgh, NY 12550
10548.MONROEWEST CT

VERIZON SITE NUMBER:
324395

BU #: **876355**
UPPER STEPNEY - TLC

474-480 MAIN ST.
MONROE, CT 0646

EXISTING 190'-0" MONOPOLE

ISSUED FOR:

REV	DATE	DRWN	DESCRIPTION	DES./QA
0	05/03/21	VM	CONSTRUCTION	----
1	11/10/21	VM	PER COMMENTS	----

STATE OF CONNECTICUT
ANTONIO A. GUALTIERI
PEN.0025406
LICENSED
PROFESSIONAL ENGINEER
11/10/21

IT IS A VIOLATION OF LAW FOR ANY PERSON, UNLESS THEY ARE ACTING UNDER THE DIRECTION OF A LICENSED PROFESSIONAL ENGINEER, TO ALTER THIS DOCUMENT.

SHEET NUMBER: C-2
REVISION: 1

ANTENNA/RRH SCHEDULE

SECTOR	STATUS	ANTENNA MANUFACTURER	ANTENNA MODEL	ANTENNA CENTERLINE	AZIMUTH	MECHANICAL DOWNTILTS	ELECTRICAL DOWNTILTS	TOWER EQUIPMENT MANUFACTURER	TOWER EQUIPMENT QTY/MODEL
A1	EXISTING	AMPHENOL	LPA-80063-6CF	160'-0"	50°	0°	2°	RFS SAMSUNG SAMSUNG COMMOSCOPE	(1) DB-C1-12C-24AB-0Z (1) RFV01U-D1A (1) RFV01U-D2A (1) CBC78TDS-43-2X
A2	**NEW**	**SAMSUNG**	**MT6407-77A**	**160'-0"**	**45°**	**0°**	**6°**		
A3	EXISTING	ANDREW	JAHH-65B-R3B	108'-0"	45°	0°	2°/2°		
A4	EXISTING	ANDREW	JAHH-65B-R3B	108'-0"	45°	0°	2°/2°		
A5	EXISTING	AMPHENOL	LPA-80063-6CF	160'-0"	50°	0°	2°		
B1	EXISTING	AMPHENOL	LPA-80063-6CF	160'-0"	170°	0°	4°	SAMSUNG SAMSUNG COMMOSCOPE	(1) RFV01U-D1A (1) RFV01U-D2A (1) CBC78TDS-43-2X
B2	**NEW**	**SAMSUNG**	**MT6407-77A**	**160'-0"**	**165°**	**0°**	**6°**		
B3	EXISTING	ANDREW	JAHH-65B-R3B	108'-0"	165°	0°	2°/2°		
B4	EXISTING	ANDREW	JAHH-65B-R3B	108'-0"	165°	0°	2°/2°		
B5	EXISTING	AMPHENOL	LPA-80063-6CF	160'-0"	170°	0°	4°		
C1	EXISTING	ANTEL	LPA-80080/4CF	160'-0"	290°	0°	0°	SAMSUNG SAMSUNG COMMOSCOPE	(1) RFV01U-D1A (1) RFV01U-D2A (1) CBC78TDS-43-2X
C2	**NEW**	**SAMSUNG**	**MT6407-77A**	**160'-0"**	**285°**	**0°**	**6°**		
C3	EXISTING	ANDREW	JAHH-65B-R3B	108'-0"	285°	0°	2°/2°		
C4	EXISTING	ANDREW	JAHH-65B-R3B	108'-0"	285°	0°	2°/2°		
C5	EXISTING	ANTEL	LPA-80080/4CF	160'-0"	290°	0°	0°		

1 VERIZON TOWER EQUIPMENT SCHEDULE
SCALE: NOT TO SCALE

CABLE SCHEDULE

STATUS	CABLE TYPE	SIZE	LENGTH	QTY
NEW	**HYBRID**	**1-5/8"**	**210'-0"±**	**1**
EXISTING	COAX	1-5/8"	210'-0"±	6
TOTAL CABLE QTY:				**7**

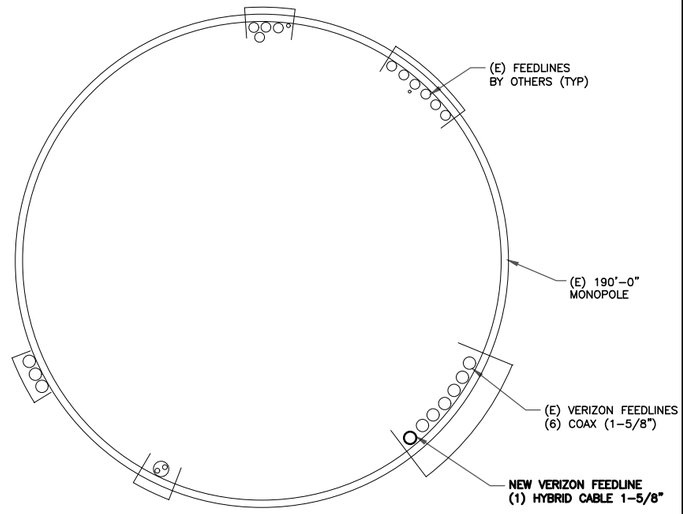

2 BASE LEVEL DETAIL
SCALE: NOT TO SCALE

N

verizon
180 WASHINGTON VALLEY ROAD
BEDMINSTER, NJ 07921

CROWN CASTLE
1200 MACARTHUR BLVD, SUITE 200
MAHWAH, NJ 07430

Tectonic
PRACTICAL SOLUTIONS. EXCEPTIONAL SERVICE.
Tectonic Engineering & Surveying Consultants P.C.
70 Pleasant Hill Road — Phone: (845) 534-5959
P.O. Box 37 — (800) 839-8331
Mountainville, NY 10953 — www.tectonicengineering.com
Regional Centered Suite
1279 Route 300
Newburgh, NY 12550 — Phone: (845) 567-3656
10546.MONROEWEST CT

VERIZON SITE NUMBER:
324395

BU #: **876355**
UPPER STEPNEY - TLC

474-480 MAIN ST.
MONROE, CT 0646

EXISTING 190'-0" MONOPOLE

ISSUED FOR:

REV	DATE	DRWN	DESCRIPTION	DES./QA
0	05/03/21	VM	CONSTRUCTION	---
1	11/10/21	VM	PER COMMENTS	---

STATE OF CONNECTICUT
ANTONIO A. GUALTIERI
PEN.0025406
LICENSED PROFESSIONAL ENGINEER
11/10/21

IT IS A VIOLATION OF LAW FOR ANY PERSON, UNLESS THEY ARE ACTING UNDER THE DIRECTION OF A LICENSED PROFESSIONAL ENGINEER, TO ALTER THIS DOCUMENT.

SHEET NUMBER: C-3
REVISION: 1

1 NOT USED
SCALE: NOT TO SCALE

2 NOT USED
SCALE: NOT TO SCALE

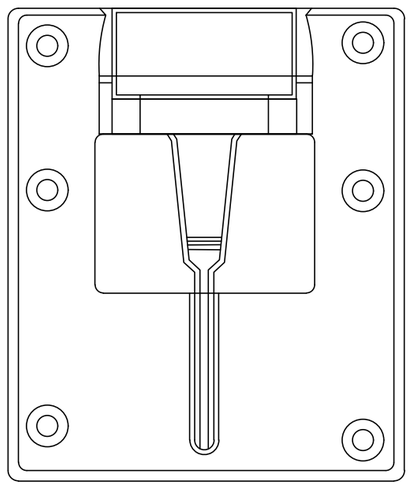

3 SAMSUNG – EP97–01585A BRACKET DETAIL
SCALE: NOT TO SCALE

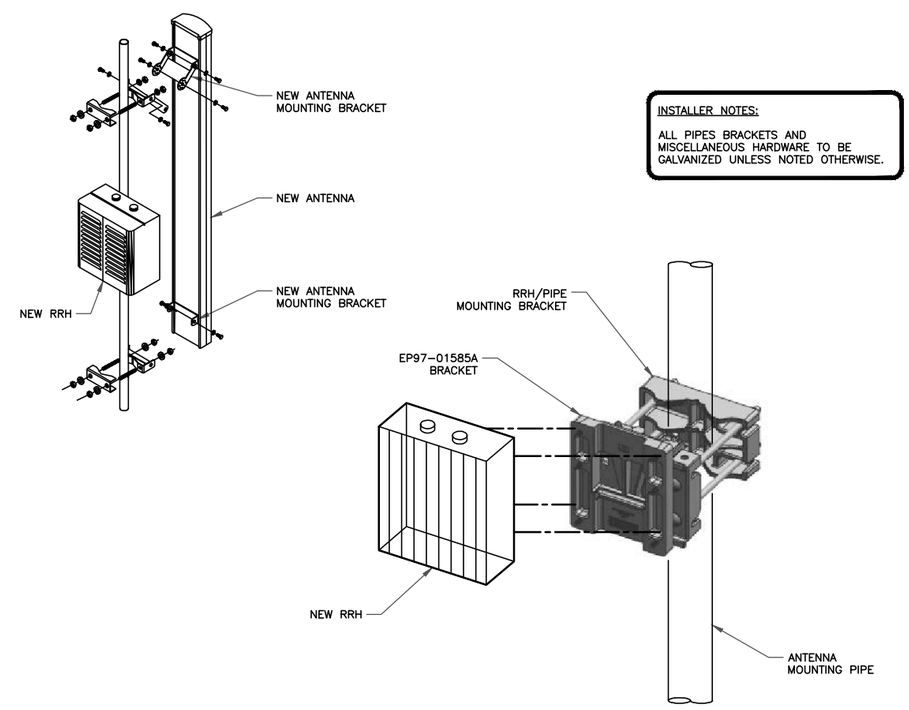

INSTALLER NOTES:

ALL PIPES BRACKETS AND MISCELLANEOUS HARDWARE TO BE GALVANIZED UNLESS NOTED OTHERWISE.

4 ANTENNA & RRH MOUNTING DETAIL
SCALE: NOT TO SCALE

verizon
180 WASHINGTON VALLEY ROAD
BEDMINSTER, NJ 07921

CROWN CASTLE
1200 MACARTHUR BLVD, SUITE 200
MAHWAH, NJ 07430

Tectonic
PRACTICAL SOLUTIONS. EXCEPTIONAL SERVICE.
Tectonic Engineering & Surveying Consultants P.C.
70 Pleasant Hill Road
P.O. Box 37
Mountainville, NY 10953
Phone: (845) 534–0909
(800) 829–6531
www.tectonicengineering.com
Project Contact Info
1279 Route 300
Newburgh, NY 12550
10545.MONROEWEST CT
Phone: (845) 567–6656

VERIZON SITE NUMBER:
324395

BU #: **876355**
UPPER STEPNEY - TLC

474-480 MAIN ST.
MONROE, CT 0646

EXISTING 190'-0" MONOPOLE

ISSUED FOR:

REV	DATE	DRWN	DESCRIPTION	DES./QA
0	05/03/21	VM	CONSTRUCTION	----
1	11/10/21	VM	PER COMMENTS	----

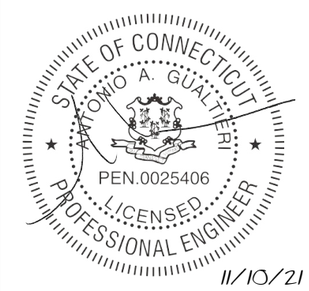

11/10/21

IT IS A VIOLATION OF LAW FOR ANY PERSON, UNLESS THEY ARE ACTING UNDER THE DIRECTION OF A LICENSED PROFESSIONAL ENGINEER, TO ALTER THIS DOCUMENT.

SHEET NUMBER: C-4
REVISION: 1

MANUFACTURER	SAMSUNG
MODEL	MT6407-77A
SIZE	16.06" x 35.12" x 5.5"
WEIGHT	87.1 LBS

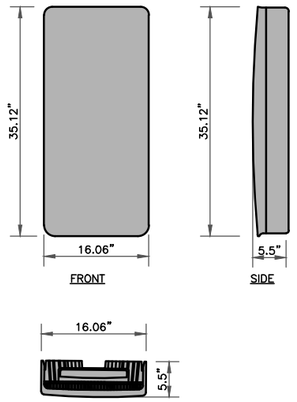

1 SAMSUNG – MT6407-77A ANTENNA
SCALE: NOT TO SCALE

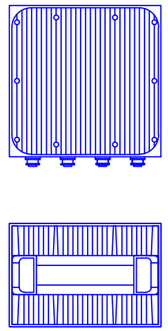

SAMSUNG – B2/B66A RRH-BR049 (RFV01U-D1A)
WEIGHT(W/O EQUIPMENT): 84.4 LBS
SIZE (HxWxD): 15x15x10 IN.

2 SAMSUNG – B2/B66A RRH-BR049 (RFV01U-D1A)
SCALE: NOT TO SCALE

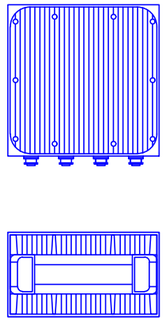

SAMSUNG – B5/B13 RRH-BR04C (RFV01U-D2A)
WEIGHT (W/O EQUIPMENT): 31.9 LBS
SIZE (HxWxD): 15x15x8.1 IN.

3 SAMSUNG – B5/B13 RRH-BR04C (RFV01U-D2A)
SCALE: NOT TO SCALE

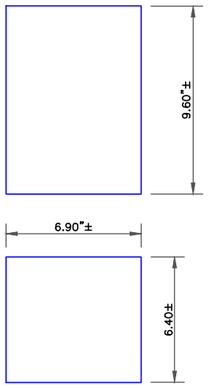

COMMSCOPE – CBC78TDS-43-2X
WEIGHT : 20.70 LBS
SIZE (HxWxD): 6.40x6.90x9.60 IN.

4 COMMSCOPE – CBC78TDS-43-2X
SCALE: NOT TO SCALE

5 NOT USED
SCALE: NOT TO SCALE

6 NOT USED
SCALE: NOT TO SCALE

verizon
180 WASHINGTON VALLEY ROAD
BEDMINSTER, NJ 07921

CROWN CASTLE
1200 MACARTHUR BLVD, SUITE 200
MAHWAH, NJ 07430

Tectonic
PRACTICAL SOLUTIONS. EXCEPTIONAL SERVICE.
Tectonic Engineering & Surveying Consultants P.C.
70 Pleasant Hill Road
P.O. Box 37
Mountainville, NY 10953
Phone: (845) 534-5959
(800) 829-6531
www.tectonicengineering.com
Project Contact Info
1279 Route 300
Newburgh, NY 12550
10545.MONROEWEST CT
Phone: (845) 567-6656

VERIZON SITE NUMBER:
324395

BU #: **876355**
UPPER STEPNEY - TLC

474-480 MAIN ST.
MONROE, CT 0646

EXISTING 190'-0" MONOPOLE

ISSUED FOR:

REV	DATE	DRWN	DESCRIPTION	DES./QA
0	05/03/21	VM	CONSTRUCTION	----
1	11/10/21	VM	PER COMMENTS	----

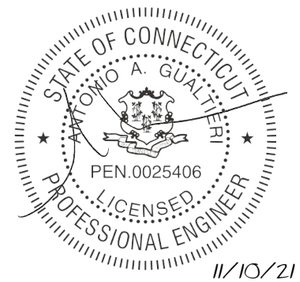

11/10/21

IT IS A VIOLATION OF LAW FOR ANY PERSON, UNLESS THEY ARE ACTING UNDER THE DIRECTION OF A LICENSED PROFESSIONAL ENGINEER, TO ALTER THIS DOCUMENT.

SHEET NUMBER: C-5
REVISION: 1

- Port 1 & 2 are for low band (698-787 MHz).
- Port 3 & 4 are for low band (824-894 MHz).
- Port 3,4,5, & 6 are for high band (1695-2360 MHz).
- Antenna Smart Bias Tee (SBT) is through port 1 for low band and port 5 for high band.
- AISG cable is only needed when drawn in the diagrams below, if it is not drawn then SBT is enough to control all RET motors.
- Not all SBT ports are needed to control RET, only green port connection to green port will control RET.

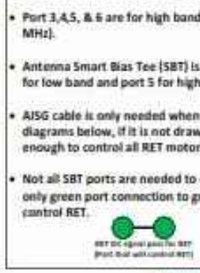

Comments:

Diagram shows configuration as viewed from standing behind the antennas.

Antennas will be installed in that order from left to right.

Cap and weatherproof unused antenna ports.

All plumbing diagram colors are irrelevant except for AISG & Hybriflex cable. (For the coax colors follow Coax Colors guide above)

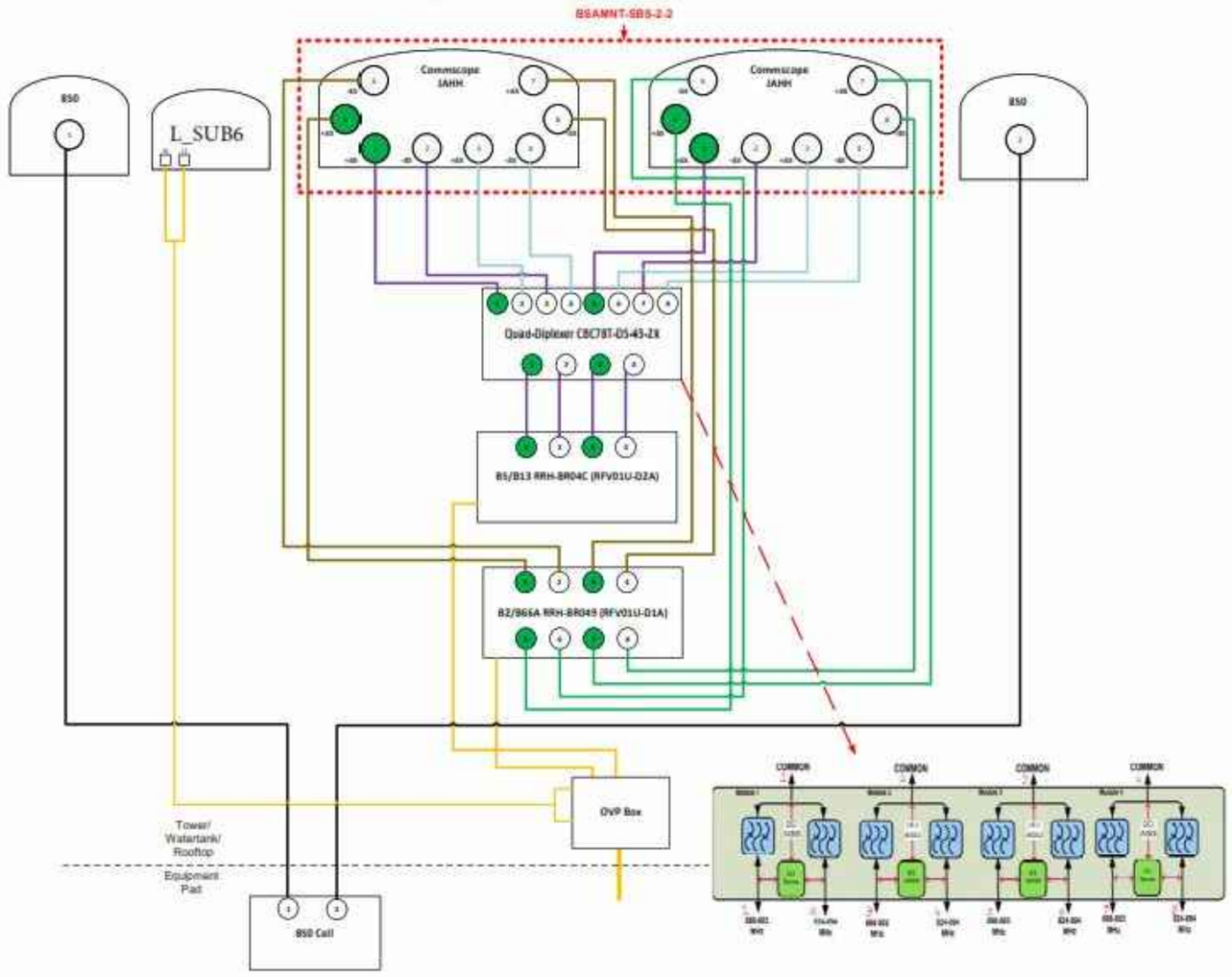

1 PLUMBING DIAGRAM
SCALE: NOT TO SCALE

verizon
180 WASHINGTON VALLEY ROAD
BEDMINSTER, NJ 07921

CROWN CASTLE
1200 MACARTHUR BLVD, SUITE 200
MAHWAH, NJ 07430

Tectonic
PRACTICAL SOLUTIONS. EXCEPTIONAL SERVICE.
Tectonic Engineering & Surveying Consultants P.C.
70 Pleasant Hill Road — Phone: (845) 534-5959
P.O. Box 37 — (800) 520-8321
Mountainville, NY 10953 — www.tectonicengineering.com
Project Contact Info
1279 Route 300
Newburgh, NY 12550 — Phone: (845) 567-0856
10546-MONROEWEST CT

VERIZON SITE NUMBER:
324395

BU #: **876355**
UPPER STEPNEY - TLC

474-480 MAIN ST.
MONROE, CT 0646

EXISTING 190'-0" MONOPOLE

ISSUED FOR:

REV	DATE	DRWN	DESCRIPTION	DES./QA
0	05/03/21	VM	CONSTRUCTION	----
1	11/10/21	VM	PER COMMENTS	----

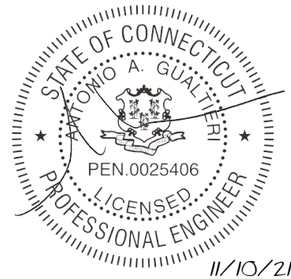

11/10/21

IT IS A VIOLATION OF LAW FOR ANY PERSON, UNLESS THEY ARE ACTING UNDER THE DIRECTION OF A LICENSED PROFESSIONAL ENGINEER, TO ALTER THIS DOCUMENT.

SHEET NUMBER: C-6

REVISION: 1

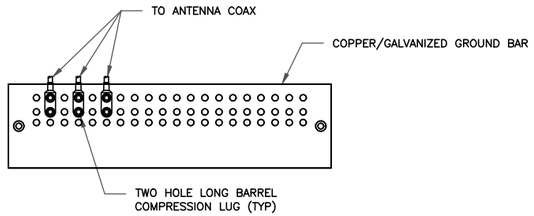

NOTES:

1. DOUBLING UP "OR STACKING" OF CONNECTIONS IS NOT PERMITTED.
2. EXTERIOR ANTIOXIDANT JOINT COMPOUND TO BE USED ON ALL EXTERIOR CONNECTIONS.
3. GROUND BAR SHALL NOT BE ISOLATED FROM TOWER. MOUNT DIRECTLY TO ANTENNA MOUNT STEEL.

1 ANTENNA SECTOR GROUND BAR DETAIL
SCALE: NOT TO SCALE

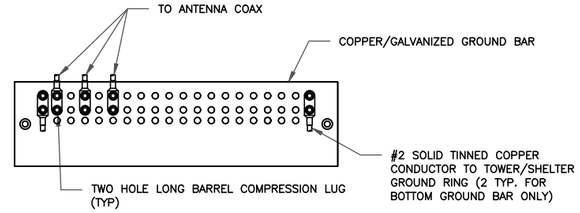

NOTES:

1. EXTERIOR ANTIOXIDANT JOINT COMPOUND TO BE USED ON ALL EXTERIOR CONNECTIONS.
2. GROUND BAR SHALL NOT BE ISOLATED FROM TOWER. MOUNT DIRECTLY TO TOWER STEEL (TOWER ONLY).
3. GROUND BAR SHALL BE ISOLATED FROM BUILDING OR SHELTER.

2 TOWER/SHELTER GROUND BAR DETAIL
SCALE: NOT TO SCALE

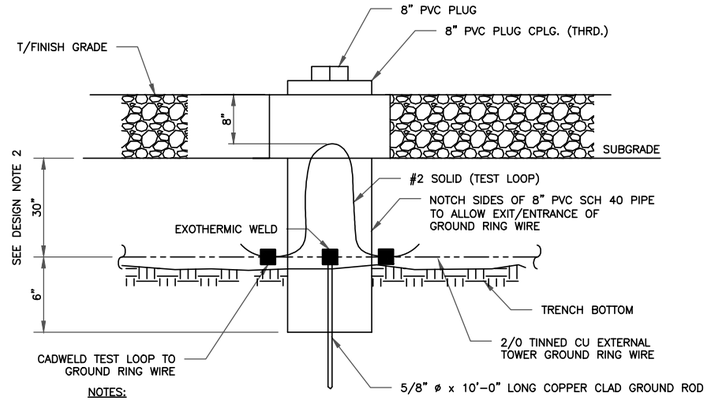

NOTES:

1. GROUND ROD SHALL BE DRIVEN VERTICALLY, NOT TO EXCEED 45 DEGREES FROM THE VERTICAL
2. GROUND WIRE SHALL BE MIN. 30" BELOW GRADE OR 6" BELOW FROST LINE. (WHICH EVER IS GREATER) AS PER N.E.C. ARTICLE 250-50(D)

3 INSPECTION WELL DETAIL
SCALE: NOT TO SCALE

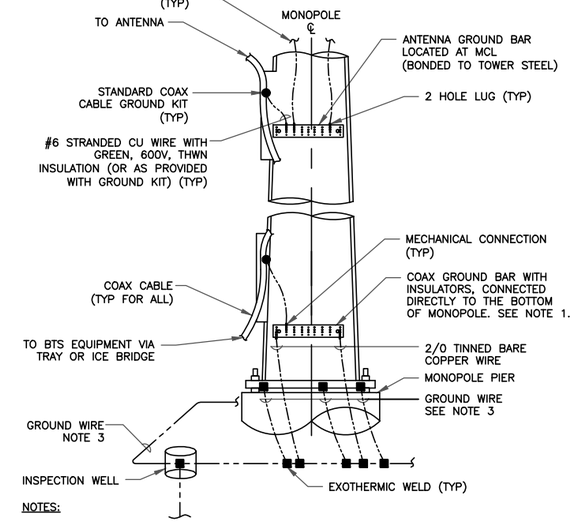

NOTES:

1. NUMBER OF GROUNDING BARS MAY VARY DEPENDING ON THE TYPE OF TOWER, ANTENNA LOCATIONS AND CONNECTION ORIENTATION. COAXIAL CABLES EXCEEDING 200 FEET ON THE TOWER SHALL HAVE GROUND KITS AT THE MIDPOINT. PROVIDE AS REQUIRED.
2. ONLY MECHANICAL CONNECTIONS ARE ALLOWED TO BE MADE TO CROWN CASTLE USA INC. TOWERS. ALL MECHANICAL CONNECTIONS SHALL BE TREATED WITH AN ANTI-OXIDANT COATING.
3. ALL TOWER GROUNDING SYSTEMS SHALL COMPLY WITH THE REQUIREMENTS OF THE RECOGNIZED EDITION OF ANSI/TIA 222 AND NFPA 780.

4 TYPICAL ANTENNA CABLE GROUNDING
SCALE: NOT TO SCALE

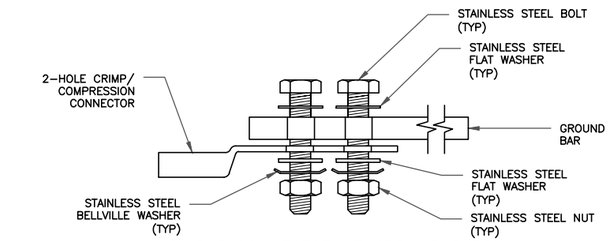

SINGLE CONNECTOR AT GROUND BARS

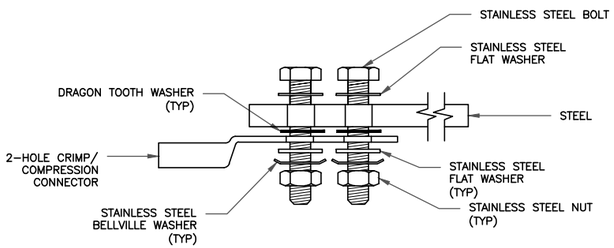

SINGLE CONNECTOR AT STEEL OBJECTS

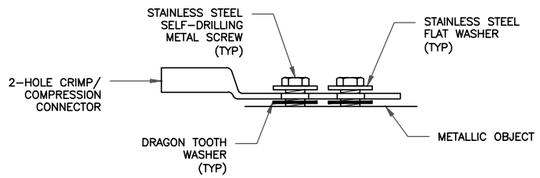

SINGLE CONNECTOR AT METALLIC/STEEL OBJECTS

5 HARDWARE DETAIL FOR EXTERIOR CONNECTIONS
SCALE: NOT TO SCALE

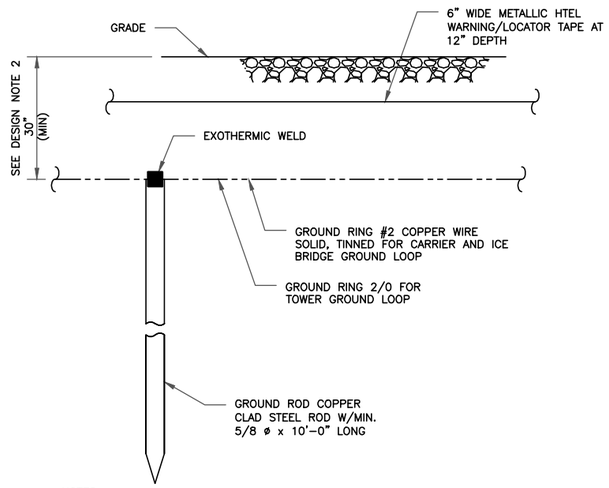

NOTES:

1. GROUND ROD SHALL BE DRIVEN VERTICALLY, NOT TO EXCEED 45 DEGREES FROM THE VERTICAL
2. GROUND WIRE SHALL BE MIN. 30" BELOW GRADE OR 6" BELOW FROST LINE. (WHICH EVER IS GREATER) AS PER N.E.C. ARTICLE 250-50(D)

6 GROUND ROD DETAIL
SCALE: NOT TO SCALE

verizon
180 WASHINGTON VALLEY ROAD
BEDMINSTER, NJ 07921

CROWN CASTLE
1200 MACARTHUR BLVD, SUITE 200
MAHWAH, NJ 07430

Tectonic
PRACTICAL SOLUTIONS. EXCEPTIONAL SERVICE.
Tectonic Engineering & Surveying Consultants P.C.
70 Pleasant Hill Road — Phone: (845) 534-5959
P.O. Box 37 — (800) 520-8321
Mountainville, NY 10953 — www.tectonicengineering.com
Regional Centers Info
1279 Route 300 — Phone: (845) 567-3656
Newburgh, NY 12550
10545.MONROEWEST CT

VERIZON SITE NUMBER:
324395

BU #: **876355**
UPPER STEPNEY - TLC

474-480 MAIN ST.
MONROE, CT 0646

EXISTING 190'-0" MONOPOLE

ISSUED FOR:

REV	DATE	DRWN	DESCRIPTION	DES./QA
0	05/03/21	VM	CONSTRUCTION	----
1	11/10/21	VM	PER COMMENTS	----

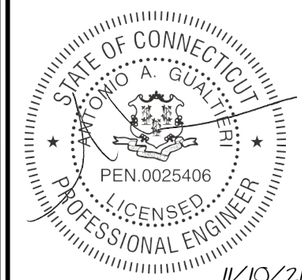

IT IS A VIOLATION OF LAW FOR ANY PERSON, UNLESS THEY ARE ACTING UNDER THE DIRECTION OF A LICENSED PROFESSIONAL ENGINEER, TO ALTER THIS DOCUMENT.

SHEET NUMBER: G-1
REVISION: 1

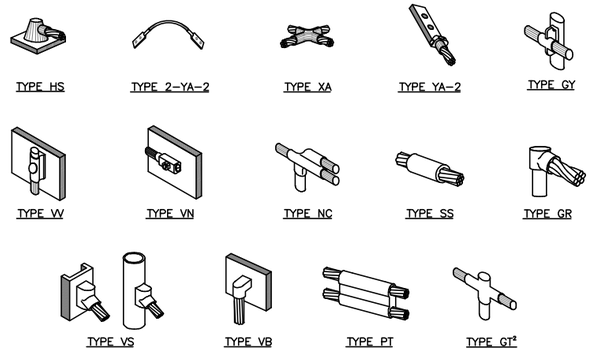

NOTE:

1. ERICO EXOTHERMIC "MOLD TYPES" SHOWN HERE ARE EXAMPLES. CONSULT WITH CONSTRUCTION MANAGER FOR SPECIFIC MOLDS TO BE USED FOR THIS PROJECT.
2. MOLD TYPE ONLY TO BE USED BELOW GRADE WHEN CONNECTING GROUND RING TO GROUND ROD.

1 CADWELD GROUNDING CONNECTIONS
SCALE: NOT TO SCALE

WIRE SIZE	BURNDY LUG	BOLT SIZE
#6 AWG GREEN INSULATED	YA6C-2TC38	3/8" - 16 NC S 2 BOLT
#2 AWG SOLID TINNED	YA3C-2TC38	3/8" - 16 NC S 2 BOLT
#2 AWG STRANDED	YA2C-2TC38	3/8" - 16 NC S 2 BOLT
#2/0 AWG STRANDED	YA26-2TC38	3/8" - 16 NC S 2 BOLT
#4/0 AWG STRANDED	YA28-2N	1/2" - 16 NC S 2 BOLT

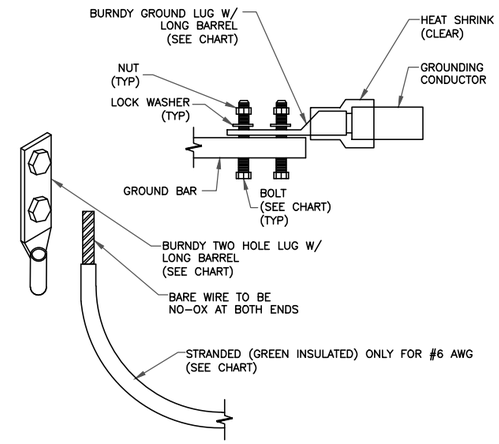

NOTES:

1. ALL GROUNDING LUGS ARE TO BE INSTALLED PER MANUFACTURER'S SPECIFICATIONS. ALL HARDWARE BOLTS, NUTS, LOCK WASHERS SHALL BE STAINLESS STEEL. ALL HARDWARE ARE TO BE AS FOLLOWS: BOLT, FLAT WASHER,GROUND BAR, GROUND LUG, FLAT WASHER AND NUT.

2 MECHANICAL LUG CONNECTION
SCALE: NOT TO SCALE

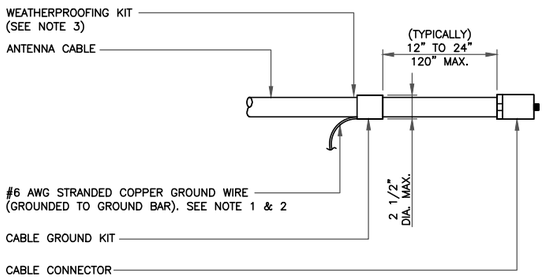

NOTES:

1. DO NOT INSTALL CABLE GROUND KIT AT A BEND AND ALWAYS DIRECT GROUND WIRE DOWN TO GROUND BAR.
2. GROUNDING KIT SHALL BE TYPE AND PART NUMBER AS SUPPLIED OR RECOMMENDED BY CABLE MANUFACTURER.
3. WEATHER PROOFING SHALL BE TWO-PART TAPE KIT, COLD SHRINK SHALL NOT BE USED.

3 CABLE GROUND KIT CONNECTION
SCALE: NOT TO SCALE

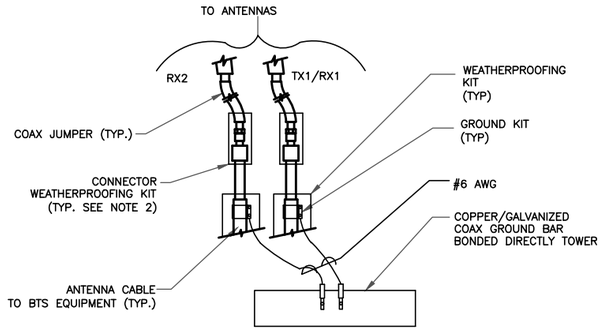

NOTES:

1. DO NOT INSTALL CABLE GROUND KIT AT A BEND AND ALWAYS DIRECT GROUND WIRE DOWN TO ANTENNA GROUND BAR.
2. WEATHER PROOFING SHALL BE TWO-PART TAPE KIT. COLD SHRINK SHALL NOT BE USED.

4 GROUND CABLE CONNECTION
SCALE: NOT TO SCALE

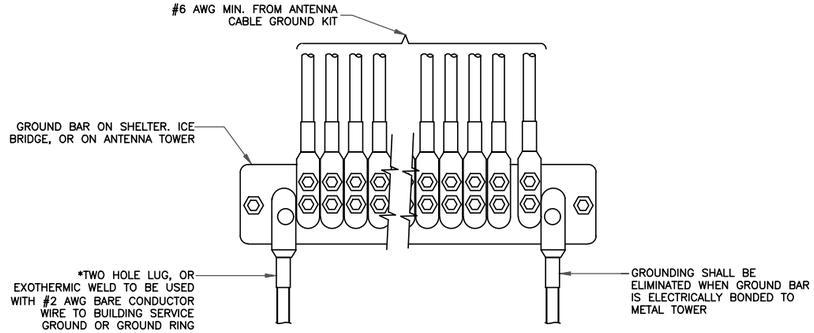

5 GROUNDWIRE INSTALLATION
SCALE: NOT TO SCALE

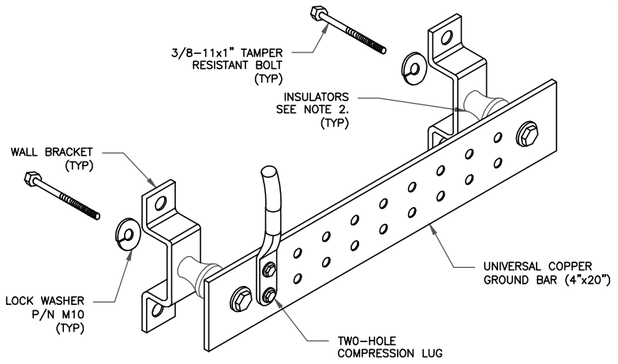

NOTES:

1. DOWN LEAD (HOME RUN) CONDUCTORS ARE NOT TO BE INSTALLED ON CROWN CASTLE USA INC. TOWER, PER THE GROUNDING DOWN CONDUCTOR POLICY QAS-STD-10091. NO MODIFICATION OR DRILLING TO TOWER STEEL IS ALLOWED IN ANY FORM OR FASHION, CAD-WELDING ON THE TOWER AND/OR IN THE AIR ARE NOT PERMITTED.
2. OMIT INSULATOR WHEN MOUNTING TO TOWER STEEL OR PLATFORM STEEL USE INSULATORS WHEN ATTACHING TO BUILDING OR SHELTERS.

6 GROUND BAR DETAIL
SCALE: NOT TO SCALE

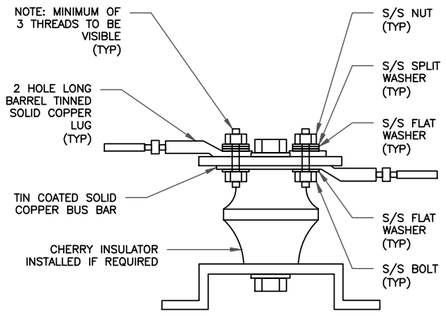

7 LUG DETAIL
SCALE: NOT TO SCALE

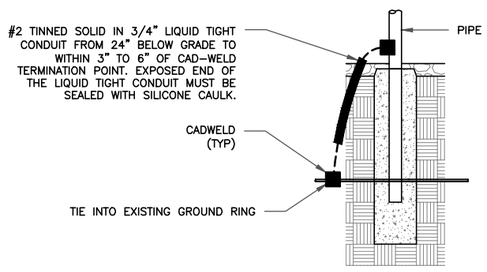

8 TRANSITIONING GROUND DETAIL
SCALE: NOT TO SCALE

verizon
180 WASHINGTON VALLEY ROAD
BEDMINSTER, NJ 07921

CROWN CASTLE
1200 MACARTHUR BLVD, SUITE 200
MAHWAH, NJ 07430

Tectonic
PRACTICAL SOLUTIONS. EXCEPTIONAL SERVICE.
Tectonic Engineering & Surveying Consultants P.C.
70 Pleasant Hill Road Phone: (845) 534-5959
P.O. Box 37 (800) 520-8321
Mountainville, NY 10953 www.tectonicengineering.com
Project Contact Info
1279 Route 300 Phone: (845) 567-3656
Newburgh, NY 12550
10548.MONROEWEST CT

VERIZON SITE NUMBER:
324395

BU #: **876355**
UPPER STEPNEY - TLC

474-480 MAIN ST.
MONROE, CT 0646

EXISTING 190'-0" MONOPOLE

ISSUED FOR:

REV	DATE	DRWN	DESCRIPTION	DES./QA
0	05/03/21	VM	CONSTRUCTION	----
1	11/10/21	VM	PER COMMENTS	----

IT IS A VIOLATION OF LAW FOR ANY PERSON, UNLESS THEY ARE ACTING UNDER THE DIRECTION OF A LICENSED PROFESSIONAL ENGINEER, TO ALTER THIS DOCUMENT.

SHEET NUMBER: G-2
REVISION: 1

Exhibit D

Structural Analysis Report

Date: **May 07, 2021**

Black & Veatch Corp.
6800 W. 115th St., Suite 2292
Overland Park, KS 66211
(913) 458-6909

Subject:	**Structural Analysis Report**	
Carrier Designation:	***Verizon Wireless* Co-Locate**	
	Site Number:	469337
	Site Name:	Monroe West CT
Crown Castle Designation:	**BU Number:**	876355
	Site Name:	UPPER STEPNEY - TLC
	JDE Job Number:	644645
	Work Order Number:	1953770
	Order Number:	552663 Rev. 0
Engineering Firm Designation:	**Black & Veatch Corp. Project Number:**	406642
Site Data:	**474-480 Main St., Monroe, Fairfield County, CT**	
	Latitude *41° 19' 31.99"*, Longitude *-73° 15' 57.05"*	
	191.5 Foot - Monopole Tower	

Black & Veatch Corp. is pleased to submit this **"Structural Analysis Report"** to determine the structural integrity of the above-mentioned tower.

The purpose of the analysis is to determine acceptability of the tower stress level. Based on our analysis we have determined the tower stress level for the structure and foundation, under the following load case, to be:

LC7: Proposed Equipment Configuration **Sufficient Capacity - 56.5%**

This analysis utilizes an ultimate 3-second gust wind speed of 120 mph as required the 2018 Connecticut State Building Code. Applicable Standard references and design criteria are listed in Section 2 - Analysis Criteria.

Structural analysis prepared by: Purich Sangpairoj

Respectfully submitted by:

Digitally signed by Jiang, Ping
DN: CN="Jiang, Ping", O=Black Veatch, C=US
Date: 2021.05.07 01:42:35-05'00'

STATE OF CONNECTICUT
PING JIANG
30767
LICENSED
PROFESSIONAL ENGINEER

May 07, 2021

Ping Jiang, P.E.
Professional Engineer

TABLE OF CONTENTS

1) INTRODUCTION

2) ANALYSIS CRITERIA
Table 1 - Proposed Equipment Configuration
Table 2 - Other Considered Equipment

3) ANALYSIS PROCEDURE
Table 3 - Documents Provided
3.1) Analysis Method
3.2) Assumptions

4) ANALYSIS RESULTS
Table 4 - Section Capacity (Summary)
Table 5 - Tower Component Stresses vs. Capacity
4.1) Recommendations

5) APPENDIX A
tnxTower Output

6) APPENDIX B
Base Level Drawing

7) APPENDIX C
Additional Calculations

1) INTRODUCTION

This tower is a 191.5 ft Monopole tower designed by Engineered Endeavors, Inc.

2) ANALYSIS CRITERIA

TIA-222 Revision:	TIA-222-H
Risk Category:	II
Wind Speed:	120 mph
Exposure Category:	B
Topographic Factor:	1
Ice Thickness:	1.500 in
Wind Speed with Ice:	50 mph
Service Wind Speed:	60 mph

Table 1 - Proposed Equipment Configuration

Mounting Level (ft)	Center Line Elevation (ft)	Number of Antennas	Antenna Manufacturer	Antenna Model	Number of Feed Lines	Feed Line Size (in)
160.0	160.0	4	antel	LPA-80063/6CF w/ Mount Pipe	7	1-5/8
		2	antel	LPA-80080/4CF w/ Mount Pipe		
		1	cci tower mounts (v2.1)	Platform Mount [LP 303-1_HR-1]		
		3	commscope	CBC78T-DS-43-2X		
		6	commscope	JAHH-65B-R3B-V3 w/ Mount Pipe		
		1	rfs celwave	DB-C1-12C-24AB-0Z		
		3	samsung telecommunications	RFV01U-D1A		
		3	samsung telecommunications	RFV01U-D2A		
		3	vzw	Sub6 Antenna - VZS01 w/ Mount Pipe		

Table 2 - Other Considered Equipment

Mounting Level (ft)	Center Line Elevation (ft)	Number of Antennas	Antenna Manufacturer	Antenna Model	Number of Feed Lines	Feed Line Size (in)
192.0	194.0	3	commscope	ATSBT-TOP-MF-4G	3	1-5/8
		3	ems wireless	RR65-18-00DP w/ Mount Pipe		
		3	ericsson	AIR6449 B41_T-MOBILE w/ Mount Pipe		
		3	ericsson	RADIO 4415 B66A_CCIV3		
		3	ericsson	RADIO 4424 B25_TMO		
		3	rfs celwave	APX16DWV-16DWV-S-E-A20 w/ Mount Pipe		
	192.0	1	cci tower mounts (v2.1)	Platform Mount [LP 303-1_HR-1]		
		3	ericsson	RADIO 4449 B12/B71		

Mounting Level (ft)	Center Line Elevation (ft)	Number of Antennas	Antenna Manufacturer	Antenna Model	Number of Feed Lines	Feed Line Size (in)
		3	rfs celwave	APXVAARR24_43-U-NA20 w/ Mount Pipe		
154.0	154.0	3	alcatel lucent	800MHZ 2X50W RRH	-	-
		3	alcatel lucent	PCS 1900MHZ 4X45W-65MHZ		
		1	cci tower mounts (v2.1)	Side Arm Mount [SO 102-3]		
	150.0	3	alcatel lucent	800 EXTERNAL NOTCH FILTER		
150.0	154.0	3	alcatel lucent	TD-RRH8X20-25	4	1-1/4
	152.0	3	rfs celwave	APXVSPP18-C-A20 w/ Mount Pipe		
		3	rfs celwave	APXVTM14-C-120 w/ Mount Pipe		
	150.0	1	cci tower mounts (v2.1)	Platform Mount [LP 601-1]		
		9	rfs celwave	ACU-A20-N		
137.0	140.0	3	ericsson	RRUS-11	1 2 4 1	3/8 5/8 1-1/4 Conduit
		3	powerwave technologies	7770.00 w/ Mount Pipe		
		6	powerwave technologies	LGP21401		
		3	powerwave technologies	P65-16-XLH-RR w/ Mount Pipe		
		1	raycap	DC6-48-60-18-8F		
	137.0	1	cci tower mounts (v2.1)	Platform Mount [LP 303-1]		
50.0	52.0	1	kathrein	OG-860/1920/GPS-A	1	1/2
	50.0	1	cci tower mounts (v2.1)	Side Arm Mount [SO 701-1]		

3) ANALYSIS PROCEDURE

Table 3 - Documents Provided

Document	Reference	Source
4-GEOTECHNICAL REPORTS	1531885	CCISITES
4-TOWER FOUNDATION DRAWINGS/DESIGN/SPECS	1631625	CCISITES
4-TOWER MANUFACTURER DRAWINGS	1631582	CCISITES

3.1) Analysis Method

tnxTower (version 8.0.9.0), a commercially available analysis software package, was used to create a three-dimensional model of the tower and calculate member stresses for various loading cases. Selected output from the analysis is included in Appendix A. When applicable, Crown Castle has calculated and provided the effective area for panel antennas using approved methods following the intent of the TIA-222 standard.

3.2) Assumptions

1) Tower and structures were maintained in accordance with the TIA-222 Standard.
2) The configuration of antennas, transmission cables, mounts and other appurtenances are as specified in Tables 1 and 2 and the referenced drawings.

This analysis may be affected if any assumptions are not valid or have been made in error. Black & Veatch Corp. should be notified to determine the effect on the structural integrity of the tower.

4) ANALYSIS RESULTS

Table 4 - Section Capacity (Summary) (Monopole Tower)

Section No.	Elevation (ft)	Component Type	Size	Critical Element	P (K)	SF*P_allow (K)	% Capacity	Pass / Fail
L1	191.5 - 172.46	Pole	TP20.46x15.5x0.1875	1	-4.23	711.71	27.5	Pass
L2	172.46 - 127.753	Pole	TP31.6x19.2819x0.3125	2	-17.88	1835.55	47.2	Pass
L3	127.753 - 83.083	Pole	TP42.49x29.8151x0.4375	3	-28.74	3458.67	45.5	Pass
L4	83.083 - 40.456	Pole	TP52.59x40.1114x0.5	4	-43.96	4900.01	43.7	Pass
L5	40.456 - 0	Pole	TP62x49.7661x0.5	5	-65.41	5995.11	46.9	Pass
							Summary	
						Pole (L2)	47.2	Pass
						Rating =	47.2	Pass

Table 5 - Tower Component Stresses vs. Capacity (Monopole Tower) - LC7

Notes	Component	Elevation (ft)	% Capacity	Pass / Fail
1	Anchor Rods	0	44.1	Pass
	Base Plate		55.5	Pass
1	Base Foundation (Structure)	0	56.5	Pass
	Base Foundation (Soil Interaction)		49.9	Pass

Structure Rating (max from all components) =	**56.5%**

Notes:
1) See additional documentation in “Appendix C – Additional Calculations” for calculations supporting the % capacity. Rating per TIA-222-H Section 15.5.

4.1) Recommendations

The tower and its foundation have sufficient capacity to carry the proposed load configuration. No modifications are required at this time.

APPENDIX A

TNXTOWER OUTPUT

Section	Length (ft)	Number of Sides	Thickness (in)	Socket Length (ft)	Top Dia (in)	Bot Dia (in)	Grade	Weight (K)
1	19.04	18	0.1875	3.08	15.5000	20.4600		0.7
2	47.79	18	0.3125	4.50	19.2819	31.6000		4.1
3	49.17	18	0.4375	5.83	29.8151	42.4900	A572-65	8.3
4	48.46	18	0.5000	7.08	40.1114	52.5900		12.0
5	47.54	18	0.5000		49.7661	62.0000		14.2
								39.3

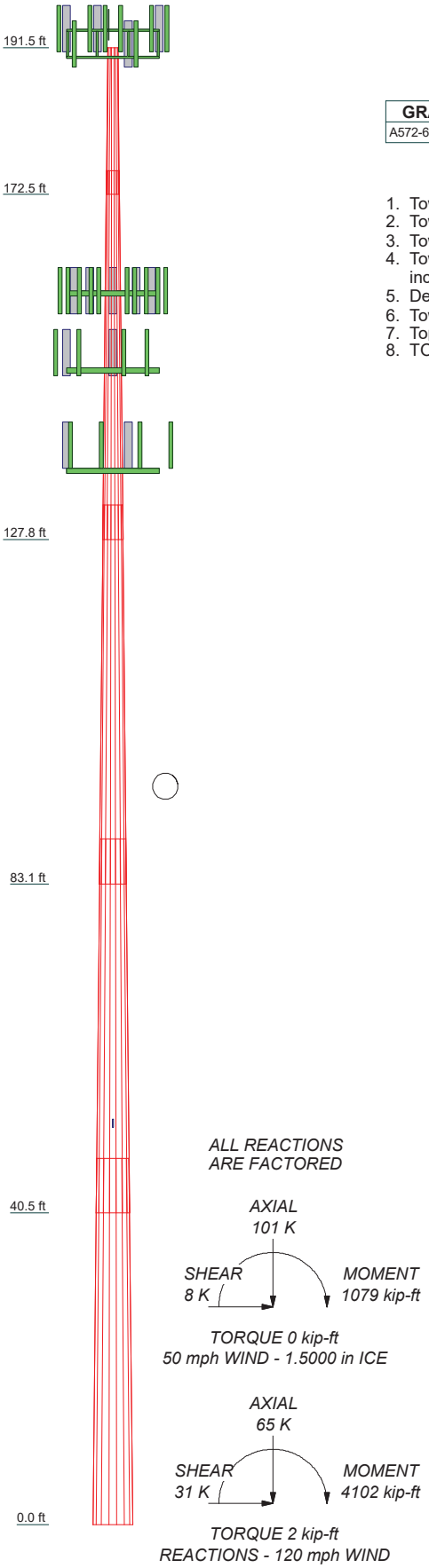

MATERIAL STRENGTH

GRADE	Fy	Fu	GRADE	Fy	Fu
A572-65	65 ksi	80 ksi			

TOWER DESIGN NOTES

1. Tower is located in Fairfield County, Connecticut.
2. Tower designed for Exposure B to the TIA-222-H Standard.
3. Tower designed for a 120 mph basic wind in accordance with the TIA-222-H Standard.
4. Tower is also designed for a 50 mph basic wind with 1.50 in ice. Ice is considered to increase in thickness with height.
5. Deflections are based upon a 60 mph wind.
6. Tower Risk Category II.
7. Topographic Category 1 with Crest Height of 0.00 ft
8. TOWER RATING: 47.2%

BLACK & VEATCH
Building a world of difference.

Black & Veatch Corp.
6800 W. 115th St., Suite 2292
Overland Park, KS 66211
Phone: (913) 458-6909
FAX: (913) 458-8136

Job:	***UPPER STEPNEY - TLC(BU# 876355)***		
Project:	***406642 (876355.1953770)***		
Client: Crown Castle	Drawn by: Purich Sangpairoj	App'd:	
Code: TIA-222-H	Date: 05/07/21	Scale: NTS	
Path:		Dwg No. E-1	

Tower Input Data

The tower is a monopole.
This tower is designed using the TIA-222-H standard.
The following design criteria apply:

- Tower is located in Fairfield County, Connecticut.
- Tower base elevation above sea level: 446.00 ft.
- Basic wind speed of 120 mph.
- Risk Category II.
- Exposure Category B.
- Simplified Topographic Factor Procedure for wind speed-up calculations is used.
- Topographic Category: 1.
- Crest Height: 0.00 ft.
- Nominal ice thickness of 1.5000 in.
- Ice thickness is considered to increase with height.
- Ice density of 56 pcf.
- A wind speed of 50 mph is used in combination with ice.
- Temperature drop of 50 °F.
- Deflections calculated using a wind speed of 60 mph.
- A non-linear (P-delta) analysis was used.
- Pressures are calculated at each section.
- Stress ratio used in pole design is 1.
- Tower analysis based on target reliabilities in accordance with Annex S.
- Load Modification Factors used: $K_{es}(F_w) = 0.95$, $K_{es}(t_i) = 0.85$.
- Maximum demand-capacity ratio is: 1.05.
- Local bending stresses due to climbing loads, feed line supports, and appurtenance mounts are not considered.

Options

	Consider Moments - Legs		Distribute Leg Loads As Uniform		Use ASCE 10 X-Brace Ly Rules
	Consider Moments - Horizontals		Assume Legs Pinned		Calculate Redundant Bracing Forces
	Consider Moments - Diagonals	√	Assume Rigid Index Plate		Ignore Redundant Members in FEA
	Use Moment Magnification	√	Use Clear Spans For Wind Area		SR Leg Bolts Resist Compression
√	Use Code Stress Ratios		Use Clear Spans For KL/r		All Leg Panels Have Same Allowable
√	Use Code Safety Factors - Guys		Retension Guys To Initial Tension		Offset Girt At Foundation
	Escalate Ice	√	Bypass Mast Stability Checks	√	Consider Feed Line Torque
	Always Use Max Kz	√	Use Azimuth Dish Coefficients		Include Angle Block Shear Check
	Use Special Wind Profile	√	Project Wind Area of Appurt.		Use TIA-222-H Bracing Resist. Exemption
	Include Bolts In Member Capacity		Autocalc Torque Arm Areas		Use TIA-222-H Tension Splice Exemption
	Leg Bolts Are At Top Of Section		Add IBC .6D+W Combination		Poles
	Secondary Horizontal Braces Leg		Sort Capacity Reports By Component	√	Include Shear-Torsion Interaction
	Use Diamond Inner Bracing (4 Sided)		Triangulate Diamond Inner Bracing		Always Use Sub-Critical Flow
	SR Members Have Cut Ends		Treat Feed Line Bundles As Cylinder		Use Top Mounted Sockets
	SR Members Are Concentric		Ignore KL/ry For 60 Deg. Angle Legs		Pole Without Linear Attachments
					Pole With Shroud Or No Appurtenances
					Outside and Inside Corner Radii Are Known

Tapered Pole Section Geometry

Section	Elevation ft	Section Length ft	Splice Length ft	Number of Sides	Top Diameter in	Bottom Diameter in	Wall Thickness in	Bend Radius in	Pole Grade
L1	191.50-172.46	19.04	3.08	18	15.5000	20.4600	0.1875	0.7500	A572-65 (65 ksi)
L2	172.46-127.75	47.79	4.50	18	19.2819	31.6000	0.3125	1.2500	A572-65 (65 ksi)
L3	127.75-83.08	49.17	5.83	18	29.8151	42.4900	0.4375	1.7500	A572-65 (65 ksi)
L4	83.08-40.46	48.46	7.08	18	40.1114	52.5900	0.5000	2.0000	A572-65 (65 ksi)
L5	40.46-0.00	47.54		18	49.7661	62.0000	0.5000	2.0000	A572-65 (65 ksi)

Tapered Pole Properties

Section	Tip Dia. in	Area in^2	I in^4	r in	C in	I/C in^3	J in^4	It/Q in^2	w in	w/t
L1	15.7102	9.1129	269.9504	5.4359	7.8740	34.2838	540.2560	4.5573	2.3980	12.789
	20.7467	12.0647	626.4228	7.1967	10.3937	60.2696	1253.6699	6.0335	3.2710	17.445
L2	20.3380	18.8152	855.3677	6.7341	9.7952	87.3253	1711.8609	9.4094	2.8436	9.1
	32.0393	31.0333	3838.0178	11.1071	16.0528	239.0871	7681.0857	15.5196	5.0116	16.037
L3	31.3854	40.7945	4448.0675	10.4290	15.1461	293.6780	8901.9879	20.4011	4.4775	10.234
	43.0780	58.3952	13046.6163	14.9286	21.5849	604.4320	26110.3996	29.2031	6.7082	15.333
L4	42.1782	62.8633	12461.6197	14.0620	20.3766	611.5657	24939.6367	31.4376	6.1796	12.359
	53.3242	82.6668	28338.5385	18.4919	26.7157	1060.7440	56714.3657	41.3413	8.3758	16.752
L5	52.3076	78.1853	23975.0231	17.4895	25.2812	948.3348	47981.5932	39.1001	7.8788	15.758
	62.8793	97.6005	46637.9792	21.8325	31.4960	1480.7588	93337.3258	48.8095	10.0320	20.064

Tower Elevation ft	Gusset Area (per face) ft^2	Gusset Thickness in	Gusset Grade	Adjust. Factor A_f	Adjust. Factor A_r	Weight Mult.	Double Angle Stitch Bolt Spacing Diagonals in	Double Angle Stitch Bolt Spacing Horizontals in	Double Angle Stitch Bolt Spacing Redundants in
L1 191.50-172.46				1	1	1			
L2 172.46-127.75				1	1	1			
L3 127.75-83.08				1	1	1			
L4 83.08-40.46				1	1	1			
L5 40.46-0.00				1	1	1			

Feed Line/Linear Appurtenances - Entered As Round Or Flat

Description	Sector	Exclude From Torque Calculation	Component Type	Placement ft	Total Number	Number Per Row	Start/End Position	Width or Diameter in	Perimeter in	Weight plf
Safety Line 3/8	A	No	Surface Ar (CaAa)	191.50 - 10.00	1	1	0.000 0.000	0.3750		0.22
***										
HCS 6X12 4AWG(1-5/8)	C	No	Surface Ar (CaAa)	191.50 - 0.00	3	1	0.441 0.450	1.6600		2.40
***										
***										

Feed Line/Linear Appurtenances - Entered As Area

Description	Face or Leg	Allow Shield	Exclude From Torque Calculation	Component Type	Placement ft	Total Number		C_AA_A ft^2/ft	Weight plf
HB158-1-13U6-S6F18(1-5/8)	C	No	No	Inside Pole	160.00 - 0.00	1	No Ice	0.00	1.90
							1/2" Ice	0.00	1.90
							1" Ice	0.00	1.90
							2" Ice	0.00	1.90
AVA7-50(1-5/8)	C	No	No	Inside Pole	160.00 - 0.00	6	No Ice	0.00	0.70
							1/2" Ice	0.00	0.70
							1" Ice	0.00	0.70
							2" Ice	0.00	0.70
***									
HB114-21U3M12-XXXF(1-1/4)	C	No	No	Inside Pole	150.00 - 0.00	1	No Ice	0.00	1.22
							1/2" Ice	0.00	1.22
							1" Ice	0.00	1.22
							2" Ice	0.00	1.22
HB114-1-0813U4-M5J(1-1/4)	C	No	No	Inside Pole	150.00 - 0.00	3	No Ice	0.00	1.20
							1/2" Ice	0.00	1.20
							1" Ice	0.00	1.20
							2" Ice	0.00	1.20
***									
2" Rigid Conduit	C	No	No	Inside Pole	137.00 - 0.00	1	No Ice	0.00	2.80
							1/2" Ice	0.00	2.80
							1" Ice	0.00	2.80
							2" Ice	0.00	2.80
WR-VG82ST-BRDA(5/8)	C	No	No	Inside Pole	137.00 - 0.00	2	No Ice	0.00	0.31
							1/2" Ice	0.00	0.31
							1" Ice	0.00	0.31
							2" Ice	0.00	0.31
LDF6-50A(1-1/4)	B	No	No	Inside Pole	137.00 - 0.00	6	No Ice	0.00	0.60
							1/2" Ice	0.00	0.60
							1" Ice	0.00	0.60
							2" Ice	0.00	0.60
FB-L98B-002-75000(3/8)	B	No	No	Inside Pole	137.00 - 0.00	1	No Ice	0.00	0.06
							1/2" Ice	0.00	0.06
							1" Ice	0.00	0.06
							2" Ice	0.00	0.06
***									
LDF4-50A(1/2)	B	No	No	Inside Pole	50.00 - 0.00	1	No Ice	0.00	0.15
							1/2" Ice	0.00	0.15
							1" Ice	0.00	0.15
							2" Ice	0.00	0.15
***									

Feed Line/Linear Appurtenances Section Areas

Tower Section	Tower Elevation ft	Face	A_R ft^2	A_F ft^2	C_AA_A In Face ft^2	C_AA_A Out Face ft^2	Weight K
L1	191.50-172.46	A	0.000	0.000	0.714	0.000	0.00
		B	0.000	0.000	0.000	0.000	0.00
		C	0.000	0.000	3.161	0.000	0.14
L2	172.46-127.75	A	0.000	0.000	1.677	0.000	0.01
		B	0.000	0.000	0.000	0.000	0.03
		C	0.000	0.000	7.421	0.000	0.66
L3	127.75-83.08	A	0.000	0.000	1.675	0.000	0.01
		B	0.000	0.000	0.000	0.000	0.16
		C	0.000	0.000	7.415	0.000	0.96
L4	83.08-40.46	A	0.000	0.000	1.599	0.000	0.01
		B	0.000	0.000	0.000	0.000	0.16
		C	0.000	0.000	7.076	0.000	0.92

Tower Section	Tower Elevation ft	Face	A_R ft^2	A_F ft^2	C_AA_A In Face ft^2	C_AA_A Out Face ft^2	Weight K
L5	40.46-0.00	A	0.000	0.000	1.142	0.000	0.01
		B	0.000	0.000	0.000	0.000	0.15
		C	0.000	0.000	6.716	0.000	0.87

Feed Line/Linear Appurtenances Section Areas - With Ice

Tower Section	Tower Elevation ft	Face or Leg	Ice Thickness in	A_R ft^2	A_F ft^2	C_AA_A In Face ft^2	C_AA_A Out Face ft^2	Weight K
L1	191.50-172.46	A	1.512	0.000	0.000	6.472	0.000	0.07
		B		0.000	0.000	0.000	0.000	0.00
		C		0.000	0.000	8.918	0.000	0.47
L2	172.46-127.75	A	1.482	0.000	0.000	15.196	0.000	0.17
		B		0.000	0.000	0.000	0.000	0.03
		C		0.000	0.000	20.941	0.000	1.44
L3	127.75-83.08	A	1.431	0.000	0.000	14.916	0.000	0.16
		B		0.000	0.000	0.000	0.000	0.16
		C		0.000	0.000	20.656	0.000	1.72
L4	83.08-40.46	A	1.357	0.000	0.000	13.797	0.000	0.14
		B		0.000	0.000	0.000	0.000	0.16
		C		0.000	0.000	19.275	0.000	1.61
L5	40.46-0.00	A	1.210	0.000	0.000	9.407	0.000	0.09
		B		0.000	0.000	0.000	0.000	0.15
		C		0.000	0.000	17.694	0.000	1.48

Feed Line Center of Pressure

Section	Elevation ft	CP_X in	CP_Z in	CP_X Ice in	CP_Z Ice in
L1	191.50-172.46	-1.3937	0.7334	-2.3936	0.5597
L2	172.46-127.75	-1.3808	0.7109	-2.5935	0.5559
L3	127.75-83.08	-1.3710	0.6941	-2.7289	0.5503
L4	83.08-40.46	-1.3654	0.6848	-2.7677	0.5443
L5	40.46-0.00	-1.2988	0.7189	-2.4703	0.7187

Note: For pole sections, center of pressure calculations do not consider feed line shielding.

Shielding Factor Ka

Tower Section	Feed Line Record No.	Description	Feed Line Segment Elev.	K_a No Ice	K_a Ice
L1	1	Safety Line 3/8	172.46 - 191.50	1.0000	1.0000
L1	3	HCS 6X12 4AWG(1-5/8)	172.46 - 191.50	1.0000	1.0000
L2	1	Safety Line 3/8	127.75 - 172.46	1.0000	1.0000
L2	3	HCS 6X12 4AWG(1-5/8)	127.75 - 172.46	1.0000	1.0000
L3	1	Safety Line 3/8	83.08 - 127.75	1.0000	1.0000
L3	3	HCS 6X12 4AWG(1-5/8)	83.08 - 127.75	1.0000	1.0000

Tower Section	Feed Line Record No.	Description	Feed Line Segment Elev.	K_a No Ice	K_a Ice
L4	1	Safety Line 3/8	40.46 - 83.08	1.0000	1.0000
L4	3	HCS 6X12 4AWG(1-5/8)	40.46 - 83.08	1.0000	1.0000
L5	1	Safety Line 3/8	10.00 - 40.46	1.0000	1.0000
L5	3	HCS 6X12 4AWG(1-5/8)	0.00 - 40.46	1.0000	1.0000

Discrete Tower Loads

Description	Face or Leg	Offset Type	Offsets: Horz Lateral Vert ft ft ft	Azimuth Adjustment °	Placement ft		C_AA_A Front ft^2	C_AA_A Side ft^2	Weight K
Lightning Rod 5/8"x6'	C	From Leg	0.00 0.00 3.00	0.0000	191.50	No Ice 1/2" Ice 1" Ice 2" Ice	0.38 0.99 1.62 2.46	0.38 0.99 1.62 2.46	0.01 0.01 0.02 0.05
***									
Platform Mount [LP 303-1_HR-1]	C	None		0.0000	192.00	No Ice 1/2" Ice 1" Ice 2" Ice	17.09 21.47 25.72 33.96	17.09 21.47 25.72 33.96	1.50 1.88 2.35 3.52
AIR6449 B41_T-MOBILE w/ Mount Pipe	A	From Leg	4.00 -2.00 2.00	0.0000	192.00	No Ice 1/2" Ice 1" Ice 2" Ice	5.19 5.59 6.02 6.90	2.71 3.04 3.38 4.12	0.13 0.17 0.23 0.35
AIR6449 B41_T-MOBILE w/ Mount Pipe	B	From Leg	4.00 -2.00 2.00	0.0000	192.00	No Ice 1/2" Ice 1" Ice 2" Ice	5.19 5.59 6.02 6.90	2.71 3.04 3.38 4.12	0.13 0.17 0.23 0.35
AIR6449 B41_T-MOBILE w/ Mount Pipe	C	From Leg	4.00 -2.00 2.00	0.0000	192.00	No Ice 1/2" Ice 1" Ice 2" Ice	5.19 5.59 6.02 6.90	2.71 3.04 3.38 4.12	0.13 0.17 0.23 0.35
RR65-18-00DP w/ Mount Pipe	A	From Leg	4.00 -6.00 2.00	0.0000	192.00	No Ice 1/2" Ice 1" Ice 2" Ice	4.47 5.08 5.70 7.01	2.92 3.50 4.10 5.35	0.03 0.07 0.11 0.22
RR65-18-00DP w/ Mount Pipe	B	From Leg	4.00 -6.00 2.00	0.0000	192.00	No Ice 1/2" Ice 1" Ice 2" Ice	4.47 5.08 5.70 7.01	2.92 3.50 4.10 5.35	0.03 0.07 0.11 0.22
RR65-18-00DP w/ Mount Pipe	C	From Leg	4.00 -6.00 2.00	0.0000	192.00	No Ice 1/2" Ice 1" Ice 2" Ice	4.47 5.08 5.70 7.01	2.92 3.50 4.10 5.35	0.03 0.07 0.11 0.22
APXVAARR24_43-U-NA20 w/ Mount Pipe	A	From Leg	4.00 2.00 0.00	0.0000	192.00	No Ice 1/2" Ice 1" Ice	14.69 15.46 16.23 17.82	6.87 7.55 8.25 9.67	0.19 0.31 0.46 0.79

Description	Face or Leg	Offset Type	Offsets: Horz Lateral Vert ft ft ft	Azimuth Adjustment °	Placement ft		C_AA_A Front ft^2	C_AA_A Side ft^2	Weight K
						2" Ice			
APXVAARR24_43-U-NA20 w/ Mount Pipe	B	From Leg	4.00 2.00 0.00	0.0000	192.00	No Ice 1/2" Ice 1" Ice 2" Ice	14.69 15.46 16.23 17.82	6.87 7.55 8.25 9.67	0.19 0.31 0.46 0.79
APXVAARR24_43-U-NA20 w/ Mount Pipe	C	From Leg	4.00 2.00 0.00	0.0000	192.00	No Ice 1/2" Ice 1" Ice 2" Ice	14.69 15.46 16.23 17.82	6.87 7.55 8.25 9.67	0.19 0.31 0.46 0.79
APX16DWV-16DWV-S-E-A20 w/ Mount Pipe	A	From Leg	4.00 6.00 2.00	0.0000	192.00	No Ice 1/2" Ice 1" Ice 2" Ice	6.29 6.86 7.45 8.68	2.76 3.27 3.79 4.90	0.06 0.11 0.16 0.29
APX16DWV-16DWV-S-E-A20 w/ Mount Pipe	B	From Leg	4.00 6.00 2.00	0.0000	192.00	No Ice 1/2" Ice 1" Ice 2" Ice	6.29 6.86 7.45 8.68	2.76 3.27 3.79 4.90	0.06 0.11 0.16 0.29
APX16DWV-16DWV-S-E-A20 w/ Mount Pipe	C	From Leg	4.00 6.00 2.00	0.0000	192.00	No Ice 1/2" Ice 1" Ice 2" Ice	6.29 6.86 7.45 8.68	2.76 3.27 3.79 4.90	0.06 0.11 0.16 0.29
RADIO 4449 B12/B71	A	From Leg	4.00 0.00 0.00	0.0000	192.00	No Ice 1/2" Ice 1" Ice 2" Ice	1.65 1.81 1.98 2.34	1.30 1.44 1.60 1.92	0.08 0.09 0.11 0.16
RADIO 4449 B12/B71	B	From Leg	4.00 0.00 0.00	0.0000	192.00	No Ice 1/2" Ice 1" Ice 2" Ice	1.65 1.81 1.98 2.34	1.30 1.44 1.60 1.92	0.08 0.09 0.11 0.16
RADIO 4449 B12/B71	C	From Leg	4.00 0.00 0.00	0.0000	192.00	No Ice 1/2" Ice 1" Ice 2" Ice	1.65 1.81 1.98 2.34	1.30 1.44 1.60 1.92	0.08 0.09 0.11 0.16
RADIO 4424 B25_TMO	A	From Leg	4.00 0.00 2.00	0.0000	192.00	No Ice 1/2" Ice 1" Ice 2" Ice	2.05 2.23 2.42 2.81	1.61 1.77 1.94 2.30	0.09 0.11 0.13 0.19
RADIO 4424 B25_TMO	B	From Leg	4.00 0.00 2.00	0.0000	192.00	No Ice 1/2" Ice 1" Ice 2" Ice	2.05 2.23 2.42 2.81	1.61 1.77 1.94 2.30	0.09 0.11 0.13 0.19
RADIO 4424 B25_TMO	C	From Leg	4.00 0.00 2.00	0.0000	192.00	No Ice 1/2" Ice 1" Ice 2" Ice	2.05 2.23 2.42 2.81	1.61 1.77 1.94 2.30	0.09 0.11 0.13 0.19
RADIO 4415 B66A_CCIV3	A	From Leg	4.00 0.00 2.00	0.0000	192.00	No Ice 1/2" Ice 1" Ice 2" Ice	1.64 1.80 1.97 2.32	0.68 0.79 0.91 1.18	0.05 0.06 0.07 0.11
RADIO 4415 B66A_CCIV3	B	From Leg	4.00 0.00 2.00	0.0000	192.00	No Ice 1/2" Ice 1" Ice	1.64 1.80 1.97 2.32	0.68 0.79 0.91 1.18	0.05 0.06 0.07 0.11

Description	Face or Leg	Offset Type	Offsets: Horz Lateral Vert ft ft ft	Azimuth Adjustment °	Placement ft		C_AA_A Front ft^2	C_AA_A Side ft^2	Weight K
						2" Ice			
RADIO 4415 B66A_CCIV3	C	From Leg	4.00 0.00 2.00	0.0000	192.00	No Ice 1/2" Ice 1" Ice 2" Ice	1.64 1.80 1.97 2.32	0.68 0.79 0.91 1.18	0.05 0.06 0.07 0.11
ATSBT-TOP-MF-4G	A	From Leg	4.00 0.00 2.00	0.0000	192.00	No Ice 1/2" Ice 1" Ice 2" Ice	0.17 0.23 0.29 0.44	0.09 0.14 0.19 0.32	0.00 0.00 0.01 0.01
ATSBT-TOP-MF-4G	B	From Leg	4.00 0.00 2.00	0.0000	192.00	No Ice 1/2" Ice 1" Ice 2" Ice	0.17 0.23 0.29 0.44	0.09 0.14 0.19 0.32	0.00 0.00 0.01 0.01
ATSBT-TOP-MF-4G	C	From Leg	4.00 0.00 2.00	0.0000	192.00	No Ice 1/2" Ice 1" Ice 2" Ice	0.17 0.23 0.29 0.44	0.09 0.14 0.19 0.32	0.00 0.00 0.01 0.01
***									
Platform Mount [LP 303-1_HR-1]	C	None		0.0000	160.00	No Ice 1/2" Ice 1" Ice 2" Ice	17.09 21.47 25.72 33.96	17.09 21.47 25.72 33.96	1.50 1.88 2.35 3.52
Sub6 Antenna - VZS01 w/ Mount Pipe	A	From Leg	4.00 3.00 0.00	0.0000	160.00	No Ice 1/2" Ice 1" Ice 2" Ice	5.91 6.72 7.44 8.68	3.74 4.79 5.70 7.17	0.12 0.17 0.22 0.36
Sub6 Antenna - VZS01 w/ Mount Pipe	B	From Leg	4.00 3.00 0.00	0.0000	160.00	No Ice 1/2" Ice 1" Ice 2" Ice	5.91 6.72 7.44 8.68	3.74 4.79 5.70 7.17	0.12 0.17 0.22 0.36
Sub6 Antenna - VZS01 w/ Mount Pipe	C	From Leg	4.00 3.00 0.00	0.0000	160.00	No Ice 1/2" Ice 1" Ice 2" Ice	5.91 6.72 7.44 8.68	3.74 4.79 5.70 7.17	0.12 0.17 0.22 0.36
(2) LPA-80063/6CF w/ Mount Pipe	A	From Leg	4.00 0.00 0.00	0.0000	160.00	No Ice 1/2" Ice 1" Ice 2" Ice	9.83 10.40 10.93 12.03	10.22 11.38 12.27 14.09	0.05 0.14 0.25 0.48
(2) LPA-80063/6CF w/ Mount Pipe	B	From Leg	4.00 0.00 0.00	0.0000	160.00	No Ice 1/2" Ice 1" Ice 2" Ice	9.83 10.40 10.93 12.03	10.22 11.38 12.27 14.09	0.05 0.14 0.25 0.48
(2) LPA-80080/4CF w/ Mount Pipe	C	From Leg	4.00 0.00 0.00	0.0000	160.00	No Ice 1/2" Ice 1" Ice 2" Ice	2.86 3.22 3.59 4.34	6.57 7.19 7.84 9.17	0.03 0.08 0.13 0.25
JAHH-65B-R3B-V3 w/ Mount Pipe	A	From Leg	4.00 -3.00 0.00	0.0000	160.00	No Ice 1/2" Ice 1" Ice 2" Ice	5.50 5.97 6.45 7.44	4.38 4.84 5.30 6.26	0.10 0.17 0.25 0.46
JAHH-65B-R3B-V3 w/ Mount Pipe	B	From Leg	4.00 -3.00 0.00	0.0000	160.00	No Ice 1/2" Ice	5.50 5.97 6.45	4.38 4.84 5.30	0.10 0.17 0.25

Description	Face or Leg	Offset Type	Offsets: Horz Lateral Vert ft ft ft	Azimuth Adjustment °	Placement ft		C_AA_A Front ft^2	C_AA_A Side ft^2	Weight K
						1" Ice	7.44	6.26	0.46
						2" Ice			
JAHH-65B-R3B-V3 w/ Mount Pipe	C	From Leg	4.00 -3.00 0.00	0.0000	160.00	No Ice	5.50	4.38	0.10
						1/2" Ice	5.97	4.84	0.17
						1" Ice	6.45	5.30	0.25
						2" Ice	7.44	6.26	0.46
JAHH-65B-R3B-V3 w/ Mount Pipe	A	From Leg	4.00 0.00 0.00	0.0000	160.00	No Ice	5.50	4.38	0.10
						1/2" Ice	5.97	4.84	0.17
						1" Ice	6.45	5.30	0.25
						2" Ice	7.44	6.26	0.46
JAHH-65B-R3B-V3 w/ Mount Pipe	B	From Leg	4.00 0.00 0.00	0.0000	160.00	No Ice	5.50	4.38	0.10
						1/2" Ice	5.97	4.84	0.17
						1" Ice	6.45	5.30	0.25
						2" Ice	7.44	6.26	0.46
JAHH-65B-R3B-V3 w/ Mount Pipe	C	From Leg	4.00 0.00 0.00	0.0000	160.00	No Ice	5.50	4.38	0.10
						1/2" Ice	5.97	4.84	0.17
						1" Ice	6.45	5.30	0.25
						2" Ice	7.44	6.26	0.46
CBC78T-DS-43-2X	A	From Leg	4.00 0.00 0.00	0.0000	160.00	No Ice	0.37	0.51	0.02
						1/2" Ice	0.45	0.60	0.03
						1" Ice	0.53	0.70	0.04
						2" Ice	0.72	0.93	0.06
CBC78T-DS-43-2X	B	From Leg	4.00 0.00 0.00	0.0000	160.00	No Ice	0.37	0.51	0.02
						1/2" Ice	0.45	0.60	0.03
						1" Ice	0.53	0.70	0.04
						2" Ice	0.72	0.93	0.06
CBC78T-DS-43-2X	C	From Leg	4.00 0.00 0.00	0.0000	160.00	No Ice	0.37	0.51	0.02
						1/2" Ice	0.45	0.60	0.03
						1" Ice	0.53	0.70	0.04
						2" Ice	0.72	0.93	0.06
RFV01U-D1A	A	From Leg	4.00 0.00 0.00	0.0000	160.00	No Ice	1.88	1.25	0.08
						1/2" Ice	2.05	1.39	0.10
						1" Ice	2.22	1.54	0.12
						2" Ice	2.60	1.86	0.18
RFV01U-D1A	B	From Leg	4.00 0.00 0.00	0.0000	160.00	No Ice	1.88	1.25	0.08
						1/2" Ice	2.05	1.39	0.10
						1" Ice	2.22	1.54	0.12
						2" Ice	2.60	1.86	0.18
RFV01U-D1A	C	From Leg	4.00 0.00 0.00	0.0000	160.00	No Ice	1.88	1.25	0.08
						1/2" Ice	2.05	1.39	0.10
						1" Ice	2.22	1.54	0.12
						2" Ice	2.60	1.86	0.18
RFV01U-D2A	A	From Leg	4.00 0.00 0.00	0.0000	160.00	No Ice	1.88	1.01	0.07
						1/2" Ice	2.05	1.14	0.09
						1" Ice	2.22	1.28	0.11
						2" Ice	2.60	1.59	0.15
RFV01U-D2A	B	From Leg	4.00 0.00 0.00	0.0000	160.00	No Ice	1.88	1.01	0.07
						1/2" Ice	2.05	1.14	0.09
						1" Ice	2.22	1.28	0.11
						2" Ice	2.60	1.59	0.15
RFV01U-D2A	C	From Leg	4.00 0.00 0.00	0.0000	160.00	No Ice	1.88	1.01	0.07
						1/2" Ice	2.05	1.14	0.09
						Ice	2.22	1.28	0.11

Description	Face or Leg	Offset Type	Offsets: Horz Lateral Vert ft ft ft	Azimuth Adjustment °	Placement ft		C_AA_A Front ft^2	C_AA_A Side ft^2	Weight K
						1" Ice	2.60	1.59	0.15
						2" Ice			
DB-C1-12C-24AB-0Z	A	From Leg	2.00 0.00 0.00	0.0000	160.00	No Ice 1/2" Ice 1" Ice 2" Ice	4.06 4.32 4.58 5.14	3.10 3.34 3.58 4.09	0.03 0.07 0.11 0.20
***									
Side Arm Mount [SO 102-3]	C	None		0.0000	154.00	No Ice 1/2" Ice 1" Ice 2" Ice	3.60 4.18 4.75 5.90	3.60 4.18 4.75 5.90	0.07 0.11 0.14 0.20
PCS 1900MHZ 4X45W-65MHZ	A	From Leg	4.00 0.00 0.00	0.0000	154.00	No Ice 1/2" Ice 1" Ice 2" Ice	2.32 2.53 2.74 3.19	2.24 2.44 2.65 3.09	0.06 0.08 0.11 0.17
PCS 1900MHZ 4X45W-65MHZ	B	From Leg	4.00 0.00 0.00	0.0000	154.00	No Ice 1/2" Ice 1" Ice 2" Ice	2.32 2.53 2.74 3.19	2.24 2.44 2.65 3.09	0.06 0.08 0.11 0.17
PCS 1900MHZ 4X45W-65MHZ	C	From Leg	4.00 0.00 0.00	0.0000	154.00	No Ice 1/2" Ice 1" Ice 2" Ice	2.32 2.53 2.74 3.19	2.24 2.44 2.65 3.09	0.06 0.08 0.11 0.17
800 EXTERNAL NOTCH FILTER	A	From Leg	4.00 0.00 -4.00	0.0000	154.00	No Ice 1/2" Ice 1" Ice 2" Ice	0.66 0.76 0.87 1.11	0.32 0.40 0.48 0.67	0.01 0.02 0.02 0.04
800 EXTERNAL NOTCH FILTER	B	From Leg	4.00 0.00 -4.00	0.0000	154.00	No Ice 1/2" Ice 1" Ice 2" Ice	0.66 0.76 0.87 1.11	0.32 0.40 0.48 0.67	0.01 0.02 0.02 0.04
800 EXTERNAL NOTCH FILTER	C	From Leg	4.00 0.00 -4.00	0.0000	154.00	No Ice 1/2" Ice 1" Ice 2" Ice	0.66 0.76 0.87 1.11	0.32 0.40 0.48 0.67	0.01 0.02 0.02 0.04
800MHZ 2X50W RRH	A	From Leg	4.00 0.00 0.00	0.0000	154.00	No Ice 1/2" Ice 1" Ice 2" Ice	2.13 2.32 2.51 2.92	1.77 1.95 2.13 2.51	0.05 0.07 0.10 0.16
800MHZ 2X50W RRH	B	From Leg	4.00 0.00 0.00	0.0000	154.00	No Ice 1/2" Ice 1" Ice 2" Ice	2.13 2.32 2.51 2.92	1.77 1.95 2.13 2.51	0.05 0.07 0.10 0.16
800MHZ 2X50W RRH	C	From Leg	4.00 0.00 0.00	0.0000	154.00	No Ice 1/2" Ice 1" Ice 2" Ice	2.13 2.32 2.51 2.92	1.77 1.95 2.13 2.51	0.05 0.07 0.10 0.16
***									
Platform Mount [LP 601-1]	C	None		0.0000	150.00	No Ice 1/2" Ice 1" Ice 2" Ice	28.50 31.69 34.87 41.23	28.50 31.69 34.87 41.23	1.12 1.68 2.28 3.65
Transition Ladder	C	From Leg	2.00	0.0000	150.00	No Ice	6.00	6.00	0.16

Description	Face or Leg	Offset Type	Offsets: Horz Lateral Vert ft ft ft	Azimuth Adjustment °	Placement ft		C_AA_A Front ft^2	C_AA_A Side ft^2	Weight K
			0.00			1/2"	8.00	8.00	0.24
			-3.00			Ice	10.00	10.00	0.32
						1" Ice	14.00	14.00	0.48
						2" Ice			
6'x2" Mount Pipe	A	From Leg	4.00	0.0000	150.00	No Ice	1.43	1.43	0.02
			6.00			1/2"	1.92	1.92	0.03
			0.00			Ice	2.29	2.29	0.05
						1" Ice	3.06	3.06	0.09
						2" Ice			
6'x2" Mount Pipe	B	From Leg	4.00	0.0000	150.00	No Ice	1.43	1.43	0.02
			6.00			1/2"	1.92	1.92	0.03
			0.00			Ice	2.29	2.29	0.05
						1" Ice	3.06	3.06	0.09
						2" Ice			
6'x2" Mount Pipe	C	From Leg	4.00	0.0000	150.00	No Ice	1.43	1.43	0.02
			6.00			1/2"	1.92	1.92	0.03
			0.00			Ice	2.29	2.29	0.05
						1" Ice	3.06	3.06	0.09
						2" Ice			
APXVTM14-C-120 w/ Mount Pipe	A	From Leg	4.00	0.0000	150.00	No Ice	4.09	2.86	0.08
			-6.00			1/2"	4.48	3.23	0.13
			2.00			Ice	4.88	3.61	0.19
						1" Ice	5.71	4.40	0.33
						2" Ice			
APXVTM14-C-120 w/ Mount Pipe	B	From Leg	4.00	0.0000	150.00	No Ice	4.09	2.86	0.08
			6.00			1/2"	4.48	3.23	0.13
			2.00			Ice	4.88	3.61	0.19
						1" Ice	5.71	4.40	0.33
						2" Ice			
APXVTM14-C-120 w/ Mount Pipe	C	From Leg	4.00	0.0000	150.00	No Ice	4.09	2.86	0.08
			6.00			1/2"	4.48	3.23	0.13
			2.00			Ice	4.88	3.61	0.19
						1" Ice	5.71	4.40	0.33
						2" Ice			
APXVSPP18-C-A20 w/ Mount Pipe	A	From Leg	4.00	0.0000	150.00	No Ice	4.60	4.01	0.10
			0.00			1/2"	5.05	4.45	0.16
			2.00			Ice	5.50	4.89	0.23
						1" Ice	6.44	5.82	0.42
						2" Ice			
APXVSPP18-C-A20 w/ Mount Pipe	B	From Leg	4.00	0.0000	150.00	No Ice	4.60	4.01	0.10
			0.00			1/2"	5.05	4.45	0.16
			2.00			Ice	5.50	4.89	0.23
						1" Ice	6.44	5.82	0.42
						2" Ice			
APXVSPP18-C-A20 w/ Mount Pipe	C	From Leg	4.00	0.0000	150.00	No Ice	4.60	4.01	0.10
			0.00			1/2"	5.05	4.45	0.16
			2.00			Ice	5.50	4.89	0.23
						1" Ice	6.44	5.82	0.42
						2" Ice			
TD-RRH8X20-25	A	From Leg	4.00	0.0000	150.00	No Ice	4.05	1.53	0.07
			0.00			1/2"	4.30	1.71	0.10
			4.00			Ice	4.56	1.90	0.13
						1" Ice	5.10	2.30	0.20
						2" Ice			
TD-RRH8X20-25	B	From Leg	4.00	0.0000	150.00	No Ice	4.05	1.53	0.07
			0.00			1/2"	4.30	1.71	0.10
			4.00			Ice	4.56	1.90	0.13
						1" Ice	5.10	2.30	0.20
						2" Ice			
TD-RRH8X20-25	C	From Leg	4.00	0.0000	150.00	No Ice	4.05	1.53	0.07
			0.00			1/2"	4.30	1.71	0.10
			4.00			Ice	4.56	1.90	0.13
						1" Ice	5.10	2.30	0.20
						2" Ice			
(3) ACU-A20-N	A	From Leg	4.00	0.0000	150.00	No Ice	0.07	0.12	0.00

Description	Face or Leg	Offset Type	Offsets: Horz Lateral Vert ft ft ft	Azimuth Adjustment °	Placement ft		C_AA_A Front ft^2	C_AA_A Side ft^2	Weight K
			0.00 0.00			1/2" Ice	0.10 0.15	0.16 0.21	0.00 0.00
						1" Ice 2" Ice	0.26	0.34	0.01
(3) ACU-A20-N	B	From Leg	4.00 0.00 0.00	0.0000	150.00	No Ice 1/2" Ice 1" Ice 2" Ice	0.07 0.10 0.15 0.26	0.12 0.16 0.21 0.34	0.00 0.00 0.00 0.01
(3) ACU-A20-N	C	From Leg	4.00 0.00 0.00	0.0000	150.00	No Ice 1/2" Ice 1" Ice 2" Ice	0.07 0.10 0.15 0.26	0.12 0.16 0.21 0.34	0.00 0.00 0.00 0.01
***									
6'x2" Mount Pipe	A	From Leg	0.00 0.00 0.00	0.0000	140.00	No Ice 1/2" Ice 1" Ice 2" Ice	1.43 1.92 2.29 3.06	1.43 1.92 2.29 3.06	0.02 0.03 0.05 0.09
6'x2" Mount Pipe	B	From Leg	0.00 0.00 0.00	0.0000	140.00	No Ice 1/2" Ice 1" Ice 2" Ice	1.43 1.92 2.29 3.06	1.43 1.92 2.29 3.06	0.02 0.03 0.05 0.09
6'x2" Mount Pipe	C	From Leg	0.00 0.00 0.00	0.0000	140.00	No Ice 1/2" Ice 1" Ice 2" Ice	1.43 1.92 2.29 3.06	1.43 1.92 2.29 3.06	0.02 0.03 0.05 0.09
***									
Platform Mount [LP 303-1]	C	None		0.0000	137.00	No Ice 1/2" Ice 1" Ice 2" Ice	14.69 18.01 21.34 28.08	14.69 18.01 21.34 28.08	1.25 1.57 1.94 2.85
7770.00 w/ Mount Pipe	A	From Leg	4.00 -6.00 3.00	0.0000	137.00	No Ice 1/2" Ice 1" Ice 2" Ice	5.75 6.18 6.61 7.49	4.25 5.01 5.71 7.16	0.06 0.10 0.16 0.29
7770.00 w/ Mount Pipe	B	From Leg	4.00 -6.00 3.00	0.0000	137.00	No Ice 1/2" Ice 1" Ice 2" Ice	5.75 6.18 6.61 7.49	4.25 5.01 5.71 7.16	0.06 0.10 0.16 0.29
7770.00 w/ Mount Pipe	C	From Leg	4.00 -6.00 3.00	0.0000	137.00	No Ice 1/2" Ice 1" Ice 2" Ice	5.75 6.18 6.61 7.49	4.25 5.01 5.71 7.16	0.06 0.10 0.16 0.29
P65-16-XLH-RR w/ Mount Pipe	A	From Leg	4.00 2.00 3.00	0.0000	137.00	No Ice 1/2" Ice 1" Ice 2" Ice	8.37 8.93 9.46 10.53	6.36 7.54 8.43 10.24	0.08 0.14 0.22 0.39
P65-16-XLH-RR w/ Mount Pipe	B	From Leg	4.00 2.00 3.00	0.0000	137.00	No Ice 1/2" Ice 1" Ice 2" Ice	8.37 8.93 9.46 10.53	6.36 7.54 8.43 10.24	0.08 0.14 0.22 0.39
P65-16-XLH-RR w/ Mount Pipe	C	From Leg	4.00 2.00 3.00	0.0000	137.00	No Ice 1/2" Ice 1" Ice	8.37 8.93 9.46 10.53	6.36 7.54 8.43 10.24	0.08 0.14 0.22 0.39

Description	Face or Leg	Offset Type	Offsets: Horz Lateral Vert ft ft ft	Azimuth Adjustment °	Placement ft		C_AA_A Front ft^2	C_AA_A Side ft^2	Weight K
						2" Ice			
(2) LGP21401	A	From Leg	4.00 0.00 3.00	0.0000	137.00	No Ice 1/2" Ice 1" Ice 2" Ice	1.10 1.24 1.38 1.69	0.35 0.44 0.54 0.77	0.01 0.02 0.03 0.05
(2) LGP21401	B	From Leg	4.00 0.00 3.00	0.0000	137.00	No Ice 1/2" Ice 1" Ice 2" Ice	1.10 1.24 1.38 1.69	0.35 0.44 0.54 0.77	0.01 0.02 0.03 0.05
(2) LGP21401	C	From Leg	4.00 0.00 3.00	0.0000	137.00	No Ice 1/2" Ice 1" Ice 2" Ice	1.10 1.24 1.38 1.69	0.35 0.44 0.54 0.77	0.01 0.02 0.03 0.05
RRUS-11	A	From Leg	4.00 0.00 3.00	0.0000	137.00	No Ice 1/2" Ice 1" Ice 2" Ice	2.78 2.99 3.21 3.66	1.19 1.33 1.49 1.83	0.05 0.07 0.09 0.15
RRUS-11	B	From Leg	4.00 0.00 3.00	0.0000	137.00	No Ice 1/2" Ice 1" Ice 2" Ice	2.78 2.99 3.21 3.66	1.19 1.33 1.49 1.83	0.05 0.07 0.09 0.15
RRUS-11	C	From Leg	4.00 0.00 3.00	0.0000	137.00	No Ice 1/2" Ice 1" Ice 2" Ice	2.78 2.99 3.21 3.66	1.19 1.33 1.49 1.83	0.05 0.07 0.09 0.15
DC6-48-60-18-8F	C	From Leg	2.00 0.00 3.00	0.0000	137.00	No Ice 1/2" Ice 1" Ice 2" Ice	0.92 1.46 1.64 2.04	0.92 1.46 1.64 2.04	0.02 0.04 0.06 0.11
***									
Side Arm Mount [SO 701-1]	A	From Leg	1.50 0.00 0.00	0.0000	50.00	No Ice 1/2" Ice 1" Ice 2" Ice	0.85 1.14 1.43 2.01	1.67 2.34 3.01 4.35	0.07 0.08 0.09 0.12
OG-860/1920/GPS-A	A	From Leg	3.00 0.00 2.00	0.0000	50.00	No Ice 1/2" Ice 1" Ice 2" Ice	0.31 0.40 0.49 0.70	0.37 0.46 0.55 0.77	0.00 0.01 0.01 0.02

Load Combinations

Comb. No.	Description
1	Dead Only
2	1.2 Dead+1.0 Wind 0 deg - No Ice
3	0.9 Dead+1.0 Wind 0 deg - No Ice
4	1.2 Dead+1.0 Wind 30 deg - No Ice
5	0.9 Dead+1.0 Wind 30 deg - No Ice
6	1.2 Dead+1.0 Wind 60 deg - No Ice
7	0.9 Dead+1.0 Wind 60 deg - No Ice

Comb. No.	Description
8	1.2 Dead+1.0 Wind 90 deg - No Ice
9	0.9 Dead+1.0 Wind 90 deg - No Ice
10	1.2 Dead+1.0 Wind 120 deg - No Ice
11	0.9 Dead+1.0 Wind 120 deg - No Ice
12	1.2 Dead+1.0 Wind 150 deg - No Ice
13	0.9 Dead+1.0 Wind 150 deg - No Ice
14	1.2 Dead+1.0 Wind 180 deg - No Ice
15	0.9 Dead+1.0 Wind 180 deg - No Ice
16	1.2 Dead+1.0 Wind 210 deg - No Ice
17	0.9 Dead+1.0 Wind 210 deg - No Ice
18	1.2 Dead+1.0 Wind 240 deg - No Ice
19	0.9 Dead+1.0 Wind 240 deg - No Ice
20	1.2 Dead+1.0 Wind 270 deg - No Ice
21	0.9 Dead+1.0 Wind 270 deg - No Ice
22	1.2 Dead+1.0 Wind 300 deg - No Ice
23	0.9 Dead+1.0 Wind 300 deg - No Ice
24	1.2 Dead+1.0 Wind 330 deg - No Ice
25	0.9 Dead+1.0 Wind 330 deg - No Ice
26	1.2 Dead+1.0 Ice+1.0 Temp
27	1.2 Dead+1.0 Wind 0 deg+1.0 Ice+1.0 Temp
28	1.2 Dead+1.0 Wind 30 deg+1.0 Ice+1.0 Temp
29	1.2 Dead+1.0 Wind 60 deg+1.0 Ice+1.0 Temp
30	1.2 Dead+1.0 Wind 90 deg+1.0 Ice+1.0 Temp
31	1.2 Dead+1.0 Wind 120 deg+1.0 Ice+1.0 Temp
32	1.2 Dead+1.0 Wind 150 deg+1.0 Ice+1.0 Temp
33	1.2 Dead+1.0 Wind 180 deg+1.0 Ice+1.0 Temp
34	1.2 Dead+1.0 Wind 210 deg+1.0 Ice+1.0 Temp
35	1.2 Dead+1.0 Wind 240 deg+1.0 Ice+1.0 Temp
36	1.2 Dead+1.0 Wind 270 deg+1.0 Ice+1.0 Temp
37	1.2 Dead+1.0 Wind 300 deg+1.0 Ice+1.0 Temp
38	1.2 Dead+1.0 Wind 330 deg+1.0 Ice+1.0 Temp
39	Dead+Wind 0 deg - Service
40	Dead+Wind 30 deg - Service
41	Dead+Wind 60 deg - Service
42	Dead+Wind 90 deg - Service
43	Dead+Wind 120 deg - Service
44	Dead+Wind 150 deg - Service
45	Dead+Wind 180 deg - Service
46	Dead+Wind 210 deg - Service
47	Dead+Wind 240 deg - Service
48	Dead+Wind 270 deg - Service
49	Dead+Wind 300 deg - Service
50	Dead+Wind 330 deg - Service

Maximum Member Forces

Section No.	Elevation ft	Component Type	Condition	Gov. Load Comb.	Axial K	Major Axis Moment kip-ft	Minor Axis Moment kip-ft
L1	191.5 - 172.46	Pole	Max Tension	26	0.00	-0.00	0.00
			Max. Compression	26	-10.55	0.10	-0.43
			Max. Mx	20	-4.39	87.10	-0.10
			Max. My	14	-4.39	-0.00	-87.26
			Max. Vy	20	-5.47	87.10	-0.10
			Max. Vx	12	5.53	-47.22	-81.91
			Max. Torque	25			0.35
L2	172.46 - 127.753	Pole	Max Tension	1	0.00	0.00	0.00
			Max. Compression	26	-41.11	3.66	-1.41
			Max. Mx	20	-18.17	588.25	2.04
			Max. My	14	-18.15	-1.29	-591.58
			Max. Vy	20	-18.47	588.25	2.04
			Max. Vx	14	18.62	-1.29	-591.58
			Max. Torque	16			-1.41
L3	127.753 - 83.083	Pole	Max Tension	1	0.00	0.00	0.00

Section No.	Elevation ft	Component Type	Condition	Gov. Load Comb.	Axial K	Major Axis Moment kip-ft	Minor Axis Moment kip-ft
			Max. Compression	26	-55.57	4.11	-3.43
			Max. Mx	20	-28.94	1460.84	5.70
			Max. My	14	-28.93	-5.52	-1471.20
			Max. Vy	20	-21.84	1460.84	5.70
			Max. Vx	14	21.98	-5.52	-1471.20
			Max. Torque	16			-1.41
L4	83.083 - 40.456	Pole	Max Tension	1	0.00	0.00	0.00
			Max. Compression	26	-74.93	4.39	-5.03
			Max. Mx	20	-44.06	2435.93	9.29
			Max. My	14	-44.05	-9.55	-2452.73
			Max. Vy	20	-25.27	2435.93	9.29
			Max. Vx	14	25.39	-9.55	-2452.73
			Max. Torque	16			-1.52
L5	40.456 - 0	Pole	Max Tension	1	0.00	0.00	0.00
			Max. Compression	26	-101.33	4.62	-7.73
			Max. Mx	20	-65.41	3719.45	12.82
			Max. My	14	-65.41	-14.09	-3742.82
			Max. Vy	20	-28.65	3719.45	12.82
			Max. Vx	14	28.76	-14.09	-3742.82
			Max. Torque	16			-1.52

Maximum Reactions

Location	Condition	Gov. Load Comb.	Vertical K	Horizontal, X K	Horizontal, Z K
Pole	Max. Vert	32	101.33	-4.03	-6.98
	Max. H_x	20	65.42	28.62	0.09
	Max. H_z	3	49.07	0.09	28.74
	Max. M_x	2	3736.95	0.09	28.74
	Max. M_z	8	3716.06	-28.62	-0.09
	Max. Torsion	4	1.51	-14.23	24.84
	Min. Vert	7	49.07	-24.74	14.29
	Min. H_x	8	65.42	-28.62	-0.09
	Min. H_z	14	65.42	-0.09	-28.74
	Min. M_x	14	-3742.82	-0.09	-28.74
	Min. M_z	20	-3719.45	28.62	0.09
	Min. Torsion	16	-1.52	14.23	-24.84

Tower Mast Reaction Summary

Load Combination	Vertical K	$Shear_x$ K	$Shear_z$ K	Overturning Moment, M_x kip-ft	Overturning Moment, M_z kip-ft	Torque kip-ft
Dead Only	54.52	0.00	0.00	2.36	1.32	0.00
1.2 Dead+1.0 Wind 0 deg - No Ice	65.42	-0.09	-28.74	-3736.95	17.47	-1.36
0.9 Dead+1.0 Wind 0 deg - No Ice	49.07	-0.09	-28.74	-3692.25	16.82	-1.34
1.2 Dead+1.0 Wind 30 deg - No Ice	65.42	14.23	-24.84	-3228.04	-1843.54	-1.51
0.9 Dead+1.0 Wind 30 deg - No Ice	49.07	14.23	-24.84	-3189.55	-1821.58	-1.50
1.2 Dead+1.0 Wind 60 deg - No Ice	65.42	24.74	-14.29	-1853.36	-3210.14	-1.26
0.9 Dead+1.0 Wind 60 deg - No Ice	49.07	24.74	-14.29	-1831.57	-3171.58	-1.26
1.2 Dead+1.0 Wind 90 deg - No Ice	65.42	28.62	0.09	18.75	-3716.06	-0.67
0.9 Dead+1.0 Wind 90 deg -	49.07	28.62	0.09	17.77	-3671.38	-0.68

Load Combination	Vertical	$Shear_x$	$Shear_z$	Overturning Moment, M_x	Overturning Moment, M_z	Torque
	K	K	K	kip-ft	kip-ft	kip-ft
No Ice						
1.2 Dead+1.0 Wind 120 deg - No Ice	65.42	25.11	14.61	1914.25	-3273.77	0.10
0.9 Dead+1.0 Wind 120 deg - No Ice	49.07	25.11	14.61	1890.19	-3234.36	0.08
1.2 Dead+1.0 Wind 150 deg - No Ice	65.42	15.46	26.78	3554.47	-2046.81	1.26
0.9 Dead+1.0 Wind 150 deg - No Ice	49.07	15.46	26.78	3510.24	-2022.20	1.23
1.2 Dead+1.0 Wind 180 deg - No Ice	65.42	0.09	28.74	3742.82	-14.09	1.37
0.9 Dead+1.0 Wind 180 deg - No Ice	49.07	0.09	28.74	3696.62	-14.34	1.34
1.2 Dead+1.0 Wind 210 deg - No Ice	65.42	-14.23	24.84	3233.96	1846.91	1.52
0.9 Dead+1.0 Wind 210 deg - No Ice	49.07	-14.23	24.84	3193.92	1824.05	1.50
1.2 Dead+1.0 Wind 240 deg - No Ice	65.42	-24.74	14.29	1859.28	3213.51	1.26
0.9 Dead+1.0 Wind 240 deg - No Ice	49.07	-24.74	14.29	1835.96	3174.05	1.26
1.2 Dead+1.0 Wind 270 deg - No Ice	65.42	-28.62	-0.09	-12.82	3719.45	0.67
0.9 Dead+1.0 Wind 270 deg - No Ice	49.07	-28.62	-0.09	-13.39	3673.86	0.67
1.2 Dead+1.0 Wind 300 deg - No Ice	65.42	-25.11	-14.61	-1908.33	3277.17	-0.11
0.9 Dead+1.0 Wind 300 deg - No Ice	49.07	-25.11	-14.61	-1885.82	3236.85	-0.09
1.2 Dead+1.0 Wind 330 deg - No Ice	65.42	-15.46	-26.78	-3548.58	2050.19	-1.26
0.9 Dead+1.0 Wind 330 deg - No Ice	49.07	-15.46	-26.78	-3505.88	2024.68	-1.24
1.2 Dead+1.0 Ice+1.0 Temp	101.33	-0.00	0.00	7.73	4.62	0.00
1.2 Dead+1.0 Wind 0 deg+1.0 Ice+1.0 Temp	101.33	-0.01	-7.94	-1042.47	7.25	-0.47
1.2 Dead+1.0 Wind 30 deg+1.0 Ice+1.0 Temp	101.33	3.95	-6.87	-900.50	-516.61	-0.46
1.2 Dead+1.0 Wind 60 deg+1.0 Ice+1.0 Temp	101.33	6.86	-3.96	-515.12	-900.75	-0.32
1.2 Dead+1.0 Wind 90 deg+1.0 Ice+1.0 Temp	101.33	7.93	0.01	10.42	-1042.26	-0.10
1.2 Dead+1.0 Wind 120 deg+1.0 Ice+1.0 Temp	101.33	6.87	3.98	535.30	-903.22	0.15
1.2 Dead+1.0 Wind 150 deg+1.0 Ice+1.0 Temp	101.33	4.03	6.98	938.44	-532.17	0.44
1.2 Dead+1.0 Wind 180 deg+1.0 Ice+1.0 Temp	101.33	0.01	7.94	1058.38	2.32	0.47
1.2 Dead+1.0 Wind 210 deg+1.0 Ice+1.0 Temp	101.33	-3.95	6.87	916.42	526.17	0.46
1.2 Dead+1.0 Wind 240 deg+1.0 Ice+1.0 Temp	101.33	-6.86	3.96	531.03	910.32	0.32
1.2 Dead+1.0 Wind 270 deg+1.0 Ice+1.0 Temp	101.33	-7.93	-0.01	5.49	1051.83	0.10
1.2 Dead+1.0 Wind 300 deg+1.0 Ice+1.0 Temp	101.33	-6.87	-3.98	-519.39	912.79	-0.15
1.2 Dead+1.0 Wind 330 deg+1.0 Ice+1.0 Temp	101.33	-4.03	-6.98	-922.53	541.73	-0.44
Dead+Wind 0 deg - Service	54.52	-0.02	-6.77	-871.97	5.08	-0.32
Dead+Wind 30 deg - Service	54.52	3.35	-5.85	-752.98	-430.03	-0.36
Dead+Wind 60 deg - Service	54.52	5.83	-3.36	-431.57	-749.54	-0.30
Dead+Wind 90 deg - Service	54.52	6.74	0.02	6.13	-867.84	-0.16
Dead+Wind 120 deg - Service	54.52	5.91	3.44	449.33	-764.46	0.02
Dead+Wind 150 deg - Service	54.52	3.64	6.31	832.96	-477.64	0.30
Dead+Wind 180 deg - Service	54.52	0.02	6.77	876.87	-2.29	0.32
Dead+Wind 210 deg -	54.52	-3.35	5.85	757.87	432.82	0.36

Load Combination	Vertical	$Shear_x$	$Shear_z$	Overturning Moment, M_x	Overturning Moment, M_z	Torque
	K	K	K	kip-ft	kip-ft	kip-ft
Service						
Dead+Wind 240 deg - Service	54.52	-5.83	3.36	436.46	752.33	0.30
Dead+Wind 270 deg - Service	54.52	-6.74	-0.02	-1.24	870.63	0.16
Dead+Wind 300 deg - Service	54.52	-5.91	-3.44	-444.44	767.25	-0.03
Dead+Wind 330 deg - Service	54.52	-3.64	-6.31	-828.07	480.44	-0.30

Solution Summary

	Sum of Applied Forces			Sum of Reactions			
Load Comb.	PX	PY	PZ	PX	PY	PZ	% Error
	K	K	K	K	K	K	
1	0.00	-54.52	0.00	0.00	54.52	0.00	0.000%
2	-0.09	-65.42	-28.74	0.09	65.42	28.74	0.000%
3	-0.09	-49.07	-28.74	0.09	49.07	28.74	0.000%
4	14.23	-65.42	-24.84	-14.23	65.42	24.84	0.000%
5	14.23	-49.07	-24.84	-14.23	49.07	24.84	0.000%
6	24.74	-65.42	-14.29	-24.74	65.42	14.29	0.000%
7	24.74	-49.07	-14.29	-24.74	49.07	14.29	0.000%
8	28.62	-65.42	0.09	-28.62	65.42	-0.09	0.000%
9	28.62	-49.07	0.09	-28.62	49.07	-0.09	0.000%
10	25.11	-65.42	14.61	-25.11	65.42	-14.61	0.000%
11	25.11	-49.07	14.61	-25.11	49.07	-14.61	0.000%
12	15.46	-65.42	26.78	-15.46	65.42	-26.78	0.000%
13	15.46	-49.07	26.78	-15.46	49.07	-26.78	0.000%
14	0.09	-65.42	28.74	-0.09	65.42	-28.74	0.000%
15	0.09	-49.07	28.74	-0.09	49.07	-28.74	0.000%
16	-14.23	-65.42	24.84	14.23	65.42	-24.84	0.000%
17	-14.23	-49.07	24.84	14.23	49.07	-24.84	0.000%
18	-24.74	-65.42	14.29	24.74	65.42	-14.29	0.000%
19	-24.74	-49.07	14.29	24.74	49.07	-14.29	0.000%
20	-28.62	-65.42	-0.09	28.62	65.42	0.09	0.000%
21	-28.62	-49.07	-0.09	28.62	49.07	0.09	0.000%
22	-25.11	-65.42	-14.61	25.11	65.42	14.61	0.000%
23	-25.11	-49.07	-14.61	25.11	49.07	14.61	0.000%
24	-15.46	-65.42	-26.78	15.46	65.42	26.78	0.000%
25	-15.46	-49.07	-26.78	15.46	49.07	26.78	0.000%
26	0.00	-101.33	0.00	0.00	101.33	-0.00	0.000%
27	-0.01	-101.33	-7.94	0.01	101.33	7.94	0.000%
28	3.95	-101.33	-6.87	-3.95	101.33	6.87	0.000%
29	6.86	-101.33	-3.96	-6.86	101.33	3.96	0.000%
30	7.93	-101.33	0.01	-7.93	101.33	-0.01	0.000%
31	6.87	-101.33	3.98	-6.87	101.33	-3.98	0.000%
32	4.03	-101.33	6.98	-4.03	101.33	-6.98	0.000%
33	0.01	-101.33	7.94	-0.01	101.33	-7.94	0.000%
34	-3.95	-101.33	6.87	3.95	101.33	-6.87	0.000%
35	-6.86	-101.33	3.96	6.86	101.33	-3.96	0.000%
36	-7.93	-101.33	-0.01	7.93	101.33	0.01	0.000%
37	-6.87	-101.33	-3.98	6.87	101.33	3.98	0.000%
38	-4.03	-101.33	-6.98	4.03	101.33	6.98	0.000%
39	-0.02	-54.52	-6.77	0.02	54.52	6.77	0.000%
40	3.35	-54.52	-5.85	-3.35	54.52	5.85	0.000%
41	5.83	-54.52	-3.36	-5.83	54.52	3.36	0.000%
42	6.74	-54.52	0.02	-6.74	54.52	-0.02	0.000%
43	5.91	-54.52	3.44	-5.91	54.52	-3.44	0.000%
44	3.64	-54.52	6.31	-3.64	54.52	-6.31	0.000%
45	0.02	-54.52	6.77	-0.02	54.52	-6.77	0.000%
46	-3.35	-54.52	5.85	3.35	54.52	-5.85	0.000%
47	-5.83	-54.52	3.36	5.83	54.52	-3.36	0.000%
48	-6.74	-54.52	-0.02	6.74	54.52	0.02	0.000%
49	-5.91	-54.52	-3.44	5.91	54.52	3.44	0.000%
50	-3.64	-54.52	-6.31	3.64	54.52	6.31	0.000%

Non-Linear Convergence Results

Load Combination	Converged?	Number of Cycles	Displacement Tolerance	Force Tolerance
1	Yes	4	0.00000001	0.00000001
2	Yes	5	0.00000001	0.00005818
3	Yes	4	0.00000001	0.00065052
4	Yes	6	0.00000001	0.00006758
5	Yes	5	0.00000001	0.00053730
6	Yes	6	0.00000001	0.00007034
7	Yes	5	0.00000001	0.00055999
8	Yes	4	0.00000001	0.00060399
9	Yes	4	0.00000001	0.00023706
10	Yes	6	0.00000001	0.00007330
11	Yes	5	0.00000001	0.00058174
12	Yes	6	0.00000001	0.00008508
13	Yes	5	0.00000001	0.00067150
14	Yes	4	0.00000001	0.00079186
15	Yes	4	0.00000001	0.00040541
16	Yes	6	0.00000001	0.00007125
17	Yes	5	0.00000001	0.00056604
18	Yes	6	0.00000001	0.00006821
19	Yes	5	0.00000001	0.00054143
20	Yes	4	0.00000001	0.00080016
21	Yes	4	0.00000001	0.00043147
22	Yes	6	0.00000001	0.00007329
23	Yes	5	0.00000001	0.00058199
24	Yes	6	0.00000001	0.00008867
25	Yes	5	0.00000001	0.00070021
26	Yes	4	0.00000001	0.00004547
27	Yes	5	0.00000001	0.00048633
28	Yes	5	0.00000001	0.00057975
29	Yes	5	0.00000001	0.00058345
30	Yes	5	0.00000001	0.00048300
31	Yes	5	0.00000001	0.00059623
32	Yes	5	0.00000001	0.00061633
33	Yes	5	0.00000001	0.00049391
34	Yes	5	0.00000001	0.00060639
35	Yes	5	0.00000001	0.00060031
36	Yes	5	0.00000001	0.00049198
37	Yes	5	0.00000001	0.00059548
38	Yes	5	0.00000001	0.00062566
39	Yes	4	0.00000001	0.00006401
40	Yes	4	0.00000001	0.00026480
41	Yes	4	0.00000001	0.00029961
42	Yes	4	0.00000001	0.00004983
43	Yes	4	0.00000001	0.00030827
44	Yes	4	0.00000001	0.00036876
45	Yes	4	0.00000001	0.00006404
46	Yes	4	0.00000001	0.00031310
47	Yes	4	0.00000001	0.00027533
48	Yes	4	0.00000001	0.00005228
49	Yes	4	0.00000001	0.00030773
50	Yes	4	0.00000001	0.00041721

Maximum Tower Deflections - Service Wind

Section No.	Elevation ft	Horz. Deflection in	Gov. Load Comb.	Tilt °	Twist °
L1	191.5 - 172.46	28.796	44	1.5455	0.0024
L2	175.543 - 127.753	23.788	44	1.4268	0.0018
L3	132.253 - 83.083	12.582	44	0.9961	0.0011

Section No.	Elevation ft	Horz. Deflection in	Gov. Load Comb.	Tilt °	Twist °
L4	88.916 - 40.456	5.332	44	0.5895	0.0004
L5	47.539 - 0	1.486	44	0.2885	0.0002

Critical Deflections and Radius of Curvature - Service Wind

Elevation ft	Appurtenance	Gov. Load Comb.	Deflection in	Tilt °	Twist °	Radius of Curvature ft
192.00	Platform Mount [LP 303-1_HR-1]	44	28.796	1.5455	0.0024	19599
191.50	Lightning Rod 5/8"x6'	44	28.796	1.5455	0.0024	19599
160.00	Platform Mount [LP 303-1_HR-1]	44	19.312	1.2850	0.0016	5803
154.00	Side Arm Mount [SO 102-3]	44	17.716	1.2244	0.0015	5683
150.00	Platform Mount [LP 601-1]	44	16.695	1.1829	0.0014	5605
140.00	6'x2" Mount Pipe	44	14.292	1.0775	0.0013	5416
137.00	Platform Mount [LP 303-1]	44	13.614	1.0458	0.0012	5359
50.00	Side Arm Mount [SO 701-1]	44	1.634	0.3046	0.0002	7089

Maximum Tower Deflections - Design Wind

Section No.	Elevation ft	Horz. Deflection in	Gov. Load Comb.	Tilt °	Twist °
L1	191.5 - 172.46	123.081	12	6.6193	0.0100
L2	175.543 - 127.753	101.702	12	6.1123	0.0077
L3	132.253 - 83.083	53.813	12	4.2662	0.0047
L4	88.916 - 40.456	22.801	12	2.5227	0.0018
L5	47.539 - 0	6.352	12	1.2337	0.0007

Critical Deflections and Radius of Curvature - Design Wind

Elevation ft	Appurtenance	Gov. Load Comb.	Deflection in	Tilt °	Twist °	Radius of Curvature ft
192.00	Platform Mount [LP 303-1_HR-1]	12	123.081	6.6193	0.0100	4716
191.50	Lightning Rod 5/8"x6'	12	123.081	6.6193	0.0100	4716
160.00	Platform Mount [LP 303-1_HR-1]	12	82.583	5.5048	0.0067	1384
154.00	Side Arm Mount [SO 102-3]	12	75.764	5.2452	0.0063	1352
150.00	Platform Mount [LP 601-1]	12	71.397	5.0674	0.0060	1331
140.00	6'x2" Mount Pipe	12	61.124	4.6151	0.0053	1282
137.00	Platform Mount [LP 303-1]	12	58.224	4.4793	0.0051	1268
50.00	Side Arm Mount [SO 701-1]	12	6.987	1.3025	0.0008	1658

Compression Checks

Pole Design Data

Section No.	Elevation ft	Size	L ft	L_u ft	Kl/r	A in^2	P_u K	ϕP_n K	Ratio $\frac{P_u}{\phi P_n}$

Section No.	Elevation ft	Size	L ft	L_u ft	Kl/r	A in^2	P_u K	ϕP_n K	Ratio $\frac{P_u}{\phi P_n}$
L1	191.5 - 172.46 (1)	TP20.46x15.5x0.1875	19.04	0.00	0.0	11.5867	-4.23	677.82	0.006
L2	172.46 - 127.753 (2)	TP31.6x19.2819x0.3125	47.79	0.00	0.0	29.8828	-17.88	1748.14	0.010
L3	127.753 - 83.083 (3)	TP42.49x29.8151x0.4375	49.17	0.00	0.0	56.3072	-28.74	3293.97	0.009
L4	83.083 - 40.456 (4)	TP52.59x40.1114x0.5	48.46	0.00	0.0	79.7723	-43.96	4666.68	0.009
L5	40.456 - 0 (5)	TP62x49.7661x0.5	47.54	0.00	0.0	97.6005	-65.41	5709.63	0.011

Pole Bending Design Data

Section No.	Elevation ft	Size	M_{ux} kip-ft	ϕM_{nx} kip-ft	Ratio $\frac{M_{ux}}{\phi M_{nx}}$	M_{uy} kip-ft	ϕM_{ny} kip-ft	Ratio $\frac{M_{uy}}{\phi M_{ny}}$
L1	191.5 - 172.46 (1)	TP20.46x15.5x0.1875	94.55	336.46	0.281	0.00	336.46	0.000
L2	172.46 - 127.753 (2)	TP31.6x19.2819x0.3125	660.99	1367.38	0.483	0.00	1367.38	0.000
L3	127.753 - 83.083 (3)	TP42.49x29.8151x0.4375	1630.14	3478.03	0.469	0.00	3478.03	0.000
L4	83.083 - 40.456 (4)	TP52.59x40.1114x0.5	2705.53	6029.52	0.449	0.00	6029.52	0.000
L5	40.456 - 0 (5)	TP62x49.7661x0.5	4101.68	8525.50	0.481	0.00	8525.50	0.000

Pole Shear Design Data

Section No.	Elevation ft	Size	Actual V_u K	ϕV_n K	Ratio $\frac{V_u}{\phi V_n}$	Actual T_u kip-ft	ϕT_n kip-ft	Ratio $\frac{T_u}{\phi T_n}$
L1	191.5 - 172.46 (1)	TP20.46x15.5x0.1875	6.39	203.35	0.031	0.34	346.71	0.001
L2	172.46 - 127.753 (2)	TP31.6x19.2819x0.3125	20.49	524.44	0.039	1.39	1383.70	0.001
L3	127.753 - 83.083 (3)	TP42.49x29.8151x0.4375	24.21	988.19	0.025	1.38	3509.13	0.000
L4	83.083 - 40.456 (4)	TP52.59x40.1114x0.5	27.66	1400.00	0.020	1.26	6162.89	0.000
L5	40.456 - 0 (5)	TP62x49.7661x0.5	30.95	1712.89	0.018	1.26	9225.42	0.000

Pole Interaction Design Data

Section No.	Elevation ft	Ratio $\frac{P_u}{\phi P_n}$	Ratio $\frac{M_{ux}}{\phi M_{nx}}$	Ratio $\frac{M_{uy}}{\phi M_{ny}}$	Ratio $\frac{V_u}{\phi V_n}$	Ratio $\frac{T_u}{\phi T_n}$	Comb. Stress Ratio	Allow. Stress Ratio	Criteria
L1	191.5 - 172.46 (1)	0.006	0.281	0.000	0.031	0.001	0.288	1.050	4.8.2
L2	172.46 - 127.753 (2)	0.010	0.483	0.000	0.039	0.001	0.495	1.050	4.8.2
L3	127.753 - 83.083 (3)	0.009	0.469	0.000	0.025	0.000	0.478	1.050	4.8.2
L4	83.083 - 40.456 (4)	0.009	0.449	0.000	0.020	0.000	0.459	1.050	4.8.2
L5	40.456 - 0 (5)	0.011	0.481	0.000	0.018	0.000	0.493	1.050	4.8.2

Section Capacity Table

Section No.	Elevation ft	Component Type	Size	Critical Element	P K	ϕP_{allow} K	% Capacity	Pass Fail
L1	191.5 - 172.46	Pole	TP20.46x15.5x0.1875	1	-4.23	711.71	27.5	Pass
L2	172.46 - 127.753	Pole	TP31.6x19.2819x0.3125	2	-17.88	1835.55	47.2	Pass
L3	127.753 - 83.083	Pole	TP42.49x29.8151x0.4375	3	-28.74	3458.67	45.5	Pass
L4	83.083 - 40.456	Pole	TP52.59x40.1114x0.5	4	-43.96	4900.01	43.7	Pass
L5	40.456 - 0	Pole	TP62x49.7661x0.5	5	-65.41	5995.11	46.9	Pass
							Summary	
						Pole (L2)	47.2	Pass
						RATING =	**47.2**	**Pass**

APPENDIX B

BASE LEVEL DRAWING

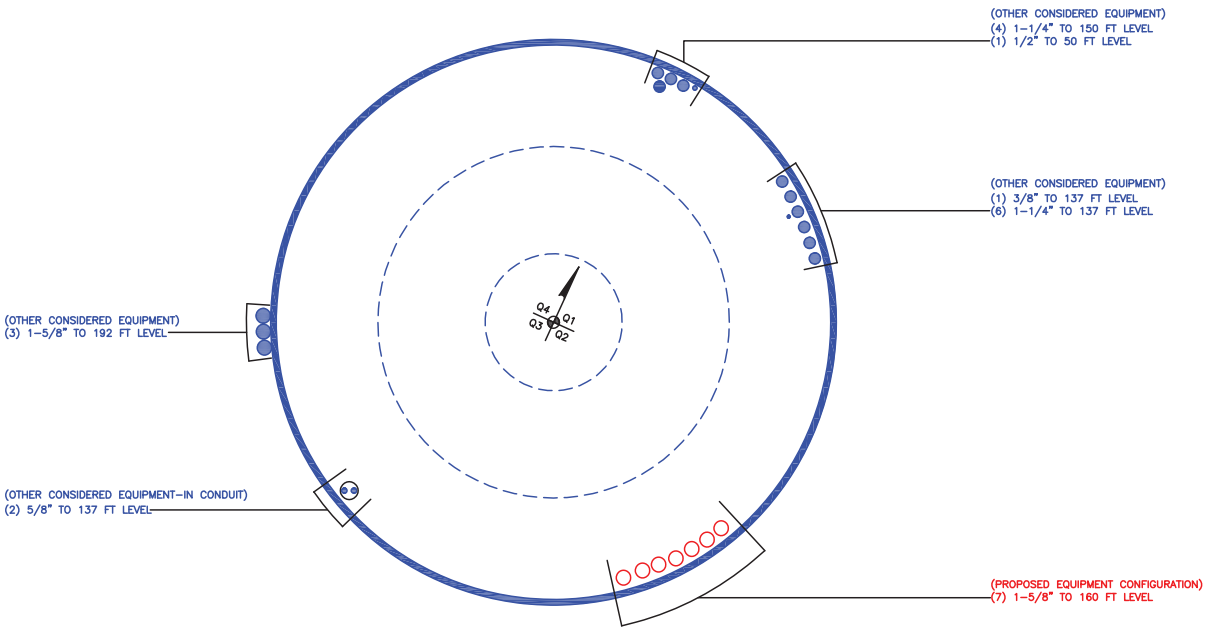

BUSINESS UNIT: 876355 TOWER ID: C_BASELEVEL

APPENDIX C

ADDITIONAL CALCULATIONS

Monopole Base Plate Connection

Site Info	
BU #	876355
Site Name	UPPER STEPNEY - TLC
Order #	552663 Rev.0

Analysis Considerations	
TIA-222 Revision	H
Grout Considered:	No
l_{ar} (in)	2.0625

Applied Loads	
Moment (kip-ft)	4101.67
Axial Force (kips)	65.41
Shear Force (kips)	30.95

**TIA-222-H Section 15.5 Applied*

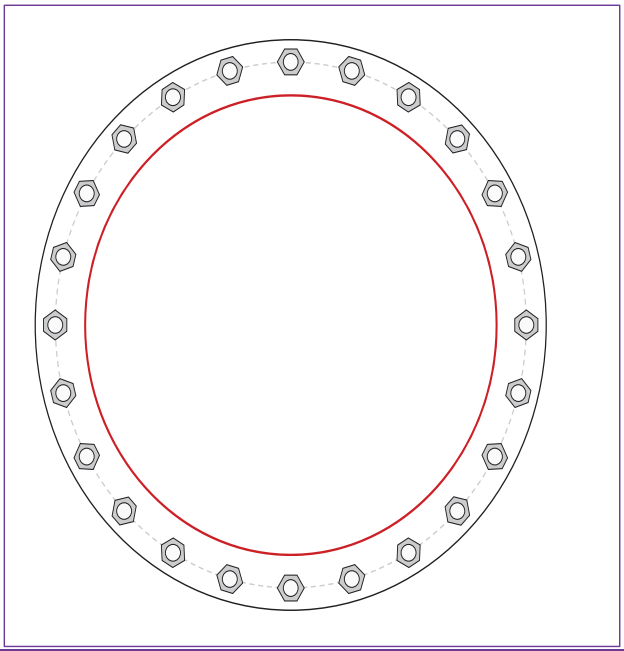

Connection Properties

Anchor Rod Data

(24) 2-1/4" ø bolts (A615-75 N; Fy=75 ksi, Fu=100 ksi) on 71" BC

Base Plate Data

77" OD x 2.25" Plate (A871-60; Fy=60 ksi, Fu=75 ksi)

Stiffener Data

N/A

Pole Data

62" x 0.5" 18-sided pole (A572-65; Fy=65 ksi, Fu=80 ksi)

Analysis Results

Anchor Rod Summary *(units of kips, kip-in)*

Pu_t = 112.77	ϕPn_t = 243.75	**Stress Rating**
Vu = 1.29	ϕVn = 149.1	**44.1%**
Mu = n/a	ϕMn = n/a	**Pass**

Base Plate Summary

Max Stress (ksi):	31.45	(Flexural)
Allowable Stress (ksi):	54	
Stress Rating:	**55.5%**	**Pass**

Pier and Pad Foundation

BU # :	876355
Site Name:	UPPER STEPNEY
App. Number:	552663 Rev.0

TIA-222 Revision:	H
Tower Type:	Monopole

Top & Bot. Pad Rein. Different?:	☑
Block Foundation?:	☐
Rectangular Pad?:	☐

Superstructure Analysis Reactions		
Compression, P_{comp}:	65.42	kips
Base Shear, Vu_comp:	30.92	kips
Moment, M_u:	4101.67	ft-kips
Tower Height, **H**:	191.5	ft
BP Dist. Above Fdn, bp_{dist}:	6.5	in

Pier Properties		
Pier Shape:	Square	
Pier Diameter, **dpier**:	7.5	ft
Ext. Above Grade, **E**:	1	ft
Pier Rebar Size, **Sc**:	8	
Pier Rebar Quantity, **mc**:	51	
Pier Tie/Spiral Size, **St**:	4	
Pier Tie/Spiral Quantity, **mt**:	4	
Pier Reinforcement Type:	Tie	
Pier Clear Cover, cc_{pier}:	3	in

Pad Properties		
Depth, **D**:	5	ft
Pad Width, W_1:	30	ft
Pad Thickness, **T**:	3	ft
Pad Rebar Size (Top dir.2), Sp_{top2}:	8	
Pad Rebar Quantity (Top dir. 2), mp_{top2}:	26	
Pad Rebar Size (Bottom dir. 2), Sp_2:	8	
Pad Rebar Quantity (Bottom dir. 2), mp_2:	50	
Pad Clear Cover, cc_{pad}:	3	in

Material Properties		
Rebar Grade, **Fy**:	60	ksi
Concrete Compressive Strength, **F'c**:	4	ksi
Dry Concrete Density, δc:	150	pcf

Soil Properties		
Total Soil Unit Weight, γ:	110	pcf
Ultimate Gross Bearing, Qult:	24.000	ksf
Cohesion, **Cu**:		ksf
Friction Angle, φ:	30	degrees
SPT Blow Count, N_{blows}:		
Base Friction, μ:	0.7	
Neglected Depth, **N**:	3.50	ft
Foundation Bearing on Rock?	Yes	
Groundwater Depth, **gw**:	N/A	ft

<--Toggle between Gross and Net

Foundation Analysis Checks				
	Capacity	**Demand**	**Rating***	**Check**
Lateral (Sliding) (kips)	364.12	30.92	**8.1%**	**Pass**
Bearing Pressure (ksf)	18.00	2.20	**11.6%**	**Pass**
*Overturning (kip*ft)*	8617.99	4303.94	**49.9%**	**Pass**
*Pier Flexure (Comp.) (kip*ft)*	7068.91	4194.43	**56.5%**	**Pass**
Pier Compression (kip)	35802.00	95.80	**0.3%**	**Pass**
*Pad Flexure (kip*ft)*	5427.04	1576.85	**27.7%**	**Pass**
Pad Shear - 1-way (kips)	1075.81	204.41	**18.1%**	**Pass**
Pad Shear - 2-way (Comp) (ksi)	0.190	0.037	**18.7%**	**Pass**
*Flexural 2-way (Comp) (kip*ft)*	4528.92	2516.66	**52.9%**	**Pass**

**Rating per TIA-222-H Section 15.5*

Soil Rating*:	**49.9%**
Structural Rating*:	**56.5%**

ASCE 7 Hazards Report

Address:
No Address at This Location

Standard: ASCE/SEI 7-10
Risk Category: II
Soil Class: D - Stiff Soil

Elevation: 445.89 ft (NAVD 88)
Latitude: 41.325553
Longitude: -73.265847

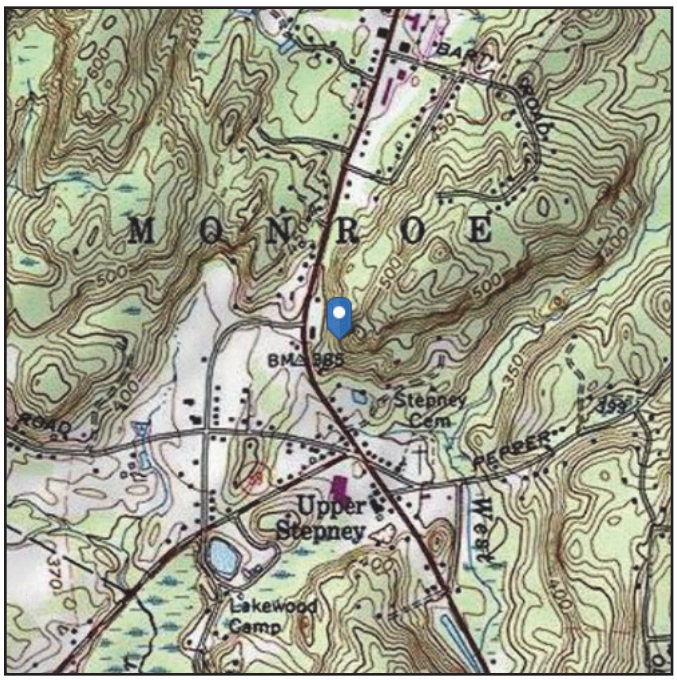

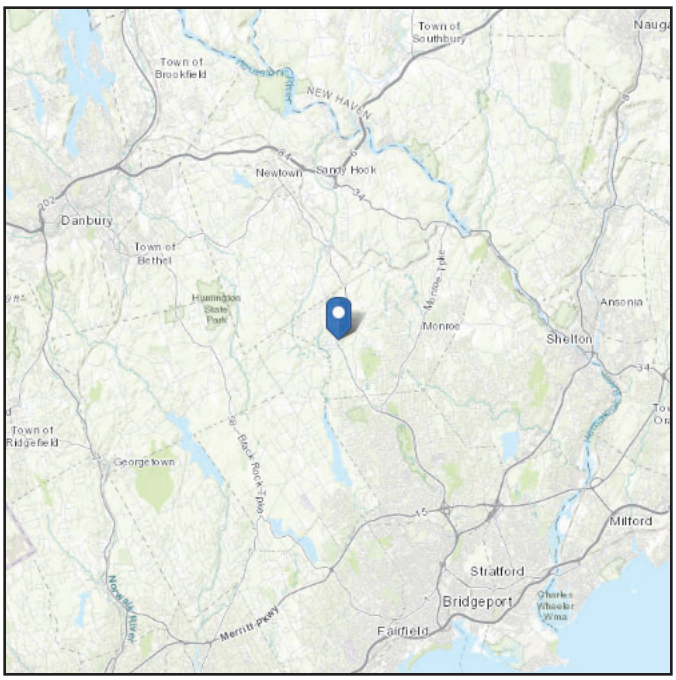

Wind

Results:

Wind Speed:	120 Vmph
10-year MRI	76 Vmph
25-year MRI	86 Vmph
50-year MRI	91 Vmph
100-year MRI	98 Vmph

Data Accessed: Thu May 06 2021

Date Source: ASCE/SEI 7-10, Fig. 26.5-1A and Figs. CC-1–CC-4, and Section 26.5.2, incorporating errata of March 12, 2014

Value provided is 3-second gust wind speeds at 33 ft above ground for Exposure C Category, based on linear interpolation between contours. Wind speeds are interpolated in accordance with the 7-10 Standard. Wind speeds correspond to approximately a 7% probability of exceedance in 50 years (annual exceedance probability = 0.00143, MRI = 700 years).

Site is in a hurricane-prone region as defined in ASCE/SEI 7-10 Section 26.2. Glazed openings need not be protected against wind-borne debris.

Seismic

Site Soil Class: D - Stiff Soil

Results:

S_S :	0.209	S_{DS} :	0.223
S_1 :	0.065	S_{D1} :	0.105
F_a :	1.6	T_L :	6
F_v :	2.4	PGA :	0.113
S_{MS} :	0.334	PGA_M :	0.178
S_{M1} :	0.157	F_{PGA} :	1.574
		I_e :	1

Seismic Design Category B

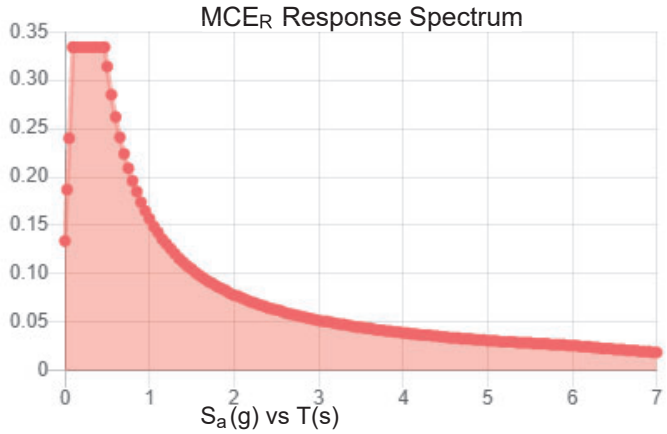

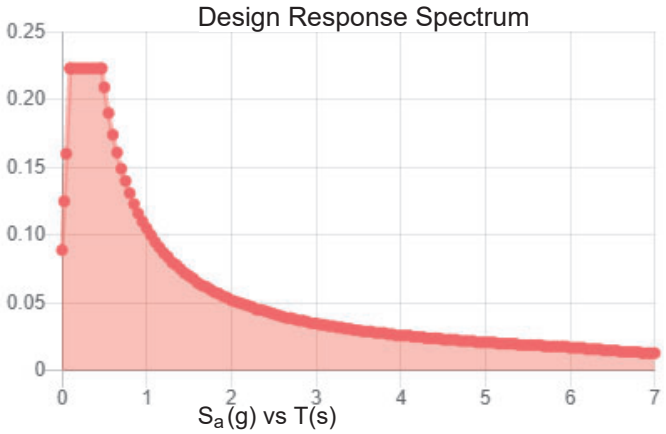

Data Accessed: Thu May 06 2021

Date Source: USGS Seismic Design Maps based on ASCE/SEI 7-10, incorporating Supplement 1 and errata of March 31, 2013, and ASCE/SEI 7-10 Table 1.5-2. Additional data for site-specific ground motion procedures in accordance with ASCE/SEI 7-10 Ch. 21 are available from USGS.

Ice

Results:

Ice Thickness:	0.75 in.
Concurrent Temperature:	15 F
Gust Speed:	50 mph
Data Source:	Standard ASCE/SEI 7-10, Figs. 10-2 through 10-8
Date Accessed:	Thu May 06 2021

Ice thicknesses on structures in exposed locations at elevations higher than the surrounding terrain and in valleys and gorges may exceed the mapped values.

Values provided are equivalent radial ice thicknesses due to freezing rain with concurrent 3-second gust speeds, for a 50-year mean recurrence interval, and temperatures concurrent with ice thicknesses due to freezing rain. Thicknesses for ice accretions caused by other sources shall be obtained from local meteorological studies. Ice thicknesses in exposed locations at elevations higher than the surrounding terrain and in valleys and gorges may exceed the mapped values.

The ASCE 7 Hazard Tool is provided for your convenience, for informational purposes only, and is provided “as is” and without warranties of any kind. The location data included herein has been obtained from information developed, produced, and maintained by third party providers; or has been extrapolated from maps incorporated in the ASCE 7 standard. While ASCE has made every effort to use data obtained from reliable sources or methodologies, ASCE does not make any representations or warranties as to the accuracy, completeness, reliability, currency, or quality of any data provided herein. Any third-party links provided by this Tool should not be construed as an endorsement, affiliation, relationship, or sponsorship of such third-party content by or from ASCE.

ASCE does not intend, nor should anyone interpret, the results provided by this Tool to replace the sound judgment of a competent professional, having knowledge and experience in the appropriate field(s) of practice, nor to substitute for the standard of care required of such professionals in interpreting and applying the contents of this Tool or the ASCE 7 standard.

In using this Tool, you expressly assume all risks associated with your use. Under no circumstances shall ASCE or its officers, directors, employees, members, affiliates, or agents be liable to you or any other person for any direct, indirect, special, incidental, or consequential damages arising from or related to your use of, or reliance on, the Tool or any information obtained therein. To the fullest extent permitted by law, you agree to release and hold harmless ASCE from any and all liability of any nature arising out of or resulting from any use of data provided by the ASCE 7 Hazard Tool.

Exhibit E

Mount Analysis

Maser Consulting Connecticut
2000 Midlantic Drive, Suite 100
Mt. Laurel, NJ 08054
856.797.0412
peter.albano@colliersengineering.com

Antenna Mount Analysis Report and PMI Requirements

Mount Analysis

SMART Tool Project #: 10037964
Maser Consulting Connecticut Project #: 21777072A

May 3, 2021

Site Information	*Site ID:*	*469337-VZW / MONROE WEST CT*
	Site Name:	*MONROE WEST CT*
	Carrier Name:	*Verizon Wireless*
	Address:	*474 Main Street* *Monroe, Connecticut 6468* *Fairfield County*
	Latitude:	*41.325553°*
	Longitude:	*-73.265847°*
Structure Information	*Tower Type:*	*190-Ft Monopole*
	Mount Type:	*12.50-Ft Platform*

FUZE ID # 16244642

Analysis Results

Platform: **79.9% Pass**

Digitally signed by Taqi Khawaja-Ghulam
Date: 2021.05.05 16:24:02-04'00'

******Contractor PMI Requirements***:
Included at the end of this MA report
Available & Submitted via portal at https://pmi.vzwsmart.com
Contractor - Please Review Specific Site PMI Requirements Upon Award
Requirements also Noted on Mount Modification Drawings
Requirements may also be Noted on A & E drawings

Report Prepared By: Evelina Lopez

Executive Summary:

The objective of this report is to determine the capacity of the antenna support mount at the subject facility for the final wireless telecommunications configuration, per the applicable codes and standards. Any modification listed under Sources of Information was assumed completed and was included in this analysis.

This analysis is inclusive of the mount structure only and does not address the structural capacity of the supporting structure. This mounting frame was not analyzed as an anchor attachment point for fall protection. All climbing activities are required to have a fall protection plan completed by a competent person.

Sources of Information:

Document Type	Remarks
Radio Frequency Data Sheet (RFDS)	*Verizon RFDS, Site ID: 324395, dated December 10, 2020*
Mount Mapping Report	*HUDSON DESIGN GROUP, LLC., Site #: 469337, dated March 9, 2021*

Analysis Criteria:

Codes and Standards:	ANSI/TIA-222-H	
Wind Parameters:	Basic Wind Speed (Ultimate 3-sec. Gust), V_{ULT}:	117 mph
	Ice Wind Speed (3-sec. Gust):	50 mph
	Design Ice Thickness:	1.00 in
	Risk Category:	II
	Exposure Category:	B
	Topographic Category:	1
	Topographic Feature Considered:	N/A
	Topographic Method:	N/A
	Ground Elevation Factor, K_e:	0.984
Seismic Parameters:	S_S:	0.213
	S_1:	0.055
Maintenance Parameters:	Wind Speed (3-sec. Gust):	30 mph
	Maintenance Live Load, Lv:	250 lbs.
	Maintenance Live Load, Lm:	500 lbs.
Analysis Software:	RISA-3D (V17)	

Final Loading Configuration:

The following equipment has been considered for the analysis of the mount:

Mount Elevation (ft)	Equipment Elevation (ft)	Quantity	Manufacturer	Model	Status
159.4	160.0	3	Samsung	MT6407-77A	Added
		3	Commscope	CBC78T-DS-43-2X	
		1	RFS	DB-C1-12C-24AB-0Z	
		3	Samsung	B2/B66A RRH-BR049	
		3	Samsung	B5/B13 RRH-BR04C	
		2	Amphenol Antel	LPA-80063-6CF-EDIN-2	Retained
		6	Commscope	JAHH-65B-R3B	
		2	Amphenol Antel	LPA-80080/4CF	
		2	Amphenol Antel	LPA-80063-6CF-EDIN-4	

Standard Conditions:

1. All engineering services are performed on the basis that the information provided to Maser Consulting Connecticut and used in this analysis is current and correct. The existing equipment loading has been applied at locations determined from the supplied documentation. Any deviation from the loading locations specified in this report shall be communicated to Maser Consulting Connecticut to verify deviation will not adversely impact the analysis.

2. Mounts are assumed to have been properly fabricated, installed and maintained in good condition, twist free and plumb in accordance with its original design and manufacturer's specifications.

   Obvious safety and structural issues/deficiencies noticed at the time of the mount mapping and reported in the Mount Mapping Report are assumed to be corrected and documented as part of the PMI process and are not considered in the mount analysis.

   The mount analysis and the mount mapping are not a condition assessment of the mount. Proper maintenance and condition assessments are still required post analysis.

3. For mount analyses completed from other data sources (including new replacement mounts) and not specifically mapped by Maser Consulting Connecticut, the mounts are assumed to have been properly fabricated, installed and maintained in good condition, twist free and plumb in accordance with its original design and manufacturer's specifications.

4. All member connections are assumed to have been designed to meet or exceed the load carrying capacity of the connected member unless otherwise specified in this report.

5. The mount was checked up to, and including, the bolts that fasten it to the mount collar/attachment and threaded rod connections in collar members if applicable. Local deformation and interaction between the mount collar/attachment and the supporting tower structure are outside the scope of this analysis.

6. All services are performed, results obtained, and recommendations made in accordance with generally accepted engineering principles and practices. Maser Consulting Connecticut is not responsible for the conclusion, opinions, and recommendations made by others based on the information supplied.

7. Structural Steel Grades have been assumed as follows, if applicable, unless otherwise noted in this analysis:
   - Channel, Solid Round, Angle, Plate — ASTM A36 (Gr. 36)
   - HSS (Rectangular) — ASTM 500 (Gr. B-46)
   - Pipe — ASTM A53 (Gr. B-35)
   - Threaded Rod — F1554 (Gr. 36)
   - Bolts — ASTM A325

Discrepancies between in-field conditions and the assumptions listed above may render this analysis invalid unless explicitly approved by Maser Consulting Connecticut.

Analysis Results:

Component	Utilization %	Pass/Fail
Face Horizontal	*17.0%*	*Pass*
Standoff Horizontal	*37.5%*	*Pass*
Platform Crossmember	*19.8%*	*Pass*
Corner Plate	*25.1%*	*Pass*
Grating Support	*28.2%*	*Pass*
Cross Arm Plate	*40.3%*	*Pass*
Support Rail	*21.6%*	*Pass*
Mount Pipe	*47.3%*	*Pass*
Dual Mount Pipe	*28.8%*	*Pass*
Mount Connection	*79.9%*	*Pass*

Structure Rating – *(Controlling Utilization of all Components)*	**79.9%**

Recommendation:

The existing mount is **SUFFICIENT** for the final loading configuration and do not require modifications.

ANSI/ASSP rigging plan review services compliant with the requirements of ANSI/TIA 322 are available for a Construction Class IV site or other, if required. Separate review fees will apply.

Attachments:

1. Mount Photos
2. Mount Mapping Report (for reference only)
3. Analysis Calculations
4. **Contractor Required Post Installation Inspection (PMI) Report Deliverables**
5. Antenna Placement Diagrams
6. TIA Adoption and Wind Usage Letter

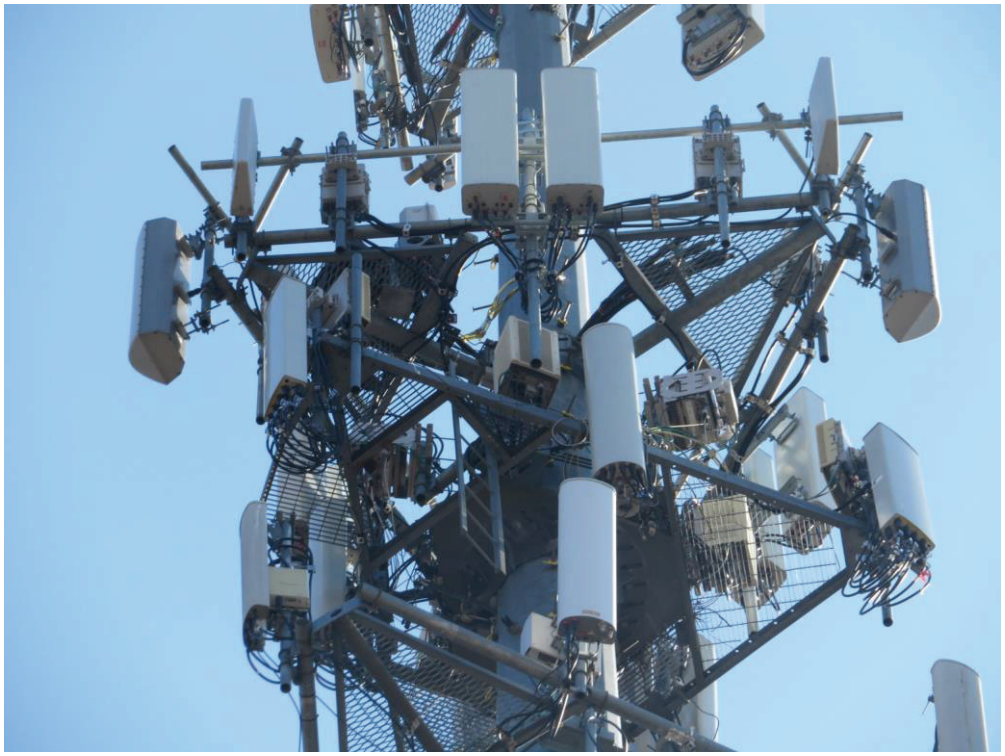

V3.0 Updated on 8-31-2020

Antenna Mount Mapping Form (PATENT PENDING)

FCC #

Tower Owner:	CROWN CASTLE	**Mapping Date:**	3/9/2021
Site Name:	MONROE WEST CT	**Tower Type:**	Monopole
Site Number or ID:	469337	**Tower Height (Ft.):**	190
Mapping Contractor:	HUDSON DESIGN GROUP, LLC.	**Mount Elevation (Ft.):**	160.16

This antenna mapping form is the property of TES and under **PATENT PENDING.** The formation contained herein is considered confidential in nature and is to be used only for the specific customer it was intended for. Reproduction, transmission, publication, modification or disclosure by any method is prohibited except by express written permission of TES. All means and methods are the responsibility of the contractor and the work shall be compliant with ANSI/ASSE A 10.48, OSHA, FCC, FAA and other safety requirements that may apply. TES is not warrantying the usability of the safety climb as it must be assessed prior to each use in compliance with OSHA requirements.

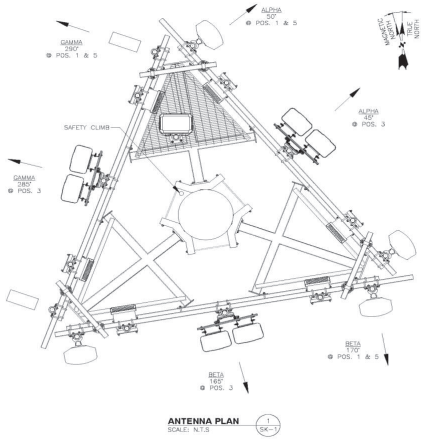

Mount Pipe Configuration and Geometries [Unit = Inches]							
Sector / Position	Mount Pipe Size & Length	Vertical Offset Dimension "u"	here you go rob per your comments	Sector / Position	Mount Pipe Size & Length	Vertical Offset Dimension "u"	Horizontal Offset "C1, C2, C3, etc."
A1	2"STD. PIPE X 72" LONG	52.00	4.00	C1	2"STD. PIPE X 72" LONG	52.00	4.00
A2	2"STD. PIPE X 72" LONG	52.00	29.00	C2	2"STD. PIPE X 72" LONG	52.00	29.00
A3	2-1/2"Ø X 3/16" THK. PIPE X 150	59.00	75.00	C3	2-1/2"Ø X 3/16" THK. PIPE X 150" LONG	59.00	75.00
A4	2"STD. PIPE X 72" LONG	52.00	122.00	C4	2"STD. PIPE X 72" LONG	52.00	122.00
A5	2"STD. PIPE X 72" LONG	52.00	146.00	C5	2"STD. PIPE X 72" LONG	52.00	146.00
A6				C6			
B1	2"STD. PIPE X 72" LONG	52.00	4.00	D1			
B2	2"STD. PIPE X 72" LONG	52.00	29.00	D2			
B3	2-1/2"Ø X 3/16" THK. PIPE X 150	59.00	75.00	D3			
B4	2"STD. PIPE X 72" LONG	52.00	122.00	D4			
B5	2"STD. PIPE X 72" LONG	52.00	146.00	D5			
B6				D6			
Distance between bottom rail and mount CL elevation (dim d). Unit is inches. See 'Mount Elev Ref' tab for details. :							24.00
Distance from top of bottom support rail to lowest tip of ant./eqpt. of Carrier above. (N/A if > 10 ft.) :							
Distance from top of bottom support rail to highest tip of ant./eqpt. of Carrier below. (N/A if > 10 ft.) :							4
Please enter additional infomation or comments below.							
MONOPOLE WALL THK.: .329, .333, .336							
Tower Face Width at Mount Elev. (ft.):			Tower Leg Size or Pole Shaft Diameter at Mount Elev. (in.):				20

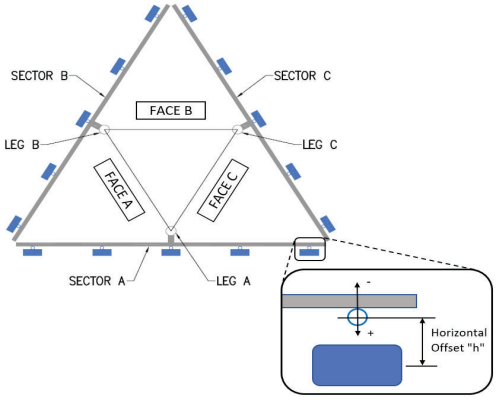

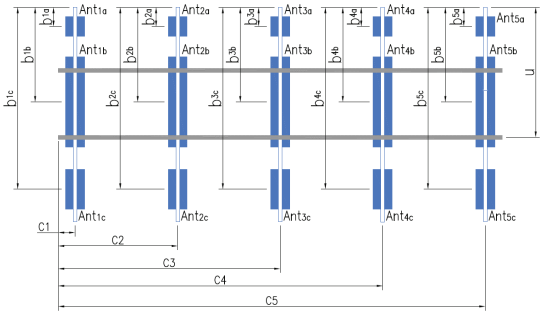

Antenna Layout (Looking Out From Tower)

	Enter antenna model. If not labeled, enter "Unknown".						Mounting Locations [Units are inches and degrees]			Photos of antennas
Ants. Items	Antenna Models if Known	Width (in.)	Depth (in.)	Height (in.)	Coax Size and Qty	Antenna Center-line (Ft.)	Vertical Distances"b_{1a}, b_{2a}, b_{3a}, b_{1b}...." (Inches)	Horiz. Offset "h" (Use "-" if Ant. is behind)	Antenna Azimuth (Degrees)	Photo Numbers
Sector A										
Ant_{1a}										
Ant_{1b}										
Ant_{1c}	LPA-80063-6CF-EDIN-	15.00	9.60	72.00		158.743	45.00	15.00	50.00	6, 12
Ant_{2a}										
Ant_{2b}	B66a RRH 4X45	12.00	7.00	25.50		160.493	24.00	-6.50		13, 32
Ant_{2c}										
Ant_{3a}										
Ant_{3b}										
Ant_{3c}	(2) JAHH-65B-R3B	14.00	8.50	72.00		158.077	60.00	14.00	45.00	10, 14
Ant_{4a}										
Ant_{4b}	B13 RRH 4X30	12.00	7.50	20.50		160.66	22.00	-6.50		17, 35
Ant_{4c}										
Ant_{5a}										
Ant_{5b}										
Ant_{5c}	LPA-80063-6CF-EDIN-	15.00	9.60	72.00		158.743	45.00	15.00	50.00	6, 15
Ant on Standoff	RHSDC-3315-PF-48	15.00	10.00	28.00			44.00			38, 40
Ant on Standoff										
Ant on Tower										
Ant on Tower										

Mount Azimuth (Degree) for Each Sector				Tower Leg Azimuth (Degree) for Each Sector	
Sector A:	50.00	Deg	Leg A:		Deg
Sector B:	170.00	Deg	Leg B:		Deg
Sector C:	290.00	Deg	Leg C:		Deg
Sector D:		Deg	Leg D:		Deg

Climbing Facility Information		
Location:	320.00 Deg	N/A
Climbing Facility	Corrosion Type:	Good condition.
	Access:	Climbing path was unobstructed.
	Condition:	Good condition.

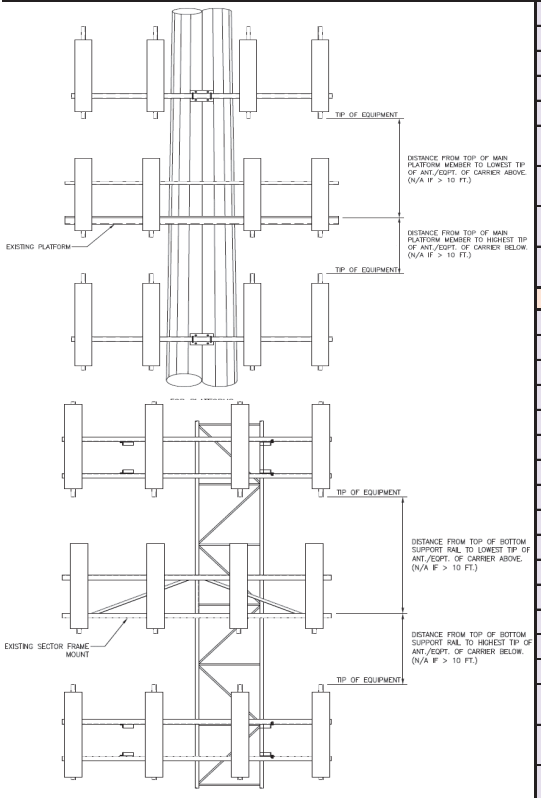

Sector B										
Ant_{1a}										
Ant_{1b}										
Ant_{1c}	LPA-80063-6CF-EDIN-	15.00	9.60	72.00		158.743	45.00	15.00	170.00	6, 15
Ant_{2a}										
Ant_{2b}	B66a RRH 4X45	12.00	7.00	25.50		160.493	24.00	-6.50		15, 32
Ant_{2c}										
Ant_{3a}										
Ant_{3b}										
Ant_{3c}	(2) JAHH-65B-R3B	14.00	8.50	72.00		158.077	60.00	14.00	165.00	10, 16
Ant_{4a}										
Ant_{4b}	B13 RRH 4X30	12.00	7.50	20.50		160.66	22.00	-6.50		17, 35
Ant_{4c}										
Ant_{5a}										
Ant_{5b}										
Ant_{5c}	LPA-80063-6CF-EDIN-	15.00	9.60	72.00		158.743	45.00	15.00	170.00	6, 17
Ant on Standoff										
Ant on Standoff										
Ant on Tower										
Ant on Tower										
Sector C										
Ant_{1a}										
Ant_{1b}										
Ant_{1c}	AMPHENOL	6.00	14.00	48.00		159.243	39.00	15.00	290.00	30, 18
Ant_{2a}										
Ant_{2b}	B66a RRH 4X45	12.00	7.00	25.50		160.493	24.00	-6.50		18, 32
Ant_{2c}										
Ant_{3a}										
Ant_{3b}										
Ant_{3c}	(2) JAHH-65B-R3B	14.00	8.50	72.00		158.077	60.00	14.00	285.00	10, 19
Ant_{4a}										
Ant_{4b}	B13 RRH 4X30	12.00	7.50	20.50		160.66	22.00	-6.50		20, 35
Ant_{4c}										
Ant_{5a}										
Ant_{5b}										
Ant_{5c}	AMPHENOL	6.00	14.00	48.00		159.243	39.00	15.00	290.00	30, 20
Ant on Standoff										
Ant on Standoff										
Ant on Tower										
Ant on Tower										
Sector D										
Ant_{1a}										
Ant_{1b}										
Ant_{1c}										
Ant_{2a}										
Ant_{2b}										
Ant_{2c}										
Ant_{3a}										
Ant_{3b}										
Ant_{3c}										
Ant_{4a}										
Ant_{4b}										
Ant_{4c}										
Ant_{5a}										
Ant_{5b}										
Ant_{5c}										
Ant on Standoff										
Ant on Standoff										
Ant on Tower										
Ant on Tower										

Observed Safety and Structural Issues During the Mount Mapping		
Issue #	Description of Issue	Photo #

1		
2	(12) 1-/8"Ø COAX, (1) 1-1/4"Ø HYBRID	32-37
3		
4		
5		
6		
7		
8		

Mapping Notes
1. Please report any visible structural or safety issues observed on the antenna mounts (Damaged members, loose connections, tilting mounts, safety climb issues, etc.)
2. If the thickness of the existing pipes or tubing can't be obtained from a general tool (such as Caliper), please use an ultrasonic measurement tool (thickness gauge) to measure the thickness.
3. Please create all required detail sketches of the mounts and insert them into the "Sketches" tab.
4. Please measure and enter the bolt sizes and types under the Members Box in the spreadsheet of the mount type.
5. Take and label the photos of the tower, mounts, connections, antennas and all measurements. Minimum 50 photos are required.
6. Please measure and report the size and length of all existing antenna mounting pipes.
7. Please measure and report the antenna information for all sectors.
8. Don't delete or rearrange any sheet or contents of any sheet from this mapping form.

Standard Conditions
1. Obvious safety and structural issues/deficiencies noticed at the time of the mount mapping are to be reported in this mapping. However, this mount mapping is not a condition assessment of the mount.

Antenna Mount Mapping Form (PATENT PENDING)

FCC #

Tower Owner:	CROWN CASTLE	**Mapping Date:**	3/9/2021
Site Name:	MONROE WEST CT	**Tower Type:**	Monopole
Site Number or ID:	469337	**Tower Height (Ft.):**	190
Mapping Contractor:	HUDSON DESIGN GROUP, LLC.	**Mount Elevation (Ft.):**	160.16

This antenna mapping form is the property of TES and under **PATENT PENDING**. The formation contained herein is considered confidential in nature and is to be used only for the specific customer it was intended for. Reproduction, transmission, publication, modification or disclosure by any method is prohibited except by express written permission of TES. All means and methods are the responsibility of the contractor and the work shall be compliant with ANSI/ASSE A 10.48, OSHA, FCC, FAA and other safety requirements that may apply. TES is not warrantying the usability of the safety climb as it must be assessed prior to each use in compliance with OSHA requirements.

Please Insert Sketches of the Antenna Mount

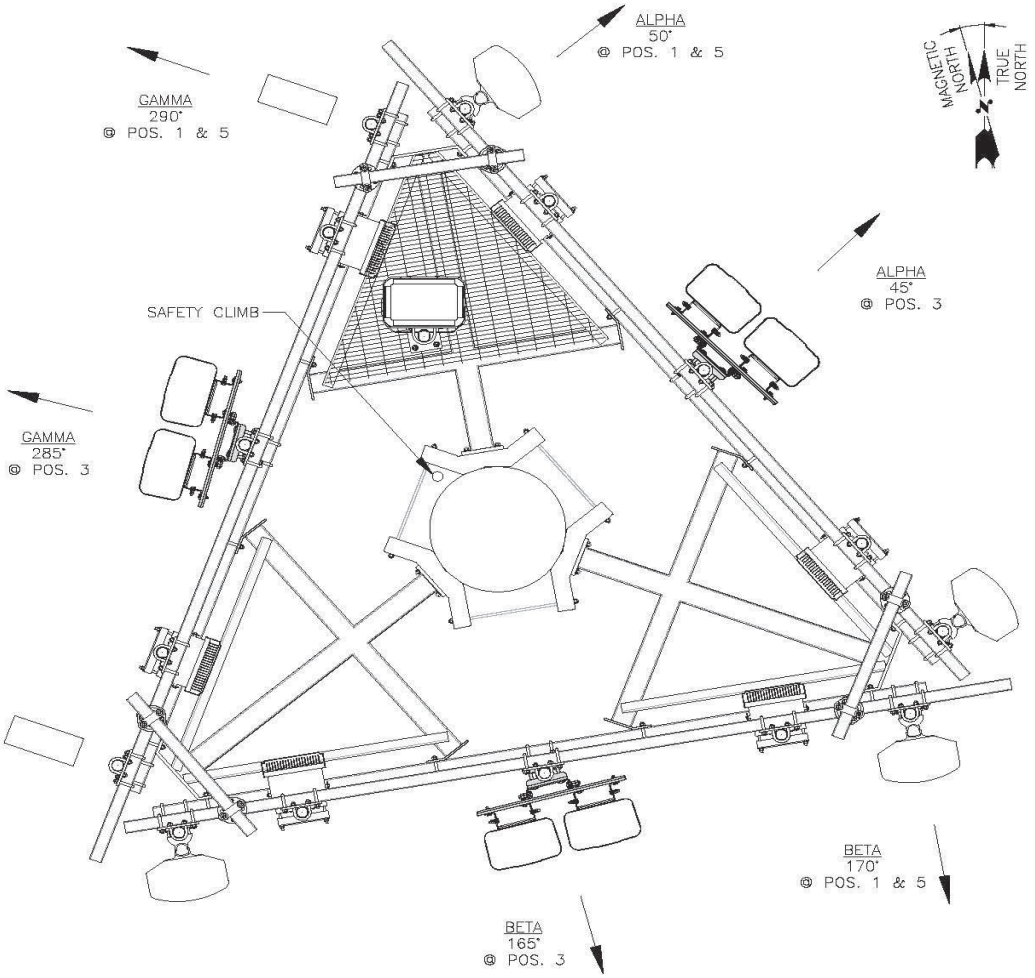

ANTENNA PLAN 1
SCALE: N.T.S SK-1

Please Insert Sketches of the Antenna Mount, cont'd

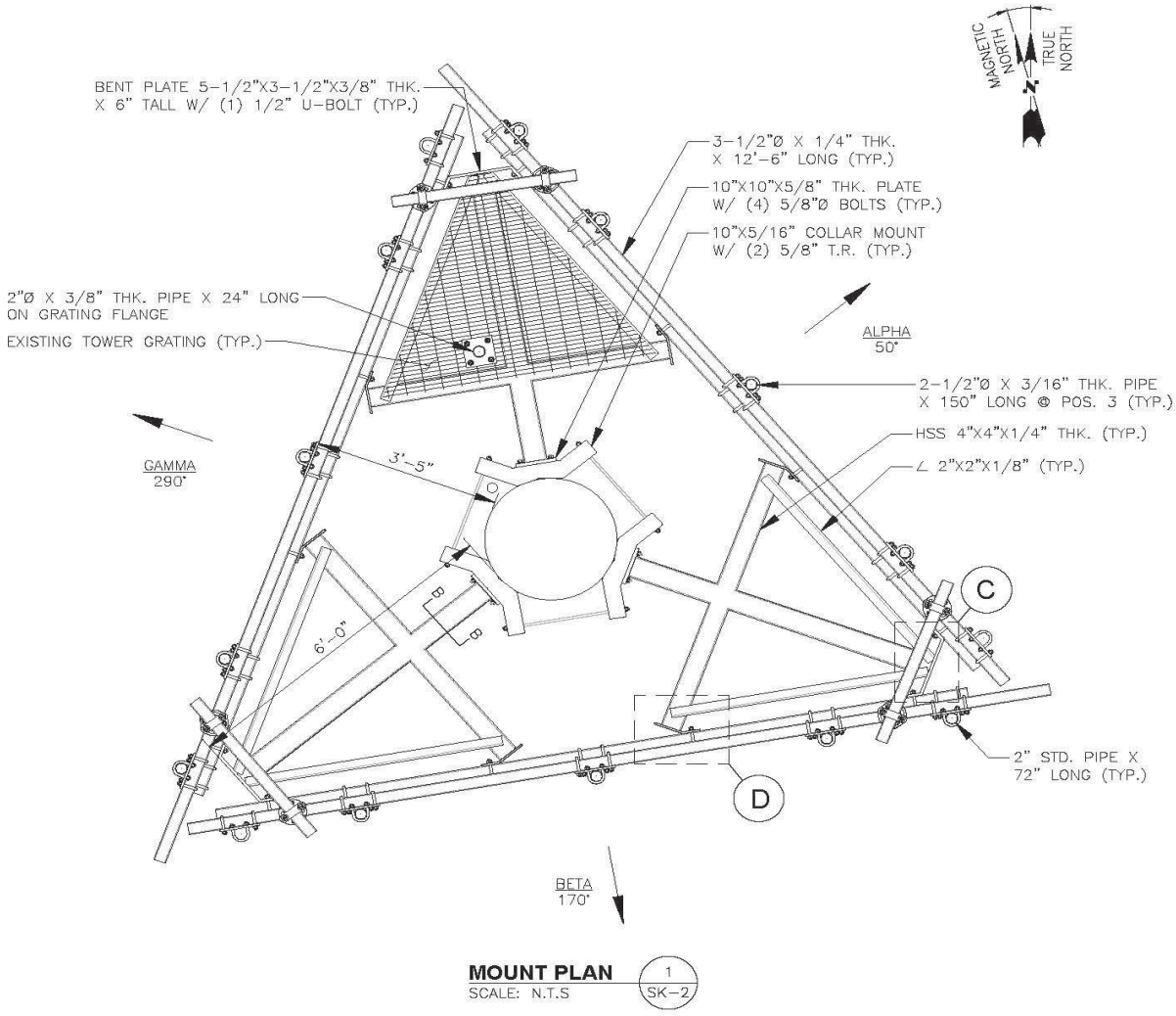

MOUNT PLAN 1/SK-2
SCALE: N.T.S

Please Insert Sketches of the Antenna Mount, cont'd

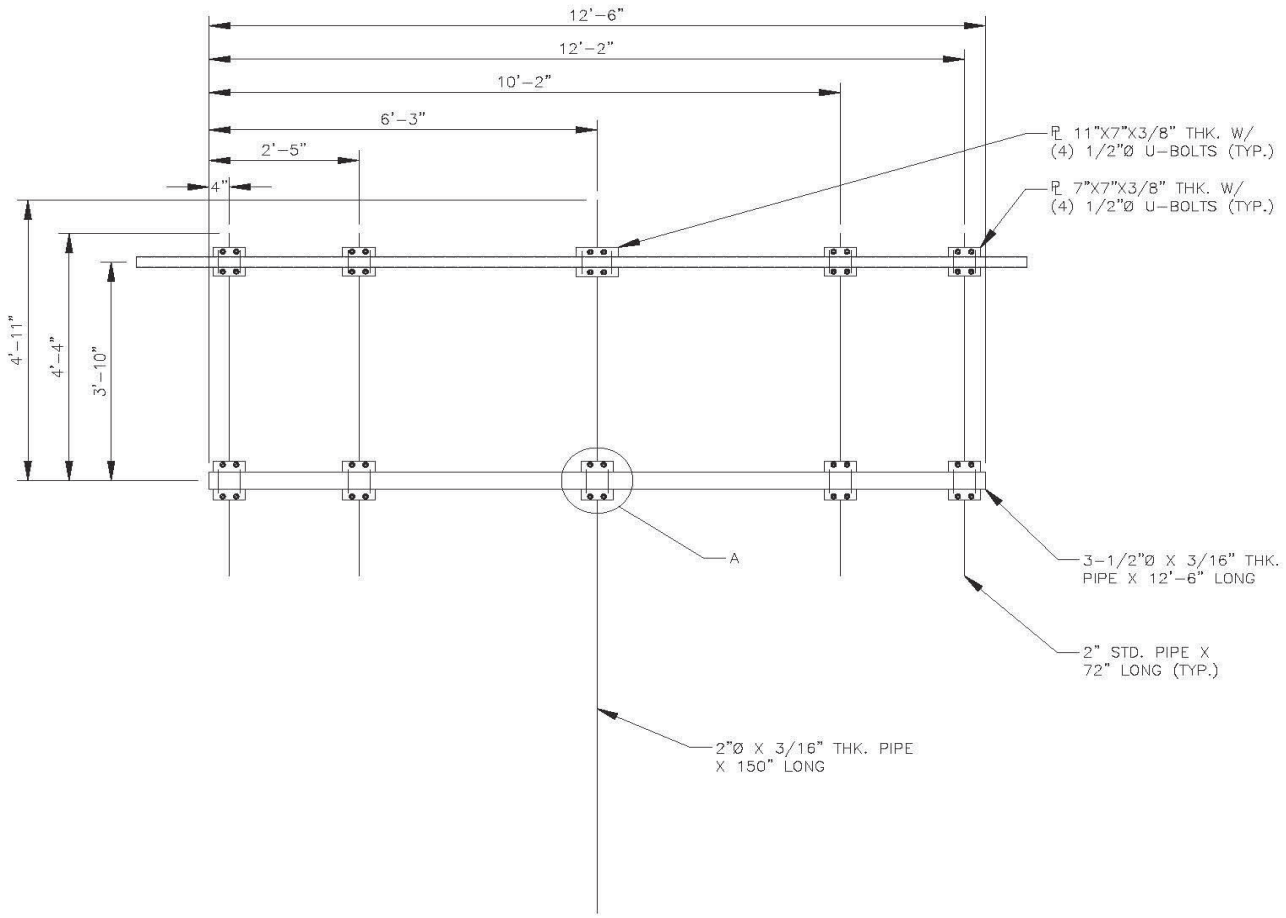

FACE ELEVATION (1 / SK-3)
SCALE: N.T.S

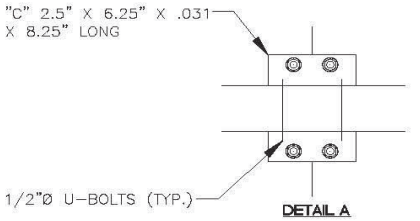

DETAIL A

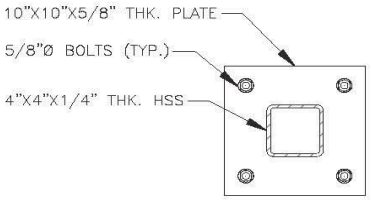

DETAIL B-B

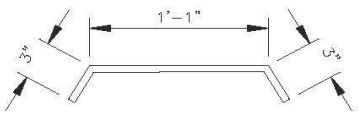

DETAIL C

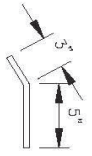

DETAIL D

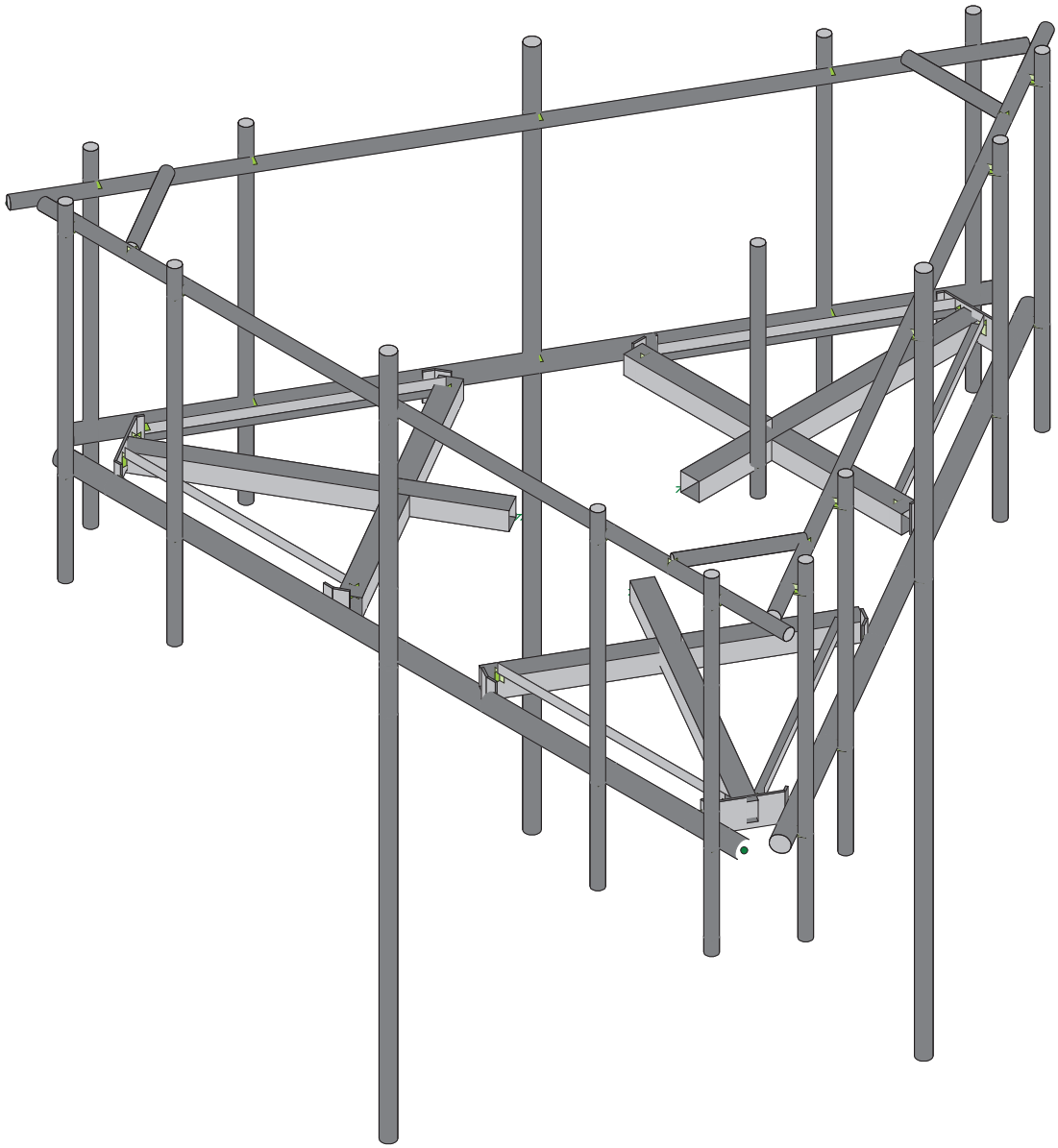

		SK - 1
		May 3, 2021 at 10:20 AM
		469337-VZW_MT_LO_H.r3d

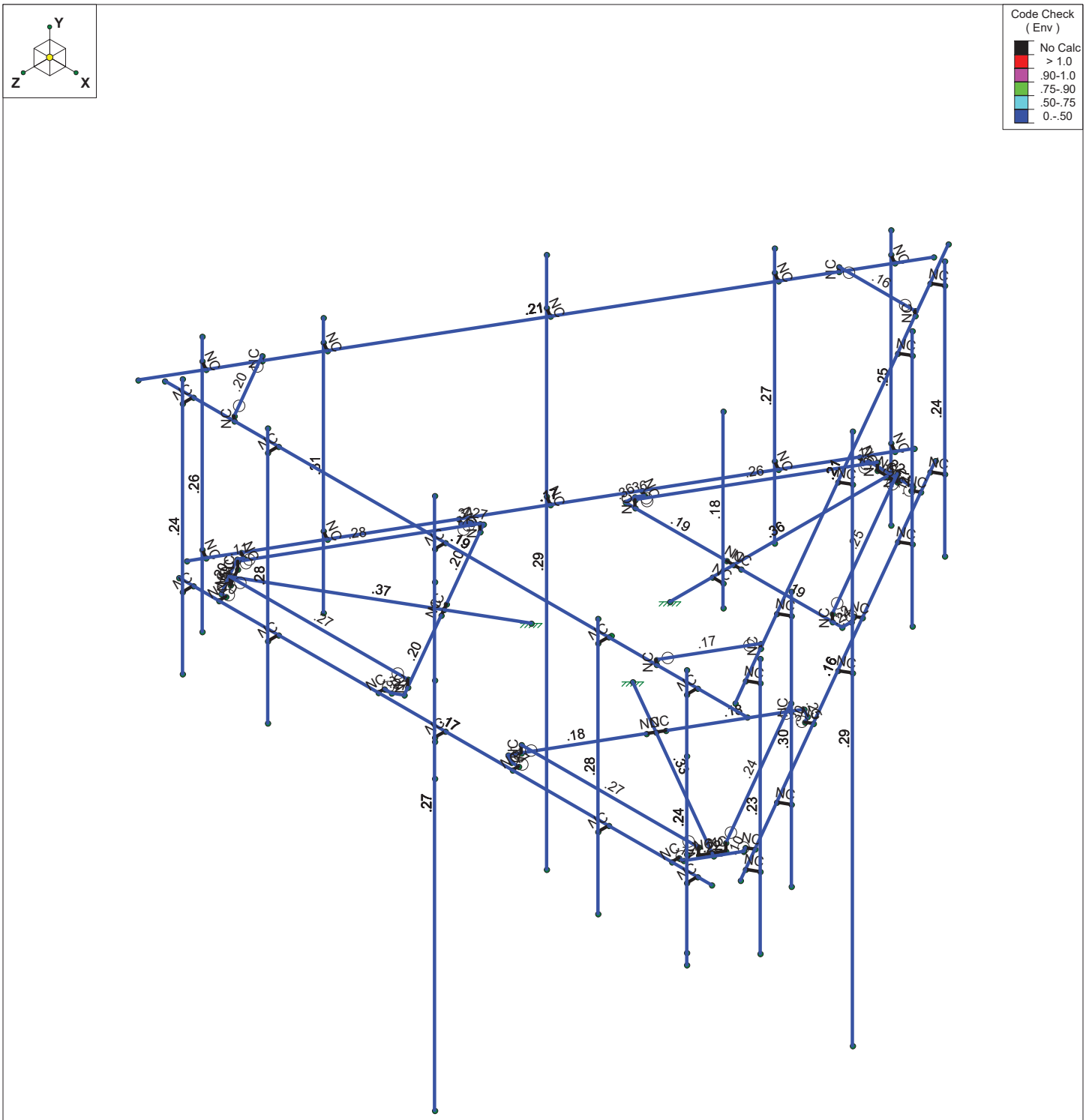

Member Code Checks Displayed (Enveloped)
Results for LC 1, 1.2D+1.0Wo (0 Deg)

		SK - 2
		May 3, 2021 at 10:22 AM
		469337-VZW_MT_LO_H.r3d

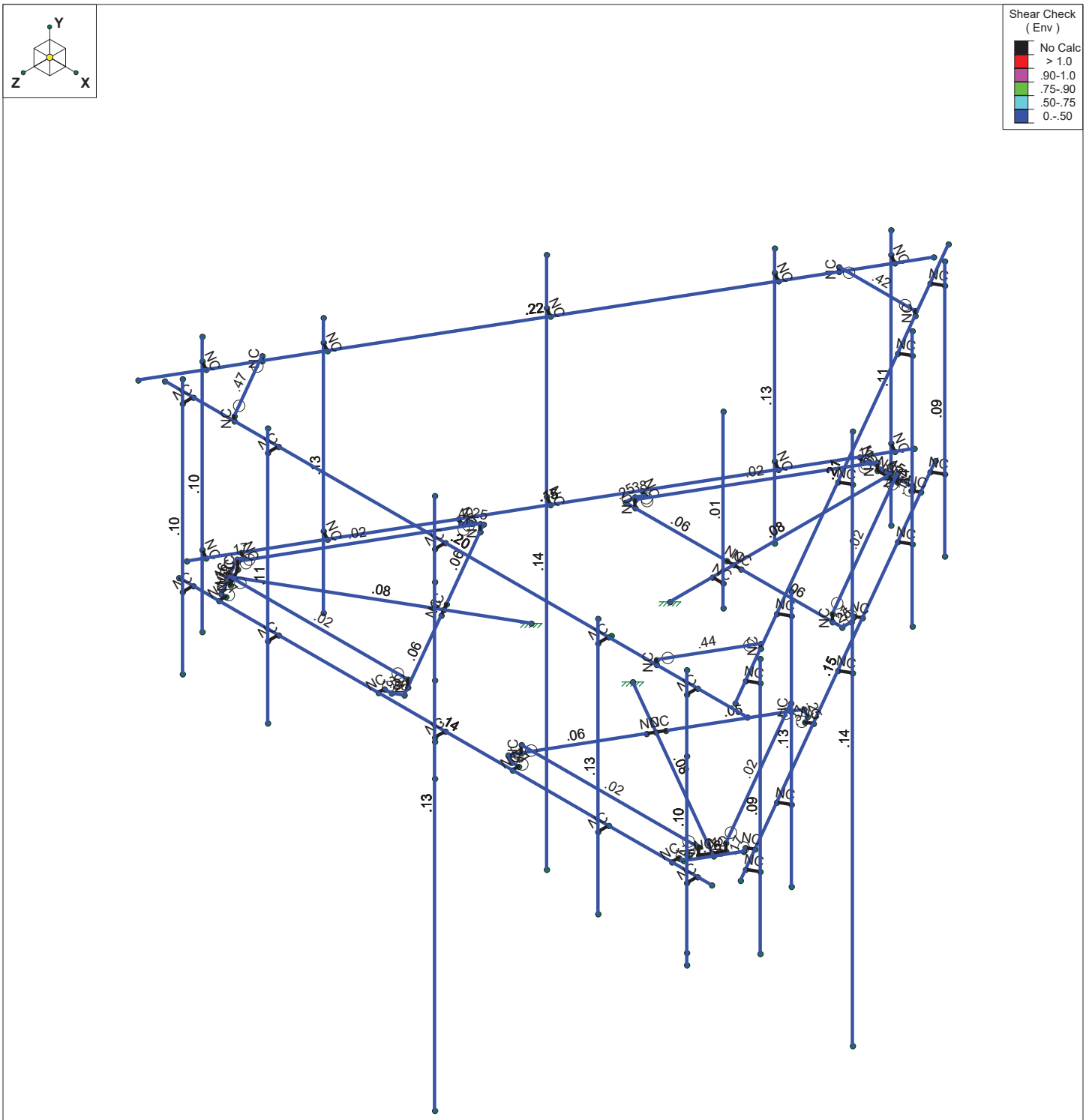

Member Shear Checks Displayed (Enveloped)
Results for LC 1, 1.2D+1.0Wo (0 Deg)

		SK - 3
		May 3, 2021 at 10:22 AM
		469337-VZW_MT_LO_H.r3d

Basic Load Cases

	BLC Description	Category	X Gravity	Y Gravity	Z Gravity	Joint	Point	Distributed	Area(Me...	Surface(P...
1	Antenna D	None					120			
2	Antenna Di	None					120			
3	Antenna Wo (0 Deg)	None					120			
4	Antenna Wo (30 Deg)	None					120			
5	Antenna Wo (60 Deg)	None					120			
6	Antenna Wo (90 Deg)	None					120			
7	Antenna Wo (120 Deg)	None					120			
8	Antenna Wo (150 Deg)	None					120			
9	Antenna Wo (180 Deg)	None					120			
10	Antenna Wo (210 Deg)	None					120			
11	Antenna Wo (240 Deg)	None					120			
12	Antenna Wo (270 Deg)	None					120			
13	Antenna Wo (300 Deg)	None					120			
14	Antenna Wo (330 Deg)	None					120			
15	Antenna Wi (0 Deg)	None					120			
16	Antenna Wi (30 Deg)	None					120			
17	Antenna Wi (60 Deg)	None					120			
18	Antenna Wi (90 Deg)	None					120			
19	Antenna Wi (120 Deg)	None					120			
20	Antenna Wi (150 Deg)	None					120			
21	Antenna Wi (180 Deg)	None					120			
22	Antenna Wi (210 Deg)	None					120			
23	Antenna Wi (240 Deg)	None					120			
24	Antenna Wi (270 Deg)	None					120			
25	Antenna Wi (300 Deg)	None					120			
26	Antenna Wi (330 Deg)	None					120			
27	Antenna Wm (0 Deg)	None					120			
28	Antenna Wm (30 Deg)	None					120			
29	Antenna Wm (60 Deg)	None					120			
30	Antenna Wm (90 Deg)	None					120			
31	Antenna Wm (120 Deg)	None					120			
32	Antenna Wm (150 Deg)	None					120			
33	Antenna Wm (180 Deg)	None					120			
34	Antenna Wm (210 Deg)	None					120			
35	Antenna Wm (240 Deg)	None					120			
36	Antenna Wm (270 Deg)	None					120			
37	Antenna Wm (300 Deg)	None					120			
38	Antenna Wm (330 Deg)	None					120			
39	Structure D	None		-1					3	
40	Structure Di	None						60	3	
41	Structure Wo (0 Deg)	None						120		
42	Structure Wo (30 Deg)	None						120		
43	Structure Wo (60 Deg)	None						120		
44	Structure Wo (90 Deg)	None						120		
45	Structure Wo (120 D...	None						120		
46	Structure Wo (150 D...	None						120		
47	Structure Wo (180 D...	None						120		
48	Structure Wo (210 D...	None						120		
49	Structure Wo (240 D...	None						120		
50	Structure Wo (270 D...	None						120		
51	Structure Wo (300 D...	None						120		
52	Structure Wo (330 D...	None						120		
53	Structure Wi (0 Deg)	None						120		
54	Structure Wi (30 Deg)	None						120		
55	Structure Wi (60 Deg)	None						120		
56	Structure Wi (90 Deg)	None						120		

Basic Load Cases (Continued)

	BLC Description	Category	X Gravity	Y Gravity	Z Gravity	Joint	Point	Distributed	Area(Me...	Surface(P...
57	Structure Wi (120 De...	None						120		
58	Structure Wi (150 De...	None						120		
59	Structure Wi (180 De...	None						120		
60	Structure Wi (210 De...	None						120		
61	Structure Wi (240 De...	None						120		
62	Structure Wi (270 De...	None						120		
63	Structure Wi (300 De...	None						120		
64	Structure Wi (330 De...	None						120		
65	Structure Wm (0 Deg)	None						120		
66	Structure Wm (30 De...	None						120		
67	Structure Wm (60 De...	None						120		
68	Structure Wm (90 De...	None						120		
69	Structure Wm (120 D...	None						120		
70	Structure Wm (150 D...	None						120		
71	Structure Wm (180 D...	None						120		
72	Structure Wm (210 D...	None						120		
73	Structure Wm (240 D...	None						120		
74	Structure Wm (270 D...	None						120		
75	Structure Wm (300 D...	None						120		
76	Structure Wm (330 D...	None						120		
77	Lm1	None					1			
78	Lm2	None					1			
79	Lv1	None					1			
80	Lv2	None					1			
81	BLC 39 Transient Are...	None						30		
82	BLC 40 Transient Are...	None						30		

Load Combinations

	Description	So...	PDelta	S...	BLC	Fac...	BLC	Fac...	BLC	Fac...	BLC	Fac...	BLC	Fac...	BLC	Fac...	BLC	Fac...	BLC	Fac...	BLC	Fac...	BLC	Fac...
1	1.2D+1.0...	Yes	Y		1	1.2	39	1.2	3	1	41	1												
2	1.2D+1.0...	Yes	Y		1	1.2	39	1.2	4	1	42	1												
3	1.2D+1.0...	Yes	Y		1	1.2	39	1.2	5	1	43	1												
4	1.2D+1.0...	Yes	Y		1	1.2	39	1.2	6	1	44	1												
5	1.2D+1.0...	Yes	Y		1	1.2	39	1.2	7	1	45	1												
6	1.2D+1.0...	Yes	Y		1	1.2	39	1.2	8	1	46	1												
7	1.2D+1.0...	Yes	Y		1	1.2	39	1.2	9	1	47	1												
8	1.2D+1.0...	Yes	Y		1	1.2	39	1.2	10	1	48	1												
9	1.2D+1.0...	Yes	Y		1	1.2	39	1.2	11	1	49	1												
10	1.2D+1.0...	Yes	Y		1	1.2	39	1.2	12	1	50	1												
11	1.2D+1.0...	Yes	Y		1	1.2	39	1.2	13	1	51	1												
12	1.2D+1.0...	Yes	Y		1	1.2	39	1.2	14	1	52	1												
13	1.2D + 1....	Yes	Y		1	1.2	39	1.2	2	1	40	1	15	1	53	1								
14	1.2D + 1....	Yes	Y		1	1.2	39	1.2	2	1	40	1	16	1	54	1								
15	1.2D + 1....	Yes	Y		1	1.2	39	1.2	2	1	40	1	17	1	55	1								
16	1.2D + 1....	Yes	Y		1	1.2	39	1.2	2	1	40	1	18	1	56	1								
17	1.2D + 1....	Yes	Y		1	1.2	39	1.2	2	1	40	1	19	1	57	1								
18	1.2D + 1....	Yes	Y		1	1.2	39	1.2	2	1	40	1	20	1	58	1								
19	1.2D + 1....	Yes	Y		1	1.2	39	1.2	2	1	40	1	21	1	59	1								
20	1.2D + 1....	Yes	Y		1	1.2	39	1.2	2	1	40	1	22	1	60	1								
21	1.2D + 1....	Yes	Y		1	1.2	39	1.2	2	1	40	1	23	1	61	1								
22	1.2D + 1....	Yes	Y		1	1.2	39	1.2	2	1	40	1	24	1	62	1								
23	1.2D + 1....	Yes	Y		1	1.2	39	1.2	2	1	40	1	25	1	63	1								
24	1.2D + 1....	Yes	Y		1	1.2	39	1.2	2	1	40	1	26	1	64	1								
25	1.2D + 1....	Yes	Y		1	1.2	39	1.2	77	1.5	27	1	65	1										
26	1.2D + 1....	Yes	Y		1	1.2	39	1.2	77	1.5	28	1	66	1										

Load Combinations (Continued)

	Description	So...	PDelta	S...	BLC	Fac...	BLC	Fac...	BLC	Fac...	BLC	Fac...	BLC	Fac...	BLC	Fac...	BLC	Fac...	BLC	Fac...	BLC	Fac...	BLC	Fac...
27	1.2D + 1....	Yes	Y		1	1.2	39	1.2	77	1.5	29	1	67	1										
28	1.2D + 1....	Yes	Y		1	1.2	39	1.2	77	1.5	30	1	68	1										
29	1.2D + 1....	Yes	Y		1	1.2	39	1.2	77	1.5	31	1	69	1										
30	1.2D + 1....	Yes	Y		1	1.2	39	1.2	77	1.5	32	1	70	1										
31	1.2D + 1....	Yes	Y		1	1.2	39	1.2	77	1.5	33	1	71	1										
32	1.2D + 1....	Yes	Y		1	1.2	39	1.2	77	1.5	34	1	72	1										
33	1.2D + 1....	Yes	Y		1	1.2	39	1.2	77	1.5	35	1	73	1										
34	1.2D + 1....	Yes	Y		1	1.2	39	1.2	77	1.5	36	1	74	1										
35	1.2D + 1....	Yes	Y		1	1.2	39	1.2	77	1.5	37	1	75	1										
36	1.2D + 1....	Yes	Y		1	1.2	39	1.2	77	1.5	38	1	76	1										
37	1.2D + 1....	Yes	Y		1	1.2	39	1.2	78	1.5	27	1	65	1										
38	1.2D + 1....	Yes	Y		1	1.2	39	1.2	78	1.5	28	1	66	1										
39	1.2D + 1....	Yes	Y		1	1.2	39	1.2	78	1.5	29	1	67	1										
40	1.2D + 1....	Yes	Y		1	1.2	39	1.2	78	1.5	30	1	68	1										
41	1.2D + 1....	Yes	Y		1	1.2	39	1.2	78	1.5	31	1	69	1										
42	1.2D + 1....	Yes	Y		1	1.2	39	1.2	78	1.5	32	1	70	1										
43	1.2D + 1....	Yes	Y		1	1.2	39	1.2	78	1.5	33	1	71	1										
44	1.2D + 1....	Yes	Y		1	1.2	39	1.2	78	1.5	34	1	72	1										
45	1.2D + 1....	Yes	Y		1	1.2	39	1.2	78	1.5	35	1	73	1										
46	1.2D + 1....	Yes	Y		1	1.2	39	1.2	78	1.5	36	1	74	1										
47	1.2D + 1....	Yes	Y		1	1.2	39	1.2	78	1.5	37	1	75	1										
48	1.2D + 1....	Yes	Y		1	1.2	39	1.2	78	1.5	38	1	76	1										
49	1.2D + 1....	Yes	Y		1	1.2	39	1.2	79	1.5														
50	1.2D + 1....	Yes	Y		1	1.2	39	1.2	80	1.5														
51	1.4D	Yes	Y		1	1.4	39	1.4																
52	Seismic ...		Y		1	1	39	1																
53	1.2D + 1....		Y		1	1.2	39	1.2	SX		SY	1	SZ	-1										
54	1.2D + 1....		Y		1	1.2	39	1.2	SX	.5	SY	1	SZ	-.866										
55	1.2D + 1....		Y		1	1.2	39	1.2	SX	.866	SY	1	SZ	-.5										
56	1.2D + 1....		Y		1	1.2	39	1.2	SX	1	SY	1	SZ											
57	1.2D + 1....		Y		1	1.2	39	1.2	SX	.866	SY	1	SZ	.5										
58	1.2D + 1....		Y		1	1.2	39	1.2	SX	.5	SY	1	SZ	.866										
59	1.2D + 1....		Y		1	1.2	39	1.2	SX		SY	1	SZ	1										
60	1.2D + 1....		Y		1	1.2	39	1.2	SX	-.5	SY	1	SZ	.866										
61	1.2D + 1....		Y		1	1.2	39	1.2	SX	-.866	SY	1	SZ	.5										
62	1.2D + 1....		Y		1	1.2	39	1.2	SX	-1	SY	1	SZ											
63	1.2D + 1....		Y		1	1.2	39	1.2	SX	-.866	SY	1	SZ	-.5										
64	1.2D + 1....		Y		1	1.2	39	1.2	SX	-.5	SY	1	SZ	-.866										

Joint Coordinates and Temperatures

	Label	X [ft]	Y [ft]	Z [ft]	Temp [F]	Detach From Diap...
1	N1	6.25	0	3.893857	0	
2	N2	-6.25	0	3.893857	0	
3	N3	0	0	-1.375	0	
4	N5	-2.541667	0	-2.875	0	
5	N6	2.315104	0.166667	-2.875	0	
6	N7	-2.315104	0.166667	-2.875	0	
7	N24	0	0	-2.875	0	
8	N27	0	0	-6.5625	0	
9	CP	0	0	0	0	
10	N29	2.315104	0	-2.875	0	
11	N30	-2.315104	0	-2.875	0	
12	N101	2.541667	0	-2.875	0	
13	N102	-0.166667	0	-2.875	0	
14	N103A	0.166667	0	-2.875	0	

Joint Coordinates and Temperatures (Continued)

	Label	X [ft]	Y [ft]	Z [ft]	Temp [F]	Detach From Diap...
15	N104A	-2.541667	0	-3.09375	0	
16	N105	2.541667	0	-3.09375	0	
17	N131	2.458333	0	-3.238088	0	
18	N135	0.571615	0	-6.465523	0	
19	N144	-2.458333	0	-3.238088	0	
20	N148	-0.571615	0	-6.465523	0	
21	N86A	2.584629	0	-3.311004	0	
22	N86B	-2.584629	0	-3.311004	0	
23	N86C	-0.515625	0	-6.5625	0	
24	N87A	0.515625	0	-6.5625	0	
25	N86D	0.715429	0	-6.548554	0	
26	N86E	-0.715429	0	-6.548554	0	
27	N88A	0	0	-6.479167	0	
28	N87C	0.234238	0.166667	-6.479167	0	
29	N86G	0.234238	0	-6.479167	0	
30	N87B	-0.234238	0.166667	-6.479167	0	
31	N88C	-0.234238	0	-6.479167	0	
32	N32	-1.190785	0	0.6875	0	
33	N33	-1.21899	0	3.638648	0	
34	N34	-3.647375	0.166667	-0.567439	0	
35	N35	-1.332271	0.166667	3.442439	0	
36	N36	-2.489823	0	1.4375	0	
37	N37	-5.683292	0	3.28125	0	
38	N39	-3.647375	0	-0.567439	0	
39	N40	-1.332271	0	3.442439	0	
40	N41	-3.760656	0	-0.763648	0	
41	N42	-2.40649	0	1.581838	0	
42	N43	-2.573156	0	1.293162	0	
43	N44	-1.408433	0	3.748023	0	
44	N45	-3.950099	0	-0.654273	0	
45	N46	-4.033433	0	-0.509935	0	
46	N47	-5.885115	0	2.737729	0	
47	N48	-1.575099	0	3.748023	0	
48	N49	-5.3135	0	3.727794	0	
49	N50	-4.159728	0	-0.582852	0	
50	N51	-1.575099	0	3.893857	0	
51	N52	-5.425479	0	3.727794	0	
52	N53	-5.941104	0	2.834706	0	
53	N54	-6.028929	0	2.654698	0	
54	N55	-5.3135	0	3.893857	0	
55	N56	-5.611123	0	3.239583	0	
56	N57	-5.728242	0.166667	3.036728	0	
57	N58	-5.728242	0	3.036728	0	
58	N59	-5.494004	0.166667	3.442439	0	
59	N60	-5.494004	0	3.442439	0	
60	N61	1.190785	0	0.6875	0	
61	N62	3.760656	0	-0.763648	0	
62	N63	1.332271	0.166667	3.442439	0	
63	N64	3.647375	0.166667	-0.567439	0	
64	N65	2.489823	0	1.4375	0	
65	N66	5.683292	0	3.28125	0	
66	N68	1.332271	0	3.442439	0	
67	N69	3.647375	0	-0.567439	0	
68	N70	1.21899	0	3.638648	0	
69	N71	2.573156	0	1.293162	0	
70	N72	2.40649	0	1.581838	0	
71	N73	3.950099	0	-0.654273	0	

Joint Coordinates and Temperatures (Continued)

	Label	X [ft]	Y [ft]	Z [ft]	Temp [F]	Detach From Diap...
72	N74	1.408433	0	3.748023	0	
73	N75	1.575099	0	3.748023	0	
74	N76	5.3135	0	3.727794	0	
75	N77	4.033433	0	-0.509935	0	
76	N78	5.885115	0	2.737729	0	
77	N79	1.575099	0	3.893857	0	
78	N80	4.159728	0	-0.582852	0	
79	N81	5.941104	0	2.834706	0	
80	N82	5.425479	0	3.727794	0	
81	N83	5.3135	0	3.893857	0	
82	N84	6.028929	0	2.654698	0	
83	N85	5.611123	0	3.239583	0	
84	N86	5.494004	0.166667	3.442439	0	
85	N87	5.494004	0	3.442439	0	
86	N88	5.728242	0.166667	3.036728	0	
87	N89	5.728242	0	3.036728	0	
88	N88B	0.247179	0	-7.359587	0	
89	N89A	6.497179	0	3.46573	0	
90	N91	-6.497179	0	3.46573	0	
91	N92	-0.247179	0	-7.359587	0	
92	N98	7.083333	3.833333	3.893857	0	
93	N99	-6.583333	3.833333	3.893857	0	
94	N95	-0.169488	3.833333	-8.081275	0	
95	N96	6.663845	3.833333	3.754406	0	
96	N98A	-6.913845	3.833333	4.187418	0	
97	N99A	-0.080512	3.833333	-7.648262	0	
98	N98B	5.916667	0	3.893857	0	
99	N99B	3.833333	0	3.893857	0	
100	N100	0	0	3.893857	0	
101	N101A	-3.916667	0	3.893857	0	
102	N102A	-5.916667	0	3.893857	0	
103	N103	5.916667	3.833333	3.893857	0	
104	N104	3.833333	3.833333	3.893857	0	
105	N105A	0	3.833333	3.893857	0	
106	N106	-3.916667	3.833333	3.893857	0	
107	N107	-5.916667	3.833333	3.893857	0	
108	N108	5.916667	0	4.143857	0	
109	N109	3.833333	0	4.143857	0	
110	N110	0	0	4.143857	0	
111	N111	-3.916667	0	4.143857	0	
112	N112	-5.916667	0	4.143857	0	
113	N113	5.916667	3.833333	4.143857	0	
114	N114	3.833333	3.833333	4.143857	0	
115	N115	0	3.833333	4.143857	0	
116	N116	-3.916667	3.833333	4.143857	0	
117	N117	-5.916667	3.833333	4.143857	0	
118	N118	5.916667	4.333333	4.143857	0	
119	N119	3.833333	4.333333	4.143857	0	
120	N120	-3.916667	4.333333	4.143857	0	
121	N121	-5.916667	4.333333	4.143857	0	
122	N122	5.916667	-1.666667	4.143857	0	
123	N123	3.833333	-1.666667	4.143857	0	
124	N124	-3.916667	-1.666667	4.143857	0	
125	N125	-5.916667	-1.666667	4.143857	0	
126	N126	0	4.916667	4.143857	0	
127	N127	0	-7.583333	4.143857	0	
128	N129	0.413845	0	-7.070912	0	

Joint Coordinates and Temperatures (Continued)

	Label	X [ft]	Y [ft]	Z [ft]	Temp [F]	Detach From Diap...
129	N130	1.455512	0	-5.266692	0	
130	N131A	3.372179	0	-1.946928	0	
131	N132	5.330512	0	1.445005	0	
132	N133	6.330512	0	3.177055	0	
133	N134	0.413845	3.833333	-7.070912	0	
134	N135A	1.455512	3.833333	-5.266692	0	
135	N136	3.372179	3.833333	-1.946928	0	
136	N137	5.330512	3.833333	1.445005	0	
137	N138	6.330512	3.833333	3.177055	0	
138	N139	0.630352	0	-7.195912	0	
139	N140	1.672018	0	-5.391692	0	
140	N141	3.588685	0	-2.071928	0	
141	N142	5.547018	0	1.320005	0	
142	N143	6.547018	0	3.052055	0	
143	N144A	0.630352	3.833333	-7.195912	0	
144	N145	1.672018	3.833333	-5.391692	0	
145	N146	3.588685	3.833333	-2.071928	0	
146	N147	5.547018	3.833333	1.320005	0	
147	N148A	6.547018	3.833333	3.052055	0	
148	N149	0.630352	4.333333	-7.195912	0	
149	N150	1.672018	4.333333	-5.391692	0	
150	N151	5.547018	4.333333	1.320005	0	
151	N152	6.547018	4.333333	3.052055	0	
152	N153	0.630352	-1.666667	-7.195912	0	
153	N154	1.672018	-1.666667	-5.391692	0	
154	N155	5.547018	-1.666667	1.320005	0	
155	N156	6.547018	-1.666667	3.052055	0	
156	N157	3.588685	4.916667	-2.071928	0	
157	N158	3.588685	-7.583333	-2.071928	0	
158	N160	-6.330512	0	3.177055	0	
159	N161	-5.288845	0	1.372836	0	
160	N162	-3.372179	0	-1.946928	0	
161	N163	-1.413845	0	-5.338861	0	
162	N164	-0.413845	0	-7.070912	0	
163	N165	-6.330512	3.833333	3.177055	0	
164	N166	-5.288845	3.833333	1.372836	0	
165	N167	-3.372179	3.833333	-1.946928	0	
166	N168	-1.413845	3.833333	-5.338861	0	
167	N169	-0.413845	3.833333	-7.070912	0	
168	N170	-6.547018	0	3.052055	0	
169	N171	-5.505352	0	1.247836	0	
170	N172	-3.588685	0	-2.071928	0	
171	N173	-1.630352	0	-5.463861	0	
172	N174	-0.630352	0	-7.195912	0	
173	N175	-6.547018	3.833333	3.052055	0	
174	N176	-5.505352	3.833333	1.247836	0	
175	N177	-3.588685	3.833333	-2.071928	0	
176	N178	-1.630352	3.833333	-5.463861	0	
177	N179	-0.630352	3.833333	-7.195912	0	
178	N180	-6.547018	4.333333	3.052055	0	
179	N181	-5.505352	4.333333	1.247836	0	
180	N182	-1.630352	4.333333	-5.463861	0	
181	N183	-0.630352	4.333333	-7.195912	0	
182	N184	-6.547018	-1.666667	3.052055	0	
183	N185	-5.505352	-1.666667	1.247836	0	
184	N186	-1.630352	-1.666667	-5.463861	0	
185	N187	-0.630352	-1.666667	-7.195912	0	

Joint Coordinates and Temperatures (Continued)

	Label	X [ft]	Y [ft]	Z [ft]	Temp [F]	Detach From Diap...
186	N188	-3.588685	4.916667	-2.071928	0	
187	N189	-3.588685	-7.583333	-2.071928	0	
188	N204	-0.894987	3.833333	-6.23755	0	
189	N201B	-0.894987	3.933333	-6.23755	0	
190	N204A	0.894987	3.833333	-6.23755	0	
191	N201C	0.894987	3.933333	-6.23755	0	
192	N205	-4.954383	3.833333	3.893857	0	
193	N206	-4.954383	3.933333	3.893857	0	
194	N207	-5.84937	3.833333	2.343693	0	
195	N208	-5.84937	3.933333	2.343693	0	
196	N212	5.84937	3.833333	2.343693	0	
197	N213	5.84937	3.933333	2.343693	0	
198	N214	4.954383	3.833333	3.893857	0	
199	N215	4.954383	3.933333	3.893857	0	
200	N206A	5.916667	0.583333	4.143857	0	
201	N207A	5.916667	2.583333	4.143857	0	
202	N208A	5.916667	-1.416667	4.143857	0	
203	N209	0	-0.083333	4.143857	0	
204	N210A	0	1.166667	4.143857	0	
205	N211A	0	3.166667	4.143857	0	
206	N212A	0	-0.833333	4.143857	0	
207	N207B	0	0	-2.375	0	
208	N208B	.25	0	-2.375	0	
209	N209A	.25	-.5	-2.375	0	
210	N210	.25	3.5	-2.375	0	

Hot Rolled Steel Section Sets

	Label	Shape	Type	Design List	Material	Design R...	A [in2]	Iyy [in4]	Izz [in4]	J [in4]
1	Face Horizontal	PIPE_3.0	Beam	Pipe	A53 Gr.B	Typical	2.07	2.85	2.85	5.69
2	Standoff Horizontal	HSS4X4X4	Beam	SquareTube	A500 Gr.B R...	Typical	3.37	7.8	7.8	12.8
3	Corner Plate	PL3/8x6	Beam	BAR	A36 Gr.36	Typical	2.25	.026	6.75	.101
4	Platform Crossme...	HSS4X4X4	Beam	SquareTube	A500 Gr.B R...	Typical	3.37	7.8	7.8	12.8
5	Grating Support	L2x2x2	Beam	Pipe	A53 Gr.B	Typical	.491	.189	.189	.003
6	Mount Pipe	PIPE_2.0	Column	Pipe	A53 Gr.B	Typical	1.02	.627	.627	1.25
7	Cross Arm Plate	PL3/8x6	Column	RECT	A36 Gr.36	Typical	2.25	.026	6.75	.101
8	Support Rail	PIPE_2.0	Beam	Pipe	A53 Gr.B	Typical	1.02	.627	.627	1.25
9	Dual Mount Pipe	PIPE_2.5	Column	Pipe	A53 Gr.B	Typical	1.61	1.45	1.45	2.89

Hot Rolled Steel Properties

	Label	E [ksi]	G [ksi]	Nu	Therm (/1E..Density[k/ft...		Yield[ksi]	Ry	Fu[ksi]	Rt
1	A992	29000	11154	.3	.65	.49	50	1.1	65	1.1
2	A36 Gr.36	29000	11154	.3	.65	.49	36	1.5	58	1.2
3	A572 Gr.50	29000	11154	.3	.65	.49	50	1.1	65	1.1
4	A500 Gr.B RND	29000	11154	.3	.65	.527	42	1.4	58	1.3
5	A500 Gr.B Rect	29000	11154	.3	.65	.527	46	1.4	58	1.3
6	A53 Gr.B	29000	11154	.3	.65	.49	35	1.6	60	1.2
7	A1085	29000	11154	.3	.65	.49	50	1.4	65	1.3
8	Q235	29000	11154	.3	.65	.49	35	1.5	58	1.2

Member Primary Data

	Label	I Joint	J Joint	K Joint	Rotate(d...	Section/Shape	Type	Design List	Material	Design Rul...
1	M1	N1	N2			Face Horizontal	Beam	Pipe	A53 Gr.B	Typical
2	M4	N3	N27			Standoff Horizontal	Beam	SquareTube	A500 Gr...	Typical
3	M10	N101	N103A			Platform Crossmember	Beam	SquareTube	A500 Gr...	Typical
4	M43	N102	N5			Platform Crossmember	Beam	SquareTube	A500 Gr...	Typical
5	M46	N86C	N87A			Corner Plate	Beam	BAR	A36 Gr.36	Typical
6	M35A	N7	N30			RIGID	None	None	RIGID	Typical
7	M36A	N6	N29			RIGID	None	None	RIGID	Typical
8	M51B	N87C	N6			Grating Support	Beam	Pipe	A53 Gr.B	Typical
9	M52B	N7	N87B			Grating Support	Beam	Pipe	A53 Gr.B	Typical
10	M52	N87B	N88C			RIGID	None	None	RIGID	Typical
11	M58	N102	N24			RIGID	None	None	RIGID	Typical
12	M59	N24	N103A			RIGID	None	None	RIGID	Typical
13	M76	N101	N105			Cross Arm Plate	Column	RECT	A36 Gr.36	Typical
14	M77	N105	N131			Cross Arm Plate	Column	RECT	A36 Gr.36	Typical
15	M79	N131	N86A			RIGID	None	None	RIGID	Typical
16	M80	N87A	N135			Corner Plate	Beam	BAR	A36 Gr.36	Typical
17	M83	N135	N86D			RIGID	None	None	RIGID	Typical
18	M84	N5	N104A			Cross Arm Plate	Column	RECT	A36 Gr.36	Typical
19	M85	N104A	N144			Cross Arm Plate	Column	RECT	A36 Gr.36	Typical
20	M88	N144	N86B			RIGID	None	None	RIGID	Typical
21	M91	N86C	N148			Corner Plate	Beam	BAR	A36 Gr.36	Typical
22	M92	N148	N86E			RIGID	None	None	RIGID	Typical
23	M50	N88C	N88A			RIGID	None	None	RIGID	Typical
24	M51	N88A	N86G			RIGID	None	None	RIGID	Typical
25	M51A	N87C	N86G			RIGID	None	None	RIGID	Typical
26	M26	N32	N37			Standoff Horizontal	Beam	SquareTube	A500 Gr...	Typical
27	M27	N41	N43			Platform Crossmember	Beam	SquareTube	A500 Gr...	Typical
28	M28	N42	N33			Platform Crossmember	Beam	SquareTube	A500 Gr...	Typical
29	M29	N52	N53			Corner Plate	Beam	BAR	A36 Gr.36	Typical
30	M30	N35	N40			RIGID	None	None	RIGID	Typical
31	M31	N34	N39			RIGID	None	None	RIGID	Typical
32	M32	N57	N34			Grating Support	Beam	Pipe	A53 Gr.B	Typical
33	M33	N35	N59			Grating Support	Beam	Pipe	A53 Gr.B	Typical
34	M34	N59	N60			RIGID	None	None	RIGID	Typical
35	M35	N42	N36			RIGID	None	None	RIGID	Typical
36	M36	N36	N43			RIGID	None	None	RIGID	Typical
37	M37	N41	N45			Cross Arm Plate	Column	RECT	A36 Gr.36	Typical
38	M38	N45	N46			Cross Arm Plate	Column	RECT	A36 Gr.36	Typical
39	M39	N46	N50			RIGID	None	None	RIGID	Typical
40	M40	N53	N47			Corner Plate	Beam	BAR	A36 Gr.36	Typical
41	M41	N47	N54			RIGID	None	None	RIGID	Typical
42	M42	N33	N44			Cross Arm Plate	Column	RECT	A36 Gr.36	Typical
43	M43A	N44	N48			Cross Arm Plate	Column	RECT	A36 Gr.36	Typical
44	M44	N48	N51			RIGID	None	None	RIGID	Typical
45	M45	N52	N49			Corner Plate	Beam	BAR	A36 Gr.36	Typical
46	M46A	N49	N55			RIGID	None	None	RIGID	Typical
47	M47	N60	N56			RIGID	None	None	RIGID	Typical
48	M48	N56	N58			RIGID	None	None	RIGID	Typical
49	M49	N57	N58			RIGID	None	None	RIGID	Typical
50	M50A	N61	N66			Standoff Horizontal	Beam	SquareTube	A500 Gr...	Typical
51	M51C	N70	N72			Platform Crossmember	Beam	SquareTube	A500 Gr...	Typical
52	M52A	N71	N62			Platform Crossmember	Beam	SquareTube	A500 Gr...	Typical
53	M53	N81	N82			Corner Plate	Beam	BAR	A36 Gr.36	Typical
54	M54	N64	N69			RIGID	None	None	RIGID	Typical
55	M55	N63	N68			RIGID	None	None	RIGID	Typical
56	M56	N86	N63			Grating Support	Beam	Pipe	A53 Gr.B	Typical
57	M57	N64	N88			Grating Support	Beam	Pipe	A53 Gr.B	Typical

Member Primary Data (Continued)

	Label	I Joint	J Joint	K Joint	Rotate(d...	Section/Shape	Type	Design List	Material	Design Rul...
58	M58A	N88	N89			RIGID	None	None	RIGID	Typical
59	M59A	N71	N65			RIGID	None	None	RIGID	Typical
60	M60	N65	N72			RIGID	None	None	RIGID	Typical
61	M61	N70	N74			Cross Arm Plate	Column	RECT	A36 Gr.36	Typical
62	M62	N74	N75			Cross Arm Plate	Column	RECT	A36 Gr.36	Typical
63	M63	N75	N79			RIGID	None	None	RIGID	Typical
64	M64	N82	N76			Corner Plate	Beam	BAR	A36 Gr.36	Typical
65	M65	N76	N83			RIGID	None	None	RIGID	Typical
66	M66	N62	N73			Cross Arm Plate	Column	RECT	A36 Gr.36	Typical
67	M67	N73	N77			Cross Arm Plate	Column	RECT	A36 Gr.36	Typical
68	M68	N77	N80			RIGID	None	None	RIGID	Typical
69	M69	N81	N78			Corner Plate	Beam	BAR	A36 Gr.36	Typical
70	M70	N78	N84			RIGID	None	None	RIGID	Typical
71	M71	N89	N85			RIGID	None	None	RIGID	Typical
72	M72	N85	N87			RIGID	None	None	RIGID	Typical
73	M73	N86	N87			RIGID	None	None	RIGID	Typical
74	M74	N88B	N89A			Face Horizontal	Beam	Pipe	A53 Gr.B	Typical
75	M75	N91	N92			Face Horizontal	Beam	Pipe	A53 Gr.B	Typical
76	M79B	N98	N99			Support Rail	Beam	Pipe	A53 Gr.B	Typical
77	M77A	N95	N96			Support Rail	Beam	Pipe	A53 Gr.B	Typical
78	M78	N98A	N99A			Support Rail	Beam	Pipe	A53 Gr.B	Typical
79	M79A	N117	N107			RIGID	None	None	RIGID	Typical
80	M80A	N112	N102A			RIGID	None	None	RIGID	Typical
81	M81	N111	N101A			RIGID	None	None	RIGID	Typical
82	M82	N116	N106			RIGID	None	None	RIGID	Typical
83	M83A	N115	N105A			RIGID	None	None	RIGID	Typical
84	M84A	N110	N100			RIGID	None	None	RIGID	Typical
85	M85A	N114	N104			RIGID	None	None	RIGID	Typical
86	M86	N109	N99B			RIGID	None	None	RIGID	Typical
87	M87	N113	N103			RIGID	None	None	RIGID	Typical
88	M88A	N108	N98B			RIGID	None	None	RIGID	Typical
89	MP5A	N121	N125			Mount Pipe	Column	Pipe	A53 Gr.B	Typical
90	MP4A	N120	N124			Mount Pipe	Column	Pipe	A53 Gr.B	Typical
91	MP2A	N119	N123			Mount Pipe	Column	Pipe	A53 Gr.B	Typical
92	MP1A	N118	N122			Mount Pipe	Column	Pipe	A53 Gr.B	Typical
93	MP3A	N126	N127			Dual Mount Pipe	Column	Pipe	A53 Gr.B	Typical
94	M94	N148A	N138			RIGID	None	None	RIGID	Typical
95	M95	N143	N133			RIGID	None	None	RIGID	Typical
96	M96	N142	N132			RIGID	None	None	RIGID	Typical
97	M97	N147	N137			RIGID	None	None	RIGID	Typical
98	M98	N146	N136			RIGID	None	None	RIGID	Typical
99	M99	N141	N131A			RIGID	None	None	RIGID	Typical
100	M100	N145	N135A			RIGID	None	None	RIGID	Typical
101	M101	N140	N130			RIGID	None	None	RIGID	Typical
102	M102	N144A	N134			RIGID	None	None	RIGID	Typical
103	M103	N139	N129			RIGID	None	None	RIGID	Typical
104	MP5C	N152	N156			Mount Pipe	Column	Pipe	A53 Gr.B	Typical
105	MP4C	N151	N155			Mount Pipe	Column	Pipe	A53 Gr.B	Typical
106	MP2C	N150	N154			Mount Pipe	Column	Pipe	A53 Gr.B	Typical
107	MP1C	N149	N153			Mount Pipe	Column	Pipe	A53 Gr.B	Typical
108	MP3C	N157	N158			Dual Mount Pipe	Column	Pipe	A53 Gr.B	Typical
109	M109	N179	N169			RIGID	None	None	RIGID	Typical
110	M110	N174	N164			RIGID	None	None	RIGID	Typical
111	M111	N173	N163			RIGID	None	None	RIGID	Typical
112	M112	N178	N168			RIGID	None	None	RIGID	Typical
113	M113	N177	N167			RIGID	None	None	RIGID	Typical
114	M114	N172	N162			RIGID	None	None	RIGID	Typical

Member Primary Data (Continued)

	Label	I Joint	J Joint	K Joint	Rotate(d...	Section/Shape	Type	Design List	Material	Design Rul...
115	M115	N176	N166			RIGID	None	None	RIGID	Typical
116	M116	N171	N161			RIGID	None	None	RIGID	Typical
117	M117	N175	N165			RIGID	None	None	RIGID	Typical
118	M118	N170	N160			RIGID	None	None	RIGID	Typical
119	MP5B	N183	N187			Mount Pipe	Column	Pipe	A53 Gr.B	Typical
120	MP4B	N182	N186			Mount Pipe	Column	Pipe	A53 Gr.B	Typical
121	MP2B	N181	N185			Mount Pipe	Column	Pipe	A53 Gr.B	Typical
122	MP1B	N180	N184			Mount Pipe	Column	Pipe	A53 Gr.B	Typical
123	MP3B	N188	N189			Dual Mount Pipe	Column	Pipe	A53 Gr.B	Typical
124	M130	N201B	N201C			Mount Pipe	Column	Pipe	A53 Gr.B	Typical
125	M130A	N204	N201B			RIGID	None	None	RIGID	Typical
126	M130B	N204A	N201C			RIGID	None	None	RIGID	Typical
127	M131	N206	N208			Mount Pipe	Column	Pipe	A53 Gr.B	Typical
128	M132	N205	N206			RIGID	None	None	RIGID	Typical
129	M133	N207	N208			RIGID	None	None	RIGID	Typical
130	M134	N213	N215			Mount Pipe	Column	Pipe	A53 Gr.B	Typical
131	M135	N212	N213			RIGID	None	None	RIGID	Typical
132	M136	N214	N215			RIGID	None	None	RIGID	Typical
133	M133A	N207B	N208B			RIGID	None	None	RIGID	Typical
134	OVP	N210	N209A			Mount Pipe	Column	Pipe	A53 Gr.B	Typical

Member Advanced Data

	Label	I Release	J Release	I Offset[in]	J Offset[in]	T/C Only	Physical	Defl Rat...	Analysis ...	Inactive	Seismic...
1	M1						Yes	Default			None
2	M4						Yes				None
3	M10						Yes	Default			None
4	M43						Yes	Default			None
5	M46						Yes	Default			None
6	M35A						Yes	** NA **			None
7	M36A						Yes	** NA **			None
8	M51B	OOOOOX	OOOOOX				Yes	Default			None
9	M52B	OOOOOX	OOOOOX				Yes	Default			None
10	M52						Yes	** NA **			None
11	M58						Yes	** NA **			None
12	M59						Yes	** NA **			None
13	M76						Yes	** NA **			None
14	M77						Yes	** NA **			None
15	M79		BenPIN				Yes	** NA **			None
16	M80						Yes				None
17	M83		BenPIN				Yes	** NA **			None
18	M84						Yes	** NA **			None
19	M85						Yes	** NA **			None
20	M88		BenPIN				Yes	** NA **			None
21	M91						Yes				None
22	M92		BenPIN				Yes	** NA **			None
23	M50						Yes	** NA **			None
24	M51						Yes	** NA **			None
25	M51A						Yes	** NA **			None
26	M26						Yes				None
27	M27						Yes	Default			None
28	M28						Yes	Default			None
29	M29						Yes	Default			None
30	M30						Yes	** NA **			None
31	M31						Yes	** NA **			None
32	M32	OOOOOX	OOOOOX				Yes	Default			None

Member Advanced Data (Continued)

	Label	I Release	J Release	I Offset[in]	J Offset[in]	T/C Only	Physical	Defl Rat...	Analysis ...	Inactive	Seismic...
33	M33	OOOOOX	OOOOOX				Yes	Default			None
34	M34						Yes	** NA **			None
35	M35						Yes	** NA **			None
36	M36						Yes	** NA **			None
37	M37						Yes	** NA **			None
38	M38						Yes	** NA **			None
39	M39		BenPIN				Yes	** NA **			None
40	M40						Yes				None
41	M41		BenPIN				Yes	** NA **			None
42	M42						Yes	** NA **			None
43	M43A						Yes	** NA **			None
44	M44		BenPIN				Yes	** NA **			None
45	M45						Yes				None
46	M46A		BenPIN				Yes	** NA **			None
47	M47						Yes	** NA **			None
48	M48						Yes	** NA **			None
49	M49						Yes	** NA **			None
50	M50A						Yes				None
51	M51C						Yes	Default			None
52	M52A						Yes	Default			None
53	M53						Yes	Default			None
54	M54						Yes	** NA **			None
55	M55						Yes	** NA **			None
56	M56	OOOOOX	OOOOOX				Yes	Default			None
57	M57	OOOOOX	OOOOOX				Yes	Default			None
58	M58A						Yes	** NA **			None
59	M59A						Yes	** NA **			None
60	M60						Yes	** NA **			None
61	M61						Yes	** NA **			None
62	M62						Yes	** NA **			None
63	M63		BenPIN				Yes	** NA **			None
64	M64						Yes				None
65	M65		BenPIN				Yes	** NA **			None
66	M66						Yes	** NA **			None
67	M67						Yes	** NA **			None
68	M68		BenPIN				Yes	** NA **			None
69	M69						Yes				None
70	M70		BenPIN				Yes	** NA **			None
71	M71						Yes	** NA **			None
72	M72						Yes	** NA **			None
73	M73						Yes	** NA **			None
74	M74						Yes	Default			None
75	M75						Yes	Default			None
76	M79B						Yes	Default			None
77	M77A						Yes	Default			None
78	M78						Yes	Default			None
79	M79A						Yes	** NA **			None
80	M80A						Yes	** NA **			None
81	M81						Yes	** NA **			None
82	M82						Yes	** NA **			None
83	M83A						Yes	** NA **			None
84	M84A						Yes	** NA **			None
85	M85A						Yes	** NA **			None
86	M86						Yes	** NA **			None
87	M87						Yes	** NA **			None
88	M88A						Yes	** NA **			None
89	MP5A						Yes	** NA **			None

Member Advanced Data (Continued)

	Label	I Release	J Release	I Offset[in]	J Offset[in]	T/C Only	Physical	Defl Rat...	Analysis ...	Inactive	Seismic...
90	MP4A						Yes	** NA **			None
91	MP2A						Yes	** NA **			None
92	MP1A						Yes	** NA **			None
93	MP3A						Yes	** NA **			None
94	M94						Yes	** NA **			None
95	M95						Yes	** NA **			None
96	M96						Yes	** NA **			None
97	M97						Yes	** NA **			None
98	M98						Yes	** NA **			None
99	M99						Yes	** NA **			None
100	M100						Yes	** NA **			None
101	M101						Yes	** NA **			None
102	M102						Yes	** NA **			None
103	M103						Yes	** NA **			None
104	MP5C						Yes	** NA **			None
105	MP4C						Yes	** NA **			None
106	MP2C						Yes	** NA **			None
107	MP1C						Yes	** NA **			None
108	MP3C						Yes	** NA **			None
109	M109						Yes	** NA **			None
110	M110						Yes	** NA **			None
111	M111						Yes	** NA **			None
112	M112						Yes	** NA **			None
113	M113						Yes	** NA **			None
114	M114						Yes	** NA **			None
115	M115						Yes	** NA **			None
116	M116						Yes	** NA **			None
117	M117						Yes	** NA **			None
118	M118						Yes	** NA **			None
119	MP5B						Yes	** NA **			None
120	MP4B						Yes	** NA **			None
121	MP2B						Yes	** NA **			None
122	MP1B						Yes	** NA **			None
123	MP3B						Yes	** NA **			None
124	M130	BenPIN	BenPIN				Yes	** NA **			None
125	M130A						Yes	** NA **			None
126	M130B						Yes	** NA **			None
127	M131	BenPIN	BenPIN				Yes	** NA **			None
128	M132						Yes	** NA **			None
129	M133						Yes	** NA **			None
130	M134	BenPIN	BenPIN				Yes	** NA **			None
131	M135						Yes	** NA **			None
132	M136						Yes	** NA **			None
133	M133A						Yes	** NA **			None
134	OVP						Yes	** NA **			None

Member Point Loads (BLC 1 : Antenna D)

	Member Label	Direction	Magnitude[lb,k-ft]	Location[ft,%]
1	MP2A	Y	-43.55	.75
2	MP2A	My	-.033	.75
3	MP2A	Mz	0	.75
4	MP2A	Y	-43.55	2.75
5	MP2A	My	-.033	2.75
6	MP2A	Mz	0	2.75
7	MP2B	Y	-43.55	.75

Member Point Loads (BLC 1 : Antenna D) (Continued)

	Member Label	Direction	Magnitude[lb,k-ft]	Location[ft,%]
8	MP2B	My	.016	.75
9	MP2B	Mz	-.028	.75
10	MP2B	Y	-43.55	2.75
11	MP2B	My	.016	2.75
12	MP2B	Mz	-.028	2.75
13	MP2C	Y	-43.55	.75
14	MP2C	My	.016	.75
15	MP2C	Mz	.028	.75
16	MP2C	Y	-43.55	2.75
17	MP2C	My	.016	2.75
18	MP2C	Mz	.028	2.75
19	MP3A	Y	-10.4	1.5
20	MP3A	My	.005	1.5
21	MP3A	Mz	0	1.5
22	MP3B	Y	-10.4	1.5
23	MP3B	My	.005	1.5
24	MP3B	Mz	0	1.5
25	MP3C	Y	-10.4	1.5
26	MP3C	My	.005	1.5
27	MP3C	Mz	0	1.5
28	OVP	Y	-32	1
29	OVP	My	0	1
30	OVP	Mz	0	1
31	MP4A	Y	-84.4	3
32	MP4A	My	.042	3
33	MP4A	Mz	0	3
34	MP4B	Y	-84.4	3
35	MP4B	My	.042	3
36	MP4B	Mz	0	3
37	MP4C	Y	-84.4	3
38	MP4C	My	.042	3
39	MP4C	Mz	0	3
40	MP3A	Y	-70.3	3
41	MP3A	My	.035	3
42	MP3A	Mz	0	3
43	MP3B	Y	-70.3	3
44	MP3B	My	.035	3
45	MP3B	Mz	0	3
46	MP3C	Y	-70.3	3
47	MP3C	My	.035	3
48	MP3C	Mz	0	3
49	MP1A	Y	-13.5	1.75
50	MP1A	My	-.01	1.75
51	MP1A	Mz	0	1.75
52	MP1A	Y	-13.5	5.75
53	MP1A	My	-.01	5.75
54	MP1A	Mz	0	5.75
55	MP5A	Y	-13.5	1.75
56	MP5A	My	-.01	1.75
57	MP5A	Mz	0	1.75
58	MP5A	Y	-13.5	5.75
59	MP5A	My	-.01	5.75
60	MP5A	Mz	0	5.75
61	MP3A	Y	-31.65	1.75
62	MP3A	My	-.024	1.75
63	MP3A	Mz	.021	1.75
64	MP3A	Y	-31.65	5.75

Member Point Loads (BLC 1 : Antenna D) (Continued)

	Member Label	Direction	Magnitude[lb,k-ft]	Location[ft,%]
65	MP3A	My	-.024	5.75
66	MP3A	Mz	.021	5.75
67	MP3B	Y	-31.65	1.75
68	MP3B	My	-.006	1.75
69	MP3B	Mz	-.031	1.75
70	MP3B	Y	-31.65	5.75
71	MP3B	My	-.006	5.75
72	MP3B	Mz	-.031	5.75
73	MP3C	Y	-31.65	1.75
74	MP3C	My	.03	1.75
75	MP3C	Mz	.01	1.75
76	MP3C	Y	-31.65	5.75
77	MP3C	My	.03	5.75
78	MP3C	Mz	.01	5.75
79	MP3A	Y	-31.65	1.75
80	MP3A	My	-.024	1.75
81	MP3A	Mz	-.021	1.75
82	MP3A	Y	-31.65	5.75
83	MP3A	My	-.024	5.75
84	MP3A	Mz	-.021	5.75
85	MP3B	Y	-31.65	1.75
86	MP3B	My	.03	1.75
87	MP3B	Mz	-.01	1.75
88	MP3B	Y	-31.65	5.75
89	MP3B	My	.03	5.75
90	MP3B	Mz	-.01	5.75
91	MP3C	Y	-31.65	1.75
92	MP3C	My	-.006	1.75
93	MP3C	Mz	.031	1.75
94	MP3C	Y	-31.65	5.75
95	MP3C	My	-.006	5.75
96	MP3C	Mz	.031	5.75
97	MP1C	Y	-6	1.25
98	MP1C	My	.002	1.25
99	MP1C	Mz	.004	1.25
100	MP1C	Y	-6	5.25
101	MP1C	My	.002	5.25
102	MP1C	Mz	.004	5.25
103	MP5C	Y	-6	1.25
104	MP5C	My	.002	1.25
105	MP5C	Mz	.004	1.25
106	MP5C	Y	-6	5.25
107	MP5C	My	.002	5.25
108	MP5C	Mz	.004	5.25
109	MP1B	Y	-13.5	1.75
110	MP1B	My	.005	1.75
111	MP1B	Mz	-.009	1.75
112	MP1B	Y	-13.5	5.75
113	MP1B	My	.005	5.75
114	MP1B	Mz	-.009	5.75
115	MP5B	Y	-13.5	1.75
116	MP5B	My	.005	1.75
117	MP5B	Mz	-.009	1.75
118	MP5B	Y	-13.5	5.75
119	MP5B	My	.005	5.75
120	MP5B	Mz	-.009	5.75

Member Point Loads (BLC 2 : Antenna Di)

	Member Label	Direction	Magnitude[lb,k-ft]	Location[ft,%]
1	MP2A	Y	-36.184	.75
2	MP2A	My	-.027	.75
3	MP2A	Mz	0	.75
4	MP2A	Y	-36.184	2.75
5	MP2A	My	-.027	2.75
6	MP2A	Mz	0	2.75
7	MP2B	Y	-36.184	.75
8	MP2B	My	.014	.75
9	MP2B	Mz	-.024	.75
10	MP2B	Y	-36.184	2.75
11	MP2B	My	.014	2.75
12	MP2B	Mz	-.024	2.75
13	MP2C	Y	-36.184	.75
14	MP2C	My	.014	.75
15	MP2C	Mz	.024	.75
16	MP2C	Y	-36.184	2.75
17	MP2C	My	.014	2.75
18	MP2C	Mz	.024	2.75
19	MP3A	Y	-10.937	1.5
20	MP3A	My	.005	1.5
21	MP3A	Mz	0	1.5
22	MP3B	Y	-10.937	1.5
23	MP3B	My	.005	1.5
24	MP3B	Mz	0	1.5
25	MP3C	Y	-10.937	1.5
26	MP3C	My	.005	1.5
27	MP3C	Mz	0	1.5
28	OVP	Y	-89.297	1
29	OVP	My	0	1
30	OVP	Mz	0	1
31	MP4A	Y	-45.63	3
32	MP4A	My	.023	3
33	MP4A	Mz	0	3
34	MP4B	Y	-45.63	3
35	MP4B	My	.023	3
36	MP4B	Mz	0	3
37	MP4C	Y	-45.63	3
38	MP4C	My	.023	3
39	MP4C	Mz	0	3
40	MP3A	Y	-41.04	3
41	MP3A	My	.021	3
42	MP3A	Mz	0	3
43	MP3B	Y	-41.04	3
44	MP3B	My	.021	3
45	MP3B	Mz	0	3
46	MP3C	Y	-41.04	3
47	MP3C	My	.021	3
48	MP3C	Mz	0	3
49	MP1A	Y	-90.926	1.75
50	MP1A	My	-.068	1.75
51	MP1A	Mz	0	1.75
52	MP1A	Y	-90.926	5.75
53	MP1A	My	-.068	5.75
54	MP1A	Mz	0	5.75
55	MP5A	Y	-90.926	1.75
56	MP5A	My	-.068	1.75
57	MP5A	Mz	0	1.75

Member Point Loads (BLC 2 : Antenna Di) (Continued)

	Member Label	Direction	Magnitude[lb,k-ft]	Location[ft,%]
58	MP5A	Y	-90.926	5.75
59	MP5A	My	-.068	5.75
60	MP5A	Mz	0	5.75
61	MP3A	Y	-71.048	1.75
62	MP3A	My	-.053	1.75
63	MP3A	Mz	.047	1.75
64	MP3A	Y	-71.048	5.75
65	MP3A	My	-.053	5.75
66	MP3A	Mz	.047	5.75
67	MP3B	Y	-71.048	1.75
68	MP3B	My	-.014	1.75
69	MP3B	Mz	-.07	1.75
70	MP3B	Y	-71.048	5.75
71	MP3B	My	-.014	5.75
72	MP3B	Mz	-.07	5.75
73	MP3C	Y	-71.048	1.75
74	MP3C	My	.068	1.75
75	MP3C	Mz	.022	1.75
76	MP3C	Y	-71.048	5.75
77	MP3C	My	.068	5.75
78	MP3C	Mz	.022	5.75
79	MP3A	Y	-71.048	1.75
80	MP3A	My	-.053	1.75
81	MP3A	Mz	-.047	1.75
82	MP3A	Y	-71.048	5.75
83	MP3A	My	-.053	5.75
84	MP3A	Mz	-.047	5.75
85	MP3B	Y	-71.048	1.75
86	MP3B	My	.068	1.75
87	MP3B	Mz	-.022	1.75
88	MP3B	Y	-71.048	5.75
89	MP3B	My	.068	5.75
90	MP3B	Mz	-.022	5.75
91	MP3C	Y	-71.048	1.75
92	MP3C	My	-.014	1.75
93	MP3C	Mz	.07	1.75
94	MP3C	Y	-71.048	5.75
95	MP3C	My	-.014	5.75
96	MP3C	Mz	.07	5.75
97	MP1C	Y	-40.943	1.25
98	MP1C	My	.015	1.25
99	MP1C	Mz	.027	1.25
100	MP1C	Y	-40.943	5.25
101	MP1C	My	.015	5.25
102	MP1C	Mz	.027	5.25
103	MP5C	Y	-40.943	1.25
104	MP5C	My	.015	1.25
105	MP5C	Mz	.027	1.25
106	MP5C	Y	-40.943	5.25
107	MP5C	My	.015	5.25
108	MP5C	Mz	.027	5.25
109	MP1B	Y	-90.926	1.75
110	MP1B	My	.034	1.75
111	MP1B	Mz	-.059	1.75
112	MP1B	Y	-90.926	5.75
113	MP1B	My	.034	5.75
114	MP1B	Mz	-.059	5.75

Member Point Loads (BLC 2 : Antenna Di) (Continued)

	Member Label	Direction	Magnitude[lb,k-ft]	Location[ft,%]
115	MP5B	Y	-90.926	1.75
116	MP5B	My	.034	1.75
117	MP5B	Mz	-.059	1.75
118	MP5B	Y	-90.926	5.75
119	MP5B	My	.034	5.75
120	MP5B	Mz	-.059	5.75

Member Point Loads (BLC 3 : Antenna Wo (0 Deg))

	Member Label	Direction	Magnitude[lb,k-ft]	Location[ft,%]
1	MP2A	X	0	.75
2	MP2A	Z	-78.226	.75
3	MP2A	Mx	0	.75
4	MP2A	X	0	2.75
5	MP2A	Z	-78.226	2.75
6	MP2A	Mx	0	2.75
7	MP2B	X	0	.75
8	MP2B	Z	-42.525	.75
9	MP2B	Mx	.028	.75
10	MP2B	X	0	2.75
11	MP2B	Z	-42.525	2.75
12	MP2B	Mx	.028	2.75
13	MP2C	X	0	.75
14	MP2C	Z	-42.525	.75
15	MP2C	Mx	-.028	.75
16	MP2C	X	0	2.75
17	MP2C	Z	-42.525	2.75
18	MP2C	Mx	-.028	2.75
19	MP3A	X	0	1.5
20	MP3A	Z	-12.316	1.5
21	MP3A	Mx	0	1.5
22	MP3B	X	0	1.5
23	MP3B	Z	-12.316	1.5
24	MP3B	Mx	0	1.5
25	MP3C	X	0	1.5
26	MP3C	Z	-12.316	1.5
27	MP3C	Mx	0	1.5
28	OVP	X	0	1
29	OVP	Z	-127.137	1
30	OVP	Mx	0	1
31	MP4A	X	0	3
32	MP4A	Z	-62.248	3
33	MP4A	Mx	0	3
34	MP4B	X	0	3
35	MP4B	Z	-62.248	3
36	MP4B	Mx	0	3
37	MP4C	X	0	3
38	MP4C	Z	-62.248	3
39	MP4C	Mx	0	3
40	MP3A	X	0	3
41	MP3A	Z	-62.248	3
42	MP3A	Mx	0	3
43	MP3B	X	0	3
44	MP3B	Z	-62.248	3
45	MP3B	Mx	0	3
46	MP3C	X	0	3
47	MP3C	Z	-62.248	3

Member Point Loads (BLC 3 : Antenna Wo (0 Deg)) (Continued)

	Member Label	Direction	Magnitude[lb,k-ft]	Location[ft,%]
48	MP3C	Mx	0	3
49	MP1A	X	0	1.75
50	MP1A	Z	-162.443	1.75
51	MP1A	Mx	0	1.75
52	MP1A	X	0	5.75
53	MP1A	Z	-162.443	5.75
54	MP1A	Mx	0	5.75
55	MP5A	X	0	1.75
56	MP5A	Z	-162.443	1.75
57	MP5A	Mx	0	1.75
58	MP5A	X	0	5.75
59	MP5A	Z	-162.443	5.75
60	MP5A	Mx	0	5.75
61	MP3A	X	0	1.75
62	MP3A	Z	-151.624	1.75
63	MP3A	Mx	-.101	1.75
64	MP3A	X	0	5.75
65	MP3A	Z	-151.624	5.75
66	MP3A	Mx	-.101	5.75
67	MP3B	X	0	1.75
68	MP3B	Z	-112.595	1.75
69	MP3B	Mx	.111	1.75
70	MP3B	X	0	5.75
71	MP3B	Z	-112.595	5.75
72	MP3B	Mx	.111	5.75
73	MP3C	X	0	1.75
74	MP3C	Z	-112.595	1.75
75	MP3C	Mx	-.036	1.75
76	MP3C	X	0	5.75
77	MP3C	Z	-112.595	5.75
78	MP3C	Mx	-.036	5.75
79	MP3A	X	0	1.75
80	MP3A	Z	-151.624	1.75
81	MP3A	Mx	.101	1.75
82	MP3A	X	0	5.75
83	MP3A	Z	-151.624	5.75
84	MP3A	Mx	.101	5.75
85	MP3B	X	0	1.75
86	MP3B	Z	-112.595	1.75
87	MP3B	Mx	.036	1.75
88	MP3B	X	0	5.75
89	MP3B	Z	-112.595	5.75
90	MP3B	Mx	.036	5.75
91	MP3C	X	0	1.75
92	MP3C	Z	-112.595	1.75
93	MP3C	Mx	-.111	1.75
94	MP3C	X	0	5.75
95	MP3C	Z	-112.595	5.75
96	MP3C	Mx	-.111	5.75
97	MP1C	X	0	1.25
98	MP1C	Z	-78.253	1.25
99	MP1C	Mx	-.051	1.25
100	MP1C	X	0	5.25
101	MP1C	Z	-78.253	5.25
102	MP1C	Mx	-.051	5.25
103	MP5C	X	0	1.25
104	MP5C	Z	-78.253	1.25

Member Point Loads (BLC 3 : Antenna Wo (0 Deg)) (Continued)

	Member Label	Direction	Magnitude[lb,k-ft]	Location[ft,%]
105	MP5C	Mx	-.051	1.25
106	MP5C	X	0	5.25
107	MP5C	Z	-78.253	5.25
108	MP5C	Mx	-.051	5.25
109	MP1B	X	0	1.75
110	MP1B	Z	-148.004	1.75
111	MP1B	Mx	.096	1.75
112	MP1B	X	0	5.75
113	MP1B	Z	-148.004	5.75
114	MP1B	Mx	.096	5.75
115	MP5B	X	0	1.75
116	MP5B	Z	-148.004	1.75
117	MP5B	Mx	.096	1.75
118	MP5B	X	0	5.75
119	MP5B	Z	-148.004	5.75
120	MP5B	Mx	.096	5.75

Member Point Loads (BLC 4 : Antenna Wo (30 Deg))

	Member Label	Direction	Magnitude[lb,k-ft]	Location[ft,%]
1	MP2A	X	33.163	.75
2	MP2A	Z	-57.44	.75
3	MP2A	Mx	-.025	.75
4	MP2A	X	33.163	2.75
5	MP2A	Z	-57.44	2.75
6	MP2A	Mx	-.025	2.75
7	MP2B	X	15.313	.75
8	MP2B	Z	-26.522	.75
9	MP2B	Mx	.023	.75
10	MP2B	X	15.313	2.75
11	MP2B	Z	-26.522	2.75
12	MP2B	Mx	.023	2.75
13	MP2C	X	33.163	.75
14	MP2C	Z	-57.44	.75
15	MP2C	Mx	-.025	.75
16	MP2C	X	33.163	2.75
17	MP2C	Z	-57.44	2.75
18	MP2C	Mx	-.025	2.75
19	MP3A	X	5.684	1.5
20	MP3A	Z	-9.845	1.5
21	MP3A	Mx	.003	1.5
22	MP3B	X	5.684	1.5
23	MP3B	Z	-9.845	1.5
24	MP3B	Mx	.003	1.5
25	MP3C	X	5.684	1.5
26	MP3C	Z	-9.845	1.5
27	MP3C	Mx	.003	1.5
28	OVP	X	55.559	1
29	OVP	Z	-96.231	1
30	OVP	Mx	0	1
31	MP4A	X	28.544	3
32	MP4A	Z	-49.44	3
33	MP4A	Mx	.014	3
34	MP4B	X	28.544	3
35	MP4B	Z	-49.44	3
36	MP4B	Mx	.014	3
37	MP4C	X	28.544	3

Member Point Loads (BLC 4 : Antenna Wo (30 Deg)) (Continued)

	Member Label	Direction	Magnitude[lb,k-ft]	Location[ft,%]
38	MP4C	Z	-49.44	3
39	MP4C	Mx	.014	3
40	MP3A	X	27.556	3
41	MP3A	Z	-47.728	3
42	MP3A	Mx	.014	3
43	MP3B	X	27.556	3
44	MP3B	Z	-47.728	3
45	MP3B	Mx	.014	3
46	MP3C	X	27.556	3
47	MP3C	Z	-47.728	3
48	MP3C	Mx	.014	3
49	MP1A	X	78.815	1.75
50	MP1A	Z	-136.512	1.75
51	MP1A	Mx	-.059	1.75
52	MP1A	X	78.815	5.75
53	MP1A	Z	-136.512	5.75
54	MP1A	Mx	-.059	5.75
55	MP5A	X	78.815	1.75
56	MP5A	Z	-136.512	1.75
57	MP5A	Mx	-.059	1.75
58	MP5A	X	78.815	5.75
59	MP5A	Z	-136.512	5.75
60	MP5A	Mx	-.059	5.75
61	MP3A	X	69.307	1.75
62	MP3A	Z	-120.044	1.75
63	MP3A	Mx	-.132	1.75
64	MP3A	X	69.307	5.75
65	MP3A	Z	-120.044	5.75
66	MP3A	Mx	-.132	5.75
67	MP3B	X	49.793	1.75
68	MP3B	Z	-86.243	1.75
69	MP3B	Mx	.075	1.75
70	MP3B	X	49.793	5.75
71	MP3B	Z	-86.243	5.75
72	MP3B	Mx	.075	5.75
73	MP3C	X	69.307	1.75
74	MP3C	Z	-120.044	1.75
75	MP3C	Mx	.028	1.75
76	MP3C	X	69.307	5.75
77	MP3C	Z	-120.044	5.75
78	MP3C	Mx	.028	5.75
79	MP3A	X	69.307	1.75
80	MP3A	Z	-120.044	1.75
81	MP3A	Mx	.028	1.75
82	MP3A	X	69.307	5.75
83	MP3A	Z	-120.044	5.75
84	MP3A	Mx	.028	5.75
85	MP3B	X	49.793	1.75
86	MP3B	Z	-86.243	1.75
87	MP3B	Mx	.075	1.75
88	MP3B	X	49.793	5.75
89	MP3B	Z	-86.243	5.75
90	MP3B	Mx	.075	5.75
91	MP3C	X	69.307	1.75
92	MP3C	Z	-120.044	1.75
93	MP3C	Mx	-.132	1.75
94	MP3C	X	69.307	5.75

Member Point Loads (BLC 4 : Antenna Wo (30 Deg)) (Continued)

	Member Label	Direction	Magnitude[lb,k-ft]	Location[ft,%]
95	MP3C	Z	-120.044	5.75
96	MP3C	Mx	-.132	5.75
97	MP1C	X	27.522	1.25
98	MP1C	Z	-47.67	1.25
99	MP1C	Mx	-.021	1.25
100	MP1C	X	27.522	5.25
101	MP1C	Z	-47.67	5.25
102	MP1C	Mx	-.021	5.25
103	MP5C	X	27.522	1.25
104	MP5C	Z	-47.67	1.25
105	MP5C	Mx	-.021	1.25
106	MP5C	X	27.522	5.25
107	MP5C	Z	-47.67	5.25
108	MP5C	Mx	-.021	5.25
109	MP1B	X	71.596	1.75
110	MP1B	Z	-124.007	1.75
111	MP1B	Mx	.107	1.75
112	MP1B	X	71.596	5.75
113	MP1B	Z	-124.007	5.75
114	MP1B	Mx	.107	5.75
115	MP5B	X	71.596	1.75
116	MP5B	Z	-124.007	1.75
117	MP5B	Mx	.107	1.75
118	MP5B	X	71.596	5.75
119	MP5B	Z	-124.007	5.75
120	MP5B	Mx	.107	5.75

Member Point Loads (BLC 5 : Antenna Wo (60 Deg))

	Member Label	Direction	Magnitude[lb,k-ft]	Location[ft,%]
1	MP2A	X	36.828	.75
2	MP2A	Z	-21.263	.75
3	MP2A	Mx	-.028	.75
4	MP2A	X	36.828	2.75
5	MP2A	Z	-21.263	2.75
6	MP2A	Mx	-.028	2.75
7	MP2B	X	36.828	.75
8	MP2B	Z	-21.263	.75
9	MP2B	Mx	.028	.75
10	MP2B	X	36.828	2.75
11	MP2B	Z	-21.263	2.75
12	MP2B	Mx	.028	2.75
13	MP2C	X	67.745	.75
14	MP2C	Z	-39.113	.75
15	MP2C	Mx	0	.75
16	MP2C	X	67.745	2.75
17	MP2C	Z	-39.113	2.75
18	MP2C	Mx	0	2.75
19	MP3A	X	8.202	1.5
20	MP3A	Z	-4.735	1.5
21	MP3A	Mx	.004	1.5
22	MP3B	X	8.202	1.5
23	MP3B	Z	-4.735	1.5
24	MP3B	Mx	.004	1.5
25	MP3C	X	8.202	1.5
26	MP3C	Z	-4.735	1.5
27	MP3C	Mx	.004	1.5

Member Point Loads (BLC 5 : Antenna Wo (60 Deg)) (Continued)

	Member Label	Direction	Magnitude[lb,k-ft]	Location[ft,%]
28	OVP	X	89.294	1
29	OVP	Z	-51.554	1
30	OVP	Mx	0	1
31	MP4A	X	40.503	3
32	MP4A	Z	-23.384	3
33	MP4A	Mx	.02	3
34	MP4B	X	40.503	3
35	MP4B	Z	-23.384	3
36	MP4B	Mx	.02	3
37	MP4C	X	40.503	3
38	MP4C	Z	-23.384	3
39	MP4C	Mx	.02	3
40	MP3A	X	35.368	3
41	MP3A	Z	-20.42	3
42	MP3A	Mx	.018	3
43	MP3B	X	35.368	3
44	MP3B	Z	-20.42	3
45	MP3B	Mx	.018	3
46	MP3C	X	35.368	3
47	MP3C	Z	-20.42	3
48	MP3C	Mx	.018	3
49	MP1A	X	128.175	1.75
50	MP1A	Z	-74.002	1.75
51	MP1A	Mx	-.096	1.75
52	MP1A	X	128.175	5.75
53	MP1A	Z	-74.002	5.75
54	MP1A	Mx	-.096	5.75
55	MP5A	X	128.175	1.75
56	MP5A	Z	-74.002	1.75
57	MP5A	Mx	-.096	1.75
58	MP5A	X	128.175	5.75
59	MP5A	Z	-74.002	5.75
60	MP5A	Mx	-.096	5.75
61	MP3A	X	97.51	1.75
62	MP3A	Z	-56.297	1.75
63	MP3A	Mx	-.111	1.75
64	MP3A	X	97.51	5.75
65	MP3A	Z	-56.297	5.75
66	MP3A	Mx	-.111	5.75
67	MP3B	X	97.51	1.75
68	MP3B	Z	-56.297	1.75
69	MP3B	Mx	.036	1.75
70	MP3B	X	97.51	5.75
71	MP3B	Z	-56.297	5.75
72	MP3B	Mx	.036	5.75
73	MP3C	X	131.311	1.75
74	MP3C	Z	-75.812	1.75
75	MP3C	Mx	.101	1.75
76	MP3C	X	131.311	5.75
77	MP3C	Z	-75.812	5.75
78	MP3C	Mx	.101	5.75
79	MP3A	X	97.51	1.75
80	MP3A	Z	-56.297	1.75
81	MP3A	Mx	-.036	1.75
82	MP3A	X	97.51	5.75
83	MP3A	Z	-56.297	5.75
84	MP3A	Mx	-.036	5.75

Member Point Loads (BLC 5 : Antenna Wo (60 Deg)) (Continued)

	Member Label	Direction	Magnitude[lb,k-ft]	Location[ft,%]
85	MP3B	X	97.51	1.75
86	MP3B	Z	-56.297	1.75
87	MP3B	Mx	.111	1.75
88	MP3B	X	97.51	5.75
89	MP3B	Z	-56.297	5.75
90	MP3B	Mx	.111	5.75
91	MP3C	X	131.311	1.75
92	MP3C	Z	-75.812	1.75
93	MP3C	Mx	-.101	1.75
94	MP3C	X	131.311	5.75
95	MP3C	Z	-75.812	5.75
96	MP3C	Mx	-.101	5.75
97	MP1C	X	37.62	1.25
98	MP1C	Z	-21.72	1.25
99	MP1C	Mx	0	1.25
100	MP1C	X	37.62	5.25
101	MP1C	Z	-21.72	5.25
102	MP1C	Mx	0	5.25
103	MP5C	X	37.62	1.25
104	MP5C	Z	-21.72	1.25
105	MP5C	Mx	0	1.25
106	MP5C	X	37.62	5.25
107	MP5C	Z	-21.72	5.25
108	MP5C	Mx	0	5.25
109	MP1B	X	128.175	1.75
110	MP1B	Z	-74.002	1.75
111	MP1B	Mx	.096	1.75
112	MP1B	X	128.175	5.75
113	MP1B	Z	-74.002	5.75
114	MP1B	Mx	.096	5.75
115	MP5B	X	128.175	1.75
116	MP5B	Z	-74.002	1.75
117	MP5B	Mx	.096	1.75
118	MP5B	X	128.175	5.75
119	MP5B	Z	-74.002	5.75
120	MP5B	Mx	.096	5.75

Member Point Loads (BLC 6 : Antenna Wo (90 Deg))

	Member Label	Direction	Magnitude[lb,k-ft]	Location[ft,%]
1	MP2A	X	30.625	.75
2	MP2A	Z	0	.75
3	MP2A	Mx	-.023	.75
4	MP2A	X	30.625	2.75
5	MP2A	Z	0	2.75
6	MP2A	Mx	-.023	2.75
7	MP2B	X	66.325	.75
8	MP2B	Z	0	.75
9	MP2B	Mx	.025	.75
10	MP2B	X	66.325	2.75
11	MP2B	Z	0	2.75
12	MP2B	Mx	.025	2.75
13	MP2C	X	66.325	.75
14	MP2C	Z	0	.75
15	MP2C	Mx	.025	.75
16	MP2C	X	66.325	2.75
17	MP2C	Z	0	2.75

Member Point Loads (BLC 6 : Antenna Wo (90 Deg)) (Continued)

	Member Label	Direction	Magnitude[lb,k-ft]	Location[ft,%]
18	MP2C	Mx	.025	2.75
19	MP3A	X	8.522	1.5
20	MP3A	Z	0	1.5
21	MP3A	Mx	.004	1.5
22	MP3B	X	8.522	1.5
23	MP3B	Z	0	1.5
24	MP3B	Mx	.004	1.5
25	MP3C	X	8.522	1.5
26	MP3C	Z	0	1.5
27	MP3C	Mx	.004	1.5
28	OVP	X	111.118	1
29	OVP	Z	0	1
30	OVP	Mx	0	1
31	MP4A	X	41.609	3
32	MP4A	Z	0	3
33	MP4A	Mx	.021	3
34	MP4B	X	41.609	3
35	MP4B	Z	0	3
36	MP4B	Mx	.021	3
37	MP4C	X	41.609	3
38	MP4C	Z	0	3
39	MP4C	Mx	.021	3
40	MP3A	X	33.704	3
41	MP3A	Z	0	3
42	MP3A	Mx	.017	3
43	MP3B	X	33.704	3
44	MP3B	Z	0	3
45	MP3B	Mx	.017	3
46	MP3C	X	33.704	3
47	MP3C	Z	0	3
48	MP3C	Mx	.017	3
49	MP1A	X	143.191	1.75
50	MP1A	Z	0	1.75
51	MP1A	Mx	-.107	1.75
52	MP1A	X	143.191	5.75
53	MP1A	Z	0	5.75
54	MP1A	Mx	-.107	5.75
55	MP5A	X	143.191	1.75
56	MP5A	Z	0	1.75
57	MP5A	Mx	-.107	1.75
58	MP5A	X	143.191	5.75
59	MP5A	Z	0	5.75
60	MP5A	Mx	-.107	5.75
61	MP3A	X	99.585	1.75
62	MP3A	Z	0	1.75
63	MP3A	Mx	-.075	1.75
64	MP3A	X	99.585	5.75
65	MP3A	Z	0	5.75
66	MP3A	Mx	-.075	5.75
67	MP3B	X	138.615	1.75
68	MP3B	Z	0	1.75
69	MP3B	Mx	-.028	1.75
70	MP3B	X	138.615	5.75
71	MP3B	Z	0	5.75
72	MP3B	Mx	-.028	5.75
73	MP3C	X	138.615	1.75
74	MP3C	Z	0	1.75

Member Point Loads (BLC 6 : Antenna Wo (90 Deg)) (Continued)

	Member Label	Direction	Magnitude[lb,k-ft]	Location[ft,%]
75	MP3C	Mx	.132	1.75
76	MP3C	X	138.615	5.75
77	MP3C	Z	0	5.75
78	MP3C	Mx	.132	5.75
79	MP3A	X	99.585	1.75
80	MP3A	Z	0	1.75
81	MP3A	Mx	-.075	1.75
82	MP3A	X	99.585	5.75
83	MP3A	Z	0	5.75
84	MP3A	Mx	-.075	5.75
85	MP3B	X	138.615	1.75
86	MP3B	Z	0	1.75
87	MP3B	Mx	.132	1.75
88	MP3B	X	138.615	5.75
89	MP3B	Z	0	5.75
90	MP3B	Mx	.132	5.75
91	MP3C	X	138.615	1.75
92	MP3C	Z	0	1.75
93	MP3C	Mx	-.028	1.75
94	MP3C	X	138.615	5.75
95	MP3C	Z	0	5.75
96	MP3C	Mx	-.028	5.75
97	MP1C	X	55.044	1.25
98	MP1C	Z	0	1.25
99	MP1C	Mx	.021	1.25
100	MP1C	X	55.044	5.25
101	MP1C	Z	0	5.25
102	MP1C	Mx	.021	5.25
103	MP5C	X	55.044	1.25
104	MP5C	Z	0	1.25
105	MP5C	Mx	.021	1.25
106	MP5C	X	55.044	5.25
107	MP5C	Z	0	5.25
108	MP5C	Mx	.021	5.25
109	MP1B	X	157.63	1.75
110	MP1B	Z	0	1.75
111	MP1B	Mx	.059	1.75
112	MP1B	X	157.63	5.75
113	MP1B	Z	0	5.75
114	MP1B	Mx	.059	5.75
115	MP5B	X	157.63	1.75
116	MP5B	Z	0	1.75
117	MP5B	Mx	.059	1.75
118	MP5B	X	157.63	5.75
119	MP5B	Z	0	5.75
120	MP5B	Mx	.059	5.75

Member Point Loads (BLC 7 : Antenna Wo (120 Deg))

	Member Label	Direction	Magnitude[lb,k-ft]	Location[ft,%]
1	MP2A	X	36.828	.75
2	MP2A	Z	21.263	.75
3	MP2A	Mx	-.028	.75
4	MP2A	X	36.828	2.75
5	MP2A	Z	21.263	2.75
6	MP2A	Mx	-.028	2.75
7	MP2B	X	67.745	.75

Member Point Loads (BLC 7 : Antenna Wo (120 Deg)) (Continued)

	Member Label	Direction	Magnitude[lb,k-ft]	Location[ft,%]
8	MP2B	Z	39.113	.75
9	MP2B	Mx	0	.75
10	MP2B	X	67.745	2.75
11	MP2B	Z	39.113	2.75
12	MP2B	Mx	0	2.75
13	MP2C	X	36.828	.75
14	MP2C	Z	21.263	.75
15	MP2C	Mx	.028	.75
16	MP2C	X	36.828	2.75
17	MP2C	Z	21.263	2.75
18	MP2C	Mx	.028	2.75
19	MP3A	X	8.202	1.5
20	MP3A	Z	4.735	1.5
21	MP3A	Mx	.004	1.5
22	MP3B	X	8.202	1.5
23	MP3B	Z	4.735	1.5
24	MP3B	Mx	.004	1.5
25	MP3C	X	8.202	1.5
26	MP3C	Z	4.735	1.5
27	MP3C	Mx	.004	1.5
28	OVP	X	110.104	1
29	OVP	Z	63.569	1
30	OVP	Mx	0	1
31	MP4A	X	40.503	3
32	MP4A	Z	23.384	3
33	MP4A	Mx	.02	3
34	MP4B	X	40.503	3
35	MP4B	Z	23.384	3
36	MP4B	Mx	.02	3
37	MP4C	X	40.503	3
38	MP4C	Z	23.384	3
39	MP4C	Mx	.02	3
40	MP3A	X	35.368	3
41	MP3A	Z	20.42	3
42	MP3A	Mx	.018	3
43	MP3B	X	35.368	3
44	MP3B	Z	20.42	3
45	MP3B	Mx	.018	3
46	MP3C	X	35.368	3
47	MP3C	Z	20.42	3
48	MP3C	Mx	.018	3
49	MP1A	X	128.175	1.75
50	MP1A	Z	74.002	1.75
51	MP1A	Mx	-.096	1.75
52	MP1A	X	128.175	5.75
53	MP1A	Z	74.002	5.75
54	MP1A	Mx	-.096	5.75
55	MP5A	X	128.175	1.75
56	MP5A	Z	74.002	1.75
57	MP5A	Mx	-.096	1.75
58	MP5A	X	128.175	5.75
59	MP5A	Z	74.002	5.75
60	MP5A	Mx	-.096	5.75
61	MP3A	X	97.51	1.75
62	MP3A	Z	56.297	1.75
63	MP3A	Mx	-.036	1.75
64	MP3A	X	97.51	5.75

Member Point Loads (BLC 7 : Antenna Wo (120 Deg)) (Continued)

	Member Label	Direction	Magnitude[lb,k-ft]	Location[ft,%]
65	MP3A	Z	56.297	5.75
66	MP3A	Mx	-.036	5.75
67	MP3B	X	131.311	1.75
68	MP3B	Z	75.812	1.75
69	MP3B	Mx	-.101	1.75
70	MP3B	X	131.311	5.75
71	MP3B	Z	75.812	5.75
72	MP3B	Mx	-.101	5.75
73	MP3C	X	97.51	1.75
74	MP3C	Z	56.297	1.75
75	MP3C	Mx	.111	1.75
76	MP3C	X	97.51	5.75
77	MP3C	Z	56.297	5.75
78	MP3C	Mx	.111	5.75
79	MP3A	X	97.51	1.75
80	MP3A	Z	56.297	1.75
81	MP3A	Mx	-.111	1.75
82	MP3A	X	97.51	5.75
83	MP3A	Z	56.297	5.75
84	MP3A	Mx	-.111	5.75
85	MP3B	X	131.311	1.75
86	MP3B	Z	75.812	1.75
87	MP3B	Mx	.101	1.75
88	MP3B	X	131.311	5.75
89	MP3B	Z	75.812	5.75
90	MP3B	Mx	.101	5.75
91	MP3C	X	97.51	1.75
92	MP3C	Z	56.297	1.75
93	MP3C	Mx	.036	1.75
94	MP3C	X	97.51	5.75
95	MP3C	Z	56.297	5.75
96	MP3C	Mx	.036	5.75
97	MP1C	X	67.769	1.25
98	MP1C	Z	39.126	1.25
99	MP1C	Mx	.051	1.25
100	MP1C	X	67.769	5.25
101	MP1C	Z	39.126	5.25
102	MP1C	Mx	.051	5.25
103	MP5C	X	67.769	1.25
104	MP5C	Z	39.126	1.25
105	MP5C	Mx	.051	1.25
106	MP5C	X	67.769	5.25
107	MP5C	Z	39.126	5.25
108	MP5C	Mx	.051	5.25
109	MP1B	X	140.68	1.75
110	MP1B	Z	81.221	1.75
111	MP1B	Mx	0	1.75
112	MP1B	X	140.68	5.75
113	MP1B	Z	81.221	5.75
114	MP1B	Mx	0	5.75
115	MP5B	X	140.68	1.75
116	MP5B	Z	81.221	1.75
117	MP5B	Mx	0	1.75
118	MP5B	X	140.68	5.75
119	MP5B	Z	81.221	5.75
120	MP5B	Mx	0	5.75

Member Point Loads (BLC 8 : Antenna Wo (150 Deg))

	Member Label	Direction	Magnitude[lb,k-ft]	Location[ft,%]
1	MP2A	X	33.163	.75
2	MP2A	Z	57.44	.75
3	MP2A	Mx	-.025	.75
4	MP2A	X	33.163	2.75
5	MP2A	Z	57.44	2.75
6	MP2A	Mx	-.025	2.75
7	MP2B	X	33.163	.75
8	MP2B	Z	57.44	.75
9	MP2B	Mx	-.025	.75
10	MP2B	X	33.163	2.75
11	MP2B	Z	57.44	2.75
12	MP2B	Mx	-.025	2.75
13	MP2C	X	15.313	.75
14	MP2C	Z	26.522	.75
15	MP2C	Mx	.023	.75
16	MP2C	X	15.313	2.75
17	MP2C	Z	26.522	2.75
18	MP2C	Mx	.023	2.75
19	MP3A	X	5.684	1.5
20	MP3A	Z	9.845	1.5
21	MP3A	Mx	.003	1.5
22	MP3B	X	5.684	1.5
23	MP3B	Z	9.845	1.5
24	MP3B	Mx	.003	1.5
25	MP3C	X	5.684	1.5
26	MP3C	Z	9.845	1.5
27	MP3C	Mx	.003	1.5
28	OVP	X	67.574	1
29	OVP	Z	117.041	1
30	OVP	Mx	0	1
31	MP4A	X	28.544	3
32	MP4A	Z	49.44	3
33	MP4A	Mx	.014	3
34	MP4B	X	28.544	3
35	MP4B	Z	49.44	3
36	MP4B	Mx	.014	3
37	MP4C	X	28.544	3
38	MP4C	Z	49.44	3
39	MP4C	Mx	.014	3
40	MP3A	X	27.556	3
41	MP3A	Z	47.728	3
42	MP3A	Mx	.014	3
43	MP3B	X	27.556	3
44	MP3B	Z	47.728	3
45	MP3B	Mx	.014	3
46	MP3C	X	27.556	3
47	MP3C	Z	47.728	3
48	MP3C	Mx	.014	3
49	MP1A	X	78.815	1.75
50	MP1A	Z	136.512	1.75
51	MP1A	Mx	-.059	1.75
52	MP1A	X	78.815	5.75
53	MP1A	Z	136.512	5.75
54	MP1A	Mx	-.059	5.75
55	MP5A	X	78.815	1.75
56	MP5A	Z	136.512	1.75
57	MP5A	Mx	-.059	1.75

Member Point Loads (BLC 8 : Antenna Wo (150 Deg)) (Continued)

	Member Label	Direction	Magnitude[lb,k-ft]	Location[ft,%]
58	MP5A	X	78.815	5.75
59	MP5A	Z	136.512	5.75
60	MP5A	Mx	-.059	5.75
61	MP3A	X	69.307	1.75
62	MP3A	Z	120.044	1.75
63	MP3A	Mx	.028	1.75
64	MP3A	X	69.307	5.75
65	MP3A	Z	120.044	5.75
66	MP3A	Mx	.028	5.75
67	MP3B	X	69.307	1.75
68	MP3B	Z	120.044	1.75
69	MP3B	Mx	-.132	1.75
70	MP3B	X	69.307	5.75
71	MP3B	Z	120.044	5.75
72	MP3B	Mx	-.132	5.75
73	MP3C	X	49.793	1.75
74	MP3C	Z	86.243	1.75
75	MP3C	Mx	.075	1.75
76	MP3C	X	49.793	5.75
77	MP3C	Z	86.243	5.75
78	MP3C	Mx	.075	5.75
79	MP3A	X	69.307	1.75
80	MP3A	Z	120.044	1.75
81	MP3A	Mx	-.132	1.75
82	MP3A	X	69.307	5.75
83	MP3A	Z	120.044	5.75
84	MP3A	Mx	-.132	5.75
85	MP3B	X	69.307	1.75
86	MP3B	Z	120.044	1.75
87	MP3B	Mx	.028	1.75
88	MP3B	X	69.307	5.75
89	MP3B	Z	120.044	5.75
90	MP3B	Mx	.028	5.75
91	MP3C	X	49.793	1.75
92	MP3C	Z	86.243	1.75
93	MP3C	Mx	.075	1.75
94	MP3C	X	49.793	5.75
95	MP3C	Z	86.243	5.75
96	MP3C	Mx	.075	5.75
97	MP1C	X	44.929	1.25
98	MP1C	Z	77.819	1.25
99	MP1C	Mx	.067	1.25
100	MP1C	X	44.929	5.25
101	MP1C	Z	77.819	5.25
102	MP1C	Mx	.067	5.25
103	MP5C	X	44.929	1.25
104	MP5C	Z	77.819	1.25
105	MP5C	Mx	.067	1.25
106	MP5C	X	44.929	5.25
107	MP5C	Z	77.819	5.25
108	MP5C	Mx	.067	5.25
109	MP1B	X	78.815	1.75
110	MP1B	Z	136.512	1.75
111	MP1B	Mx	-.059	1.75
112	MP1B	X	78.815	5.75
113	MP1B	Z	136.512	5.75
114	MP1B	Mx	-.059	5.75

Member Point Loads (BLC 8 : Antenna Wo (150 Deg)) (Continued)

	Member Label	Direction	Magnitude[lb,k-ft]	Location[ft,%]
115	MP5B	X	78.815	1.75
116	MP5B	Z	136.512	1.75
117	MP5B	Mx	-.059	1.75
118	MP5B	X	78.815	5.75
119	MP5B	Z	136.512	5.75
120	MP5B	Mx	-.059	5.75

Member Point Loads (BLC 9 : Antenna Wo (180 Deg))

	Member Label	Direction	Magnitude[lb,k-ft]	Location[ft,%]
1	MP2A	X	0	.75
2	MP2A	Z	78.226	.75
3	MP2A	Mx	0	.75
4	MP2A	X	0	2.75
5	MP2A	Z	78.226	2.75
6	MP2A	Mx	0	2.75
7	MP2B	X	0	.75
8	MP2B	Z	42.525	.75
9	MP2B	Mx	-.028	.75
10	MP2B	X	0	2.75
11	MP2B	Z	42.525	2.75
12	MP2B	Mx	-.028	2.75
13	MP2C	X	0	.75
14	MP2C	Z	42.525	.75
15	MP2C	Mx	.028	.75
16	MP2C	X	0	2.75
17	MP2C	Z	42.525	2.75
18	MP2C	Mx	.028	2.75
19	MP3A	X	0	1.5
20	MP3A	Z	12.316	1.5
21	MP3A	Mx	0	1.5
22	MP3B	X	0	1.5
23	MP3B	Z	12.316	1.5
24	MP3B	Mx	0	1.5
25	MP3C	X	0	1.5
26	MP3C	Z	12.316	1.5
27	MP3C	Mx	0	1.5
28	OVP	X	0	1
29	OVP	Z	127.137	1
30	OVP	Mx	0	1
31	MP4A	X	0	3
32	MP4A	Z	62.248	3
33	MP4A	Mx	0	3
34	MP4B	X	0	3
35	MP4B	Z	62.248	3
36	MP4B	Mx	0	3
37	MP4C	X	0	3
38	MP4C	Z	62.248	3
39	MP4C	Mx	0	3
40	MP3A	X	0	3
41	MP3A	Z	62.248	3
42	MP3A	Mx	0	3
43	MP3B	X	0	3
44	MP3B	Z	62.248	3
45	MP3B	Mx	0	3
46	MP3C	X	0	3
47	MP3C	Z	62.248	3

Member Point Loads (BLC 9 : Antenna Wo (180 Deg)) (Continued)

	Member Label	Direction	Magnitude[lb,k-ft]	Location[ft,%]
48	MP3C	Mx	0	3
49	MP1A	X	0	1.75
50	MP1A	Z	162.443	1.75
51	MP1A	Mx	0	1.75
52	MP1A	X	0	5.75
53	MP1A	Z	162.443	5.75
54	MP1A	Mx	0	5.75
55	MP5A	X	0	1.75
56	MP5A	Z	162.443	1.75
57	MP5A	Mx	0	1.75
58	MP5A	X	0	5.75
59	MP5A	Z	162.443	5.75
60	MP5A	Mx	0	5.75
61	MP3A	X	0	1.75
62	MP3A	Z	151.624	1.75
63	MP3A	Mx	.101	1.75
64	MP3A	X	0	5.75
65	MP3A	Z	151.624	5.75
66	MP3A	Mx	.101	5.75
67	MP3B	X	0	1.75
68	MP3B	Z	112.595	1.75
69	MP3B	Mx	-.111	1.75
70	MP3B	X	0	5.75
71	MP3B	Z	112.595	5.75
72	MP3B	Mx	-.111	5.75
73	MP3C	X	0	1.75
74	MP3C	Z	112.595	1.75
75	MP3C	Mx	.036	1.75
76	MP3C	X	0	5.75
77	MP3C	Z	112.595	5.75
78	MP3C	Mx	.036	5.75
79	MP3A	X	0	1.75
80	MP3A	Z	151.624	1.75
81	MP3A	Mx	-.101	1.75
82	MP3A	X	0	5.75
83	MP3A	Z	151.624	5.75
84	MP3A	Mx	-.101	5.75
85	MP3B	X	0	1.75
86	MP3B	Z	112.595	1.75
87	MP3B	Mx	-.036	1.75
88	MP3B	X	0	5.75
89	MP3B	Z	112.595	5.75
90	MP3B	Mx	-.036	5.75
91	MP3C	X	0	1.75
92	MP3C	Z	112.595	1.75
93	MP3C	Mx	.111	1.75
94	MP3C	X	0	5.75
95	MP3C	Z	112.595	5.75
96	MP3C	Mx	.111	5.75
97	MP1C	X	0	1.25
98	MP1C	Z	78.253	1.25
99	MP1C	Mx	.051	1.25
100	MP1C	X	0	5.25
101	MP1C	Z	78.253	5.25
102	MP1C	Mx	.051	5.25
103	MP5C	X	0	1.25
104	MP5C	Z	78.253	1.25

Member Point Loads (BLC 9 : Antenna Wo (180 Deg)) (Continued)

	Member Label	Direction	Magnitude[lb,k-ft]	Location[ft,%]
105	MP5C	Mx	.051	1.25
106	MP5C	X	0	5.25
107	MP5C	Z	78.253	5.25
108	MP5C	Mx	.051	5.25
109	MP1B	X	0	1.75
110	MP1B	Z	148.004	1.75
111	MP1B	Mx	-.096	1.75
112	MP1B	X	0	5.75
113	MP1B	Z	148.004	5.75
114	MP1B	Mx	-.096	5.75
115	MP5B	X	0	1.75
116	MP5B	Z	148.004	1.75
117	MP5B	Mx	-.096	1.75
118	MP5B	X	0	5.75
119	MP5B	Z	148.004	5.75
120	MP5B	Mx	-.096	5.75

Member Point Loads (BLC 10 : Antenna Wo (210 Deg))

	Member Label	Direction	Magnitude[lb,k-ft]	Location[ft,%]
1	MP2A	X	-33.163	.75
2	MP2A	Z	57.44	.75
3	MP2A	Mx	.025	.75
4	MP2A	X	-33.163	2.75
5	MP2A	Z	57.44	2.75
6	MP2A	Mx	.025	2.75
7	MP2B	X	-15.313	.75
8	MP2B	Z	26.522	.75
9	MP2B	Mx	-.023	.75
10	MP2B	X	-15.313	2.75
11	MP2B	Z	26.522	2.75
12	MP2B	Mx	-.023	2.75
13	MP2C	X	-33.163	.75
14	MP2C	Z	57.44	.75
15	MP2C	Mx	.025	.75
16	MP2C	X	-33.163	2.75
17	MP2C	Z	57.44	2.75
18	MP2C	Mx	.025	2.75
19	MP3A	X	-5.684	1.5
20	MP3A	Z	9.845	1.5
21	MP3A	Mx	-.003	1.5
22	MP3B	X	-5.684	1.5
23	MP3B	Z	9.845	1.5
24	MP3B	Mx	-.003	1.5
25	MP3C	X	-5.684	1.5
26	MP3C	Z	9.845	1.5
27	MP3C	Mx	-.003	1.5
28	OVP	X	-55.559	1
29	OVP	Z	96.231	1
30	OVP	Mx	0	1
31	MP4A	X	-28.544	3
32	MP4A	Z	49.44	3
33	MP4A	Mx	-.014	3
34	MP4B	X	-28.544	3
35	MP4B	Z	49.44	3
36	MP4B	Mx	-.014	3
37	MP4C	X	-28.544	3

Member Point Loads (BLC 10 : Antenna Wo (210 Deg)) (Continued)

	Member Label	Direction	Magnitude[lb,k-ft]	Location[ft,%]
38	MP4C	Z	49.44	3
39	MP4C	Mx	-.014	3
40	MP3A	X	-27.556	3
41	MP3A	Z	47.728	3
42	MP3A	Mx	-.014	3
43	MP3B	X	-27.556	3
44	MP3B	Z	47.728	3
45	MP3B	Mx	-.014	3
46	MP3C	X	-27.556	3
47	MP3C	Z	47.728	3
48	MP3C	Mx	-.014	3
49	MP1A	X	-78.815	1.75
50	MP1A	Z	136.512	1.75
51	MP1A	Mx	.059	1.75
52	MP1A	X	-78.815	5.75
53	MP1A	Z	136.512	5.75
54	MP1A	Mx	.059	5.75
55	MP5A	X	-78.815	1.75
56	MP5A	Z	136.512	1.75
57	MP5A	Mx	.059	1.75
58	MP5A	X	-78.815	5.75
59	MP5A	Z	136.512	5.75
60	MP5A	Mx	.059	5.75
61	MP3A	X	-69.307	1.75
62	MP3A	Z	120.044	1.75
63	MP3A	Mx	.132	1.75
64	MP3A	X	-69.307	5.75
65	MP3A	Z	120.044	5.75
66	MP3A	Mx	.132	5.75
67	MP3B	X	-49.793	1.75
68	MP3B	Z	86.243	1.75
69	MP3B	Mx	-.075	1.75
70	MP3B	X	-49.793	5.75
71	MP3B	Z	86.243	5.75
72	MP3B	Mx	-.075	5.75
73	MP3C	X	-69.307	1.75
74	MP3C	Z	120.044	1.75
75	MP3C	Mx	-.028	1.75
76	MP3C	X	-69.307	5.75
77	MP3C	Z	120.044	5.75
78	MP3C	Mx	-.028	5.75
79	MP3A	X	-69.307	1.75
80	MP3A	Z	120.044	1.75
81	MP3A	Mx	-.028	1.75
82	MP3A	X	-69.307	5.75
83	MP3A	Z	120.044	5.75
84	MP3A	Mx	-.028	5.75
85	MP3B	X	-49.793	1.75
86	MP3B	Z	86.243	1.75
87	MP3B	Mx	-.075	1.75
88	MP3B	X	-49.793	5.75
89	MP3B	Z	86.243	5.75
90	MP3B	Mx	-.075	5.75
91	MP3C	X	-69.307	1.75
92	MP3C	Z	120.044	1.75
93	MP3C	Mx	.132	1.75
94	MP3C	X	-69.307	5.75

Member Point Loads (BLC 10 : Antenna Wo (210 Deg)) (Continued)

	Member Label	Direction	Magnitude[lb,k-ft]	Location[ft,%]
95	MP3C	Z	120.044	5.75
96	MP3C	Mx	.132	5.75
97	MP1C	X	-27.522	1.25
98	MP1C	Z	47.67	1.25
99	MP1C	Mx	.021	1.25
100	MP1C	X	-27.522	5.25
101	MP1C	Z	47.67	5.25
102	MP1C	Mx	.021	5.25
103	MP5C	X	-27.522	1.25
104	MP5C	Z	47.67	1.25
105	MP5C	Mx	.021	1.25
106	MP5C	X	-27.522	5.25
107	MP5C	Z	47.67	5.25
108	MP5C	Mx	.021	5.25
109	MP1B	X	-71.596	1.75
110	MP1B	Z	124.007	1.75
111	MP1B	Mx	-.107	1.75
112	MP1B	X	-71.596	5.75
113	MP1B	Z	124.007	5.75
114	MP1B	Mx	-.107	5.75
115	MP5B	X	-71.596	1.75
116	MP5B	Z	124.007	1.75
117	MP5B	Mx	-.107	1.75
118	MP5B	X	-71.596	5.75
119	MP5B	Z	124.007	5.75
120	MP5B	Mx	-.107	5.75

Member Point Loads (BLC 11 : Antenna Wo (240 Deg))

	Member Label	Direction	Magnitude[lb,k-ft]	Location[ft,%]
1	MP2A	X	-36.828	.75
2	MP2A	Z	21.263	.75
3	MP2A	Mx	.028	.75
4	MP2A	X	-36.828	2.75
5	MP2A	Z	21.263	2.75
6	MP2A	Mx	.028	2.75
7	MP2B	X	-36.828	.75
8	MP2B	Z	21.263	.75
9	MP2B	Mx	-.028	.75
10	MP2B	X	-36.828	2.75
11	MP2B	Z	21.263	2.75
12	MP2B	Mx	-.028	2.75
13	MP2C	X	-67.745	.75
14	MP2C	Z	39.113	.75
15	MP2C	Mx	0	.75
16	MP2C	X	-67.745	2.75
17	MP2C	Z	39.113	2.75
18	MP2C	Mx	0	2.75
19	MP3A	X	-8.202	1.5
20	MP3A	Z	4.735	1.5
21	MP3A	Mx	-.004	1.5
22	MP3B	X	-8.202	1.5
23	MP3B	Z	4.735	1.5
24	MP3B	Mx	-.004	1.5
25	MP3C	X	-8.202	1.5
26	MP3C	Z	4.735	1.5
27	MP3C	Mx	-.004	1.5

Member Point Loads (BLC 11 : Antenna Wo (240 Deg)) (Continued)

	Member Label	Direction	Magnitude[lb,k-ft]	Location[ft,%]
28	OVP	X	-89.294	1
29	OVP	Z	51.554	1
30	OVP	Mx	0	1
31	MP4A	X	-40.503	3
32	MP4A	Z	23.384	3
33	MP4A	Mx	-.02	3
34	MP4B	X	-40.503	3
35	MP4B	Z	23.384	3
36	MP4B	Mx	-.02	3
37	MP4C	X	-40.503	3
38	MP4C	Z	23.384	3
39	MP4C	Mx	-.02	3
40	MP3A	X	-35.368	3
41	MP3A	Z	20.42	3
42	MP3A	Mx	-.018	3
43	MP3B	X	-35.368	3
44	MP3B	Z	20.42	3
45	MP3B	Mx	-.018	3
46	MP3C	X	-35.368	3
47	MP3C	Z	20.42	3
48	MP3C	Mx	-.018	3
49	MP1A	X	-128.175	1.75
50	MP1A	Z	74.002	1.75
51	MP1A	Mx	.096	1.75
52	MP1A	X	-128.175	5.75
53	MP1A	Z	74.002	5.75
54	MP1A	Mx	.096	5.75
55	MP5A	X	-128.175	1.75
56	MP5A	Z	74.002	1.75
57	MP5A	Mx	.096	1.75
58	MP5A	X	-128.175	5.75
59	MP5A	Z	74.002	5.75
60	MP5A	Mx	.096	5.75
61	MP3A	X	-97.51	1.75
62	MP3A	Z	56.297	1.75
63	MP3A	Mx	.111	1.75
64	MP3A	X	-97.51	5.75
65	MP3A	Z	56.297	5.75
66	MP3A	Mx	.111	5.75
67	MP3B	X	-97.51	1.75
68	MP3B	Z	56.297	1.75
69	MP3B	Mx	-.036	1.75
70	MP3B	X	-97.51	5.75
71	MP3B	Z	56.297	5.75
72	MP3B	Mx	-.036	5.75
73	MP3C	X	-131.311	1.75
74	MP3C	Z	75.812	1.75
75	MP3C	Mx	-.101	1.75
76	MP3C	X	-131.311	5.75
77	MP3C	Z	75.812	5.75
78	MP3C	Mx	-.101	5.75
79	MP3A	X	-97.51	1.75
80	MP3A	Z	56.297	1.75
81	MP3A	Mx	.036	1.75
82	MP3A	X	-97.51	5.75
83	MP3A	Z	56.297	5.75
84	MP3A	Mx	.036	5.75

Member Point Loads (BLC 11 : Antenna Wo (240 Deg)) (Continued)

	Member Label	Direction	Magnitude[lb,k-ft]	Location[ft,%]
85	MP3B	X	-97.51	1.75
86	MP3B	Z	56.297	1.75
87	MP3B	Mx	-.111	1.75
88	MP3B	X	-97.51	5.75
89	MP3B	Z	56.297	5.75
90	MP3B	Mx	-.111	5.75
91	MP3C	X	-131.311	1.75
92	MP3C	Z	75.812	1.75
93	MP3C	Mx	.101	1.75
94	MP3C	X	-131.311	5.75
95	MP3C	Z	75.812	5.75
96	MP3C	Mx	.101	5.75
97	MP1C	X	-37.62	1.25
98	MP1C	Z	21.72	1.25
99	MP1C	Mx	0	1.25
100	MP1C	X	-37.62	5.25
101	MP1C	Z	21.72	5.25
102	MP1C	Mx	0	5.25
103	MP5C	X	-37.62	1.25
104	MP5C	Z	21.72	1.25
105	MP5C	Mx	0	1.25
106	MP5C	X	-37.62	5.25
107	MP5C	Z	21.72	5.25
108	MP5C	Mx	0	5.25
109	MP1B	X	-128.175	1.75
110	MP1B	Z	74.002	1.75
111	MP1B	Mx	-.096	1.75
112	MP1B	X	-128.175	5.75
113	MP1B	Z	74.002	5.75
114	MP1B	Mx	-.096	5.75
115	MP5B	X	-128.175	1.75
116	MP5B	Z	74.002	1.75
117	MP5B	Mx	-.096	1.75
118	MP5B	X	-128.175	5.75
119	MP5B	Z	74.002	5.75
120	MP5B	Mx	-.096	5.75

Member Point Loads (BLC 12 : Antenna Wo (270 Deg))

	Member Label	Direction	Magnitude[lb,k-ft]	Location[ft,%]
1	MP2A	X	-30.625	.75
2	MP2A	Z	0	.75
3	MP2A	Mx	.023	.75
4	MP2A	X	-30.625	2.75
5	MP2A	Z	0	2.75
6	MP2A	Mx	.023	2.75
7	MP2B	X	-66.325	.75
8	MP2B	Z	0	.75
9	MP2B	Mx	-.025	.75
10	MP2B	X	-66.325	2.75
11	MP2B	Z	0	2.75
12	MP2B	Mx	-.025	2.75
13	MP2C	X	-66.325	.75
14	MP2C	Z	0	.75
15	MP2C	Mx	-.025	.75
16	MP2C	X	-66.325	2.75
17	MP2C	Z	0	2.75

Member Point Loads (BLC 12 : Antenna Wo (270 Deg)) (Continued)

	Member Label	Direction	Magnitude[lb,k-ft]	Location[ft,%]
18	MP2C	Mx	-.025	2.75
19	MP3A	X	-8.522	1.5
20	MP3A	Z	0	1.5
21	MP3A	Mx	-.004	1.5
22	MP3B	X	-8.522	1.5
23	MP3B	Z	0	1.5
24	MP3B	Mx	-.004	1.5
25	MP3C	X	-8.522	1.5
26	MP3C	Z	0	1.5
27	MP3C	Mx	-.004	1.5
28	OVP	X	-111.118	1
29	OVP	Z	0	1
30	OVP	Mx	0	1
31	MP4A	X	-41.609	3
32	MP4A	Z	0	3
33	MP4A	Mx	-.021	3
34	MP4B	X	-41.609	3
35	MP4B	Z	0	3
36	MP4B	Mx	-.021	3
37	MP4C	X	-41.609	3
38	MP4C	Z	0	3
39	MP4C	Mx	-.021	3
40	MP3A	X	-33.704	3
41	MP3A	Z	0	3
42	MP3A	Mx	-.017	3
43	MP3B	X	-33.704	3
44	MP3B	Z	0	3
45	MP3B	Mx	-.017	3
46	MP3C	X	-33.704	3
47	MP3C	Z	0	3
48	MP3C	Mx	-.017	3
49	MP1A	X	-143.191	1.75
50	MP1A	Z	0	1.75
51	MP1A	Mx	.107	1.75
52	MP1A	X	-143.191	5.75
53	MP1A	Z	0	5.75
54	MP1A	Mx	.107	5.75
55	MP5A	X	-143.191	1.75
56	MP5A	Z	0	1.75
57	MP5A	Mx	.107	1.75
58	MP5A	X	-143.191	5.75
59	MP5A	Z	0	5.75
60	MP5A	Mx	.107	5.75
61	MP3A	X	-99.585	1.75
62	MP3A	Z	0	1.75
63	MP3A	Mx	.075	1.75
64	MP3A	X	-99.585	5.75
65	MP3A	Z	0	5.75
66	MP3A	Mx	.075	5.75
67	MP3B	X	-138.615	1.75
68	MP3B	Z	0	1.75
69	MP3B	Mx	.028	1.75
70	MP3B	X	-138.615	5.75
71	MP3B	Z	0	5.75
72	MP3B	Mx	.028	5.75
73	MP3C	X	-138.615	1.75
74	MP3C	Z	0	1.75

Member Point Loads (BLC 12 : Antenna Wo (270 Deg)) (Continued)

	Member Label	Direction	Magnitude[lb,k-ft]	Location[ft,%]
75	MP3C	Mx	-.132	1.75
76	MP3C	X	-138.615	5.75
77	MP3C	Z	0	5.75
78	MP3C	Mx	-.132	5.75
79	MP3A	X	-99.585	1.75
80	MP3A	Z	0	1.75
81	MP3A	Mx	.075	1.75
82	MP3A	X	-99.585	5.75
83	MP3A	Z	0	5.75
84	MP3A	Mx	.075	5.75
85	MP3B	X	-138.615	1.75
86	MP3B	Z	0	1.75
87	MP3B	Mx	-.132	1.75
88	MP3B	X	-138.615	5.75
89	MP3B	Z	0	5.75
90	MP3B	Mx	-.132	5.75
91	MP3C	X	-138.615	1.75
92	MP3C	Z	0	1.75
93	MP3C	Mx	.028	1.75
94	MP3C	X	-138.615	5.75
95	MP3C	Z	0	5.75
96	MP3C	Mx	.028	5.75
97	MP1C	X	-55.044	1.25
98	MP1C	Z	0	1.25
99	MP1C	Mx	-.021	1.25
100	MP1C	X	-55.044	5.25
101	MP1C	Z	0	5.25
102	MP1C	Mx	-.021	5.25
103	MP5C	X	-55.044	1.25
104	MP5C	Z	0	1.25
105	MP5C	Mx	-.021	1.25
106	MP5C	X	-55.044	5.25
107	MP5C	Z	0	5.25
108	MP5C	Mx	-.021	5.25
109	MP1B	X	-157.63	1.75
110	MP1B	Z	0	1.75
111	MP1B	Mx	-.059	1.75
112	MP1B	X	-157.63	5.75
113	MP1B	Z	0	5.75
114	MP1B	Mx	-.059	5.75
115	MP5B	X	-157.63	1.75
116	MP5B	Z	0	1.75
117	MP5B	Mx	-.059	1.75
118	MP5B	X	-157.63	5.75
119	MP5B	Z	0	5.75
120	MP5B	Mx	-.059	5.75

Member Point Loads (BLC 13 : Antenna Wo (300 Deg))

	Member Label	Direction	Magnitude[lb,k-ft]	Location[ft,%]
1	MP2A	X	-36.828	.75
2	MP2A	Z	-21.263	.75
3	MP2A	Mx	.028	.75
4	MP2A	X	-36.828	2.75
5	MP2A	Z	-21.263	2.75
6	MP2A	Mx	.028	2.75
7	MP2B	X	-67.745	.75

Member Point Loads (BLC 13 : Antenna Wo (300 Deg)) (Continued)

	Member Label	Direction	Magnitude[lb,k-ft]	Location[ft,%]
8	MP2B	Z	-39.113	.75
9	MP2B	Mx	0	.75
10	MP2B	X	-67.745	2.75
11	MP2B	Z	-39.113	2.75
12	MP2B	Mx	0	2.75
13	MP2C	X	-36.828	.75
14	MP2C	Z	-21.263	.75
15	MP2C	Mx	-.028	.75
16	MP2C	X	-36.828	2.75
17	MP2C	Z	-21.263	2.75
18	MP2C	Mx	-.028	2.75
19	MP3A	X	-8.202	1.5
20	MP3A	Z	-4.735	1.5
21	MP3A	Mx	-.004	1.5
22	MP3B	X	-8.202	1.5
23	MP3B	Z	-4.735	1.5
24	MP3B	Mx	-.004	1.5
25	MP3C	X	-8.202	1.5
26	MP3C	Z	-4.735	1.5
27	MP3C	Mx	-.004	1.5
28	OVP	X	-110.104	1
29	OVP	Z	-63.569	1
30	OVP	Mx	0	1
31	MP4A	X	-40.503	3
32	MP4A	Z	-23.384	3
33	MP4A	Mx	-.02	3
34	MP4B	X	-40.503	3
35	MP4B	Z	-23.384	3
36	MP4B	Mx	-.02	3
37	MP4C	X	-40.503	3
38	MP4C	Z	-23.384	3
39	MP4C	Mx	-.02	3
40	MP3A	X	-35.368	3
41	MP3A	Z	-20.42	3
42	MP3A	Mx	-.018	3
43	MP3B	X	-35.368	3
44	MP3B	Z	-20.42	3
45	MP3B	Mx	-.018	3
46	MP3C	X	-35.368	3
47	MP3C	Z	-20.42	3
48	MP3C	Mx	-.018	3
49	MP1A	X	-128.175	1.75
50	MP1A	Z	-74.002	1.75
51	MP1A	Mx	.096	1.75
52	MP1A	X	-128.175	5.75
53	MP1A	Z	-74.002	5.75
54	MP1A	Mx	.096	5.75
55	MP5A	X	-128.175	1.75
56	MP5A	Z	-74.002	1.75
57	MP5A	Mx	.096	1.75
58	MP5A	X	-128.175	5.75
59	MP5A	Z	-74.002	5.75
60	MP5A	Mx	.096	5.75
61	MP3A	X	-97.51	1.75
62	MP3A	Z	-56.297	1.75
63	MP3A	Mx	.036	1.75
64	MP3A	X	-97.51	5.75

Member Point Loads (BLC 13 : Antenna Wo (300 Deg)) (Continued)

	Member Label	Direction	Magnitude[lb,k-ft]	Location[ft,%]
65	MP3A	Z	-56.297	5.75
66	MP3A	Mx	.036	5.75
67	MP3B	X	-131.311	1.75
68	MP3B	Z	-75.812	1.75
69	MP3B	Mx	.101	1.75
70	MP3B	X	-131.311	5.75
71	MP3B	Z	-75.812	5.75
72	MP3B	Mx	.101	5.75
73	MP3C	X	-97.51	1.75
74	MP3C	Z	-56.297	1.75
75	MP3C	Mx	-.111	1.75
76	MP3C	X	-97.51	5.75
77	MP3C	Z	-56.297	5.75
78	MP3C	Mx	-.111	5.75
79	MP3A	X	-97.51	1.75
80	MP3A	Z	-56.297	1.75
81	MP3A	Mx	.111	1.75
82	MP3A	X	-97.51	5.75
83	MP3A	Z	-56.297	5.75
84	MP3A	Mx	.111	5.75
85	MP3B	X	-131.311	1.75
86	MP3B	Z	-75.812	1.75
87	MP3B	Mx	-.101	1.75
88	MP3B	X	-131.311	5.75
89	MP3B	Z	-75.812	5.75
90	MP3B	Mx	-.101	5.75
91	MP3C	X	-97.51	1.75
92	MP3C	Z	-56.297	1.75
93	MP3C	Mx	-.036	1.75
94	MP3C	X	-97.51	5.75
95	MP3C	Z	-56.297	5.75
96	MP3C	Mx	-.036	5.75
97	MP1C	X	-67.769	1.25
98	MP1C	Z	-39.126	1.25
99	MP1C	Mx	-.051	1.25
100	MP1C	X	-67.769	5.25
101	MP1C	Z	-39.126	5.25
102	MP1C	Mx	-.051	5.25
103	MP5C	X	-67.769	1.25
104	MP5C	Z	-39.126	1.25
105	MP5C	Mx	-.051	1.25
106	MP5C	X	-67.769	5.25
107	MP5C	Z	-39.126	5.25
108	MP5C	Mx	-.051	5.25
109	MP1B	X	-140.68	1.75
110	MP1B	Z	-81.221	1.75
111	MP1B	Mx	0	1.75
112	MP1B	X	-140.68	5.75
113	MP1B	Z	-81.221	5.75
114	MP1B	Mx	0	5.75
115	MP5B	X	-140.68	1.75
116	MP5B	Z	-81.221	1.75
117	MP5B	Mx	0	1.75
118	MP5B	X	-140.68	5.75
119	MP5B	Z	-81.221	5.75
120	MP5B	Mx	0	5.75

Member Point Loads (BLC 14 : Antenna Wo (330 Deg))

	Member Label	Direction	Magnitude[lb,k-ft]	Location[ft,%]
1	MP2A	X	-33.163	.75
2	MP2A	Z	-57.44	.75
3	MP2A	Mx	.025	.75
4	MP2A	X	-33.163	2.75
5	MP2A	Z	-57.44	2.75
6	MP2A	Mx	.025	2.75
7	MP2B	X	-33.163	.75
8	MP2B	Z	-57.44	.75
9	MP2B	Mx	.025	.75
10	MP2B	X	-33.163	2.75
11	MP2B	Z	-57.44	2.75
12	MP2B	Mx	.025	2.75
13	MP2C	X	-15.313	.75
14	MP2C	Z	-26.522	.75
15	MP2C	Mx	-.023	.75
16	MP2C	X	-15.313	2.75
17	MP2C	Z	-26.522	2.75
18	MP2C	Mx	-.023	2.75
19	MP3A	X	-5.684	1.5
20	MP3A	Z	-9.845	1.5
21	MP3A	Mx	-.003	1.5
22	MP3B	X	-5.684	1.5
23	MP3B	Z	-9.845	1.5
24	MP3B	Mx	-.003	1.5
25	MP3C	X	-5.684	1.5
26	MP3C	Z	-9.845	1.5
27	MP3C	Mx	-.003	1.5
28	OVP	X	-67.574	1
29	OVP	Z	-117.041	1
30	OVP	Mx	0	1
31	MP4A	X	-28.544	3
32	MP4A	Z	-49.44	3
33	MP4A	Mx	-.014	3
34	MP4B	X	-28.544	3
35	MP4B	Z	-49.44	3
36	MP4B	Mx	-.014	3
37	MP4C	X	-28.544	3
38	MP4C	Z	-49.44	3
39	MP4C	Mx	-.014	3
40	MP3A	X	-27.556	3
41	MP3A	Z	-47.728	3
42	MP3A	Mx	-.014	3
43	MP3B	X	-27.556	3
44	MP3B	Z	-47.728	3
45	MP3B	Mx	-.014	3
46	MP3C	X	-27.556	3
47	MP3C	Z	-47.728	3
48	MP3C	Mx	-.014	3
49	MP1A	X	-78.815	1.75
50	MP1A	Z	-136.512	1.75
51	MP1A	Mx	.059	1.75
52	MP1A	X	-78.815	5.75
53	MP1A	Z	-136.512	5.75
54	MP1A	Mx	.059	5.75
55	MP5A	X	-78.815	1.75
56	MP5A	Z	-136.512	1.75
57	MP5A	Mx	.059	1.75

Member Point Loads (BLC 14 : Antenna Wo (330 Deg)) (Continued)

	Member Label	Direction	Magnitude[lb,k-ft]	Location[ft,%]
58	MP5A	X	-78.815	5.75
59	MP5A	Z	-136.512	5.75
60	MP5A	Mx	.059	5.75
61	MP3A	X	-69.307	1.75
62	MP3A	Z	-120.044	1.75
63	MP3A	Mx	-.028	1.75
64	MP3A	X	-69.307	5.75
65	MP3A	Z	-120.044	5.75
66	MP3A	Mx	-.028	5.75
67	MP3B	X	-69.307	1.75
68	MP3B	Z	-120.044	1.75
69	MP3B	Mx	.132	1.75
70	MP3B	X	-69.307	5.75
71	MP3B	Z	-120.044	5.75
72	MP3B	Mx	.132	5.75
73	MP3C	X	-49.793	1.75
74	MP3C	Z	-86.243	1.75
75	MP3C	Mx	-.075	1.75
76	MP3C	X	-49.793	5.75
77	MP3C	Z	-86.243	5.75
78	MP3C	Mx	-.075	5.75
79	MP3A	X	-69.307	1.75
80	MP3A	Z	-120.044	1.75
81	MP3A	Mx	.132	1.75
82	MP3A	X	-69.307	5.75
83	MP3A	Z	-120.044	5.75
84	MP3A	Mx	.132	5.75
85	MP3B	X	-69.307	1.75
86	MP3B	Z	-120.044	1.75
87	MP3B	Mx	-.028	1.75
88	MP3B	X	-69.307	5.75
89	MP3B	Z	-120.044	5.75
90	MP3B	Mx	-.028	5.75
91	MP3C	X	-49.793	1.75
92	MP3C	Z	-86.243	1.75
93	MP3C	Mx	-.075	1.75
94	MP3C	X	-49.793	5.75
95	MP3C	Z	-86.243	5.75
96	MP3C	Mx	-.075	5.75
97	MP1C	X	-44.929	1.25
98	MP1C	Z	-77.819	1.25
99	MP1C	Mx	-.067	1.25
100	MP1C	X	-44.929	5.25
101	MP1C	Z	-77.819	5.25
102	MP1C	Mx	-.067	5.25
103	MP5C	X	-44.929	1.25
104	MP5C	Z	-77.819	1.25
105	MP5C	Mx	-.067	1.25
106	MP5C	X	-44.929	5.25
107	MP5C	Z	-77.819	5.25
108	MP5C	Mx	-.067	5.25
109	MP1B	X	-78.815	1.75
110	MP1B	Z	-136.512	1.75
111	MP1B	Mx	.059	1.75
112	MP1B	X	-78.815	5.75
113	MP1B	Z	-136.512	5.75
114	MP1B	Mx	.059	5.75

Member Point Loads (BLC 14 : Antenna Wo (330 Deg)) (Continued)

	Member Label	Direction	Magnitude[lb,k-ft]	Location[ft,%]
115	MP5B	X	-78.815	1.75
116	MP5B	Z	-136.512	1.75
117	MP5B	Mx	.059	1.75
118	MP5B	X	-78.815	5.75
119	MP5B	Z	-136.512	5.75
120	MP5B	Mx	.059	5.75

Member Point Loads (BLC 15 : Antenna Wi (0 Deg))

	Member Label	Direction	Magnitude[lb,k-ft]	Location[ft,%]
1	MP2A	X	0	.75
2	MP2A	Z	-16.166	.75
3	MP2A	Mx	0	.75
4	MP2A	X	0	2.75
5	MP2A	Z	-16.166	2.75
6	MP2A	Mx	0	2.75
7	MP2B	X	0	.75
8	MP2B	Z	-9.213	.75
9	MP2B	Mx	.006	.75
10	MP2B	X	0	2.75
11	MP2B	Z	-9.213	2.75
12	MP2B	Mx	.006	2.75
13	MP2C	X	0	.75
14	MP2C	Z	-9.213	.75
15	MP2C	Mx	-.006	.75
16	MP2C	X	0	2.75
17	MP2C	Z	-9.213	2.75
18	MP2C	Mx	-.006	2.75
19	MP3A	X	0	1.5
20	MP3A	Z	-3.319	1.5
21	MP3A	Mx	0	1.5
22	MP3B	X	0	1.5
23	MP3B	Z	-3.319	1.5
24	MP3B	Mx	0	1.5
25	MP3C	X	0	1.5
26	MP3C	Z	-3.319	1.5
27	MP3C	Mx	0	1.5
28	OVP	X	0	1
29	OVP	Z	-26.479	1
30	OVP	Mx	0	1
31	MP4A	X	0	3
32	MP4A	Z	-13.636	3
33	MP4A	Mx	0	3
34	MP4B	X	0	3
35	MP4B	Z	-13.636	3
36	MP4B	Mx	0	3
37	MP4C	X	0	3
38	MP4C	Z	-13.636	3
39	MP4C	Mx	0	3
40	MP3A	X	0	3
41	MP3A	Z	-13.636	3
42	MP3A	Mx	0	3
43	MP3B	X	0	3
44	MP3B	Z	-13.636	3
45	MP3B	Mx	0	3
46	MP3C	X	0	3
47	MP3C	Z	-13.636	3

Member Point Loads (BLC 15 : Antenna Wi (0 Deg)) (Continued)

	Member Label	Direction	Magnitude[lb,k-ft]	Location[ft,%]
48	MP3C	Mx	0	3
49	MP1A	X	0	1.75
50	MP1A	Z	-32.316	1.75
51	MP1A	Mx	0	1.75
52	MP1A	X	0	5.75
53	MP1A	Z	-32.316	5.75
54	MP1A	Mx	0	5.75
55	MP5A	X	0	1.75
56	MP5A	Z	-32.316	1.75
57	MP5A	Mx	0	1.75
58	MP5A	X	0	5.75
59	MP5A	Z	-32.316	5.75
60	MP5A	Mx	0	5.75
61	MP3A	X	0	1.75
62	MP3A	Z	-30.384	1.75
63	MP3A	Mx	-.02	1.75
64	MP3A	X	0	5.75
65	MP3A	Z	-30.384	5.75
66	MP3A	Mx	-.02	5.75
67	MP3B	X	0	1.75
68	MP3B	Z	-23.149	1.75
69	MP3B	Mx	.023	1.75
70	MP3B	X	0	5.75
71	MP3B	Z	-23.149	5.75
72	MP3B	Mx	.023	5.75
73	MP3C	X	0	1.75
74	MP3C	Z	-23.149	1.75
75	MP3C	Mx	-.007	1.75
76	MP3C	X	0	5.75
77	MP3C	Z	-23.149	5.75
78	MP3C	Mx	-.007	5.75
79	MP3A	X	0	1.75
80	MP3A	Z	-30.384	1.75
81	MP3A	Mx	.02	1.75
82	MP3A	X	0	5.75
83	MP3A	Z	-30.384	5.75
84	MP3A	Mx	.02	5.75
85	MP3B	X	0	1.75
86	MP3B	Z	-23.149	1.75
87	MP3B	Mx	.007	1.75
88	MP3B	X	0	5.75
89	MP3B	Z	-23.149	5.75
90	MP3B	Mx	.007	5.75
91	MP3C	X	0	1.75
92	MP3C	Z	-23.149	1.75
93	MP3C	Mx	-.023	1.75
94	MP3C	X	0	5.75
95	MP3C	Z	-23.149	5.75
96	MP3C	Mx	-.023	5.75
97	MP1C	X	0	1.25
98	MP1C	Z	-16.211	1.25
99	MP1C	Mx	-.011	1.25
100	MP1C	X	0	5.25
101	MP1C	Z	-16.211	5.25
102	MP1C	Mx	-.011	5.25
103	MP5C	X	0	1.25
104	MP5C	Z	-16.211	1.25

Member Point Loads (BLC 15 : Antenna Wi (0 Deg)) (Continued)

	Member Label	Direction	Magnitude[lb,k-ft]	Location[ft,%]
105	MP5C	Mx	-.011	1.25
106	MP5C	X	0	5.25
107	MP5C	Z	-16.211	5.25
108	MP5C	Mx	-.011	5.25
109	MP1B	X	0	1.75
110	MP1B	Z	-29.658	1.75
111	MP1B	Mx	.019	1.75
112	MP1B	X	0	5.75
113	MP1B	Z	-29.658	5.75
114	MP1B	Mx	.019	5.75
115	MP5B	X	0	1.75
116	MP5B	Z	-29.658	1.75
117	MP5B	Mx	.019	1.75
118	MP5B	X	0	5.75
119	MP5B	Z	-29.658	5.75
120	MP5B	Mx	.019	5.75

Member Point Loads (BLC 16 : Antenna Wi (30 Deg))

	Member Label	Direction	Magnitude[lb,k-ft]	Location[ft,%]
1	MP2A	X	6.924	.75
2	MP2A	Z	-11.993	.75
3	MP2A	Mx	-.005	.75
4	MP2A	X	6.924	2.75
5	MP2A	Z	-11.993	2.75
6	MP2A	Mx	-.005	2.75
7	MP2B	X	3.447	.75
8	MP2B	Z	-5.971	.75
9	MP2B	Mx	.005	.75
10	MP2B	X	3.447	2.75
11	MP2B	Z	-5.971	2.75
12	MP2B	Mx	.005	2.75
13	MP2C	X	6.924	.75
14	MP2C	Z	-11.993	.75
15	MP2C	Mx	-.005	.75
16	MP2C	X	6.924	2.75
17	MP2C	Z	-11.993	2.75
18	MP2C	Mx	-.005	2.75
19	MP3A	X	1.556	1.5
20	MP3A	Z	-2.696	1.5
21	MP3A	Mx	.000778	1.5
22	MP3B	X	1.556	1.5
23	MP3B	Z	-2.696	1.5
24	MP3B	Mx	.000778	1.5
25	MP3C	X	1.556	1.5
26	MP3C	Z	-2.696	1.5
27	MP3C	Mx	.000778	1.5
28	OVP	X	11.715	1
29	OVP	Z	-20.291	1
30	OVP	Mx	0	1
31	MP4A	X	6.3	3
32	MP4A	Z	-10.912	3
33	MP4A	Mx	.003	3
34	MP4B	X	6.3	3
35	MP4B	Z	-10.912	3
36	MP4B	Mx	.003	3
37	MP4C	X	6.3	3

Member Point Loads (BLC 16 : Antenna Wi (30 Deg)) (Continued)

	Member Label	Direction	Magnitude[lb,k-ft]	Location[ft,%]
38	MP4C	Z	-10.912	3
39	MP4C	Mx	.003	3
40	MP3A	X	6.103	3
41	MP3A	Z	-10.571	3
42	MP3A	Mx	.003	3
43	MP3B	X	6.103	3
44	MP3B	Z	-10.571	3
45	MP3B	Mx	.003	3
46	MP3C	X	6.103	3
47	MP3C	Z	-10.571	3
48	MP3C	Mx	.003	3
49	MP1A	X	15.715	1.75
50	MP1A	Z	-27.219	1.75
51	MP1A	Mx	-.012	1.75
52	MP1A	X	15.715	5.75
53	MP1A	Z	-27.219	5.75
54	MP1A	Mx	-.012	5.75
55	MP5A	X	15.715	1.75
56	MP5A	Z	-27.219	1.75
57	MP5A	Mx	-.012	1.75
58	MP5A	X	15.715	5.75
59	MP5A	Z	-27.219	5.75
60	MP5A	Mx	-.012	5.75
61	MP3A	X	13.986	1.75
62	MP3A	Z	-24.225	1.75
63	MP3A	Mx	-.027	1.75
64	MP3A	X	13.986	5.75
65	MP3A	Z	-24.225	5.75
66	MP3A	Mx	-.027	5.75
67	MP3B	X	10.369	1.75
68	MP3B	Z	-17.959	1.75
69	MP3B	Mx	.016	1.75
70	MP3B	X	10.369	5.75
71	MP3B	Z	-17.959	5.75
72	MP3B	Mx	.016	5.75
73	MP3C	X	13.986	1.75
74	MP3C	Z	-24.225	1.75
75	MP3C	Mx	.006	1.75
76	MP3C	X	13.986	5.75
77	MP3C	Z	-24.225	5.75
78	MP3C	Mx	.006	5.75
79	MP3A	X	13.986	1.75
80	MP3A	Z	-24.225	1.75
81	MP3A	Mx	.006	1.75
82	MP3A	X	13.986	5.75
83	MP3A	Z	-24.225	5.75
84	MP3A	Mx	.006	5.75
85	MP3B	X	10.369	1.75
86	MP3B	Z	-17.959	1.75
87	MP3B	Mx	.016	1.75
88	MP3B	X	10.369	5.75
89	MP3B	Z	-17.959	5.75
90	MP3B	Mx	.016	5.75
91	MP3C	X	13.986	1.75
92	MP3C	Z	-24.225	1.75
93	MP3C	Mx	-.027	1.75
94	MP3C	X	13.986	5.75

Member Point Loads (BLC 16 : Antenna Wi (30 Deg)) (Continued)

	Member Label	Direction	Magnitude[lb,k-ft]	Location[ft,%]
95	MP3C	Z	-24.225	5.75
96	MP3C	Mx	-.027	5.75
97	MP1C	X	5.915	1.25
98	MP1C	Z	-10.246	1.25
99	MP1C	Mx	-.004	1.25
100	MP1C	X	5.915	5.25
101	MP1C	Z	-10.246	5.25
102	MP1C	Mx	-.004	5.25
103	MP5C	X	5.915	1.25
104	MP5C	Z	-10.246	1.25
105	MP5C	Mx	-.004	1.25
106	MP5C	X	5.915	5.25
107	MP5C	Z	-10.246	5.25
108	MP5C	Mx	-.004	5.25
109	MP1B	X	14.386	1.75
110	MP1B	Z	-24.918	1.75
111	MP1B	Mx	.022	1.75
112	MP1B	X	14.386	5.75
113	MP1B	Z	-24.918	5.75
114	MP1B	Mx	.022	5.75
115	MP5B	X	14.386	1.75
116	MP5B	Z	-24.918	1.75
117	MP5B	Mx	.022	1.75
118	MP5B	X	14.386	5.75
119	MP5B	Z	-24.918	5.75
120	MP5B	Mx	.022	5.75

Member Point Loads (BLC 17 : Antenna Wi (60 Deg))

	Member Label	Direction	Magnitude[lb,k-ft]	Location[ft,%]
1	MP2A	X	7.978	.75
2	MP2A	Z	-4.606	.75
3	MP2A	Mx	-.006	.75
4	MP2A	X	7.978	2.75
5	MP2A	Z	-4.606	2.75
6	MP2A	Mx	-.006	2.75
7	MP2B	X	7.978	.75
8	MP2B	Z	-4.606	.75
9	MP2B	Mx	.006	.75
10	MP2B	X	7.978	2.75
11	MP2B	Z	-4.606	2.75
12	MP2B	Mx	.006	2.75
13	MP2C	X	14.001	.75
14	MP2C	Z	-8.083	.75
15	MP2C	Mx	0	.75
16	MP2C	X	14.001	2.75
17	MP2C	Z	-8.083	2.75
18	MP2C	Mx	0	2.75
19	MP3A	X	2.338	1.5
20	MP3A	Z	-1.35	1.5
21	MP3A	Mx	.001	1.5
22	MP3B	X	2.338	1.5
23	MP3B	Z	-1.35	1.5
24	MP3B	Mx	.001	1.5
25	MP3C	X	2.338	1.5
26	MP3C	Z	-1.35	1.5
27	MP3C	Mx	.001	1.5

Member Point Loads (BLC 17 : Antenna Wi (60 Deg)) (Continued)

	Member Label	Direction	Magnitude[lb,k-ft]	Location[ft,%]
28	OVP	X	18.97	1
29	OVP	Z	-10.953	1
30	OVP	Mx	0	1
31	MP4A	X	9.117	3
32	MP4A	Z	-5.264	3
33	MP4A	Mx	.005	3
34	MP4B	X	9.117	3
35	MP4B	Z	-5.264	3
36	MP4B	Mx	.005	3
37	MP4C	X	9.117	3
38	MP4C	Z	-5.264	3
39	MP4C	Mx	.005	3
40	MP3A	X	8.093	3
41	MP3A	Z	-4.673	3
42	MP3A	Mx	.004	3
43	MP3B	X	8.093	3
44	MP3B	Z	-4.673	3
45	MP3B	Mx	.004	3
46	MP3C	X	8.093	3
47	MP3C	Z	-4.673	3
48	MP3C	Mx	.004	3
49	MP1A	X	25.685	1.75
50	MP1A	Z	-14.829	1.75
51	MP1A	Mx	-.019	1.75
52	MP1A	X	25.685	5.75
53	MP1A	Z	-14.829	5.75
54	MP1A	Mx	-.019	5.75
55	MP5A	X	25.685	1.75
56	MP5A	Z	-14.829	1.75
57	MP5A	Mx	-.019	1.75
58	MP5A	X	25.685	5.75
59	MP5A	Z	-14.829	5.75
60	MP5A	Mx	-.019	5.75
61	MP3A	X	20.047	1.75
62	MP3A	Z	-11.574	1.75
63	MP3A	Mx	-.023	1.75
64	MP3A	X	20.047	5.75
65	MP3A	Z	-11.574	5.75
66	MP3A	Mx	-.023	5.75
67	MP3B	X	20.047	1.75
68	MP3B	Z	-11.574	1.75
69	MP3B	Mx	.007	1.75
70	MP3B	X	20.047	5.75
71	MP3B	Z	-11.574	5.75
72	MP3B	Mx	.007	5.75
73	MP3C	X	26.313	1.75
74	MP3C	Z	-15.192	1.75
75	MP3C	Mx	.02	1.75
76	MP3C	X	26.313	5.75
77	MP3C	Z	-15.192	5.75
78	MP3C	Mx	.02	5.75
79	MP3A	X	20.047	1.75
80	MP3A	Z	-11.574	1.75
81	MP3A	Mx	-.007	1.75
82	MP3A	X	20.047	5.75
83	MP3A	Z	-11.574	5.75
84	MP3A	Mx	-.007	5.75

Member Point Loads (BLC 17 : Antenna Wi (60 Deg)) (Continued)

	Member Label	Direction	Magnitude[lb,k-ft]	Location[ft,%]
85	MP3B	X	20.047	1.75
86	MP3B	Z	-11.574	1.75
87	MP3B	Mx	.023	1.75
88	MP3B	X	20.047	5.75
89	MP3B	Z	-11.574	5.75
90	MP3B	Mx	.023	5.75
91	MP3C	X	26.313	1.75
92	MP3C	Z	-15.192	1.75
93	MP3C	Mx	-.02	1.75
94	MP3C	X	26.313	5.75
95	MP3C	Z	-15.192	5.75
96	MP3C	Mx	-.02	5.75
97	MP1C	X	8.349	1.25
98	MP1C	Z	-4.82	1.25
99	MP1C	Mx	0	1.25
100	MP1C	X	8.349	5.25
101	MP1C	Z	-4.82	5.25
102	MP1C	Mx	0	5.25
103	MP5C	X	8.349	1.25
104	MP5C	Z	-4.82	1.25
105	MP5C	Mx	0	1.25
106	MP5C	X	8.349	5.25
107	MP5C	Z	-4.82	5.25
108	MP5C	Mx	0	5.25
109	MP1B	X	25.685	1.75
110	MP1B	Z	-14.829	1.75
111	MP1B	Mx	.019	1.75
112	MP1B	X	25.685	5.75
113	MP1B	Z	-14.829	5.75
114	MP1B	Mx	.019	5.75
115	MP5B	X	25.685	1.75
116	MP5B	Z	-14.829	1.75
117	MP5B	Mx	.019	1.75
118	MP5B	X	25.685	5.75
119	MP5B	Z	-14.829	5.75
120	MP5B	Mx	.019	5.75

Member Point Loads (BLC 18 : Antenna Wi (90 Deg))

	Member Label	Direction	Magnitude[lb,k-ft]	Location[ft,%]
1	MP2A	X	6.895	.75
2	MP2A	Z	0	.75
3	MP2A	Mx	-.005	.75
4	MP2A	X	6.895	2.75
5	MP2A	Z	0	2.75
6	MP2A	Mx	-.005	2.75
7	MP2B	X	13.849	.75
8	MP2B	Z	0	.75
9	MP2B	Mx	.005	.75
10	MP2B	X	13.849	2.75
11	MP2B	Z	0	2.75
12	MP2B	Mx	.005	2.75
13	MP2C	X	13.849	.75
14	MP2C	Z	0	.75
15	MP2C	Mx	.005	.75
16	MP2C	X	13.849	2.75
17	MP2C	Z	0	2.75

Member Point Loads (BLC 18 : Antenna Wi (90 Deg)) (Continued)

	Member Label	Direction	Magnitude[lb,k-ft]	Location[ft,%]
18	MP2C	Mx	.005	2.75
19	MP3A	X	2.493	1.5
20	MP3A	Z	0	1.5
21	MP3A	Mx	.001	1.5
22	MP3B	X	2.493	1.5
23	MP3B	Z	0	1.5
24	MP3B	Mx	.001	1.5
25	MP3C	X	2.493	1.5
26	MP3C	Z	0	1.5
27	MP3C	Mx	.001	1.5
28	OVP	X	23.43	1
29	OVP	Z	0	1
30	OVP	Mx	0	1
31	MP4A	X	9.491	3
32	MP4A	Z	0	3
33	MP4A	Mx	.005	3
34	MP4B	X	9.491	3
35	MP4B	Z	0	3
36	MP4B	Mx	.005	3
37	MP4C	X	9.491	3
38	MP4C	Z	0	3
39	MP4C	Mx	.005	3
40	MP3A	X	7.915	3
41	MP3A	Z	0	3
42	MP3A	Mx	.004	3
43	MP3B	X	7.915	3
44	MP3B	Z	0	3
45	MP3B	Mx	.004	3
46	MP3C	X	7.915	3
47	MP3C	Z	0	3
48	MP3C	Mx	.004	3
49	MP1A	X	28.772	1.75
50	MP1A	Z	0	1.75
51	MP1A	Mx	-.022	1.75
52	MP1A	X	28.772	5.75
53	MP1A	Z	0	5.75
54	MP1A	Mx	-.022	5.75
55	MP5A	X	28.772	1.75
56	MP5A	Z	0	1.75
57	MP5A	Mx	-.022	1.75
58	MP5A	X	28.772	5.75
59	MP5A	Z	0	5.75
60	MP5A	Mx	-.022	5.75
61	MP3A	X	20.737	1.75
62	MP3A	Z	0	1.75
63	MP3A	Mx	-.016	1.75
64	MP3A	X	20.737	5.75
65	MP3A	Z	0	5.75
66	MP3A	Mx	-.016	5.75
67	MP3B	X	27.972	1.75
68	MP3B	Z	0	1.75
69	MP3B	Mx	-.006	1.75
70	MP3B	X	27.972	5.75
71	MP3B	Z	0	5.75
72	MP3B	Mx	-.006	5.75
73	MP3C	X	27.972	1.75
74	MP3C	Z	0	1.75

Member Point Loads (BLC 18 : Antenna Wi (90 Deg)) (Continued)

	Member Label	Direction	Magnitude[lb,k-ft]	Location[ft,%]
75	MP3C	Mx	.027	1.75
76	MP3C	X	27.972	5.75
77	MP3C	Z	0	5.75
78	MP3C	Mx	.027	5.75
79	MP3A	X	20.737	1.75
80	MP3A	Z	0	1.75
81	MP3A	Mx	-.016	1.75
82	MP3A	X	20.737	5.75
83	MP3A	Z	0	5.75
84	MP3A	Mx	-.016	5.75
85	MP3B	X	27.972	1.75
86	MP3B	Z	0	1.75
87	MP3B	Mx	.027	1.75
88	MP3B	X	27.972	5.75
89	MP3B	Z	0	5.75
90	MP3B	Mx	.027	5.75
91	MP3C	X	27.972	1.75
92	MP3C	Z	0	1.75
93	MP3C	Mx	-.006	1.75
94	MP3C	X	27.972	5.75
95	MP3C	Z	0	5.75
96	MP3C	Mx	-.006	5.75
97	MP1C	X	11.831	1.25
98	MP1C	Z	0	1.25
99	MP1C	Mx	.004	1.25
100	MP1C	X	11.831	5.25
101	MP1C	Z	0	5.25
102	MP1C	Mx	.004	5.25
103	MP5C	X	11.831	1.25
104	MP5C	Z	0	1.25
105	MP5C	Mx	.004	1.25
106	MP5C	X	11.831	5.25
107	MP5C	Z	0	5.25
108	MP5C	Mx	.004	5.25
109	MP1B	X	31.43	1.75
110	MP1B	Z	0	1.75
111	MP1B	Mx	.012	1.75
112	MP1B	X	31.43	5.75
113	MP1B	Z	0	5.75
114	MP1B	Mx	.012	5.75
115	MP5B	X	31.43	1.75
116	MP5B	Z	0	1.75
117	MP5B	Mx	.012	1.75
118	MP5B	X	31.43	5.75
119	MP5B	Z	0	5.75
120	MP5B	Mx	.012	5.75

Member Point Loads (BLC 19 : Antenna Wi (120 Deg))

	Member Label	Direction	Magnitude[lb,k-ft]	Location[ft,%]
1	MP2A	X	7.978	.75
2	MP2A	Z	4.606	.75
3	MP2A	Mx	-.006	.75
4	MP2A	X	7.978	2.75
5	MP2A	Z	4.606	2.75
6	MP2A	Mx	-.006	2.75
7	MP2B	X	14.001	.75

Member Point Loads (BLC 19 : Antenna Wi (120 Deg)) (Continued)

	Member Label	Direction	Magnitude[lb,k-ft]	Location[ft,%]
8	MP2B	Z	8.083	.75
9	MP2B	Mx	0	.75
10	MP2B	X	14.001	2.75
11	MP2B	Z	8.083	2.75
12	MP2B	Mx	0	2.75
13	MP2C	X	7.978	.75
14	MP2C	Z	4.606	.75
15	MP2C	Mx	.006	.75
16	MP2C	X	7.978	2.75
17	MP2C	Z	4.606	2.75
18	MP2C	Mx	.006	2.75
19	MP3A	X	2.338	1.5
20	MP3A	Z	1.35	1.5
21	MP3A	Mx	.001	1.5
22	MP3B	X	2.338	1.5
23	MP3B	Z	1.35	1.5
24	MP3B	Mx	.001	1.5
25	MP3C	X	2.338	1.5
26	MP3C	Z	1.35	1.5
27	MP3C	Mx	.001	1.5
28	OVP	X	22.931	1
29	OVP	Z	13.239	1
30	OVP	Mx	0	1
31	MP4A	X	9.117	3
32	MP4A	Z	5.264	3
33	MP4A	Mx	.005	3
34	MP4B	X	9.117	3
35	MP4B	Z	5.264	3
36	MP4B	Mx	.005	3
37	MP4C	X	9.117	3
38	MP4C	Z	5.264	3
39	MP4C	Mx	.005	3
40	MP3A	X	8.093	3
41	MP3A	Z	4.673	3
42	MP3A	Mx	.004	3
43	MP3B	X	8.093	3
44	MP3B	Z	4.673	3
45	MP3B	Mx	.004	3
46	MP3C	X	8.093	3
47	MP3C	Z	4.673	3
48	MP3C	Mx	.004	3
49	MP1A	X	25.685	1.75
50	MP1A	Z	14.829	1.75
51	MP1A	Mx	-.019	1.75
52	MP1A	X	25.685	5.75
53	MP1A	Z	14.829	5.75
54	MP1A	Mx	-.019	5.75
55	MP5A	X	25.685	1.75
56	MP5A	Z	14.829	1.75
57	MP5A	Mx	-.019	1.75
58	MP5A	X	25.685	5.75
59	MP5A	Z	14.829	5.75
60	MP5A	Mx	-.019	5.75
61	MP3A	X	20.047	1.75
62	MP3A	Z	11.574	1.75
63	MP3A	Mx	-.007	1.75
64	MP3A	X	20.047	5.75

Member Point Loads (BLC 19 : Antenna Wi (120 Deg)) (Continued)

	Member Label	Direction	Magnitude[lb,k-ft]	Location[ft,%]
65	MP3A	Z	11.574	5.75
66	MP3A	Mx	-.007	5.75
67	MP3B	X	26.313	1.75
68	MP3B	Z	15.192	1.75
69	MP3B	Mx	-.02	1.75
70	MP3B	X	26.313	5.75
71	MP3B	Z	15.192	5.75
72	MP3B	Mx	-.02	5.75
73	MP3C	X	20.047	1.75
74	MP3C	Z	11.574	1.75
75	MP3C	Mx	.023	1.75
76	MP3C	X	20.047	5.75
77	MP3C	Z	11.574	5.75
78	MP3C	Mx	.023	5.75
79	MP3A	X	20.047	1.75
80	MP3A	Z	11.574	1.75
81	MP3A	Mx	-.023	1.75
82	MP3A	X	20.047	5.75
83	MP3A	Z	11.574	5.75
84	MP3A	Mx	-.023	5.75
85	MP3B	X	26.313	1.75
86	MP3B	Z	15.192	1.75
87	MP3B	Mx	.02	1.75
88	MP3B	X	26.313	5.75
89	MP3B	Z	15.192	5.75
90	MP3B	Mx	.02	5.75
91	MP3C	X	20.047	1.75
92	MP3C	Z	11.574	1.75
93	MP3C	Mx	.007	1.75
94	MP3C	X	20.047	5.75
95	MP3C	Z	11.574	5.75
96	MP3C	Mx	.007	5.75
97	MP1C	X	14.039	1.25
98	MP1C	Z	8.106	1.25
99	MP1C	Mx	.011	1.25
100	MP1C	X	14.039	5.25
101	MP1C	Z	8.106	5.25
102	MP1C	Mx	.011	5.25
103	MP5C	X	14.039	1.25
104	MP5C	Z	8.106	1.25
105	MP5C	Mx	.011	1.25
106	MP5C	X	14.039	5.25
107	MP5C	Z	8.106	5.25
108	MP5C	Mx	.011	5.25
109	MP1B	X	27.986	1.75
110	MP1B	Z	16.158	1.75
111	MP1B	Mx	0	1.75
112	MP1B	X	27.986	5.75
113	MP1B	Z	16.158	5.75
114	MP1B	Mx	0	5.75
115	MP5B	X	27.986	1.75
116	MP5B	Z	16.158	1.75
117	MP5B	Mx	0	1.75
118	MP5B	X	27.986	5.75
119	MP5B	Z	16.158	5.75
120	MP5B	Mx	0	5.75

Member Point Loads (BLC 20 : Antenna Wi (150 Deg))

	Member Label	Direction	Magnitude[lb,k-ft]	Location[ft,%]
1	MP2A	X	6.924	.75
2	MP2A	Z	11.993	.75
3	MP2A	Mx	-.005	.75
4	MP2A	X	6.924	2.75
5	MP2A	Z	11.993	2.75
6	MP2A	Mx	-.005	2.75
7	MP2B	X	6.924	.75
8	MP2B	Z	11.993	.75
9	MP2B	Mx	-.005	.75
10	MP2B	X	6.924	2.75
11	MP2B	Z	11.993	2.75
12	MP2B	Mx	-.005	2.75
13	MP2C	X	3.447	.75
14	MP2C	Z	5.971	.75
15	MP2C	Mx	.005	.75
16	MP2C	X	3.447	2.75
17	MP2C	Z	5.971	2.75
18	MP2C	Mx	.005	2.75
19	MP3A	X	1.556	1.5
20	MP3A	Z	2.696	1.5
21	MP3A	Mx	.000778	1.5
22	MP3B	X	1.556	1.5
23	MP3B	Z	2.696	1.5
24	MP3B	Mx	.000778	1.5
25	MP3C	X	1.556	1.5
26	MP3C	Z	2.696	1.5
27	MP3C	Mx	.000778	1.5
28	OVP	X	14.002	1
29	OVP	Z	24.252	1
30	OVP	Mx	0	1
31	MP4A	X	6.3	3
32	MP4A	Z	10.912	3
33	MP4A	Mx	.003	3
34	MP4B	X	6.3	3
35	MP4B	Z	10.912	3
36	MP4B	Mx	.003	3
37	MP4C	X	6.3	3
38	MP4C	Z	10.912	3
39	MP4C	Mx	.003	3
40	MP3A	X	6.103	3
41	MP3A	Z	10.571	3
42	MP3A	Mx	.003	3
43	MP3B	X	6.103	3
44	MP3B	Z	10.571	3
45	MP3B	Mx	.003	3
46	MP3C	X	6.103	3
47	MP3C	Z	10.571	3
48	MP3C	Mx	.003	3
49	MP1A	X	15.715	1.75
50	MP1A	Z	27.219	1.75
51	MP1A	Mx	-.012	1.75
52	MP1A	X	15.715	5.75
53	MP1A	Z	27.219	5.75
54	MP1A	Mx	-.012	5.75
55	MP5A	X	15.715	1.75
56	MP5A	Z	27.219	1.75
57	MP5A	Mx	-.012	1.75

Member Point Loads (BLC 20 : Antenna Wi (150 Deg)) (Continued)

	Member Label	Direction	Magnitude[lb,k-ft]	Location[ft,%]
58	MP5A	X	15.715	5.75
59	MP5A	Z	27.219	5.75
60	MP5A	Mx	-.012	5.75
61	MP3A	X	13.986	1.75
62	MP3A	Z	24.225	1.75
63	MP3A	Mx	.006	1.75
64	MP3A	X	13.986	5.75
65	MP3A	Z	24.225	5.75
66	MP3A	Mx	.006	5.75
67	MP3B	X	13.986	1.75
68	MP3B	Z	24.225	1.75
69	MP3B	Mx	-.027	1.75
70	MP3B	X	13.986	5.75
71	MP3B	Z	24.225	5.75
72	MP3B	Mx	-.027	5.75
73	MP3C	X	10.369	1.75
74	MP3C	Z	17.959	1.75
75	MP3C	Mx	.016	1.75
76	MP3C	X	10.369	5.75
77	MP3C	Z	17.959	5.75
78	MP3C	Mx	.016	5.75
79	MP3A	X	13.986	1.75
80	MP3A	Z	24.225	1.75
81	MP3A	Mx	-.027	1.75
82	MP3A	X	13.986	5.75
83	MP3A	Z	24.225	5.75
84	MP3A	Mx	-.027	5.75
85	MP3B	X	13.986	1.75
86	MP3B	Z	24.225	1.75
87	MP3B	Mx	.006	1.75
88	MP3B	X	13.986	5.75
89	MP3B	Z	24.225	5.75
90	MP3B	Mx	.006	5.75
91	MP3C	X	10.369	1.75
92	MP3C	Z	17.959	1.75
93	MP3C	Mx	.016	1.75
94	MP3C	X	10.369	5.75
95	MP3C	Z	17.959	5.75
96	MP3C	Mx	.016	5.75
97	MP1C	X	9.201	1.25
98	MP1C	Z	15.936	1.25
99	MP1C	Mx	.014	1.25
100	MP1C	X	9.201	5.25
101	MP1C	Z	15.936	5.25
102	MP1C	Mx	.014	5.25
103	MP5C	X	9.201	1.25
104	MP5C	Z	15.936	1.25
105	MP5C	Mx	.014	1.25
106	MP5C	X	9.201	5.25
107	MP5C	Z	15.936	5.25
108	MP5C	Mx	.014	5.25
109	MP1B	X	15.715	1.75
110	MP1B	Z	27.219	1.75
111	MP1B	Mx	-.012	1.75
112	MP1B	X	15.715	5.75
113	MP1B	Z	27.219	5.75
114	MP1B	Mx	-.012	5.75

Member Point Loads (BLC 20 : Antenna Wi (150 Deg)) (Continued)

	Member Label	Direction	Magnitude[lb,k-ft]	Location[ft,%]
115	MP5B	X	15.715	1.75
116	MP5B	Z	27.219	1.75
117	MP5B	Mx	-.012	1.75
118	MP5B	X	15.715	5.75
119	MP5B	Z	27.219	5.75
120	MP5B	Mx	-.012	5.75

Member Point Loads (BLC 21 : Antenna Wi (180 Deg))

	Member Label	Direction	Magnitude[lb,k-ft]	Location[ft,%]
1	MP2A	X	0	.75
2	MP2A	Z	16.166	.75
3	MP2A	Mx	0	.75
4	MP2A	X	0	2.75
5	MP2A	Z	16.166	2.75
6	MP2A	Mx	0	2.75
7	MP2B	X	0	.75
8	MP2B	Z	9.213	.75
9	MP2B	Mx	-.006	.75
10	MP2B	X	0	2.75
11	MP2B	Z	9.213	2.75
12	MP2B	Mx	-.006	2.75
13	MP2C	X	0	.75
14	MP2C	Z	9.213	.75
15	MP2C	Mx	.006	.75
16	MP2C	X	0	2.75
17	MP2C	Z	9.213	2.75
18	MP2C	Mx	.006	2.75
19	MP3A	X	0	1.5
20	MP3A	Z	3.319	1.5
21	MP3A	Mx	0	1.5
22	MP3B	X	0	1.5
23	MP3B	Z	3.319	1.5
24	MP3B	Mx	0	1.5
25	MP3C	X	0	1.5
26	MP3C	Z	3.319	1.5
27	MP3C	Mx	0	1.5
28	OVP	X	0	1
29	OVP	Z	26.479	1
30	OVP	Mx	0	1
31	MP4A	X	0	3
32	MP4A	Z	13.636	3
33	MP4A	Mx	0	3
34	MP4B	X	0	3
35	MP4B	Z	13.636	3
36	MP4B	Mx	0	3
37	MP4C	X	0	3
38	MP4C	Z	13.636	3
39	MP4C	Mx	0	3
40	MP3A	X	0	3
41	MP3A	Z	13.636	3
42	MP3A	Mx	0	3
43	MP3B	X	0	3
44	MP3B	Z	13.636	3
45	MP3B	Mx	0	3
46	MP3C	X	0	3
47	MP3C	Z	13.636	3

Member Point Loads (BLC 21 : Antenna Wi (180 Deg)) (Continued)

	Member Label	Direction	Magnitude[lb,k-ft]	Location[ft,%]
48	MP3C	Mx	0	3
49	MP1A	X	0	1.75
50	MP1A	Z	32.316	1.75
51	MP1A	Mx	0	1.75
52	MP1A	X	0	5.75
53	MP1A	Z	32.316	5.75
54	MP1A	Mx	0	5.75
55	MP5A	X	0	1.75
56	MP5A	Z	32.316	1.75
57	MP5A	Mx	0	1.75
58	MP5A	X	0	5.75
59	MP5A	Z	32.316	5.75
60	MP5A	Mx	0	5.75
61	MP3A	X	0	1.75
62	MP3A	Z	30.384	1.75
63	MP3A	Mx	.02	1.75
64	MP3A	X	0	5.75
65	MP3A	Z	30.384	5.75
66	MP3A	Mx	.02	5.75
67	MP3B	X	0	1.75
68	MP3B	Z	23.149	1.75
69	MP3B	Mx	-.023	1.75
70	MP3B	X	0	5.75
71	MP3B	Z	23.149	5.75
72	MP3B	Mx	-.023	5.75
73	MP3C	X	0	1.75
74	MP3C	Z	23.149	1.75
75	MP3C	Mx	.007	1.75
76	MP3C	X	0	5.75
77	MP3C	Z	23.149	5.75
78	MP3C	Mx	.007	5.75
79	MP3A	X	0	1.75
80	MP3A	Z	30.384	1.75
81	MP3A	Mx	-.02	1.75
82	MP3A	X	0	5.75
83	MP3A	Z	30.384	5.75
84	MP3A	Mx	-.02	5.75
85	MP3B	X	0	1.75
86	MP3B	Z	23.149	1.75
87	MP3B	Mx	-.007	1.75
88	MP3B	X	0	5.75
89	MP3B	Z	23.149	5.75
90	MP3B	Mx	-.007	5.75
91	MP3C	X	0	1.75
92	MP3C	Z	23.149	1.75
93	MP3C	Mx	.023	1.75
94	MP3C	X	0	5.75
95	MP3C	Z	23.149	5.75
96	MP3C	Mx	.023	5.75
97	MP1C	X	0	1.25
98	MP1C	Z	16.211	1.25
99	MP1C	Mx	.011	1.25
100	MP1C	X	0	5.25
101	MP1C	Z	16.211	5.25
102	MP1C	Mx	.011	5.25
103	MP5C	X	0	1.25
104	MP5C	Z	16.211	1.25

Member Point Loads (BLC 21 : Antenna Wi (180 Deg)) (Continued)

	Member Label	Direction	Magnitude[lb,k-ft]	Location[ft,%]
105	MP5C	Mx	.011	1.25
106	MP5C	X	0	5.25
107	MP5C	Z	16.211	5.25
108	MP5C	Mx	.011	5.25
109	MP1B	X	0	1.75
110	MP1B	Z	29.658	1.75
111	MP1B	Mx	-.019	1.75
112	MP1B	X	0	5.75
113	MP1B	Z	29.658	5.75
114	MP1B	Mx	-.019	5.75
115	MP5B	X	0	1.75
116	MP5B	Z	29.658	1.75
117	MP5B	Mx	-.019	1.75
118	MP5B	X	0	5.75
119	MP5B	Z	29.658	5.75
120	MP5B	Mx	-.019	5.75

Member Point Loads (BLC 22 : Antenna Wi (210 Deg))

	Member Label	Direction	Magnitude[lb,k-ft]	Location[ft,%]
1	MP2A	X	-6.924	.75
2	MP2A	Z	11.993	.75
3	MP2A	Mx	.005	.75
4	MP2A	X	-6.924	2.75
5	MP2A	Z	11.993	2.75
6	MP2A	Mx	.005	2.75
7	MP2B	X	-3.447	.75
8	MP2B	Z	5.971	.75
9	MP2B	Mx	-.005	.75
10	MP2B	X	-3.447	2.75
11	MP2B	Z	5.971	2.75
12	MP2B	Mx	-.005	2.75
13	MP2C	X	-6.924	.75
14	MP2C	Z	11.993	.75
15	MP2C	Mx	.005	.75
16	MP2C	X	-6.924	2.75
17	MP2C	Z	11.993	2.75
18	MP2C	Mx	.005	2.75
19	MP3A	X	-1.556	1.5
20	MP3A	Z	2.696	1.5
21	MP3A	Mx	-.000778	1.5
22	MP3B	X	-1.556	1.5
23	MP3B	Z	2.696	1.5
24	MP3B	Mx	-.000778	1.5
25	MP3C	X	-1.556	1.5
26	MP3C	Z	2.696	1.5
27	MP3C	Mx	-.000778	1.5
28	OVP	X	-11.715	1
29	OVP	Z	20.291	1
30	OVP	Mx	0	1
31	MP4A	X	-6.3	3
32	MP4A	Z	10.912	3
33	MP4A	Mx	-.003	3
34	MP4B	X	-6.3	3
35	MP4B	Z	10.912	3
36	MP4B	Mx	-.003	3
37	MP4C	X	-6.3	3

Member Point Loads (BLC 22 : Antenna Wi (210 Deg)) (Continued)

	Member Label	Direction	Magnitude[lb,k-ft]	Location[ft,%]
38	MP4C	Z	10.912	3
39	MP4C	Mx	-.003	3
40	MP3A	X	-6.103	3
41	MP3A	Z	10.571	3
42	MP3A	Mx	-.003	3
43	MP3B	X	-6.103	3
44	MP3B	Z	10.571	3
45	MP3B	Mx	-.003	3
46	MP3C	X	-6.103	3
47	MP3C	Z	10.571	3
48	MP3C	Mx	-.003	3
49	MP1A	X	-15.715	1.75
50	MP1A	Z	27.219	1.75
51	MP1A	Mx	.012	1.75
52	MP1A	X	-15.715	5.75
53	MP1A	Z	27.219	5.75
54	MP1A	Mx	.012	5.75
55	MP5A	X	-15.715	1.75
56	MP5A	Z	27.219	1.75
57	MP5A	Mx	.012	1.75
58	MP5A	X	-15.715	5.75
59	MP5A	Z	27.219	5.75
60	MP5A	Mx	.012	5.75
61	MP3A	X	-13.986	1.75
62	MP3A	Z	24.225	1.75
63	MP3A	Mx	.027	1.75
64	MP3A	X	-13.986	5.75
65	MP3A	Z	24.225	5.75
66	MP3A	Mx	.027	5.75
67	MP3B	X	-10.369	1.75
68	MP3B	Z	17.959	1.75
69	MP3B	Mx	-.016	1.75
70	MP3B	X	-10.369	5.75
71	MP3B	Z	17.959	5.75
72	MP3B	Mx	-.016	5.75
73	MP3C	X	-13.986	1.75
74	MP3C	Z	24.225	1.75
75	MP3C	Mx	-.006	1.75
76	MP3C	X	-13.986	5.75
77	MP3C	Z	24.225	5.75
78	MP3C	Mx	-.006	5.75
79	MP3A	X	-13.986	1.75
80	MP3A	Z	24.225	1.75
81	MP3A	Mx	-.006	1.75
82	MP3A	X	-13.986	5.75
83	MP3A	Z	24.225	5.75
84	MP3A	Mx	-.006	5.75
85	MP3B	X	-10.369	1.75
86	MP3B	Z	17.959	1.75
87	MP3B	Mx	-.016	1.75
88	MP3B	X	-10.369	5.75
89	MP3B	Z	17.959	5.75
90	MP3B	Mx	-.016	5.75
91	MP3C	X	-13.986	1.75
92	MP3C	Z	24.225	1.75
93	MP3C	Mx	.027	1.75
94	MP3C	X	-13.986	5.75

Member Point Loads (BLC 22 : Antenna Wi (210 Deg)) (Continued)

	Member Label	Direction	Magnitude[lb,k-ft]	Location[ft,%]
95	MP3C	Z	24.225	5.75
96	MP3C	Mx	.027	5.75
97	MP1C	X	-5.915	1.25
98	MP1C	Z	10.246	1.25
99	MP1C	Mx	.004	1.25
100	MP1C	X	-5.915	5.25
101	MP1C	Z	10.246	5.25
102	MP1C	Mx	.004	5.25
103	MP5C	X	-5.915	1.25
104	MP5C	Z	10.246	1.25
105	MP5C	Mx	.004	1.25
106	MP5C	X	-5.915	5.25
107	MP5C	Z	10.246	5.25
108	MP5C	Mx	.004	5.25
109	MP1B	X	-14.386	1.75
110	MP1B	Z	24.918	1.75
111	MP1B	Mx	-.022	1.75
112	MP1B	X	-14.386	5.75
113	MP1B	Z	24.918	5.75
114	MP1B	Mx	-.022	5.75
115	MP5B	X	-14.386	1.75
116	MP5B	Z	24.918	1.75
117	MP5B	Mx	-.022	1.75
118	MP5B	X	-14.386	5.75
119	MP5B	Z	24.918	5.75
120	MP5B	Mx	-.022	5.75

Member Point Loads (BLC 23 : Antenna Wi (240 Deg))

	Member Label	Direction	Magnitude[lb,k-ft]	Location[ft,%]
1	MP2A	X	-7.978	.75
2	MP2A	Z	4.606	.75
3	MP2A	Mx	.006	.75
4	MP2A	X	-7.978	2.75
5	MP2A	Z	4.606	2.75
6	MP2A	Mx	.006	2.75
7	MP2B	X	-7.978	.75
8	MP2B	Z	4.606	.75
9	MP2B	Mx	-.006	.75
10	MP2B	X	-7.978	2.75
11	MP2B	Z	4.606	2.75
12	MP2B	Mx	-.006	2.75
13	MP2C	X	-14.001	.75
14	MP2C	Z	8.083	.75
15	MP2C	Mx	0	.75
16	MP2C	X	-14.001	2.75
17	MP2C	Z	8.083	2.75
18	MP2C	Mx	0	2.75
19	MP3A	X	-2.338	1.5
20	MP3A	Z	1.35	1.5
21	MP3A	Mx	-.001	1.5
22	MP3B	X	-2.338	1.5
23	MP3B	Z	1.35	1.5
24	MP3B	Mx	-.001	1.5
25	MP3C	X	-2.338	1.5
26	MP3C	Z	1.35	1.5
27	MP3C	Mx	-.001	1.5

Member Point Loads (BLC 23 : Antenna Wi (240 Deg)) (Continued)

	Member Label	Direction	Magnitude[lb,k-ft]	Location[ft,%]
28	OVP	X	-18.97	1
29	OVP	Z	10.953	1
30	OVP	Mx	0	1
31	MP4A	X	-9.117	3
32	MP4A	Z	5.264	3
33	MP4A	Mx	-.005	3
34	MP4B	X	-9.117	3
35	MP4B	Z	5.264	3
36	MP4B	Mx	-.005	3
37	MP4C	X	-9.117	3
38	MP4C	Z	5.264	3
39	MP4C	Mx	-.005	3
40	MP3A	X	-8.093	3
41	MP3A	Z	4.673	3
42	MP3A	Mx	-.004	3
43	MP3B	X	-8.093	3
44	MP3B	Z	4.673	3
45	MP3B	Mx	-.004	3
46	MP3C	X	-8.093	3
47	MP3C	Z	4.673	3
48	MP3C	Mx	-.004	3
49	MP1A	X	-25.685	1.75
50	MP1A	Z	14.829	1.75
51	MP1A	Mx	.019	1.75
52	MP1A	X	-25.685	5.75
53	MP1A	Z	14.829	5.75
54	MP1A	Mx	.019	5.75
55	MP5A	X	-25.685	1.75
56	MP5A	Z	14.829	1.75
57	MP5A	Mx	.019	1.75
58	MP5A	X	-25.685	5.75
59	MP5A	Z	14.829	5.75
60	MP5A	Mx	.019	5.75
61	MP3A	X	-20.047	1.75
62	MP3A	Z	11.574	1.75
63	MP3A	Mx	.023	1.75
64	MP3A	X	-20.047	5.75
65	MP3A	Z	11.574	5.75
66	MP3A	Mx	.023	5.75
67	MP3B	X	-20.047	1.75
68	MP3B	Z	11.574	1.75
69	MP3B	Mx	-.007	1.75
70	MP3B	X	-20.047	5.75
71	MP3B	Z	11.574	5.75
72	MP3B	Mx	-.007	5.75
73	MP3C	X	-26.313	1.75
74	MP3C	Z	15.192	1.75
75	MP3C	Mx	-.02	1.75
76	MP3C	X	-26.313	5.75
77	MP3C	Z	15.192	5.75
78	MP3C	Mx	-.02	5.75
79	MP3A	X	-20.047	1.75
80	MP3A	Z	11.574	1.75
81	MP3A	Mx	.007	1.75
82	MP3A	X	-20.047	5.75
83	MP3A	Z	11.574	5.75
84	MP3A	Mx	.007	5.75

Member Point Loads (BLC 23 : Antenna Wi (240 Deg)) (Continued)

	Member Label	Direction	Magnitude[lb,k-ft]	Location[ft,%]
85	MP3B	X	-20.047	1.75
86	MP3B	Z	11.574	1.75
87	MP3B	Mx	-.023	1.75
88	MP3B	X	-20.047	5.75
89	MP3B	Z	11.574	5.75
90	MP3B	Mx	-.023	5.75
91	MP3C	X	-26.313	1.75
92	MP3C	Z	15.192	1.75
93	MP3C	Mx	.02	1.75
94	MP3C	X	-26.313	5.75
95	MP3C	Z	15.192	5.75
96	MP3C	Mx	.02	5.75
97	MP1C	X	-8.349	1.25
98	MP1C	Z	4.82	1.25
99	MP1C	Mx	0	1.25
100	MP1C	X	-8.349	5.25
101	MP1C	Z	4.82	5.25
102	MP1C	Mx	0	5.25
103	MP5C	X	-8.349	1.25
104	MP5C	Z	4.82	1.25
105	MP5C	Mx	0	1.25
106	MP5C	X	-8.349	5.25
107	MP5C	Z	4.82	5.25
108	MP5C	Mx	0	5.25
109	MP1B	X	-25.685	1.75
110	MP1B	Z	14.829	1.75
111	MP1B	Mx	-.019	1.75
112	MP1B	X	-25.685	5.75
113	MP1B	Z	14.829	5.75
114	MP1B	Mx	-.019	5.75
115	MP5B	X	-25.685	1.75
116	MP5B	Z	14.829	1.75
117	MP5B	Mx	-.019	1.75
118	MP5B	X	-25.685	5.75
119	MP5B	Z	14.829	5.75
120	MP5B	Mx	-.019	5.75

Member Point Loads (BLC 24 : Antenna Wi (270 Deg))

	Member Label	Direction	Magnitude[lb,k-ft]	Location[ft,%]
1	MP2A	X	-6.895	.75
2	MP2A	Z	0	.75
3	MP2A	Mx	.005	.75
4	MP2A	X	-6.895	2.75
5	MP2A	Z	0	2.75
6	MP2A	Mx	.005	2.75
7	MP2B	X	-13.849	.75
8	MP2B	Z	0	.75
9	MP2B	Mx	-.005	.75
10	MP2B	X	-13.849	2.75
11	MP2B	Z	0	2.75
12	MP2B	Mx	-.005	2.75
13	MP2C	X	-13.849	.75
14	MP2C	Z	0	.75
15	MP2C	Mx	-.005	.75
16	MP2C	X	-13.849	2.75
17	MP2C	Z	0	2.75

Member Point Loads (BLC 24 : Antenna Wi (270 Deg)) (Continued)

	Member Label	Direction	Magnitude[lb,k-ft]	Location[ft,%]
18	MP2C	Mx	-.005	2.75
19	MP3A	X	-2.493	1.5
20	MP3A	Z	0	1.5
21	MP3A	Mx	-.001	1.5
22	MP3B	X	-2.493	1.5
23	MP3B	Z	0	1.5
24	MP3B	Mx	-.001	1.5
25	MP3C	X	-2.493	1.5
26	MP3C	Z	0	1.5
27	MP3C	Mx	-.001	1.5
28	OVP	X	-23.43	1
29	OVP	Z	0	1
30	OVP	Mx	0	1
31	MP4A	X	-9.491	3
32	MP4A	Z	0	3
33	MP4A	Mx	-.005	3
34	MP4B	X	-9.491	3
35	MP4B	Z	0	3
36	MP4B	Mx	-.005	3
37	MP4C	X	-9.491	3
38	MP4C	Z	0	3
39	MP4C	Mx	-.005	3
40	MP3A	X	-7.915	3
41	MP3A	Z	0	3
42	MP3A	Mx	-.004	3
43	MP3B	X	-7.915	3
44	MP3B	Z	0	3
45	MP3B	Mx	-.004	3
46	MP3C	X	-7.915	3
47	MP3C	Z	0	3
48	MP3C	Mx	-.004	3
49	MP1A	X	-28.772	1.75
50	MP1A	Z	0	1.75
51	MP1A	Mx	.022	1.75
52	MP1A	X	-28.772	5.75
53	MP1A	Z	0	5.75
54	MP1A	Mx	.022	5.75
55	MP5A	X	-28.772	1.75
56	MP5A	Z	0	1.75
57	MP5A	Mx	.022	1.75
58	MP5A	X	-28.772	5.75
59	MP5A	Z	0	5.75
60	MP5A	Mx	.022	5.75
61	MP3A	X	-20.737	1.75
62	MP3A	Z	0	1.75
63	MP3A	Mx	.016	1.75
64	MP3A	X	-20.737	5.75
65	MP3A	Z	0	5.75
66	MP3A	Mx	.016	5.75
67	MP3B	X	-27.972	1.75
68	MP3B	Z	0	1.75
69	MP3B	Mx	.006	1.75
70	MP3B	X	-27.972	5.75
71	MP3B	Z	0	5.75
72	MP3B	Mx	.006	5.75
73	MP3C	X	-27.972	1.75
74	MP3C	Z	0	1.75

Member Point Loads (BLC 24 : Antenna Wi (270 Deg)) (Continued)

	Member Label	Direction	Magnitude[lb,k-ft]	Location[ft,%]
75	MP3C	Mx	-.027	1.75
76	MP3C	X	-27.972	5.75
77	MP3C	Z	0	5.75
78	MP3C	Mx	-.027	5.75
79	MP3A	X	-20.737	1.75
80	MP3A	Z	0	1.75
81	MP3A	Mx	.016	1.75
82	MP3A	X	-20.737	5.75
83	MP3A	Z	0	5.75
84	MP3A	Mx	.016	5.75
85	MP3B	X	-27.972	1.75
86	MP3B	Z	0	1.75
87	MP3B	Mx	-.027	1.75
88	MP3B	X	-27.972	5.75
89	MP3B	Z	0	5.75
90	MP3B	Mx	-.027	5.75
91	MP3C	X	-27.972	1.75
92	MP3C	Z	0	1.75
93	MP3C	Mx	.006	1.75
94	MP3C	X	-27.972	5.75
95	MP3C	Z	0	5.75
96	MP3C	Mx	.006	5.75
97	MP1C	X	-11.831	1.25
98	MP1C	Z	0	1.25
99	MP1C	Mx	-.004	1.25
100	MP1C	X	-11.831	5.25
101	MP1C	Z	0	5.25
102	MP1C	Mx	-.004	5.25
103	MP5C	X	-11.831	1.25
104	MP5C	Z	0	1.25
105	MP5C	Mx	-.004	1.25
106	MP5C	X	-11.831	5.25
107	MP5C	Z	0	5.25
108	MP5C	Mx	-.004	5.25
109	MP1B	X	-31.43	1.75
110	MP1B	Z	0	1.75
111	MP1B	Mx	-.012	1.75
112	MP1B	X	-31.43	5.75
113	MP1B	Z	0	5.75
114	MP1B	Mx	-.012	5.75
115	MP5B	X	-31.43	1.75
116	MP5B	Z	0	1.75
117	MP5B	Mx	-.012	1.75
118	MP5B	X	-31.43	5.75
119	MP5B	Z	0	5.75
120	MP5B	Mx	-.012	5.75

Member Point Loads (BLC 25 : Antenna Wi (300 Deg))

	Member Label	Direction	Magnitude[lb,k-ft]	Location[ft,%]
1	MP2A	X	-7.978	.75
2	MP2A	Z	-4.606	.75
3	MP2A	Mx	.006	.75
4	MP2A	X	-7.978	2.75
5	MP2A	Z	-4.606	2.75
6	MP2A	Mx	.006	2.75
7	MP2B	X	-14.001	.75

Member Point Loads (BLC 25 : Antenna Wi (300 Deg)) (Continued)

	Member Label	Direction	Magnitude[lb,k-ft]	Location[ft,%]
8	MP2B	Z	-8.083	.75
9	MP2B	Mx	0	.75
10	MP2B	X	-14.001	2.75
11	MP2B	Z	-8.083	2.75
12	MP2B	Mx	0	2.75
13	MP2C	X	-7.978	.75
14	MP2C	Z	-4.606	.75
15	MP2C	Mx	-.006	.75
16	MP2C	X	-7.978	2.75
17	MP2C	Z	-4.606	2.75
18	MP2C	Mx	-.006	2.75
19	MP3A	X	-2.338	1.5
20	MP3A	Z	-1.35	1.5
21	MP3A	Mx	-.001	1.5
22	MP3B	X	-2.338	1.5
23	MP3B	Z	-1.35	1.5
24	MP3B	Mx	-.001	1.5
25	MP3C	X	-2.338	1.5
26	MP3C	Z	-1.35	1.5
27	MP3C	Mx	-.001	1.5
28	OVP	X	-22.931	1
29	OVP	Z	-13.239	1
30	OVP	Mx	0	1
31	MP4A	X	-9.117	3
32	MP4A	Z	-5.264	3
33	MP4A	Mx	-.005	3
34	MP4B	X	-9.117	3
35	MP4B	Z	-5.264	3
36	MP4B	Mx	-.005	3
37	MP4C	X	-9.117	3
38	MP4C	Z	-5.264	3
39	MP4C	Mx	-.005	3
40	MP3A	X	-8.093	3
41	MP3A	Z	-4.673	3
42	MP3A	Mx	-.004	3
43	MP3B	X	-8.093	3
44	MP3B	Z	-4.673	3
45	MP3B	Mx	-.004	3
46	MP3C	X	-8.093	3
47	MP3C	Z	-4.673	3
48	MP3C	Mx	-.004	3
49	MP1A	X	-25.685	1.75
50	MP1A	Z	-14.829	1.75
51	MP1A	Mx	.019	1.75
52	MP1A	X	-25.685	5.75
53	MP1A	Z	-14.829	5.75
54	MP1A	Mx	.019	5.75
55	MP5A	X	-25.685	1.75
56	MP5A	Z	-14.829	1.75
57	MP5A	Mx	.019	1.75
58	MP5A	X	-25.685	5.75
59	MP5A	Z	-14.829	5.75
60	MP5A	Mx	.019	5.75
61	MP3A	X	-20.047	1.75
62	MP3A	Z	-11.574	1.75
63	MP3A	Mx	.007	1.75
64	MP3A	X	-20.047	5.75

Member Point Loads (BLC 25 : Antenna Wi (300 Deg)) (Continued)

	Member Label	Direction	Magnitude[lb,k-ft]	Location[ft,%]
65	MP3A	Z	-11.574	5.75
66	MP3A	Mx	.007	5.75
67	MP3B	X	-26.313	1.75
68	MP3B	Z	-15.192	1.75
69	MP3B	Mx	.02	1.75
70	MP3B	X	-26.313	5.75
71	MP3B	Z	-15.192	5.75
72	MP3B	Mx	.02	5.75
73	MP3C	X	-20.047	1.75
74	MP3C	Z	-11.574	1.75
75	MP3C	Mx	-.023	1.75
76	MP3C	X	-20.047	5.75
77	MP3C	Z	-11.574	5.75
78	MP3C	Mx	-.023	5.75
79	MP3A	X	-20.047	1.75
80	MP3A	Z	-11.574	1.75
81	MP3A	Mx	.023	1.75
82	MP3A	X	-20.047	5.75
83	MP3A	Z	-11.574	5.75
84	MP3A	Mx	.023	5.75
85	MP3B	X	-26.313	1.75
86	MP3B	Z	-15.192	1.75
87	MP3B	Mx	-.02	1.75
88	MP3B	X	-26.313	5.75
89	MP3B	Z	-15.192	5.75
90	MP3B	Mx	-.02	5.75
91	MP3C	X	-20.047	1.75
92	MP3C	Z	-11.574	1.75
93	MP3C	Mx	-.007	1.75
94	MP3C	X	-20.047	5.75
95	MP3C	Z	-11.574	5.75
96	MP3C	Mx	-.007	5.75
97	MP1C	X	-14.039	1.25
98	MP1C	Z	-8.106	1.25
99	MP1C	Mx	-.011	1.25
100	MP1C	X	-14.039	5.25
101	MP1C	Z	-8.106	5.25
102	MP1C	Mx	-.011	5.25
103	MP5C	X	-14.039	1.25
104	MP5C	Z	-8.106	1.25
105	MP5C	Mx	-.011	1.25
106	MP5C	X	-14.039	5.25
107	MP5C	Z	-8.106	5.25
108	MP5C	Mx	-.011	5.25
109	MP1B	X	-27.986	1.75
110	MP1B	Z	-16.158	1.75
111	MP1B	Mx	0	1.75
112	MP1B	X	-27.986	5.75
113	MP1B	Z	-16.158	5.75
114	MP1B	Mx	0	5.75
115	MP5B	X	-27.986	1.75
116	MP5B	Z	-16.158	1.75
117	MP5B	Mx	0	1.75
118	MP5B	X	-27.986	5.75
119	MP5B	Z	-16.158	5.75
120	MP5B	Mx	0	5.75

Member Point Loads (BLC 26 : Antenna Wi (330 Deg))

	Member Label	Direction	Magnitude[lb,k-ft]	Location[ft,%]
1	MP2A	X	-6.924	.75
2	MP2A	Z	-11.993	.75
3	MP2A	Mx	.005	.75
4	MP2A	X	-6.924	2.75
5	MP2A	Z	-11.993	2.75
6	MP2A	Mx	.005	2.75
7	MP2B	X	-6.924	.75
8	MP2B	Z	-11.993	.75
9	MP2B	Mx	.005	.75
10	MP2B	X	-6.924	2.75
11	MP2B	Z	-11.993	2.75
12	MP2B	Mx	.005	2.75
13	MP2C	X	-3.447	.75
14	MP2C	Z	-5.971	.75
15	MP2C	Mx	-.005	.75
16	MP2C	X	-3.447	2.75
17	MP2C	Z	-5.971	2.75
18	MP2C	Mx	-.005	2.75
19	MP3A	X	-1.556	1.5
20	MP3A	Z	-2.696	1.5
21	MP3A	Mx	-.000778	1.5
22	MP3B	X	-1.556	1.5
23	MP3B	Z	-2.696	1.5
24	MP3B	Mx	-.000778	1.5
25	MP3C	X	-1.556	1.5
26	MP3C	Z	-2.696	1.5
27	MP3C	Mx	-.000778	1.5
28	OVP	X	-14.002	1
29	OVP	Z	-24.252	1
30	OVP	Mx	0	1
31	MP4A	X	-6.3	3
32	MP4A	Z	-10.912	3
33	MP4A	Mx	-.003	3
34	MP4B	X	-6.3	3
35	MP4B	Z	-10.912	3
36	MP4B	Mx	-.003	3
37	MP4C	X	-6.3	3
38	MP4C	Z	-10.912	3
39	MP4C	Mx	-.003	3
40	MP3A	X	-6.103	3
41	MP3A	Z	-10.571	3
42	MP3A	Mx	-.003	3
43	MP3B	X	-6.103	3
44	MP3B	Z	-10.571	3
45	MP3B	Mx	-.003	3
46	MP3C	X	-6.103	3
47	MP3C	Z	-10.571	3
48	MP3C	Mx	-.003	3
49	MP1A	X	-15.715	1.75
50	MP1A	Z	-27.219	1.75
51	MP1A	Mx	.012	1.75
52	MP1A	X	-15.715	5.75
53	MP1A	Z	-27.219	5.75
54	MP1A	Mx	.012	5.75
55	MP5A	X	-15.715	1.75
56	MP5A	Z	-27.219	1.75
57	MP5A	Mx	.012	1.75

Member Point Loads (BLC 26 : Antenna Wi (330 Deg)) (Continued)

	Member Label	Direction	Magnitude[lb,k-ft]	Location[ft,%]
58	MP5A	X	-15.715	5.75
59	MP5A	Z	-27.219	5.75
60	MP5A	Mx	.012	5.75
61	MP3A	X	-13.986	1.75
62	MP3A	Z	-24.225	1.75
63	MP3A	Mx	-.006	1.75
64	MP3A	X	-13.986	5.75
65	MP3A	Z	-24.225	5.75
66	MP3A	Mx	-.006	5.75
67	MP3B	X	-13.986	1.75
68	MP3B	Z	-24.225	1.75
69	MP3B	Mx	.027	1.75
70	MP3B	X	-13.986	5.75
71	MP3B	Z	-24.225	5.75
72	MP3B	Mx	.027	5.75
73	MP3C	X	-10.369	1.75
74	MP3C	Z	-17.959	1.75
75	MP3C	Mx	-.016	1.75
76	MP3C	X	-10.369	5.75
77	MP3C	Z	-17.959	5.75
78	MP3C	Mx	-.016	5.75
79	MP3A	X	-13.986	1.75
80	MP3A	Z	-24.225	1.75
81	MP3A	Mx	.027	1.75
82	MP3A	X	-13.986	5.75
83	MP3A	Z	-24.225	5.75
84	MP3A	Mx	.027	5.75
85	MP3B	X	-13.986	1.75
86	MP3B	Z	-24.225	1.75
87	MP3B	Mx	-.006	1.75
88	MP3B	X	-13.986	5.75
89	MP3B	Z	-24.225	5.75
90	MP3B	Mx	-.006	5.75
91	MP3C	X	-10.369	1.75
92	MP3C	Z	-17.959	1.75
93	MP3C	Mx	-.016	1.75
94	MP3C	X	-10.369	5.75
95	MP3C	Z	-17.959	5.75
96	MP3C	Mx	-.016	5.75
97	MP1C	X	-9.201	1.25
98	MP1C	Z	-15.936	1.25
99	MP1C	Mx	-.014	1.25
100	MP1C	X	-9.201	5.25
101	MP1C	Z	-15.936	5.25
102	MP1C	Mx	-.014	5.25
103	MP5C	X	-9.201	1.25
104	MP5C	Z	-15.936	1.25
105	MP5C	Mx	-.014	1.25
106	MP5C	X	-9.201	5.25
107	MP5C	Z	-15.936	5.25
108	MP5C	Mx	-.014	5.25
109	MP1B	X	-15.715	1.75
110	MP1B	Z	-27.219	1.75
111	MP1B	Mx	.012	1.75
112	MP1B	X	-15.715	5.75
113	MP1B	Z	-27.219	5.75
114	MP1B	Mx	.012	5.75

Member Point Loads (BLC 26 : Antenna Wi (330 Deg)) (Continued)

	Member Label	Direction	Magnitude[lb,k-ft]	Location[ft,%]
115	MP5B	X	-15.715	1.75
116	MP5B	Z	-27.219	1.75
117	MP5B	Mx	.012	1.75
118	MP5B	X	-15.715	5.75
119	MP5B	Z	-27.219	5.75
120	MP5B	Mx	.012	5.75

Member Point Loads (BLC 27 : Antenna Wm (0 Deg))

	Member Label	Direction	Magnitude[lb,k-ft]	Location[ft,%]
1	MP2A	X	0	.75
2	MP2A	Z	-5.143	.75
3	MP2A	Mx	0	.75
4	MP2A	X	0	2.75
5	MP2A	Z	-5.143	2.75
6	MP2A	Mx	0	2.75
7	MP2B	X	0	.75
8	MP2B	Z	-2.796	.75
9	MP2B	Mx	.002	.75
10	MP2B	X	0	2.75
11	MP2B	Z	-2.796	2.75
12	MP2B	Mx	.002	2.75
13	MP2C	X	0	.75
14	MP2C	Z	-2.796	.75
15	MP2C	Mx	-.002	.75
16	MP2C	X	0	2.75
17	MP2C	Z	-2.796	2.75
18	MP2C	Mx	-.002	2.75
19	MP3A	X	0	1.5
20	MP3A	Z	-.81	1.5
21	MP3A	Mx	0	1.5
22	MP3B	X	0	1.5
23	MP3B	Z	-.81	1.5
24	MP3B	Mx	0	1.5
25	MP3C	X	0	1.5
26	MP3C	Z	-.81	1.5
27	MP3C	Mx	0	1.5
28	OVP	X	0	1
29	OVP	Z	-8.359	1
30	OVP	Mx	0	1
31	MP4A	X	0	3
32	MP4A	Z	-4.093	3
33	MP4A	Mx	0	3
34	MP4B	X	0	3
35	MP4B	Z	-4.093	3
36	MP4B	Mx	0	3
37	MP4C	X	0	3
38	MP4C	Z	-4.093	3
39	MP4C	Mx	0	3
40	MP3A	X	0	3
41	MP3A	Z	-4.093	3
42	MP3A	Mx	0	3
43	MP3B	X	0	3
44	MP3B	Z	-4.093	3
45	MP3B	Mx	0	3
46	MP3C	X	0	3
47	MP3C	Z	-4.093	3

Member Point Loads (BLC 27 : Antenna Wm (0 Deg)) (Continued)

	Member Label	Direction	Magnitude[lb,k-ft]	Location[ft,%]
48	MP3C	Mx	0	3
49	MP1A	X	0	1.75
50	MP1A	Z	-10.68	1.75
51	MP1A	Mx	0	1.75
52	MP1A	X	0	5.75
53	MP1A	Z	-10.68	5.75
54	MP1A	Mx	0	5.75
55	MP5A	X	0	1.75
56	MP5A	Z	-10.68	1.75
57	MP5A	Mx	0	1.75
58	MP5A	X	0	5.75
59	MP5A	Z	-10.68	5.75
60	MP5A	Mx	0	5.75
61	MP3A	X	0	1.75
62	MP3A	Z	-9.969	1.75
63	MP3A	Mx	-.007	1.75
64	MP3A	X	0	5.75
65	MP3A	Z	-9.969	5.75
66	MP3A	Mx	-.007	5.75
67	MP3B	X	0	1.75
68	MP3B	Z	-7.403	1.75
69	MP3B	Mx	.007	1.75
70	MP3B	X	0	5.75
71	MP3B	Z	-7.403	5.75
72	MP3B	Mx	.007	5.75
73	MP3C	X	0	1.75
74	MP3C	Z	-7.403	1.75
75	MP3C	Mx	-.002	1.75
76	MP3C	X	0	5.75
77	MP3C	Z	-7.403	5.75
78	MP3C	Mx	-.002	5.75
79	MP3A	X	0	1.75
80	MP3A	Z	-9.969	1.75
81	MP3A	Mx	.007	1.75
82	MP3A	X	0	5.75
83	MP3A	Z	-9.969	5.75
84	MP3A	Mx	.007	5.75
85	MP3B	X	0	1.75
86	MP3B	Z	-7.403	1.75
87	MP3B	Mx	.002	1.75
88	MP3B	X	0	5.75
89	MP3B	Z	-7.403	5.75
90	MP3B	Mx	.002	5.75
91	MP3C	X	0	1.75
92	MP3C	Z	-7.403	1.75
93	MP3C	Mx	-.007	1.75
94	MP3C	X	0	5.75
95	MP3C	Z	-7.403	5.75
96	MP3C	Mx	-.007	5.75
97	MP1C	X	0	1.25
98	MP1C	Z	-5.145	1.25
99	MP1C	Mx	-.003	1.25
100	MP1C	X	0	5.25
101	MP1C	Z	-5.145	5.25
102	MP1C	Mx	-.003	5.25
103	MP5C	X	0	1.25
104	MP5C	Z	-5.145	1.25

Member Point Loads (BLC 27 : Antenna Wm (0 Deg)) (Continued)

	Member Label	Direction	Magnitude[lb,k-ft]	Location[ft,%]
105	MP5C	Mx	-.003	1.25
106	MP5C	X	0	5.25
107	MP5C	Z	-5.145	5.25
108	MP5C	Mx	-.003	5.25
109	MP1B	X	0	1.75
110	MP1B	Z	-9.731	1.75
111	MP1B	Mx	.006	1.75
112	MP1B	X	0	5.75
113	MP1B	Z	-9.731	5.75
114	MP1B	Mx	.006	5.75
115	MP5B	X	0	1.75
116	MP5B	Z	-9.731	1.75
117	MP5B	Mx	.006	1.75
118	MP5B	X	0	5.75
119	MP5B	Z	-9.731	5.75
120	MP5B	Mx	.006	5.75

Member Point Loads (BLC 28 : Antenna Wm (30 Deg))

	Member Label	Direction	Magnitude[lb,k-ft]	Location[ft,%]
1	MP2A	X	2.18	.75
2	MP2A	Z	-3.776	.75
3	MP2A	Mx	-.002	.75
4	MP2A	X	2.18	2.75
5	MP2A	Z	-3.776	2.75
6	MP2A	Mx	-.002	2.75
7	MP2B	X	1.007	.75
8	MP2B	Z	-1.744	.75
9	MP2B	Mx	.002	.75
10	MP2B	X	1.007	2.75
11	MP2B	Z	-1.744	2.75
12	MP2B	Mx	.002	2.75
13	MP2C	X	2.18	.75
14	MP2C	Z	-3.776	.75
15	MP2C	Mx	-.002	.75
16	MP2C	X	2.18	2.75
17	MP2C	Z	-3.776	2.75
18	MP2C	Mx	-.002	2.75
19	MP3A	X	.374	1.5
20	MP3A	Z	-.647	1.5
21	MP3A	Mx	.000187	1.5
22	MP3B	X	.374	1.5
23	MP3B	Z	-.647	1.5
24	MP3B	Mx	.000187	1.5
25	MP3C	X	.374	1.5
26	MP3C	Z	-.647	1.5
27	MP3C	Mx	.000187	1.5
28	OVP	X	3.653	1
29	OVP	Z	-6.327	1
30	OVP	Mx	0	1
31	MP4A	X	1.877	3
32	MP4A	Z	-3.25	3
33	MP4A	Mx	.000938	3
34	MP4B	X	1.877	3
35	MP4B	Z	-3.25	3
36	MP4B	Mx	.000938	3
37	MP4C	X	1.877	3

Member Point Loads (BLC 28 : Antenna Wm (30 Deg)) (Continued)

	Member Label	Direction	Magnitude[lb,k-ft]	Location[ft,%]
38	MP4C	Z	-3.25	3
39	MP4C	Mx	.000938	3
40	MP3A	X	1.812	3
41	MP3A	Z	-3.138	3
42	MP3A	Mx	.000906	3
43	MP3B	X	1.812	3
44	MP3B	Z	-3.138	3
45	MP3B	Mx	.000906	3
46	MP3C	X	1.812	3
47	MP3C	Z	-3.138	3
48	MP3C	Mx	.000906	3
49	MP1A	X	5.182	1.75
50	MP1A	Z	-8.975	1.75
51	MP1A	Mx	-.004	1.75
52	MP1A	X	5.182	5.75
53	MP1A	Z	-8.975	5.75
54	MP1A	Mx	-.004	5.75
55	MP5A	X	5.182	1.75
56	MP5A	Z	-8.975	1.75
57	MP5A	Mx	-.004	1.75
58	MP5A	X	5.182	5.75
59	MP5A	Z	-8.975	5.75
60	MP5A	Mx	-.004	5.75
61	MP3A	X	4.557	1.75
62	MP3A	Z	-7.892	1.75
63	MP3A	Mx	-.009	1.75
64	MP3A	X	4.557	5.75
65	MP3A	Z	-7.892	5.75
66	MP3A	Mx	-.009	5.75
67	MP3B	X	3.274	1.75
68	MP3B	Z	-5.67	1.75
69	MP3B	Mx	.005	1.75
70	MP3B	X	3.274	5.75
71	MP3B	Z	-5.67	5.75
72	MP3B	Mx	.005	5.75
73	MP3C	X	4.557	1.75
74	MP3C	Z	-7.892	1.75
75	MP3C	Mx	.002	1.75
76	MP3C	X	4.557	5.75
77	MP3C	Z	-7.892	5.75
78	MP3C	Mx	.002	5.75
79	MP3A	X	4.557	1.75
80	MP3A	Z	-7.892	1.75
81	MP3A	Mx	.002	1.75
82	MP3A	X	4.557	5.75
83	MP3A	Z	-7.892	5.75
84	MP3A	Mx	.002	5.75
85	MP3B	X	3.274	1.75
86	MP3B	Z	-5.67	1.75
87	MP3B	Mx	.005	1.75
88	MP3B	X	3.274	5.75
89	MP3B	Z	-5.67	5.75
90	MP3B	Mx	.005	5.75
91	MP3C	X	4.557	1.75
92	MP3C	Z	-7.892	1.75
93	MP3C	Mx	-.009	1.75
94	MP3C	X	4.557	5.75

Member Point Loads (BLC 28 : Antenna Wm (30 Deg)) (Continued)

	Member Label	Direction	Magnitude[lb,k-ft]	Location[ft,%]
95	MP3C	Z	-7.892	5.75
96	MP3C	Mx	-.009	5.75
97	MP1C	X	1.809	1.25
98	MP1C	Z	-3.134	1.25
99	MP1C	Mx	-.001	1.25
100	MP1C	X	1.809	5.25
101	MP1C	Z	-3.134	5.25
102	MP1C	Mx	-.001	5.25
103	MP5C	X	1.809	1.25
104	MP5C	Z	-3.134	1.25
105	MP5C	Mx	-.001	1.25
106	MP5C	X	1.809	5.25
107	MP5C	Z	-3.134	5.25
108	MP5C	Mx	-.001	5.25
109	MP1B	X	4.707	1.75
110	MP1B	Z	-8.153	1.75
111	MP1B	Mx	.007	1.75
112	MP1B	X	4.707	5.75
113	MP1B	Z	-8.153	5.75
114	MP1B	Mx	.007	5.75
115	MP5B	X	4.707	1.75
116	MP5B	Z	-8.153	1.75
117	MP5B	Mx	.007	1.75
118	MP5B	X	4.707	5.75
119	MP5B	Z	-8.153	5.75
120	MP5B	Mx	.007	5.75

Member Point Loads (BLC 29 : Antenna Wm (60 Deg))

	Member Label	Direction	Magnitude[lb,k-ft]	Location[ft,%]
1	MP2A	X	2.421	.75
2	MP2A	Z	-1.398	.75
3	MP2A	Mx	-.002	.75
4	MP2A	X	2.421	2.75
5	MP2A	Z	-1.398	2.75
6	MP2A	Mx	-.002	2.75
7	MP2B	X	2.421	.75
8	MP2B	Z	-1.398	.75
9	MP2B	Mx	.002	.75
10	MP2B	X	2.421	2.75
11	MP2B	Z	-1.398	2.75
12	MP2B	Mx	.002	2.75
13	MP2C	X	4.454	.75
14	MP2C	Z	-2.572	.75
15	MP2C	Mx	0	.75
16	MP2C	X	4.454	2.75
17	MP2C	Z	-2.572	2.75
18	MP2C	Mx	0	2.75
19	MP3A	X	.539	1.5
20	MP3A	Z	-.311	1.5
21	MP3A	Mx	.00027	1.5
22	MP3B	X	.539	1.5
23	MP3B	Z	-.311	1.5
24	MP3B	Mx	.00027	1.5
25	MP3C	X	.539	1.5
26	MP3C	Z	-.311	1.5
27	MP3C	Mx	.00027	1.5

Member Point Loads (BLC 29 : Antenna Wm (60 Deg)) (Continued)

	Member Label	Direction	Magnitude[lb,k-ft]	Location[ft,%]
28	OVP	X	5.871	1
29	OVP	Z	-3.389	1
30	OVP	Mx	0	1
31	MP4A	X	2.663	3
32	MP4A	Z	-1.537	3
33	MP4A	Mx	.001	3
34	MP4B	X	2.663	3
35	MP4B	Z	-1.537	3
36	MP4B	Mx	.001	3
37	MP4C	X	2.663	3
38	MP4C	Z	-1.537	3
39	MP4C	Mx	.001	3
40	MP3A	X	2.325	3
41	MP3A	Z	-1.343	3
42	MP3A	Mx	.001	3
43	MP3B	X	2.325	3
44	MP3B	Z	-1.343	3
45	MP3B	Mx	.001	3
46	MP3C	X	2.325	3
47	MP3C	Z	-1.343	3
48	MP3C	Mx	.001	3
49	MP1A	X	8.427	1.75
50	MP1A	Z	-4.865	1.75
51	MP1A	Mx	-.006	1.75
52	MP1A	X	8.427	5.75
53	MP1A	Z	-4.865	5.75
54	MP1A	Mx	-.006	5.75
55	MP5A	X	8.427	1.75
56	MP5A	Z	-4.865	1.75
57	MP5A	Mx	-.006	1.75
58	MP5A	X	8.427	5.75
59	MP5A	Z	-4.865	5.75
60	MP5A	Mx	-.006	5.75
61	MP3A	X	6.411	1.75
62	MP3A	Z	-3.701	1.75
63	MP3A	Mx	-.007	1.75
64	MP3A	X	6.411	5.75
65	MP3A	Z	-3.701	5.75
66	MP3A	Mx	-.007	5.75
67	MP3B	X	6.411	1.75
68	MP3B	Z	-3.701	1.75
69	MP3B	Mx	.002	1.75
70	MP3B	X	6.411	5.75
71	MP3B	Z	-3.701	5.75
72	MP3B	Mx	.002	5.75
73	MP3C	X	8.633	1.75
74	MP3C	Z	-4.984	1.75
75	MP3C	Mx	.007	1.75
76	MP3C	X	8.633	5.75
77	MP3C	Z	-4.984	5.75
78	MP3C	Mx	.007	5.75
79	MP3A	X	6.411	1.75
80	MP3A	Z	-3.701	1.75
81	MP3A	Mx	-.002	1.75
82	MP3A	X	6.411	5.75
83	MP3A	Z	-3.701	5.75
84	MP3A	Mx	-.002	5.75

Member Point Loads (BLC 29 : Antenna Wm (60 Deg)) (Continued)

	Member Label	Direction	Magnitude[lb,k-ft]	Location[ft,%]
85	MP3B	X	6.411	1.75
86	MP3B	Z	-3.701	1.75
87	MP3B	Mx	.007	1.75
88	MP3B	X	6.411	5.75
89	MP3B	Z	-3.701	5.75
90	MP3B	Mx	.007	5.75
91	MP3C	X	8.633	1.75
92	MP3C	Z	-4.984	1.75
93	MP3C	Mx	-.007	1.75
94	MP3C	X	8.633	5.75
95	MP3C	Z	-4.984	5.75
96	MP3C	Mx	-.007	5.75
97	MP1C	X	2.473	1.25
98	MP1C	Z	-1.428	1.25
99	MP1C	Mx	0	1.25
100	MP1C	X	2.473	5.25
101	MP1C	Z	-1.428	5.25
102	MP1C	Mx	0	5.25
103	MP5C	X	2.473	1.25
104	MP5C	Z	-1.428	1.25
105	MP5C	Mx	0	1.25
106	MP5C	X	2.473	5.25
107	MP5C	Z	-1.428	5.25
108	MP5C	Mx	0	5.25
109	MP1B	X	8.427	1.75
110	MP1B	Z	-4.865	1.75
111	MP1B	Mx	.006	1.75
112	MP1B	X	8.427	5.75
113	MP1B	Z	-4.865	5.75
114	MP1B	Mx	.006	5.75
115	MP5B	X	8.427	1.75
116	MP5B	Z	-4.865	1.75
117	MP5B	Mx	.006	1.75
118	MP5B	X	8.427	5.75
119	MP5B	Z	-4.865	5.75
120	MP5B	Mx	.006	5.75

Member Point Loads (BLC 30 : Antenna Wm (90 Deg))

	Member Label	Direction	Magnitude[lb,k-ft]	Location[ft,%]
1	MP2A	X	2.013	.75
2	MP2A	Z	0	.75
3	MP2A	Mx	-.002	.75
4	MP2A	X	2.013	2.75
5	MP2A	Z	0	2.75
6	MP2A	Mx	-.002	2.75
7	MP2B	X	4.361	.75
8	MP2B	Z	0	.75
9	MP2B	Mx	.002	.75
10	MP2B	X	4.361	2.75
11	MP2B	Z	0	2.75
12	MP2B	Mx	.002	2.75
13	MP2C	X	4.361	.75
14	MP2C	Z	0	.75
15	MP2C	Mx	.002	.75
16	MP2C	X	4.361	2.75
17	MP2C	Z	0	2.75

Member Point Loads (BLC 30 : Antenna Wm (90 Deg)) (Continued)

	Member Label	Direction	Magnitude[lb,k-ft]	Location[ft,%]
18	MP2C	Mx	.002	2.75
19	MP3A	X	.56	1.5
20	MP3A	Z	0	1.5
21	MP3A	Mx	.00028	1.5
22	MP3B	X	.56	1.5
23	MP3B	Z	0	1.5
24	MP3B	Mx	.00028	1.5
25	MP3C	X	.56	1.5
26	MP3C	Z	0	1.5
27	MP3C	Mx	.00028	1.5
28	OVP	X	7.306	1
29	OVP	Z	0	1
30	OVP	Mx	0	1
31	MP4A	X	2.736	3
32	MP4A	Z	0	3
33	MP4A	Mx	.001	3
34	MP4B	X	2.736	3
35	MP4B	Z	0	3
36	MP4B	Mx	.001	3
37	MP4C	X	2.736	3
38	MP4C	Z	0	3
39	MP4C	Mx	.001	3
40	MP3A	X	2.216	3
41	MP3A	Z	0	3
42	MP3A	Mx	.001	3
43	MP3B	X	2.216	3
44	MP3B	Z	0	3
45	MP3B	Mx	.001	3
46	MP3C	X	2.216	3
47	MP3C	Z	0	3
48	MP3C	Mx	.001	3
49	MP1A	X	9.414	1.75
50	MP1A	Z	0	1.75
51	MP1A	Mx	-.007	1.75
52	MP1A	X	9.414	5.75
53	MP1A	Z	0	5.75
54	MP1A	Mx	-.007	5.75
55	MP5A	X	9.414	1.75
56	MP5A	Z	0	1.75
57	MP5A	Mx	-.007	1.75
58	MP5A	X	9.414	5.75
59	MP5A	Z	0	5.75
60	MP5A	Mx	-.007	5.75
61	MP3A	X	6.547	1.75
62	MP3A	Z	0	1.75
63	MP3A	Mx	-.005	1.75
64	MP3A	X	6.547	5.75
65	MP3A	Z	0	5.75
66	MP3A	Mx	-.005	5.75
67	MP3B	X	9.113	1.75
68	MP3B	Z	0	1.75
69	MP3B	Mx	-.002	1.75
70	MP3B	X	9.113	5.75
71	MP3B	Z	0	5.75
72	MP3B	Mx	-.002	5.75
73	MP3C	X	9.113	1.75
74	MP3C	Z	0	1.75

Member Point Loads (BLC 30 : Antenna Wm (90 Deg)) (Continued)

	Member Label	Direction	Magnitude[lb,k-ft]	Location[ft,%]
75	MP3C	Mx	.009	1.75
76	MP3C	X	9.113	5.75
77	MP3C	Z	0	5.75
78	MP3C	Mx	.009	5.75
79	MP3A	X	6.547	1.75
80	MP3A	Z	0	1.75
81	MP3A	Mx	-.005	1.75
82	MP3A	X	6.547	5.75
83	MP3A	Z	0	5.75
84	MP3A	Mx	-.005	5.75
85	MP3B	X	9.113	1.75
86	MP3B	Z	0	1.75
87	MP3B	Mx	.009	1.75
88	MP3B	X	9.113	5.75
89	MP3B	Z	0	5.75
90	MP3B	Mx	.009	5.75
91	MP3C	X	9.113	1.75
92	MP3C	Z	0	1.75
93	MP3C	Mx	-.002	1.75
94	MP3C	X	9.113	5.75
95	MP3C	Z	0	5.75
96	MP3C	Mx	-.002	5.75
97	MP1C	X	3.619	1.25
98	MP1C	Z	0	1.25
99	MP1C	Mx	.001	1.25
100	MP1C	X	3.619	5.25
101	MP1C	Z	0	5.25
102	MP1C	Mx	.001	5.25
103	MP5C	X	3.619	1.25
104	MP5C	Z	0	1.25
105	MP5C	Mx	.001	1.25
106	MP5C	X	3.619	5.25
107	MP5C	Z	0	5.25
108	MP5C	Mx	.001	5.25
109	MP1B	X	10.364	1.75
110	MP1B	Z	0	1.75
111	MP1B	Mx	.004	1.75
112	MP1B	X	10.364	5.75
113	MP1B	Z	0	5.75
114	MP1B	Mx	.004	5.75
115	MP5B	X	10.364	1.75
116	MP5B	Z	0	1.75
117	MP5B	Mx	.004	1.75
118	MP5B	X	10.364	5.75
119	MP5B	Z	0	5.75
120	MP5B	Mx	.004	5.75

Member Point Loads (BLC 31 : Antenna Wm (120 Deg))

	Member Label	Direction	Magnitude[lb,k-ft]	Location[ft,%]
1	MP2A	X	2.421	.75
2	MP2A	Z	1.398	.75
3	MP2A	Mx	-.002	.75
4	MP2A	X	2.421	2.75
5	MP2A	Z	1.398	2.75
6	MP2A	Mx	-.002	2.75
7	MP2B	X	4.454	.75

Member Point Loads (BLC 31 : Antenna Wm (120 Deg)) (Continued)

	Member Label	Direction	Magnitude[lb,k-ft]	Location[ft,%]
8	MP2B	Z	2.572	.75
9	MP2B	Mx	0	.75
10	MP2B	X	4.454	2.75
11	MP2B	Z	2.572	2.75
12	MP2B	Mx	0	2.75
13	MP2C	X	2.421	.75
14	MP2C	Z	1.398	.75
15	MP2C	Mx	.002	.75
16	MP2C	X	2.421	2.75
17	MP2C	Z	1.398	2.75
18	MP2C	Mx	.002	2.75
19	MP3A	X	.539	1.5
20	MP3A	Z	.311	1.5
21	MP3A	Mx	.00027	1.5
22	MP3B	X	.539	1.5
23	MP3B	Z	.311	1.5
24	MP3B	Mx	.00027	1.5
25	MP3C	X	.539	1.5
26	MP3C	Z	.311	1.5
27	MP3C	Mx	.00027	1.5
28	OVP	X	7.239	1
29	OVP	Z	4.179	1
30	OVP	Mx	0	1
31	MP4A	X	2.663	3
32	MP4A	Z	1.537	3
33	MP4A	Mx	.001	3
34	MP4B	X	2.663	3
35	MP4B	Z	1.537	3
36	MP4B	Mx	.001	3
37	MP4C	X	2.663	3
38	MP4C	Z	1.537	3
39	MP4C	Mx	.001	3
40	MP3A	X	2.325	3
41	MP3A	Z	1.343	3
42	MP3A	Mx	.001	3
43	MP3B	X	2.325	3
44	MP3B	Z	1.343	3
45	MP3B	Mx	.001	3
46	MP3C	X	2.325	3
47	MP3C	Z	1.343	3
48	MP3C	Mx	.001	3
49	MP1A	X	8.427	1.75
50	MP1A	Z	4.865	1.75
51	MP1A	Mx	-.006	1.75
52	MP1A	X	8.427	5.75
53	MP1A	Z	4.865	5.75
54	MP1A	Mx	-.006	5.75
55	MP5A	X	8.427	1.75
56	MP5A	Z	4.865	1.75
57	MP5A	Mx	-.006	1.75
58	MP5A	X	8.427	5.75
59	MP5A	Z	4.865	5.75
60	MP5A	Mx	-.006	5.75
61	MP3A	X	6.411	1.75
62	MP3A	Z	3.701	1.75
63	MP3A	Mx	-.002	1.75
64	MP3A	X	6.411	5.75

Member Point Loads (BLC 31 : Antenna Wm (120 Deg)) (Continued)

	Member Label	Direction	Magnitude[lb,k-ft]	Location[ft,%]
65	MP3A	Z	3.701	5.75
66	MP3A	Mx	-.002	5.75
67	MP3B	X	8.633	1.75
68	MP3B	Z	4.984	1.75
69	MP3B	Mx	-.007	1.75
70	MP3B	X	8.633	5.75
71	MP3B	Z	4.984	5.75
72	MP3B	Mx	-.007	5.75
73	MP3C	X	6.411	1.75
74	MP3C	Z	3.701	1.75
75	MP3C	Mx	.007	1.75
76	MP3C	X	6.411	5.75
77	MP3C	Z	3.701	5.75
78	MP3C	Mx	.007	5.75
79	MP3A	X	6.411	1.75
80	MP3A	Z	3.701	1.75
81	MP3A	Mx	-.007	1.75
82	MP3A	X	6.411	5.75
83	MP3A	Z	3.701	5.75
84	MP3A	Mx	-.007	5.75
85	MP3B	X	8.633	1.75
86	MP3B	Z	4.984	1.75
87	MP3B	Mx	.007	1.75
88	MP3B	X	8.633	5.75
89	MP3B	Z	4.984	5.75
90	MP3B	Mx	.007	5.75
91	MP3C	X	6.411	1.75
92	MP3C	Z	3.701	1.75
93	MP3C	Mx	.002	1.75
94	MP3C	X	6.411	5.75
95	MP3C	Z	3.701	5.75
96	MP3C	Mx	.002	5.75
97	MP1C	X	4.456	1.25
98	MP1C	Z	2.572	1.25
99	MP1C	Mx	.003	1.25
100	MP1C	X	4.456	5.25
101	MP1C	Z	2.572	5.25
102	MP1C	Mx	.003	5.25
103	MP5C	X	4.456	1.25
104	MP5C	Z	2.572	1.25
105	MP5C	Mx	.003	1.25
106	MP5C	X	4.456	5.25
107	MP5C	Z	2.572	5.25
108	MP5C	Mx	.003	5.25
109	MP1B	X	9.249	1.75
110	MP1B	Z	5.34	1.75
111	MP1B	Mx	0	1.75
112	MP1B	X	9.249	5.75
113	MP1B	Z	5.34	5.75
114	MP1B	Mx	0	5.75
115	MP5B	X	9.249	1.75
116	MP5B	Z	5.34	1.75
117	MP5B	Mx	0	1.75
118	MP5B	X	9.249	5.75
119	MP5B	Z	5.34	5.75
120	MP5B	Mx	0	5.75

Member Point Loads (BLC 32 : Antenna Wm (150 Deg))

	Member Label	Direction	Magnitude[lb,k-ft]	Location[ft,%]
1	MP2A	X	2.18	.75
2	MP2A	Z	3.776	.75
3	MP2A	Mx	-.002	.75
4	MP2A	X	2.18	2.75
5	MP2A	Z	3.776	2.75
6	MP2A	Mx	-.002	2.75
7	MP2B	X	2.18	.75
8	MP2B	Z	3.776	.75
9	MP2B	Mx	-.002	.75
10	MP2B	X	2.18	2.75
11	MP2B	Z	3.776	2.75
12	MP2B	Mx	-.002	2.75
13	MP2C	X	1.007	.75
14	MP2C	Z	1.744	.75
15	MP2C	Mx	.002	.75
16	MP2C	X	1.007	2.75
17	MP2C	Z	1.744	2.75
18	MP2C	Mx	.002	2.75
19	MP3A	X	.374	1.5
20	MP3A	Z	.647	1.5
21	MP3A	Mx	.000187	1.5
22	MP3B	X	.374	1.5
23	MP3B	Z	.647	1.5
24	MP3B	Mx	.000187	1.5
25	MP3C	X	.374	1.5
26	MP3C	Z	.647	1.5
27	MP3C	Mx	.000187	1.5
28	OVP	X	4.443	1
29	OVP	Z	7.695	1
30	OVP	Mx	0	1
31	MP4A	X	1.877	3
32	MP4A	Z	3.25	3
33	MP4A	Mx	.000938	3
34	MP4B	X	1.877	3
35	MP4B	Z	3.25	3
36	MP4B	Mx	.000938	3
37	MP4C	X	1.877	3
38	MP4C	Z	3.25	3
39	MP4C	Mx	.000938	3
40	MP3A	X	1.812	3
41	MP3A	Z	3.138	3
42	MP3A	Mx	.000906	3
43	MP3B	X	1.812	3
44	MP3B	Z	3.138	3
45	MP3B	Mx	.000906	3
46	MP3C	X	1.812	3
47	MP3C	Z	3.138	3
48	MP3C	Mx	.000906	3
49	MP1A	X	5.182	1.75
50	MP1A	Z	8.975	1.75
51	MP1A	Mx	-.004	1.75
52	MP1A	X	5.182	5.75
53	MP1A	Z	8.975	5.75
54	MP1A	Mx	-.004	5.75
55	MP5A	X	5.182	1.75
56	MP5A	Z	8.975	1.75
57	MP5A	Mx	-.004	1.75

Member Point Loads (BLC 32 : Antenna Wm (150 Deg)) (Continued)

	Member Label	Direction	Magnitude[lb,k-ft]	Location[ft,%]
58	MP5A	X	5.182	5.75
59	MP5A	Z	8.975	5.75
60	MP5A	Mx	-.004	5.75
61	MP3A	X	4.557	1.75
62	MP3A	Z	7.892	1.75
63	MP3A	Mx	.002	1.75
64	MP3A	X	4.557	5.75
65	MP3A	Z	7.892	5.75
66	MP3A	Mx	.002	5.75
67	MP3B	X	4.557	1.75
68	MP3B	Z	7.892	1.75
69	MP3B	Mx	-.009	1.75
70	MP3B	X	4.557	5.75
71	MP3B	Z	7.892	5.75
72	MP3B	Mx	-.009	5.75
73	MP3C	X	3.274	1.75
74	MP3C	Z	5.67	1.75
75	MP3C	Mx	.005	1.75
76	MP3C	X	3.274	5.75
77	MP3C	Z	5.67	5.75
78	MP3C	Mx	.005	5.75
79	MP3A	X	4.557	1.75
80	MP3A	Z	7.892	1.75
81	MP3A	Mx	-.009	1.75
82	MP3A	X	4.557	5.75
83	MP3A	Z	7.892	5.75
84	MP3A	Mx	-.009	5.75
85	MP3B	X	4.557	1.75
86	MP3B	Z	7.892	1.75
87	MP3B	Mx	.002	1.75
88	MP3B	X	4.557	5.75
89	MP3B	Z	7.892	5.75
90	MP3B	Mx	.002	5.75
91	MP3C	X	3.274	1.75
92	MP3C	Z	5.67	1.75
93	MP3C	Mx	.005	1.75
94	MP3C	X	3.274	5.75
95	MP3C	Z	5.67	5.75
96	MP3C	Mx	.005	5.75
97	MP1C	X	2.954	1.25
98	MP1C	Z	5.116	1.25
99	MP1C	Mx	.004	1.25
100	MP1C	X	2.954	5.25
101	MP1C	Z	5.116	5.25
102	MP1C	Mx	.004	5.25
103	MP5C	X	2.954	1.25
104	MP5C	Z	5.116	1.25
105	MP5C	Mx	.004	1.25
106	MP5C	X	2.954	5.25
107	MP5C	Z	5.116	5.25
108	MP5C	Mx	.004	5.25
109	MP1B	X	5.182	1.75
110	MP1B	Z	8.975	1.75
111	MP1B	Mx	-.004	1.75
112	MP1B	X	5.182	5.75
113	MP1B	Z	8.975	5.75
114	MP1B	Mx	-.004	5.75

Member Point Loads (BLC 32 : Antenna Wm (150 Deg)) (Continued)

	Member Label	Direction	Magnitude[lb,k-ft]	Location[ft,%]
115	MP5B	X	5.182	1.75
116	MP5B	Z	8.975	1.75
117	MP5B	Mx	-.004	1.75
118	MP5B	X	5.182	5.75
119	MP5B	Z	8.975	5.75
120	MP5B	Mx	-.004	5.75

Member Point Loads (BLC 33 : Antenna Wm (180 Deg))

	Member Label	Direction	Magnitude[lb,k-ft]	Location[ft,%]
1	MP2A	X	0	.75
2	MP2A	Z	5.143	.75
3	MP2A	Mx	0	.75
4	MP2A	X	0	2.75
5	MP2A	Z	5.143	2.75
6	MP2A	Mx	0	2.75
7	MP2B	X	0	.75
8	MP2B	Z	2.796	.75
9	MP2B	Mx	-.002	.75
10	MP2B	X	0	2.75
11	MP2B	Z	2.796	2.75
12	MP2B	Mx	-.002	2.75
13	MP2C	X	0	.75
14	MP2C	Z	2.796	.75
15	MP2C	Mx	.002	.75
16	MP2C	X	0	2.75
17	MP2C	Z	2.796	2.75
18	MP2C	Mx	.002	2.75
19	MP3A	X	0	1.5
20	MP3A	Z	.81	1.5
21	MP3A	Mx	0	1.5
22	MP3B	X	0	1.5
23	MP3B	Z	.81	1.5
24	MP3B	Mx	0	1.5
25	MP3C	X	0	1.5
26	MP3C	Z	.81	1.5
27	MP3C	Mx	0	1.5
28	OVP	X	0	1
29	OVP	Z	8.359	1
30	OVP	Mx	0	1
31	MP4A	X	0	3
32	MP4A	Z	4.093	3
33	MP4A	Mx	0	3
34	MP4B	X	0	3
35	MP4B	Z	4.093	3
36	MP4B	Mx	0	3
37	MP4C	X	0	3
38	MP4C	Z	4.093	3
39	MP4C	Mx	0	3
40	MP3A	X	0	3
41	MP3A	Z	4.093	3
42	MP3A	Mx	0	3
43	MP3B	X	0	3
44	MP3B	Z	4.093	3
45	MP3B	Mx	0	3
46	MP3C	X	0	3
47	MP3C	Z	4.093	3

Member Point Loads (BLC 33 : Antenna Wm (180 Deg)) (Continued)

	Member Label	Direction	Magnitude[lb,k-ft]	Location[ft,%]
48	MP3C	Mx	0	3
49	MP1A	X	0	1.75
50	MP1A	Z	10.68	1.75
51	MP1A	Mx	0	1.75
52	MP1A	X	0	5.75
53	MP1A	Z	10.68	5.75
54	MP1A	Mx	0	5.75
55	MP5A	X	0	1.75
56	MP5A	Z	10.68	1.75
57	MP5A	Mx	0	1.75
58	MP5A	X	0	5.75
59	MP5A	Z	10.68	5.75
60	MP5A	Mx	0	5.75
61	MP3A	X	0	1.75
62	MP3A	Z	9.969	1.75
63	MP3A	Mx	.007	1.75
64	MP3A	X	0	5.75
65	MP3A	Z	9.969	5.75
66	MP3A	Mx	.007	5.75
67	MP3B	X	0	1.75
68	MP3B	Z	7.403	1.75
69	MP3B	Mx	-.007	1.75
70	MP3B	X	0	5.75
71	MP3B	Z	7.403	5.75
72	MP3B	Mx	-.007	5.75
73	MP3C	X	0	1.75
74	MP3C	Z	7.403	1.75
75	MP3C	Mx	.002	1.75
76	MP3C	X	0	5.75
77	MP3C	Z	7.403	5.75
78	MP3C	Mx	.002	5.75
79	MP3A	X	0	1.75
80	MP3A	Z	9.969	1.75
81	MP3A	Mx	-.007	1.75
82	MP3A	X	0	5.75
83	MP3A	Z	9.969	5.75
84	MP3A	Mx	-.007	5.75
85	MP3B	X	0	1.75
86	MP3B	Z	7.403	1.75
87	MP3B	Mx	-.002	1.75
88	MP3B	X	0	5.75
89	MP3B	Z	7.403	5.75
90	MP3B	Mx	-.002	5.75
91	MP3C	X	0	1.75
92	MP3C	Z	7.403	1.75
93	MP3C	Mx	.007	1.75
94	MP3C	X	0	5.75
95	MP3C	Z	7.403	5.75
96	MP3C	Mx	.007	5.75
97	MP1C	X	0	1.25
98	MP1C	Z	5.145	1.25
99	MP1C	Mx	.003	1.25
100	MP1C	X	0	5.25
101	MP1C	Z	5.145	5.25
102	MP1C	Mx	.003	5.25
103	MP5C	X	0	1.25
104	MP5C	Z	5.145	1.25

Member Point Loads (BLC 33 : Antenna Wm (180 Deg)) (Continued)

	Member Label	Direction	Magnitude[lb,k-ft]	Location[ft,%]
105	MP5C	Mx	.003	1.25
106	MP5C	X	0	5.25
107	MP5C	Z	5.145	5.25
108	MP5C	Mx	.003	5.25
109	MP1B	X	0	1.75
110	MP1B	Z	9.731	1.75
111	MP1B	Mx	-.006	1.75
112	MP1B	X	0	5.75
113	MP1B	Z	9.731	5.75
114	MP1B	Mx	-.006	5.75
115	MP5B	X	0	1.75
116	MP5B	Z	9.731	1.75
117	MP5B	Mx	-.006	1.75
118	MP5B	X	0	5.75
119	MP5B	Z	9.731	5.75
120	MP5B	Mx	-.006	5.75

Member Point Loads (BLC 34 : Antenna Wm (210 Deg))

	Member Label	Direction	Magnitude[lb,k-ft]	Location[ft,%]
1	MP2A	X	-2.18	.75
2	MP2A	Z	3.776	.75
3	MP2A	Mx	.002	.75
4	MP2A	X	-2.18	2.75
5	MP2A	Z	3.776	2.75
6	MP2A	Mx	.002	2.75
7	MP2B	X	-1.007	.75
8	MP2B	Z	1.744	.75
9	MP2B	Mx	-.002	.75
10	MP2B	X	-1.007	2.75
11	MP2B	Z	1.744	2.75
12	MP2B	Mx	-.002	2.75
13	MP2C	X	-2.18	.75
14	MP2C	Z	3.776	.75
15	MP2C	Mx	.002	.75
16	MP2C	X	-2.18	2.75
17	MP2C	Z	3.776	2.75
18	MP2C	Mx	.002	2.75
19	MP3A	X	-.374	1.5
20	MP3A	Z	.647	1.5
21	MP3A	Mx	-.000187	1.5
22	MP3B	X	-.374	1.5
23	MP3B	Z	.647	1.5
24	MP3B	Mx	-.000187	1.5
25	MP3C	X	-.374	1.5
26	MP3C	Z	.647	1.5
27	MP3C	Mx	-.000187	1.5
28	OVP	X	-3.653	1
29	OVP	Z	6.327	1
30	OVP	Mx	0	1
31	MP4A	X	-1.877	3
32	MP4A	Z	3.25	3
33	MP4A	Mx	-.000938	3
34	MP4B	X	-1.877	3
35	MP4B	Z	3.25	3
36	MP4B	Mx	-.000938	3
37	MP4C	X	-1.877	3

Member Point Loads (BLC 34 : Antenna Wm (210 Deg)) (Continued)

	Member Label	Direction	Magnitude[lb,k-ft]	Location[ft,%]
38	MP4C	Z	3.25	3
39	MP4C	Mx	-.000938	3
40	MP3A	X	-1.812	3
41	MP3A	Z	3.138	3
42	MP3A	Mx	-.000906	3
43	MP3B	X	-1.812	3
44	MP3B	Z	3.138	3
45	MP3B	Mx	-.000906	3
46	MP3C	X	-1.812	3
47	MP3C	Z	3.138	3
48	MP3C	Mx	-.000906	3
49	MP1A	X	-5.182	1.75
50	MP1A	Z	8.975	1.75
51	MP1A	Mx	.004	1.75
52	MP1A	X	-5.182	5.75
53	MP1A	Z	8.975	5.75
54	MP1A	Mx	.004	5.75
55	MP5A	X	-5.182	1.75
56	MP5A	Z	8.975	1.75
57	MP5A	Mx	.004	1.75
58	MP5A	X	-5.182	5.75
59	MP5A	Z	8.975	5.75
60	MP5A	Mx	.004	5.75
61	MP3A	X	-4.557	1.75
62	MP3A	Z	7.892	1.75
63	MP3A	Mx	.009	1.75
64	MP3A	X	-4.557	5.75
65	MP3A	Z	7.892	5.75
66	MP3A	Mx	.009	5.75
67	MP3B	X	-3.274	1.75
68	MP3B	Z	5.67	1.75
69	MP3B	Mx	-.005	1.75
70	MP3B	X	-3.274	5.75
71	MP3B	Z	5.67	5.75
72	MP3B	Mx	-.005	5.75
73	MP3C	X	-4.557	1.75
74	MP3C	Z	7.892	1.75
75	MP3C	Mx	-.002	1.75
76	MP3C	X	-4.557	5.75
77	MP3C	Z	7.892	5.75
78	MP3C	Mx	-.002	5.75
79	MP3A	X	-4.557	1.75
80	MP3A	Z	7.892	1.75
81	MP3A	Mx	-.002	1.75
82	MP3A	X	-4.557	5.75
83	MP3A	Z	7.892	5.75
84	MP3A	Mx	-.002	5.75
85	MP3B	X	-3.274	1.75
86	MP3B	Z	5.67	1.75
87	MP3B	Mx	-.005	1.75
88	MP3B	X	-3.274	5.75
89	MP3B	Z	5.67	5.75
90	MP3B	Mx	-.005	5.75
91	MP3C	X	-4.557	1.75
92	MP3C	Z	7.892	1.75
93	MP3C	Mx	.009	1.75
94	MP3C	X	-4.557	5.75

Member Point Loads (BLC 34 : Antenna Wm (210 Deg)) (Continued)

	Member Label	Direction	Magnitude[lb,k-ft]	Location[ft,%]
95	MP3C	Z	7.892	5.75
96	MP3C	Mx	.009	5.75
97	MP1C	X	-1.809	1.25
98	MP1C	Z	3.134	1.25
99	MP1C	Mx	.001	1.25
100	MP1C	X	-1.809	5.25
101	MP1C	Z	3.134	5.25
102	MP1C	Mx	.001	5.25
103	MP5C	X	-1.809	1.25
104	MP5C	Z	3.134	1.25
105	MP5C	Mx	.001	1.25
106	MP5C	X	-1.809	5.25
107	MP5C	Z	3.134	5.25
108	MP5C	Mx	.001	5.25
109	MP1B	X	-4.707	1.75
110	MP1B	Z	8.153	1.75
111	MP1B	Mx	-.007	1.75
112	MP1B	X	-4.707	5.75
113	MP1B	Z	8.153	5.75
114	MP1B	Mx	-.007	5.75
115	MP5B	X	-4.707	1.75
116	MP5B	Z	8.153	1.75
117	MP5B	Mx	-.007	1.75
118	MP5B	X	-4.707	5.75
119	MP5B	Z	8.153	5.75
120	MP5B	Mx	-.007	5.75

Member Point Loads (BLC 35 : Antenna Wm (240 Deg))

	Member Label	Direction	Magnitude[lb,k-ft]	Location[ft,%]
1	MP2A	X	-2.421	.75
2	MP2A	Z	1.398	.75
3	MP2A	Mx	.002	.75
4	MP2A	X	-2.421	2.75
5	MP2A	Z	1.398	2.75
6	MP2A	Mx	.002	2.75
7	MP2B	X	-2.421	.75
8	MP2B	Z	1.398	.75
9	MP2B	Mx	-.002	.75
10	MP2B	X	-2.421	2.75
11	MP2B	Z	1.398	2.75
12	MP2B	Mx	-.002	2.75
13	MP2C	X	-4.454	.75
14	MP2C	Z	2.572	.75
15	MP2C	Mx	0	.75
16	MP2C	X	-4.454	2.75
17	MP2C	Z	2.572	2.75
18	MP2C	Mx	0	2.75
19	MP3A	X	-.539	1.5
20	MP3A	Z	.311	1.5
21	MP3A	Mx	-.00027	1.5
22	MP3B	X	-.539	1.5
23	MP3B	Z	.311	1.5
24	MP3B	Mx	-.00027	1.5
25	MP3C	X	-.539	1.5
26	MP3C	Z	.311	1.5
27	MP3C	Mx	-.00027	1.5

Member Point Loads (BLC 35 : Antenna Wm (240 Deg)) (Continued)

	Member Label	Direction	Magnitude[lb,k-ft]	Location[ft,%]
28	OVP	X	-5.871	1
29	OVP	Z	3.389	1
30	OVP	Mx	0	1
31	MP4A	X	-2.663	3
32	MP4A	Z	1.537	3
33	MP4A	Mx	-.001	3
34	MP4B	X	-2.663	3
35	MP4B	Z	1.537	3
36	MP4B	Mx	-.001	3
37	MP4C	X	-2.663	3
38	MP4C	Z	1.537	3
39	MP4C	Mx	-.001	3
40	MP3A	X	-2.325	3
41	MP3A	Z	1.343	3
42	MP3A	Mx	-.001	3
43	MP3B	X	-2.325	3
44	MP3B	Z	1.343	3
45	MP3B	Mx	-.001	3
46	MP3C	X	-2.325	3
47	MP3C	Z	1.343	3
48	MP3C	Mx	-.001	3
49	MP1A	X	-8.427	1.75
50	MP1A	Z	4.865	1.75
51	MP1A	Mx	.006	1.75
52	MP1A	X	-8.427	5.75
53	MP1A	Z	4.865	5.75
54	MP1A	Mx	.006	5.75
55	MP5A	X	-8.427	1.75
56	MP5A	Z	4.865	1.75
57	MP5A	Mx	.006	1.75
58	MP5A	X	-8.427	5.75
59	MP5A	Z	4.865	5.75
60	MP5A	Mx	.006	5.75
61	MP3A	X	-6.411	1.75
62	MP3A	Z	3.701	1.75
63	MP3A	Mx	.007	1.75
64	MP3A	X	-6.411	5.75
65	MP3A	Z	3.701	5.75
66	MP3A	Mx	.007	5.75
67	MP3B	X	-6.411	1.75
68	MP3B	Z	3.701	1.75
69	MP3B	Mx	-.002	1.75
70	MP3B	X	-6.411	5.75
71	MP3B	Z	3.701	5.75
72	MP3B	Mx	-.002	5.75
73	MP3C	X	-8.633	1.75
74	MP3C	Z	4.984	1.75
75	MP3C	Mx	-.007	1.75
76	MP3C	X	-8.633	5.75
77	MP3C	Z	4.984	5.75
78	MP3C	Mx	-.007	5.75
79	MP3A	X	-6.411	1.75
80	MP3A	Z	3.701	1.75
81	MP3A	Mx	.002	1.75
82	MP3A	X	-6.411	5.75
83	MP3A	Z	3.701	5.75
84	MP3A	Mx	.002	5.75

Member Point Loads (BLC 35 : Antenna Wm (240 Deg)) (Continued)

	Member Label	Direction	Magnitude[lb,k-ft]	Location[ft,%]
85	MP3B	X	-6.411	1.75
86	MP3B	Z	3.701	1.75
87	MP3B	Mx	-.007	1.75
88	MP3B	X	-6.411	5.75
89	MP3B	Z	3.701	5.75
90	MP3B	Mx	-.007	5.75
91	MP3C	X	-8.633	1.75
92	MP3C	Z	4.984	1.75
93	MP3C	Mx	.007	1.75
94	MP3C	X	-8.633	5.75
95	MP3C	Z	4.984	5.75
96	MP3C	Mx	.007	5.75
97	MP1C	X	-2.473	1.25
98	MP1C	Z	1.428	1.25
99	MP1C	Mx	0	1.25
100	MP1C	X	-2.473	5.25
101	MP1C	Z	1.428	5.25
102	MP1C	Mx	0	5.25
103	MP5C	X	-2.473	1.25
104	MP5C	Z	1.428	1.25
105	MP5C	Mx	0	1.25
106	MP5C	X	-2.473	5.25
107	MP5C	Z	1.428	5.25
108	MP5C	Mx	0	5.25
109	MP1B	X	-8.427	1.75
110	MP1B	Z	4.865	1.75
111	MP1B	Mx	-.006	1.75
112	MP1B	X	-8.427	5.75
113	MP1B	Z	4.865	5.75
114	MP1B	Mx	-.006	5.75
115	MP5B	X	-8.427	1.75
116	MP5B	Z	4.865	1.75
117	MP5B	Mx	-.006	1.75
118	MP5B	X	-8.427	5.75
119	MP5B	Z	4.865	5.75
120	MP5B	Mx	-.006	5.75

Member Point Loads (BLC 36 : Antenna Wm (270 Deg))

	Member Label	Direction	Magnitude[lb,k-ft]	Location[ft,%]
1	MP2A	X	-2.013	.75
2	MP2A	Z	0	.75
3	MP2A	Mx	.002	.75
4	MP2A	X	-2.013	2.75
5	MP2A	Z	0	2.75
6	MP2A	Mx	.002	2.75
7	MP2B	X	-4.361	.75
8	MP2B	Z	0	.75
9	MP2B	Mx	-.002	.75
10	MP2B	X	-4.361	2.75
11	MP2B	Z	0	2.75
12	MP2B	Mx	-.002	2.75
13	MP2C	X	-4.361	.75
14	MP2C	Z	0	.75
15	MP2C	Mx	-.002	.75
16	MP2C	X	-4.361	2.75
17	MP2C	Z	0	2.75

Member Point Loads (BLC 36 : Antenna Wm (270 Deg)) (Continued)

	Member Label	Direction	Magnitude[lb,k-ft]	Location[ft,%]
18	MP2C	Mx	-.002	2.75
19	MP3A	X	-.56	1.5
20	MP3A	Z	0	1.5
21	MP3A	Mx	-.00028	1.5
22	MP3B	X	-.56	1.5
23	MP3B	Z	0	1.5
24	MP3B	Mx	-.00028	1.5
25	MP3C	X	-.56	1.5
26	MP3C	Z	0	1.5
27	MP3C	Mx	-.00028	1.5
28	OVP	X	-7.306	1
29	OVP	Z	0	1
30	OVP	Mx	0	1
31	MP4A	X	-2.736	3
32	MP4A	Z	0	3
33	MP4A	Mx	-.001	3
34	MP4B	X	-2.736	3
35	MP4B	Z	0	3
36	MP4B	Mx	-.001	3
37	MP4C	X	-2.736	3
38	MP4C	Z	0	3
39	MP4C	Mx	-.001	3
40	MP3A	X	-2.216	3
41	MP3A	Z	0	3
42	MP3A	Mx	-.001	3
43	MP3B	X	-2.216	3
44	MP3B	Z	0	3
45	MP3B	Mx	-.001	3
46	MP3C	X	-2.216	3
47	MP3C	Z	0	3
48	MP3C	Mx	-.001	3
49	MP1A	X	-9.414	1.75
50	MP1A	Z	0	1.75
51	MP1A	Mx	.007	1.75
52	MP1A	X	-9.414	5.75
53	MP1A	Z	0	5.75
54	MP1A	Mx	.007	5.75
55	MP5A	X	-9.414	1.75
56	MP5A	Z	0	1.75
57	MP5A	Mx	.007	1.75
58	MP5A	X	-9.414	5.75
59	MP5A	Z	0	5.75
60	MP5A	Mx	.007	5.75
61	MP3A	X	-6.547	1.75
62	MP3A	Z	0	1.75
63	MP3A	Mx	.005	1.75
64	MP3A	X	-6.547	5.75
65	MP3A	Z	0	5.75
66	MP3A	Mx	.005	5.75
67	MP3B	X	-9.113	1.75
68	MP3B	Z	0	1.75
69	MP3B	Mx	.002	1.75
70	MP3B	X	-9.113	5.75
71	MP3B	Z	0	5.75
72	MP3B	Mx	.002	5.75
73	MP3C	X	-9.113	1.75
74	MP3C	Z	0	1.75

Member Point Loads (BLC 36 : Antenna Wm (270 Deg)) (Continued)

	Member Label	Direction	Magnitude[lb,k-ft]	Location[ft,%]
75	MP3C	Mx	-.009	1.75
76	MP3C	X	-9.113	5.75
77	MP3C	Z	0	5.75
78	MP3C	Mx	-.009	5.75
79	MP3A	X	-6.547	1.75
80	MP3A	Z	0	1.75
81	MP3A	Mx	.005	1.75
82	MP3A	X	-6.547	5.75
83	MP3A	Z	0	5.75
84	MP3A	Mx	.005	5.75
85	MP3B	X	-9.113	1.75
86	MP3B	Z	0	1.75
87	MP3B	Mx	-.009	1.75
88	MP3B	X	-9.113	5.75
89	MP3B	Z	0	5.75
90	MP3B	Mx	-.009	5.75
91	MP3C	X	-9.113	1.75
92	MP3C	Z	0	1.75
93	MP3C	Mx	.002	1.75
94	MP3C	X	-9.113	5.75
95	MP3C	Z	0	5.75
96	MP3C	Mx	.002	5.75
97	MP1C	X	-3.619	1.25
98	MP1C	Z	0	1.25
99	MP1C	Mx	-.001	1.25
100	MP1C	X	-3.619	5.25
101	MP1C	Z	0	5.25
102	MP1C	Mx	-.001	5.25
103	MP5C	X	-3.619	1.25
104	MP5C	Z	0	1.25
105	MP5C	Mx	-.001	1.25
106	MP5C	X	-3.619	5.25
107	MP5C	Z	0	5.25
108	MP5C	Mx	-.001	5.25
109	MP1B	X	-10.364	1.75
110	MP1B	Z	0	1.75
111	MP1B	Mx	-.004	1.75
112	MP1B	X	-10.364	5.75
113	MP1B	Z	0	5.75
114	MP1B	Mx	-.004	5.75
115	MP5B	X	-10.364	1.75
116	MP5B	Z	0	1.75
117	MP5B	Mx	-.004	1.75
118	MP5B	X	-10.364	5.75
119	MP5B	Z	0	5.75
120	MP5B	Mx	-.004	5.75

Member Point Loads (BLC 37 : Antenna Wm (300 Deg))

	Member Label	Direction	Magnitude[lb,k-ft]	Location[ft,%]
1	MP2A	X	-2.421	.75
2	MP2A	Z	-1.398	.75
3	MP2A	Mx	.002	.75
4	MP2A	X	-2.421	2.75
5	MP2A	Z	-1.398	2.75
6	MP2A	Mx	.002	2.75
7	MP2B	X	-4.454	.75

Member Point Loads (BLC 37 : Antenna Wm (300 Deg)) (Continued)

	Member Label	Direction	Magnitude[lb,k-ft]	Location[ft,%]
8	MP2B	Z	-2.572	.75
9	MP2B	Mx	0	.75
10	MP2B	X	-4.454	2.75
11	MP2B	Z	-2.572	2.75
12	MP2B	Mx	0	2.75
13	MP2C	X	-2.421	.75
14	MP2C	Z	-1.398	.75
15	MP2C	Mx	-.002	.75
16	MP2C	X	-2.421	2.75
17	MP2C	Z	-1.398	2.75
18	MP2C	Mx	-.002	2.75
19	MP3A	X	-.539	1.5
20	MP3A	Z	-.311	1.5
21	MP3A	Mx	-.00027	1.5
22	MP3B	X	-.539	1.5
23	MP3B	Z	-.311	1.5
24	MP3B	Mx	-.00027	1.5
25	MP3C	X	-.539	1.5
26	MP3C	Z	-.311	1.5
27	MP3C	Mx	-.00027	1.5
28	OVP	X	-7.239	1
29	OVP	Z	-4.179	1
30	OVP	Mx	0	1
31	MP4A	X	-2.663	3
32	MP4A	Z	-1.537	3
33	MP4A	Mx	-.001	3
34	MP4B	X	-2.663	3
35	MP4B	Z	-1.537	3
36	MP4B	Mx	-.001	3
37	MP4C	X	-2.663	3
38	MP4C	Z	-1.537	3
39	MP4C	Mx	-.001	3
40	MP3A	X	-2.325	3
41	MP3A	Z	-1.343	3
42	MP3A	Mx	-.001	3
43	MP3B	X	-2.325	3
44	MP3B	Z	-1.343	3
45	MP3B	Mx	-.001	3
46	MP3C	X	-2.325	3
47	MP3C	Z	-1.343	3
48	MP3C	Mx	-.001	3
49	MP1A	X	-8.427	1.75
50	MP1A	Z	-4.865	1.75
51	MP1A	Mx	.006	1.75
52	MP1A	X	-8.427	5.75
53	MP1A	Z	-4.865	5.75
54	MP1A	Mx	.006	5.75
55	MP5A	X	-8.427	1.75
56	MP5A	Z	-4.865	1.75
57	MP5A	Mx	.006	1.75
58	MP5A	X	-8.427	5.75
59	MP5A	Z	-4.865	5.75
60	MP5A	Mx	.006	5.75
61	MP3A	X	-6.411	1.75
62	MP3A	Z	-3.701	1.75
63	MP3A	Mx	.002	1.75
64	MP3A	X	-6.411	5.75

Member Point Loads (BLC 37 : Antenna Wm (300 Deg)) (Continued)

	Member Label	Direction	Magnitude[lb,k-ft]	Location[ft,%]
65	MP3A	Z	-3.701	5.75
66	MP3A	Mx	.002	5.75
67	MP3B	X	-8.633	1.75
68	MP3B	Z	-4.984	1.75
69	MP3B	Mx	.007	1.75
70	MP3B	X	-8.633	5.75
71	MP3B	Z	-4.984	5.75
72	MP3B	Mx	.007	5.75
73	MP3C	X	-6.411	1.75
74	MP3C	Z	-3.701	1.75
75	MP3C	Mx	-.007	1.75
76	MP3C	X	-6.411	5.75
77	MP3C	Z	-3.701	5.75
78	MP3C	Mx	-.007	5.75
79	MP3A	X	-6.411	1.75
80	MP3A	Z	-3.701	1.75
81	MP3A	Mx	.007	1.75
82	MP3A	X	-6.411	5.75
83	MP3A	Z	-3.701	5.75
84	MP3A	Mx	.007	5.75
85	MP3B	X	-8.633	1.75
86	MP3B	Z	-4.984	1.75
87	MP3B	Mx	-.007	1.75
88	MP3B	X	-8.633	5.75
89	MP3B	Z	-4.984	5.75
90	MP3B	Mx	-.007	5.75
91	MP3C	X	-6.411	1.75
92	MP3C	Z	-3.701	1.75
93	MP3C	Mx	-.002	1.75
94	MP3C	X	-6.411	5.75
95	MP3C	Z	-3.701	5.75
96	MP3C	Mx	-.002	5.75
97	MP1C	X	-4.456	1.25
98	MP1C	Z	-2.572	1.25
99	MP1C	Mx	-.003	1.25
100	MP1C	X	-4.456	5.25
101	MP1C	Z	-2.572	5.25
102	MP1C	Mx	-.003	5.25
103	MP5C	X	-4.456	1.25
104	MP5C	Z	-2.572	1.25
105	MP5C	Mx	-.003	1.25
106	MP5C	X	-4.456	5.25
107	MP5C	Z	-2.572	5.25
108	MP5C	Mx	-.003	5.25
109	MP1B	X	-9.249	1.75
110	MP1B	Z	-5.34	1.75
111	MP1B	Mx	0	1.75
112	MP1B	X	-9.249	5.75
113	MP1B	Z	-5.34	5.75
114	MP1B	Mx	0	5.75
115	MP5B	X	-9.249	1.75
116	MP5B	Z	-5.34	1.75
117	MP5B	Mx	0	1.75
118	MP5B	X	-9.249	5.75
119	MP5B	Z	-5.34	5.75
120	MP5B	Mx	0	5.75

Member Point Loads (BLC 38 : Antenna Wm (330 Deg))

	Member Label	Direction	Magnitude[lb,k-ft]	Location[ft,%]
1	MP2A	X	-2.18	.75
2	MP2A	Z	-3.776	.75
3	MP2A	Mx	.002	.75
4	MP2A	X	-2.18	2.75
5	MP2A	Z	-3.776	2.75
6	MP2A	Mx	.002	2.75
7	MP2B	X	-2.18	.75
8	MP2B	Z	-3.776	.75
9	MP2B	Mx	.002	.75
10	MP2B	X	-2.18	2.75
11	MP2B	Z	-3.776	2.75
12	MP2B	Mx	.002	2.75
13	MP2C	X	-1.007	.75
14	MP2C	Z	-1.744	.75
15	MP2C	Mx	-.002	.75
16	MP2C	X	-1.007	2.75
17	MP2C	Z	-1.744	2.75
18	MP2C	Mx	-.002	2.75
19	MP3A	X	-.374	1.5
20	MP3A	Z	-.647	1.5
21	MP3A	Mx	-.000187	1.5
22	MP3B	X	-.374	1.5
23	MP3B	Z	-.647	1.5
24	MP3B	Mx	-.000187	1.5
25	MP3C	X	-.374	1.5
26	MP3C	Z	-.647	1.5
27	MP3C	Mx	-.000187	1.5
28	OVP	X	-4.443	1
29	OVP	Z	-7.695	1
30	OVP	Mx	0	1
31	MP4A	X	-1.877	3
32	MP4A	Z	-3.25	3
33	MP4A	Mx	-.000938	3
34	MP4B	X	-1.877	3
35	MP4B	Z	-3.25	3
36	MP4B	Mx	-.000938	3
37	MP4C	X	-1.877	3
38	MP4C	Z	-3.25	3
39	MP4C	Mx	-.000938	3
40	MP3A	X	-1.812	3
41	MP3A	Z	-3.138	3
42	MP3A	Mx	-.000906	3
43	MP3B	X	-1.812	3
44	MP3B	Z	-3.138	3
45	MP3B	Mx	-.000906	3
46	MP3C	X	-1.812	3
47	MP3C	Z	-3.138	3
48	MP3C	Mx	-.000906	3
49	MP1A	X	-5.182	1.75
50	MP1A	Z	-8.975	1.75
51	MP1A	Mx	.004	1.75
52	MP1A	X	-5.182	5.75
53	MP1A	Z	-8.975	5.75
54	MP1A	Mx	.004	5.75
55	MP5A	X	-5.182	1.75
56	MP5A	Z	-8.975	1.75
57	MP5A	Mx	.004	1.75

Member Point Loads (BLC 38 : Antenna Wm (330 Deg)) (Continued)

	Member Label	Direction	Magnitude[lb,k-ft]	Location[ft,%]
58	MP5A	X	-5.182	5.75
59	MP5A	Z	-8.975	5.75
60	MP5A	Mx	.004	5.75
61	MP3A	X	-4.557	1.75
62	MP3A	Z	-7.892	1.75
63	MP3A	Mx	-.002	1.75
64	MP3A	X	-4.557	5.75
65	MP3A	Z	-7.892	5.75
66	MP3A	Mx	-.002	5.75
67	MP3B	X	-4.557	1.75
68	MP3B	Z	-7.892	1.75
69	MP3B	Mx	.009	1.75
70	MP3B	X	-4.557	5.75
71	MP3B	Z	-7.892	5.75
72	MP3B	Mx	.009	5.75
73	MP3C	X	-3.274	1.75
74	MP3C	Z	-5.67	1.75
75	MP3C	Mx	-.005	1.75
76	MP3C	X	-3.274	5.75
77	MP3C	Z	-5.67	5.75
78	MP3C	Mx	-.005	5.75
79	MP3A	X	-4.557	1.75
80	MP3A	Z	-7.892	1.75
81	MP3A	Mx	.009	1.75
82	MP3A	X	-4.557	5.75
83	MP3A	Z	-7.892	5.75
84	MP3A	Mx	.009	5.75
85	MP3B	X	-4.557	1.75
86	MP3B	Z	-7.892	1.75
87	MP3B	Mx	-.002	1.75
88	MP3B	X	-4.557	5.75
89	MP3B	Z	-7.892	5.75
90	MP3B	Mx	-.002	5.75
91	MP3C	X	-3.274	1.75
92	MP3C	Z	-5.67	1.75
93	MP3C	Mx	-.005	1.75
94	MP3C	X	-3.274	5.75
95	MP3C	Z	-5.67	5.75
96	MP3C	Mx	-.005	5.75
97	MP1C	X	-2.954	1.25
98	MP1C	Z	-5.116	1.25
99	MP1C	Mx	-.004	1.25
100	MP1C	X	-2.954	5.25
101	MP1C	Z	-5.116	5.25
102	MP1C	Mx	-.004	5.25
103	MP5C	X	-2.954	1.25
104	MP5C	Z	-5.116	1.25
105	MP5C	Mx	-.004	1.25
106	MP5C	X	-2.954	5.25
107	MP5C	Z	-5.116	5.25
108	MP5C	Mx	-.004	5.25
109	MP1B	X	-5.182	1.75
110	MP1B	Z	-8.975	1.75
111	MP1B	Mx	.004	1.75
112	MP1B	X	-5.182	5.75
113	MP1B	Z	-8.975	5.75
114	MP1B	Mx	.004	5.75

Member Point Loads (BLC 38 : Antenna Wm (330 Deg)) (Continued)

	Member Label	Direction	Magnitude[lb,k-ft]	Location[ft,%]
115	MP5B	X	-5.182	1.75
116	MP5B	Z	-8.975	1.75
117	MP5B	Mx	.004	1.75
118	MP5B	X	-5.182	5.75
119	MP5B	Z	-8.975	5.75
120	MP5B	Mx	.004	5.75

Member Point Loads (BLC 77 : Lm1)

	Member Label	Direction	Magnitude[lb,k-ft]	Location[ft,%]
1	M1	Y	-500	%3

Member Point Loads (BLC 78 : Lm2)

	Member Label	Direction	Magnitude[lb,k-ft]	Location[ft,%]
1	M1	Y	-500	%50

Member Point Loads (BLC 79 : Lv1)

	Member Label	Direction	Magnitude[lb,k-ft]	Location[ft,%]
1	M1	Y	-250	%100

Member Point Loads (BLC 80 : Lv2)

	Member Label	Direction	Magnitude[lb,k-ft]	Location[ft,%]
1	M1	Y	-250	%50

Member Distributed Loads (BLC 40 : Structure Di)

	Member Label	Direction	Start Magnitude[lb/ft,...	End Magnitude[lb/ft,F...	Start Location[ft,%]	End Location[ft,%]
1	M1	Y	-6.679	-6.679	0	%100
2	M4	Y	-9.764	-9.764	0	%100
3	M10	Y	-9.764	-9.764	0	%100
4	M43	Y	-9.764	-9.764	0	%100
5	M46	Y	-10.272	-10.272	0	%100
6	M51B	Y	-5.719	-5.719	0	%100
7	M52B	Y	-5.719	-5.719	0	%100
8	M76	Y	-10.272	-10.272	0	%100
9	M77	Y	-10.272	-10.272	0	%100
10	M80	Y	-10.272	-10.272	0	%100
11	M84	Y	-10.272	-10.272	0	%100
12	M85	Y	-10.272	-10.272	0	%100
13	M91	Y	-10.272	-10.272	0	%100
14	M26	Y	-9.764	-9.764	0	%100
15	M27	Y	-9.764	-9.764	0	%100
16	M28	Y	-9.764	-9.764	0	%100
17	M29	Y	-10.272	-10.272	0	%100
18	M32	Y	-5.719	-5.719	0	%100
19	M33	Y	-5.719	-5.719	0	%100
20	M37	Y	-10.272	-10.272	0	%100
21	M38	Y	-10.272	-10.272	0	%100
22	M40	Y	-10.272	-10.272	0	%100
23	M42	Y	-10.272	-10.272	0	%100
24	M43A	Y	-10.272	-10.272	0	%100
25	M45	Y	-10.272	-10.272	0	%100
26	M50A	Y	-9.764	-9.764	0	%100
27	M51C	Y	-9.764	-9.764	0	%100
28	M52A	Y	-9.764	-9.764	0	%100

Member Distributed Loads (BLC 40 : Structure Di) (Continued)

	Member Label	Direction	Start Magnitude[lb/ft,...	End Magnitude[lb/ft,F...	Start Location[ft,%]	End Location[ft,%]
29	M53	Y	-10.272	-10.272	0	%100
30	M56	Y	-5.719	-5.719	0	%100
31	M57	Y	-5.719	-5.719	0	%100
32	M61	Y	-10.272	-10.272	0	%100
33	M62	Y	-10.272	-10.272	0	%100
34	M64	Y	-10.272	-10.272	0	%100
35	M66	Y	-10.272	-10.272	0	%100
36	M67	Y	-10.272	-10.272	0	%100
37	M69	Y	-10.272	-10.272	0	%100
38	M74	Y	-6.679	-6.679	0	%100
39	M75	Y	-6.679	-6.679	0	%100
40	M79B	Y	-5.071	-5.071	0	%100
41	M77A	Y	-5.071	-5.071	0	%100
42	M78	Y	-5.071	-5.071	0	%100
43	MP5A	Y	-5.071	-5.071	0	%100
44	MP4A	Y	-5.071	-5.071	0	%100
45	MP2A	Y	-5.071	-5.071	0	%100
46	MP1A	Y	-5.071	-5.071	0	%100
47	MP3A	Y	-5.786	-5.786	0	%100
48	MP5C	Y	-5.071	-5.071	0	%100
49	MP4C	Y	-5.071	-5.071	0	%100
50	MP2C	Y	-5.071	-5.071	0	%100
51	MP1C	Y	-5.071	-5.071	0	%100
52	MP3C	Y	-5.786	-5.786	0	%100
53	MP5B	Y	-5.071	-5.071	0	%100
54	MP4B	Y	-5.071	-5.071	0	%100
55	MP2B	Y	-5.071	-5.071	0	%100
56	MP1B	Y	-5.071	-5.071	0	%100
57	MP3B	Y	-5.786	-5.786	0	%100
58	M130	Y	-5.071	-5.071	0	%100
59	M131	Y	-5.071	-5.071	0	%100
60	M134	Y	-5.071	-5.071	0	%100

Member Distributed Loads (BLC 41 : Structure Wo (0 Deg))

	Member Label	Direction	Start Magnitude[lb/ft,...	End Magnitude[lb/ft,F...	Start Location[ft,%]	End Location[ft,%]
1	M1	X	0	0	0	%100
2	M1	Z	-11.651	-11.651	0	%100
3	M4	X	0	0	0	%100
4	M4	Z	0	0	0	%100
5	M10	X	0	0	0	%100
6	M10	Z	-10.013	-10.013	0	%100
7	M43	X	0	0	0	%100
8	M43	Z	-10.013	-10.013	0	%100
9	M46	X	0	0	0	%100
10	M46	Z	-19.972	-19.972	0	%100
11	M51B	X	0	0	0	%100
12	M51B	Z	-2.773	-2.773	0	%100
13	M52B	X	0	0	0	%100
14	M52B	Z	-2.773	-2.773	0	%100
15	M76	X	0	0	0	%100
16	M76	Z	0	0	0	%100
17	M77	X	0	0	0	%100
18	M77	Z	-5.086	-5.086	0	%100
19	M80	X	0	0	0	%100
20	M80	Z	-5.357	-5.357	0	%100
21	M84	X	0	0	0	%100

Member Distributed Loads (BLC 41 : Structure Wo (0 Deg)) (Continued)

	Member Label	Direction	Start Magnitude[lb/ft,...	End Magnitude[lb/ft,F...	Start Location[ft,%]	End Location[ft,%]
22	M84	Z	0	0	0	%100
23	M85	X	0	0	0	%100
24	M85	Z	-5.086	-5.086	0	%100
25	M91	X	0	0	0	%100
26	M91	Z	-5.357	-5.357	0	%100
27	M26	X	0	0	0	%100
28	M26	Z	-8.875	-8.875	0	%100
29	M27	X	0	0	0	%100
30	M27	Z	-2.503	-2.503	0	%100
31	M28	X	0	0	0	%100
32	M28	Z	-2.503	-2.503	0	%100
33	M29	X	0	0	0	%100
34	M29	Z	-4.993	-4.993	0	%100
35	M32	X	0	0	0	%100
36	M32	Z	-2.773	-2.773	0	%100
37	M33	X	0	0	0	%100
38	M33	Z	-11.09	-11.09	0	%100
39	M37	X	0	0	0	%100
40	M37	Z	-14.979	-14.979	0	%100
41	M38	X	0	0	0	%100
42	M38	Z	-5.086	-5.086	0	%100
43	M40	X	0	0	0	%100
44	M40	Z	-5.357	-5.357	0	%100
45	M42	X	0	0	0	%100
46	M42	Z	-14.979	-14.979	0	%100
47	M43A	X	0	0	0	%100
48	M43A	Z	-20.342	-20.342	0	%100
49	M45	X	0	0	0	%100
50	M45	Z	-21.426	-21.426	0	%100
51	M50A	X	0	0	0	%100
52	M50A	Z	-8.875	-8.875	0	%100
53	M51C	X	0	0	0	%100
54	M51C	Z	-2.503	-2.503	0	%100
55	M52A	X	0	0	0	%100
56	M52A	Z	-2.503	-2.503	0	%100
57	M53	X	0	0	0	%100
58	M53	Z	-4.993	-4.993	0	%100
59	M56	X	0	0	0	%100
60	M56	Z	-11.09	-11.09	0	%100
61	M57	X	0	0	0	%100
62	M57	Z	-2.773	-2.773	0	%100
63	M61	X	0	0	0	%100
64	M61	Z	-14.979	-14.979	0	%100
65	M62	X	0	0	0	%100
66	M62	Z	-20.342	-20.342	0	%100
67	M64	X	0	0	0	%100
68	M64	Z	-21.426	-21.426	0	%100
69	M66	X	0	0	0	%100
70	M66	Z	-14.979	-14.979	0	%100
71	M67	X	0	0	0	%100
72	M67	Z	-5.086	-5.086	0	%100
73	M69	X	0	0	0	%100
74	M69	Z	-5.357	-5.357	0	%100
75	M74	X	0	0	0	%100
76	M74	Z	-2.913	-2.913	0	%100
77	M75	X	0	0	0	%100
78	M75	Z	-2.913	-2.913	0	%100

Member Distributed Loads (BLC 41 : Structure Wo (0 Deg)) (Continued)

	Member Label	Direction	Start Magnitude[lb/ft,...	End Magnitude[lb/ft,F...	Start Location[ft,%]	End Location[ft,%]
79	M79B	X	0	0	0	%100
80	M79B	Z	-7.906	-7.906	0	%100
81	M77A	X	0	0	0	%100
82	M77A	Z	-1.976	-1.976	0	%100
83	M78	X	0	0	0	%100
84	M78	Z	-1.976	-1.976	0	%100
85	MP5A	X	0	0	0	%100
86	MP5A	Z	-7.906	-7.906	0	%100
87	MP4A	X	0	0	0	%100
88	MP4A	Z	-7.906	-7.906	0	%100
89	MP2A	X	0	0	0	%100
90	MP2A	Z	-7.906	-7.906	0	%100
91	MP1A	X	0	0	0	%100
92	MP1A	Z	-7.906	-7.906	0	%100
93	MP3A	X	0	0	0	%100
94	MP3A	Z	-9.57	-9.57	0	%100
95	MP5C	X	0	0	0	%100
96	MP5C	Z	-7.906	-7.906	0	%100
97	MP4C	X	0	0	0	%100
98	MP4C	Z	-7.906	-7.906	0	%100
99	MP2C	X	0	0	0	%100
100	MP2C	Z	-7.906	-7.906	0	%100
101	MP1C	X	0	0	0	%100
102	MP1C	Z	-7.906	-7.906	0	%100
103	MP3C	X	0	0	0	%100
104	MP3C	Z	-9.57	-9.57	0	%100
105	MP5B	X	0	0	0	%100
106	MP5B	Z	-7.906	-7.906	0	%100
107	MP4B	X	0	0	0	%100
108	MP4B	Z	-7.906	-7.906	0	%100
109	MP2B	X	0	0	0	%100
110	MP2B	Z	-7.906	-7.906	0	%100
111	MP1B	X	0	0	0	%100
112	MP1B	Z	-7.906	-7.906	0	%100
113	MP3B	X	0	0	0	%100
114	MP3B	Z	-9.57	-9.57	0	%100
115	M130	X	0	0	0	%100
116	M130	Z	-5.57	-5.57	0	%100
117	M131	X	0	0	0	%100
118	M131	Z	-1.392	-1.392	0	%100
119	M134	X	0	0	0	%100
120	M134	Z	-1.392	-1.392	0	%100

Member Distributed Loads (BLC 42 : Structure Wo (30 Deg))

	Member Label	Direction	Start Magnitude[lb/ft,...	End Magnitude[lb/ft,F...	Start Location[ft,%]	End Location[ft,%]
1	M1	X	4.369	4.369	0	%100
2	M1	Z	-7.567	-7.567	0	%100
3	M4	X	1.479	1.479	0	%100
4	M4	Z	-2.562	-2.562	0	%100
5	M10	X	3.755	3.755	0	%100
6	M10	Z	-6.504	-6.504	0	%100
7	M43	X	3.755	3.755	0	%100
8	M43	Z	-6.504	-6.504	0	%100
9	M46	X	7.49	7.49	0	%100
10	M46	Z	-12.973	-12.973	0	%100
11	M51B	X	4.159	4.159	0	%100

Member Distributed Loads (BLC 42 : Structure Wo (30 Deg)) (Continued)

	Member Label	Direction	Start Magnitude[lb/ft,...	End Magnitude[lb/ft,F...	Start Location[ft,%]	End Location[ft,%]
12	M51B	Z	-7.203	-7.203	0	%100
13	M52B	X	0	0	0	%100
14	M52B	Z	0	0	0	%100
15	M76	X	2.497	2.497	0	%100
16	M76	Z	-4.324	-4.324	0	%100
17	M77	X	7.628	7.628	0	%100
18	M77	Z	-13.213	-13.213	0	%100
19	M80	X	8.035	8.035	0	%100
20	M80	Z	-13.917	-13.917	0	%100
21	M84	X	2.497	2.497	0	%100
22	M84	Z	-4.324	-4.324	0	%100
23	M85	X	0	0	0	%100
24	M85	Z	0	0	0	%100
25	M91	X	0	0	0	%100
26	M91	Z	0	0	0	%100
27	M26	X	1.479	1.479	0	%100
28	M26	Z	-2.562	-2.562	0	%100
29	M27	X	3.755	3.755	0	%100
30	M27	Z	-6.504	-6.504	0	%100
31	M28	X	3.755	3.755	0	%100
32	M28	Z	-6.504	-6.504	0	%100
33	M29	X	7.49	7.49	0	%100
34	M29	Z	-12.973	-12.973	0	%100
35	M32	X	0	0	0	%100
36	M32	Z	0	0	0	%100
37	M33	X	4.159	4.159	0	%100
38	M33	Z	-7.203	-7.203	0	%100
39	M37	X	2.497	2.497	0	%100
40	M37	Z	-4.324	-4.324	0	%100
41	M38	X	0	0	0	%100
42	M38	Z	0	0	0	%100
43	M40	X	0	0	0	%100
44	M40	Z	0	0	0	%100
45	M42	X	2.497	2.497	0	%100
46	M42	Z	-4.324	-4.324	0	%100
47	M43A	X	7.628	7.628	0	%100
48	M43A	Z	-13.213	-13.213	0	%100
49	M45	X	8.035	8.035	0	%100
50	M45	Z	-13.917	-13.917	0	%100
51	M50A	X	5.917	5.917	0	%100
52	M50A	Z	-10.248	-10.248	0	%100
53	M51C	X	0	0	0	%100
54	M51C	Z	0	0	0	%100
55	M52A	X	0	0	0	%100
56	M52A	Z	0	0	0	%100
57	M53	X	0	0	0	%100
58	M53	Z	0	0	0	%100
59	M56	X	4.159	4.159	0	%100
60	M56	Z	-7.203	-7.203	0	%100
61	M57	X	4.159	4.159	0	%100
62	M57	Z	-7.203	-7.203	0	%100
63	M61	X	9.986	9.986	0	%100
64	M61	Z	-17.297	-17.297	0	%100
65	M62	X	7.628	7.628	0	%100
66	M62	Z	-13.213	-13.213	0	%100
67	M64	X	8.035	8.035	0	%100
68	M64	Z	-13.917	-13.917	0	%100

Member Distributed Loads (BLC 42 : Structure Wo (30 Deg)) (Continued)

	Member Label	Direction	Start Magnitude[lb/ft,...	End Magnitude[lb/ft,F...	Start Location[ft,%]	End Location[ft,%]
69	M66	X	9.986	9.986	0	%100
70	M66	Z	-17.297	-17.297	0	%100
71	M67	X	7.628	7.628	0	%100
72	M67	Z	-13.213	-13.213	0	%100
73	M69	X	8.035	8.035	0	%100
74	M69	Z	-13.917	-13.917	0	%100
75	M74	X	4.369	4.369	0	%100
76	M74	Z	-7.567	-7.567	0	%100
77	M75	X	0	0	0	%100
78	M75	Z	0	0	0	%100
79	M79B	X	2.965	2.965	0	%100
80	M79B	Z	-5.135	-5.135	0	%100
81	M77A	X	2.965	2.965	0	%100
82	M77A	Z	-5.135	-5.135	0	%100
83	M78	X	0	0	0	%100
84	M78	Z	0	0	0	%100
85	MP5A	X	3.953	3.953	0	%100
86	MP5A	Z	-6.847	-6.847	0	%100
87	MP4A	X	3.953	3.953	0	%100
88	MP4A	Z	-6.847	-6.847	0	%100
89	MP2A	X	3.953	3.953	0	%100
90	MP2A	Z	-6.847	-6.847	0	%100
91	MP1A	X	3.953	3.953	0	%100
92	MP1A	Z	-6.847	-6.847	0	%100
93	MP3A	X	4.785	4.785	0	%100
94	MP3A	Z	-8.288	-8.288	0	%100
95	MP5C	X	3.953	3.953	0	%100
96	MP5C	Z	-6.847	-6.847	0	%100
97	MP4C	X	3.953	3.953	0	%100
98	MP4C	Z	-6.847	-6.847	0	%100
99	MP2C	X	3.953	3.953	0	%100
100	MP2C	Z	-6.847	-6.847	0	%100
101	MP1C	X	3.953	3.953	0	%100
102	MP1C	Z	-6.847	-6.847	0	%100
103	MP3C	X	4.785	4.785	0	%100
104	MP3C	Z	-8.288	-8.288	0	%100
105	MP5B	X	3.953	3.953	0	%100
106	MP5B	Z	-6.847	-6.847	0	%100
107	MP4B	X	3.953	3.953	0	%100
108	MP4B	Z	-6.847	-6.847	0	%100
109	MP2B	X	3.953	3.953	0	%100
110	MP2B	Z	-6.847	-6.847	0	%100
111	MP1B	X	3.953	3.953	0	%100
112	MP1B	Z	-6.847	-6.847	0	%100
113	MP3B	X	4.785	4.785	0	%100
114	MP3B	Z	-8.288	-8.288	0	%100
115	M130	X	2.089	2.089	0	%100
116	M130	Z	-3.618	-3.618	0	%100
117	M131	X	2.089	2.089	0	%100
118	M131	Z	-3.618	-3.618	0	%100
119	M134	X	0	0	0	%100
120	M134	Z	0	0	0	%100

Member Distributed Loads (BLC 43 : Structure Wo (60 Deg))

	Member Label	Direction	Start Magnitude[lb/ft,...	End Magnitude[lb/ft,F...	Start Location[ft,%]	End Location[ft,%]
1	M1	X	2.522	2.522	0	%100

Member Distributed Loads (BLC 43 : Structure Wo (60 Deg)) (Continued)

	Member Label	Direction	Start Magnitude[lb/ft,...	End Magnitude[lb/ft,F...	Start Location[ft,%]	End Location[ft,%]
2	M1	Z	-1.456	-1.456	0	%100
3	M4	X	7.686	7.686	0	%100
4	M4	Z	-4.438	-4.438	0	%100
5	M10	X	2.168	2.168	0	%100
6	M10	Z	-1.252	-1.252	0	%100
7	M43	X	2.168	2.168	0	%100
8	M43	Z	-1.252	-1.252	0	%100
9	M46	X	4.324	4.324	0	%100
10	M46	Z	-2.497	-2.497	0	%100
11	M51B	X	9.605	9.605	0	%100
12	M51B	Z	-5.545	-5.545	0	%100
13	M52B	X	2.401	2.401	0	%100
14	M52B	Z	-1.386	-1.386	0	%100
15	M76	X	12.973	12.973	0	%100
16	M76	Z	-7.49	-7.49	0	%100
17	M77	X	17.617	17.617	0	%100
18	M77	Z	-10.171	-10.171	0	%100
19	M80	X	18.556	18.556	0	%100
20	M80	Z	-10.713	-10.713	0	%100
21	M84	X	12.973	12.973	0	%100
22	M84	Z	-7.49	-7.49	0	%100
23	M85	X	4.404	4.404	0	%100
24	M85	Z	-2.543	-2.543	0	%100
25	M91	X	4.639	4.639	0	%100
26	M91	Z	-2.678	-2.678	0	%100
27	M26	X	0	0	0	%100
28	M26	Z	0	0	0	%100
29	M27	X	8.672	8.672	0	%100
30	M27	Z	-5.007	-5.007	0	%100
31	M28	X	8.672	8.672	0	%100
32	M28	Z	-5.007	-5.007	0	%100
33	M29	X	17.297	17.297	0	%100
34	M29	Z	-9.986	-9.986	0	%100
35	M32	X	2.401	2.401	0	%100
36	M32	Z	-1.386	-1.386	0	%100
37	M33	X	2.401	2.401	0	%100
38	M33	Z	-1.386	-1.386	0	%100
39	M37	X	0	0	0	%100
40	M37	Z	0	0	0	%100
41	M38	X	4.404	4.404	0	%100
42	M38	Z	-2.543	-2.543	0	%100
43	M40	X	4.639	4.639	0	%100
44	M40	Z	-2.678	-2.678	0	%100
45	M42	X	0	0	0	%100
46	M42	Z	0	0	0	%100
47	M43A	X	4.404	4.404	0	%100
48	M43A	Z	-2.543	-2.543	0	%100
49	M45	X	4.639	4.639	0	%100
50	M45	Z	-2.678	-2.678	0	%100
51	M50A	X	7.686	7.686	0	%100
52	M50A	Z	-4.438	-4.438	0	%100
53	M51C	X	2.168	2.168	0	%100
54	M51C	Z	-1.252	-1.252	0	%100
55	M52A	X	2.168	2.168	0	%100
56	M52A	Z	-1.252	-1.252	0	%100
57	M53	X	4.324	4.324	0	%100
58	M53	Z	-2.497	-2.497	0	%100

Member Distributed Loads (BLC 43 : Structure Wo (60 Deg)) (Continued)

	Member Label	Direction	Start Magnitude[lb/ft,...	End Magnitude[lb/ft,F...	Start Location[ft,%]	End Location[ft,%]
59	M56	X	2.401	2.401	0	%100
60	M56	Z	-1.386	-1.386	0	%100
61	M57	X	9.605	9.605	0	%100
62	M57	Z	-5.545	-5.545	0	%100
63	M61	X	12.973	12.973	0	%100
64	M61	Z	-7.49	-7.49	0	%100
65	M62	X	4.404	4.404	0	%100
66	M62	Z	-2.543	-2.543	0	%100
67	M64	X	4.639	4.639	0	%100
68	M64	Z	-2.678	-2.678	0	%100
69	M66	X	12.973	12.973	0	%100
70	M66	Z	-7.49	-7.49	0	%100
71	M67	X	17.617	17.617	0	%100
72	M67	Z	-10.171	-10.171	0	%100
73	M69	X	18.556	18.556	0	%100
74	M69	Z	-10.713	-10.713	0	%100
75	M74	X	10.09	10.09	0	%100
76	M74	Z	-5.825	-5.825	0	%100
77	M75	X	2.522	2.522	0	%100
78	M75	Z	-1.456	-1.456	0	%100
79	M79B	X	1.712	1.712	0	%100
80	M79B	Z	-.988	-.988	0	%100
81	M77A	X	6.847	6.847	0	%100
82	M77A	Z	-3.953	-3.953	0	%100
83	M78	X	1.712	1.712	0	%100
84	M78	Z	-.988	-.988	0	%100
85	MP5A	X	6.847	6.847	0	%100
86	MP5A	Z	-3.953	-3.953	0	%100
87	MP4A	X	6.847	6.847	0	%100
88	MP4A	Z	-3.953	-3.953	0	%100
89	MP2A	X	6.847	6.847	0	%100
90	MP2A	Z	-3.953	-3.953	0	%100
91	MP1A	X	6.847	6.847	0	%100
92	MP1A	Z	-3.953	-3.953	0	%100
93	MP3A	X	8.288	8.288	0	%100
94	MP3A	Z	-4.785	-4.785	0	%100
95	MP5C	X	6.847	6.847	0	%100
96	MP5C	Z	-3.953	-3.953	0	%100
97	MP4C	X	6.847	6.847	0	%100
98	MP4C	Z	-3.953	-3.953	0	%100
99	MP2C	X	6.847	6.847	0	%100
100	MP2C	Z	-3.953	-3.953	0	%100
101	MP1C	X	6.847	6.847	0	%100
102	MP1C	Z	-3.953	-3.953	0	%100
103	MP3C	X	8.288	8.288	0	%100
104	MP3C	Z	-4.785	-4.785	0	%100
105	MP5B	X	6.847	6.847	0	%100
106	MP5B	Z	-3.953	-3.953	0	%100
107	MP4B	X	6.847	6.847	0	%100
108	MP4B	Z	-3.953	-3.953	0	%100
109	MP2B	X	6.847	6.847	0	%100
110	MP2B	Z	-3.953	-3.953	0	%100
111	MP1B	X	6.847	6.847	0	%100
112	MP1B	Z	-3.953	-3.953	0	%100
113	MP3B	X	8.288	8.288	0	%100
114	MP3B	Z	-4.785	-4.785	0	%100
115	M130	X	1.206	1.206	0	%100

Member Distributed Loads (BLC 43 : Structure Wo (60 Deg)) (Continued)

	Member Label	Direction	Start Magnitude[lb/ft,...	End Magnitude[lb/ft,F...	Start Location[ft,%]	End Location[ft,%]
116	M130	Z	-.696	-.696	0	%100
117	M131	X	4.824	4.824	0	%100
118	M131	Z	-2.785	-2.785	0	%100
119	M134	X	1.206	1.206	0	%100
120	M134	Z	-.696	-.696	0	%100

Member Distributed Loads (BLC 44 : Structure Wo (90 Deg))

	Member Label	Direction	Start Magnitude[lb/ft,...	End Magnitude[lb/ft,F...	Start Location[ft,%]	End Location[ft,%]
1	M1	X	0	0	0	%100
2	M1	Z	0	0	0	%100
3	M4	X	11.834	11.834	0	%100
4	M4	Z	0	0	0	%100
5	M10	X	0	0	0	%100
6	M10	Z	0	0	0	%100
7	M43	X	0	0	0	%100
8	M43	Z	0	0	0	%100
9	M46	X	0	0	0	%100
10	M46	Z	0	0	0	%100
11	M51B	X	8.318	8.318	0	%100
12	M51B	Z	0	0	0	%100
13	M52B	X	8.318	8.318	0	%100
14	M52B	Z	0	0	0	%100
15	M76	X	19.972	19.972	0	%100
16	M76	Z	0	0	0	%100
17	M77	X	15.257	15.257	0	%100
18	M77	Z	0	0	0	%100
19	M80	X	16.07	16.07	0	%100
20	M80	Z	0	0	0	%100
21	M84	X	19.972	19.972	0	%100
22	M84	Z	0	0	0	%100
23	M85	X	15.257	15.257	0	%100
24	M85	Z	0	0	0	%100
25	M91	X	16.07	16.07	0	%100
26	M91	Z	0	0	0	%100
27	M26	X	2.958	2.958	0	%100
28	M26	Z	0	0	0	%100
29	M27	X	7.51	7.51	0	%100
30	M27	Z	0	0	0	%100
31	M28	X	7.51	7.51	0	%100
32	M28	Z	0	0	0	%100
33	M29	X	14.979	14.979	0	%100
34	M29	Z	0	0	0	%100
35	M32	X	8.318	8.318	0	%100
36	M32	Z	0	0	0	%100
37	M33	X	0	0	0	%100
38	M33	Z	0	0	0	%100
39	M37	X	4.993	4.993	0	%100
40	M37	Z	0	0	0	%100
41	M38	X	15.257	15.257	0	%100
42	M38	Z	0	0	0	%100
43	M40	X	16.07	16.07	0	%100
44	M40	Z	0	0	0	%100
45	M42	X	4.993	4.993	0	%100
46	M42	Z	0	0	0	%100
47	M43A	X	0	0	0	%100
48	M43A	Z	0	0	0	%100

Member Distributed Loads (BLC 44 : Structure Wo (90 Deg)) (Continued)

	Member Label	Direction	Start Magnitude[lb/ft,...	End Magnitude[lb/ft,F...	Start Location[ft,%]	End Location[ft,%]
49	M45	X	0	0	0	%100
50	M45	Z	0	0	0	%100
51	M50A	X	2.958	2.958	0	%100
52	M50A	Z	0	0	0	%100
53	M51C	X	7.51	7.51	0	%100
54	M51C	Z	0	0	0	%100
55	M52A	X	7.51	7.51	0	%100
56	M52A	Z	0	0	0	%100
57	M53	X	14.979	14.979	0	%100
58	M53	Z	0	0	0	%100
59	M56	X	0	0	0	%100
60	M56	Z	0	0	0	%100
61	M57	X	8.318	8.318	0	%100
62	M57	Z	0	0	0	%100
63	M61	X	4.993	4.993	0	%100
64	M61	Z	0	0	0	%100
65	M62	X	0	0	0	%100
66	M62	Z	0	0	0	%100
67	M64	X	0	0	0	%100
68	M64	Z	0	0	0	%100
69	M66	X	4.993	4.993	0	%100
70	M66	Z	0	0	0	%100
71	M67	X	15.257	15.257	0	%100
72	M67	Z	0	0	0	%100
73	M69	X	16.07	16.07	0	%100
74	M69	Z	0	0	0	%100
75	M74	X	8.738	8.738	0	%100
76	M74	Z	0	0	0	%100
77	M75	X	8.738	8.738	0	%100
78	M75	Z	0	0	0	%100
79	M79B	X	0	0	0	%100
80	M79B	Z	0	0	0	%100
81	M77A	X	5.929	5.929	0	%100
82	M77A	Z	0	0	0	%100
83	M78	X	5.929	5.929	0	%100
84	M78	Z	0	0	0	%100
85	MP5A	X	7.906	7.906	0	%100
86	MP5A	Z	0	0	0	%100
87	MP4A	X	7.906	7.906	0	%100
88	MP4A	Z	0	0	0	%100
89	MP2A	X	7.906	7.906	0	%100
90	MP2A	Z	0	0	0	%100
91	MP1A	X	7.906	7.906	0	%100
92	MP1A	Z	0	0	0	%100
93	MP3A	X	9.57	9.57	0	%100
94	MP3A	Z	0	0	0	%100
95	MP5C	X	7.906	7.906	0	%100
96	MP5C	Z	0	0	0	%100
97	MP4C	X	7.906	7.906	0	%100
98	MP4C	Z	0	0	0	%100
99	MP2C	X	7.906	7.906	0	%100
100	MP2C	Z	0	0	0	%100
101	MP1C	X	7.906	7.906	0	%100
102	MP1C	Z	0	0	0	%100
103	MP3C	X	9.57	9.57	0	%100
104	MP3C	Z	0	0	0	%100
105	MP5B	X	7.906	7.906	0	%100

Member Distributed Loads (BLC 44 : Structure Wo (90 Deg)) (Continued)

	Member Label	Direction	Start Magnitude[lb/ft,...	End Magnitude[lb/ft,F...	Start Location[ft,%]	End Location[ft,%]
106	MP5B	Z	0	0	0	%100
107	MP4B	X	7.906	7.906	0	%100
108	MP4B	Z	0	0	0	%100
109	MP2B	X	7.906	7.906	0	%100
110	MP2B	Z	0	0	0	%100
111	MP1B	X	7.906	7.906	0	%100
112	MP1B	Z	0	0	0	%100
113	MP3B	X	9.57	9.57	0	%100
114	MP3B	Z	0	0	0	%100
115	M130	X	0	0	0	%100
116	M130	Z	0	0	0	%100
117	M131	X	4.177	4.177	0	%100
118	M131	Z	0	0	0	%100
119	M134	X	4.177	4.177	0	%100
120	M134	Z	0	0	0	%100

Member Distributed Loads (BLC 45 : Structure Wo (120 Deg))

	Member Label	Direction	Start Magnitude[lb/ft,...	End Magnitude[lb/ft,F...	Start Location[ft,%]	End Location[ft,%]
1	M1	X	2.522	2.522	0	%100
2	M1	Z	1.456	1.456	0	%100
3	M4	X	7.686	7.686	0	%100
4	M4	Z	4.438	4.438	0	%100
5	M10	X	2.168	2.168	0	%100
6	M10	Z	1.252	1.252	0	%100
7	M43	X	2.168	2.168	0	%100
8	M43	Z	1.252	1.252	0	%100
9	M46	X	4.324	4.324	0	%100
10	M46	Z	2.497	2.497	0	%100
11	M51B	X	2.401	2.401	0	%100
12	M51B	Z	1.386	1.386	0	%100
13	M52B	X	9.605	9.605	0	%100
14	M52B	Z	5.545	5.545	0	%100
15	M76	X	12.973	12.973	0	%100
16	M76	Z	7.49	7.49	0	%100
17	M77	X	4.404	4.404	0	%100
18	M77	Z	2.543	2.543	0	%100
19	M80	X	4.639	4.639	0	%100
20	M80	Z	2.678	2.678	0	%100
21	M84	X	12.973	12.973	0	%100
22	M84	Z	7.49	7.49	0	%100
23	M85	X	17.617	17.617	0	%100
24	M85	Z	10.171	10.171	0	%100
25	M91	X	18.556	18.556	0	%100
26	M91	Z	10.713	10.713	0	%100
27	M26	X	7.686	7.686	0	%100
28	M26	Z	4.438	4.438	0	%100
29	M27	X	2.168	2.168	0	%100
30	M27	Z	1.252	1.252	0	%100
31	M28	X	2.168	2.168	0	%100
32	M28	Z	1.252	1.252	0	%100
33	M29	X	4.324	4.324	0	%100
34	M29	Z	2.497	2.497	0	%100
35	M32	X	9.605	9.605	0	%100
36	M32	Z	5.545	5.545	0	%100
37	M33	X	2.401	2.401	0	%100
38	M33	Z	1.386	1.386	0	%100

Member Distributed Loads (BLC 45 : Structure Wo (120 Deg)) (Continued)

	Member Label	Direction	Start Magnitude[lb/ft,...	End Magnitude[lb/ft,F...	Start Location[ft,%]	End Location[ft,%]
39	M37	X	12.973	12.973	0	%100
40	M37	Z	7.49	7.49	0	%100
41	M38	X	17.617	17.617	0	%100
42	M38	Z	10.171	10.171	0	%100
43	M40	X	18.556	18.556	0	%100
44	M40	Z	10.713	10.713	0	%100
45	M42	X	12.973	12.973	0	%100
46	M42	Z	7.49	7.49	0	%100
47	M43A	X	4.404	4.404	0	%100
48	M43A	Z	2.543	2.543	0	%100
49	M45	X	4.639	4.639	0	%100
50	M45	Z	2.678	2.678	0	%100
51	M50A	X	0	0	0	%100
52	M50A	Z	0	0	0	%100
53	M51C	X	8.672	8.672	0	%100
54	M51C	Z	5.007	5.007	0	%100
55	M52A	X	8.672	8.672	0	%100
56	M52A	Z	5.007	5.007	0	%100
57	M53	X	17.297	17.297	0	%100
58	M53	Z	9.986	9.986	0	%100
59	M56	X	2.401	2.401	0	%100
60	M56	Z	1.386	1.386	0	%100
61	M57	X	2.401	2.401	0	%100
62	M57	Z	1.386	1.386	0	%100
63	M61	X	0	0	0	%100
64	M61	Z	0	0	0	%100
65	M62	X	4.404	4.404	0	%100
66	M62	Z	2.543	2.543	0	%100
67	M64	X	4.639	4.639	0	%100
68	M64	Z	2.678	2.678	0	%100
69	M66	X	0	0	0	%100
70	M66	Z	0	0	0	%100
71	M67	X	4.404	4.404	0	%100
72	M67	Z	2.543	2.543	0	%100
73	M69	X	4.639	4.639	0	%100
74	M69	Z	2.678	2.678	0	%100
75	M74	X	2.522	2.522	0	%100
76	M74	Z	1.456	1.456	0	%100
77	M75	X	10.09	10.09	0	%100
78	M75	Z	5.825	5.825	0	%100
79	M79B	X	1.712	1.712	0	%100
80	M79B	Z	.988	.988	0	%100
81	M77A	X	1.712	1.712	0	%100
82	M77A	Z	.988	.988	0	%100
83	M78	X	6.847	6.847	0	%100
84	M78	Z	3.953	3.953	0	%100
85	MP5A	X	6.847	6.847	0	%100
86	MP5A	Z	3.953	3.953	0	%100
87	MP4A	X	6.847	6.847	0	%100
88	MP4A	Z	3.953	3.953	0	%100
89	MP2A	X	6.847	6.847	0	%100
90	MP2A	Z	3.953	3.953	0	%100
91	MP1A	X	6.847	6.847	0	%100
92	MP1A	Z	3.953	3.953	0	%100
93	MP3A	X	8.288	8.288	0	%100
94	MP3A	Z	4.785	4.785	0	%100
95	MP5C	X	6.847	6.847	0	%100

Member Distributed Loads (BLC 45 : Structure Wo (120 Deg)) (Continued)

	Member Label	Direction	Start Magnitude[lb/ft,...	End Magnitude[lb/ft,F...	Start Location[ft,%]	End Location[ft,%]
96	MP5C	Z	3.953	3.953	0	%100
97	MP4C	X	6.847	6.847	0	%100
98	MP4C	Z	3.953	3.953	0	%100
99	MP2C	X	6.847	6.847	0	%100
100	MP2C	Z	3.953	3.953	0	%100
101	MP1C	X	6.847	6.847	0	%100
102	MP1C	Z	3.953	3.953	0	%100
103	MP3C	X	8.288	8.288	0	%100
104	MP3C	Z	4.785	4.785	0	%100
105	MP5B	X	6.847	6.847	0	%100
106	MP5B	Z	3.953	3.953	0	%100
107	MP4B	X	6.847	6.847	0	%100
108	MP4B	Z	3.953	3.953	0	%100
109	MP2B	X	6.847	6.847	0	%100
110	MP2B	Z	3.953	3.953	0	%100
111	MP1B	X	6.847	6.847	0	%100
112	MP1B	Z	3.953	3.953	0	%100
113	MP3B	X	8.288	8.288	0	%100
114	MP3B	Z	4.785	4.785	0	%100
115	M130	X	1.206	1.206	0	%100
116	M130	Z	.696	.696	0	%100
117	M131	X	1.206	1.206	0	%100
118	M131	Z	.696	.696	0	%100
119	M134	X	4.824	4.824	0	%100
120	M134	Z	2.785	2.785	0	%100

Member Distributed Loads (BLC 46 : Structure Wo (150 Deg))

	Member Label	Direction	Start Magnitude[lb/ft,...	End Magnitude[lb/ft,F...	Start Location[ft,%]	End Location[ft,%]
1	M1	X	4.369	4.369	0	%100
2	M1	Z	7.567	7.567	0	%100
3	M4	X	1.479	1.479	0	%100
4	M4	Z	2.562	2.562	0	%100
5	M10	X	3.755	3.755	0	%100
6	M10	Z	6.504	6.504	0	%100
7	M43	X	3.755	3.755	0	%100
8	M43	Z	6.504	6.504	0	%100
9	M46	X	7.49	7.49	0	%100
10	M46	Z	12.973	12.973	0	%100
11	M51B	X	0	0	0	%100
12	M51B	Z	0	0	0	%100
13	M52B	X	4.159	4.159	0	%100
14	M52B	Z	7.203	7.203	0	%100
15	M76	X	2.497	2.497	0	%100
16	M76	Z	4.324	4.324	0	%100
17	M77	X	0	0	0	%100
18	M77	Z	0	0	0	%100
19	M80	X	0	0	0	%100
20	M80	Z	0	0	0	%100
21	M84	X	2.497	2.497	0	%100
22	M84	Z	4.324	4.324	0	%100
23	M85	X	7.628	7.628	0	%100
24	M85	Z	13.213	13.213	0	%100
25	M91	X	8.035	8.035	0	%100
26	M91	Z	13.917	13.917	0	%100
27	M26	X	5.917	5.917	0	%100
28	M26	Z	10.248	10.248	0	%100

Member Distributed Loads (BLC 46 : Structure Wo (150 Deg)) (Continued)

	Member Label	Direction	Start Magnitude[lb/ft,...	End Magnitude[lb/ft,F...	Start Location[ft,%]	End Location[ft,%]
29	M27	X	0	0	0	%100
30	M27	Z	0	0	0	%100
31	M28	X	0	0	0	%100
32	M28	Z	0	0	0	%100
33	M29	X	0	0	0	%100
34	M29	Z	0	0	0	%100
35	M32	X	4.159	4.159	0	%100
36	M32	Z	7.203	7.203	0	%100
37	M33	X	4.159	4.159	0	%100
38	M33	Z	7.203	7.203	0	%100
39	M37	X	9.986	9.986	0	%100
40	M37	Z	17.297	17.297	0	%100
41	M38	X	7.628	7.628	0	%100
42	M38	Z	13.213	13.213	0	%100
43	M40	X	8.035	8.035	0	%100
44	M40	Z	13.917	13.917	0	%100
45	M42	X	9.986	9.986	0	%100
46	M42	Z	17.297	17.297	0	%100
47	M43A	X	7.628	7.628	0	%100
48	M43A	Z	13.213	13.213	0	%100
49	M45	X	8.035	8.035	0	%100
50	M45	Z	13.917	13.917	0	%100
51	M50A	X	1.479	1.479	0	%100
52	M50A	Z	2.562	2.562	0	%100
53	M51C	X	3.755	3.755	0	%100
54	M51C	Z	6.504	6.504	0	%100
55	M52A	X	3.755	3.755	0	%100
56	M52A	Z	6.504	6.504	0	%100
57	M53	X	7.49	7.49	0	%100
58	M53	Z	12.973	12.973	0	%100
59	M56	X	4.159	4.159	0	%100
60	M56	Z	7.203	7.203	0	%100
61	M57	X	0	0	0	%100
62	M57	Z	0	0	0	%100
63	M61	X	2.497	2.497	0	%100
64	M61	Z	4.324	4.324	0	%100
65	M62	X	7.628	7.628	0	%100
66	M62	Z	13.213	13.213	0	%100
67	M64	X	8.035	8.035	0	%100
68	M64	Z	13.917	13.917	0	%100
69	M66	X	2.497	2.497	0	%100
70	M66	Z	4.324	4.324	0	%100
71	M67	X	0	0	0	%100
72	M67	Z	0	0	0	%100
73	M69	X	0	0	0	%100
74	M69	Z	0	0	0	%100
75	M74	X	0	0	0	%100
76	M74	Z	0	0	0	%100
77	M75	X	4.369	4.369	0	%100
78	M75	Z	7.567	7.567	0	%100
79	M79B	X	2.965	2.965	0	%100
80	M79B	Z	5.135	5.135	0	%100
81	M77A	X	0	0	0	%100
82	M77A	Z	0	0	0	%100
83	M78	X	2.965	2.965	0	%100
84	M78	Z	5.135	5.135	0	%100
85	MP5A	X	3.953	3.953	0	%100

Member Distributed Loads (BLC 46 : Structure Wo (150 Deg)) (Continued)

	Member Label	Direction	Start Magnitude[lb/ft,...	End Magnitude[lb/ft,F...	Start Location[ft,%]	End Location[ft,%]
86	MP5A	Z	6.847	6.847	0	%100
87	MP4A	X	3.953	3.953	0	%100
88	MP4A	Z	6.847	6.847	0	%100
89	MP2A	X	3.953	3.953	0	%100
90	MP2A	Z	6.847	6.847	0	%100
91	MP1A	X	3.953	3.953	0	%100
92	MP1A	Z	6.847	6.847	0	%100
93	MP3A	X	4.785	4.785	0	%100
94	MP3A	Z	8.288	8.288	0	%100
95	MP5C	X	3.953	3.953	0	%100
96	MP5C	Z	6.847	6.847	0	%100
97	MP4C	X	3.953	3.953	0	%100
98	MP4C	Z	6.847	6.847	0	%100
99	MP2C	X	3.953	3.953	0	%100
100	MP2C	Z	6.847	6.847	0	%100
101	MP1C	X	3.953	3.953	0	%100
102	MP1C	Z	6.847	6.847	0	%100
103	MP3C	X	4.785	4.785	0	%100
104	MP3C	Z	8.288	8.288	0	%100
105	MP5B	X	3.953	3.953	0	%100
106	MP5B	Z	6.847	6.847	0	%100
107	MP4B	X	3.953	3.953	0	%100
108	MP4B	Z	6.847	6.847	0	%100
109	MP2B	X	3.953	3.953	0	%100
110	MP2B	Z	6.847	6.847	0	%100
111	MP1B	X	3.953	3.953	0	%100
112	MP1B	Z	6.847	6.847	0	%100
113	MP3B	X	4.785	4.785	0	%100
114	MP3B	Z	8.288	8.288	0	%100
115	M130	X	2.089	2.089	0	%100
116	M130	Z	3.618	3.618	0	%100
117	M131	X	0	0	0	%100
118	M131	Z	0	0	0	%100
119	M134	X	2.089	2.089	0	%100
120	M134	Z	3.618	3.618	0	%100

Member Distributed Loads (BLC 47 : Structure Wo (180 Deg))

	Member Label	Direction	Start Magnitude[lb/ft,...	End Magnitude[lb/ft,F...	Start Location[ft,%]	End Location[ft,%]
1	M1	X	0	0	0	%100
2	M1	Z	11.651	11.651	0	%100
3	M4	X	0	0	0	%100
4	M4	Z	0	0	0	%100
5	M10	X	0	0	0	%100
6	M10	Z	10.013	10.013	0	%100
7	M43	X	0	0	0	%100
8	M43	Z	10.013	10.013	0	%100
9	M46	X	0	0	0	%100
10	M46	Z	19.972	19.972	0	%100
11	M51B	X	0	0	0	%100
12	M51B	Z	2.773	2.773	0	%100
13	M52B	X	0	0	0	%100
14	M52B	Z	2.773	2.773	0	%100
15	M76	X	0	0	0	%100
16	M76	Z	0	0	0	%100
17	M77	X	0	0	0	%100
18	M77	Z	5.086	5.086	0	%100

Member Distributed Loads (BLC 47 : Structure Wo (180 Deg)) (Continued)

	Member Label	Direction	Start Magnitude[lb/ft,...	End Magnitude[lb/ft,F...	Start Location[ft,%]	End Location[ft,%]
19	M80	X	0	0	0	%100
20	M80	Z	5.357	5.357	0	%100
21	M84	X	0	0	0	%100
22	M84	Z	0	0	0	%100
23	M85	X	0	0	0	%100
24	M85	Z	5.086	5.086	0	%100
25	M91	X	0	0	0	%100
26	M91	Z	5.357	5.357	0	%100
27	M26	X	0	0	0	%100
28	M26	Z	8.875	8.875	0	%100
29	M27	X	0	0	0	%100
30	M27	Z	2.503	2.503	0	%100
31	M28	X	0	0	0	%100
32	M28	Z	2.503	2.503	0	%100
33	M29	X	0	0	0	%100
34	M29	Z	4.993	4.993	0	%100
35	M32	X	0	0	0	%100
36	M32	Z	2.773	2.773	0	%100
37	M33	X	0	0	0	%100
38	M33	Z	11.09	11.09	0	%100
39	M37	X	0	0	0	%100
40	M37	Z	14.979	14.979	0	%100
41	M38	X	0	0	0	%100
42	M38	Z	5.086	5.086	0	%100
43	M40	X	0	0	0	%100
44	M40	Z	5.357	5.357	0	%100
45	M42	X	0	0	0	%100
46	M42	Z	14.979	14.979	0	%100
47	M43A	X	0	0	0	%100
48	M43A	Z	20.342	20.342	0	%100
49	M45	X	0	0	0	%100
50	M45	Z	21.426	21.426	0	%100
51	M50A	X	0	0	0	%100
52	M50A	Z	8.875	8.875	0	%100
53	M51C	X	0	0	0	%100
54	M51C	Z	2.503	2.503	0	%100
55	M52A	X	0	0	0	%100
56	M52A	Z	2.503	2.503	0	%100
57	M53	X	0	0	0	%100
58	M53	Z	4.993	4.993	0	%100
59	M56	X	0	0	0	%100
60	M56	Z	11.09	11.09	0	%100
61	M57	X	0	0	0	%100
62	M57	Z	2.773	2.773	0	%100
63	M61	X	0	0	0	%100
64	M61	Z	14.979	14.979	0	%100
65	M62	X	0	0	0	%100
66	M62	Z	20.342	20.342	0	%100
67	M64	X	0	0	0	%100
68	M64	Z	21.426	21.426	0	%100
69	M66	X	0	0	0	%100
70	M66	Z	14.979	14.979	0	%100
71	M67	X	0	0	0	%100
72	M67	Z	5.086	5.086	0	%100
73	M69	X	0	0	0	%100
74	M69	Z	5.357	5.357	0	%100
75	M74	X	0	0	0	%100

Member Distributed Loads (BLC 47 : Structure Wo (180 Deg)) (Continued)

	Member Label	Direction	Start Magnitude[lb/ft,...	End Magnitude[lb/ft,F...	Start Location[ft,%]	End Location[ft,%]
76	M74	Z	2.913	2.913	0	%100
77	M75	X	0	0	0	%100
78	M75	Z	2.913	2.913	0	%100
79	M79B	X	0	0	0	%100
80	M79B	Z	7.906	7.906	0	%100
81	M77A	X	0	0	0	%100
82	M77A	Z	1.976	1.976	0	%100
83	M78	X	0	0	0	%100
84	M78	Z	1.976	1.976	0	%100
85	MP5A	X	0	0	0	%100
86	MP5A	Z	7.906	7.906	0	%100
87	MP4A	X	0	0	0	%100
88	MP4A	Z	7.906	7.906	0	%100
89	MP2A	X	0	0	0	%100
90	MP2A	Z	7.906	7.906	0	%100
91	MP1A	X	0	0	0	%100
92	MP1A	Z	7.906	7.906	0	%100
93	MP3A	X	0	0	0	%100
94	MP3A	Z	9.57	9.57	0	%100
95	MP5C	X	0	0	0	%100
96	MP5C	Z	7.906	7.906	0	%100
97	MP4C	X	0	0	0	%100
98	MP4C	Z	7.906	7.906	0	%100
99	MP2C	X	0	0	0	%100
100	MP2C	Z	7.906	7.906	0	%100
101	MP1C	X	0	0	0	%100
102	MP1C	Z	7.906	7.906	0	%100
103	MP3C	X	0	0	0	%100
104	MP3C	Z	9.57	9.57	0	%100
105	MP5B	X	0	0	0	%100
106	MP5B	Z	7.906	7.906	0	%100
107	MP4B	X	0	0	0	%100
108	MP4B	Z	7.906	7.906	0	%100
109	MP2B	X	0	0	0	%100
110	MP2B	Z	7.906	7.906	0	%100
111	MP1B	X	0	0	0	%100
112	MP1B	Z	7.906	7.906	0	%100
113	MP3B	X	0	0	0	%100
114	MP3B	Z	9.57	9.57	0	%100
115	M130	X	0	0	0	%100
116	M130	Z	5.57	5.57	0	%100
117	M131	X	0	0	0	%100
118	M131	Z	1.392	1.392	0	%100
119	M134	X	0	0	0	%100
120	M134	Z	1.392	1.392	0	%100

Member Distributed Loads (BLC 48 : Structure Wo (210 Deg))

	Member Label	Direction	Start Magnitude[lb/ft,...	End Magnitude[lb/ft,F...	Start Location[ft,%]	End Location[ft,%]
1	M1	X	-4.369	-4.369	0	%100
2	M1	Z	7.567	7.567	0	%100
3	M4	X	-1.479	-1.479	0	%100
4	M4	Z	2.562	2.562	0	%100
5	M10	X	-3.755	-3.755	0	%100
6	M10	Z	6.504	6.504	0	%100
7	M43	X	-3.755	-3.755	0	%100
8	M43	Z	6.504	6.504	0	%100

Member Distributed Loads (BLC 48 : Structure Wo (210 Deg)) (Continued)

	Member Label	Direction	Start Magnitude[lb/ft,...	End Magnitude[lb/ft,F...	Start Location[ft,%]	End Location[ft,%]
9	M46	X	-7.49	-7.49	0	%100
10	M46	Z	12.973	12.973	0	%100
11	M51B	X	-4.159	-4.159	0	%100
12	M51B	Z	7.203	7.203	0	%100
13	M52B	X	0	0	0	%100
14	M52B	Z	0	0	0	%100
15	M76	X	-2.497	-2.497	0	%100
16	M76	Z	4.324	4.324	0	%100
17	M77	X	-7.628	-7.628	0	%100
18	M77	Z	13.213	13.213	0	%100
19	M80	X	-8.035	-8.035	0	%100
20	M80	Z	13.917	13.917	0	%100
21	M84	X	-2.497	-2.497	0	%100
22	M84	Z	4.324	4.324	0	%100
23	M85	X	0	0	0	%100
24	M85	Z	0	0	0	%100
25	M91	X	0	0	0	%100
26	M91	Z	0	0	0	%100
27	M26	X	-1.479	-1.479	0	%100
28	M26	Z	2.562	2.562	0	%100
29	M27	X	-3.755	-3.755	0	%100
30	M27	Z	6.504	6.504	0	%100
31	M28	X	-3.755	-3.755	0	%100
32	M28	Z	6.504	6.504	0	%100
33	M29	X	-7.49	-7.49	0	%100
34	M29	Z	12.973	12.973	0	%100
35	M32	X	0	0	0	%100
36	M32	Z	0	0	0	%100
37	M33	X	-4.159	-4.159	0	%100
38	M33	Z	7.203	7.203	0	%100
39	M37	X	-2.497	-2.497	0	%100
40	M37	Z	4.324	4.324	0	%100
41	M38	X	0	0	0	%100
42	M38	Z	0	0	0	%100
43	M40	X	0	0	0	%100
44	M40	Z	0	0	0	%100
45	M42	X	-2.497	-2.497	0	%100
46	M42	Z	4.324	4.324	0	%100
47	M43A	X	-7.628	-7.628	0	%100
48	M43A	Z	13.213	13.213	0	%100
49	M45	X	-8.035	-8.035	0	%100
50	M45	Z	13.917	13.917	0	%100
51	M50A	X	-5.917	-5.917	0	%100
52	M50A	Z	10.248	10.248	0	%100
53	M51C	X	0	0	0	%100
54	M51C	Z	0	0	0	%100
55	M52A	X	0	0	0	%100
56	M52A	Z	0	0	0	%100
57	M53	X	0	0	0	%100
58	M53	Z	0	0	0	%100
59	M56	X	-4.159	-4.159	0	%100
60	M56	Z	7.203	7.203	0	%100
61	M57	X	-4.159	-4.159	0	%100
62	M57	Z	7.203	7.203	0	%100
63	M61	X	-9.986	-9.986	0	%100
64	M61	Z	17.297	17.297	0	%100
65	M62	X	-7.628	-7.628	0	%100

Member Distributed Loads (BLC 48 : Structure Wo (210 Deg)) (Continued)

	Member Label	Direction	Start Magnitude[lb/ft,...	End Magnitude[lb/ft,F...	Start Location[ft,%]	End Location[ft,%]
66	M62	Z	13.213	13.213	0	%100
67	M64	X	-8.035	-8.035	0	%100
68	M64	Z	13.917	13.917	0	%100
69	M66	X	-9.986	-9.986	0	%100
70	M66	Z	17.297	17.297	0	%100
71	M67	X	-7.628	-7.628	0	%100
72	M67	Z	13.213	13.213	0	%100
73	M69	X	-8.035	-8.035	0	%100
74	M69	Z	13.917	13.917	0	%100
75	M74	X	-4.369	-4.369	0	%100
76	M74	Z	7.567	7.567	0	%100
77	M75	X	0	0	0	%100
78	M75	Z	0	0	0	%100
79	M79B	X	-2.965	-2.965	0	%100
80	M79B	Z	5.135	5.135	0	%100
81	M77A	X	-2.965	-2.965	0	%100
82	M77A	Z	5.135	5.135	0	%100
83	M78	X	0	0	0	%100
84	M78	Z	0	0	0	%100
85	MP5A	X	-3.953	-3.953	0	%100
86	MP5A	Z	6.847	6.847	0	%100
87	MP4A	X	-3.953	-3.953	0	%100
88	MP4A	Z	6.847	6.847	0	%100
89	MP2A	X	-3.953	-3.953	0	%100
90	MP2A	Z	6.847	6.847	0	%100
91	MP1A	X	-3.953	-3.953	0	%100
92	MP1A	Z	6.847	6.847	0	%100
93	MP3A	X	-4.785	-4.785	0	%100
94	MP3A	Z	8.288	8.288	0	%100
95	MP5C	X	-3.953	-3.953	0	%100
96	MP5C	Z	6.847	6.847	0	%100
97	MP4C	X	-3.953	-3.953	0	%100
98	MP4C	Z	6.847	6.847	0	%100
99	MP2C	X	-3.953	-3.953	0	%100
100	MP2C	Z	6.847	6.847	0	%100
101	MP1C	X	-3.953	-3.953	0	%100
102	MP1C	Z	6.847	6.847	0	%100
103	MP3C	X	-4.785	-4.785	0	%100
104	MP3C	Z	8.288	8.288	0	%100
105	MP5B	X	-3.953	-3.953	0	%100
106	MP5B	Z	6.847	6.847	0	%100
107	MP4B	X	-3.953	-3.953	0	%100
108	MP4B	Z	6.847	6.847	0	%100
109	MP2B	X	-3.953	-3.953	0	%100
110	MP2B	Z	6.847	6.847	0	%100
111	MP1B	X	-3.953	-3.953	0	%100
112	MP1B	Z	6.847	6.847	0	%100
113	MP3B	X	-4.785	-4.785	0	%100
114	MP3B	Z	8.288	8.288	0	%100
115	M130	X	-2.089	-2.089	0	%100
116	M130	Z	3.618	3.618	0	%100
117	M131	X	-2.089	-2.089	0	%100
118	M131	Z	3.618	3.618	0	%100
119	M134	X	0	0	0	%100
120	M134	Z	0	0	0	%100

Member Distributed Loads (BLC 49 : Structure Wo (240 Deg))

	Member Label	Direction	Start Magnitude[lb/ft,...	End Magnitude[lb/ft,F...	Start Location[ft,%]	End Location[ft,%]
1	M1	X	-2.522	-2.522	0	%100
2	M1	Z	1.456	1.456	0	%100
3	M4	X	-7.686	-7.686	0	%100
4	M4	Z	4.438	4.438	0	%100
5	M10	X	-2.168	-2.168	0	%100
6	M10	Z	1.252	1.252	0	%100
7	M43	X	-2.168	-2.168	0	%100
8	M43	Z	1.252	1.252	0	%100
9	M46	X	-4.324	-4.324	0	%100
10	M46	Z	2.497	2.497	0	%100
11	M51B	X	-9.605	-9.605	0	%100
12	M51B	Z	5.545	5.545	0	%100
13	M52B	X	-2.401	-2.401	0	%100
14	M52B	Z	1.386	1.386	0	%100
15	M76	X	-12.973	-12.973	0	%100
16	M76	Z	7.49	7.49	0	%100
17	M77	X	-17.617	-17.617	0	%100
18	M77	Z	10.171	10.171	0	%100
19	M80	X	-18.556	-18.556	0	%100
20	M80	Z	10.713	10.713	0	%100
21	M84	X	-12.973	-12.973	0	%100
22	M84	Z	7.49	7.49	0	%100
23	M85	X	-4.404	-4.404	0	%100
24	M85	Z	2.543	2.543	0	%100
25	M91	X	-4.639	-4.639	0	%100
26	M91	Z	2.678	2.678	0	%100
27	M26	X	0	0	0	%100
28	M26	Z	0	0	0	%100
29	M27	X	-8.672	-8.672	0	%100
30	M27	Z	5.007	5.007	0	%100
31	M28	X	-8.672	-8.672	0	%100
32	M28	Z	5.007	5.007	0	%100
33	M29	X	-17.297	-17.297	0	%100
34	M29	Z	9.986	9.986	0	%100
35	M32	X	-2.401	-2.401	0	%100
36	M32	Z	1.386	1.386	0	%100
37	M33	X	-2.401	-2.401	0	%100
38	M33	Z	1.386	1.386	0	%100
39	M37	X	0	0	0	%100
40	M37	Z	0	0	0	%100
41	M38	X	-4.404	-4.404	0	%100
42	M38	Z	2.543	2.543	0	%100
43	M40	X	-4.639	-4.639	0	%100
44	M40	Z	2.678	2.678	0	%100
45	M42	X	0	0	0	%100
46	M42	Z	0	0	0	%100
47	M43A	X	-4.404	-4.404	0	%100
48	M43A	Z	2.543	2.543	0	%100
49	M45	X	-4.639	-4.639	0	%100
50	M45	Z	2.678	2.678	0	%100
51	M50A	X	-7.686	-7.686	0	%100
52	M50A	Z	4.438	4.438	0	%100
53	M51C	X	-2.168	-2.168	0	%100
54	M51C	Z	1.252	1.252	0	%100
55	M52A	X	-2.168	-2.168	0	%100
56	M52A	Z	1.252	1.252	0	%100
57	M53	X	-4.324	-4.324	0	%100

Member Distributed Loads (BLC 49 : Structure Wo (240 Deg)) (Continued)

	Member Label	Direction	Start Magnitude[lb/ft,...	End Magnitude[lb/ft,F...	Start Location[ft,%]	End Location[ft,%]
58	M53	Z	2.497	2.497	0	%100
59	M56	X	-2.401	-2.401	0	%100
60	M56	Z	1.386	1.386	0	%100
61	M57	X	-9.605	-9.605	0	%100
62	M57	Z	5.545	5.545	0	%100
63	M61	X	-12.973	-12.973	0	%100
64	M61	Z	7.49	7.49	0	%100
65	M62	X	-4.404	-4.404	0	%100
66	M62	Z	2.543	2.543	0	%100
67	M64	X	-4.639	-4.639	0	%100
68	M64	Z	2.678	2.678	0	%100
69	M66	X	-12.973	-12.973	0	%100
70	M66	Z	7.49	7.49	0	%100
71	M67	X	-17.617	-17.617	0	%100
72	M67	Z	10.171	10.171	0	%100
73	M69	X	-18.556	-18.556	0	%100
74	M69	Z	10.713	10.713	0	%100
75	M74	X	-10.09	-10.09	0	%100
76	M74	Z	5.825	5.825	0	%100
77	M75	X	-2.522	-2.522	0	%100
78	M75	Z	1.456	1.456	0	%100
79	M79B	X	-1.712	-1.712	0	%100
80	M79B	Z	.988	.988	0	%100
81	M77A	X	-6.847	-6.847	0	%100
82	M77A	Z	3.953	3.953	0	%100
83	M78	X	-1.712	-1.712	0	%100
84	M78	Z	.988	.988	0	%100
85	MP5A	X	-6.847	-6.847	0	%100
86	MP5A	Z	3.953	3.953	0	%100
87	MP4A	X	-6.847	-6.847	0	%100
88	MP4A	Z	3.953	3.953	0	%100
89	MP2A	X	-6.847	-6.847	0	%100
90	MP2A	Z	3.953	3.953	0	%100
91	MP1A	X	-6.847	-6.847	0	%100
92	MP1A	Z	3.953	3.953	0	%100
93	MP3A	X	-8.288	-8.288	0	%100
94	MP3A	Z	4.785	4.785	0	%100
95	MP5C	X	-6.847	-6.847	0	%100
96	MP5C	Z	3.953	3.953	0	%100
97	MP4C	X	-6.847	-6.847	0	%100
98	MP4C	Z	3.953	3.953	0	%100
99	MP2C	X	-6.847	-6.847	0	%100
100	MP2C	Z	3.953	3.953	0	%100
101	MP1C	X	-6.847	-6.847	0	%100
102	MP1C	Z	3.953	3.953	0	%100
103	MP3C	X	-8.288	-8.288	0	%100
104	MP3C	Z	4.785	4.785	0	%100
105	MP5B	X	-6.847	-6.847	0	%100
106	MP5B	Z	3.953	3.953	0	%100
107	MP4B	X	-6.847	-6.847	0	%100
108	MP4B	Z	3.953	3.953	0	%100
109	MP2B	X	-6.847	-6.847	0	%100
110	MP2B	Z	3.953	3.953	0	%100
111	MP1B	X	-6.847	-6.847	0	%100
112	MP1B	Z	3.953	3.953	0	%100
113	MP3B	X	-8.288	-8.288	0	%100
114	MP3B	Z	4.785	4.785	0	%100

Member Distributed Loads (BLC 49 : Structure Wo (240 Deg)) (Continued)

	Member Label	Direction	Start Magnitude[lb/ft,...	End Magnitude[lb/ft,F...	Start Location[ft,%]	End Location[ft,%]
115	M130	X	-1.206	-1.206	0	%100
116	M130	Z	.696	.696	0	%100
117	M131	X	-4.824	-4.824	0	%100
118	M131	Z	2.785	2.785	0	%100
119	M134	X	-1.206	-1.206	0	%100
120	M134	Z	.696	.696	0	%100

Member Distributed Loads (BLC 50 : Structure Wo (270 Deg))

	Member Label	Direction	Start Magnitude[lb/ft,...	End Magnitude[lb/ft,F...	Start Location[ft,%]	End Location[ft,%]
1	M1	X	0	0	0	%100
2	M1	Z	0	0	0	%100
3	M4	X	-11.834	-11.834	0	%100
4	M4	Z	0	0	0	%100
5	M10	X	0	0	0	%100
6	M10	Z	0	0	0	%100
7	M43	X	0	0	0	%100
8	M43	Z	0	0	0	%100
9	M46	X	0	0	0	%100
10	M46	Z	0	0	0	%100
11	M51B	X	-8.318	-8.318	0	%100
12	M51B	Z	0	0	0	%100
13	M52B	X	-8.318	-8.318	0	%100
14	M52B	Z	0	0	0	%100
15	M76	X	-19.972	-19.972	0	%100
16	M76	Z	0	0	0	%100
17	M77	X	-15.257	-15.257	0	%100
18	M77	Z	0	0	0	%100
19	M80	X	-16.07	-16.07	0	%100
20	M80	Z	0	0	0	%100
21	M84	X	-19.972	-19.972	0	%100
22	M84	Z	0	0	0	%100
23	M85	X	-15.257	-15.257	0	%100
24	M85	Z	0	0	0	%100
25	M91	X	-16.07	-16.07	0	%100
26	M91	Z	0	0	0	%100
27	M26	X	-2.958	-2.958	0	%100
28	M26	Z	0	0	0	%100
29	M27	X	-7.51	-7.51	0	%100
30	M27	Z	0	0	0	%100
31	M28	X	-7.51	-7.51	0	%100
32	M28	Z	0	0	0	%100
33	M29	X	-14.979	-14.979	0	%100
34	M29	Z	0	0	0	%100
35	M32	X	-8.318	-8.318	0	%100
36	M32	Z	0	0	0	%100
37	M33	X	0	0	0	%100
38	M33	Z	0	0	0	%100
39	M37	X	-4.993	-4.993	0	%100
40	M37	Z	0	0	0	%100
41	M38	X	-15.257	-15.257	0	%100
42	M38	Z	0	0	0	%100
43	M40	X	-16.07	-16.07	0	%100
44	M40	Z	0	0	0	%100
45	M42	X	-4.993	-4.993	0	%100
46	M42	Z	0	0	0	%100
47	M43A	X	0	0	0	%100

Member Distributed Loads (BLC 50 : Structure Wo (270 Deg)) (Continued)

	Member Label	Direction	Start Magnitude[lb/ft,...	End Magnitude[lb/ft,F...	Start Location[ft,%]	End Location[ft,%]
48	M43A	Z	0	0	0	%100
49	M45	X	0	0	0	%100
50	M45	Z	0	0	0	%100
51	M50A	X	-2.958	-2.958	0	%100
52	M50A	Z	0	0	0	%100
53	M51C	X	-7.51	-7.51	0	%100
54	M51C	Z	0	0	0	%100
55	M52A	X	-7.51	-7.51	0	%100
56	M52A	Z	0	0	0	%100
57	M53	X	-14.979	-14.979	0	%100
58	M53	Z	0	0	0	%100
59	M56	X	0	0	0	%100
60	M56	Z	0	0	0	%100
61	M57	X	-8.318	-8.318	0	%100
62	M57	Z	0	0	0	%100
63	M61	X	-4.993	-4.993	0	%100
64	M61	Z	0	0	0	%100
65	M62	X	0	0	0	%100
66	M62	Z	0	0	0	%100
67	M64	X	0	0	0	%100
68	M64	Z	0	0	0	%100
69	M66	X	-4.993	-4.993	0	%100
70	M66	Z	0	0	0	%100
71	M67	X	-15.257	-15.257	0	%100
72	M67	Z	0	0	0	%100
73	M69	X	-16.07	-16.07	0	%100
74	M69	Z	0	0	0	%100
75	M74	X	-8.738	-8.738	0	%100
76	M74	Z	0	0	0	%100
77	M75	X	-8.738	-8.738	0	%100
78	M75	Z	0	0	0	%100
79	M79B	X	0	0	0	%100
80	M79B	Z	0	0	0	%100
81	M77A	X	-5.929	-5.929	0	%100
82	M77A	Z	0	0	0	%100
83	M78	X	-5.929	-5.929	0	%100
84	M78	Z	0	0	0	%100
85	MP5A	X	-7.906	-7.906	0	%100
86	MP5A	Z	0	0	0	%100
87	MP4A	X	-7.906	-7.906	0	%100
88	MP4A	Z	0	0	0	%100
89	MP2A	X	-7.906	-7.906	0	%100
90	MP2A	Z	0	0	0	%100
91	MP1A	X	-7.906	-7.906	0	%100
92	MP1A	Z	0	0	0	%100
93	MP3A	X	-9.57	-9.57	0	%100
94	MP3A	Z	0	0	0	%100
95	MP5C	X	-7.906	-7.906	0	%100
96	MP5C	Z	0	0	0	%100
97	MP4C	X	-7.906	-7.906	0	%100
98	MP4C	Z	0	0	0	%100
99	MP2C	X	-7.906	-7.906	0	%100
100	MP2C	Z	0	0	0	%100
101	MP1C	X	-7.906	-7.906	0	%100
102	MP1C	Z	0	0	0	%100
103	MP3C	X	-9.57	-9.57	0	%100
104	MP3C	Z	0	0	0	%100

Member Distributed Loads (BLC 50 : Structure Wo (270 Deg)) (Continued)

	Member Label	Direction	Start Magnitude[lb/ft,...	End Magnitude[lb/ft,F...	Start Location[ft,%]	End Location[ft,%]
105	MP5B	X	-7.906	-7.906	0	%100
106	MP5B	Z	0	0	0	%100
107	MP4B	X	-7.906	-7.906	0	%100
108	MP4B	Z	0	0	0	%100
109	MP2B	X	-7.906	-7.906	0	%100
110	MP2B	Z	0	0	0	%100
111	MP1B	X	-7.906	-7.906	0	%100
112	MP1B	Z	0	0	0	%100
113	MP3B	X	-9.57	-9.57	0	%100
114	MP3B	Z	0	0	0	%100
115	M130	X	0	0	0	%100
116	M130	Z	0	0	0	%100
117	M131	X	-4.177	-4.177	0	%100
118	M131	Z	0	0	0	%100
119	M134	X	-4.177	-4.177	0	%100
120	M134	Z	0	0	0	%100

Member Distributed Loads (BLC 51 : Structure Wo (300 Deg))

	Member Label	Direction	Start Magnitude[lb/ft,...	End Magnitude[lb/ft,F...	Start Location[ft,%]	End Location[ft,%]
1	M1	X	-2.522	-2.522	0	%100
2	M1	Z	-1.456	-1.456	0	%100
3	M4	X	-7.686	-7.686	0	%100
4	M4	Z	-4.438	-4.438	0	%100
5	M10	X	-2.168	-2.168	0	%100
6	M10	Z	-1.252	-1.252	0	%100
7	M43	X	-2.168	-2.168	0	%100
8	M43	Z	-1.252	-1.252	0	%100
9	M46	X	-4.324	-4.324	0	%100
10	M46	Z	-2.497	-2.497	0	%100
11	M51B	X	-2.401	-2.401	0	%100
12	M51B	Z	-1.386	-1.386	0	%100
13	M52B	X	-9.605	-9.605	0	%100
14	M52B	Z	-5.545	-5.545	0	%100
15	M76	X	-12.973	-12.973	0	%100
16	M76	Z	-7.49	-7.49	0	%100
17	M77	X	-4.404	-4.404	0	%100
18	M77	Z	-2.543	-2.543	0	%100
19	M80	X	-4.639	-4.639	0	%100
20	M80	Z	-2.678	-2.678	0	%100
21	M84	X	-12.973	-12.973	0	%100
22	M84	Z	-7.49	-7.49	0	%100
23	M85	X	-17.617	-17.617	0	%100
24	M85	Z	-10.171	-10.171	0	%100
25	M91	X	-18.556	-18.556	0	%100
26	M91	Z	-10.713	-10.713	0	%100
27	M26	X	-7.686	-7.686	0	%100
28	M26	Z	-4.438	-4.438	0	%100
29	M27	X	-2.168	-2.168	0	%100
30	M27	Z	-1.252	-1.252	0	%100
31	M28	X	-2.168	-2.168	0	%100
32	M28	Z	-1.252	-1.252	0	%100
33	M29	X	-4.324	-4.324	0	%100
34	M29	Z	-2.497	-2.497	0	%100
35	M32	X	-9.605	-9.605	0	%100
36	M32	Z	-5.545	-5.545	0	%100
37	M33	X	-2.401	-2.401	0	%100

Member Distributed Loads (BLC 51 : Structure Wo (300 Deg)) (Continued)

	Member Label	Direction	Start Magnitude[lb/ft,...	End Magnitude[lb/ft,F...	Start Location[ft,%]	End Location[ft,%]
38	M33	Z	-1.386	-1.386	0	%100
39	M37	X	-12.973	-12.973	0	%100
40	M37	Z	-7.49	-7.49	0	%100
41	M38	X	-17.617	-17.617	0	%100
42	M38	Z	-10.171	-10.171	0	%100
43	M40	X	-18.556	-18.556	0	%100
44	M40	Z	-10.713	-10.713	0	%100
45	M42	X	-12.973	-12.973	0	%100
46	M42	Z	-7.49	-7.49	0	%100
47	M43A	X	-4.404	-4.404	0	%100
48	M43A	Z	-2.543	-2.543	0	%100
49	M45	X	-4.639	-4.639	0	%100
50	M45	Z	-2.678	-2.678	0	%100
51	M50A	X	0	0	0	%100
52	M50A	Z	0	0	0	%100
53	M51C	X	-8.672	-8.672	0	%100
54	M51C	Z	-5.007	-5.007	0	%100
55	M52A	X	-8.672	-8.672	0	%100
56	M52A	Z	-5.007	-5.007	0	%100
57	M53	X	-17.297	-17.297	0	%100
58	M53	Z	-9.986	-9.986	0	%100
59	M56	X	-2.401	-2.401	0	%100
60	M56	Z	-1.386	-1.386	0	%100
61	M57	X	-2.401	-2.401	0	%100
62	M57	Z	-1.386	-1.386	0	%100
63	M61	X	0	0	0	%100
64	M61	Z	0	0	0	%100
65	M62	X	-4.404	-4.404	0	%100
66	M62	Z	-2.543	-2.543	0	%100
67	M64	X	-4.639	-4.639	0	%100
68	M64	Z	-2.678	-2.678	0	%100
69	M66	X	0	0	0	%100
70	M66	Z	0	0	0	%100
71	M67	X	-4.404	-4.404	0	%100
72	M67	Z	-2.543	-2.543	0	%100
73	M69	X	-4.639	-4.639	0	%100
74	M69	Z	-2.678	-2.678	0	%100
75	M74	X	-2.522	-2.522	0	%100
76	M74	Z	-1.456	-1.456	0	%100
77	M75	X	-10.09	-10.09	0	%100
78	M75	Z	-5.825	-5.825	0	%100
79	M79B	X	-1.712	-1.712	0	%100
80	M79B	Z	-.988	-.988	0	%100
81	M77A	X	-1.712	-1.712	0	%100
82	M77A	Z	-.988	-.988	0	%100
83	M78	X	-6.847	-6.847	0	%100
84	M78	Z	-3.953	-3.953	0	%100
85	MP5A	X	-6.847	-6.847	0	%100
86	MP5A	Z	-3.953	-3.953	0	%100
87	MP4A	X	-6.847	-6.847	0	%100
88	MP4A	Z	-3.953	-3.953	0	%100
89	MP2A	X	-6.847	-6.847	0	%100
90	MP2A	Z	-3.953	-3.953	0	%100
91	MP1A	X	-6.847	-6.847	0	%100
92	MP1A	Z	-3.953	-3.953	0	%100
93	MP3A	X	-8.288	-8.288	0	%100
94	MP3A	Z	-4.785	-4.785	0	%100

Member Distributed Loads (BLC 51 : Structure Wo (300 Deg)) (Continued)

	Member Label	Direction	Start Magnitude[lb/ft,...	End Magnitude[lb/ft,F...	Start Location[ft,%]	End Location[ft,%]
95	MP5C	X	-6.847	-6.847	0	%100
96	MP5C	Z	-3.953	-3.953	0	%100
97	MP4C	X	-6.847	-6.847	0	%100
98	MP4C	Z	-3.953	-3.953	0	%100
99	MP2C	X	-6.847	-6.847	0	%100
100	MP2C	Z	-3.953	-3.953	0	%100
101	MP1C	X	-6.847	-6.847	0	%100
102	MP1C	Z	-3.953	-3.953	0	%100
103	MP3C	X	-8.288	-8.288	0	%100
104	MP3C	Z	-4.785	-4.785	0	%100
105	MP5B	X	-6.847	-6.847	0	%100
106	MP5B	Z	-3.953	-3.953	0	%100
107	MP4B	X	-6.847	-6.847	0	%100
108	MP4B	Z	-3.953	-3.953	0	%100
109	MP2B	X	-6.847	-6.847	0	%100
110	MP2B	Z	-3.953	-3.953	0	%100
111	MP1B	X	-6.847	-6.847	0	%100
112	MP1B	Z	-3.953	-3.953	0	%100
113	MP3B	X	-8.288	-8.288	0	%100
114	MP3B	Z	-4.785	-4.785	0	%100
115	M130	X	-1.206	-1.206	0	%100
116	M130	Z	-.696	-.696	0	%100
117	M131	X	-1.206	-1.206	0	%100
118	M131	Z	-.696	-.696	0	%100
119	M134	X	-4.824	-4.824	0	%100
120	M134	Z	-2.785	-2.785	0	%100

Member Distributed Loads (BLC 52 : Structure Wo (330 Deg))

	Member Label	Direction	Start Magnitude[lb/ft,...	End Magnitude[lb/ft,F...	Start Location[ft,%]	End Location[ft,%]
1	M1	X	-4.369	-4.369	0	%100
2	M1	Z	-7.567	-7.567	0	%100
3	M4	X	-1.479	-1.479	0	%100
4	M4	Z	-2.562	-2.562	0	%100
5	M10	X	-3.755	-3.755	0	%100
6	M10	Z	-6.504	-6.504	0	%100
7	M43	X	-3.755	-3.755	0	%100
8	M43	Z	-6.504	-6.504	0	%100
9	M46	X	-7.49	-7.49	0	%100
10	M46	Z	-12.973	-12.973	0	%100
11	M51B	X	0	0	0	%100
12	M51B	Z	0	0	0	%100
13	M52B	X	-4.159	-4.159	0	%100
14	M52B	Z	-7.203	-7.203	0	%100
15	M76	X	-2.497	-2.497	0	%100
16	M76	Z	-4.324	-4.324	0	%100
17	M77	X	0	0	0	%100
18	M77	Z	0	0	0	%100
19	M80	X	0	0	0	%100
20	M80	Z	0	0	0	%100
21	M84	X	-2.497	-2.497	0	%100
22	M84	Z	-4.324	-4.324	0	%100
23	M85	X	-7.628	-7.628	0	%100
24	M85	Z	-13.213	-13.213	0	%100
25	M91	X	-8.035	-8.035	0	%100
26	M91	Z	-13.917	-13.917	0	%100
27	M26	X	-5.917	-5.917	0	%100

Member Distributed Loads (BLC 52 : Structure Wo (330 Deg)) (Continued)

	Member Label	Direction	Start Magnitude[lb/ft,...	End Magnitude[lb/ft,F...	Start Location[ft,%]	End Location[ft,%]
28	M26	Z	-10.248	-10.248	0	%100
29	M27	X	0	0	0	%100
30	M27	Z	0	0	0	%100
31	M28	X	0	0	0	%100
32	M28	Z	0	0	0	%100
33	M29	X	0	0	0	%100
34	M29	Z	0	0	0	%100
35	M32	X	-4.159	-4.159	0	%100
36	M32	Z	-7.203	-7.203	0	%100
37	M33	X	-4.159	-4.159	0	%100
38	M33	Z	-7.203	-7.203	0	%100
39	M37	X	-9.986	-9.986	0	%100
40	M37	Z	-17.297	-17.297	0	%100
41	M38	X	-7.628	-7.628	0	%100
42	M38	Z	-13.213	-13.213	0	%100
43	M40	X	-8.035	-8.035	0	%100
44	M40	Z	-13.917	-13.917	0	%100
45	M42	X	-9.986	-9.986	0	%100
46	M42	Z	-17.297	-17.297	0	%100
47	M43A	X	-7.628	-7.628	0	%100
48	M43A	Z	-13.213	-13.213	0	%100
49	M45	X	-8.035	-8.035	0	%100
50	M45	Z	-13.917	-13.917	0	%100
51	M50A	X	-1.479	-1.479	0	%100
52	M50A	Z	-2.562	-2.562	0	%100
53	M51C	X	-3.755	-3.755	0	%100
54	M51C	Z	-6.504	-6.504	0	%100
55	M52A	X	-3.755	-3.755	0	%100
56	M52A	Z	-6.504	-6.504	0	%100
57	M53	X	-7.49	-7.49	0	%100
58	M53	Z	-12.973	-12.973	0	%100
59	M56	X	-4.159	-4.159	0	%100
60	M56	Z	-7.203	-7.203	0	%100
61	M57	X	0	0	0	%100
62	M57	Z	0	0	0	%100
63	M61	X	-2.497	-2.497	0	%100
64	M61	Z	-4.324	-4.324	0	%100
65	M62	X	-7.628	-7.628	0	%100
66	M62	Z	-13.213	-13.213	0	%100
67	M64	X	-8.035	-8.035	0	%100
68	M64	Z	-13.917	-13.917	0	%100
69	M66	X	-2.497	-2.497	0	%100
70	M66	Z	-4.324	-4.324	0	%100
71	M67	X	0	0	0	%100
72	M67	Z	0	0	0	%100
73	M69	X	0	0	0	%100
74	M69	Z	0	0	0	%100
75	M74	X	0	0	0	%100
76	M74	Z	0	0	0	%100
77	M75	X	-4.369	-4.369	0	%100
78	M75	Z	-7.567	-7.567	0	%100
79	M79B	X	-2.965	-2.965	0	%100
80	M79B	Z	-5.135	-5.135	0	%100
81	M77A	X	0	0	0	%100
82	M77A	Z	0	0	0	%100
83	M78	X	-2.965	-2.965	0	%100
84	M78	Z	-5.135	-5.135	0	%100

Member Distributed Loads (BLC 52 : Structure Wo (330 Deg)) (Continued)

	Member Label	Direction	Start Magnitude[lb/ft,...	End Magnitude[lb/ft,F...	Start Location[ft,%]	End Location[ft,%]
85	MP5A	X	-3.953	-3.953	0	%100
86	MP5A	Z	-6.847	-6.847	0	%100
87	MP4A	X	-3.953	-3.953	0	%100
88	MP4A	Z	-6.847	-6.847	0	%100
89	MP2A	X	-3.953	-3.953	0	%100
90	MP2A	Z	-6.847	-6.847	0	%100
91	MP1A	X	-3.953	-3.953	0	%100
92	MP1A	Z	-6.847	-6.847	0	%100
93	MP3A	X	-4.785	-4.785	0	%100
94	MP3A	Z	-8.288	-8.288	0	%100
95	MP5C	X	-3.953	-3.953	0	%100
96	MP5C	Z	-6.847	-6.847	0	%100
97	MP4C	X	-3.953	-3.953	0	%100
98	MP4C	Z	-6.847	-6.847	0	%100
99	MP2C	X	-3.953	-3.953	0	%100
100	MP2C	Z	-6.847	-6.847	0	%100
101	MP1C	X	-3.953	-3.953	0	%100
102	MP1C	Z	-6.847	-6.847	0	%100
103	MP3C	X	-4.785	-4.785	0	%100
104	MP3C	Z	-8.288	-8.288	0	%100
105	MP5B	X	-3.953	-3.953	0	%100
106	MP5B	Z	-6.847	-6.847	0	%100
107	MP4B	X	-3.953	-3.953	0	%100
108	MP4B	Z	-6.847	-6.847	0	%100
109	MP2B	X	-3.953	-3.953	0	%100
110	MP2B	Z	-6.847	-6.847	0	%100
111	MP1B	X	-3.953	-3.953	0	%100
112	MP1B	Z	-6.847	-6.847	0	%100
113	MP3B	X	-4.785	-4.785	0	%100
114	MP3B	Z	-8.288	-8.288	0	%100
115	M130	X	-2.089	-2.089	0	%100
116	M130	Z	-3.618	-3.618	0	%100
117	M131	X	0	0	0	%100
118	M131	Z	0	0	0	%100
119	M134	X	-2.089	-2.089	0	%100
120	M134	Z	-3.618	-3.618	0	%100

Member Distributed Loads (BLC 53 : Structure Wi (0 Deg))

	Member Label	Direction	Start Magnitude[lb/ft,...	End Magnitude[lb/ft,F...	Start Location[ft,%]	End Location[ft,%]
1	M1	X	0	0	0	%100
2	M1	Z	-3.551	-3.551	0	%100
3	M4	X	0	0	0	%100
4	M4	Z	0	0	0	%100
5	M10	X	0	0	0	%100
6	M10	Z	-2.914	-2.914	0	%100
7	M43	X	0	0	0	%100
8	M43	Z	-2.914	-2.914	0	%100
9	M46	X	0	0	0	%100
10	M46	Z	-4.551	-4.551	0	%100
11	M51B	X	0	0	0	%100
12	M51B	Z	-.838	-.838	0	%100
13	M52B	X	0	0	0	%100
14	M52B	Z	-.838	-.838	0	%100
15	M76	X	0	0	0	%100
16	M76	Z	0	0	0	%100
17	M77	X	0	0	0	%100

Member Distributed Loads (BLC 53 : Structure Wi (0 Deg)) (Continued)

	Member Label	Direction	Start Magnitude[lb/ft,...	End Magnitude[lb/ft,F...	Start Location[ft,%]	End Location[ft,%]
18	M77	Z	-1.136	-1.136	0	%100
19	M80	X	0	0	0	%100
20	M80	Z	-1.186	-1.186	0	%100
21	M84	X	0	0	0	%100
22	M84	Z	0	0	0	%100
23	M85	X	0	0	0	%100
24	M85	Z	-1.136	-1.136	0	%100
25	M91	X	0	0	0	%100
26	M91	Z	-1.186	-1.186	0	%100
27	M26	X	0	0	0	%100
28	M26	Z	-2.688	-2.688	0	%100
29	M27	X	0	0	0	%100
30	M27	Z	-.728	-.728	0	%100
31	M28	X	0	0	0	%100
32	M28	Z	-.728	-.728	0	%100
33	M29	X	0	0	0	%100
34	M29	Z	-1.138	-1.138	0	%100
35	M32	X	0	0	0	%100
36	M32	Z	-.838	-.838	0	%100
37	M33	X	0	0	0	%100
38	M33	Z	-3.352	-3.352	0	%100
39	M37	X	0	0	0	%100
40	M37	Z	-3.358	-3.358	0	%100
41	M38	X	0	0	0	%100
42	M38	Z	-1.136	-1.136	0	%100
43	M40	X	0	0	0	%100
44	M40	Z	-1.186	-1.186	0	%100
45	M42	X	0	0	0	%100
46	M42	Z	-3.358	-3.358	0	%100
47	M43A	X	0	0	0	%100
48	M43A	Z	-4.545	-4.545	0	%100
49	M45	X	0	0	0	%100
50	M45	Z	-4.743	-4.743	0	%100
51	M50A	X	0	0	0	%100
52	M50A	Z	-2.688	-2.688	0	%100
53	M51C	X	0	0	0	%100
54	M51C	Z	-.728	-.728	0	%100
55	M52A	X	0	0	0	%100
56	M52A	Z	-.728	-.728	0	%100
57	M53	X	0	0	0	%100
58	M53	Z	-1.138	-1.138	0	%100
59	M56	X	0	0	0	%100
60	M56	Z	-3.352	-3.352	0	%100
61	M57	X	0	0	0	%100
62	M57	Z	-.838	-.838	0	%100
63	M61	X	0	0	0	%100
64	M61	Z	-3.358	-3.358	0	%100
65	M62	X	0	0	0	%100
66	M62	Z	-4.545	-4.545	0	%100
67	M64	X	0	0	0	%100
68	M64	Z	-4.743	-4.743	0	%100
69	M66	X	0	0	0	%100
70	M66	Z	-3.358	-3.358	0	%100
71	M67	X	0	0	0	%100
72	M67	Z	-1.136	-1.136	0	%100
73	M69	X	0	0	0	%100
74	M69	Z	-1.186	-1.186	0	%100

Member Distributed Loads (BLC 53 : Structure Wi (0 Deg)) (Continued)

	Member Label	Direction	Start Magnitude[lb/ft,...	End Magnitude[lb/ft,F...	Start Location[ft,%]	End Location[ft,%]
75	M74	X	0	0	0	%100
76	M74	Z	-.888	-.888	0	%100
77	M75	X	0	0	0	%100
78	M75	Z	-.888	-.888	0	%100
79	M79B	X	0	0	0	%100
80	M79B	Z	-2.867	-2.867	0	%100
81	M77A	X	0	0	0	%100
82	M77A	Z	-.717	-.717	0	%100
83	M78	X	0	0	0	%100
84	M78	Z	-.717	-.717	0	%100
85	MP5A	X	0	0	0	%100
86	MP5A	Z	-2.867	-2.867	0	%100
87	MP4A	X	0	0	0	%100
88	MP4A	Z	-2.867	-2.867	0	%100
89	MP2A	X	0	0	0	%100
90	MP2A	Z	-2.867	-2.867	0	%100
91	MP1A	X	0	0	0	%100
92	MP1A	Z	-2.867	-2.867	0	%100
93	MP3A	X	0	0	0	%100
94	MP3A	Z	-3.171	-3.171	0	%100
95	MP5C	X	0	0	0	%100
96	MP5C	Z	-2.867	-2.867	0	%100
97	MP4C	X	0	0	0	%100
98	MP4C	Z	-2.867	-2.867	0	%100
99	MP2C	X	0	0	0	%100
100	MP2C	Z	-2.867	-2.867	0	%100
101	MP1C	X	0	0	0	%100
102	MP1C	Z	-2.867	-2.867	0	%100
103	MP3C	X	0	0	0	%100
104	MP3C	Z	-3.171	-3.171	0	%100
105	MP5B	X	0	0	0	%100
106	MP5B	Z	-2.867	-2.867	0	%100
107	MP4B	X	0	0	0	%100
108	MP4B	Z	-2.867	-2.867	0	%100
109	MP2B	X	0	0	0	%100
110	MP2B	Z	-2.867	-2.867	0	%100
111	MP1B	X	0	0	0	%100
112	MP1B	Z	-2.867	-2.867	0	%100
113	MP3B	X	0	0	0	%100
114	MP3B	Z	-3.171	-3.171	0	%100
115	M130	X	0	0	0	%100
116	M130	Z	-2.023	-2.023	0	%100
117	M131	X	0	0	0	%100
118	M131	Z	-.506	-.506	0	%100
119	M134	X	0	0	0	%100
120	M134	Z	-.506	-.506	0	%100

Member Distributed Loads (BLC 54 : Structure Wi (30 Deg))

	Member Label	Direction	Start Magnitude[lb/ft,...	End Magnitude[lb/ft,F...	Start Location[ft,%]	End Location[ft,%]
1	M1	X	1.332	1.332	0	%100
2	M1	Z	-2.306	-2.306	0	%100
3	M4	X	.448	.448	0	%100
4	M4	Z	-.776	-.776	0	%100
5	M10	X	1.093	1.093	0	%100
6	M10	Z	-1.893	-1.893	0	%100
7	M43	X	1.093	1.093	0	%100

Member Distributed Loads (BLC 54 : Structure Wi (30 Deg)) (Continued)

	Member Label	Direction	Start Magnitude[lb/ft,...	End Magnitude[lb/ft,F...	Start Location[ft,%]	End Location[ft,%]
8	M43	Z	-1.893	-1.893	0	%100
9	M46	X	1.707	1.707	0	%100
10	M46	Z	-2.956	-2.956	0	%100
11	M51B	X	1.257	1.257	0	%100
12	M51B	Z	-2.177	-2.177	0	%100
13	M52B	X	0	0	0	%100
14	M52B	Z	0	0	0	%100
15	M76	X	.56	.56	0	%100
16	M76	Z	-.969	-.969	0	%100
17	M77	X	1.704	1.704	0	%100
18	M77	Z	-2.952	-2.952	0	%100
19	M80	X	1.779	1.779	0	%100
20	M80	Z	-3.081	-3.081	0	%100
21	M84	X	.56	.56	0	%100
22	M84	Z	-.969	-.969	0	%100
23	M85	X	0	0	0	%100
24	M85	Z	0	0	0	%100
25	M91	X	0	0	0	%100
26	M91	Z	0	0	0	%100
27	M26	X	.448	.448	0	%100
28	M26	Z	-.776	-.776	0	%100
29	M27	X	1.093	1.093	0	%100
30	M27	Z	-1.893	-1.893	0	%100
31	M28	X	1.093	1.093	0	%100
32	M28	Z	-1.893	-1.893	0	%100
33	M29	X	1.707	1.707	0	%100
34	M29	Z	-2.956	-2.956	0	%100
35	M32	X	0	0	0	%100
36	M32	Z	0	0	0	%100
37	M33	X	1.257	1.257	0	%100
38	M33	Z	-2.177	-2.177	0	%100
39	M37	X	.56	.56	0	%100
40	M37	Z	-.969	-.969	0	%100
41	M38	X	0	0	0	%100
42	M38	Z	0	0	0	%100
43	M40	X	0	0	0	%100
44	M40	Z	0	0	0	%100
45	M42	X	.56	.56	0	%100
46	M42	Z	-.969	-.969	0	%100
47	M43A	X	1.704	1.704	0	%100
48	M43A	Z	-2.952	-2.952	0	%100
49	M45	X	1.779	1.779	0	%100
50	M45	Z	-3.081	-3.081	0	%100
51	M50A	X	1.792	1.792	0	%100
52	M50A	Z	-3.104	-3.104	0	%100
53	M51C	X	0	0	0	%100
54	M51C	Z	0	0	0	%100
55	M52A	X	0	0	0	%100
56	M52A	Z	0	0	0	%100
57	M53	X	0	0	0	%100
58	M53	Z	0	0	0	%100
59	M56	X	1.257	1.257	0	%100
60	M56	Z	-2.177	-2.177	0	%100
61	M57	X	1.257	1.257	0	%100
62	M57	Z	-2.177	-2.177	0	%100
63	M61	X	2.239	2.239	0	%100
64	M61	Z	-3.878	-3.878	0	%100

Member Distributed Loads (BLC 54 : Structure Wi (30 Deg)) (Continued)

	Member Label	Direction	Start Magnitude[lb/ft,...	End Magnitude[lb/ft,F...	Start Location[ft,%]	End Location[ft,%]
65	M62	X	1.704	1.704	0	%100
66	M62	Z	-2.952	-2.952	0	%100
67	M64	X	1.779	1.779	0	%100
68	M64	Z	-3.081	-3.081	0	%100
69	M66	X	2.239	2.239	0	%100
70	M66	Z	-3.878	-3.878	0	%100
71	M67	X	1.704	1.704	0	%100
72	M67	Z	-2.952	-2.952	0	%100
73	M69	X	1.779	1.779	0	%100
74	M69	Z	-3.081	-3.081	0	%100
75	M74	X	1.332	1.332	0	%100
76	M74	Z	-2.306	-2.306	0	%100
77	M75	X	0	0	0	%100
78	M75	Z	0	0	0	%100
79	M79B	X	1.075	1.075	0	%100
80	M79B	Z	-1.862	-1.862	0	%100
81	M77A	X	1.075	1.075	0	%100
82	M77A	Z	-1.862	-1.862	0	%100
83	M78	X	0	0	0	%100
84	M78	Z	0	0	0	%100
85	MP5A	X	1.434	1.434	0	%100
86	MP5A	Z	-2.483	-2.483	0	%100
87	MP4A	X	1.434	1.434	0	%100
88	MP4A	Z	-2.483	-2.483	0	%100
89	MP2A	X	1.434	1.434	0	%100
90	MP2A	Z	-2.483	-2.483	0	%100
91	MP1A	X	1.434	1.434	0	%100
92	MP1A	Z	-2.483	-2.483	0	%100
93	MP3A	X	1.586	1.586	0	%100
94	MP3A	Z	-2.746	-2.746	0	%100
95	MP5C	X	1.434	1.434	0	%100
96	MP5C	Z	-2.483	-2.483	0	%100
97	MP4C	X	1.434	1.434	0	%100
98	MP4C	Z	-2.483	-2.483	0	%100
99	MP2C	X	1.434	1.434	0	%100
100	MP2C	Z	-2.483	-2.483	0	%100
101	MP1C	X	1.434	1.434	0	%100
102	MP1C	Z	-2.483	-2.483	0	%100
103	MP3C	X	1.586	1.586	0	%100
104	MP3C	Z	-2.746	-2.746	0	%100
105	MP5B	X	1.434	1.434	0	%100
106	MP5B	Z	-2.483	-2.483	0	%100
107	MP4B	X	1.434	1.434	0	%100
108	MP4B	Z	-2.483	-2.483	0	%100
109	MP2B	X	1.434	1.434	0	%100
110	MP2B	Z	-2.483	-2.483	0	%100
111	MP1B	X	1.434	1.434	0	%100
112	MP1B	Z	-2.483	-2.483	0	%100
113	MP3B	X	1.586	1.586	0	%100
114	MP3B	Z	-2.746	-2.746	0	%100
115	M130	X	.759	.759	0	%100
116	M130	Z	-1.314	-1.314	0	%100
117	M131	X	.759	.759	0	%100
118	M131	Z	-1.314	-1.314	0	%100
119	M134	X	0	0	0	%100
120	M134	Z	0	0	0	%100

Member Distributed Loads (BLC 55 : Structure Wi (60 Deg))

	Member Label	Direction	Start Magnitude[lb/ft,...	End Magnitude[lb/ft,F...	Start Location[ft,%]	End Location[ft,%]
1	M1	X	.769	.769	0	%100
2	M1	Z	-.444	-.444	0	%100
3	M4	X	2.328	2.328	0	%100
4	M4	Z	-1.344	-1.344	0	%100
5	M10	X	.631	.631	0	%100
6	M10	Z	-.364	-.364	0	%100
7	M43	X	.631	.631	0	%100
8	M43	Z	-.364	-.364	0	%100
9	M46	X	.985	.985	0	%100
10	M46	Z	-.569	-.569	0	%100
11	M51B	X	2.903	2.903	0	%100
12	M51B	Z	-1.676	-1.676	0	%100
13	M52B	X	.726	.726	0	%100
14	M52B	Z	-.419	-.419	0	%100
15	M76	X	2.908	2.908	0	%100
16	M76	Z	-1.679	-1.679	0	%100
17	M77	X	3.936	3.936	0	%100
18	M77	Z	-2.273	-2.273	0	%100
19	M80	X	4.108	4.108	0	%100
20	M80	Z	-2.372	-2.372	0	%100
21	M84	X	2.908	2.908	0	%100
22	M84	Z	-1.679	-1.679	0	%100
23	M85	X	.984	.984	0	%100
24	M85	Z	-.568	-.568	0	%100
25	M91	X	1.027	1.027	0	%100
26	M91	Z	-.593	-.593	0	%100
27	M26	X	0	0	0	%100
28	M26	Z	0	0	0	%100
29	M27	X	2.523	2.523	0	%100
30	M27	Z	-1.457	-1.457	0	%100
31	M28	X	2.523	2.523	0	%100
32	M28	Z	-1.457	-1.457	0	%100
33	M29	X	3.941	3.941	0	%100
34	M29	Z	-2.276	-2.276	0	%100
35	M32	X	.726	.726	0	%100
36	M32	Z	-.419	-.419	0	%100
37	M33	X	.726	.726	0	%100
38	M33	Z	-.419	-.419	0	%100
39	M37	X	0	0	0	%100
40	M37	Z	0	0	0	%100
41	M38	X	.984	.984	0	%100
42	M38	Z	-.568	-.568	0	%100
43	M40	X	1.027	1.027	0	%100
44	M40	Z	-.593	-.593	0	%100
45	M42	X	0	0	0	%100
46	M42	Z	0	0	0	%100
47	M43A	X	.984	.984	0	%100
48	M43A	Z	-.568	-.568	0	%100
49	M45	X	1.027	1.027	0	%100
50	M45	Z	-.593	-.593	0	%100
51	M50A	X	2.328	2.328	0	%100
52	M50A	Z	-1.344	-1.344	0	%100
53	M51C	X	.631	.631	0	%100
54	M51C	Z	-.364	-.364	0	%100
55	M52A	X	.631	.631	0	%100
56	M52A	Z	-.364	-.364	0	%100
57	M53	X	.985	.985	0	%100

Member Distributed Loads (BLC 55 : Structure Wi (60 Deg)) (Continued)

	Member Label	Direction	Start Magnitude[lb/ft,...	End Magnitude[lb/ft,F...	Start Location[ft,%]	End Location[ft,%]
58	M53	Z	-.569	-.569	0	%100
59	M56	X	.726	.726	0	%100
60	M56	Z	-.419	-.419	0	%100
61	M57	X	2.903	2.903	0	%100
62	M57	Z	-1.676	-1.676	0	%100
63	M61	X	2.908	2.908	0	%100
64	M61	Z	-1.679	-1.679	0	%100
65	M62	X	.984	.984	0	%100
66	M62	Z	-.568	-.568	0	%100
67	M64	X	1.027	1.027	0	%100
68	M64	Z	-.593	-.593	0	%100
69	M66	X	2.908	2.908	0	%100
70	M66	Z	-1.679	-1.679	0	%100
71	M67	X	3.936	3.936	0	%100
72	M67	Z	-2.273	-2.273	0	%100
73	M69	X	4.108	4.108	0	%100
74	M69	Z	-2.372	-2.372	0	%100
75	M74	X	3.075	3.075	0	%100
76	M74	Z	-1.775	-1.775	0	%100
77	M75	X	.769	.769	0	%100
78	M75	Z	-.444	-.444	0	%100
79	M79B	X	.621	.621	0	%100
80	M79B	Z	-.358	-.358	0	%100
81	M77A	X	2.483	2.483	0	%100
82	M77A	Z	-1.434	-1.434	0	%100
83	M78	X	.621	.621	0	%100
84	M78	Z	-.358	-.358	0	%100
85	MP5A	X	2.483	2.483	0	%100
86	MP5A	Z	-1.434	-1.434	0	%100
87	MP4A	X	2.483	2.483	0	%100
88	MP4A	Z	-1.434	-1.434	0	%100
89	MP2A	X	2.483	2.483	0	%100
90	MP2A	Z	-1.434	-1.434	0	%100
91	MP1A	X	2.483	2.483	0	%100
92	MP1A	Z	-1.434	-1.434	0	%100
93	MP3A	X	2.746	2.746	0	%100
94	MP3A	Z	-1.586	-1.586	0	%100
95	MP5C	X	2.483	2.483	0	%100
96	MP5C	Z	-1.434	-1.434	0	%100
97	MP4C	X	2.483	2.483	0	%100
98	MP4C	Z	-1.434	-1.434	0	%100
99	MP2C	X	2.483	2.483	0	%100
100	MP2C	Z	-1.434	-1.434	0	%100
101	MP1C	X	2.483	2.483	0	%100
102	MP1C	Z	-1.434	-1.434	0	%100
103	MP3C	X	2.746	2.746	0	%100
104	MP3C	Z	-1.586	-1.586	0	%100
105	MP5B	X	2.483	2.483	0	%100
106	MP5B	Z	-1.434	-1.434	0	%100
107	MP4B	X	2.483	2.483	0	%100
108	MP4B	Z	-1.434	-1.434	0	%100
109	MP2B	X	2.483	2.483	0	%100
110	MP2B	Z	-1.434	-1.434	0	%100
111	MP1B	X	2.483	2.483	0	%100
112	MP1B	Z	-1.434	-1.434	0	%100
113	MP3B	X	2.746	2.746	0	%100
114	MP3B	Z	-1.586	-1.586	0	%100

Member Distributed Loads (BLC 55 : Structure Wi (60 Deg)) (Continued)

	Member Label	Direction	Start Magnitude[lb/ft,...	End Magnitude[lb/ft,F...	Start Location[ft,%]	End Location[ft,%]
115	M130	X	.438	.438	0	%100
116	M130	Z	-.253	-.253	0	%100
117	M131	X	1.752	1.752	0	%100
118	M131	Z	-1.012	-1.012	0	%100
119	M134	X	.438	.438	0	%100
120	M134	Z	-.253	-.253	0	%100

Member Distributed Loads (BLC 56 : Structure Wi (90 Deg))

	Member Label	Direction	Start Magnitude[lb/ft,...	End Magnitude[lb/ft,F...	Start Location[ft,%]	End Location[ft,%]
1	M1	X	0	0	0	%100
2	M1	Z	0	0	0	%100
3	M4	X	3.584	3.584	0	%100
4	M4	Z	0	0	0	%100
5	M10	X	0	0	0	%100
6	M10	Z	0	0	0	%100
7	M43	X	0	0	0	%100
8	M43	Z	0	0	0	%100
9	M46	X	0	0	0	%100
10	M46	Z	0	0	0	%100
11	M51B	X	2.514	2.514	0	%100
12	M51B	Z	0	0	0	%100
13	M52B	X	2.514	2.514	0	%100
14	M52B	Z	0	0	0	%100
15	M76	X	4.478	4.478	0	%100
16	M76	Z	0	0	0	%100
17	M77	X	3.409	3.409	0	%100
18	M77	Z	0	0	0	%100
19	M80	X	3.557	3.557	0	%100
20	M80	Z	0	0	0	%100
21	M84	X	4.478	4.478	0	%100
22	M84	Z	0	0	0	%100
23	M85	X	3.409	3.409	0	%100
24	M85	Z	0	0	0	%100
25	M91	X	3.557	3.557	0	%100
26	M91	Z	0	0	0	%100
27	M26	X	.896	.896	0	%100
28	M26	Z	0	0	0	%100
29	M27	X	2.185	2.185	0	%100
30	M27	Z	0	0	0	%100
31	M28	X	2.185	2.185	0	%100
32	M28	Z	0	0	0	%100
33	M29	X	3.413	3.413	0	%100
34	M29	Z	0	0	0	%100
35	M32	X	2.514	2.514	0	%100
36	M32	Z	0	0	0	%100
37	M33	X	0	0	0	%100
38	M33	Z	0	0	0	%100
39	M37	X	1.119	1.119	0	%100
40	M37	Z	0	0	0	%100
41	M38	X	3.409	3.409	0	%100
42	M38	Z	0	0	0	%100
43	M40	X	3.557	3.557	0	%100
44	M40	Z	0	0	0	%100
45	M42	X	1.119	1.119	0	%100
46	M42	Z	0	0	0	%100
47	M43A	X	0	0	0	%100

Member Distributed Loads (BLC 56 : Structure Wi (90 Deg)) (Continued)

	Member Label	Direction	Start Magnitude[lb/ft,...	End Magnitude[lb/ft,F...	Start Location[ft,%]	End Location[ft,%]
48	M43A	Z	0	0	0	%100
49	M45	X	0	0	0	%100
50	M45	Z	0	0	0	%100
51	M50A	X	.896	.896	0	%100
52	M50A	Z	0	0	0	%100
53	M51C	X	2.185	2.185	0	%100
54	M51C	Z	0	0	0	%100
55	M52A	X	2.185	2.185	0	%100
56	M52A	Z	0	0	0	%100
57	M53	X	3.413	3.413	0	%100
58	M53	Z	0	0	0	%100
59	M56	X	0	0	0	%100
60	M56	Z	0	0	0	%100
61	M57	X	2.514	2.514	0	%100
62	M57	Z	0	0	0	%100
63	M61	X	1.119	1.119	0	%100
64	M61	Z	0	0	0	%100
65	M62	X	0	0	0	%100
66	M62	Z	0	0	0	%100
67	M64	X	0	0	0	%100
68	M64	Z	0	0	0	%100
69	M66	X	1.119	1.119	0	%100
70	M66	Z	0	0	0	%100
71	M67	X	3.409	3.409	0	%100
72	M67	Z	0	0	0	%100
73	M69	X	3.557	3.557	0	%100
74	M69	Z	0	0	0	%100
75	M74	X	2.663	2.663	0	%100
76	M74	Z	0	0	0	%100
77	M75	X	2.663	2.663	0	%100
78	M75	Z	0	0	0	%100
79	M79B	X	0	0	0	%100
80	M79B	Z	0	0	0	%100
81	M77A	X	2.15	2.15	0	%100
82	M77A	Z	0	0	0	%100
83	M78	X	2.15	2.15	0	%100
84	M78	Z	0	0	0	%100
85	MP5A	X	2.867	2.867	0	%100
86	MP5A	Z	0	0	0	%100
87	MP4A	X	2.867	2.867	0	%100
88	MP4A	Z	0	0	0	%100
89	MP2A	X	2.867	2.867	0	%100
90	MP2A	Z	0	0	0	%100
91	MP1A	X	2.867	2.867	0	%100
92	MP1A	Z	0	0	0	%100
93	MP3A	X	3.171	3.171	0	%100
94	MP3A	Z	0	0	0	%100
95	MP5C	X	2.867	2.867	0	%100
96	MP5C	Z	0	0	0	%100
97	MP4C	X	2.867	2.867	0	%100
98	MP4C	Z	0	0	0	%100
99	MP2C	X	2.867	2.867	0	%100
100	MP2C	Z	0	0	0	%100
101	MP1C	X	2.867	2.867	0	%100
102	MP1C	Z	0	0	0	%100
103	MP3C	X	3.171	3.171	0	%100
104	MP3C	Z	0	0	0	%100

Member Distributed Loads (BLC 56 : Structure Wi (90 Deg)) (Continued)

	Member Label	Direction	Start Magnitude[lb/ft,...	End Magnitude[lb/ft,F...	Start Location[ft,%]	End Location[ft,%]
105	MP5B	X	2.867	2.867	0	%100
106	MP5B	Z	0	0	0	%100
107	MP4B	X	2.867	2.867	0	%100
108	MP4B	Z	0	0	0	%100
109	MP2B	X	2.867	2.867	0	%100
110	MP2B	Z	0	0	0	%100
111	MP1B	X	2.867	2.867	0	%100
112	MP1B	Z	0	0	0	%100
113	MP3B	X	3.171	3.171	0	%100
114	MP3B	Z	0	0	0	%100
115	M130	X	0	0	0	%100
116	M130	Z	0	0	0	%100
117	M131	X	1.518	1.518	0	%100
118	M131	Z	0	0	0	%100
119	M134	X	1.518	1.518	0	%100
120	M134	Z	0	0	0	%100

Member Distributed Loads (BLC 57 : Structure Wi (120 Deg))

	Member Label	Direction	Start Magnitude[lb/ft,...	End Magnitude[lb/ft,F...	Start Location[ft,%]	End Location[ft,%]
1	M1	X	.769	.769	0	%100
2	M1	Z	.444	.444	0	%100
3	M4	X	2.328	2.328	0	%100
4	M4	Z	1.344	1.344	0	%100
5	M10	X	.631	.631	0	%100
6	M10	Z	.364	.364	0	%100
7	M43	X	.631	.631	0	%100
8	M43	Z	.364	.364	0	%100
9	M46	X	.985	.985	0	%100
10	M46	Z	.569	.569	0	%100
11	M51B	X	.726	.726	0	%100
12	M51B	Z	.419	.419	0	%100
13	M52B	X	2.903	2.903	0	%100
14	M52B	Z	1.676	1.676	0	%100
15	M76	X	2.908	2.908	0	%100
16	M76	Z	1.679	1.679	0	%100
17	M77	X	.984	.984	0	%100
18	M77	Z	.568	.568	0	%100
19	M80	X	1.027	1.027	0	%100
20	M80	Z	.593	.593	0	%100
21	M84	X	2.908	2.908	0	%100
22	M84	Z	1.679	1.679	0	%100
23	M85	X	3.936	3.936	0	%100
24	M85	Z	2.273	2.273	0	%100
25	M91	X	4.108	4.108	0	%100
26	M91	Z	2.372	2.372	0	%100
27	M26	X	2.328	2.328	0	%100
28	M26	Z	1.344	1.344	0	%100
29	M27	X	.631	.631	0	%100
30	M27	Z	.364	.364	0	%100
31	M28	X	.631	.631	0	%100
32	M28	Z	.364	.364	0	%100
33	M29	X	.985	.985	0	%100
34	M29	Z	.569	.569	0	%100
35	M32	X	2.903	2.903	0	%100
36	M32	Z	1.676	1.676	0	%100
37	M33	X	.726	.726	0	%100

Member Distributed Loads (BLC 57 : Structure Wi (120 Deg)) (Continued)

	Member Label	Direction	Start Magnitude[lb/ft,...	End Magnitude[lb/ft,F...	Start Location[ft,%]	End Location[ft,%]
38	M33	Z	.419	.419	0	%100
39	M37	X	2.908	2.908	0	%100
40	M37	Z	1.679	1.679	0	%100
41	M38	X	3.936	3.936	0	%100
42	M38	Z	2.273	2.273	0	%100
43	M40	X	4.108	4.108	0	%100
44	M40	Z	2.372	2.372	0	%100
45	M42	X	2.908	2.908	0	%100
46	M42	Z	1.679	1.679	0	%100
47	M43A	X	.984	.984	0	%100
48	M43A	Z	.568	.568	0	%100
49	M45	X	1.027	1.027	0	%100
50	M45	Z	.593	.593	0	%100
51	M50A	X	0	0	0	%100
52	M50A	Z	0	0	0	%100
53	M51C	X	2.523	2.523	0	%100
54	M51C	Z	1.457	1.457	0	%100
55	M52A	X	2.523	2.523	0	%100
56	M52A	Z	1.457	1.457	0	%100
57	M53	X	3.941	3.941	0	%100
58	M53	Z	2.276	2.276	0	%100
59	M56	X	.726	.726	0	%100
60	M56	Z	.419	.419	0	%100
61	M57	X	.726	.726	0	%100
62	M57	Z	.419	.419	0	%100
63	M61	X	0	0	0	%100
64	M61	Z	0	0	0	%100
65	M62	X	.984	.984	0	%100
66	M62	Z	.568	.568	0	%100
67	M64	X	1.027	1.027	0	%100
68	M64	Z	.593	.593	0	%100
69	M66	X	0	0	0	%100
70	M66	Z	0	0	0	%100
71	M67	X	.984	.984	0	%100
72	M67	Z	.568	.568	0	%100
73	M69	X	1.027	1.027	0	%100
74	M69	Z	.593	.593	0	%100
75	M74	X	.769	.769	0	%100
76	M74	Z	.444	.444	0	%100
77	M75	X	3.075	3.075	0	%100
78	M75	Z	1.775	1.775	0	%100
79	M79B	X	.621	.621	0	%100
80	M79B	Z	.358	.358	0	%100
81	M77A	X	.621	.621	0	%100
82	M77A	Z	.358	.358	0	%100
83	M78	X	2.483	2.483	0	%100
84	M78	Z	1.434	1.434	0	%100
85	MP5A	X	2.483	2.483	0	%100
86	MP5A	Z	1.434	1.434	0	%100
87	MP4A	X	2.483	2.483	0	%100
88	MP4A	Z	1.434	1.434	0	%100
89	MP2A	X	2.483	2.483	0	%100
90	MP2A	Z	1.434	1.434	0	%100
91	MP1A	X	2.483	2.483	0	%100
92	MP1A	Z	1.434	1.434	0	%100
93	MP3A	X	2.746	2.746	0	%100
94	MP3A	Z	1.586	1.586	0	%100

Member Distributed Loads (BLC 57 : Structure Wi (120 Deg)) (Continued)

	Member Label	Direction	Start Magnitude[lb/ft,...	End Magnitude[lb/ft,F...	Start Location[ft,%]	End Location[ft,%]
95	MP5C	X	2.483	2.483	0	%100
96	MP5C	Z	1.434	1.434	0	%100
97	MP4C	X	2.483	2.483	0	%100
98	MP4C	Z	1.434	1.434	0	%100
99	MP2C	X	2.483	2.483	0	%100
100	MP2C	Z	1.434	1.434	0	%100
101	MP1C	X	2.483	2.483	0	%100
102	MP1C	Z	1.434	1.434	0	%100
103	MP3C	X	2.746	2.746	0	%100
104	MP3C	Z	1.586	1.586	0	%100
105	MP5B	X	2.483	2.483	0	%100
106	MP5B	Z	1.434	1.434	0	%100
107	MP4B	X	2.483	2.483	0	%100
108	MP4B	Z	1.434	1.434	0	%100
109	MP2B	X	2.483	2.483	0	%100
110	MP2B	Z	1.434	1.434	0	%100
111	MP1B	X	2.483	2.483	0	%100
112	MP1B	Z	1.434	1.434	0	%100
113	MP3B	X	2.746	2.746	0	%100
114	MP3B	Z	1.586	1.586	0	%100
115	M130	X	.438	.438	0	%100
116	M130	Z	.253	.253	0	%100
117	M131	X	.438	.438	0	%100
118	M131	Z	.253	.253	0	%100
119	M134	X	1.752	1.752	0	%100
120	M134	Z	1.012	1.012	0	%100

Member Distributed Loads (BLC 58 : Structure Wi (150 Deg))

	Member Label	Direction	Start Magnitude[lb/ft,...	End Magnitude[lb/ft,F...	Start Location[ft,%]	End Location[ft,%]
1	M1	X	1.332	1.332	0	%100
2	M1	Z	2.306	2.306	0	%100
3	M4	X	.448	.448	0	%100
4	M4	Z	.776	.776	0	%100
5	M10	X	1.093	1.093	0	%100
6	M10	Z	1.893	1.893	0	%100
7	M43	X	1.093	1.093	0	%100
8	M43	Z	1.893	1.893	0	%100
9	M46	X	1.707	1.707	0	%100
10	M46	Z	2.956	2.956	0	%100
11	M51B	X	0	0	0	%100
12	M51B	Z	0	0	0	%100
13	M52B	X	1.257	1.257	0	%100
14	M52B	Z	2.177	2.177	0	%100
15	M76	X	.56	.56	0	%100
16	M76	Z	.969	.969	0	%100
17	M77	X	0	0	0	%100
18	M77	Z	0	0	0	%100
19	M80	X	0	0	0	%100
20	M80	Z	0	0	0	%100
21	M84	X	.56	.56	0	%100
22	M84	Z	.969	.969	0	%100
23	M85	X	1.704	1.704	0	%100
24	M85	Z	2.952	2.952	0	%100
25	M91	X	1.779	1.779	0	%100
26	M91	Z	3.081	3.081	0	%100
27	M26	X	1.792	1.792	0	%100

Member Distributed Loads (BLC 58 : Structure Wi (150 Deg)) (Continued)

	Member Label	Direction	Start Magnitude[lb/ft,...	End Magnitude[lb/ft,F...	Start Location[ft,%]	End Location[ft,%]
28	M26	Z	3.104	3.104	0	%100
29	M27	X	0	0	0	%100
30	M27	Z	0	0	0	%100
31	M28	X	0	0	0	%100
32	M28	Z	0	0	0	%100
33	M29	X	0	0	0	%100
34	M29	Z	0	0	0	%100
35	M32	X	1.257	1.257	0	%100
36	M32	Z	2.177	2.177	0	%100
37	M33	X	1.257	1.257	0	%100
38	M33	Z	2.177	2.177	0	%100
39	M37	X	2.239	2.239	0	%100
40	M37	Z	3.878	3.878	0	%100
41	M38	X	1.704	1.704	0	%100
42	M38	Z	2.952	2.952	0	%100
43	M40	X	1.779	1.779	0	%100
44	M40	Z	3.081	3.081	0	%100
45	M42	X	2.239	2.239	0	%100
46	M42	Z	3.878	3.878	0	%100
47	M43A	X	1.704	1.704	0	%100
48	M43A	Z	2.952	2.952	0	%100
49	M45	X	1.779	1.779	0	%100
50	M45	Z	3.081	3.081	0	%100
51	M50A	X	.448	.448	0	%100
52	M50A	Z	.776	.776	0	%100
53	M51C	X	1.093	1.093	0	%100
54	M51C	Z	1.893	1.893	0	%100
55	M52A	X	1.093	1.093	0	%100
56	M52A	Z	1.893	1.893	0	%100
57	M53	X	1.707	1.707	0	%100
58	M53	Z	2.956	2.956	0	%100
59	M56	X	1.257	1.257	0	%100
60	M56	Z	2.177	2.177	0	%100
61	M57	X	0	0	0	%100
62	M57	Z	0	0	0	%100
63	M61	X	.56	.56	0	%100
64	M61	Z	.969	.969	0	%100
65	M62	X	1.704	1.704	0	%100
66	M62	Z	2.952	2.952	0	%100
67	M64	X	1.779	1.779	0	%100
68	M64	Z	3.081	3.081	0	%100
69	M66	X	.56	.56	0	%100
70	M66	Z	.969	.969	0	%100
71	M67	X	0	0	0	%100
72	M67	Z	0	0	0	%100
73	M69	X	0	0	0	%100
74	M69	Z	0	0	0	%100
75	M74	X	0	0	0	%100
76	M74	Z	0	0	0	%100
77	M75	X	1.332	1.332	0	%100
78	M75	Z	2.306	2.306	0	%100
79	M79B	X	1.075	1.075	0	%100
80	M79B	Z	1.862	1.862	0	%100
81	M77A	X	0	0	0	%100
82	M77A	Z	0	0	0	%100
83	M78	X	1.075	1.075	0	%100
84	M78	Z	1.862	1.862	0	%100

Member Distributed Loads (BLC 58 : Structure Wi (150 Deg)) (Continued)

	Member Label	Direction	Start Magnitude[lb/ft,...	End Magnitude[lb/ft,F...	Start Location[ft,%]	End Location[ft,%]
85	MP5A	X	1.434	1.434	0	%100
86	MP5A	Z	2.483	2.483	0	%100
87	MP4A	X	1.434	1.434	0	%100
88	MP4A	Z	2.483	2.483	0	%100
89	MP2A	X	1.434	1.434	0	%100
90	MP2A	Z	2.483	2.483	0	%100
91	MP1A	X	1.434	1.434	0	%100
92	MP1A	Z	2.483	2.483	0	%100
93	MP3A	X	1.586	1.586	0	%100
94	MP3A	Z	2.746	2.746	0	%100
95	MP5C	X	1.434	1.434	0	%100
96	MP5C	Z	2.483	2.483	0	%100
97	MP4C	X	1.434	1.434	0	%100
98	MP4C	Z	2.483	2.483	0	%100
99	MP2C	X	1.434	1.434	0	%100
100	MP2C	Z	2.483	2.483	0	%100
101	MP1C	X	1.434	1.434	0	%100
102	MP1C	Z	2.483	2.483	0	%100
103	MP3C	X	1.586	1.586	0	%100
104	MP3C	Z	2.746	2.746	0	%100
105	MP5B	X	1.434	1.434	0	%100
106	MP5B	Z	2.483	2.483	0	%100
107	MP4B	X	1.434	1.434	0	%100
108	MP4B	Z	2.483	2.483	0	%100
109	MP2B	X	1.434	1.434	0	%100
110	MP2B	Z	2.483	2.483	0	%100
111	MP1B	X	1.434	1.434	0	%100
112	MP1B	Z	2.483	2.483	0	%100
113	MP3B	X	1.586	1.586	0	%100
114	MP3B	Z	2.746	2.746	0	%100
115	M130	X	.759	.759	0	%100
116	M130	Z	1.314	1.314	0	%100
117	M131	X	0	0	0	%100
118	M131	Z	0	0	0	%100
119	M134	X	.759	.759	0	%100
120	M134	Z	1.314	1.314	0	%100

Member Distributed Loads (BLC 59 : Structure Wi (180 Deg))

	Member Label	Direction	Start Magnitude[lb/ft,...	End Magnitude[lb/ft,F...	Start Location[ft,%]	End Location[ft,%]
1	M1	X	0	0	0	%100
2	M1	Z	3.551	3.551	0	%100
3	M4	X	0	0	0	%100
4	M4	Z	0	0	0	%100
5	M10	X	0	0	0	%100
6	M10	Z	2.914	2.914	0	%100
7	M43	X	0	0	0	%100
8	M43	Z	2.914	2.914	0	%100
9	M46	X	0	0	0	%100
10	M46	Z	4.551	4.551	0	%100
11	M51B	X	0	0	0	%100
12	M51B	Z	.838	.838	0	%100
13	M52B	X	0	0	0	%100
14	M52B	Z	.838	.838	0	%100
15	M76	X	0	0	0	%100
16	M76	Z	0	0	0	%100
17	M77	X	0	0	0	%100

Member Distributed Loads (BLC 59 : Structure Wi (180 Deg)) (Continued)

	Member Label	Direction	Start Magnitude[lb/ft,...	End Magnitude[lb/ft,F...	Start Location[ft,%]	End Location[ft,%]
18	M77	Z	1.136	1.136	0	%100
19	M80	X	0	0	0	%100
20	M80	Z	1.186	1.186	0	%100
21	M84	X	0	0	0	%100
22	M84	Z	0	0	0	%100
23	M85	X	0	0	0	%100
24	M85	Z	1.136	1.136	0	%100
25	M91	X	0	0	0	%100
26	M91	Z	1.186	1.186	0	%100
27	M26	X	0	0	0	%100
28	M26	Z	2.688	2.688	0	%100
29	M27	X	0	0	0	%100
30	M27	Z	.728	.728	0	%100
31	M28	X	0	0	0	%100
32	M28	Z	.728	.728	0	%100
33	M29	X	0	0	0	%100
34	M29	Z	1.138	1.138	0	%100
35	M32	X	0	0	0	%100
36	M32	Z	.838	.838	0	%100
37	M33	X	0	0	0	%100
38	M33	Z	3.352	3.352	0	%100
39	M37	X	0	0	0	%100
40	M37	Z	3.358	3.358	0	%100
41	M38	X	0	0	0	%100
42	M38	Z	1.136	1.136	0	%100
43	M40	X	0	0	0	%100
44	M40	Z	1.186	1.186	0	%100
45	M42	X	0	0	0	%100
46	M42	Z	3.358	3.358	0	%100
47	M43A	X	0	0	0	%100
48	M43A	Z	4.545	4.545	0	%100
49	M45	X	0	0	0	%100
50	M45	Z	4.743	4.743	0	%100
51	M50A	X	0	0	0	%100
52	M50A	Z	2.688	2.688	0	%100
53	M51C	X	0	0	0	%100
54	M51C	Z	.728	.728	0	%100
55	M52A	X	0	0	0	%100
56	M52A	Z	.728	.728	0	%100
57	M53	X	0	0	0	%100
58	M53	Z	1.138	1.138	0	%100
59	M56	X	0	0	0	%100
60	M56	Z	3.352	3.352	0	%100
61	M57	X	0	0	0	%100
62	M57	Z	.838	.838	0	%100
63	M61	X	0	0	0	%100
64	M61	Z	3.358	3.358	0	%100
65	M62	X	0	0	0	%100
66	M62	Z	4.545	4.545	0	%100
67	M64	X	0	0	0	%100
68	M64	Z	4.743	4.743	0	%100
69	M66	X	0	0	0	%100
70	M66	Z	3.358	3.358	0	%100
71	M67	X	0	0	0	%100
72	M67	Z	1.136	1.136	0	%100
73	M69	X	0	0	0	%100
74	M69	Z	1.186	1.186	0	%100

Member Distributed Loads (BLC 59 : Structure Wi (180 Deg)) (Continued)

	Member Label	Direction	Start Magnitude[lb/ft,...	End Magnitude[lb/ft,F...	Start Location[ft,%]	End Location[ft,%]
75	M74	X	0	0	0	%100
76	M74	Z	.888	.888	0	%100
77	M75	X	0	0	0	%100
78	M75	Z	.888	.888	0	%100
79	M79B	X	0	0	0	%100
80	M79B	Z	2.867	2.867	0	%100
81	M77A	X	0	0	0	%100
82	M77A	Z	.717	.717	0	%100
83	M78	X	0	0	0	%100
84	M78	Z	.717	.717	0	%100
85	MP5A	X	0	0	0	%100
86	MP5A	Z	2.867	2.867	0	%100
87	MP4A	X	0	0	0	%100
88	MP4A	Z	2.867	2.867	0	%100
89	MP2A	X	0	0	0	%100
90	MP2A	Z	2.867	2.867	0	%100
91	MP1A	X	0	0	0	%100
92	MP1A	Z	2.867	2.867	0	%100
93	MP3A	X	0	0	0	%100
94	MP3A	Z	3.171	3.171	0	%100
95	MP5C	X	0	0	0	%100
96	MP5C	Z	2.867	2.867	0	%100
97	MP4C	X	0	0	0	%100
98	MP4C	Z	2.867	2.867	0	%100
99	MP2C	X	0	0	0	%100
100	MP2C	Z	2.867	2.867	0	%100
101	MP1C	X	0	0	0	%100
102	MP1C	Z	2.867	2.867	0	%100
103	MP3C	X	0	0	0	%100
104	MP3C	Z	3.171	3.171	0	%100
105	MP5B	X	0	0	0	%100
106	MP5B	Z	2.867	2.867	0	%100
107	MP4B	X	0	0	0	%100
108	MP4B	Z	2.867	2.867	0	%100
109	MP2B	X	0	0	0	%100
110	MP2B	Z	2.867	2.867	0	%100
111	MP1B	X	0	0	0	%100
112	MP1B	Z	2.867	2.867	0	%100
113	MP3B	X	0	0	0	%100
114	MP3B	Z	3.171	3.171	0	%100
115	M130	X	0	0	0	%100
116	M130	Z	2.023	2.023	0	%100
117	M131	X	0	0	0	%100
118	M131	Z	.506	.506	0	%100
119	M134	X	0	0	0	%100
120	M134	Z	.506	.506	0	%100

Member Distributed Loads (BLC 60 : Structure Wi (210 Deg))

	Member Label	Direction	Start Magnitude[lb/ft,...	End Magnitude[lb/ft,F...	Start Location[ft,%]	End Location[ft,%]
1	M1	X	-1.332	-1.332	0	%100
2	M1	Z	2.306	2.306	0	%100
3	M4	X	-.448	-.448	0	%100
4	M4	Z	.776	.776	0	%100
5	M10	X	-1.093	-1.093	0	%100
6	M10	Z	1.893	1.893	0	%100
7	M43	X	-1.093	-1.093	0	%100

Member Distributed Loads (BLC 60 : Structure Wi (210 Deg)) (Continued)

	Member Label	Direction	Start Magnitude[lb/ft,...	End Magnitude[lb/ft,F...	Start Location[ft,%]	End Location[ft,%]
8	M43	Z	1.893	1.893	0	%100
9	M46	X	-1.707	-1.707	0	%100
10	M46	Z	2.956	2.956	0	%100
11	M51B	X	-1.257	-1.257	0	%100
12	M51B	Z	2.177	2.177	0	%100
13	M52B	X	0	0	0	%100
14	M52B	Z	0	0	0	%100
15	M76	X	-.56	-.56	0	%100
16	M76	Z	.969	.969	0	%100
17	M77	X	-1.704	-1.704	0	%100
18	M77	Z	2.952	2.952	0	%100
19	M80	X	-1.779	-1.779	0	%100
20	M80	Z	3.081	3.081	0	%100
21	M84	X	-.56	-.56	0	%100
22	M84	Z	.969	.969	0	%100
23	M85	X	0	0	0	%100
24	M85	Z	0	0	0	%100
25	M91	X	0	0	0	%100
26	M91	Z	0	0	0	%100
27	M26	X	-.448	-.448	0	%100
28	M26	Z	.776	.776	0	%100
29	M27	X	-1.093	-1.093	0	%100
30	M27	Z	1.893	1.893	0	%100
31	M28	X	-1.093	-1.093	0	%100
32	M28	Z	1.893	1.893	0	%100
33	M29	X	-1.707	-1.707	0	%100
34	M29	Z	2.956	2.956	0	%100
35	M32	X	0	0	0	%100
36	M32	Z	0	0	0	%100
37	M33	X	-1.257	-1.257	0	%100
38	M33	Z	2.177	2.177	0	%100
39	M37	X	-.56	-.56	0	%100
40	M37	Z	.969	.969	0	%100
41	M38	X	0	0	0	%100
42	M38	Z	0	0	0	%100
43	M40	X	0	0	0	%100
44	M40	Z	0	0	0	%100
45	M42	X	-.56	-.56	0	%100
46	M42	Z	.969	.969	0	%100
47	M43A	X	-1.704	-1.704	0	%100
48	M43A	Z	2.952	2.952	0	%100
49	M45	X	-1.779	-1.779	0	%100
50	M45	Z	3.081	3.081	0	%100
51	M50A	X	-1.792	-1.792	0	%100
52	M50A	Z	3.104	3.104	0	%100
53	M51C	X	0	0	0	%100
54	M51C	Z	0	0	0	%100
55	M52A	X	0	0	0	%100
56	M52A	Z	0	0	0	%100
57	M53	X	0	0	0	%100
58	M53	Z	0	0	0	%100
59	M56	X	-1.257	-1.257	0	%100
60	M56	Z	2.177	2.177	0	%100
61	M57	X	-1.257	-1.257	0	%100
62	M57	Z	2.177	2.177	0	%100
63	M61	X	-2.239	-2.239	0	%100
64	M61	Z	3.878	3.878	0	%100

Member Distributed Loads (BLC 60 : Structure Wi (210 Deg)) (Continued)

	Member Label	Direction	Start Magnitude[lb/ft,...	End Magnitude[lb/ft,F...	Start Location[ft,%]	End Location[ft,%]
65	M62	X	-1.704	-1.704	0	%100
66	M62	Z	2.952	2.952	0	%100
67	M64	X	-1.779	-1.779	0	%100
68	M64	Z	3.081	3.081	0	%100
69	M66	X	-2.239	-2.239	0	%100
70	M66	Z	3.878	3.878	0	%100
71	M67	X	-1.704	-1.704	0	%100
72	M67	Z	2.952	2.952	0	%100
73	M69	X	-1.779	-1.779	0	%100
74	M69	Z	3.081	3.081	0	%100
75	M74	X	-1.332	-1.332	0	%100
76	M74	Z	2.306	2.306	0	%100
77	M75	X	0	0	0	%100
78	M75	Z	0	0	0	%100
79	M79B	X	-1.075	-1.075	0	%100
80	M79B	Z	1.862	1.862	0	%100
81	M77A	X	-1.075	-1.075	0	%100
82	M77A	Z	1.862	1.862	0	%100
83	M78	X	0	0	0	%100
84	M78	Z	0	0	0	%100
85	MP5A	X	-1.434	-1.434	0	%100
86	MP5A	Z	2.483	2.483	0	%100
87	MP4A	X	-1.434	-1.434	0	%100
88	MP4A	Z	2.483	2.483	0	%100
89	MP2A	X	-1.434	-1.434	0	%100
90	MP2A	Z	2.483	2.483	0	%100
91	MP1A	X	-1.434	-1.434	0	%100
92	MP1A	Z	2.483	2.483	0	%100
93	MP3A	X	-1.586	-1.586	0	%100
94	MP3A	Z	2.746	2.746	0	%100
95	MP5C	X	-1.434	-1.434	0	%100
96	MP5C	Z	2.483	2.483	0	%100
97	MP4C	X	-1.434	-1.434	0	%100
98	MP4C	Z	2.483	2.483	0	%100
99	MP2C	X	-1.434	-1.434	0	%100
100	MP2C	Z	2.483	2.483	0	%100
101	MP1C	X	-1.434	-1.434	0	%100
102	MP1C	Z	2.483	2.483	0	%100
103	MP3C	X	-1.586	-1.586	0	%100
104	MP3C	Z	2.746	2.746	0	%100
105	MP5B	X	-1.434	-1.434	0	%100
106	MP5B	Z	2.483	2.483	0	%100
107	MP4B	X	-1.434	-1.434	0	%100
108	MP4B	Z	2.483	2.483	0	%100
109	MP2B	X	-1.434	-1.434	0	%100
110	MP2B	Z	2.483	2.483	0	%100
111	MP1B	X	-1.434	-1.434	0	%100
112	MP1B	Z	2.483	2.483	0	%100
113	MP3B	X	-1.586	-1.586	0	%100
114	MP3B	Z	2.746	2.746	0	%100
115	M130	X	-.759	-.759	0	%100
116	M130	Z	1.314	1.314	0	%100
117	M131	X	-.759	-.759	0	%100
118	M131	Z	1.314	1.314	0	%100
119	M134	X	0	0	0	%100
120	M134	Z	0	0	0	%100

Member Distributed Loads (BLC 61 : Structure Wi (240 Deg))

	Member Label	Direction	Start Magnitude[lb/ft,...	End Magnitude[lb/ft,F...	Start Location[ft,%]	End Location[ft,%]
1	M1	X	-.769	-.769	0	%100
2	M1	Z	.444	.444	0	%100
3	M4	X	-2.328	-2.328	0	%100
4	M4	Z	1.344	1.344	0	%100
5	M10	X	-.631	-.631	0	%100
6	M10	Z	.364	.364	0	%100
7	M43	X	-.631	-.631	0	%100
8	M43	Z	.364	.364	0	%100
9	M46	X	-.985	-.985	0	%100
10	M46	Z	.569	.569	0	%100
11	M51B	X	-2.903	-2.903	0	%100
12	M51B	Z	1.676	1.676	0	%100
13	M52B	X	-.726	-.726	0	%100
14	M52B	Z	.419	.419	0	%100
15	M76	X	-2.908	-2.908	0	%100
16	M76	Z	1.679	1.679	0	%100
17	M77	X	-3.936	-3.936	0	%100
18	M77	Z	2.273	2.273	0	%100
19	M80	X	-4.108	-4.108	0	%100
20	M80	Z	2.372	2.372	0	%100
21	M84	X	-2.908	-2.908	0	%100
22	M84	Z	1.679	1.679	0	%100
23	M85	X	-.984	-.984	0	%100
24	M85	Z	.568	.568	0	%100
25	M91	X	-1.027	-1.027	0	%100
26	M91	Z	.593	.593	0	%100
27	M26	X	0	0	0	%100
28	M26	Z	0	0	0	%100
29	M27	X	-2.523	-2.523	0	%100
30	M27	Z	1.457	1.457	0	%100
31	M28	X	-2.523	-2.523	0	%100
32	M28	Z	1.457	1.457	0	%100
33	M29	X	-3.941	-3.941	0	%100
34	M29	Z	2.276	2.276	0	%100
35	M32	X	-.726	-.726	0	%100
36	M32	Z	.419	.419	0	%100
37	M33	X	-.726	-.726	0	%100
38	M33	Z	.419	.419	0	%100
39	M37	X	0	0	0	%100
40	M37	Z	0	0	0	%100
41	M38	X	-.984	-.984	0	%100
42	M38	Z	.568	.568	0	%100
43	M40	X	-1.027	-1.027	0	%100
44	M40	Z	.593	.593	0	%100
45	M42	X	0	0	0	%100
46	M42	Z	0	0	0	%100
47	M43A	X	-.984	-.984	0	%100
48	M43A	Z	.568	.568	0	%100
49	M45	X	-1.027	-1.027	0	%100
50	M45	Z	.593	.593	0	%100
51	M50A	X	-2.328	-2.328	0	%100
52	M50A	Z	1.344	1.344	0	%100
53	M51C	X	-.631	-.631	0	%100
54	M51C	Z	.364	.364	0	%100
55	M52A	X	-.631	-.631	0	%100
56	M52A	Z	.364	.364	0	%100
57	M53	X	-.985	-.985	0	%100

Member Distributed Loads (BLC 61 : Structure Wi (240 Deg)) (Continued)

	Member Label	Direction	Start Magnitude[lb/ft,...	End Magnitude[lb/ft,F...	Start Location[ft,%]	End Location[ft,%]
58	M53	Z	.569	.569	0	%100
59	M56	X	-.726	-.726	0	%100
60	M56	Z	.419	.419	0	%100
61	M57	X	-2.903	-2.903	0	%100
62	M57	Z	1.676	1.676	0	%100
63	M61	X	-2.908	-2.908	0	%100
64	M61	Z	1.679	1.679	0	%100
65	M62	X	-.984	-.984	0	%100
66	M62	Z	.568	.568	0	%100
67	M64	X	-1.027	-1.027	0	%100
68	M64	Z	.593	.593	0	%100
69	M66	X	-2.908	-2.908	0	%100
70	M66	Z	1.679	1.679	0	%100
71	M67	X	-3.936	-3.936	0	%100
72	M67	Z	2.273	2.273	0	%100
73	M69	X	-4.108	-4.108	0	%100
74	M69	Z	2.372	2.372	0	%100
75	M74	X	-3.075	-3.075	0	%100
76	M74	Z	1.775	1.775	0	%100
77	M75	X	-.769	-.769	0	%100
78	M75	Z	.444	.444	0	%100
79	M79B	X	-.621	-.621	0	%100
80	M79B	Z	.358	.358	0	%100
81	M77A	X	-2.483	-2.483	0	%100
82	M77A	Z	1.434	1.434	0	%100
83	M78	X	-.621	-.621	0	%100
84	M78	Z	.358	.358	0	%100
85	MP5A	X	-2.483	-2.483	0	%100
86	MP5A	Z	1.434	1.434	0	%100
87	MP4A	X	-2.483	-2.483	0	%100
88	MP4A	Z	1.434	1.434	0	%100
89	MP2A	X	-2.483	-2.483	0	%100
90	MP2A	Z	1.434	1.434	0	%100
91	MP1A	X	-2.483	-2.483	0	%100
92	MP1A	Z	1.434	1.434	0	%100
93	MP3A	X	-2.746	-2.746	0	%100
94	MP3A	Z	1.586	1.586	0	%100
95	MP5C	X	-2.483	-2.483	0	%100
96	MP5C	Z	1.434	1.434	0	%100
97	MP4C	X	-2.483	-2.483	0	%100
98	MP4C	Z	1.434	1.434	0	%100
99	MP2C	X	-2.483	-2.483	0	%100
100	MP2C	Z	1.434	1.434	0	%100
101	MP1C	X	-2.483	-2.483	0	%100
102	MP1C	Z	1.434	1.434	0	%100
103	MP3C	X	-2.746	-2.746	0	%100
104	MP3C	Z	1.586	1.586	0	%100
105	MP5B	X	-2.483	-2.483	0	%100
106	MP5B	Z	1.434	1.434	0	%100
107	MP4B	X	-2.483	-2.483	0	%100
108	MP4B	Z	1.434	1.434	0	%100
109	MP2B	X	-2.483	-2.483	0	%100
110	MP2B	Z	1.434	1.434	0	%100
111	MP1B	X	-2.483	-2.483	0	%100
112	MP1B	Z	1.434	1.434	0	%100
113	MP3B	X	-2.746	-2.746	0	%100
114	MP3B	Z	1.586	1.586	0	%100

Member Distributed Loads (BLC 61 : Structure Wi (240 Deg)) (Continued)

	Member Label	Direction	Start Magnitude[lb/ft,...	End Magnitude[lb/ft,F...	Start Location[ft,%]	End Location[ft,%]
115	M130	X	-.438	-.438	0	%100
116	M130	Z	.253	.253	0	%100
117	M131	X	-1.752	-1.752	0	%100
118	M131	Z	1.012	1.012	0	%100
119	M134	X	-.438	-.438	0	%100
120	M134	Z	.253	.253	0	%100

Member Distributed Loads (BLC 62 : Structure Wi (270 Deg))

	Member Label	Direction	Start Magnitude[lb/ft,...	End Magnitude[lb/ft,F...	Start Location[ft,%]	End Location[ft,%]
1	M1	X	0	0	0	%100
2	M1	Z	0	0	0	%100
3	M4	X	-3.584	-3.584	0	%100
4	M4	Z	0	0	0	%100
5	M10	X	0	0	0	%100
6	M10	Z	0	0	0	%100
7	M43	X	0	0	0	%100
8	M43	Z	0	0	0	%100
9	M46	X	0	0	0	%100
10	M46	Z	0	0	0	%100
11	M51B	X	-2.514	-2.514	0	%100
12	M51B	Z	0	0	0	%100
13	M52B	X	-2.514	-2.514	0	%100
14	M52B	Z	0	0	0	%100
15	M76	X	-4.478	-4.478	0	%100
16	M76	Z	0	0	0	%100
17	M77	X	-3.409	-3.409	0	%100
18	M77	Z	0	0	0	%100
19	M80	X	-3.557	-3.557	0	%100
20	M80	Z	0	0	0	%100
21	M84	X	-4.478	-4.478	0	%100
22	M84	Z	0	0	0	%100
23	M85	X	-3.409	-3.409	0	%100
24	M85	Z	0	0	0	%100
25	M91	X	-3.557	-3.557	0	%100
26	M91	Z	0	0	0	%100
27	M26	X	-.896	-.896	0	%100
28	M26	Z	0	0	0	%100
29	M27	X	-2.185	-2.185	0	%100
30	M27	Z	0	0	0	%100
31	M28	X	-2.185	-2.185	0	%100
32	M28	Z	0	0	0	%100
33	M29	X	-3.413	-3.413	0	%100
34	M29	Z	0	0	0	%100
35	M32	X	-2.514	-2.514	0	%100
36	M32	Z	0	0	0	%100
37	M33	X	0	0	0	%100
38	M33	Z	0	0	0	%100
39	M37	X	-1.119	-1.119	0	%100
40	M37	Z	0	0	0	%100
41	M38	X	-3.409	-3.409	0	%100
42	M38	Z	0	0	0	%100
43	M40	X	-3.557	-3.557	0	%100
44	M40	Z	0	0	0	%100
45	M42	X	-1.119	-1.119	0	%100
46	M42	Z	0	0	0	%100
47	M43A	X	0	0	0	%100

Member Distributed Loads (BLC 62 : Structure Wi (270 Deg)) (Continued)

	Member Label	Direction	Start Magnitude[lb/ft,...	End Magnitude[lb/ft,F...	Start Location[ft,%]	End Location[ft,%]
48	M43A	Z	0	0	0	%100
49	M45	X	0	0	0	%100
50	M45	Z	0	0	0	%100
51	M50A	X	-.896	-.896	0	%100
52	M50A	Z	0	0	0	%100
53	M51C	X	-2.185	-2.185	0	%100
54	M51C	Z	0	0	0	%100
55	M52A	X	-2.185	-2.185	0	%100
56	M52A	Z	0	0	0	%100
57	M53	X	-3.413	-3.413	0	%100
58	M53	Z	0	0	0	%100
59	M56	X	0	0	0	%100
60	M56	Z	0	0	0	%100
61	M57	X	-2.514	-2.514	0	%100
62	M57	Z	0	0	0	%100
63	M61	X	-1.119	-1.119	0	%100
64	M61	Z	0	0	0	%100
65	M62	X	0	0	0	%100
66	M62	Z	0	0	0	%100
67	M64	X	0	0	0	%100
68	M64	Z	0	0	0	%100
69	M66	X	-1.119	-1.119	0	%100
70	M66	Z	0	0	0	%100
71	M67	X	-3.409	-3.409	0	%100
72	M67	Z	0	0	0	%100
73	M69	X	-3.557	-3.557	0	%100
74	M69	Z	0	0	0	%100
75	M74	X	-2.663	-2.663	0	%100
76	M74	Z	0	0	0	%100
77	M75	X	-2.663	-2.663	0	%100
78	M75	Z	0	0	0	%100
79	M79B	X	0	0	0	%100
80	M79B	Z	0	0	0	%100
81	M77A	X	-2.15	-2.15	0	%100
82	M77A	Z	0	0	0	%100
83	M78	X	-2.15	-2.15	0	%100
84	M78	Z	0	0	0	%100
85	MP5A	X	-2.867	-2.867	0	%100
86	MP5A	Z	0	0	0	%100
87	MP4A	X	-2.867	-2.867	0	%100
88	MP4A	Z	0	0	0	%100
89	MP2A	X	-2.867	-2.867	0	%100
90	MP2A	Z	0	0	0	%100
91	MP1A	X	-2.867	-2.867	0	%100
92	MP1A	Z	0	0	0	%100
93	MP3A	X	-3.171	-3.171	0	%100
94	MP3A	Z	0	0	0	%100
95	MP5C	X	-2.867	-2.867	0	%100
96	MP5C	Z	0	0	0	%100
97	MP4C	X	-2.867	-2.867	0	%100
98	MP4C	Z	0	0	0	%100
99	MP2C	X	-2.867	-2.867	0	%100
100	MP2C	Z	0	0	0	%100
101	MP1C	X	-2.867	-2.867	0	%100
102	MP1C	Z	0	0	0	%100
103	MP3C	X	-3.171	-3.171	0	%100
104	MP3C	Z	0	0	0	%100

Member Distributed Loads (BLC 62 : Structure Wi (270 Deg)) (Continued)

	Member Label	Direction	Start Magnitude[lb/ft,...	End Magnitude[lb/ft,F...	Start Location[ft,%]	End Location[ft,%]
105	MP5B	X	-2.867	-2.867	0	%100
106	MP5B	Z	0	0	0	%100
107	MP4B	X	-2.867	-2.867	0	%100
108	MP4B	Z	0	0	0	%100
109	MP2B	X	-2.867	-2.867	0	%100
110	MP2B	Z	0	0	0	%100
111	MP1B	X	-2.867	-2.867	0	%100
112	MP1B	Z	0	0	0	%100
113	MP3B	X	-3.171	-3.171	0	%100
114	MP3B	Z	0	0	0	%100
115	M130	X	0	0	0	%100
116	M130	Z	0	0	0	%100
117	M131	X	-1.518	-1.518	0	%100
118	M131	Z	0	0	0	%100
119	M134	X	-1.518	-1.518	0	%100
120	M134	Z	0	0	0	%100

Member Distributed Loads (BLC 63 : Structure Wi (300 Deg))

	Member Label	Direction	Start Magnitude[lb/ft,...	End Magnitude[lb/ft,F...	Start Location[ft,%]	End Location[ft,%]
1	M1	X	-.769	-.769	0	%100
2	M1	Z	-.444	-.444	0	%100
3	M4	X	-2.328	-2.328	0	%100
4	M4	Z	-1.344	-1.344	0	%100
5	M10	X	-.631	-.631	0	%100
6	M10	Z	-.364	-.364	0	%100
7	M43	X	-.631	-.631	0	%100
8	M43	Z	-.364	-.364	0	%100
9	M46	X	-.985	-.985	0	%100
10	M46	Z	-.569	-.569	0	%100
11	M51B	X	-.726	-.726	0	%100
12	M51B	Z	-.419	-.419	0	%100
13	M52B	X	-2.903	-2.903	0	%100
14	M52B	Z	-1.676	-1.676	0	%100
15	M76	X	-2.908	-2.908	0	%100
16	M76	Z	-1.679	-1.679	0	%100
17	M77	X	-.984	-.984	0	%100
18	M77	Z	-.568	-.568	0	%100
19	M80	X	-1.027	-1.027	0	%100
20	M80	Z	-.593	-.593	0	%100
21	M84	X	-2.908	-2.908	0	%100
22	M84	Z	-1.679	-1.679	0	%100
23	M85	X	-3.936	-3.936	0	%100
24	M85	Z	-2.273	-2.273	0	%100
25	M91	X	-4.108	-4.108	0	%100
26	M91	Z	-2.372	-2.372	0	%100
27	M26	X	-2.328	-2.328	0	%100
28	M26	Z	-1.344	-1.344	0	%100
29	M27	X	-.631	-.631	0	%100
30	M27	Z	-.364	-.364	0	%100
31	M28	X	-.631	-.631	0	%100
32	M28	Z	-.364	-.364	0	%100
33	M29	X	-.985	-.985	0	%100
34	M29	Z	-.569	-.569	0	%100
35	M32	X	-2.903	-2.903	0	%100
36	M32	Z	-1.676	-1.676	0	%100
37	M33	X	-.726	-.726	0	%100

Member Distributed Loads (BLC 63 : Structure Wi (300 Deg)) (Continued)

	Member Label	Direction	Start Magnitude[lb/ft,...	End Magnitude[lb/ft,F...	Start Location[ft,%]	End Location[ft,%]
38	M33	Z	-.419	-.419	0	%100
39	M37	X	-2.908	-2.908	0	%100
40	M37	Z	-1.679	-1.679	0	%100
41	M38	X	-3.936	-3.936	0	%100
42	M38	Z	-2.273	-2.273	0	%100
43	M40	X	-4.108	-4.108	0	%100
44	M40	Z	-2.372	-2.372	0	%100
45	M42	X	-2.908	-2.908	0	%100
46	M42	Z	-1.679	-1.679	0	%100
47	M43A	X	-.984	-.984	0	%100
48	M43A	Z	-.568	-.568	0	%100
49	M45	X	-1.027	-1.027	0	%100
50	M45	Z	-.593	-.593	0	%100
51	M50A	X	0	0	0	%100
52	M50A	Z	0	0	0	%100
53	M51C	X	-2.523	-2.523	0	%100
54	M51C	Z	-1.457	-1.457	0	%100
55	M52A	X	-2.523	-2.523	0	%100
56	M52A	Z	-1.457	-1.457	0	%100
57	M53	X	-3.941	-3.941	0	%100
58	M53	Z	-2.276	-2.276	0	%100
59	M56	X	-.726	-.726	0	%100
60	M56	Z	-.419	-.419	0	%100
61	M57	X	-.726	-.726	0	%100
62	M57	Z	-.419	-.419	0	%100
63	M61	X	0	0	0	%100
64	M61	Z	0	0	0	%100
65	M62	X	-.984	-.984	0	%100
66	M62	Z	-.568	-.568	0	%100
67	M64	X	-1.027	-1.027	0	%100
68	M64	Z	-.593	-.593	0	%100
69	M66	X	0	0	0	%100
70	M66	Z	0	0	0	%100
71	M67	X	-.984	-.984	0	%100
72	M67	Z	-.568	-.568	0	%100
73	M69	X	-1.027	-1.027	0	%100
74	M69	Z	-.593	-.593	0	%100
75	M74	X	-.769	-.769	0	%100
76	M74	Z	-.444	-.444	0	%100
77	M75	X	-3.075	-3.075	0	%100
78	M75	Z	-1.775	-1.775	0	%100
79	M79B	X	-.621	-.621	0	%100
80	M79B	Z	-.358	-.358	0	%100
81	M77A	X	-.621	-.621	0	%100
82	M77A	Z	-.358	-.358	0	%100
83	M78	X	-2.483	-2.483	0	%100
84	M78	Z	-1.434	-1.434	0	%100
85	MP5A	X	-2.483	-2.483	0	%100
86	MP5A	Z	-1.434	-1.434	0	%100
87	MP4A	X	-2.483	-2.483	0	%100
88	MP4A	Z	-1.434	-1.434	0	%100
89	MP2A	X	-2.483	-2.483	0	%100
90	MP2A	Z	-1.434	-1.434	0	%100
91	MP1A	X	-2.483	-2.483	0	%100
92	MP1A	Z	-1.434	-1.434	0	%100
93	MP3A	X	-2.746	-2.746	0	%100
94	MP3A	Z	-1.586	-1.586	0	%100

Member Distributed Loads (BLC 63 : Structure Wi (300 Deg)) (Continued)

	Member Label	Direction	Start Magnitude[lb/ft,...	End Magnitude[lb/ft,F...	Start Location[ft,%]	End Location[ft,%]
95	MP5C	X	-2.483	-2.483	0	%100
96	MP5C	Z	-1.434	-1.434	0	%100
97	MP4C	X	-2.483	-2.483	0	%100
98	MP4C	Z	-1.434	-1.434	0	%100
99	MP2C	X	-2.483	-2.483	0	%100
100	MP2C	Z	-1.434	-1.434	0	%100
101	MP1C	X	-2.483	-2.483	0	%100
102	MP1C	Z	-1.434	-1.434	0	%100
103	MP3C	X	-2.746	-2.746	0	%100
104	MP3C	Z	-1.586	-1.586	0	%100
105	MP5B	X	-2.483	-2.483	0	%100
106	MP5B	Z	-1.434	-1.434	0	%100
107	MP4B	X	-2.483	-2.483	0	%100
108	MP4B	Z	-1.434	-1.434	0	%100
109	MP2B	X	-2.483	-2.483	0	%100
110	MP2B	Z	-1.434	-1.434	0	%100
111	MP1B	X	-2.483	-2.483	0	%100
112	MP1B	Z	-1.434	-1.434	0	%100
113	MP3B	X	-2.746	-2.746	0	%100
114	MP3B	Z	-1.586	-1.586	0	%100
115	M130	X	-.438	-.438	0	%100
116	M130	Z	-.253	-.253	0	%100
117	M131	X	-.438	-.438	0	%100
118	M131	Z	-.253	-.253	0	%100
119	M134	X	-1.752	-1.752	0	%100
120	M134	Z	-1.012	-1.012	0	%100

Member Distributed Loads (BLC 64 : Structure Wi (330 Deg))

	Member Label	Direction	Start Magnitude[lb/ft,...	End Magnitude[lb/ft,F...	Start Location[ft,%]	End Location[ft,%]
1	M1	X	-1.332	-1.332	0	%100
2	M1	Z	-2.306	-2.306	0	%100
3	M4	X	-.448	-.448	0	%100
4	M4	Z	-.776	-.776	0	%100
5	M10	X	-1.093	-1.093	0	%100
6	M10	Z	-1.893	-1.893	0	%100
7	M43	X	-1.093	-1.093	0	%100
8	M43	Z	-1.893	-1.893	0	%100
9	M46	X	-1.707	-1.707	0	%100
10	M46	Z	-2.956	-2.956	0	%100
11	M51B	X	0	0	0	%100
12	M51B	Z	0	0	0	%100
13	M52B	X	-1.257	-1.257	0	%100
14	M52B	Z	-2.177	-2.177	0	%100
15	M76	X	-.56	-.56	0	%100
16	M76	Z	-.969	-.969	0	%100
17	M77	X	0	0	0	%100
18	M77	Z	0	0	0	%100
19	M80	X	0	0	0	%100
20	M80	Z	0	0	0	%100
21	M84	X	-.56	-.56	0	%100
22	M84	Z	-.969	-.969	0	%100
23	M85	X	-1.704	-1.704	0	%100
24	M85	Z	-2.952	-2.952	0	%100
25	M91	X	-1.779	-1.779	0	%100
26	M91	Z	-3.081	-3.081	0	%100
27	M26	X	-1.792	-1.792	0	%100

Member Distributed Loads (BLC 64 : Structure Wi (330 Deg)) (Continued)

	Member Label	Direction	Start Magnitude[lb/ft,...	End Magnitude[lb/ft,F...	Start Location[ft,%]	End Location[ft,%]
28	M26	Z	-3.104	-3.104	0	%100
29	M27	X	0	0	0	%100
30	M27	Z	0	0	0	%100
31	M28	X	0	0	0	%100
32	M28	Z	0	0	0	%100
33	M29	X	0	0	0	%100
34	M29	Z	0	0	0	%100
35	M32	X	-1.257	-1.257	0	%100
36	M32	Z	-2.177	-2.177	0	%100
37	M33	X	-1.257	-1.257	0	%100
38	M33	Z	-2.177	-2.177	0	%100
39	M37	X	-2.239	-2.239	0	%100
40	M37	Z	-3.878	-3.878	0	%100
41	M38	X	-1.704	-1.704	0	%100
42	M38	Z	-2.952	-2.952	0	%100
43	M40	X	-1.779	-1.779	0	%100
44	M40	Z	-3.081	-3.081	0	%100
45	M42	X	-2.239	-2.239	0	%100
46	M42	Z	-3.878	-3.878	0	%100
47	M43A	X	-1.704	-1.704	0	%100
48	M43A	Z	-2.952	-2.952	0	%100
49	M45	X	-1.779	-1.779	0	%100
50	M45	Z	-3.081	-3.081	0	%100
51	M50A	X	-.448	-.448	0	%100
52	M50A	Z	-.776	-.776	0	%100
53	M51C	X	-1.093	-1.093	0	%100
54	M51C	Z	-1.893	-1.893	0	%100
55	M52A	X	-1.093	-1.093	0	%100
56	M52A	Z	-1.893	-1.893	0	%100
57	M53	X	-1.707	-1.707	0	%100
58	M53	Z	-2.956	-2.956	0	%100
59	M56	X	-1.257	-1.257	0	%100
60	M56	Z	-2.177	-2.177	0	%100
61	M57	X	0	0	0	%100
62	M57	Z	0	0	0	%100
63	M61	X	-.56	-.56	0	%100
64	M61	Z	-.969	-.969	0	%100
65	M62	X	-1.704	-1.704	0	%100
66	M62	Z	-2.952	-2.952	0	%100
67	M64	X	-1.779	-1.779	0	%100
68	M64	Z	-3.081	-3.081	0	%100
69	M66	X	-.56	-.56	0	%100
70	M66	Z	-.969	-.969	0	%100
71	M67	X	0	0	0	%100
72	M67	Z	0	0	0	%100
73	M69	X	0	0	0	%100
74	M69	Z	0	0	0	%100
75	M74	X	0	0	0	%100
76	M74	Z	0	0	0	%100
77	M75	X	-1.332	-1.332	0	%100
78	M75	Z	-2.306	-2.306	0	%100
79	M79B	X	-1.075	-1.075	0	%100
80	M79B	Z	-1.862	-1.862	0	%100
81	M77A	X	0	0	0	%100
82	M77A	Z	0	0	0	%100
83	M78	X	-1.075	-1.075	0	%100
84	M78	Z	-1.862	-1.862	0	%100

Member Distributed Loads (BLC 64 : Structure Wi (330 Deg)) (Continued)

	Member Label	Direction	Start Magnitude[lb/ft,...	End Magnitude[lb/ft,F...	Start Location[ft,%]	End Location[ft,%]
85	MP5A	X	-1.434	-1.434	0	%100
86	MP5A	Z	-2.483	-2.483	0	%100
87	MP4A	X	-1.434	-1.434	0	%100
88	MP4A	Z	-2.483	-2.483	0	%100
89	MP2A	X	-1.434	-1.434	0	%100
90	MP2A	Z	-2.483	-2.483	0	%100
91	MP1A	X	-1.434	-1.434	0	%100
92	MP1A	Z	-2.483	-2.483	0	%100
93	MP3A	X	-1.586	-1.586	0	%100
94	MP3A	Z	-2.746	-2.746	0	%100
95	MP5C	X	-1.434	-1.434	0	%100
96	MP5C	Z	-2.483	-2.483	0	%100
97	MP4C	X	-1.434	-1.434	0	%100
98	MP4C	Z	-2.483	-2.483	0	%100
99	MP2C	X	-1.434	-1.434	0	%100
100	MP2C	Z	-2.483	-2.483	0	%100
101	MP1C	X	-1.434	-1.434	0	%100
102	MP1C	Z	-2.483	-2.483	0	%100
103	MP3C	X	-1.586	-1.586	0	%100
104	MP3C	Z	-2.746	-2.746	0	%100
105	MP5B	X	-1.434	-1.434	0	%100
106	MP5B	Z	-2.483	-2.483	0	%100
107	MP4B	X	-1.434	-1.434	0	%100
108	MP4B	Z	-2.483	-2.483	0	%100
109	MP2B	X	-1.434	-1.434	0	%100
110	MP2B	Z	-2.483	-2.483	0	%100
111	MP1B	X	-1.434	-1.434	0	%100
112	MP1B	Z	-2.483	-2.483	0	%100
113	MP3B	X	-1.586	-1.586	0	%100
114	MP3B	Z	-2.746	-2.746	0	%100
115	M130	X	-.759	-.759	0	%100
116	M130	Z	-1.314	-1.314	0	%100
117	M131	X	0	0	0	%100
118	M131	Z	0	0	0	%100
119	M134	X	-.759	-.759	0	%100
120	M134	Z	-1.314	-1.314	0	%100

Member Distributed Loads (BLC 65 : Structure Wm (0 Deg))

	Member Label	Direction	Start Magnitude[lb/ft,...	End Magnitude[lb/ft,F...	Start Location[ft,%]	End Location[ft,%]
1	M1	X	0	0	0	%100
2	M1	Z	-.766	-.766	0	%100
3	M4	X	0	0	0	%100
4	M4	Z	0	0	0	%100
5	M10	X	0	0	0	%100
6	M10	Z	-.658	-.658	0	%100
7	M43	X	0	0	0	%100
8	M43	Z	-.658	-.658	0	%100
9	M46	X	0	0	0	%100
10	M46	Z	-1.313	-1.313	0	%100
11	M51B	X	0	0	0	%100
12	M51B	Z	-.182	-.182	0	%100
13	M52B	X	0	0	0	%100
14	M52B	Z	-.182	-.182	0	%100
15	M76	X	0	0	0	%100
16	M76	Z	0	0	0	%100
17	M77	X	0	0	0	%100

Member Distributed Loads (BLC 65 : Structure Wm (0 Deg)) (Continued)

	Member Label	Direction	Start Magnitude[lb/ft,...	End Magnitude[lb/ft,F...	Start Location[ft,%]	End Location[ft,%]
18	M77	Z	-.334	-.334	0	%100
19	M80	X	0	0	0	%100
20	M80	Z	-.352	-.352	0	%100
21	M84	X	0	0	0	%100
22	M84	Z	0	0	0	%100
23	M85	X	0	0	0	%100
24	M85	Z	-.334	-.334	0	%100
25	M91	X	0	0	0	%100
26	M91	Z	-.352	-.352	0	%100
27	M26	X	0	0	0	%100
28	M26	Z	-.584	-.584	0	%100
29	M27	X	0	0	0	%100
30	M27	Z	-.165	-.165	0	%100
31	M28	X	0	0	0	%100
32	M28	Z	-.165	-.165	0	%100
33	M29	X	0	0	0	%100
34	M29	Z	-.328	-.328	0	%100
35	M32	X	0	0	0	%100
36	M32	Z	-.182	-.182	0	%100
37	M33	X	0	0	0	%100
38	M33	Z	-.729	-.729	0	%100
39	M37	X	0	0	0	%100
40	M37	Z	-.985	-.985	0	%100
41	M38	X	0	0	0	%100
42	M38	Z	-.334	-.334	0	%100
43	M40	X	0	0	0	%100
44	M40	Z	-.352	-.352	0	%100
45	M42	X	0	0	0	%100
46	M42	Z	-.985	-.985	0	%100
47	M43A	X	0	0	0	%100
48	M43A	Z	-1.337	-1.337	0	%100
49	M45	X	0	0	0	%100
50	M45	Z	-1.409	-1.409	0	%100
51	M50A	X	0	0	0	%100
52	M50A	Z	-.584	-.584	0	%100
53	M51C	X	0	0	0	%100
54	M51C	Z	-.165	-.165	0	%100
55	M52A	X	0	0	0	%100
56	M52A	Z	-.165	-.165	0	%100
57	M53	X	0	0	0	%100
58	M53	Z	-.328	-.328	0	%100
59	M56	X	0	0	0	%100
60	M56	Z	-.729	-.729	0	%100
61	M57	X	0	0	0	%100
62	M57	Z	-.182	-.182	0	%100
63	M61	X	0	0	0	%100
64	M61	Z	-.985	-.985	0	%100
65	M62	X	0	0	0	%100
66	M62	Z	-1.337	-1.337	0	%100
67	M64	X	0	0	0	%100
68	M64	Z	-1.409	-1.409	0	%100
69	M66	X	0	0	0	%100
70	M66	Z	-.985	-.985	0	%100
71	M67	X	0	0	0	%100
72	M67	Z	-.334	-.334	0	%100
73	M69	X	0	0	0	%100
74	M69	Z	-.352	-.352	0	%100

Member Distributed Loads (BLC 65 : Structure Wm (0 Deg)) (Continued)

	Member Label	Direction	Start Magnitude[lb/ft,...	End Magnitude[lb/ft,F...	Start Location[ft,%]	End Location[ft,%]
75	M74	X	0	0	0	%100
76	M74	Z	-.191	-.191	0	%100
77	M75	X	0	0	0	%100
78	M75	Z	-.191	-.191	0	%100
79	M79B	X	0	0	0	%100
80	M79B	Z	-.52	-.52	0	%100
81	M77A	X	0	0	0	%100
82	M77A	Z	-.13	-.13	0	%100
83	M78	X	0	0	0	%100
84	M78	Z	-.13	-.13	0	%100
85	MP5A	X	0	0	0	%100
86	MP5A	Z	-.52	-.52	0	%100
87	MP4A	X	0	0	0	%100
88	MP4A	Z	-.52	-.52	0	%100
89	MP2A	X	0	0	0	%100
90	MP2A	Z	-.52	-.52	0	%100
91	MP1A	X	0	0	0	%100
92	MP1A	Z	-.52	-.52	0	%100
93	MP3A	X	0	0	0	%100
94	MP3A	Z	-.629	-.629	0	%100
95	MP5C	X	0	0	0	%100
96	MP5C	Z	-.52	-.52	0	%100
97	MP4C	X	0	0	0	%100
98	MP4C	Z	-.52	-.52	0	%100
99	MP2C	X	0	0	0	%100
100	MP2C	Z	-.52	-.52	0	%100
101	MP1C	X	0	0	0	%100
102	MP1C	Z	-.52	-.52	0	%100
103	MP3C	X	0	0	0	%100
104	MP3C	Z	-.629	-.629	0	%100
105	MP5B	X	0	0	0	%100
106	MP5B	Z	-.52	-.52	0	%100
107	MP4B	X	0	0	0	%100
108	MP4B	Z	-.52	-.52	0	%100
109	MP2B	X	0	0	0	%100
110	MP2B	Z	-.52	-.52	0	%100
111	MP1B	X	0	0	0	%100
112	MP1B	Z	-.52	-.52	0	%100
113	MP3B	X	0	0	0	%100
114	MP3B	Z	-.629	-.629	0	%100
115	M130	X	0	0	0	%100
116	M130	Z	-.366	-.366	0	%100
117	M131	X	0	0	0	%100
118	M131	Z	-.092	-.092	0	%100
119	M134	X	0	0	0	%100
120	M134	Z	-.092	-.092	0	%100

Member Distributed Loads (BLC 66 : Structure Wm (30 Deg))

	Member Label	Direction	Start Magnitude[lb/ft,...	End Magnitude[lb/ft,F...	Start Location[ft,%]	End Location[ft,%]
1	M1	X	.287	.287	0	%100
2	M1	Z	-.498	-.498	0	%100
3	M4	X	.097	.097	0	%100
4	M4	Z	-.168	-.168	0	%100
5	M10	X	.247	.247	0	%100
6	M10	Z	-.428	-.428	0	%100
7	M43	X	.247	.247	0	%100

Member Distributed Loads (BLC 66 : Structure Wm (30 Deg)) (Continued)

	Member Label	Direction	Start Magnitude[lb/ft,...	End Magnitude[lb/ft,F...	Start Location[ft,%]	End Location[ft,%]
8	M43	Z	-.428	-.428	0	%100
9	M46	X	.492	.492	0	%100
10	M46	Z	-.853	-.853	0	%100
11	M51B	X	.273	.273	0	%100
12	M51B	Z	-.474	-.474	0	%100
13	M52B	X	0	0	0	%100
14	M52B	Z	0	0	0	%100
15	M76	X	.164	.164	0	%100
16	M76	Z	-.284	-.284	0	%100
17	M77	X	.502	.502	0	%100
18	M77	Z	-.869	-.869	0	%100
19	M80	X	.528	.528	0	%100
20	M80	Z	-.915	-.915	0	%100
21	M84	X	.164	.164	0	%100
22	M84	Z	-.284	-.284	0	%100
23	M85	X	0	0	0	%100
24	M85	Z	0	0	0	%100
25	M91	X	0	0	0	%100
26	M91	Z	0	0	0	%100
27	M26	X	.097	.097	0	%100
28	M26	Z	-.168	-.168	0	%100
29	M27	X	.247	.247	0	%100
30	M27	Z	-.428	-.428	0	%100
31	M28	X	.247	.247	0	%100
32	M28	Z	-.428	-.428	0	%100
33	M29	X	.492	.492	0	%100
34	M29	Z	-.853	-.853	0	%100
35	M32	X	0	0	0	%100
36	M32	Z	0	0	0	%100
37	M33	X	.273	.273	0	%100
38	M33	Z	-.474	-.474	0	%100
39	M37	X	.164	.164	0	%100
40	M37	Z	-.284	-.284	0	%100
41	M38	X	0	0	0	%100
42	M38	Z	0	0	0	%100
43	M40	X	0	0	0	%100
44	M40	Z	0	0	0	%100
45	M42	X	.164	.164	0	%100
46	M42	Z	-.284	-.284	0	%100
47	M43A	X	.502	.502	0	%100
48	M43A	Z	-.869	-.869	0	%100
49	M45	X	.528	.528	0	%100
50	M45	Z	-.915	-.915	0	%100
51	M50A	X	.389	.389	0	%100
52	M50A	Z	-.674	-.674	0	%100
53	M51C	X	0	0	0	%100
54	M51C	Z	0	0	0	%100
55	M52A	X	0	0	0	%100
56	M52A	Z	0	0	0	%100
57	M53	X	0	0	0	%100
58	M53	Z	0	0	0	%100
59	M56	X	.273	.273	0	%100
60	M56	Z	-.474	-.474	0	%100
61	M57	X	.273	.273	0	%100
62	M57	Z	-.474	-.474	0	%100
63	M61	X	.657	.657	0	%100
64	M61	Z	-1.137	-1.137	0	%100

Member Distributed Loads (BLC 66 : Structure Wm (30 Deg)) (Continued)

	Member Label	Direction	Start Magnitude[lb/ft,...	End Magnitude[lb/ft,F...	Start Location[ft,%]	End Location[ft,%]
65	M62	X	.502	.502	0	%100
66	M62	Z	-.869	-.869	0	%100
67	M64	X	.528	.528	0	%100
68	M64	Z	-.915	-.915	0	%100
69	M66	X	.657	.657	0	%100
70	M66	Z	-1.137	-1.137	0	%100
71	M67	X	.502	.502	0	%100
72	M67	Z	-.869	-.869	0	%100
73	M69	X	.528	.528	0	%100
74	M69	Z	-.915	-.915	0	%100
75	M74	X	.287	.287	0	%100
76	M74	Z	-.498	-.498	0	%100
77	M75	X	0	0	0	%100
78	M75	Z	0	0	0	%100
79	M79B	X	.195	.195	0	%100
80	M79B	Z	-.338	-.338	0	%100
81	M77A	X	.195	.195	0	%100
82	M77A	Z	-.338	-.338	0	%100
83	M78	X	0	0	0	%100
84	M78	Z	0	0	0	%100
85	MP5A	X	.26	.26	0	%100
86	MP5A	Z	-.45	-.45	0	%100
87	MP4A	X	.26	.26	0	%100
88	MP4A	Z	-.45	-.45	0	%100
89	MP2A	X	.26	.26	0	%100
90	MP2A	Z	-.45	-.45	0	%100
91	MP1A	X	.26	.26	0	%100
92	MP1A	Z	-.45	-.45	0	%100
93	MP3A	X	.315	.315	0	%100
94	MP3A	Z	-.545	-.545	0	%100
95	MP5C	X	.26	.26	0	%100
96	MP5C	Z	-.45	-.45	0	%100
97	MP4C	X	.26	.26	0	%100
98	MP4C	Z	-.45	-.45	0	%100
99	MP2C	X	.26	.26	0	%100
100	MP2C	Z	-.45	-.45	0	%100
101	MP1C	X	.26	.26	0	%100
102	MP1C	Z	-.45	-.45	0	%100
103	MP3C	X	.315	.315	0	%100
104	MP3C	Z	-.545	-.545	0	%100
105	MP5B	X	.26	.26	0	%100
106	MP5B	Z	-.45	-.45	0	%100
107	MP4B	X	.26	.26	0	%100
108	MP4B	Z	-.45	-.45	0	%100
109	MP2B	X	.26	.26	0	%100
110	MP2B	Z	-.45	-.45	0	%100
111	MP1B	X	.26	.26	0	%100
112	MP1B	Z	-.45	-.45	0	%100
113	MP3B	X	.315	.315	0	%100
114	MP3B	Z	-.545	-.545	0	%100
115	M130	X	.137	.137	0	%100
116	M130	Z	-.238	-.238	0	%100
117	M131	X	.137	.137	0	%100
118	M131	Z	-.238	-.238	0	%100
119	M134	X	0	0	0	%100
120	M134	Z	0	0	0	%100

Member Distributed Loads (BLC 67 : Structure Wm (60 Deg))

	Member Label	Direction	Start Magnitude[lb/ft,...	End Magnitude[lb/ft,F...	Start Location[ft,%]	End Location[ft,%]
1	M1	X	.166	.166	0	%100
2	M1	Z	-.096	-.096	0	%100
3	M4	X	.505	.505	0	%100
4	M4	Z	-.292	-.292	0	%100
5	M10	X	.143	.143	0	%100
6	M10	Z	-.082	-.082	0	%100
7	M43	X	.143	.143	0	%100
8	M43	Z	-.082	-.082	0	%100
9	M46	X	.284	.284	0	%100
10	M46	Z	-.164	-.164	0	%100
11	M51B	X	.631	.631	0	%100
12	M51B	Z	-.365	-.365	0	%100
13	M52B	X	.158	.158	0	%100
14	M52B	Z	-.091	-.091	0	%100
15	M76	X	.853	.853	0	%100
16	M76	Z	-.492	-.492	0	%100
17	M77	X	1.158	1.158	0	%100
18	M77	Z	-.669	-.669	0	%100
19	M80	X	1.22	1.22	0	%100
20	M80	Z	-.704	-.704	0	%100
21	M84	X	.853	.853	0	%100
22	M84	Z	-.492	-.492	0	%100
23	M85	X	.29	.29	0	%100
24	M85	Z	-.167	-.167	0	%100
25	M91	X	.305	.305	0	%100
26	M91	Z	-.176	-.176	0	%100
27	M26	X	0	0	0	%100
28	M26	Z	0	0	0	%100
29	M27	X	.57	.57	0	%100
30	M27	Z	-.329	-.329	0	%100
31	M28	X	.57	.57	0	%100
32	M28	Z	-.329	-.329	0	%100
33	M29	X	1.137	1.137	0	%100
34	M29	Z	-.657	-.657	0	%100
35	M32	X	.158	.158	0	%100
36	M32	Z	-.091	-.091	0	%100
37	M33	X	.158	.158	0	%100
38	M33	Z	-.091	-.091	0	%100
39	M37	X	0	0	0	%100
40	M37	Z	0	0	0	%100
41	M38	X	.29	.29	0	%100
42	M38	Z	-.167	-.167	0	%100
43	M40	X	.305	.305	0	%100
44	M40	Z	-.176	-.176	0	%100
45	M42	X	0	0	0	%100
46	M42	Z	0	0	0	%100
47	M43A	X	.29	.29	0	%100
48	M43A	Z	-.167	-.167	0	%100
49	M45	X	.305	.305	0	%100
50	M45	Z	-.176	-.176	0	%100
51	M50A	X	.505	.505	0	%100
52	M50A	Z	-.292	-.292	0	%100
53	M51C	X	.143	.143	0	%100
54	M51C	Z	-.082	-.082	0	%100
55	M52A	X	.143	.143	0	%100
56	M52A	Z	-.082	-.082	0	%100
57	M53	X	.284	.284	0	%100

Member Distributed Loads (BLC 67 : Structure Wm (60 Deg)) (Continued)

	Member Label	Direction	Start Magnitude[lb/ft,...	End Magnitude[lb/ft,F...	Start Location[ft,%]	End Location[ft,%]
58	M53	Z	-.164	-.164	0	%100
59	M56	X	.158	.158	0	%100
60	M56	Z	-.091	-.091	0	%100
61	M57	X	.631	.631	0	%100
62	M57	Z	-.365	-.365	0	%100
63	M61	X	.853	.853	0	%100
64	M61	Z	-.492	-.492	0	%100
65	M62	X	.29	.29	0	%100
66	M62	Z	-.167	-.167	0	%100
67	M64	X	.305	.305	0	%100
68	M64	Z	-.176	-.176	0	%100
69	M66	X	.853	.853	0	%100
70	M66	Z	-.492	-.492	0	%100
71	M67	X	1.158	1.158	0	%100
72	M67	Z	-.669	-.669	0	%100
73	M69	X	1.22	1.22	0	%100
74	M69	Z	-.704	-.704	0	%100
75	M74	X	.663	.663	0	%100
76	M74	Z	-.383	-.383	0	%100
77	M75	X	.166	.166	0	%100
78	M75	Z	-.096	-.096	0	%100
79	M79B	X	.113	.113	0	%100
80	M79B	Z	-.065	-.065	0	%100
81	M77A	X	.45	.45	0	%100
82	M77A	Z	-.26	-.26	0	%100
83	M78	X	.113	.113	0	%100
84	M78	Z	-.065	-.065	0	%100
85	MP5A	X	.45	.45	0	%100
86	MP5A	Z	-.26	-.26	0	%100
87	MP4A	X	.45	.45	0	%100
88	MP4A	Z	-.26	-.26	0	%100
89	MP2A	X	.45	.45	0	%100
90	MP2A	Z	-.26	-.26	0	%100
91	MP1A	X	.45	.45	0	%100
92	MP1A	Z	-.26	-.26	0	%100
93	MP3A	X	.545	.545	0	%100
94	MP3A	Z	-.315	-.315	0	%100
95	MP5C	X	.45	.45	0	%100
96	MP5C	Z	-.26	-.26	0	%100
97	MP4C	X	.45	.45	0	%100
98	MP4C	Z	-.26	-.26	0	%100
99	MP2C	X	.45	.45	0	%100
100	MP2C	Z	-.26	-.26	0	%100
101	MP1C	X	.45	.45	0	%100
102	MP1C	Z	-.26	-.26	0	%100
103	MP3C	X	.545	.545	0	%100
104	MP3C	Z	-.315	-.315	0	%100
105	MP5B	X	.45	.45	0	%100
106	MP5B	Z	-.26	-.26	0	%100
107	MP4B	X	.45	.45	0	%100
108	MP4B	Z	-.26	-.26	0	%100
109	MP2B	X	.45	.45	0	%100
110	MP2B	Z	-.26	-.26	0	%100
111	MP1B	X	.45	.45	0	%100
112	MP1B	Z	-.26	-.26	0	%100
113	MP3B	X	.545	.545	0	%100
114	MP3B	Z	-.315	-.315	0	%100

Member Distributed Loads (BLC 67 : Structure Wm (60 Deg)) (Continued)

	Member Label	Direction	Start Magnitude[lb/ft,...	End Magnitude[lb/ft,F...	Start Location[ft,%]	End Location[ft,%]
115	M130	X	.079	.079	0	%100
116	M130	Z	-.046	-.046	0	%100
117	M131	X	.317	.317	0	%100
118	M131	Z	-.183	-.183	0	%100
119	M134	X	.079	.079	0	%100
120	M134	Z	-.046	-.046	0	%100

Member Distributed Loads (BLC 68 : Structure Wm (90 Deg))

	Member Label	Direction	Start Magnitude[lb/ft,...	End Magnitude[lb/ft,F...	Start Location[ft,%]	End Location[ft,%]
1	M1	X	0	0	0	%100
2	M1	Z	0	0	0	%100
3	M4	X	.778	.778	0	%100
4	M4	Z	0	0	0	%100
5	M10	X	0	0	0	%100
6	M10	Z	0	0	0	%100
7	M43	X	0	0	0	%100
8	M43	Z	0	0	0	%100
9	M46	X	0	0	0	%100
10	M46	Z	0	0	0	%100
11	M51B	X	.547	.547	0	%100
12	M51B	Z	0	0	0	%100
13	M52B	X	.547	.547	0	%100
14	M52B	Z	0	0	0	%100
15	M76	X	1.313	1.313	0	%100
16	M76	Z	0	0	0	%100
17	M77	X	1.003	1.003	0	%100
18	M77	Z	0	0	0	%100
19	M80	X	1.057	1.057	0	%100
20	M80	Z	0	0	0	%100
21	M84	X	1.313	1.313	0	%100
22	M84	Z	0	0	0	%100
23	M85	X	1.003	1.003	0	%100
24	M85	Z	0	0	0	%100
25	M91	X	1.057	1.057	0	%100
26	M91	Z	0	0	0	%100
27	M26	X	.195	.195	0	%100
28	M26	Z	0	0	0	%100
29	M27	X	.494	.494	0	%100
30	M27	Z	0	0	0	%100
31	M28	X	.494	.494	0	%100
32	M28	Z	0	0	0	%100
33	M29	X	.985	.985	0	%100
34	M29	Z	0	0	0	%100
35	M32	X	.547	.547	0	%100
36	M32	Z	0	0	0	%100
37	M33	X	0	0	0	%100
38	M33	Z	0	0	0	%100
39	M37	X	.328	.328	0	%100
40	M37	Z	0	0	0	%100
41	M38	X	1.003	1.003	0	%100
42	M38	Z	0	0	0	%100
43	M40	X	1.057	1.057	0	%100
44	M40	Z	0	0	0	%100
45	M42	X	.328	.328	0	%100
46	M42	Z	0	0	0	%100
47	M43A	X	0	0	0	%100

Member Distributed Loads (BLC 68 : Structure Wm (90 Deg)) (Continued)

	Member Label	Direction	Start Magnitude[lb/ft,...	End Magnitude[lb/ft,F...	Start Location[ft,%]	End Location[ft,%]
48	M43A	Z	0	0	0	%100
49	M45	X	0	0	0	%100
50	M45	Z	0	0	0	%100
51	M50A	X	.195	.195	0	%100
52	M50A	Z	0	0	0	%100
53	M51C	X	.494	.494	0	%100
54	M51C	Z	0	0	0	%100
55	M52A	X	.494	.494	0	%100
56	M52A	Z	0	0	0	%100
57	M53	X	.985	.985	0	%100
58	M53	Z	0	0	0	%100
59	M56	X	0	0	0	%100
60	M56	Z	0	0	0	%100
61	M57	X	.547	.547	0	%100
62	M57	Z	0	0	0	%100
63	M61	X	.328	.328	0	%100
64	M61	Z	0	0	0	%100
65	M62	X	0	0	0	%100
66	M62	Z	0	0	0	%100
67	M64	X	0	0	0	%100
68	M64	Z	0	0	0	%100
69	M66	X	.328	.328	0	%100
70	M66	Z	0	0	0	%100
71	M67	X	1.003	1.003	0	%100
72	M67	Z	0	0	0	%100
73	M69	X	1.057	1.057	0	%100
74	M69	Z	0	0	0	%100
75	M74	X	.574	.574	0	%100
76	M74	Z	0	0	0	%100
77	M75	X	.574	.574	0	%100
78	M75	Z	0	0	0	%100
79	M79B	X	0	0	0	%100
80	M79B	Z	0	0	0	%100
81	M77A	X	.39	.39	0	%100
82	M77A	Z	0	0	0	%100
83	M78	X	.39	.39	0	%100
84	M78	Z	0	0	0	%100
85	MP5A	X	.52	.52	0	%100
86	MP5A	Z	0	0	0	%100
87	MP4A	X	.52	.52	0	%100
88	MP4A	Z	0	0	0	%100
89	MP2A	X	.52	.52	0	%100
90	MP2A	Z	0	0	0	%100
91	MP1A	X	.52	.52	0	%100
92	MP1A	Z	0	0	0	%100
93	MP3A	X	.629	.629	0	%100
94	MP3A	Z	0	0	0	%100
95	MP5C	X	.52	.52	0	%100
96	MP5C	Z	0	0	0	%100
97	MP4C	X	.52	.52	0	%100
98	MP4C	Z	0	0	0	%100
99	MP2C	X	.52	.52	0	%100
100	MP2C	Z	0	0	0	%100
101	MP1C	X	.52	.52	0	%100
102	MP1C	Z	0	0	0	%100
103	MP3C	X	.629	.629	0	%100
104	MP3C	Z	0	0	0	%100

Member Distributed Loads (BLC 68 : Structure Wm (90 Deg)) (Continued)

	Member Label	Direction	Start Magnitude[lb/ft,...	End Magnitude[lb/ft,F...	Start Location[ft,%]	End Location[ft,%]
105	MP5B	X	.52	.52	0	%100
106	MP5B	Z	0	0	0	%100
107	MP4B	X	.52	.52	0	%100
108	MP4B	Z	0	0	0	%100
109	MP2B	X	.52	.52	0	%100
110	MP2B	Z	0	0	0	%100
111	MP1B	X	.52	.52	0	%100
112	MP1B	Z	0	0	0	%100
113	MP3B	X	.629	.629	0	%100
114	MP3B	Z	0	0	0	%100
115	M130	X	0	0	0	%100
116	M130	Z	0	0	0	%100
117	M131	X	.275	.275	0	%100
118	M131	Z	0	0	0	%100
119	M134	X	.275	.275	0	%100
120	M134	Z	0	0	0	%100

Member Distributed Loads (BLC 69 : Structure Wm (120 Deg))

	Member Label	Direction	Start Magnitude[lb/ft,...	End Magnitude[lb/ft,F...	Start Location[ft,%]	End Location[ft,%]
1	M1	X	.166	.166	0	%100
2	M1	Z	.096	.096	0	%100
3	M4	X	.505	.505	0	%100
4	M4	Z	.292	.292	0	%100
5	M10	X	.143	.143	0	%100
6	M10	Z	.082	.082	0	%100
7	M43	X	.143	.143	0	%100
8	M43	Z	.082	.082	0	%100
9	M46	X	.284	.284	0	%100
10	M46	Z	.164	.164	0	%100
11	M51B	X	.158	.158	0	%100
12	M51B	Z	.091	.091	0	%100
13	M52B	X	.631	.631	0	%100
14	M52B	Z	.365	.365	0	%100
15	M76	X	.853	.853	0	%100
16	M76	Z	.492	.492	0	%100
17	M77	X	.29	.29	0	%100
18	M77	Z	.167	.167	0	%100
19	M80	X	.305	.305	0	%100
20	M80	Z	.176	.176	0	%100
21	M84	X	.853	.853	0	%100
22	M84	Z	.492	.492	0	%100
23	M85	X	1.158	1.158	0	%100
24	M85	Z	.669	.669	0	%100
25	M91	X	1.22	1.22	0	%100
26	M91	Z	.704	.704	0	%100
27	M26	X	.505	.505	0	%100
28	M26	Z	.292	.292	0	%100
29	M27	X	.143	.143	0	%100
30	M27	Z	.082	.082	0	%100
31	M28	X	.143	.143	0	%100
32	M28	Z	.082	.082	0	%100
33	M29	X	.284	.284	0	%100
34	M29	Z	.164	.164	0	%100
35	M32	X	.631	.631	0	%100
36	M32	Z	.365	.365	0	%100
37	M33	X	.158	.158	0	%100

Member Distributed Loads (BLC 69 : Structure Wm (120 Deg)) (Continued)

	Member Label	Direction	Start Magnitude[lb/ft,...	End Magnitude[lb/ft,F...	Start Location[ft,%]	End Location[ft,%]
38	M33	Z	.091	.091	0	%100
39	M37	X	.853	.853	0	%100
40	M37	Z	.492	.492	0	%100
41	M38	X	1.158	1.158	0	%100
42	M38	Z	.669	.669	0	%100
43	M40	X	1.22	1.22	0	%100
44	M40	Z	.704	.704	0	%100
45	M42	X	.853	.853	0	%100
46	M42	Z	.492	.492	0	%100
47	M43A	X	.29	.29	0	%100
48	M43A	Z	.167	.167	0	%100
49	M45	X	.305	.305	0	%100
50	M45	Z	.176	.176	0	%100
51	M50A	X	0	0	0	%100
52	M50A	Z	0	0	0	%100
53	M51C	X	.57	.57	0	%100
54	M51C	Z	.329	.329	0	%100
55	M52A	X	.57	.57	0	%100
56	M52A	Z	.329	.329	0	%100
57	M53	X	1.137	1.137	0	%100
58	M53	Z	.657	.657	0	%100
59	M56	X	.158	.158	0	%100
60	M56	Z	.091	.091	0	%100
61	M57	X	.158	.158	0	%100
62	M57	Z	.091	.091	0	%100
63	M61	X	0	0	0	%100
64	M61	Z	0	0	0	%100
65	M62	X	.29	.29	0	%100
66	M62	Z	.167	.167	0	%100
67	M64	X	.305	.305	0	%100
68	M64	Z	.176	.176	0	%100
69	M66	X	0	0	0	%100
70	M66	Z	0	0	0	%100
71	M67	X	.29	.29	0	%100
72	M67	Z	.167	.167	0	%100
73	M69	X	.305	.305	0	%100
74	M69	Z	.176	.176	0	%100
75	M74	X	.166	.166	0	%100
76	M74	Z	.096	.096	0	%100
77	M75	X	.663	.663	0	%100
78	M75	Z	.383	.383	0	%100
79	M79B	X	.113	.113	0	%100
80	M79B	Z	.065	.065	0	%100
81	M77A	X	.113	.113	0	%100
82	M77A	Z	.065	.065	0	%100
83	M78	X	.45	.45	0	%100
84	M78	Z	.26	.26	0	%100
85	MP5A	X	.45	.45	0	%100
86	MP5A	Z	.26	.26	0	%100
87	MP4A	X	.45	.45	0	%100
88	MP4A	Z	.26	.26	0	%100
89	MP2A	X	.45	.45	0	%100
90	MP2A	Z	.26	.26	0	%100
91	MP1A	X	.45	.45	0	%100
92	MP1A	Z	.26	.26	0	%100
93	MP3A	X	.545	.545	0	%100
94	MP3A	Z	.315	.315	0	%100

Member Distributed Loads (BLC 69 : Structure Wm (120 Deg)) (Continued)

	Member Label	Direction	Start Magnitude[lb/ft,...	End Magnitude[lb/ft,F...	Start Location[ft,%]	End Location[ft,%]
95	MP5C	X	.45	.45	0	%100
96	MP5C	Z	.26	.26	0	%100
97	MP4C	X	.45	.45	0	%100
98	MP4C	Z	.26	.26	0	%100
99	MP2C	X	.45	.45	0	%100
100	MP2C	Z	.26	.26	0	%100
101	MP1C	X	.45	.45	0	%100
102	MP1C	Z	.26	.26	0	%100
103	MP3C	X	.545	.545	0	%100
104	MP3C	Z	.315	.315	0	%100
105	MP5B	X	.45	.45	0	%100
106	MP5B	Z	.26	.26	0	%100
107	MP4B	X	.45	.45	0	%100
108	MP4B	Z	.26	.26	0	%100
109	MP2B	X	.45	.45	0	%100
110	MP2B	Z	.26	.26	0	%100
111	MP1B	X	.45	.45	0	%100
112	MP1B	Z	.26	.26	0	%100
113	MP3B	X	.545	.545	0	%100
114	MP3B	Z	.315	.315	0	%100
115	M130	X	.079	.079	0	%100
116	M130	Z	.046	.046	0	%100
117	M131	X	.079	.079	0	%100
118	M131	Z	.046	.046	0	%100
119	M134	X	.317	.317	0	%100
120	M134	Z	.183	.183	0	%100

Member Distributed Loads (BLC 70 : Structure Wm (150 Deg))

	Member Label	Direction	Start Magnitude[lb/ft,...	End Magnitude[lb/ft,F...	Start Location[ft,%]	End Location[ft,%]
1	M1	X	.287	.287	0	%100
2	M1	Z	.498	.498	0	%100
3	M4	X	.097	.097	0	%100
4	M4	Z	.168	.168	0	%100
5	M10	X	.247	.247	0	%100
6	M10	Z	.428	.428	0	%100
7	M43	X	.247	.247	0	%100
8	M43	Z	.428	.428	0	%100
9	M46	X	.492	.492	0	%100
10	M46	Z	.853	.853	0	%100
11	M51B	X	0	0	0	%100
12	M51B	Z	0	0	0	%100
13	M52B	X	.273	.273	0	%100
14	M52B	Z	.474	.474	0	%100
15	M76	X	.164	.164	0	%100
16	M76	Z	.284	.284	0	%100
17	M77	X	0	0	0	%100
18	M77	Z	0	0	0	%100
19	M80	X	0	0	0	%100
20	M80	Z	0	0	0	%100
21	M84	X	.164	.164	0	%100
22	M84	Z	.284	.284	0	%100
23	M85	X	.502	.502	0	%100
24	M85	Z	.869	.869	0	%100
25	M91	X	.528	.528	0	%100
26	M91	Z	.915	.915	0	%100
27	M26	X	.389	.389	0	%100

Member Distributed Loads (BLC 70 : Structure Wm (150 Deg)) (Continued)

	Member Label	Direction	Start Magnitude[lb/ft,...	End Magnitude[lb/ft,F...	Start Location[ft,%]	End Location[ft,%]
28	M26	Z	.674	.674	0	%100
29	M27	X	0	0	0	%100
30	M27	Z	0	0	0	%100
31	M28	X	0	0	0	%100
32	M28	Z	0	0	0	%100
33	M29	X	0	0	0	%100
34	M29	Z	0	0	0	%100
35	M32	X	.273	.273	0	%100
36	M32	Z	.474	.474	0	%100
37	M33	X	.273	.273	0	%100
38	M33	Z	.474	.474	0	%100
39	M37	X	.657	.657	0	%100
40	M37	Z	1.137	1.137	0	%100
41	M38	X	.502	.502	0	%100
42	M38	Z	.869	.869	0	%100
43	M40	X	.528	.528	0	%100
44	M40	Z	.915	.915	0	%100
45	M42	X	.657	.657	0	%100
46	M42	Z	1.137	1.137	0	%100
47	M43A	X	.502	.502	0	%100
48	M43A	Z	.869	.869	0	%100
49	M45	X	.528	.528	0	%100
50	M45	Z	.915	.915	0	%100
51	M50A	X	.097	.097	0	%100
52	M50A	Z	.168	.168	0	%100
53	M51C	X	.247	.247	0	%100
54	M51C	Z	.428	.428	0	%100
55	M52A	X	.247	.247	0	%100
56	M52A	Z	.428	.428	0	%100
57	M53	X	.492	.492	0	%100
58	M53	Z	.853	.853	0	%100
59	M56	X	.273	.273	0	%100
60	M56	Z	.474	.474	0	%100
61	M57	X	0	0	0	%100
62	M57	Z	0	0	0	%100
63	M61	X	.164	.164	0	%100
64	M61	Z	.284	.284	0	%100
65	M62	X	.502	.502	0	%100
66	M62	Z	.869	.869	0	%100
67	M64	X	.528	.528	0	%100
68	M64	Z	.915	.915	0	%100
69	M66	X	.164	.164	0	%100
70	M66	Z	.284	.284	0	%100
71	M67	X	0	0	0	%100
72	M67	Z	0	0	0	%100
73	M69	X	0	0	0	%100
74	M69	Z	0	0	0	%100
75	M74	X	0	0	0	%100
76	M74	Z	0	0	0	%100
77	M75	X	.287	.287	0	%100
78	M75	Z	.498	.498	0	%100
79	M79B	X	.195	.195	0	%100
80	M79B	Z	.338	.338	0	%100
81	M77A	X	0	0	0	%100
82	M77A	Z	0	0	0	%100
83	M78	X	.195	.195	0	%100
84	M78	Z	.338	.338	0	%100

Member Distributed Loads (BLC 70 : Structure Wm (150 Deg)) (Continued)

	Member Label	Direction	Start Magnitude[lb/ft,...	End Magnitude[lb/ft,F...	Start Location[ft,%]	End Location[ft,%]
85	MP5A	X	.26	.26	0	%100
86	MP5A	Z	.45	.45	0	%100
87	MP4A	X	.26	.26	0	%100
88	MP4A	Z	.45	.45	0	%100
89	MP2A	X	.26	.26	0	%100
90	MP2A	Z	.45	.45	0	%100
91	MP1A	X	.26	.26	0	%100
92	MP1A	Z	.45	.45	0	%100
93	MP3A	X	.315	.315	0	%100
94	MP3A	Z	.545	.545	0	%100
95	MP5C	X	.26	.26	0	%100
96	MP5C	Z	.45	.45	0	%100
97	MP4C	X	.26	.26	0	%100
98	MP4C	Z	.45	.45	0	%100
99	MP2C	X	.26	.26	0	%100
100	MP2C	Z	.45	.45	0	%100
101	MP1C	X	.26	.26	0	%100
102	MP1C	Z	.45	.45	0	%100
103	MP3C	X	.315	.315	0	%100
104	MP3C	Z	.545	.545	0	%100
105	MP5B	X	.26	.26	0	%100
106	MP5B	Z	.45	.45	0	%100
107	MP4B	X	.26	.26	0	%100
108	MP4B	Z	.45	.45	0	%100
109	MP2B	X	.26	.26	0	%100
110	MP2B	Z	.45	.45	0	%100
111	MP1B	X	.26	.26	0	%100
112	MP1B	Z	.45	.45	0	%100
113	MP3B	X	.315	.315	0	%100
114	MP3B	Z	.545	.545	0	%100
115	M130	X	.137	.137	0	%100
116	M130	Z	.238	.238	0	%100
117	M131	X	0	0	0	%100
118	M131	Z	0	0	0	%100
119	M134	X	.137	.137	0	%100
120	M134	Z	.238	.238	0	%100

Member Distributed Loads (BLC 71 : Structure Wm (180 Deg))

	Member Label	Direction	Start Magnitude[lb/ft,...	End Magnitude[lb/ft,F...	Start Location[ft,%]	End Location[ft,%]
1	M1	X	0	0	0	%100
2	M1	Z	.766	.766	0	%100
3	M4	X	0	0	0	%100
4	M4	Z	0	0	0	%100
5	M10	X	0	0	0	%100
6	M10	Z	.658	.658	0	%100
7	M43	X	0	0	0	%100
8	M43	Z	.658	.658	0	%100
9	M46	X	0	0	0	%100
10	M46	Z	1.313	1.313	0	%100
11	M51B	X	0	0	0	%100
12	M51B	Z	.182	.182	0	%100
13	M52B	X	0	0	0	%100
14	M52B	Z	.182	.182	0	%100
15	M76	X	0	0	0	%100
16	M76	Z	0	0	0	%100
17	M77	X	0	0	0	%100

Member Distributed Loads (BLC 71 : Structure Wm (180 Deg)) (Continued)

	Member Label	Direction	Start Magnitude[lb/ft,...	End Magnitude[lb/ft,F...	Start Location[ft,%]	End Location[ft,%]
18	M77	Z	.334	.334	0	%100
19	M80	X	0	0	0	%100
20	M80	Z	.352	.352	0	%100
21	M84	X	0	0	0	%100
22	M84	Z	0	0	0	%100
23	M85	X	0	0	0	%100
24	M85	Z	.334	.334	0	%100
25	M91	X	0	0	0	%100
26	M91	Z	.352	.352	0	%100
27	M26	X	0	0	0	%100
28	M26	Z	.584	.584	0	%100
29	M27	X	0	0	0	%100
30	M27	Z	.165	.165	0	%100
31	M28	X	0	0	0	%100
32	M28	Z	.165	.165	0	%100
33	M29	X	0	0	0	%100
34	M29	Z	.328	.328	0	%100
35	M32	X	0	0	0	%100
36	M32	Z	.182	.182	0	%100
37	M33	X	0	0	0	%100
38	M33	Z	.729	.729	0	%100
39	M37	X	0	0	0	%100
40	M37	Z	.985	.985	0	%100
41	M38	X	0	0	0	%100
42	M38	Z	.334	.334	0	%100
43	M40	X	0	0	0	%100
44	M40	Z	.352	.352	0	%100
45	M42	X	0	0	0	%100
46	M42	Z	.985	.985	0	%100
47	M43A	X	0	0	0	%100
48	M43A	Z	1.337	1.337	0	%100
49	M45	X	0	0	0	%100
50	M45	Z	1.409	1.409	0	%100
51	M50A	X	0	0	0	%100
52	M50A	Z	.584	.584	0	%100
53	M51C	X	0	0	0	%100
54	M51C	Z	.165	.165	0	%100
55	M52A	X	0	0	0	%100
56	M52A	Z	.165	.165	0	%100
57	M53	X	0	0	0	%100
58	M53	Z	.328	.328	0	%100
59	M56	X	0	0	0	%100
60	M56	Z	.729	.729	0	%100
61	M57	X	0	0	0	%100
62	M57	Z	.182	.182	0	%100
63	M61	X	0	0	0	%100
64	M61	Z	.985	.985	0	%100
65	M62	X	0	0	0	%100
66	M62	Z	1.337	1.337	0	%100
67	M64	X	0	0	0	%100
68	M64	Z	1.409	1.409	0	%100
69	M66	X	0	0	0	%100
70	M66	Z	.985	.985	0	%100
71	M67	X	0	0	0	%100
72	M67	Z	.334	.334	0	%100
73	M69	X	0	0	0	%100
74	M69	Z	.352	.352	0	%100

Member Distributed Loads (BLC 71 : Structure Wm (180 Deg)) (Continued)

	Member Label	Direction	Start Magnitude[lb/ft,...	End Magnitude[lb/ft,F...	Start Location[ft,%]	End Location[ft,%]
75	M74	X	0	0	0	%100
76	M74	Z	.191	.191	0	%100
77	M75	X	0	0	0	%100
78	M75	Z	.191	.191	0	%100
79	M79B	X	0	0	0	%100
80	M79B	Z	.52	.52	0	%100
81	M77A	X	0	0	0	%100
82	M77A	Z	.13	.13	0	%100
83	M78	X	0	0	0	%100
84	M78	Z	.13	.13	0	%100
85	MP5A	X	0	0	0	%100
86	MP5A	Z	.52	.52	0	%100
87	MP4A	X	0	0	0	%100
88	MP4A	Z	.52	.52	0	%100
89	MP2A	X	0	0	0	%100
90	MP2A	Z	.52	.52	0	%100
91	MP1A	X	0	0	0	%100
92	MP1A	Z	.52	.52	0	%100
93	MP3A	X	0	0	0	%100
94	MP3A	Z	.629	.629	0	%100
95	MP5C	X	0	0	0	%100
96	MP5C	Z	.52	.52	0	%100
97	MP4C	X	0	0	0	%100
98	MP4C	Z	.52	.52	0	%100
99	MP2C	X	0	0	0	%100
100	MP2C	Z	.52	.52	0	%100
101	MP1C	X	0	0	0	%100
102	MP1C	Z	.52	.52	0	%100
103	MP3C	X	0	0	0	%100
104	MP3C	Z	.629	.629	0	%100
105	MP5B	X	0	0	0	%100
106	MP5B	Z	.52	.52	0	%100
107	MP4B	X	0	0	0	%100
108	MP4B	Z	.52	.52	0	%100
109	MP2B	X	0	0	0	%100
110	MP2B	Z	.52	.52	0	%100
111	MP1B	X	0	0	0	%100
112	MP1B	Z	.52	.52	0	%100
113	MP3B	X	0	0	0	%100
114	MP3B	Z	.629	.629	0	%100
115	M130	X	0	0	0	%100
116	M130	Z	.366	.366	0	%100
117	M131	X	0	0	0	%100
118	M131	Z	.092	.092	0	%100
119	M134	X	0	0	0	%100
120	M134	Z	.092	.092	0	%100

Member Distributed Loads (BLC 72 : Structure Wm (210 Deg))

	Member Label	Direction	Start Magnitude[lb/ft,...	End Magnitude[lb/ft,F...	Start Location[ft,%]	End Location[ft,%]
1	M1	X	-.287	-.287	0	%100
2	M1	Z	.498	.498	0	%100
3	M4	X	-.097	-.097	0	%100
4	M4	Z	.168	.168	0	%100
5	M10	X	-.247	-.247	0	%100
6	M10	Z	.428	.428	0	%100
7	M43	X	-.247	-.247	0	%100

Member Distributed Loads (BLC 72 : Structure Wm (210 Deg)) (Continued)

	Member Label	Direction	Start Magnitude[lb/ft,...	End Magnitude[lb/ft,F...	Start Location[ft,%]	End Location[ft,%]
8	M43	Z	.428	.428	0	%100
9	M46	X	-.492	-.492	0	%100
10	M46	Z	.853	.853	0	%100
11	M51B	X	-.273	-.273	0	%100
12	M51B	Z	.474	.474	0	%100
13	M52B	X	0	0	0	%100
14	M52B	Z	0	0	0	%100
15	M76	X	-.164	-.164	0	%100
16	M76	Z	.284	.284	0	%100
17	M77	X	-.502	-.502	0	%100
18	M77	Z	.869	.869	0	%100
19	M80	X	-.528	-.528	0	%100
20	M80	Z	.915	.915	0	%100
21	M84	X	-.164	-.164	0	%100
22	M84	Z	.284	.284	0	%100
23	M85	X	0	0	0	%100
24	M85	Z	0	0	0	%100
25	M91	X	0	0	0	%100
26	M91	Z	0	0	0	%100
27	M26	X	-.097	-.097	0	%100
28	M26	Z	.168	.168	0	%100
29	M27	X	-.247	-.247	0	%100
30	M27	Z	.428	.428	0	%100
31	M28	X	-.247	-.247	0	%100
32	M28	Z	.428	.428	0	%100
33	M29	X	-.492	-.492	0	%100
34	M29	Z	.853	.853	0	%100
35	M32	X	0	0	0	%100
36	M32	Z	0	0	0	%100
37	M33	X	-.273	-.273	0	%100
38	M33	Z	.474	.474	0	%100
39	M37	X	-.164	-.164	0	%100
40	M37	Z	.284	.284	0	%100
41	M38	X	0	0	0	%100
42	M38	Z	0	0	0	%100
43	M40	X	0	0	0	%100
44	M40	Z	0	0	0	%100
45	M42	X	-.164	-.164	0	%100
46	M42	Z	.284	.284	0	%100
47	M43A	X	-.502	-.502	0	%100
48	M43A	Z	.869	.869	0	%100
49	M45	X	-.528	-.528	0	%100
50	M45	Z	.915	.915	0	%100
51	M50A	X	-.389	-.389	0	%100
52	M50A	Z	.674	.674	0	%100
53	M51C	X	0	0	0	%100
54	M51C	Z	0	0	0	%100
55	M52A	X	0	0	0	%100
56	M52A	Z	0	0	0	%100
57	M53	X	0	0	0	%100
58	M53	Z	0	0	0	%100
59	M56	X	-.273	-.273	0	%100
60	M56	Z	.474	.474	0	%100
61	M57	X	-.273	-.273	0	%100
62	M57	Z	.474	.474	0	%100
63	M61	X	-.657	-.657	0	%100
64	M61	Z	1.137	1.137	0	%100

Member Distributed Loads (BLC 72 : Structure Wm (210 Deg)) (Continued)

	Member Label	Direction	Start Magnitude[lb/ft,...	End Magnitude[lb/ft,F...	Start Location[ft,%]	End Location[ft,%]
65	M62	X	-.502	-.502	0	%100
66	M62	Z	.869	.869	0	%100
67	M64	X	-.528	-.528	0	%100
68	M64	Z	.915	.915	0	%100
69	M66	X	-.657	-.657	0	%100
70	M66	Z	1.137	1.137	0	%100
71	M67	X	-.502	-.502	0	%100
72	M67	Z	.869	.869	0	%100
73	M69	X	-.528	-.528	0	%100
74	M69	Z	.915	.915	0	%100
75	M74	X	-.287	-.287	0	%100
76	M74	Z	.498	.498	0	%100
77	M75	X	0	0	0	%100
78	M75	Z	0	0	0	%100
79	M79B	X	-.195	-.195	0	%100
80	M79B	Z	.338	.338	0	%100
81	M77A	X	-.195	-.195	0	%100
82	M77A	Z	.338	.338	0	%100
83	M78	X	0	0	0	%100
84	M78	Z	0	0	0	%100
85	MP5A	X	-.26	-.26	0	%100
86	MP5A	Z	.45	.45	0	%100
87	MP4A	X	-.26	-.26	0	%100
88	MP4A	Z	.45	.45	0	%100
89	MP2A	X	-.26	-.26	0	%100
90	MP2A	Z	.45	.45	0	%100
91	MP1A	X	-.26	-.26	0	%100
92	MP1A	Z	.45	.45	0	%100
93	MP3A	X	-.315	-.315	0	%100
94	MP3A	Z	.545	.545	0	%100
95	MP5C	X	-.26	-.26	0	%100
96	MP5C	Z	.45	.45	0	%100
97	MP4C	X	-.26	-.26	0	%100
98	MP4C	Z	.45	.45	0	%100
99	MP2C	X	-.26	-.26	0	%100
100	MP2C	Z	.45	.45	0	%100
101	MP1C	X	-.26	-.26	0	%100
102	MP1C	Z	.45	.45	0	%100
103	MP3C	X	-.315	-.315	0	%100
104	MP3C	Z	.545	.545	0	%100
105	MP5B	X	-.26	-.26	0	%100
106	MP5B	Z	.45	.45	0	%100
107	MP4B	X	-.26	-.26	0	%100
108	MP4B	Z	.45	.45	0	%100
109	MP2B	X	-.26	-.26	0	%100
110	MP2B	Z	.45	.45	0	%100
111	MP1B	X	-.26	-.26	0	%100
112	MP1B	Z	.45	.45	0	%100
113	MP3B	X	-.315	-.315	0	%100
114	MP3B	Z	.545	.545	0	%100
115	M130	X	-.137	-.137	0	%100
116	M130	Z	.238	.238	0	%100
117	M131	X	-.137	-.137	0	%100
118	M131	Z	.238	.238	0	%100
119	M134	X	0	0	0	%100
120	M134	Z	0	0	0	%100

Member Distributed Loads (BLC 73 : Structure Wm (240 Deg))

	Member Label	Direction	Start Magnitude[lb/ft,...	End Magnitude[lb/ft,F...	Start Location[ft,%]	End Location[ft,%]
1	M1	X	-.166	-.166	0	%100
2	M1	Z	.096	.096	0	%100
3	M4	X	-.505	-.505	0	%100
4	M4	Z	.292	.292	0	%100
5	M10	X	-.143	-.143	0	%100
6	M10	Z	.082	.082	0	%100
7	M43	X	-.143	-.143	0	%100
8	M43	Z	.082	.082	0	%100
9	M46	X	-.284	-.284	0	%100
10	M46	Z	.164	.164	0	%100
11	M51B	X	-.631	-.631	0	%100
12	M51B	Z	.365	.365	0	%100
13	M52B	X	-.158	-.158	0	%100
14	M52B	Z	.091	.091	0	%100
15	M76	X	-.853	-.853	0	%100
16	M76	Z	.492	.492	0	%100
17	M77	X	-1.158	-1.158	0	%100
18	M77	Z	.669	.669	0	%100
19	M80	X	-1.22	-1.22	0	%100
20	M80	Z	.704	.704	0	%100
21	M84	X	-.853	-.853	0	%100
22	M84	Z	.492	.492	0	%100
23	M85	X	-.29	-.29	0	%100
24	M85	Z	.167	.167	0	%100
25	M91	X	-.305	-.305	0	%100
26	M91	Z	.176	.176	0	%100
27	M26	X	0	0	0	%100
28	M26	Z	0	0	0	%100
29	M27	X	-.57	-.57	0	%100
30	M27	Z	.329	.329	0	%100
31	M28	X	-.57	-.57	0	%100
32	M28	Z	.329	.329	0	%100
33	M29	X	-1.137	-1.137	0	%100
34	M29	Z	.657	.657	0	%100
35	M32	X	-.158	-.158	0	%100
36	M32	Z	.091	.091	0	%100
37	M33	X	-.158	-.158	0	%100
38	M33	Z	.091	.091	0	%100
39	M37	X	0	0	0	%100
40	M37	Z	0	0	0	%100
41	M38	X	-.29	-.29	0	%100
42	M38	Z	.167	.167	0	%100
43	M40	X	-.305	-.305	0	%100
44	M40	Z	.176	.176	0	%100
45	M42	X	0	0	0	%100
46	M42	Z	0	0	0	%100
47	M43A	X	-.29	-.29	0	%100
48	M43A	Z	.167	.167	0	%100
49	M45	X	-.305	-.305	0	%100
50	M45	Z	.176	.176	0	%100
51	M50A	X	-.505	-.505	0	%100
52	M50A	Z	.292	.292	0	%100
53	M51C	X	-.143	-.143	0	%100
54	M51C	Z	.082	.082	0	%100
55	M52A	X	-.143	-.143	0	%100
56	M52A	Z	.082	.082	0	%100
57	M53	X	-.284	-.284	0	%100

Member Distributed Loads (BLC 73 : Structure Wm (240 Deg)) (Continued)

	Member Label	Direction	Start Magnitude[lb/ft,...	End Magnitude[lb/ft,F...	Start Location[ft,%]	End Location[ft,%]
58	M53	Z	.164	.164	0	%100
59	M56	X	-.158	-.158	0	%100
60	M56	Z	.091	.091	0	%100
61	M57	X	-.631	-.631	0	%100
62	M57	Z	.365	.365	0	%100
63	M61	X	-.853	-.853	0	%100
64	M61	Z	.492	.492	0	%100
65	M62	X	-.29	-.29	0	%100
66	M62	Z	.167	.167	0	%100
67	M64	X	-.305	-.305	0	%100
68	M64	Z	.176	.176	0	%100
69	M66	X	-.853	-.853	0	%100
70	M66	Z	.492	.492	0	%100
71	M67	X	-1.158	-1.158	0	%100
72	M67	Z	.669	.669	0	%100
73	M69	X	-1.22	-1.22	0	%100
74	M69	Z	.704	.704	0	%100
75	M74	X	-.663	-.663	0	%100
76	M74	Z	.383	.383	0	%100
77	M75	X	-.166	-.166	0	%100
78	M75	Z	.096	.096	0	%100
79	M79B	X	-.113	-.113	0	%100
80	M79B	Z	.065	.065	0	%100
81	M77A	X	-.45	-.45	0	%100
82	M77A	Z	.26	.26	0	%100
83	M78	X	-.113	-.113	0	%100
84	M78	Z	.065	.065	0	%100
85	MP5A	X	-.45	-.45	0	%100
86	MP5A	Z	.26	.26	0	%100
87	MP4A	X	-.45	-.45	0	%100
88	MP4A	Z	.26	.26	0	%100
89	MP2A	X	-.45	-.45	0	%100
90	MP2A	Z	.26	.26	0	%100
91	MP1A	X	-.45	-.45	0	%100
92	MP1A	Z	.26	.26	0	%100
93	MP3A	X	-.545	-.545	0	%100
94	MP3A	Z	.315	.315	0	%100
95	MP5C	X	-.45	-.45	0	%100
96	MP5C	Z	.26	.26	0	%100
97	MP4C	X	-.45	-.45	0	%100
98	MP4C	Z	.26	.26	0	%100
99	MP2C	X	-.45	-.45	0	%100
100	MP2C	Z	.26	.26	0	%100
101	MP1C	X	-.45	-.45	0	%100
102	MP1C	Z	.26	.26	0	%100
103	MP3C	X	-.545	-.545	0	%100
104	MP3C	Z	.315	.315	0	%100
105	MP5B	X	-.45	-.45	0	%100
106	MP5B	Z	.26	.26	0	%100
107	MP4B	X	-.45	-.45	0	%100
108	MP4B	Z	.26	.26	0	%100
109	MP2B	X	-.45	-.45	0	%100
110	MP2B	Z	.26	.26	0	%100
111	MP1B	X	-.45	-.45	0	%100
112	MP1B	Z	.26	.26	0	%100
113	MP3B	X	-.545	-.545	0	%100
114	MP3B	Z	.315	.315	0	%100

Member Distributed Loads (BLC 73 : Structure Wm (240 Deg)) (Continued)

	Member Label	Direction	Start Magnitude[lb/ft,...	End Magnitude[lb/ft,F...	Start Location[ft,%]	End Location[ft,%]
115	M130	X	-.079	-.079	0	%100
116	M130	Z	.046	.046	0	%100
117	M131	X	-.317	-.317	0	%100
118	M131	Z	.183	.183	0	%100
119	M134	X	-.079	-.079	0	%100
120	M134	Z	.046	.046	0	%100

Member Distributed Loads (BLC 74 : Structure Wm (270 Deg))

	Member Label	Direction	Start Magnitude[lb/ft,...	End Magnitude[lb/ft,F...	Start Location[ft,%]	End Location[ft,%]
1	M1	X	0	0	0	%100
2	M1	Z	0	0	0	%100
3	M4	X	-.778	-.778	0	%100
4	M4	Z	0	0	0	%100
5	M10	X	0	0	0	%100
6	M10	Z	0	0	0	%100
7	M43	X	0	0	0	%100
8	M43	Z	0	0	0	%100
9	M46	X	0	0	0	%100
10	M46	Z	0	0	0	%100
11	M51B	X	-.547	-.547	0	%100
12	M51B	Z	0	0	0	%100
13	M52B	X	-.547	-.547	0	%100
14	M52B	Z	0	0	0	%100
15	M76	X	-1.313	-1.313	0	%100
16	M76	Z	0	0	0	%100
17	M77	X	-1.003	-1.003	0	%100
18	M77	Z	0	0	0	%100
19	M80	X	-1.057	-1.057	0	%100
20	M80	Z	0	0	0	%100
21	M84	X	-1.313	-1.313	0	%100
22	M84	Z	0	0	0	%100
23	M85	X	-1.003	-1.003	0	%100
24	M85	Z	0	0	0	%100
25	M91	X	-1.057	-1.057	0	%100
26	M91	Z	0	0	0	%100
27	M26	X	-.195	-.195	0	%100
28	M26	Z	0	0	0	%100
29	M27	X	-.494	-.494	0	%100
30	M27	Z	0	0	0	%100
31	M28	X	-.494	-.494	0	%100
32	M28	Z	0	0	0	%100
33	M29	X	-.985	-.985	0	%100
34	M29	Z	0	0	0	%100
35	M32	X	-.547	-.547	0	%100
36	M32	Z	0	0	0	%100
37	M33	X	0	0	0	%100
38	M33	Z	0	0	0	%100
39	M37	X	-.328	-.328	0	%100
40	M37	Z	0	0	0	%100
41	M38	X	-1.003	-1.003	0	%100
42	M38	Z	0	0	0	%100
43	M40	X	-1.057	-1.057	0	%100
44	M40	Z	0	0	0	%100
45	M42	X	-.328	-.328	0	%100
46	M42	Z	0	0	0	%100
47	M43A	X	0	0	0	%100

Member Distributed Loads (BLC 74 : Structure Wm (270 Deg)) (Continued)

	Member Label	Direction	Start Magnitude[lb/ft,...	End Magnitude[lb/ft,F...	Start Location[ft,%]	End Location[ft,%]
48	M43A	Z	0	0	0	%100
49	M45	X	0	0	0	%100
50	M45	Z	0	0	0	%100
51	M50A	X	-.195	-.195	0	%100
52	M50A	Z	0	0	0	%100
53	M51C	X	-.494	-.494	0	%100
54	M51C	Z	0	0	0	%100
55	M52A	X	-.494	-.494	0	%100
56	M52A	Z	0	0	0	%100
57	M53	X	-.985	-.985	0	%100
58	M53	Z	0	0	0	%100
59	M56	X	0	0	0	%100
60	M56	Z	0	0	0	%100
61	M57	X	-.547	-.547	0	%100
62	M57	Z	0	0	0	%100
63	M61	X	-.328	-.328	0	%100
64	M61	Z	0	0	0	%100
65	M62	X	0	0	0	%100
66	M62	Z	0	0	0	%100
67	M64	X	0	0	0	%100
68	M64	Z	0	0	0	%100
69	M66	X	-.328	-.328	0	%100
70	M66	Z	0	0	0	%100
71	M67	X	-1.003	-1.003	0	%100
72	M67	Z	0	0	0	%100
73	M69	X	-1.057	-1.057	0	%100
74	M69	Z	0	0	0	%100
75	M74	X	-.574	-.574	0	%100
76	M74	Z	0	0	0	%100
77	M75	X	-.574	-.574	0	%100
78	M75	Z	0	0	0	%100
79	M79B	X	0	0	0	%100
80	M79B	Z	0	0	0	%100
81	M77A	X	-.39	-.39	0	%100
82	M77A	Z	0	0	0	%100
83	M78	X	-.39	-.39	0	%100
84	M78	Z	0	0	0	%100
85	MP5A	X	-.52	-.52	0	%100
86	MP5A	Z	0	0	0	%100
87	MP4A	X	-.52	-.52	0	%100
88	MP4A	Z	0	0	0	%100
89	MP2A	X	-.52	-.52	0	%100
90	MP2A	Z	0	0	0	%100
91	MP1A	X	-.52	-.52	0	%100
92	MP1A	Z	0	0	0	%100
93	MP3A	X	-.629	-.629	0	%100
94	MP3A	Z	0	0	0	%100
95	MP5C	X	-.52	-.52	0	%100
96	MP5C	Z	0	0	0	%100
97	MP4C	X	-.52	-.52	0	%100
98	MP4C	Z	0	0	0	%100
99	MP2C	X	-.52	-.52	0	%100
100	MP2C	Z	0	0	0	%100
101	MP1C	X	-.52	-.52	0	%100
102	MP1C	Z	0	0	0	%100
103	MP3C	X	-.629	-.629	0	%100
104	MP3C	Z	0	0	0	%100

Member Distributed Loads (BLC 74 : Structure Wm (270 Deg)) (Continued)

	Member Label	Direction	Start Magnitude[lb/ft,...	End Magnitude[lb/ft,F...	Start Location[ft,%]	End Location[ft,%]
105	MP5B	X	-.52	-.52	0	%100
106	MP5B	Z	0	0	0	%100
107	MP4B	X	-.52	-.52	0	%100
108	MP4B	Z	0	0	0	%100
109	MP2B	X	-.52	-.52	0	%100
110	MP2B	Z	0	0	0	%100
111	MP1B	X	-.52	-.52	0	%100
112	MP1B	Z	0	0	0	%100
113	MP3B	X	-.629	-.629	0	%100
114	MP3B	Z	0	0	0	%100
115	M130	X	0	0	0	%100
116	M130	Z	0	0	0	%100
117	M131	X	-.275	-.275	0	%100
118	M131	Z	0	0	0	%100
119	M134	X	-.275	-.275	0	%100
120	M134	Z	0	0	0	%100

Member Distributed Loads (BLC 75 : Structure Wm (300 Deg))

	Member Label	Direction	Start Magnitude[lb/ft,...	End Magnitude[lb/ft,F...	Start Location[ft,%]	End Location[ft,%]
1	M1	X	-.166	-.166	0	%100
2	M1	Z	-.096	-.096	0	%100
3	M4	X	-.505	-.505	0	%100
4	M4	Z	-.292	-.292	0	%100
5	M10	X	-.143	-.143	0	%100
6	M10	Z	-.082	-.082	0	%100
7	M43	X	-.143	-.143	0	%100
8	M43	Z	-.082	-.082	0	%100
9	M46	X	-.284	-.284	0	%100
10	M46	Z	-.164	-.164	0	%100
11	M51B	X	-.158	-.158	0	%100
12	M51B	Z	-.091	-.091	0	%100
13	M52B	X	-.631	-.631	0	%100
14	M52B	Z	-.365	-.365	0	%100
15	M76	X	-.853	-.853	0	%100
16	M76	Z	-.492	-.492	0	%100
17	M77	X	-.29	-.29	0	%100
18	M77	Z	-.167	-.167	0	%100
19	M80	X	-.305	-.305	0	%100
20	M80	Z	-.176	-.176	0	%100
21	M84	X	-.853	-.853	0	%100
22	M84	Z	-.492	-.492	0	%100
23	M85	X	-1.158	-1.158	0	%100
24	M85	Z	-.669	-.669	0	%100
25	M91	X	-1.22	-1.22	0	%100
26	M91	Z	-.704	-.704	0	%100
27	M26	X	-.505	-.505	0	%100
28	M26	Z	-.292	-.292	0	%100
29	M27	X	-.143	-.143	0	%100
30	M27	Z	-.082	-.082	0	%100
31	M28	X	-.143	-.143	0	%100
32	M28	Z	-.082	-.082	0	%100
33	M29	X	-.284	-.284	0	%100
34	M29	Z	-.164	-.164	0	%100
35	M32	X	-.631	-.631	0	%100
36	M32	Z	-.365	-.365	0	%100
37	M33	X	-.158	-.158	0	%100

Member Distributed Loads (BLC 75 : Structure Wm (300 Deg)) (Continued)

	Member Label	Direction	Start Magnitude[lb/ft,...	End Magnitude[lb/ft,F...	Start Location[ft,%]	End Location[ft,%]
38	M33	Z	-.091	-.091	0	%100
39	M37	X	-.853	-.853	0	%100
40	M37	Z	-.492	-.492	0	%100
41	M38	X	-1.158	-1.158	0	%100
42	M38	Z	-.669	-.669	0	%100
43	M40	X	-1.22	-1.22	0	%100
44	M40	Z	-.704	-.704	0	%100
45	M42	X	-.853	-.853	0	%100
46	M42	Z	-.492	-.492	0	%100
47	M43A	X	-.29	-.29	0	%100
48	M43A	Z	-.167	-.167	0	%100
49	M45	X	-.305	-.305	0	%100
50	M45	Z	-.176	-.176	0	%100
51	M50A	X	0	0	0	%100
52	M50A	Z	0	0	0	%100
53	M51C	X	-.57	-.57	0	%100
54	M51C	Z	-.329	-.329	0	%100
55	M52A	X	-.57	-.57	0	%100
56	M52A	Z	-.329	-.329	0	%100
57	M53	X	-1.137	-1.137	0	%100
58	M53	Z	-.657	-.657	0	%100
59	M56	X	-.158	-.158	0	%100
60	M56	Z	-.091	-.091	0	%100
61	M57	X	-.158	-.158	0	%100
62	M57	Z	-.091	-.091	0	%100
63	M61	X	0	0	0	%100
64	M61	Z	0	0	0	%100
65	M62	X	-.29	-.29	0	%100
66	M62	Z	-.167	-.167	0	%100
67	M64	X	-.305	-.305	0	%100
68	M64	Z	-.176	-.176	0	%100
69	M66	X	0	0	0	%100
70	M66	Z	0	0	0	%100
71	M67	X	-.29	-.29	0	%100
72	M67	Z	-.167	-.167	0	%100
73	M69	X	-.305	-.305	0	%100
74	M69	Z	-.176	-.176	0	%100
75	M74	X	-.166	-.166	0	%100
76	M74	Z	-.096	-.096	0	%100
77	M75	X	-.663	-.663	0	%100
78	M75	Z	-.383	-.383	0	%100
79	M79B	X	-.113	-.113	0	%100
80	M79B	Z	-.065	-.065	0	%100
81	M77A	X	-.113	-.113	0	%100
82	M77A	Z	-.065	-.065	0	%100
83	M78	X	-.45	-.45	0	%100
84	M78	Z	-.26	-.26	0	%100
85	MP5A	X	-.45	-.45	0	%100
86	MP5A	Z	-.26	-.26	0	%100
87	MP4A	X	-.45	-.45	0	%100
88	MP4A	Z	-.26	-.26	0	%100
89	MP2A	X	-.45	-.45	0	%100
90	MP2A	Z	-.26	-.26	0	%100
91	MP1A	X	-.45	-.45	0	%100
92	MP1A	Z	-.26	-.26	0	%100
93	MP3A	X	-.545	-.545	0	%100
94	MP3A	Z	-.315	-.315	0	%100

Member Distributed Loads (BLC 75 : Structure Wm (300 Deg)) (Continued)

	Member Label	Direction	Start Magnitude[lb/ft,...	End Magnitude[lb/ft,F...	Start Location[ft,%]	End Location[ft,%]
95	MP5C	X	-.45	-.45	0	%100
96	MP5C	Z	-.26	-.26	0	%100
97	MP4C	X	-.45	-.45	0	%100
98	MP4C	Z	-.26	-.26	0	%100
99	MP2C	X	-.45	-.45	0	%100
100	MP2C	Z	-.26	-.26	0	%100
101	MP1C	X	-.45	-.45	0	%100
102	MP1C	Z	-.26	-.26	0	%100
103	MP3C	X	-.545	-.545	0	%100
104	MP3C	Z	-.315	-.315	0	%100
105	MP5B	X	-.45	-.45	0	%100
106	MP5B	Z	-.26	-.26	0	%100
107	MP4B	X	-.45	-.45	0	%100
108	MP4B	Z	-.26	-.26	0	%100
109	MP2B	X	-.45	-.45	0	%100
110	MP2B	Z	-.26	-.26	0	%100
111	MP1B	X	-.45	-.45	0	%100
112	MP1B	Z	-.26	-.26	0	%100
113	MP3B	X	-.545	-.545	0	%100
114	MP3B	Z	-.315	-.315	0	%100
115	M130	X	-.079	-.079	0	%100
116	M130	Z	-.046	-.046	0	%100
117	M131	X	-.079	-.079	0	%100
118	M131	Z	-.046	-.046	0	%100
119	M134	X	-.317	-.317	0	%100
120	M134	Z	-.183	-.183	0	%100

Member Distributed Loads (BLC 76 : Structure Wm (330 Deg))

	Member Label	Direction	Start Magnitude[lb/ft,...	End Magnitude[lb/ft,F...	Start Location[ft,%]	End Location[ft,%]
1	M1	X	-.287	-.287	0	%100
2	M1	Z	-.498	-.498	0	%100
3	M4	X	-.097	-.097	0	%100
4	M4	Z	-.168	-.168	0	%100
5	M10	X	-.247	-.247	0	%100
6	M10	Z	-.428	-.428	0	%100
7	M43	X	-.247	-.247	0	%100
8	M43	Z	-.428	-.428	0	%100
9	M46	X	-.492	-.492	0	%100
10	M46	Z	-.853	-.853	0	%100
11	M51B	X	0	0	0	%100
12	M51B	Z	0	0	0	%100
13	M52B	X	-.273	-.273	0	%100
14	M52B	Z	-.474	-.474	0	%100
15	M76	X	-.164	-.164	0	%100
16	M76	Z	-.284	-.284	0	%100
17	M77	X	0	0	0	%100
18	M77	Z	0	0	0	%100
19	M80	X	0	0	0	%100
20	M80	Z	0	0	0	%100
21	M84	X	-.164	-.164	0	%100
22	M84	Z	-.284	-.284	0	%100
23	M85	X	-.502	-.502	0	%100
24	M85	Z	-.869	-.869	0	%100
25	M91	X	-.528	-.528	0	%100
26	M91	Z	-.915	-.915	0	%100
27	M26	X	-.389	-.389	0	%100

Member Distributed Loads (BLC 76 : Structure Wm (330 Deg)) (Continued)

	Member Label	Direction	Start Magnitude[lb/ft,...	End Magnitude[lb/ft,F...	Start Location[ft,%]	End Location[ft,%]
28	M26	Z	-.674	-.674	0	%100
29	M27	X	0	0	0	%100
30	M27	Z	0	0	0	%100
31	M28	X	0	0	0	%100
32	M28	Z	0	0	0	%100
33	M29	X	0	0	0	%100
34	M29	Z	0	0	0	%100
35	M32	X	-.273	-.273	0	%100
36	M32	Z	-.474	-.474	0	%100
37	M33	X	-.273	-.273	0	%100
38	M33	Z	-.474	-.474	0	%100
39	M37	X	-.657	-.657	0	%100
40	M37	Z	-1.137	-1.137	0	%100
41	M38	X	-.502	-.502	0	%100
42	M38	Z	-.869	-.869	0	%100
43	M40	X	-.528	-.528	0	%100
44	M40	Z	-.915	-.915	0	%100
45	M42	X	-.657	-.657	0	%100
46	M42	Z	-1.137	-1.137	0	%100
47	M43A	X	-.502	-.502	0	%100
48	M43A	Z	-.869	-.869	0	%100
49	M45	X	-.528	-.528	0	%100
50	M45	Z	-.915	-.915	0	%100
51	M50A	X	-.097	-.097	0	%100
52	M50A	Z	-.168	-.168	0	%100
53	M51C	X	-.247	-.247	0	%100
54	M51C	Z	-.428	-.428	0	%100
55	M52A	X	-.247	-.247	0	%100
56	M52A	Z	-.428	-.428	0	%100
57	M53	X	-.492	-.492	0	%100
58	M53	Z	-.853	-.853	0	%100
59	M56	X	-.273	-.273	0	%100
60	M56	Z	-.474	-.474	0	%100
61	M57	X	0	0	0	%100
62	M57	Z	0	0	0	%100
63	M61	X	-.164	-.164	0	%100
64	M61	Z	-.284	-.284	0	%100
65	M62	X	-.502	-.502	0	%100
66	M62	Z	-.869	-.869	0	%100
67	M64	X	-.528	-.528	0	%100
68	M64	Z	-.915	-.915	0	%100
69	M66	X	-.164	-.164	0	%100
70	M66	Z	-.284	-.284	0	%100
71	M67	X	0	0	0	%100
72	M67	Z	0	0	0	%100
73	M69	X	0	0	0	%100
74	M69	Z	0	0	0	%100
75	M74	X	0	0	0	%100
76	M74	Z	0	0	0	%100
77	M75	X	-.287	-.287	0	%100
78	M75	Z	-.498	-.498	0	%100
79	M79B	X	-.195	-.195	0	%100
80	M79B	Z	-.338	-.338	0	%100
81	M77A	X	0	0	0	%100
82	M77A	Z	0	0	0	%100
83	M78	X	-.195	-.195	0	%100
84	M78	Z	-.338	-.338	0	%100

Member Distributed Loads (BLC 76 : Structure Wm (330 Deg)) (Continued)

	Member Label	Direction	Start Magnitude[lb/ft,...	End Magnitude[lb/ft,F...	Start Location[ft,%]	End Location[ft,%]
85	MP5A	X	-.26	-.26	0	%100
86	MP5A	Z	-.45	-.45	0	%100
87	MP4A	X	-.26	-.26	0	%100
88	MP4A	Z	-.45	-.45	0	%100
89	MP2A	X	-.26	-.26	0	%100
90	MP2A	Z	-.45	-.45	0	%100
91	MP1A	X	-.26	-.26	0	%100
92	MP1A	Z	-.45	-.45	0	%100
93	MP3A	X	-.315	-.315	0	%100
94	MP3A	Z	-.545	-.545	0	%100
95	MP5C	X	-.26	-.26	0	%100
96	MP5C	Z	-.45	-.45	0	%100
97	MP4C	X	-.26	-.26	0	%100
98	MP4C	Z	-.45	-.45	0	%100
99	MP2C	X	-.26	-.26	0	%100
100	MP2C	Z	-.45	-.45	0	%100
101	MP1C	X	-.26	-.26	0	%100
102	MP1C	Z	-.45	-.45	0	%100
103	MP3C	X	-.315	-.315	0	%100
104	MP3C	Z	-.545	-.545	0	%100
105	MP5B	X	-.26	-.26	0	%100
106	MP5B	Z	-.45	-.45	0	%100
107	MP4B	X	-.26	-.26	0	%100
108	MP4B	Z	-.45	-.45	0	%100
109	MP2B	X	-.26	-.26	0	%100
110	MP2B	Z	-.45	-.45	0	%100
111	MP1B	X	-.26	-.26	0	%100
112	MP1B	Z	-.45	-.45	0	%100
113	MP3B	X	-.315	-.315	0	%100
114	MP3B	Z	-.545	-.545	0	%100
115	M130	X	-.137	-.137	0	%100
116	M130	Z	-.238	-.238	0	%100
117	M131	X	0	0	0	%100
118	M131	Z	0	0	0	%100
119	M134	X	-.137	-.137	0	%100
120	M134	Z	-.238	-.238	0	%100

Member Distributed Loads (BLC 81 : BLC 39 Transient Area Loads)

	Member Label	Direction	Start Magnitude[lb/ft,...	End Magnitude[lb/ft,F...	Start Location[ft,%]	End Location[ft,%]
1	M32	Y	-1.884	-4.426	0	.832
2	M32	Y	-4.426	-7.044	.832	1.665
3	M32	Y	-7.044	-8.26	1.665	2.497
4	M32	Y	-8.26	-6.573	2.497	3.329
5	M32	Y	-6.573	-3.462	3.329	4.162
6	M33	Y	-3.463	-6.545	0	.832
7	M33	Y	-6.545	-8.189	.832	1.665
8	M33	Y	-8.189	-6.902	1.665	2.497
9	M33	Y	-6.902	-4.228	2.497	3.329
10	M33	Y	-4.228	-1.661	3.329	4.162
11	M56	Y	-1.661	-4.228	0	.832
12	M56	Y	-4.228	-6.902	.832	1.665
13	M56	Y	-6.902	-8.189	1.665	2.497
14	M56	Y	-8.189	-6.545	2.497	3.329
15	M56	Y	-6.545	-3.463	3.329	4.162
16	M57	Y	-3.462	-6.573	0	.832
17	M57	Y	-6.573	-8.26	.832	1.665

Member Distributed Loads (BLC 81 : BLC 39 Transient Area Loads) (Continued)

	Member Label	Direction	Start Magnitude[lb/ft,...	End Magnitude[lb/ft,F...	Start Location[ft,%]	End Location[ft,%]
18	M57	Y	-8.26	-7.044	1.665	2.497
19	M57	Y	-7.044	-4.426	2.497	3.329
20	M57	Y	-4.426	-1.884	3.329	4.162
21	M51B	Y	-1.879	-4.428	0	.832
22	M51B	Y	-4.428	-7.042	.832	1.665
23	M51B	Y	-7.042	-8.256	1.665	2.497
24	M51B	Y	-8.256	-6.578	2.497	3.329
25	M51B	Y	-6.578	-3.47	3.329	4.162
26	M52B	Y	-3.463	-6.545	0	.832
27	M52B	Y	-6.545	-8.189	.832	1.665
28	M52B	Y	-8.189	-6.9	1.665	2.497
29	M52B	Y	-6.9	-4.227	2.497	3.329
30	M52B	Y	-4.227	-1.665	3.329	4.162

Member Distributed Loads (BLC 82 : BLC 40 Transient Area Loads)

	Member Label	Direction	Start Magnitude[lb/ft,...	End Magnitude[lb/ft,F...	Start Location[ft,%]	End Location[ft,%]
1	M32	Y	-3.979	-9.37	0	.832
2	M32	Y	-9.37	-14.895	.832	1.665
3	M32	Y	-14.895	-17.464	1.665	2.497
4	M32	Y	-17.464	-13.914	2.497	3.329
5	M32	Y	-13.914	-7.339	3.329	4.162
6	M33	Y	-7.325	-13.842	0	.832
7	M33	Y	-13.842	-17.324	.832	1.665
8	M33	Y	-17.324	-14.598	1.665	2.497
9	M33	Y	-14.598	-8.94	2.497	3.329
10	M33	Y	-8.94	-3.523	3.329	4.162
11	M51B	Y	-3.976	-9.367	0	.832
12	M51B	Y	-9.367	-14.896	.832	1.665
13	M51B	Y	-14.896	-17.465	1.665	2.497
14	M51B	Y	-17.465	-13.915	2.497	3.329
15	M51B	Y	-13.915	-7.34	3.329	4.162
16	M52B	Y	-7.325	-13.844	0	.832
17	M52B	Y	-13.844	-17.322	.832	1.665
18	M52B	Y	-17.322	-14.596	1.665	2.497
19	M52B	Y	-14.596	-8.941	2.497	3.329
20	M52B	Y	-8.941	-3.523	3.329	4.162
21	M56	Y	-3.514	-8.944	0	.832
22	M56	Y	-8.944	-14.6	.832	1.665
23	M56	Y	-14.6	-17.322	1.665	2.497
24	M56	Y	-17.322	-13.844	2.497	3.329
25	M56	Y	-13.844	-7.326	3.329	4.162
26	M57	Y	-7.323	-13.905	0	.832
27	M57	Y	-13.905	-17.474	.832	1.665
28	M57	Y	-17.474	-14.902	1.665	2.497
29	M57	Y	-14.902	-9.363	2.497	3.329
30	M57	Y	-9.363	-3.986	3.329	4.162

Member Area Loads (BLC 39 : Structure D)

	Joint A	Joint B	Joint C	Joint D	Direction	Distribution	Magnitude[ksf]
1	N57	N59	N35	N34	Y	Two Way	-.005
2	N63	N64	N88	N86	Y	Two Way	-.005
3	N7	N87B	N87C	N6	Y	Two Way	-.005

Member Area Loads (BLC 40 : Structure Di)

Joint A	Joint B	Joint C	Joint D	Direction	Distribution	Magnitude[ksf]

Member Area Loads (BLC 40 : Structure Di) (Continued)

	Joint A	Joint B	Joint C	Joint D	Direction	Distribution	Magnitude[ksf]
1	N59	N57	N34	N35	Y	Two Way	-.011
2	N7	N87B	N87C	N6	Y	Two Way	-.011
3	N63	N64	N88	N86	Y	Two Way	-.011

Envelope Joint Reactions

	Joint		X [lb]	LC	Y [lb]	LC	Z [lb]	LC	MX [k-ft]	LC	MY [k-ft]	LC	MZ [k-ft]	LC
1	N3	max	1263.018	10	2779.978	13	2474.015	1	5.724	13	1.906	4	.425	4
2		min	-1262.65	4	432.727	7	-2611.179	7	-.28	7	-1.896	10	-.436	10
3	N32	max	2017.241	10	2766.076	21	1619.843	1	.027	2	2.492	12	.005	3
4		min	-2138.613	4	393.681	3	-1557.129	7	-2.912	20	-2.476	6	-5.112	21
5	N61	max	2119.88	11	2543.108	17	1519.165	1	.119	12	1.796	8	4.488	17
6		min	-2002.361	5	333.284	11	-1444.704	7	-2.873	30	-1.8	2	-.159	11
7	Totals:	max	5306.405	10	7562.845	23	5613.022	1						
8		min	-5306.414	4	3352.731	5	-5613.011	7						

Envelope AISC 15th(360-16): LRFD Steel Code Checks

	Mem...	Shape	Code Check	Loc[ft]	LC	Shear Check	Loc[ft]	Dir	LC	phi*...	phi*...	phi*...	phi*...	Cb	Eqn
1	M1	PIPE...	.169	7.813	20	.139	7.813		10	282...	652...	5.749	5.749	3...	H1...
2	M4	HSS4...	.357	0	13	.081	0	y	23	124...	139...	16....	16....	3...	H1...
3	M10	HSS4...	.186	2.375	14	.056	2.375	y	13	136...	139...	16....	16....	1...	H1...
4	M43	HSS4...	.191	0	24	.058	2.152	z	12	136...	139...	16....	16....	1...	H1...
5	M46	PL3/8...	.223	.516	12	.147	.516	y	4	362...	729...	.57	9.113	1...	H1...
6	M51B	L2x2x2	.252	0	3	.015	4.162	y	16	671...	154...	.391	.663	1...	H2...
7	M52B	L2x2x2	.264	0	12	.015	0	y	22	671...	154...	.391	.665	1...	H2...
8	M76	PL3/8...	.243	0	2	.248	0	y	21	706...	729...	.57	9.113	1...	H1...
9	M77	PL3/8...	.321	.167	8	.374	0	y	14	715...	729...	.57	9.113	1...	H1...
10	M80	PL3/8...	.107	.112	12	.145	0	y	10	723...	729...	.57	9.113	2...	H1...
11	M84	PL3/8...	.358	0	12	.253	0	y	17	706...	729...	.57	9.113	1...	H1...
12	M85	PL3/8...	.362	.167	6	.385	0	y	24	715...	729...	.57	9.113	1...	H1...
13	M91	PL3/8...	.117	.112	2	.148	0	y	4	723...	729...	.57	9.113	2...	H1...
14	M26	HSS4...	.374	0	23	.081	0	y	43	124...	139...	16....	16....	3...	H1...
15	M27	HSS4...	.198	2.375	22	.061	2.375	y	21	136...	139...	16....	16....	1...	H1...
16	M28	HSS4...	.195	0	20	.059	0	y	21	136...	139...	16....	16....	1...	H1...
17	M29	PL3/8...	.195	.516	2	.163	1.031	y	12	362...	729...	.57	9.113	1...	H1...
18	M32	L2x2x2	.282	0	11	.016	4.162	y	24	671...	154...	.391	.663	1...	H2...
19	M33	L2x2x2	.274	4.162	7	.015	0	y	18	671...	154...	.391	.662	1...	H2...
20	M37	PL3/8...	.268	0	10	.249	0	y	16	706...	729...	.57	9.113	1...	H1...
21	M38	PL3/8...	.342	.167	4	.403	0	y	22	715...	729...	.57	9.113	1...	H1...
22	M40	PL3/8...	.108	.112	7	.168	.112	y	12	723...	729...	.57	9.113	2...	H1...
23	M42	PL3/8...	.269	0	8	.256	0	y	13	706...	729...	.57	9.113	1...	H1...
24	M43A	PL3/8...	.339	.167	2	.395	0	y	20	715...	729...	.57	9.113	1...	H1...
25	M45	PL3/8...	.104	.112	11	.166	0	y	12	723...	729...	.57	9.113	1...	H1...
26	M50A	HSS4...	.327	0	17	.082	0	y	42	124...	139...	16....	16....	3...	H1...
27	M51C	HSS4...	.185	2.375	18	.059	.223	z	6	136...	139...	16....	16....	1...	H1...
28	M52A	HSS4...	.183	0	16	.054	0	y	17	136...	139...	16....	16....	1...	H1...
29	M53	PL3/8...	.223	.516	12	.162	0	y	2	362...	729...	.57	9.113	1...	H1...
30	M56	L2x2x2	.271	4.162	6	.015	4.162	y	20	671...	154...	.391	.665	1...	H2...
31	M57	L2x2x2	.244	4.162	3	.016	0	y	14	671...	154...	.391	.663	1...	H2...
32	M61	PL3/8...	.345	0	6	.237	0	y	24	706...	729...	.57	9.113	1...	H1...
33	M62	PL3/8...	.371	.167	12	.371	0	y	18	715...	729...	.57	9.113	1...	H1...
34	M64	PL3/8...	.110	.112	3	.251	0	y	26	723...	729...	.57	9.113	2...	H1...
35	M66	PL3/8...	.252	0	4	.252	0	y	21	706...	729...	.57	9.113	1...	H1...
36	M67	PL3/8...	.304	.167	10	.369	0	y	16	715...	729...	.57	9.113	1...	H1...
37	M69	PL3/8...	.104	.112	6	.169	.112	y	1	723...	729...	.57	9.113	2...	H1...

Envelope AISC 15th(360-16): LRFD Steel Code Checks (Continued)

	Mem...	Shape	Code Check	Loc[ft]	LC	Shear Check	Loc[ft]	Dir	LC	phi*...	phi*...	phi*...	phi*...	Cb	Eqn
38	M74	PIPE...	.157	7.812	16	.148	4.687		12	282...	652...	5.749	5.749	3...	H1...
39	M75	PIPE...	.170	4.687	22	.147	7.812		2	282...	652...	5.749	5.749	3...	H1...
40	M79B	PIPE...	.194	7.118	5	.205	12.955		11	526...	321...	1.872	1.872	1...	H1...
41	M77A	PIPE...	.206	7.118	1	.213	12.101		1	526...	321...	1.872	1.872	1...	H1...
42	M78	PIPE...	.213	2.135	12	.216	1.993		1	526...	321...	1.872	1.872	1...	H1...
43	MP5A	PIPE...	.243	4.313	11	.098	4.313		10	208...	321...	1.872	1.872	1...	H1...
44	MP4A	PIPE...	.279	4.313	5	.113	2.938		10	208...	321...	1.872	1.872	2...	H1...
45	MP2A	PIPE...	.283	4.313	9	.128	4.313		5	208...	321...	1.872	1.872	2...	H1...
46	MP1A	PIPE...	.244	4.313	9	.101	4.313		4	208...	321...	1.872	1.872	1...	H1...
47	MP3A	PIPE...	.269	4.818	10	.134	2.865		10	145...	507...	3.596	3.596	3...	H1...
48	MP5C	PIPE...	.225	4.313	6	.088	4.313		6	208...	321...	1.872	1.872	2...	H1...
49	MP4C	PIPE...	.296	4.313	1	.128	4.313		6	208...	321...	1.872	1.872	2...	H1...
50	MP2C	PIPE...	.266	4.313	5	.144	4.313		1	208...	321...	1.872	1.872	2...	H1...
51	MP1C	PIPE...	.241	4.313	12	.095	4.313		12	208...	321...	1.872	1.872	2...	H1...
52	MP3C	PIPE...	.288	4.818	12	.143	4.818		12	145...	507...	3.596	3.596	3...	H1...
53	MP5B	PIPE...	.249	4.313	2	.107	4.313		2	208...	321...	1.872	1.872	2...	H1...
54	MP4B	PIPE...	.265	4.313	9	.132	4.313		2	208...	321...	1.872	1.872	2...	H1...
55	MP2B	PIPE...	.311	4.313	1	.130	4.313		8	208...	321...	1.872	1.872	3...	H1...
56	MP1B	PIPE...	.258	4.313	1	.104	4.313		8	208...	321...	1.872	1.872	2...	H1...
57	MP3B	PIPE...	.287	4.818	2	.145	4.818		2	145...	507...	3.596	3.596	3...	H1...
58	M130	PIPE...	.158	.746	10	.418	0		10	309...	321...	1.872	1.872	1...	H3...
59	M131	PIPE...	.202	.727	12	.473	0		12	309...	321...	1.872	1.872	1...	H3...
60	M134	PIPE...	.172	1.063	2	.438	0		2	309...	321...	1.872	1.872	1...	H3...
61	OVP	PIPE...	.182	3.5	12	.014	1.042		12	265...	321...	1.872	1.872	1...	H1...

Client:	Verizon	Date:	5/3/2021
Site Name:	Monroe West CT		
Project No.	21777072A		
Title:	Mount Analysis	Page:	1

Version 3.1

I. Mount-to-Tower Connection Check

RISA Model Data

Nodes *(labeled per RISA)*	Orientation *(per graphic of typical platform)*
N32	30
N3	270
N61	150

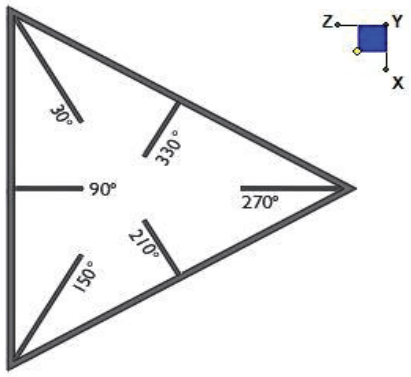

TYPICAL PLATFORM

Tower Connection Bolt Checks

Any moment resistance?:	yes
Bolt Quantity per Reaction:	4
d_x (in) *(Delta X of typ. bolt config. sketch)* :	8
d_y (in) *(Delta Y of typ. bolt config. sketch)* :	8
Bolt Type:	A325N
Bolt Diameter (in):	0.625
Required Tensile Strength (kips):	18.0
Required Shear Strength (kips):	3.2
Tensile Strength / bolt (kips):	20.7
Shear Strength / bolt (kips):	12.4
Tensile Capacity Overall:	**21.8%***
Shear Capacity Overall:	**6.5%**

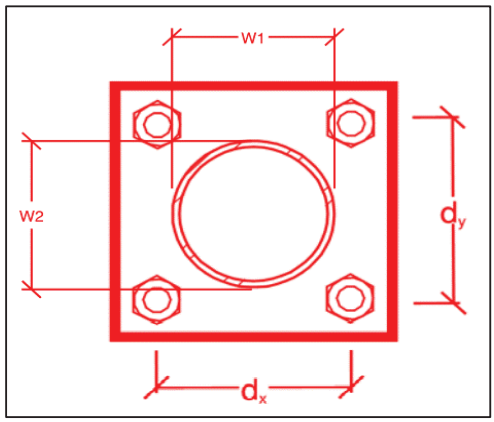

**Note: Tension reduction not required if tension or shear capacity < 30%*

Tower Connection Plate and Weld Check

Connecting Standoff Member Shape:	Rect
Plate Width (in):	10
Plate Height (in):	10
W1 (in):	4
W2 (in):	4
Fy (ksi, plate):	36
t_{Plate} (in):	0.625
Weld Size (1/16 in):	3
Phi*Rn (kip/in):	4.18
Required Weld Strength (kip/in):	3.34
Plate Bending Capacity:	**57.9%**
Weld Capacity:	**79.9%**

Max Plate Bending Strengths

Mu_{xx} *(kip-in)* :	17.0
Phi*Mn_{xx} *(kip-in)* :	31.6
Mu_{yy} *(kip-in)* :	1.3
Phi*Mn_{yy} *(kip-in)* :	31.6

Mount Desktop – Post Modification Inspection (PMI) Report Requirements

Documents & Photos Required from Contractor – Passing Mount Analysis

Purpose – to provide Maser Consulting Connecticut the proper documentation in order to complete the required Mount Desktop review of the Post Modification Inspection Report.

- Contractor is responsible for making certain the photos provided as noted below provide confirmation that the installation was completed in accordance with this Passing Mount Analysis.
- Contractor shall relay any data that can impact the performance of the mount, this includes safety issues.

Base Requirements:

- Any special photos outside of the standard requirements will be indicated on the passing MA
- Verification that loading is as communicated in the Passing Mount Analysis. NOTE If loading is different than what is conveyed contact Maser Consulting Connecticut immediately.
- Each photo should be time and date stamped
- Photos should be high resolution and submitted in a Zip File and should be organized in the file structure as depicted in Schedule A attached.
- Contractor shall ensure that the safety climb wire rope is supported and not adversely impacted by the install of the modification components. This may involve the install of wire rope guides, or other items to protect the wire rope.
- The photos in the file structure should be uploaded to ***https://pmi.vzwsmart.com*** as depicted on the drawings

Photo Requirements:

- *Base and "During Installation Photos"*
  - Base pictures include
    - Photo of Gate Signs showing the tower owner, site name, and number
    - Photo of carrier shelter showing the carrier site name and number if available
    - Photos of the galvanizing compound and/or paint used (if applicable), clearly showing the label and name
  - "During Installation Photos if provided - must be placed only in this folder
- *Photos taken at ground level*
  - Overall tower structure before and after installation of the equipment modifications
  - Photos of the appropriate mount before and after installation of the modifications; if the mounts are at different rad elevations, pictures must be provided for all elevations that the modifications were installed
- *Photos taken at Mount Elevation*
  - Photos showing each individual sector before and also after installation of equipment.

- These photos should also certify that the placement and geometry of the equipment on the mount is as depicted on the sketch and table in the mount analysis
- Photos showing the safety climb wire rope above and below the mount prior to modification.
- Photos showing the climbing facility and safety climb if present.

Antenna & equipment placement and Geometry Confirmation:

- The contractor must certify that the antenna & equipment placement and geometry is in accordance with the antenna placement diagrams as included in this mount analysis.

☐ The contractor certifies that the photos support and the equipment on the mount is as depicted on the antenna placement diagrams as included in this mount analysis.

☐ The contractor notes that the equipment on the mount is not in accordance with the antenna placement diagrams and has accordingly marked up the diagrams or provided a diagram outlining the differences.

Certifying Individual: Company _____

Name _____

Signature _____

Special Instructions / Validation as required from the MA or any other information the contractor deems necessary to share that was identified:

Issue:

-Contractor to remove existing OVP mount pipe connected to grating. -Contractor to install new 48" OVP mount pipe to the beta/gamma Standoff Arm using Site Pro 1 SQCX4-K 12" from the existing tower connection. The proposed mount pipe shall project 42" above the existing standoff arm. Proposed OVP to be installed on new 48" OVP pipe.

Response:

Schedule A – Photo & Document File Structure

- VzW Site Number / Name
  - Base & "During Installation" Photos
  - Pre-Installation Photos
    - Alpha
    - Beta
    - Gamma
    - Ground Level
    - Tape Drop
  - Post-Installation Photos
    - Alpha
    - Beta
    - Gamma
    - Ground Level
    - Tape Drop
    - Photos of climbing facility and safety climb – If Present
  - Certifications – Submission of this document including certifications
  - Specific Required Additional Photos

Structure: 469337-VZW - MONROE WEST CT

Sector: **A**

Structure Type: Monopole

Mount Elev: 159.40

4/29/2021

MASER CONSULTING CONNECTICUT

Plan View

Front View
Looking at Structure

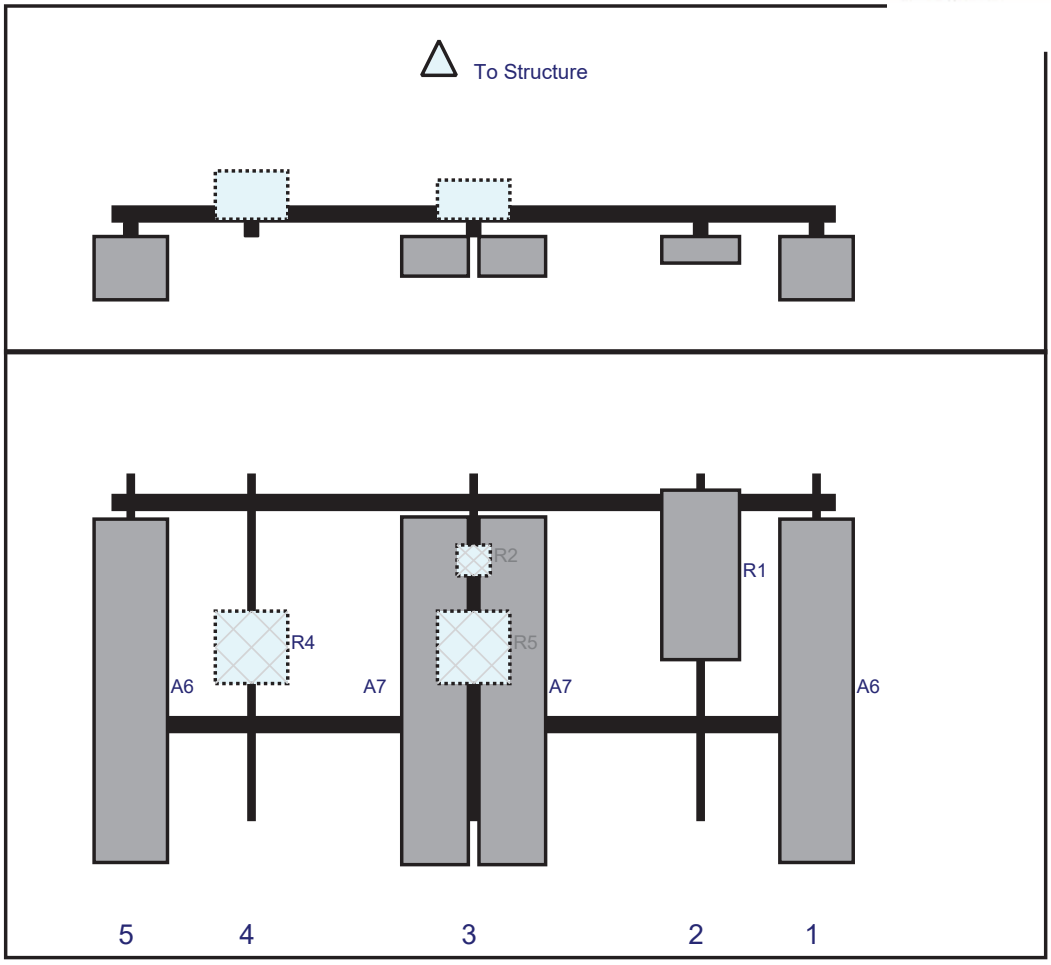

Ref#	Model	Height (in)	Width (in)	H Dist Frm L.	Pipe #	Pipe Pos V	Ant Pos	C. Ant Frm T.	Ant H Off	Status	Validation
A6	LPA-80063-6CF-EDIN-2	71.1	15.2	146	1	a	Front	45	0	Retained	03/09/2021
R1	MT6407-77A	35.1	16.1	122	2	a	Front	21	0	Added	
A7	JAHH-65B-R3B	72	13.8	75	3	a	Front	45	8	Retained	03/09/2021
A7	JAHH-65B-R3B	72	13.8	75	3	b	Front	45	-8	Retained	03/09/2021
R2	CBC78T-DS-43-2X	6.4	6.9	75	3	a	Behind	18	0	Added	
R5	B5/B13 RRH-BR04C (RFV01U-D2A)	15	15	75	3	a	Behind	36	0	Added	
R4	B2/B66A RRH-BR049 (RFV01U-D1A)	15	15	29	4	a	Behind	36	0	Added	
A6	LPA-80063-6CF-EDIN-2	71.1	15.2	4	5	a	Front	45	0	Retained	03/09/2021

Copyright 2019 by Tower Engineering Solutions, LLC. All Rights Reserved

MASER CONSULTING —CONNECTICUT—

Plan View

Front View
Looking at Structure

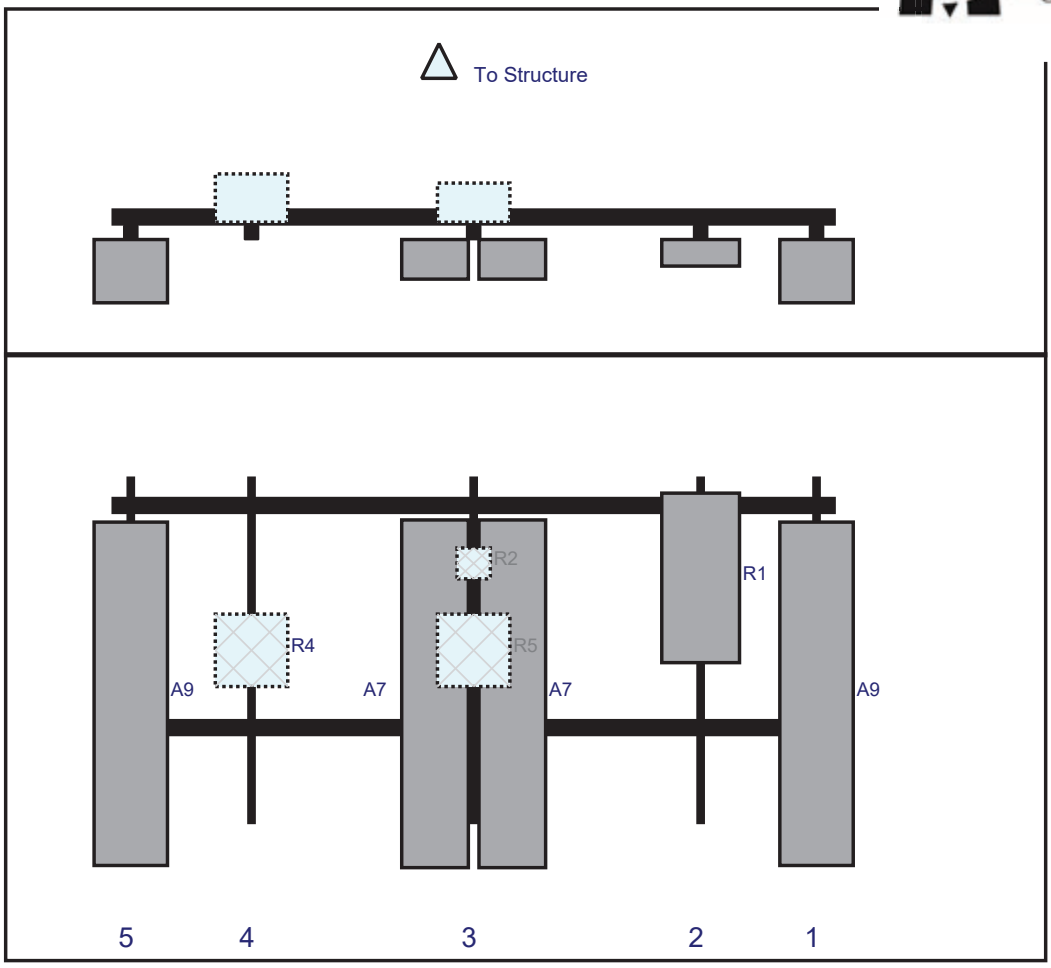

Ref#	Model	Height (in)	Width (in)	H Dist Frm L.	Pipe #	Pipe Pos V	Ant Pos	C. Ant Frm T.	Ant H Off	Status	Validation
A9	LPA-80063-6CF-EDIN-4	71.1	15.2	146	1	a	Front	45	0	Retained	03/09/2021
R1	MT6407-77A	35.1	16.1	122	2	a	Front	21	0	Added	
A7	JAHH-65B-R3B	72	13.8	75	3	a	Front	45	8	Retained	03/09/2021
A7	JAHH-65B-R3B	72	13.8	75	3	b	Front	45	-8	Retained	03/09/2021
R2	CBC78T-DS-43-2X	6.4	6.9	75	3	a	Behind	18	0	Added	
R5	B5/B13 RRH-BR04C (RFV01U-D2A)	15	15	75	3	a	Behind	36	0	Added	
R4	B2/B66A RRH-BR049 (RFV01U-D1A)	15	15	29	4	a	Behind	36	0	Added	
A9	LPA-80063-6CF-EDIN-4	71.1	15.2	4	5	a	Front	45	0	Retained	03/09/2021

Copyright 2019 by Tower Engineering Solutions, LLC. All Rights Reserved

MASER CONSULTING CONNECTICUT

Plan View

Front View
Looking at Structure

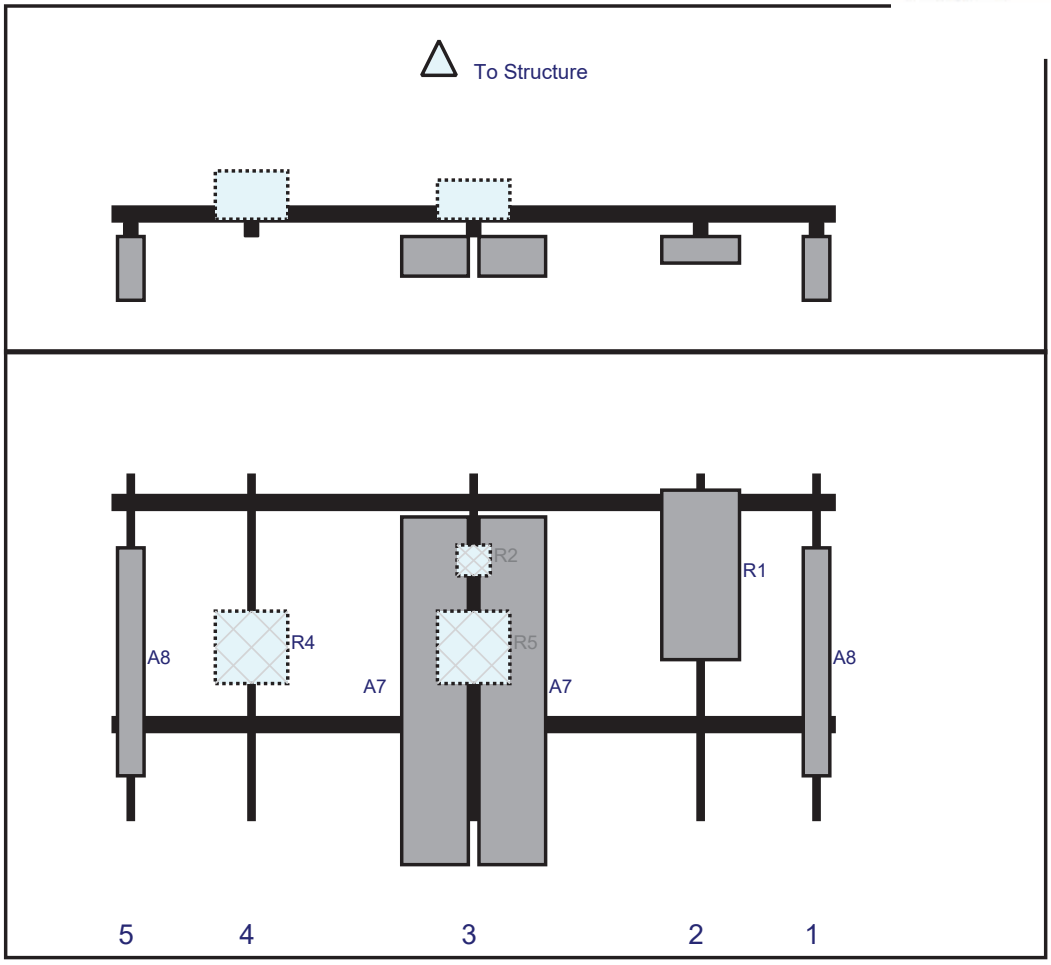

Ref#	Model	Height (in)	Width (in)	H Dist Frm L.	Pipe #	Pipe Pos V	Ant Pos	C. Ant Frm T.	Ant H Off	Status	Validation
A8	LPA-80080/4CF	47.2	5.5	146	1	a	Front	39	0	Retained	03/09/2021
R1	MT6407-77A	35.1	16.1	122	2	a	Front	21	0	Added	
A7	JAHH-65B-R3B	72	13.8	75	3	a	Front	45	8	Retained	03/09/2021
A7	JAHH-65B-R3B	72	13.8	75	3	b	Front	45	-8	Retained	03/09/2021
R2	CBC78T-DS-43-2X	6.4	6.9	75	3	a	Behind	18	0	Added	
R5	B5/B13 RRH-BR04C (RFV01U-D2A)	15	15	75	3	a	Behind	36	0	Added	
R4	B2/B66A RRH-BR049 (RFV01U-D1A)	15	15	29	4	a	Behind	36	0	Added	
A8	LPA-80080/4CF	47.2	5.5	4	5	a	Front	39	0	Retained	03/09/2021

Copyright 2019 by Tower Engineering Solutions, LLC. All Rights Reserved

Maser Consulting Connecticut

MASER CONSULTING — CONNECTICUT —

Subject:	*TIA-222-H Usage*	
Site Information	*Site ID:*	*469337-VZW / MONROE WEST CT*
	Site Name:	*MONROE WEST CT*
	Carrier Name:	*Verizon Wireless*
	Address:	*474 Main Street* *Monroe, Connecticut 6468* *Fairfield County*
	Latitude:	*41.325553°*
	Longitude:	*-73.265847°*
Structure Information	*Tower Type:*	*190-Ft Monopole*
	Mount Type:	*12.50-Ft Platform*

To Whom It May Concern,

We respectfully submit the above referenced Antenna Mount Structural Analysis report in conformance with ANSI/TIA-222-H, Structural Standard for Antenna Supporting Structures and Antennas and Small Wind Turbine Support Structures.

The 2021 International Building Code states that, in Section 3108, telecommunication towers shall be designed and constructed in accordance with the provisions of TIA-222. The TIA-222-H is the latest revision of the TIA-222 Standard, effective as of January 01, 2018.

As with all ANSI standards and engineering best practice is to apply the most current revision of the standard. This ensures the engineer is applying all updates. As an example, the TIA-222-H standard includes updates to bring it in line with the latest AISC and ACI standards and it also incorporates the latest wind speed map by ASCE 7 based on updated studies of the wind data.

The TIA-222-H standard clarifies these specific requirements for the antenna mount analysis such as modeling method, seismic analysis, 30-degree increment wind direction and maintenance loading. Therefore, it is our opinion that TIA-222-H is the most appropriate standard for antenna mount structural analysis and is acceptable for use at this site to ensure the engineer is taking into account the most current engineering standard available.

Sincerely,

Taqi Khawaja, PE
Technical Manager

Exhibit F

Power Density/RF Emissions Report

Site Name: ***MONROE WEST CT***
Cumulative Power Density

Operator	Operating Frequency	Number of Trans.	ERP Per Trans.	Total ERP	Distance to Target	Calculated Power Density	Maximum Permissible Exposure*	Fraction of MPE
	(MHz)		(watts)	(watts)	(feet)	(mW/cm^2)	(mW/cm^2)	(%)
VZW 700	751	4	628	2511	160	0.0035	0.5007	0.70%
VZW CDMA	878.49	2	478	955	160	0.0013	0.5857	0.23%
VZW Cellular	874	4	725	2902	160	0.0041	0.5827	0.70%
VZW PCS	1980	4	1525	6100	160	0.0086	1.0000	0.86%
VZW AWS	2120	4	1493	5973	160	0.0084	1.0000	0.84%
VZW CBAND	3730.005	4	6531	26125	160	0.0367	1.0000	3.67%
Total Percentage of Maximum Permissible Exposure								7.00%

*Guidelines adopted by the FCC on August 1, 1996, 47 CFR Part 1 based on NCRP Report 86, 1986 and generally on ANSI/IEEE C95.1-1992
**Calculation includes a -10 dB Off Beam Antenna Pattern Adjustment pursuant to Attachments B and C of the Siting Council's November 10, 2015 Memorandum for Exempt Modification filings

MHz = Megahertz
mW/cm^2 = milliwatts per square centimeter
ERP = Effective Radiated Power

Absolute worst case maximum values used.

Exhibit F

Recipient Mailings

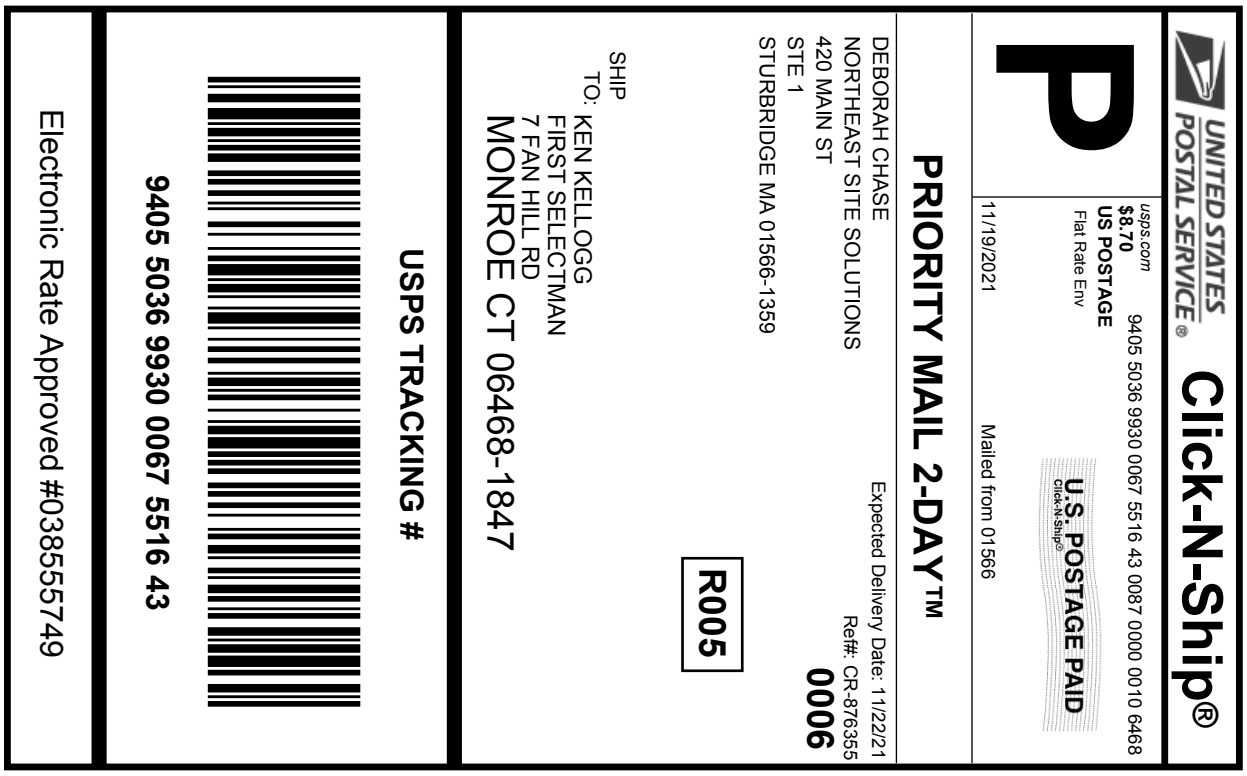

Cut on dotted line.

Instructions

1. **Each Click-N-Ship® label is unique. Labels are to be used as printed and used only once. DO NOT PHOTO COPY OR ALTER LABEL.**
2. **Place your label so it does not wrap around the edge of the package.**
3. **Adhere your label to the package. A self-adhesive label is recommended. If tape or glue is used, DO NOT TAPE OVER BARCODE. Be sure all edges are secure.**
4. **To mail your package with PC Postage®, you may schedule a Package Pickup online, hand to your letter carrier, take to a Post Office™, or drop in a USPS collection box.**
5. **Mail your package on the "Ship Date" you selected when creating this label.**

Click-N-Ship® Label Record

USPS TRACKING # :
9405 5036 9930 0067 5516 43

Trans. #:	548792961
Print Date:	11/19/2021
Ship Date:	11/19/2021
Expected Delivery Date:	11/22/2021

Priority Mail® Postage:	**$8.70**
Total:	**$8.70**

From: DEBORAH CHASE
NORTHEAST SITE SOLUTIONS
420 MAIN ST
STE 1
STURBRIDGE MA 01566-1359

Ref#: CR-876355

To: KEN KELLOGG
FIRST SELECTMAN
7 FAN HILL RD
MONROE CT 06468-1847

* Retail Pricing Priority Mail rates apply. There is no fee for USPS Tracking® service on Priority Mail service with use of this electronic rate shipping label. Refunds for unused postage paid labels can be requested online 30 days from the print date.

Thank you for shipping with the United States Postal Service!
Check the status of your shipment on the USPS Tracking® page at usps.com

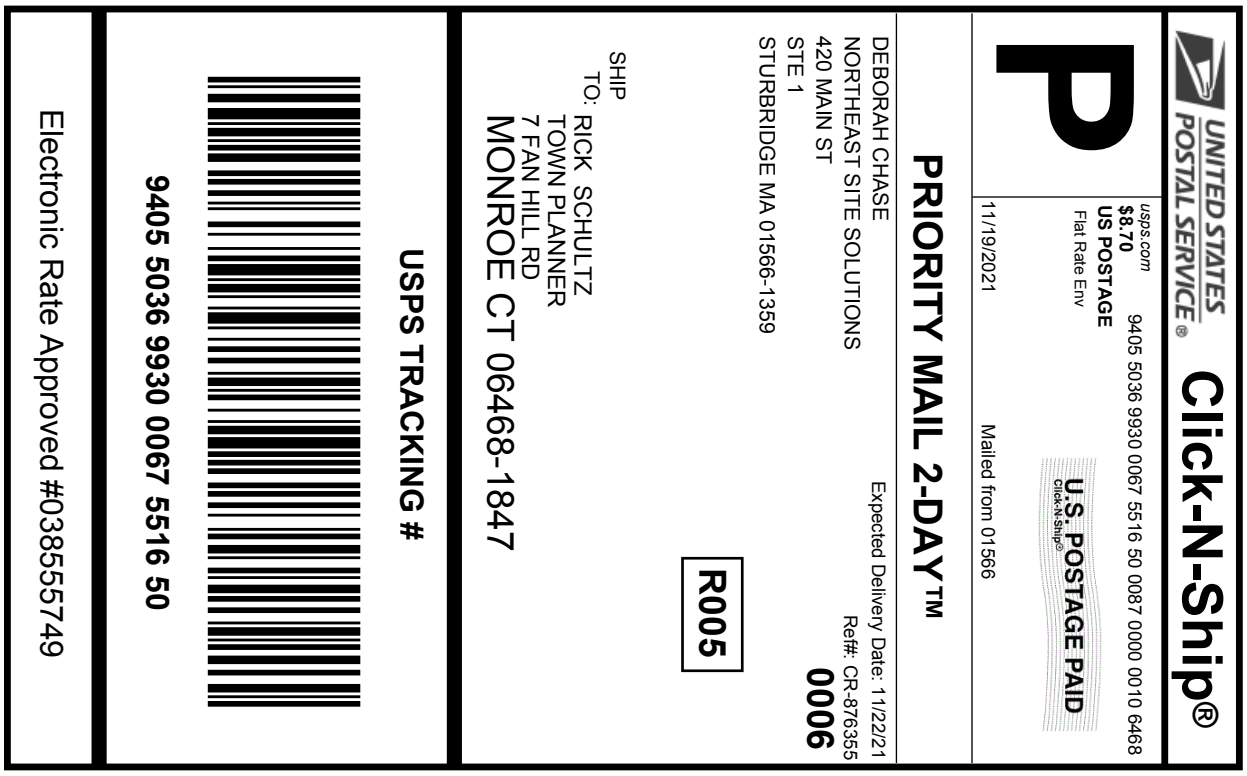

Cut on dotted line.

Instructions

1. **Each Click-N-Ship® label is unique. Labels are to be used as printed and used only once. DO NOT PHOTO COPY OR ALTER LABEL.**
2. **Place your label so it does not wrap around the edge of the package.**
3. **Adhere your label to the package. A self-adhesive label is recommended. If tape or glue is used, DO NOT TAPE OVER BARCODE. Be sure all edges are secure.**
4. **To mail your package with PC Postage®, you may schedule a Package Pickup online, hand to your letter carrier, take to a Post Office™, or drop in a USPS collection box.**
5. **Mail your package on the "Ship Date" you selected when creating this label.**

Click-N-Ship® Label Record

USPS TRACKING # :
9405 5036 9930 0067 5516 50

Trans. #:	548792961
Print Date:	11/19/2021
Ship Date:	11/19/2021
Expected Delivery Date:	11/22/2021

Priority Mail® Postage:	**$8.70**
Total:	**$8.70**

From: DEBORAH CHASE
NORTHEAST SITE SOLUTIONS
420 MAIN ST
STE 1
STURBRIDGE MA 01566-1359

Ref#: CR-876355

To: RICK SCHULTZ
TOWN PLANNER
7 FAN HILL RD
MONROE CT 06468-1847

* Retail Pricing Priority Mail rates apply. There is no fee for USPS Tracking® service on Priority Mail service with use of this electronic rate shipping label. Refunds for unused postage paid labels can be requested online 30 days from the print date.

Thank you for shipping with the United States Postal Service!
Check the status of your shipment on the USPS Tracking® page at usps.com

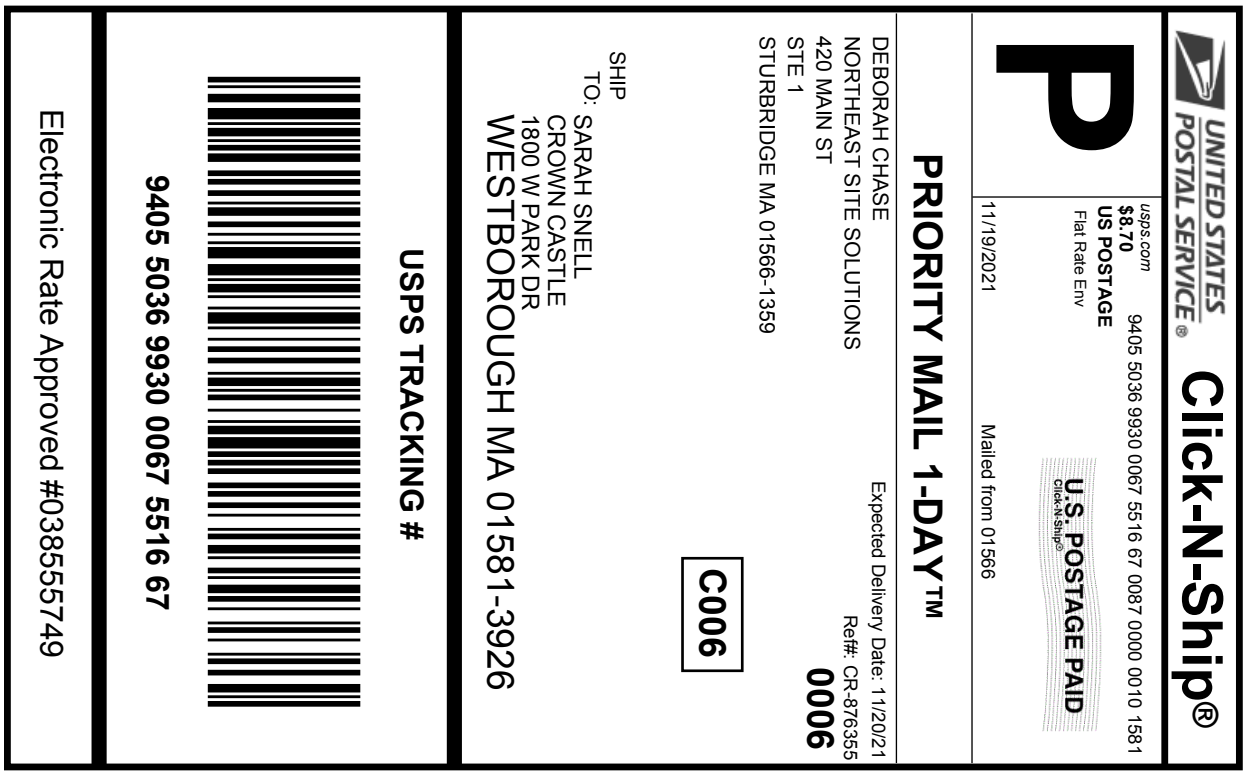

Cut on dotted line.

Instructions

1. **Each Click-N-Ship® label is unique. Labels are to be used as printed and used only once. DO NOT PHOTO COPY OR ALTER LABEL.**
2. **Place your label so it does not wrap around the edge of the package.**
3. **Adhere your label to the package. A self-adhesive label is recommended. If tape or glue is used, DO NOT TAPE OVER BARCODE. Be sure all edges are secure.**
4. **To mail your package with PC Postage®, you may schedule a Package Pickup online, hand to your letter carrier, take to a Post Office™, or drop in a USPS collection box.**
5. **Mail your package on the "Ship Date" you selected when creating this label.**

Click-N-Ship® Label Record

USPS TRACKING # :
9405 5036 9930 0067 5516 67

Trans. #:	548792961
Print Date:	11/19/2021
Ship Date:	11/19/2021
Expected Delivery Date:	11/20/2021

Priority Mail® Postage:	**$8.70**
Total:	**$8.70**

From: DEBORAH CHASE
NORTHEAST SITE SOLUTIONS
420 MAIN ST
STE 1
STURBRIDGE MA 01566-1359

Ref#: CR-876355

To: SARAH SNELL
CROWN CASTLE
1800 W PARK DR
WESTBOROUGH MA 01581-3926

* Retail Pricing Priority Mail rates apply. There is no fee for USPS Tracking® service on Priority Mail service with use of this electronic rate shipping label. Refunds for unused postage paid labels can be requested online 30 days from the print date.

Thank you for shipping with the United States Postal Service!
Check the status of your shipment on the USPS Tracking® page at usps.com

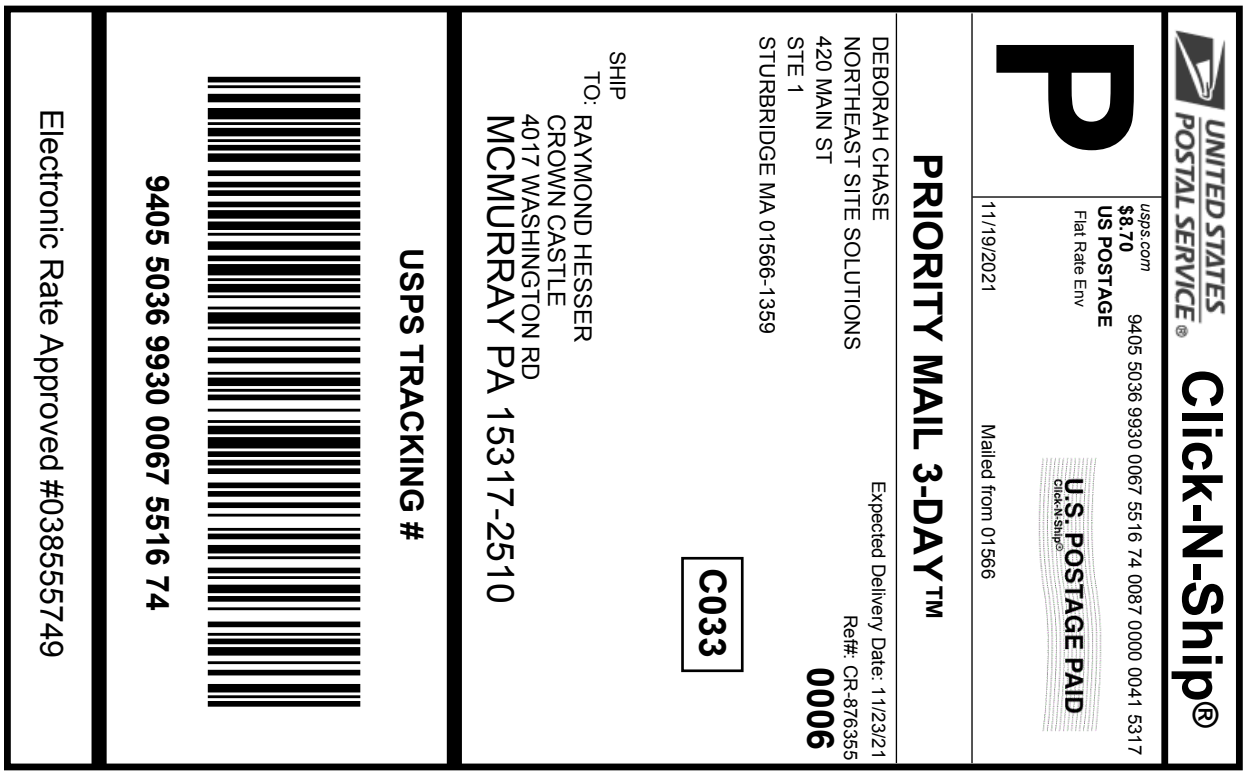

Cut on dotted line.

Instructions

1. **Each Click-N-Ship® label is unique. Labels are to be used as printed and used only once. DO NOT PHOTO COPY OR ALTER LABEL.**
2. **Place your label so it does not wrap around the edge of the package.**
3. **Adhere your label to the package. A self-adhesive label is recommended. If tape or glue is used, DO NOT TAPE OVER BARCODE. Be sure all edges are secure.**
4. **To mail your package with PC Postage®, you may schedule a Package Pickup online, hand to your letter carrier, take to a Post Office™, or drop in a USPS collection box.**
5. **Mail your package on the "Ship Date" you selected when creating this label.**

Click-N-Ship® Label Record

USPS TRACKING # :
9405 5036 9930 0067 5516 74

Trans. #:	548792961
Print Date:	11/19/2021
Ship Date:	11/19/2021
Expected Delivery Date:	11/23/2021

Priority Mail® Postage:	**$8.70**
Total:	**$8.70**

From: DEBORAH CHASE
NORTHEAST SITE SOLUTIONS
420 MAIN ST
STE 1
STURBRIDGE MA 01566-1359

Ref#: CR-876355

To: RAYMOND HESSER
CROWN CASTLE
4017 WASHINGTON RD
MCMURRAY PA 15317-2510

* Retail Pricing Priority Mail rates apply. There is no fee for USPS Tracking® service on Priority Mail service with use of this electronic rate shipping label. Refunds for unused postage paid labels can be requested online 30 days from the print date.

Thank you for shipping with the United States Postal Service!
Check the status of your shipment on the USPS Tracking® page at usps.com

876355

UNITED STATES POSTAL SERVICE.

SOUTH WINDSOR
850 CLARK ST
SOUTH WINDSOR, CT 06074-9998
(800)275-8777

11/23/2021 01:51 PM

Product	Qty	Unit Price	Price
Prepaid Mail Westborough, MA 01581 Weight: 0 lb 2.00 oz Acceptance Date: Tue 11/23/2021 Tracking #: 9405 5036 9930 0067 5516 67	1		$0.00
Prepaid Mail Monroe, CT 06468 Weight: 0 lb 7.10 oz Acceptance Date: Tue 11/23/2021 Tracking #: 9405 5036 9930 0067 5516 50	1		$0.00
Prepaid Mail Monroe, CT 06468 Weight: 0 lb 7.10 oz Acceptance Date: Tue 11/23/2021 Tracking #: 9405 5036 9930 0067 5516 43	1		$0.00
Prepaid Mail Canonsburg, PA 15317 Weight: 0 lb 7.30 oz Acceptance Date: Tue 11/23/2021 Tracking #: 9405 5036 9930 0067 5516 74	1		$0.00
Grand Total:			$0.00