SHEET INDEX

NO.	DESCRIPTION
T-1	TITLE SHEET
T-2	GENERAL NOTES
C-1	SITE PLAN
C-1A	ENLARGED SITE PLAN
C-2	ENLARGED EQUIPMENT LAYOUT
C-3	SITE ELEVATION
C-4	ANTENNA LAYOUTS
C-5	ANTENNA DETAILS
C-5A	SITE DETAILS
C-6	ANTENNA SCHEDULES
C-7	EQUIPMENT SPECS
E-1	UTILITY PLAN AND NOTES
E-2	FINAL SINGLE LINE DIAGRAM/PANEL SCHEDULE
E-3	GROUNDING DETAILS AND NOTES
E-4	SITE CONFIGURATIONS MATERIAL LIST
E-4A	SITE CONFIGURATIONS MATERIAL LIST
E-5	SITE CONFIGURATIONS MATERIAL LIST

DRIVING DIRECTIONS

FROM: IGOR SIKORSKY MEMORIAL AIRPORT
DEPART ON GREAT MEADOW RD (NORTH-EAST)
BEAR RIGHT (NORTH-WEST) ONTO SR-113
TURN RIGHT (NORTH-EAST) ONTO SURF AVE
TAKE RAMP (RIGHT) ONTO I-95
AT EXIT 37, TURN RIGHT ONTO RAMP
TURN LEFT TO STAY ON RAMP
BEAR LEFT (NORTH-WEST) ONTO HIGH ST
ROAD NAME CHANGES TO ORONOQUE RD
TURN RIGHT TO STAY ON ORONOQUE RD
ARRIVE AT SITE

VICINITY MAP

Sirius XM™ SATELLITE RADIO

SITE NAME

HAR040S

SITE I.D.

HAR040S

SITE ADDRESS

423 ORONOQUE RD.
MILFORD, CT 06460

STRUCTURE TYPE

MONOPOLE

PROJECT TEAM

CROWN CASTLE
shaping the wireless world
CROWN CASTLE
2000 CORPORATE DR.
CANONSBURG, PA 15317
PHONE: (724) 416-2000

PROJECT MANAGER/STRUCTURAL ENGINEER
SITE ACQUISITION

FULLERTON ENGINEERING · DESIGN
9600 W. BRYN MAWR AVE., SUITE 200
ROSEMONT, ILLINOIS 60018
TEL: 847-292-0200
FAX: 847-292-0206
www.FullertonEngineering.com

ENGINEER

CODE COMPLIANCE:

- HANDICAP ACCESS REQUIREMENTS ARE NOT REQUIRED
- FACILITY IS UNMANNED AND NOT FOR HUMAN HABITATION
- FACILITY HAS NO PLUMBING OR REFRIGERANTS
- THIS FACILITY SHALL MEET OR EXCEED ALL FAA AND FCC REGULATORY REQUIREMENTS

SCOPE OF WORK:

- INSTALL (1) NEW SIRIUS XM PANEL ANTENNA ON EXISTING MONOPOLE
- INSTALL NEW SIRIUS XM VSAT DISH, RX DISH, AND GPS ON EXISTING MONOPOLE
- INSTALL NEW SIRIUS XM CABINET ON NEW 6'x6' CONCRETE PAD
- INSTALL NEW UTILITY H-FRAME WITH NEW UTILITY SERVICE
- ALL NEW MATERIAL SHALL BE FURNISHED AND INSTALLED BY CONTRACTOR UNLESS NOTED OTHERWISE. CABINETS, ANTENNAS AND CABLES FURNISHED BY OWNER AND INSTALLED BY CONTRACTOR

PROJECT SUMMARY

SITE NAME:	HAR040S
SITE NO:	HAR040S CCI#806359
SITE ADDRESS:	423 ORONOQUE RD. MILFORD, CT 06460
COUNTY:	NEW HAVEN
SITE COORDINATES LATITUDE: LONGITUDE: GROUND ELEVATION:	 41.23784166° (NAD 83) -73.08611111° (NAD 83) 159' (AMSL)
JURISDICTION:	CITY OF NEW HAVEN
ZONING:	-
APPLICANT:	SIRIUS XM 1500 ECKINGTON PL NE WASHINGTON, DC 20002 TEL: (202) 380-4157 FAX: (202) 380-4570
LANDLORD:	CROWN CASTLE 2000 CORPORATE DR. CANONSBURG, PA 15317 PHONE: (724) 416-2000
BUILDING CODE:	2003 INTERNATIONAL BULDING CODE
ELECTRICAL CODE:	2005 NATIONAL ELECTRIC CODE

ENGINEER'S LICENSE

CERTIFICATION STATEMENT:

I CERTIFY THAT THESE DRAWING WERE PREPARED BY ME OR UNDER MY DIRECT SUPERVISION AND CONTROL, AND TO THE BEST OF MY KNOWLEDGE AND BELIEF COMPLY WITH THE REQUIREMENTS OF THE 2003 INTERNATIONAL BUILDING CODE.

LICENSED ENGINEER - STATE OF CONNECTICUT

STATE OF CONNECTICUT
HENRY M. BELLAGAMBA
No. 25358
LICENSED
PROFESSIONAL ENGINEER

SIGNED DATE: 02/25/2014
EXPIRES: 1/31/2015 LICENSE#: 25358

APPROVALS

CONST.		DATE
RF		DATE
OPS		DATE
LANDLORD		DATE

DRAWING SCALED TO 11"x17"

Sirius XM™ SATELLITE RADIO

CROWN CASTLE
shaping the wireless world
CROWN CASTLE
2000 CORPORATE DR.
CANONSBURG, PA 15317
PHONE: (724) 416-2000

FULLERTON ENGINEERING · DESIGN
9600 W. BRYN MAWR AVE., SUITE 200
ROSEMONT, ILLINOIS 60018
TEL: 847-292-0200
FAX: 847-292-0206
www.FullertonEngineering.com

CHECKED BY:	JP
APPROVED BY:	MB

#	DATE	DESCRIPTION	INT.
0	2/07/14	90% REVIEW	DW
1	02/25/14	FINAL	JB

SITE NAME
HAR040S

SITE I.D.
HAR040S

SITE ADDRESS
423 ORONOQUE RD.
MILFORD, CT 06460

SHEET NAME
TITLE SHEET

SHEET NUMBER
T-1

THIS DRAWING IS THE PROPERTY OF FULLERTON ENGINEERING CONSULTANTS, INC. IT IS FOR THE EXCLUSIVE USE OF THIS PROJECT. ANY RE-USE OF THIS DRAWING WITHOUT THE EXPRESSED WRITTEN CONSENT OF FULLERTON ENGINEERING CONSULTANTS, INC. IS PROHIBITED.

GENERAL CONSTRUCTION NOTES:

1. THIS SET OF PLANS HAS BEEN PREPARED FOR THE PURPOSES OF MUNICIPAL AND AGENCY REVIEW AND APPROVAL.
2. THESE PLANS ARE INTENDED TO BE USED TO DIRECT THE PROPOSED LAYOUT. DRAWINGS SHOULD NOT BE SCALED UNLESS OTHERWISE NOTED. PLANS, ELEVATIONS AND DETAILS ARE INTENDED TO SHOW THE END RESULT OF DESIGN. MINOR MODIFICATIONS MAY BE REQUIRED TO SUIT JOB DIMENSIONS OR CONDITIONS.
3. THE CONTRACTOR SHALL VERIFY ALL DIMENSIONS AND CONDITIONS AND NOTIFY THE PROJECT MANAGER OF ANY DISCREPANCIES BEFORE STARTING ANY WORK.
4. ALL EQUIPMENT AND MATERIALS SHALL BE INSTALLED IN ACCORDANCE WITH THE MANUFACTURER'S RECOMMENDATIONS UNLESS OTHERWISE NOTED BY THE ENGINEER OF RECORD.
5. CONTRACTOR SHALL BE RESPONSIBLE FOR ALL WORK PERFORMED AND MATERIALS INSTALLED TO BE IN STRICT CONFORMANCE, AS A MINIMUM STANDARD, WITH ALL APPLICABLE CODES, REGULATIONS AND ORDINANCES HAVING JURISDICTION. ELECTRICAL SYSTEMS SHALL BE INSTALLED IN CONFORMANCE WITH THE NATIONAL ELECTRICAL CODE, AND ALL OTHER LOCAL AND STATE JURISDICTIONAL CODES, ORDINANCES, AND WITH LOCAL UTILITY COMPANY SPECIFICATIONS, WHICHEVER IS MORE STRINGENT.
6. THE CONTRACTOR SHALL KEEP CONTRACT AREA CLEAN, HAZARD FREE AND DISPOSE OF ALL DIRT, STUMPS, STONES, RUBBISH OR DEBRIS IN ACCORDANCE WITH ALL LOCAL AND ENVIRONMENTAL LAWS. NO MATERIALS OR EQUIPMENT SHALL BE PLACED ANYWHERE ON OR IN THE STRUCTURE WITHOUT MAKING ADEQUATE PROVISIONS TO PROTECT EXISTING PROPERTY. UPON COMPLETION, REPAIR ANY DAMAGE THAT MAY HAVE OCCURRED DURING CONSTRUCTION. REPAIR ALL EXISTING WALL SURFACES DAMAGED DURING CONSTRUCTION SUCH THAT THEY MATCH AND BLEND WITH ADJACENT SURFACES.
7. THE CONTRACTOR SHALL BE SOLELY RESPONSIBLE AND HAVE CONTROL OVER CONSTRUCTION MEANS, METHODS, TECHNIQUES, SEQUENCES, AND PROCEDURES.

WARRANTIES AND BONDS:

1. THE CONTRACTOR SHALL GUARANTEE ALL LABOR AND MATERIALS USED IN THIS PROJECT FOR A MINIMUM PERIOD OF ONE (1) YEAR COMMENCING FROM THE DATE OF FINAL ACCEPTANCE BY THE CLIENT. THE CONTRACTOR IS NOT REQUIRED TO GUARANTEE MATERIAL SUPPLIED BY THE OWNER.
2. FINAL DATE OF ACCEPTANCE IS DEEMED AS THE DATE THAT ALL REQUIRED STATE AND FEDERAL APPROVAL HAVE BEEN OBTAINED INCLUDING, BUT NOT LIMITED TO:
   A. FINAL INSPECTION- D14
   B. CERTIFICATE OF OCCUPANCY
3. ANY DEFICIENCIES THAT COME EVIDENT DURING THIS ONE (1) YEAR PERIOD SHALL BE CORRECTED BY THE CONTRACTOR AT THE CONTRACTOR'S EXPENSE.

DELIVERY, STORAGE AND HANDLING:

1. THE CONTRACTOR SHALL BE RESPONSIBLE FOR ALL PROCEDURES AND SCHEDULING ASSOCIATED WITH HOISTING, STAGING, AND ERECTING OF MATERIALS AND EQUIPMENT TO AND/OR UPON THE SITE.
2. ALL ELEMENTS OF THE EXISTING SITE, I.E. STRUCTURES, SITE PLANTINGS, ETC. SHALL BE PROTECTED AS NECESSARY FROM SAID ACTIONS. THIS WORK MUST BE DONE IN A SAFE, SECURE NONDESTRUCTIVE MANNER FOR PROTECTING PERSONNEL AND PROPERTY.

SITE WORK GENERAL NOTES:

1. THIS SET OF PLANS HAS BEEN PREPARED FOR THE PURPOSES OF MUNICIPAL AND AGENCY REVIEW AND APPROVAL.
2. THESE PLANS ARE INTENDED TO BE USED TO DIRECT THE PROPOSED LAYOUT. DRAWINGS SHOULD NOT BE SCALED UNLESS OTHERWISE NOTED. PLANS, ELEVATIONS AND DETAILS ARE INTENDED TO SHOW THE END RESULT OF DESIGN. MINOR MODIFICATIONS MAY BE REQUIRED TO SUIT JOB DIMENSIONS OR CONDITIONS.
3. THE CONTRACTOR SHALL VERIFY ALL DIMENSIONS AND CONDITIONS AND NOTIFY THE PROJECT MANAGER OF ANY DISCREPANCIES BEFORE STARTING ANY WORK.
4. ALL EQUIPMENT AND MATERIALS SHALL BE INSTALLED IN ACCORDANCE WITH THE MANUFACTURER'S RECOMMENDATIONS UNLESS OTHERWISE NOTED BY THE ENGINEER OF RECORD.
5. CONTRACTOR SHALL BE RESPONSIBLE FOR ALL WORK PERFORMED AND MATERIALS INSTALLED TO BE IN STRICT CONFORMANCE, AS A MINIMUM STANDARD, WITH ALL APPLICABLE CODES, REGULATIONS AND ORDINANCES HAVING JURISDICTION. ELECTRICAL SYSTEMS SHALL BE INSTALLED IN CONFORMANCE WITH THE NATIONAL ELECTRICAL CODE, AND ALL OTHER LOCAL AND STATE JURISDICTIONAL CODES, ORDINANCES, AND WITH LOCAL UTILITY COMPANY SPECIFICATIONS, WHICHEVER IS MORE STRINGENT.
6. THE CONTRACTOR SHALL KEEP CONTRACT AREA CLEAN, HAZARD FREE AND DISPOSE OF ALL DIRT, STUMPS, STONES, RUBBISH OR DEBRIS IN ACCORDANCE WITH ALL LOCAL AND ENVIRONMENTAL LAWS. NO MATERIALS OR EQUIPMENT SHALL BE PLACED ANYWHERE ON OR IN THE STRUCTURE WITHOUT MAKING ADEQUATE PROVISIONS TO PROTECT EXISTING PROPERTY. UPON COMPLETION, REPAIR ANY DAMAGE THAT MAY HAVE OCCURRED DURING CONSTRUCTION. REPAIR ALL EXISTING WALL SURFACES DAMAGED DURING CONSTRUCTION SUCH THAT THEY MATCH AND BLEND WITH ADJACENT SURFACES.
7. THE CONTRACTOR SHALL BE SOLELY RESPONSIBLE AND HAVE CONTROL OVER CONSTRUCTION MEANS, METHODS, TECHNIQUES, SEQUENCES, AND PROCEDURES.
8. THE CONTRACTOR SHALL CALL UTILITIES PRIOR TO THE START OF CONSTRUCTION.
9. ALL SITE WORK SHALL BE AS INDICATED ON THE DRAWING AND STIPULATED IN THE SPECIFICATION PROJECT SUMMARY.
10. IF NECESSARY, RUBBISH, STUMPS, DEBRIS, STICKS, STONES, AND OTHER REFUSE SHALL BE REMOVED FROM THE SITE AND DISPOSED OF LEGALLY.
11. THE SITE SHALL BE GRADED TO CAUSE SURFACE WATER FLOW AWAY FROM THE EQUIPMENT SHELTER AND TOWER AREAS.
12. NO FILL OR EMBANKMENT MATERIAL SHALL BE PLACED ON FROZEN GROUND. FROZEN MATERIALS, SNOW OR ICE SHALL NOT BE PLACED IN ANY FILL OR EMBANKMENT.
13. THE SUB GRADE SHALL BE COMPACTED AND BROUGHT TO A SMOOTH UNIFORM GRADE PRIOR TO FINISHED SURFACE APPLICATION.
14. ALL EXISTING INACTIVE SEWER, WATER, GAS, ELECTRIC AND OTHER UTILITIES, WHICH INTERFERE WITH THE EXECUTION OF THE WORK, SHALL BE REMOVED AND/OR CAPPED, PLUGGED OR OTHERWISE DISCONTINUED AT POINTS WHICH WILL NOT INTERFERE WITH THE EXECUTION OF THE WORK, SUBJECT TO THE APPROVAL OF ENGINEERING.
15. THE AREAS OF THE OWNERS PROPERTY DISTURBED BY THE WORK AND NOT COVERED BY THE BUILDING OR DRIVEWAY, SHALL BE GRADED TO A UNIFORM SLOPE, FERTILIZED AND SEEDED.
16. CONTRACTOR SHALL MINIMIZE DISTURBANCE TO EXISTING SITE DURING CONSTRUCTION. EROSION CONTROL MEASURES, SHALL BE IN CONFORMANCE WITH THE LOCAL GUIDELINES FOR EROSION AND SEDIMENT CONTROL.
17. ALL BACK FILL SHALL BE COMPACTED TO 95% MODIFIED PROCTOR DENSITY AS DETERMINED BY ASTM STANDARD TEST PROCEDURES.

CONSTRUCTION SPECIFICATIONS:

1. THE CONTRACTOR SHALL VISIT THE SITE OF THE PROPOSED WORK AND FULLY ACQUAINT THEMSELVES WITH THE CONDITIONS AS THEY EXIST IN ORDER THAT ANY RESTRICTIONS PERTAINING TO THE WORK ARE UNDERSTOOD. ALL AREAS AND DIMENSIONS ARE INDICATED ON THE DRAWINGS AS ACCURATELY AS POSSIBLE, BUT ALL CONDITIONS SHALL BE VERIFIED BY EACH CONTRACTOR AND/OR SUBCONTRACTOR AT THE SITE. THE FAILURE OF THE CONTRACTOR TO EXAMINE OR RECEIVE ANY FORM, INSTRUMENT OR DOCUMENT, OR TO VISIT THE SITE SHALL NOT RELIEVE THE CONTRACTOR FROM ANY OBLIGATION WITH RESPECT TO THEIR QUOTED PRICE. THE SUBMISSION OF A QUOTATION SHALL ACKNOWLEDGE THAT THE CONTRACTOR AND THEIR SUBCONTRACTORS HAVE FULLY EXAMINED THE SITE AND KNOW THE EXISTING CONDITIONS AND HAVE MADE PROVISIONS FOR OPERATING UNDER THE CONDITIONS AS THEY EXIST AT THE SITE AND HAVE INCLUDED ALL NECESSARY ITEMS.
2. THE GENERAL CONTRACTOR'S RESPONSIBILITIES SHALL INCLUDE, BUT NOT BE LIMITED TO, CONSTRUCTION OF THE EQUIPMENT FOUNDATION, INCLUDING ELECTRICAL SERVICE, TELEPHONE CONDUITS, GROUNDING SYSTEM AND COORDINATION WITH LOCAL UTILITY COMPANIES.
3. THE ANTENNA INSTALLERS RESPONSIBILITIES SHALL INCLUDE, BUT NOT BE LIMITED TO, CABLE TRAY INSTALLATION, ROUTING OF CABLES FROM RADIO EQUIPMENT TO ANTENNAS, ASSOCIATED HARDWARE FOR SECURING ANTENNA CABLES, ANTENNA MOUNTS, DETERMINING SUPPLIER OF ANTENNAS, GROUNDING OF ANTENNAS TO GROUNDING SYSTEM, INSTALLING ANTENNAS AND VERIFYING WITH RADIO FREQUENCY ENGINEERS, THE ALIGNMENT, LOCATION, AND PROPER ORIENTATION OF ANTENNAS.
4. THE CONTRACTORS SHALL COORDINATE CONSTRUCTION ACTIVITIES WITH THE BUILDING LANDLORD IN ORDER TO AVOID CONFLICTS WITH CURRENT USE OF THE SITE.
5. THE OWNER MAY HAVE WORK PERFORMED UNDER SEPARATE CONTRACTS, CONCURRENTLY, WITH THE WORK OF THIS CONTRACT.
6. THE GENERAL CONTRACTOR SHALL PERMIT ACCESS TO THE PROJECT TO THESE CONTRACTORS TO PERFORM THEIR WORK.
7. CONTRACTOR SHALL CONFORM TO ALL APPLICABLE LOCAL, COUNTY, STATE, AND FEDERAL CODES, LAWS AND REQUIREMENTS, INCLUDING OSHA.
8. THE CONTRACTOR SHALL APPLY AND PAY FOR THE CONSTRUCTION PERMIT, CERTIFICATE OF OCCUPANCY AND ALL OTHER REQUIRED PERMITS OR LICENSES. THE CONTRACTOR IS RESPONSIBLE FOR OBTAINING ALL INSPECTIONS.
9. CARE SHALL BE EXERCISED IN PROTECTING THE BUILDING OCCUPANTS DURING THE DEMOLITION AND CONSTRUCTION PERIODS OF THIS PROJECT. EVERY EFFORT SHALL BE MADE TO MAINTAIN A CLEAN OPERATION. DEBRIS SHALL NOT ACCUMULATE. ALL DEBRIS WILL BE DEPOSITED IN A SUITABLE CONTAINER ON A DAILY BASIS AND SHALL BE EMPTIED ON A REGULAR SCHEDULE. THE LOCATION OF THE CONTAINER SHALL BE COORDINATED WITH THE BUILDING MANAGER.
10. SAFETY PROCEDURES: ATTENTION IS DIRECTED TO FEDERAL, STATE, AND LOCAL LAWS, RULES AND REGULATIONS CONCERNING CONSTRUCTION SAFETY AND HEALTH STANDARDS. THE CONSTRUCTION COMPANY AWARDED THIS PROJECT SHALL ENSURE ALL WORKING SURROUNDINGS AND CONDITIONS ARE SANITARY AND ARE NOT HAZARDOUS OR DANGEROUS TO THE HEALTH OR SAFETY OF THE WORK CREWS OR BUILDING OCCUPANTS. PRECAUTION SHALL BE EXERCISED AT ALL TIMES FOR THE PROTECTION OF PERSONS AND PROPERTY. IT IS MANDATORY THAT THE SAFETY PROVISIONS OF APPLICABLE LOCAL LAWS, OSHA REGULATIONS AND BUILDING AND CONSTRUCTION CODES, BE OBSERVED FOR ALL CONTRACTORS AND ANTENNA RIGGERS.
11. THE GENERAL CONTRACTOR MUST COORDINATE ALL ROOF RELATED WORK WITH THE LANDLORD'S PRE-APPROVED ROOFER. THE GENERAL CONTRACTOR MUST CONFIRM THE COMPATIBILITY OF ALL MATERIALS AND ENSURE THAT ALL EXISTING ROOF WARRANTIES, IF ANY, REMAIN IN EFFECT.

Sirius XM SATELLITE RADIO

CROWN CASTLE
shaping the wireless world
CROWN CASTLE
2000 CORPORATE DR.
CANONSBURG, PA 15317
PHONE: (724) 416-2000

FULLERTON ENGINEERING · DESIGN
9600 W. BRYN MAWR AVE., SUITE 200
ROSEMONT, ILLINOIS 60018
TEL: 847-292-0200
FAX: 847-292-0206
www.FullertonEngineering.com

CHECKED BY:	JP
APPROVED BY:	MB

#	DATE	DESCRIPTION	INT.
0	2/07/14	90% REVIEW	DW
1	02/25/14	FINAL	JB

STATE OF CONNECTICUT
HENRY M. BELLAGAMBA
No. 25358
LICENSED
PROFESSIONAL ENGINEER

SIGNED DATE: 02/25/2014

SITE NAME
HAR040S

SITE I.D.
HAR040S

SITE ADDRESS
423 ORONOQUE RD.
MILFORD, CT 06460

SHEET NAME
GENERAL NOTES

SHEET NUMBER
T-2

THIS DRAWING IS THE PROPERTY OF FULLERTON ENGINEERING CONSULTANTS, INC. IT IS FOR THE EXCLUSIVE USE OF THIS PROJECT. ANY RE-USE OF THIS DRAWING WITHOUT THE EXPRESSED WRITTEN CONSENT OF FULLERTON ENGINEERING CONSULTANTS, INC. IS PROHIBITED.

ABBREVIATIONS

AFF	ABOVE FINISHED FLOOR
AGL	ABOVE GRADE LEVEL
AMSL	ABOVE MEAN SEA LEVEL
APPROX	APPROXIMATE
AWG	AMERICAN WIRE GAUGE
BLDG	BUILDING
BTS	BASE TRANSMISSION STATION
CLR	CLEAR
COL	COLUMN
CONC	CONCRETE
CND	CONDUIT
DWG	DRAWING
FT	FOOT(FEET)
EGB	EQUIPMENT GROUND BAR
ELEC	ELECTRICAL
EMT	ELECTRICAL METALLIC TUBING
ELEV	ELEVATION
EQUIP	EQUIPMENT
EXISTING	EXISTING
EXT	EXTERIOR
FND	FOUNDATION
GA	GAUGE
GALV	GALVANIZED
GPS	GLOBAL POSITIONING SYSTEM
GND	GROUND
LTE	LONG TERM EVOLUTION
MAX	MAXIMUM
MFR	MANUFACTURER
MGB	MASTER GROUND BAR
MIN	MINIMUM
NTS	NOT TO SCALE
O.C.	ON CENTER
OE/OT	OVERHEAD ELECTRIC/TELCO
RGS	RIGID GALVANIZED STEEL
IN	INCH(ES)
INT	INTERIOR
LB.(#)	POUND(S)
RRU	REMOTE RADIO UNIT
SF	SQUARE FOOT
STL	STEEL
TYP	TYPICAL
UE	UNDERGROUND ELECTRIC
UT	UNDERGROUND TELCO
UNO	UNLESS NOTED OTHERWISE
VIF	VERIFY IN FIELD
W/	WITH
XFMR	TRANSFORMER
℄	CENTERLINE
PL	PLATE

SYMBOLS

- ℄ CENTERLINE
- REVISION
- WORK POINT
- UTILITY POLE
- BRICK
- COMPRESSED STONE
- CONCRETE
- EARTH
- GRAVEL
- MASONRY
- STEEL
- CENTERLINE
- PROPERTY LINE
- LEASE LINE
- EASEMENT LINE
- CHAIN LINK FENCE
- WOOD FENCE
- UE — BELOW GRADE ELECTRIC
- UT — BELOW GRADE TELEPHONE
- OE/OT — OVERHEAD ELECTRIC/TELEPHONE
- A S-1 / A — SECTION REFERENCE

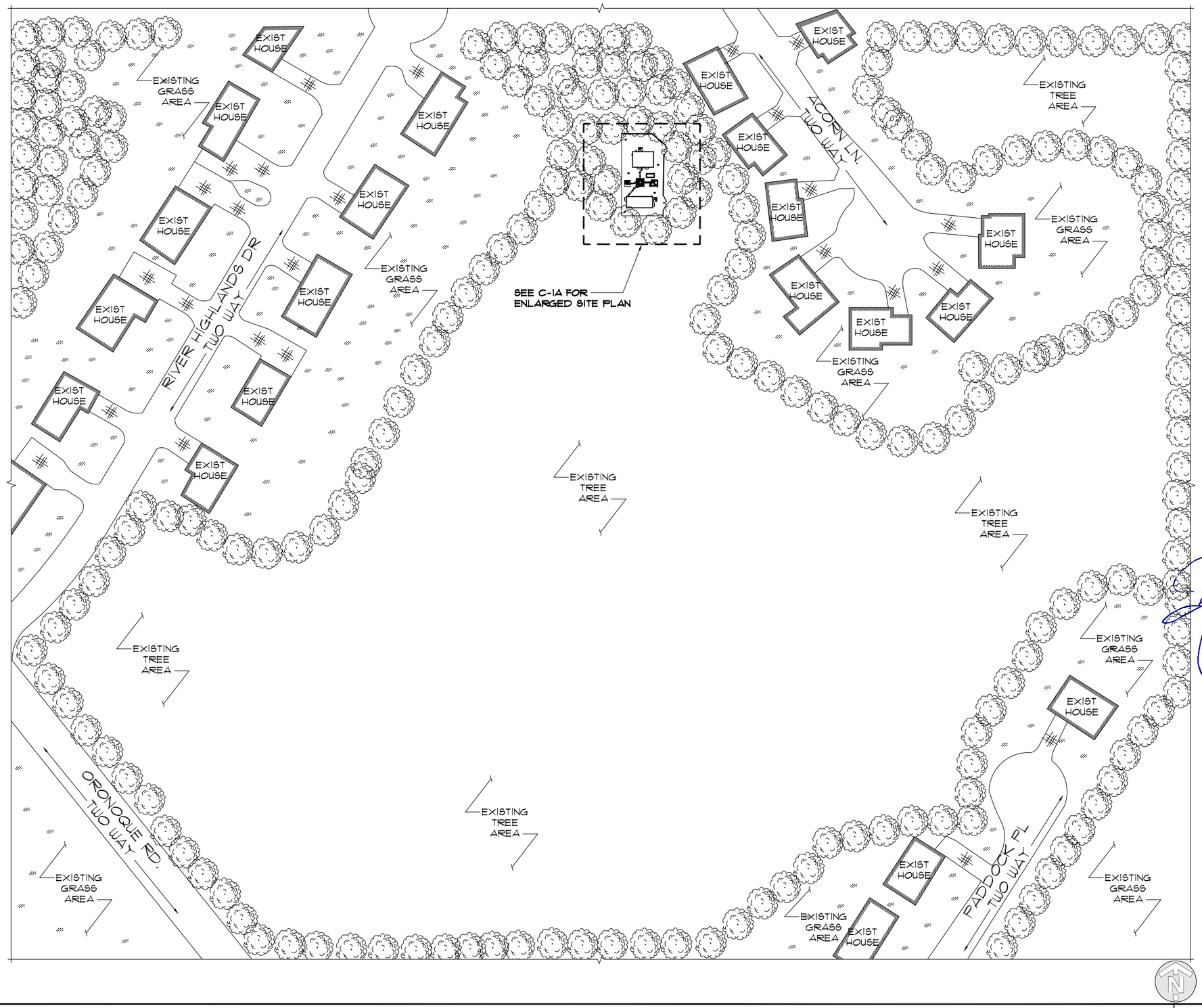

SITE PLAN

SCALE: 1" = 100'-0"

1

Sirius XM SATELLITE RADIO

CROWN CASTLE
shaping the wireless world
CROWN CASTLE
2000 CORPORATE DR.
CANONSBURG, PA 15317
PHONE: (724) 416-2000

FULLERTON ENGINEERING · DESIGN
9600 W. BRYN MAWR AVE., SUITE 200
ROSEMONT, ILLINOIS 60018
TEL: 847-292-0200
FAX: 847-292-0206
www.FullertonEngineering.com

CHECKED BY:	JP
APPROVED BY:	MB

#	DATE	DESCRIPTION	INT.
0	2/07/14	90% REVIEW	DW
1	02/25/14	FINAL	JB

STATE OF CONNECTICUT
HENRY M. BELLAGAMBA
No. 25358
LICENSED PROFESSIONAL ENGINEER

SIGNED DATE: 02/25/2014

SITE NAME
HAR040S

SITE I.D.
HAR040S

SITE ADDRESS
423 ORONOQUE RD.
MILFORD, CT 06460

SHEET NAME
SITE PLAN

SHEET NUMBER
C-1

THIS DRAWING IS THE PROPERTY OF FULLERTON ENGINEERING CONSULTANTS, INC. IT IS FOR THE EXCLUSIVE USE OF THIS PROJECT. ANY RE-USE OF THIS DRAWING WITHOUT THE EXPRESSED WRITTEN CONSENT OF FULLERTON ENGINEERING CONSULTANTS, INC. IS PROHIBITED.

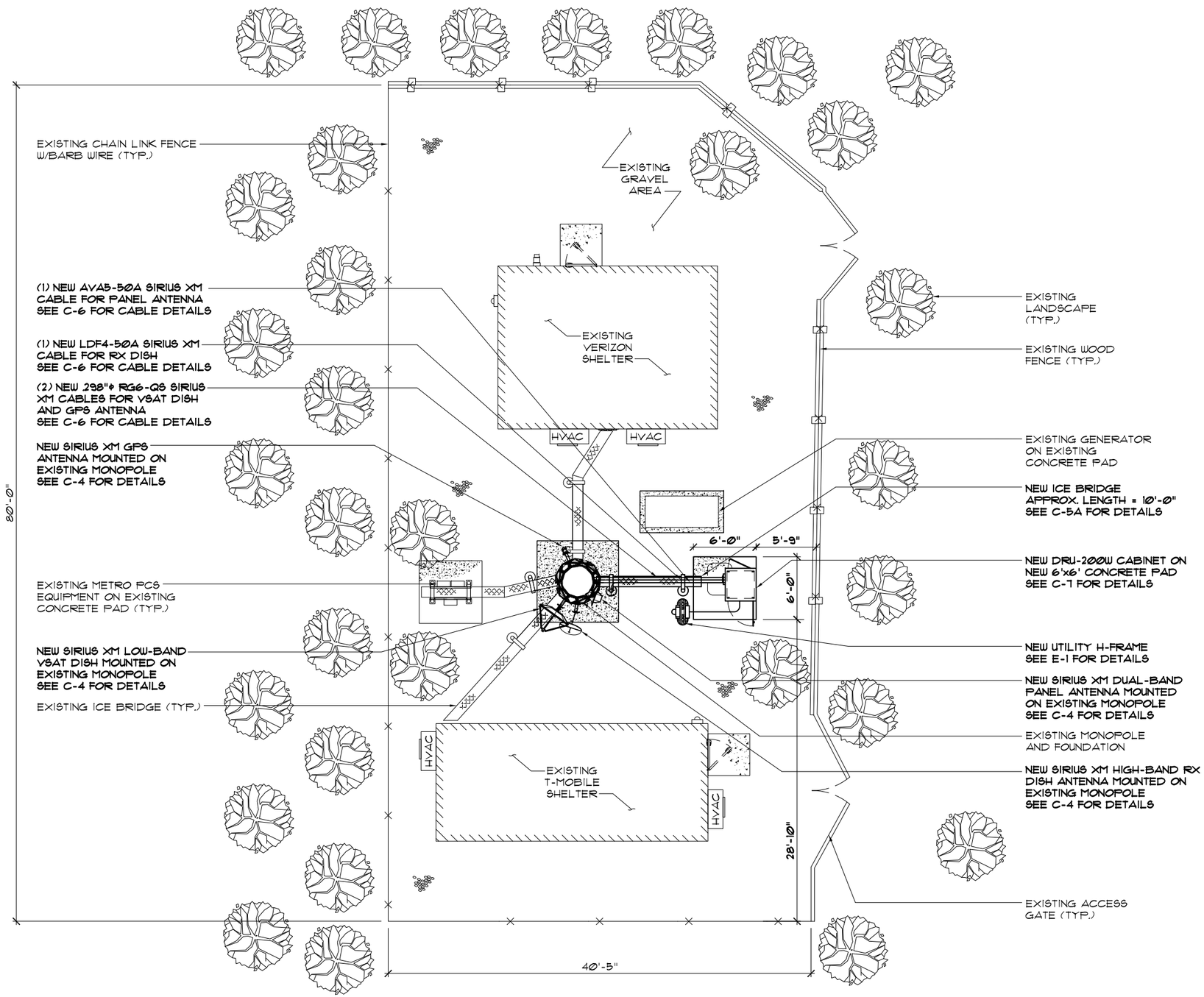

ENLARGED SITE PLAN

SCALE: 3/32" = 1'-0"

1

Sirius XM SATELLITE RADIO

CROWN CASTLE

shaping the wireless world
CROWN CASTLE
2000 CORPORATE DR.
CANONSBURG, PA 15317
PHONE: (724) 416-2000

FULLERTON ENGINEERING · DESIGN

9600 W. BRYN MAWR AVE., SUITE 200
ROSEMONT, ILLINOIS 60018
TEL: 847-292-0200
FAX: 847-292-0206
www.FullertonEngineering.com

CHECKED BY:	JP
APPROVED BY:	MB

#	DATE	DESCRIPTION	INT.
0	2/07/14	90% REVIEW	DW
1	02/25/14	FINAL	JB

STATE OF CONNECTICUT
HENRY M. BELLAGAMBA
No. 25358
LICENSED PROFESSIONAL ENGINEER

SIGNED DATE: 02/25/2014

SITE NAME

HAR040S

SITE I.D.

HAR040S

SITE ADDRESS

423 ORONOQUE RD.
MILFORD, CT 06460

SHEET NAME

ENLARGED SITE PLAN

SHEET NUMBER

C-1A

THIS DRAWING IS THE PROPERTY OF FULLERTON ENGINEERING CONSULTANTS, INC. IT IS FOR THE EXCLUSIVE USE OF THIS PROJECT. ANY RE-USE OF THIS DRAWING WITHOUT THE EXPRESSED WRITTEN CONSENT OF FULLERTON ENGINEERING CONSULTANTS, INC. IS PROHIBITED.

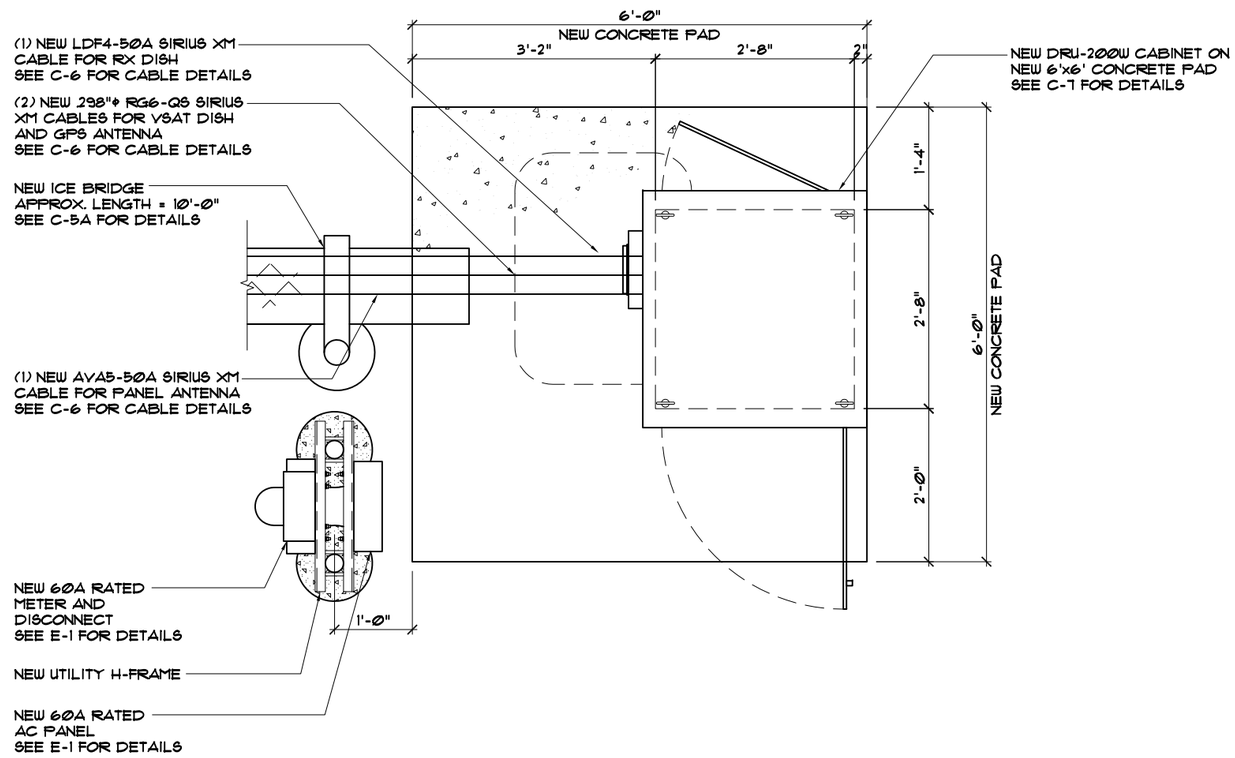

ENLARGED EQUIPMENT LAYOUT

SCALE: 1/2" = 1'-0" | 1

Sirius XM SATELLITE RADIO

CROWN CASTLE

shaping the wireless world
CROWN CASTLE
2000 CORPORATE DR.
CANONSBURG, PA 15317
PHONE: (724) 416-2000

FULLERTON ENGINEERING · DESIGN

9600 W. BRYN MAWR AVE., SUITE 200
ROSEMONT, ILLINOIS 60018
TEL: 847-292-0200
FAX: 847-292-0206
www.FullertonEngineering.com

CHECKED BY:	JP
APPROVED BY:	MB

#	DATE	DESCRIPTION	INT.
0	2/07/14	90% REVIEW	DW
1	02/25/14	FINAL	JB

STATE OF CONNECTICUT
HENRY M. BELLAGAMBA
No. 25358
LICENSED PROFESSIONAL ENGINEER

SIGNED DATE: 02/25/2014

SITE NAME
HAR040S

SITE I.D.
HAR040S

SITE ADDRESS
423 ORONOQUE RD.
MILFORD, CT 06460

SHEET NAME
ENLARGED EQUIPMENT LAYOUT

SHEET NUMBER
C-2

THIS DRAWING IS THE PROPERTY OF FULLERTON ENGINEERING CONSULTANTS, INC. IT IS FOR THE EXCLUSIVE USE OF THIS PROJECT. ANY RE-USE OF THIS DRAWING WITHOUT THE EXPRESSED WRITTEN CONSENT OF FULLERTON ENGINEERING CONSULTANTS, INC. IS PROHIBITED.

STRUCTURAL NOTES:

1. STRUCTURAL CALCULATION PREPARED BY OTHERS. CONTRACTOR TO COORDINATE WITH PROJECT MANAGER TO OBTAIN A COPY.
2. CONTRACTOR TO REFER TO TOWER STRUCTURAL CALCULATIONS FOR ADDITIONAL LOADS. NO ERECTION OR MODIFICATION OF TOWER SHALL BE MADE WITHOUT APPROVAL OF STRUCTURAL ENGINEER.

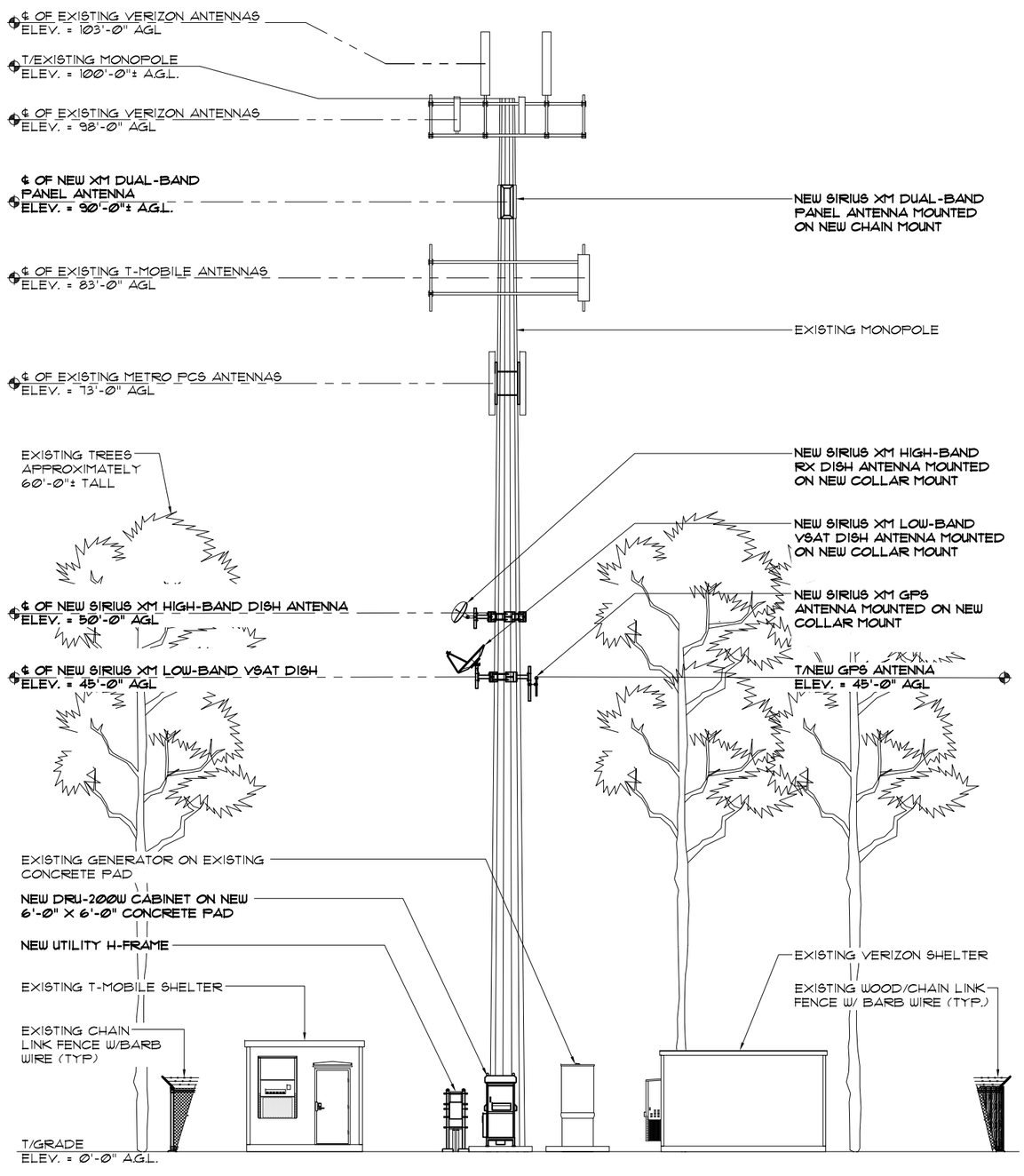

SITE ELEVATION

SCALE: N.T.S. | 1

Sirius XM SATELLITE RADIO

CROWN CASTLE
shaping the wireless world
CROWN CASTLE
2000 CORPORATE DR.
CANONSBURG, PA 15317
PHONE: (724) 416-2000

FULLERTON ENGINEERING · DESIGN
9600 W. BRYN MAWR AVE., SUITE 200
ROSEMONT, ILLINOIS 60018
TEL: 847-292-0200
FAX: 847-292-0206
www.FullertonEngineering.com

CHECKED BY:	JP
APPROVED BY:	MB

#	DATE	DESCRIPTION	INT.
0	2/07/14	90% REVIEW	DW
1	02/25/14	FINAL	JB

STATE OF CONNECTICUT
HENRY M. BELLAGAMBA
No. 25358
LICENSED
PROFESSIONAL ENGINEER

SIGNED DATE: 02/25/2014

SITE NAME
HAR040S

SITE I.D.
HAR040S

SITE ADDRESS
423 ORONOQUE RD.
MILFORD, CT 06460

SHEET NAME
SITE ELEVATION

SHEET NUMBER
C-3

THIS DRAWING IS THE PROPERTY OF FULLERTON ENGINEERING CONSULTANTS, INC. IT IS FOR THE EXCLUSIVE USE OF THIS PROJECT. ANY RE-USE OF THIS DRAWING WITHOUT THE EXPRESSED WRITTEN CONSENT OF FULLERTON ENGINEERING CONSULTANTS, INC. IS PROHIBITED.

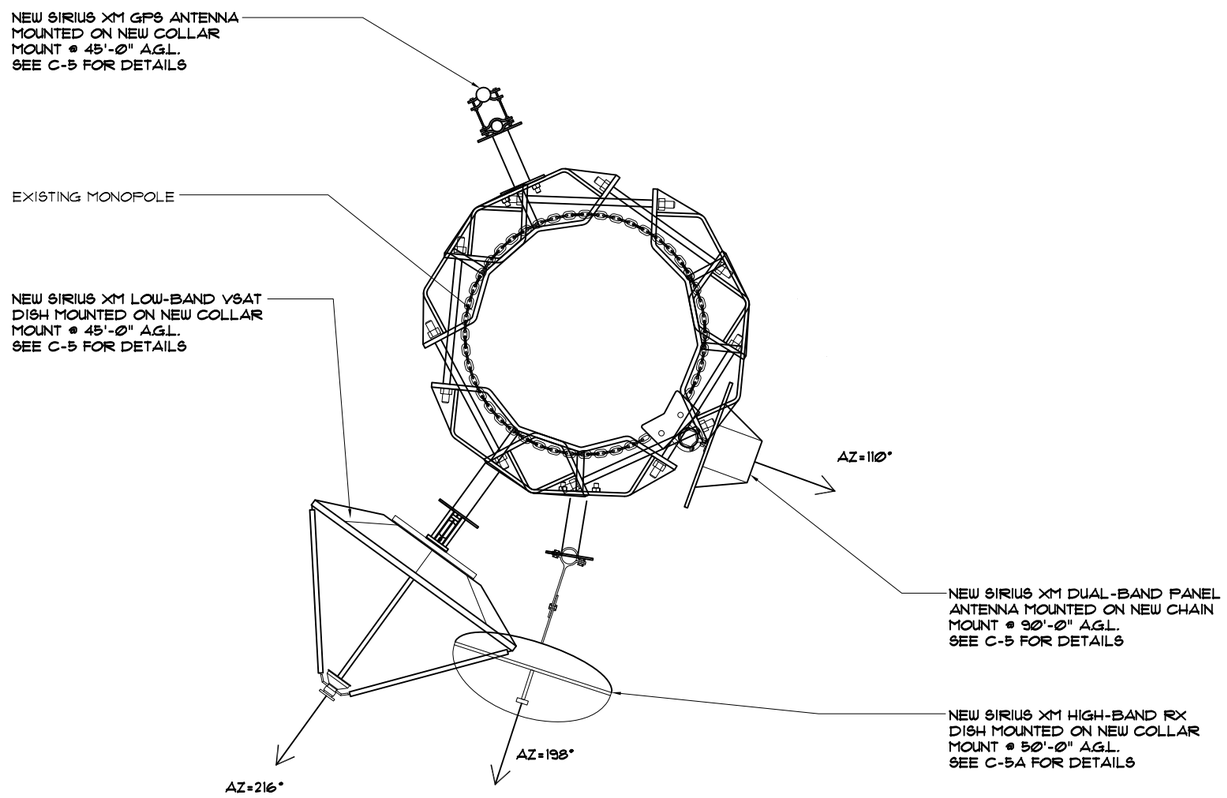

FINAL ANTENNA LAYOUT

SCALE: 1/2" = 1'-0"

1

Sirius XM SATELLITE RADIO

CROWN CASTLE

shaping the wireless world
CROWN CASTLE
2000 CORPORATE DR.
CANONSBURG, PA 15317
PHONE: (724) 416-2000

FULLERTON ENGINEERING · DESIGN

9600 W. BRYN MAWR AVE., SUITE 200
ROSEMONT, ILLINOIS 60018
TEL: 847-292-0200
FAX: 847-292-0206
www.FullertonEngineering.com

CHECKED BY:	JP
APPROVED BY:	MB

#	DATE	DESCRIPTION	INT.
0	2/07/14	90% REVIEW	DW
1	02/25/14	FINAL	JB

STATE OF CONNECTICUT
HENRY M. BELLAGAMBA
No. 25358
LICENSED PROFESSIONAL ENGINEER

SIGNED DATE: 02/25/2014

SITE NAME

HAR040S

SITE I.D.

HAR040S

SITE ADDRESS

423 ORONOQUE RD.
MILFORD, CT 06460

SHEET NAME

ANTENNA LAYOUTS

SHEET NUMBER

C-4

THIS DRAWING IS THE PROPERTY OF FULLERTON ENGINEERING CONSULTANTS, INC. IT IS FOR THE EXCLUSIVE USE OF THIS PROJECT. ANY RE-USE OF THIS DRAWING WITHOUT THE EXPRESSED WRITTEN CONSENT OF FULLERTON ENGINEERING CONSULTANTS, INC. IS PROHIBITED.

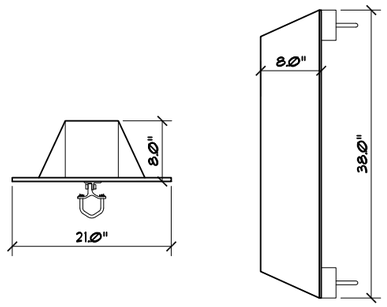

PLAN VIEW SIDE VIEW

TILTEK
TA-2335-DAB-L-095

FREQUENCY RANGE	2320-2345 MHz
ANTENNA WITH CLAMPS	33 lb

ANTENNA SPEC SCALE: N.T.S. 1

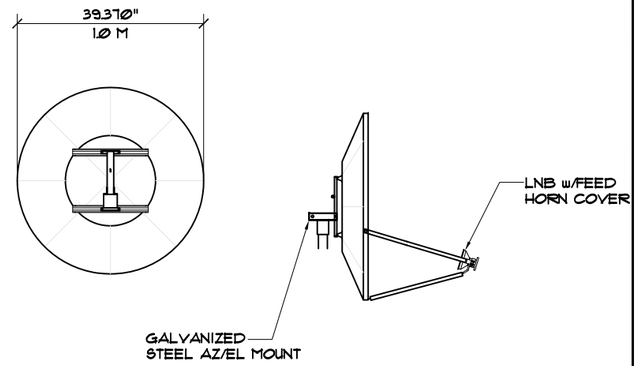

REAR VIEW SIDE VIEW

MANUFACTURER:	PRODELIN CORP
MODEL#:	1111
WEIGHT:	±40 LBS

VSAT SPEC SCALE: N.T.S. 2

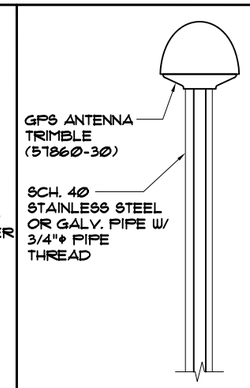

GPS MINIMUM SKY VIEW REQUIREMENTS

MINIMUM OF 75% OR 270° IN ANY DIRECTION

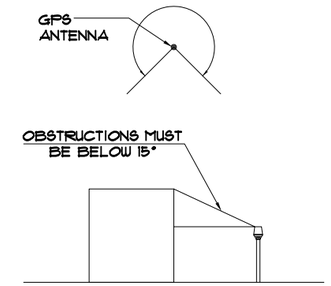

NOTES:

1. THE ELEVATION AND LOCATION OF THE GPS ANTENNA SHALL BE IN ACCORDANCE WITH THE FINAL RF REPORT.
2. THE GPS ANTENNA MOUNT IS DESIGNED TO FASTEN TO A STANDARD 1"ϕ, SCH 40, GALV STEEL OR STAINLESS STEEL PIPE WITH 3/4"ϕ PIPE THREAD AT ANTENNA MOUNT.
3. CONTRACTOR TO VERIFY THAT GPS MOUNT IS INSTALLED AND PLUMBED CORRECTLY
4. DO NOT SWEEP TEST GPS ANTENNA.

GPS SPEC SCALE: N.T.S. 3

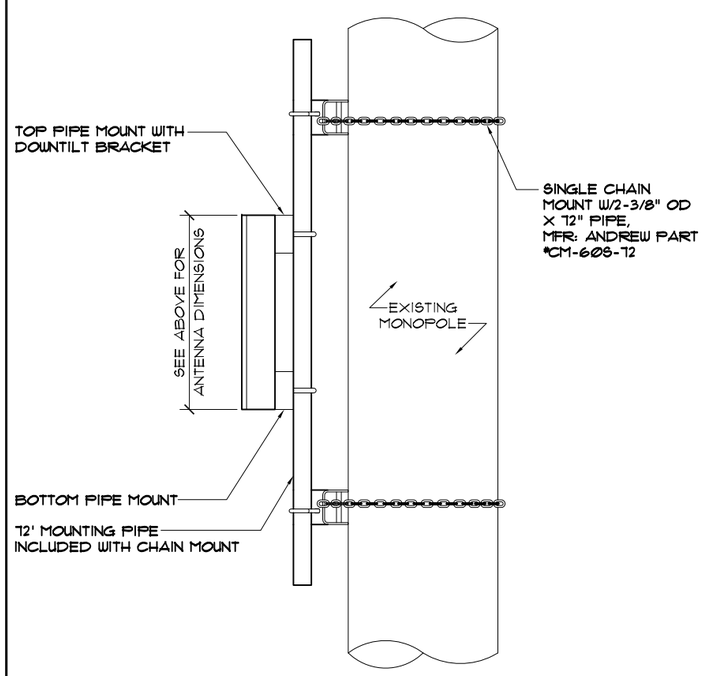

ANTENNA MOUNTING DETAIL SCALE: N.T.S. 4

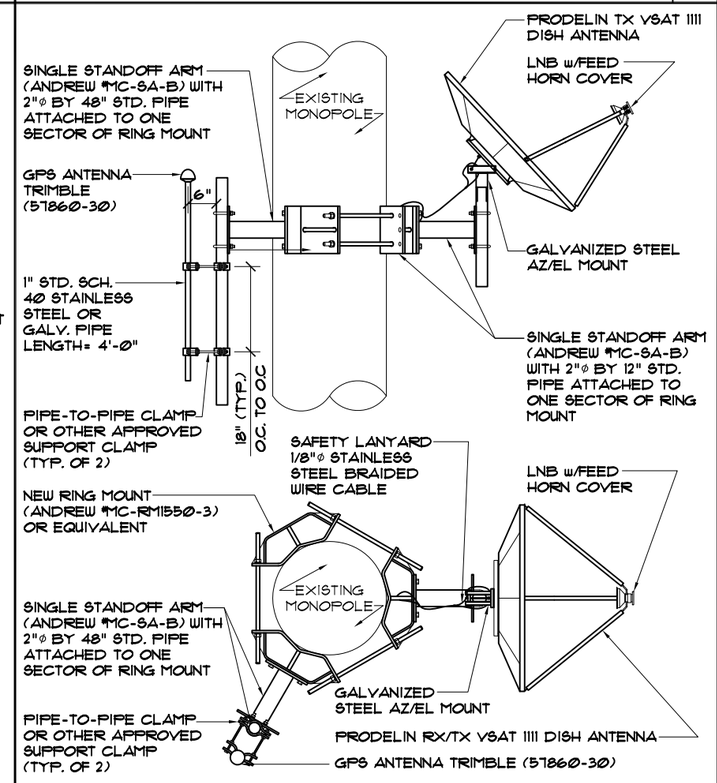

VSAT/GPS MOUNTING DETAIL SCALE: N.T.S. 5

NOT USED SCALE: N.T.S. 6

Sirius XM SATELLITE RADIO

CROWN CASTLE
shaping the wireless world
CROWN CASTLE
2000 CORPORATE DR.
CANONSBURG, PA 15317
PHONE: (724) 416-2000

FULLERTON ENGINEERING · DESIGN
9600 W. BRYN MAWR AVE., SUITE 200
ROSEMONT, ILLINOIS 60018
TEL: 847-292-0200
FAX: 847-292-0206
www.FullertonEngineering.com

CHECKED BY:	JP
APPROVED BY:	MB

#	DATE	DESCRIPTION	INT.
0	2/07/14	90% REVIEW	DW
1	02/25/14	FINAL	JB

STATE OF CONNECTICUT
HENRY M. BELLAGAMBA
No. 25358
LICENSED
PROFESSIONAL ENGINEER

SIGNED DATE: 02/25/2014

SITE NAME
HAR040S

SITE I.D.
HAR040S

SITE ADDRESS
423 ORONOQUE RD.
MILFORD, CT 06460

SHEET NAME
ANTENNA DETAILS

SHEET NUMBER
C-5

THIS DRAWING IS THE PROPERTY OF FULLERTON ENGINEERING CONSULTANTS, INC. IT IS FOR THE EXCLUSIVE USE OF THIS PROJECT. ANY RE-USE OF THIS DRAWING WITHOUT THE EXPRESSED WRITTEN CONSENT OF FULLERTON ENGINEERING CONSULTANTS, INC. IS PROHIBITED.

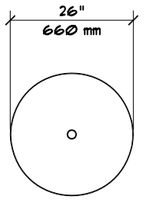

REAR VIEW

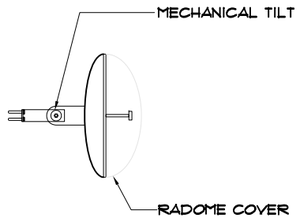

SIDE VIEW

MANUFACTURER:	TIL-TEK
MODEL#:	TA-2324-LHCP
WEIGHT:	±26 LBS

RX DISH SPECS

SCALE: N.T.S. | 1

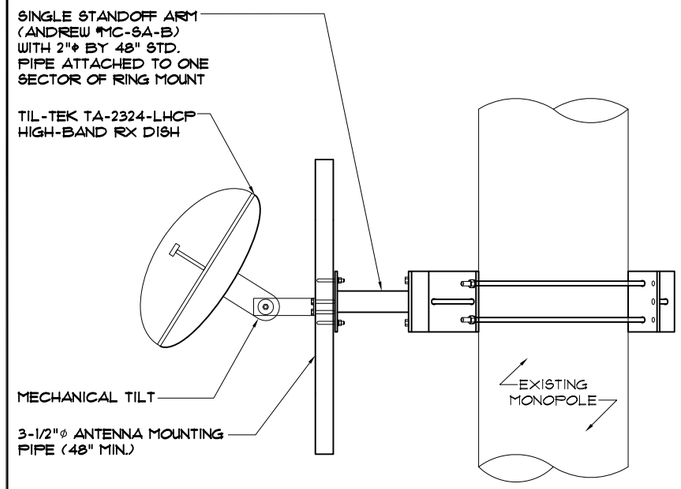

RX MOUNTING DETAIL

SCALE: N.T.S. | 2

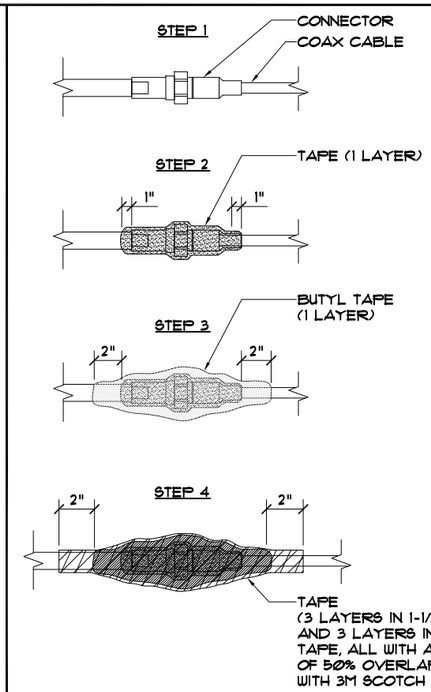

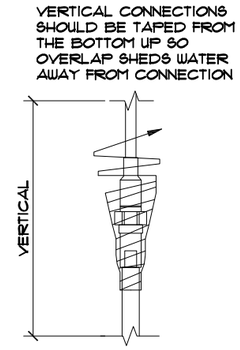

NOTE:
ELECTRICAL TAPE ENDS ARE TO BE CUT, DO NOT STRETCH

WEATHERPROOFING DETAIL

SCALE: N.T.S. | 3

1. COAX MAINLINE FOR TX & RX ANTENNAS WILL BE LABELED AT THE TOP AND BOTTOM WITHIN 12" OF THE CONNECTORS.
2. FOR COAX MAIN LINE CABLE CONNECTS TO A POWER SPLITTER, LABEL MUST ALSO BE PLACED ON THE JUMPER CABLE 12" FROM THE ANTENNA CONNECTOR.
3. ANY COAX MAKING A WALL PENETRATION WILL BE LABELED ON EACH SIDE OF THE PENETRATION.
4. LOW BAND DIVERSITY IS NOT INSTALLED IN ALL THE SITES, ONLY THE CORE SITE FOR THE MARKET.
5. ALL COLOR CODED TAPE SHOULD BE 1-1/2" IN WIDTH.
6. ANTENNA LINE COLORS WILL BE AS FOLLOWS:
   A. LB-RED (R)
   B. HB-BLUE (B)
   C. GPS-WHITE (W)
   D. VSAT-YELLOW (Y)
   E. RX DISH-GREEN (G)
   F. DIVERSITY-ORANGE (O)

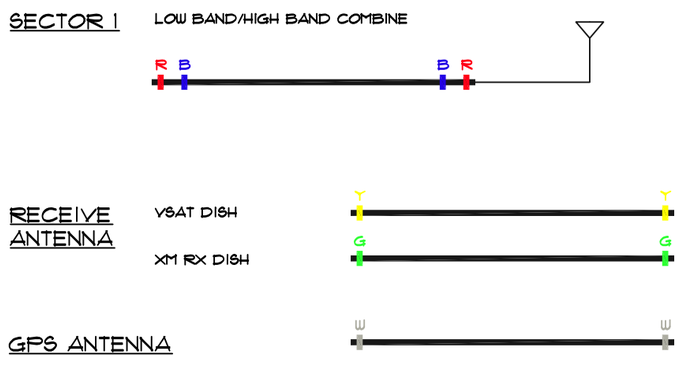

TYPICAL COLOR CODING

SCALE: N.T.S. | 4

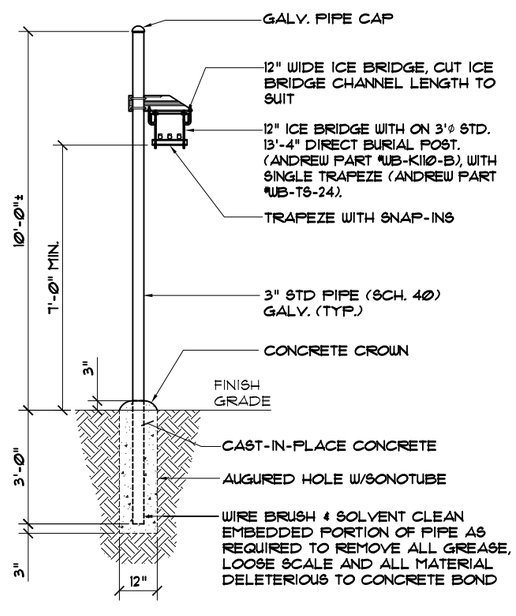

ICE BRIDGE DETAIL

SCALE: N.T.S. | 5

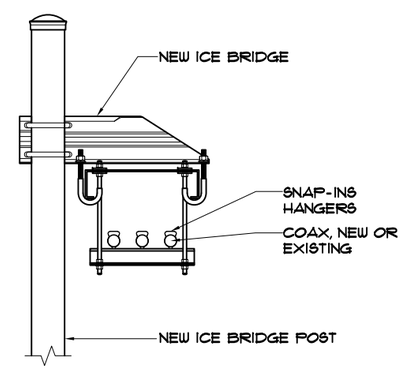

CABLE ROUTING DETAIL

SCALE: N.T.S. | 6

Sirius XM SATELLITE RADIO

CROWN CASTLE
shaping the wireless world
CROWN CASTLE
2000 CORPORATE DR.
CANONSBURG, PA 15317
PHONE: (724) 416-2000

FULLERTON ENGINEERING · DESIGN
9600 W. BRYN MAWR AVE., SUITE 200
ROSEMONT, ILLINOIS 60018
TEL: 847-292-0200
FAX: 847-292-0206
www.FullertonEngineering.com

CHECKED BY:	JP
APPROVED BY:	MB

#	DATE	DESCRIPTION	INT.
0	2/07/14	90% REVIEW	DW
1	02/25/14	FINAL	JB

STATE OF CONNECTICUT
HENRY M. BELLAGAMBA
No. 25358
LICENSED PROFESSIONAL ENGINEER

SIGNED DATE: 02/25/2014

SITE NAME
HAR040S

SITE I.D.
HAR040S

SITE ADDRESS
423 ORONOQUE RD.
MILFORD, CT 06460

SHEET NAME
SITE DETAILS

SHEET NUMBER
C-5A

THIS DRAWING IS THE PROPERTY OF FULLERTON ENGINEERING CONSULTANTS, INC. IT IS FOR THE EXCLUSIVE USE OF THIS PROJECT. ANY RE-USE OF THIS DRAWING WITHOUT THE EXPRESSED WRITTEN CONSENT OF FULLERTON ENGINEERING CONSULTANTS, INC. IS PROHIBITED.

NEW ANTENNA CONFIGURATION

ANTENNA								CABLE			
ANTENNA NUMBER	NEW OR EXISTING	ANTENNA MANUFACTURER	ANTENNA TYPE	MODEL NUMBER	AZIMUTH (TN)	TILT (+ OR -)	¢ OF ANTENNA FROM GROUND LEVEL (FT)	NEW OR EXISTING	CABLE TYPE	CABLE SIZE (DIA. IN)	CABLE LENGTH (FT)
1	NEW	TIL-TEK	PANEL	TA-2335-DAB-L-095	110°	-2	90'-0"	NEW	AVA5-50A	7/8"	120'-0"
2	NEW	PRODELIN	VSAT	1111 WITHOUT DEICING	216°	+36°	45'-0"	NEW	RG6-QS	.298"	65'-0"
3	NEW	TIL-TEK	RX	TA-2324-LHCP	198°	+41°	50'-0"	NEW	LDF4-50A	1/2"	70'-0"
4	NEW	TRIMBLE	GPS	57860-30	N/A	-	45'-0"	NEW	RG6-QS	.298"	65'-0"

NEW EQUIPMENT SCHEDULE

CABINET NUMBER	CABINET MANUFACTURER	CABINET TYPE	MODEL NUMBER	NOTES
NEW	UBS	REPEATER	DRU-200W	NEW

NEW POWER SCHEDULE

AMPERE	VOLTAGE	PHASE	NOTES
30 AMPS	120/240	1	NEW 30A, 2P BREAKER IN NEW 60A SERVICE

Sirius XM SATELLITE RADIO

CROWN CASTLE
shaping the wireless world

CROWN CASTLE
2000 CORPORATE DR.
CANONSBURG, PA 15317
PHONE: (724) 416-2000

FULLERTON ENGINEERING · DESIGN
9600 W. BRYN MAWR AVE., SUITE 200
ROSEMONT, ILLINOIS 60018
TEL: 847-292-0200
FAX: 847-292-0206
www.FullertonEngineering.com

CHECKED BY: JP
APPROVED BY: MB

#	DATE	DESCRIPTION	INT.
0	2/07/14	90% REVIEW	DW
1	02/25/14	FINAL	JB

STATE OF CONNECTICUT
HENRY M. BELLAGAMBA
No. 25358
LICENSED
PROFESSIONAL ENGINEER

SIGNED DATE: 02/25/2014

SITE NAME
HAR040S

SITE I.D.
HAR040S

SITE ADDRESS
423 ORONOQUE RD.
MILFORD, CT 06460

SHEET NAME
ANTENNA SCHEDULES

SHEET NUMBER
C-6

THIS DRAWING IS THE PROPERTY OF FULLERTON ENGINEERING CONSULTANTS, INC. IT IS FOR THE EXCLUSIVE USE OF THIS PROJECT. ANY RE-USE OF THIS DRAWING WITHOUT THE EXPRESSED WRITTEN CONSENT OF FULLERTON ENGINEERING CONSULTANTS, INC. IS PROHIBITED.

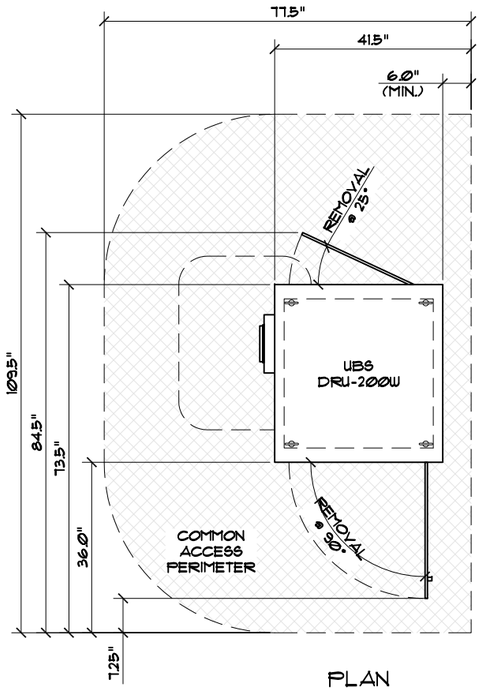

PLAN

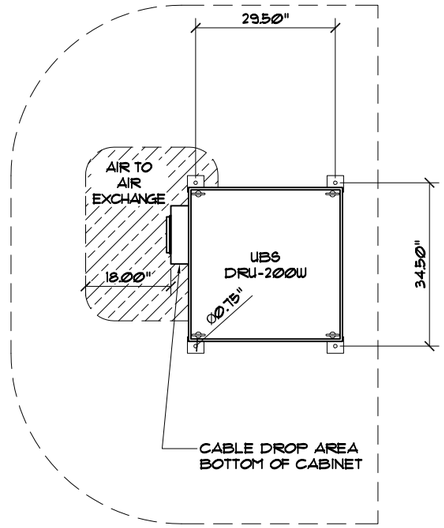

BASE MOUNTING HOLE LOCATION (BOTTOM VIEW)

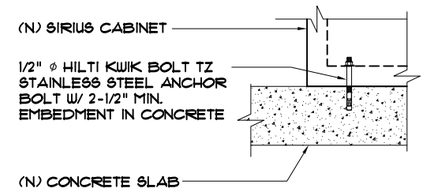

BOLT DETAIL

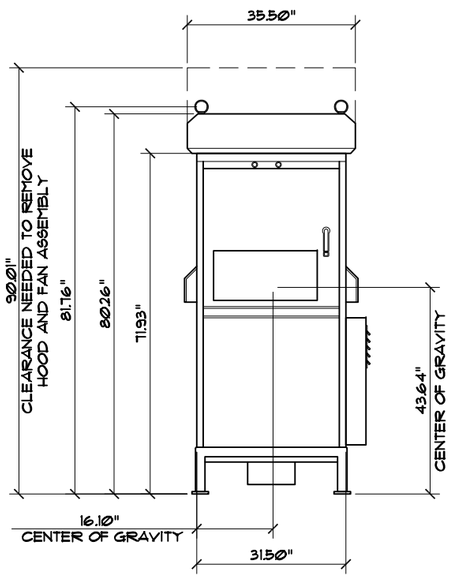

FRONT

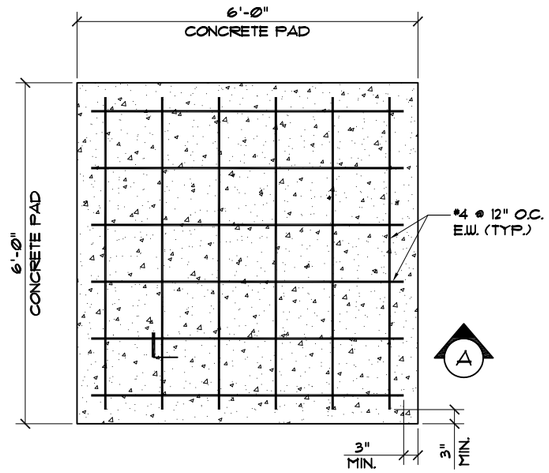

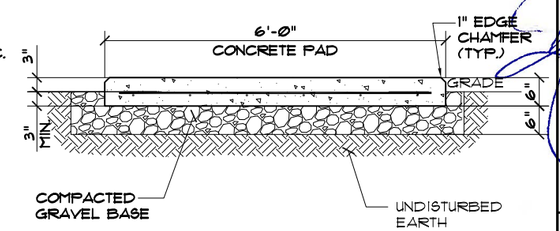

SECTION A:

CONCRETE NOTES:

1. MEET OR EXCEED THE FOLLOWING CODES AND STANDARDS
   - CEMENT.....ASTM C 150, TYPE I
   - DESIGN.....ACI 318 AND 360
   - CONSTRUCTION.....ACI 301
   - DETAILING.....CRSI MANUAL OF STANDARD PRACTICE USE CLASS "B" FOR SPLICES UNLESS NOTED
   - REINF. STEEL.....ASTM A 615 GRADE 60, DEFORMED
   - MIXING.....ASTM C 94. READY MIX CONCRETE
   - AIR ENTRAINMENT.....ACI 318 AND ASTM C-260
   - AGGREGATE.....ASTM C 33
2. CONCRETE STRENGTH AT 28 DAYS SHALL BE 4000 PSI MINIMUM.
3. DO NOT FIELD BEND OR WELD TO GRADE 60 REINFORCING STEEL.
4. PROVIDE AIR ENTRAINED CONCRETE WITH AIR CONTENT OF 5% TO 7% FOR ALL CONCRETE EXPOSED TO EARTH OR WEATHER
5. MAXIMUM AGGREGATE SIZE: 3/4" FOR FOOTINGS, WALLS, BEAMS, SLABS.
6. DO NOT USE IN ADMIXTURE, WATER OR OTHER CONSTITUENTS OF CONCRETE WHICH HAS CALCIUM CHLORIDE.
7. MINIMUM COVER FOR REINFORCEMENT STEEL UNLESS INCREASED COVER NECESSARY TO MEET FIRE RATING INDICATED: CAST AGAINST AND EXPOSED TO EARTH.....3" EXPOSED TO EARTH AND WEATHER, #11 TO #6 BARS...2" EXPOSED TO EARTH AND WEATHER, #5 AND SMALLER...1-½" INTERIOR EXPOSURE, BEAMS AND COLUMNS ..1-½" INTERIOR EXPOSURE, SLABS, WALLS AND JOISTS....¾"
8. SLAB SURFACE FLATNESS MAXIMUM TOLERANCE SHALL BE 0.2" OVER 78". CHECK FLOOR LEVEL ALONG THE THREE AXIS: DEPTH, WIDTH & DIAGONAL.
9. THE GENERAL CONTRACTOR SHALL HAVE ALL FOUNDATION EXCAVATIONS INSPECTED BY A GOETECHNICAL ENGINEER PRIOR TO PLACEMENT OF CONCRETE TO VERIFY THE EXISTING SOIL CONDITIONS ARE CONSISTENT WITH THOSE CONSIDERED BY THIS DESIGN.

UBS DRU-200W CABINET DETAIL

SCALE: 3/8" = 1'-0" | 1

Sirius XM SATELLITE RADIO

CROWN CASTLE
shaping the wireless world
CROWN CASTLE
2000 CORPORATE DR.
CANONSBURG, PA 15317
PHONE: (724) 416-2000

FULLERTON ENGINEERING · DESIGN
9600 W. BRYN MAWR AVE., SUITE 200
ROSEMONT, ILLINOIS 60018
TEL: 847-292-0200
FAX: 847-292-0206
www.FullertonEngineering.com

CHECKED BY:	JP
APPROVED BY:	MB

#	DATE	DESCRIPTION	INT.
0	2/07/14	90% REVIEW	DW
1	02/25/14	FINAL	JB

STATE OF CONNECTICUT · HENRY M. BELLAGAMBA · No. 25358 · LICENSED PROFESSIONAL ENGINEER

SIGNED DATE: 02/25/2014

SITE NAME
HAR040S

SITE I.D.
HAR040S

SITE ADDRESS
423 ORONOQUE RD.
MILFORD, CT 06460

SHEET NAME
EQUIPMENT SPECS

SHEET NUMBER
C-7

THIS DRAWING IS THE PROPERTY OF FULLERTON ENGINEERING CONSULTANTS, INC. IT IS FOR THE EXCLUSIVE USE OF THIS PROJECT. ANY RE-USE OF THIS DRAWING WITHOUT THE EXPRESSED WRITTEN CONSENT OF FULLERTON ENGINEERING CONSULTANTS, INC. IS PROHIBITED.

SERVICE EQUIPMENT NOTES:

1. ALL ELECTRICAL EQUIPMENT SHALL BE LABELED WITH PERMANENT ENGRAVED PLASTIC LABELS
2. PATCH, REPAIR AND PAINT ANY AREA THAT HAS BEEN DAMAGED IN THE COURSE OF THE ELECTRICAL WORK

CONDUCTOR NOTES:

1. ALL CONDUCTORS SHALL BE COPPER
2. ALL WIRING SHALL BE COPPER WITH THHN/THWN DUAL RATED 600 VOLTS INSULATION
3. GROUNDING CONDUCTORS SHALL BE SOLID TINNED COPPER UNLESS OTHERWISE NOTED

CONDUIT NOTES:

1. SCH 80 PVC CONDUIT SHALL BE USED WHEN INSTALLED IN OR UNDER CONCRETE SLABS, IN CONTACT WITH EARTH, OR EXPOSED ABOVE GRADE
2. EMT SHALL BE USED ONLY FOR INTERIOR RUNS AND SHALL HAVE COMPRESSION TYPE FITTINGS
3. SEAL TIGHT, FLEXIBLE CONDUIT MAY BE USED WHERE CODE PERMITS. ALL CONDUIT SHALL HAVE FULL SIZE EQUIPMENT GROUND WIRE
4. SERVICE CONDUITS SHALL HAVE NO MORE THAN (3) - 90° BENDS IN ANY SINGLE RUN. THE CONTRACTOR SHALL PROVIDE PULL BOXES AS NEEDED WHERE CONDUIT REQUIREMENTS EXCEED THESE CONDITIONS
5. ALL CABLES, POWER AND/OR TELEPHONE AND/OR FIBER SYSTEM CONDUITS SHALL HAVE A MINIMUM 24" RADIUS SWEEPS TO EQUIPMENT, PULL BOXES, ETC., UNLESS OTHERWISE NOTED, OR AS REQUIRED BY UTILITY COMPANIES

NEW CABLE GROUNDING NOTES:

1. AVOID DISRUPTION OF EXISTING GROUNDING SYSTEM. REPAIR ANY DAMAGE TO THE SATISFACTION OF THE OWNER
2. CONTRACTOR SHALL CONNECT GROUND KITS TO THE EXISTING GROUND BARS AT THE TOP AND BASE OF TOWER
3. CONTRACTOR SHALL CONNECT GROUND KITS TO THE NEW GROUND BAR BEFORE ENTRY TO CABINET
4. NO BACK TO BACK LUGGING OF GROUNDS

GENERAL GROUNDING NOTES:

1. VERTICAL DROPS SHALL BE 20'-0" OF #2 AWG SOLID TINNED COPPER WIRE. CADWELD TO GROUND BAR
2. ALL BENDS MINIMUM 8" RADIUS
3. APPLY ANTI-OXIDATION COMPOUND TO ALL CONNECTIONS
4. BARE COPPER CONDUCTORS SHALL NOT BE IN CONTACT WITH ANY DISSIMILAR MATERIAL. PLACE ON STANDOFFS, IF NECESSARY TO ALLOW FOR PROPER INSTALLATION
5. SHARP BENDS IN GROUNDING CONDUCTORS SHALL BE AVOIDED. 90° BENDS SHALL NOT BE USED
6. ALL GROUNDING CONDUCTORS SHALL BE KEPT AS SHORT AS POSSIBLE. THE SHORTEST PRACTICAL ROUTE SHALL BE CHOSEN WITH THE LEAST AMOUNT OF BENDS AND SPLICES. USE THIS RULE AT ALL TIMES
7. ALL CONNECTIONS TO GROUND BARS SHALL BE WITH A 2-HOLE LUG UNLESS OTHERWISE SPECIFIED
8. WHEN GROUNDING MORE THAN ONE PIECE OF EQUIPMENT, DO NOT USE THE EQUIPMENT AS A GROUNDING CONDUCTOR. DOUBLE-STACKING OF LUGS SHALL BE USED TO GET FROM EQUIPMENT TO EQUIPMENT
9. REMOVE ALL PAINT BENEATH THE SURFACE OF GROUND LUGS

ELECTRICAL NOTES

SCALE: N.T.S. | 1

NOTE:
CONTRACTOR TO VERIFY AVAILABILITY OF EXISTING CONDUIT AND REUSE WHEN POSSIBLE

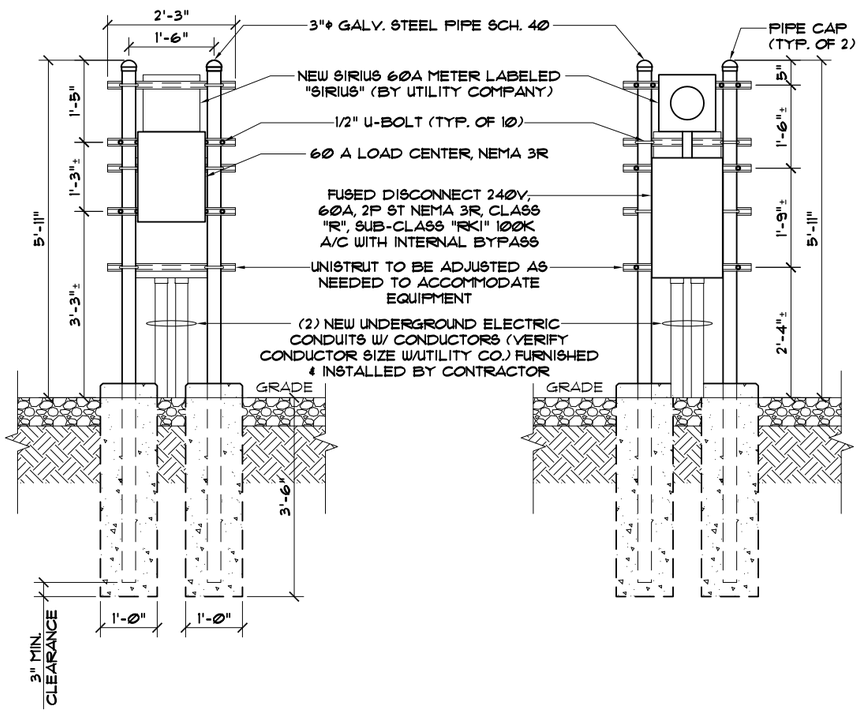

UTILITY H-FRAME DETAIL

SCALE: N.T.S. | 2

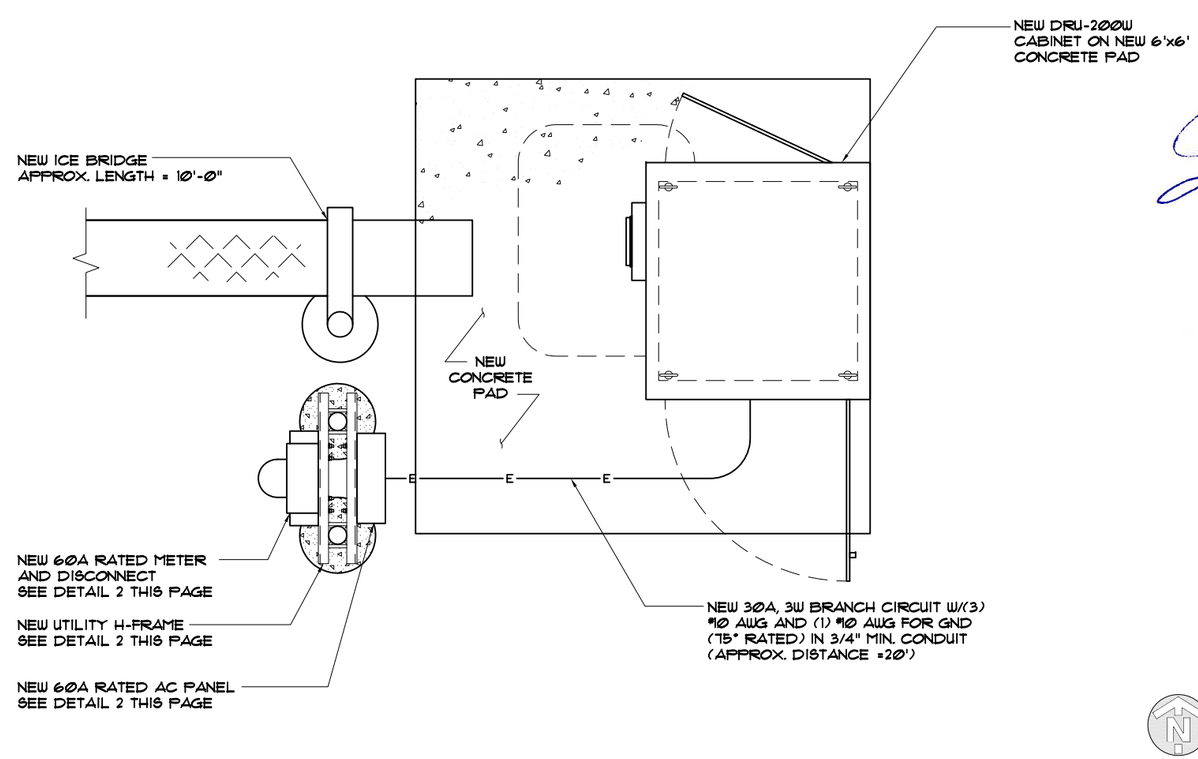

FINAL UTILITY PLAN

SCALE: 1/2" = 1'-0" | 3

Sirius XM SATELLITE RADIO

CROWN CASTLE
shaping the wireless world
CROWN CASTLE
2000 CORPORATE DR.
CANONSBURG, PA 15317
PHONE: (724) 416-2000

FULLERTON ENGINEERING · DESIGN
9600 W. BRYN MAWR AVE., SUITE 200
ROSEMONT, ILLINOIS 60018
TEL: 847-292-0200
FAX: 847-292-0206
www.FullertonEngineering.com

CHECKED BY:	JP
APPROVED BY:	MB

#	DATE	DESCRIPTION	INT.
0	2/07/14	90% REVIEW	DW
1	02/25/14	FINAL	JB

STATE OF CONNECTICUT · HENRY M. BELLAGAMBA · No. 25358 · LICENSED PROFESSIONAL ENGINEER

SIGNED DATE: 02/25/2014

SITE NAME
HAR040S

SITE I.D.
HAR040S

SITE ADDRESS
423 ORONOQUE RD.
MILFORD, CT 06460

SHEET NAME
UTILITY PLAN AND NOTES

SHEET NUMBER
E-1

THIS DRAWING IS THE PROPERTY OF FULLERTON ENGINEERING CONSULTANTS, INC. IT IS FOR THE EXCLUSIVE USE OF THIS PROJECT. ANY RE-USE OF THIS DRAWING WITHOUT THE EXPRESSED WRITTEN CONSENT OF FULLERTON ENGINEERING CONSULTANTS, INC. IS PROHIBITED.

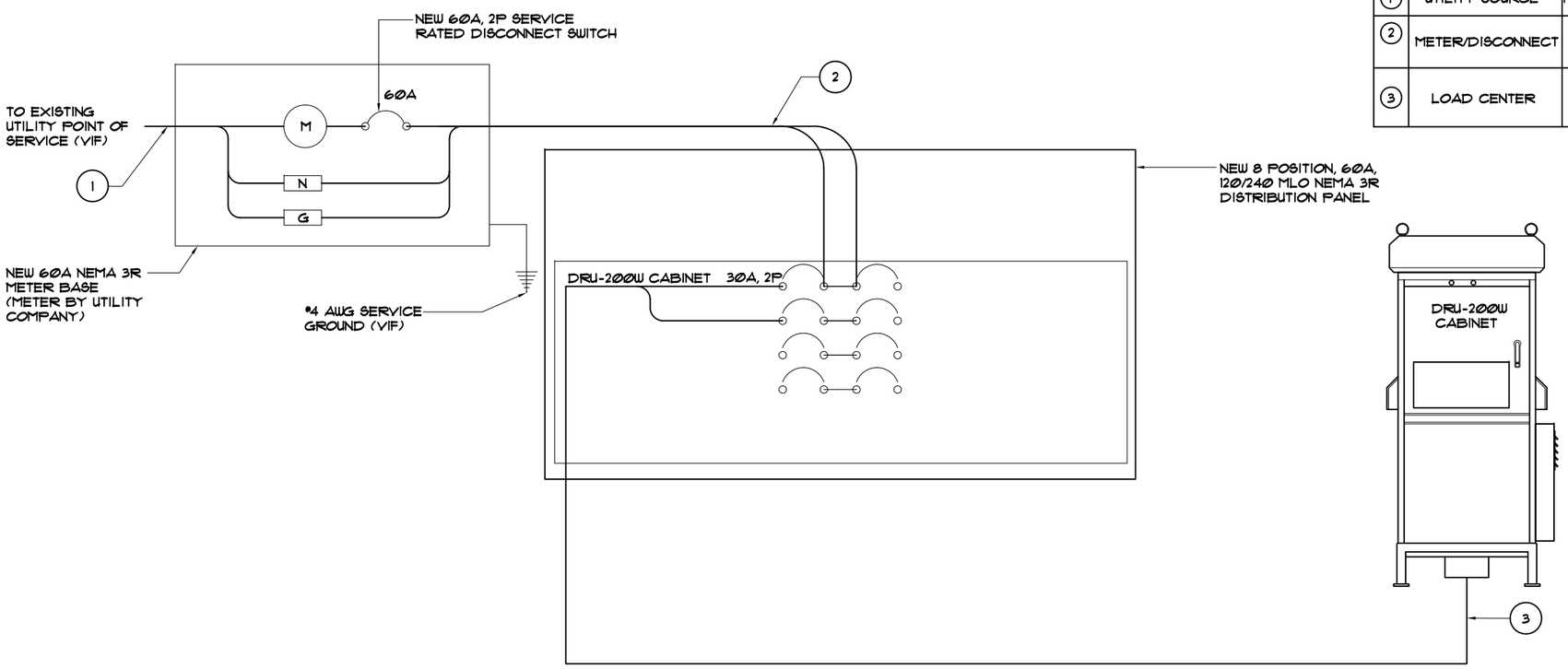

CIRCUIT SCHEDULE

NO	FROM	TO	CONFIGURATION
1	UTILITY SOURCE	METER/DISCONNECT	(3) #3 AWG FOR NEW 100A SERVICE (VIF)
2	METER/DISCONNECT	LOAD CENTER	(3) NEW #3 AWG AND (1) #8 FOR GROUND IN 1" (MIN.) CONDUIT
3	LOAD CENTER	DRU-200W	BRANCH CIRCUIT W/(3) #10 AWG AND (1) #10 AWG FOR GND (75° RATED) IN 3/4" MIN. CONDUIT

FINAL SINGLE LINE DIAGRAM

SCALE: N.T.S. 1

SITE NUMBER:	HAR040S		MODEL NUMBER:	T.B.D.	
VOLTAGE:	240V/120		PHASE:	1	WIRE: 3
MAIN BREAKER:	MLO		BUSS RATING:	60 AMPS	AIC: 10,000
MOUNT:	SURFACE				GROUND BAR: YES
ENCLOSURE TYPE:	TYPE 3				
PANEL STATUS:	NEW				

CKT	LOAD DESCRIPTION	BREAKER AMPS	BREAKER POLES	BREAKER STATUS	SERVICE LOAD VA	USAGE FACTOR	PHASE A VA	PHASE B VA	USAGE FACTOR	SERVICE LOAD VA	BREAKER STATUS	BREAKER POLES	BREAKER AMPS	LOAD DESCRIPTION	CKT
1	DRU-200	30	2	NEW	2194	1.25	2743		0.00	0				OPEN	2
3					2194	1.25		2742.5	0.00	0				OPEN	4
5	OPEN				0	0.00	0		0.00	0				OPEN	6
7	OPEN				0	0.00		0	0.00	0				OPEN	8
							2743	2743	VA			TOTAL KVA	5.49		
	FINAL LOADING											AMPS	22.85		
	TYPICAL PANEL SCHEDULE-VIF LOCATIONS AND POSITION														

FINAL PANEL SCHEDULE

SCALE: N.T.S. 2

Sirius XM SATELLITE RADIO

CROWN CASTLE
shaping the wireless world
CROWN CASTLE
2000 CORPORATE DR.
CANONSBURG, PA 15317
PHONE: (724) 416-2000

FULLERTON ENGINEERING · DESIGN
9600 W. BRYN MAWR AVE., SUITE 200
ROSEMONT, ILLINOIS 60018
TEL: 847-292-0200
FAX: 847-292-0206
www.FullertonEngineering.com

CHECKED BY:	JP
APPROVED BY:	MB

#	DATE	DESCRIPTION	INT.
0	2/07/14	90% REVIEW	DW
1	02/25/14	FINAL	JB

STATE OF CONNECTICUT
HENRY M. BELLAGAMBA
No. 25358
LICENSED PROFESSIONAL ENGINEER

SIGNED DATE: 02/25/2014

SITE NAME
HAR040S

SITE I.D.
HAR040S

SITE ADDRESS
423 ORONOQUE RD.
MILFORD, CT 06460

SHEET NAME
FINAL SINGLE LINE DIAGRAM/ PANEL SCHED.

SHEET NUMBER
E-2

THIS DRAWING IS THE PROPERTY OF FULLERTON ENGINEERING CONSULTANTS, INC. IT IS FOR THE EXCLUSIVE USE OF THIS PROJECT. ANY RE-USE OF THIS DRAWING WITHOUT THE EXPRESSED WRITTEN CONSENT OF FULLERTON ENGINEERING CONSULTANTS, INC. IS PROHIBITED.

SERVICE EQUIPMENT NOTES:

1. ALL ELECTRICAL EQUIPMENT SHALL BE LABELED WITH PERMANENT ENGRAVED PLASTIC LABELS.
2. PATCH, REPAIR AND PAINT ANY AREA THAT HAS BEEN DAMAGED IN THE COURSE OF THE ELECTRICAL WORK.

CONDUCTOR NOTES:

1. ALL CONDUCTORS SHALL BE COPPER
2. ALL WIRING SHALL BE COPPER WITH THHN/THWN DUAL RATED 600 VOLTS INSULATION
3. GROUNDING CONDUCTORS SHALL BE SOLID TINNED COPPER UNLESS OTHERWISE NOTED.

CONDUIT NOTES:

1. SCH 80 PVC CONDUIT SHALL BE USED WHEN INSTALLED IN OR UNDER CONCRETE SLABS, IN CONTACT WITH EARTH, OR EXPOSED ABOVE GRADE
2. EMT SHALL BE USED ONLY FOR INTERIOR RUNS AND SHALL HAVE COMPRESSION TYPE FITTINGS
3. SEAL TIGHT, FLEXIBLE CONDUIT MAY BE USED WHERE CODE PERMITS. ALL CONDUIT SHALL HAVE FULL SIZE EQUIPMENT GROUND WIRE
4. SERVICE CONDUITS SHALL HAVE NO MORE THAN (3) - 90° BENDS IN ANY SINGLE RUN. THE CONTRACTOR SHALL PROVIDE PULL BOXES AS NEEDED WHERE CONDUIT REQUIREMENTS EXCEED THESE CONDITIONS
5. ALL CABLES, POWER AND/OR TELEPHONE AND/OR FIBER SYSTEM CONDUITS SHALL HAVE A MINIMUM 24" RADIUS SWEEPS TO EQUIPMENT, PULL BOXES, ETC., UNLESS OTHERWISE NOTED, OR AS REQUIRED BY UTILITY COMPANIES

NEW CABLE GROUNDING NOTES:

1. AVOID DISRUPTION OF EXISTING GROUNDING SYSTEM. REPAIR ANY DAMAGE TO THE SATISFACTION OF THE OWNER
2. CONTRACTOR SHALL CONNECT GROUND KITS TO THE EXISTING GROUND BARS AT THE TOP AND BASE OF TOWER
3. CONTRACTOR SHALL CONNECT GROUND KITS TO THE NEW GROUND BAR BEFORE ENTRY TO CABINET
4. NO BACK TO BACK LUGGING OF GROUNDS

GENERAL GROUNDING NOTES:

1. VERTICAL DROPS SHALL BE 20'-0" OF #2 AWG SOLID TINNED COPPER WIRE. CADWELD TO GROUND BAR
2. ALL BENDS MINIMUM 8" RADIUS.
3. APPLY ANTI-OXIDATION COMPOUND TO ALL CONNECTIONS.
4. BARE COPPER CONDUCTORS SHALL NOT BE IN CONTACT WITH ANY DISSIMILIAR MATERIAL. PLACE ON STANDOFFS, IF NECESSARY TO ALLOW FOR PROPER INSTALLATION.
5. SHARP BENDS IN GROUNDING CONDUCTORS SHALL BE AVOIDED. 90° BENDS SHALL NOT BE USED.
6. ALL GROUNDING CONDUCTORS SHALL BE KEPT AS SHORT AS POSSIBLE. THE SHORTEST PRACTICAL ROUTE SHALL BE CHOSEN WITH THE LEAST AMOUNT OF BENDS AND SPLICES. USE THIS RULE AT ALL TIMES.
7. ALL CONNECTIONS TO GROUND BARS SHALL BE WITH A 2-HOLE LUG UNLESS OTHERWISE SPECIFIED.
8. WHEN GROUNDING MORE THAN ONE PIECE OF EQUIPMENT, DO NOT USE THE EQUIPMENT AS A GROUNDING CONDUCTOR. DOUBLE-STACKING OF LUGS SHALL BE USED TO GET FROM EQUIPMENT TO EQUIPMENT.
9. REMOVE ALL PAINT BENEATH THE SURFACE OF GROUND LUGS
10. GROUND SYSTEM TO BE TESTED TO 5 OHMS OR LESS

NOTES SCALE: N.T.S. 1

NOT USED SCALE: N.T.S. 2

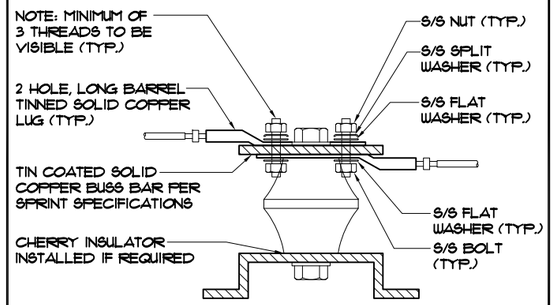

NOTES:

1. ALL HARDWARE 18-8 STAINLESS STEEL INCLUDING SPLIT WASHERS.
2. COAT WIRE END WITH ANTI-OXIDATION COMPOUND PRIOR TO INSERTION INTO LUG BARREL AND CRIMPING.
3. APPLY ANTI-OXIDATION COMPOUND BETWEEN ALL LUGS AND BUSS BARS PRIOR TO MATING AND BOLTING.

GROUND LUG DETAIL SCALE: N.T.S. 3

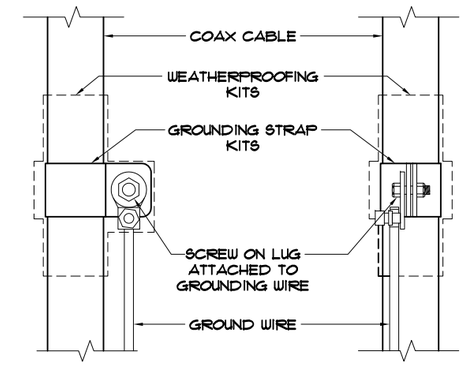

NOTES:

- DO NOT INSTALL CABLE GROUND KIT AT A BEND AND ALWAYS DIRECT GROUND WIRE DOWN TO GROUND BAR.
- THIS DETAILS IS TYPICAL FOR EACH CABLE WHERE IT IS SPECIFIED TO BE GROUNDED

COAX GROUND KIT SCALE: N.T.S. 4

NOTE:

ALL NEW GROUND BARS SHALL BE TIED TO (E) GROUND RING OR BONDED TO (E) GROUND BARS

▲ MECHANICAL CONNECTION ● EXOTHERMIC CONNECTION

GROUND EACH CABINET FROM GROUND BAR INSIDE CABINET TO MASTER GROUND BAR. INSTALL GROMMET AT BOTTOM OF CABINET, 2 HOLE LUG.

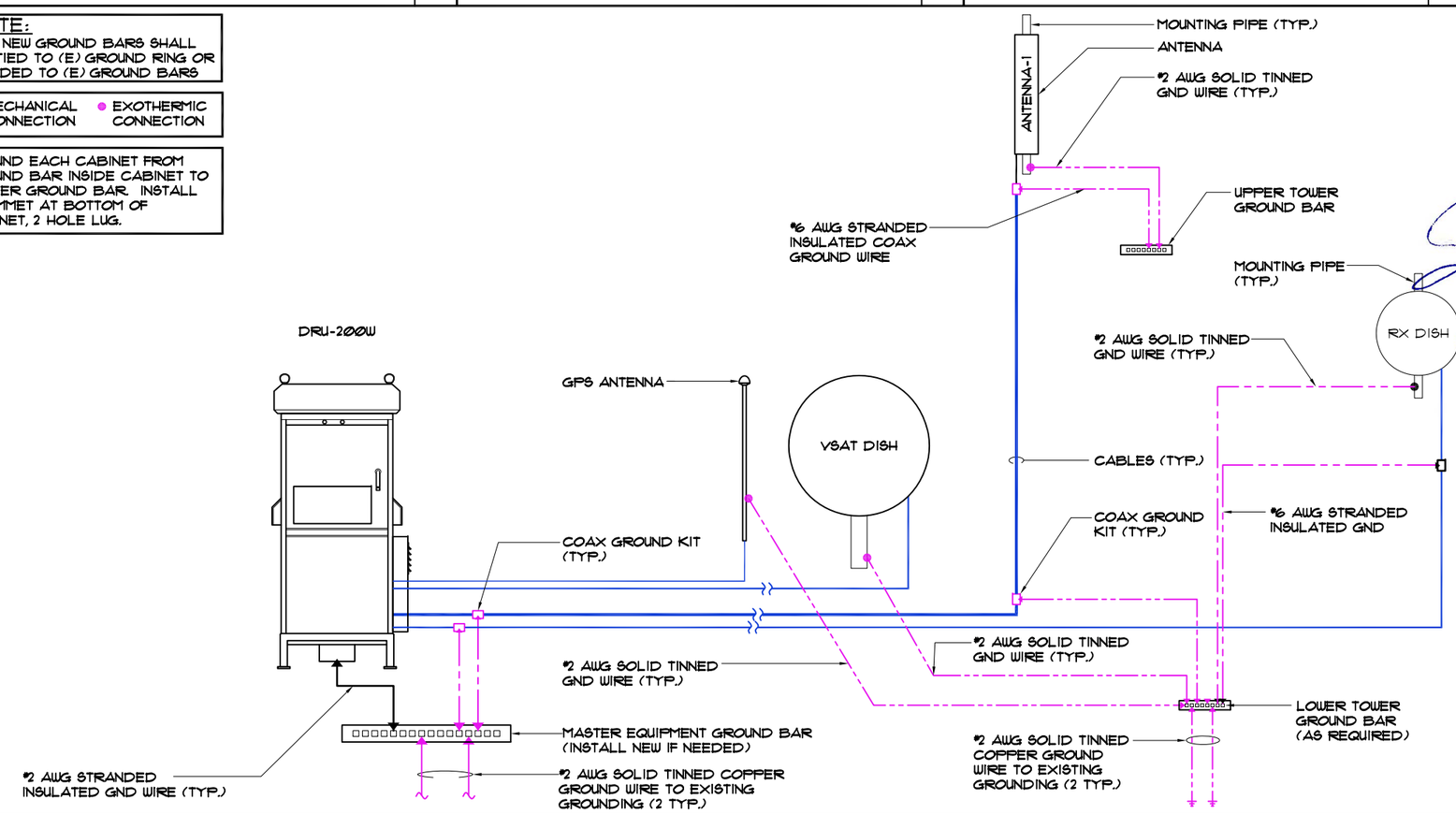

FINAL SINGLE LINE GROUNDING DIAGRAM SCALE: N.T.S. 5

Sirius XM SATELLITE RADIO

CROWN CASTLE
shaping the wireless world
CROWN CASTLE
2000 CORPORATE DR.
CANONSBURG, PA 15317
PHONE: (724) 416-2000

FULLERTON ENGINEERING · DESIGN
9600 W. BRYN MAWR AVE., SUITE 200
ROSEMONT, ILLINOIS 60018
TEL: 847-292-0200
FAX: 847-292-0206
www.FullertonEngineering.com

CHECKED BY:	JP
APPROVED BY:	MB

#	DATE	DESCRIPTION	INT.
0	2/07/14	90% REVIEW	DW
1	02/25/14	FINAL	JB

STATE OF CONNECTICUT · HENRY M. BELLAGAMBA · No. 25358 · LICENSED PROFESSIONAL ENGINEER

SIGNED DATE: 02/25/2014

SITE NAME
HAR040S

SITE I.D.
HAR040S

SITE ADDRESS
423 ORONOQUE RD.
MILFORD, CT 06460

SHEET NAME
GROUNDING DETAILS AND NOTES

SHEET NUMBER
E-3

THIS DRAWING IS THE PROPERTY OF FULLERTON ENGINEERING CONSULTANTS, INC. IT IS FOR THE EXCLUSIVE USE OF THIS PROJECT. ANY RE-USE OF THIS DRAWING WITHOUT THE EXPRESSED WRITTEN CONSENT OF FULLERTON ENGINEERING CONSULTANTS, INC. IS PROHIBITED.

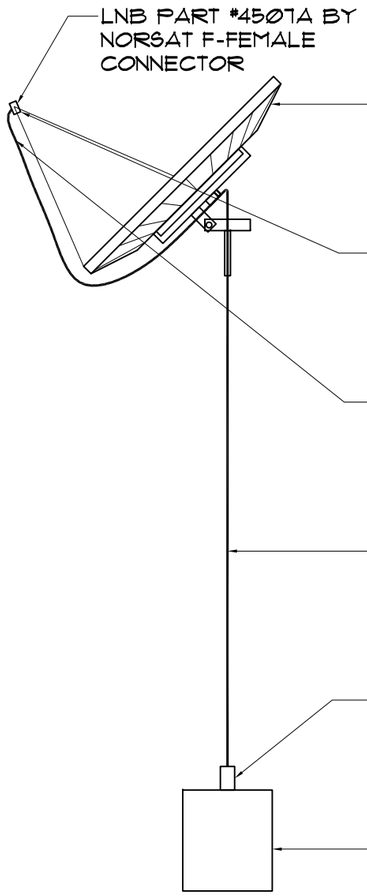

ITEM #	DESCRIPTION	SIZE	QUANTITY	LENGTH	MANUFACTURER	PART NUMBER	REMARKS	PROVIDED BY
1	VSAT DISH	1.0M	1 NEW	N/A	PRODELIN	1111 WITHOUT DEICING	PRODELIN VSAT DISH ANTENNA	VENDOR
2	LNB	N/A	1 NEW	N/A	NORSAT	4507A	-	VENDOR
3	F-MALE CONNECTOR	N/A	1 NEW	N/A	THOMAS AND BETTS	SNSIP6QS	-	VENDOR
4	COAX CABLE	.298"	1 NEW	65'	BELDEN	RG6-QS	-	VENDOR
5	F-MALE CONNECTOR	N/A	1 NEW	N/A	THOMAS AND BETTS	SNSIP6QS		VENDOR
6	CABINET	N/A	1 NEW	N/A	UBS	DRU-200W	-	SIRIUS XM

VSAT ANTENNA CONFIGURATION

SCALE: N.T.S. 1

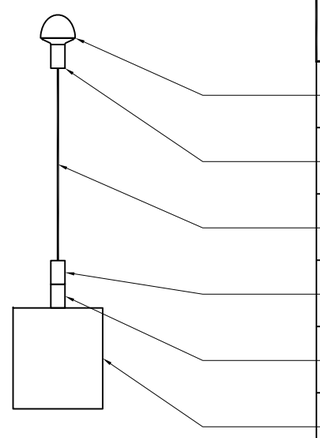

ITEM #	DESCRIPTION	SIZE	QUANTITY	LENGTH	MANUFACTURER	PART NUMBER	REMARKS	PROVIDED BY
1	GPS ANTENNA	N/A	1 NEW	N/A	TRIMBLE	57860-30	-	SIRIUS XM
2	F CONNECTOR	N/A	1 NEW	N/A	THOMAS AND BETTS	SNSIP6QS	-	VENDOR
3	COAX CABLE	.298	1 NEW	65'	BELDEN	RG6-QS	-	VENDOR
4	F CONNECTOR	N/A	1 NEW	N/A	THOMAS AND BETTS	SNSIP6QS	-	VENDOR
5	F TO N CONNECTOR	N/A	1 NEW	N/A	EMERSON	26-8020	-	SIRIUS XM
6	CABINET	N/A	1 NEW	N/A	UBS	DRU-200W	-	SIRIUS XM

GPS ANTENNA CONFIGURATION

SCALE: N.T.S. 2

Sirius XM SATELLITE RADIO

CROWN CASTLE
shaping the wireless world
CROWN CASTLE
2000 CORPORATE DR.
CANONSBURG, PA 15317
PHONE: (724) 416-2000

FULLERTON ENGINEERING · DESIGN
9600 W. BRYN MAWR AVE., SUITE 200
ROSEMONT, ILLINOIS 60018
TEL: 847-292-0200
FAX: 847-292-0206
www.FullertonEngineering.com

CHECKED BY:	JP
APPROVED BY:	MB

#	DATE	DESCRIPTION	INT.
0	2/07/14	90% REVIEW	DW
1	02/25/14	FINAL	JB

STATE OF CONNECTICUT
HENRY M. BELLAGAMBA
No. 25358
LICENSED
PROFESSIONAL ENGINEER

SIGNED DATE: 02/25/2014

SITE NAME
HAR040S

SITE I.D.
HAR040S

SITE ADDRESS
423 ORONOQUE RD.
MILFORD, CT 06460

SHEET NAME
SITE CONFIGURATIONS MATERIAL LIST

SHEET NUMBER
E-4

THIS DRAWING IS THE PROPERTY OF FULLERTON ENGINEERING CONSULTANTS, INC. IT IS FOR THE EXCLUSIVE USE OF THIS PROJECT. ANY RE-USE OF THIS DRAWING WITHOUT THE EXPRESSED WRITTEN CONSENT OF FULLERTON ENGINEERING CONSULTANTS, INC. IS PROHIBITED.

ITEM #	DESCRIPTION	SIZE	QUANTITY	LENGTH	MANUFACTURER	PART NUMBER	REMARKS	PROVIDED BY
1	HB RX DISH (2330-2345 MHz)	25.25"	1 NEW	N/A	TIL-TEK	TA-2324-LHCP	CIRCULAR POLARIZED SOLID PARABOLIC DISH ANTENNA	SIRIUS XM
2	7-16 DIN MALE CONNECTOR	N/A	1 NEW	N/A	ANDREW	L4TDN-PSA	ATTACH TO CABLE PRIOR TO INSTALLATION	VENDOR
3	GROUNDING KIT	N/A	1 NEW	N/A	ANDREW	SG12-06B2A	INCLUDES 59" #6 GROUND WIRE, INSTALL 1 KIT EVERY 100 FT. MIN.	VENDOR
4	COAXIAL CABLE	1/2"ϕ	1 NEW	70'	ANDREW	LDF4-50A	MINIMUM BEND RADIUS PER MANUFACTURER SPECS	VENDOR
5	GROUNDING KIT	N/A	1 NEW	N/A	ANDREW	SG12-06B2A	INCLUDES 59" #6 GROUND WIRE, INSTALL 1 KIT EVERY 100 FT. MIN.	VENDOR
6	N MALE CONNECTOR	N/A	1 NEW	N/A	ANDREW	L4TNM-PSA	-	VENDOR
7	CABINET	N/A	1 NEW	N/A	UBS	DRU-200W	-	SIRIUS XM

RX ANTENNA CONFIGURATION

SCALE: N.T.S.

1

Sirius XM SATELLITE RADIO

CROWN CASTLE

shaping the wireless world
CROWN CASTLE
2000 CORPORATE DR.
CANONSBURG, PA 15317
PHONE: (724) 416-2000

FULLERTON ENGINEERING · DESIGN

9600 W. BRYN MAWR AVE., SUITE 200
ROSEMONT, ILLINOIS 60018
TEL: 847-292-0200
FAX: 847-292-0206
www.FullertonEngineering.com

CHECKED BY:	JP
APPROVED BY:	MB

#	DATE	DESCRIPTION	INT.
0	2/07/14	90% REVIEW	DW
1	02/25/14	FINAL	JB

STATE OF CONNECTICUT
HENRY M. BELLAGAMBA
No. 25358
LICENSED
PROFESSIONAL ENGINEER

SIGNED DATE: 02/25/2014

SITE NAME

HAR040S

SITE I.D.

HAR040S

SITE ADDRESS

423 ORONOQUE RD.
MILFORD, CT 06460

SHEET NAME

SITE CONFIGURATIONS MATERIAL LIST

SHEET NUMBER

E-4A

THIS DRAWING IS THE PROPERTY OF FULLERTON ENGINEERING CONSULTANTS, INC. IT IS FOR THE EXCLUSIVE USE OF THIS PROJECT. ANY RE-USE OF THIS DRAWING WITHOUT THE EXPRESSED WRITTEN CONSENT OF FULLERTON ENGINEERING CONSULTANTS, INC. IS PROHIBITED.

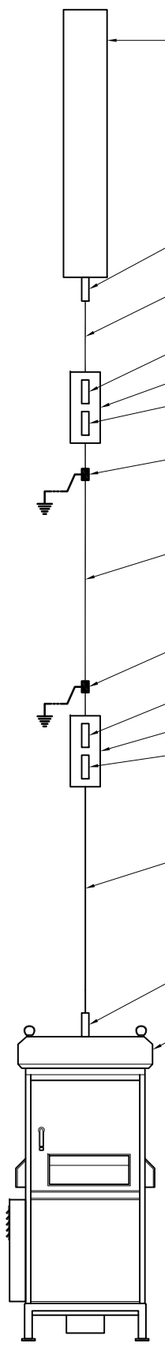

ITEM #	DESCRIPTION	SIZE	QUANTITY	LENGTH	MANUFACTURER	PART NUMBER	REMARKS	PROVIDED BY
1	TRANSMIT ANTENNA	N/A	1 NEW	N/A	TIL-TEK	TA-2335-DAB-L-095	-	SIRIUS XM
2	7-16 DIN MALE CONNECTOR	N/A	1 NEW	N/A	TIL-TEK	L4TDM-PSA	ATTACH TO CABLE PRIOR TO INSTALLATION	VENDOR
3	TOP JUMPER	1/2"ϕ	1 NEW	6' - 10'	ANDREW	LDF4-50A	6'-10' OF JUMPER CABLE CAN BE USED DEPENDING ON THE SITE	VENDOR
4	7-16 DIN MALE CONNECTOR	N/A	1 NEW	N/A	ANDREW	L4TDM-PSA	ATTACH TO CABLE PRIOR TO INSTALLATION	VENDOR
5	WEATHERPROOFING	N/A	1 NEW	N/A	ANDREW	-	WEATHERPROOFING PER 3/C-5A	VENDOR
6	7-16 DIN FEMALE CONNECTOR	N/A	1 NEW	N/A	ANDREW	AL5DF-PSA	ATTACH TO CABLE PRIOR TO INSTALLATION	VENDOR
7	GROUNDING KIT	N/A	1 NEW	N/A	ANDREW	SG78-06B2A	INCLUDES 59" % GROUND WIRE, INSTALL 1 KIT EVERY 100 FT. MIN.	VENDOR
8	COAXIAL CABLE	7/8"	1 NEW	120'	ANDREW	AVA5-50A	MINIMUM BEND RADIUS PER MANUFACTURER SPECS	VENDOR
9	GROUNDING KIT	N/A	1 NEW	N/A	ANDREW	SG78-06B2A	INCLUDES 59" % GROUND WIRE, INSTALL 1 KIT EVERY 100 FT. MIN.	VENDOR
10	7-16 DIN FEMALE CONNECTOR	N/A	1 NEW	N/A	ANDREW	AL5DF-PSA	ATTACH TO CABLE PRIOR TO INSTALLATION	VENDOR
11	WEATHERPROOFING	N/A	1 NEW	N/A	ANDREW	-	WEATHERPROOFING PER 3/C-5A	VENDOR
12	7-16 DIN MALE CONNECTOR	N/A	1 NEW	N/A	ANDREW	L4TDM-PSA	ATTACH TO CABLE PRIOR TO INSTALLATION	VENDOR
13	BOTTOM JUMPER	1/2"ϕ	1 NEW	6' - 10'	ANDREW	LDF4-50A	6'-10' OF JUMPER CABLE CAN BE USED DEPENDING ON THE SITE	VENDOR
14	7/8" EIA CONNECTOR	N/A	1 NEW	N/A	ANDREW	L4E78-PS	ATTACH TO CABLE PRIOR TO INSTALLATION	VENDOR
15	CABINET	N/A	1 NEW	N/A	UBS	DRU-200W	-	SIRIUS XM

FINAL ANTENNA CONFIGURATION

SCALE: N.T.S. | 1

Sirius XM SATELLITE RADIO

CROWN CASTLE
shaping the wireless world
CROWN CASTLE
2000 CORPORATE DR.
CANONSBURG, PA 15317
PHONE: (724) 416-2000

FULLERTON ENGINEERING · DESIGN
9600 W. BRYN MAWR AVE., SUITE 200
ROSEMONT, ILLINOIS 60018
TEL: 847-292-0200
FAX: 847-292-0206
www.FullertonEngineering.com

CHECKED BY:	JP
APPROVED BY:	MB

#	DATE	DESCRIPTION	INT.
0	2/07/14	90% REVIEW	DW
1	02/25/14	FINAL	JB

STATE OF CONNECTICUT
HENRY M. BELLAGAMBA
No. 25358
LICENSED
PROFESSIONAL ENGINEER

SIGNED DATE: 02/25/2014

SITE NAME
HAR040S

SITE I.D.
HAR040S

SITE ADDRESS
423 ORONOQUE RD.
MILFORD, CT 06460

SHEET NAME
SITE CONFIGURATIONS MATERIAL LIST

SHEET NUMBER
E-5

THIS DRAWING IS THE PROPERTY OF FULLERTON ENGINEERING CONSULTANTS, INC. IT IS FOR THE EXCLUSIVE USE OF THIS PROJECT. ANY RE-USE OF THIS DRAWING WITHOUT THE EXPRESSED WRITTEN CONSENT OF FULLERTON ENGINEERING CONSULTANTS, INC. IS PROHIBITED.