CROWN CASTLE
Crown Castle
3530 Toringdon Way Suite 300
Charlotte NC 28277
Tel (704) 405-6600

October 24, 2014

Melanie A. Bachman
Connecticut Siting Council
10 Franklin Square
New Britain, CT 06051

RE: **T-Mobile-Exempt Modification - Crown Site BU: 825983**
**T-Mobile Site ID: CT11057C**
**Located at: 90 Industrial Park Road, Middletown, CT 06457**

Dear Ms. Bachman:

This letter and exhibits are submitted on behalf of T-Mobile. T-Mobile is making modifications to certain existing sites in its Connecticut system in order to implement their 700MHz technology. Please accept this letter and exhibits as notification, pursuant to § 16-50j-73 of the Regulations of Connecticut State Agencies ("R.C.S.A."), of construction that constitutes an exempt modification pursuant to R.C.S.A. § 16-50j-72(b)(2). In compliance with R.C.S.A. § 16-50j-73, a copy of this letter is being sent to The Honorable Daniel T. Drew, Mayor for City of Middletown, and Phillip C. Armetta, Property Owner.

T-Mobile plans to modify the existing wireless communications facility owned by Crown Castle and located at **90 Industrial Park Road, Middletown, CT 06457**. Attached are a compound plan and elevation depicting the planned changes (Exhibit-1), and documentation of the structural sufficiency of the structure to accommodate the revised antenna configuration (Exhibit-2). Also included is a power density table report reflecting the modification to T-Mobile's operations at the site (Exhibit-3).

The changes to the facility do not constitute a modification as defined in Connecticut General Statutes ("C.G.S.") § 16-50i(d) because the general physical characteristics of the facility will not be significantly changed. Rather, the planned changes to the facility fall squarely within those activities explicitly provided for in the R.C.S.A. § 16-50j-72(b)(2).

1. The proposed modifications will not result in an increase in the height of the existing tower. T-Mobile's replacement antennas will be located at the same elevation on the existing tower.

2. There will be no proposed modifications to the ground and no extension of boundaries.

3. The proposed modifications will not increase noise levels at the facility by six decibels or more.

4. The operation of the replacement antennas will not increase radio frequency (RF) emissions at the facility to a level at or above the Federal Communications Commission (FCC) adopted safety standard. A cumulative General Power Density table report for T-Mobile's modified facility is included as Exhibit-3.

5. A Structural Modification Report confirming that the tower and foundation can support T-Mobile's proposed modifications is included as Exhibit-2.

For the foregoing reasons, T-Mobile respectfully submits the proposed modifications to the above-reference telecommunications facility constitutes an exempt modification under R.C.S.A. § 16-50j-72(b)(2).

Sincerely,

Jerry Feathers
Real Estate Specialist

Enclosure

Tab 1: Exhibit-1: Compound plan and elevation depicting the planned changes
Tab 2: Exhibit-2: Structural Modification Report
Tab 3: Exhibit-3: General Power Density Table Report (RF Emissions Analysis Report)

cc: The Honorable Daniel T. Drew
City of Middletown
City Hall
245 deKoven Drive
Middletown, CT 06457

cc: Phillip C. Armetta
90 Industrial Park Rd.
Middletown, CT 06457

# T-MOBILE NORTHEAST LLC

# T-MOBILE SITE #: CT11057C
# CROWN CASTLE BU #: 825983
# SITE NAME: MIDDLETOWN 1
# 90 INDUSTRIAL PARK ROAD
# MIDDLETOWN, CT 06457
# MIDDLESEX COUNTY

## SITE CONFIGURATION: 704G

## SITE INFORMATION

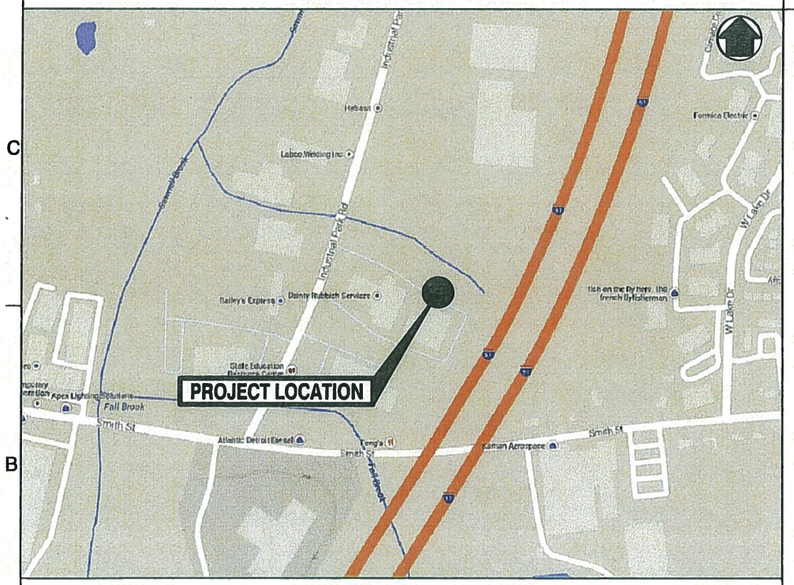


**KEY MAP**
N.T.S.

DIRECTIONS: (FROM PARSIPPANY):

TAKE US–202 N TO I–80 E TO I–287 N. KEEP RIGHT AT THE FORK, FOLLOW SIGNS FOR I–87 S/I–287/TAPPAN ZEE BR/NEW YORK CITY/NEW YORK THRUWAY AND MERGE ONTO I–287 E/I–87 S. TAKE EXIT 9N–9S FOR HUTCHINSON PKWY TOWARD WHITESTONE BRIDGE/MERRITT PKWY. MERGE ONTO WESTCHESTER AVE. TAKE THE HUTCHINSON PKWY N RAMP TO MERRITT PKWY. MERGE ONTO HUTCHINSON RIVER PKWY N. CONTINUE ONTO CT–15 N. TAKE EXIT 68 N–E TO MERGE ONTO I–91 N TOWARD CT–66 E/HARTFORD/MIDDLETOWN. TAKE EXIT 20 FOR COUNTRY CLUB RD TOWARD MIDDLE ST. TURN LEFT ONTO COUNTRY CLUB RD. TAKE THE 1ST RIGHT ONTO MIDDLE ST. TURN RIGHT ONTO SMITH ST. TURN LEFT ONTO INDUSTRIAL PARK RD. TURN RIGHT, DESTINATION WILL BE ON THE LEFT.

## PROJECT INFORMATION

| | |
|---|---|
| T–MOBILE SITE #: | CT11057C |
| CROWN CASTLE BU #: | 825983 |
| SITE ADDRESS: | 90 INDUSTRIAL PARK ROAD<br>MIDDLETOWN, CT 06457<br>MIDDLESEX COUNTY |
| LATITUDE: | N 41° 35' 8.3" |
| LONGITUDE: | W 72° 42' 50.49" |
| TOWER OWNER: | CROWN CASTLE<br>1200 MACARTHUR BLVD., SUITE 200<br>MAHWAH, NJ 07430 |
| CONTACT: | PETER TISI<br>(201) 236–9224 |
| APPLICANT: | T–MOBILE NORTHEAST, LLC<br>4 SYLVAN WAY<br>PARSIPPANY, NJ 07054 |
| CONTACT: | PHONE #: (973) 397–4800<br>FAX #: (973) 292–8893 |
| ENGINEER: | DEWBERRY ENGINEERS INC.<br>600 PARSIPPANY ROAD, SUITE 301<br>PARSIPPANY, NJ 07054 |
| CONTACT: | GREG NAWROTZKI<br>(973) 576–9653 |
| SCOPE OF WORK: | REMOVE AND REPLACE (3) EXISTING ANTENNAS WITH (3) NEW ANTENNAS, ADD (3) NEW BIAS TEES, ADD (3) NEW RRU'S AT GRADE |

## SHEET INDEX

| SHEET NO. | SHEET DESCRIPTION |
|---|---|
| T–1 | TITLE SHEET |
| G–1 | GENERAL NOTES |
| C–1 | COMPOUND PLAN & EQUIPMENT PLANS |
| C–2 | ANTENNA LAYOUTS & ELEVATIONS |
| C–3 | CONSTRUCTION DETAILS |
| E–1 | GROUNDING NOTES & DETAILS |

## APPROVALS

T–MOBILE DATE

OWNER/ LANDLORD DATE

RF ENGINEER DATE

ZONING DATE

CONSTRUCTION DATE


Dewberry®
Dewberry Engineers Inc.
600 PARSIPPANY ROAD
SUITE 301
PARSIPPANY, NJ 07054
PHONE: 973.739.9400
FAX: 973.739.9710

T-MOBILE NORTHEAST LLC
4 SYLVAN WAY
PARSIPPANY, NJ 07054
PHONE: (973) 397-4800
FAX: (973) 292-8893


MIDDLETOWN 1

CT11057C

90 INDUSTRIAL PARK ROAD
MIDDLETOWN, CT 06457
MIDDLESEX COUNTY


THIS DOCUMENT WAS DEVELOPED TO REFLECT A SPECIFIC SITE AND ITS SITE CONDITIONS AND IS NOT TO BE USED FOR ANOTHER SITE OR WHEN OTHER CONDITIONS PERTAIN. REUSE OF THIS DOCUMENT IS AT THE SOLE RISK OF THE USER.


SEAL

THIS DOCUMENT CONTAINS THE SOLE PROPERTY OF THE WIRELESS COMMUNICATIONS (CA) ALLIANCE PROVIDED SOLELY FOR THE USE BY T-MOBILE AND ITS AFFILIATES. REPRODUCTION OF THIS DRAWING AND/OR THE INFORMATION CONTAINED IN IT IS FORBIDDEN WITHOUT THE WRITTEN PERMISSION OF T–MOBILE.


SCALE
AS SHOWN

| REV. | DATE | BY | DESCRIPTION |
|---|---|---|---|
| 0 | 10/07/14 | JC | ISSUED AS FINAL |
| A | 08/25/14 | JC | ISSUED FOR REVIEW |

REVISIONS

DRAWN BY JC
CHECKED BY BSH
APPROVED BY GHN
DATE 08/21/14

TITLE
**TITLE SHEET**

PROJECT NO. 50066258/50066270

**T - 1**

SHEET NO.

1 2 3 4 5

## GENERAL NOTES:

1. FOR THE PURPOSE OF CONSTRUCTION DRAWING, THE FOLLOWING DEFINITIONS SHALL APPLY:
   PROJECT MANAGEMENT – CROWN CASTLE
   CONTRACTOR – GENERAL CONTRACTOR (CONSTRUCTION)
   OWNER – T-MOBILE
   OEM – ORIGINAL EQUIPMENT MANUFACTURER
2. PRIOR TO THE SUBMISSION OF BIDS, THE BIDDING CONTRACTOR SHALL VISIT THE CELL SITE TO FAMILIARIZE WITH THE EXISTING CONDITIONS AND TO CONFIRM THAT THE WORK CAN BE ACCOMPLISHED AS SHOWN ON THE CONSTRUCTION DRAWINGS. ANY DISCREPANCY FOUND SHALL BE BROUGHT TO THE ATTENTION OF PROJECT MANAGEMENT.
3. ALL MATERIALS FURNISHED AND INSTALLED SHALL BE IN STRICT ACCORDANCE WITH ALL APPLICABLE CODES, REGULATIONS, AND ORDINANCES. CONTRACTOR SHALL ISSUE ALL APPROPRIATE NOTICES AND COMPLY WITH ALL LAWS, ORDINANCES, RULES, REGULATIONS, AND LAWFUL ORDERS OF ANY PUBLIC AUTHORITY REGARDING THE PERFORMANCE OF THE WORK.
4. ALL WORK CARRIED OUT SHALL COMPLY WITH ALL APPLICABLE MUNICIPAL AND UTILITY COMPANY SPECIFICATIONS AND LOCAL JURISDICTIONAL CODES, ORDINANCES AND APPLICABLE REGULATIONS.
5. DRAWINGS PROVIDED HERE ARE NOT TO SCALE UNLESS OTHERWISE NOTED AND ARE INTENDED TO SHOW OUTLINE ONLY.
6. UNLESS NOTED OTHERWISE, THE WORK SHALL INCLUDE FURNISHING MATERIALS, EQUIPMENT, APPURTENANCES, AND LABOR NECESSARY TO COMPLETE ALL INSTALLATIONS AS INDICATED ON THE DRAWINGS.
7. THE CONTRACTOR SHALL INSTALL ALL EQUIPMENT AND MATERIALS IN ACCORDANCE WITH MANUFACTURER'S RECOMMENDATIONS UNLESS SPECIFICALLY STATED OTHERWISE.
8. IF THE SPECIFIED EQUIPMENT CANNOT BE INSTALLED AS SHOWN ON THESE DRAWINGS, THE CONTRACTOR SHALL PROPOSE AN ALTERNATIVE INSTALLATION FOR APPROVAL BY PROJECT MANAGEMENT.
9. CONTRACTOR SHALL DETERMINE ACTUAL ROUTING OF CONDUIT, POWER AND T1 CABLES, GROUNDING CABLES AS SHOWN ON THE POWER, GROUNDING AND TELCO PLAN DRAWING. CONTRACTOR SHALL UTILIZE EXISTING TRAYS AND/OR SHALL ADD NEW TRAYS AS NECESSARY. CONTRACTOR SHALL CONFIRM THE ACTUAL ROUTING WITH PROJECT MANAGEMENT.
10. THE CONTRACTOR SHALL PROTECT EXISTING IMPROVEMENTS, PAVEMENTS, CURBS, LANDSCAPING AND STRUCTURES. ANY DAMAGED PART SHALL BE REPAIRED AT CONTRACTOR'S EXPENSE TO THE SATISFACTION OF THE OWNER.
11. CONTRACTOR SHALL LEGALLY AND PROPERLY DISPOSE OF ALL SCRAP MATERIALS SUCH AS COAXIAL CABLES AND OTHER ITEMS REMOVED FROM THE EXISTING FACILITY. ANTENNAS REMOVED SHALL BE RETURNED TO THE OWNER'S DESIGNATED LOCATION.
12. CONTRACTOR SHALL LEAVE PREMISES IN CLEAN CONDITION.
13. THE CONTRACTOR SHALL SUPERVISE AND DIRECT THE PROJECT DESCRIBED HEREIN. THE CONTRACTOR SHALL BE SOLELY RESPONSIBLE FOR ALL CONSTRUCTION MEANS, METHODS, TECHNIQUES, SEQUENCES, AND PROCEDURES AND FOR COORDINATING ALL PORTIONS OF THE WORK UNDER THE CONTRACT.
14. CONTRACTOR SHALL NOTIFY DEWBERRY 48 HOURS IN ADVANCE OF POURING CONCRETE, OR BACKFILLING TRENCHES, SEALING ROOF AND WALL PENETRATIONS & POST DOWNS, FINISHING NEW WALLS OR FINAL ELECTRICAL CONNECTIONS FOR ENGINEER REVIEW.
15. CONTRACTOR SHALL VERIFY ALL EXISTING DIMENSIONS AND CONDITIONS PRIOR TO COMMENCING ANY WORK. ALL DIMENSIONS OF EXISTING CONSTRUCTION SHOWN ON THE DRAWINGS MUST BE VERIFIED. CONTRACTOR SHALL NOTIFY PROJECT MANAGEMENT OF ANY DISCREPANCIES PRIOR TO ORDERING MATERIAL OR PROCEEDING WITH CONSTRUCTION.
16. THE EXISTING CELL SITE IS IN FULL COMMERCIAL OPERATION. ANY CONSTRUCTION WORK BY CONTRACTOR SHALL NOT DISRUPT THE EXISTING NORMAL OPERATION. ANY WORK ON EXISTING EQUIPMENT MUST BE COORDINATED WITH CONTRACTOR. ALSO, WORK SHOULD BE SCHEDULED FOR AN APPROPRIATE MAINTENANCE WINDOW USUALLY IN LOW TRAFFIC PERIODS AFTER MIDNIGHT.
17. SINCE THE CELL SITE IS ACTIVE, ALL SAFETY PRECAUTIONS MUST BE TAKEN WHEN WORKING AROUND HIGH LEVELS OF ELECTROMAGNETIC RADIATION. EQUIPMENT SHOULD BE SHUTDOWN PRIOR TO PERFORMING ANY WORK THAT COULD EXPOSE THE WORKERS TO DANGER. PERSONAL RF EXPOSURE MONITORS ARE ADVISED TO BE WORN TO ALERT OF ANY DANGEROUS EXPOSURE LEVELS.

## SITE WORK GENERAL NOTES:

1. THE CONTRACTOR SHALL CONTACT UTILITY LOCATING SERVICES PRIOR TO THE START OF CONSTRUCTION.
2. ALL EXISTING ACTIVE SEWER, WATER, GAS, ELECTRIC, AND OTHER UTILITIES WHERE ENCOUNTERED IN THE WORK, SHALL BE PROTECTED AT ALL TIMES, AND WHERE REQUIRED FOR THE PROPER EXECUTION OF THE WORK, SHALL BE RELOCATED AS DIRECTED BY CONTRACTOR. EXTREME CAUTION SHOULD BE USED BY THE CONTRACTOR WHEN EXCAVATING OR DRILLING PIERS AROUND OR NEAR UTILITIES. CONTRACTOR SHALL PROVIDE SAFETY TRAINING FOR THE WORKING CREW. THIS WILL INCLUDE BUT NOT BE LIMITED TO:
   A) FALL PROTECTION
   B) CONFINED SPACE
   C) ELECTRICAL SAFETY
   D) TRENCHING & EXCAVATION.
3. ALL SITE WORK SHALL BE AS INDICATED ON THE DRAWINGS AND PROJECT SPECIFICATIONS.
4. IF NECESSARY, RUBBISH, STUMPS, DEBRIS, STICKS, STONES, TOP SOIL AND OTHER REFUSE SHALL BE REMOVED FROM THE SITE AND DISPOSED OF LEGALLY.
5. ALL EXISTING INACTIVE SEWER, WATER, GAS, ELECTRIC AND OTHER UTILITIES, WHICH INTERFERE WITH THE EXECUTION OF THE WORK, SHALL BE REMOVED AND/OR CAPPED, PLUGGED OR OTHERWISE DISCONTINUED AT POINTS WHICH WILL NOT INTERFERE WITH THE EXECUTION OF THE WORK, SUBJECT TO THE APPROVAL OF CONTRACTOR, OWNER AND/OR LOCAL UTILITIES.
6. CONTRACTOR SHALL MINIMIZE DISTURBANCE TO EXISTING SITE DURING CONSTRUCTION.
7. THE CONTRACTOR SHALL PROVIDE SITE SIGNAGE IN ACCORDANCE WITH THE T-MOBILE SPECIFICATION FOR SITE SIGNAGE.
8. THE SITE SHALL BE GRADED TO CAUSE SURFACE WATER TO FLOW AWAY FROM THE TRANSMISSION EQUIPMENT AND TOWER AREAS.
9. NO FILL OR EMBANKMENT MATERIAL SHALL BE PLACED ON FROZEN GROUND. FROZEN MATERIALS, SNOW OR ICE SHALL NOT BE PLACED IN ANY FILL OR EMBANKMENT.
10. THE SUB GRADE SHALL BE COMPACTED AND BROUGHT TO A SMOOTH UNIFORM GRADE PRIOR TO FINISHED SURFACE APPLICATION, SEE SOIL COMPACTION NOTES.
11. THE AREAS OF THE OWNER'S PROPERTY DISTURBED BY THE WORK AND NOT COVERED BY THE TOWER, EQUIPMENT OR DRIVEWAY, SHALL BE GRADED TO A UNIFORM SLOPE, AND STABILIZED TO PREVENT EROSION.
12. EROSION CONTROL MEASURES, IF REQUIRED DURING CONSTRUCTION, SHALL BE IN CONFORMANCE WITH THE LOCAL JURISDICTION'S GUIDELINES FOR EROSION AND SEDIMENT CONTROL.

## ELECTRICAL INSTALLATION NOTES:

1. ALL ELECTRICAL WORK SHALL BE PERFORMED IN ACCORDANCE WITH THE PROJECT SPECIFICATIONS, NEC AND ALL APPLICABLE LOCAL CODES.
2. CONTRACTOR SHALL MODIFY EXISTING CABLE TRAY SYSTEM AS REQUIRED TO SUPPORT RF AND TRANSPORT CABLING TO THE NEW BTS EQUIPMENT. CONTRACTOR SHALL SUBMIT MODIFICATIONS TO PROJECT MANAGEMENT FOR APPROVAL.
3. CONDUIT ROUTINGS ARE SCHEMATIC. CONTRACTOR SHALL INSTALL CONDUITS SO THAT ACCESS TO EQUIPMENT IS NOT BLOCKED.
4. WIRING, RACEWAY AND SUPPORT METHODS AND MATERIALS SHALL COMPLY WITH THE REQUIREMENTS OF THE NEC AND TELCORDIA.
5. ALL CIRCUITS SHALL BE SEGREGATED AND MAINTAIN MINIMUM CABLE SEPARATION AS REQUIRED BY THE NEC AND TELCORDIA.
6. CABLES SHALL NOT BE ROUTED THROUGH LADDER-STYLE CABLE TRAY RUNGS.
7. EACH END OF EVERY POWER, POWER PHASE CONDUCTOR (I.E., HOTS), GROUNDING, AND T1 CONDUCTOR AND CABLE SHALL BE LABELED WITH COLOR-CODED INSULATION OR ELECTRICAL TAPE (3M BRAND, 1/2 INCH PLASTIC ELECTRICAL TAPE WITH UV PROTECTION, OR EQUAL). THE IDENTIFICATION METHOD SHALL CONFORM WITH NEC & OSHA, AND MATCH EXISTING INSTALLATION REQUIREMENTS.
8. ALL ELECTRICAL COMPONENTS SHALL BE CLEARLY LABELED WITH ENGRAVED LAMACOID PLASTIC LABELS. ALL EQUIPMENT SHALL BE LABELED WITH THEIR VOLTAGE RATING, PHASE CONFIGURATION, WIRE CONFIGURATION, POWER OR AMPACITY RATING, AND BRANCH CIRCUIT ID NUMBERS (I.E., PANELBOARD AND CIRCUIT ID'S).
9. PANELBOARDS (ID NUMBERS) AND INTERNAL CIRCUIT BREAKERS (CIRCUIT ID NUMBERS) SHALL BE CLEARLY LABELED WITH ENGRAVED LAMACOID PLASTIC LABELS.
10. ALL TIE WRAPS SHALL BE CUT FLUSH WITH APPROVED CUTTING TOOL TO REMOVE SHARP EDGES.
11. POWER, CONTROL, AND EQUIPMENT GROUND WIRING IN TUBING OR CONDUIT SHALL BE SINGLE CONDUCTOR (SIZE 14 AWG OR LARGER), 600V, OIL RESISTANT THHN OR THWN-2, CLASS B STRANDED COPPER CABLE RATED FOR 90 °C (WET AND DRY) OPERATION; LISTED OR LABELED FOR THE LOCATION AND RACEWAY SYSTEM USED, UNLESS OTHERWISE SPECIFIED.
12. POWER PHASE CONDUCTORS (I.E., HOTS) SHALL BE LABELED WITH COLOR-CODED INSULATION OR ELECTRICAL TAPE (3M BRAND, 1/2 INCH PLASTIC ELECTRICAL TAPE WITH UV PROTECTION, OR EQUAL.) PHASE CONDUCTOR COLOR CODES SHALL CONFORM WITH THE NEC & OSHA AND MATCH EXISTING INSTALLATION REQUIREMENTS.
13. SUPPLEMENTAL EQUIPMENT GROUND WIRING LOCATED INDOORS SHALL BE SINGLE CONDUCTOR (SIZE 6 AWG OR LARGER), 600V, OIL RESISTANT THHN OR THWN-2 GREEN INSULATION, CLASS B STRANDED COPPER CABLE RATED FOR 90°C (WET AND DRY) OPERATION; LISTED OR LABELED FOR THE LOCATION AND RACEWAY SYSTEM USED, UNLESS OTHERWISE SPECIFIED.
14. SUPPLEMENTAL EQUIPMENT GROUND WIRING LOCATED OUTDOORS, OR BELOW GRADE, SHALL BE SINGLE CONDUCTOR #2 AWG SOLID TINNED COPPER CABLE, UNLESS OTHERWISE SPECIFIED.
15. POWER AND CONTROL WIRING, NOT IN TUBING OR CONDUIT, SHALL BE MULTI-CONDUCTOR, TYPE TC CABLE (SIZE 14 AWG OR LARGER), 600V, OIL RESISTANT THHN OR THWN-2, CLASS B STRANDED COPPER CABLE RATED FOR 90°C (WET AND DRY) OPERATION; WITH OUTER JACKET; LISTED OR LABELED FOR THE LOCATION USED, UNLESS OTHERWISE SPECIFIED.
16. ALL POWER AND POWER GROUNDING CONNECTIONS SHALL BE CRIMP-STYLE, COMPRESSION WIRE LUGS AND WIRENUTS BY THOMAS AND BETTS (OR EQUAL). LUGS AND WIRENUTS SHALL BE RATED FOR OPERATION AT NO LESS THAN 75°C (90°C IF AVAILABLE).
17. RACEWAY AND CABLE TRAY SHALL BE LISTED OR LABELED FOR ELECTRICAL USE IN ACCORDANCE WITH NEMA, UL, ANSI/IEEE, AND NEC.
18. NEW RACEWAY OR CABLE TRAY WILL MATCH THE EXISTING INSTALLATION WHERE POSSIBLE.
19. ELECTRICAL METALLIC TUBING (EMT) OR RIGID NONMETALLIC CONDUIT (I.E., RIGID PVC SCHEDULE 40, OR RIGID PVC SCHEDULE 80 FOR LOCATIONS SUBJECT TO PHYSICAL DAMAGE) SHALL BE USED FOR EXPOSED INDOOR LOCATIONS.
20. ELECTRICAL METALLIC TUBING (EMT), ELECTRICAL NONMETALLIC TUBING (ENT), OR RIGID NONMETALLIC CONDUIT (RIGID PVC, SCHEDULE 40) SHALL BE USED FOR CONCEALED INDOOR LOCATIONS.
21. GALVANIZED STEEL INTERMEDIATE METALLIC CONDUIT (IMC) SHALL BE USED FOR OUTDOOR LOCATIONS ABOVE GRADE.
22. RIGID NONMETALLIC CONDUIT (I.E., RIGID PVC SCHEDULE 40 OR RIGID PVC SCHEDULE 80) SHALL BE USED UNDERGROUND; DIRECT BURIED, IN AREAS OF OCCASIONAL LIGHT VEHICLE TRAFFIC OR ENCASED IN REINFORCED CONCRETE IN AREAS OF HEAVY VEHICLE TRAFFIC.
23. LIQUID-TIGHT FLEXIBLE METALLIC CONDUIT (LIQUID-TITE FLEX) SHALL BE USED INDOORS AND OUTDOORS, WHERE VIBRATION OCCURS OR FLEXIBILITY IS NEEDED.
24. CONDUIT AND TUBING FITTINGS SHALL BE THREADED OR COMPRESSION-TYPE AND APPROVED FOR THE LOCATION USED. SETSCREW FITTINGS ARE NOT ACCEPTABLE.
25. CABINETS, BOXES, AND WIREWAYS SHALL BE LISTED OR LABELED FOR ELECTRICAL USE IN ACCORDANCE WITH NEMA, UL, ANSI/IEEE, AND NEC.
26. CABINETS, BOXES, AND WIREWAYS TO MATCH THE EXISTING INSTALLATION WHERE POSSIBLE.
27. WIREWAYS SHALL BE EPOXY-COATED (GRAY) AND INCLUDE A HINGED COVER, DESIGNED TO SWING OPEN DOWNWARD; SHALL BE PANDUIT TYPE E (OR EQUAL); AND RATED NEMA 1 (OR BETTER) INDOORS, OR NEMA 3R (OR BETTER) OUTDOORS.
28. EQUIPMENT CABINETS, TERMINAL BOXES, JUNCTION BOXES, AND PULL BOXES SHALL BE GALVANIZED OR EPOXY-COATED SHEET STEEL, SHALL MEET OR EXCEED UL 50, AND RATED NEMA 1 (OR BETTER) INDOORS, OR NEMA 3R (OR BETTER) OUTDOORS.
29. METAL RECEPTACLE, SWITCH, AND DEVICE BOXES SHALL BE GALVANIZED, EPOXY-COATED, OR NON-CORRODING; SHALL MEET OR EXCEED UL 514A AND NEMA OS 1; AND RATED NEMA 1 (OR BETTER) INDOORS, OR WEATHER PROTECTED (WP OR BETTER) OUTDOORS.
30. NONMETALLIC RECEPTACLE, SWITCH, AND DEVICE BOXES SHALL MEET OR EXCEED NEMA OS 2; AND RATED NEMA 1 (OR BETTER) INDOORS, OR WEATHER PROTECTED (WP OR BETTER) OUTDOORS.
31. THE CONTRACTOR SHALL NOTIFY AND OBTAIN NECESSARY AUTHORIZATION FROM PROJECT MANAGEMENT BEFORE COMMENCING WORK ON THE AC POWER DISTRIBUTION PANELS.
32. THE CONTRACTOR SHALL PROVIDE NECESSARY TAGGING ON THE BREAKERS, CABLES AND DISTRIBUTION PANELS IN ACCORDANCE WITH THE APPLICABLE CODES AND STANDARDS TO SAFEGUARD AGAINST LIFE AND PROPERTY.

## CONCRETE AND REINFORCING STEEL NOTES:

1. ALL CONCRETE WORK SHALL BE IN ACCORDANCE WITH THE ACI 301, ACI 318, ACI 336, ASTM A184, ASTM A185 AND THE DESIGN AND CONSTRUCTION SPECIFICATION FOR CAST-IN-PLACE CONCRETE.
2. ALL CONCRETE SHALL HAVE A MINIMUM COMPRESSIVE STRENGTH OF 4000 PSI AT 28 DAYS, UNLESS NOTED OTHERWISE. A HIGHER STRENGTH (4000 PSI) MAY BE USED. ALL CONCRETING WORK SHALL BE DONE IN ACCORDANCE WITH ACI 318 CODE REQUIREMENTS.
3. REINFORCING STEEL SHALL CONFORM TO ASTM A 615, GRADE 60, DEFORMED UNLESS NOTED OTHERWISE. WELDED WIRE FABRIC SHALL CONFORM TO ASTM A 185 WELDED STEEL WIRE FABRIC UNLESS NOTED OTHERWISE (UNO). SPLICES SHALL BE CLASS "B" AND ALL HOOKS SHALL BE STANDARD, UNO.
4. THE FOLLOWING MINIMUM CONCRETE COVER SHALL BE PROVIDED FOR REINFORCING STEEL UNLESS SHOWN OTHERWISE ON DRAWINGS:

   CONCRETE CAST AGAINST EARTH........3 IN.
   CONCRETE EXPOSED TO EARTH OR WEATHER:
   #6 AND LARGER ..........................2 IN.
   #5 AND SMALLER & WWF.........1 1/2 IN.
   CONCRETE NOT EXPOSED TO EARTH OR WEATHER OR NOT CAST AGAINST THE GROUND:
   SLAB AND WALL ........................3/4 IN.
   BEAMS AND COLUMNS..............1 1/2 IN.
5. A CHAMFER 3/4" SHALL BE PROVIDED AT ALL EXPOSED EDGES OF CONCRETE, UNO, IN ACCORDANCE WITH ACI 301 SECTION 4.2.4.
6. INSTALLATION OF CONCRETE EXPANSION/WEDGE ANCHOR, SHALL BE PER MANUFACTURER'S WRITTEN RECOMMENDED PROCEDURE. THE ANCHOR BOLT, DOWEL OR ROD SHALL CONFORM TO MANUFACTURER'S RECOMMENDATION FOR EMBEDMENT DEPTH OR AS SHOWN ON THE DRAWINGS. NO REBAR SHALL BE CUT WITHOUT PRIOR CONTRACTOR APPROVAL WHEN DRILLING HOLES IN CONCRETE. SPECIAL INSPECTIONS, REQUIRED BY GOVERNING CODES, SHALL BE PERFORMED IN ORDER TO MAINTAIN MANUFACTURER'S MAXIMUM ALLOWABLE LOADS. ALL EXPANSION/WEDGE ANCHORS SHALL BE STAINLESS STEEL OR HOT DIPPED GALVANIZED. EXPANSION BOLTS SHALL BE PROVIDED BY RAMSET/REDHEAD OR APPROVED EQUAL.
7. CONCRETE CYLINDER TEST IS NOT REQUIRED FOR SLAB ON GRADE WHEN CONCRETE IS LESS THAN 50 CUBIC YARDS (IBC 1905.6.2.3) IN THAT EVENT THE FOLLOWING RECORDS SHALL BE PROVIDED BY THE CONCRETE SUPPLIER;
   (A) RESULTS OF CONCRETE CYLINDER TESTS PERFORMED AT THE SUPPLIER'S PLANT,
   (B) CERTIFICATION OF MINIMUM COMPRESSIVE STRENGTH FOR THE CONCRETE GRADE SUPPLIED.
   FOR GREATER THAN 50 CUBIC YARDS THE GC SHALL PERFORM THE CONCRETE CYLINDER TEST.
8. AS AN ALTERNATIVE TO ITEM 7, TEST CYLINDERS SHALL BE TAKEN INITIALLY AND THEREAFTER FOR EVERY 50 YARDS OF CONCRETE FROM EACH DIFFERENT BATCH PLANT.
9. EQUIPMENT SHALL NOT BE PLACED ON NEW PADS FOR SEVEN DAYS AFTER PAD IS POURED, UNLESS IT IS VERIFIED BY CYLINDER TESTS THAT COMPRESSIVE STRENGTH HAS BEEN ATTAINED.

## STRUCTURAL STEEL NOTES:

1. ALL STEEL WORK SHALL BE PAINTED OR GALVANIZED IN ACCORDANCE WITH THE DRAWINGS UNLESS NOTED OTHERWISE. STRUCTURAL STEEL SHALL BE ASTM-A-36 UNLESS OTHERWISE NOTED ON THE SITE SPECIFIC DRAWINGS. STEEL DESIGN, INSTALLATION AND BOLTING SHALL BE PERFORMED IN ACCORDANCE WITH THE AMERICAN INSTITUTE OF STEEL CONSTRUCTION (AISC) "MANUAL OF STEEL CONSTRUCTION".
2. ALL WELDING SHALL BE PERFORMED USING E70XX ELECTRODES AND WELDING SHALL CONFORM TO AISC. WHERE FILLET WELD SIZES ARE NOT SHOWN, PROVIDE THE MINIMUM SIZE PER TABLE J2.4 IN THE AISC "MANUAL OF STEEL CONSTRUCTION". PAINTED SURFACES SHALL BE TOUCHED UP.
3. BOLTED CONNECTIONS SHALL BE ASTM A325 BEARING TYPE (3/4"Ø) CONNECTIONS AND SHALL HAVE MINIMUM OF TWO BOLTS UNLESS NOTED OTHERWISE.
4. NON-STRUCTURAL CONNECTIONS FOR STEEL GRATING MAY USE 5/8" DIA. ASTM A 307 BOLTS UNLESS NOTED OTHERWISE.
5. INSTALLATION OF CONCRETE EXPANSION/WEDGE ANCHOR, SHALL BE PER MANUFACTURER'S WRITTEN RECOMMENDED PROCEDURE. THE ANCHOR BOLT, DOWEL OR ROD SHALL CONFORM TO MANUFACTURER'S RECOMMENDATION FOR EMBEDMENT DEPTH OR AS SHOWN ON THE DRAWINGS. NO REBAR SHALL BE CUT WITHOUT PRIOR CONTRACTOR APPROVAL WHEN DRILLING HOLES IN CONCRETE. SPECIAL INSPECTIONS, REQUIRED BY GOVERNING CODES, SHALL BE PERFORMED IN ORDER TO MAINTAIN MANUFACTURER'S MAXIMUM ALLOWABLE LOADS. ALL EXPANSION/WEDGE ANCHORS SHALL BE STAINLESS STEEL OR HOT DIPPED GALVANIZED. EXPANSION BOLTS SHALL BE PROVIDED BY RAMSET/REDHEAD OR APPROVED EQUAL.
6. CONTRACTOR SHALL SUBMIT SHOP DRAWINGS FOR ENGINEER REVIEW & APPROVAL ON PROJECTS REQUIRING STRUCTURAL STEEL.
7. ALL STRUCTURAL STEEL WORK SHALL BE DONE IN ACCORDANCE WITH AISC SPECIFICATIONS.

## CONSTRUCTION NOTES:

1. FIELD VERIFICATION:
   CONTRACTOR SHALL FIELD VERIFY SCOPE OF WORK, T-MOBILE ANTENNA PLATFORM LOCATION AND ANTENNAS TO BE REPLACED.
2. COORDINATION OF WORK:
   CONTRACTOR SHALL COORDINATE RF WORK AND PROCEDURES WITH PROJECT MANAGEMENT.
3. CABLE LADDER RACK:
   CONTRACTOR SHALL FURNISH AND INSTALL CABLE LADDER RACK, CABLE TRAY, AND CONDUIT AS REQUIRED TO SUPPORT CABLES TO THE NEW BTS LOCATION.
4. GROUNDING OF ALL EQUIPMENT AND ANTENNAS IS NOT CONSIDERED PART OF THE SCOPE OF THIS PROJECT AND IS THE RESPONSIBILITY OF THE OWNER AND CONTRACTOR AT THE TIME OF CONSTRUCTION. ALL EQUIPMENT AND ANTENNAS TO BE INSTALLED AND GROUNDED IN ACCORDANCE WITH GOVERNING BUILDING CODE, MANUFACTURER RECOMMENDATIONS AND OWNER SPECIFICATIONS.

Dewberry®
Dewberry Engineers Inc.
600 PARSIPPANY ROAD
SUITE 301
PARSIPPANY, NJ 07054
PHONE: 973.739.9400
FAX: 973.739.9710

T-Mobile
T-MOBILE NORTHEAST LLC
4 SYLVAN WAY
PARSIPPANY, NJ 07054
PHONE: (973) 397-4800
FAX: (973) 292-8893

MIDDLETOWN 1

CT11057C

90 INDUSTRIAL PARK ROAD
MIDDLETOWN, CT 06457
MIDDLESEX COUNTY

THIS DOCUMENT WAS DEVELOPED TO REFLECT A SPECIFIC SITE AND ITS SITE CONDITIONS AND IS NOT TO BE USED FOR ANOTHER SITE OR WHEN OTHER CONDITIONS PERTAIN. REUSE OF THIS DOCUMENT IS AT THE SOLE RISK OF THE USER.

SEAL
STATE OF CONNECTICUT
JIANG YU
No. 23222
PROFESSIONAL ENGINEER
LICENSED
JIANG YU
CONNECTICUT LICENSE NO. 0023222

THIS DRAWING IS COPYRIGHTED AND IS THE SOLE PROPERTY OF T-MOBILE COMMUNICATIONS. IT IS PRODUCED SOLELY FOR THE USE BY T-MOBILE AND ITS AFFILIATES. REPRODUCTION OR USE OF THIS DRAWING AND/OR THE INFORMATION CONTAINED IN IT IS FORBIDDEN WITHOUT THE WRITTEN PERMISSION OF T-MOBILE.

SCALE
AS SHOWN

| REV. | DATE | BY | DESCRIPTION |
|---|---|---|---|
| 0 | 10/07/14 | JC | ISSUED AS FINAL |
| A | 08/25/14 | JC | ISSUED FOR REVIEW |

REVISIONS

DRAWN BY JC
CHECKED BY BSH
APPROVED BY GHN
DATE 08/21/14

TITLE
# GENERAL NOTES

PROJECT NO. 50066258/50066270

G - 1

SHEET NO.

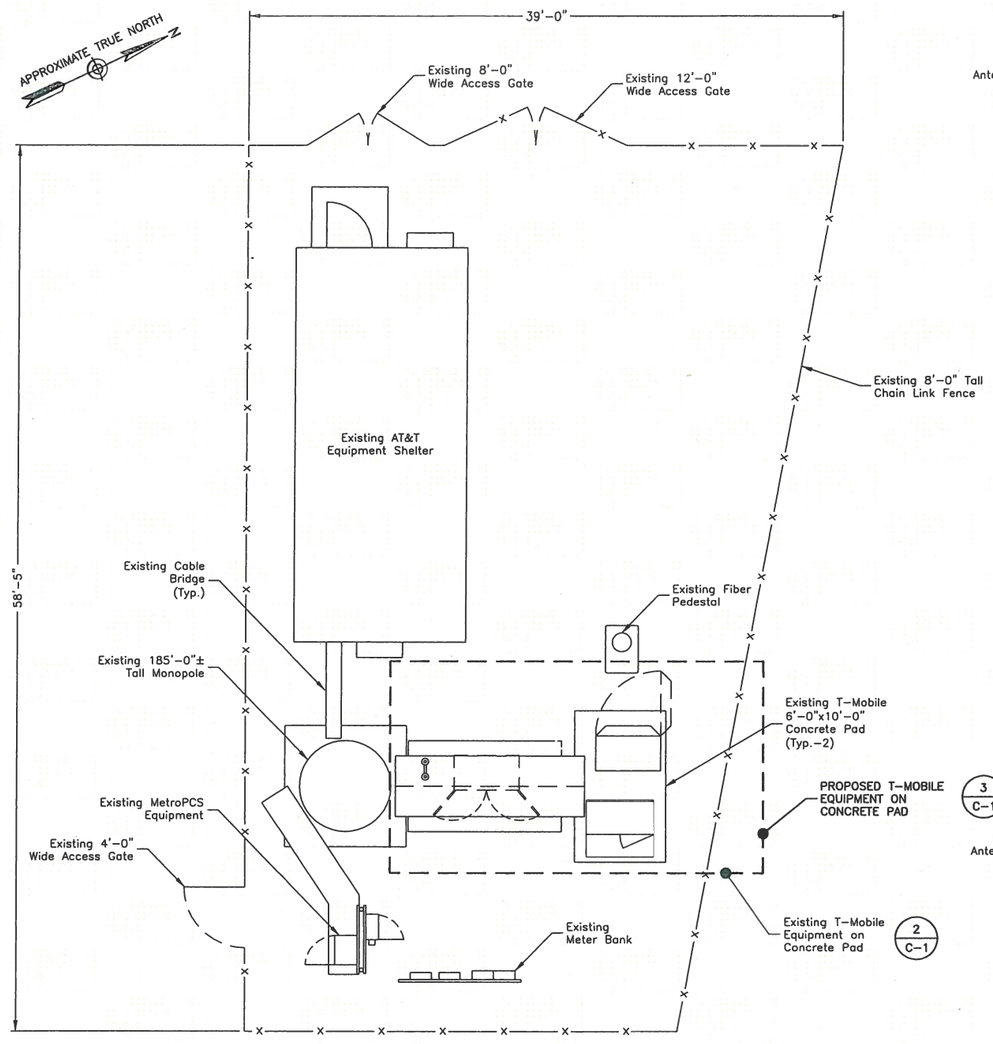


## COMPOUND PLAN 1

SCALE: 1"=10' FOR 11"x17"
1"=5' FOR 22"x34"

0' 5' 10'

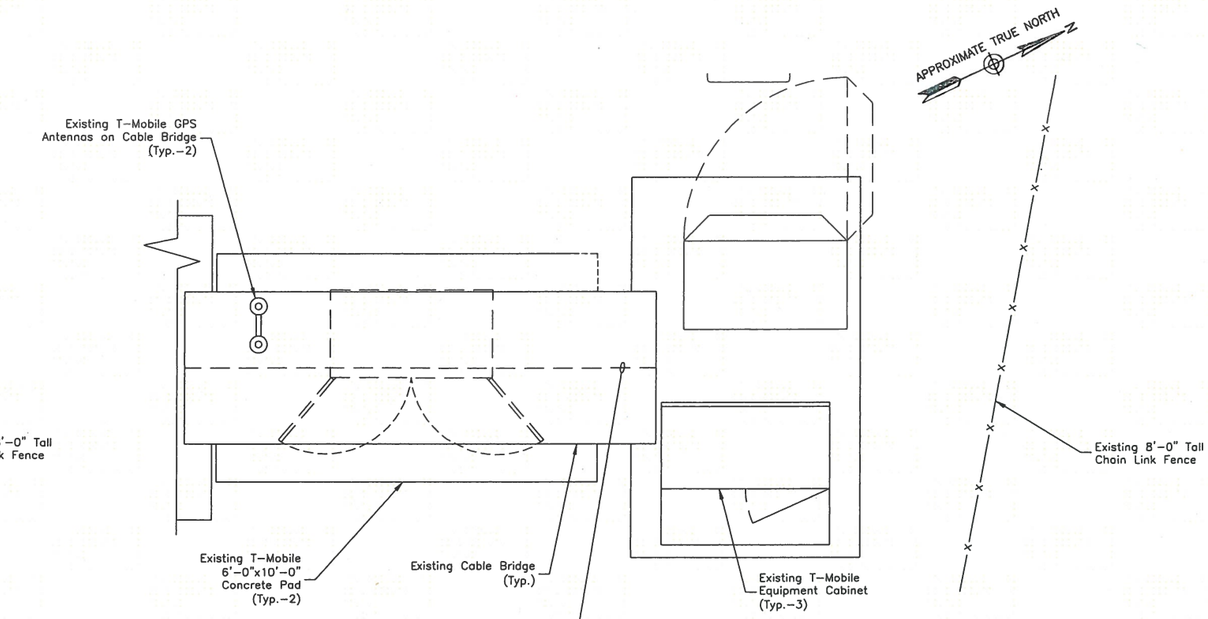


## EXISTING EQUIPMENT PLAN 2

SCALE: 1/4"=1' FOR 11"x17"
1/2"=2' FOR 22"x34"

0 2 4

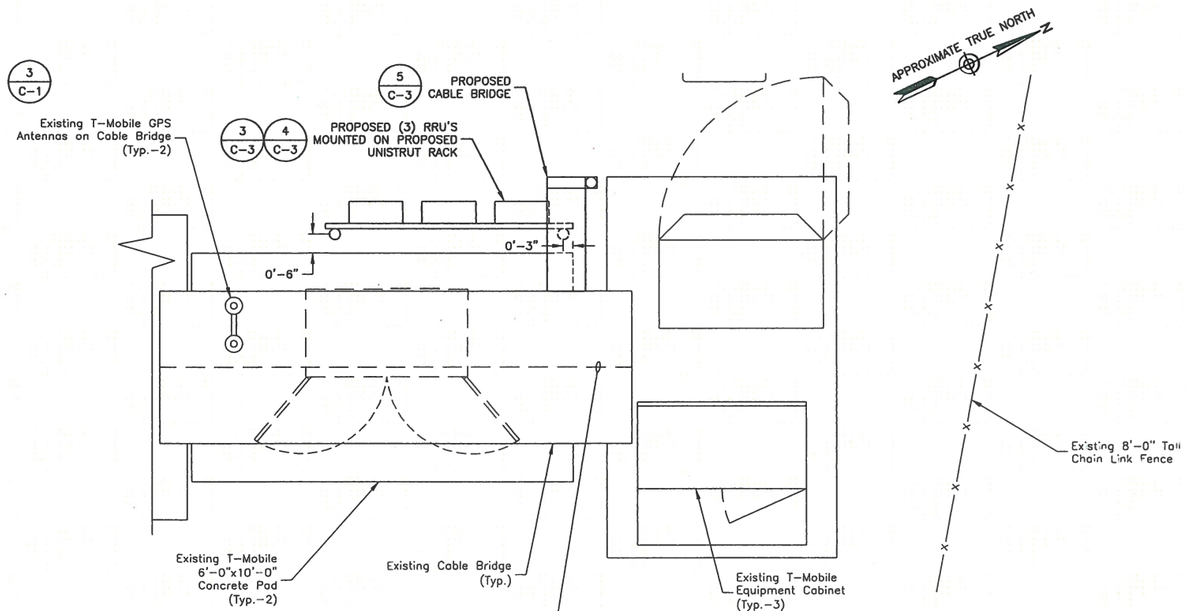


## PROPOSED EQUIPMENT PLAN 3

SCALE: 1/4"=1' FOR 11"x17"
1/2"=2' FOR 22"x34"

0 2 4

NOTES:

1. NORTH SHOWN AS APPROXIMATE.
2. NOT ALL INFORMATION IS SHOWN FOR CLARITY.
3. MOUNT ALL ANTENNAS, BIAS TEES, COAX, ETC. IN ACCORDANCE WITH STRUCTURAL ANALYSIS TO BE COMPLETED BY OTHERS.


Dewberry®
Dewberry Engineers Inc.
600 PARSIPPANY ROAD
SUITE 301
PARSIPPANY, NJ 07054
PHONE: 973.739.9400
FAX: 973.739.9710

T-Mobile
T-MOBILE NORTHEAST LLC
4 SYLVAN WAY
PARSIPPANY, NJ 07054
PHONE: (973) 397-4800
FAX: (973) 292-8893


MIDDLETOWN 1

CT11057C

90 INDUSTRIAL PARK ROAD
MIDDLETOWN, CT 06457
MIDDLESEX COUNTY


THIS DOCUMENT WAS DEVELOPED TO REFLECT A SPECIFIC SITE AND ITS SITE CONDITIONS AND IS NOT TO BE USED FOR ANOTHER SITE OR WHEN OTHER CONDITIONS PERTAIN. REUSE OF THIS DOCUMENT IS AT THE SOLE RISK OF THE USER.


SEAL

THIS DRAWING IS CONSIDERED THE SOLE PROPERTY OF T-MOBILE AND COMMUNICATIONS, INC. LISTED SOLELY FOR THE USE OF T-MOBILE AND ITS AFFILIATES. REPRODUCTION OF THIS DRAWING AND/OR THE INFORMATION CONTAINED IN IT IS FORBIDDEN WITHOUT THE WRITTEN PERMISSION OF T-MOBILE.


SCALE

AS SHOWN

| REV. | DATE | BY | DESCRIPTION |
|---|---|---|---|
| 0 | 10/07/14 | JC | ISSUED AS FINAL |
| A | 08/25/14 | JC | ISSUED FOR REVIEW |

REVISIONS

DRAWN BY JC
CHECKED BY BSH
APPROVED BY GHN
DATE 08/21/14

TITLE

# COMPOUND PLAN & EQUIPMENT PLANS

PROJECT NO. 50066258/50066270

C - 1

SHEET NO.

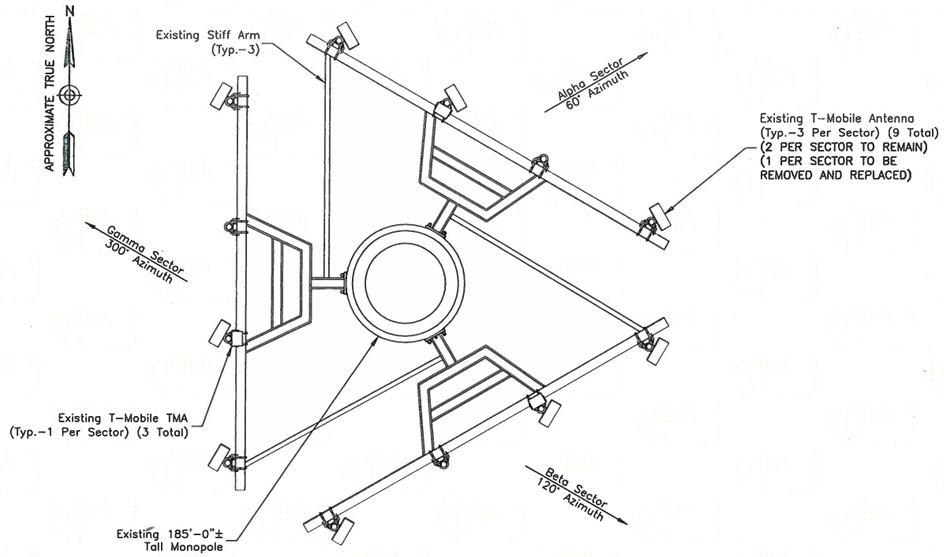


## EXISTING ANTENNA LAYOUT (1)

SCALE: N.T.S.

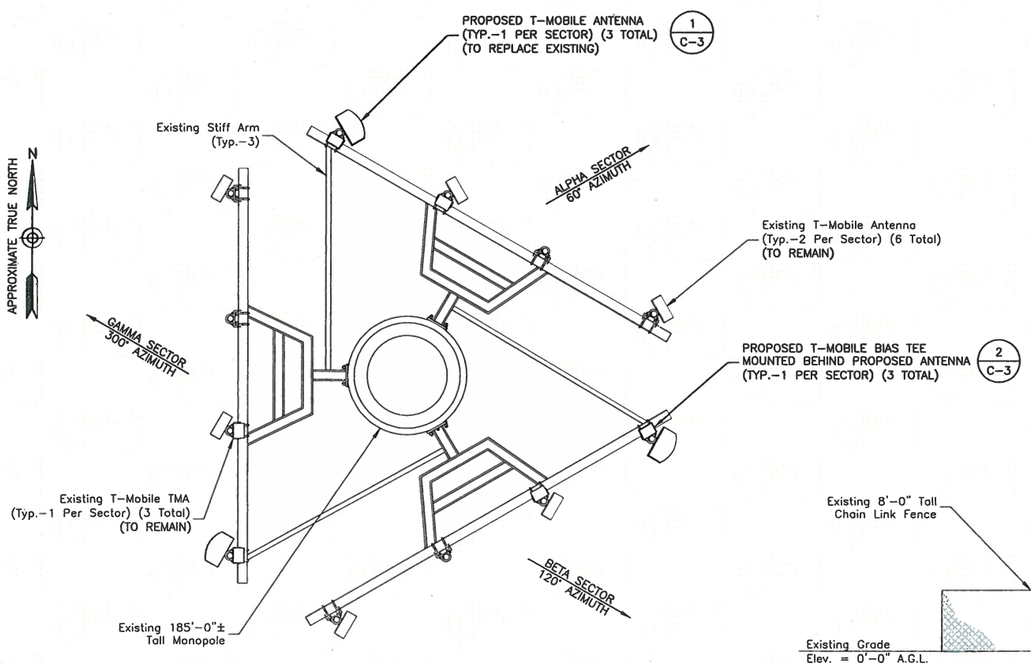


## PROPOSED ANTENNA LAYOUT (2)

SCALE: N.T.S.

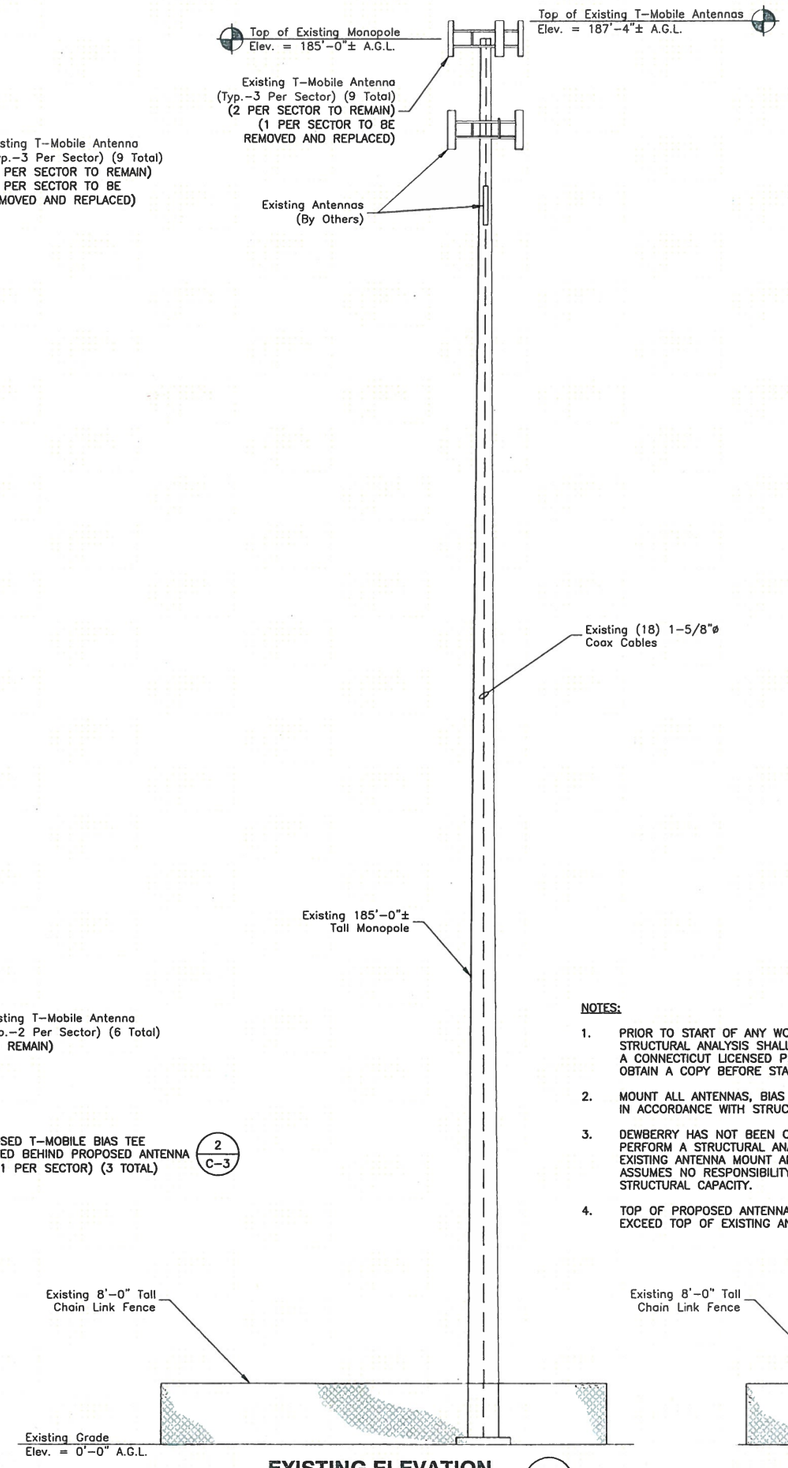


## EXISTING ELEVATION (3)

SCALE: 1"=20' FOR 11"x17"
1"=10' FOR 22"x34"

0' 10' 20'

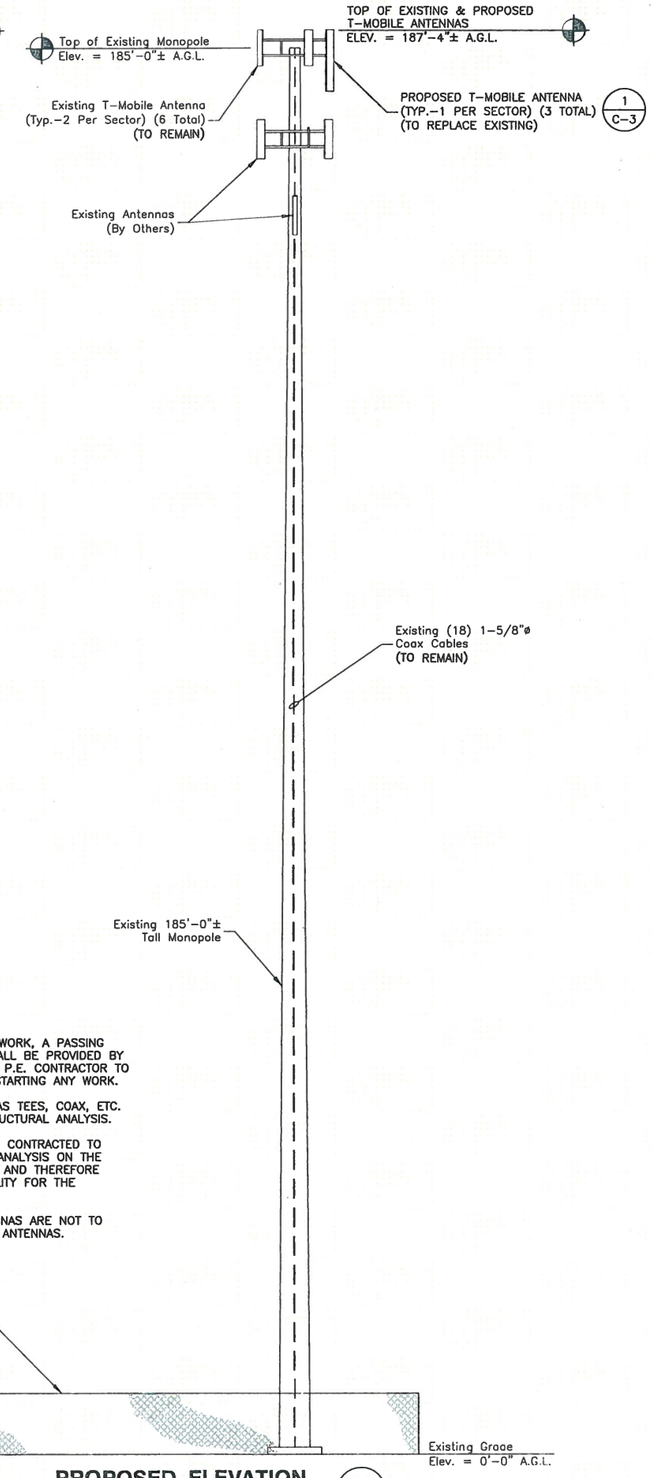


## PROPOSED ELEVATION (4)

SCALE: 1"=20' FOR 11"x17"
1"=10' FOR 22"x34"

0' 10' 20'

**NOTES:**

1. PRIOR TO START OF ANY WORK, A PASSING STRUCTURAL ANALYSIS SHALL BE PROVIDED BY A CONNECTICUT LICENSED P.E. CONTRACTOR TO OBTAIN A COPY BEFORE STARTING ANY WORK.
2. MOUNT ALL ANTENNAS, BIAS TEES, COAX, ETC. IN ACCORDANCE WITH STRUCTURAL ANALYSIS.
3. DEWBERRY HAS NOT BEEN CONTRACTED TO PERFORM A STRUCTURAL ANALYSIS ON THE EXISTING ANTENNA MOUNT AND THEREFORE ASSUMES NO RESPONSIBILITY FOR THE STRUCTURAL CAPACITY.
4. TOP OF PROPOSED ANTENNAS ARE NOT TO EXCEED TOP OF EXISTING ANTENNAS.


Dewberry®
Dewberry Engineers Inc.
600 PARSIPPANY ROAD
SUITE 301
PARSIPPANY, NJ 07054
PHONE: 973.739.9400
FAX: 973.739.9710

T-Mobile
T-MOBILE NORTHEAST LLC
4 SYLVAN WAY
PARSIPPANY, NJ 07054
PHONE: (973) 397-4600
FAX: (973) 292-8893


MIDDLETOWN 1

CT11057C

90 INDUSTRIAL PARK ROAD
MIDDLETOWN, CT 06457
MIDDLESEX COUNTY


THIS DOCUMENT WAS DEVELOPED TO REFLECT A SPECIFIC SITE AND ITS SITE CONDITIONS AND IS NOT TO BE USED FOR ANOTHER SITE OR WHEN OTHER CONDITIONS PERTAIN. REUSE OF THIS DOCUMENT IS AT THE SOLE RISK OF THE USER.


SEAL

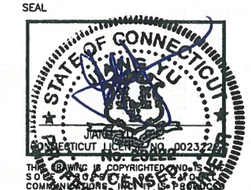



THE DESIGN IS COPYRIGHTED AND IS THE PROPERTY OF T-MOBILE NORTHEAST LLC AND ITS AFFILIATES. REPRODUCTION OR USE OF THIS DRAWING AND/OR THE INFORMATION CONTAINED IN THIS DRAWING WITHOUT THE WRITTEN PERMISSION OF T-MOBILE.


SCALE
AS SHOWN

| REV. | DATE | BY | DESCRIPTION |
|---|---|---|---|
| 0 | 10/07/14 | JC | ISSUED AS FINAL |
| A | 08/25/14 | JC | ISSUED FOR REVIEW |

REVISIONS

DRAWN BY JC
CHECKED BY BSH
APPROVED BY GHN
DATE 08/21/14

TITLE

# ANTENNA LAYOUTS & ELEVATIONS

PROJECT NO. 50066258/50066270

C - 2

SHEET NO.

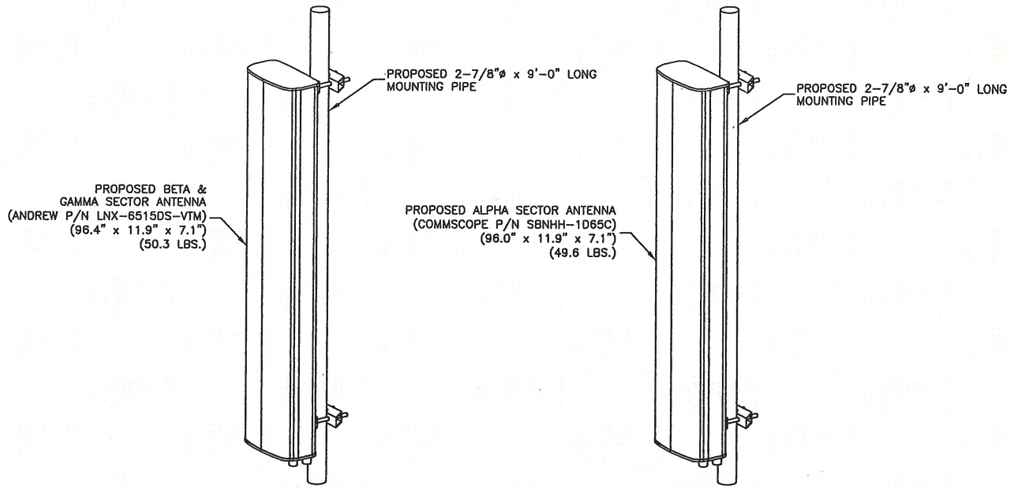


NOTES:

1. MOUNT ANTENNAS PER MANUFACTURER'S RECOMMENDATIONS.
2. GROUND ANTENNAS AND MOUNTS PER MANUFACTURER'S RECOMMENDATIONS AND T-MOBILE STANDARDS.
3. CONFIRM REQUIRED ANTENNAS WITH THE LATEST RFDS.

## ISOMETRIC ANTENNA DETAILS (1)

SCALE: N.T.S.

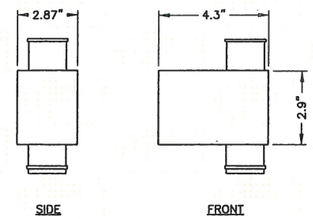


COMMSCOPE ATBT-BOTTOM-24V

NOTES:

1. MOUNT EQUIPMENT PER MANUFACTURER'S RECOMMENDATIONS.
2. GROUND EQUIPMENT AND MOUNTS PER MANUFACTURER'S RECOMMENDATIONS AND T-MOBILE STANDARDS.
3. CONFIRM REQUIRED EQUIPMENT WITH THE LATEST RFDS.

## BIAS TEE DETAIL (2)

SCALE: N.T.S.

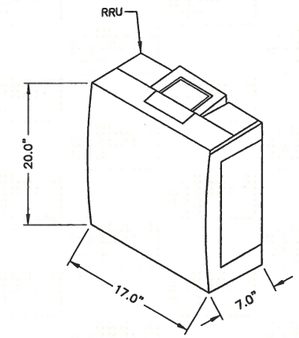


SPECIFICATIONS:

| | |
|---|---|
| HEIGHT: | 20.0" |
| WIDTH: | 17.0" |
| DEPTH: | 7.0" |
| WEIGHT: | 50.7 LBS |

ERICSSON RRUS-11 B12

RRU NOTES:

1. MOUNT EQUIPMENT PER MANUFACTURER'S RECOMMENDATIONS.
2. GROUND EQUIPMENT AND MOUNTS PER MANUFACTURER'S RECOMMENDATIONS AND T-MOBILE STANDARDS.
3. CONFIRM REQUIRED EQUIPMENT WITH THE LATEST RFDS.

## RRUS-11 - REMOTE RADIO UNIT (3)

SCALE: N.T.S.

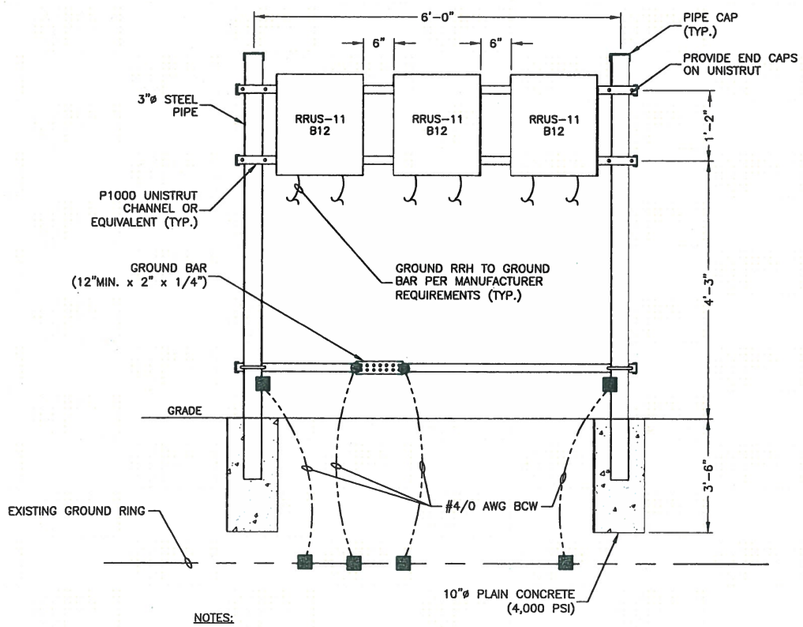


NOTES:

1. CONTRACTOR SHALL SUPPLY AND INSTALL UNISTRUT (OR EQUIVALENT) MOUNTING CHANNELS.
2. CONTRACTOR SHALL SUPPLY (BUT NOT INSTALL) 3/8"ø UNISTRUT BOLTING HARDWARE AND SPRING NUTS. TYPICAL FOUR PER RRU. CONTRACTOR SHALL BAG THE BOLTING HARDWARE AND HANG FROM INSTALLED UNISTRUT FRAME.
3. SPACING MAY VARY BASED ON SELECTED EQUIPMENT. ADJUSTMENTS TO SPACING WILL BE MADE BY RRU INSTALLER.
4. NO PAINTING OF THE RRU OR SOLAR SHIELD IS ALLOWED.

## RRU RACK DETAIL (4)

SCALE: N.T.S

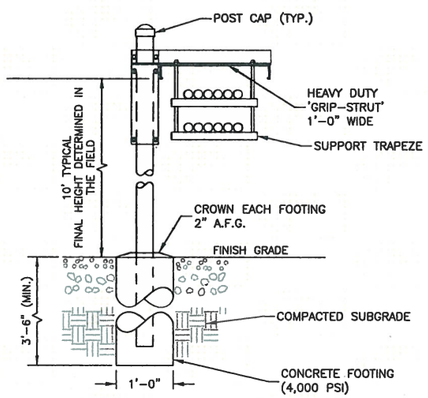


NOTES:

1. CABLE BRIDGE SHALL BE SITE PRO 1 12" GRIP-SPAN ICE BRIDGE KITS WITH Z-BRACKET TRAPEZE (P/N: IB12D-216Z) OR APPROVED EQUAL.
2. ALL COMPONENTS SHALL BE INSTALLED ACCORDING TO MANUFACTURER'S SPECIFICATIONS.
3. CONTRACTOR SHALL DETERMINE REQUIRED QUANTITY OF ALL CABLE BRIDGE COMPONENTS.
4. SNAP-IN HANGERS, SPLICE KITS, HINGE KITS, EXTENSION KITS, STIFFENERS, AND OTHER MISCELLANEOUS HARDWARE SHALL BE PROVIDED BY THE CONTRACTOR AS REQUIRED.
5. CABLE BRIDGE SHALL BE ROUTED TO ACCOMMODATE THE MINIMUM BENDING RADIUS OF THE COAXIAL CABLE.
6. CABLE BRIDGE COMPONENTS SHOWN ARE SCHEMATIC, CONSULT MANUFACTURER FOR EXACT AND CURRENT SPECIFICATIONS.

## CABLE BRIDGE DETAIL (5)

SCALE: N.T.S.

## DESIGN CONFIGURATION

| | ANTENNAS | | COAX | | COAX LENGTH |
|---|---|---|---|---|---|
| | EXISTING | PROPOSED | EXISTING | PROPOSED | |
| ALPHA | EMS RR90-17-02DP | COMMSCOPE SBNHH-1D65C | (6) 1-5/8" | — | 235' |
| | RFS APX16DWV-16DWVS-C | EXISTING TO REMAIN | | | |
| | EMS RR90-17-02DP | EXISTING TO REMAIN | | | |
| BETA | EMS RR90-17-02DP | COMMSCOPE LNX-6515DS-VTM | (6) 1-5/8" | — | 235' |
| | RFS APX16DWV-16DWVS-C | EXISTING TO REMAIN | | | |
| | EMS RR90-17-02DP | EXISTING TO REMAIN | | | |
| GAMMA | EMS RR90-17-02DP | COMMSCOPE LNX-6515DS-VTM | (6) 1-5/8" | — | 235' |
| | RFS APX16DWV-16DWVS-C | EXISTING TO REMAIN | | | |
| | EMS RR90-17-02DP | EXISTING TO REMAIN | | | |


Dewberry®
Dewberry Engineers Inc.
600 PARSIPPANY ROAD
SUITE 301
PARSIPPANY, NJ 07054
PHONE: 973.739.9400
FAX: 973.739.9710

T-Mobile
T-MOBILE NORTHEAST LLC
4 SYLVAN WAY
PARSIPPANY, NJ 07054
PHONE: (973) 397-4800
FAX: (973) 292-8893


MIDDLETOWN 1

CT11057C

90 INDUSTRIAL PARK ROAD
MIDDLETOWN, CT 06457
MIDDLESEX COUNTY


THIS DOCUMENT WAS DEVELOPED TO REFLECT A SPECIFIC SITE AND ITS SITE CONDITIONS AND IS NOT TO BE USED FOR ANOTHER SITE OR WHEN OTHER CONDITIONS PERTAIN. REUSE OF THIS DOCUMENT IS AT THE SOLE RISK OF THE USER.


SEAL

THIS DRAWING IS THE PROPERTY OF THE SOLE PROFESSIONAL ENGINEER AND MAY BE COMMUNICATED TO THIRD PARTIES, REPRODUCED SOLELY FOR MEMBERS OF THE PROFESSIONAL AND ITS AFFILIATES. REPRODUCTION OR USE OF THIS DRAWING AND/OR THE INFORMATION CONTAINED IN IT IS FORBIDDEN WITHOUT THE WRITTEN PERMISSION OF T-MOBILE.


SCALE

AS SHOWN

| REV. | DATE | BY | DESCRIPTION |
|---|---|---|---|
| 0 | 10/07/14 | JC | ISSUED AS FINAL |
| A | 08/25/14 | JC | ISSUED FOR REVIEW |

REVISIONS

DRAWN BY JC
CHECKED BY BSH
APPROVED BY GHN
DATE 08/21/14

TITLE

# CONSTRUCTION DETAILS

PROJECT NO. 50066258/50066270

C - 3

SHEET NO.

## GROUNDING NOTES:

1. THE CONTRACTOR SHALL REVIEW AND INSPECT THE EXISTING FACILITY GROUNDING SYSTEM AND LIGHTNING PROTECTION SYSTEM (AS DESIGNED AND INSTALLED) FOR STRICT COMPLIANCE WITH THE NEC (AS ADOPTED BY THE AHJ). THE SITE-SPECIFIC (UL, LPI, OR NFPA) LIGHTING PROTECTION CODE, AND GENERAL COMPLIANCE WITH TELCORDIA AND TIA GROUNDING STANDARDS. THE CONTRACTOR SHALL REPORT ANY VIOLATIONS OR ADVERSE FINDINGS TO THE ENGINEER FOR RESOLUTION.
2. ALL GROUND ELECTRODE SYSTEMS (INCLUDING TELECOMMUNICATION, RADIO, LIGHTNING PROTECTION, AND AC POWER GES'S) SHALL BE BONDED TOGETHER, AT OR BELOW GRADE, BY TWO OR MORE COPPER BONDING CONDUCTORS. ALL AVAILABLE GROUNDING ELECTRODES SHALL BE CONNECTED TOGETHER IN ACCORDANCE WITH THE NEC.
3. THE CONTRACTOR SHALL PERFORM IEEE FALL-OF-POTENTIAL RESISTANCE TO EARTH TESTING (PER IEEE 1100 AND 81) FOR GROUND ELECTRODE SYSTEMS. USE OF OTHER METHODS MUST BE PRE-APPROVED BY THE ENGINEER IN WRITING.
4. THE CONTRACTOR SHALL FURNISH AND INSTALL SUPPLEMENTAL GROUND ELECTRODES AS NEEDED TO ACHIEVE A TEST RESULT OF 5 OHMS OR LESS ON TOWER SITES AND 10 OHMS OR LESS ON ROOFTOP SITES. WHEN ADDING ELECTRODES, CONTRACTOR SHALL MAINTAIN A MINIMUM DISTANCE BETWEEN THE ADDED ELECTRODE AND ANY OTHER EXISTING ELECTRODE EQUAL TO THE BURIED LENGTH OF THE ROD. IDEALLY, CONTRACTOR SHALL STRIVE TO KEEP THE SEPARATION DISTANCE EQUAL TO TWICE THE BURIED LENGTH OF THE RODS.
5. THE CONTRACTOR IS RESPONSIBLE FOR PROPERLY SEQUENCING GROUNDING AND UNDERGROUND CONDUIT INSTALLATION AS TO PREVENT ANY LOSS OF CONTINUITY IN THE GROUNDING SYSTEM OR DAMAGE TO THE CONDUIT.
6. METAL CONDUIT AND TRAY SHALL BE GROUNDED AND MADE ELECTRICALLY CONTINUOUS WITH LISTED BONDING FITTINGS OR BY BONDING ACROSS THE DISCONTINUITY WITH 6 AWG COPPER WIRE AND UL APPROVED GROUNDING TYPE CONDUIT CLAMPS.
7. METAL RACEWAY SHALL NOT BE USED AS THE NEC REQUIRED EQUIPMENT GROUND CONDUCTOR. STRANDED COPPER CONDUCTORS WITH GREEN INSULATION, SIZED IN ACCORDANCE WITH THE NEC, SHALL BE FURNISHED AND INSTALLED WITH THE POWER CIRCUITS TO TRANSMISSION EQUIPMENT.
8. CONNECTIONS TO THE GROUND BUS SHALL NOT BE DOUBLED UP OR STACKED. BACK-TO-BACK CONNECTIONS ON OPPOSITE SIDES OF THE GROUND BUS ARE PERMITTED.
9. ALUMINUM CONDUCTOR OR COPPER CLAD STEEL CONDUCTOR SHALL NOT BE USED FOR GROUNDING CONNECTIONS.
10. USE OF 90° BENDS IN THE PROTECTION GROUNDING CONDUCTORS SHALL BE AVOIDED WHEN 45° BENDS CAN BE ADEQUATELY SUPPORTED. IN ALL CASES, BENDS SHALL BE MADE WITH A MINIMUM BEND RADIUS OF 8 INCHES.
11. EACH INTERIOR TRANSMISSION CABINET FRAME/PLINTH SHALL BE DIRECTLY CONNECTED TO THE MASTER GROUND BAR WITH 6 AWG STRANDED, GREEN INSULATED SUPPLEMENTAL EQUIPMENT GROUND WIRE UNLESS NOTED OTHERWISE IN THE DETAILS. EACH OUTDOOR CABINET FRAME/PLINTH SHALL BE DIRECTLY CONNECTED TO THE BURIED GROUND RING WITH 2 AWG SOLID TIN-PLATED COPPER WIRE UNLESS NOTED OTHERWISE IN THE DETAILS.
12. ALL EXTERIOR GROUND CONDUCTORS BETWEEN EQUIPMENT/GROUND BARS AND THE GROUND RING, SHALL BE 2 AWG SOLID TIN-PLATED COPPER UNLESS OTHERWISE INDICATED.
13. EXOTHERMIC WELDS SHALL BE USED FOR ALL GROUNDING CONNECTIONS BELOW GRADE. CONNECTIONS TO ABOVE GRADE UNITS SHALL BE MADE WITH EXOTHERMIC WELDS WHERE PRACTICAL OR WITH 2 HOLE MECHANICAL TYPE BRASS CONNECTORS WITH STAINLESS STEEL HARDWARE, INCLUDING SET SCREWS. HIGH PRESSURE CRIMP CONNECTORS MAY ONLY BE USED WITH WRITTEN PERMISSION FROM T-MOBILE MARKET REPRESENTATIVE.
14. EXOTHERMIC WELDS SHALL BE PERMITTED ON TOWERS ONLY WITH THE EXPRESS APPROVAL OF THE TOWER MANUFACTURER OR THE CONTRACTORS STRUCTURAL ENGINEER.
15. ALL WIRE TO WIRE GROUND CONNECTIONS TO THE INTERIOR GROUND RING SHALL BE FORMED USING HIGH PRESS CRIMPS OR SPLIT BOLT CONNECTORS WHERE INDICATED IN THE DETAILS.
16. ON ROOFTOP SITES WHERE EXOTHERMIC WELDS ARE A FIRE HAZARD COPPER COMPRESSION CAP CONNECTORS MAY BE USED FOR WIRE TO WIRE CONNECTORS. 2 HOLE MECHANICAL TYPE BRASS CONNECTORS WITH STAINLESS STEEL HARDWARE, INCLUDING SET SCREWS SHALL BE USED FOR CONNECTION TO ALL ROOFTOP TRANSMISSION EQUIPMENT AND STRUCTURAL STEEL.
17. COAX BRIDGE BONDING CONDUCTORS SHALL BE EXOTHERMICALLY BONDED OR BOLTED TO THE BRIDGE AND THE TOWER GROUND BAR USING TWO-HOLE MECHANICAL TYPE BRASS CONNECTORS AND STAINLESS STEEL HARDWARE.
18. APPROVED ANTIOXIDANT COATINGS (I.E., CONDUCTIVE GEL OR PASTE) SHALL BE USED ON ALL COMPRESSION AND BOLTED GROUND CONNECTIONS.
19. ALL EXTERIOR GROUND CONNECTIONS SHALL BE COATED WITH A CORROSION RESISTANT MATERIAL.
20. MISCELLANEOUS ELECTRICAL AND NON-ELECTRICAL METAL BOXES, FRAMES AND SUPPORTS SHALL BE BONDED TO THE GROUND RING, IN ACCORDANCE WITH THE NEC.
21. BOND ALL METALLIC OBJECTS WITHIN 6 FT OF THE BURIED GROUND RING WITH 2 AWG SOLID TIN-PLATED COPPER GROUND CONDUCTOR. DURING EXCAVATION FOR NEW GROUND CONDUCTORS, IF EXISTING GROUND CONDUCTORS ARE ENCOUNTERED, BOND EXISTING GROUND CONDUCTORS TO NEW CONDUCTORS.
22. GROUND CONDUCTORS USED IN THE FACILITY GROUND AND LIGHTNING PROTECTION SYSTEMS SHALL NOT BE ROUTED THROUGH METALLIC OBJECTS THAT FORM A RING AROUND THE CONDUCTOR, SUCH AS METALLIC CONDUITS, METAL SUPPORT CLIPS OR SLEEVES THROUGH WALLS OR FLOORS. WHEN IT IS REQUIRED TO BE HOUSED IN CONDUIT TO MEET CODE REQUIREMENTS OR LOCAL CONDITIONS, NON-METALLIC MATERIAL SUCH AS PVC PLASTIC CONDUIT SHALL BE USED. WHERE USE OF METAL CONDUIT IS UNAVOIDABLE (E.G., NON-METALLIC CONDUIT PROHIBITED BY LOCAL CODE) THE GROUND CONDUCTOR SHALL BE BONDED TO EACH END OF THE METAL CONDUIT WITH LISTED BONDING FITTINGS.

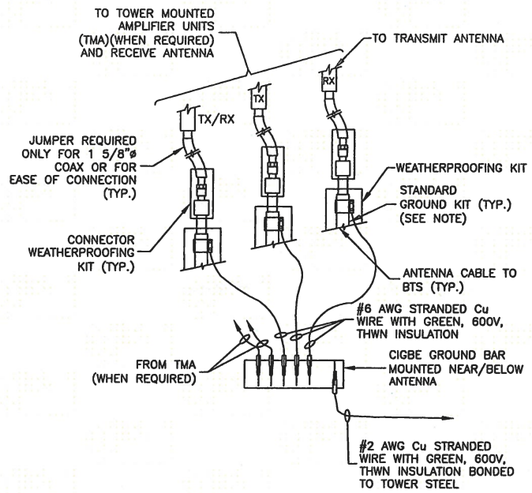


NOTE:

1. DO NOT INSTALL CABLE GROUND KIT AT A BEND AND ALWAYS DIRECT GROUND WIRE DOWN TO CIGBE.

### CONNECTION OF GROUND WIRES TO GROUNDING BAR (CIGBE) — 1

SCALE: N.T.S.

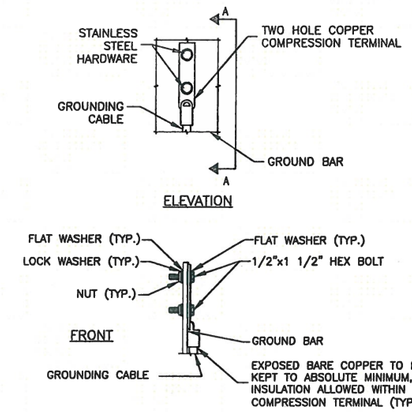


NOTES:

1. DOUBLING UP OR STACKING OF CONNECTIONS IS NOT PERMITTED.
2. OXIDE INHIBITING COMPOUND TO BE USED AT ALL LOCATIONS.

### TYPICAL GROUND BAR MECHANICAL CONNECTION DETAIL — 2

SCALE: N.T.S.

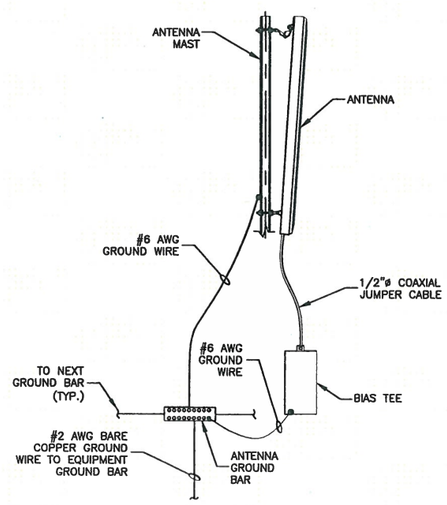


### TYPICAL ANTENNA GROUNDING DETAIL — 3

SCALE: N.T.S

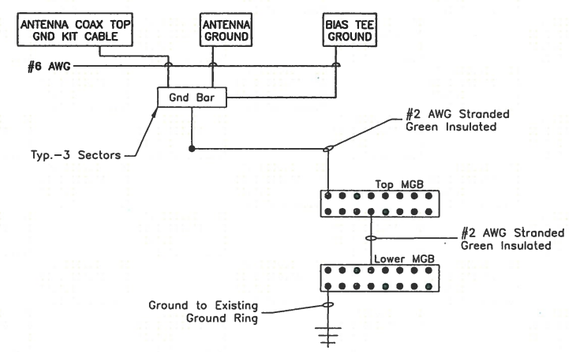


NOTES:

1. BOND ANTENNA GROUNDING KIT CABLE TO TOP CIGBE
2. BOND ANTENNA GROUNDING KIT CABLE TO BOTTOM CIGBE.
3. SCHEMATIC GROUNDING DIAGRAM IS TYPICAL FOR EACH SECTOR.
4. VERIFY EXISTING GROUND SYSTEM IS INSTALLED PER T-MOBILE STANDARDS.

### SCHEMATIC GROUNDING DIAGRAM — 4

SCALE: N.T.S.


Dewberry®
Dewberry Engineers Inc.
600 PARSIPPANY ROAD
SUITE 301
PARSIPPANY, NJ 07054
PHONE: 973.739.9400
FAX: 973.739.9710

T-Mobile
T-MOBILE NORTHEAST LLC
4 SYLVAN WAY
PARSIPPANY, NJ 07054
PHONE: (973) 397-4800
FAX: (973) 292-8893


MIDDLETOWN 1

CT11057C

90 INDUSTRIAL PARK ROAD
MIDDLETOWN, CT 06457
MIDDLESEX COUNTY


THIS DOCUMENT WAS DEVELOPED TO REFLECT A SPECIFIC SITE AND ITS SITE CONDITIONS AND IS NOT TO BE USED FOR ANOTHER SITE OR WHEN OTHER CONDITIONS PERTAIN. REUSE OF THIS DOCUMENT IS AT THE SOLE RISK OF THE USER.


SEAL

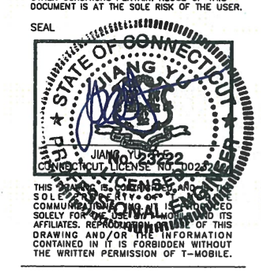



THIS DRAWING IS CONFIDENTIAL AND IS THE SOLE PROPERTY OF T-MOBILE AND ITS COMMUNICATIONS CONSULTANTS. IT IS PROVIDED SOLELY FOR THE USE BY T-MOBILE AND ITS AFFILIATES. REPRODUCTION OF THIS DRAWING AND/OR THE INFORMATION CONTAINED IN IT IS FORBIDDEN WITHOUT THE WRITTEN PERMISSION OF T-MOBILE.


SCALE

AS SHOWN

| REV. | DATE | BY | DESCRIPTION |
|---|---|---|---|
| 0 | 10/07/14 | JC | ISSUED AS FINAL |
| A | 08/25/14 | JC | ISSUED FOR REVIEW |

REVISIONS

| | |
|---|---|
| DRAWN BY | JC |
| CHECKED BY | BSH |
| APPROVED BY | GHN |
| DATE | 08/21/14 |

TITLE

# GROUNDING NOTES & DETAILS

PROJECT NO. 50066258/50066270

E-1

SHEET NO.

PAUL J. FORD AND COMPANY
STRUCTURAL ENGINEERS
250 East Broad Street • Suite 600 • Columbus, Ohio 43215-3708

Date: **September 09, 2014**

Debra Elliott
Crown Castle
3530 Toringdon Way Suite 300
Charlotte, NC 28277

Paul J Ford and Company
250 E. Broad Street, Suite 600
Columbus, OH 43215
614.221.6679
jwoolley@pjfweb.com

**Subject: Structural Analysis Report**

| | | |
|---|---|---|
| ***Carrier Designation:*** | ***T-Mobile* Co-Locate** | |
| | **Carrier Site Number:** | CT11057C |
| | **Carrier Site Name:** | N/A |
| ***Crown Castle Designation:*** | **Crown Castle BU Number:** | 825983 |
| | **Crown Castle Site Name:** | MIDDLETOWN_1 |
| | **Crown Castle JDE Job Number:** | 302375 |
| | **Crown Castle Work Order Number:** | 907744 |
| | **Crown Castle Application Number:** | 261508 Rev. 1 |
| ***Engineering Firm Designation:*** | **Paul J Ford and Company Project Number:** | 37513-1570.002.7805 |
| ***Site Data:*** | **90 Industrial Park Road, Middletown, Middlesex County, CT**<br>**Latitude *41° 35' 8.3"*, Longitude *-72° 42' 50.49"***<br>**185 Foot - Monopole Tower** | |

Dear Debra Elliott,

*Paul J Ford and Company* is pleased to submit this **"Structural Analysis Report"** to determine the structural integrity of the above mentioned tower. This analysis has been performed in accordance with the Crown Castle Structural 'Statement of Work' and the terms of Crown Castle Purchase Order Number 685783, in accordance with application 261508, revision 1.

The purpose of the analysis is to determine acceptability of the tower stress level. Based on our analysis we have determined the tower stress level for the structure and foundation, under the following load case, to be:

LC4.7: Existing + Reserved + Proposed Equipment w/ Proposed Modifications **Sufficient Capacity**
Note: See Table I and Table II for the proposed and existing/reserved loading, respectively.

The structural analysis was performed for this tower in accordance with the requirements the 2005 Connecticut State Building Code of TIA/EIA-222-F Structural Standards for Steel Antenna Towers and Antenna Supporting Structures using a fastest mile wind speed of 85 mph with no ice, 37.6 mph with 0.75 inch ice thickness and 50 mph under service loads.

All modifications and equipment proposed in this report shall be installed in accordance with the referenced drawings, dated 8/14/13 and 9/17/13, for the determined available structural capacity to be effective.

We at *Paul J Ford and Company* appreciate the opportunity of providing our continuing professional services to you and Crown Castle. If you have any questions or need further assistance on this or any other projects please give us a call.

Respectfully submitted by:

John J. Woolley, E.I.
Structural Designer

tnxTower Report - version 6.1.4.1

STATE OF CONNECTICUT
JUSTIN T. KLINE
No. 30801
LICENSED
PROFESSIONAL ENGINEER

9-10-14

PAUL J. FORD AND COMPANY
STRUCTURAL ENGINEERS
250 East Broad Street • Suite 600 • Columbus, Ohio 43215-3708

Date: **September 09, 2014**

Debra Elliott
Crown Castle
3530 Toringdon Way Suite 300
Charlotte, NC 28277

Paul J Ford and Company
250 E. Broad Street, Suite 600
Columbus, OH 43215
614.221.6679
jwoolley@pjfweb.com

**Subject: Structural Analysis Report**

| | | |
|---|---|---|
| ***Carrier Designation:*** | ***T-Mobile* Co-Locate** | |
| | **Carrier Site Number:** | CT11057C |
| | **Carrier Site Name:** | N/A |
| ***Crown Castle Designation:*** | **Crown Castle BU Number:** | 825983 |
| | **Crown Castle Site Name:** | MIDDLETOWN_1 |
| | **Crown Castle JDE Job Number:** | 302375 |
| | **Crown Castle Work Order Number:** | 907744 |
| | **Crown Castle Application Number:** | 261508 Rev. 1 |
| ***Engineering Firm Designation:*** | **Paul J Ford and Company Project Number:** | 37513-1570.002.7805 |
| ***Site Data:*** | **90 Industrial Park Road, Middletown, Middlesex County, CT**<br>**Latitude *41° 35' 8.3"*, Longitude *-72° 42' 50.49"***<br>**185 Foot - Monopole Tower** | |

Dear Debra Elliott,

*Paul J Ford and Company* is pleased to submit this **"Structural Analysis Report"** to determine the structural integrity of the above mentioned tower. This analysis has been performed in accordance with the Crown Castle Structural 'Statement of Work' and the terms of Crown Castle Purchase Order Number 685783, in accordance with application 261508, revision 1.

The purpose of the analysis is to determine acceptability of the tower stress level. Based on our analysis we have determined the tower stress level for the structure and foundation, under the following load case, to be:

LC4.7: Existing + Reserved + Proposed Equipment w/ Proposed Modifications **Sufficient Capacity**
Note: See Table I and Table II for the proposed and existing/reserved loading, respectively.

The structural analysis was performed for this tower in accordance with the requirements the 2005 Connecticut State Building Code of TIA/EIA-222-F Structural Standards for Steel Antenna Towers and Antenna Supporting Structures using a fastest mile wind speed of 85 mph with no ice, 37.6 mph with 0.75 inch ice thickness and 50 mph under service loads.

All modifications and equipment proposed in this report shall be installed in accordance with the referenced drawings, dated 8/14/13 and 9/17/13, for the determined available structural capacity to be effective.

We at *Paul J Ford and Company* appreciate the opportunity of providing our continuing professional services to you and Crown Castle. If you have any questions or need further assistance on this or any other projects please give us a call.

Respectfully submitted by:

John J. Woolley, E.I.
Structural Designer

tnxTower Report - version 6.1.4.1

## TABLE OF CONTENTS

**1) INTRODUCTION**

**2) ANALYSIS CRITERIA**
Table 1 - Proposed Antenna and Cable Information
Table 2 – Existing and Reserved Antenna and Cable Information

**3) ANALYSIS PROCEDURE**
Table 3 - Documents Provided
3.1) Analysis Method
3.2) Assumptions

**4) ANALYSIS RESULTS**
Table 4 – Section Capacity (Summary)
Table 5 - Tower Component Stresses vs. Capacity
4.1) Recommendations

**5) APPENDIX A**
TNX Tower Output

**6) APPENDIX B**
Base Level Drawing

**7) APPENDIX C**
Additional Calculations

## 1) INTRODUCTION

This tower is a 185 ft Monopole tower designed by FRED A. NUDD CORPORATION in May of 1998. The tower was originally designed for a wind speed of 85 mph per TIA/EIA-222-E.

## 2) ANALYSIS CRITERIA

The structural analysis was performed for this tower in accordance with the requirements the 2005 Connecticut State Building Code of TIA/EIA-222-F Structural Standards for Steel Antenna Towers and Antenna Supporting Structures using a fastest mile wind speed of 85 mph with no ice, 37.6 mph with 0.75 inch ice thickness and 50 mph under service loads.

**Table 1 - Proposed Antenna and Cable Information**

| Mounting Level (ft) | Center Line Elevation (ft) | Number of Antennas | Antenna Manufacturer | Antenna Model | Number of Feed Lines | Feed Line Size (in) | Note |
|---|---|---|---|---|---|---|---|
| 185.0 | 185.0 | 3 | commscope | ATBT-BOTTOM-24V | - | - | - |
| | | 2 | commscope | LNX-6515DS-VTM w/ Mount Pipe | | | |
| | | 1 | commscope | SBNHH-1D65C w/ Mount Pipe | | | |

**Table 2 - Existing and Reserved Antenna and Cable Information**

| Mounting Level (ft) | Center Line Elevation (ft) | Number of Antennas | Antenna Manufacturer | Antenna Model | Number of Feed Lines | Feed Line Size (in) | Note |
|---|---|---|---|---|---|---|---|
| 185.0 | 185.0 | 3 | andrew | ETW190VS12UB | 18 | 1-5/8 | 1 |
| | | 3 | ems wireless | RR90-17-02DP w/ Mount Pipe | | | |
| | | 3 | rfs celwave | APX16DWV-16DWVS-C w/ Mount Pipe | | | |
| | | 1 | tower mounts | Sector Mount [SM 802-3] | | | |
| | | 9 | ericsson | AIR 21 w/ Mount Pipe | 3 | 1-5/8 | 3 |
| | | 3 | ericsson | AIR 33 w/ Mount Pipe | | | |
| | | 1 | raycap | DC6-48-60-18-8F | | | |
| 175.0 | 175.0 | 6 | communication components inc. | DTMABP7819VG12A | 1<br>2 | 3/8<br>3/4 | 2 |
| | | 6 | ericsson | RRUS-11 | | | |
| | | 3 | kmw communications | AM-X-CD-16-65-00T-RET w/ Mount Pipe | | | |
| | | 6 | powerwave technologies | LGP13519 | | | |
| | | 1 | raycap | DC6-48-60-18-8F | | | |
| | | 1 | tower mounts | Sector Mount [SM 802-3] | 12 | 1-1/4 | 1 |
| | | 6 | powerwave technologies | 7770.00 w/ Mount Pipe | | | |
| 165.0 | 165.0 | 3 | rfs celwave | APXV18-206517S-C w/ Mount Pipe | 6 | 1-5/8 | 1 |
| | | 1 | tower mounts | Pipe Mount [PM 601-3] | | | |
| 155.0 | 155.0 | 3 | alcatel lucent | RRH2X40-07-U | 2 | 1-5/8 | 2 |
| | | 3 | alcatel lucent | RRH2X40-AWS | | | |
| | | 6 | antel | BXA-171063-12CF-EDIN-2 w/ Mount Pipe | | | |
| | | 6 | antel | BXA-70063-6CF-EDIN-2 w/ Mount Pipe | | | |
| | | 1 | rfs celwave | DB-T1-6Z-8AB-0Z | | | |
| | | 1 | tower mounts | Platform Mount [LP 301-1] | | | |

Notes:
1) Existing Equipment
2) Reserved Equipment
3) Equipment To Be Removed

## 3) ANALYSIS PROCEDURE

**Table 3 - Documents Provided**

| Document | Remarks | Reference | Source |
|---|---|---|---|
| 4-GEOTECHNICAL REPORTS | Clarence Welti, 3/27/1998 | 3473514 | CCISITES |
| 4-TOWER FOUNDATION DRAWINGS/DESIGN/SPECS | Nudd, 98-5980, 5/1/1998 | 3880469 | CCISITES |
| 4-TOWER MANUFACTURER DRAWINGS | Nudd, 98-5980, 5/1/1998 | 3473517 | CCISITES |
| 4-TOWER REINFORCEMENT DESIGN/DRAWINGS/DATA | All-Points Tech, CT107572, 4/26/2005 | 3879955 | CCISITES |
| 4-TOWER PROPOSED REINFORCEMENT DESIGN/DRAWINGS/DATA | PJF, 37513-1570 BP, 8/14/2013 | 3954032 | CCISITES |
| 4-TOWER PROPOSED REINFORCEMENT DESIGN/DRAWINGS/DATA | PJF, 37513-1570 BP A, 9/17/13 | 3990532 | CCISITES |

### 3.1) Analysis Method

tnxTower (version 6.1.4.1), a commercially available analysis software package, was used to create a three-dimensional model of the tower and calculate member stresses for various loading cases. Selected output from the analysis is included in Appendix A.

### 3.2) Assumptions

1) Tower and structures were built in accordance with the manufacturer's specifications.
2) The tower and structures have been maintained in accordance with the manufacturer's specification.
3) The configuration of antennas, transmission cables, mounts and other appurtenances are as specified in Tables 1 and 2 and the referenced drawings.
4) The Nudd manufacturer's drawings specify an anchor rod that does not exist. From experience with Nudd monopoles, the anchors are likely A36 standard anchors and have been assumed as such.
5) Monopole will be reinforced in conformance with the referenced modification drawings dated 8/14/2013.
6) Monopole will be reinforced in conformance with the referenced proposed modification drawings dated 9/17/13.

This analysis may be affected if any assumptions are not valid or have been made in error. Paul J Ford and Company should be notified to determine the effect on the structural integrity of the tower.

## 4) ANALYSIS RESULTS

**Table 4 - Section Capacity (Summary)**

| Section No. | Elevation (ft) | Component Type | Size | Critical Element | P (K) | SF*P_allow (K) | % Capacity | Pass / Fail |
|---|---|---|---|---|---|---|---|---|
| L1 | 185 - 180 | Pole | TP18x18x0.1875 | 1 | -1.377 | 361.254 | 18.7 | Pass |
| L2 | 180 - 153 | Pole | TP26.8088x18x0.25 | 2 | -7.522 | 718.182 | 88.0 | Pass |
| L3 | 153 - 151.833 | Pole | TP27.1894x26.8088x0.3625 | 3 | -7.692 | 1051.792 | 63.8 | Pass |
| L4 | 151.833 - 151 | Pole | TP27.4613x27.1894x0.5246 | 4 | -7.851 | 1527.325 | 46.0 | Pass |
| L5 | 151 - 130 | Pole | TP34.3125x27.4613x0.3802 | 5 | -10.448 | 1328.220 | 83.9 | Pass |
| L6 | 130 - 120.667 | Pole | TP36.844x31.9209x0.4447 | 6 | -14.042 | 1750.722 | 83.5 | Pass |
| L7 | 120.667 - 115 | Pole | TP38.6875x36.844x0.4776 | 7 | -15.372 | 1934.076 | 81.9 | Pass |
| L8 | 115 - 114 | Pole | TP39.0125x38.6875x0.5402 | 8 | -15.639 | 2248.011 | 71.6 | Pass |
| L9 | 114 - 95 | Pole | TP45.1875x39.0125x0.4463 | 9 | -18.774 | 2065.883 | 90.1 | Pass |
| L10 | 95 - 91 | Pole | TP45.8125x42.3448x0.5294 | 10 | -22.956 | 2592.778 | 80.7 | Pass |
| L11 | 91 - 90 | Pole | TP46.1391x45.8125x0.465 | 11 | -23.230 | 2297.212 | 91.6 | Pass |
| L12 | 90 - 61.5 | Pole | TP55.4461x46.1391x0.5299 | 12 | -32.774 | 3147.320 | 83.5 | Pass |
| L13 | 61.5 - 58 | Pole | TP56.5891x55.4461x0.5263 | 13 | -34.052 | 3165.902 | 84.9 | Pass |
| L14 | 58 - 40 | Pole | TP61.6875x56.5891x0.5788 | 14 | -41.536 | 3628.093 | 83.9 | Pass |
| L15 | 40 - 33 | Pole | TP63.9583x61.6875x0.5704 | 15 | -44.580 | 3910.529 | 80.9 | Pass |
| L16 | 33 - 28 | Pole | TP65.5804x63.9583x0.595 | 16 | -46.900 | 4047.974 | 80.3 | Pass |
| L17 | 28 - 0 | Pole | TP73.8125x65.5804x0.5758 | 17 | -60.428 | 4154.028 | 90.6 | Pass |
| | | | | | | | Summary | |
| | | | | | | Pole (L11) | 91.6 | Pass |
| | | | | | | **RATING =** | **91.6** | **Pass** |

**Table 5 - Tower Component Stresses vs. Capacity**

| Notes | Component | Elevation (ft) | % Capacity | Pass / Fail |
|---|---|---|---|---|
| 1 | Anchor Rods | 0 | 84.0 | Pass |
| 1 | Base Plate | 0 | 50.2 | Pass |
| 1 | Base Foundation (Combined) | 0 | 84.0 | Pass |

| Structure Rating (max from all components) = | 91.6% |
|---|---|

Notes:
1) See additional documentation in "Appendix C – Additional Calculations" for calculations supporting the % capacity consumed.

### 4.1) Recommendations

Reinforce the pole as shown in PJF drawings 37513-1570 BP and 37513-1570 BP A, dated 8/14/13 and 9/17/13, respectively.

# APPENDIX A

# TNXTOWER OUTPUT

# Tower Input Data

There is a pole section.
This tower is designed using the TIA/EIA-222-F standard.
The following design criteria apply:

1) Tower is located in Middlesex County, Connecticut.
2) Basic wind speed of 85 mph.
3) Nominal ice thickness of 0.7500 in.
4) Ice density of 56.000 pcf.
5) A wind speed of 38 mph is used in combination with ice.
6) Temperature drop of 50.000 °F.
7) Deflections calculated using a wind speed of 50 mph.
8) A non-linear (P-delta) analysis was used.
9) Pressures are calculated at each section.
10) Stress ratio used in pole design is 1.333.
11) Local bending stresses due to climbing loads, feed line supports, and appurtenance mounts are not considered.

# Options

Consider Moments - Legs
Consider Moments - Horizontals
Consider Moments - Diagonals
Use Moment Magnification
√ Use Code Stress Ratios
√ Use Code Safety Factors - Guys
Escalate Ice
Always Use Max Kz
Use Special Wind Profile
Include Bolts In Member Capacity
Leg Bolts Are At Top Of Section
Secondary Horizontal Braces Leg
Use Diamond Inner Bracing (4 Sided)
Add IBC .6D+W Combination

Distribute Leg Loads As Uniform
Assume Legs Pinned
√ Assume Rigid Index Plate
√ Use Clear Spans For Wind Area
Use Clear Spans For KL/r
Retension Guys To Initial Tension
√ Bypass Mast Stability Checks
√ Use Azimuth Dish Coefficients
√ Project Wind Area of Appurt.
√ Autocalc Torque Arm Areas
SR Members Have Cut Ends
Sort Capacity Reports By Component
Triangulate Diamond Inner Bracing
Use TIA-222-G Tension Splice
Capacity Exemption

Treat Feedline Bundles As Cylinder
Use ASCE 10 X-Brace Ly Rules
Calculate Redundant Bracing Forces
Ignore Redundant Members in FEA
SR Leg Bolts Resist Compression
All Leg Panels Have Same Allowable
Offset Girt At Foundation
√ Consider Feedline Torque
Include Angle Block Shear Check

Poles

√ Include Shear-Torsion Interaction
Always Use Sub-Critical Flow
Use Top Mounted Sockets

# Tapered Pole Section Geometry

| Section | Elevation ft | Section Length ft | Splice Length ft | Number of Sides | Top Diameter in | Bottom Diameter in | Wall Thickness in | Bend Radius in | Pole Grade |
|---|---|---|---|---|---|---|---|---|---|
| L1 | 185.000-180.000 | 5.000 | 0.000 | 12 | 18.0000 | 18.0000 | 0.1875 | 0.7500 | A36M-42 (42 ksi) |
| L2 | 180.000-153.000 | 27.000 | 0.000 | 12 | 18.0000 | 26.8088 | 0.2500 | 1.0000 | A36M-42 (42 ksi) |
| L3 | 153.000-151.833 | 1.167 | 0.000 | 12 | 26.8088 | 27.1894 | 0.3625 | 1.4499 | Reinf 42.00 ksi (42 ksi) |
| L4 | 151.833-151.000 | 0.833 | 0.000 | 12 | 27.1894 | 27.4613 | 0.5246 | 2.0983 | Reinf 41.97 ksi (42 ksi) |
| L5 | 151.000-130.000 | 21.000 | 5.000 | 12 | 27.4613 | 34.3125 | 0.3802 | 1.5206 | Reinf 42.00 ksi (42 ksi) |
| L6 | 130.000-120.667 | 14.333 | 0.000 | 12 | 31.9209 | 36.8440 | 0.4447 | 1.7787 | Reinf 42.00 ksi (42 ksi) |
| L7 | 120.667-115.000 | 5.667 | 0.000 | 12 | 36.8440 | 38.6875 | 0.4776 | 1.9105 | Reinf 41.15 ksi (41 ksi) |
| L8 | 115.000-114.000 | 1.000 | 0.000 | 12 | 38.6875 | 39.0125 | 0.5402 | 2.1608 | Reinf 42.00 ksi (42 ksi) |
| L9 | 114.000-95.000 | 19.000 | 6.000 | 12 | 39.0125 | 45.1875 | 0.4463 | 1.7854 | Reinf 42.00 ksi (42 ksi) |

| Section | Elevation ft | Section Length ft | Splice Length ft | Number of Sides | Top Diameter in | Bottom Diameter in | Wall Thickness in | Bend Radius in | Pole Grade |
|---|---|---|---|---|---|---|---|---|---|
| L10 | 95.000-91.000 | 10.000 | 0.000 | 12 | 42.3448 | 45.8125 | 0.5293 | 2.1174 | Reinf 42.00 ksi (42 ksi) |
| L11 | 91.000-90.000 | 1.000 | 0.000 | 12 | 45.8125 | 46.1391 | 0.4650 | 1.8600 | Reinf 42.00 ksi (42 ksi) |
| L12 | 90.000-61.500 | 28.500 | 0.000 | 12 | 46.1391 | 55.4461 | 0.5299 | 2.1194 | Reinf 42.00 ksi (42 ksi) |
| L13 | 61.500-58.000 | 3.500 | 0.000 | 12 | 55.4461 | 56.5891 | 0.5263 | 2.1054 | Reinf 41.66 ksi (42 ksi) |
| L14 | 58.000-40.000 | 18.000 | 0.000 | 12 | 56.5891 | 61.6875 | 0.5788 | 2.3152 | Reinf 39.83 ksi (40 ksi) |
| L15 | 40.000-33.000 | 7.000 | 0.000 | 12 | 61.6875 | 63.9583 | 0.5704 | 2.2814 | Reinf 42.00 ksi (42 ksi) |
| L16 | 33.000-28.000 | 5.000 | 0.000 | 12 | 63.9583 | 65.5804 | 0.5950 | 2.3800 | Reinf 40.65 ksi (41 ksi) |
| L17 | 28.000-0.000 | 28.000 | | 12 | 65.5804 | 73.8125 | 0.5758 | 2.3032 | Reinf 38.25 ksi (38 ksi) |

# Tapered Pole Properties

| Section | Tip Dia. in | Area $in^2$ | I $in^4$ | r in | C in | I/C $in^3$ | J $in^4$ | It/Q $in^2$ | w in | w/t |
|---|---|---|---|---|---|---|---|---|---|---|
| L1 | 18.6350 | 10.7543 | 435.5296 | 6.3769 | 9.3240 | 46.7106 | 882.5011 | 5.2929 | 4.3215 | 23.048 |
| | 18.6350 | 10.7543 | 435.5296 | 6.3769 | 9.3240 | 46.7106 | 882.5011 | 5.2929 | 4.3215 | 23.048 |
| L2 | 18.6350 | 14.2888 | 574.6149 | 6.3545 | 9.3240 | 61.6275 | 1164.3256 | 7.0325 | 4.1540 | 16.616 |
| | 27.7545 | 21.3798 | 1924.8847 | 9.5080 | 13.8869 | 138.6112 | 3900.3383 | 10.5225 | 6.5147 | 26.059 |
| L3 | 27.7545 | 30.8669 | 2755.5460 | 9.4678 | 13.8869 | 198.4273 | 5583.4833 | 15.1917 | 6.2133 | 17.142 |
| | 28.1485 | 31.3111 | 2876.2480 | 9.6040 | 14.0841 | 204.2195 | 5828.0583 | 15.4104 | 6.3153 | 17.423 |
| L4 | 28.1485 | 45.0408 | 4087.6060 | 9.5460 | 14.0841 | 290.2283 | 8282.5980 | 22.1677 | 5.8809 | 11.211 |
| | 28.4300 | 45.5000 | 4213.9101 | 9.6433 | 14.2249 | 296.2342 | 8538.5243 | 22.3937 | 5.9537 | 11.35 |
| L5 | 28.4300 | 33.1504 | 3103.1778 | 9.6950 | 14.2249 | 218.1507 | 6287.8796 | 16.3156 | 6.3408 | 16.679 |
| | 35.5229 | 41.5371 | 6104.4940 | 12.1478 | 17.7739 | 343.4532 | 12369.3598 | 20.4433 | 8.1769 | 21.509 |
| L6 | 34.8249 | 45.0689 | 5699.3931 | 11.2685 | 16.5350 | 344.6858 | 11548.5156 | 22.1815 | 7.3631 | 16.559 |
| | 38.1438 | 52.1180 | 8813.7607 | 13.0310 | 19.0852 | 461.8110 | 17859.0686 | 25.6509 | 8.6825 | 19.526 |
| L7 | 38.1438 | 55.9304 | 9441.3633 | 13.0192 | 19.0852 | 494.6952 | 19130.7618 | 27.5272 | 8.5942 | 17.993 |
| | 40.0522 | 58.7656 | 10951.1594 | 13.6791 | 20.0401 | 546.4616 | 22190.0179 | 28.9226 | 9.0882 | 19.028 |
| L8 | 40.0522 | 66.3563 | 12325.2437 | 13.6567 | 20.0401 | 615.0283 | 24974.2852 | 32.6586 | 8.9205 | 16.513 |
| | 40.3887 | 66.9216 | 12642.9539 | 13.7731 | 20.2085 | 625.6263 | 25618.0523 | 32.9368 | 9.0076 | 16.674 |
| L9 | 40.3887 | 55.4279 | 10522.6912 | 13.8067 | 20.2085 | 520.7068 | 21321.8253 | 27.2799 | 9.2592 | 20.745 |
| | 46.7815 | 64.3027 | 16429.6893 | 16.0173 | 23.4071 | 701.9098 | 33291.0048 | 31.6478 | 10.9141 | 24.452 |
| L10 | 45.9926 | 71.2747 | 15907.2598 | 14.9699 | 21.9346 | 725.2127 | 32232.4211 | 35.0793 | 9.9298 | 18.758 |
| | 47.4286 | 77.1854 | 20202.0122 | 16.2114 | 23.7309 | 851.2966 | 40934.7537 | 37.9883 | 10.8591 | 20.514 |
| L11 | 47.4286 | 67.8974 | 17821.5622 | 16.2344 | 23.7309 | 750.9863 | 36111.3167 | 33.4170 | 11.0316 | 23.724 |
| | 47.7667 | 68.3863 | 18209.3555 | 16.3513 | 23.9000 | 761.8967 | 36897.0910 | 33.6577 | 11.1191 | 23.913 |
| L12 | 47.7667 | 77.8146 | 20661.0510 | 16.3281 | 23.9000 | 864.4779 | 41864.8909 | 38.2980 | 10.9453 | 20.657 |
| | 57.4020 | 93.6935 | 36065.9307 | 19.6600 | 28.7211 | 1255.7305 | 73079.3535 | 46.1131 | 13.4396 | 25.365 |
| L13 | 57.4020 | 93.0788 | 35833.8815 | 19.6613 | 28.7211 | 1247.6511 | 72609.1589 | 45.8106 | 13.4490 | 25.552 |
| | 58.5853 | 95.0159 | 38118.0515 | 20.0705 | 29.3131 | 1300.3745 | 77237.5066 | 46.7639 | 13.7553 | 26.134 |
| L14 | 58.5853 | 104.3883 | 41799.694 | 20.0517 | 29.3131 | 1425.9716 | 84697.514 | 51.3768 | 13.6147 | 23.522 |

| Section | Tip Dia. in | Area $in^2$ | I $in^4$ | r in | C in | I/C $in^3$ | J $in^4$ | It/Q $in^2$ | w in | w/t |
|---|---|---|---|---|---|---|---|---|---|---|
| | | | 8 | | | | 0 | | | |
| | 63.8636 | 113.8905 | 54284.954 | 21.8769 | 31.9541 | 1698.8403 | 109996.03 | 56.0534 | 14.9811 | 25.883 |
| | | | 6 | | | | 54 | | | |
| L15 | 63.8636 | 112.2433 | 53514.632 | 21.8799 | 31.9541 | 1674.7332 | 108435.15 | 55.2427 | 15.0037 | 26.306 |
| | | | 8 | | | | 47 | | | |
| | 66.2145 | 116.4137 | 59704.079 | 22.6929 | 33.1304 | 1802.0927 | 120976.65 | 57.2953 | 15.6123 | 27.373 |
| | | | 2 | | | | 10 | | | |
| L16 | 66.2145 | 121.3998 | 62212.816 | 22.6841 | 33.1304 | 1877.8158 | 126060.03 | 59.7493 | 15.5462 | 26.128 |
| | | | 1 | | | | 21 | | | |
| | 67.8938 | 124.5075 | 67113.899 | 23.2648 | 33.9706 | 1975.6450 | 135990.95 | 61.2788 | 15.9809 | 26.858 |
| | | | 5 | | | | 60 | | | |
| L17 | 67.8938 | 120.5234 | 65004.728 | 23.2716 | 33.9706 | 1913.5570 | 131717.20 | 59.3179 | 16.0324 | 27.844 |
| | | | 9 | | | | 44 | | | |
| | 76.4163 | 135.7864 | 92960.785 | 26.2187 | 38.2349 | 2431.3087 | 188363.75 | 66.8299 | 18.2386 | 31.675 |
| | | | 2 | | | | 38 | | | |

| Tower Elevation ft | Gusset Area (per face) $ft^2$ | Gusset Thickness in | Gusset Grade | Adjust. Factor $A_f$ | Adjust. Factor $A_r$ | Weight Mult. | Double Angle Stitch Bolt Spacing Diagonals in | Double Angle Stitch Bolt Spacing Horizontals in |
|---|---|---|---|---|---|---|---|---|
| L1 185.000-180.000 | | | | 1 | 1 | 1 | | |
| L2 180.000-153.000 | | | | 1 | 1 | 1 | | |
| L3 153.000-151.833 | | | | 1 | 1 | 1 | | |
| L4 151.833-151.000 | | | | 1 | 1 | 1 | | |
| L5 151.000-130.000 | | | | 1 | 1 | 1 | | |
| L6 130.000-120.667 | | | | 1 | 1 | 1 | | |
| L7 120.667-115.000 | | | | 1 | 1 | 1 | | |
| L8 115.000-114.000 | | | | 1 | 1 | 1 | | |
| L9 114.000-95.000 | | | | 1 | 1 | 1 | | |
| L10 95.000-91.000 | | | | 1 | 1 | 1 | | |
| L11 91.000-90.000 | | | | 1 | 1 | 1 | | |
| L12 90.000-61.500 | | | | 1 | 1 | 1 | | |
| L13 61.500-58.000 | | | | 1 | 1 | 1 | | |
| L14 58.000-40.000 | | | | 1 | 1 | 1 | | |
| L15 40.000-33.000 | | | | 1 | 1 | 1 | | |
| L16 33.000-28.000 | | | | 1 | 1 | 1 | | |
| L17 28.000-0.000 | | | | 1 | 1 | 1 | | |

# Feed Line/Linear Appurtenances - Entered As Area

| Description | Face or Leg | Allow Shield | Component Type | Placement ft | Total Number | | $C_AA_A$ $ft^2/ft$ | Weight klf |
|---|---|---|---|---|---|---|---|---|
| LDF7-50A(1-5/8") | C | No | CaAa (Out Of Face) | 185.000 - 0.000 | 1 | No Ice | 0.198 | 0.001 |
| | | | | | | 1/2" Ice | 0.298 | 0.002 |
| | | | | | | 1" Ice | 0.398 | 0.004 |
| LDF7-50A(1-5/8") | C | No | CaAa (Out Of Face) | 185.000 - 0.000 | 5 | No Ice | 0.000 | 0.001 |
| | | | | | | 1/2" Ice | 0.000 | 0.002 |

| Description | Face or Leg | Allow Shield | Component Type | Placement ft | Total Number | | $C_AA_A$ $ft^2/ft$ | Weight klf |
|---|---|---|---|---|---|---|---|---|
| | | | | | | 1" Ice | 0.000 | 0.004 |
| LDF7-50A(1-5/8") | C | No | Inside Pole | 185.000 - 0.000 | 15 | No Ice | 0.000 | 0.001 |
| | | | | | | 1/2" Ice | 0.000 | 0.001 |
| | | | | | | 1" Ice | 0.000 | 0.001 |
| LDF6-50A(1-1/4") | C | No | Inside Pole | 175.000 - 0.000 | 12 | No Ice | 0.000 | 0.001 |
| | | | | | | 1/2" Ice | 0.000 | 0.001 |
| | | | | | | 1" Ice | 0.000 | 0.001 |
| FB-L98-002-XXX( 3/8) | C | No | Inside Pole | 175.000 - 0.000 | 1 | No Ice | 0.000 | 0.000 |
| | | | | | | 1/2" Ice | 0.000 | 0.000 |
| | | | | | | 1" Ice | 0.000 | 0.000 |
| WR-VG86ST-BRD( 3/4) | C | No | Inside Pole | 175.000 - 0.000 | 2 | No Ice | 0.000 | 0.001 |
| | | | | | | 1/2" Ice | 0.000 | 0.001 |
| | | | | | | 1" Ice | 0.000 | 0.001 |
| LDF7-50A(1-5/8") | C | No | Inside Pole | 165.000 - 0.000 | 6 | No Ice | 0.000 | 0.001 |
| | | | | | | 1/2" Ice | 0.000 | 0.001 |
| | | | | | | 1" Ice | 0.000 | 0.001 |
| HB158-1-08U8-S8J18( 1-5/8) | C | No | Inside Pole | 155.000 - 0.000 | 2 | No Ice | 0.000 | 0.001 |
| | | | | | | 1/2" Ice | 0.000 | 0.001 |
| | | | | | | 1" Ice | 0.000 | 0.001 |
| Aero MP3-04 | C | No | CaAa (Out Of Face) | 53.330 - 38.330 | 1 | No Ice | 0.269 | 0.000 |
| | | | | | | 1/2" Ice | 0.380 | 0.000 |
| | | | | | | 1" Ice | 0.491 | 0.000 |
| Aero MP3-05 | C | No | CaAa (Out Of Face) | 123.330 - 88.330 | 1 | No Ice | 0.348 | 0.000 |
| | | | | | | 1/2" Ice | 0.400 | 0.000 |
| | | | | | | 1" Ice | 0.657 | 0.000 |
| Aero MP3-04 | C | No | CaAa (Out Of Face) | 153.750 - 123.330 | 1 | No Ice | 0.269 | 0.000 |
| | | | | | | 1/2" Ice | 0.380 | 0.000 |
| | | | | | | 1" Ice | 0.491 | 0.000 |
| Aero MP3-08 | C | No | CaAa (Out Of Face) | 37.000 - 0.000 | 1 | No Ice | 0.467 | 0.000 |
| | | | | | | 1/2" Ice | 0.578 | 0.000 |
| | | | | | | 1" Ice | 0.689 | 0.000 |
| Aero MP3-06 | C | No | CaAa (Out Of Face) | 93.250 - 37.000 | 1 | No Ice | 0.434 | 0.000 |
| | | | | | | 1/2" Ice | 0.545 | 0.000 |
| | | | | | | 1" Ice | 0.657 | 0.000 |
| Aero MP3-04 | C | No | CaAa (Out Of Face) | 98.250 - 93.250 | 1 | No Ice | 0.269 | 0.000 |
| | | | | | | 1/2" Ice | 0.380 | 0.000 |
| | | | | | | 1" Ice | 0.491 | 0.000 |
| Aero MP3-03 | C | No | CaAa (Out Of Face) | 132.500 - 112.500 | 1 | No Ice | 0.262 | 0.000 |
| | | | | | | 1/2" Ice | 0.374 | 0.000 |
| | | | | | | 1" Ice | 0.485 | 0.000 |
| Aero MP3-03 | C | No | CaAa (Out Of Face) | 154.500 - 149.500 | 1 | No Ice | 0.262 | 0.000 |
| | | | | | | 1/2" Ice | 0.374 | 0.000 |
| | | | | | | 1" Ice | 0.485 | 0.000 |

## Feed Line/Linear Appurtenances Section Areas

| Tower Section | Tower Elevation ft | Face | $A_R$ $ft^2$ | $A_F$ $ft^2$ | $C_AA_A$ In Face $ft^2$ | $C_AA_A$ Out Face $ft^2$ | Weight K |
|---|---|---|---|---|---|---|---|
| L1 | 185.000-180.000 | A | 0.000 | 0.000 | 0.000 | 0.000 | 0.000 |
| | | B | 0.000 | 0.000 | 0.000 | 0.000 | 0.000 |
| | | C | 0.000 | 0.000 | 0.000 | 0.990 | 0.086 |
| L2 | 180.000-153.000 | A | 0.000 | 0.000 | 0.000 | 0.000 | 0.000 |
| | | B | 0.000 | 0.000 | 0.000 | 0.000 | 0.000 |
| | | C | 0.000 | 0.000 | 0.000 | 5.941 | 0.731 |
| L3 | 153.000-151.833 | A | 0.000 | 0.000 | 0.000 | 0.000 | 0.000 |
| | | B | 0.000 | 0.000 | 0.000 | 0.000 | 0.000 |
| | | C | 0.000 | 0.000 | 0.000 | 0.851 | 0.040 |
| L4 | 151.833-151.000 | A | 0.000 | 0.000 | 0.000 | 0.000 | 0.000 |
| | | B | 0.000 | 0.000 | 0.000 | 0.000 | 0.000 |
| | | C | 0.000 | 0.000 | 0.000 | 0.608 | 0.028 |
| L5 | 151.000-130.000 | A | 0.000 | 0.000 | 0.000 | 0.000 | 0.000 |
| | | B | 0.000 | 0.000 | 0.000 | 0.000 | 0.000 |
| | | C | 0.000 | 0.000 | 0.000 | 10.857 | 0.712 |
| L6 | 130.000-120.667 | A | 0.000 | 0.000 | 0.000 | 0.000 | 0.000 |
| | | B | 0.000 | 0.000 | 0.000 | 0.000 | 0.000 |

| Tower Section | Tower Elevation ft | Face | $A_R$ $ft^2$ | $A_F$ $ft^2$ | $C_AA_A$ In Face $ft^2$ | $C_AA_A$ Out Face $ft^2$ | Weight K |
|---|---|---|---|---|---|---|---|
| | | C | 0.000 | 0.000 | 0.000 | 7.018 | 0.316 |
| L7 | 120.667-115.000 | A | 0.000 | 0.000 | 0.000 | 0.000 | 0.000 |
| | | B | 0.000 | 0.000 | 0.000 | 0.000 | 0.000 |
| | | C | 0.000 | 0.000 | 0.000 | 4.580 | 0.192 |
| L8 | 115.000-114.000 | A | 0.000 | 0.000 | 0.000 | 0.000 | 0.000 |
| | | B | 0.000 | 0.000 | 0.000 | 0.000 | 0.000 |
| | | C | 0.000 | 0.000 | 0.000 | 0.808 | 0.034 |
| L9 | 114.000-95.000 | A | 0.000 | 0.000 | 0.000 | 0.000 | 0.000 |
| | | B | 0.000 | 0.000 | 0.000 | 0.000 | 0.000 |
| | | C | 0.000 | 0.000 | 0.000 | 11.638 | 0.644 |
| L10 | 95.000-91.000 | A | 0.000 | 0.000 | 0.000 | 0.000 | 0.000 |
| | | B | 0.000 | 0.000 | 0.000 | 0.000 | 0.000 |
| | | C | 0.000 | 0.000 | 0.000 | 3.631 | 0.136 |
| L11 | 91.000-90.000 | A | 0.000 | 0.000 | 0.000 | 0.000 | 0.000 |
| | | B | 0.000 | 0.000 | 0.000 | 0.000 | 0.000 |
| | | C | 0.000 | 0.000 | 0.000 | 0.980 | 0.034 |
| L12 | 90.000-61.500 | A | 0.000 | 0.000 | 0.000 | 0.000 | 0.000 |
| | | B | 0.000 | 0.000 | 0.000 | 0.000 | 0.000 |
| | | C | 0.000 | 0.000 | 0.000 | 18.602 | 0.966 |
| L13 | 61.500-58.000 | A | 0.000 | 0.000 | 0.000 | 0.000 | 0.000 |
| | | B | 0.000 | 0.000 | 0.000 | 0.000 | 0.000 |
| | | C | 0.000 | 0.000 | 0.000 | 2.213 | 0.119 |
| L14 | 58.000-40.000 | A | 0.000 | 0.000 | 0.000 | 0.000 | 0.000 |
| | | B | 0.000 | 0.000 | 0.000 | 0.000 | 0.000 |
| | | C | 0.000 | 0.000 | 0.000 | 14.968 | 0.610 |
| L15 | 40.000-33.000 | A | 0.000 | 0.000 | 0.000 | 0.000 | 0.000 |
| | | B | 0.000 | 0.000 | 0.000 | 0.000 | 0.000 |
| | | C | 0.000 | 0.000 | 0.000 | 5.005 | 0.237 |
| L16 | 33.000-28.000 | A | 0.000 | 0.000 | 0.000 | 0.000 | 0.000 |
| | | B | 0.000 | 0.000 | 0.000 | 0.000 | 0.000 |
| | | C | 0.000 | 0.000 | 0.000 | 3.323 | 0.170 |
| L17 | 28.000-0.000 | A | 0.000 | 0.000 | 0.000 | 0.000 | 0.000 |
| | | B | 0.000 | 0.000 | 0.000 | 0.000 | 0.000 |
| | | C | 0.000 | 0.000 | 0.000 | 18.611 | 0.949 |

## Feed Line/Linear Appurtenances Section Areas - With Ice

| Tower Section | Tower Elevation ft | Face or Leg | Ice Thickness in | $A_R$ $ft^2$ | $A_F$ $ft^2$ | $C_AA_A$ In Face $ft^2$ | $C_AA_A$ Out Face $ft^2$ | Weight K |
|---|---|---|---|---|---|---|---|---|
| L1 | 185.000-180.000 | A | 0.750 | 0.000 | 0.000 | 0.000 | 0.000 | 0.000 |
| | | B | | 0.000 | 0.000 | 0.000 | 0.000 | 0.000 |
| | | C | | 0.000 | 0.000 | 0.000 | 1.740 | 0.163 |
| L2 | 180.000-153.000 | A | 0.750 | 0.000 | 0.000 | 0.000 | 0.000 | 0.000 |
| | | B | | 0.000 | 0.000 | 0.000 | 0.000 | 0.000 |
| | | C | | 0.000 | 0.000 | 0.000 | 10.366 | 1.148 |
| L3 | 153.000-151.833 | A | 0.750 | 0.000 | 0.000 | 0.000 | 0.000 | 0.000 |
| | | B | | 0.000 | 0.000 | 0.000 | 0.000 | 0.000 |
| | | C | | 0.000 | 0.000 | 0.000 | 1.415 | 0.058 |
| L4 | 151.833-151.000 | A | 0.750 | 0.000 | 0.000 | 0.000 | 0.000 | 0.000 |
| | | B | | 0.000 | 0.000 | 0.000 | 0.000 | 0.000 |
| | | C | | 0.000 | 0.000 | 0.000 | 1.011 | 0.041 |
| L5 | 151.000-130.000 | A | 0.750 | 0.000 | 0.000 | 0.000 | 0.000 | 0.000 |
| | | B | | 0.000 | 0.000 | 0.000 | 0.000 | 0.000 |
| | | C | | 0.000 | 0.000 | 0.000 | 18.174 | 1.037 |
| L6 | 130.000-120.667 | A | 0.750 | 0.000 | 0.000 | 0.000 | 0.000 | 0.000 |
| | | B | | 0.000 | 0.000 | 0.000 | 0.000 | 0.000 |
| | | C | | 0.000 | 0.000 | 0.000 | 11.566 | 0.461 |
| L7 | 120.667-115.000 | A | 0.750 | 0.000 | 0.000 | 0.000 | 0.000 | 0.000 |
| | | B | | 0.000 | 0.000 | 0.000 | 0.000 | 0.000 |
| | | C | | 0.000 | 0.000 | 0.000 | 7.398 | 0.280 |
| L8 | 115.000-114.000 | A | 0.750 | 0.000 | 0.000 | 0.000 | 0.000 | 0.000 |
| | | B | | 0.000 | 0.000 | 0.000 | 0.000 | 0.000 |
| | | C | | 0.000 | 0.000 | 0.000 | 1.305 | 0.049 |
| L9 | 114.000-95.000 | A | 0.750 | 0.000 | 0.000 | 0.000 | 0.000 | 0.000 |
| | | B | | 0.000 | 0.000 | 0.000 | 0.000 | 0.000 |

| Tower Section | Tower Elevation ft | Face or Leg | Ice Thickness in | $A_R$ $ft^2$ | $A_F$ $ft^2$ | $C_AA_A$ In Face $ft^2$ | $C_AA_A$ Out Face $ft^2$ | Weight K |
|---|---|---|---|---|---|---|---|---|
| | | C | | 0.000 | 0.000 | 0.000 | 18.710 | 0.938 |
| L10 | 95.000-91.000 | A | 0.750 | 0.000 | 0.000 | 0.000 | 0.000 | 0.000 |
| | | B | | 0.000 | 0.000 | 0.000 | 0.000 | 0.000 |
| | | C | | 0.000 | 0.000 | 0.000 | 5.620 | 0.197 |
| L11 | 91.000-90.000 | A | 0.750 | 0.000 | 0.000 | 0.000 | 0.000 | 0.000 |
| | | B | | 0.000 | 0.000 | 0.000 | 0.000 | 0.000 |
| | | C | | 0.000 | 0.000 | 0.000 | 1.477 | 0.049 |
| L12 | 90.000-61.500 | A | 0.750 | 0.000 | 0.000 | 0.000 | 0.000 | 0.000 |
| | | B | | 0.000 | 0.000 | 0.000 | 0.000 | 0.000 |
| | | C | | 0.000 | 0.000 | 0.000 | 27.929 | 1.407 |
| L13 | 61.500-58.000 | A | 0.750 | 0.000 | 0.000 | 0.000 | 0.000 | 0.000 |
| | | B | | 0.000 | 0.000 | 0.000 | 0.000 | 0.000 |
| | | C | | 0.000 | 0.000 | 0.000 | 3.322 | 0.173 |
| L14 | 58.000-40.000 | A | 0.750 | 0.000 | 0.000 | 0.000 | 0.000 | 0.000 |
| | | B | | 0.000 | 0.000 | 0.000 | 0.000 | 0.000 |
| | | C | | 0.000 | 0.000 | 0.000 | 22.890 | 0.889 |
| L15 | 40.000-33.000 | A | 0.750 | 0.000 | 0.000 | 0.000 | 0.000 | 0.000 |
| | | B | | 0.000 | 0.000 | 0.000 | 0.000 | 0.000 |
| | | C | | 0.000 | 0.000 | 0.000 | 7.500 | 0.346 |
| L16 | 33.000-28.000 | A | 0.750 | 0.000 | 0.000 | 0.000 | 0.000 | 0.000 |
| | | B | | 0.000 | 0.000 | 0.000 | 0.000 | 0.000 |
| | | C | | 0.000 | 0.000 | 0.000 | 4.907 | 0.247 |
| L17 | 28.000-0.000 | A | 0.750 | 0.000 | 0.000 | 0.000 | 0.000 | 0.000 |
| | | B | | 0.000 | 0.000 | 0.000 | 0.000 | 0.000 |
| | | C | | 0.000 | 0.000 | 0.000 | 27.477 | 1.382 |

## Feed Line Center of Pressure

| Section | Elevation ft | $CP_X$ in | $CP_Z$ in | $CP_X$ Ice in | $CP_Z$ Ice in |
|---|---|---|---|---|---|
| L1 | 185.000-180.000 | -0.2272 | 0.1312 | -0.3437 | 0.1984 |
| L2 | 180.000-153.000 | -0.2605 | 0.1504 | -0.3988 | 0.2302 |
| L3 | 153.000-151.833 | -0.7156 | 0.4132 | -0.9880 | 0.5704 |
| L4 | 151.833-151.000 | -0.7177 | 0.4144 | -0.9924 | 0.5730 |
| L5 | 151.000-130.000 | -0.5605 | 0.3236 | -0.8136 | 0.4697 |
| L6 | 130.000-120.667 | -0.7785 | 0.4494 | -1.1000 | 0.6351 |
| L7 | 120.667-115.000 | -0.8354 | 0.4823 | -1.1659 | 0.6731 |
| L8 | 115.000-114.000 | -0.8402 | 0.4851 | -1.1762 | 0.6791 |
| L9 | 114.000-95.000 | -0.6790 | 0.3920 | -0.9740 | 0.5623 |
| L10 | 95.000-91.000 | -0.9506 | 0.5488 | -1.2978 | 0.7493 |
| L11 | 91.000-90.000 | -1.0139 | 0.5853 | -1.3532 | 0.7813 |
| L12 | 90.000-61.500 | -0.7326 | 0.4230 | -1.0067 | 0.5812 |
| L13 | 61.500-58.000 | -0.7234 | 0.4177 | -1.0022 | 0.5786 |
| L14 | 58.000-40.000 | -0.9267 | 0.5351 | -1.2908 | 0.7452 |
| L15 | 40.000-33.000 | -0.8163 | 0.4713 | -1.1315 | 0.6533 |
| L16 | 33.000-28.000 | -0.7688 | 0.4438 | -1.0579 | 0.6108 |
| L17 | 28.000-0.000 | -0.7748 | 0.4473 | -1.0708 | 0.6182 |

## Discrete Tower Loads

| Description | Face or Leg | Offset Type | Offsets: Horz Lateral Vert ft ft ft | Azimuth Adjustment ° | Placement ft | | $C_AA_A$ Front $ft^2$ | $C_AA_A$ Side $ft^2$ | Weight K |
|---|---|---|---|---|---|---|---|---|---|
| *** | | | | | | | | | |
| ETW190VS12UB | A | From Leg | 4.000<br>0.000 | 0.000 | 185.000 | No Ice<br>1/2" | 0.664<br>0.778 | 0.367<br>0.461 | 0.015<br>0.020 |

| Description | Face or Leg | Offset Type | Offsets: Horz Lateral Vert ft ft ft | Azimuth Adjustment ° | Placement ft | | $C_AA_A$ Front $ft^2$ | $C_AA_A$ Side $ft^2$ | Weight K |
|---|---|---|---|---|---|---|---|---|---|
| | | | 0.000 | | | Ice | 0.901 | 0.564 | 0.026 |
| | | | | | | 1" Ice | | | |
| ETW190VS12UB | B | From Leg | 4.000 | 0.000 | 185.000 | No Ice | 0.664 | 0.367 | 0.015 |
| | | | 0.000 | | | 1/2" | 0.778 | 0.461 | 0.020 |
| | | | 0.000 | | | Ice | 0.901 | 0.564 | 0.026 |
| | | | | | | 1" Ice | | | |
| ETW190VS12UB | C | From Leg | 4.000 | 0.000 | 185.000 | No Ice | 0.664 | 0.367 | 0.015 |
| | | | 0.000 | | | 1/2" | 0.778 | 0.461 | 0.020 |
| | | | 0.000 | | | Ice | 0.901 | 0.564 | 0.026 |
| | | | | | | 1" Ice | | | |
| Sector Mount [SM 802-3] | C | None | | 0.000 | 185.000 | No Ice | 24.410 | 24.410 | 0.930 |
| | | | | | | 1/2" | 31.390 | 31.390 | 1.362 |
| | | | | | | Ice | 38.370 | 38.370 | 1.794 |
| | | | | | | 1" Ice | | | |
| RR90-17-02DP w/ Mount Pipe | A | From Leg | 4.000 | 0.000 | 185.000 | No Ice | 4.593 | 3.319 | 0.034 |
| | | | 0.000 | | | 1/2" | 5.088 | 4.089 | 0.072 |
| | | | 0.000 | | | Ice | 5.578 | 4.784 | 0.115 |
| | | | | | | 1" Ice | | | |
| RR90-17-02DP w/ Mount Pipe | B | From Leg | 4.000 | 0.000 | 185.000 | No Ice | 4.593 | 3.319 | 0.034 |
| | | | 0.000 | | | 1/2" | 5.088 | 4.089 | 0.072 |
| | | | 0.000 | | | Ice | 5.578 | 4.784 | 0.115 |
| | | | | | | 1" Ice | | | |
| RR90-17-02DP w/ Mount Pipe | C | From Leg | 4.000 | 0.000 | 185.000 | No Ice | 4.593 | 3.319 | 0.034 |
| | | | 0.000 | | | 1/2" | 5.088 | 4.089 | 0.072 |
| | | | 0.000 | | | Ice | 5.578 | 4.784 | 0.115 |
| | | | | | | 1" Ice | | | |
| APX16DWV-16DWVS-C w/ Mount Pipe | A | From Leg | 4.000 | 0.000 | 185.000 | No Ice | 7.466 | 3.494 | 0.061 |
| | | | 0.000 | | | 1/2" | 7.994 | 4.263 | 0.110 |
| | | | 0.000 | | | Ice | 8.518 | 4.960 | 0.165 |
| | | | | | | 1" Ice | | | |
| APX16DWV-16DWVS-C w/ Mount Pipe | B | From Leg | 4.000 | 0.000 | 185.000 | No Ice | 7.466 | 3.494 | 0.061 |
| | | | 0.000 | | | 1/2" | 7.994 | 4.263 | 0.110 |
| | | | 0.000 | | | Ice | 8.518 | 4.960 | 0.165 |
| | | | | | | 1" Ice | | | |
| APX16DWV-16DWVS-C w/ Mount Pipe | C | From Leg | 4.000 | 0.000 | 185.000 | No Ice | 7.466 | 3.494 | 0.061 |
| | | | 0.000 | | | 1/2" | 7.994 | 4.263 | 0.110 |
| | | | 0.000 | | | Ice | 8.518 | 4.960 | 0.165 |
| | | | | | | 1" Ice | | | |
| ATBT-BOTTOM-24V | A | From Leg | 4.000 | 0.000 | 185.000 | No Ice | 0.121 | 0.075 | 0.003 |
| | | | 0.000 | | | 1/2" | 0.172 | 0.119 | 0.004 |
| | | | 0.000 | | | Ice | 0.232 | 0.172 | 0.006 |
| | | | | | | 1" Ice | | | |
| SBNHH-1D65C w/ Mount Pipe | A | From Leg | 4.000 | 0.000 | 185.000 | No Ice | 11.626 | 9.793 | 0.082 |
| | | | 0.000 | | | 1/2" | 12.346 | 11.311 | 0.172 |
| | | | 0.000 | | | Ice | 13.074 | 12.854 | 0.271 |
| | | | | | | 1" Ice | | | |
| ATBT-BOTTOM-24V | B | From Leg | 4.000 | 0.000 | 185.000 | No Ice | 0.121 | 0.075 | 0.003 |
| | | | 0.000 | | | 1/2" | 0.172 | 0.119 | 0.004 |
| | | | 0.000 | | | Ice | 0.232 | 0.172 | 0.006 |
| | | | | | | 1" Ice | | | |
| LNX-6515DS-VTM w/ Mount Pipe | B | From Leg | 4.000 | 0.000 | 185.000 | No Ice | 11.683 | 9.842 | 0.083 |
| | | | 0.000 | | | 1/2" | 12.404 | 11.366 | 0.173 |
| | | | 0.000 | | | Ice | 13.135 | 12.914 | 0.273 |
| | | | | | | 1" Ice | | | |
| ATBT-BOTTOM-24V | C | From Leg | 4.000 | 0.000 | 185.000 | No Ice | 0.121 | 0.075 | 0.003 |
| | | | 0.000 | | | 1/2" | 0.172 | 0.119 | 0.004 |
| | | | 0.000 | | | Ice | 0.232 | 0.172 | 0.006 |
| | | | | | | 1" Ice | | | |
| LNX-6515DS-VTM w/ Mount Pipe | C | From Leg | 4.000 | 0.000 | 185.000 | No Ice | 11.683 | 9.842 | 0.083 |
| | | | 0.000 | | | 1/2" | 12.404 | 11.366 | 0.173 |
| | | | 0.000 | | | Ice | 13.135 | 12.914 | 0.273 |
| | | | | | | 1" Ice | | | |
| **** | | | | | | | | | |
| (2) 7770.00 w/ Mount Pipe | A | From Leg | 4.000 | 10.000 | 175.000 | No Ice | 6.119 | 4.254 | 0.055 |
| | | | 0.000 | | | 1/2" | 6.626 | 5.014 | 0.103 |

| Description | Face or Leg | Offset Type | Offsets: Horz Lateral Vert ft ft ft | Azimuth Adjustment ° | Placement ft | | $C_AA_A$ Front $ft^2$ | $C_AA_A$ Side $ft^2$ | Weight K |
|---|---|---|---|---|---|---|---|---|---|
| | | | 0.000 | | | Ice | 7.128 | 5.711 | 0.157 |
| | | | | | | 1" Ice | | | |
| (2) 7770.00 w/ Mount Pipe | B | From Leg | 4.000 | 10.000 | 175.000 | No Ice | 6.119 | 4.254 | 0.055 |
| | | | 0.000 | | | 1/2" | 6.626 | 5.014 | 0.103 |
| | | | 0.000 | | | Ice | 7.128 | 5.711 | 0.157 |
| | | | | | | 1" Ice | | | |
| (2) 7770.00 w/ Mount Pipe | C | From Leg | 4.000 | 10.000 | 175.000 | No Ice | 6.119 | 4.254 | 0.055 |
| | | | 0.000 | | | 1/2" | 6.626 | 5.014 | 0.103 |
| | | | 0.000 | | | Ice | 7.128 | 5.711 | 0.157 |
| | | | | | | 1" Ice | | | |
| AM-X-CD-16-65-00T-RET w/ Mount Pipe | A | From Leg | 4.000 | 23.000 | 175.000 | No Ice | 8.498 | 6.304 | 0.074 |
| | | | 0.000 | | | 1/2" | 9.149 | 7.479 | 0.139 |
| | | | 0.000 | | | Ice | 9.767 | 8.368 | 0.212 |
| | | | | | | 1" Ice | | | |
| AM-X-CD-16-65-00T-RET w/ Mount Pipe | B | From Leg | 4.000 | 22.000 | 175.000 | No Ice | 8.498 | 6.304 | 0.074 |
| | | | 0.000 | | | 1/2" | 9.149 | 7.479 | 0.139 |
| | | | 0.000 | | | Ice | 9.767 | 8.368 | 0.212 |
| | | | | | | 1" Ice | | | |
| AM-X-CD-16-65-00T-RET w/ Mount Pipe | C | From Leg | 4.000 | 14.000 | 175.000 | No Ice | 8.498 | 6.304 | 0.074 |
| | | | 0.000 | | | 1/2" | 9.149 | 7.479 | 0.139 |
| | | | 0.000 | | | Ice | 9.767 | 8.368 | 0.212 |
| | | | | | | 1" Ice | | | |
| (2) RRUS-11 | A | From Leg | 4.000 | 23.000 | 175.000 | No Ice | 3.249 | 1.373 | 0.048 |
| | | | 0.000 | | | 1/2" | 3.491 | 1.551 | 0.068 |
| | | | 0.000 | | | Ice | 3.741 | 1.738 | 0.092 |
| | | | | | | 1" Ice | | | |
| (2) RRUS-11 | B | From Leg | 4.000 | 22.000 | 175.000 | No Ice | 3.249 | 1.373 | 0.048 |
| | | | 0.000 | | | 1/2" | 3.491 | 1.551 | 0.068 |
| | | | 0.000 | | | Ice | 3.741 | 1.738 | 0.092 |
| | | | | | | 1" Ice | | | |
| (2) RRUS-11 | C | From Leg | 4.000 | 14.000 | 175.000 | No Ice | 3.249 | 1.373 | 0.048 |
| | | | 0.000 | | | 1/2" | 3.491 | 1.551 | 0.068 |
| | | | 0.000 | | | Ice | 3.741 | 1.738 | 0.092 |
| | | | | | | 1" Ice | | | |
| (2) LGP13519 | A | From Leg | 4.000 | 23.000 | 175.000 | No Ice | 0.338 | 0.207 | 0.005 |
| | | | 0.000 | | | 1/2" | 0.422 | 0.280 | 0.008 |
| | | | 0.000 | | | Ice | 0.515 | 0.362 | 0.012 |
| | | | | | | 1" Ice | | | |
| (2) LGP13519 | B | From Leg | 4.000 | 22.000 | 175.000 | No Ice | 0.338 | 0.207 | 0.005 |
| | | | 0.000 | | | 1/2" | 0.422 | 0.280 | 0.008 |
| | | | 0.000 | | | Ice | 0.515 | 0.362 | 0.012 |
| | | | | | | 1" Ice | | | |
| (2) LGP13519 | C | From Leg | 4.000 | 14.000 | 175.000 | No Ice | 0.338 | 0.207 | 0.005 |
| | | | 0.000 | | | 1/2" | 0.422 | 0.280 | 0.008 |
| | | | 0.000 | | | Ice | 0.515 | 0.362 | 0.012 |
| | | | | | | 1" Ice | | | |
| (2) DTMABP7819VG12A | A | From Leg | 4.000 | 23.000 | 175.000 | No Ice | 1.139 | 0.391 | 0.019 |
| | | | 0.000 | | | 1/2" | 1.284 | 0.488 | 0.026 |
| | | | 0.000 | | | Ice | 1.437 | 0.595 | 0.036 |
| | | | | | | 1" Ice | | | |
| (2) DTMABP7819VG12A | B | From Leg | 4.000 | 22.000 | 175.000 | No Ice | 1.139 | 0.391 | 0.019 |
| | | | 0.000 | | | 1/2" | 1.284 | 0.488 | 0.026 |
| | | | 0.000 | | | Ice | 1.437 | 0.595 | 0.036 |
| | | | | | | 1" Ice | | | |
| (2) DTMABP7819VG12A | C | From Leg | 4.000 | 14.000 | 175.000 | No Ice | 1.139 | 0.391 | 0.019 |
| | | | 0.000 | | | 1/2" | 1.284 | 0.488 | 0.026 |
| | | | 0.000 | | | Ice | 1.437 | 0.595 | 0.036 |
| | | | | | | 1" Ice | | | |
| DC6-48-60-18-8F | B | From Leg | 4.000 | 22.000 | 175.000 | No Ice | 2.216 | 2.216 | 0.020 |
| | | | 0.000 | | | 1/2" | 2.436 | 2.436 | 0.039 |
| | | | 0.000 | | | Ice | 2.664 | 2.664 | 0.061 |
| | | | | | | 1" Ice | | | |
| Sector Mount [SM 802-3] | C | None | | 0.000 | 175.000 | No Ice | 24.410 | 24.410 | 0.930 |
| | | | | | | 1/2" | 31.390 | 31.390 | 1.362 |
| | | | | | | Ice | 38.370 | 38.370 | 1.794 |

| Description | Face or Leg | Offset Type | Offsets: Horz Lateral Vert ft ft ft | Azimuth Adjustment ° | Placement ft | | $C_AA_A$ Front $ft^2$ | $C_AA_A$ Side $ft^2$ | Weight K |
|---|---|---|---|---|---|---|---|---|---|
| | | | | | | 1" Ice | | | |
| **** | | | | | | | | | |
| APXV18-206517S-C w/ Mount Pipe | A | From Leg | 4.000<br>0.000<br>0.000 | 0.000 | 165.000 | No Ice<br>1/2" Ice<br>1" Ice | 5.404<br>5.960<br>6.481 | 4.700<br>5.860<br>6.734 | 0.052<br>0.097<br>0.150 |
| APXV18-206517S-C w/ Mount Pipe | B | From Leg | 4.000<br>0.000<br>0.000 | 0.000 | 165.000 | No Ice<br>1/2" Ice<br>1" Ice | 5.404<br>5.960<br>6.481 | 4.700<br>5.860<br>6.734 | 0.052<br>0.097<br>0.150 |
| APXV18-206517S-C w/ Mount Pipe | C | From Leg | 4.000<br>0.000<br>0.000 | 0.000 | 165.000 | No Ice<br>1/2" Ice<br>1" Ice | 5.404<br>5.960<br>6.481 | 4.700<br>5.860<br>6.734 | 0.052<br>0.097<br>0.150 |
| Pipe Mount [PM 601-3] | C | None | | 0.000 | 165.000 | No Ice<br>1/2" Ice<br>1" Ice | 4.390<br>5.480<br>6.570 | 4.390<br>5.480<br>6.570 | 0.195<br>0.237<br>0.280 |
| **** | | | | | | | | | |
| (2) BXA-70063-6CF-EDIN-2 w/ Mount Pipe | A | From Leg | 4.000<br>0.000<br>0.000 | 0.000 | 155.000 | No Ice<br>1/2" Ice<br>1" Ice | 7.969<br>8.609<br>9.216 | 5.801<br>6.953<br>7.819 | 0.042<br>0.103<br>0.171 |
| (2) BXA-70063-6CF-EDIN-2 w/ Mount Pipe | B | From Leg | 4.000<br>0.000<br>0.000 | 0.000 | 155.000 | No Ice<br>1/2" Ice<br>1" Ice | 7.969<br>8.609<br>9.216 | 5.801<br>6.953<br>7.819 | 0.042<br>0.103<br>0.171 |
| (2) BXA-70063-6CF-EDIN-2 w/ Mount Pipe | C | From Leg | 4.000<br>0.000<br>0.000 | 0.000 | 155.000 | No Ice<br>1/2" Ice<br>1" Ice | 7.969<br>8.609<br>9.216 | 5.801<br>6.953<br>7.819 | 0.042<br>0.103<br>0.171 |
| (2) BXA-171063-12CF-EDIN-2 w/ Mount Pipe | A | From Leg | 4.000<br>0.000<br>0.000 | 0.000 | 155.000 | No Ice<br>1/2" Ice<br>1" Ice | 5.029<br>5.583<br>6.103 | 5.289<br>6.459<br>7.348 | 0.041<br>0.087<br>0.140 |
| (2) BXA-171063-12CF-EDIN-2 w/ Mount Pipe | B | From Leg | 4.000<br>0.000<br>0.000 | 0.000 | 155.000 | No Ice<br>1/2" Ice<br>1" Ice | 5.029<br>5.583<br>6.103 | 5.289<br>6.459<br>7.348 | 0.041<br>0.087<br>0.140 |
| (2) BXA-171063-12CF-EDIN-2 w/ Mount Pipe | C | From Leg | 4.000<br>0.000<br>0.000 | 0.000 | 155.000 | No Ice<br>1/2" Ice<br>1" Ice | 5.029<br>5.583<br>6.103 | 5.289<br>6.459<br>7.348 | 0.041<br>0.087<br>0.140 |
| RRH2X40-AWS | A | From Leg | 4.000<br>0.000<br>0.000 | 0.000 | 155.000 | No Ice<br>1/2" Ice<br>1" Ice | 2.522<br>2.753<br>2.993 | 1.589<br>1.795<br>2.010 | 0.044<br>0.061<br>0.082 |
| RRH2X40-AWS | B | From Leg | 4.000<br>0.000<br>0.000 | 0.000 | 155.000 | No Ice<br>1/2" Ice<br>1" Ice | 2.522<br>2.753<br>2.993 | 1.589<br>1.795<br>2.010 | 0.044<br>0.061<br>0.082 |
| RRH2X40-AWS | C | From Leg | 4.000<br>0.000<br>0.000 | 0.000 | 155.000 | No Ice<br>1/2" Ice<br>1" Ice | 2.522<br>2.753<br>2.993 | 1.589<br>1.795<br>2.010 | 0.044<br>0.061<br>0.082 |
| RRH2X40-07-U | A | From Leg | 4.000<br>0.000<br>0.000 | 0.000 | 155.000 | No Ice<br>1/2" Ice<br>1" Ice | 2.246<br>2.447<br>2.657 | 1.228<br>1.385<br>1.551 | 0.050<br>0.067<br>0.086 |
| RRH2X40-07-U | B | From Leg | 4.000<br>0.000<br>0.000 | 0.000 | 155.000 | No Ice<br>1/2" Ice<br>1" Ice | 2.246<br>2.447<br>2.657 | 1.228<br>1.385<br>1.551 | 0.050<br>0.067<br>0.086 |
| RRH2X40-07-U | C | From Leg | 4.000<br>0.000 | 0.000 | 155.000 | No Ice<br>1/2" | 2.246<br>2.447 | 1.228<br>1.385 | 0.050<br>0.067 |

| Description | Face or Leg | Offset Type | Offsets: Horz Lateral Vert ft ft ft | Azimuth Adjustment ° | Placement ft | | $C_AA_A$ Front $ft^2$ | $C_AA_A$ Side $ft^2$ | Weight K |
|---|---|---|---|---|---|---|---|---|---|
| | | | 0.000 | | | Ice | 2.657 | 1.551 | 0.086 |
| | | | | | | 1" Ice | | | |
| DB-T1-6Z-8AB-0Z | C | From Leg | 4.000 | 0.000 | 155.000 | No Ice | 5.600 | 2.333 | 0.044 |
| | | | 0.000 | | | 1/2" | 5.915 | 2.558 | 0.080 |
| | | | 0.000 | | | Ice | 6.240 | 2.791 | 0.120 |
| | | | | | | 1" Ice | | | |
| Platform Mount [LP 301-1] | C | None | | 0.000 | 155.000 | No Ice | 30.100 | 30.100 | 1.589 |
| | | | | | | 1/2" | 40.800 | 40.800 | 2.029 |
| | | | | | | Ice | 51.500 | 51.500 | 2.470 |
| | | | | | | 1" Ice | | | |
| *** | | | | | | | | | |

# Tower Pressures - No Ice

$G_H$ = 1.690

| Section Elevation ft | z ft | $K_Z$ | $q_z$ ksf | $A_G$ $ft^2$ | Face | $A_F$ $ft^2$ | $A_R$ $ft^2$ | $A_{leg}$ $ft^2$ | Leg % | $C_AA_A$ In Face $ft^2$ | $C_AA_A$ Out Face $ft^2$ |
|---|---|---|---|---|---|---|---|---|---|---|---|
| L1 185.000-180.000 | 182.500 | 1.63 | 0.030 | 7.500 | A | 0.000 | 7.500 | 7.500 | 100.00 | 0.000 | 0.000 |
| | | | | | B | 0.000 | 7.500 | | 100.00 | 0.000 | 0.000 |
| | | | | | C | 0.000 | 7.500 | | 100.00 | 0.000 | 0.990 |
| L2 180.000-153.000 | 165.615 | 1.586 | 0.029 | 50.410 | A | 0.000 | 50.410 | 50.410 | 100.00 | 0.000 | 0.000 |
| | | | | | B | 0.000 | 50.410 | | 100.00 | 0.000 | 0.000 |
| | | | | | C | 0.000 | 50.410 | | 100.00 | 0.000 | 5.941 |
| L3 153.000-151.833 | 152.415 | 1.548 | 0.029 | 2.625 | A | 0.000 | 2.625 | 2.625 | 100.00 | 0.000 | 0.000 |
| | | | | | B | 0.000 | 2.625 | | 100.00 | 0.000 | 0.000 |
| | | | | | C | 0.000 | 2.625 | | 100.00 | 0.000 | 0.851 |
| L4 151.833-151.000 | 151.416 | 1.545 | 0.029 | 1.898 | A | 0.000 | 1.898 | 1.898 | 100.00 | 0.000 | 0.000 |
| | | | | | B | 0.000 | 1.898 | | 100.00 | 0.000 | 0.000 |
| | | | | | C | 0.000 | 1.898 | | 100.00 | 0.000 | 0.608 |
| L5 151.000-130.000 | 140.112 | 1.512 | 0.028 | 54.052 | A | 0.000 | 54.052 | 54.052 | 100.00 | 0.000 | 0.000 |
| | | | | | B | 0.000 | 54.052 | | 100.00 | 0.000 | 0.000 |
| | | | | | C | 0.000 | 54.052 | | 100.00 | 0.000 | 10.857 |
| L6 130.000-120.667 | 125.263 | 1.464 | 0.027 | 27.410 | A | 0.000 | 27.410 | 27.410 | 100.00 | 0.000 | 0.000 |
| | | | | | B | 0.000 | 27.410 | | 100.00 | 0.000 | 0.000 |
| | | | | | C | 0.000 | 27.410 | | 100.00 | 0.000 | 7.018 |
| L7 120.667-115.000 | 117.810 | 1.438 | 0.027 | 17.834 | A | 0.000 | 17.834 | 17.834 | 100.00 | 0.000 | 0.000 |
| | | | | | B | 0.000 | 17.834 | | 100.00 | 0.000 | 0.000 |
| | | | | | C | 0.000 | 17.834 | | 100.00 | 0.000 | 4.580 |
| L8 115.000-114.000 | 114.499 | 1.427 | 0.026 | 3.237 | A | 0.000 | 3.237 | 3.237 | 100.00 | 0.000 | 0.000 |
| | | | | | B | 0.000 | 3.237 | | 100.00 | 0.000 | 0.000 |
| | | | | | C | 0.000 | 3.237 | | 100.00 | 0.000 | 0.808 |
| L9 114.000-95.000 | 104.268 | 1.389 | 0.026 | 66.658 | A | 0.000 | 66.658 | 66.658 | 100.00 | 0.000 | 0.000 |
| | | | | | B | 0.000 | 66.658 | | 100.00 | 0.000 | 0.000 |
| | | | | | C | 0.000 | 66.658 | | 100.00 | 0.000 | 11.638 |
| L10 95.000-91.000 | 92.990 | 1.344 | 0.025 | 15.040 | A | 0.000 | 15.040 | 15.040 | 100.00 | 0.000 | 0.000 |
| | | | | | B | 0.000 | 15.040 | | 100.00 | 0.000 | 0.000 |
| | | | | | C | 0.000 | 15.040 | | 100.00 | 0.000 | 3.631 |
| L11 91.000-90.000 | 90.499 | 1.334 | 0.025 | 3.831 | A | 0.000 | 3.831 | 3.831 | 100.00 | 0.000 | 0.000 |
| | | | | | B | 0.000 | 3.831 | | 100.00 | 0.000 | 0.000 |
| | | | | | C | 0.000 | 3.831 | | 100.00 | 0.000 | 0.980 |
| L12 90.000-61.500 | 75.315 | 1.266 | 0.023 | 120.632 | A | 0.000 | 120.632 | 120.632 | 100.00 | 0.000 | 0.000 |
| | | | | | B | 0.000 | 120.632 | | 100.00 | 0.000 | 0.000 |
| | | | | | C | 0.000 | 120.632 | | 100.00 | 0.000 | 18.602 |
| L13 61.500-58.000 | 59.744 | 1.185 | 0.022 | 16.338 | A | 0.000 | 16.338 | 16.338 | 100.00 | 0.000 | 0.000 |
| | | | | | B | 0.000 | 16.338 | | 100.00 | 0.000 | 0.000 |
| | | | | | C | 0.000 | 16.338 | | 100.00 | 0.000 | 2.213 |

| Section Elevation ft | z ft | $K_Z$ | $q_z$ ksf | $A_G$ $ft^2$ | Face | $A_F$ $ft^2$ | $A_R$ $ft^2$ | $A_{leg}$ $ft^2$ | Leg % | $C_AA_A$ In Face $ft^2$ | $C_AA_A$ Out Face $ft^2$ |
|---|---|---|---|---|---|---|---|---|---|---|---|
| L14 58.000-40.000 | 48.871 | 1.119 | 0.021 | 88.707 | A | 0.000 | 88.707 | 88.707 | 100.00 | 0.000 | 0.000 |
| | | | | | B | 0.000 | 88.707 | | 100.00 | 0.000 | 0.000 |
| | | | | | C | 0.000 | 88.707 | | 100.00 | 0.000 | 14.968 |
| L15 40.000-33.000 | 36.479 | 1.029 | 0.019 | 36.647 | A | 0.000 | 36.647 | 36.647 | 100.00 | 0.000 | 0.000 |
| | | | | | B | 0.000 | 36.647 | | 100.00 | 0.000 | 0.000 |
| | | | | | C | 0.000 | 36.647 | | 100.00 | 0.000 | 5.005 |
| L16 33.000-28.000 | 30.490 | 1 | 0.018 | 26.987 | A | 0.000 | 26.987 | 26.987 | 100.00 | 0.000 | 0.000 |
| | | | | | B | 0.000 | 26.987 | | 100.00 | 0.000 | 0.000 |
| | | | | | C | 0.000 | 26.987 | | 100.00 | 0.000 | 3.323 |
| L17 28.000-0.000 | 13.724 | 1 | 0.018 | 162.625 | A | 0.000 | 162.625 | 162.625 | 100.00 | 0.000 | 0.000 |
| | | | | | B | 0.000 | 162.625 | | 100.00 | 0.000 | 0.000 |
| | | | | | C | 0.000 | 162.625 | | 100.00 | 0.000 | 18.611 |

## Tower Pressure - With Ice

$G_H$ = 1.690

| Section Elevation ft | z ft | $K_Z$ | $q_z$ ksf | $t_Z$ in | $A_G$ $ft^2$ | Face | $A_F$ $ft^2$ | $A_R$ $ft^2$ | $A_{leg}$ $ft^2$ | Leg % | $C_AA_A$ In Face $ft^2$ | $C_AA_A$ Out Face $ft^2$ |
|---|---|---|---|---|---|---|---|---|---|---|---|---|
| L1 185.000-180.000 | 182.500 | 1.63 | 0.006 | 0.7500 | 8.125 | A | 0.000 | 8.125 | 8.125 | 100.00 | 0.000 | 0.000 |
| | | | | | | B | 0.000 | 8.125 | | 100.00 | 0.000 | 0.000 |
| | | | | | | C | 0.000 | 8.125 | | 100.00 | 0.000 | 1.740 |
| L2 180.000-153.000 | 165.615 | 1.586 | 0.006 | 0.7500 | 53.785 | A | 0.000 | 53.785 | 53.785 | 100.00 | 0.000 | 0.000 |
| | | | | | | B | 0.000 | 53.785 | | 100.00 | 0.000 | 0.000 |
| | | | | | | C | 0.000 | 53.785 | | 100.00 | 0.000 | 10.366 |
| L3 153.000-151.833 | 152.415 | 1.548 | 0.006 | 0.7500 | 2.771 | A | 0.000 | 2.771 | 2.771 | 100.00 | 0.000 | 0.000 |
| | | | | | | B | 0.000 | 2.771 | | 100.00 | 0.000 | 0.000 |
| | | | | | | C | 0.000 | 2.771 | | 100.00 | 0.000 | 1.415 |
| L4 151.833-151.000 | 151.416 | 1.545 | 0.006 | 0.7500 | 2.002 | A | 0.000 | 2.002 | 2.002 | 100.00 | 0.000 | 0.000 |
| | | | | | | B | 0.000 | 2.002 | | 100.00 | 0.000 | 0.000 |
| | | | | | | C | 0.000 | 2.002 | | 100.00 | 0.000 | 1.011 |
| L5 151.000-130.000 | 140.112 | 1.512 | 0.005 | 0.7500 | 56.677 | A | 0.000 | 56.677 | 56.677 | 100.00 | 0.000 | 0.000 |
| | | | | | | B | 0.000 | 56.677 | | 100.00 | 0.000 | 0.000 |
| | | | | | | C | 0.000 | 56.677 | | 100.00 | 0.000 | 18.174 |
| L6 130.000-120.667 | 125.263 | 1.464 | 0.005 | 0.7500 | 28.576 | A | 0.000 | 28.576 | 28.576 | 100.00 | 0.000 | 0.000 |
| | | | | | | B | 0.000 | 28.576 | | 100.00 | 0.000 | 0.000 |
| | | | | | | C | 0.000 | 28.576 | | 100.00 | 0.000 | 11.566 |
| L7 120.667-115.000 | 117.810 | 1.438 | 0.005 | 0.7500 | 18.542 | A | 0.000 | 18.542 | 18.542 | 100.00 | 0.000 | 0.000 |
| | | | | | | B | 0.000 | 18.542 | | 100.00 | 0.000 | 0.000 |
| | | | | | | C | 0.000 | 18.542 | | 100.00 | 0.000 | 7.398 |
| L8 115.000-114.000 | 114.499 | 1.427 | 0.005 | 0.7500 | 3.362 | A | 0.000 | 3.362 | 3.362 | 100.00 | 0.000 | 0.000 |
| | | | | | | B | 0.000 | 3.362 | | 100.00 | 0.000 | 0.000 |
| | | | | | | C | 0.000 | 3.362 | | 100.00 | 0.000 | 1.305 |
| L9 114.000-95.000 | 104.268 | 1.389 | 0.005 | 0.7500 | 69.033 | A | 0.000 | 69.033 | 69.033 | 100.00 | 0.000 | 0.000 |
| | | | | | | B | 0.000 | 69.033 | | 100.00 | 0.000 | 0.000 |
| | | | | | | C | 0.000 | 69.033 | | 100.00 | 0.000 | 18.710 |
| L10 95.000-91.000 | 92.990 | 1.344 | 0.005 | 0.7500 | 15.540 | A | 0.000 | 15.540 | 15.540 | 100.00 | 0.000 | 0.000 |
| | | | | | | B | 0.000 | 15.540 | | 100.00 | 0.000 | 0.000 |
| | | | | | | C | 0.000 | 15.540 | | 100.00 | 0.000 | 5.620 |
| L11 91.000-90.000 | 90.499 | 1.334 | 0.005 | 0.7500 | 3.956 | A | 0.000 | 3.956 | 3.956 | 100.00 | 0.000 | 0.000 |
| | | | | | | B | 0.000 | 3.956 | | 100.00 | 0.000 | 0.000 |
| | | | | | | C | 0.000 | 3.956 | | 100.00 | 0.000 | 1.477 |
| L12 90.000-61.500 | 75.315 | 1.266 | 0.005 | 0.7500 | 124.195 | A | 0.000 | 124.195 | 124.195 | 100.00 | 0.000 | 0.000 |
| | | | | | | B | 0.000 | 124.195 | | 100.00 | 0.000 | 0.000 |
| | | | | | | C | 0.000 | 124.195 | | 100.00 | 0.000 | 27.929 |
| L13 61.500-58.000 | 59.744 | 1.185 | 0.004 | 0.7500 | 16.776 | A | 0.000 | 16.776 | 16.776 | 100.00 | 0.000 | 0.000 |
| | | | | | | B | 0.000 | 16.776 | | 100.00 | 0.000 | 0.000 |
| | | | | | | C | 0.000 | 16.776 | | 100.00 | 0.000 | 3.322 |
| L14 58.000-40.000 | 48.871 | 1.119 | 0.004 | 0.7500 | 90.957 | A | 0.000 | 90.957 | 90.957 | 100.00 | 0.000 | 0.000 |
| | | | | | | B | 0.000 | 90.957 | | 100.00 | 0.000 | 0.000 |
| | | | | | | C | 0.000 | 90.957 | | 100.00 | 0.000 | 22.890 |
| L15 40.000-33.000 | 36.479 | 1.029 | 0.004 | 0.7500 | 37.522 | A | 0.000 | 37.522 | 37.522 | 100.00 | 0.000 | 0.000 |
| | | | | | | B | 0.000 | 37.522 | | 100.00 | 0.000 | 0.000 |

| Section Elevation ft | z ft | $K_Z$ | $q_z$ ksf | $t_Z$ in | $A_G$ $ft^2$ | Face | $A_F$ $ft^2$ | $A_R$ $ft^2$ | $A_{leg}$ $ft^2$ | Leg % | $C_AA_A$ In Face $ft^2$ | $C_AA_A$ Out Face $ft^2$ |
|---|---|---|---|---|---|---|---|---|---|---|---|---|
| | | | | | | C | 0.000 | 37.522 | | 100.00 | 0.000 | 7.500 |
| L16 33.000-28.000 | 30.490 | 1 | 0.004 | 0.7500 | 27.612 | A | 0.000 | 27.612 | 27.612 | 100.00 | 0.000 | 0.000 |
| | | | | | | B | 0.000 | 27.612 | | 100.00 | 0.000 | 0.000 |
| | | | | | | C | 0.000 | 27.612 | | 100.00 | 0.000 | 4.907 |
| L17 28.000-0.000 | 13.724 | 1 | 0.004 | 0.7500 | 166.125 | A | 0.000 | 166.125 | 166.125 | 100.00 | 0.000 | 0.000 |
| | | | | | | B | 0.000 | 166.125 | | 100.00 | 0.000 | 0.000 |
| | | | | | | C | 0.000 | 166.125 | | 100.00 | 0.000 | 27.477 |

## Tower Pressure - Service

$G_H$ = 1.690

| Section Elevation ft | z ft | $K_Z$ | $q_z$ ksf | $A_G$ $ft^2$ | Face | $A_F$ $ft^2$ | $A_R$ $ft^2$ | $A_{leg}$ $ft^2$ | Leg % | $C_AA_A$ In Face $ft^2$ | $C_AA_A$ Out Face $ft^2$ |
|---|---|---|---|---|---|---|---|---|---|---|---|
| L1 185.000-180.000 | 182.500 | 1.63 | 0.010 | 7.500 | A | 0.000 | 7.500 | 7.500 | 100.00 | 0.000 | 0.000 |
| | | | | | B | 0.000 | 7.500 | | 100.00 | 0.000 | 0.000 |
| | | | | | C | 0.000 | 7.500 | | 100.00 | 0.000 | 0.990 |
| L2 180.000-153.000 | 165.615 | 1.586 | 0.010 | 50.410 | A | 0.000 | 50.410 | 50.410 | 100.00 | 0.000 | 0.000 |
| | | | | | B | 0.000 | 50.410 | | 100.00 | 0.000 | 0.000 |
| | | | | | C | 0.000 | 50.410 | | 100.00 | 0.000 | 5.941 |
| L3 153.000-151.833 | 152.415 | 1.548 | 0.010 | 2.625 | A | 0.000 | 2.625 | 2.625 | 100.00 | 0.000 | 0.000 |
| | | | | | B | 0.000 | 2.625 | | 100.00 | 0.000 | 0.000 |
| | | | | | C | 0.000 | 2.625 | | 100.00 | 0.000 | 0.851 |
| L4 151.833-151.000 | 151.416 | 1.545 | 0.010 | 1.898 | A | 0.000 | 1.898 | 1.898 | 100.00 | 0.000 | 0.000 |
| | | | | | B | 0.000 | 1.898 | | 100.00 | 0.000 | 0.000 |
| | | | | | C | 0.000 | 1.898 | | 100.00 | 0.000 | 0.608 |
| L5 151.000-130.000 | 140.112 | 1.512 | 0.010 | 54.052 | A | 0.000 | 54.052 | 54.052 | 100.00 | 0.000 | 0.000 |
| | | | | | B | 0.000 | 54.052 | | 100.00 | 0.000 | 0.000 |
| | | | | | C | 0.000 | 54.052 | | 100.00 | 0.000 | 10.857 |
| L6 130.000-120.667 | 125.263 | 1.464 | 0.009 | 27.410 | A | 0.000 | 27.410 | 27.410 | 100.00 | 0.000 | 0.000 |
| | | | | | B | 0.000 | 27.410 | | 100.00 | 0.000 | 0.000 |
| | | | | | C | 0.000 | 27.410 | | 100.00 | 0.000 | 7.018 |
| L7 120.667-115.000 | 117.810 | 1.438 | 0.009 | 17.834 | A | 0.000 | 17.834 | 17.834 | 100.00 | 0.000 | 0.000 |
| | | | | | B | 0.000 | 17.834 | | 100.00 | 0.000 | 0.000 |
| | | | | | C | 0.000 | 17.834 | | 100.00 | 0.000 | 4.580 |
| L8 115.000-114.000 | 114.499 | 1.427 | 0.009 | 3.237 | A | 0.000 | 3.237 | 3.237 | 100.00 | 0.000 | 0.000 |
| | | | | | B | 0.000 | 3.237 | | 100.00 | 0.000 | 0.000 |
| | | | | | C | 0.000 | 3.237 | | 100.00 | 0.000 | 0.808 |
| L9 114.000-95.000 | 104.268 | 1.389 | 0.009 | 66.658 | A | 0.000 | 66.658 | 66.658 | 100.00 | 0.000 | 0.000 |
| | | | | | B | 0.000 | 66.658 | | 100.00 | 0.000 | 0.000 |
| | | | | | C | 0.000 | 66.658 | | 100.00 | 0.000 | 11.638 |
| L10 95.000-91.000 | 92.990 | 1.344 | 0.009 | 15.040 | A | 0.000 | 15.040 | 15.040 | 100.00 | 0.000 | 0.000 |
| | | | | | B | 0.000 | 15.040 | | 100.00 | 0.000 | 0.000 |
| | | | | | C | 0.000 | 15.040 | | 100.00 | 0.000 | 3.631 |
| L11 91.000-90.000 | 90.499 | 1.334 | 0.009 | 3.831 | A | 0.000 | 3.831 | 3.831 | 100.00 | 0.000 | 0.000 |
| | | | | | B | 0.000 | 3.831 | | 100.00 | 0.000 | 0.000 |
| | | | | | C | 0.000 | 3.831 | | 100.00 | 0.000 | 0.980 |
| L12 90.000-61.500 | 75.315 | 1.266 | 0.008 | 120.632 | A | 0.000 | 120.632 | 120.632 | 100.00 | 0.000 | 0.000 |
| | | | | | B | 0.000 | 120.632 | | 100.00 | 0.000 | 0.000 |
| | | | | | C | 0.000 | 120.632 | | 100.00 | 0.000 | 18.602 |
| L13 61.500-58.000 | 59.744 | 1.185 | 0.008 | 16.338 | A | 0.000 | 16.338 | 16.338 | 100.00 | 0.000 | 0.000 |
| | | | | | B | 0.000 | 16.338 | | 100.00 | 0.000 | 0.000 |
| | | | | | C | 0.000 | 16.338 | | 100.00 | 0.000 | 2.213 |
| L14 58.000-40.000 | 48.871 | 1.119 | 0.007 | 88.707 | A | 0.000 | 88.707 | 88.707 | 100.00 | 0.000 | 0.000 |
| | | | | | B | 0.000 | 88.707 | | 100.00 | 0.000 | 0.000 |
| | | | | | C | 0.000 | 88.707 | | 100.00 | 0.000 | 14.968 |
| L15 40.000-33.000 | 36.479 | 1.029 | 0.007 | 36.647 | A | 0.000 | 36.647 | 36.647 | 100.00 | 0.000 | 0.000 |
| | | | | | B | 0.000 | 36.647 | | 100.00 | 0.000 | 0.000 |
| | | | | | C | 0.000 | 36.647 | | 100.00 | 0.000 | 5.005 |
| L16 33.000-28.000 | 30.490 | 1 | 0.006 | 26.987 | A | 0.000 | 26.987 | 26.987 | 100.00 | 0.000 | 0.000 |
| | | | | | B | 0.000 | 26.987 | | 100.00 | 0.000 | 0.000 |

| Section Elevation ft | z ft | $K_Z$ | $q_z$ ksf | $A_G$ $ft^2$ | Face | $A_F$ $ft^2$ | $A_R$ $ft^2$ | $A_{leg}$ $ft^2$ | Leg % | $C_AA_A$ In Face $ft^2$ | $C_AA_A$ Out Face $ft^2$ |
|---|---|---|---|---|---|---|---|---|---|---|---|
| L17 28.000-0.000 | 13.724 | 1 | 0.006 | 162.625 | C | 0.000 | 26.987 | 162.625 | 100.00 | 0.000 | 3.323 |
| | | | | | A | 0.000 | 162.625 | | 100.00 | 0.000 | 0.000 |
| | | | | | B | 0.000 | 162.625 | | 100.00 | 0.000 | 0.000 |
| | | | | | C | 0.000 | 162.625 | | 100.00 | 0.000 | 18.611 |

# Load Combinations

| Comb. No. | Description |
|---|---|
| 1 | Dead Only |
| 2 | Dead+Wind 0 deg - No Ice |
| 3 | Dead+Wind 30 deg - No Ice |
| 4 | Dead+Wind 60 deg - No Ice |
| 5 | Dead+Wind 90 deg - No Ice |
| 6 | Dead+Wind 120 deg - No Ice |
| 7 | Dead+Wind 150 deg - No Ice |
| 8 | Dead+Wind 180 deg - No Ice |
| 9 | Dead+Wind 210 deg - No Ice |
| 10 | Dead+Wind 240 deg - No Ice |
| 11 | Dead+Wind 270 deg - No Ice |
| 12 | Dead+Wind 300 deg - No Ice |
| 13 | Dead+Wind 330 deg - No Ice |
| 14 | Dead+Ice+Temp |
| 15 | Dead+Wind 0 deg+Ice+Temp |
| 16 | Dead+Wind 30 deg+Ice+Temp |
| 17 | Dead+Wind 60 deg+Ice+Temp |
| 18 | Dead+Wind 90 deg+Ice+Temp |
| 19 | Dead+Wind 120 deg+Ice+Temp |
| 20 | Dead+Wind 150 deg+Ice+Temp |
| 21 | Dead+Wind 180 deg+Ice+Temp |
| 22 | Dead+Wind 210 deg+Ice+Temp |
| 23 | Dead+Wind 240 deg+Ice+Temp |
| 24 | Dead+Wind 270 deg+Ice+Temp |
| 25 | Dead+Wind 300 deg+Ice+Temp |
| 26 | Dead+Wind 330 deg+Ice+Temp |
| 27 | Dead+Wind 0 deg - Service |
| 28 | Dead+Wind 30 deg - Service |
| 29 | Dead+Wind 60 deg - Service |
| 30 | Dead+Wind 90 deg - Service |
| 31 | Dead+Wind 120 deg - Service |
| 32 | Dead+Wind 150 deg - Service |
| 33 | Dead+Wind 180 deg - Service |
| 34 | Dead+Wind 210 deg - Service |
| 35 | Dead+Wind 240 deg - Service |
| 36 | Dead+Wind 270 deg - Service |
| 37 | Dead+Wind 300 deg - Service |
| 38 | Dead+Wind 330 deg - Service |

# Maximum Member Forces

| Section No. | Elevation ft | Component Type | Condition | Gov. Load Comb. | Force K | Major Axis Moment kip-ft | Minor Axis Moment kip-ft |
|---|---|---|---|---|---|---|---|
| L1 | 185 - 180 | Pole | Max Tension | 14 | 0.000 | -0.000 | 0.000 |
| | | | Max. Compression | 14 | -3.455 | 0.068 | -0.046 |
| | | | Max. Mx | 11 | -1.379 | 23.926 | -0.017 |
| | | | Max. My | 8 | -1.379 | 0.018 | -23.922 |
| | | | Max. Vy | 11 | -5.014 | 23.926 | -0.017 |
| | | | Max. Vx | 8 | 5.013 | 0.018 | -23.922 |
| | | | Max. Torque | 6 | | | -0.019 |
| L2 | 180 - 153 | Pole | Max Tension | 1 | 0.000 | 0.000 | 0.000 |
| | | | Max. Compression | 14 | -15.417 | 0.765 | -0.696 |

| Section No. | Elevation ft | Component Type | Condition | Gov. Load Comb. | Force K | Major Axis Moment kip-ft | Minor Axis Moment kip-ft |
|---|---|---|---|---|---|---|---|
| | | | Max. Mx | 11 | -7.532 | 334.536 | -1.600 |
| | | | Max. My | 8 | -7.536 | 1.611 | -335.116 |
| | | | Max. Vy | 11 | -20.048 | 334.536 | -1.600 |
| | | | Max. Vx | 8 | 20.002 | 1.611 | -335.116 |
| | | | Max. Torque | 2 | | | -0.448 |
| L3 | 153 - 151.833 | Pole | Max Tension | 1 | 0.000 | 0.000 | 0.000 |
| | | | Max. Compression | 14 | -15.629 | 0.790 | -0.711 |
| | | | Max. Mx | 11 | -7.701 | 358.029 | -1.751 |
| | | | Max. My | 8 | -7.706 | 1.764 | -358.553 |
| | | | Max. Vy | 11 | -20.224 | 358.029 | -1.751 |
| | | | Max. Vx | 8 | 20.178 | 1.764 | -358.553 |
| | | | Max. Torque | 12 | | | 0.338 |
| L4 | 151.833 - 151 | Pole | Max Tension | 1 | 0.000 | 0.000 | 0.000 |
| | | | Max. Compression | 14 | -15.820 | 0.808 | -0.721 |
| | | | Max. Mx | 11 | -7.860 | 374.938 | -1.860 |
| | | | Max. My | 8 | -7.865 | 1.875 | -375.421 |
| | | | Max. Vy | 11 | -20.354 | 374.938 | -1.860 |
| | | | Max. Vx | 8 | 20.308 | 1.875 | -375.421 |
| | | | Max. Torque | 12 | | | 0.346 |
| L5 | 151 - 130 | Pole | Max Tension | 1 | 0.000 | 0.000 | 0.000 |
| | | | Max. Compression | 14 | -19.052 | 1.176 | -0.934 |
| | | | Max. Mx | 11 | -10.458 | 719.221 | -3.925 |
| | | | Max. My | 8 | -10.462 | 3.976 | -718.932 |
| | | | Max. Vy | 11 | -22.738 | 719.221 | -3.925 |
| | | | Max. Vx | 8 | 22.692 | 3.976 | -718.932 |
| | | | Max. Torque | 12 | | | 0.454 |
| L6 | 130 - 120.667 | Pole | Max Tension | 1 | 0.000 | 0.000 | 0.000 |
| | | | Max. Compression | 14 | -23.296 | 1.529 | -1.137 |
| | | | Max. Mx | 11 | -14.051 | 1063.072 | -5.785 |
| | | | Max. My | 8 | -14.055 | 5.870 | -1062.084 |
| | | | Max. Vy | 11 | -25.252 | 1063.072 | -5.785 |
| | | | Max. Vx | 8 | 25.206 | 5.870 | -1062.084 |
| | | | Max. Torque | 12 | | | 0.596 |
| L7 | 120.667 - 115 | Pole | Max Tension | 1 | 0.000 | 0.000 | 0.000 |
| | | | Max. Compression | 14 | -24.886 | 1.684 | -1.227 |
| | | | Max. Mx | 11 | -15.381 | 1209.107 | -6.522 |
| | | | Max. My | 8 | -15.384 | 6.623 | -1207.840 |
| | | | Max. Vy | 11 | -26.296 | 1209.107 | -6.522 |
| | | | Max. Vx | 8 | 26.250 | 6.623 | -1207.840 |
| | | | Max. Torque | 12 | | | 0.668 |
| L8 | 115 - 114 | Pole | Max Tension | 1 | 0.000 | 0.000 | 0.000 |
| | | | Max. Compression | 14 | -25.200 | 1.713 | -1.243 |
| | | | Max. Mx | 11 | -15.648 | 1235.498 | -6.653 |
| | | | Max. My | 8 | -15.651 | 6.757 | -1234.182 |
| | | | Max. Vy | 11 | -26.484 | 1235.498 | -6.653 |
| | | | Max. Vx | 8 | 26.438 | 6.757 | -1234.182 |
| | | | Max. Torque | 12 | | | 0.680 |
| L9 | 114 - 95 | Pole | Max Tension | 1 | 0.000 | 0.000 | 0.000 |
| | | | Max. Compression | 14 | -28.939 | 2.112 | -1.472 |
| | | | Max. Mx | 11 | -18.781 | 1594.679 | -8.350 |
| | | | Max. My | 8 | -18.784 | 8.494 | -1592.720 |
| | | | Max. Vy | 11 | -28.808 | 1594.679 | -8.350 |
| | | | Max. Vx | 8 | 28.762 | 8.494 | -1592.720 |
| | | | Max. Torque | 12 | | | 0.812 |
| L10 | 95 - 91 | Pole | Max Tension | 1 | 0.000 | 0.000 | 0.000 |
| | | | Max. Compression | 14 | -33.669 | 2.427 | -1.654 |
| | | | Max. Mx | 11 | -22.963 | 1892.952 | -9.658 |
| | | | Max. My | 8 | -22.966 | 9.835 | -1890.496 |
| | | | Max. Vy | 11 | -30.840 | 1892.952 | -9.658 |
| | | | Max. Vx | 8 | 30.794 | 9.835 | -1890.496 |
| | | | Max. Torque | 7 | | | -0.953 |
| L11 | 91 - 90 | Pole | Max Tension | 1 | 0.000 | 0.000 | 0.000 |
| | | | Max. Compression | 14 | -33.994 | 2.461 | -1.673 |
| | | | Max. Mx | 11 | -23.237 | 1923.893 | -9.789 |
| | | | Max. My | 8 | -23.240 | 9.969 | -1921.387 |

| Section No. | Elevation ft | Component Type | Condition | Gov. Load Comb. | Force K | Major Axis Moment kip-ft | Minor Axis Moment kip-ft |
|---|---|---|---|---|---|---|---|
| | | | Max. Vy | 11 | -31.043 | 1923.893 | -9.789 |
| | | | Max. Vx | 8 | 30.997 | 9.969 | -1921.387 |
| | | | Max. Torque | 7 | | | -0.973 |
| L12 | 90 - 61.5 | Pole | Max Tension | 1 | 0.000 | 0.000 | 0.000 |
| | | | Max. Compression | 14 | -45.097 | 3.516 | -2.281 |
| | | | Max. Mx | 11 | -32.778 | 2885.605 | -13.531 |
| | | | Max. My | 8 | -32.780 | 13.820 | -2881.667 |
| | | | Max. Vy | 11 | -36.598 | 2885.605 | -13.531 |
| | | | Max. Vx | 8 | 36.551 | 13.820 | -2881.667 |
| | | | Max. Torque | 7 | | | -1.370 |
| L13 | 61.5 - 58 | Pole | Max Tension | 1 | 0.000 | 0.000 | 0.000 |
| | | | Max. Compression | 14 | -46.576 | 3.660 | -2.363 |
| | | | Max. Mx | 11 | -34.056 | 3014.885 | -13.991 |
| | | | Max. My | 8 | -34.058 | 14.296 | -3010.770 |
| | | | Max. Vy | 11 | -37.280 | 3014.885 | -13.991 |
| | | | Max. Vx | 8 | 37.234 | 14.296 | -3010.770 |
| | | | Max. Torque | 7 | | | -1.419 |
| L14 | 58 - 40 | Pole | Max Tension | 1 | 0.000 | 0.000 | 0.000 |
| | | | Max. Compression | 14 | -55.162 | 4.437 | -2.811 |
| | | | Max. Mx | 11 | -41.539 | 3717.907 | -16.356 |
| | | | Max. My | 8 | -41.540 | 16.740 | -3712.879 |
| | | | Max. Vy | 11 | -40.875 | 3717.907 | -16.356 |
| | | | Max. Vx | 8 | 40.829 | 16.740 | -3712.879 |
| | | | Max. Torque | 7 | | | -1.751 |
| L15 | 40 - 33 | Pole | Max Tension | 1 | 0.000 | 0.000 | 0.000 |
| | | | Max. Compression | 14 | -58.649 | 4.758 | -2.996 |
| | | | Max. Mx | 11 | -44.582 | 4008.586 | -17.275 |
| | | | Max. My | 8 | -44.583 | 17.692 | -4003.203 |
| | | | Max. Vy | 11 | -42.182 | 4008.586 | -17.275 |
| | | | Max. Vx | 8 | 42.136 | 17.692 | -4003.203 |
| | | | Max. Torque | 7 | | | -1.858 |
| L16 | 33 - 28 | Pole | Max Tension | 1 | 0.000 | 0.000 | 0.000 |
| | | | Max. Compression | 14 | -61.295 | 4.994 | -3.132 |
| | | | Max. Mx | 11 | -46.902 | 4221.796 | -17.931 |
| | | | Max. My | 8 | -46.903 | 18.373 | -4216.158 |
| | | | Max. Vy | 11 | -43.103 | 4221.796 | -17.931 |
| | | | Max. Vx | 8 | 43.057 | 18.373 | -4216.158 |
| | | | Max. Torque | 7 | | | -1.930 |
| L17 | 28 - 0 | Pole | Max Tension | 1 | 0.000 | 0.000 | 0.000 |
| | | | Max. Compression | 18 | -76.741 | -1291.483 | 0.011 |
| | | | Max. Mx | 11 | -60.428 | 5503.323 | -21.593 |
| | | | Max. My | 8 | -60.428 | 22.181 | -5496.257 |
| | | | Max. Vy | 11 | -48.517 | 5503.323 | -21.593 |
| | | | Max. Vx | 8 | 48.472 | 22.181 | -5496.257 |
| | | | Max. Torque | 7 | | | -2.364 |

# Maximum Reactions

| Location | Condition | Gov. Load Comb. | Vertical K | Horizontal, X K | Horizontal, Z K |
|---|---|---|---|---|---|
| Pole | Max. Vert | 18 | 76.741 | -10.998 | 0.053 |
| | Max. $H_x$ | 11 | 60.438 | 48.505 | -0.123 |
| | Max. $H_z$ | 2 | 60.438 | -0.123 | 48.459 |
| | Max. $M_x$ | 2 | 5494.158 | -0.123 | 48.459 |
| | Max. $M_z$ | 5 | 5500.051 | -48.505 | 0.123 |
| | Max. Torsion | 13 | 2.363 | 24.148 | 41.909 |
| | Min. Vert | 11 | 60.438 | 48.505 | -0.123 |
| | Min. $H_x$ | 5 | 60.438 | -48.505 | 0.123 |
| | Min. $H_z$ | 8 | 60.438 | 0.123 | -48.459 |
| | Min. $M_x$ | 8 | -5496.257 | 0.123 | -48.459 |
| | Min. $M_z$ | 11 | -5503.323 | 48.505 | -0.123 |
| | Min. Torsion | 7 | -2.364 | -24.148 | -41.909 |

# Tower Mast Reaction Summary

| Load Combination | Vertical | $Shear_x$ | $Shear_z$ | Overturning Moment, $M_x$ | Overturning Moment, $M_z$ | Torque |
|---|---|---|---|---|---|---|
| | K | K | K | kip-ft | kip-ft | kip-ft |
| Dead Only | 60.438 | -0.000 | 0.000 | 1.029 | 1.607 | 0.000 |
| Dead+Wind 0 deg - No Ice | 60.438 | 0.123 | -48.459 | -5494.158 | -18.907 | -1.931 |
| Dead+Wind 30 deg - No Ice | 60.438 | 24.361 | -42.032 | -4768.779 | -2767.331 | -0.982 |
| Dead+Wind 60 deg - No Ice | 60.438 | 42.072 | -24.338 | -2764.674 | -4773.806 | 0.230 |
| Dead+Wind 90 deg - No Ice | 60.438 | 48.505 | -0.123 | -19.494 | -5500.051 | 1.381 |
| Dead+Wind 120 deg - No Ice | 60.438 | 41.949 | 24.125 | 2731.210 | -4753.304 | 2.162 |
| Dead+Wind 150 deg - No Ice | 60.438 | 24.148 | 41.909 | 4750.375 | -2731.769 | 2.364 |
| Dead+Wind 180 deg - No Ice | 60.438 | -0.123 | 48.459 | 5496.257 | 22.181 | 1.932 |
| Dead+Wind 210 deg - No Ice | 60.438 | -24.361 | 42.032 | 4770.878 | 2770.604 | 0.982 |
| Dead+Wind 240 deg - No Ice | 60.438 | -42.072 | 24.338 | 2766.772 | 4777.079 | -0.231 |
| Dead+Wind 270 deg - No Ice | 60.438 | -48.505 | 0.123 | 21.593 | 5503.323 | -1.382 |
| Dead+Wind 300 deg - No Ice | 60.438 | -41.949 | -24.125 | -2729.111 | 4756.576 | -2.162 |
| Dead+Wind 330 deg - No Ice | 60.438 | -24.148 | -41.909 | -4748.276 | 2735.041 | -2.363 |
| Dead+Ice+Temp | 76.741 | 0.000 | -0.000 | 3.953 | 6.420 | 0.000 |
| Dead+Wind 0 deg+Ice+Temp | 76.741 | 0.024 | -10.988 | -1292.574 | 2.541 | -0.582 |
| Dead+Wind 30 deg+Ice+Temp | 76.741 | 5.520 | -9.528 | -1120.895 | -645.955 | -0.301 |
| Dead+Wind 60 deg+Ice+Temp | 76.741 | 9.536 | -5.515 | -647.777 | -1119.593 | 0.061 |
| Dead+Wind 90 deg+Ice+Temp | 76.741 | 10.998 | -0.053 | -0.011 | -1291.483 | 0.406 |
| Dead+Wind 120 deg+Ice+Temp | 76.741 | 9.512 | 5.473 | 648.890 | -1115.511 | 0.642 |
| Dead+Wind 150 deg+Ice+Temp | 76.741 | 5.478 | 9.504 | 1124.997 | -638.884 | 0.707 |
| Dead+Wind 180 deg+Ice+Temp | 76.741 | -0.024 | 10.988 | 1300.758 | 10.706 | 0.582 |
| Dead+Wind 210 deg+Ice+Temp | 76.741 | -5.520 | 9.528 | 1129.078 | 659.202 | 0.301 |
| Dead+Wind 240 deg+Ice+Temp | 76.741 | -9.536 | 5.515 | 655.960 | 1132.840 | -0.061 |
| Dead+Wind 270 deg+Ice+Temp | 76.741 | -10.997 | 0.024 | 8.174 | 1304.710 | -0.406 |
| Dead+Wind 300 deg+Ice+Temp | 76.741 | -9.512 | -5.473 | -640.706 | 1128.758 | -0.642 |
| Dead+Wind 330 deg+Ice+Temp | 76.741 | -5.478 | -9.504 | -1116.813 | 652.132 | -0.707 |
| Dead+Wind 0 deg - Service | 60.438 | 0.043 | -16.768 | -1901.394 | -5.474 | -0.669 |
| Dead+Wind 30 deg - Service | 60.438 | 8.429 | -14.543 | -1650.071 | -956.866 | -0.340 |
| Dead+Wind 60 deg - Service | 60.438 | 14.556 | -8.421 | -956.331 | -1651.427 | 0.080 |
| Dead+Wind 90 deg - Service | 60.438 | 16.784 | -0.043 | -6.061 | -1903.052 | 0.479 |
| Dead+Wind 120 deg - Service | 60.438 | 14.514 | 8.347 | 946.116 | -1644.316 | 0.750 |
| Dead+Wind 150 deg - Service | 60.438 | 8.355 | 14.500 | 1645.063 | -944.547 | 0.819 |
| Dead+Wind 180 deg - Service | 60.438 | -0.043 | 16.768 | 1903.498 | 8.752 | 0.669 |
| Dead+Wind 210 deg - Service | 60.438 | -8.429 | 14.543 | 1652.175 | 960.145 | 0.340 |
| Dead+Wind 240 deg - Service | 60.438 | -14.556 | 8.421 | 958.435 | 1654.706 | -0.080 |
| Dead+Wind 270 deg - Service | 60.438 | -16.784 | 0.043 | 8.165 | 1906.330 | -0.479 |
| Dead+Wind 300 deg - Service | 60.438 | -14.514 | -8.347 | -944.012 | 1647.594 | -0.750 |
| Dead+Wind 330 deg - Service | 60.438 | -8.355 | -14.500 | -1642.959 | 947.825 | -0.819 |

# Solution Summary

| | Sum of Applied Forces | | | Sum of Reactions | | | |
|---|---|---|---|---|---|---|---|
| Load Comb. | PX K | PY K | PZ K | PX K | PY K | PZ K | % Error |
| 1 | 0.000 | -60.438 | 0.000 | 0.000 | 60.438 | -0.000 | 0.000% |
| 2 | 0.123 | -60.438 | -48.464 | -0.123 | 60.438 | 48.459 | 0.006% |
| 3 | 24.361 | -60.438 | -42.032 | -24.361 | 60.438 | 42.032 | 0.000% |
| 4 | 42.072 | -60.438 | -24.338 | -42.072 | 60.438 | 24.338 | 0.000% |
| 5 | 48.509 | -60.438 | -0.123 | -48.505 | 60.438 | 0.123 | 0.006% |
| 6 | 41.949 | -60.438 | 24.125 | -41.949 | 60.438 | -24.125 | 0.000% |
| 7 | 24.148 | -60.438 | 41.909 | -24.148 | 60.438 | -41.909 | 0.000% |
| 8 | -0.123 | -60.438 | 48.464 | 0.123 | 60.438 | -48.459 | 0.006% |
| 9 | -24.361 | -60.438 | 42.032 | 24.361 | 60.438 | -42.032 | 0.000% |
| 10 | -42.072 | -60.438 | 24.338 | 42.072 | 60.438 | -24.338 | 0.000% |
| 11 | -48.509 | -60.438 | 0.123 | 48.505 | 60.438 | -0.123 | 0.006% |
| 12 | -41.949 | -60.438 | -24.125 | 41.949 | 60.438 | 24.125 | 0.000% |
| 13 | -24.148 | -60.438 | -41.909 | 24.148 | 60.438 | 41.909 | 0.000% |
| 14 | 0.000 | -76.741 | 0.000 | -0.000 | 76.741 | 0.000 | 0.001% |
| 15 | 0.024 | -76.741 | -10.988 | -0.024 | 76.741 | 10.988 | 0.000% |
| 16 | 5.520 | -76.741 | -9.528 | -5.520 | 76.741 | 9.528 | 0.000% |
| 17 | 9.536 | -76.741 | -5.515 | -9.536 | 76.741 | 5.515 | 0.000% |
| 18 | 10.998 | -76.741 | -0.024 | -10.998 | 76.741 | 0.053 | 0.038% |
| 19 | 9.512 | -76.741 | 5.473 | -9.512 | 76.741 | -5.473 | 0.000% |
| 20 | 5.478 | -76.741 | 9.504 | -5.478 | 76.741 | -9.504 | 0.000% |
| 21 | -0.024 | -76.741 | 10.988 | 0.024 | 76.741 | -10.988 | 0.000% |
| 22 | -5.520 | -76.741 | 9.528 | 5.520 | 76.741 | -9.528 | 0.000% |
| 23 | -9.536 | -76.741 | 5.515 | 9.536 | 76.741 | -5.515 | 0.000% |
| 24 | -10.998 | -76.741 | 0.024 | 10.997 | 76.741 | -0.024 | 0.000% |
| 25 | -9.512 | -76.741 | -5.473 | 9.512 | 76.741 | 5.473 | 0.000% |
| 26 | -5.478 | -76.741 | -9.504 | 5.478 | 76.741 | 9.504 | 0.000% |
| 27 | 0.043 | -60.438 | -16.769 | -0.043 | 60.438 | 16.768 | 0.003% |
| 28 | 8.429 | -60.438 | -14.544 | -8.429 | 60.438 | 14.543 | 0.003% |
| 29 | 14.558 | -60.438 | -8.422 | -14.556 | 60.438 | 8.421 | 0.003% |
| 30 | 16.785 | -60.438 | -0.043 | -16.784 | 60.438 | 0.043 | 0.003% |
| 31 | 14.515 | -60.438 | 8.348 | -14.514 | 60.438 | -8.347 | 0.003% |
| 32 | 8.356 | -60.438 | 14.502 | -8.355 | 60.438 | -14.500 | 0.003% |
| 33 | -0.043 | -60.438 | 16.769 | 0.043 | 60.438 | -16.768 | 0.003% |
| 34 | -8.429 | -60.438 | 14.544 | 8.429 | 60.438 | -14.543 | 0.003% |
| 35 | -14.558 | -60.438 | 8.422 | 14.556 | 60.438 | -8.421 | 0.003% |
| 36 | -16.785 | -60.438 | 0.043 | 16.784 | 60.438 | -0.043 | 0.003% |
| 37 | -14.515 | -60.438 | -8.348 | 14.514 | 60.438 | 8.347 | 0.003% |
| 38 | -8.356 | -60.438 | -14.502 | 8.355 | 60.438 | 14.500 | 0.003% |

# Non-Linear Convergence Results

| Load Combination | Converged? | Number of Cycles | Displacement Tolerance | Force Tolerance |
|---|---|---|---|---|
| 1 | Yes | 6 | 0.00000001 | 0.00000001 |
| 2 | Yes | 13 | 0.00007944 | 0.00008744 |
| 3 | Yes | 17 | 0.00000001 | 0.00010066 |
| 4 | Yes | 17 | 0.00000001 | 0.00010078 |
| 5 | Yes | 13 | 0.00007943 | 0.00008281 |
| 6 | Yes | 17 | 0.00000001 | 0.00010049 |
| 7 | Yes | 17 | 0.00000001 | 0.00009725 |
| 8 | Yes | 13 | 0.00007943 | 0.00012052 |
| 9 | Yes | 17 | 0.00000001 | 0.00010187 |
| 10 | Yes | 17 | 0.00000001 | 0.00010177 |
| 11 | Yes | 13 | 0.00007943 | 0.00011523 |
| 12 | Yes | 17 | 0.00000001 | 0.00009732 |
| 13 | Yes | 17 | 0.00000001 | 0.00010055 |
| 14 | Yes | 6 | 0.00000001 | 0.00002462 |
| 15 | Yes | 16 | 0.00000001 | 0.00006648 |
| 16 | Yes | 16 | 0.00000001 | 0.00007039 |
| 17 | Yes | 16 | 0.00000001 | 0.00007040 |
| 18 | Yes | 23 | 0.00000001 | 0.00000000 |
| 19 | Yes | 16 | 0.00000001 | 0.00007030 |
| 20 | Yes | 16 | 0.00000001 | 0.00007034 |
| 21 | Yes | 16 | 0.00000001 | 0.00006700 |
| 22 | Yes | 16 | 0.00000001 | 0.00007142 |

| | | | | |
|---|---|---|---|---|
| 23 | Yes | 16 | 0.00000001 | 0.00007147 |
| 24 | Yes | 16 | 0.00000001 | 0.00006716 |
| 25 | Yes | 16 | 0.00000001 | 0.00007055 |
| 26 | Yes | 16 | 0.00000001 | 0.00007045 |
| 27 | Yes | 13 | 0.00008229 | 0.00003673 |
| 28 | Yes | 13 | 0.00008212 | 0.00013961 |
| 29 | Yes | 13 | 0.00008212 | 0.00014016 |
| 30 | Yes | 13 | 0.00008228 | 0.00003640 |
| 31 | Yes | 13 | 0.00008212 | 0.00014647 |
| 32 | Yes | 13 | 0.00008213 | 0.00013112 |
| 33 | Yes | 13 | 0.00008229 | 0.00003767 |
| 34 | Yes | 13 | 0.00008212 | 0.00014533 |
| 35 | Yes | 13 | 0.00008212 | 0.00014486 |
| 36 | Yes | 13 | 0.00008228 | 0.00003731 |
| 37 | Yes | 13 | 0.00008212 | 0.00013142 |
| 38 | Yes | 13 | 0.00008212 | 0.00014672 |

## Maximum Tower Deflections - Service Wind

| Section No. | Elevation ft | Horz. Deflection in | Gov. Load Comb. | Tilt ° | Twist ° |
|---|---|---|---|---|---|
| L1 | 185 - 180 | 28.555 | 35 | 1.653 | 0.001 |
| L2 | 180 - 153 | 26.829 | 35 | 1.640 | 0.001 |
| L3 | 153 - 151.833 | 18.288 | 35 | 1.321 | 0.001 |
| L4 | 151.833 - 151 | 17.967 | 35 | 1.307 | 0.001 |
| L5 | 151 - 130 | 17.739 | 35 | 1.300 | 0.001 |
| L6 | 135 - 120.667 | 13.727 | 35 | 1.091 | 0.001 |
| L7 | 120.667 - 115 | 10.642 | 35 | 0.945 | 0.001 |
| L8 | 115 - 114 | 9.558 | 35 | 0.882 | 0.001 |
| L9 | 114 - 95 | 9.374 | 35 | 0.873 | 0.001 |
| L10 | 101 - 91 | 7.200 | 35 | 0.726 | 0.000 |
| L11 | 91 - 90 | 5.741 | 35 | 0.657 | 0.000 |
| L12 | 90 - 61.5 | 5.604 | 35 | 0.647 | 0.000 |
| L13 | 61.5 - 58 | 2.488 | 35 | 0.403 | 0.000 |
| L14 | 58 - 40 | 2.202 | 35 | 0.376 | 0.000 |
| L15 | 40 - 33 | 1.024 | 35 | 0.250 | 0.000 |
| L16 | 33 - 28 | 0.692 | 35 | 0.203 | 0.000 |
| L17 | 28 - 0 | 0.496 | 35 | 0.172 | 0.000 |

## Critical Deflections and Radius of Curvature - Service Wind

| Elevation ft | Appurtenance | Gov. Load Comb. | Deflection in | Tilt ° | Twist ° | Radius of Curvature ft |
|---|---|---|---|---|---|---|
| 185.000 | ETW190VS12UB | 35 | 28.555 | 1.653 | 0.001 | 12073 |
| 175.000 | (2) 7770.00 w/ Mount Pipe | 35 | 25.128 | 1.606 | 0.001 | 7512 |
| 165.000 | APXV18-206517S-C w/ Mount Pipe | 35 | 21.858 | 1.489 | 0.001 | 4594 |
| 155.000 | (2) BXA-70063-6CF-EDIN-2 w/ Mount Pipe | 35 | 18.849 | 1.348 | 0.001 | 3532 |

## Maximum Tower Deflections - Design Wind

| Section No. | Elevation ft | Horz. Deflection in | Gov. Load Comb. | Tilt ° | Twist ° |
|---|---|---|---|---|---|
| L1 | 185 - 180 | 82.290 | 10 | 4.765 | 0.003 |
| L2 | 180 - 153 | 77.323 | 10 | 4.727 | 0.002 |
| L3 | 153 - 151.833 | 52.734 | 10 | 3.809 | 0.003 |

| Section No. | Elevation ft | Horz. Deflection in | Gov. Load Comb. | Tilt ° | Twist ° |
|---|---|---|---|---|---|
| L4 | 151.833 - 151 | 51.809 | 10 | 3.769 | 0.003 |
| L5 | 151 - 130 | 51.154 | 10 | 3.748 | 0.002 |
| L6 | 135 - 120.667 | 39.592 | 10 | 3.148 | 0.002 |
| L7 | 120.667 - 115 | 30.702 | 10 | 2.727 | 0.002 |
| L8 | 115 - 114 | 27.576 | 10 | 2.546 | 0.002 |
| L9 | 114 - 95 | 27.046 | 10 | 2.518 | 0.002 |
| L10 | 101 - 91 | 20.775 | 10 | 2.094 | 0.001 |
| L11 | 91 - 90 | 16.565 | 10 | 1.897 | 0.001 |
| L12 | 90 - 61.5 | 16.171 | 10 | 1.867 | 0.001 |
| L13 | 61.5 - 58 | 7.180 | 10 | 1.164 | 0.001 |
| L14 | 58 - 40 | 6.357 | 10 | 1.084 | 0.001 |
| L15 | 40 - 33 | 2.956 | 10 | 0.723 | 0.000 |
| L16 | 33 - 28 | 1.997 | 10 | 0.586 | 0.000 |
| L17 | 28 - 0 | 1.431 | 10 | 0.496 | 0.000 |

## Critical Deflections and Radius of Curvature - Design Wind

| Elevation ft | Appurtenance | Gov. Load Comb. | Deflection in | Tilt ° | Twist ° | Radius of Curvature ft |
|---|---|---|---|---|---|---|
| 185.000 | ETW190VS12UB | 10 | 82.290 | 4.765 | 0.003 | 4249 |
| 175.000 | (2) 7770.00 w/ Mount Pipe | 10 | 72.427 | 4.631 | 0.002 | 2642 |
| 165.000 | APXV18-206517S-C w/ Mount Pipe | 10 | 63.015 | 4.294 | 0.002 | 1614 |
| 155.000 | (2) BXA-70063-6CF-EDIN-2 w/ Mount Pipe | 10 | 54.351 | 3.886 | 0.003 | 1239 |

## *Compression Checks*

## Pole Design Data

| Section No. | Elevation ft | Size | L ft | $L_u$ ft | Kl/r | $F_a$ ksi | A $in^2$ | Actual P K | Allow. $P_a$ K | Ratio $\frac{P}{P_a}$ |
|---|---|---|---|---|---|---|---|---|---|---|
| L1 | 185 - 180 (1) | TP18x18x0.1875 | 5.000 | 0.000 | 0.0 | 25.200 | 10.7543 | -1.377 | 271.008 | 0.005 |
| L2 | 180 - 153 (2) | TP26.8088x18x0.25 | 27.000 | 0.000 | 0.0 | 25.200 | 21.3798 | -7.522 | 538.771 | 0.014 |
| L3 | 153 - 151.833 (3) | TP27.1894x26.8088x0.3625 | 1.167 | 0.000 | 0.0 | 25.200 | 31.3111 | -7.692 | 789.041 | 0.010 |
| L4 | 151.833 - 151 (4) | TP27.4613x27.1894x0.5246 | 0.833 | 0.000 | 0.0 | 25.182 | 45.5000 | -7.851 | 1145.780 | 0.007 |
| L5 | 151 - 130 (5) | TP34.3125x27.4613x0.3802 | 21.000 | 0.000 | 0.0 | 25.200 | 39.5403 | -10.448 | 996.414 | 0.010 |
| L6 | 130 - 120.667 (6) | TP36.844x31.9209x0.4447 | 14.333 | 0.000 | 0.0 | 25.200 | 52.1180 | -14.042 | 1313.370 | 0.011 |
| L7 | 120.667 - 115 (7) | TP38.6875x36.844x0.4776 | 5.667 | 0.000 | 0.0 | 24.690 | 58.7656 | -15.372 | 1450.920 | 0.011 |
| L8 | 115 - 114 (8) | TP39.0125x38.6875x0.5402 | 1.000 | 0.000 | 0.0 | 25.200 | 66.9216 | -15.639 | 1686.430 | 0.009 |
| L9 | 114 - 95 (9) | TP45.1875x39.0125x0.4463 | 19.000 | 0.000 | 0.0 | 25.200 | 61.5001 | -18.774 | 1549.800 | 0.012 |
| L10 | 95 - 91 (10) | TP45.8125x42.3448x0.5294 | 10.000 | 0.000 | 0.0 | 25.200 | 77.1854 | -22.956 | 1945.070 | 0.012 |
| L11 | 91 - 90 (11) | TP46.1391x45.8125x0.465 | 1.000 | 0.000 | 0.0 | 25.200 | 68.3863 | -23.230 | 1723.340 | 0.013 |
| L12 | 90 - 61.5 (12) | TP55.4461x46.1391x0.5299 | 28.500 | 0.000 | 0.0 | 25.200 | 93.6935 | -32.774 | 2361.080 | 0.014 |
| L13 | 61.5 - 58 (13) | TP56.5891x55.4461x0.5263 | 3.500 | 0.000 | 0.0 | 24.996 | 95.0159 | -34.052 | 2375.020 | 0.014 |
| L14 | 58 - 40 (14) | TP61.6875x56.5891x0.578 | 18.000 | 0.000 | 0.0 | 23.898 | 113.890 | -41.536 | 2721.750 | 0.015 |

| Section No. | Elevation ft | Size | L ft | $L_u$ ft | Kl/r | $F_a$ ksi | A $in^2$ | Actual P K | Allow. $P_a$ K | Ratio $\frac{P}{P_a}$ |
|---|---|---|---|---|---|---|---|---|---|---|
| | | 8 | | | | | 0 | | | |
| L15 | 40 - 33 (15) | TP63.9583x61.6875x0.5704 | 7.000 | 0.000 | 0.0 | 25.200 | 116.4140 | -44.580 | 2933.630 | 0.015 |
| L16 | 33 - 28 (16) | TP65.5804x63.9583x0.595 | 5.000 | 0.000 | 0.0 | 24.390 | 124.5080 | -46.900 | 3036.740 | 0.015 |
| L17 | 28 - 0 (17) | TP73.8125x65.5804x0.5758 | 28.000 | 0.000 | 0.0 | 22.950 | 135.7860 | -60.428 | 3116.300 | 0.019 |

## Pole Bending Design Data

| Section No. | Elevation ft | Size | Actual $M_x$ kip-ft | Actual $f_{bx}$ ksi | Allow. $F_{bx}$ ksi | Ratio $\frac{f_{bx}}{F_{bx}}$ | Actual $M_y$ kip-ft | Actual $f_{by}$ ksi | Allow. $F_{by}$ ksi | Ratio $\frac{f_{by}}{F_{by}}$ |
|---|---|---|---|---|---|---|---|---|---|---|
| L1 | 185 - 180 (1) | TP18x18x0.1875 | 23.935 | 6.149 | 25.200 | 0.244 | 0.000 | 0.000 | 25.200 | 0.000 |
| L2 | 180 - 153 (2) | TP26.8088x18x0.25 | 336.278 | 29.113 | 25.200 | 1.155 | 0.000 | 0.000 | 25.200 | 0.000 |
| L3 | 153 - 151.833 (3) | TP27.1894x26.8088x0.3625 | 359.862 | 21.146 | 25.200 | 0.839 | 0.000 | 0.000 | 25.200 | 0.000 |
| L4 | 151.833 - 151 (4) | TP27.4613x27.1894x0.5246 | 376.835 | 15.265 | 25.182 | 0.606 | 0.000 | 0.000 | 25.182 | 0.000 |
| L5 | 151 - 130 (5) | TP34.3125x27.4613x0.3802 | 722.487 | 27.873 | 25.200 | 1.106 | 0.000 | 0.000 | 25.200 | 0.000 |
| L6 | 130 - 120.667 (6) | TP36.844x31.9209x0.4447 | 1067.792 | 27.746 | 25.200 | 1.101 | 0.000 | 0.000 | 25.200 | 0.000 |
| L7 | 120.667 - 115 (7) | TP38.6875x36.844x0.4776 | 1214.408 | 26.668 | 24.690 | 1.080 | 0.000 | 0.000 | 24.690 | 0.000 |
| L8 | 115 - 114 (8) | TP39.0125x38.6875x0.5402 | 1240.900 | 23.802 | 25.200 | 0.945 | 0.000 | 0.000 | 25.200 | 0.000 |
| L9 | 114 - 95 (9) | TP45.1875x39.0125x0.4463 | 1601.417 | 29.944 | 25.200 | 1.188 | 0.000 | 0.000 | 25.200 | 0.000 |
| L10 | 95 - 91 (10) | TP45.8125x42.3448x0.5294 | 1900.725 | 26.793 | 25.200 | 1.063 | 0.000 | 0.000 | 25.200 | 0.000 |
| L11 | 91 - 90 (11) | TP46.1391x45.8125x0.465 | 1931.767 | 30.426 | 25.200 | 1.207 | 0.000 | 0.000 | 25.200 | 0.000 |
| L12 | 90 - 61.5 (12) | TP55.4461x46.1391x0.5299 | 2896.425 | 27.679 | 25.200 | 1.098 | 0.000 | 0.000 | 25.200 | 0.000 |
| L13 | 61.5 - 58 (13) | TP56.5891x55.4461x0.5263 | 3026.067 | 27.925 | 24.996 | 1.117 | 0.000 | 0.000 | 24.996 | 0.000 |
| L14 | 58 - 40 (14) | TP61.6875x56.5891x0.5788 | 3730.942 | 26.354 | 23.898 | 1.103 | 0.000 | 0.000 | 23.898 | 0.000 |
| L15 | 40 - 33 (15) | TP63.9583x61.6875x0.5704 | 4022.350 | 26.785 | 25.200 | 1.063 | 0.000 | 0.000 | 25.200 | 0.000 |
| L16 | 33 - 28 (16) | TP65.5804x63.9583x0.595 | 4236.067 | 25.730 | 24.390 | 1.055 | 0.000 | 0.000 | 24.390 | 0.000 |
| L17 | 28 - 0 (17) | TP73.8125x65.5804x0.5758 | 5520.467 | 27.247 | 22.950 | 1.187 | 0.000 | 0.000 | 22.950 | 0.000 |

## Pole Shear Design Data

| Section No. | Elevation ft | Size | Actual V K | Actual $f_v$ ksi | Allow. $F_v$ ksi | Ratio $\frac{f_v}{F_v}$ | Actual T kip-ft | Actual $f_{vt}$ ksi | Allow. $F_{vt}$ ksi | Ratio $\frac{f_{vt}}{F_{vt}}$ |
|---|---|---|---|---|---|---|---|---|---|---|
| L1 | 185 - 180 (1) | TP18x18x0.1875 | 5.016 | 0.466 | 16.800 | 0.056 | 0.011 | 0.001 | 16.800 | 0.000 |
| L2 | 180 - 153 (2) | TP26.8088x18x0.25 | 20.126 | 0.941 | 16.800 | 0.114 | 0.080 | 0.003 | 16.800 | 0.000 |
| L3 | 153 - 151.833 (3) | TP27.1894x26.8088x0.3625 | 20.302 | 0.648 | 16.800 | 0.078 | 0.078 | 0.002 | 16.800 | 0.000 |
| L4 | 151.833 - 151 (4) | TP27.4613x27.1894x0.5246 | 20.437 | 0.449 | 16.788 | 0.054 | 0.072 | 0.001 | 16.788 | 0.000 |
| L5 | 151 - 130 (5) | TP34.3125x27.4613x0.3802 | 22.842 | 0.578 | 16.800 | 0.070 | 0.232 | 0.004 | 16.800 | 0.000 |
| L6 | 130 - 120.667 | TP36.844x31.9209x0.444 | 25.356 | 0.487 | 16.800 | 0.059 | 0.232 | 0.003 | 16.800 | 0.000 |

| Section No. | Elevation ft | Size | Actual V K | Actual $f_v$ ksi | Allow. $F_v$ ksi | Ratio $\frac{f_v}{F_v}$ | Actual T kip-ft | Actual $f_{vt}$ ksi | Allow. $F_{vt}$ ksi | Ratio $\frac{f_{vt}}{F_{vt}}$ |
|---|---|---|---|---|---|---|---|---|---|---|
| | (6) | 7 | | | | | | | | |
| L7 | 120.667 - 115 (7) | TP38.6875x36.844x0.4776 | 26.400 | 0.449 | 16.460 | 0.055 | 0.232 | 0.002 | 16.460 | 0.000 |
| L8 | 115 - 114 (8) | TP39.0125x38.6875x0.5402 | 26.589 | 0.397 | 16.800 | 0.048 | 0.232 | 0.002 | 16.800 | 0.000 |
| L9 | 114 - 95 (9) | TP45.1875x39.0125x0.4463 | 28.911 | 0.470 | 16.800 | 0.057 | 0.231 | 0.002 | 16.800 | 0.000 |
| L10 | 95 - 91 (10) | TP45.8125x42.3448x0.5294 | 30.943 | 0.401 | 16.800 | 0.048 | 0.231 | 0.002 | 16.800 | 0.000 |
| L11 | 91 - 90 (11) | TP46.1391x45.8125x0.465 | 31.145 | 0.455 | 16.800 | 0.055 | 0.231 | 0.002 | 16.800 | 0.000 |
| L12 | 90 - 61.5 (12) | TP55.4461x46.1391x0.5299 | 36.699 | 0.392 | 16.800 | 0.047 | 0.231 | 0.001 | 16.800 | 0.000 |
| L13 | 61.5 - 58 (13) | TP56.5891x55.4461x0.5263 | 37.380 | 0.393 | 16.664 | 0.048 | 0.231 | 0.001 | 16.664 | 0.000 |
| L14 | 58 - 40 (14) | TP61.6875x56.5891x0.5788 | 40.974 | 0.360 | 15.932 | 0.046 | 0.231 | 0.001 | 15.932 | 0.000 |
| L15 | 40 - 33 (15) | TP63.9583x61.6875x0.5704 | 42.280 | 0.363 | 16.800 | 0.044 | 0.231 | 0.001 | 16.800 | 0.000 |
| L16 | 33 - 28 (16) | TP65.5804x63.9583x0.595 | 43.202 | 0.347 | 16.260 | 0.043 | 0.231 | 0.001 | 16.260 | 0.000 |
| L17 | 28 - 0 (17) | TP73.8125x65.5804x0.5758 | 48.617 | 0.358 | 15.300 | 0.048 | 0.231 | 0.001 | 15.300 | 0.000 |

## Pole Interaction Design Data

| Section No. | Elevation ft | Ratio $\frac{P}{P_a}$ | Ratio $\frac{f_{bx}}{F_{bx}}$ | Ratio $\frac{f_{by}}{F_{by}}$ | Ratio $\frac{f_v}{F_v}$ | Ratio $\frac{f_{vt}}{F_{vt}}$ | Comb. Stress Ratio | Allow. Stress Ratio | Criteria |
|---|---|---|---|---|---|---|---|---|---|
| L1 | 185 - 180 (1) | 0.005 | 0.244 | 0.000 | 0.056 | 0.000 | 0.250 ✔ | 1.333 | H1-3+VT ✔ |
| L2 | 180 - 153 (2) | 0.014 | 1.155 | 0.000 | 0.114 | 0.000 | 1.172 ✔ | 1.333 | H1-3+VT ✔ |
| L3 | 153 - 151.833 (3) | 0.010 | 0.839 | 0.000 | 0.078 | 0.000 | 0.850 ✔ | 1.333 | H1-3+VT ✔ |
| L4 | 151.833 - 151 (4) | 0.007 | 0.606 | 0.000 | 0.054 | 0.000 | 0.614 ✔ | 1.333 | H1-3+VT ✔ |
| L5 | 151 - 130 (5) | 0.010 | 1.106 | 0.000 | 0.070 | 0.000 | 1.118 ✔ | 1.333 | H1-3+VT ✔ |
| L6 | 130 - 120.667 (6) | 0.011 | 1.101 | 0.000 | 0.059 | 0.000 | 1.113 ✔ | 1.333 | H1-3+VT ✔ |
| L7 | 120.667 - 115 (7) | 0.011 | 1.080 | 0.000 | 0.055 | 0.000 | 1.091 ✔ | 1.333 | H1-3+VT ✔ |
| L8 | 115 - 114 (8) | 0.009 | 0.945 | 0.000 | 0.048 | 0.000 | 0.954 ✔ | 1.333 | H1-3+VT ✔ |
| L9 | 114 - 95 (9) | 0.012 | 1.188 | 0.000 | 0.057 | 0.000 | 1.201 ✔ | 1.333 | H1-3+VT ✔ |
| L10 | 95 - 91 (10) | 0.012 | 1.063 | 0.000 | 0.048 | 0.000 | 1.076 ✔ | 1.333 | H1-3+VT ✔ |
| L11 | 91 - 90 (11) | 0.013 | 1.207 | 0.000 | 0.055 | 0.000 | 1.222 ✔ | 1.333 | H1-3+VT ✔ |
| L12 | 90 - 61.5 (12) | 0.014 | 1.098 | 0.000 | 0.047 | 0.000 | 1.113 ✔ | 1.333 | H1-3+VT ✔ |
| L13 | 61.5 - 58 (13) | 0.014 | 1.117 | 0.000 | 0.048 | 0.000 | 1.132 ✔ | 1.333 | H1-3+VT ✔ |
| L14 | 58 - 40 (14) | 0.015 | 1.103 | 0.000 | 0.046 | 0.000 | 1.119 ✔ | 1.333 | H1-3+VT ✔ |
| L15 | 40 - 33 (15) | 0.015 | 1.063 | 0.000 | 0.044 | 0.000 | 1.079 ✔ | 1.333 | H1-3+VT ✔ |

| Section No. | Elevation ft | Ratio $\frac{P}{P_a}$ | Ratio $\frac{f_{bx}}{F_{bx}}$ | Ratio $\frac{f_{by}}{F_{by}}$ | Ratio $\frac{f_v}{F_v}$ | Ratio $\frac{f_{vt}}{F_{vt}}$ | Comb. Stress Ratio | Allow. Stress Ratio | Criteria |
|---|---|---|---|---|---|---|---|---|---|
| L16 | 33 - 28 (16) | 0.015 | 1.055 | 0.000 | 0.043 | 0.000 | 1.071 ✔ | 1.333 | H1-3+VT ✔ |
| L17 | 28 - 0 (17) | 0.019 | 1.187 | 0.000 | 0.048 | 0.000 | 1.207 ✔ | 1.333 | H1-3+VT ✔ |

# Section Capacity Table

| Section No. | Elevation ft | Component Type | Size | Critical Element | P K | $SF*P_{allow}$ K | % Capacity | Pass Fail |
|---|---|---|---|---|---|---|---|---|
| L1 | 185 - 180 | Pole | TP18x18x0.1875 | 1 | -1.377 | 361.254 | 18.7 | Pass |
| L2 | 180 - 153 | Pole | TP26.8088x18x0.25 | 2 | -7.522 | 718.182 | 88.0 | Pass |
| L3 | 153 - 151.833 | Pole | TP27.1894x26.8088x0.3625 | 3 | -7.692 | 1051.792 | 63.8 | Pass |
| L4 | 151.833 - 151 | Pole | TP27.4613x27.1894x0.5246 | 4 | -7.851 | 1527.325 | 46.0 | Pass |
| L5 | 151 - 130 | Pole | TP34.3125x27.4613x0.3802 | 5 | -10.448 | 1328.220 | 83.9 | Pass |
| L6 | 130 - 120.667 | Pole | TP36.844x31.9209x0.4447 | 6 | -14.042 | 1750.722 | 83.5 | Pass |
| L7 | 120.667 - 115 | Pole | TP38.6875x36.844x0.4776 | 7 | -15.372 | 1934.076 | 81.9 | Pass |
| L8 | 115 - 114 | Pole | TP39.0125x38.6875x0.5402 | 8 | -15.639 | 2248.011 | 71.6 | Pass |
| L9 | 114 - 95 | Pole | TP45.1875x39.0125x0.4463 | 9 | -18.774 | 2065.883 | 90.1 | Pass |
| L10 | 95 - 91 | Pole | TP45.8125x42.3448x0.5294 | 10 | -22.956 | 2592.778 | 80.7 | Pass |
| L11 | 91 - 90 | Pole | TP46.1391x45.8125x0.465 | 11 | -23.230 | 2297.212 | 91.6 | Pass |
| L12 | 90 - 61.5 | Pole | TP55.4461x46.1391x0.5299 | 12 | -32.774 | 3147.320 | 83.5 | Pass |
| L13 | 61.5 - 58 | Pole | TP56.5891x55.4461x0.5263 | 13 | -34.052 | 3165.902 | 84.9 | Pass |
| L14 | 58 - 40 | Pole | TP61.6875x56.5891x0.5788 | 14 | -41.536 | 3628.093 | 83.9 | Pass |
| L15 | 40 - 33 | Pole | TP63.9583x61.6875x0.5704 | 15 | -44.580 | 3910.529 | 80.9 | Pass |
| L16 | 33 - 28 | Pole | TP65.5804x63.9583x0.595 | 16 | -46.900 | 4047.974 | 80.3 | Pass |
| L17 | 28 - 0 | Pole | TP73.8125x65.5804x0.5758 | 17 | -60.428 | 4154.028 | 90.6 | Pass |
| | | | | | | | Summary | |
| | | | | | | Pole (L11) | 91.6 | Pass |
| | | | | | | **RATING =** | **91.6** | **Pass** |

# APPENDIX B

# BASE LEVEL DRAWING

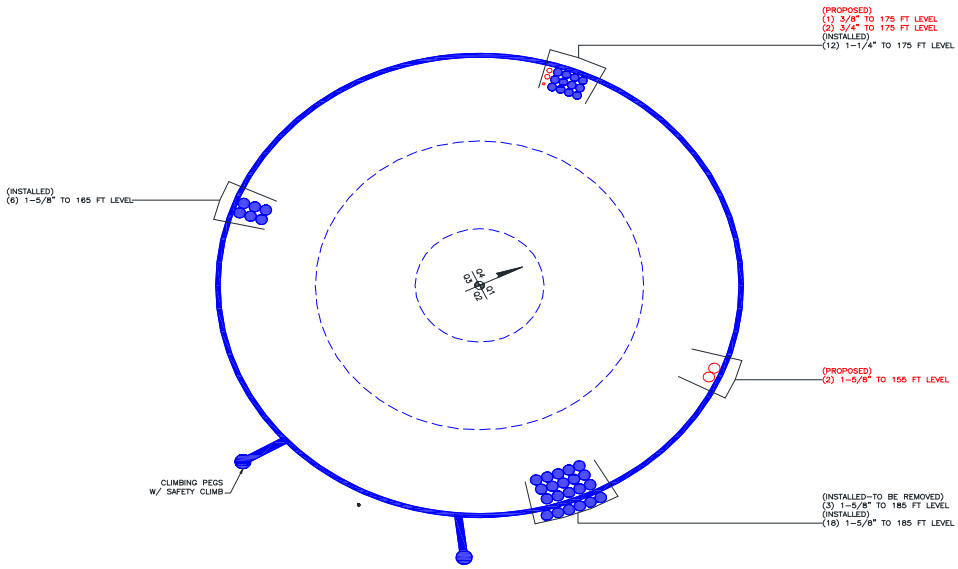
(PROPOSED)
(1) 3/8" TO 175 FT LEVEL
(2) 3/4" TO 175 FT LEVEL
(INSTALLED)
(12) 1-1/4" TO 175 FT LEVEL
(INSTALLED)
(6) 1-5/8" TO 165 FT LEVEL
(PROPOSED)
(2) 1-5/8" TO 155 FT LEVEL
CLIMBING PEGS
W/ SAFETY CLIMB
(INSTALLED-TO BE REMOVED)
(3) 1-5/8" TO 185 FT LEVEL
(INSTALLED)
(18) 1-5/8" TO 185 FT LEVEL

# APPENDIX C

# ADDITIONAL CALCULATIONS

Program Version 6.1.4.1 - 12/17/2013 File:G:/TOWER/375_Crown_Castle/2013/37513-1570 BU 825983/37513-1570.002.7805 WO 907744 BU 825983 - 002 SA/37513-1570.002.7805 (2 mods incl).eri

| Section | Length (ft) | Number of Sides | Thickness (in) | Socket Length (ft) | Top Dia (in) | Bot Dia (in) | Grade | Weight (K) |
|---|---|---|---|---|---|---|---|---|
| 1 | 5.000 | 12 | 0.1875 | | 18.0000 | 18.0000 | A36M-42 | 0.2 |
| 2 | 27.000 | 12 | 0.2500 | | 18.0000 | 26.8088 | | 1.6 |
| 3 | 0.3187 | 12 | 0.2625 | | 26.8088 | 27.4613 | Reinf 42.00 ksi | 0.1 |
| 4 | 0.3187 | 12 | 0.2625 | | 27.4613 | 27.8194 | Reinf 41.97 ksi | 0.1 |
| 5 | 21.000 | 12 | 0.3802 | 5.000 | 27.4613 | 34.3125 | Reinf 42.00 ksi | 2.7 |
| 6 | 14.333 | 12 | 0.4447 | | 31.9209 | 36.8440 | | 2.4 |
| 7 | 5.667 | 12 | 0.4776 | | 36.8440 | 38.6875 | Reinf 41.15 ksi | 1.1 |
| 8 | 1.000 | 12 | 0.5402 | | 38.6875 | 39.0125 | | 0.2 |
| 9 | 19.000 | 12 | 0.4463 | 6.000 | 39.0125 | 45.1875 | | 3.9 |
| 10 | 10.000 | 12 | 0.4653 | | 45.1875 | 45.4448 | Reinf 42.00 ksi | 2.5 |
| 11 | 1.000 | 12 | 0.4653 | | 45.4448 | 46.1391 | | 0.2 |
| 12 | 28.500 | 12 | 0.5299 | | 46.1391 | 55.4461 | | 8.3 |
| 13 | 3.500 | 12 | 0.5263 | | 55.4461 | 56.5891 | | 1.1 |
| 14 | 18.000 | 12 | 0.5788 | | 56.5891 | 61.6875 | Reinf 41.66 ksi | 6.7 |
| 15 | 7.000 | 12 | 0.5704 | | 61.6875 | 63.9583 | Reinf 39.83 ksi | 2.7 |
| 16 | 5.000 | 12 | 0.5950 | | 63.9583 | 65.5804 | Reinf 42.00 ksi | 2.1 |
| 17 | 28.000 | 12 | 0.5758 | | 65.5804 | 73.8125 | Reinf 40.65 ksi / Reinf 38.25 ksi | 12.2 |
| | | | | | | | | 48.2 |

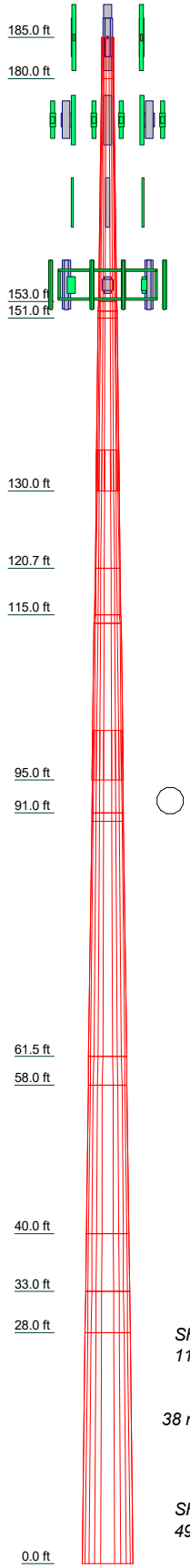


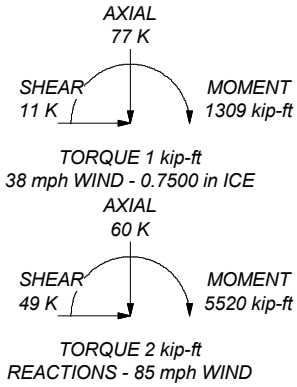


## DESIGNED APPURTENANCE LOADING

| TYPE | ELEVATION | TYPE | ELEVATION |
|---|---|---|---|
| ETW190VS12UB | 185 | (2) LGP13519 | 175 |
| ETW190VS12UB | 185 | (2) LGP13519 | 175 |
| ETW190VS12UB | 185 | (2) DTMABP7819VG12A | 175 |
| Sector Mount [SM 802-3] | 185 | (2) DTMABP7819VG12A | 175 |
| RR90-17-02DP w/ Mount Pipe | 185 | (2) DTMABP7819VG12A | 175 |
| RR90-17-02DP w/ Mount Pipe | 185 | DC6-48-60-18-8F | 175 |
| RR90-17-02DP w/ Mount Pipe | 185 | Sector Mount [SM 802-3] | 175 |
| APX16DWV-16DWVS-C w/ Mount Pipe | 185 | APXV18-206517S-C w/ Mount Pipe | 165 |
| | | APXV18-206517S-C w/ Mount Pipe | 165 |
| APX16DWV-16DWVS-C w/ Mount Pipe | 185 | APXV18-206517S-C w/ Mount Pipe | 165 |
| | | Pipe Mount [PM 601-3] | 165 |
| APX16DWV-16DWVS-C w/ Mount Pipe | 185 | (2) BXA-70063-6CF-EDIN-2 w/ Mount Pipe | 155 |
| ATBT-BOTTOM-24V | 185 | (2) BXA-70063-6CF-EDIN-2 w/ Mount Pipe | 155 |
| SBNHH-1D65C w/ Mount Pipe | 185 | | |
| ATBT-BOTTOM-24V | 185 | (2) BXA-70063-6CF-EDIN-2 w/ Mount Pipe | 155 |
| LNX-6515DS-VTM w/ Mount Pipe | 185 | | |
| ATBT-BOTTOM-24V | 185 | (2) BXA-171063-12CF-EDIN-2 w/ Mount Pipe | 155 |
| LNX-6515DS-VTM w/ Mount Pipe | 185 | | |
| (2) 7770.00 w/ Mount Pipe | 175 | (2) BXA-171063-12CF-EDIN-2 w/ Mount Pipe | 155 |
| (2) 7770.00 w/ Mount Pipe | 175 | | |
| (2) 7770.00 w/ Mount Pipe | 175 | (2) BXA-171063-12CF-EDIN-2 w/ Mount Pipe | 155 |
| AM-X-CD-16-65-00T-RET w/ Mount Pipe | 175 | RRH2X40-AWS | 155 |
| | | RRH2X40-AWS | 155 |
| AM-X-CD-16-65-00T-RET w/ Mount Pipe | 175 | RRH2X40-AWS | 155 |
| AM-X-CD-16-65-00T-RET w/ Mount Pipe | 175 | RRH2X40-07-U | 155 |
| | | RRH2X40-07-U | 155 |
| (2) RRUS-11 | 175 | RRH2X40-07-U | 155 |
| (2) RRUS-11 | 175 | DB-T1-6Z-8AB-0Z | 155 |
| (2) RRUS-11 | 175 | Platform Mount [LP 301-1] | 155 |
| (2) LGP13519 | 175 | | |

## MATERIAL STRENGTH

| GRADE | Fy | Fu | GRADE | Fy | Fu |
|---|---|---|---|---|---|
| A36M-42 | 42 ksi | 60 ksi | Reinf 41.66 ksi | 42 ksi | 53 ksi |
| Reinf 42.00 ksi | 42 ksi | 53 ksi | Reinf 39.83 ksi | 40 ksi | 50 ksi |
| Reinf 41.97 ksi | 42 ksi | 53 ksi | Reinf 40.65 ksi | 41 ksi | 51 ksi |
| Reinf 41.15 ksi | 41 ksi | 52 ksi | Reinf 38.25 ksi | 38 ksi | 48 ksi |

## TOWER DESIGN NOTES

1. Tower is located in Middlesex County, Connecticut.
2. Tower designed for a 85 mph basic wind in accordance with the TIA/EIA-222-F Standard.
3. Tower is also designed for a 38 mph basic wind with 0.75 in ice.
4. Deflections are based upon a 50 mph wind.
5. TOWER RATING: 91.6%


*Paul J Ford and Company*
250 E. Broad Street, Suite 600
Columbus, OH 43215
Phone: 614.221.6679
FAX: 614.448.4105


| | | | |
|---|---|---|---|
| Job: ***185' Monopole / Middletown_1*** | | | |
| Project: ***PJF 37513-1570 / BU 825983*** | | | |
| Client: CCI | Drawn by: John J Woolley | App'd: | |
| Code: TIA/EIA-222-F | Date: 09/10/14 | Scale: NTS | |
| Path: | | Dwg No. E-1 | |

PAUL J. FORD AND COMPANY
STRUCTURAL ENGINEERS
250 East Broad Street • Suite 1500 • Columbus, Ohio 43215-3708
Phone 614-221-6679 • Fax 614-448-4105 • www.PJFweb.com

v4.2 - Effective 4-3-13

**Date:** 9/10/2014
**PJF Project:** 37513-1570.002.7805
**Client Ref. #** 825983
**Site Name:** Middletown_1
**Description:** Micropile
**Owner:** CCI
**Engineer:** JJW

## Micropile Analysis

| | | | | | | | | |
|---|---|---|---|---|---|---|---|---|
| Moment = | 5520 | k-ft | TIA Ref. | F | | Location = | Micropile | |
| Axial = | 60.0 | kips | ASIF = | 1.3333 | | η = | N/A | for BP, Rev. G Sect. 4.9.9 |
| Shear = | 49.0 | kips | Max Ratio = | 100.0% | | Threads = | N/A | for FP, Rev. G |
| Item Qty = | 30 | | | | | Soil = | Soft Clay / Silty Clay (Lean) | for Micropile |

**** For Post Installed Anchors: Check anchors for embedment, epoxy/grout bond, and capacity based on proof load. ****

| Item | Nominal Anchor Dia, in | Description | Fy, ksi | Fu, ksi | Location, degrees | Anchor Circle, in | Area Override, $in^2$ | Area, $in^2$ | Max Net Compression, kips | Max Net Tension, kips | Load for Capacity Calc, kips | Capacity Override, kips | Capacity, kips | Capacity Ratio | Required Bond Length, ft |
|---|---|---|---|---|---|---|---|---|---|---|---|---|---|---|---|
| 1 | 2.000 | A36 | 36 | 58 | 0.0 | 68.00 | 0.00 | 3.14 | 55.81 | 52.02 | 52.02 | 0.00 | 80.17 | 64.9% | |
| 2 | 2.000 | A36 | 36 | 58 | 15.0 | 68.00 | 0.00 | 3.14 | 57.16 | 53.37 | 53.37 | 0.00 | 80.17 | 66.6% | |
| 3 | 2.000 | A36 | 36 | 58 | 30.0 | 68.00 | 0.00 | 3.14 | 58.46 | 54.68 | 54.68 | 0.00 | 80.17 | 68.2% | |
| 4 | 2.000 | A36 | 36 | 58 | 45.0 | 68.00 | 0.00 | 3.14 | 59.37 | 55.58 | 55.58 | 0.00 | 80.17 | 69.3% | |
| 5 | 2.000 | A36 | 36 | 58 | 60.0 | 68.00 | 0.00 | 3.14 | 59.61 | 55.82 | 55.82 | 0.00 | 80.17 | 69.6% | |
| 6 | 2.000 | A36 | 36 | 58 | 75.0 | 68.00 | 0.00 | 3.14 | 59.08 | 55.29 | 55.29 | 0.00 | 80.17 | 69.0% | |
| 7 | 2.000 | A36 | 36 | 58 | 90.0 | 68.00 | 0.00 | 3.14 | 57.86 | 54.07 | 54.07 | 0.00 | 80.17 | 67.4% | |
| 8 | 2.000 | A36 | 36 | 58 | 105.0 | 68.00 | 0.00 | 3.14 | 56.17 | 52.38 | 52.38 | 0.00 | 80.17 | 65.3% | |
| 9 | 2.000 | A36 | 36 | 58 | 120.0 | 68.00 | 0.00 | 3.14 | 54.39 | 50.61 | 50.61 | 0.00 | 80.17 | 63.1% | |
| 10 | 2.000 | A36 | 36 | 58 | 135.0 | 68.00 | 0.00 | 3.14 | 52.97 | 49.18 | 49.18 | 0.00 | 80.17 | 61.3% | |
| 11 | 2.000 | A36 | 36 | 58 | 150.0 | 68.00 | 0.00 | 3.14 | 52.27 | 48.48 | 48.48 | 0.00 | 80.17 | 60.5% | |
| 12 | 2.000 | A36 | 36 | 58 | 165.0 | 68.00 | 0.00 | 3.14 | 52.48 | 48.69 | 48.69 | 0.00 | 80.17 | 60.7% | |
| 13 | 2.000 | A36 | 36 | 58 | 180.0 | 68.00 | 0.00 | 3.14 | 53.53 | 49.74 | 49.74 | 0.00 | 80.17 | 62.0% | |
| 14 | 2.000 | A36 | 36 | 58 | 195.0 | 68.00 | 0.00 | 3.14 | 55.09 | 51.30 | 51.30 | 0.00 | 80.17 | 64.0% | |
| 15 | 2.000 | A36 | 36 | 58 | 210.0 | 68.00 | 0.00 | 3.14 | 56.73 | 52.95 | 52.95 | 0.00 | 80.17 | 66.0% | |
| 16 | 2.000 | A36 | 36 | 58 | 225.0 | 68.00 | 0.00 | 3.14 | 58.07 | 54.28 | 54.28 | 0.00 | 80.17 | 67.7% | |
| 17 | 2.000 | A36 | 36 | 58 | 240.0 | 68.00 | 0.00 | 3.14 | 58.80 | 55.01 | 55.01 | 0.00 | 80.17 | 68.6% | |
| 18 | 2.000 | A36 | 36 | 58 | 255.0 | 68.00 | 0.00 | 3.14 | 58.80 | 55.02 | 55.02 | 0.00 | 80.17 | 68.6% | |
| 19 | 2.000 | A36 | 36 | 58 | 270.0 | 68.00 | 0.00 | 3.14 | 58.14 | 54.35 | 54.35 | 0.00 | 80.17 | 67.8% | |
| 20 | 2.000 | A36 | 36 | 58 | 285.0 | 68.00 | 0.00 | 3.14 | 57.02 | 53.23 | 53.23 | 0.00 | 80.17 | 66.4% | |
| 21 | 2.000 | A36 | 36 | 58 | 300.0 | 68.00 | 0.00 | 3.14 | 55.79 | 52.00 | 52.00 | 0.00 | 80.17 | 64.9% | |
| 22 | 2.000 | A36 | 36 | 58 | 315.0 | 68.00 | 0.00 | 3.14 | 54.82 | 51.03 | 51.03 | 0.00 | 80.17 | 63.7% | |
| 23 | 2.000 | A36 | 36 | 58 | 330.0 | 68.00 | 0.00 | 3.14 | 54.45 | 50.66 | 50.66 | 0.00 | 80.17 | 63.2% | |
| 24 | 2.000 | A36 | 36 | 58 | 345.0 | 68.00 | 0.00 | 3.14 | 54.81 | 51.02 | 51.02 | 0.00 | 80.17 | 63.6% | |
| 25 | 0.000 | Other | | | 45.0 | 169.81 | 4.02 | 4.02 | 184.81 | 179.96 | 184.81 | 219.90 | 219.90 | 84.0% | 55.00 |
| 26 | 0.000 | Other | | | 165.0 | 169.81 | 4.02 | 4.02 | 166.30 | 161.45 | 166.30 | 219.90 | 219.90 | 75.6% | 55.00 |
| 27 | 0.000 | Other | | | 285.0 | 169.81 | 4.02 | 4.02 | 177.73 | 172.88 | 177.73 | 219.90 | 219.90 | 80.8% | 55.00 |
| 28 | 0.000 | Other | | | 105.0 | 169.81 | 4.02 | 4.02 | 176.64 | 171.79 | 176.64 | 219.90 | 219.90 | 80.3% | 55.00 |
| 29 | 0.000 | Other | | | 210.0 | 169.81 | 4.02 | 4.02 | 179.30 | 174.46 | 179.30 | 219.90 | 219.90 | 81.5% | 55.00 |
| 30 | 0.000 | Other | | | 335.0 | 169.81 | 4.02 | 4.02 | 168.32 | 163.47 | 168.32 | 219.90 | 219.90 | 76.5% | 55.00 |
| | | | | | | | | 99.52 | | | | | | | |

© Copyright 2011, Paul J. Ford and Company, all right reserved.

# Stiffened or Unstiffened, Interior Flange Plate - Any Bolt Material TIA Rev F

**Site Data**

| | |
|---|---|
| BU#: | |
| Site Name: | |
| App #: | |

| | |
|---|---|
| Manufacturer: | Other |

| Reactions | | |
|---|---|---|
| Moment: | 1962.25 | ft-kips |
| Axial: | 45.46 | kips |
| Shear: | 37.1 | kips |
| Exterior Flange Run, T+Q: | 0 | kips |

Reactions adjusted to account for micropiles

**Elevation:** 0 feet

| Bolt Data | | | | |
|---|---|---|---|---|
| Qty: | 24 | | | |
| Diam: | 2 | | Bolt Fu: | 58 |
| Bolt Material: | Other | | Bolt Fy: | 36 |
| Strength (Fu): | 58 | ksi | Bolt Fty: | 19.14 |
| Yield (Fy): | 36 | ksi | | |
| Circle: | 68 | in | | |

**Interior Flange Bolt Results**

| | | |
|---|---|---|
| Maximum Bolt Tension: | 55.8 | Kips, Ext. T=Interior T |
| Allowable Tension: | 80.2 | Kips |
| Bolt Stress Ratio: | 69.6% | Pass |

| Plate Data | | |
|---|---|---|
| Plate Outer Diam: | 72.9375 | in |
| Plate Inner Diam: | 62 | in (Hole @ Ctr) |
| Thick: | 2 | in |
| Grade: | 36 | ksi |
| **Effective Width:** | 9.77 | in |

**Interior Flange Plate Results** Flexural Check

| | | |
|---|---|---|
| Controlling Bolt Axial Force: | 59.6 | Kips, Ext. C= Interior C |
| Plate Stress: | 18.1 | ksi |
| Allowable Plate Stress: | 36.0 | ksi |
| Plate Stress Ratio: | 50.2% | Pass |

| **Stiffener Data** (Welding at Both Sides) | | |
|---|---|---|
| Config: | 1 | * |
| Weld Type: | Fillet | |
| Groove Depth: | | <-- Disregard |
| Groove Angle: | | <-- Disregard |
| Fillet H. Weld: | 0.75 | in |
| Fillet V. Weld: | 0.375 | in |
| Width: | 5 | in |
| Height: | 18 | in |
| Thick: | 1 | in |
| Notch: | 1 | in |
| Grade: | 50 | ksi |
| Weld str.: | 70 | ksi |

**Stiffener Results**

| | | |
|---|---|---|
| Horizontal Weld : | 22.7% | Pass |
| Vertical Weld: | 11.5% | Pass |
| Plate Flex+Shear, fb/Fb+(fv/Fv)^2: | 2.1% | Pass |
| Plate Tension+Shear, ft/Ft+(fv/Fv)^2: | 16.7% | Pass |
| Plate Comp. (AISC Bracket): | 15.0% | Pass |

**Pole Results**

| | | |
|---|---|---|
| Pole Punching Shear Check: | 3.7% | Pass |

| Pole Data | | |
|---|---|---|
| Pole OuterDiam: | 73.8125 | in |
| Thick: | 0.4375 | in |
| Pole Inner Diam: | 72.9375 | in |
| Grade: | 42 | ksi |
| # of Sides: | 12 | "0" IF Round |
| Fu | 60 | ksi |

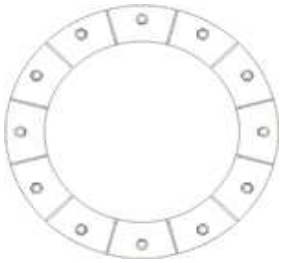

| Stress Increase Factor | | |
|---|---|---|
| ASIF: | 1.333 | |

* 0 = none, 1 = every bolt, 2 = every 2 bolts, 3 = 2 per bolt

** Note: for complete joint penetration groove welds the groove depth must be exactly 1/2 the stiffener thickness for calculation purposes

PJF job no. **37513-1570 BP A** Project name **0**

Foundation Loads:

| | | |
|---|---|---|
| Pole weight or tower leg compression = | **45.5** | (kips) |
| Horizontal load at top of pier = | **37.1** | (kips) |
| Overturning moment at top of pier= | **1962** | (ft-kips) |

Design criteria:

| | | |
|---|---|---|
| Safety factor against overturning = | **1.5** | |

Soil Properties:

| | | |
|---|---|---|
| Soil density = | **120** | (pcf) |
| Allowable soil bearing = | **3** | (ksf) |
| Depth to water table = | **16** | (ft) |

Dimensions:

| | | |
|---|---|---|
| Pier shape (round or square) | **R** | ("R" or "S") |
| Pier width = | **7.5** | (ft) |
| Pier height above grade = | **0.25** | (ft) |
| depth to bottom of footing = | **10.5** | (ft) |
| Footing thickness = | **3** | (ft) |
| Footing width = | **25** | (ft) |
| Footing length = | **25** | (ft) |

Concrete:

| | | |
|---|---|---|
| Concrete strength = | **4** | (ksi) |
| Rebar strength = | **60** | (ksi) |
| ultimate load factor = | **1.3** | |

Reinforcing Steel:

| | Pad | |
|---|---|---|
| minimum cover over rebar = | **3** | inches |
| size of pad rebar = | **#8** | bar |
| quantity of pad rebar = | **35** | (ea direction) |

Reinforcing Steel:

| | Pier | |
|---|---|---|
| size of vert rebar in pier= | **#8** | bar |
| vertical rebar quantity = | **64** | |
| size of pier ties = | **#4** | bar |
| minimum cover over rebar = | **3** | inches |

Total volume of concrete = 82.1 cu yd

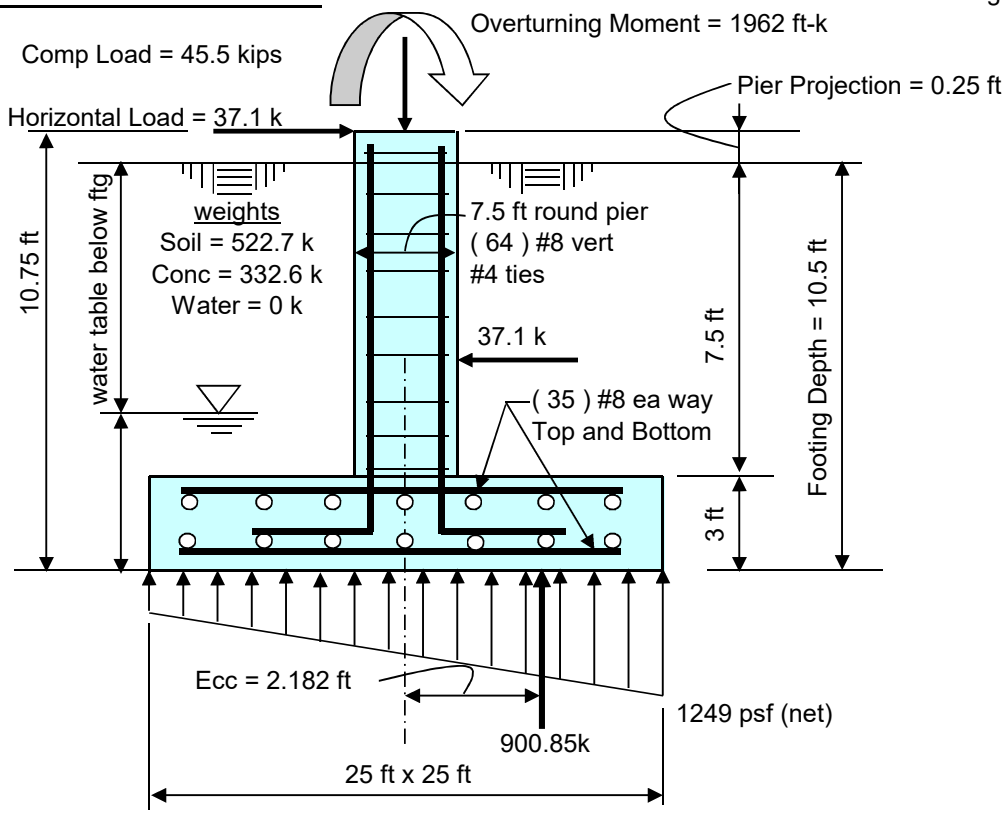


| Summary of analysis results | |
|---|---|
| Maximum Net Soil Bearing = 1.249 ksf<br>Allowable Net Soil Bearing = 3 ksf<br>**Soil Bearing Stress Ratio = 0.42 Okay** | Ult Bending Shear Capacity = 126 psi<br>Ult Bending Shear Stress = 19 psi<br>**Bending Shear Stress Ratio = 0.15 Okay** |
| Ftg Overturning Resistance = 11261 ft-kips<br>Overturning Moment = 1966 ft-kips<br>Required Overturning Safety Factor = 1.5<br>Overturning Safety Factor = 5.728<br>**Ratio = 0.26 Okay** | Pad Bending Moment Capacity= 3818 ft-k<br>Pad Bending Moment = 834 ft-k<br>**Bending Moment Stress Ratio = 0.22 OK** |

```
                      oooooo              o
                     oo    oo            oo
 ooooo    oooooo    oo          ooooo    oo      oo   oo   o oooooooooo    o ooooo
oo    o   oo   oo   oo         oo   oo   oo      oo   oo    oo   oo   oo    oo   oo
oo        oo   oo   oo         oo   oo   oo      oo   oo    oo   oo   oo    oo   oo
 ooooo    oo   oo   oo         oo   oo   oo      oo   oo    oo   oo   oo    oo   oo
     oo   oooooo    oo         oo   oo   oo      oo   oo    oo   oo   oo    oo   oo
o    oo   oo        oo    oo   oo   oo   oo  o   oo   oo    oo   oo   oo    oo   oo
 ooooo    oo         oooooo     ooooo     ooo     ooooo o   oo   oo   oo    oo   oo (TM)
```

==========

spColumn v4.80 (TM)
Computer program for the Strength Design of Reinforced Concrete Sections
Copyright © 1988-2011, STRUCTUREPOINT, LLC.
All rights reserved

==========

Licensee stated above acknowledges that STRUCTUREPOINT (SP) is not and cannot be responsible for either the accuracy or adequacy of the material supplied as input for processing by the spColumn computer program. Furthermore, STRUCTUREPOINT neither makes any warranty expressed nor implied with respect to the correctness of the output prepared by the spColumn program. Although STRUCTUREPOINT has endeavored to produce spColumn error free the program is not and cannot be certified infallible. The final and only responsibility for analysis, design and engineering documents is the licensee's. Accordingly, STRUCTUREPOINT disclaims all responsibility in contract, negligence or other tort for any analysis, design or engineering documents prepared in connection with the use of the spColumn program.

General Information:
==========
File Name: g:\tower\375_crown_castle\2013\37513-1570 bu 825983\37513-1570.002...\37513-1570 bp a.col
Project:
Column: Engineer:
Code: ACI 318-11 Units: English

Run Option: Investigation Slenderness: Not considered
Run Axis: X-axis Column Type: Architectural

Material Properties:
==========
f'c = 4 ksi fy = 60 ksi
Ec = 3605 ksi Es = 29000 ksi
Ultimate strain = 0.003 in/in
Beta1 = 0.85

Section:
==========
Circular: Diameter = 90 in

Gross section area, Ag = 6361.73 in^2
Ix = 3.22062e+006 in^4 Iy = 3.22062e+006 in^4
rx = 22.5 in ry = 22.5 in
Xo = 0 in Yo = 0 in

Reinforcement:
==========
Bar Set: ASTM A615

| Size | Diam (in) | Area (in^2) | Size | Diam (in) | Area (in^2) | Size | Diam (in) | Area (in^2) |
|---|---|---|---|---|---|---|---|---|
| # 3 | 0.38 | 0.11 | # 4 | 0.50 | 0.20 | # 5 | 0.63 | 0.31 |
| # 6 | 0.75 | 0.44 | # 7 | 0.88 | 0.60 | # 8 | 1.00 | 0.79 |
| # 9 | 1.13 | 1.00 | # 10 | 1.27 | 1.27 | # 11 | 1.41 | 1.56 |
| # 14 | 1.69 | 2.25 | # 18 | 2.26 | 4.00 | | | |

Confinement: Tied; #3 ties with #10 bars, #4 with larger bars.
phi(a) = 0.8, phi(b) = 0.9, phi(c) = 0.65

Layout: Circular
Pattern: All Sides Equal (Cover to transverse reinforcement)
Total steel area: As = 51.35 in^2 at rho = 0.81% (Note: rho < 1.0%)
Minimum clear spacing = 2.97 in

65 #8 Cover = 3 in

Factored Loads and Moments with Corresponding Capacities:
==========

| No. | Pu kip | Mux k-ft | PhiMnx k-ft | PhiMn/Mu | NA depth in | Dt depth in | eps_t | Phi |
|---|---|---|---|---|---|---|---|---|
| 1 | 45.50 | 2924.40 | 8590.39 | 2.937 | 16.07 | 86.08 | 0.01307 | 0.900 |

*** End of output ***

EBI Consulting

environmental | engineering | due diligence

# RADIO FREQUENCY EMISSIONS ANALYSIS REPORT
# EVALUATION OF HUMAN EXPOSURE POTENTIAL TO NON-IONIZING EMISSIONS

T-Mobile Existing Facility

Site ID: CT11057C

Middletown 1
90 Industrial Park Road
Middletown, CT 06457

**October 16, 2014**

**EBI Project Number: 62145549**

| Site Compliance Summary | |
|---|---|
| Compliance Status: | COMPLIANT |
| Site total MPE% of FCC general public allowable limit: | 38.63 % |

21 B Street · Burlington, MA 01803 · Tel: (781) 273.2500 · Fax: (781) 273.3311

October 16, 2014

T-Mobile USA
Attn: Jason Overbey, RF Manager
35 Griffin Road South
Bloomfield, CT 06002

Emissions Analysis for Site: **CT11057C – Middletown 1**

EBI Consulting was directed to analyze the proposed T-Mobile facility located at **90 Industrial Park Road, Middletown, CT**, for the purpose of determining whether the emissions from the Proposed T-Mobile Antenna Installation located on this property are within specified federal limits.

All information used in this report was analyzed as a percentage of current Maximum Permissible Exposure (% MPE) as listed in the FCC OET Bulletin 65 Edition 97-01and ANSI/IEEE Std C95.1. The FCC regulates Maximum Permissible Exposure in units of microwatts per square centimeter (µW/cm2). The number of $\mu W/cm^2$ calculated at each sample point is called the power density. The exposure limit for power density varies depending upon the frequencies being utilized. Wireless Carriers and Paging Services use different frequency bands each with different exposure limits, therefore it is necessary to report results and limits in terms of percent MPE rather than power density.

All results were compared to the FCC (Federal Communications Commission) radio frequency exposure rules, 47 CFR 1.1307(b)(1) – (b)(3), to determine compliance with the Maximum Permissible Exposure (MPE) limits for General Population/Uncontrolled environments as defined below.

General population/uncontrolled exposure limits apply to situations in which the general public may be exposed or in which persons who are exposed as a consequence of their employment may not be made fully aware of the potential for exposure or cannot exercise control over their exposure. Therefore, members of the general public would always be considered under this category when exposure is not employment related, for example, in the case of a telecommunications tower that exposes persons in a nearby residential area.

Public exposure to radio frequencies is regulated and enforced in units of microwatts per square centimeter ($\mu W/cm^2$). The general population exposure limit for the 700 MHz Band is 467 $\mu W/cm^2$, and the general population exposure limit for the PCS and AWS bands is 1000 $\mu W/cm^2$. Because each carrier will be using different frequency bands, and each frequency band has different exposure limits, it is necessary to report percent of MPE rather than power density.

Occupational/controlled exposure limits apply to situations in which persons are exposed as a consequence of their employment and in which those persons who are exposed have been made fully aware of the potential for exposure and can exercise control over their exposure. Occupational/controlled exposure limits also apply where exposure is of a transient nature as a result of incidental passage through a location where exposure levels may be above general population/uncontrolled limits (see below), as long as the exposed person has been made fully aware of the potential for exposure and can exercise control over his or her exposure by leaving the area or by some other appropriate means.

Additional details can be found in FCC OET 65.

## CALCULATIONS

Calculations were done for the proposed T-Mobile Wireless antenna facility located at **90 Industrial Park Road, Middletown, CT**, using the equipment information listed below. All calculations were performed per the specifications under FCC OET 65. Since T-Mobile is proposing highly focused directional panel antennas, which project most of the emitted energy out toward the horizon, all calculations were performed assuming a lobe representing the maximum gain of the antenna per the antenna manufactures supplied specifications, minus 10 dB, was focused at the base of the tower. For this report the sample point is the top of a 6 foot person standing at the base of the tower.

For all calculations, all equipment was calculated using the following assumptions:

1) 2 GSM channels (PCS Band - 1900 MHz) were considered for each sector of the proposed installation. These Channels have a transmit power of 30 Watts per Channel

2) 2 UMTS channels (AWS Band – 2100 MHz) were considered for each sector of the proposed installation. These Channels have a transmit power of 30 Watts per Channel.

3) 2 LTE channels (AWS Band – 2100 MHz) were considered for each sector of the proposed installation. These Channels have a transmit power of 60 Watts per Channel.

4) 1 LTE channel (700 MHz Band) was considered for each sector of the proposed installation. This channel has a transmit power of 30 Watts.

5) All radios at the proposed installation were considered to be running at full power and were uncombined in their RF transmissions paths per carrier prescribed configuration. Per FCC OET Bulletin No. 65 - Edition 97-01 recommendations to achieve the maximum anticipated value at each sample point, all power levels emitting from the proposed antenna installation are increased by a factor of 2.56 to account for possible in-phase reflections from the surrounding environment. This is rarely the case, and if so, is never continuous.

6) For the following calculations the sample point was the top of a six foot person standing at the base of the tower. The maximum gain of the antenna per the antenna manufactures supplied specifications minus 10 dB was used in this direction. This value is a very conservative estimate as gain reductions for these particular antennas are typically much higher in this direction.

7) The antennas used in this modeling are the **RFS APX16DWV-16DWVS-E-A20** for 1900 MHz (PCS) and 2100 MHz (AWS) channels and the **Commscope LNX-6515DS-VTM** for 700 MHz channels. This is based on feedback from the carrier with regards to anticipated antenna selection. The **RFS APX16DWV-16DWVS-E-A20** has a maximum gain of **16.3 dBd** at its main lobe. The **Commscope LNX-6515DS-VTM** has a maximum gain of **14.6 dBd** at its main lobe. The maximum gain of the antenna per the antenna manufactures supplied specifications, minus 10 dB, was used for all calculations. This value is a very conservative estimate as gain reductions for these particular antennas are typically much higher in this direction.

8) The antenna mounting height centerline of the proposed antennas is **185 feet** above ground level (AGL).

9) Emissions values for additional carriers were taken from the Connecticut Siting Council active database. Values in this database are provided by the individual carriers themselves.

All calculations were done with respect to uncontrolled / general public threshold limits.

## T-Mobile Site Inventory and Power Data

| Sector: | A | Sector: | B | Sector: | C |
|---|---|---|---|---|---|
| Antenna #: | **1** | Antenna #: | **1** | Antenna #: | **1** |
| Make / Model: | RFS APX16DWV-16DWVS-E-A20 | Make / Model: | RFS APX16DWV-16DWVS-E-A20 | Make / Model: | RFS APX16DWV-16DWVS-E-A20 |
| Gain: | 16.3 dBd | Gain: | 16.3 dBd | Gain: | 16.3 dBd |
| Height (AGL): | 185 | Height (AGL): | 185 | Height (AGL): | 185 |
| Frequency Bands | 1900 MHz(PCS) / 2100 MHz (AWS) | Frequency Bands | 1900 MHz(PCS) / 2100 MHz (AWS) | Frequency Bands | 1900 MHz(PCS) / 2100 MHz (AWS) |
| Channel Count | 6 | Channel Count | 6 | # PCS Channels: | 6 |
| Total TX Power: | 240 | Total TX Power: | 240 | # AWS Channels: | 240 |
| ERP (W): | 3,833.82 | ERP (W): | 3,833.82 | ERP (W): | 3,833.82 |
| Antenna A1 MPE% | 1.15 | Antenna B1 MPE% | 1.15 | Antenna C1 MPE% | 1.15 |
| Antenna #: | **2** | Antenna #: | **2** | Antenna #: | **2** |
| Make / Model: | Commscope LNX-6515DS-VTM | Make / Model: | Commscope LNX-6515DS-VTM | Make / Model: | Commscope LNX-6515DS-VTM |
| Gain: | 14.6 dBd | Gain: | 14.6 dBd | Gain: | 14.6 dBd |
| Height (AGL): | 185 | Height (AGL): | 185 | Height (AGL): | 185 |
| Frequency Bands | 700 Mhz | Frequency Bands | 700 Mhz | Frequency Bands | 700 Mhz |
| Channel Count | 1 | Channel Count | 1 | Channel Count | 1 |
| Total TX Power: | 30 | Total TX Power: | 30 | Total TX Power: | 30 |
| ERP (W): | 445.37 | ERP (W): | 445.37 | ERP (W): | 445.37 |
| Antenna A2 MPE% | 0.21 | Antenna B2 MPE% | 0.21 | Antenna C2 MPE% | 0.21 |

| Site Composite MPE% | |
|---|---|
| **Carrier** | **MPE%** |
| T-Mobile | **4.07** |
| AT&T | 10.50 % |
| Verizon Wireless | 24.06 % |
| **Site Total MPE %:** | **38.63 %** |

| | |
|---|---|
| T-Mobile Sector 1 Total: | 1.36 % |
| T-Mobile Sector 2 Total: | 1.36 % |
| T-Mobile Sector 3 Total: | 1.36 % |
| | |
| Site Total: | 38.63 % |

## Summary

All calculations performed for this analysis yielded results that were **within** the allowable limits for general public exposure to RF Emissions.

The anticipated maximum composite contributions from the T-Mobile facility as well as the site composite emissions value with regards to compliance with FCC's allowable limits for general public exposure to RF Emissions are shown here:

| T-Mobile Sector | Power Density Value (%) |
|---|---|
| Sector 1: | 1.36 % |
| Sector 2: | 1.36 % |
| Sector 3 : | 1.36 % |
| T-Mobile Total: | 4.07 % |
| | |
| Site Total: | 38.63 % |
| | |
| Site Compliance Status: | **COMPLIANT** |

The anticipated composite MPE value for this site assuming all carriers present is **38.63%** of the allowable FCC established general public limit sampled at the ground level. This is based upon values listed in the Connecticut Siting Council database for existing carrier emissions.

FCC guidelines state that if a site is found to be out of compliance (over allowable thresholds), that carriers over a 5% contribution to the composite value will require measures to bring the site into compliance. For this facility, the composite values calculated were well within the allowable 100% threshold standard per the federal government.

Scott Heffernan
RF Engineering Director

**EBI Consulting**
21 B Street
Burlington, MA 01803`