From: Zajac, Richard <Richard.Zajac@crowncastle.com>
Sent: Monday, August 2, 2021 1:40 PM
To: Robidoux, Evan <Evan.Robidoux@ct.gov>
Cc: CSC-DL Siting Council <Siting.Council@ct.gov>
Subject: RE: Council Incomplete Letter for TS-DISH-083-210621A (90 Industrial Park Road, Middletown)

Good afternoon,
Pursuant to the incomplete letter issued for TS-DISH-083-210621A, please see the attached mount analysis report. A hard copy of this report will be sent via FedEx to arrive to you tomorrow, 8/3.

If you have any questions/comments/concerns or require additional information in order to resume the review process/issue an approval, please do not hesitate to contact me.

Thank you,
RICH ZAJAC
Site Acquisition Specialist
T: (585) 445-5896 M: (607) 346-7212
F: (724) 416-4461
CROWN CASTLE
4545 East River Road, Suite 320
West Henrietta, NY 14586

Date: **July 23, 2021**

Darcy Tarr
Crown Castle
3530 Toringdon Way, Suite 300
Charlotte, NC 28277
(704) 405-6589

Trylon
1825 W. Walnut Hill Lane,
Suite 302
Irving, TX 75038
214-930-1730

Subject:	**Mount Replacement Analysis Report**	
Carrier Designation:	**Dish Network Equipment Change Out**	
	Carrier Site Number:	BOBDL00056A
	Carrier Site Name:	CT-CCI-T-825983
Crown Castle Designation:	**Crown Castle BU Number:**	825983
	Crown Castle Site Name:	Middletown_1
	Crown Castle JDE Job Number:	645127
	Crown Castle Order Number:	553287 Rev. 3
Engineering Firm Designation:	**Trylon Report Designation:**	188195
Site Data:	**90 Industrial Park Road, Middletown, Middlesex County, CT, 06457**	
	Latitude 41°35'8.30" Longitude -72°42'50.49"	
Structure Information:	**Tower Height & Type:**	**185.0 ft Monopole**
	Mount Elevation:	**165.0 ft**
	Mount Type:	**8.0 ft Platform**

Dear Darcy Tarr,

Trylon is pleased to submit this **"Mount Replacement Analysis Report"** to determine the structural integrity of Dish Network's antenna mounting system with the proposed appurtenance and equipment addition on the abovementioned supporting tower structure. Analysis of the existing supporting tower structure is to be completed by others and therefore is not part of this analysis. Analysis of the antenna mounting system as a tie-off point for fall protection or rigging is not part of this document.

The purpose of the analysis is to determine acceptability of the mount stress level. Based on our analysis we have determined the mount stress level to be:

Platform **Sufficient**
***Sufficient upon completion of the changes listed in the 'Recommendations' section of this report.**

This analysis utilizes an ultimate 3-second gust wind speed of 130 mph as required by the 2015 International Building Code. Applicable Standard references and design criteria are listed in Section 2 - Analysis Criteria.

Mount analysis prepared by: Bryan P. Mawhinney

Respectfully Submitted by:
Jinshan Wang, P.E.

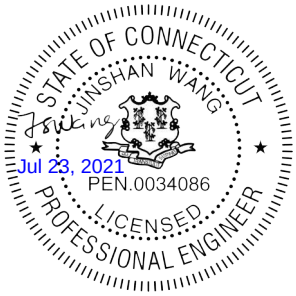

TABLE OF CONTENTS

1) INTRODUCTION

2) ANALYSIS CRITERIA
Table 1 - Proposed Equipment Configuration

3) ANALYSIS PROCEDURE
Table 2 - Documents Provided
3.1) Analysis Method
3.2) Assumptions

4) ANALYSIS RESULTS
Table 3 - Mount Component Stresses vs. Capacity
4.1) Recommendations

5) APPENDIX A
Wire Frame and Rendered Models

6) APPENDIX B
Software Input Calculations

7) APPENDIX C
Software Analysis Output

8) APPENDIX D
Additional Calculations

9) APPENDIX E
Supplemental Drawings

1) INTRODUCTION

This is a proposed 3 sector 8.0 ft Platform, designed by Commscope.

2) ANALYSIS CRITERIA

Building Code:	2015 IBC
TIA-222 Revision:	TIA-222-H
Risk Category:	II
Ultimate Wind Speed:	130 mph
Exposure Category:	C
Topographic Factor at Base:	1.0
Topographic Factor at Mount:	1.0
Ice Thickness:	1.5 in
Wind Speed with Ice:	50 mph
Seismic S_s:	0.180
Seismic S_1:	0.063
Live Loading Wind Speed:	30 mph
Man Live Load at Mid/End-Points:	250 lb
Man Live Load at Mount Pipes:	500 lb

Table 1 - Proposed Equipment Configuration

Mount Centerline (ft)	Antenna Centerline (ft)	Number of Antennas	Antenna Manufacturer	Antenna Model	Mount / Modification Details
165.0	165.0	3	JMA WIRELESS	MX08FRO665-20	8.0 ft Platform [Commscope MC-PK8-DSH]
		3	FUJITSU	TA08025-B604	
		3	FUJITSU	TA08025-B605	
		1	RAYCAP	RDIDC-9181-PF-48	

3) ANALYSIS PROCEDURE

Table 2 - Documents Provided

Document	Remarks	Reference	Source
Crown Application	Dish Network Application	553287 Rev. 3	CCI Sites
Construction Drawings	Infinigy	Site ID: BOBDL00056A	TSA
Mount Manufacturer Drawings	Commscope	MC-PK8-DSH	TSA

3.1) Analysis Method

RISA-3D (Version 17.0.4), a commercially available analysis software package, was used to create a three-dimensional model of the antenna mounting system and calculate member stresses for various loading cases.

A tool internally developed, using Microsoft Excel, by Trylon was used to calculate wind loading on all appurtenances, dishes, and mount members for various load cases. Selected output from the analysis is included in Appendix B.

This analysis was performed in accordance with Crown Castle's ENG-SOW-10208 *Tower Mount Analysis* (Revision B).

3.2) Assumptions

1) The antenna mounting system was properly fabricated, installed and maintained in good condition in accordance with its original design and manufacturer's specifications.
2) The configuration of antennas, mounts, and other appurtenances are as specified in Table 1 and the referenced drawings.
3) All member connections are assumed to have been designed to meet or exceed the load carrying capacity of the connected member unless otherwise specified in this report.
4) The analysis will be required to be revised if the existing conditions in the field differ from those shown in the above-referenced documents or assumed in this analysis. No allowance was made for any damaged, missing, or rusted members.
5) Prior structural modifications to the tower mounting system are assumed to be installed as shown per available data.
6) Steel grades have been assumed as follows, unless noted otherwise:

Channel, Solid Round, Angle, Plate	ASTM A36 (GR 36)
HSS (Rectangular)	ASTM A500 (GR B-46)
Pipe	ASTM A53 (GR 35)
Connection Bolts	ASTM A325

This analysis may be affected if any assumptions are not valid or have been made in error. Trylon should be notified to determine the effect on the structural integrity of the antenna mounting system.

4) ANALYSIS RESULTS

Table 3 - Mount Component Stresses vs. Capacity (Platform, Worst Case Sector)

Notes	Component	Critical Member	Centerline (ft)	% Capacity	Pass / Fail
1, 2	Mount Pipe(s)	MP4	165.0	37.7	Pass
	Horizontal(s)	H3		12.8	Pass
	Standoff(s)	M12		51.0	Pass
	Mount Connection(s)	--		21.1	Pass

Structure Rating (max from all components) =	**51.0%**

Notes:
1) See additional documentation in "Appendix C - Software Analysis Output" for calculations supporting the % capacity consumed.
2) Rating per TIA-222-H, Section 15.5

4.1) Recommendations

The mount has sufficient capacity to carry the proposed loading configuration. In order for the results of the analysis to be considered valid, the proposed mount listed below must be installed.

1. Commscope MC-PK8-DSH.

No structural modifications are required at this time, provided that the above-listed changes are implemented.

APPENDIX A

WIRE FRAME AND RENDERED MODELS

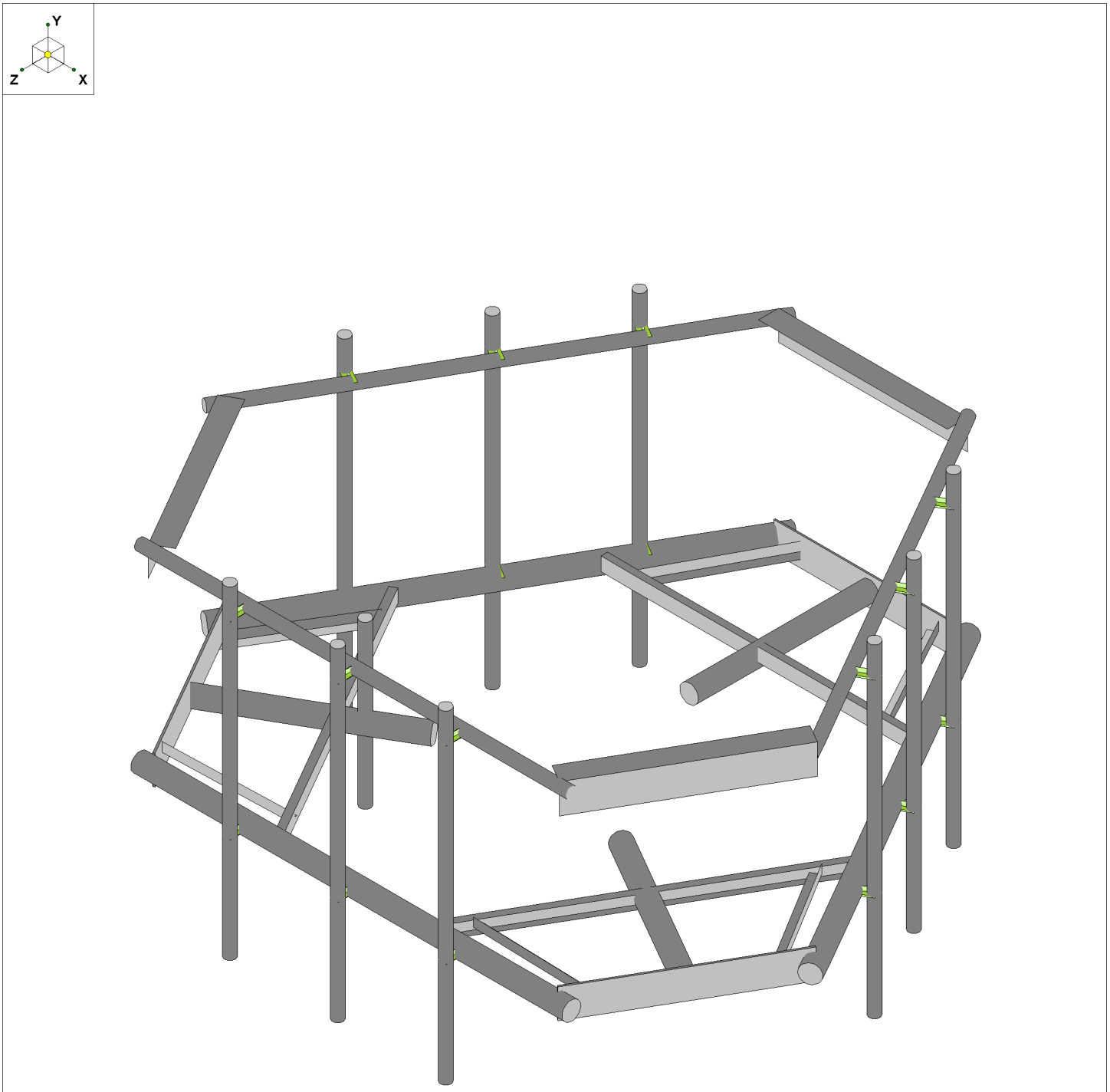

	MC-PK8-C	SK - 1
		July 23, 2021 at 2:54 PM
		MC-PK8-C_loaded.r3d

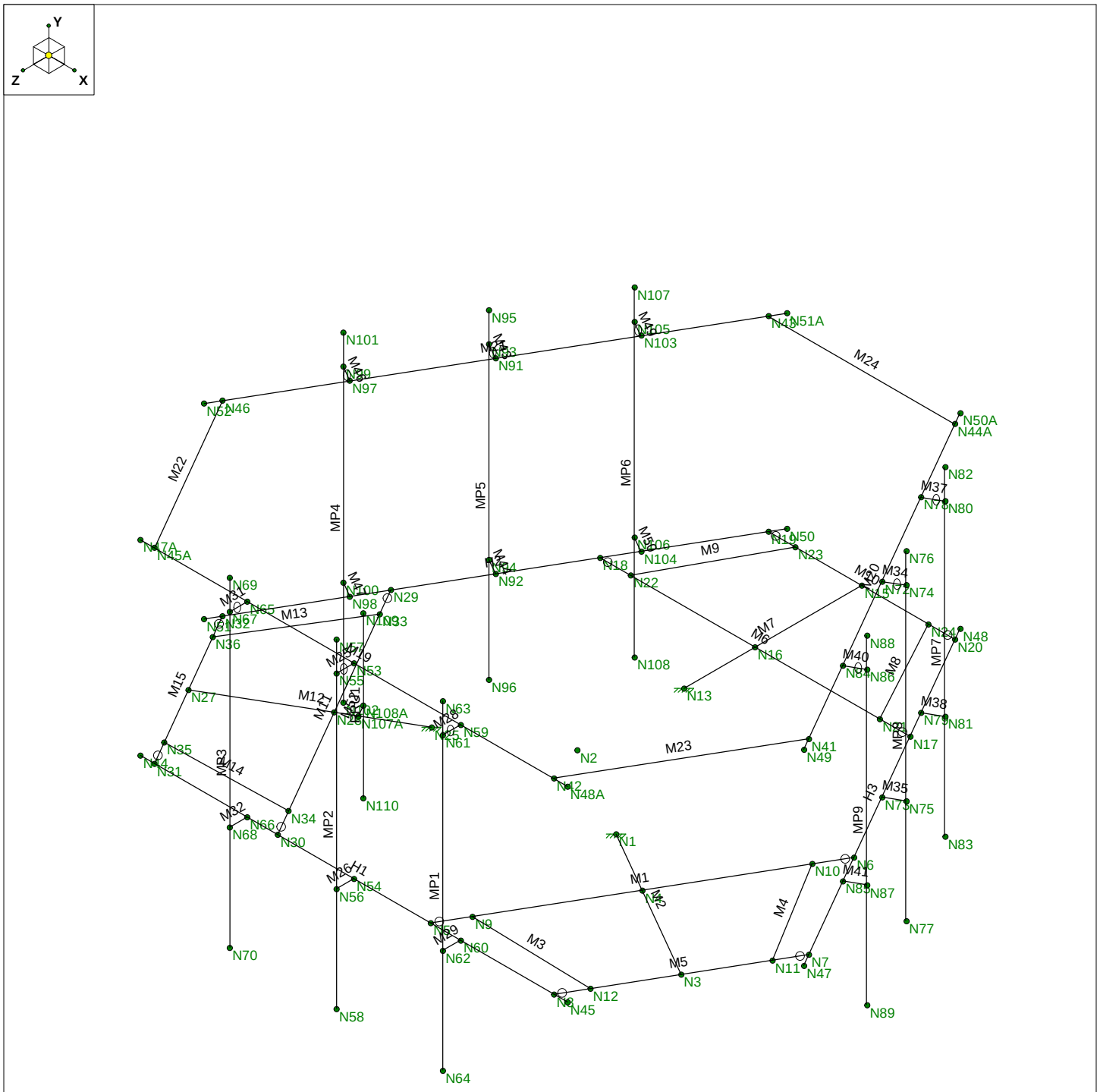

	MC-PK8-C	SK - 2
		July 23, 2021 at 2:55 PM
		MC-PK8-C_loaded.r3d

APPENDIX B

SOFTWARE INPUT CALCULATIONS

ASCE 7 Hazards Report

Address:
No Address at This Location

Standard: ASCE/SEI 7-10
Risk Category: II
Soil Class:

Elevation: 89.45 ft (NAVD 88)
Latitude: 41.585639
Longitude: -72.714028

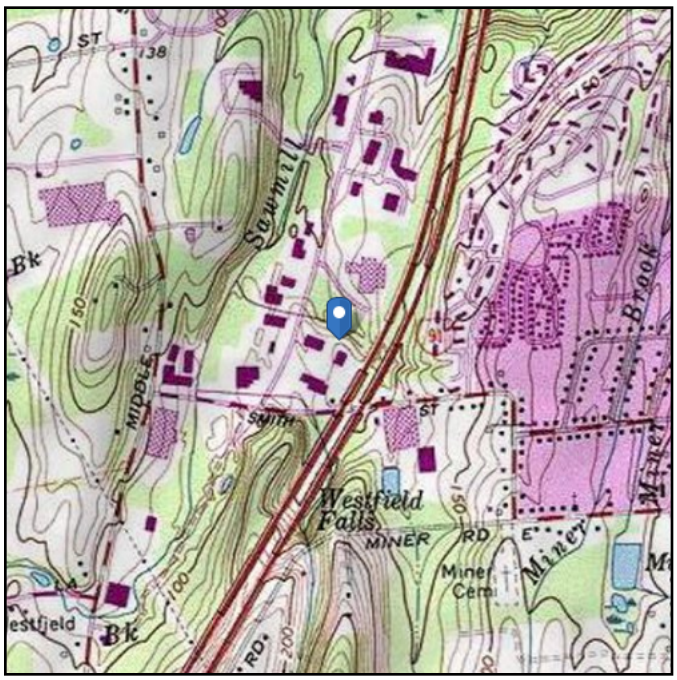

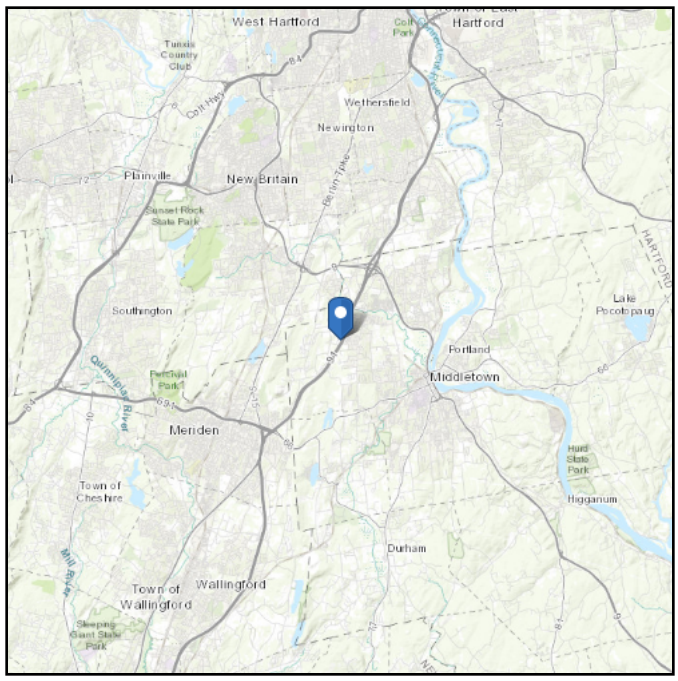

Ice

Results:

Ice Thickness:	0.75 in.
Concurrent Temperature:	15 F
Gust Speed:	50 mph

Data Source: Standard ASCE/SEI 7-10, Figs. 10-2 through 10-8

Date Accessed: Wed Jul 21 2021

Ice thicknesses on structures in exposed locations at elevations higher than the surrounding terrain and in valleys and gorges may exceed the mapped values.

Values provided are equivalent radial ice thicknesses due to freezing rain with concurrent 3-second gust speeds, for a 50-year mean recurrence interval, and temperatures concurrent with ice thicknesses due to freezing rain. Thicknesses for ice accretions caused by other sources shall be obtained from local meteorological studies. Ice thicknesses in exposed locations at elevations higher than the surrounding terrain and in valleys and gorges may exceed the mapped values.

The ASCE 7 Hazard Tool is provided for your convenience, for informational purposes only, and is provided “as is” and without warranties of any kind. The location data included herein has been obtained from information developed, produced, and maintained by third party providers; or has been extrapolated from maps incorporated in the ASCE 7 standard. While ASCE has made every effort to use data obtained from reliable sources or methodologies, ASCE does not make any representations or warranties as to the accuracy, completeness, reliability, currency, or quality of any data provided herein. Any third-party links provided by this Tool should not be construed as an endorsement, affiliation, relationship, or sponsorship of such third-party content by or from ASCE.

ASCE does not intend, nor should anyone interpret, the results provided by this Tool to replace the sound judgment of a competent professional, having knowledge and experience in the appropriate field(s) of practice, nor to substitute for the standard of care required of such professionals in interpreting and applying the contents of this Tool or the ASCE 7 standard.

In using this Tool, you expressly assume all risks associated with your use. Under no circumstances shall ASCE or its officers, directors, employees, members, affiliates, or agents be liable to you or any other person for any direct, indirect, special, incidental, or consequential damages arising from or related to your use of, or reliance on, the Tool or any information obtained therein. To the fullest extent permitted by law, you agree to release and hold harmless ASCE from any and all liability of any nature arising out of or resulting from any use of data provided by the ASCE 7 Hazard Tool.

Trylon
1825 W. Walnut Hill Lane Suite 120
Irving, TX 75038

TIA LOAD CALCULATOR 2.0

PROJECT DATA	
Job Code:	188195
Carrier Site ID:	BOBDL00056A
Carrier Site Name:	BOBDL00056A

CODES AND STANDARDS	
Building Code:	2015 IBC
Local Building Code:	0
Design Standard:	TIA-222-H

STRUCTURE DETAILS		
Mount Type:	Platform	--
Mount Elevation:	165.0	ft.
Number of Sectors:	3	--
Structure Type:	Monopole	--
Structure Height:	185.0	ft.

ANALYSIS CRITERIA		
Structure Risk Category:	II	--
Exposure Category:	C	--
Site Class:	D - Default	--
Ground Elevation:	89	ft.

TOPOGRAPHIC DATA		
Topographic Category:	1.00	--
Topographic Feature:	N/A	--
Crest Point Elevation:	0.00	ft.
Base Point Elevation:	0.00	ft.
Crest to Mid-Height (L/2):	0.00	ft.
Distance from Crest (x):	0.00	ft.
Base Topo Factor (K_{zt}):	1.00	--
Mount Topo Factor (K_{zt}):	1.00	--

WIND PARAMETERS		
Design Wind Speed:	130	mph
Wind Escalation Factor (K_s):	1.00	--
Velocity Coefficient (K_z):	1.41	--
Directionality Factor (K_d):	0.95	--
Gust Effect Factor (Gh):	1.00	--
Shielding Factor (K_a):	0.90	--
Velocity Pressure (q_z):	57.62	psf

ICE PARAMETERS		
Design Ice Wind Speed:	50	mph
Design Ice Thickness (t_i):	1.50	in
Importance Factor (I_i):	1.00	--
Ice Velocity Pressure (q_{zi}):	57.62	psf
Mount Ice Thickness (t_{iz}):	1.76	in

WIND STRUCTURE CALCULATIONS		
Flat Member Pressure:	103.71	psf
Round Member Pressure:	62.22	psf
Ice Wind Pressure:	7.69	psf

SEISMIC PARAMETERS		
Importance Factor (I_e):	1.00	--
Short Period Accel .(S_s):	0.18	g
1 Second Accel (S_1):	0.06	g
Short Period Des. (S_{DS}):	0.19	g
1 Second Des. (S_{D1}):	0.10	g
Short Period Coeff. (F_a):	1.60	--
1 Second Coeff. (F_v):	2.40	--
Response Coefficient (Cs):	0.10	--
Amplification Factor (A_S):	1.20	--

LOAD COMBINATIONS [LRFD]

#	Description
1	1.4DL
2	1.2DL + 1WL 0 AZI
3	1.2DL + 1WL 30 AZI
4	1.2DL + 1WL 45 AZI
5	1.2DL + 1WL 60 AZI
6	1.2DL + 1WL 90 AZI
7	1.2DL + 1WL 120 AZI
8	1.2DL + 1WL 135 AZI
9	1.2DL + 1WL 150 AZI
10	1.2DL + 1WL 180 AZI
11	1.2DL + 1WL 210 AZI
12	1.2DL + 1WL 225 AZI
13	1.2DL + 1WL 240 AZI
14	1.2DL + 1WL 270 AZI
15	1.2DL + 1WL 300 AZI
16	1.2DL + 1WL 315 AZI
17	1.2DL + 1WL 330 AZI
18	0.9DL + 1WL 0 AZI
19	0.9DL + 1WL 30 AZI
20	0.9DL + 1WL 45 AZI
21	0.9DL + 1WL 60 AZI
22	0.9DL + 1WL 90 AZI
23	0.9DL + 1WL 120 AZI
24	0.9DL + 1WL 135 AZI
25	0.9DL + 1WL 150 AZI
26	0.9DL + 1WL 180 AZI
27	0.9DL + 1WL 210 AZI
28	0.9DL + 1WL 225 AZI
29	0.9DL + 1WL 240 AZI
30	0.9DL + 1WL 270 AZI
31	0.9DL + 1WL 300 AZI
32	0.9DL + 1WL 315 AZI
33	0.9DL + 1WL 330 AZI
34	1.2DL + 1DLi + 1WLi 0 AZI
35	1.2DL + 1DLi + 1WLi 30 AZI
36	1.2DL + 1DLi + 1WLi 45 AZI
37	1.2DL + 1DLi + 1WLi 60 AZI
38	1.2DL + 1DLi + 1WLi 90 AZI
39	1.2DL + 1DLi + 1WLi 120 AZI
40	1.2DL + 1DLi + 1WLi 135 AZI
41	1.2DL + 1DLi + 1WLi 150 AZI

#	Description
42	1.2DL + 1DLi + 1WLi 180 AZI
43	1.2DL + 1DLi + 1WLi 210 AZI
44	1.2DL + 1DLi + 1WLi 225 AZI
45	1.2DL + 1DLi + 1WLi 240 AZI
46	1.2DL + 1DLi + 1WLi 270 AZI
47	1.2DL + 1DLi + 1WLi 300 AZI
48	1.2DL + 1DLi + 1WLi 315 AZI
49	1.2DL + 1DLi + 1WLi 330 AZI
50	(1.2+0.2Sds) + 1.0E 0 AZI
51	(1.2+0.2Sds) + 1.0E 30 AZI
52	(1.2+0.2Sds) + 1.0E 45 AZI
53	(1.2+0.2Sds) + 1.0E 60 AZI
54	(1.2+0.2Sds) + 1.0E 90 AZI
55	(1.2+0.2Sds) + 1.0E 120 AZI
56	(1.2+0.2Sds) + 1.0E 135 AZI
57	(1.2+0.2Sds) + 1.0E 150 AZI
58	(1.2+0.2Sds) + 1.0E 180 AZI
59	(1.2+0.2Sds) + 1.0E 210 AZI
60	(1.2+0.2Sds) + 1.0E 225 AZI
61	(1.2+0.2Sds) + 1.0E 240 AZI
62	(1.2+0.2Sds) + 1.0E 270 AZI
63	(1.2+0.2Sds) + 1.0E 300 AZI
64	(1.2+0.2Sds) + 1.0E 315 AZI
65	(1.2+0.2Sds) + 1.0E 330 AZI
66	(0.9-0.2Sds) + 1.0E 0 AZI
67	(0.9-0.2Sds) + 1.0E 30 AZI
68	(0.9-0.2Sds) + 1.0E 45 AZI
69	(0.9-0.2Sds) + 1.0E 60 AZI
70	(0.9-0.2Sds) + 1.0E 90 AZI
71	(0.9-0.2Sds) + 1.0E 120 AZI
72	(0.9-0.2Sds) + 1.0E 135 AZI
73	(0.9-0.2Sds) + 1.0E 150 AZI
74	(0.9-0.2Sds) + 1.0E 180 AZI
75	(0.9-0.2Sds) + 1.0E 210 AZI
76	(0.9-0.2Sds) + 1.0E 225 AZI
77	(0.9-0.2Sds) + 1.0E 240 AZI
78	(0.9-0.2Sds) + 1.0E 270 AZI
79	(0.9-0.2Sds) + 1.0E 300 AZI
80	(0.9-0.2Sds) + 1.0E 315 AZI
81	(0.9-0.2Sds) + 1.0E 330 AZI
82-88	1.2D + 1.5 Lv1

#	Description
89	1.2D + 1.5Lm + 1.0Wm 0 AZI - MP1
90	1.2D + 1.5Lm + 1.0Wm 30 AZI - MP1
91	1.2D + 1.5Lm + 1.0Wm 45 AZI - MP1
92	1.2D + 1.5Lm + 1.0Wm 60 AZI - MP1
93	1.2D + 1.5Lm + 1.0Wm 90 AZI - MP1
94	1.2D + 1.5Lm + 1.0Wm 120 AZI - MP1
95	1.2D + 1.5Lm + 1.0Wm 135 AZI - MP1
96	1.2D + 1.5Lm + 1.0Wm 150 AZI - MP1
97	1.2D + 1.5Lm + 1.0Wm 180 AZI - MP1
98	1.2D + 1.5Lm + 1.0Wm 210 AZI - MP1
99	1.2D + 1.5Lm + 1.0Wm 225 AZI - MP1
100	1.2D + 1.5Lm + 1.0Wm 240 AZI - MP1
101	1.2D + 1.5Lm + 1.0Wm 270 AZI - MP1
102	1.2D + 1.5Lm + 1.0Wm 300 AZI - MP1
103	1.2D + 1.5Lm + 1.0Wm 315 AZI - MP1
104	1.2D + 1.5Lm + 1.0Wm 330 AZI - MP1
105	1.2D + 1.5Lm + 1.0Wm 0 AZI - MP2
106	1.2D + 1.5Lm + 1.0Wm 30 AZI - MP2
107	1.2D + 1.5Lm + 1.0Wm 45 AZI - MP2
108	1.2D + 1.5Lm + 1.0Wm 60 AZI - MP2
109	1.2D + 1.5Lm + 1.0Wm 90 AZI - MP2
110	1.2D + 1.5Lm + 1.0Wm 120 AZI - MP2
111	1.2D + 1.5Lm + 1.0Wm 135 AZI - MP2
112	1.2D + 1.5Lm + 1.0Wm 150 AZI - MP2
113	1.2D + 1.5Lm + 1.0Wm 180 AZI - MP2
114	1.2D + 1.5Lm + 1.0Wm 210 AZI - MP2
115	1.2D + 1.5Lm + 1.0Wm 225 AZI - MP2
116	1.2D + 1.5Lm + 1.0Wm 240 AZI - MP2
117	1.2D + 1.5Lm + 1.0Wm 270 AZI - MP2
118	1.2D + 1.5Lm + 1.0Wm 300 AZI - MP2
119	1.2D + 1.5Lm + 1.0Wm 315 AZI - MP2
120	1.2D + 1.5Lm + 1.0Wm 330 AZI - MP2

#	Description
121	1.2D + 1.5Lm + 1.0Wm 0 AZI - MP3
122	1.2D + 1.5Lm + 1.0Wm 30 AZI - MP3
123	1.2D + 1.5Lm + 1.0Wm 45 AZI - MP3
124	1.2D + 1.5Lm + 1.0Wm 60 AZI - MP3
125	1.2D + 1.5Lm + 1.0Wm 90 AZI - MP3
126	1.2D + 1.5Lm + 1.0Wm 120 AZI - MP3
127	1.2D + 1.5Lm + 1.0Wm 135 AZI - MP3
128	1.2D + 1.5Lm + 1.0Wm 150 AZI - MP3
129	1.2D + 1.5Lm + 1.0Wm 180 AZI - MP3
130	1.2D + 1.5Lm + 1.0Wm 210 AZI - MP3
131	1.2D + 1.5Lm + 1.0Wm 225 AZI - MP3
132	1.2D + 1.5Lm + 1.0Wm 240 AZI - MP3
133	1.2D + 1.5Lm + 1.0Wm 270 AZI - MP3
134	1.2D + 1.5Lm + 1.0Wm 300 AZI - MP3
135	1.2D + 1.5Lm + 1.0Wm 315 AZI - MP3
136	1.2D + 1.5Lm + 1.0Wm 330 AZI - MP3
137	1.2D + 1.5Lm + 1.0Wm 0 AZI - MP4
138	1.2D + 1.5Lm + 1.0Wm 30 AZI - MP4
139	1.2D + 1.5Lm + 1.0Wm 45 AZI - MP4
140	1.2D + 1.5Lm + 1.0Wm 60 AZI - MP4
141	1.2D + 1.5Lm + 1.0Wm 90 AZI - MP4
142	1.2D + 1.5Lm + 1.0Wm 120 AZI - MP4
143	1.2D + 1.5Lm + 1.0Wm 135 AZI - MP4
144	1.2D + 1.5Lm + 1.0Wm 150 AZI - MP4
145	1.2D + 1.5Lm + 1.0Wm 180 AZI - MP4
146	1.2D + 1.5Lm + 1.0Wm 210 AZI - MP4
147	1.2D + 1.5Lm + 1.0Wm 225 AZI - MP4
148	1.2D + 1.5Lm + 1.0Wm 240 AZI - MP4
149	1.2D + 1.5Lm + 1.0Wm 270 AZI - MP4
150	1.2D + 1.5Lm + 1.0Wm 300 AZI - MP4
151	1.2D + 1.5Lm + 1.0Wm 315 AZI - MP4
152	1.2D + 1.5Lm + 1.0Wm 330 AZI - MP4

*This page shows an example of maintenance loads for (4) pipes, the number of mount pipe LCs may vary per site

EQUIPMENT LOADING

Appurtenance Name/Location	Qty.	Elevation [ft]	--	EPA_N (ft2)	EPA_T (ft2)	Weight (lbs)
MX08FRO665-20	3	165	No Ice	8.01	3.21	82.50
MP1/MP4/MP7, 0/120/240	--	--	w/ Ice	9.63	4.63	293.04
TA08025-B604	3	165	No Ice	1.96	0.98	63.90
MP1/MP4/MP7, 0/120/240	--	--	w/ Ice	2.40	1.32	71.45
TA08025-B605	3	165	No Ice	1.96	1.13	75.00
MP1/MP4/MP7, 0/120/240	--	--	w/ Ice	2.40	1.48	76.10
RDIDC-9181-PF-48	1	165	No Ice	2.01	1.17	21.85
RRU1, 0	--	--	w/ Ice	2.45	1.53	75.01
			No Ice			
--	--	--	w/ Ice			
			No Ice			
--	--	--	w/ Ice			
			No Ice			
--	--	--	w/ Ice			
			No Ice			
--	--	--	w/ Ice			
			No Ice			
--	--	--	w/ Ice			
			No Ice			
--	--	--	w/ Ice			
			No Ice			
--	--	--	w/ Ice			
			No Ice			
--	--	--	w/ Ice			
			No Ice			
--	--	--	w/ Ice			
			No Ice			
--	--	--	w/ Ice			
			No Ice			
--	--	--	w/ Ice			
			No Ice			
--	--	--	w/ Ice			
			No Ice			
--	--	--	w/ Ice			
			No Ice			
--	--	--	w/ Ice			
			No Ice			
--	--	--	w/ Ice			
			No Ice			
--	--	--	w/ Ice			
			No Ice			
--	--	--	w/ Ice			
			No Ice			
--	--	--	w/ Ice			
			No Ice			
--	--	--	w/ Ice			
			No Ice			
--	--	--	w/ Ice			
			No Ice			
--	--	--	w/ Ice			
			No Ice			
--	--	--	w/ Ice			
			No Ice			
--	--	--	w/ Ice			

EQUIPMENT LOADING [CONT.]

Appurtenance Name/Location	Qty.	Elevation [ft]	--	EPA_N (ft2)	EPA_T (ft2)	Weight (lbs)
			No Ice			
--	--	--	w/ Ice			
			No Ice			
--	--	--	w/ Ice			
			No Ice			
--	--	--	w/ Ice			
			No Ice			
--	--	--	w/ Ice			
			No Ice			
--	--	--	w/ Ice			
			No Ice			
--	--	--	w/ Ice			
			No Ice			
--	--	--	w/ Ice			
			No Ice			
--	--	--	w/ Ice			
			No Ice			
--	--	--	w/ Ice			
			No Ice			
--	--	--	w/ Ice			
			No Ice			
--	--	--	w/ Ice			
			No Ice			
--	--	--	w/ Ice			
			No Ice			
--	--	--	w/ Ice			

EQUIPMENT WIND CALCULATIONS

Appurtenance Name	Qty.	Elevation [ft]	K_{zt}	K_z	K_d	t_d	q_z [psf]	q_{zi} [psf]
MX08FRO665-20	3	165	1.00	1.41	0.95	1.76	57.62	8.52
TA08025-B604	3	165	1.00	1.41	0.95	1.76	57.62	8.52
TA08025-B605	3	165	1.00	1.41	0.95	1.76	57.62	8.52
RDIDC-9181-PF-48	1	165	1.00	1.41	0.95	1.76	57.62	8.52

EQUIPMENT LATERAL WIND FORCE CALCULATIONS

Appurtenance Name	Qty.	--	0° 180°	30° 210°	60° 240°	90° 270°	120° 300°	150° 330°
MX08FRO665-20	3	No Ice	415.35	228.68	353.13	166.45	353.13	228.68
MP1/MP4/MP7, 0/120/240	--	w/ Ice	73.89	45.13	64.30	35.54	64.30	45.13
TA08025-B604	3	No Ice	101.82	63.61	89.08	50.88	89.08	63.61
MP1/MP4/MP7, 0/120/240	--	w/ Ice	18.38	12.17	16.31	10.11	16.31	12.17
TA08025-B605	3	No Ice	101.82	69.38	91.00	58.57	91.00	69.38
MP1/MP4/MP7, 0/120/240	--	w/ Ice	18.38	13.11	16.62	11.35	16.62	13.11
RDIDC-9181-PF-48	1	No Ice	104.32	71.51	93.39	60.58	93.39	71.51
RRU1, 0	--	w/ Ice	18.80	13.52	17.04	11.76	17.04	13.52
		No Ice						
--	--	w/ Ice						
		No Ice						
--	--	w/ Ice						
		No Ice						
--	--	w/ Ice						
		No Ice						
--	--	w/ Ice						
		No Ice						
--	--	w/ Ice						
		No Ice						
--	--	w/ Ice						
		No Ice						
--	--	w/ Ice						
		No Ice						
--	--	w/ Ice						
		No Ice						
--	--	w/ Ice						
		No Ice						
--	--	w/ Ice						
		No Ice						
--	--	w/ Ice						
		No Ice						
--	--	w/ Ice						
		No Ice						
--	--	w/ Ice						
		No Ice						
--	--	w/ Ice						
		No Ice						
--	--	w/ Ice						
		No Ice						
--	--	w/ Ice						
		No Ice						
--	--	w/ Ice						
		No Ice						
--	--	w/ Ice						

EQUIPMENT LATERAL WIND FORCE CALCULATIONS [CONT.]

Appurtenance Name	*Qty.*	*--*	*0° 180°*	*30° 210°*	*60° 240°*	*90° 270°*	*120° 300°*	*150° 330°*
		No Ice						
--	--	w/ Ice						
		No Ice						
--	--	w/ Ice						
		No Ice						
--	--	w/ Ice						
		No Ice						
--	--	w/ Ice						
		No Ice						
--	--	w/ Ice						
		No Ice						
--	--	w/ Ice						
		No Ice						
--	--	w/ Ice						
		No Ice						
--	--	w/ Ice						
		No Ice						
--	--	w/ Ice						
		No Ice						
--	--	w/ Ice						
		No Ice						
--	--	w/ Ice						
		No Ice						
--	--	w/ Ice						

EQUIPMENT SEISMIC FORCE CALCULATIONS

Appurtenance Name	*Qty.*	*Elevation [ft]*	*Weight [lbs]*	F_p [lbs]
MX08FRO665-20	3	165	82.5	9.50
TA08025-B604	3	165	63.9	7.36
TA08025-B605	3	165	75	8.64
RDIDC-9181-PF-48	1	165	21.85	2.52

APPENDIX C

SOFTWARE ANALYSIS OUTPUT

(Global) Model Settings

Display Sections for Member Calcs	5
Max Internal Sections for Member Calcs	97
Include Shear Deformation?	Yes
Increase Nailing Capacity for Wind?	Yes
Include Warping?	Yes
Trans Load Btwn Intersecting Wood Wall?	Yes
Area Load Mesh (in^2)	144
Merge Tolerance (in)	.12
P-Delta Analysis Tolerance	0.50%
Include P-Delta for Walls?	Yes
Automatically Iterate Stiffness for Walls?	Yes
Max Iterations for Wall Stiffness	3
Gravity Acceleration (in/sec^2)	386.4
Wall Mesh Size (in)	24
Eigensolution Convergence Tol. (1.E-)	4
Vertical Axis	Y
Global Member Orientation Plane	XZ
Static Solver	Sparse Accelerated
Dynamic Solver	Accelerated Solver

Hot Rolled Steel Code	AISC 15th(360-16): LRFD
Adjust Stiffness?	Yes(Iterative)
RISAConnection Code	AISC 15th(360-16): LRFD
Cold Formed Steel Code	AISI S100-12: LRFD
Wood Code	AWC NDS-15: ASD
Wood Temperature	< 100F
Concrete Code	ACI 318-14
Masonry Code	ACI 530-13: Strength
Aluminum Code	AA ADM1-10: LRFD - Building
Stainless Steel Code	AISC 14th(360-10): LRFD
Adjust Stiffness?	Yes(Iterative)

Number of Shear Regions	4
Region Spacing Increment (in)	4
Biaxial Column Method	Exact Integration
Parme Beta Factor (PCA)	.65
Concrete Stress Block	Rectangular
Use Cracked Sections?	Yes
Use Cracked Sections Slab?	Yes
Bad Framing Warnings?	No
Unused Force Warnings?	Yes
Min 1 Bar Diam. Spacing?	No
Concrete Rebar Set	REBAR_SET_ASTMA615
Min % Steel for Column	1
Max % Steel for Column	8

(Global) Model Settings, Continued

Seismic Code	ASCE 7-10
Seismic Base Elevation (in)	Not Entered
Add Base Weight?	Yes
Ct X	.02
Ct Z	.02
T X (sec)	Not Entered
T Z (sec)	Not Entered
R X	3
R Z	3
Ct Exp. X	.75
Ct Exp. Z	.75
SD1	1
SDS	1
S1	1
TL (sec)	5
Risk Cat	I or II
Drift Cat	Other
Om Z	1
Om X	1
Cd Z	1
Cd X	1
Rho Z	1
Rho X	1

Material Takeoff

	Material	Size	Pieces	Length[in]	Weight[K]
1	General				
2	RIGID		19	75	0
3	Total General		19	75	0
4					
5	Hot Rolled Steel				
6	A36 Gr.36	C3X5	3	209.1	.087
7	A36 Gr.36	L6 5/8x4 7/16x3/16	3	126	.073
8	A36 Gr.36	L2x2x3	6	163.8	.034
9	A53 Gr.B	6.5"x0.37" Plate	3	126	.086
10	A53 Gr.B	PIPE 2.0	13	972	.281
11	A53 Gr.B	PIPE 3.5	6	408	.289
12	Total HR Steel		34	2004.9	.85

Joint Coordinates and Temperatures

	Label	X [in]	Y [in]	Z [in]	Temp [F]	Detach From Diap...
1	N1	20.78461	0	-12	0	
2	N2	0	0	-24	0	
3	N3	55.425626	0	8	0	
4	N4	34.641016	0	-4	0	
5	N5	17.212813	0	26.186533	0	
6	N6	52.069219	0	-34.186533	0	
7	N7	65.925626	0	-10.186533	0	
8	N8	44.925626	0	26.186533	0	
9	N9	20.641016	0	20.248711	0	

Joint Coordinates and Temperatures (Continued)

	Label	X [in]	Y [in]	Z [in]	Temp [F]	Detach From Diap...
10	N10	48.641016	0	-28.248711	0	
11	N11	62.925626	0	-4.990381	0	
12	N12	47.925626	0	20.990381	0	
13	N13	-0.	0	-48	0	
14	N15	-0.	0	-88	0	
15	N16	-0.	0	-64	0	
16	N17	34.856406	0	-64	0	
17	N18	-34.856406	0	-64	0	
18	N19	-21	0	-88	0	
19	N20	21	0	-88	0	
20	N21	28	0	-64	0	
21	N22	-28	0	-64	0	
22	N23	-15	0	-88	0	
23	N24	15	0	-88	0	
24	N25	-20.78461	0	-12	0	
25	N27	-55.425626	0	8	0	
26	N28	-34.641016	0	-4	0	
27	N29	-52.069219	0	-34.186533	0	
28	N30	-17.212813	0	26.186533	0	
29	N31	-44.925626	0	26.186533	0	
30	N32	-65.925626	0	-10.186533	0	
31	N33	-48.641016	0	-28.248711	0	
32	N34	-20.641016	0	20.248711	0	
33	N35	-47.925626	0	20.990381	0	
34	N36	-62.925626	0	-4.990381	0	
35	N44	-48.000126	0	26.186533	0	
36	N45	48.000126	0	26.186533	0	
37	N47	67.462876	0	-7.523938	0	
38	N48	19.46275	0	-90.662595	0	
39	N50	-19.46275	0	-90.662595	0	
40	N51	-67.462876	0	-7.523938	0	
41	N41	65.925626	42	-10.186533	0	
42	N42	44.925626	42	26.186533	0	
43	N43	-21	42	-88	0	
44	N44A	21	42	-88	0	
45	N45A	-44.925626	42	26.186533	0	
46	N46	-65.925626	42	-10.186533	0	
47	N47A	-48.000126	42	26.186533	0	
48	N48A	48.000126	42	26.186533	0	
49	N49	67.462876	42	-7.523938	0	
50	N50A	19.46275	42	-90.662595	0	
51	N51A	-19.46275	42	-90.662595	0	
52	N52	-67.462876	42	-7.523938	0	
53	N53	0	42	26.186533	0	
54	N54	0	0	26.186533	0	
55	N55	0	42	30.186533	0	
56	N56	0	0	30.186533	0	
57	N57	0	48.625	30.186533	0	
58	N58	0	-23.375	30.186533	0	
59	N59	24	42	26.186533	0	
60	N60	24	0	26.186533	0	
61	N61	24	42	30.186533	0	

Joint Coordinates and Temperatures (Continued)

	Label	X [in]	Y [in]	Z [in]	Temp [F]	Detach From Diap...
62	N62	24	0	30.186533	0	
63	N63	24	48.625	30.186533	0	
64	N64	24	-23.375	30.186533	0	
65	N65	-24	42	26.186533	0	
66	N66	-24	0	26.186533	0	
67	N67	-24	42	30.186533	0	
68	N68	-24	0	30.186533	0	
69	N69	-24	48.625	30.186533	0	
70	N70	-24	-23.375	30.186533	0	
71	N72	43.462813	42	-49.093267	0	
72	N73	43.462813	0	-49.093267	0	
73	N74	46.926915	42	-51.093267	0	
74	N75	46.926915	0	-51.093267	0	
75	N76	46.926915	48.625	-51.093267	0	
76	N77	46.926915	-23.375	-51.093267	0	
77	N78	31.462813	42	-69.877876	0	
78	N79	31.462813	0	-69.877876	0	
79	N80	34.926915	42	-71.877876	0	
80	N81	34.926915	0	-71.877876	0	
81	N82	34.926915	48.625	-71.877876	0	
82	N83	34.926915	-23.375	-71.877876	0	
83	N84	55.462813	42	-28.308657	0	
84	N85	55.462813	0	-28.308657	0	
85	N86	58.926915	42	-30.308657	0	
86	N87	58.926915	0	-30.308657	0	
87	N88	58.926915	48.625	-30.308657	0	
88	N89	58.926915	-23.375	-30.308657	0	
89	N91	-43.462813	42	-49.093267	0	
90	N92	-43.462813	0	-49.093267	0	
91	N93	-46.926915	42	-51.093267	0	
92	N94	-46.926915	0	-51.093267	0	
93	N95	-46.926915	48.625	-51.093267	0	
94	N96	-46.926915	-23.375	-51.093267	0	
95	N97	-55.462813	42	-28.308657	0	
96	N98	-55.462813	0	-28.308657	0	
97	N99	-58.926915	42	-30.308657	0	
98	N100	-58.926915	0	-30.308657	0	
99	N101	-58.926915	48.625	-30.308657	0	
100	N102	-58.926915	-23.375	-30.308657	0	
101	N103	-31.462813	42	-69.877876	0	
102	N104	-31.462813	0	-69.877876	0	
103	N105	-34.926915	42	-71.877876	0	
104	N106	-34.926915	0	-71.877876	0	
105	N107	-34.926915	48.625	-71.877876	0	
106	N108	-34.926915	-23.375	-71.877876	0	
107	N107A	-31.176915	0	-6.	0	
108	N108A	-32.676915	0	-8.598076	0	
109	N109	-32.676915	18	-8.598076	0	
110	N110	-32.676915	-18	-8.598076	0	

Member Primary Data

	Label	I Joint	J Joint	K Joint	Rotate(de...	Section/Shape	Type	Design List	Material	Design Rul...
1	M1	N5	N6			Standoff Bracing	Beam	Channel	A36 Gr.36	Typical
2	M2	N3	N1			Standoffs	Beam	Pipe	A53 Gr.B	Typical
3	M3	N9	N12		270	Grating Bracing	Beam	Single Angle	A36 Gr.36	Typical
4	M4	N10	N11			Grating Bracing	Beam	Single Angle	A36 Gr.36	Typical
5	M5	N8	N7			Plates	Beam	RECT	A53 Gr.B	Typical
6	M6	N17	N18			Standoff Bracing	Beam	Channel	A36 Gr.36	Typical
7	M7	N15	N13			Standoffs	Beam	Pipe	A53 Gr.B	Typical
8	M8	N21	N24		270	Grating Bracing	Beam	Single Angle	A36 Gr.36	Typical
9	M9	N22	N23			Grating Bracing	Beam	Single Angle	A36 Gr.36	Typical
10	M10	N20	N19			Plates	Beam	RECT	A53 Gr.B	Typical
11	M11	N29	N30			Standoff Bracing	Beam	Channel	A36 Gr.36	Typical
12	M12	N27	N25			Standoffs	Beam	Pipe	A53 Gr.B	Typical
13	M13	N33	N36		270	Grating Bracing	Beam	Single Angle	A36 Gr.36	Typical
14	M14	N34	N35			Grating Bracing	Beam	Single Angle	A36 Gr.36	Typical
15	M15	N32	N31			Plates	Beam	RECT	A53 Gr.B	Typical
16	H1	N44	N45			Horizontals	Beam	Pipe	A53 Gr.B	Typical
17	H3	N47	N48			Horizontals	Beam	Pipe	A53 Gr.B	Typical
18	H2	N50	N51			Horizontals	Beam	Pipe	A53 Gr.B	Typical
19	M19	N47A	N48A			Handrails	Beam	Pipe	A53 Gr.B	Typical
20	M20	N49	N50A			Handrails	Beam	Pipe	A53 Gr.B	Typical
21	M21	N51A	N52			Handrails	Beam	Pipe	A53 Gr.B	Typical
22	M22	N46	N45A		180	Handrail Corners	Beam	Single Angle	A36 Gr.36	Typical
23	M23	N42	N41		180	Handrail Corners	Beam	Single Angle	A36 Gr.36	Typical
24	M24	N44A	N43		180	Handrail Corners	Beam	Single Angle	A36 Gr.36	Typical
25	M25	N55	N53			RIGID	None	None	RIGID	Typical
26	M26	N56	N54			RIGID	None	None	RIGID	Typical
27	MP2	N57	N58			Mount Pipes	Beam	Pipe	A53 Gr.B	Typical
28	M28	N61	N59			RIGID	None	None	RIGID	Typical
29	M29	N62	N60			RIGID	None	None	RIGID	Typical
30	MP1	N63	N64			Mount Pipes	Beam	Pipe	A53 Gr.B	Typical
31	M31	N67	N65			RIGID	None	None	RIGID	Typical
32	M32	N68	N66			RIGID	None	None	RIGID	Typical
33	MP3	N69	N70			Mount Pipes	Beam	Pipe	A53 Gr.B	Typical
34	M34	N74	N72			RIGID	None	None	RIGID	Typical
35	M35	N75	N73			RIGID	None	None	RIGID	Typical
36	MP8	N76	N77			Mount Pipes	Beam	Pipe	A53 Gr.B	Typical
37	M37	N80	N78			RIGID	None	None	RIGID	Typical
38	M38	N81	N79			RIGID	None	None	RIGID	Typical
39	MP7	N82	N83			Mount Pipes	Beam	Pipe	A53 Gr.B	Typical
40	M40	N86	N84			RIGID	None	None	RIGID	Typical
41	M41	N87	N85			RIGID	None	None	RIGID	Typical
42	MP9	N88	N89			Mount Pipes	Beam	Pipe	A53 Gr.B	Typical
43	M43	N93	N91			RIGID	None	None	RIGID	Typical
44	M44	N94	N92			RIGID	None	None	RIGID	Typical
45	MP5	N95	N96			Mount Pipes	Beam	Pipe	A53 Gr.B	Typical
46	M46	N99	N97			RIGID	None	None	RIGID	Typical
47	M47	N100	N98			RIGID	None	None	RIGID	Typical
48	MP4	N101	N102			Mount Pipes	Beam	Pipe	A53 Gr.B	Typical
49	M49	N105	N103			RIGID	None	None	RIGID	Typical
50	M50	N106	N104			RIGID	None	None	RIGID	Typical
51	MP6	N107	N108			Mount Pipes	Beam	Pipe	A53 Gr.B	Typical

Member Primary Data (Continued)

	Label	I Joint	J Joint	K Joint	Rotate(de...	Section/Shape	Type	Design List	Material	Design Rul...
52	M52	N107A	N108A			RIGID	None	None	RIGID	Typical
53	RRU1	N109	N110			Mount Pipes	Beam	Pipe	A53 Gr.B	Typical

Member Advanced Data

	Label	I Release	J Release	I Offset[in]	J Offset[in]	T/C Only	Physical	Defl Rat...	Analysis ...	Inactive	Seismic...
1	M1	BenPIN	BenPIN				Yes				None
2	M2						Yes				None
3	M3						Yes				None
4	M4						Yes				None
5	M5	OOOOXO	OOOOXO				Yes	Default			None
6	M6	BenPIN	BenPIN				Yes				None
7	M7						Yes				None
8	M8						Yes				None
9	M9						Yes				None
10	M10	OOOOXO	OOOOXO				Yes	Default			None
11	M11	BenPIN	BenPIN				Yes				None
12	M12						Yes				None
13	M13						Yes				None
14	M14						Yes				None
15	M15	OOOOXO	OOOOXO				Yes	Default			None
16	H1						Yes	Default			None
17	H3						Yes				None
18	H2						Yes				None
19	M19						Yes				None
20	M20						Yes				None
21	M21						Yes				None
22	M22						Yes				None
23	M23						Yes				None
24	M24						Yes				None
25	M25	OOOXOO					Yes	** NA **			None
26	M26						Yes	** NA **			None
27	MP2						Yes				None
28	M28	OOOXOO					Yes	** NA **			None
29	M29						Yes	** NA **			None
30	MP1						Yes				None
31	M31	OOOXOO					Yes	** NA **			None
32	M32						Yes	** NA **			None
33	MP3						Yes				None
34	M34	OOOXOO					Yes	** NA **			None
35	M35						Yes	** NA **			None
36	MP8						Yes				None
37	M37	OOOXOO					Yes	** NA **			None
38	M38						Yes	** NA **			None
39	MP7						Yes				None
40	M40	OOOXOO					Yes	** NA **			None
41	M41						Yes	** NA **			None
42	MP9						Yes				None
43	M43	OOOXOO					Yes	** NA **			None
44	M44						Yes	** NA **			None
45	MP5						Yes				None

Member Advanced Data (Continued)

	Label	I Release	J Release	I Offset[in]	J Offset[in]	T/C Only	Physical	Defl Rat...	Analysis ...	Inactive	Seismic...
46	M46	OOOXOO					Yes	** NA **			None
47	M47						Yes	** NA **			None
48	MP4						Yes				None
49	M49	OOOXOO					Yes	** NA **			None
50	M50						Yes	** NA **			None
51	MP6						Yes				None
52	M52						Yes	** NA **			None
53	RRU1						Yes				None

Hot Rolled Steel Design Parameters

	Label	Shape	Length[in]	Lbyy[in]	Lbzz[in]	Lcomp top[in]	Lcomp bot[in]	L-torqu...	Kyy	Kzz	Cb	Function
1	M1	Standoff Br...	69.713			Lbyy						Lateral
2	M2	Standoffs	40			Lbyy						Lateral
3	M3	Grating Bra...	27.295			Lbyy						Lateral
4	M4	Grating Bra...	27.295			Lbyy						Lateral
5	M5	Plates	42			Lbyy						Lateral
6	M6	Standoff Br...	69.713	28	28	28	28	28				Lateral
7	M7	Standoffs	40			Lbyy						Lateral
8	M8	Grating Bra...	27.295			Lbyy						Lateral
9	M9	Grating Bra...	27.295			Lbyy						Lateral
10	M10	Plates	42			Lbyy						Lateral
11	M11	Standoff Br...	69.713			Lbyy						Lateral
12	M12	Standoffs	40			Lbyy						Lateral
13	M13	Grating Bra...	27.295			Lbyy						Lateral
14	M14	Grating Bra...	27.295			Lbyy						Lateral
15	M15	Plates	42			Lbyy						Lateral
16	H1	Horizontals	96			Lbyy						Lateral
17	H3	Horizontals	96			Lbyy						Lateral
18	H2	Horizontals	96			Lbyy						Lateral
19	M19	Handrails	96			Lbyy						Lateral
20	M20	Handrails	96			Lbyy						Lateral
21	M21	Handrails	96			Lbyy						Lateral
22	M22	Handrail Co...	42			Lbyy						Lateral
23	M23	Handrail Co...	42			Lbyy						Lateral
24	M24	Handrail Co...	42			Lbyy						Lateral
25	MP2	Mount Pipes	72			Lbyy						Lateral
26	MP1	Mount Pipes	72			Lbyy						Lateral
27	MP3	Mount Pipes	72			Lbyy						Lateral
28	MP8	Mount Pipes	72			Lbyy						Lateral
29	MP7	Mount Pipes	72			Lbyy						Lateral
30	MP9	Mount Pipes	72			Lbyy						Lateral
31	MP5	Mount Pipes	72			Lbyy						Lateral
32	MP4	Mount Pipes	72			Lbyy						Lateral
33	MP6	Mount Pipes	72			Lbyy						Lateral
34	RRU1	Mount Pipes	36			Lbyy						Lateral

Hot Rolled Steel Section Sets

	Label	Shape	Type	Design List	Material	Design ...	A [in2]	Iyy [in4]	Izz [in4]	J [in4]
1	Plates	6.5"x0.37" Plate	Beam	RECT	A53 Gr.B	Typical	2.405	.027	8.468	.106
2	Grating Bracing	L2x2x3	Beam	Single Angle	A36 Gr.36	Typical	.722	.271	.271	.009
3	Standoffs	PIPE_3.5	Beam	Pipe	A53 Gr.B	Typical	2.5	4.52	4.52	9.04
4	Standoff Bracing	C3X5	Beam	Channel	A36 Gr.36	Typical	1.47	.241	1.85	.043
5	Handrails	PIPE_2.0	Beam	Pipe	A53 Gr.B	Typical	1.02	.627	.627	1.25
6	Handrail Corners	L6 5/8x4 7/16x3/16	Beam	Single Angle	A36 Gr.36	Typical	2.039	3.593	9.575	.023
7	Horizontals	PIPE_3.5	Beam	Pipe	A53 Gr.B	Typical	2.5	4.52	4.52	9.04
8	Mount Pipes	PIPE_2.0	Beam	Pipe	A53 Gr.B	Typical	1.02	.627	.627	1.25

Hot Rolled Steel Properties

	Label	E [ksi]	G [ksi]	Nu	Therm (/1E...	Density[k/ft...	Yield[psi]	Ry	Fu[psi]	Rt
1	A992	29000	11154	.3	.65	.49	50000	1.1	65000	1.1
2	A36 Gr.36	29000	11154	.3	.65	.49	36000	1.5	58000	1.2
3	A572 Gr.50	29000	11154	.3	.65	.49	50000	1.1	65000	1.1
4	A500 Gr.B RND	29000	11154	.3	.65	.527	42000	1.4	58000	1.3
5	A500 Gr.B Rect	29000	11154	.3	.65	.527	46000	1.4	58000	1.3
6	A53 Gr.B	29000	11154	.3	.65	.49	35000	1.6	60000	1.2
7	A1085	29000	11154	.3	.65	.49	50000	1.4	65000	1.3

Member Point Loads (BLC 1 : Self Weight)

	Member Label	Direction	Magnitude[lb,lb-ft]	Location[in,%]
1	MP1	Y	-41.25	0
2	MP1	Y	-41.25	72
3	MP1	Y	-63.9	%25
4	MP1	Y	-75	%25
5	RRU1	Y	-21.85	%25
6	MP4	Y	-41.25	0
7	MP4	Y	-41.25	72
8	MP4	Y	-63.9	%25
9	MP4	Y	-75	%25
10	MP7	Y	-41.25	0
11	MP7	Y	-41.25	72
12	MP7	Y	-63.9	%25
13	MP7	Y	-75	%25

Member Point Loads (BLC 4 : Wind Load 0 AZI)

	Member Label	Direction	Magnitude[lb,lb-ft]	Location[in,%]
1	MP1	Z	-207.675	0
2	MP1	Z	-207.675	72
3	MP1	Z	-101.815	%25
4	MP1	Z	-101.815	%25
5	RRU1	Z	-104.324	%25
6	MP4	Z	-114.338	0
7	MP4	Z	-114.338	72
8	MP4	Z	-63.61	%25
9	MP4	Z	-69.38	%25
10	MP7	Z	-114.338	0

Member Point Loads (BLC 4 : Wind Load 0 AZI) (Continued)

	Member Label	Direction	Magnitude[lb,lb-ft]	Location[in,%]
11	MP7	Z	-114.338	72
12	MP7	Z	-63.61	%25
13	MP7	Z	-69.38	%25
14	MP1	X	0	0
15	MP1	X	0	72
16	MP1	X	0	%25
17	MP1	X	0	%25
18	RRU1	X	0	%25
19	MP4	X	0	0
20	MP4	X	0	72
21	MP4	X	0	%25
22	MP4	X	0	%25
23	MP7	X	0	0
24	MP7	X	0	72
25	MP7	X	0	%25
26	MP7	X	0	%25

Member Point Loads (BLC 5 : Wind Load 30 AZI)

	Member Label	Direction	Magnitude[lb,lb-ft]	Location[in,%]
1	MP1	Z	-152.908	0
2	MP1	Z	-152.908	72
3	MP1	Z	-77.146	%25
4	MP1	Z	-78.811	%25
5	RRU1	Z	-80.875	%25
6	MP4	Z	-152.908	0
7	MP4	Z	-152.908	72
8	MP4	Z	-77.146	%25
9	MP4	Z	-78.811	%25
10	MP7	Z	-72.076	0
11	MP7	Z	-72.076	72
12	MP7	Z	-44.059	%25
13	MP7	Z	-50.721	%25
14	MP1	X	-88.281	0
15	MP1	X	-88.281	72
16	MP1	X	-44.54	%25
17	MP1	X	-45.502	%25
18	RRU1	X	-46.693	%25
19	MP4	X	-88.281	0
20	MP4	X	-88.281	72
21	MP4	X	-44.54	%25
22	MP4	X	-45.502	%25
23	MP7	X	-41.613	0
24	MP7	X	-41.613	72
25	MP7	X	-25.438	%25
26	MP7	X	-29.284	%25

Member Point Loads (BLC 6 : Wind Load 45 AZI)

	Member Label	Direction	Magnitude[lb,lb-ft]	Location[in,%]
1	MP1	Z	-102.849	0
2	MP1	Z	-102.849	72
3	MP1	Z	-53.984	%25

Member Point Loads (BLC 6 : Wind Load 45 AZI) (Continued)

	Member Label	Direction	Magnitude[lb,lb-ft]	Location[in,%]
4	MP1	Z	-56.704	%25
5	RRU1	Z	-58.301	%25
6	MP4	Z	-140.954	0
7	MP4	Z	-140.954	72
8	MP4	Z	-69.581	%25
9	MP4	Z	-69.946	%25
10	MP7	Z	-64.744	0
11	MP7	Z	-64.744	72
12	MP7	Z	-38.387	%25
13	MP7	Z	-43.462	%25
14	MP1	X	-102.849	0
15	MP1	X	-102.849	72
16	MP1	X	-53.984	%25
17	MP1	X	-56.704	%25
18	RRU1	X	-58.301	%25
19	MP4	X	-140.954	0
20	MP4	X	-140.954	72
21	MP4	X	-69.581	%25
22	MP4	X	-69.946	%25
23	MP7	X	-64.744	0
24	MP7	X	-64.744	72
25	MP7	X	-38.387	%25
26	MP7	X	-43.462	%25

Member Point Loads (BLC 7 : Wind Load 60 AZI)

	Member Label	Direction	Magnitude[lb,lb-ft]	Location[in,%]
1	MP1	Z	-57.169	0
2	MP1	Z	-57.169	72
3	MP1	Z	-31.805	%25
4	MP1	Z	-34.69	%25
5	RRU1	Z	-35.756	%25
6	MP4	Z	-103.838	0
7	MP4	Z	-103.838	72
8	MP4	Z	-50.908	%25
9	MP4	Z	-50.908	%25
10	MP7	Z	-57.169	0
11	MP7	Z	-57.169	72
12	MP7	Z	-31.805	%25
13	MP7	Z	-34.69	%25
14	MP1	X	-99.02	0
15	MP1	X	-99.02	72
16	MP1	X	-55.088	%25
17	MP1	X	-60.085	%25
18	RRU1	X	-61.931	%25
19	MP4	X	-179.852	0
20	MP4	X	-179.852	72
21	MP4	X	-88.175	%25
22	MP4	X	-88.175	%25
23	MP7	X	-99.02	0
24	MP7	X	-99.02	72
25	MP7	X	-55.088	%25

Member Point Loads (BLC 7 : Wind Load 60 AZI) (Continued)

	Member Label	Direction	Magnitude[lb,lb-ft]	Location[in,%]
26	MP7	X	-60.085	%25

Member Point Loads (BLC 8 : Wind Load 90 AZI)

	Member Label	Direction	Magnitude[lb,lb-ft]	Location[in,%]
1	MP1	Z	-5.096e-15	0
2	MP1	Z	-5.096e-15	72
3	MP1	Z	-3.115e-15	%25
4	MP1	Z	-3.586e-15	%25
5	RRU1	Z	-3.709e-15	%25
6	MP4	Z	-1.081e-14	0
7	MP4	Z	-1.081e-14	72
8	MP4	Z	-5.455e-15	%25
9	MP4	Z	-5.572e-15	%25
10	MP7	Z	-1.081e-14	0
11	MP7	Z	-1.081e-14	72
12	MP7	Z	-5.455e-15	%25
13	MP7	Z	-5.572e-15	%25
14	MP1	X	-83.226	0
15	MP1	X	-83.226	72
16	MP1	X	-50.875	%25
17	MP1	X	-58.568	%25
18	RRU1	X	-60.575	%25
19	MP4	X	-176.563	0
20	MP4	X	-176.563	72
21	MP4	X	-89.08	%25
22	MP4	X	-91.004	%25
23	MP7	X	-176.563	0
24	MP7	X	-176.563	72
25	MP7	X	-89.08	%25
26	MP7	X	-91.004	%25

Member Point Loads (BLC 9 : Wind Load 120 AZI)

	Member Label	Direction	Magnitude[lb,lb-ft]	Location[in,%]
1	MP1	Z	57.169	0
2	MP1	Z	57.169	72
3	MP1	Z	31.805	%25
4	MP1	Z	34.69	%25
5	RRU1	Z	35.756	%25
6	MP4	Z	57.169	0
7	MP4	Z	57.169	72
8	MP4	Z	31.805	%25
9	MP4	Z	34.69	%25
10	MP7	Z	103.838	0
11	MP7	Z	103.838	72
12	MP7	Z	50.908	%25
13	MP7	Z	50.908	%25
14	MP1	X	-99.02	0
15	MP1	X	-99.02	72
16	MP1	X	-55.088	%25
17	MP1	X	-60.085	%25
18	RRU1	X	-61.931	%25

Member Point Loads (BLC 9 : Wind Load 120 AZI) (Continued)

	Member Label	Direction	Magnitude[lb,lb-ft]	Location[in,%]
19	MP4	X	-99.02	0
20	MP4	X	-99.02	72
21	MP4	X	-55.088	%25
22	MP4	X	-60.085	%25
23	MP7	X	-179.852	0
24	MP7	X	-179.852	72
25	MP7	X	-88.175	%25
26	MP7	X	-88.175	%25

Member Point Loads (BLC 10 : Wind Load 135 AZI)

	Member Label	Direction	Magnitude[lb,lb-ft]	Location[in,%]
1	MP1	Z	102.849	0
2	MP1	Z	102.849	72
3	MP1	Z	53.984	%25
4	MP1	Z	56.704	%25
5	RRU1	Z	58.301	%25
6	MP4	Z	64.744	0
7	MP4	Z	64.744	72
8	MP4	Z	38.387	%25
9	MP4	Z	43.462	%25
10	MP7	Z	140.954	0
11	MP7	Z	140.954	72
12	MP7	Z	69.581	%25
13	MP7	Z	69.946	%25
14	MP1	X	-102.849	0
15	MP1	X	-102.849	72
16	MP1	X	-53.984	%25
17	MP1	X	-56.704	%25
18	RRU1	X	-58.301	%25
19	MP4	X	-64.744	0
20	MP4	X	-64.744	72
21	MP4	X	-38.387	%25
22	MP4	X	-43.462	%25
23	MP7	X	-140.954	0
24	MP7	X	-140.954	72
25	MP7	X	-69.581	%25
26	MP7	X	-69.946	%25

Member Point Loads (BLC 11 : Wind Load 150 AZI)

	Member Label	Direction	Magnitude[lb,lb-ft]	Location[in,%]
1	MP1	Z	152.908	0
2	MP1	Z	152.908	72
3	MP1	Z	77.146	%25
4	MP1	Z	78.811	%25
5	RRU1	Z	80.875	%25
6	MP4	Z	72.076	0
7	MP4	Z	72.076	72
8	MP4	Z	44.059	%25
9	MP4	Z	50.721	%25
10	MP7	Z	152.908	0
11	MP7	Z	152.908	72

Member Point Loads (BLC 11 : Wind Load 150 AZI) (Continued)

	Member Label	Direction	Magnitude[lb,lb-ft]	Location[in,%]
12	MP7	Z	77.146	%25
13	MP7	Z	78.811	%25
14	MP1	X	-88.281	0
15	MP1	X	-88.281	72
16	MP1	X	-44.54	%25
17	MP1	X	-45.502	%25
18	RRU1	X	-46.693	%25
19	MP4	X	-41.613	0
20	MP4	X	-41.613	72
21	MP4	X	-25.438	%25
22	MP4	X	-29.284	%25
23	MP7	X	-88.281	0
24	MP7	X	-88.281	72
25	MP7	X	-44.54	%25
26	MP7	X	-45.502	%25

Member Point Loads (BLC 12 : Ice Weight)

	Member Label	Direction	Magnitude[lb,lb-ft]	Location[in,%]
1	MP1	Y	-146.519	0
2	MP1	Y	-146.519	72
3	MP1	Y	-71.452	%25
4	MP1	Y	-76.104	%25
5	RRU1	Y	-75.01	%25
6	MP4	Y	-146.519	0
7	MP4	Y	-146.519	72
8	MP4	Y	-71.452	%25
9	MP4	Y	-76.104	%25
10	MP7	Y	-146.519	0
11	MP7	Y	-146.519	72
12	MP7	Y	-71.452	%25
13	MP7	Y	-76.104	%25

Member Point Loads (BLC 15 : Ice Wind Load 0 AZI)

	Member Label	Direction	Magnitude[lb,lb-ft]	Location[in,%]
1	MP1	Z	-36.947	0
2	MP1	Z	-36.947	72
3	MP1	Z	-18.38	%25
4	MP1	Z	-18.38	%25
5	RRU1	Z	-18.8	%25
6	MP4	Z	-22.563	0
7	MP4	Z	-22.563	72
8	MP4	Z	-12.175	%25
9	MP4	Z	-13.111	%25
10	MP7	Z	-22.563	0
11	MP7	Z	-22.563	72
12	MP7	Z	-12.175	%25
13	MP7	Z	-13.111	%25
14	MP1	X	0	0
15	MP1	X	0	72
16	MP1	X	0	%25
17	MP1	X	0	%25

Member Point Loads (BLC 15 : Ice Wind Load 0 AZI) (Continued)

	Member Label	Direction	Magnitude[lb,lb-ft]	Location[in,%]
18	RRU1	X	0	%25
19	MP4	X	0	0
20	MP4	X	0	72
21	MP4	X	0	%25
22	MP4	X	0	%25
23	MP7	X	0	0
24	MP7	X	0	72
25	MP7	X	0	%25
26	MP7	X	0	%25

Member Point Loads (BLC 16 : Ice Wind Load 30 AZI)

	Member Label	Direction	Magnitude[lb,lb-ft]	Location[in,%]
1	MP1	Z	-27.844	0
2	MP1	Z	-27.844	72
3	MP1	Z	-14.126	%25
4	MP1	Z	-14.396	%25
5	RRU1	Z	-14.757	%25
6	MP4	Z	-27.844	0
7	MP4	Z	-27.844	72
8	MP4	Z	-14.126	%25
9	MP4	Z	-14.396	%25
10	MP7	Z	-15.388	0
11	MP7	Z	-15.388	72
12	MP7	Z	-8.752	%25
13	MP7	Z	-9.833	%25
14	MP1	X	-16.076	0
15	MP1	X	-16.076	72
16	MP1	X	-8.156	%25
17	MP1	X	-8.312	%25
18	RRU1	X	-8.52	%25
19	MP4	X	-16.076	0
20	MP4	X	-16.076	72
21	MP4	X	-8.156	%25
22	MP4	X	-8.312	%25
23	MP7	X	-8.884	0
24	MP7	X	-8.884	72
25	MP7	X	-5.053	%25
26	MP7	X	-5.677	%25

Member Point Loads (BLC 17 : Ice Wind Load 45 AZI)

	Member Label	Direction	Magnitude[lb,lb-ft]	Location[in,%]
1	MP1	Z	-19.345	0
2	MP1	Z	-19.345	72
3	MP1	Z	-10.071	%25
4	MP1	Z	-10.513	%25
5	RRU1	Z	-10.804	%25
6	MP4	Z	-25.217	0
7	MP4	Z	-25.217	72
8	MP4	Z	-12.604	%25
9	MP4	Z	-12.664	%25
10	MP7	Z	-13.472	0

Member Point Loads (BLC 17 : Ice Wind Load 45 AZI) (Continued)

	Member Label	Direction	Magnitude[lb,lb-ft]	Location[in,%]
11	MP7	Z	-13.472	72
12	MP7	Z	-7.538	%25
13	MP7	Z	-8.362	%25
14	MP1	X	-19.345	0
15	MP1	X	-19.345	72
16	MP1	X	-10.071	%25
17	MP1	X	-10.513	%25
18	RRU1	X	-10.804	%25
19	MP4	X	-25.217	0
20	MP4	X	-25.217	72
21	MP4	X	-12.604	%25
22	MP4	X	-12.664	%25
23	MP7	X	-13.472	0
24	MP7	X	-13.472	72
25	MP7	X	-7.538	%25
26	MP7	X	-8.362	%25

Member Point Loads (BLC 18 : Ice Wind Load 60 AZI)

	Member Label	Direction	Magnitude[lb,lb-ft]	Location[in,%]
1	MP1	Z	-11.281	0
2	MP1	Z	-11.281	72
3	MP1	Z	-6.087	%25
4	MP1	Z	-6.555	%25
5	RRU1	Z	-6.76	%25
6	MP4	Z	-18.473	0
7	MP4	Z	-18.473	72
8	MP4	Z	-9.19	%25
9	MP4	Z	-9.19	%25
10	MP7	Z	-11.281	0
11	MP7	Z	-11.281	72
12	MP7	Z	-6.087	%25
13	MP7	Z	-6.555	%25
14	MP1	X	-19.54	0
15	MP1	X	-19.54	72
16	MP1	X	-10.544	%25
17	MP1	X	-11.354	%25
18	RRU1	X	-11.708	%25
19	MP4	X	-31.997	0
20	MP4	X	-31.997	72
21	MP4	X	-15.917	%25
22	MP4	X	-15.917	%25
23	MP7	X	-19.54	0
24	MP7	X	-19.54	72
25	MP7	X	-10.544	%25
26	MP7	X	-11.354	%25

Member Point Loads (BLC 19 : Ice Wind Load 90 AZI)

	Member Label	Direction	Magnitude[lb,lb-ft]	Location[in,%]
1	MP1	Z	-1.088e-15	0
2	MP1	Z	-1.088e-15	72
3	MP1	Z	-6.188e-16	%25

Member Point Loads (BLC 19 : Ice Wind Load 90 AZI) (Continued)

	Member Label	Direction	Magnitude[lb,lb-ft]	Location[in,%]
4	MP1	Z	-6.953e-16	%25
5	RRU1	Z	-7.2e-16	%25
6	MP4	Z	-1.969e-15	0
7	MP4	Z	-1.969e-15	72
8	MP4	Z	-9.988e-16	%25
9	MP4	Z	-1.018e-15	%25
10	MP7	Z	-1.969e-15	0
11	MP7	Z	-1.969e-15	72
12	MP7	Z	-9.988e-16	%25
13	MP7	Z	-1.018e-15	%25
14	MP1	X	-17.768	0
15	MP1	X	-17.768	72
16	MP1	X	-10.106	%25
17	MP1	X	-11.354	%25
18	RRU1	X	-11.759	%25
19	MP4	X	-32.152	0
20	MP4	X	-32.152	72
21	MP4	X	-16.311	%25
22	MP4	X	-16.623	%25
23	MP7	X	-32.152	0
24	MP7	X	-32.152	72
25	MP7	X	-16.311	%25
26	MP7	X	-16.623	%25

Member Point Loads (BLC 20 : Ice Wind Load 120 AZI)

	Member Label	Direction	Magnitude[lb,lb-ft]	Location[in,%]
1	MP1	Z	11.281	0
2	MP1	Z	11.281	72
3	MP1	Z	6.087	%25
4	MP1	Z	6.555	%25
5	RRU1	Z	6.76	%25
6	MP4	Z	11.281	0
7	MP4	Z	11.281	72
8	MP4	Z	6.087	%25
9	MP4	Z	6.555	%25
10	MP7	Z	18.473	0
11	MP7	Z	18.473	72
12	MP7	Z	9.19	%25
13	MP7	Z	9.19	%25
14	MP1	X	-19.54	0
15	MP1	X	-19.54	72
16	MP1	X	-10.544	%25
17	MP1	X	-11.354	%25
18	RRU1	X	-11.708	%25
19	MP4	X	-19.54	0
20	MP4	X	-19.54	72
21	MP4	X	-10.544	%25
22	MP4	X	-11.354	%25
23	MP7	X	-31.997	0
24	MP7	X	-31.997	72
25	MP7	X	-15.917	%25

Member Point Loads (BLC 20 : Ice Wind Load 120 AZI) (Continued)

	Member Label	Direction	Magnitude[lb,lb-ft]	Location[in,%]
26	MP7	X	-15.917	%25

Member Point Loads (BLC 21 : Ice Wind Load 135 AZI)

	Member Label	Direction	Magnitude[lb,lb-ft]	Location[in,%]
1	MP1	Z	19.345	0
2	MP1	Z	19.345	72
3	MP1	Z	10.071	%25
4	MP1	Z	10.513	%25
5	RRU1	Z	10.804	%25
6	MP4	Z	13.472	0
7	MP4	Z	13.472	72
8	MP4	Z	7.538	%25
9	MP4	Z	8.362	%25
10	MP7	Z	25.217	0
11	MP7	Z	25.217	72
12	MP7	Z	12.604	%25
13	MP7	Z	12.664	%25
14	MP1	X	-19.345	0
15	MP1	X	-19.345	72
16	MP1	X	-10.071	%25
17	MP1	X	-10.513	%25
18	RRU1	X	-10.804	%25
19	MP4	X	-13.472	0
20	MP4	X	-13.472	72
21	MP4	X	-7.538	%25
22	MP4	X	-8.362	%25
23	MP7	X	-25.217	0
24	MP7	X	-25.217	72
25	MP7	X	-12.604	%25
26	MP7	X	-12.664	%25

Member Point Loads (BLC 22 : Ice Wind Load 150 AZI)

	Member Label	Direction	Magnitude[lb,lb-ft]	Location[in,%]
1	MP1	Z	27.844	0
2	MP1	Z	27.844	72
3	MP1	Z	14.126	%25
4	MP1	Z	14.396	%25
5	RRU1	Z	14.757	%25
6	MP4	Z	15.388	0
7	MP4	Z	15.388	72
8	MP4	Z	8.752	%25
9	MP4	Z	9.833	%25
10	MP7	Z	27.844	0
11	MP7	Z	27.844	72
12	MP7	Z	14.126	%25
13	MP7	Z	14.396	%25
14	MP1	X	-16.076	0
15	MP1	X	-16.076	72
16	MP1	X	-8.156	%25
17	MP1	X	-8.312	%25
18	RRU1	X	-8.52	%25

Member Point Loads (BLC 22 : Ice Wind Load 150 AZI) (Continued)

	Member Label	Direction	Magnitude[lb,lb-ft]	Location[in,%]
19	MP4	X	-8.884	0
20	MP4	X	-8.884	72
21	MP4	X	-5.053	%25
22	MP4	X	-5.677	%25
23	MP7	X	-16.076	0
24	MP7	X	-16.076	72
25	MP7	X	-8.156	%25
26	MP7	X	-8.312	%25

Member Point Loads (BLC 23 : Seismic Load Z)

	Member Label	Direction	Magnitude[lb,lb-ft]	Location[in,%]
1	MP1	Z	-4.752	0
2	MP1	Z	-4.752	72
3	MP1	Z	-7.361	%25
4	MP1	Z	-8.64	%25
5	RRU1	Z	-2.517	%25
6	MP4	Z	-4.752	0
7	MP4	Z	-4.752	72
8	MP4	Z	-7.361	%25
9	MP4	Z	-8.64	%25
10	MP7	Z	-4.752	0
11	MP7	Z	-4.752	72
12	MP7	Z	-7.361	%25
13	MP7	Z	-8.64	%25

Member Point Loads (BLC 24 : Seismic Load X)

	Member Label	Direction	Magnitude[lb,lb-ft]	Location[in,%]
1	MP1	X	-4.752	0
2	MP1	X	-4.752	72
3	MP1	X	-7.361	%25
4	MP1	X	-8.64	%25
5	RRU1	X	-2.517	%25
6	MP4	X	-4.752	0
7	MP4	X	-4.752	72
8	MP4	X	-7.361	%25
9	MP4	X	-8.64	%25
10	MP7	X	-4.752	0
11	MP7	X	-4.752	72
12	MP7	X	-7.361	%25
13	MP7	X	-8.64	%25

Member Point Loads (BLC 25 : Live Load 1 (Lv))

	Member Label	Direction	Magnitude[lb,lb-ft]	Location[in,%]
1	H1	Y	-250	0

Member Point Loads (BLC 26 : Live Load 2 (Lv))

	Member Label	Direction	Magnitude[lb,lb-ft]	Location[in,%]
1	H1	Y	-250	%50

Member Point Loads (BLC 27 : Live Load 3 (Lv))

	Member Label	Direction	Magnitude[lb,lb-ft]	Location[in,%]
1	H1	Y	-250	%100

Member Point Loads (BLC 28 : Live Load 4 (Lv))

	Member Label	Direction	Magnitude[lb,lb-ft]	Location[in,%]
1	H3	Y	-250	0

Member Point Loads (BLC 29 : Live Load 5 (Lv))

	Member Label	Direction	Magnitude[lb,lb-ft]	Location[in,%]
1	H3	Y	-250	%50

Member Point Loads (BLC 30 : Live Load 6 (Lv))

	Member Label	Direction	Magnitude[lb,lb-ft]	Location[in,%]
1	H3	Y	-250	%100

Member Point Loads (BLC 31 : Live Load 7 (Lv))

	Member Label	Direction	Magnitude[lb,lb-ft]	Location[in,%]
1	H2	Y	-250	0

Member Point Loads (BLC 32 : Live Load 8 (Lv))

	Member Label	Direction	Magnitude[lb,lb-ft]	Location[in,%]
1	H2	Y	-250	%50

Member Point Loads (BLC 33 : Live Load 9 (Lv))

	Member Label	Direction	Magnitude[lb,lb-ft]	Location[in,%]
1	H2	Y	-250	%100

Member Point Loads (BLC 34 : Maintenance Load 1 (Lm))

	Member Label	Direction	Magnitude[lb,lb-ft]	Location[in,%]
1	MP2	Y	-500	%50

Member Point Loads (BLC 35 : Maintenance Load 2 (Lm))

	Member Label	Direction	Magnitude[lb,lb-ft]	Location[in,%]
1	MP1	Y	-500	%50

Member Point Loads (BLC 36 : Maintenance Load 3 (Lm))

	Member Label	Direction	Magnitude[lb,lb-ft]	Location[in,%]
1	MP3	Y	-500	%50

Member Point Loads (BLC 37 : Maintenance Load 4 (Lm))

	Member Label	Direction	Magnitude[lb,lb-ft]	Location[in,%]
1	MP8	Y	-500	%50

Member Point Loads (BLC 38 : Maintenance Load 5 (Lm))

	Member Label	Direction	Magnitude[lb,lb-ft]	Location[in,%]
1	MP7	Y	-500	%50

Member Point Loads (BLC 39 : Maintenance Load 6 (Lm))

	Member Label	Direction	Magnitude[lb,lb-ft]	Location[in,%]
1	MP9	Y	-500	%50

Member Point Loads (BLC 40 : Maintenance Load 7 (Lm))

	Member Label	Direction	Magnitude[lb,lb-ft]	Location[in,%]
1	MP5	Y	-500	%50

Member Point Loads (BLC 41 : Maintenance Load 8 (Lm))

	Member Label	Direction	Magnitude[lb,lb-ft]	Location[in,%]
1	MP4	Y	-500	%50

Member Point Loads (BLC 42 : Maintenance Load 9 (Lm))

	Member Label	Direction	Magnitude[lb,lb-ft]	Location[in,%]
1	MP6	Y	-500	%50

Member Distributed Loads (BLC 2 : Structure Wind Z)

	Member Label	Direction	Start Magnitude[lb/ft,...	End Magnitude[lb/ft,F...	Start Location[in,%]	End Location[in,%]
1	M1	SZ	-103.708	-103.708	0	%100
2	M2	SZ	-62.225	-62.225	0	%100
3	M3	SZ	-103.708	-103.708	0	%100
4	M4	SZ	-103.708	-103.708	0	%100
5	M5	SZ	-103.708	-103.708	0	%100
6	M6	SZ	-103.708	-103.708	0	%100
7	M7	SZ	-62.225	-62.225	0	%100
8	M8	SZ	-103.708	-103.708	0	%100
9	M9	SZ	-103.708	-103.708	0	%100
10	M10	SZ	-103.708	-103.708	0	%100
11	M11	SZ	-103.708	-103.708	0	%100
12	M12	SZ	-62.225	-62.225	0	%100
13	M13	SZ	-103.708	-103.708	0	%100
14	M14	SZ	-103.708	-103.708	0	%100
15	M15	SZ	-103.708	-103.708	0	%100
16	H1	SZ	-62.225	-62.225	0	%100
17	H3	SZ	-62.225	-62.225	0	%100
18	H2	SZ	-62.225	-62.225	0	%100
19	M19	SZ	-62.225	-62.225	0	%100
20	M20	SZ	-62.225	-62.225	0	%100
21	M21	SZ	-62.225	-62.225	0	%100
22	M22	SZ	-103.708	-103.708	0	%100
23	M23	SZ	-103.708	-103.708	0	%100
24	M24	SZ	-103.708	-103.708	0	%100
25	M25	SZ	-103.708	-103.708	0	%100
26	M26	SZ	-103.708	-103.708	0	%100
27	MP2	SZ	-62.225	-62.225	0	%100
28	M28	SZ	-103.708	-103.708	0	%100
29	M29	SZ	-103.708	-103.708	0	%100
30	MP1	SZ	-62.225	-62.225	0	%100
31	M31	SZ	-103.708	-103.708	0	%100
32	M32	SZ	-103.708	-103.708	0	%100
33	MP3	SZ	-62.225	-62.225	0	%100

Member Distributed Loads (BLC 2 : Structure Wind Z) (Continued)

	Member Label	Direction	Start Magnitude[lb/ft,...	End Magnitude[lb/ft,F...	Start Location[in,%]	End Location[in,%]
34	M34	SZ	-103.708	-103.708	0	%100
35	M35	SZ	-103.708	-103.708	0	%100
36	MP8	SZ	-62.225	-62.225	0	%100
37	M37	SZ	-103.708	-103.708	0	%100
38	M38	SZ	-103.708	-103.708	0	%100
39	MP7	SZ	-62.225	-62.225	0	%100
40	M40	SZ	-103.708	-103.708	0	%100
41	M41	SZ	-103.708	-103.708	0	%100
42	MP9	SZ	-62.225	-62.225	0	%100
43	M43	SZ	-103.708	-103.708	0	%100
44	M44	SZ	-103.708	-103.708	0	%100
45	MP5	SZ	-62.225	-62.225	0	%100
46	M46	SZ	-103.708	-103.708	0	%100
47	M47	SZ	-103.708	-103.708	0	%100
48	MP4	SZ	-62.225	-62.225	0	%100
49	M49	SZ	-103.708	-103.708	0	%100
50	M50	SZ	-103.708	-103.708	0	%100
51	MP6	SZ	-62.225	-62.225	0	%100
52	M52	SZ	-103.708	-103.708	0	%100
53	RRU1	SZ	-62.225	-62.225	0	%100

Member Distributed Loads (BLC 3 : Structure Wind X)

	Member Label	Direction	Start Magnitude[lb/ft,...	End Magnitude[lb/ft,F...	Start Location[in,%]	End Location[in,%]
1	M1	SX	-103.708	-103.708	0	%100
2	M2	SX	-62.225	-62.225	0	%100
3	M3	SX	-103.708	-103.708	0	%100
4	M4	SX	-103.708	-103.708	0	%100
5	M5	SX	-103.708	-103.708	0	%100
6	M6	SX	-103.708	-103.708	0	%100
7	M7	SX	-62.225	-62.225	0	%100
8	M8	SX	-103.708	-103.708	0	%100
9	M9	SX	-103.708	-103.708	0	%100
10	M10	SX	-103.708	-103.708	0	%100
11	M11	SX	-103.708	-103.708	0	%100
12	M12	SX	-62.225	-62.225	0	%100
13	M13	SX	-103.708	-103.708	0	%100
14	M14	SX	-103.708	-103.708	0	%100
15	M15	SX	-103.708	-103.708	0	%100
16	H1	SX	-62.225	-62.225	0	%100
17	H3	SX	-62.225	-62.225	0	%100
18	H2	SX	-62.225	-62.225	0	%100
19	M19	SX	-62.225	-62.225	0	%100
20	M20	SX	-62.225	-62.225	0	%100
21	M21	SX	-62.225	-62.225	0	%100
22	M22	SX	-103.708	-103.708	0	%100
23	M23	SX	-103.708	-103.708	0	%100
24	M24	SX	-103.708	-103.708	0	%100
25	M25	SX	-103.708	-103.708	0	%100
26	M26	SX	-103.708	-103.708	0	%100
27	MP2	SX	-62.225	-62.225	0	%100
28	M28	SX	-103.708	-103.708	0	%100

Member Distributed Loads (BLC 3 : Structure Wind X) (Continued)

	Member Label	Direction	Start Magnitude[lb/ft,...	End Magnitude[lb/ft,F...	Start Location[in,%]	End Location[in,%]
29	M29	SX	-103.708	-103.708	0	%100
30	MP1	SX	-62.225	-62.225	0	%100
31	M31	SX	-103.708	-103.708	0	%100
32	M32	SX	-103.708	-103.708	0	%100
33	MP3	SX	-62.225	-62.225	0	%100
34	M34	SX	-103.708	-103.708	0	%100
35	M35	SX	-103.708	-103.708	0	%100
36	MP8	SX	-62.225	-62.225	0	%100
37	M37	SX	-103.708	-103.708	0	%100
38	M38	SX	-103.708	-103.708	0	%100
39	MP7	SX	-62.225	-62.225	0	%100
40	M40	SX	-103.708	-103.708	0	%100
41	M41	SX	-103.708	-103.708	0	%100
42	MP9	SX	-62.225	-62.225	0	%100
43	M43	SX	-103.708	-103.708	0	%100
44	M44	SX	-103.708	-103.708	0	%100
45	MP5	SX	-62.225	-62.225	0	%100
46	M46	SX	-103.708	-103.708	0	%100
47	M47	SX	-103.708	-103.708	0	%100
48	MP4	SX	-62.225	-62.225	0	%100
49	M49	SX	-103.708	-103.708	0	%100
50	M50	SX	-103.708	-103.708	0	%100
51	MP6	SX	-62.225	-62.225	0	%100
52	M52	SX	-103.708	-103.708	0	%100
53	RRU1	SX	-62.225	-62.225	0	%100

Member Distributed Loads (BLC 12 : Ice Weight)

	Member Label	Direction	Start Magnitude[lb/ft,...	End Magnitude[lb/ft,F...	Start Location[in,%]	End Location[in,%]
1	M1	Y	-11.013	-11.013	0	%100
2	M2	Y	-12.403	-12.403	0	%100
3	M3	Y	-9.881	-9.881	0	%100
4	M4	Y	-9.881	-9.881	0	%100
5	M5	Y	-17.807	-17.807	0	%100
6	M6	Y	-11.013	-11.013	0	%100
7	M7	Y	-12.403	-12.403	0	%100
8	M8	Y	-9.881	-9.881	0	%100
9	M9	Y	-9.881	-9.881	0	%100
10	M10	Y	-17.807	-17.807	0	%100
11	M11	Y	-11.013	-11.013	0	%100
12	M12	Y	-12.403	-12.403	0	%100
13	M13	Y	-9.881	-9.881	0	%100
14	M14	Y	-9.881	-9.881	0	%100
15	M15	Y	-17.807	-17.807	0	%100
16	H1	Y	-12.403	-12.403	0	%100
17	H3	Y	-12.403	-12.403	0	%100
18	H2	Y	-12.403	-12.403	0	%100
19	M19	Y	-8.905	-8.905	0	%100
20	M20	Y	-8.905	-8.905	0	%100
21	M21	Y	-8.905	-8.905	0	%100
22	M22	Y	-20.957	-20.957	0	%100
23	M23	Y	-20.957	-20.957	0	%100

Member Distributed Loads (BLC 12 : Ice Weight) (Continued)

	Member Label	Direction	Start Magnitude[lb/ft,...	End Magnitude[lb/ft,F...	Start Location[in,%]	End Location[in,%]
24	M24	Y	-20.957	-20.957	0	%100
25	M25	Y	0	0	0	%100
26	M26	Y	0	0	0	%100
27	MP2	Y	-8.905	-8.905	0	%100
28	M28	Y	0	0	0	%100
29	M29	Y	0	0	0	%100
30	MP1	Y	-8.905	-8.905	0	%100
31	M31	Y	0	0	0	%100
32	M32	Y	0	0	0	%100
33	MP3	Y	-8.905	-8.905	0	%100
34	M34	Y	0	0	0	%100
35	M35	Y	0	0	0	%100
36	MP8	Y	-8.905	-8.905	0	%100
37	M37	Y	0	0	0	%100
38	M38	Y	0	0	0	%100
39	MP7	Y	-8.905	-8.905	0	%100
40	M40	Y	0	0	0	%100
41	M41	Y	0	0	0	%100
42	MP9	Y	-8.905	-8.905	0	%100
43	M43	Y	0	0	0	%100
44	M44	Y	0	0	0	%100
45	MP5	Y	-8.905	-8.905	0	%100
46	M46	Y	0	0	0	%100
47	M47	Y	0	0	0	%100
48	MP4	Y	-8.905	-8.905	0	%100
49	M49	Y	0	0	0	%100
50	M50	Y	0	0	0	%100
51	MP6	Y	-8.905	-8.905	0	%100
52	M52	Y	0	0	0	%100
53	RRU1	Y	-8.905	-8.905	0	%100

Member Distributed Loads (BLC 13 : Ice Structure Wind Z)

	Member Label	Direction	Start Magnitude[lb/ft,...	End Magnitude[lb/ft,F...	Start Location[in,%]	End Location[in,%]
1	M1	SZ	-15.766	-15.766	0	%100
2	M2	SZ	-14.461	-14.461	0	%100
3	M3	SZ	-17.267	-17.267	0	%100
4	M4	SZ	-17.267	-17.267	0	%100
5	M5	SZ	-11.849	-11.849	0	%100
6	M6	SZ	-15.766	-15.766	0	%100
7	M7	SZ	-14.461	-14.461	0	%100
8	M8	SZ	-17.267	-17.267	0	%100
9	M9	SZ	-17.267	-17.267	0	%100
10	M10	SZ	-11.849	-11.849	0	%100
11	M11	SZ	-15.766	-15.766	0	%100
12	M12	SZ	-14.461	-14.461	0	%100
13	M13	SZ	-17.267	-17.267	0	%100
14	M14	SZ	-17.267	-17.267	0	%100
15	M15	SZ	-11.849	-11.849	0	%100
16	H1	SZ	-14.461	-14.461	0	%100
17	H3	SZ	-14.461	-14.461	0	%100
18	H2	SZ	-14.461	-14.461	0	%100

Member Distributed Loads (BLC 13 : Ice Structure Wind Z) (Continued)

	Member Label	Direction	Start Magnitude[lb/ft,...	End Magnitude[lb/ft,F...	Start Location[in,%]	End Location[in,%]
19	M19	SZ	-19.095	-19.095	0	%100
20	M20	SZ	-19.095	-19.095	0	%100
21	M21	SZ	-19.095	-19.095	0	%100
22	M22	SZ	-11.086	-11.086	0	%100
23	M23	SZ	-11.086	-11.086	0	%100
24	M24	SZ	-11.086	-11.086	0	%100
25	M25	SZ	0	0	0	%100
26	M26	SZ	0	0	0	%100
27	MP2	SZ	-19.095	-19.095	0	%100
28	M28	SZ	0	0	0	%100
29	M29	SZ	0	0	0	%100
30	MP1	SZ	-19.095	-19.095	0	%100
31	M31	SZ	0	0	0	%100
32	M32	SZ	0	0	0	%100
33	MP3	SZ	-19.095	-19.095	0	%100
34	M34	SZ	0	0	0	%100
35	M35	SZ	0	0	0	%100
36	MP8	SZ	-19.095	-19.095	0	%100
37	M37	SZ	0	0	0	%100
38	M38	SZ	0	0	0	%100
39	MP7	SZ	-19.095	-19.095	0	%100
40	M40	SZ	0	0	0	%100
41	M41	SZ	0	0	0	%100
42	MP9	SZ	-19.095	-19.095	0	%100
43	M43	SZ	0	0	0	%100
44	M44	SZ	0	0	0	%100
45	MP5	SZ	-19.095	-19.095	0	%100
46	M46	SZ	0	0	0	%100
47	M47	SZ	0	0	0	%100
48	MP4	SZ	-19.095	-19.095	0	%100
49	M49	SZ	0	0	0	%100
50	M50	SZ	0	0	0	%100
51	MP6	SZ	-19.095	-19.095	0	%100
52	M52	SZ	0	0	0	%100
53	RRU1	SZ	-19.095	-19.095	0	%100

Member Distributed Loads (BLC 14 : Ice Structure Wind X)

	Member Label	Direction	Start Magnitude[lb/ft,...	End Magnitude[lb/ft,F...	Start Location[in,%]	End Location[in,%]
1	M1	SX	-15.766	-15.766	0	%100
2	M2	SX	-14.461	-14.461	0	%100
3	M3	SX	-17.267	-17.267	0	%100
4	M4	SX	-17.267	-17.267	0	%100
5	M5	SX	-11.849	-11.849	0	%100
6	M6	SX	-15.766	-15.766	0	%100
7	M7	SX	-14.461	-14.461	0	%100
8	M8	SX	-17.267	-17.267	0	%100
9	M9	SX	-17.267	-17.267	0	%100
10	M10	SX	-11.849	-11.849	0	%100
11	M11	SX	-15.766	-15.766	0	%100
12	M12	SX	-14.461	-14.461	0	%100
13	M13	SX	-17.267	-17.267	0	%100

Member Distributed Loads (BLC 14 : Ice Structure Wind X) (Continued)

	Member Label	Direction	Start Magnitude[lb/ft,...	End Magnitude[lb/ft,F...	Start Location[in,%]	End Location[in,%]
14	M14	SX	-17.267	-17.267	0	%100
15	M15	SX	-11.849	-11.849	0	%100
16	H1	SX	-14.461	-14.461	0	%100
17	H3	SX	-14.461	-14.461	0	%100
18	H2	SX	-14.461	-14.461	0	%100
19	M19	SX	-19.095	-19.095	0	%100
20	M20	SX	-19.095	-19.095	0	%100
21	M21	SX	-19.095	-19.095	0	%100
22	M22	SX	-11.086	-11.086	0	%100
23	M23	SX	-11.086	-11.086	0	%100
24	M24	SX	-11.086	-11.086	0	%100
25	M25	SX	0	0	0	%100
26	M26	SX	0	0	0	%100
27	MP2	SX	-19.095	-19.095	0	%100
28	M28	SX	0	0	0	%100
29	M29	SX	0	0	0	%100
30	MP1	SX	-19.095	-19.095	0	%100
31	M31	SX	0	0	0	%100
32	M32	SX	0	0	0	%100
33	MP3	SX	-19.095	-19.095	0	%100
34	M34	SX	0	0	0	%100
35	M35	SX	0	0	0	%100
36	MP8	SX	-19.095	-19.095	0	%100
37	M37	SX	0	0	0	%100
38	M38	SX	0	0	0	%100
39	MP7	SX	-19.095	-19.095	0	%100
40	M40	SX	0	0	0	%100
41	M41	SX	0	0	0	%100
42	MP9	SX	-19.095	-19.095	0	%100
43	M43	SX	0	0	0	%100
44	M44	SX	0	0	0	%100
45	MP5	SX	-19.095	-19.095	0	%100
46	M46	SX	0	0	0	%100
47	M47	SX	0	0	0	%100
48	MP4	SX	-19.095	-19.095	0	%100
49	M49	SX	0	0	0	%100
50	M50	SX	0	0	0	%100
51	MP6	SX	-19.095	-19.095	0	%100
52	M52	SX	0	0	0	%100
53	RRU1	SX	-19.095	-19.095	0	%100

Member Distributed Loads (BLC 43 : BLC 1 Transient Area Loads)

	Member Label	Direction	Start Magnitude[lb/ft,...	End Magnitude[lb/ft,F...	Start Location[in,%]	End Location[in,%]
1	M12	Y	-18.202	-18.202	0	23.596
2	M13	Y	-9.173	-9.173	3.828	27.295
3	M14	Y	-9.173	-9.173	3.828	27.295
4	M7	Y	-18.202	-18.202	0	23.596
5	M8	Y	-9.173	-9.173	3.828	27.295
6	M9	Y	-9.173	-9.173	3.828	27.295
7	M2	Y	-18.202	-18.202	0	23.596
8	M3	Y	-9.173	-9.173	3.828	27.295

Member Distributed Loads (BLC 43 : BLC 1 Transient Area Loads) (Continued)

	Member Label	Direction	Start Magnitude[lb/ft,...	End Magnitude[lb/ft,F...	Start Location[in,%]	End Location[in,%]
9	M4	Y	-9.173	-9.173	3.828	27.295

Member Distributed Loads (BLC 44 : BLC 12 Transient Area Loads)

	Member Label	Direction	Start Magnitude[lb/ft,...	End Magnitude[lb/ft,F...	Start Location[in,%]	End Location[in,%]
1	M12	Y	-29.851	-29.851	0	23.596
2	M13	Y	-15.043	-15.043	3.828	27.295
3	M14	Y	-15.043	-15.043	3.828	27.295
4	M7	Y	-29.851	-29.851	0	23.596
5	M8	Y	-15.043	-15.043	3.828	27.295
6	M9	Y	-15.043	-15.043	3.828	27.295
7	M2	Y	-29.851	-29.851	0	23.596
8	M3	Y	-15.043	-15.043	3.828	27.295
9	M4	Y	-15.043	-15.043	3.828	27.295

Member Area Loads (BLC 1 : Self Weight)

	Joint A	Joint B	Joint C	Joint D	Direction	Distribution	Magnitude[psf]
1	N35	N36	N33	N34	Y	Two Way	-10
2	N23	N24	N21	N22	Y	Two Way	-10
3	N11	N12	N9	N10	Y	Two Way	-10

Member Area Loads (BLC 12 : Ice Weight)

	Joint A	Joint B	Joint C	Joint D	Direction	Distribution	Magnitude[psf]
1	N35	N36	N33	N34	Y	Two Way	-16.4
2	N23	N24	N21	N22	Y	Two Way	-16.4
3	N11	N12	N9	N10	Y	Two Way	-16.4

Basic Load Cases

	BLC Description	Category	X Gravity	Y Gravity	Z Gravity	Joint	Point	Distributed	Area(Me...	Surface(...
1	Self Weight	DL		-1			13		3	
2	Structure Wind Z	WLZ						53		
3	Structure Wind X	WLX						53		
4	Wind Load 0 AZI	WLZ					26			
5	Wind Load 30 AZI	None					26			
6	Wind Load 45 AZI	None					26			
7	Wind Load 60 AZI	None					26			
8	Wind Load 90 AZI	WLX					26			
9	Wind Load 120 AZI	None					26			
10	Wind Load 135 AZI	None					26			
11	Wind Load 150 AZI	None					26			
12	Ice Weight	OL1					13	53	3	
13	Ice Structure Wind Z	OL2						53		
14	Ice Structure Wind X	OL3						53		
15	Ice Wind Load 0 AZI	OL2					26			
16	Ice Wind Load 30 AZI	None					26			
17	Ice Wind Load 45 AZI	None					26			
18	Ice Wind Load 60 AZI	None					26			
19	Ice Wind Load 90 AZI	OL3					26			
20	Ice Wind Load 120 AZI	None					26			

Basic Load Cases (Continued)

	BLC Description	Category	X Gravity	Y Gravity	Z Gravity	Joint	Point	Distributed	Area(Me...	Surface(...
21	Ice Wind Load 135 AZI	None					26			
22	Ice Wind Load 150 AZI	None					26			
23	Seismic Load Z	ELZ			-.115		13			
24	Seismic Load X	ELX	-.115				13			
25	Live Load 1 (Lv)	None					1			
26	Live Load 2 (Lv)	None					1			
27	Live Load 3 (Lv)	None					1			
28	Live Load 4 (Lv)	None					1			
29	Live Load 5 (Lv)	None					1			
30	Live Load 6 (Lv)	None					1			
31	Live Load 7 (Lv)	None					1			
32	Live Load 8 (Lv)	None					1			
33	Live Load 9 (Lv)	None					1			
34	Maintenance Load 1 (Lm)	None					1			
35	Maintenance Load 2 (Lm)	None					1			
36	Maintenance Load 3 (Lm)	None					1			
37	Maintenance Load 4 (Lm)	None					1			
38	Maintenance Load 5 (Lm)	None					1			
39	Maintenance Load 6 (Lm)	None					1			
40	Maintenance Load 7 (Lm)	None					1			
41	Maintenance Load 8 (Lm)	None					1			
42	Maintenance Load 9 (Lm)	None					1			
43	BLC 1 Transient Area Loads	None						9		
44	BLC 12 Transient Area Loa...	None						9		

Load Combinations

	Description	Solve	PDelta	SRSS	BLC	Fa...	B...	Fa...	B...	Fact..	B...	Fa...	B...	Fa...	B...	Fa...	B...	Fa...	B...	Fa...	B...	Fa...	B...	Fa...
1	1.4DL	Yes	Y		DL	1.4																		
2	1.2DL + 1WL 0 AZI	Yes	Y		DL	1.2	2	1	3		4	1												
3	1.2DL + 1WL 30 AZI	Yes	Y		DL	1.2	2	.866	3	.5	5	1												
4	1.2DL + 1WL 45 AZI	Yes	Y		DL	1.2	2	.707	3	.707	6	1												
5	1.2DL + 1WL 60 AZI	Yes	Y		DL	1.2	2	.5	3	.866	7	1												
6	1.2DL + 1WL 90 AZI	Yes	Y		DL	1.2	2		3	1	8	1												
7	1.2DL + 1WL 120 AZI	Yes	Y		DL	1.2	2	-.5	3	.866	9	1												
8	1.2DL + 1WL 135 AZI	Yes	Y		DL	1.2	2	-.7...	3	.707	10	1												
9	1.2DL + 1WL 150 AZI	Yes	Y		DL	1.2	2	-.8...	3	.5	11	1												
10	1.2DL + 1WL 180 AZI	Yes	Y		DL	1.2	2	-1	3		4	-1												
11	1.2DL + 1WL 210 AZI	Yes	Y		DL	1.2	2	-.8...	3	-.5	5	-1												
12	1.2DL + 1WL 225 AZI	Yes	Y		DL	1.2	2	-.7...	3	-.707	6	-1												
13	1.2DL + 1WL 240 AZI	Yes	Y		DL	1.2	2	-.5	3	-.866	7	-1												
14	1.2DL + 1WL 270 AZI	Yes	Y		DL	1.2	2		3	-1	8	-1												
15	1.2DL + 1WL 300 AZI	Yes	Y		DL	1.2	2	.5	3	-.866	9	-1												
16	1.2DL + 1WL 315 AZI	Yes	Y		DL	1.2	2	.707	3	-.707	10	-1												
17	1.2DL + 1WL 330 AZI	Yes	Y		DL	1.2	2	.866	3	-.5	11	-1												
18	0.9DL + 1WL 0 AZI	Yes	Y		DL	.9	2	1	3		4	1												
19	0.9DL + 1WL 30 AZI	Yes	Y		DL	.9	2	.866	3	.5	5	1												
20	0.9DL + 1WL 45 AZI	Yes	Y		DL	.9	2	.707	3	.707	6	1												
21	0.9DL + 1WL 60 AZI	Yes	Y		DL	.9	2	.5	3	.866	7	1												
22	0.9DL + 1WL 90 AZI	Yes	Y		DL	.9	2		3	1	8	1												
23	0.9DL + 1WL 120 AZI	Yes	Y		DL	.9	2	-.5	3	.866	9	1												

Load Combinations (Continued)

	Description	Solve	PDelta	SRSS	BLC	Fa...	B...	Fa...	B...	Fact...	B...	Fa...	B...	Fa...	B...	Fa...	B...	Fa...	B...	Fa...	B...	Fa...	B...	Fa...	B...	Fa...
24	0.9DL + 1WL 135 AZI	Yes	Y		DL	.9	2	-.7...	3	.707	10	1														
25	0.9DL + 1WL 150 AZI	Yes	Y		DL	.9	2	-.8...	3	.5	11	1														
26	0.9DL + 1WL 180 AZI	Yes	Y		DL	.9	2	-1	3		4	-1														
27	0.9DL + 1WL 210 AZI	Yes	Y		DL	.9	2	-.8...	3	-.5	5	-1														
28	0.9DL + 1WL 225 AZI	Yes	Y		DL	.9	2	-.7...	3	-.707	6	-1														
29	0.9DL + 1WL 240 AZI	Yes	Y		DL	.9	2	-.5	3	-.866	7	-1														
30	0.9DL + 1WL 270 AZI	Yes	Y		DL	.9	2		3	-1	8	-1														
31	0.9DL + 1WL 300 AZI	Yes	Y		DL	.9	2	.5	3	-.866	9	-1														
32	0.9DL + 1WL 315 AZI	Yes	Y		DL	.9	2	.707	3	-.707	10	-1														
33	0.9DL + 1WL 330 AZI	Yes	Y		DL	.9	2	.866	3	-.5	11	-1														
34	1.2DL + 1DLi + 1WLi 0 ...	Yes	Y		DL	1.2	O...	1	13	1	14		15	1												
35	1.2DL + 1DLi + 1WLi 30 ...	Yes	Y		DL	1.2	O...	1	13	.866	14	.5	16	1												
36	1.2DL + 1DLi + 1WLi 45 ...	Yes	Y		DL	1.2	O...	1	13	.707	14	.707	17	1												
37	1.2DL + 1DLi + 1WLi 60 ...	Yes	Y		DL	1.2	O...	1	13	.5	14	.866	18	1												
38	1.2DL + 1DLi + 1WLi 90 ...	Yes	Y		DL	1.2	O...	1	13		14	1	19	1												
39	1.2DL + 1DLi + 1WLi 12...	Yes	Y		DL	1.2	O...	1	13	-.5	14	.866	20	1												
40	1.2DL + 1DLi + 1WLi 13...	Yes	Y		DL	1.2	O...	1	13	-.707	14	.707	21	1												
41	1.2DL + 1DLi + 1WLi 15...	Yes	Y		DL	1.2	O...	1	13	-.866	14	.5	22	1												
42	1.2DL + 1DLi + 1WLi 18...	Yes	Y		DL	1.2	O...	1	13	-1	14		15	-1												
43	1.2DL + 1DLi + 1WLi 21...	Yes	Y		DL	1.2	O...	1	13	-.866	14	-.5	16	-1												
44	1.2DL + 1DLi + 1WLi 22...	Yes	Y		DL	1.2	O...	1	13	-.707	14	-.7...	17	-1												
45	1.2DL + 1DLi + 1WLi 24...	Yes	Y		DL	1.2	O...	1	13	-.5	14	-.8...	18	-1												
46	1.2DL + 1DLi + 1WLi 27...	Yes	Y		DL	1.2	O...	1	13		14	-1	19	-1												
47	1.2DL + 1DLi + 1WLi 30...	Yes	Y		DL	1.2	O...	1	13	.5	14	-.8...	20	-1												
48	1.2DL + 1DLi + 1WLi 31...	Yes	Y		DL	1.2	O...	1	13	.707	14	-.7...	21	-1												
49	1.2DL + 1DLi + 1WLi 33...	Yes	Y		DL	1.2	O...	1	13	.866	14	-.5	22	-1												
50	(1.2+0.2Sds)DL + 1E 0 ...	Yes	Y		DL	1....	23	1	24																	
51	(1.2+0.2Sds)DL + 1E 30...	Yes	Y		DL	1....	23	.866	24	.5																
52	(1.2+0.2Sds)DL + 1E 45...	Yes	Y		DL	1....	23	.707	24	.707																
53	(1.2+0.2Sds)DL + 1E 60...	Yes	Y		DL	1....	23	.5	24	.866																
54	(1.2+0.2Sds)DL + 1E 90...	Yes	Y		DL	1....	23		24	1																
55	(1.2+0.2Sds)DL + 1E 12...	Yes	Y		DL	1....	23	-.5	24	.866																
56	(1.2+0.2Sds)DL + 1E 13...	Yes	Y		DL	1....	23	-.7...	24	.707																
57	(1.2+0.2Sds)DL + 1E 15...	Yes	Y		DL	1....	23	-.8...	24	.5																
58	(1.2+0.2Sds)DL + 1E 18...	Yes	Y		DL	1....	23	-1	24																	
59	(1.2+0.2Sds)DL + 1E 21...	Yes	Y		DL	1....	23	-.8...	24	-.5																
60	(1.2+0.2Sds)DL + 1E 22...	Yes	Y		DL	1....	23	-.7...	24	-.707																
61	(1.2+0.2Sds)DL + 1E 24...	Yes	Y		DL	1....	23	-.5	24	-.866																
62	(1.2+0.2Sds)DL + 1E 27...	Yes	Y		DL	1....	23		24	-1																
63	(1.2+0.2Sds)DL + 1E 30...	Yes	Y		DL	1....	23	.5	24	-.866																
64	(1.2+0.2Sds)DL + 1E 31...	Yes	Y		DL	1....	23	.707	24	-.707																
65	(1.2+0.2Sds)DL + 1E 33...	Yes	Y		DL	1....	23	.866	24	-.5																
66	(0.9-0.2Sds)DL + 1E 0 A...	Yes	Y		DL	.862	23	1	24																	
67	(0.9-0.2Sds)DL + 1E 30 ...	Yes	Y		DL	.862	23	.866	24	.5																
68	(0.9-0.2Sds)DL + 1E 45 ...	Yes	Y		DL	.862	23	.707	24	.707																
69	(0.9-0.2Sds)DL + 1E 60 ...	Yes	Y		DL	.862	23	.5	24	.866																
70	(0.9-0.2Sds)DL + 1E 90 ...	Yes	Y		DL	.862	23		24	1																
71	(0.9-0.2Sds)DL + 1E 12...	Yes	Y		DL	.862	23	-.5	24	.866																
72	(0.9-0.2Sds)DL + 1E 13...	Yes	Y		DL	.862	23	-.7...	24	.707																
73	(0.9-0.2Sds)DL + 1E 15...	Yes	Y		DL	.862	23	-.8...	24	.5																
74	(0.9-0.2Sds)DL + 1E 18...	Yes	Y		DL	.862	23	-1	24																	
75	(0.9-0.2Sds)DL + 1E 21...	Yes	Y		DL	.862	23	-.8...	24	-.5																

Load Combinations (Continued)

	Description	Solve	PDelta	SRSS	BLC	Fa...	B...	Fa...	B...	Fact...	B...	Fa...	B...	Fa...	B...	Fa...	B...	Fa...	B...	Fa...	B...	Fa...	B...	Fa...
76	(0.9-0.2Sds)DL + 1E 22...	Yes	Y		DL	.862	23	-.7...	24	-.707														
77	(0.9-0.2Sds)DL + 1E 24...	Yes	Y		DL	.862	23	-.5	24	-.866														
78	(0.9-0.2Sds)DL + 1E 27...	Yes	Y		DL	.862	23		24	-1														
79	(0.9-0.2Sds)DL + 1E 30...	Yes	Y		DL	.862	23	.5	24	-.866														
80	(0.9-0.2Sds)DL + 1E 31...	Yes	Y		DL	.862	23	.707	24	-.707														
81	(0.9-0.2Sds)DL + 1E 33...	Yes	Y		DL	.862	23	.866	24	-.5														
82	1.2DL + 1Lv1	Yes	Y		DL	1.2	25	1.5																
83	1.2DL + 1Lv2	Yes	Y		DL	1.2	26	1.5																
84	1.2DL + 1Lv3	Yes	Y		DL	1.2	27	1.5																
85	1.2DL + 1Lv4	Yes	Y		DL	1.2	28	1.5																
86	1.2DL + 1Lv5	Yes	Y		DL	1.2	29	1.5																
87	1.2DL + 1Lv6	Yes	Y		DL	1.2	30	1.5																
88	1.2DL + 1Lv7	Yes	Y		DL	1.2	31	1.5																
89	1.2DL + 1Lv8	Yes	Y		DL	1.2	32	1.5																
90	1.2DL + 1Lv9	Yes	Y		DL	1.2	33	1.5																
91	1.2DL + 1.5Lm + 1Wm 0...	Yes	Y		DL	1.2	34	1.5	2	.053	3		4	.053										
92	1.2DL + 1.5Lm + 1Wm 3...	Yes	Y		DL	1.2	34	1.5	2	.046	3	.027	5	.053										
93	1.2DL + 1.5Lm + 1Wm 4...	Yes	Y		DL	1.2	34	1.5	2	.038	3	.038	6	.053										
94	1.2DL + 1.5Lm + 1Wm 6...	Yes	Y		DL	1.2	34	1.5	2	.027	3	.046	7	.053										
95	1.2DL + 1.5Lm + 1Wm 9...	Yes	Y		DL	1.2	34	1.5	2		3	.053	8	.053										
96	1.2DL + 1.5Lm + 1Wm 1...	Yes	Y		DL	1.2	34	1.5	2	-.027	3	.046	9	.053										
97	1.2DL + 1.5Lm + 1Wm 1...	Yes	Y		DL	1.2	34	1.5	2	-.038	3	.038	10	.053										
98	1.2DL + 1.5Lm + 1Wm 1...	Yes	Y		DL	1.2	34	1.5	2	-.046	3	.027	11	.053										
99	1.2DL + 1.5Lm + 1Wm 1...	Yes	Y		DL	1.2	34	1.5	2	-.053	3		4	-.0...										
100	1.2DL + 1.5Lm + 1Wm 2...	Yes	Y		DL	1.2	34	1.5	2	-.046	3	-.0...	5	-.0...										
101	1.2DL + 1.5Lm + 1Wm 2...	Yes	Y		DL	1.2	34	1.5	2	-.038	3	-.0...	6	-.0...										
102	1.2DL + 1.5Lm + 1Wm 2...	Yes	Y		DL	1.2	34	1.5	2	-.027	3	-.0...	7	-.0...										
103	1.2DL + 1.5Lm + 1Wm 2...	Yes	Y		DL	1.2	34	1.5	2		3	-.0...	8	-.0...										
104	1.2DL + 1.5Lm + 1Wm 3...	Yes	Y		DL	1.2	34	1.5	2	.027	3	-.0...	9	-.0...										
105	1.2DL + 1.5Lm + 1Wm 3...	Yes	Y		DL	1.2	34	1.5	2	.038	3	-.0...	10	-.0...										
106	1.2DL + 1.5Lm + 1Wm 3...	Yes	Y		DL	1.2	34	1.5	2	.046	3	-.0...	11	-.0...										
107	1.2DL + 1.5Lm + 1Wm 0...	Yes	Y		DL	1.2	35	1.5	2	.053	3		4	.053										
108	1.2DL + 1.5Lm + 1Wm 3...	Yes	Y		DL	1.2	35	1.5	2	.046	3	.027	5	.053										
109	1.2DL + 1.5Lm + 1Wm 4...	Yes	Y		DL	1.2	35	1.5	2	.038	3	.038	6	.053										
110	1.2DL + 1.5Lm + 1Wm 6...	Yes	Y		DL	1.2	35	1.5	2	.027	3	.046	7	.053										
111	1.2DL + 1.5Lm + 1Wm 9...	Yes	Y		DL	1.2	35	1.5	2		3	.053	8	.053										
112	1.2DL + 1.5Lm + 1Wm 1...	Yes	Y		DL	1.2	35	1.5	2	-.027	3	.046	9	.053										
113	1.2DL + 1.5Lm + 1Wm 1...	Yes	Y		DL	1.2	35	1.5	2	-.038	3	.038	10	.053										
114	1.2DL + 1.5Lm + 1Wm 1...	Yes	Y		DL	1.2	35	1.5	2	-.046	3	.027	11	.053										
115	1.2DL + 1.5Lm + 1Wm 1...	Yes	Y		DL	1.2	35	1.5	2	-.053	3		4	-.0...										
116	1.2DL + 1.5Lm + 1Wm 2...	Yes	Y		DL	1.2	35	1.5	2	-.046	3	-.0...	5	-.0...										
117	1.2DL + 1.5Lm + 1Wm 2...	Yes	Y		DL	1.2	35	1.5	2	-.038	3	-.0...	6	-.0...										
118	1.2DL + 1.5Lm + 1Wm 2...	Yes	Y		DL	1.2	35	1.5	2	-.027	3	-.0...	7	-.0...										
119	1.2DL + 1.5Lm + 1Wm 2...	Yes	Y		DL	1.2	35	1.5	2		3	-.0...	8	-.0...										
120	1.2DL + 1.5Lm + 1Wm 3...	Yes	Y		DL	1.2	35	1.5	2	.027	3	-.0...	9	-.0...										
121	1.2DL + 1.5Lm + 1Wm 3...	Yes	Y		DL	1.2	35	1.5	2	.038	3	-.0...	10	-.0...										
122	1.2DL + 1.5Lm + 1Wm 3...	Yes	Y		DL	1.2	35	1.5	2	.046	3	-.0...	11	-.0...										
123	1.2DL + 1.5Lm + 1Wm 0...	Yes	Y		DL	1.2	36	1.5	2	.053	3		4	.053										
124	1.2DL + 1.5Lm + 1Wm 3...	Yes	Y		DL	1.2	36	1.5	2	.046	3	.027	5	.053										
125	1.2DL + 1.5Lm + 1Wm 4...	Yes	Y		DL	1.2	36	1.5	2	.038	3	.038	6	.053										
126	1.2DL + 1.5Lm + 1Wm 6...	Yes	Y		DL	1.2	36	1.5	2	.027	3	.046	7	.053										
127	1.2DL + 1.5Lm + 1Wm 9...	Yes	Y		DL	1.2	36	1.5	2		3	.053	8	.053										

Load Combinations (Continued)

	Description	Solve	PDelta	SRSS	BLC	Fa...	B...	Fa...	B...	Fact...	B...	Fa...	B...	Fa...	B...	Fa...	B...	Fa...	B...	Fa...	B...	Fa...	B...	Fa...
128	1.2DL + 1.5Lm + 1Wm 1...	Yes	Y		DL	1.2	36	1.5	2	-.027	3	.046	9	.053										
129	1.2DL + 1.5Lm + 1Wm 1...	Yes	Y		DL	1.2	36	1.5	2	-.038	3	.038	10	.053										
130	1.2DL + 1.5Lm + 1Wm 1...	Yes	Y		DL	1.2	36	1.5	2	-.046	3	.027	11	.053										
131	1.2DL + 1.5Lm + 1Wm 1...	Yes	Y		DL	1.2	36	1.5	2	-.053	3		4	-.0...										
132	1.2DL + 1.5Lm + 1Wm 2...	Yes	Y		DL	1.2	36	1.5	2	-.046	3	-.0...	5	-.0...										
133	1.2DL + 1.5Lm + 1Wm 2...	Yes	Y		DL	1.2	36	1.5	2	-.038	3	-.0...	6	-.0...										
134	1.2DL + 1.5Lm + 1Wm 2...	Yes	Y		DL	1.2	36	1.5	2	-.027	3	-.0...	7	-.0...										
135	1.2DL + 1.5Lm + 1Wm 2...	Yes	Y		DL	1.2	36	1.5	2		3	-.0...	8	-.0...										
136	1.2DL + 1.5Lm + 1Wm 3...	Yes	Y		DL	1.2	36	1.5	2	.027	3	-.0...	9	-.0...										
137	1.2DL + 1.5Lm + 1Wm 3...	Yes	Y		DL	1.2	36	1.5	2	.038	3	-.0...	10	-.0...										
138	1.2DL + 1.5Lm + 1Wm 3...	Yes	Y		DL	1.2	36	1.5	2	.046	3	-.0...	11	-.0...										
139	1.2DL + 1.5Lm + 1Wm 0...	Yes	Y		DL	1.2	37	1.5	2	.053	3		4	.053										
140	1.2DL + 1.5Lm + 1Wm 3...	Yes	Y		DL	1.2	37	1.5	2	.046	3	.027	5	.053										
141	1.2DL + 1.5Lm + 1Wm 4...	Yes	Y		DL	1.2	37	1.5	2	.038	3	.038	6	.053										
142	1.2DL + 1.5Lm + 1Wm 6...	Yes	Y		DL	1.2	37	1.5	2	.027	3	.046	7	.053										
143	1.2DL + 1.5Lm + 1Wm 9...	Yes	Y		DL	1.2	37	1.5	2		3	.053	8	.053										
144	1.2DL + 1.5Lm + 1Wm 1...	Yes	Y		DL	1.2	37	1.5	2	-.027	3	.046	9	.053										
145	1.2DL + 1.5Lm + 1Wm 1...	Yes	Y		DL	1.2	37	1.5	2	-.038	3	.038	10	.053										
146	1.2DL + 1.5Lm + 1Wm 1...	Yes	Y		DL	1.2	37	1.5	2	-.046	3	.027	11	.053										
147	1.2DL + 1.5Lm + 1Wm 1...	Yes	Y		DL	1.2	37	1.5	2	-.053	3		4	-.0...										
148	1.2DL + 1.5Lm + 1Wm 2...	Yes	Y		DL	1.2	37	1.5	2	-.046	3	-.0...	5	-.0...										
149	1.2DL + 1.5Lm + 1Wm 2...	Yes	Y		DL	1.2	37	1.5	2	-.038	3	-.0...	6	-.0...										
150	1.2DL + 1.5Lm + 1Wm 2...	Yes	Y		DL	1.2	37	1.5	2	-.027	3	-.0...	7	-.0...										
151	1.2DL + 1.5Lm + 1Wm 2...	Yes	Y		DL	1.2	37	1.5	2		3	-.0...	8	-.0...										
152	1.2DL + 1.5Lm + 1Wm 3...	Yes	Y		DL	1.2	37	1.5	2	.027	3	-.0...	9	-.0...										
153	1.2DL + 1.5Lm + 1Wm 3...	Yes	Y		DL	1.2	37	1.5	2	.038	3	-.0...	10	-.0...										
154	1.2DL + 1.5Lm + 1Wm 3...	Yes	Y		DL	1.2	37	1.5	2	.046	3	-.0...	11	-.0...										
155	1.2DL + 1.5Lm + 1Wm 0...	Yes	Y		DL	1.2	38	1.5	2	.053	3		4	.053										
156	1.2DL + 1.5Lm + 1Wm 3...	Yes	Y		DL	1.2	38	1.5	2	.046	3	.027	5	.053										
157	1.2DL + 1.5Lm + 1Wm 4...	Yes	Y		DL	1.2	38	1.5	2	.038	3	.038	6	.053										
158	1.2DL + 1.5Lm + 1Wm 6...	Yes	Y		DL	1.2	38	1.5	2	.027	3	.046	7	.053										
159	1.2DL + 1.5Lm + 1Wm 9...	Yes	Y		DL	1.2	38	1.5	2		3	.053	8	.053										
160	1.2DL + 1.5Lm + 1Wm 1...	Yes	Y		DL	1.2	38	1.5	2	-.027	3	.046	9	.053										
161	1.2DL + 1.5Lm + 1Wm 1...	Yes	Y		DL	1.2	38	1.5	2	-.038	3	.038	10	.053										
162	1.2DL + 1.5Lm + 1Wm 1...	Yes	Y		DL	1.2	38	1.5	2	-.046	3	.027	11	.053										
163	1.2DL + 1.5Lm + 1Wm 1...	Yes	Y		DL	1.2	38	1.5	2	-.053	3		4	-.0...										
164	1.2DL + 1.5Lm + 1Wm 2...	Yes	Y		DL	1.2	38	1.5	2	-.046	3	-.0...	5	-.0...										
165	1.2DL + 1.5Lm + 1Wm 2...	Yes	Y		DL	1.2	38	1.5	2	-.038	3	-.0...	6	-.0...										
166	1.2DL + 1.5Lm + 1Wm 2...	Yes	Y		DL	1.2	38	1.5	2	-.027	3	-.0...	7	-.0...										
167	1.2DL + 1.5Lm + 1Wm 2...	Yes	Y		DL	1.2	38	1.5	2		3	-.0...	8	-.0...										
168	1.2DL + 1.5Lm + 1Wm 3...	Yes	Y		DL	1.2	38	1.5	2	.027	3	-.0...	9	-.0...										
169	1.2DL + 1.5Lm + 1Wm 3...	Yes	Y		DL	1.2	38	1.5	2	.038	3	-.0...	10	-.0...										
170	1.2DL + 1.5Lm + 1Wm 3...	Yes	Y		DL	1.2	38	1.5	2	.046	3	-.0...	11	-.0...										
171	1.2DL + 1.5Lm + 1Wm 0...	Yes	Y		DL	1.2	39	1.5	2	.053	3		4	.053										
172	1.2DL + 1.5Lm + 1Wm 3...	Yes	Y		DL	1.2	39	1.5	2	.046	3	.027	5	.053										
173	1.2DL + 1.5Lm + 1Wm 4...	Yes	Y		DL	1.2	39	1.5	2	.038	3	.038	6	.053										
174	1.2DL + 1.5Lm + 1Wm 6...	Yes	Y		DL	1.2	39	1.5	2	.027	3	.046	7	.053										
175	1.2DL + 1.5Lm + 1Wm 9...	Yes	Y		DL	1.2	39	1.5	2		3	.053	8	.053										
176	1.2DL + 1.5Lm + 1Wm 1...	Yes	Y		DL	1.2	39	1.5	2	-.027	3	.046	9	.053										
177	1.2DL + 1.5Lm + 1Wm 1...	Yes	Y		DL	1.2	39	1.5	2	-.038	3	.038	10	.053										
178	1.2DL + 1.5Lm + 1Wm 1...	Yes	Y		DL	1.2	39	1.5	2	-.046	3	.027	11	.053										
179	1.2DL + 1.5Lm + 1Wm 1...	Yes	Y		DL	1.2	39	1.5	2	-.053	3		4	-.0...										

Load Combinations (Continued)

	Description	Solve	PDelta	SRSS	BLC	Fa...	B...	Fa...	B...	Fact...	B...	Fa...	B...	Fa...	B...	Fa...	B...	Fa...	B...	Fa...	B...	Fa...	B...	Fa...
180	1.2DL + 1.5Lm + 1Wm 2...	Yes	Y		DL	1.2	39	1.5	2	-.046	3	-.0...	5	-.0...										
181	1.2DL + 1.5Lm + 1Wm 2...	Yes	Y		DL	1.2	39	1.5	2	-.038	3	-.0...	6	-.0...										
182	1.2DL + 1.5Lm + 1Wm 2...	Yes	Y		DL	1.2	39	1.5	2	-.027	3	-.0...	7	-.0...										
183	1.2DL + 1.5Lm + 1Wm 2...	Yes	Y		DL	1.2	39	1.5	2		3	-.0...	8	-.0...										
184	1.2DL + 1.5Lm + 1Wm 3...	Yes	Y		DL	1.2	39	1.5	2	.027	3	-.0...	9	-.0...										
185	1.2DL + 1.5Lm + 1Wm 3...	Yes	Y		DL	1.2	39	1.5	2	.038	3	-.0...	10	-.0...										
186	1.2DL + 1.5Lm + 1Wm 3...	Yes	Y		DL	1.2	39	1.5	2	.046	3	-.0...	11	-.0...										
187	1.2DL + 1.5Lm + 1Wm 0...	Yes	Y		DL	1.2	40	1.5	2	.053	3		4	.053										
188	1.2DL + 1.5Lm + 1Wm 3...	Yes	Y		DL	1.2	40	1.5	2	.046	3	.027	5	.053										
189	1.2DL + 1.5Lm + 1Wm 4...	Yes	Y		DL	1.2	40	1.5	2	.038	3	.038	6	.053										
190	1.2DL + 1.5Lm + 1Wm 6...	Yes	Y		DL	1.2	40	1.5	2	.027	3	.046	7	.053										
191	1.2DL + 1.5Lm + 1Wm 9...	Yes	Y		DL	1.2	40	1.5	2		3	.053	8	.053										
192	1.2DL + 1.5Lm + 1Wm 1...	Yes	Y		DL	1.2	40	1.5	2	-.027	3	.046	9	.053										
193	1.2DL + 1.5Lm + 1Wm 1...	Yes	Y		DL	1.2	40	1.5	2	-.038	3	.038	10	.053										
194	1.2DL + 1.5Lm + 1Wm 1...	Yes	Y		DL	1.2	40	1.5	2	-.046	3	.027	11	.053										
195	1.2DL + 1.5Lm + 1Wm 1...	Yes	Y		DL	1.2	40	1.5	2	-.053	3		4	-.0...										
196	1.2DL + 1.5Lm + 1Wm 2...	Yes	Y		DL	1.2	40	1.5	2	-.046	3	-.0...	5	-.0...										
197	1.2DL + 1.5Lm + 1Wm 2...	Yes	Y		DL	1.2	40	1.5	2	-.038	3	-.0...	6	-.0...										
198	1.2DL + 1.5Lm + 1Wm 2...	Yes	Y		DL	1.2	40	1.5	2	-.027	3	-.0...	7	-.0...										
199	1.2DL + 1.5Lm + 1Wm 2...	Yes	Y		DL	1.2	40	1.5	2		3	-.0...	8	-.0...										
200	1.2DL + 1.5Lm + 1Wm 3...	Yes	Y		DL	1.2	40	1.5	2	.027	3	-.0...	9	-.0...										
201	1.2DL + 1.5Lm + 1Wm 3...	Yes	Y		DL	1.2	40	1.5	2	.038	3	-.0...	10	-.0...										
202	1.2DL + 1.5Lm + 1Wm 3...	Yes	Y		DL	1.2	40	1.5	2	.046	3	-.0...	11	-.0...										
203	1.2DL + 1.5Lm + 1Wm 0...	Yes	Y		DL	1.2	41	1.5	2	.053	3		4	.053										
204	1.2DL + 1.5Lm + 1Wm 3...	Yes	Y		DL	1.2	41	1.5	2	.046	3	.027	5	.053										
205	1.2DL + 1.5Lm + 1Wm 4...	Yes	Y		DL	1.2	41	1.5	2	.038	3	.038	6	.053										
206	1.2DL + 1.5Lm + 1Wm 6...	Yes	Y		DL	1.2	41	1.5	2	.027	3	.046	7	.053										
207	1.2DL + 1.5Lm + 1Wm 9...	Yes	Y		DL	1.2	41	1.5	2		3	.053	8	.053										
208	1.2DL + 1.5Lm + 1Wm 1...	Yes	Y		DL	1.2	41	1.5	2	-.027	3	.046	9	.053										
209	1.2DL + 1.5Lm + 1Wm 1...	Yes	Y		DL	1.2	41	1.5	2	-.038	3	.038	10	.053										
210	1.2DL + 1.5Lm + 1Wm 1...	Yes	Y		DL	1.2	41	1.5	2	-.046	3	.027	11	.053										
211	1.2DL + 1.5Lm + 1Wm 1...	Yes	Y		DL	1.2	41	1.5	2	-.053	3		4	-.0...										
212	1.2DL + 1.5Lm + 1Wm 2...	Yes	Y		DL	1.2	41	1.5	2	-.046	3	-.0...	5	-.0...										
213	1.2DL + 1.5Lm + 1Wm 2...	Yes	Y		DL	1.2	41	1.5	2	-.038	3	-.0...	6	-.0...										
214	1.2DL + 1.5Lm + 1Wm 2...	Yes	Y		DL	1.2	41	1.5	2	-.027	3	-.0...	7	-.0...										
215	1.2DL + 1.5Lm + 1Wm 2...	Yes	Y		DL	1.2	41	1.5	2		3	-.0...	8	-.0...										
216	1.2DL + 1.5Lm + 1Wm 3...	Yes	Y		DL	1.2	41	1.5	2	.027	3	-.0...	9	-.0...										
217	1.2DL + 1.5Lm + 1Wm 3...	Yes	Y		DL	1.2	41	1.5	2	.038	3	-.0...	10	-.0...										
218	1.2DL + 1.5Lm + 1Wm 3...	Yes	Y		DL	1.2	41	1.5	2	.046	3	-.0...	11	-.0...										
219	1.2DL + 1.5Lm + 1Wm 0...	Yes	Y		DL	1.2	42	1.5	2	.053	3		4	.053										
220	1.2DL + 1.5Lm + 1Wm 3...	Yes	Y		DL	1.2	42	1.5	2	.046	3	.027	5	.053										
221	1.2DL + 1.5Lm + 1Wm 4...	Yes	Y		DL	1.2	42	1.5	2	.038	3	.038	6	.053										
222	1.2DL + 1.5Lm + 1Wm 6...	Yes	Y		DL	1.2	42	1.5	2	.027	3	.046	7	.053										
223	1.2DL + 1.5Lm + 1Wm 9...	Yes	Y		DL	1.2	42	1.5	2		3	.053	8	.053										
224	1.2DL + 1.5Lm + 1Wm 1...	Yes	Y		DL	1.2	42	1.5	2	-.027	3	.046	9	.053										
225	1.2DL + 1.5Lm + 1Wm 1...	Yes	Y		DL	1.2	42	1.5	2	-.038	3	.038	10	.053										
226	1.2DL + 1.5Lm + 1Wm 1...	Yes	Y		DL	1.2	42	1.5	2	-.046	3	.027	11	.053										
227	1.2DL + 1.5Lm + 1Wm 1...	Yes	Y		DL	1.2	42	1.5	2	-.053	3		4	-.0...										
228	1.2DL + 1.5Lm + 1Wm 2...	Yes	Y		DL	1.2	42	1.5	2	-.046	3	-.0...	5	-.0...										
229	1.2DL + 1.5Lm + 1Wm 2...	Yes	Y		DL	1.2	42	1.5	2	-.038	3	-.0...	6	-.0...										
230	1.2DL + 1.5Lm + 1Wm 2...	Yes	Y		DL	1.2	42	1.5	2	-.027	3	-.0...	7	-.0...										
231	1.2DL + 1.5Lm + 1Wm 2...	Yes	Y		DL	1.2	42	1.5	2		3	-.0...	8	-.0...										

Load Combinations (Continued)

	Description	Solve	PDelta	SRSS	BLC	Fa...	B...	Fa...	B...	Fact...	B...	Fa...	B...	Fa...	B...	Fa...	B...	Fa...	B...	Fa...	B...	Fa...	B...	Fa...
232	1.2DL + 1.5Lm + 1Wm 3...	Yes	Y		DL	1.2	42	1.5	2	.027	3	-.0...	9	-.0...										
233	1.2DL + 1.5Lm + 1Wm 3...	Yes	Y		DL	1.2	42	1.5	2	.038	3	-.0...	10	-.0...										
234	1.2DL + 1.5Lm + 1Wm 3...	Yes	Y		DL	1.2	42	1.5	2	.046	3	-.0...	11	-.0...										

Envelope Joint Reactions

	Joint		X [lb]	LC	Y [lb]	LC	Z [lb]	LC	MX [lb-ft]	LC	MY [lb-ft]	LC	MZ [lb-ft]	LC
1	N25	max	1335.478	20	2108.178	39	2016.154	3	415.233	33	2361.326	19	341.299	31
2		min	-1340.406	12	5.676	31	-2010.062	27	-2014.644	130	-2364.633	11	-3786.471	38
3	N1	max	1110.581	8	1967.195	45	1954.146	17	429.472	19	2251.147	25	3453.912	45
4		min	-1102.8	32	-25.426	21	-1952.893	25	-2266.078	43	-2254.266	17	-303.057	21
5	N13	max	1984.916	22	1974.551	34	520.366	18	4120.485	34	1944.951	30	754.57	167
6		min	-1987.543	14	-49.896	26	-528.249	10	-441.411	26	-1948.205	6	-623.654	223
7	Totals:	max	3787.951	22	5727.353	42	4049.841	18						
8		min	-3787.951	30	1508.594	66	-4049.842	10						

Envelope AISC 15th(360-16): LRFD Steel Code Checks

	Member	Shape	Code Che...	Lo...	LC	She...	Lo...	...	LC	phi*Pnc [lb]	phi*Pnt [lb]	phi*Mn y-y [lb...	phi*M.....	...	Eqn
1	M12	PIPE_3.5	.535	40	39	.212	40		3	75262.68	78750	7953.75	7953...	...	H1-1b
2	M7	PIPE_3.5	.519	40	34	.187	40		14	75262.68	78750	7953.75	7953...	...	H1-1b
3	M2	PIPE_3.5	.516	40	45	.200	40		9	75262.68	78750	7953.75	7953...	...	H1-1b
4	M11	C3X5	.414	34....	6	.142	63...	y	35	11202.931	47628	981.263	4104	...	H1-1b
5	M6	C3X5	.398	34....	34	.140	63...	y	46	37027.882	47628	981.263	4020...	1	H1-1b
6	M1	C3X5	.397	34....	11	.141	63...	y	40	11202.931	47628	981.263	4104	...	H1-1b
7	MP4	PIPE_2.0	.396	48	11	.054	48		11	20866.733	32130	1871.625	1871...	...	H1-1b
8	MP1	PIPE_2.0	.396	48	16	.052	48		17	20866.733	32130	1871.625	1871...	...	H1-1b
9	MP3	PIPE_2.0	.390	48	5	.036	48		10	20866.733	32130	1871.625	1871...	...	H1-1b
10	MP9	PIPE_2.0	.389	48	10	.035	48		3	20866.733	32130	1871.625	1871...	...	H1-1b
11	MP7	PIPE_2.0	.379	48	10	.043	48		6	20866.733	32130	1871.625	1871...	...	H1-1b
12	MP8	PIPE_2.0	.375	48	10	.046	48		14	20866.733	32130	1871.625	1871...	...	H1-1b
13	MP2	PIPE_2.0	.375	48	5	.055	48		9	20866.733	32130	1871.625	1871...	...	H1-1b
14	MP6	PIPE_2.0	.359	48	15	.037	48		9	20866.733	32130	1871.625	1871...	...	H1-1b
15	MP5	PIPE_2.0	.358	48	16	.057	48		3	20866.733	32130	1871.625	1871...	...	H1-1b
16	M10	6.5"x0.3...	.296	21	2	.100	21	y	48	3513.807	75757.5	583.963	6346...	...	H1-1b
17	M15	6.5"x0.3...	.292	21	7	.099	21	y	37	3513.807	75757.5	583.963	6329...	...	H1-1b
18	M5	6.5"x0.3...	.281	21	13	.099	21	y	42	3513.807	75757.5	583.963	6372...	...	H1-1b
19	M13	L2x2x3	.228	0	6	.029	0	z	43	18051.765	23392.8	557.717	1239...	...	H2-1
20	M3	L2x2x3	.208	0	11	.029	0	z	49	18051.765	23392.8	557.717	1239...	...	H2-1
21	M8	L2x2x3	.197	0	17	.029	0	z	38	18051.765	23392.8	557.717	1239...	...	H2-1
22	M22	L6 5/8x...	.184	0	21	.036	42	z	4	15453.054	66065.641	1040.591	3031...	...	H2-1
23	M4	L2x2x3	.182	0	13	.031	0	y	41	18051.765	23392.8	557.717	1239...	...	H2-1
24	M23	L6 5/8x...	.177	0	26	.035	42	y	17	15453.054	66065.641	1040.591	3031...	...	H2-1
25	M21	PIPE_2.0	.170	72	5	.146	72		13	14916.036	32130	1871.625	1871...	...	H1-1b
26	M19	PIPE_2.0	.168	72	10	.151	72		2	14916.036	32130	1871.625	1871...	...	H1-1b
27	M9	L2x2x3	.163	0	2	.031	0	y	46	18051.765	23392.8	557.717	1239...	...	H2-1
28	M20	PIPE_2.0	.160	24	16	.145	72		8	14916.036	32130	1871.625	1871...	...	H1-1b
29	M24	L6 5/8x...	.155	3.9...	33	.033	42	y	6	15453.054	66065.641	1040.591	3031...	...	H2-1
30	M14	L2x2x3	.146	0	8	.031	0	y	36	18051.765	23392.8	557.717	1239...	...	H2-1
31	H3	PIPE_3.5	.134	31	10	.111	24		16	60666.044	78750	7953.75	7953...	...	H1-1b
32	H2	PIPE_3.5	.129	31	15	.104	24		5	60666.044	78750	7953.75	7953...	...	H1-1b

Envelope AISC 15th(360-16): LRFD Steel Code Checks (Continued)

	Member	Shape	Code Che...	Lo...	LC	She...	Lo...	...	LC	phi*Pnc [lb]	phi*Pnt [lb]	phi*Mn y-y [lb...	phi*M.....		Eqn
33	H1	PIPE_3.5	.128	31	5	.110	24		10	60666.044	78750	7953.75	7953...	...	H1-1b
34	RRU1	PIPE_2.0	.050	18	10	.013	18		10	28843.414	32130	1871.625	1871...	...	H1-1b

APPENDIX D

ADDITIONAL CALCUATIONS

Analysis date: 7/23/2021

BOLT TOOL 1.5.2

Project Data	
Job Code:	188200
Carrier Site ID:	BOBDL00056A
Carrier Site Name:	BOBDL00056A

Code	
Design Standard:	TIA-222-H
Slip Check:	No
Pretension Standard:	TIA-222-H

Bolt Properties		
Connection Type:	Bolt	
Diameter:	0.625	in
Grade:	A325	--
Yield Strength (Fy):	92	ksi
Ultimate Strength (Fu):	120	ksi
Number of Bolts:	4	--
Threads Included:	Yes	--
Double Shear:	No	--
Connection Pipe Size:	-	in

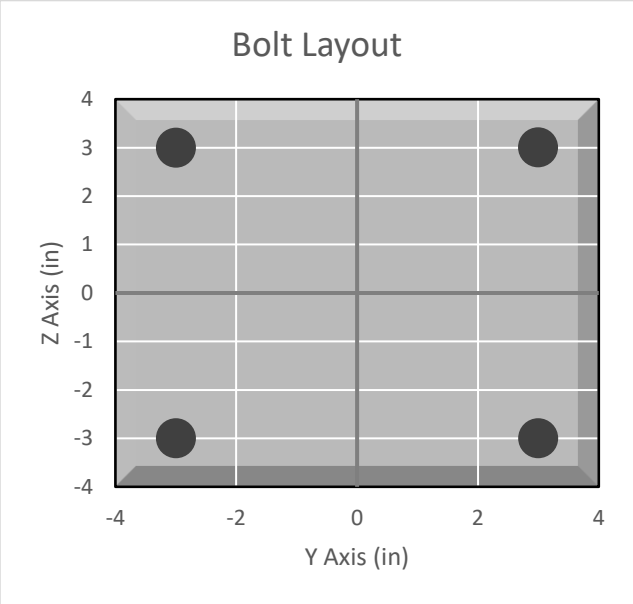

Connection Description
Mount Standoff to Collar

Bolt Check*		
Tensile Capacity (ϕT_n):	20340.1	lbs
Shear Capacity (ϕV_n):	13805.8	lbs
Tension Force (T_u):	4500.4	lbs
Shear Force (V_u):	729.1	lbs
Tension Usage:	21.1%	--
Shear Usage:	5.0%	--
Interaction:	21.1%	Pass
Controlling Member:	M12	--
Controlling LC:	37	--

**Rating per TIA-222-H Section 15.5*

APPENDIX E

SUPPLEMENTAL DRAWINGS

ITEM	PART NO.	DESCRIPTION	QTY.	WEIGHT	NOTE NO.
1	MTC3006SB	STEEL BUNDLE FOR SNUB NOSE PLATFORM	1	402.64 LBS	
2	MCPK8CSB	PIPE STEEL BUNDLE FOR MC-PK8-C	1	464.27 LBS	
3	MCPK8CHWK	HARDWARE KIT FOR MC-PK8-C	1	543.22 LBS	

C

REVISIONS				
REV.	ECN	DESCRIPTION	BY	DATE
A		INITIAL RELEASE	DRR	12/27/11
B	8000005979	CHANGE NOSE CORNER BRKT, ADD GUB-4240	MSM	11/25/14
C	8000007579	NEW RINGMOUNT WELDMENT DESIGN	RJC	04/07/15

FOR BOM ENTRY ONLY

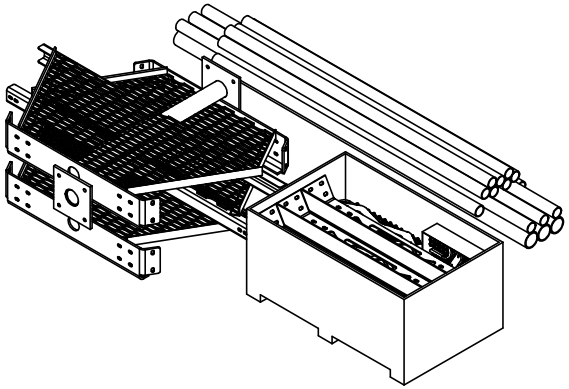

NOTES:
1. CUSTOMER ASSEMBLY SHEETS 2–3.

These drawings and specifications are the proprietary property of ANDREW CORPORATION and may be used only for the specific purpose authorized in writing by Andrew Corporation.

ALL DIMENSIONS ARE IN INCHES U.O.S.
TOLERANCES UNLESS OTHERWISE SPECIFIED:
.X = ± .12 ANGLES ±2°
.XX = ± .06 FRACTIONS ±1/32
.XXX= ± .03
REMOVE BURRS AND BREAK EDGES .005

DO NOT SCALE THIS PRINT

DRAWN BY: MSM	SHEET: 1 of 3	PART NUMBER: MC-PK8-C
CHECKED BY: TP	SCALE: NTS	DESCRIPTION: LOW PROFILE PLATFORM KIT 8' FACE
DATE: 10/18/11	MATERIAL: A36, A500	DRAWING TYPE: ASSEMBLY DRAWING
REVISION: C	FINISH: GALV A123	ANDREW® WESTCHESTER, IL. 60154 U.S.A.
	WEIGHT: 1410.14 LBS	

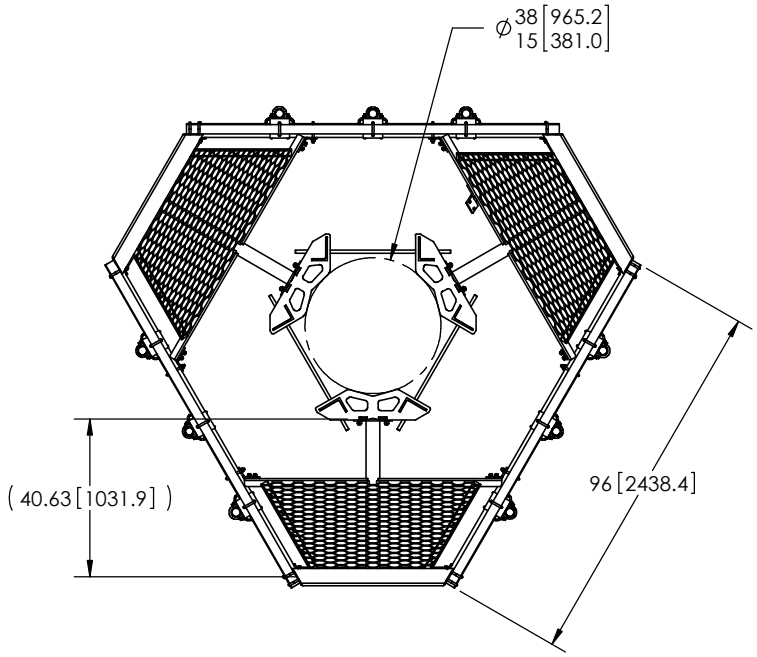

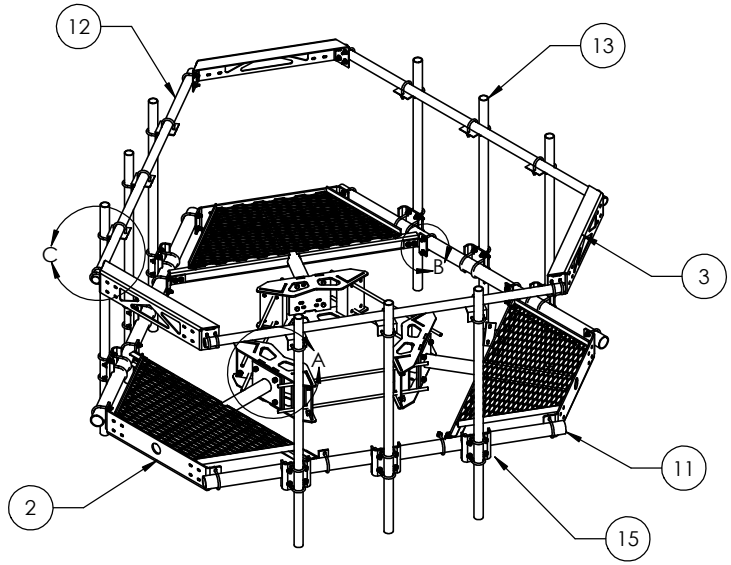

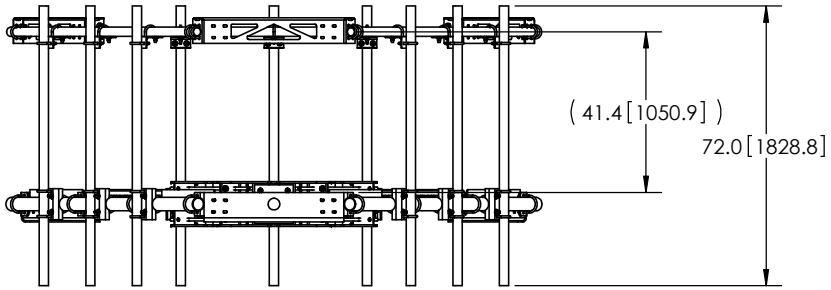

ITEM	PART NO.	DESCRIPTION	QTY.	WEIGHT
1	MC-RM1550-3	12" - 50" OD RINGMOUNT	1	230.42 LBS
2	MTC300601	Low Profile Co-Location Platform Snub Nose	3	134.21 LBS
3	MT195801	Corner Weldment Snub Nose Handrail	3	27.10 LBS
4	XA2020.01	CROSS OVER ANGLE	9	2.65 LBS
5	GUB-4356	1/2" X 3-5/8" X 6" GALV U-BOLT	18	0.82 LBS
6	GUB-4355	1/2" X 3-5/8" X 5" GALV U-BOLT	12	0.71 LBS
7	GUB-4240	1/2" X 2-1/2" X 4" GALV U-BOLT	48	0.56 LBS
8	GB-04145	1/2" X 1-1/2" GALV BOLT KIT	12	0.13 LBS
9	GWF-04	1/2" GALV FLAT WASHER	24	0.03 LBS
10	GB-0520A	5/8" X 2" GALV BOLT KIT (A325)	12	0.27 LBS
11	MT54796	3.50" OD X 96" GALV PIPE	3	60.28 LBS
12	MT-651-96	Ø2.375" OD X 96" PIPE	3	29.07 LBS
13	MT-651	2.375" OD x 72" PIPE	9	21.80 LBS
14	MT19617	MT196 Pipe Mount Plate	6	2.49 LBS
15	MT21701	PIPE MOUNT PLATE	9	7.93 LBS

NOTES:
1. ALL METRIC DIMENSIONS ARE IN BRACKETS.
2. WILL FIT MONOPOLES 15"–38" OD.

These drawings and specifications are the proprietary property of ANDREW CORPORATION and may be used only for the specific purpose authorized in writing by Andrew Corporation.

ALL DIMENSIONS ARE IN INCHES U.O.S.
TOLERANCES UNLESS OTHERWISE SPECIFIED:
.X = ± .12 ANGLES ±2°
.XX = ± .06 FRACTIONS ±1/32
.XXX= ± .03
REMOVE BURRS AND BREAK EDGES .005

DO NOT SCALE THIS PRINT

DRAWN BY: MSM	SHEET: 2 of 3	PART NUMBER: MC-PK8-C	
CHECKED BY: TP	SCALE: NTS	DESCRIPTION: 25" OD Snub Nose MT-196	
DATE: 10/18/11	MATERIAL: A36, A53	DRAWING TYPE: ASSEMBLY DRAWING	
REVISION: C	FINISH: GALV A123	ANDREW®	WESTCHESTER, IL. 60154 U.S.A.
	WEIGHT: 1361.27 LBS		

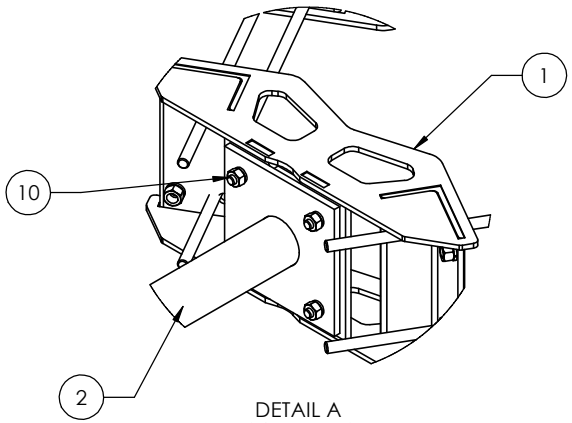

DETAIL A
SCALE 1 : 8

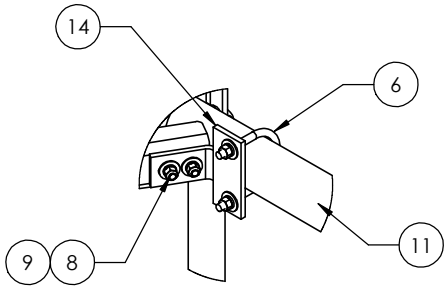

DETAIL B
SCALE 1 : 8

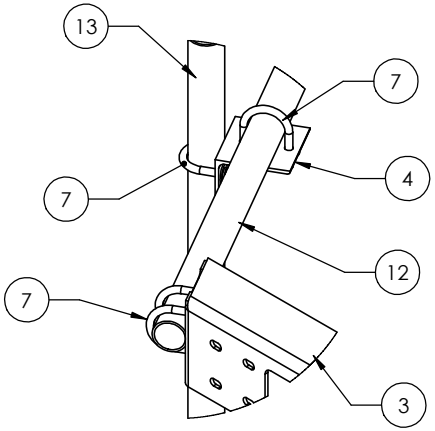

DETAIL C
SCALE 1 : 8

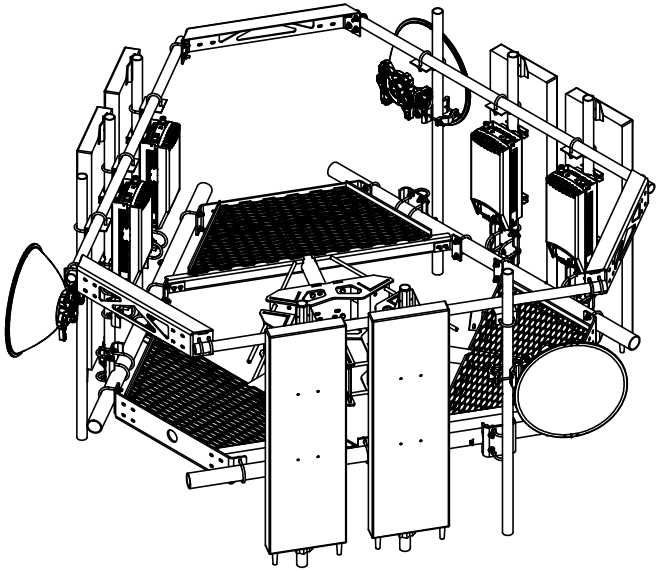

WITH ANTENNAS

NOTES:
1. ALL METRIC DIMENSIONS ARE IN BRACKETS.

These drawings and specifications are the proprietary property of ANDREW CORPORATION and may be used only for the specific purpose authorized in writing by Andrew Corporation.

ALL DIMENSIONS ARE IN INCHES U.O.S.
TOLERANCES UNLESS OTHERWISE SPECIFIED:

.X = ± .12		ANGLES	±2°
.XX = ± .06		FRACTIONS	±1/32
.XXX= ± .03			

REMOVE BURRS AND BREAK EDGES .005

DO NOT SCALE THIS PRINT

DRAWN BY: MSM	SHEET: 3 of 3	PART NUMBER: MC-PK8-C
CHECKED BY: TP	SCALE: NTS	DESCRIPTION: 25" OD Snub Nose MT-196
DATE: 10/18/11	MATERIAL: A36, A53	DRAWING TYPE: ASSEMBLY DRAWING
REVISION: C	FINISH: GALV A123	ANDREW® WESTCHESTER, IL. 60154 U.S.A.
	WEIGHT: 1361.27 LBS	