Sprint

AUGMENT ID:	CT-HFD0039F17.1
SPRINT SITE CASCADE:	CT52XC027
SPRINT SITE NAME:	MANCHESTER
SITE TYPE:	MONOPOLE
LANDLORD SITE ID:	CT13529

SPRINT CLEARWIRE MW-TO-LIT FIBER

SITE ADDRESS:	93 LAKE STREET MANCHESTER, CT 06042
COUNTY:	HARTFORD
JURISDICTION:	TOWN OF MANCHESTER

Sprint

SAC WIRELESS
540 W. MADISON ST., 9TH FLOOR
CHICAGO, IL 60661

FULLERTON ENGINEERING · DESIGN
1100 E. WOODFIELD ROAD, SUITE 500
SCHAUMBURG, ILLINOIS 60173
TEL: 847-908-8400
COA# PEC.0001444
www.FullertonEngineering.com

PROJECT INFORMATION

SPRINT SITE CASCADE	CT52XC027
SPRINT SITE NAME	MANCHESTER
LANDLORD SITE ID	CT13529
SITE ADDRESS:	93 LAKE STREET MANCHESTER, CT 06042
COUNTY:	HARTFORD
MAP/PARCEL #:	333000093A
LATITUDE:	41° 47' 20.70"
LONGITUDE:	72° 28' 55.50"
LAT/LONG TYPE:	NAD83
GROUND ELEV. (A.M.S.L.):	475'
CURRENT ZONING:	RURAL RESIDENCE
JURISDICTION:	TOWN OF MANCHESTER
OCCUPANCY CLASSIFICATION:	U
CONSTRUCTION TYPE:	II-B
A.D.A. COMPLIANCE	FACILITY IS UNMANNED AND NOT FOR HUMAN HABITATION
TOWER OWNER:	SBA COMMUNICATIONS CORPORATION 900 CUMMINGS CENTER SUITE 204U BEVERLY, MA 01915-6181
CARRIER/APPLICANT:	SPRINT 6391 SPRINT PARKWAY OVERLAND PARK, KS 66251-2650
ELECTRIC PROVIDER:	CONNECTICUT LIGHT & POWER HARTFORD, CT 06141 PHONE: (800)286-2000
FIBER PROVIDER:	COX
PROPOSED USE:	TELECOMMUNICATIONS FACILITY

PROJECT CONSULTANTS

SAC CONTACTS:	SAC WIRELESS 540 W. MADISON ST., 9TH FLOOR CHICAGO, IL 60661 ERIC LEE (815) 793-0730 eric.lee@sacw.com
SPRINT CONTACT:	ARRIN ARENSMAN (913) 481-7344 arrin.arensman@sprint.com
ENGINEER/ARCHITECT:	FULLERTON ENGINEERING
ADDRESS:	1100 E. WOODFIELD ROAD, SUITE 500 SCHAUMBURG, ILLINOIS 60173
CONTACT:	POLINA KOSEVA
PHONE:	(847) 908-8476
EMAIL:	pkoseva@fullertonengineering.com

DRAWING INDEX

T-1	TITLE SHEET
AAV-1	CLEARWIRE MW-TO-LIT FIBER SITE PLANS
AAV-2	CLEARWIRE MW-TO-LIT FIBER EQUIPMENT DETAILS
AAV-3	CLEARWIRE MW-TO-LIT FIBER EQUIPMENT DETAILS
AAV-4	SITE PHOTOS

SITE LOCATION MAP

DRIVING DIRECTIONS FROM HARTFORD-BRAINARD AIRPORT:

1. DEPART MAXIM RD TOWARD BRAINARD RD
2. ROAD NAME CHANGES TO BRAINARD RD
3. TAKE RAMP RIGHT FOR US-5 N / CT-15 N
4. KEEP STRAIGHT ONTO CT-15 N
5. KEEP STRAIGHT ONTO I-84 E / US-6 E
6. TAKE RAMP RIGHT FOR I-384 E
7. AT EXIT 5, TAKE RAMP RIGHT FOR CT-85 TOWARD BOLTON / COLCHESTER
8. TURN LEFT ONTO CT-85 / BOLTON CENTER RD
9. TURN LEFT ONTO US-6 / US-44 / BOSTON TPKE
10. TURN RIGHT ONTO LAKE ST
11. ARRIVE AT LAKE ST

THE LAST INTERSECTION IS US-6 / US-44 / MIDDLE TPKE E
IF YOU REACH CIDER MILL RD, YOU'VE GONE TOO FAR

NO SCALE

SCOPE OF WORK

THE HEAVY SCOPE OF WORK CONSISTS OF:

SPRINT:
1. INSTALL NEW H-FRAME BEHIND EXISTING CLEARWIRE CABINET.
2. INSTALL NEW PURCELL BOX ON NEW H-FRAME.
3. INSTALL ±10' OF (2) NEW 2" CONDUITS FROM EXISTING CLEARWIRE CABINET TO NEW PURCELL BOX ON NEW H-FRAME.
4. INSTALL ±40' OF NEW 3" CONDUIT WITH (2) 1" INNER-DUCTS FROM NEW PURCELL BOX TO PMMP.
5. PMMP IS A NEW VAULT OPPOSING THE GATE BEHIND THE COMMUNITY TELCO BOX AT COORDINATES: 41°43'14.17"N 72°39'37.77"W
6. SPRINT TO INSTALL +/-10' OF NEW FIBER WITHIN (2) NEW 2" CONDUITS FROM EXISTING CLEARWIRE CABINET TO NEW PURCELL BOX ON NEW H-FRAME

FIBER VENDOR:
1. INSTALL NEW NID INSIDE NEW PURCELL BOX.
2. INSTALL NEW FDP INSIDE NEW PURCELL BOX.
3. INSTALL ±40' OF NEW FIBER WITHIN NEW 3" CONDUIT WITH (2) 1" INNER-DUCTS FROM NEW PURCELL BOX TO PMMP.

- CONTRACTOR SHALL FURNISH ALL MATERIAL WITH THE EXCEPTION OF SPRINT SUPPLIED MATERIAL.
- ALL MATERIAL SHALL BE INSTALLED BY THE CONTRACTOR, UNLESS STATED OTHERWISE.

NOTE: DRAWING SCALES ARE FOR 11"x17" SHEETS UNLESS OTHERWISE NOTED

APPLICABLE BUILDING CODES AND STANDARDS

ALL WORK AND MATERIALS SHALL BE PERFORMED AND INSTALLED IN ACCORDANCE WITH THE CURRENT EDITIONS OF THE FOLLOWING CODES AS ADOPTED BY THE LOCAL GOVERNING AUTHORITIES. NOTHING IN THESE PLANS IS TO BE CONSTRUCTED TO PERMIT WORK NOT CONFORMING TO THESE CODES.

- 2016 INTERNATIONAL BUILDING CODE
- 2014 NATIONAL ELECTRICAL CODE WITH CONNECTICUT AMENDMENTS

- FACILITY IS UNMANNED AND NOT FOR HUMAN HABITATION.
- ADA ACCESS REQUIREMENTS ARE NOT REQUIRED.
- THIS FACILITY DOES NOT REQUIRE POTABLE WATER AND WILL NOT PRODUCE ANY SEWAGE

CALL BEFORE YOU DIG:
811 OR
1-800-922-4455

GENERAL ABBREVIATIONS

FV	FIBER VENDOR
DFV	DARK FIBER VENDER
MMP	MEET ME POINT
NID	NETWORK INTERFACE DEVICE
MMBTS	MULTI MODAL BASE TRANSMISSION STATION
AGL	ABOVE GRADE LEVEL
APPROX	APPROXIMATE
BLDG	BUILDING
℄	CENTERLINE
CND	CONDUIT
FT	FOOT(FEET)
ELEV	ELEVATION
EQUIP	EQUIPMENT
(E)	EXISTING
N.T.S.	NOT TO SCALE
PPC	POWER PROTECTION CABINET
TELCO	TELCO
ROW	RIGHT OF WAY

REV	DATE	DESCRIPTION	BY
A	8/30/18	90% REVIEW	MA
0	9/20/18	FINAL	PK

I HEREBY CERTIFY THAT THESE DRAWINGS WERE PREPARED BY ME OR UNDER MY DIRECT SUPERVISION AND CONTROL, AND TO THE BEST OF MY KNOWLEDGE AND BELIEF COMPLY WITH THE REQUIREMENTS OF ALL APPLICABLE CODES.

STATE OF CONNECTICUT · HENRY M. BELLAGAMBA · 25358 · LICENSED PROFESSIONAL ENGINEER

SITE NAME
MANCHESTER

SITE NUMBER:
CT52XC027

SITE ADDRESS
93 LAKE STREET
MANCHESTER, CT 06042

SHEET TITLE
TITLE SHEET

SHEET NUMBER
T-1

PROJECT# 2018.0203.0308

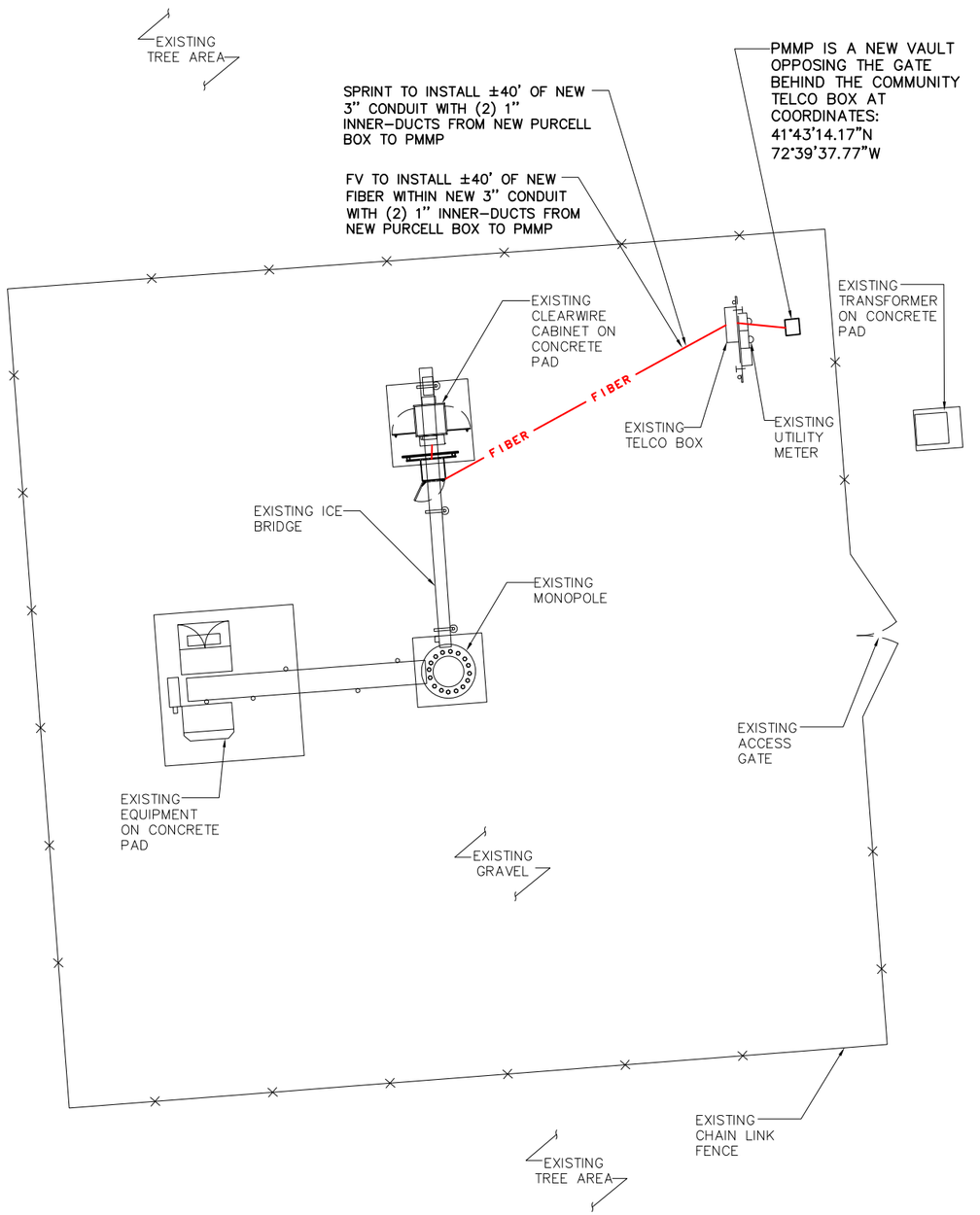

DETAILED SITE PLAN SCALE 1" = 10'-0" 1

PROJECT SCOPE (HEAVY SCOPE):

SPRINT:
1. INSTALL NEW H-FRAME BEHIND EXISTING CLEARWIRE CABINET.
2. INSTALL NEW PURCELL BOX ON NEW H-FRAME.
3. INSTALL ±10' OF (2) NEW 2" CONDUITS FROM EXISTING CLEARWIRE CABINET TO NEW PURCELL BOX ON NEW H-FRAME.
4. SPRINT TO INSTALL ±10' OF NEW FIBER WITHIN (2) NEW 2" CONDUITS FROM EXISTING CLEARWIRE CABINET TO NEW PURCELL BOX ON NEW H-FRAME
5. INSTALL ±40' OF NEW 3" CONDUIT WITH (2) 1" INNER-DUCTS FROM NEW PURCELL BOX TO PMMP.
6. PMMP IS A NEW VAULT OPPOSING THE GATE BEHIND THE COMMUNITY TELCO BOX AT COORDINATES: 41°43'14.17"N 72°39'37.77"W

FIBER VENDOR:
1. INSTALL NEW NID INSIDE NEW PURCELL BOX.
2. INSTALL NEW FDP INSIDE NEW PURCELL BOX.
3. INSTALL ±40' OF NEW FIBER WITHIN NEW 3" CONDUIT WITH (2) 1" INNER-DUCTS FROM NEW PURCELL BOX TO PMMP.

SITE NOTES:

1. SITE INFORMATION WAS PREPARED USING EXISTING DOCUMENTATION AND /OR SITE MEASUREMENTS AND SHOULD NOT BE INTERPRETED AS AN ACCURATE BOUNDARY SURVEY.
2. THIS SITE PLAN WAS PREPARED WITHOUT THE BENEFIT OF A TITLE REPORT AND IS SUBJECT TO ALL THE EASEMENTS AND RESTRICTIONS OF RECORD
3. CONTRACTOR SHALL MAKE A UTILITY "ONE CALL" TO LOCATE ALL UTILITIES PRIOR TO CONSTRUCTION. CONTRACTOR SHALL BE RESPONSIBLE FOR COORDINATING A PRIVATE UTILITY LOCATE IF NEEDED TO DETERMINE THE UNDERGROUND STRUCTURES ON PRIVATE PROPERTY. THESE DRAWINGS DO NOT DEPICT ALL UNDERGROUND UTILITIES IN THE PROJECT AREA.
4. LATITUDE AND LONGITUDE COORDINATES ASSOCIATED WITH PROPOSED EQUIPMENT/INFRASTRUCTURE WERE BASED UPON GOOGLE EARTH AND WERE NOT FIELD VERIFIED FOR PRECISION. THE EXACT LOCATION OF PROPOSED EQUIPMENT/INFRASTRUCTURE SHALL BE FIELD VERIFIED WITH SPRINT, SAC AND/OR FV.

ROLES AND RESPONSIBILITIES:

SPRINT R&R:
1. SPRINT TO PERFORM ALL NEW CONDUIT INSTALLATIONS FROM THE MMP TO THE PPC AND FROM PPC TO MMBTS.
2. SPRINT TO PROVIDE ITS TELCO CABINET TO FV FOR THE PROPOSED NID IF SPACE ALLOWS.
3. SPRINT TO PROVIDE POWER TO FV NID.

FIBER VENDOR R&R:
1. FIBER VENDOR RESPONSIBLE FOR ANY NEW CONDUIT INSTALLATION, FIBER WORK OR MMP CONSTRUCTION REQUIRED FROM THE ROW TO THE MMP.
2. FIBER VENDOR RESPONSIBLE FOR PULLING FIBER FROM MMP TO NID.
3. FIBER VENDOR RESPONSIBLE FOR PULLING FIBER FROM NID TO MMBTS.
4. FIBER VENDOR RESPONSIBLE FOR INSTALL OF NID WHETHER IT BE IN THE TELCO CABINET OR ELSEWHERE. NID TO BE INSTALLED IN TELCO CABINET UNLESS SPACE IS UNAVAILABLE AND THEREFORE SPECIFIED OTHERWISE.

GENERAL NOTES SCALE: N.T.S. 2

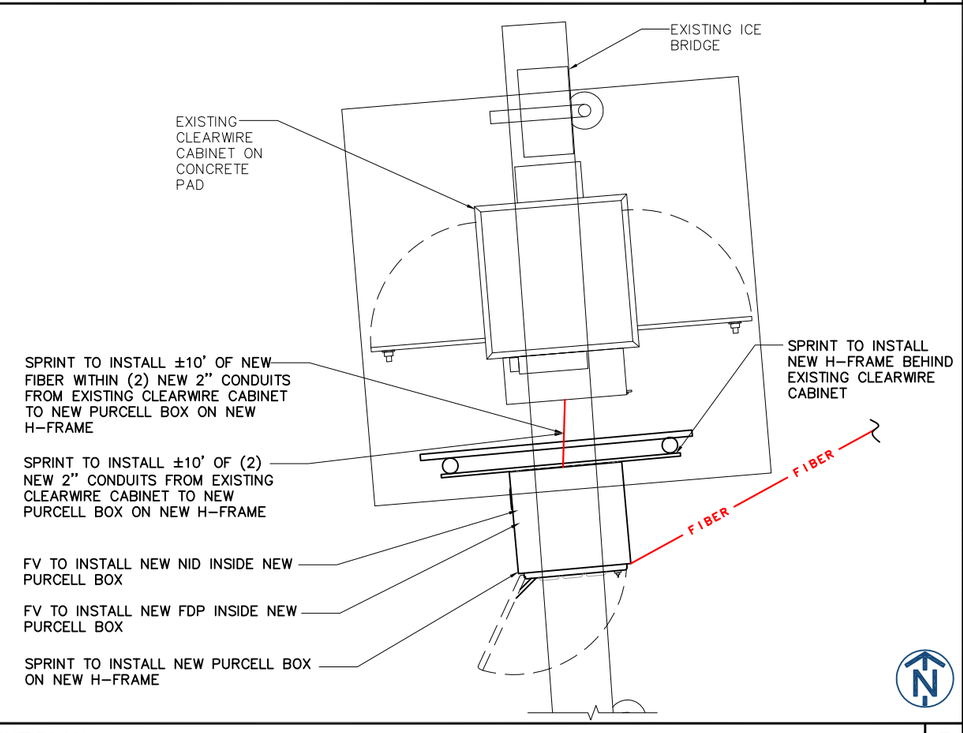

EQUIPMENT PLAN SCALE: 3/8" = 1'-0" 3

Sprint

SAC WIRELESS
540 W. MADISON ST., 9TH FLOOR
CHICAGO, IL 60661

FULLERTON ENGINEERING · DESIGN
1100 E. WOODFIELD ROAD, SUITE 500
SCHAUMBURG, ILLINOIS 60173
TEL: 847-908-8400
COA# PEC.0001444
www.FullertonEngineering.com

REV	DATE	DESCRIPTION	BY
A	8/30/18	90% REVIEW	MA
0	9/20/18	FINAL	PK

I HEREBY CERTIFY THAT THESE DRAWINGS WERE PREPARED BY ME OR UNDER MY DIRECT SUPERVISION AND CONTROL, AND TO THE BEST OF MY KNOWLEDGE AND BELIEF COMPLY WITH THE REQUIREMENTS OF ALL APPLICABLE CODES.

STATE OF CONNECTICUT · HENRY M. BELLAGAMBA · 25358 · LICENSED PROFESSIONAL ENGINEER

SITE NAME
MANCHESTER

SITE NUMBER:
CT52XC027

SITE ADDRESS
93 LAKE STREET
MANCHESTER, CT 06042

SHEET TITLE
CLEARWIRE
MW-TO-LIT FIBER
SITE PLANS

SHEET NUMBER
AAV-1

PROJECT# 2018.0203.0308

NOTES:
1. SPRINT TO INSTALL ALL NEW CONDUIT FOR PROJECT
2. FIBER VENDOR TO INSTALL ALL NEW FIBER THROUGH EXISTING AND PROPOSED CONDUIT

POWER — FIBER — GROUND —

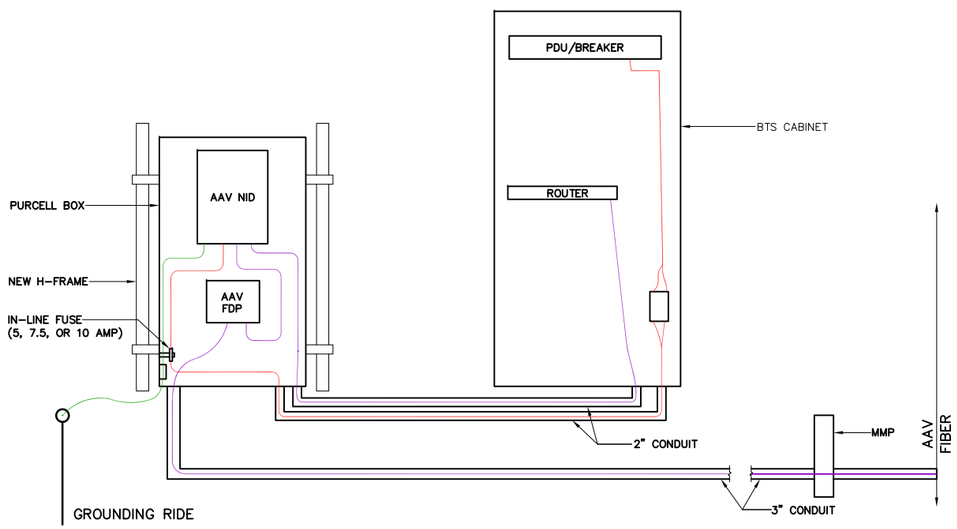

PLUMBING DIAGRAM SCALE: N.T.S. 1

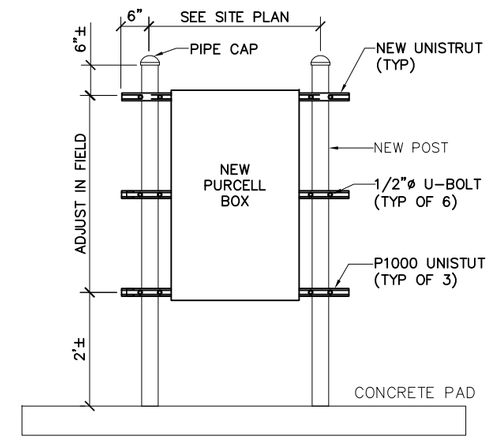

H-FRAME DETAIL SCALE: N.T.S. 2

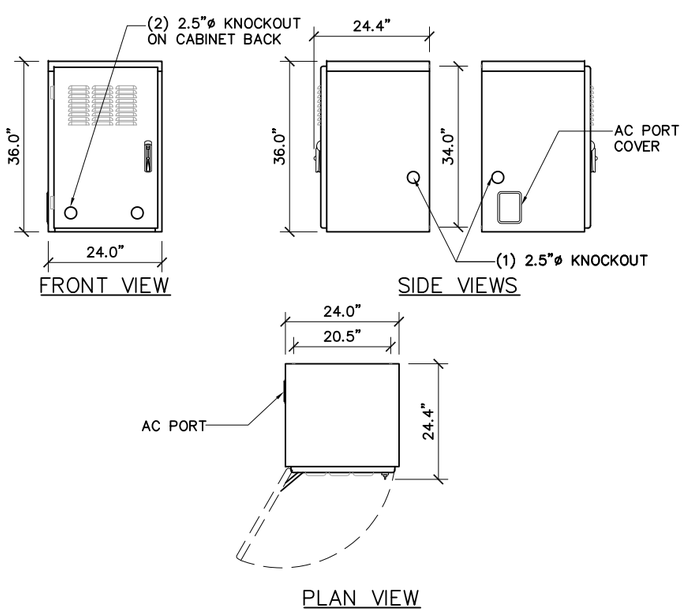

PURCELL TELCO BOX SPECS SCALE: 3/8" = 1'-0" 3

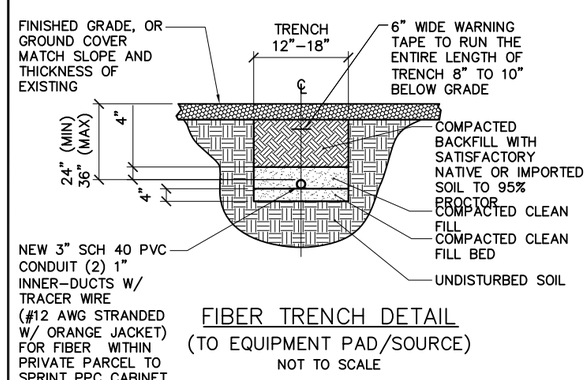

FIBER TRENCH DETAIL
(TO EQUIPMENT PAD/SOURCE)
NOT TO SCALE

UTILITY TRENCH NOTES:

1. CONDUIT SIZE, TYPE, QUANTITY, AND SEPARATION DIMENSION TO BE VERIFIED WITH LOCAL UTILITY.
2. ALL UTILITY TRENCHES WITHIN THE FENCED COMPOUND OR UNDER ANY PORTION OF A GRAVEL DRIVE AND/OR ROADWAY SHALL BE BACKFILLED WITH COMPACTED AGGREGATE.
3. ALL CONDUITS SHALL BE INSTALLED WITH 3/16" POLYPROPYLENE ROPE (PULL STRING) OR MULE TAPE SUITABLE FOR PULLING CABLE THROUGH DUCT.
4. ALL CONDUITS THAT ARE TO BE USED FOR FIBER/ALARM SHALL BE INSTALLED WITH A TRACER WIRE (#12 AWG STRANDED W/ ORANGE JACKET).
5. ALL CONDUITS SHALL BE CLEAN INSIDE WITH NO DIRT OR ANY OTHER OBSTRUCTIONS.
6. ALL BENDS MUST SWEEP 36" RADIUS AND MAXIMUM OF 3 SWEEPS. ANY ADDITIONAL SWEEPS MUST BE APPROVED BY THE UTILITY COMPANY.
7. THE CONTRACTOR SHALL VERIFY AND FOLLOW THE UTILITY COMPANY SPECIFICATIONS FOR INSTALLATIONS.
8. THE CONTRACTOR SHALL LOCATE ALL EXISTING UTILITIES WITHIN THE COMPOUND AND INSTALL PULL BOXES WHERE NEEDED TO AVOID ANY EXISTING UTILITIES. CONTRACTOR MUST EXERCISE EXTREME CAUTION WHEN TRENCHING AND HAND DIG AROUND EXISTING UTILITIES AS REQUIRED.
9. CONTRACTOR SHALL LOCATE ALL EXISTING UTILITIES WITHIN THE COMPOUND AND INSTALL PULLBOXES WHERE NEEDED TO AVOID ANY EXISTING UTILITIES. CONTRACTOR MUST EXERCISE EXTREME CAUTION WHEN TRENCHING AND HAND DIG AROUND EXISTING UTILITIES AS REQUIRED.

TRENCH DETAIL SCALE: N.T.S. 4

Sprint

SAC WIRELESS
540 W. MADISON ST., 9TH FLOOR
CHICAGO, IL 60661

FULLERTON ENGINEERING · DESIGN
1100 E. WOODFIELD ROAD, SUITE 500
SCHAUMBURG, ILLINOIS 60173
TEL: 847-908-8400
COA# PEC.0001444
www.FullertonEngineering.com

REV	DATE	DESCRIPTION	BY
A	8/30/18	90% REVIEW	MA
0	9/20/18	FINAL	PK

I HEREBY CERTIFY THAT THESE DRAWINGS WERE PREPARED BY ME OR UNDER MY DIRECT SUPERVISION AND CONTROL, AND TO THE BEST OF MY KNOWLEDGE AND BELIEF COMPLY WITH THE REQUIREMENTS OF ALL APPLICABLE CODES.

STATE OF CONNECTICUT · HENRY M. BELLAGAMBA · 25358 · LICENSED · PROFESSIONAL ENGINEER

SITE NAME
MANCHESTER

SITE NUMBER:
CT52XC027

SITE ADDRESS
93 LAKE STREET
MANCHESTER, CT 06042

SHEET TITLE
CLEARWIRE
MW-TO-LIT FIBER
EQUIPMENT DETAILS

SHEET NUMBER
AAV-2

PROJECT# 2018.0203.0308

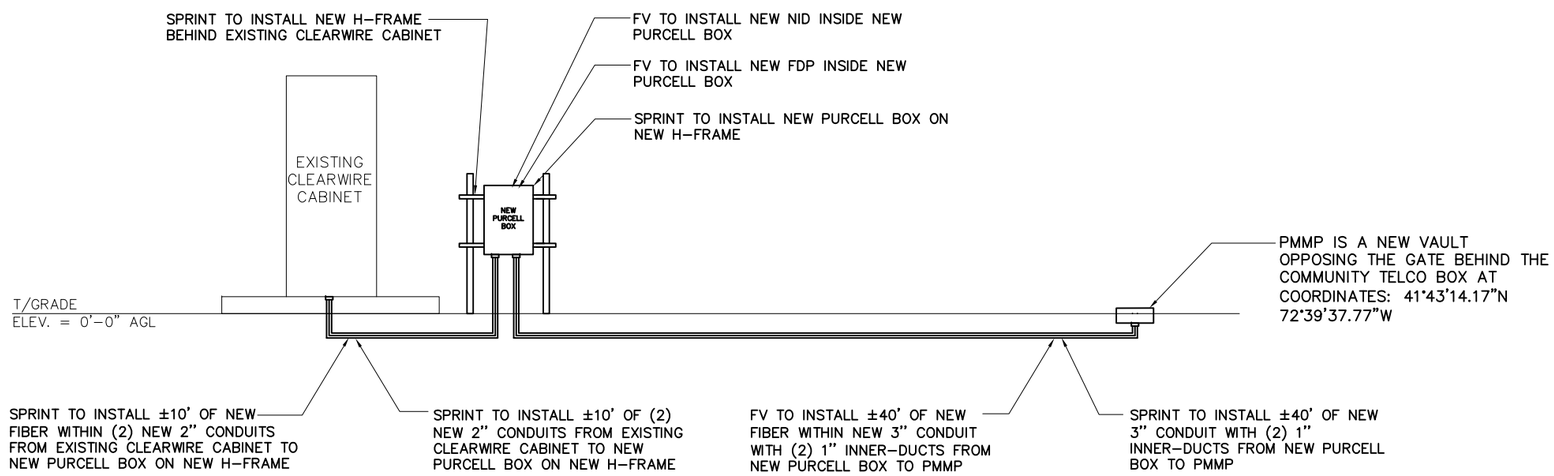

FIBER SCHEMATIC

SCALE: N.T.S.

1

Sprint

WIRELESS

540 W. MADISON ST., 9TH FLOOR
CHICAGO, IL 60661

FULLERTON
ENGINEERING · DESIGN

1100 E. WOODFIELD ROAD, SUITE 500
SCHAUMBURG, ILLINOIS 60173
TEL: 847-908-8400
COA# PEC.0001444
www.FullertonEngineering.com

REV	DATE	DESCRIPTION	BY
A	8/30/18	90% REVIEW	MA
0	9/20/18	FINAL	PK

I HEREBY CERTIFY THAT THESE DRAWINGS WERE PREPARED BY ME OR UNDER MY DIRECT SUPERVISION AND CONTROL, AND TO THE BEST OF MY KNOWLEDGE AND BELIEF COMPLY WITH THE REQUIREMENTS OF ALL APPLICABLE CODES.

STATE OF CONNECTICUT
HENRY M. BELLAGAMBA
25358
LICENSED
PROFESSIONAL ENGINEER

SITE NAME

MANCHESTER

SITE NUMBER:

CT52XC027

SITE ADDRESS

93 LAKE STREET
MANCHESTER, CT 06042

SHEET TITLE

CLEARWIRE
MW-TO-LIT FIBER
EQUIPMENT DETAILS

SHEET NUMBER

AAV-3

PROJECT# 2018.0203.0308

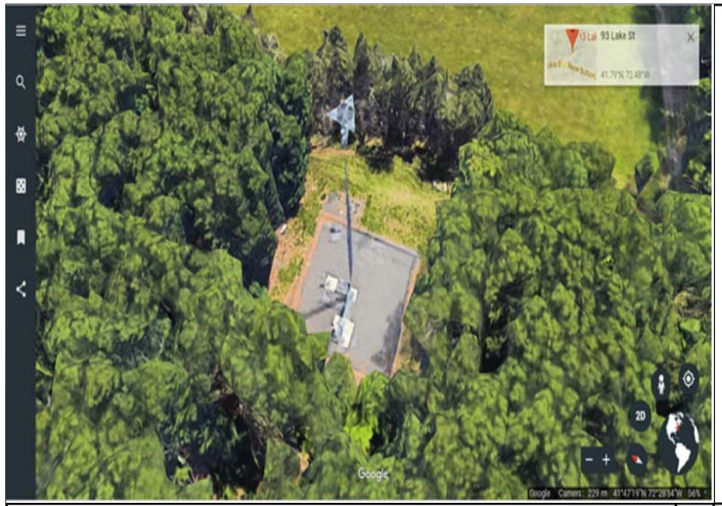

SITE OVERVIEW SCALE: N.T.S. 1

SITE OVERVIEW SCALE: N.T.S. 2

PROPOSED MMP SCALE: N.T.S. 3

PROPOSED CONDUIT PATH SCALE: N.T.S. 4

PROPOSED CONDUIT PATH SCALE: N.T.S. 5

CLEARWIRE CABINET SCALE: N.T.S. 6

CLEARWIRE CABINET SCALE: N.T.S. 7

CLEARWIRE CABINET SCALE: N.T.S. 8

NOT USED SCALE: N.T.S. 9

Sprint

SAC WIRELESS
540 W. MADISON ST., 9TH FLOOR
CHICAGO, IL 60661

FULLERTON ENGINEERING · DESIGN
1100 E. WOODFIELD ROAD, SUITE 500
SCHAUMBURG, ILLINOIS 60173
TEL: 847-908-8400
COA# PEC.0001444
www.FullertonEngineering.com

REV	DATE	DESCRIPTION	BY
A	8/30/18	90% REVIEW	MA
0	9/20/18	FINAL	PK

I HEREBY CERTIFY THAT THESE DRAWINGS WERE PREPARED BY ME OR UNDER MY DIRECT SUPERVISION AND CONTROL, AND TO THE BEST OF MY KNOWLEDGE AND BELIEF COMPLY WITH THE REQUIREMENTS OF ALL APPLICABLE CODES.

STATE OF CONNECTICUT · HENRY M. BELLAGAMBA · 25358 · LICENSED PROFESSIONAL ENGINEER

SITE NAME
MANCHESTER

SITE NUMBER:
CT52XC027

SITE ADDRESS
93 LAKE STREET
MANCHESTER, CT 06042

SHEET TITLE
SITE PHOTOS

SHEET NUMBER
AAV-4

PROJECT# 2018.0203.0308