CROWN BU#: **806372**

eyeTower, LLC SITE NAME: **BDL200**

PROJECT TYPE: **ADDITION OF EQUIPMENT IN PROPOSED SHELTER AND ANTENNAS TO EXISTING TELECOMUNICATIONS SITE**

PROJECT LOCATION: **266R CENTER ST**
MANCHESTER, CT 06040

PROJECT COUNTY: **HARTFORD COUNTY**

VICINITY MAP

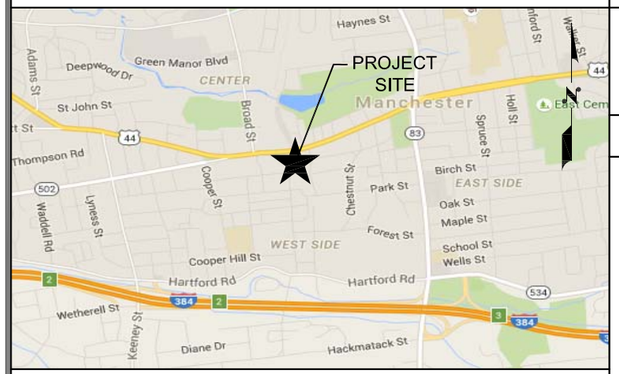

DRIVING DIRECTIONS

FROM BRADLEY INTERNATIONAL AIRPORT:

CONTINUE TO SCHOEPHOESTER RD. HEAD NORTH TOWARDS BRADLEY INTERNATIONAL AIRPORT. SLIGHT LEFT ONTO BRADLEY INTERNATIONAL AIRPORT. KEEP RIGHT TO CONTINUE TOWARDS SCHOEPHOESTER RD. TAKE CT-20 E, I-91 S, I-291 E AND I-384 TO CT-83 N IN MANCHESTER. TAKE EXIT 3 FROM I-384. MERGE ONTO SCHOEPHOESTER RD. CONTINUE ONTO BRADLEY INTERNATIONAL AIRPORT CON. CONTINUE ONTO CT-20 E/BRADLEY INTERNATIONAL AIRPORT CON. USE THE RIGHT 2 LANES TO MERGE ONTO I-91 S TOWARDS HARTFORD. TAKE EXIT 35A FOR I-291 TOWARDS MANCHESTER. CONTINUE ONTO I-291 E. TAKE THE I-384 E EXIT. KEEP LEFT, FOLLOW SIGNS FOR INTERSTATE 384 E. CONTINUE ONTO I-384. TAKE EXIT 3 TO MERGE ONTO CT-83 N. TAKE HARTFORD RD TO PINE ST. MERGE ONTO CT-83 N. TURN LEFT ONTO HARTFORD RD. TURN RIGHT ONTO PINE ST. DESTINATION WILL BE ON THE RIGHT.

GENERAL NOTES

CONTRACTOR SHALL VERIFY ALL PLANS AND EXISTING DIMENSIONS AND CONDITIONS ON THE JOB SITE, AND SHALL IMMEDIATELY NOTIFY THE A/E FIRM IN WRITING OF ANY DISCREPANCIES BEFORE PROCEEDING WITH THE WORK OR BE RESPONSIBLE FOR SAME.

811 Know what's below. Call before you dig.

SCOPE OF WORK

INSTALLATION OF NEW eyeTower, LLC EQUIPMENT SHELTER AND ANTENNAS IN EXISTING TELECOMMUNICATIONS COMPOUND.

SITE INFORMATION

APPLICANT :	eyeTower, LLC C/O CORPORATION SERVICE COMPANY 2711 CENTERVILLE RD, STE 400, PMB 160 WILMINGTON, DE 19808
TOWER OWNER :	CROWN CASTLE 100 REGENCY FOREST DRIVE, SUITE 150 CARY, NC 27518
PROPERTY OWNER :	CROWN ATLANTIC CO LLC 4017 WASHINGTON RD McMURRAY, PA 15317
JURISDICTION :	TOWN OF MANCHESTER
MAP/PARCEL# :	102000266R
ZONING CLASSIFICATION :	INDUSTRIAL
LATITUDE :	41.772114° (41° 46' 19.0" N)
LONGITUDE :	-72.530211° (72° 31' 48.8" W)
POWER COMPANY :	CT LIGHT & POWER (866) 554-6025
FIBER COMPANY :	AT&T (800) 331-0500
eyeTower, LLC CONTACT:	TODD CARPENTER eyeTower, LLC 2711 CENTERVILLE RD, STE 400, PMB 160 WILMINGTON, DE 19808
PROFESSIONAL OF RECORD:	ROBERT J. LARA, AIA MORRISON HERSHFIELD CORPORATION RLARA@MORRISONHERSHFIELD.COM PHONE: (954) 577-4655 CT LICENSE#: 11509

CODE COMPLIANCE

ALL WORK AND MATERIALS SHALL BE PERFORMED AND INSTALLED IN ACCORDANCE WITH THE CURRENT EDITIONS OF THE FOLLOWING CODES AS ADOPTED BY THE LOCAL GOVERNING AUTHORITIES. NOTHING IN THESE PLANS IS TO BE CONSTRUED TO PERMIT WORK NOT CONFORMING TO THESE CODES:

CONNECTICUT BUILDING PERFORMANCE STANDARDS WITH THE FOLLOWING CODE REFERENCES:

2005 CT STATE BUILDING CODE WITH 2013 AMENDMENTS
- 2003 INTERNATIONAL BUILDING CODE
- 2003 INTERNATIONAL MECHANICAL CODE
- 2011 NATIONAL ELECTRIC CODE (NFPA 70)
- 2015 CT STATE FIRE PREVENTION CODE

APPROVALS

APPROVED BY:	INITIALS:	DATE:
O.P.E./OPS:		
LEASING:		
RF:		
ZONING:		
CONSTRUCTION:		
POWER/TELCO:		

LIST OF DRAWINGS

ARCHITECTURAL

SHT.	DESCRIPTION	REV. NO.
T-1	COVER SHEET	2
G-1	NOTES	2
A-1	COMPOUND PLAN	2
A-2	EQUIPMENT LOCATION PLAN	2
A-3	TOWER ELEVATION & ANTENNA ORIENTATION	2
A-4	ANTENNA DETAILS	2
A-5	OTA TOWER ELEVATION	2
A-6	ANTENNA SPECS	2
A-7	ANTENNA SPECS	2
A-8	DETAILS	2
A-9	DETAILS	2
A-10	DETAILS	2
A-11	DETAILS	2

STRUCTURAL

S-1	STRUCTURAL NOTES AND CONC. PAD DETAILS	2

ELECTRICAL

E-1	ELECTRICAL NOTES AND ABBREVIATIONS	2
E-2	ELECTRICAL COMPOUND PLAN	2
E-3	ELECTRICAL RISER DIAGRAM	2
E-4	GROUNDING PLAN	2
E-5	GROUNDING DETAILS	2
E-6	GROUNDING DETAILS	2
E-7	GROUNDING DETAILS	2

DO NOT SCALE DRAWINGS. CONTRACTOR MUST VERIFY ALL DIMENSIONS AND ADVISE CONSULTANTS OF ANY ERRORS OR OMISSIONS. NO VARIATIONS OR MODIFICATIONS TO WORK SHOWN SHALL BE IMPLEMENTED WITHOUT PRIOR WRITTEN APPROVAL. ALL PREVIOUS ISSUES OF THIS DRAWING ARE SUPERSEDED BY THE LATEST REVISION. ALL DRAWINGS AND SPECIFICATIONS REMAIN THE PROPERTY OF MORRISON HERSHFIELD CORPORATION. NEITHER MORRISON HERSHFIELD NOR THE ARCHITECT WILL BE PROVIDING CONSTRUCTION REVIEW OF THIS PROJECT.

STATE OF CONNECTICUT ROBERT J. LARA LICENSED ARCHITECT

Jul 6 2016

ROBERT JERRY LARA
REGISTERED ARCHITECT
STATE OF CONNECTICUT
11509

No.	Date	Action
4	.	.
3	.	.
2	07/06/16	ISSUED FOR PERMIT
1	05/24/16	ISSUED FOR PERMIT
0	05/16/16	ISSUED FOR PERMIT
A	05/10/16	90% CD SUBMITTAL

Carrier:
eyeTOWER
2711 CENTERVILLE ROAD, STE 400, PMB 160
WILMINGTON, DE 19808

Tower Owner/Client:
CROWN CASTLE
100 REGENCY FOREST DRIVE, SUITE 150
CARY, NC 27518

A/E Consultant:
MORRISON HERSHFIELD
8604 Cliff Cameron Drive, Suite 152
Charlotte, NC 28269
TEL: 704.499.6861 FAX: 704.547.5231
www.morrisonhershfield.com

Project:
806372
BDL200
266R CENTER ST.
MANCHESTER, CT 06040

Drawing Title:
COVER SHEET

Project No.: 7160018	
Designer: CG	Date: 05/10/16
Drawn By: RM	Checked By: RL
PM Review: CG	Client Approval
Issue No.: 2	Drawing No. T-1

SCALE IS BASE ON 22" X 34" "D" SIZE

I:\7160018.00_806372_BDL200_Final-CDs_Rev 2_2016.07.06.dwg 07/06/2016 2:42pm cgroth

ARCHITECTURAL GENERAL NOTES

1. WORK SHALL COMPLY WITH ALL APPLICABLE CODES, ORDINANCES, AND REGULATIONS. ALL NECESSARY LICENSES, CERTIFICATES, ETC., REQUIRED BY AUTHORITY HAVING JURISDICTION SHALL BE PROCURED AND PAID FOR BY THE CONTRACTOR.
2. THE GENERAL CONTRACTOR AND EACH SUBCONTRACTOR SHALL BE RESPONSIBLE FOR VERIFYING DIMENSIONS AND CONDITIONS AT THE JOB SITE WHICH COULD AFFECT THE WORK UNDER THIS CONTRACT. ALL MANUFACTURERS RECOMMENDED SPECIFICATIONS, EXCEPT THOSE SPECIFICATIONS HEREIN, WHERE MOST STRINGENT SHALL BE COMPLIED WITH.
3. THE CONTRACTOR SHALL VERIFY THAT NO CONFLICTS EXIST BETWEEN THE LOCATIONS OF ANY AND ALL MECHANICAL, ELECTRICAL, PLUMBING, OR STRUCTURAL ELEMENTS, AND THAT ALL REQUIRED CLEARANCES FOR INSTALLATION AND MAINTENANCE ARE MET. NOTIFY THE CONSULTANT OF ANY CONFLICTS. THE CONSULTANT HAS THE RIGHT TO MAKE MINOR MODIFICATIONS IN THE DESIGN OF THE CONTRACT WITHOUT THE CONTRACTOR GETTING ADDITIONAL COMPENSATION.
4. THE CONTRACTOR SHALL BE RESPONSIBLE FOR DAILY CLEAN UP OF ALL TRADES AND REMOVE ALL DEBRIS FROM THE CONSTRUCTION SITE. AT THE COMPLETION OF THE PROJECT, THE CONTRACTOR SHALL THOROUGHLY CLEAN THE BUILDING, SITE, AND ANY OTHER SURROUNDING AREAS TO A BETTER THAN NEW CONDITION.
5. THE CONTRACTOR IS RESPONSIBLE FOR ADEQUATELY BRACING AND PROTECTING ALL WORK DURING CONSTRUCTION AGAINST DAMAGE, BREAKAGE, COLLAPSE, ETC. ACCORDING TO APPLICABLE CODES, STANDARDS, AND GOOD CONSTRUCTION PRACTICES.
6. WHERE ONE DETAIL IS SHOWN FOR ONE CONDITION, IT SHALL APPLY FOR ALL LIKE OR SIMILAR CONDITIONS, EVEN THOUGH NOT SPECIFICALLY MARKED ON THE DRAWINGS OR REFERRED TO IN THE SPECIFICATIONS, UNLESS NOTED OTHERWISE.
7. WHERE NEW PAVING, CONCRETE SIDEWALKS OR PATHS MEET EXISTING CONSTRUCTION, THE CONTRACTOR SHALL MATCH THE EXISTING PITCH, GRADE, AND ELEVATION SO THE ENTIRE STRUCTURE SHALL HAVE A SMOOTH TRANSITION.
8. THE GENERAL CONTRACTOR SHALL OBTAIN WRITTEN CONFIRMATION OF THE EXPECTED DATE OF COMPLETION OF THE POWER CONNECTION FROM THE POWER COMPANY.
9. IF THE POWER COMPANY IS UNABLE TO PROVIDE THE POWER CONNECTION BY OWNER'S REQUIRED DATE, THE GENERAL CONTRACTOR SHALL PROVIDE AND MAINTAIN A TEMPORARY GENERATOR UNTIL THE POWER COMPANY CONNECTION IS COMPLETED. COSTS ASSOCIATED WITH THE TEMPORARY GENERATOR TO BE APPROVED BY THE OWNER.
10. PLANS PART OF THIS SET ARE COMPLEMENTARY. INFORMATION IS NOT LIMITED TO ONE PLAN. DRAWINGS AND SPECIFICATIONS ARE INSTRUMENTS OF SERVICE AND SHALL REMAIN THE PROPERTY OF THE ARCHITECT, WHETHER THE PROJECT FOR WHICH THEY ARE MADE IS EXECUTED OR NOT. THEY ARE NOT TO BE USED BY THE OWNER ON OTHER PROJECTS OR EXTENSION TO THIS PROJECT EXCEPT BY AGREEMENT IN WRITING AND WITH APPROPRIATE COMPENSATION TO MORRISON HERSHFIELD. THESE PLANS WERE PREPARED TO BE SUBMITTED TO GOVERNMENTAL BUILDING AUTHORITIES FOR REVIEW FOR COMPLIANCE WITH APPLICABLE CODES AND IT IS THE SOLE RESPONSIBILITY OF THE OWNER AND/OR CONTRACTOR TO BUILD ACCORDING TO APPLICABLE BUILDING CODES.
11. IF CONTRACTOR OR SUB-CONTRACTOR FIND IT NECESSARY TO DEVIATE FROM ORIGINAL APPROVED PLANS, THEN IT IS THE CONTRACTOR'S AND THE SUB-CONTRACTOR'S RESPONSIBILITY TO PROVIDE THE ARCHITECT WITH 4 COPIES OF THE PROPOSED CHANGES FOR HIS APPROVAL BEFORE PROCEEDING WITH THE WORK. IN ADDITION THE CONTRACTOR AND SUB-CONTRACTORS SHALL BE RESPONSIBLE FOR PROCURING ALL NECESSARY APPROVALS FROM THE BUILDING AUTHORITIES FOR THE PROPOSED CHANGES BEFORE PROCEEDING WITH THE WORK. THE CONTRACTOR AND SUB-CONTRACTORS SHALL BE RESPONSIBLE FOR PROCURING ALL NECESSARY INSPECTIONS AND APPROVALS FROM BUILDING AUTHORITIES DURING THE EXECUTION OF THE WORK.
12. IN EVERY EVENT, THESE CONSTRUCTION DOCUMENTS AND SPECIFICATIONS SHALL BE INTERPRETED TO BE A MINIMUM ACCEPTABLE MEANS OF CONSTRUCTION BUT THIS SHALL NOT RELIEVE THE CONTRACTOR, SUB-CONTRACTOR, AND/OR SUPPLIER/MANUFACTURER FROM PROVIDING A COMPLETE AND CORRECT JOB WHEN ADDITIONAL ITEMS ARE REQUIRED TO THE MINIMUM SPECIFICATION. IF ANY ITEMS NEED TO EXCEED THESE MINIMUM SPECIFICATIONS TO PROVIDE A COMPLETE, ADEQUATE AND SAFE WORKING CONDITION, THEN IT SHALL BE THE DEEMED AND UNDERSTOOD TO BE INCLUDED IN THE DRAWINGS. FOR EXAMPLE, IF AN ITEM AND/OR PIECE OF EQUIPMENT REQUIRES A LARGER WIRE SIZE (I.E. ELECTRICAL WIRE), STRONGER OR LARGER PIPING, INCREASED QUANTITY (I.E. STRUCTURAL ELEMENTS), REDUCED SPACING, AND/OR INCREASED LENGTH (I.E. BOLT LENGTHS, BAR LENGTHS) THEN IT SHALL BE DEEMED AND UNDERSTOOD TO BE INCLUDED IN THE BID/PROPOSAL. THESE DOCUMENTS ARE MEANT AS A GUIDE AND ALL ITEMS REASONABLY INFERRED SHALL BE DEEMED TO BE INCLUDED.
13. THESE CONTRACT DOCUMENTS AND SPECIFICATIONS SHALL NOT BE CONSTRUED TO CREATE A CONTRACTUAL RELATIONSHIP OF ANY KIND BETWEEN THE ARCHITECT AND THE CONTRACTOR.

IMPORTANT NOTICE

THE EXISTING CONDITIONS REPRESENTED HEREIN ARE BASED ON VISUAL OBSERVATIONS AND INFORMATION PROVIDED BY OTHERS. MORRISON HERSHFIELD CORPORATION CANNOT GUARANTEE THE CORRECTNESS NOR COMPLETENESS OF THE EXISTING CONDITIONS SHOWN AND ASSUMES NO RESPONSIBILITY THEREOF. CONTRACTOR AND HIS SUB-CONTRACTORS SHALL VISIT THE SITE AND VERIFY ALL EXISTING CONDITIONS AS REQUIRED FOR PROPER EXECUTION OF PROJECT. REPORT ANY CONFLICTS OR DISCREPANCIES TO THE CONSULTANT PRIOR TO CONSTRUCTION.

ELECTRICAL GENERAL NOTES

A. GENERAL

1. EXAMINE THE SITE CONDITIONS VERY CAREFULLY AND THE SCOPE OF PROPOSED WORK TOGETHER WITH THE WORK OF ALL OTHER TRADES AND INCLUDE IN THE BID PRICE ALL COSTS FOR WORK SUCH AS EQUIPMENT AND WIRING MADE NECESSARY TO ACCOMMODATE THE ELECTRICAL SYSTEMS SHOWN AND SYSTEMS OF OTHER TRADES.
2. OBTAIN ALL PERMITS, PAY ASSOCIATED FEES AND SCHEDULE INSPECTION.
3. PROVIDE ALL LABOR, MATERIAL, EQUIPMENT, INSURANCE, AND SERVICES TO COMPLETE THIS PROJECT IN ACCORDANCE WITH THE CONTRACT DOCUMENTS AND PRESENT IT AS FULLY OPERATIONAL TO THE SATISFACTION OF eyeTower, LLC & LAND/TOWER OWNER
4. PRIOR TO BEGINNING WORK COORDINATE ALL POWER AND TELCO WORK WITH THE LOCAL UTILITY COMPANY AS IT MAY APPLY TO THIS SITE. ALL WORK TO COMPLY WITH THE RULES AND REGULATIONS OF THE UTILITIES INVOLVED GENERAL CONTRACTOR IS RESPONSIBLE FOR VED. REQUESTING CONNECTION OF COMMERCIAL POWER FROM THE POWER COMPANY. ELECTRICAL CONTRACTOR SHALL COORDINATE THIS WORK WITH THE GENERAL CONTRACTOR.
5. FABRICATION AND INSTALLATION OF THE COMPLETE ELECTRICAL SYSTEM SHALL BE DONE IN A FIRST CLASS WORKMANSHIP PER NECA STANDARD 1-2000 BY QUALIFIED PERSONNEL EXPERIENCED IN SUCH WORK AND SHALL SCHEDULE THE WORK IN AN ORDERLY MANNER SO AS NOT TO IMPEDE PROGRESS OF THE PROJECT.

B. BASIC MATERIALS AND METHODS

1. ALL ELECTRICAL WORK SHALL CONFORM TO THE EDITION OF THE NEC ACCEPTED BY THE LOCAL JURISDICTION AND TO THE APPLICABLE LOCAL CODES AND REGULATIONS.
2. ARRANGE CONDUIT, WIRING, EQUIPMENT, AND OTHER WORK GENERALLY AS SHOWN, PROVIDING PROPER CLEARANCES AND ACCESS. CAREFULLY EXAMINE ALL CONTRACT DRAWINGS AND FIT THE WORK IN EACH LOCATION WITHOUT SUBSTANTIAL ALTERATION. WHERE DEPARTURES ARE PROPOSED BECAUSE OF FIELD CONDITIONS OR OTHER CAUSES, PREPARE AND SUBMIT DETAILED DRAWINGS FOR ACCEPTANCE.
3. THE CONTRACT DRAWINGS ARE GENERALLY DIAGRAMMATIC AND ALL OFFSETS, BENDS, FITTINGS AND ACCESSORIES ARE NOT NECESSARILY SHOWN. PROVIDE ALL SUCH ITEMS AS MAY BE REQUIRED TO FIT THE WORK TO THE CONDITIONS.
4. SEAL AROUND CONDUITS AND AROUND CONDUCTORS WITHIN CONDUITS ENTERING THE MODULAR CABINETS WHERE PENETRATION OCCURS WITH A SILICONE SEALANT TO PREVENT MOISTURE PENETRATION INTO BUILDING.

C. CONDUCTORS AND CONNECTORS

1. UNLESS NOTED OTHERWISE, ALL CONDUCTORS SHALL BE COPPER, MINIMUM SIZE #12 AWG, WITH THERMOPLASTIC INSULATION CONFORMING TO NEMA WC5 OR CROSS-LINKED POLYETHYLENE INSULATION CONFORMING TO NEMA WC7. (TYPES THHN). INSULATION SHALL BE RATED FOR 90 DEG. CONDUCTORS SHALL BE COLOR CODED IN ACCORDANCE WITH NEC.
2. CONDUCTOR LENGTHS SHALL BE CONTINUOUS FROM TERMINATION TO TERMINATION WITHOUT SPLICES. SPLICES ARE NOT ACCEPTABLE. IF SPLICES ARE UNAVOIDABLE PRIOR APPROVAL FROM THE ENGINEER MUST BE OBTAINED.

D. GROUNDING

1. ALL LIGHTNING PROTECTION GROUNDING OF THE ELECTRICAL EQUIPMENT SHALL BE CARRIED OUT IN ACCORDANCE WITH THE CURRENT NFPA STANDARDS.
2. ALL GROUND LUG AND COMPRESSION CONNECTIONS SHALL BE COATED WITH ANTI-OXIDANT AGENT, SUCH AS NO-OX, NOALOX, PENETROX OR KOPRSHIELD.
3. ALL EXTERIOR GROUNDING CONDUCTORS INCLUDING EXTERIOR GROUND RING SHALL BE #2 AWG SOLID BARE TINNED COPPER. MAKE ALL GROUND CONNECTIONS AS SHORT AND DIRECT AS POSSIBLE. AVOID SHARP BENDS. THE RADIUS OF ANY BEND SHALL NOT BE LESS THAN 8" AND THE ANGLE OF ANY BEND SHALL NOT EXCEED 90°. GROUNDING CONDUCTORS SHALL BE ROUTED DOWNWARD TOWARD THE BURIED GROUND RING.
4. REPAIR ALL GALVANIZED SURFACES THAT HAVE BEEN DAMAGED BY THERMO-WELDING WITH ERICO T-319 GALVANIZING BAR.
5. ALL EXTERNAL GROUND CONNECTIONS SHALL BE EXOTHERMICALLY WELDED. ALL EXOTHERMIC WELDS TO EXTERIOR GROUND RING SHALL BE THE PARALLEL TYPE, EXCEPT FOR THE GROUND RODS WHICH ARE TEE EXOTHERMIC WELDS. REPAIR ALL GALVANIZED SURFACES THAT HAVE BEEN DAMAGED BY EXOTHERMIC WELDING. USE SPRAY GALVANIZER SUCH AS HOLUB LECTROSOL #15-501.

PROJECT INFORMATION

1. THIS IS AN UNMANNED AND RESTRICTED ACCESS EQUIPMENT AND WILL BE USED FOR THE TRANSMISSION OF RADIO SIGNALS FOR THE PURPOSE OF PROVIDING PUBLIC SERVICE.
2. THIS FACILITY WILL CONSUME NO UNRECOVERABLE ENERGY.
3. NO POTABLE WATER SUPPLY IS TO BE PROVIDED AT THIS LOCATION.
4. NO WASTE WATER WILL BE GENERATED AT THIS LOCATION.
5. NO SOLID WASTE WILL BE GENERATED AT THIS LOCATION.
6. **eyeTower, LLC** MAINTENANCE CREW (TYPICALLY ONE PERSON) WILL MAKE AN AVERAGE OF ONE TRIP PER MONTH AT ONE HOUR PER VISIT.

COMPOUND NOTES

1. THE MINIMUM LOWEST FIRST FLOOR ELEVATION SHALL NOT BE LESS THAN 4" ABOVE CROWN OF ROAD OR THE FEDERAL AND/OR COUNTY FLOOD CRITERIA ELEVATION, WHICHEVER IS HIGHER. CONTRACTOR SHALL SUBMIT AN ELEVATION CERTIFICATE (IF REQUIRE BY THE JURISDICTION) UPON COMPLETION OF PROJECT.
2. WORK OUTSIDE OF THE PROPERTY LINE INCLUDED IN THIS SET OF DRAWINGS SHALL BE, BUT NOT LIMITED TO, DRIVEWAYS, SODDING TO ASPHALT LINE AND UTILITY CONNECTIONS.
3. EXISTING TREES WITHIN CONSTRUCTION FOOTPRINT SHALL BE REMOVED AND PROPERLY DISPOSED OF. CONTRACTOR SHALL PROCURE PERMIT PRIOR TO REMOVAL.
4. CONTRACTOR AND SUBCONTRACTORS SHALL VERIFY ALL UTILITY SERVICE CONNECTION LOCATIONS PRIOR TO SUBMITTING BID AND PROCEEDING WITH WORK. IT IS RECOMMENDED THAT THE CONTRACTOR VISIT THE SITE AND VERIFY ALL DIMENSIONS AND NOTES BEFORE SUBMITTING BID AND PROCEEDING WITH WORK.
5. SOIL AT THIS SITE IS UNDISTURBED ROCK AND SAND ADEQUATE OF SUPPORTING THE DESIGN LOAD OF 2000 P.S.F. IF OTHER CONDITIONS ARE ENCOUNTERED, NOTIFY MIRRISON HERSHFIELD BEFORE PROCEEDING WITH WORK. THIS VALUE IS CONSIDERED SAFE WITH RESPECT TO ACTUAL FAILURE OF THE SUPPORTING GROUND, BUT DOES NOT NECESSARILY ENSURE THE PREVENTION OF EXCESSIVE FOUNDATION MOVEMENTS.
6. BURY PHONE, AND ELECTRIC SERVICE NO LESS THAN 24" BELOW FINISH GRADE WITH 1'-0" RADIUS SAND BACKFILL AROUND PIPES. COORDINATE W/ ELECTRICAL DRAWINGS.
7. IN ORDER TO AVOID ANY CONFLICTS, CONTRACTOR SHALL COORDINATE ALL HIS PRACTICAL TRADES.
8. THE POWER CABINET MUST BE CLEAR OF FLAMMABLE MATERIAL WITHIN 12 INCHES OF THE CABINET, INCLUDING ABOVE THE CABINET.
9. EXHAUST OUTLETS MUST BE LOCATED AT LEAST 10 FEET FROM ANY HVAC AIR INTAKES, WINDOWS, DOORS, AND OTHER OPENINGS INTO A BUILDING – COORDINATE IN FIELD.
10. THE POWER CABINET MUST BE MOUNTED ON THE FOUNDATION TO ALLOW WATER TO DRAIN FROM THE DRAIN OUTLET AND AWAY FROM THE CABINET.
11. TO ENSURE SERVICEABLE ABILITY, THE DOORS OF CABINETS WILL REQUIRE AN OPENING RADIUS OF 36 INCHES OF CLEARANCE FROM THE CLOSED POSITION TO THE OPEN POSITION.

SITE GENERAL NOTES

1. RESTORE EXISTING ASPHALT AND/OR CONCRETE COMPOUND TO IT'S ORIGINAL CONDITION
2. CONTRACTOR SHALL DETECT AND MARK ANY UNDERGROUND LINES, PIPING, PRIOR TO START OF EXCAVATION

DO NOT SCALE DRAWINGS. CONTRACTOR MUST VERIFY ALL DIMENSIONS AND ADVISE CONSULTANTS OF ANY ERRORS OR OMISSIONS. NO VARIATIONS OR MODIFICATIONS TO WORK SHOWN SHALL BE IMPLEMENTED WITHOUT PRIOR WRITTEN APPROVAL. ALL PREVIOUS ISSUES OF THIS DRAWING ARE SUPERSEDED BY THE LATEST REVISION. ALL DRAWINGS AND SPECIFICATIONS REMAIN THE PROPERTY OF MORRISON HERSHFIELD CORPORATION. NEITHER MORRISON HERSHFIELD NOR THE ARCHITECT WILL BE PROVIDING CONSTRUCTION REVIEW OF THIS PROJECT.

STATE OF CONNECTICUT · ROBERT J. LARA · NO. 11508 · LICENSED ARCHITECT

Jul 6 2016

ROBERT JERRY LARA
REGISTERED ARCHITECT
STATE OF CONNECTICUT
11508

No.	Date	Action
4	.	.
3	.	.
2	07/06/16	ISSUED FOR PERMIT
1	05/24/16	ISSUED FOR PERMIT
0	05/16/16	ISSUED FOR PERMIT
A	05/10/16	90% CD SUBMITTAL

Carrier:

eyeTOWER
2711 CENTERVILLE ROAD, STE 400, PMB 160
WILMINGTON, DE 19808

Tower Owner/Client:

CROWN CASTLE
100 REGENCY FOREST DRIVE, SUITE 150
CARY, NC 27518

A/E Consultant:

MORRISON HERSHFIELD
8604 Cliff Cameron Drive, Suite 152
Charlotte, NC 28269
TEL: 704.499.6861 FAX: 704.547.5231
www.morrisonhershfield.com

Project:

806372
BDL200

266R CENTER ST.
MANCHESTER, CT 06040

Drawing Title:

NOTES

Project No.: 7160018	
Designer: CG	Date: 05/10/16
Drawn By: RM	Checked By: RL
PM Review: CG	Client Approval
Issue No.: 2	Drawing No. G-1

SCALE IS BASE ON 22" X 34" "D" SIZE

S:\716 Series\7160018.00 Crown Carolinas AE Services 2016\9.0 Sites\BDL200_HRT\9.2_Design & Development\CAD\7160018.00_806372_BDL200_Final-CDs_Rev 2_2016.07.06.dwg 07/06/2016 10:24am bfraser

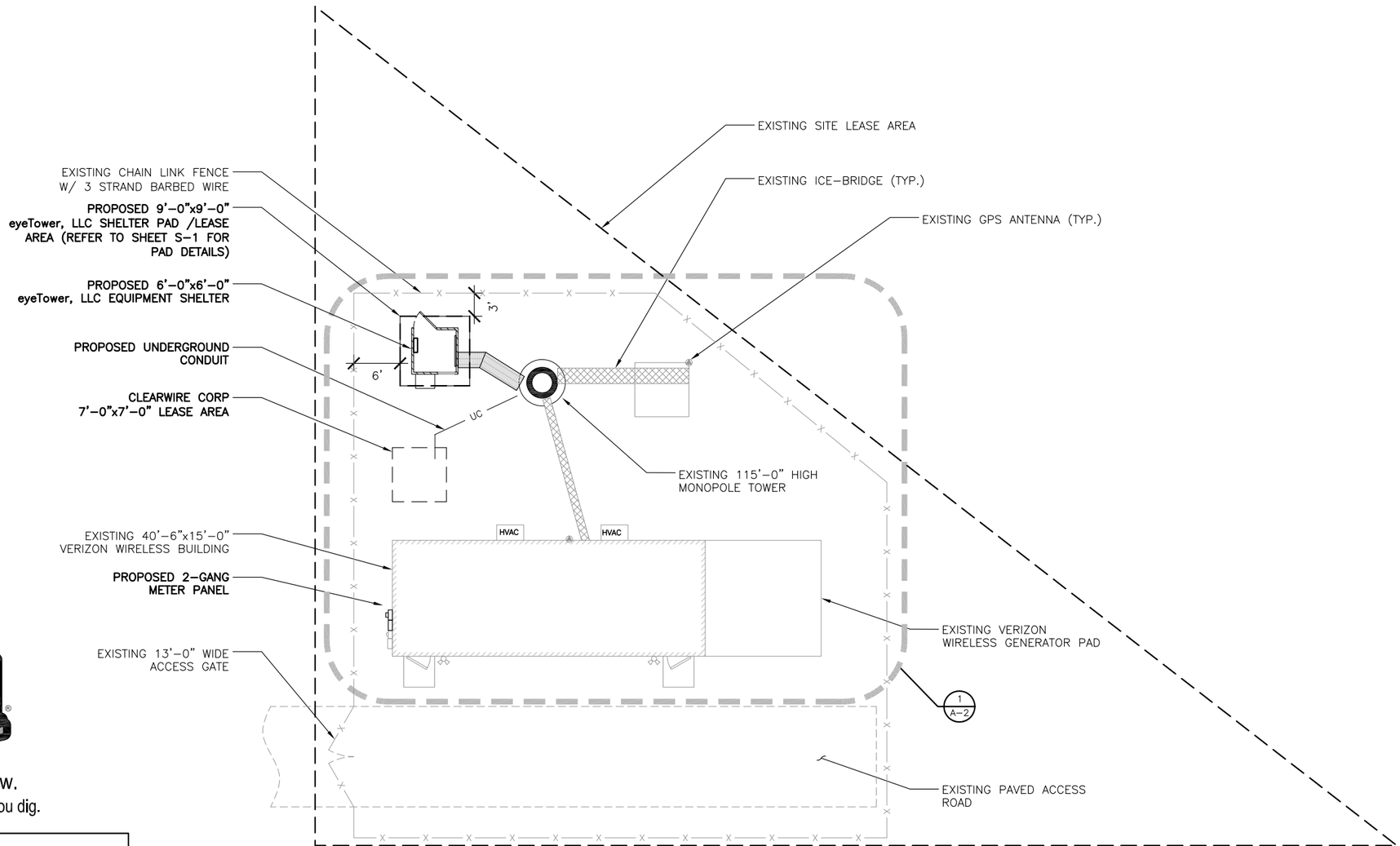

811

Know what's below.
Call before you dig.

NOTE:
THE NEW CONSTRUCTION WILL NOT DISTURB OR DESTROY EXISTING LANDSCAPING OR TREES.

NOTE:
SITE PLAN INFORMATION CONTAINED HEREIN IS TAKEN FROM THE DOCUMENTS PROVIDED BY CLIENT. NEITHER WARRANTY NOR GUARANTEE IS GIVEN BY THE ARCHITECT NOR MORRISON HERSHFIELD CORPORATION TO THE ACCURACY NOR THE COMPLETENESS OF THE COPIED SURVEY/SITE PLAN INFORMATION.

TRUE NORTH

COMPOUND PLAN

ANSI "D" SCALE: 1/8" = 1'-0"
ANSI "B" SCALE: 1/16" = 1'-0"
8' 6' 4' 2' 0' 8'

1

I:\7160018.00_806372_BDL200_Final-Cds_Rev 2_2016.07.06.dwg 07/06/2016 2:42pm cgroth

DO NOT SCALE DRAWINGS. CONTRACTOR MUST VERIFY ALL DIMENSIONS AND ADVISE CONSULTANTS OF ANY ERRORS OR OMISSIONS. NO VARIATIONS OR MODIFICATIONS TO WORK SHOWN SHALL BE IMPLEMENTED WITHOUT PRIOR WRITTEN APPROVAL. ALL PREVIOUS ISSUES OF THIS DRAWING ARE SUPERSEDED BY THE LATEST REVISION. ALL DRAWINGS AND SPECIFICATIONS REMAIN THE PROPERTY OF MORRISON HERSHFIELD CORPORATION. NEITHER MORRISON HERSHFIELD NOR THE ARCHITECT WILL BE PROVIDING CONSTRUCTION REVIEW OF THIS PROJECT.

STATE OF CONNECTICUT
ROBERT J. LARA
LICENSED ARCHITECT

Jul 6 2016

ROBERT JERRY LARA
REGISTERED ARCHITECT
STATE OF CONNECTICUT
11509

No.	Date	Action
4	.	.
3	.	.
2	07/06/16	ISSUED FOR PERMIT
1	05/24/16	ISSUED FOR PERMIT
0	05/16/16	ISSUED FOR PERMIT
A	05/10/16	90% CD SUBMITTAL

Carrier:
eyeTOWER
2711 CENTERVILLE ROAD, STE 400, PMB 160
WILMINGTON, DE 19808

Tower Owner/Client:
CROWN CASTLE
100 REGENCY FOREST DRIVE, SUITE 150
CARY, NC 27518

A/E Consultant:
MORRISON HERSHFIELD
8604 Cliff Cameron Drive, Suite 152
Charlotte, NC 28269
TEL: 704.499.6861 FAX: 704.547.5231
www.morrisonhershfield.com

Project:
806372
BDL200

266R CENTER ST.
MANCHESTER, CT 06040

Drawing Title:
COMPOUND PLAN

Project No.: 7160018
Designer: CG
Date: 05/10/16
Drawn By: RM
Checked By: RL
PM Review: CG
Client Approval
Issue No.: 2
Drawing No. A-1

SCALE IS BASE ON 22" X 34" "D" SIZE

1 2 3 4 5 6

GENERAL REFERENCE NOTES

1. DAMAGE TO ALL UTILITIES, LAND, ACCESS AREAS, AND PROPERTY OF OTHERS DISTURBED DURING CONSTRUCTION SHALL BE RETURNED TO THE ORIGINAL CONDITION AT THE COMPLETION OF THE WORK.
2. REMOVE ANY EXISTING VEGETATION AND ORGANIC MATERIALS FROM THE LEASE AREA.
3. RE-GRADE AROUND THE EQUIPMENT SLAB AS REQUIRED TO ALLOW A MAXIMUM 4" OF PAD THICKNESS EXTENDING ABOVE THE FINISHED GRAVEL SURFACE. REPLACE GRAVEL AROUND SLAB AT COMPLETION OF INSTALLATION.
4. ALL WORK SHALL BE DONE IN A SATISFACTORY AND PROFESSIONAL WORKMANLIKE MANNER. ALL WORK SHALL BE SUBJECT TO INSPECTION DURING CONSTRUCTION AND FINAL APPROVAL BY THE CONSTRUCTION MANAGER.
5. ANY SUBSTITUTIONS OF MATERIALS, EQUIPMENT, OR DEVIATIONS FROM THE DESIGN PLAN OR SPECIFICATIONS SHALL BE COORDINATED AND APPROVED BY THE CONSTRUCTION MANAGER.
6. COLOR SELECTION FOR PAINTED ITEMS SHALL BE MADE BY THE CONSTRUCTION MANAGER.
7. THE CONTRACTOR SHALL FIELD VERIFY ALL EXISTING DIMENSIONS AND CONDITIONS SHOWN PRIORTO BID SUBMITTAL. AND CONFLICTS, DISCREPENCIES, ERRORS, AND/OR OMISSIONS SHALL BE BROUGHT TO THE ATTENTION OF THE CONSTRUCTION MANAGER.
8. CONTRACTOR SHALL CONTACT A SUBSURFACE UTILIES LOCATOR FOR EXACT LOCATIONS OF ALL EXISTING UTILITES WITHIN DISTURBED AREAS, PRIOR TO THE COMMENCEMENT OF CONSTRUCTION ACTIVITIES. CONTRACTOR SHALL VERIFY THE LOCATIONS OF EXISTING UTILITES BY DIGGING A TEST PIT, AS NECESSARY. THE LOCATIONS OF EXISTING UTILITES SHOWN ON THESE PLANS ARE APPROXIMATE AND ARE FOR PLANNING PURPOSES ONLY.
9. THE CONTRACTOR SHALL PROVIDE ANY NECESSARY PROTECTION FOR EXISTING UTILITES DURING CONSTRUCTION.
10. THE CONTRACTOR SHALL MAINTAIN A CLEAN SET OF CONSTRUCTION DRAWINGS AT THE SITE FOR THE PURPOSE OF DOCUMENTING "AS-BUILT" CONDITIONS AND DEVIATIONS FORM THE ORIGINAL DESIGN. THE REDLINE DRAWINGS SHALL BE TURNED OVER TO THE CONSTRUCTION MANAGER AT THE COMPLETION OF THE PROJECT.
11. THE CONTRACTOR SHALL SECURE AND PAY FOR ALL NECESSARY PERMITS FOR THE PROJECT FROM ALL APPLICABLE GOVERNMENT AGENCIES. CONTRACTOR SHALL BE RESPONSIBLE FOR ABIDING BE ALL THE CONDITIONS AND REQUIREMENTS OF THE PERMITS.
12. THE CONTRACTOR SHALL PROTECT ALL SURVEY STATIONS AND CONTROL POINTS DURING CONSTRUCTION AND SHALL RE-ESTABLISH ANY DISTURBED CONTROL POINTS.
13. ALL WORK SHALL BE DONE IN ACCORDANCE WITH THE GOVERING LOCAL BUILDING CODE AND ALL APPLICABLE AMENDMENTS. THE CONTRACTOR SHALL COORDINATE WITH THE LOCAL GOVERNING LOCAL OFFICAL FOR LOCAL BUILD CODE REQUIREMENTS.
14. THE CONTRACTOR SHALL VISIT THE PROJECT SITE AND FAMILIARIZE HIMSELF WITH ALL EXISTING CONDITIONS INCLUDING SITE ACCESS PRIOR TO BID SUBMITTAL. ANY CHANGES DURING CONSTRUCTION DUE TO AN EXISTING CONDITION WHICH IS VISUALLY ASCERTAINABLE PRIOR RO BID SUBMITTAL, CANNOT BE USED AS THE BASIS FOR A CHANGE ORDER.
15. THE CONTRACTOR SHALL BE RESPONSIBLE FOR REMOVING ALL WASTE DEBRIS AND VEGETATION FROM THE SITE. BURIAL AND/OR BURNING OF WASTE MATERIALS IS NOT ACCEPTABLE.

NOTES:

1. CONDUIT ROUTING IS SCHEMATIC ONLY, CONTRACTOR SHALL DETERMINE SUITABLE ROUTING IN THE FIELD.
2. CONTRACTOR TO REUSE EXISTING CONDUITS ROUTED TO EXISTING GENERATOR AS POSSIBLE. FIELD VERIFY.
3. CONTRACTOR SHALL TEST & CERTIFY CONDITION OF EXISTING GAS LINE PRIOR TO CONNECTION OF NEW GENERATOR OR REPLACE W/NEW LINE – SEE ISOMETRIC DIAGRAM DETAIL A/A-4.

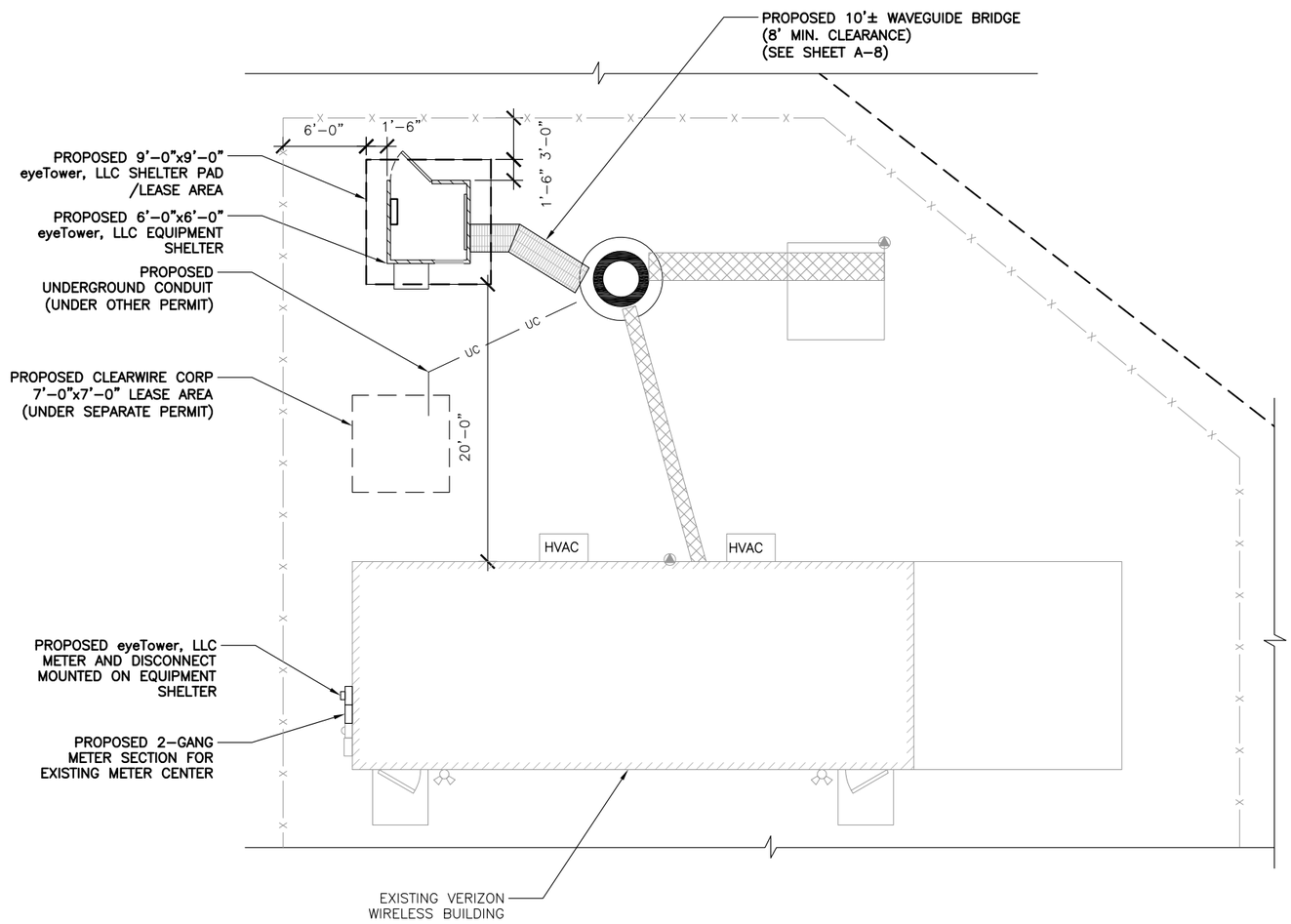

TRUE NORTH

EQUIPMENT LAYOUT PLAN

ANSI "D" SCALE: 3/16" = 1'-0"
ANSI "B" SCALE: 3/32" = 1'-0"
4' 2' 0" 4'

1

DO NOT SCALE DRAWINGS. CONTRACTOR MUST VERIFY ALL DIMENSIONS AND ADVISE CONSULTANTS OF ANY ERRORS OR OMISSIONS. NO VARIATIONS OR MODIFICATIONS TO WORK SHOWN SHALL BE IMPLEMENTED WITHOUT PRIOR WRITTEN APPROVAL. ALL PREVIOUS ISSUES OF THIS DRAWING ARE SUPERSEDED BY THE LATEST REVISION. ALL DRAWINGS AND SPECIFICATIONS REMAIN THE PROPERTY OF MORRISON HERSHFIELD CORPORATION. NEITHER MORRISON HERSHFIELD NOR THE ARCHITECT WILL BE PROVIDING CONSTRUCTION REVIEW OF THIS PROJECT.

STATE OF CONNECTICUT ROBERT J. LARA LICENSED ARCHITECT

Jul 6 2016

ROBERT JERRY LARA
REGISTERED ARCHITECT
STATE OF CONNECTICUT
11509

No.	Date	Action
4	.	.
3	.	.
2	07/06/16	ISSUED FOR PERMIT
1	05/24/16	ISSUED FOR PERMIT
0	05/16/16	ISSUED FOR PERMIT
A	05/10/16	90% CD SUBMITTAL

Carrier:

eyeTOWER
2711 CENTERVILLE ROAD, STE 400, PMB 160
WILMINGTON, DE 19808

Tower Owner/Client:

CROWN CASTLE
100 REGENCY FOREST DRIVE, SUITE 150
CARY, NC 27518

A/E Consultant:

MORRISON HERSHFIELD
8604 Cliff Cameron Drive, Suite 152
Charlotte, NC 28269
TEL: 704.499.6861 FAX: 704.547.5231
www.morrisonhershfield.com

Project:

806372
BDL200

266R CENTER ST.
MANCHESTER, CT 06040

Drawing Title:

EQUIPMENT LOCATION PLAN

Project No.: 7160018

Designer: CG	Date: 05/10/16
Drawn By: RM	Checked By: RL
PM Review: CG	Client Approval
Issue No.: 2	Drawing No. A-2

SCALE IS BASE ON 22" X 34" "D" SIZE

I:\7160018.00_806372_BDL200_Final-CDs_Rev 2_2016.07.06.dwg 07/06/2016 2:42pm cgroth

NOTE:
NO WORK SHALL COMMENCE WITHOUT THE APPROVED TOWER/ANTENNA MOUNT STRUCTURAL ANALYSIS REPORT SIGNED AND SEALED BY A LICENSED PROFESSIONAL ENGINEER UNDER SEPARATE COVER. IF REQUIRED, THE CONTRACTOR SHALL MODIFY TOWER AND/OR ANTENNA MOUNTS AS INDICATED IN THE ABOVE MENTIONED STRUCTURAL REPORT OR ASSOCIATED MODIFICATION DESIGN DRAWINGS.

NOTE:
1. REFER TO PIER STRUCTURAL ENGINEERING CORP. PASSING STRUCTURAL ANALYSIS DATED 02/16/2016 PERFORMED UNDER P-SEC COMPANY PROJECT # 14966.
2. REFER TO SHEET A-5 FOR OTA TOWER ELEVATION DRAWING PROVIDED BY eyeTower, LLC.

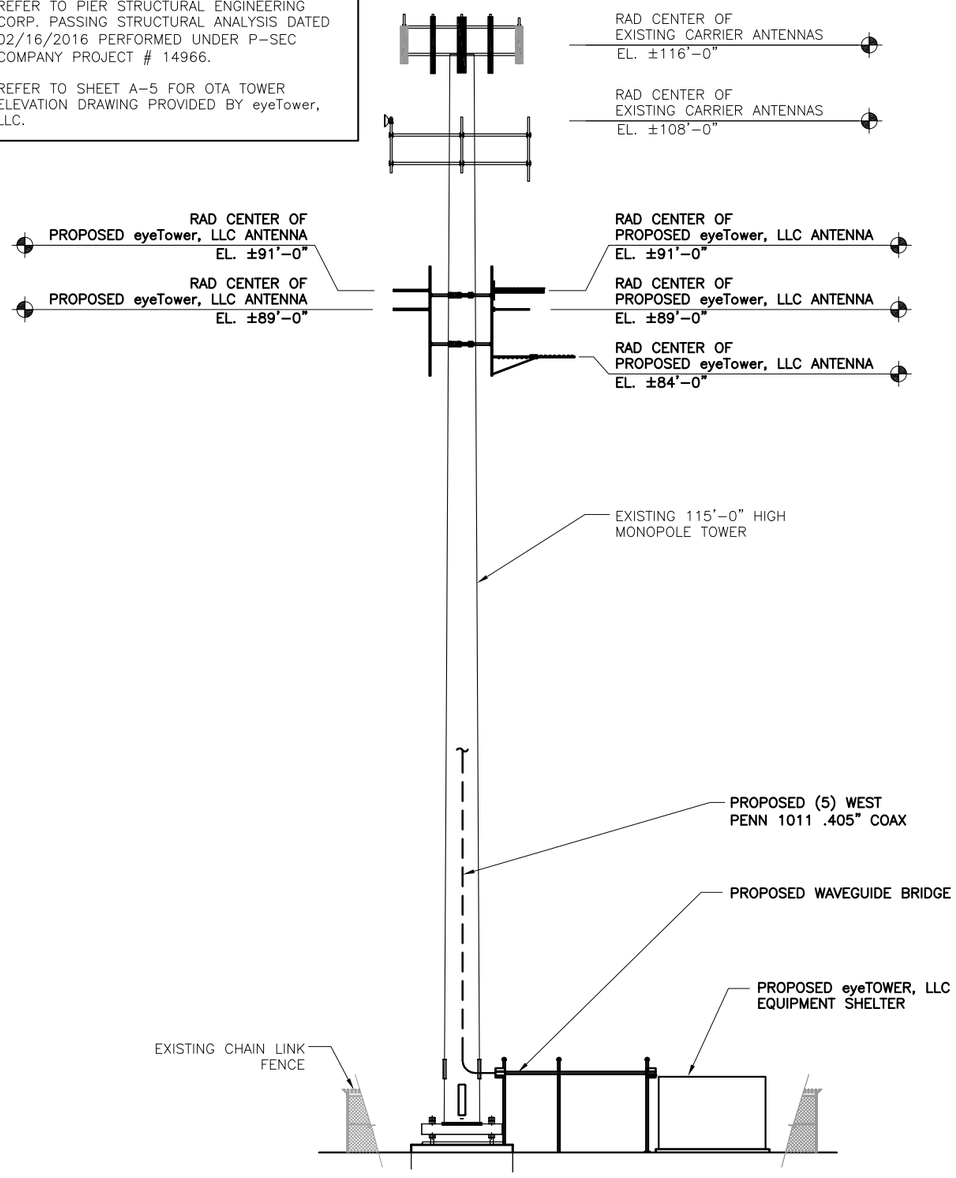

TOWER ELEVATION

ANSI "D" SCALE: 1/8" = 1'-0"
ANSI "B" SCALE: 1/16" = 1'-0"
8' 6' 4' 2' 0" 8'

1

NOTE:
1. REFER TO ANTENNA SCHEDULE FOR ADDITIONAL INFO.
2. ADJUST ANTENNA MOUNTS AS REQUIRED TO ACHIEVE THE AZIMUTHS SPECIFIED AND LIMIT RF SHADOWING.
3. CONTRACTOR TO FIELD VERIFY TOWER DIAMETER PRIOR TO ORDERING MOUNT.

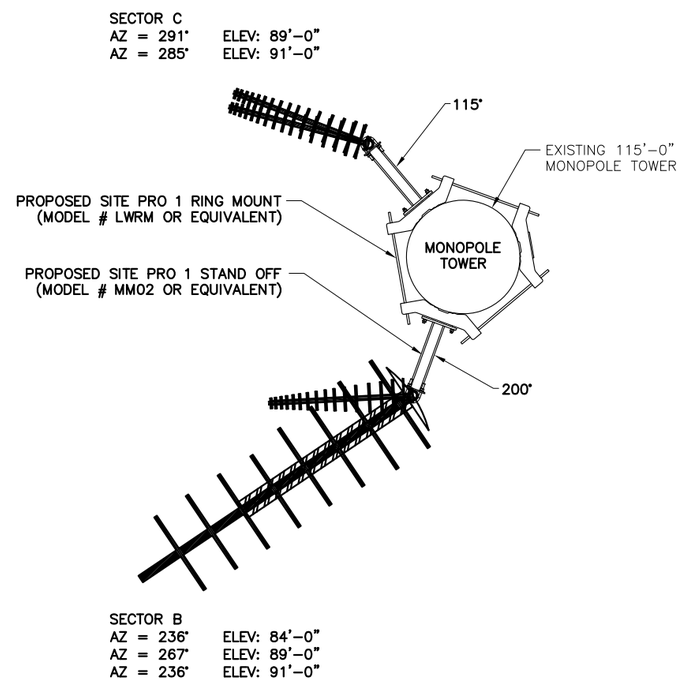

TRUE NORTH

ANTENNA LAYOUT

ANSI "D" SCALE: 1/2" = 1'-0"
ANSI "B" SCALE: 1/4" = 1'-0"
2' 1' 0" 2'

2

DO NOT SCALE DRAWINGS. CONTRACTOR MUST VERIFY ALL DIMENSIONS AND ADVISE CONSULTANTS OF ANY ERRORS OR OMISSIONS. NO VARIATIONS OR MODIFICATIONS TO WORK SHOWN SHALL BE IMPLEMENTED WITHOUT PRIOR WRITTEN APPROVAL. ALL PREVIOUS ISSUES OF THIS DRAWING ARE SUPERSEDED BY THE LATEST REVISION. ALL DRAWINGS AND SPECIFICATIONS REMAIN THE PROPERTY OF MORRISON HERSHFIELD CORPORATION. NEITHER MORRISON HERSHFIELD NOR THE ARCHITECT WILL BE PROVIDING CONSTRUCTION REVIEW OF THIS PROJECT.

STATE OF CONNECTICUT
ROBERT J. LARA
LICENSED ARCHITECT
No. 11509
Jul 6 2016
ROBERT JERRY LARA
REGISTERED ARCHITECT
STATE OF CONNECTICUT
11509

No.	Date	Action
4	.	.
3	.	.
2	07/06/16	ISSUED FOR PERMIT
1	05/24/16	ISSUED FOR PERMIT
0	05/16/16	ISSUED FOR PERMIT
A	05/10/16	90% CD SUBMITTAL

Carrier:
eyeTOWER
2711 CENTERVILLE ROAD, STE 400, PMB 160
WILMINGTON, DE 19808

Tower Owner/Client:
CROWN CASTLE
100 REGENCY FOREST DRIVE, SUITE 150
CARY, NC 27518

A/E Consultant:
MORRISON HERSHFIELD
8604 Cliff Cameron Drive, Suite 152
Charlotte, NC 28269
TEL: 704.499.6861 FAX: 704.547.5231
www.morrisonhershfield.com

Project:
806372
BDL200
266R CENTER ST.
MANCHESTER, CT 06040

Drawing Title:
TOWER ELEVATION & ANTENNA ORIENTATION

Project No.: 7160018
Designer: CG
Date: 05/10/16
Drawn By: RM
Checked By: RL
PM Review: CG
Client Approval
Issue No.: 2
Drawing No. A-3

SCALE IS BASE ON 22" X 34" "D" SIZE

S:\716 Series\7160018.00 Crown Carolinas AE Services 2016\9.0 Sites\BDL200_HRT\9.2_Design & Development\CAD\7160018.00_806372_BDL200_Final-CDs_Rev 2_2016.07.06.dwg 07/06/2016 10:24am bfraser

SIDE VIEW 200° LEG

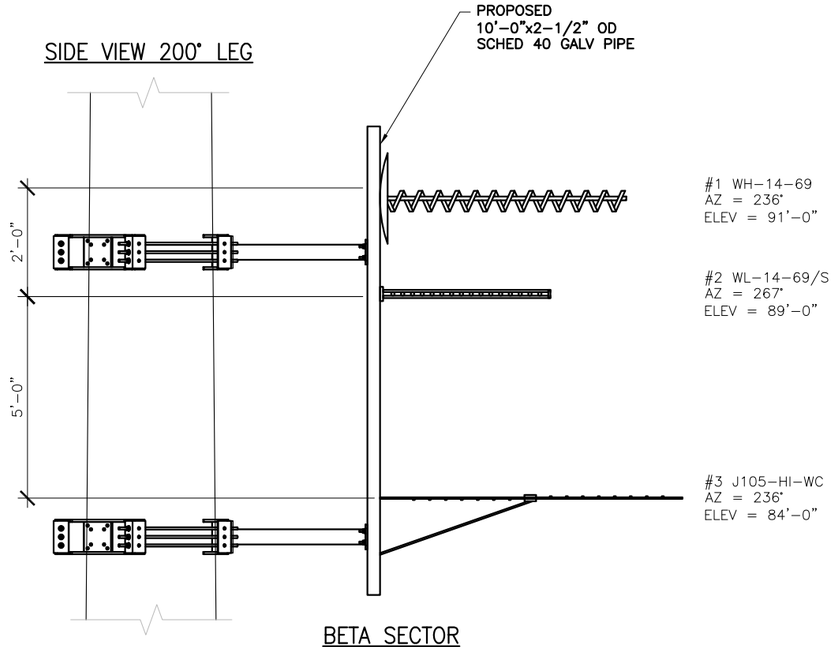

BETA SECTOR

SIDE VIEW 320° LEG

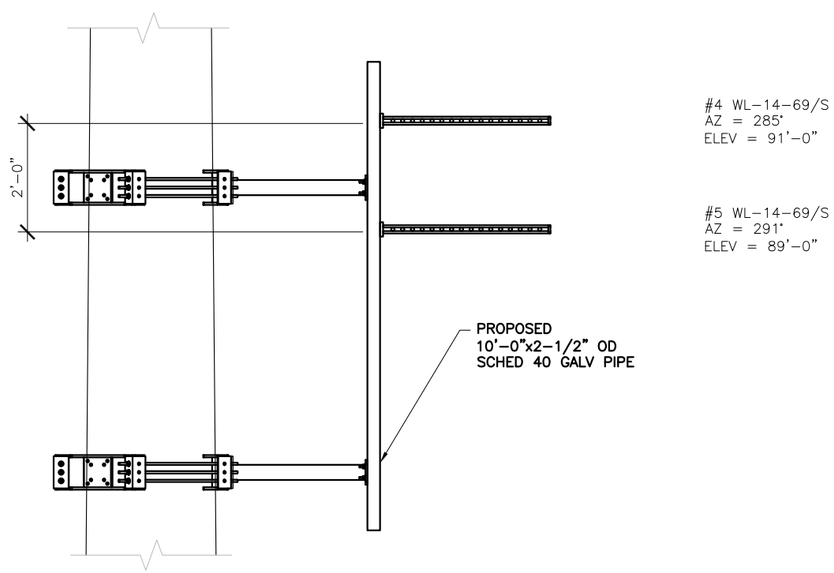

GAMMA SECTOR

ANTENNA DETAIL — 22"x34" SCALE: NOT TO SCALE; 11"x17" SCALE: NOT TO SCALE — 1

NOTE:
1. REFER TO PIER STRUCTURAL ENGINEERING CORP. PASSING STRUCTURAL ANALYSIS DATED 02/03/2016 PERFORMED UNDER P-SEC COMPANY PROJECT # 14966.

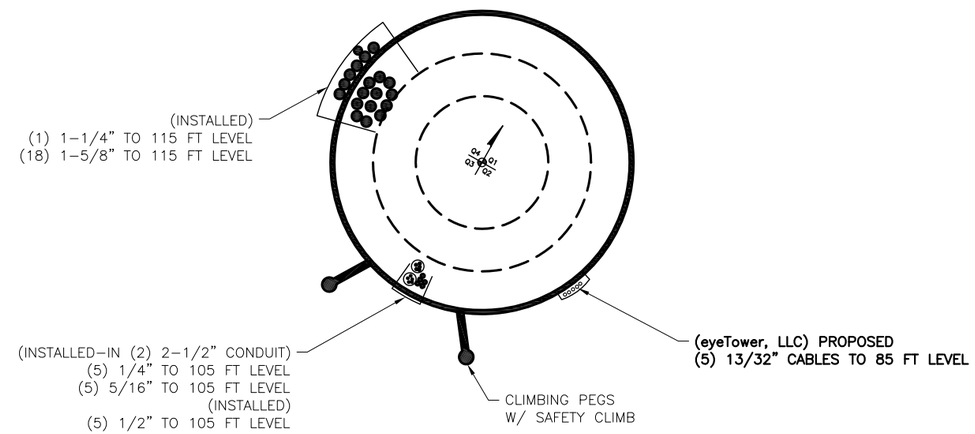

BASE LEVEL VIEW — 22"x34" SCALE: NOT TO SCALE; 11"x17" SCALE: NOT TO SCALE — 2

Cable Support Detail

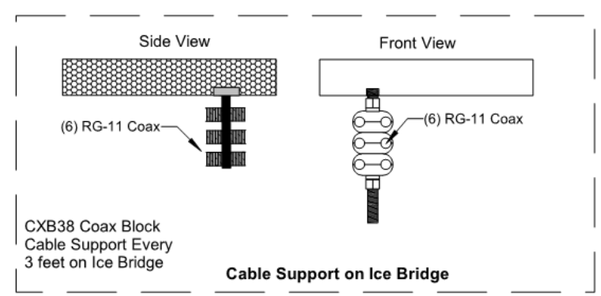

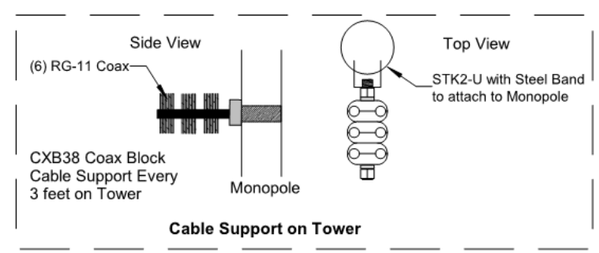

CABLE SUPPORT DETAIL — 22"x34" SCALE: NOT TO SCALE; 11"x17" SCALE: NOT TO SCALE — 3

DO NOT SCALE DRAWINGS. CONTRACTOR MUST VERIFY ALL DIMENSIONS AND ADVISE CONSULTANTS OF ANY ERRORS OR OMISSIONS. NO VARIATIONS OR MODIFICATIONS TO WORK SHOWN SHALL BE IMPLEMENTED WITHOUT PRIOR WRITTEN APPROVAL. ALL PREVIOUS ISSUES OF THIS DRAWING ARE SUPERSEDED BY THE LATEST REVISION. ALL DRAWINGS AND SPECIFICATIONS REMAIN THE PROPERTY OF MORRISON HERSHFIELD CORPORATION. NEITHER MORRISON HERSHFIELD NOR THE ARCHITECT WILL BE PROVIDING CONSTRUCTION REVIEW OF THIS PROJECT.

STATE OF CONNECTICUT — ROBERT J. LARA — LICENSED ARCHITECT

Jul 6 2016

ROBERT JERRY LARA
REGISTERED ARCHITECT
STATE OF CONNECTICUT
11509

No.	Date	Action
4	.	.
3	.	.
2	07/06/16	ISSUED FOR PERMIT
1	05/24/16	ISSUED FOR PERMIT
0	05/16/16	ISSUED FOR PERMIT
A	05/10/16	90% CD SUBMITTAL

Carrier:
eyeTOWER
2711 CENTERVILLE ROAD, STE 400, PMB 160
WILMINGTON, DE 19808

Tower Owner/Client:
CROWN CASTLE
100 REGENCY FOREST DRIVE, SUITE 150
CARY, NC 27518

A/E Consultant:
MORRISON HERSHFIELD
8604 Cliff Cameron Drive, Suite 152
Charlotte, NC 28269
TEL: 704.499.6861 FAX: 704.547.5231
www.morrisonhershfield.com

Project:
806372
BDL200
266R CENTER ST.
MANCHESTER, CT 06040

Drawing Title:
ANTENNA DETAILS

Project No.: 7160018
Designer: CG
Date: 05/10/16
Drawn By: RM
Checked By: RL
PM Review: CG
Client Approval
Issue No.: 2
Drawing No. A-4

SCALE IS BASE ON 22" X 34" "D" SIZE

S:\716 Series\7160018.00 Crown Carolinas AE Services 2016\9.0 Sites\BDL200_HRT\9.2_Design & Development\CAD\7160018.00_806372_BDL200_Final-CD's_Rev 2_2016.07.06.dwg 07/06/2016 10:24am bfraser

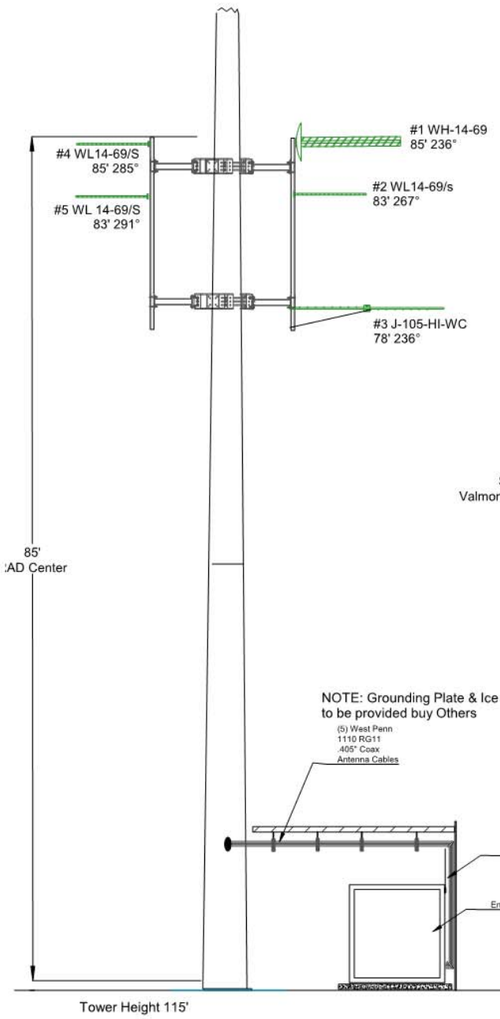

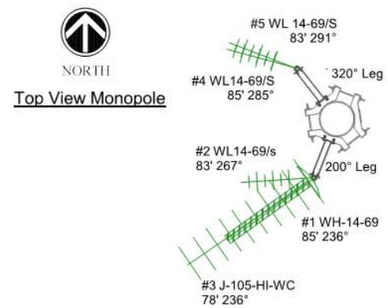

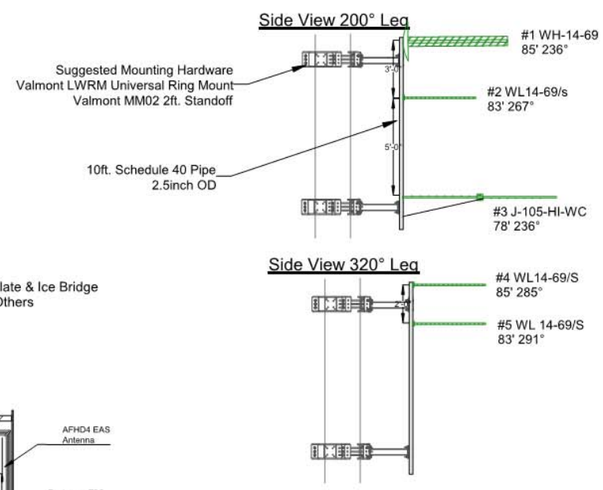

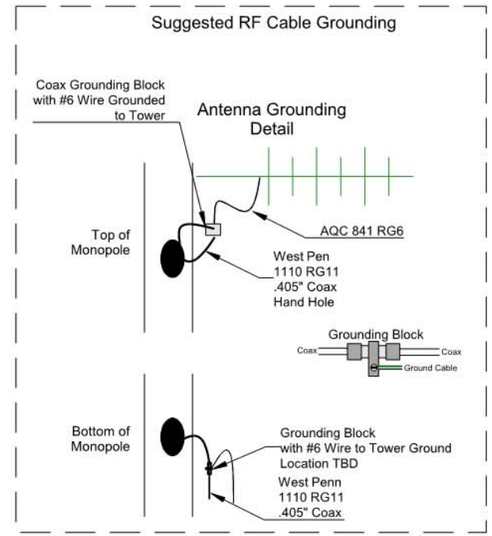

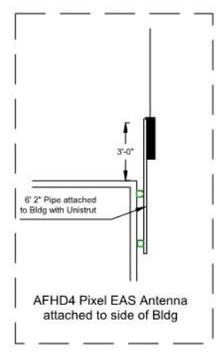

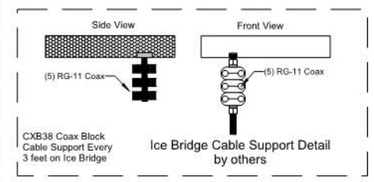

NOTE:

OTA TOWER ELEVATION DRAWING WAS PROVIDED BY eyeTower, LLC.

eye Tower LLC 806372 Hartford
266R Center St. Manchester, CT
OTA Monopole Elevations

DASCOM SYSTEMS GROUP
2415 Vermura Drive, Woodbury, MN, 55125
Phone: (651) 578-1200 Fax: (651) 578-2555
www.dascom-systems.com

Title: OTA Monopole Elevations
Engineered By:
Customer: eye Tower 806372
Drawn By: KDO
Project: 806372 Hartford
Approved By:
Revision:
File Name: eT 806372 Center St. Hartford OTA Monopole 050416
Scale: NTS
Date: 05/04/16
Job # : 806372

DO NOT SCALE DRAWINGS. CONTRACTOR MUST VERIFY ALL DIMENSIONS AND ADVISE CONSULTANTS OF ANY ERRORS OR OMISSIONS. NO VARIATIONS OR MODIFICATIONS TO WORK SHOWN SHALL BE IMPLEMENTED WITHOUT PRIOR WRITTEN APPROVAL. ALL PREVIOUS ISSUES OF THIS DRAWING ARE SUPERSEDED BY THE LATEST REVISION. ALL DRAWINGS AND SPECIFICATIONS REMAIN THE PROPERTY OF MORRISON HERSHFIELD CORPORATION. NEITHER MORRISON HERSHFIELD NOR THE ARCHITECT WILL BE PROVIDING CONSTRUCTION REVIEW OF THIS PROJECT.

STATE OF CONNECTICUT
ROBERT J. LARA
LICENSED ARCHITECT
Jul 6 2016
ROBERT JERRY LARA
REGISTERED ARCHITECT
STATE OF CONNECTICUT
11509

No.	Date	Action
4	.	.
3	.	.
2	07/06/16	ISSUED FOR PERMIT
1	05/24/16	ISSUED FOR PERMIT
0	05/16/16	ISSUED FOR PERMIT
A	05/10/16	90% CD SUBMITTAL

Carrier:

eyeTOWER
2711 CENTERVILLE ROAD, STE 400, PMB 160
WILMINGTON, DE 19808

Tower Owner/Client:

CROWN CASTLE
100 REGENCY FOREST DRIVE, SUITE 150
CARY, NC 27518

A/E Consultant:

MORRISON HERSHFIELD
8604 Cliff Cameron Drive, Suite 152
Charlotte, NC 28269
TEL: 704.499.6861 FAX: 704.547.5231
www.morrisonhershfield.com

Project:

806372
BDL200

266R CENTER ST.
MANCHESTER, CT 06040

Drawing Title:

OTA TOWER
ELEVATION

Project No.: 7160018	
Designer: CG	Date: 05/10/16
Drawn By: RM	Checked By: RL
PM Review: CG	Client Approval
Issue No.: 2	Drawing No. A-5

SCALE IS BASE ON 22" X 34" "D" SIZE

S:\716 Series\7160018.00 Crown Carolinas AE Services 2016\9.0 Sites\BDL200_HRT\9.2_Design & Development\CAD\7160018.00_806372_BDL200_Final-CDs_Rev 2_2016.07.06.dwg 07/06/2016 10:24am bfraser

WADE Antenna, Inc.

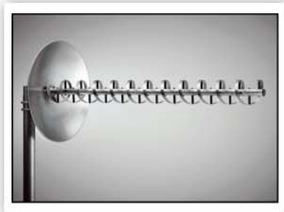

Helical Antennas

WH14-69/24, WH14-69/32, WH14-69/43

Description

The Wade Helical Antenna is circularly polarized for CATV Off-Air reception. The WH14-69 covers the entire UHF band (470- 806 MHz), channels 14 through 69.

Available as a single antenna or a customized antenna array. Electrical performance of the WH14-69, along with the high quality of materials used in the construction of this antenna, have resulted in a superior performance and longevity even when exposed to the most extreme weather conditions.

ELECTRICAL SPECIFICATIONS

SPECIFICATION	WH14-69/24	WH14-69/32	WH14-69/43
FREQUENCY RANGE	470-806 MHz	470-806 MHz	470-806 MHz
GAIN (dBic)	17	18	19
GAIN (dBi)	14	15	16
NUMBER OF TURNS	12	12	12
VSWR MAX	1.9	1.9	1.9
VSWR TYPICAL	1.4	1.4	1.4
HPBW HORIZONTAL	30	27	24
HPBW VERTICAL	28	25.5	23
POLARIZATION	Circular	Circular	Circular
SIDELOBE SUPPRESSION	15dB	16dB	17dB
F/B RATIO (dB)	>23	>25	>27
CROSS POLARIZATION SUPPRESSION	20dB	20dB	20dB
IMPEDANCE	75 Ohm	75 Ohm	75 Ohm
CONNECTOR	"F" Connector	"F" Connector	"F" Connector
MAX. INPUT POWER	25 W	25 W	25 W
TEMPURATURE (C)	-40 to +70	-40 to +70	-40 to +70

MECHANICAL SPECIFICATIONS

SPECIFICATION	WH14-69/24	WH14-69/32	WH14-69/43
OVERALL LENGTH	65"	65"	65"
HELIX DIAMETER	5.875"	5.875"	5.875"
GROUND PLANE DIAM.	24	32	42.67
STUB LENGTH	6.5"	6.5"	6.5"
STUB OD	1.5"	1.5"	1.5"
ANTENNA WEIGHT (lbs)	12	13	14
MOUNTING OPTION	Mast	Mast	Mast
MAST OD	2.5"	2.5"	2.5"

WIND LOAD SPECIFICATIONS

SPECIFICATION	WH14-69/24	WH14-69/32	WH14-69/43
WIND AREA (Sq. ft.)			
NO ICE *	1.64	1.94	2.32
1" RADIAL ICE **	3.68	4.02	4.42
WIND LOAD (ft. lbs)			
NO ICE *	143	169	203
1" RADIAL ICE **	93	102	122
SURVIVAL WIND SPEED (no ice)	180	165	151

*Wind Speed: 100mph **Half Wind: 50mph

Wade Antenna's ongoing policy of continuing development may result in specification changes to its products.

WADE Antenna, Inc.
29 Sharp Road, Brantford, Ontario, N3T 5L8 Canada
Tel: 519.756.7157 Fax: 519.756.5056

1.800.463.1607
sales@wadeantenna.com
www.wadeantenna.com

SPEC0026_A01

WADE Antenna, Inc.

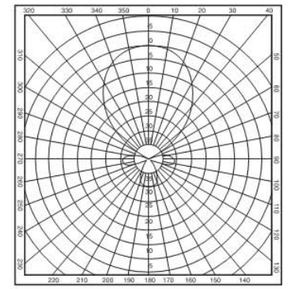

SINGLE UHF ANTENNA MODEL:

- WL 14-69/S

A single broadband UHF model provides optimum performance over the desired band. The 75 Ohm feed point is sealed within the boom. A short length of cable is fitted with a standard "F" connector for connection to the down lead. This light weight, high quality antenna is small in size and big on performance.

ELECTRICAL SPECIFICATIONS:

MODEL(S)	WL-14-69/S
Frequency Range (MHz)	470-800 MHz
Channels	14 to 69
Gain	11 dBi
Impedence	75 Ohm
VSWR	<1.25:1
FR:BK Ratio	>25 dB
Polarization	H or V
H. Beam Width	46 deg.
V. Beam Width	65 deg.
Side lobe Suppression	>30 dB
Connectors	"F" Connector
Std. Mount	3/8" U-bolts to fit 2-7/8" O.D. Pipe

- Where interfering signals such as co-channel, adjacent channel and ghosting are present, custom arrays can be designed to reduce the level of interference by as much as 40 db in most cases.

MECHANICAL SPECIFICATIONS:

MODEL(S)	WL-14-69/S
Boom length	45.25"
Weight (lbs):	
No ice	5.8
1" radial ice	35
Wind load (lbs):	
No ice*	23
1" radial ice**	15
Wind torque (ft-lbs):	
No ice*	43.5
1" radial ice**	28.5
Wind load area (sq.ft.)	
No Ice	0.63
1" Radial Ice	1.42

* WIND SPEED - 100 M.P.H. ** HALF WIND SPEED - 50 M.P.H.

OVERALL DIMENSIONS

MODEL(S)	WL-14-69/S
Number of Elements	16
Boom Length (A)	45.25"
Boom Length (B)	2.675"
Shortest Length (C)	3.675"
Longest Element (D)	11"

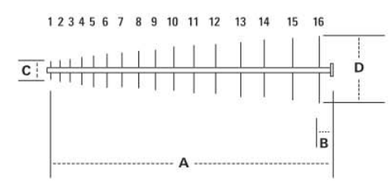

WADE Antenna Inc.
29 Sharp Road
Brantford, Ontario, N3T 5L8 Canada
Tel: 519.756.7157
Fax: 519.756.5056

(800) 463-1607
sales@wadeantenna.com

www.wadeantenna.com

DO NOT SCALE DRAWINGS. CONTRACTOR MUST VERIFY ALL DIMENSIONS AND ADVISE CONSULTANTS OF ANY ERRORS OR OMISSIONS. NO VARIATIONS OR MODIFICATIONS TO WORK SHOWN SHALL BE IMPLEMENTED WITHOUT PRIOR WRITTEN APPROVAL. ALL PREVIOUS ISSUES OF THIS DRAWING ARE SUPERSEDED BY THE LATEST REVISION. ALL DRAWINGS AND SPECIFICATIONS REMAIN THE PROPERTY OF MORRISON HERSHFIELD CORPORATION. NEITHER MORRISON HERSHFIELD NOR THE ARCHITECT WILL BE PROVIDING CONSTRUCTION REVIEW OF THIS PROJECT.

STATE OF CONNECTICUT ROBERT J. LARA LICENSED ARCHITECT

Jul 6 2016

ROBERT JERRY LARA
REGISTERED ARCHITECT
STATE OF CONNECTICUT
11509

No.	Date	Action
4	.	.
3	.	.
2	07/06/16	ISSUED FOR PERMIT
1	05/24/16	ISSUED FOR PERMIT
0	05/16/16	ISSUED FOR PERMIT
A	05/10/16	90% CD SUBMITTAL

Carrier:

eyeTOWER
2711 CENTERVILLE ROAD, STE 400, PMB 160
WILMINGTON, DE 19808

Tower Owner/Client:

CROWN CASTLE
100 REGENCY FOREST DRIVE, SUITE 150
CARY, NC 27518

A/E Consultant:

MORRISON HERSHFIELD
8604 Cliff Cameron Drive, Suite 152
Charlotte, NC 28269
TEL: 704.499.6861 FAX: 704.547.5231
www.morrisonhershfield.com

Project:

806372
BDL200

266R CENTER ST.
MANCHESTER, CT 06040

Drawing Title:

ANTENNA SPECS

Project No.: 7160018

Designer: CG | Date: 05/10/16

Drawn By: RM | Checked By: RL

PM Review: CG | Client Approval

Issue No.: 2 | Drawing No. A-6

SCALE IS BASE ON 22" X 34" "D" SIZE

S:\716 Series\7160018.00 Crown Carolinas AE Services 2016\9.0 Sites\BDL200_HRT\9.2_Design & Development\CAD\7160018.00_806372_BDL200_Final-CDs_Rev 2_2016.07.06.dwg 07/06/2016 10:24am bfraser

WADE Antenna, Inc.

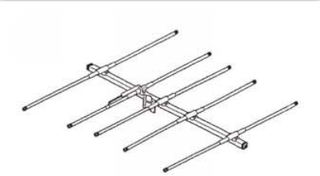

J55-*

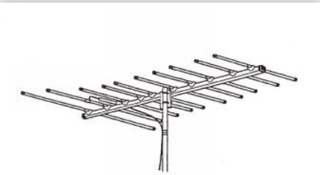

J105-*

J-Series YAGI and LOG Periodic Antenna

J55-* (Single Channel), J105-* (Single Channel), J55-LO (Log Periodic), J105-HI (Log Periodic)

Description

J-Series system antennas are specifically designed for commercial and industrial master antenna installations. Their heavy-duty construction ensures reliability under severe climatic conditions, providing a durable, trouble-free operation. Available in both cut-to-channel yagi and broadband models. Our single channel antennas feature sharp directivity for high gain, and excellent front-to-back ratios. Broadband models are of true log periodic design assuring extremely flat response and matched output over the entire band. All antennas are available with the exclusive Wade Cantilever Mount. Our J Series antennas are the answer to any system where high reliability or long life is a must.

Features

- Extra heavy-duty construction
- Seamless end-sealed chrome aluminum tubing prevents moisture penetration
- Anti-corrosion ensures maintenance free, weather resistant installation
- Stack vertically or horizontally for increased gain and directivity
- 125 mph wind velocity survival rating
- Cantilever mount available for all models

ELECTRICAL SPECIFICATIONS

	Cut Channel		Broadband	
MODEL	**J55-***	**J105-***	**J55-LO**	**J105-HI**
NO. ELEMENTS	5	10	5	10
CHANNEL*	2 to FM*	7 to 13*	2 Thru FM	7 Thru 13
GAIN	10 dBi	12.5 dBi	10 dBi	10.5 dBi
IMPEDANCE	75 Ohm	75 Ohm	75 Ohm	75 Ohm
VSWR	1.5:1	1.5:1	1.5:1	1.5:1
FR:BK RATIO	18 dB	20 dB	22 dB	22 dB
POLARIZATION	Horiz.	Horiz.	Horiz.	Horiz.
H. BEAM WIDTH	60 deg.	44 deg.	60 deg.	49 deg.
V. BEAM WIDTH	100 deg.	59 deg.	100 deg.	75 deg.
CONNECTOR	"F" Connector	"F" Connector	"F" Connector	"F" Connector
CENTRE MOUNT	Standard	Standard	Standard	Standard
CANTILEVER MOUNT	Optional	Optional	Optional	Optional
PIPE SIZE **	Up to 2.5" O.D.	Up to 2.5" O.D.	Up to 2.5" O.D.	Up to 2.5" O.D.

* Specify Channel ** Larger sizes available on request

** See reverse for Mechanical Specifications and more images. **

Wade Antenna's ongoing policy of continuing development may result in specification changes to its products.

WADE Antenna, Inc.
29 Sharp Road, Brantford, Ontario, N3T 5L8 Canada
Tel: 519.756.7157 Fax: 519.756.5056

1.800.463.1607
sales@wadeantenna.com
www.wadeantenna.com

SPEC0017_A01

WADE Antenna, Inc.

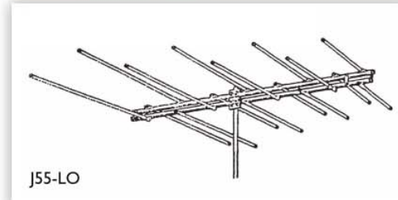

J55-LO

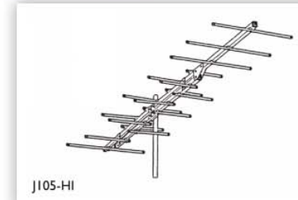

J105-HI

MECHANICAL SPECIFICATIONS

				THRUST (FT-Lbs)	
MODEL	**LENGTH (IN.)**	**WIDTH (IN.)**	**WEIGHT (LBS)**	**NO ICE**	**1/4" ICE**
J55-LO	94	54	24	69	109
J105-HI	104	33	19	55	77
J55-2	102	110	18	52	80
J55-3	89	100.5	18	46	72
J55-4	88	89	17	40	66
J55-5	80	77	16	36	60
J55-6	71	70	16	32	54
J55-FM	79	65	16	32	54
J105-7	98	33.5	16	35	55
J105-8	98	32.5	16	33.5	52.5
J105-9	98	31.5	15	31.5	50
J105-10	91	30.5	15	30	48.5
J105-11	91	30	15	28.5	46.3
J105-12	85	28.5	15	27.5	44
J105-13	82	27	15	26	42

* Length of longest element ** Wind speed 100mph

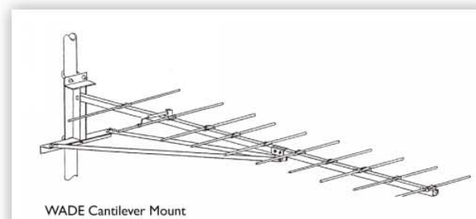

WADE Cantilever Mount

Wade Antenna's ongoing policy of continuing development may result in specification changes to its products.

WADE Antenna, Inc.
29 Sharp Road, Brantford, Ontario, N3T 5L8 Canada
Tel: 519.756.7157 Fax: 519.756.5056

1.800.463.1607
sales@wadeantenna.com
www.wadeantenna.com

SPEC0017_A02

DO NOT SCALE DRAWINGS. CONTRACTOR MUST VERIFY ALL DIMENSIONS AND ADVISE CONSULTANTS OF ANY ERRORS OR OMISSIONS. NO VARIATIONS OR MODIFICATIONS TO WORK SHOWN SHALL BE IMPLEMENTED WITHOUT PRIOR WRITTEN APPROVAL. ALL PREVIOUS ISSUES OF THIS DRAWING ARE SUPERSEDED BY THE LATEST REVISION. ALL DRAWINGS AND SPECIFICATIONS REMAIN THE PROPERTY OF MORRISON HERSHFIELD CORPORATION. NEITHER MORRISON HERSHFIELD NOR THE ARCHITECT WILL BE PROVIDING CONSTRUCTION REVIEW OF THIS PROJECT.

STATE OF CONNECTICUT ROBERT J. LARA LICENSED ARCHITECT

Jul 6 2016

ROBERT JERRY LARA
REGISTERED ARCHITECT
STATE OF CONNECTICUT
11509

No.	Date	Action
4	.	.
3	.	.
2	07/06/16	ISSUED FOR PERMIT
1	05/24/16	ISSUED FOR PERMIT
0	05/16/16	ISSUED FOR PERMIT
A	05/10/16	90% CD SUBMITTAL

Carrier:

eyeTOWER
2711 CENTERVILLE ROAD, STE 400, PMB 160
WILMINGTON, DE 19808

Tower Owner/Client:

CROWN CASTLE
100 REGENCY FOREST DRIVE, SUITE 150
CARY, NC 27518

A/E Consultant:

MORRISON HERSHFIELD
8604 Cliff Cameron Drive, Suite 152
Charlotte, NC 28269
TEL: 704.499.6861 FAX: 704.547.5231
www.morrisonhershfield.com

Project:

806372
BDL200

266R CENTER ST.
MANCHESTER, CT 06040

Drawing Title:

ANTENNA SPECS

Project No.: 7160018

Designer: CG | Date: 05/10/16

Drawn By: RM | Checked By: RL

PM Review: CG | Client Approval

Issue No.: 2 | Drawing No. A-7

SCALE IS BASE ON 22" X 34" "D" SIZE

S:\716 Series\7160018.00 Crown Carolinas AE Services 2016\9.0 Sites\BDL200_HRT\9.2_Design & Development\CAD\7160018.00_806372_BDL200_Final-CDs_Rev 2_2016.07.06.dwg 07/06/2016 10:24am bfraser

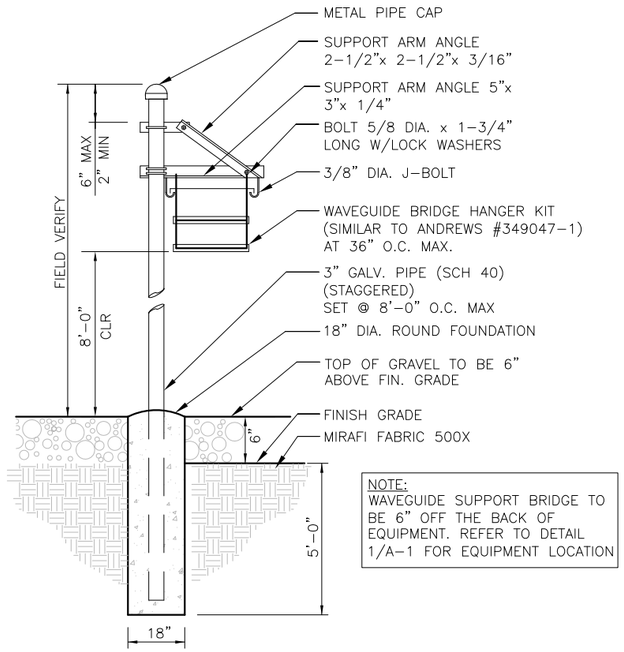

NOTE:
WAVEGUIDE SUPPORT BRIDGE TO BE 6" OFF THE BACK OF EQUIPMENT. REFER TO DETAIL 1/A-1 FOR EQUIPMENT LOCATION

WAVEGUIDE BRIDGE DETAIL — 22"x34" SCALE: NOT TO SCALE / 11"x17" SCALE: NOT TO SCALE — 1

NOT USED — 22"x34" SCALE: NOT TO SCALE / 11"x17" SCALE: NOT TO SCALE — 2

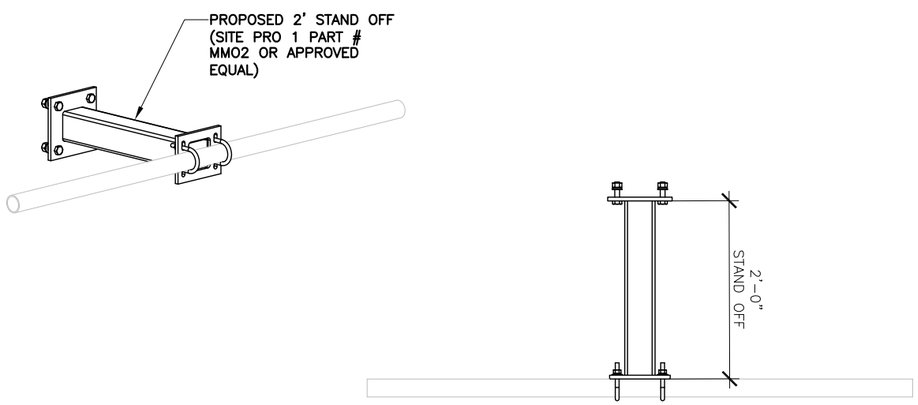

MOUNT DETAIL — 22"x34" SCALE: NOT TO SCALE / 11"x17" SCALE: NOT TO SCALE — 3

NOT USED — 22"x34" SCALE: NOT TO SCALE / 11"x17" SCALE: NOT TO SCALE — 4

DO NOT SCALE DRAWINGS. CONTRACTOR MUST VERIFY ALL DIMENSIONS AND ADVISE CONSULTANTS OF ANY ERRORS OR OMISSIONS. NO VARIATIONS OR MODIFICATIONS TO WORK SHOWN SHALL BE IMPLEMENTED WITHOUT PRIOR WRITTEN APPROVAL. ALL PREVIOUS ISSUES OF THIS DRAWING ARE SUPERSEDED BY THE LATEST REVISION. ALL DRAWINGS AND SPECIFICATIONS REMAIN THE PROPERTY OF MORRISON HERSHFIELD CORPORATION. NEITHER MORRISON HERSHFIELD NOR THE ARCHITECT WILL BE PROVIDING CONSTRUCTION REVIEW OF THIS PROJECT.

STATE OF CONNECTICUT — ROBERT J. LARA — LICENSED ARCHITECT

Jul 6 2016

ROBERT JERRY LARA
REGISTERED ARCHITECT
STATE OF CONNECTICUT
11509

No.	Date	Action
4	.	.
3	.	.
2	07/06/16	ISSUED FOR PERMIT
1	05/24/16	ISSUED FOR PERMIT
0	05/16/16	ISSUED FOR PERMIT
A	05/10/16	90% CD SUBMITTAL

Carrier:
eyeTOWER
2711 CENTERVILLE ROAD, STE 400, PMB 160
WILMINGTON, DE 19808

Tower Owner/Client:
CROWN CASTLE
100 REGENCY FOREST DRIVE, SUITE 150
CARY, NC 27518

A/E Consultant:
MORRISON HERSHFIELD
8604 Cliff Cameron Drive, Suite 152
Charlotte, NC 28269
TEL: 704.499.6861 FAX: 704.547.5231
www.morrisonhershfield.com

Project:
806372
BDL200

266R CENTER ST.
MANCHESTER, CT 06040

Drawing Title:
DETAILS

Project No.: 7160018
Designer: CG
Date: 05/10/16
Drawn By: RM
Checked By: RL
PM Review: CG
Client Approval
Issue No.: 2
Drawing No. A-8

SCALE IS BASE ON 22" X 34" "D" SIZE

S:\716 Series\7160018.00 Crown Carolinas AE Services 2016\9.0 Sites\BDL200_HRT\9.2_Design & Development\CAD\7160018.00_806372_BDL200_Final-CD's_Rev 2_2016.07.06.dwg 07/06/2016 10:24am bfraser

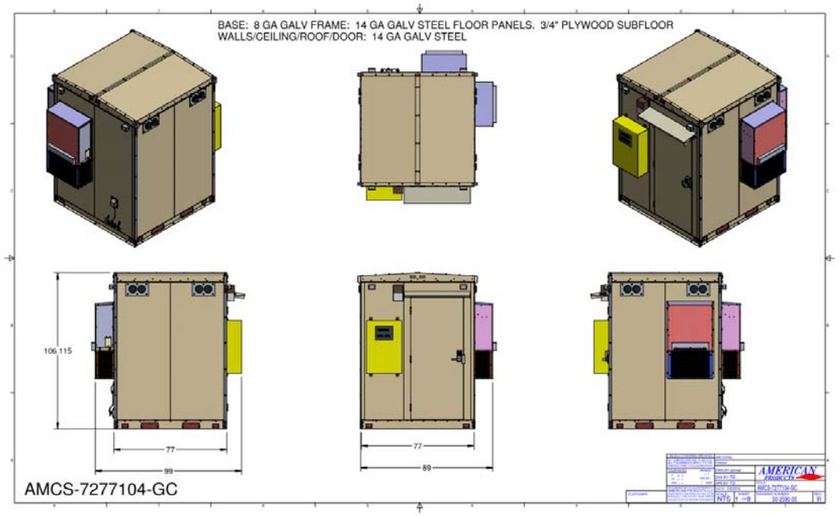

SHELTER DETAIL — 22"x34" SCALE: NOT TO SCALE; 11"x17" SCALE: NOT TO SCALE — 1

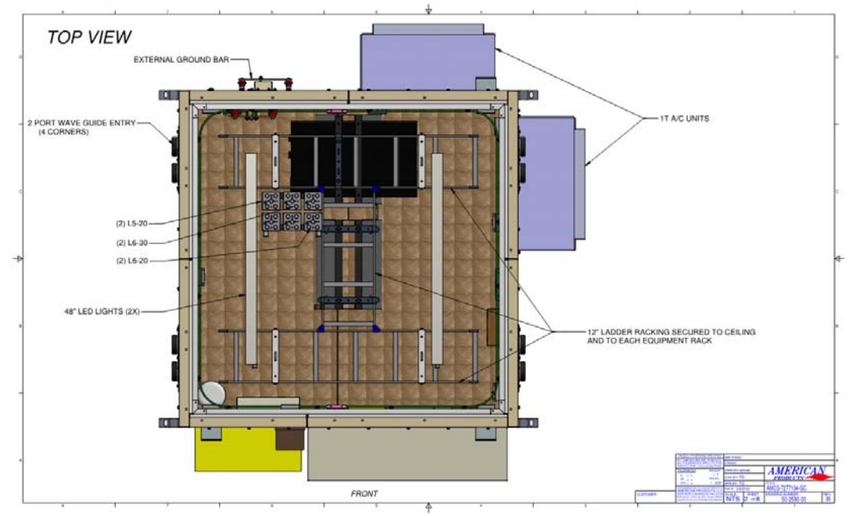

SHELTER DETAIL — 22"x34" SCALE: NOT TO SCALE; 11"x17" SCALE: NOT TO SCALE — 2

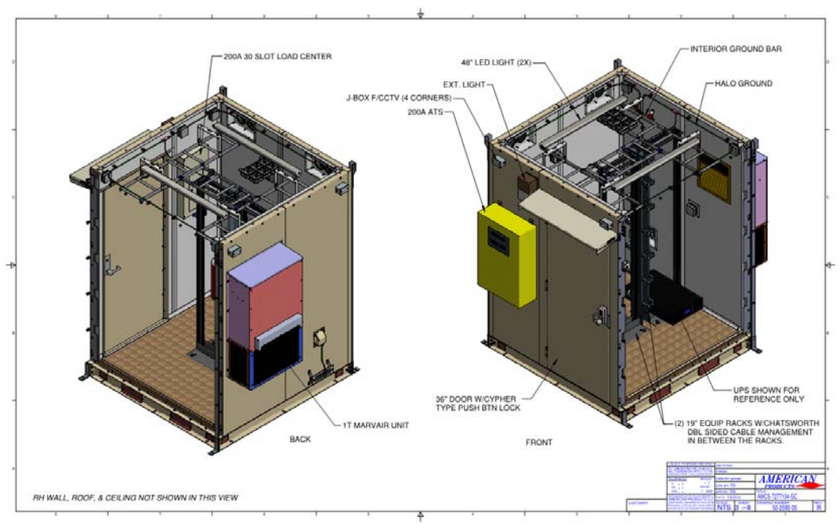

SHELTER DETAIL — 22"x34" SCALE: NOT TO SCALE; 11"x17" SCALE: NOT TO SCALE — 3

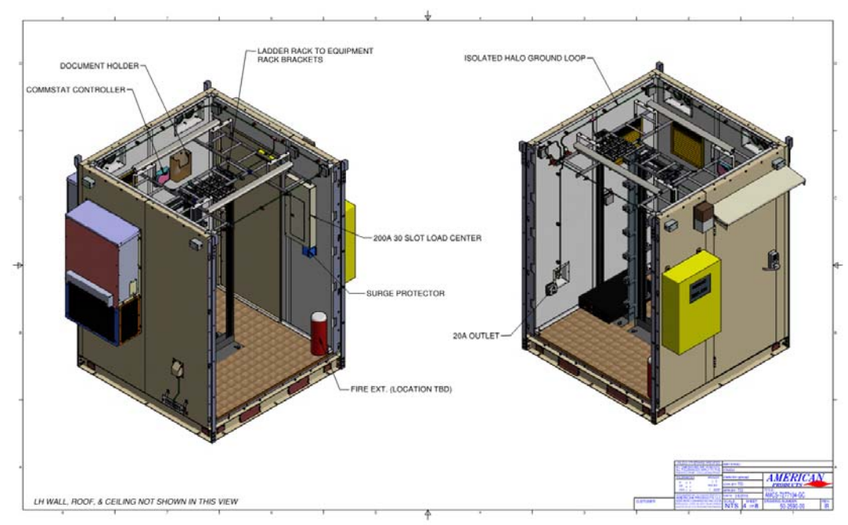

SHELTER DETAIL — 22"x34" SCALE: NOT TO SCALE; 11"x17" SCALE: NOT TO SCALE — 4

DO NOT SCALE DRAWINGS. CONTRACTOR MUST VERIFY ALL DIMENSIONS AND ADVISE CONSULTANTS OF ANY ERRORS OR OMISSIONS. NO VARIATIONS OR MODIFICATIONS TO WORK SHOWN SHALL BE IMPLEMENTED WITHOUT PRIOR WRITTEN APPROVAL. ALL PREVIOUS ISSUES OF THIS DRAWING ARE SUPERSEDED BY THE LATEST REVISION. ALL DRAWINGS AND SPECIFICATIONS REMAIN THE PROPERTY OF MORRISON HERSHFIELD CORPORATION. NEITHER MORRISON HERSHFIELD NOR THE ARCHITECT WILL BE PROVIDING CONSTRUCTION REVIEW OF THIS PROJECT.

STATE OF CONNECTICUT — ROBERT J. LARA — LICENSED ARCHITECT

Jul 6 2016

ROBERT JERRY LARA
REGISTERED ARCHITECT
STATE OF CONNECTICUT
11509

No.	Date	Action
4	.	.
3	.	.
2	07/06/16	ISSUED FOR PERMIT
1	05/24/16	ISSUED FOR PERMIT
0	05/16/16	ISSUED FOR PERMIT
A	05/10/16	90% CD SUBMITTAL

Carrier:

eyeTOWER
2711 CENTERVILLE ROAD, STE 400, PMB 160
WILMINGTON, DE 19808

Tower Owner/Client:

CROWN CASTLE
100 REGENCY FOREST DRIVE, SUITE 150
CARY, NC 27518

A/E Consultant:

MORRISON HERSHFIELD
8604 Cliff Cameron Drive, Suite 152
Charlotte, NC 28269
TEL: 704.499.6861 FAX: 704.547.5231
www.morrisonhershfield.com

Project:

806372
BDL200

266R CENTER ST.
MANCHESTER, CT 06040

Drawing Title:

DETAILS

Project No.: 7160018

Designer: CG	Date: 05/10/16
Drawn By: RM	Checked By: RL
PM Review: CG	Client Approval
Issue No.: 2	Drawing No. A-9

SCALE IS BASE ON 22" X 34" "D" SIZE

S:\716 Series\7160018.00 Crown Carolinas AE Services 2016\9.0 Sites\BDL200_JHR\9.2_Design & Development\CAD\7160018.00_806372_BDL200_Final-CDs_Rev 2_2016.07.06.dwg 07/06/2016 10:25am bfraser

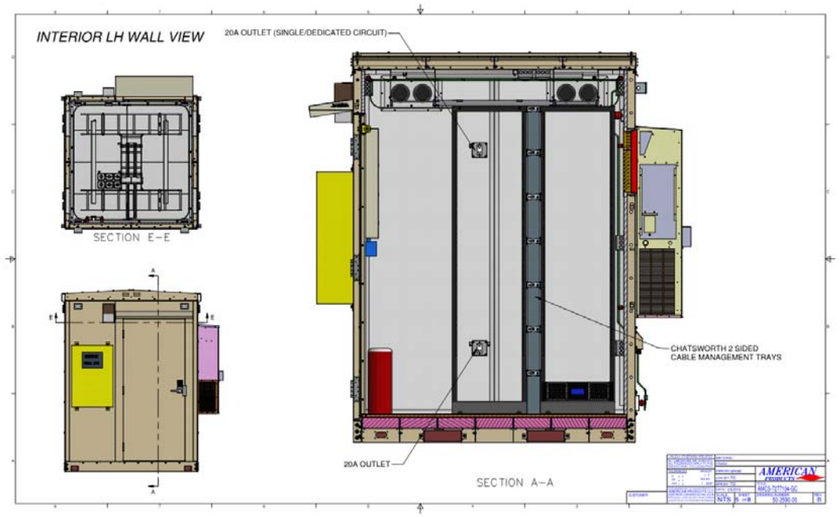

SHELTER DETAIL

22"x34" SCALE: NOT TO SCALE
11"x17" SCALE: NOT TO SCALE

1

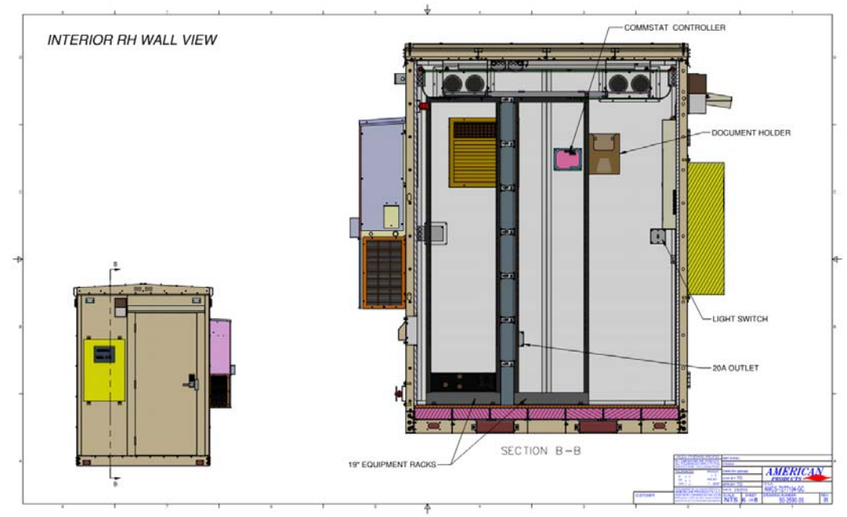

SHELTER DETAIL

22"x34" SCALE: NOT TO SCALE
11"x17" SCALE: NOT TO SCALE

2

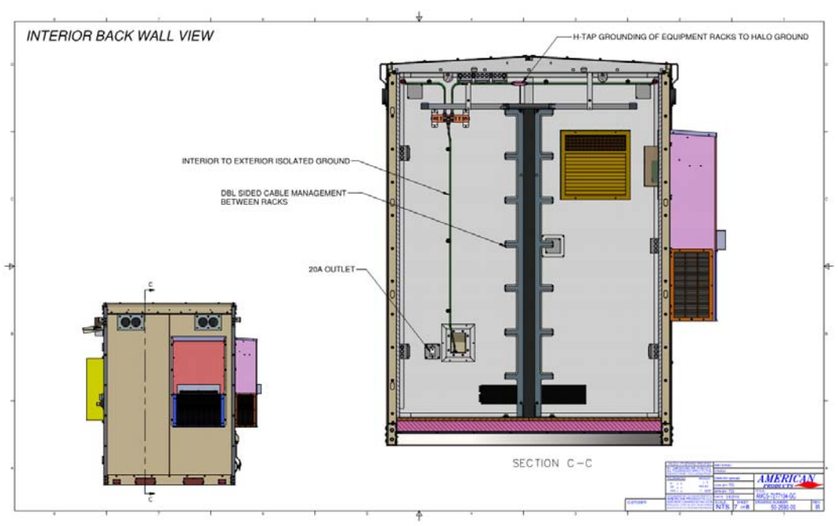

SHELTER DETAIL

22"x34" SCALE: NOT TO SCALE
11"x17" SCALE: NOT TO SCALE

3

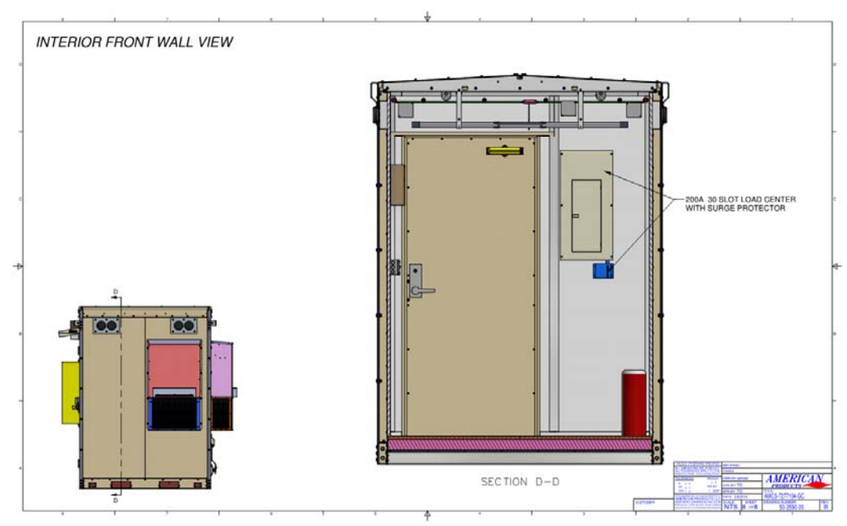

SHELTER DETAIL

22"x34" SCALE: NOT TO SCALE
11"x17" SCALE: NOT TO SCALE

4

DO NOT SCALE DRAWINGS. CONTRACTOR MUST VERIFY ALL DIMENSIONS AND ADVISE CONSULTANTS OF ANY ERRORS OR OMISSIONS. NO VARIATIONS OR MODIFICATIONS TO WORK SHOWN SHALL BE IMPLEMENTED WITHOUT PRIOR WRITTEN APPROVAL. ALL PREVIOUS ISSUES OF THIS DRAWING ARE SUPERSEDED BY THE LATEST REVISION. ALL DRAWINGS AND SPECIFICATIONS REMAIN THE PROPERTY OF MORRISON HERSHFIELD CORPORATION. NEITHER MORRISON HERSHFIELD NOR THE ARCHITECT WILL BE PROVIDING CONSTRUCTION REVIEW OF THIS PROJECT.

STATE OF CONNECTICUT
ROBERT J. LARA
LICENSED ARCHITECT

Jul 6 2016

ROBERT JERRY LARA
REGISTERED ARCHITECT
STATE OF CONNECTICUT
11509

No.	Date	Action
4	.	.
3	.	.
2	07/06/16	ISSUED FOR PERMIT
1	05/24/16	ISSUED FOR PERMIT
0	05/16/16	ISSUED FOR PERMIT
A	05/10/16	90% CD SUBMITTAL

Carrier:

eyeTOWER

2711 CENTERVILLE ROAD, STE 400, PMB 160
WILMINGTON, DE 19808

Tower Owner/Client:

CROWN CASTLE

100 REGENCY FOREST DRIVE, SUITE 150
CARY, NC 27518

A/E Consultant:

MORRISON HERSHFIELD

8604 Cliff Cameron Drive, Suite 152
Charlotte, NC 28269
TEL: 704.499.6861 FAX: 704.547.5231
www.morrisonhershfield.com

Project:

806372
BDL200

266R CENTER ST.
MANCHESTER, CT 06040

Drawing Title:

DETAILS

Project No.: 7160018

Designer: CG

Date: 05/10/16

Drawn By: RM

Checked By: RL

PM Review: CG

Client Approval

Issue No.: 2

Drawing No. A-10

SCALE IS BASE ON 22" X 34" "D" SIZE

S:\716 Series\7160018.00 Crown Carolinas AE Services 2016\3.0 Sites\BDL200_JHR\9.2_Design & Development\CAD\7160018.00_806372_BDL200_Final-CDs_Rev 2_2016.07.06.dwg 07/06/2016 10:25am bfraser

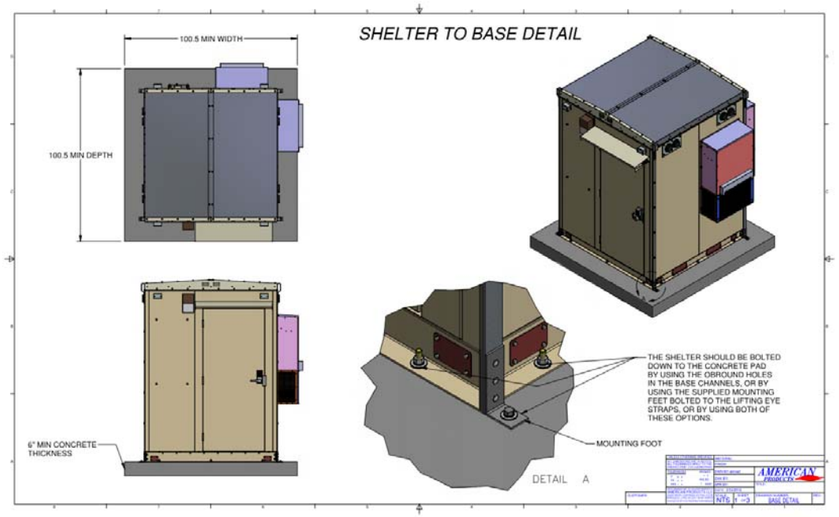

SHELTER DETAIL — 22"x34" SCALE: NOT TO SCALE; 11"x17" SCALE: NOT TO SCALE — 1

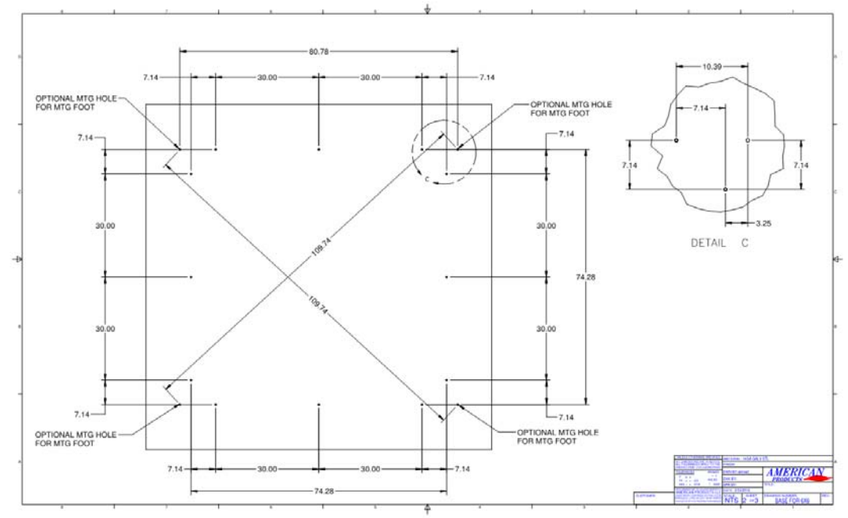

SHELTER DETAIL — 22"x34" SCALE: NOT TO SCALE; 11"x17" SCALE: NOT TO SCALE — 2

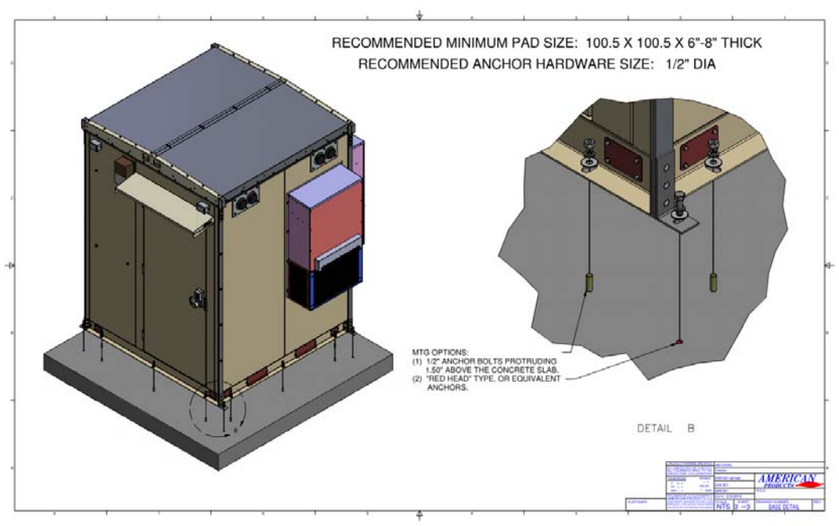

SHELTER DETAIL — 22"x34" SCALE: NOT TO SCALE; 11"x17" SCALE: NOT TO SCALE — 3

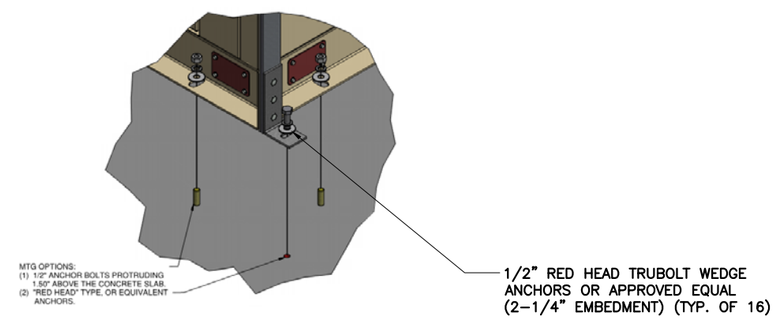

SHELTER ANCHORAGE DETAIL — 22"x34" SCALE: NOT TO SCALE; 11"x17" SCALE: NOT TO SCALE — 4

DO NOT SCALE DRAWINGS. CONTRACTOR MUST VERIFY ALL DIMENSIONS AND ADVISE CONSULTANTS OF ANY ERRORS OR OMISSIONS. NO VARIATIONS OR MODIFICATIONS TO WORK SHOWN SHALL BE IMPLEMENTED WITHOUT PRIOR WRITTEN APPROVAL. ALL PREVIOUS ISSUES OF THIS DRAWING ARE SUPERSEDED BY THE LATEST REVISION. ALL DRAWINGS AND SPECIFICATIONS REMAIN THE PROPERTY OF MORRISON HERSHFIELD CORPORATION. NEITHER MORRISON HERSHFIELD NOR THE ARCHITECT WILL BE PROVIDING CONSTRUCTION REVIEW OF THIS PROJECT.

STATE OF CONNECTICUT — ROBERT J. LARA — LICENSED ARCHITECT

Jul 6 2016

ROBERT JERRY LARA
REGISTERED ARCHITECT
STATE OF CONNECTICUT
11509

No.	Date	Action
4	.	.
3	.	.
2	07/06/16	ISSUED FOR PERMIT
1	05/24/16	ISSUED FOR PERMIT
0	05/16/16	ISSUED FOR PERMIT
A	05/10/16	90% CD SUBMITTAL

Carrier:
eyeTOWER
2711 CENTERVILLE ROAD, STE 400, PMB 160
WILMINGTON, DE 19808

Tower Owner/Client:
CROWN CASTLE
100 REGENCY FOREST DRIVE, SUITE 150
CARY, NC 27518

A/E Consultant:
MORRISON HERSHFIELD
8604 Cliff Cameron Drive, Suite 152
Charlotte, NC 28269
TEL: 704.499.6861 FAX: 704.547.5231
www.morrisonhershfield.com

Project:
806372
BDL200
266R CENTER ST.
MANCHESTER, CT 06040

Drawing Title:
DETAILS

Project No.: 7160018
Designer: CG
Date: 05/10/16
Drawn By: RM
Checked By: RL
PM Review: CG
Client Approval
Issue No.: 2
Drawing No. A-11

SCALE IS BASE ON 22" X 34" "D" SIZE

S:\716 Series\7160018.00 Crown Carolinas AE Services 2016\3.0 Sites\BDL200_JHR\9.2_Design & Development\CAD\7160018.00_806372_BDL200_Final-CDs_Rev 2_2016.07.06.dwg 07/06/2016 10:25am bfraser

CONCRETE:

1. ALL CONCRETE SHALLL BE 4000 PSI MIN. IN 28 DAY AND ALL WORK SHALL CONFORM TO ACI 318, " BUILDING CODE REQUIREMENTS FOR REINFORCED CONCRETE " AND TO THE PROJECT SPECIFICATIONS.
2. READY-MIX CONCRETE SUPPLIERS TO BE NRMCA-CERTIFIED.
3. ALL CONCRETE IS TO BE NORMAL DENSITY CONCRETE WITH A MAXIMUM SLUMP OF 4 INCHES. MAXIMUM AGGREGATE SIZE 3/4 INCH.
4. NO ADDITIONAL WATER SHALL BE ADDED TO THE CONCRETE AT THE JOB SITE.
5. DO NOT USE CHLORIDE-CONTAINING ADMIXTURES.
6. HOT WEATHER CONCRETE: COMPLY WITH ACI 305R.
7. PROVIDE CHAMFERS, REVEALS, REGLETS, RECESSES AND THE LIKE AS SHOWN ON THE ARCHITECTURAL OR STRUCTURAL DRAWINGS.
8. NO HOLES OR SLEEVES SHALL BE MADE THROUGH CONCRETE WORK OTHER THAN THOSE INDICATED ON THE STRUCTURAL DRAWINGS WITHOUT THE APPROVAL OF THE STRUCTURAL ENGINEER.
9. PROVIDE CAST-IN-PLACE CONCRETE FOR MECHANICAL AND ELECTRICAL DIVISIONS INCLUDING BUT NOT LIMITED TO: EQUIPMENT BASES, HOUSEKEEPING PADS, CURBS, PITS, UNDERGROUND DUCTBANKS.
10. ALL FORMWORK OFFSET TOLERANCES (PER ACI 117) TO BE CLASS A.
11. FLOOR SLAB TOLERANCE TO ASTM E1155: SPECIFIED OVERALL MINIMUM VALUE OF FLATNESS F_F=25 WITH LOCAL MINIMUM F_F=17, AND MINIMUM VALUE OF LEVELNESS F_L=20 WITH LOCAL MINIMUM F_L=15. MEASURE F_L AND F_F WITHIN 72 HOURS OF SLAB CONSTRUCTION.
12. STEEL FIBER REINFORCED CONCRETE SHALL MEET THE REQUIREMENTS OF ASTM A820 AND WITH 80 LBS/YD OF DOSAGE RATE

REINFORCING STEEL :
(IF APPLICABLE AS PER DETAIL C/S-1)

1. REINFORCING BARS: ASTM A625, GRADE 60, DEFORMED BARS.
2. WELDED WIRE MESH: TO ASTM A185. PROVIDE IN FLAT SHEETS ONLY. VERTICAL PLACEMENT TOLERANCE TO BE 3/8 INCH.
3. REINFORCING STEEL TO BE DETAILED, FABRICATED, BENT AND PLACED IN ACCORDANCE WITH THE CRSI MANUAL OF STANDARD PRACTICE AND ACI 315.
4. THE CONTRACTOR SHALL FABRICATE ALL REINFORCEMENT AND FURNISH ALL ACCESSORIES, BOLSTERS, CHAIRS, SPACER BARS AND SUPPORTS NECESSARY TO SECURE THE REINFORCEMENT UNLESS INDICATED OTHERWISE.

GENERATOR PAD:

1. ALLOWABLE BEARING PRESSURE USED IN DESIGN ASSUMED AS 2000 PSF IF SUSPICIOUS SOIL UNCOVERED, NOTIFY DESIGN PROFESSIONAL.

DESIGN NOTES:

DESIGN DATA:

2003 INTERNATIONAL BUILDING CODE	
WIND SPEED	100 MPH (NOMINAL 35 GUST)
EXPOSURE	C
IMPORTANCE FACTOR	1.0

CONCRETE (28 DAYS):

SLAB	4000 PSI
ALL OTHER CONCRETE	4000 PSI
REINFORCING STEEL	A615 GRADE 60
WELDED WIRE FABRIC	A185

STRUCTURAL GENERAL NOTES

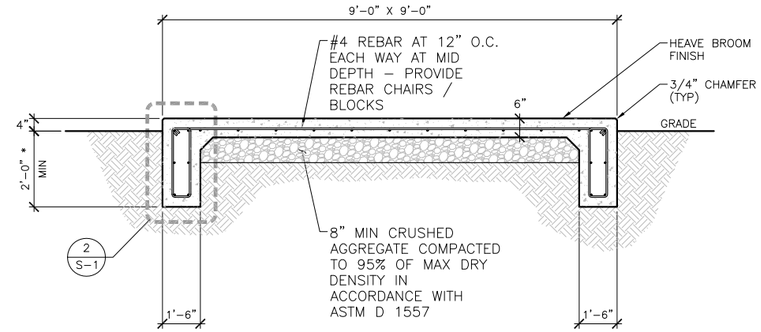

* PLACE BOTTOM OF FOUNDATION MIN 12" BELOW FROST LINE - VERIFY W/ JURISDICTION

SHELTER FOUNDATION SECTION

NTS | 1

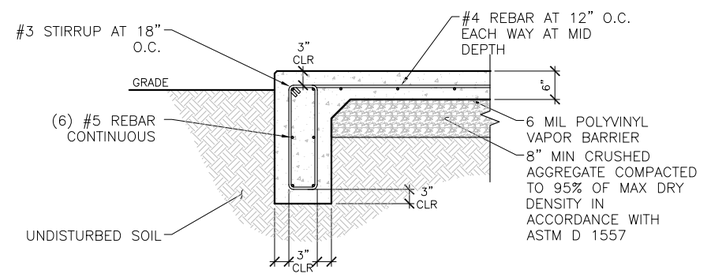

PERIMETER SECTION DETAIL

NTS | 2

NOT USED

NTS | 3

DO NOT SCALE DRAWINGS. CONTRACTOR MUST VERIFY ALL DIMENSIONS AND ADVISE CONSULTANTS OF ANY ERRORS OR OMISSIONS. NO VARIATIONS OR MODIFICATIONS TO WORK SHOWN SHALL BE IMPLEMENTED WITHOUT PRIOR WRITTEN APPROVAL. ALL PREVIOUS ISSUES OF THIS DRAWING ARE SUPERSEDED BY THE LATEST REVISION. ALL DRAWINGS AND SPECIFICATIONS REMAIN THE PROPERTY OF MORRISON HERSHFIELD CORPORATION. NEITHER MORRISON HERSHFIELD NOR THE ARCHITECT WILL BE PROVIDING CONSTRUCTION REVIEW OF THIS PROJECT.

STATE OF CONNECTICUT ROBERT J. LARA LICENSED ARCHITECT

Jul 6 2016

ROBERT JERRY LARA
REGISTERED ARCHITECT
STATE OF CONNECTICUT
11509

No.	Date	Action
4	.	.
3	.	.
2	07/06/16	ISSUED FOR PERMIT
1	05/24/16	ISSUED FOR PERMIT
0	05/16/16	ISSUED FOR PERMIT
A	05/10/16	90% CD SUBMITTAL

Carrier:
eyeTOWER
2711 CENTERVILLE ROAD, STE 400, PMB 160
WILMINGTON, DE 19808

Tower Owner/Client:
CROWN CASTLE
100 REGENCY FOREST DRIVE, SUITE 150
CARY, NC 27518

A/E Consultant:
MORRISON HERSHFIELD
8604 Cliff Cameron Drive, Suite 152
Charlotte, NC 28269
TEL: 704.499.6861 FAX: 704.547.5231
www.morrisonhershfield.com

Project:
806372
BDL200
266R CENTER ST.
MANCHESTER, CT 06040

Drawing Title:
STRUCTURAL NOTES AND CONC. PAD DETAILS

Project No.: 7160018	
Designer: CG	Date: 05/10/16
Drawn By: RM	Checked By: RL
PM Review: CG	Client Approval
Issue No.: 2	Drawing No. S-1

SCALE IS BASE ON 22" X 34" "D" SIZE

S:\Y16 Series\7160018.00 Crown Carolinas AE Services 2016\9.0 Sites\BDL200_HRT\9.2_Design & Development\CAD\7160018.00_806372_BDL200_Final-CDs_Rev 2_2016.07.06.dwg 07/06/2016 10:25am bfraser

ELECTRICAL GENERAL NOTES

1. GENERAL

1. EXAMINE THE SITE CONDITIONS VERY CAREFULLY AND THE SCOPE OF PROPOSED WORK TOGETHER WITH THE WORK OF ALL OTHER TRADES AND INCLUDE IN THE BID PRICE ALL COSTS FOR WORK SUCH AS EQUIPMENT AND WIRING MADE NECESSARY TO ACCOMMODATE THE ELECTRICAL SYSTEMS SHOWN AND SYSTEMS OF OTHER TRADES.

2. SUBMITTAL OF BID INDICATES CONTRACTOR IS COGNIZANT OF ALL JOB SITE CONDITIONS AND WORK TO BE PERFORMED UNDER THIS CONTRACT.

3. PERFORM DETAILED VERIFICATION OF WORK PRIOR TO ORDERING THE ELECTRICAL EQUIPMENT AND COMMENCING CONSTRUCTION. ISSUE A WRITTEN NOTICE TO THE CONSULTANT OF ANY DISCREPANCIES.

4. OBTAIN ALL PERMITS, PAY ASSOCIATED FEES AND SCHEDULE INSPECTION.

5. PROVIDE ALL LABOR, MATERIAL, EQUIPMENT, INSURANCE, AND SERVICES TO COMPLETE THIS PROJECT IN ACCORDANCE WITH THE CONTRACT DOCUMENTS AND PRESENT IT AS FULLY OPERATIONAL TO THE SATISFACTION OF THE OWNER.

6. CARRY OUT WORK IN ACCORDANCE WITH ALL GOVERNING STATE, COUNTY AND LOCAL CODES AND O.S.H.A.

7. PRIOR TO BEGINNING WORK COORDINATE ALL POWER AND TELCO WORK WITH THE LOCAL UTILITY COMPANY AS IT MAY APPLY TO THIS SITE. ALL WORK TO COMPLY WITH THE RULES AND REGULATIONS OF THE UTILITIES INVOLVED.

8. FABRICATION AND INSTALLATION OF THE COMPLETE ELECTRICAL SYSTEM SHALL BE DONE IN A FIRST CLASS WORKMANSHIP PER NECA STANDARD 1–2000 BY QUALIFIED PERSONNEL EXPERIENCED IN SUCH WORK AND SHALL SCHEDULE THE WORK IN AN ORDERLY MANNER SO AS NOT TO IMPEDE PROGRESS OF THE PROJECT.

9. DURING PROGRESS OF THE WORK, MAINTAIN AN ACCURATE RECORD OF THE INSTALLATION OF THE ELECTRICAL SYSTEMS, LOCATING EACH CIRCUIT PRECISELY AND DIMENSIONING EQUIPMENT, CONDUIT AND CABLE LOCATIONS. UPON COMPLETION OF THE INSTALLATION, TRANSFER ALL RECORD DATA TO BLACK LINE PRINTS OF THE ORIGINAL DRAWINGS AND SUBMIT THESE DRAWINGS AS RECORD DRAWINGS TO THE CONSULTANT.

10. COMPLETE JOB SHALL BE GUARANTEED FOR A PERIOD OF ONE (1) YEAR AFTER THE DATE OF JOB ACCEPTANCE BY OWNER. ANY WORK, MATERIAL, OR EQUIPMENT FOUND TO BE FAULTY DURING THAT PERIOD SHALL BE CORRECTED AT ONCE UPON WRITTEN NOTIFICATION, AT THE EXPENSE OF THE CONTRACTOR.

11. GENERAL CONTRACTOR IS RESPONSIBLE FOR REQUESTING CONNECTION OF COMMERCIAL POWER FROM THE POWER COMPANY. ELECTRICAL CONTRACTOR SHALL COORDINATE THIS WORK WITH THE GENERAL CONTRACTOR.

12. COORDINATE EXACT TELEPHONE REQUIREMENTS AND SERVICE ROUTING WITH LOCAL TELEPHONE COMPANY. APPLY FOR TELEPHONE SERVICE IMMEDIATELY UPON AWARD OF CONTRACT.

2. BASIC MATERIALS AND METHODS

1. ALL ELECTRICAL WORK SHALL CONFORM TO THE EDITION OF THE NEC ACCEPTED BY THE LOCAL JURISDICTION AND TO THE APPLICABLE LOCAL CODES AND REGULATIONS.

2. ALL MATERIALS AND EQUIPMENT SHALL BE NEW. MATERIALS AND EQUIPMENT SHALL BE THE STANDARD PRODUCTS OF MANUFACTURER'S CURRENT DESIGN. ANY FIRST–CLASS PRODUCT MADE BY A REPUTABLE MANUFACTURER MAY BE USED PROVIDING IT CONFORMS TO THE CONTRACT REQUIREMENTS AND MEETS THE APPROVAL OF THE CONSULTANT AND THE OWNER.

3. ARRANGE CONDUIT, WIRING, EQUIPMENT, AND OTHER WORK GENERALLY AS SHOWN, PROVIDING PROPER CLEARANCES AND ACCESS. CAREFULLY EXAMINE ALL CONTRACT DRAWINGS AND FIT THE WORK IN EACH LOCATION WITHOUT SUBSTANTIAL ALTERATION. WHERE DEPARTURES ARE PROPOSED BECAUSE OF FIELD CONDITIONS OR OTHER CAUSES, PREPARE AND SUBMIT DETAILED DRAWINGS FOR ACCEPTANCE.

4. THE CONTRACT DRAWINGS ARE GENERALLY DIAGRAMMATIC AND ALL OFFSETS, BENDS, FITTINGS AND ACCESSORIES ARE NOT NECESSARILY SHOWN. PROVIDE ALL SUCH ITEMS AS MAY BE REQUIRED TO FIT THE WORK TO THE CONDITIONS.

5. MAINTAIN ALL CLEARANCES AS REQUIRED BY NEC.

6. SEAL AROUND CONDUITS AND AROUND CONDUCTORS WITHIN CONDUITS ENTERING THE MODULAR CABINETS WHERE PENETRATION OCCURS WITH A SILICONE SEALANT TO PREVENT MOISTURE PENETRATION INTO BUILDING.

7. SILICONE SEAL AROUND ALL BOLTS AND SCREWS USED TO SECURE EQUIPMENT TO EXTERIOR OF BUILDING.

8. MAKE NECESSARY CONNECTIONS FOR BATTERY IN EMERGENCY LIGHT FIXTURE. CONNECT EXTERIOR LIGHT FIXTURE (PROVIDED BY CABINET MANUFACTURER) TO EXTERNAL JUNCTION BOX.

3. CONDUCTORS AND CONNECTORS

1. UNLESS NOTED OTHERWISE, ALL CONDUCTORS SHALL BE COPPER, MINIMUM SIZE #12 AWG, WITH THERMOPLASTIC INSULATION CONFORMING TO NEMA WC5 OR CROSS–LINKED POLYETHYLENE INSULATION CONFORMING TO NEMA WC7. (TYPES THHN OR THWN). INSULATION SHALL BE RATED FOR 90 C CONDUCTORS SHALL BE COLOR CODED IN ACCORDANCE WITH NEC.

2. ALL CONDUCTORS USED FOR GROUNDING SHALL BE COPPER AND SHALL HAVE GREEN INSULATION.

3. FOR COPPER CONDUCTORS #6 AWG AND SMALLER USE 3M SCOTCH–LOK OR T&B STA–KON COMPRESSION TYPE CONNECTORS WITH INTEGRAL OR SEPARATE INSULATION CAPS. FOR COPPER CONDUCTORS LARGER THAN #6 AWG USE SOLDERLESS, IDENT HEX SCREW OR BOLT TYPE PRESSURE CONNECTORS OR DOUBLE COMPRESSION C–CLAMP CONNECTORS, UNLESS SPECIFIED OTHERWISE ON DRAWINGS.

4. UNLESS NOTED OTHERWISE ALL LUGS SHALL BE TIN PLATED COPPER, TWO–HOLE, LONG BARREL, COMPRESSION TYPE.

5. CONDUCTOR LENGTHS SHALL BE CONTINUOUS FROM TERMINATION TO TERMINATION WITHOUT SPLICES. SPLICES ARE NOT ACCEPTABLE. IF SPLICES ARE UNAVOIDABLE PRIOR APPROVAL FROM THE ENGINEER MUST BE OBTAINED.

4. RACEWAYS AND BOXES

1. ALL CONDUIT SHALL BE UL LABELED.

2. ALL EMPTY CONDUITS INSTALLED FOR FUTURE USE SHALL HAVE A PULL CORD.

3. SHEET METAL BOXES SHALL CONFORM TO NEMA OS1; CAST–METAL BOXES SHALL CONFORM TO NEMA 81 AND SHALL BE SIZED IN ACCORDANCE WITH NEC UNLESS NOTED OTHERWISE.

5. GROUNDING

1. ALL LIGHTNING PROTECTION GROUNDING OF THE ELECTRICAL EQUIPMENT SHALL BE CARRIED OUT IN ACCORDANCE WITH THE CURRENT NFPA STANDARDS.

2. GROUND LUGS ARE SPECIFIED UNDER SECTION 3 "CONDUCTORS AND CONNECTORS".

3. ALL GROUND LUG AND COMPRESSION CONNECTIONS SHALL BE COATED WITH ANTI–OXIDANT AGENT, SUCH AS NO–OX, NOALOX, PENETROX OR KOPRSHIELD.

4. GROUND ALL EXPOSED METALLIC OBJECTS ON BUILDING EXTERIOR INCLUDING BUILDING TIE DOWN BRACKETS.

5. PROVIDE LOCK WASHERS FOR ALL MECHANICAL CONNECTIONS FOR GROUND CONDUCTORS. USE STAINLESS STEEL HARDWARE THROUGHOUT.

6. DO NOT INSTALL GROUND RING OUTSIDE OF PROPERTY LINE.

7. REMOVE ALL PAINT AND CLEAN ALL DIRT FROM SURFACES REQUIRING GROUND CONNECTIONS, REPAINT TO MATCH AFTER CONNECTION IS MADE TO MAINTAIN CORROSION RESISTANCE.

8. ALL EXTERIOR GROUNDING CONDUCTORS INCLUDING EXTERIOR GROUND RING SHALL BE #2 AWG SOLID BARE TINNED COPPER. MAKE ALL GROUND CONNECTIONS AS SHORT AND DIRECT AS POSSIBLE. AVOID SHARP BENDS. THE RADIUS OF ANY BEND SHALL NOT BE LESS THAN 8" AND THE ANGLE OF ANY BEND SHALL NOT EXCEED 90°. GROUNDING CONDUCTORS SHALL BE ROUTED DOWNWARD TOWARD THE BURIED GROUND RING.

9. REPAIR ALL GALVANIZED SURFACES THAT HAVE BEEN DAMAGED BY THERMO–WELDING WITH ERICO T–319 GALVANIZING BAR.

10. ALL GROUND CONNECTIONS SHALL BE APPROVED FOR THE METALS BEING CONNECTED.

11. ALL EXTERNAL GROUND CONNECTIONS SHALL BE EXOTHERMICALLY WELDED. ALL EXOTHERMIC WELDS TO EXTERIOR GROUND RING SHALL BE THE PARALLEL TYPE, EXCEPT FOR THE GROUND RODS WHICH ARE TEE EXOTHERMIC WELDS. REPAIR ALL GALVANIZED SURFACES THAT HAVE BEEN DAMAGED BY EXOTHERMIC WELDING. USE SPRAY GALVANIZER SUCH AS HOLUB LECTROSOL #15–501.

12. CONTRACTOR SHALL NOTIFY eyeTower, LLC WHEN THE BURIED GROUND RING IS INSTALLED SO THE REPRESENTATIVE CAN INSPECT THE GROUND RING BEFORE IT IS BACKFILLED WITH SOIL. CONTACT: eyeTower, LLC PROJECT MGR.

13. FOR METAL FENCE POST GROUNDING, USE A HEAVY DUTY TYPE GROUNDING CLAMP OR EXOTHERMIC WELD CONNECTION TO POST.

14. WHERE MECHANICAL CONNECTORS (TWO–HOLE OR CLAMP) ARE USED, APPLY A LIBERAL PROTECTIVE COATING OF AN ANTI–OXIDE COMPOUND SUCH AS "NO OXIDE A" BY DEARBORN CHEMICAL COMPANY ON ALL CONNECTORS.

15. BOND ALL EXTERIOR CONDUITS, PIPES AND CYLINDRICAL METALLIC OBJECTS WITH A PENN–UNION GT SERIES CLAMP, BLACKBURN GUV SERIES CLAMP OR A BURNDY GAR 3900BU SERIES CLAMP ONLY, NO SUBSTITUTES ACCEPTED.

LEGEND

SYMBOL	DESCRIPTION
	CIRCUIT BREAKER
	NON–FUSIBLE DISCONNECT SWITCH
F	FUSIBLE DISCONNECT SWITCH
	SURFACE MOUNTED PANEL BOARD
TR	TRANSFORMER
M	KILOWATT HOUR METER
	DENOTES CABLE OR CONDUIT TURNING UP IN PLAN VIEW
	DENOTES CABLE OR CONDUIT TURNING DOWN IN PLAN VIEW
JB	JUNCTION BOX
PB	PULL BOX TO NEC/TELCO STANDARDS
	ABOVE GROUND SERVICES
	UNDER GROUND SERVICES
2	DENOTES REFERENCE NOTE
	EXOTHERMIC WELD CONNECTION
	MECHANICAL CONNECTION (eg LUG, C–TAP)
	GROUND ROD
	GROUND BAR
	PIN AND SLEEVE RECEPTACLE
	GROUND ROD WITH INSPECTION SLEEVE

ABBREVIATIONS

AFG	ABOVE FINISHED GRADE
AIC	AMPERE INTERRUPTING CAPACITY
BFG	BELOW FINISHED GRADE
C	CONDUIT
CRGB	CELL REFERENCE GROUND BAR
CU	COPPER
C/W	COMPLETE WITH
D.T.T.	DRY TYPE TRANSFORMER
EC	EMPTY CONDUIT
G	GROUND
GE	GROUNDING ELECTRODE
GEC	GROUNDING ELECTRODE CONDUCTOR
GRC	GALVANIZED RIGID CONDUIT
MTS	MANUAL TRANSFER SWITCH
NEC	NATIONAL ELECTRICAL CODE
RNC	RIGID NON–METALLIC CONDUIT (SCHEDULE 80 PVC)
SD	SERVICE DISCONNECT SWITCH
SE	SERVICE ENTRANCE
SN	SOLID NEUTRAL
TGB	TELCO GROUND BAR
TEGB	TOWER EXIT GROUND BAR
TR	TRANSFORMER
TVSS	TRANSIENT VOLTAGE SURGE SUPPRESSOR
TYP	TYPICAL
WP	WEATHERPROOF – NEMA 3R
U/G	UNDERGROUND
PPC	POWER PROTECTION CABINET

DO NOT SCALE DRAWINGS. CONTRACTOR MUST VERIFY ALL DIMENSIONS AND ADVISE CONSULTANTS OF ANY ERRORS OR OMISSIONS. NO VARIATIONS OR MODIFICATIONS TO WORK SHOWN SHALL BE IMPLEMENTED WITHOUT PRIOR WRITTEN APPROVAL. ALL PREVIOUS ISSUES OF THIS DRAWING ARE SUPERSEDED BY THE LATEST REVISION. ALL DRAWINGS AND SPECIFICATIONS REMAIN THE PROPERTY OF MORRISON HERSHFIELD CORPORATION. NEITHER MORRISON HERSHFIELD NOR THE ARCHITECT WILL BE PROVIDING CONSTRUCTION REVIEW OF THIS PROJECT.

STATE OF CONNECTICUT · ROBERT J. LARA · LICENSED ARCHITECT

Jul 6 2016

ROBERT JERRY LARA
REGISTERED ARCHITECT
STATE OF CONNECTICUT
11509

No.	Date	Action
4	.	.
3	.	.
2	07/06/16	ISSUED FOR PERMIT
1	05/24/16	ISSUED FOR PERMIT
0	05/16/16	ISSUED FOR PERMIT
A	05/10/16	90% CD SUBMITTAL

Carrier:

eyeTOWER
2711 CENTERVILLE ROAD, STE 400, PMB 160
WILMINGTON, DE 19808

Tower Owner/Client:

CROWN CASTLE
100 REGENCY FOREST DRIVE, SUITE 150
CARY, NC 27518

A/E Consultant:

MORRISON HERSHFIELD
8604 Cliff Cameron Drive, Suite 152
Charlotte, NC 28269
TEL: 704.499.6861 FAX: 704.547.5231
www.morrisonhershfield.com

Project:

806372
BDL200

266R CENTER ST.
MANCHESTER, CT 06040

Drawing Title:

ELECTRICAL NOTES AND ABBREVIATIONS

Project No.: 7160018

Designer: CG	Date: 05/10/16
Drawn By: RM	Checked By: RL
PM Review: CG	Client Approval
Issue No.: 2	Drawing No. E-1

SCALE IS BASE ON 22" X 34" "D" SIZE

S:\716 Series\7160018.00 Crown Carolinas AE Services 2016\9.0 Sites\BDL200_HRT\9.2_Design & Development\CAD\7160018.00_806372_BDL200_Final-CDs_Rev 2_2016.07.06.dwg 07/06/2016 10:25am bfraser

1. EXISTING 2-GANG METER CENTER UTILITY PAD MOUNT TRANSFORMER. (VERIFY IN FIELD). COORDINATE WITH POWER COMPANY FOR NEW 120/240V-1ø-3W, 200A SERVICE FOR eyeTower, LLC.
2. NEW 2-GANG METER SECTION FOR EXISTING METER CENTER.
3. EXISTING CONDUCTORS IN CONDUIT TO REMAIN.
4. NEW PANEL "PP1" WITH BRANCH CIRCUIT BREAKERS, PANEL SHALL BE A 120/240V-1ø-3W, 200A RATED, NEMA-1 42 POLE PANEL.
5. NEW 3/4" THICK, 2'X4' TELCO BACKBOARD, PAINTED BLACK.
6. EXISTING MAIN SERVICE GROUNDING ELECTRODE CONDUCTOR BONDED TO (2) 5/8" DIA. X 10'-0" LONG COPPER CLAD GROUND RODS SPACED A MINIMUM OF 6'-0" APART. (VERIFY IN FIELD)
7. NEW 200A, 240V, 1ø, 3W UTILITY METER SOCKET PER UTILITY STANDARDS. PROVIDE MECH. ATTACHED ENGRAVED NAME PLATE INDICATING: "eyeTower, LLC METER".
8. NEW 200A-2PMAIN CIRCUIT BREAKER (INTERUPTING CAPACITY 65,000 AIC MIN) IN NEW METER CENTER SECTION FOR eyeTower, LLC.
9. EXISTING #2 AWG CU. BONDED TO GROUND RING SYSTEM. (VERIFY IN FIELD)
10. SUPPLY AND INSTALL (1) 4" RNC W/ PULL CORDS FROM EXISTING FIBER DEMARC VAULT TO eyeTower, LLC TELCO BACKBOARD IN SHELTER.
11. NEW (3) #3/0, + (1) #6 GROUND, 2"C.
12. NEW OR EXISTING FIBER DEMARC VAULT LOCATION AT RIGHT OF WAY. COORDINATE WITH FIBER PROVIDER FOR EXACT LOCATION AND ALL REQUIREMENTS.
13. EXISTING METER CENTER MOUNTED TO WALL OF VERIZON SHELTER.
14. CONTRACTOR TO ARRANGE AND PAY FOR UNDERGROUND UTILITY SURVEYS FOR ALL TRENCHING. REUSE NATIVE BACKFILL AND REINSTATE TO ORIGINAL CONDITION. INSTALL 6" WIDE METALLIC LINED RED PLASTIC MARKER TAPE 8" ABOVE ALL BURIED CONDUIT.
15. CONTRACTOR TO OBTAIN EXISTING LOAD INFORMATION FROM UTILITY COMPANY OR PERFORM A 30 DAY LOAD STUDY USING A TRUE RMS METER PER NEC 220.87 TO DETERMINE ADDITION SPACE CAPACITY OF EXISTING SERVICE METER CENTER. EXISTING PLUS NEW LOAD SHALL NOT EXCEED CAPACITY OF EXISTING METER CENTER FEEDERS.

NOTES:

1. CONDUIT ROUTING IS SCHEMATIC ONLY, CONTRACTOR SHALL DETERMINE SUITABLE ROUTING IN THE FIELD.
2. CONTRACTOR TO REUSE EXISTING CONDUITS ROUTED TO EXISTING GENERATOR AS POSSIBLE. FIELD VERIFY.
3. CONTRACTOR TO PROVIDE PVC CONDUIT BELOW FINISH GRADE AND RGS CONDUIT ABOVE FINISH GRADE.

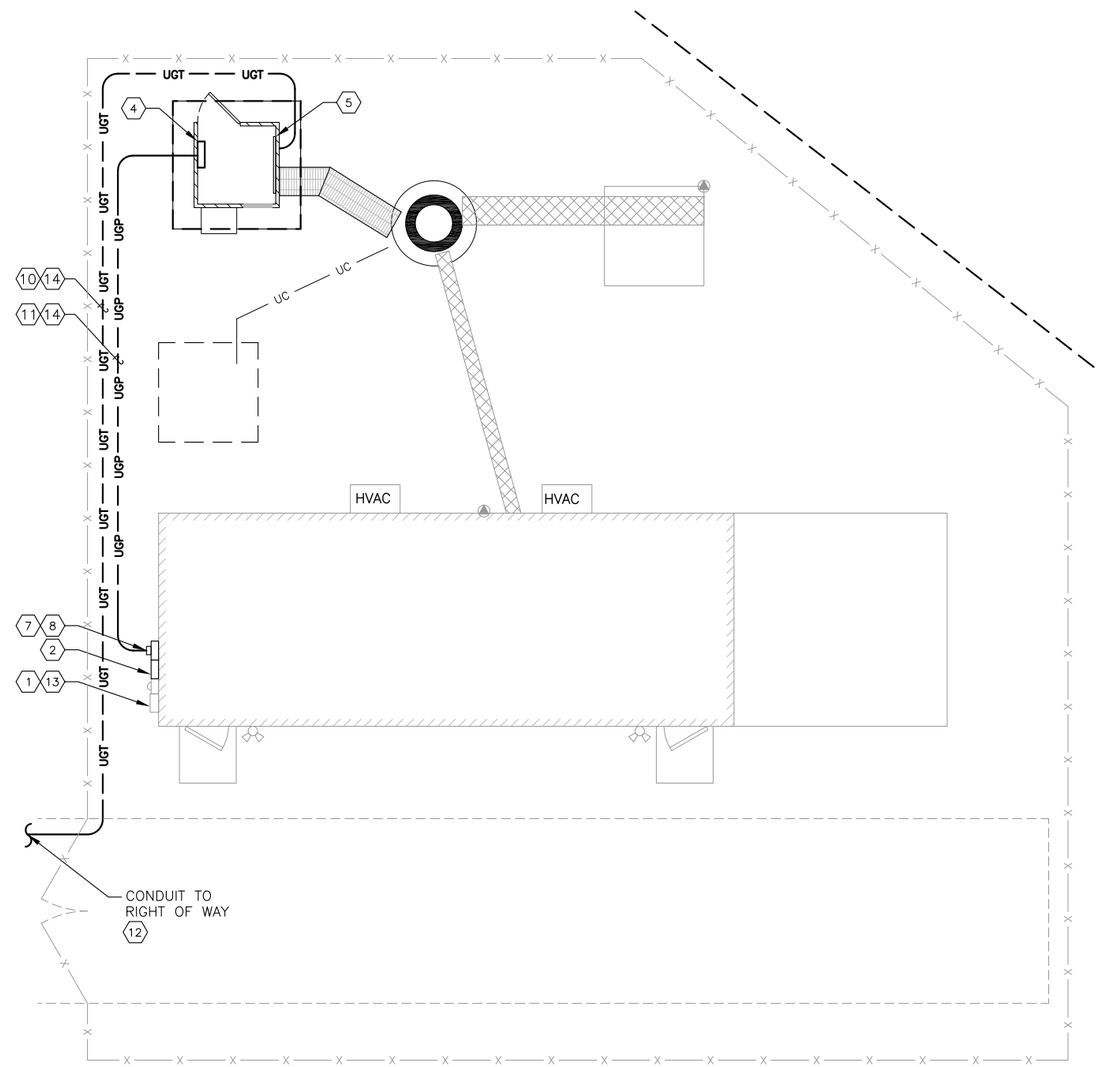

TRUE NORTH

ELECTRICAL LAYOUT PLAN

ANSI "D" SCALE: 1/2" = 1'-0"
ANSI "B" SCALE: 1/4" = 1'-0"
2' 1' 0' 2'

1

DO NOT SCALE DRAWINGS. CONTRACTOR MUST VERIFY ALL DIMENSIONS AND ADVISE CONSULTANTS OF ANY ERRORS OR OMISSIONS. NO VARIATIONS OR MODIFICATIONS TO WORK SHOWN SHALL BE IMPLEMENTED WITHOUT PRIOR WRITTEN APPROVAL. ALL PREVIOUS ISSUES OF THIS DRAWING ARE SUPERSEDED BY THE LATEST REVISION. ALL DRAWINGS AND SPECIFICATIONS REMAIN THE PROPERTY OF MORRISON HERSHFIELD CORPORATION. NEITHER MORRISON HERSHFIELD NOR THE ARCHITECT WILL BE PROVIDING CONSTRUCTION REVIEW OF THIS PROJECT.

STATE OF CONNECTICUT ROBERT J. LARA LICENSED ARCHITECT

Jul 6 2016

ROBERT JERRY LARA
REGISTERED ARCHITECT
STATE OF CONNECTICUT
11509

No.	Date	Action
4	.	.
3	.	.
2	07/06/16	ISSUED FOR PERMIT
1	05/24/16	ISSUED FOR PERMIT
0	05/16/16	ISSUED FOR PERMIT
A	05/10/16	90% CD SUBMITTAL

Carrier:

eyeTOWER

2711 CENTERVILLE ROAD, STE 400, PMB 160
WILMINGTON, DE 19808

Tower Owner/Client:

CROWN CASTLE

100 REGENCY FOREST DRIVE, SUITE 150
CARY, NC 27518

A/E Consultant:

MORRISON HERSHFIELD

8604 Cliff Cameron Drive, Suite 152
Charlotte, NC 28269
TEL: 704.499.6861 FAX: 704.547.5231
www.morrisonhershfield.com

Project:

806372
BDL200

266R CENTER ST.
MANCHESTER, CT 06040

Drawing Title:

ELECTRICAL COMPOUND PLAN

Project No.: 7160018

Designer: CG	Date: 05/10/16
Drawn By: RM	Checked By: RL
PM Review: CG	Client Approval
Issue No.: 2	Drawing No. E-2

SCALE IS BASE ON 22" X 34" "D" SIZE

I:\7160018.00_806372_BDL200_Final-CDs_Rev 2_2016.07.06.dwg 07/06/2016 2:42pm cgroth

1 2 3 4 5 6

C B A

1. EXISTING 2–GANG METER CENTER UTILITY PAD MOUNT TRANSFORMER. (VERIFY IN FIELD). COORDINATE WITH POWER COMPANY FOR NEW 120/240V–1ø–3W, 200A SERVICE FOR eyeTower, LLC.
2. NEW 2–GANG METER SECTION FOR EXISTING METER CENTER.
3. EXISTING CONDUCTORS IN CONDUIT TO REMAIN.
4. NEW PANEL "PP1" WITH BRANCH CIRCUIT BREAKERS, PANEL SHALL BE A 120/240V–1ø–3W, 200A RATED, NEMA–1 42 POLE PANEL.
5. NEW 3/4" THICK, 2'X4' TELCO BACKBOARD, PAINTED BLACK.
6. EXISTING MAIN SERVICE GROUNDING ELECTRODE CONDUCTOR BONDED TO (2) 5/8" DIA. X 10'–0" LONG COPPER CLAD GROUND RODS SPACED A MINIMUM OF 6'–0" APART. (VERIFY IN FIELD)
7. NEW 200A, 240V, 1ø, 3W UTILITY METER SOCKET PER UTILITY STANDARDS. PROVIDE MECH. ATTACHED ENGRAVED NAME PLATE INDICATING: "eyeTower, LLC METER".
8. NEW 200A–2PMAIN CIRCUIT BREAKER (INTERUPTING CAPACITY 65,000 AIC MIN) IN NEW METER CENTER SECTION FOR eyeTower, LLC.
9. EXISTING #2 AWG CU. BONDED TO GROUND RING SYSTEM. (VERIFY IN FIELD)
10. SUPPLY AND INSTALL (1) 4" RNC W/ PULL CORDS FROM EXISTING FIBER DEMARC VAULT TO eyeTower, LLC TELCO BACKBOARD IN SHELTER.
11. NEW (3) #3/0, + (1) #6 GROUND, 2"C.
12. NEW OR EXISTING FIBER DEMARC VAULT LOCATION AT RIGHT OF WAY. COORDINATE WITH FIBER PROVIDER FOR EXACT LOCATION AND ALL REQUIREMENTS.
13. EXISTING METER CENTER MOUNTED TO WALL OF VERIZON SHELTER.
14. CONTRACTOR TO ARRANGE AND PAY FOR UNDERGROUND UTILITY SURVEYS FOR ALL TRENCHING. REUSE NATIVE BACKFILL AND REINSTATE TO ORIGINAL CONDITION. INSTALL 6" WIDE METALLIC LINED RED PLASTIC MARKER TAPE 8" ABOVE ALL BURIED CONDUIT.
15. CONTRACTOR TO OBTAIN EXISTING LOAD INFORMATION FROM UTILITY COMPANY OR PERFORM A 30 DAY LOAD STUDY USING A TRUE RMS METER PER NEC 220.87 TO DETERMINE ADDITION SPACE CAPACITY OF EXISTING SERVICE METER CENTER. EXISTING PLUS NEW LOAD SHALL NOT EXCEED CAPACITY OF EXISTING METER CENTER FEEDERS.

NOTE 1: CONTRACTOR TO USE PVC SCHED 40 FOR UNDER GROUND CONDUIT ROUTING AND GRC FOR ABOVE GROUND ROUTING.
NOTE 2: COOR. GEN. ALARMING OPTIONS TO SHELTER BACKBOARD ALARM BLOCK W/ eyeTower, LLC.
NOTE 3: ALL EXTERIOR ELECTRICAL EQUIPMENT SHALL BE RATED NEMA 3R
NOTE 4: ALL CONDUIT LENGTHS AND ROUTING TO BE VERIFIED IN FIELD BY CONTRACTOR.

ELECTRICAL REFERENCE NOTES

NOTE:
ALL CONDUIT ENTRY LOCATIONS AND SHELTER EQUIPMENT LOCATIONS SHALL BE COORDINATED WITH STATE APPROVED PRE–FABRICATED EQUIPMENT SHELTER SHOP DRAWINGS.

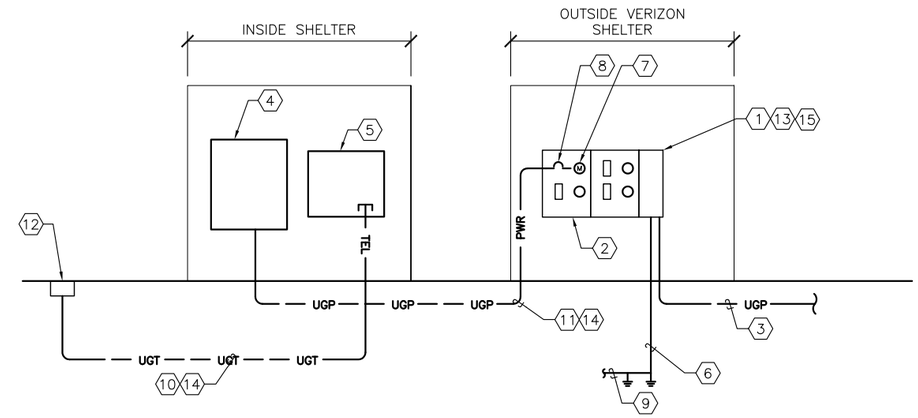

ELECTRICAL RISER DIAGRAM

NTS | 1

NOTE:
COORDINATE EXACT REQUIREMENTS FOR NEW FIBER–TELCO SERVICE WITH FIBER PROVIDER.

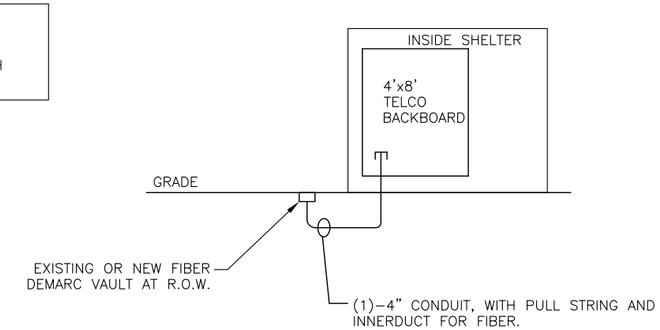

TELEPHONE RISER DIAGRAM

NTS | 2

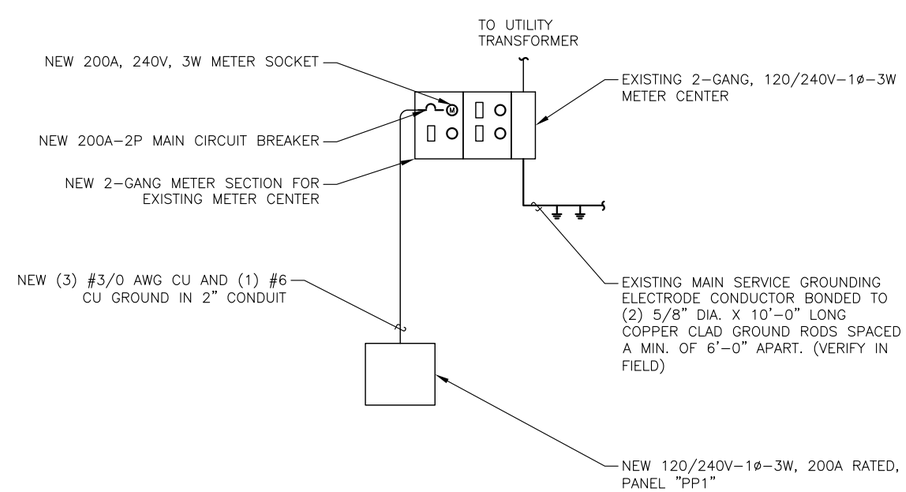

ELECTRICAL SINGLE-LINE DIAGRAM

NTS | 3

DO NOT SCALE DRAWINGS. CONTRACTOR MUST VERIFY ALL DIMENSIONS AND ADVISE CONSULTANTS OF ANY ERRORS OR OMISSIONS. NO VARIATIONS OR MODIFICATIONS TO WORK SHOWN SHALL BE IMPLEMENTED WITHOUT PRIOR WRITTEN APPROVAL. ALL PREVIOUS ISSUES OF THIS DRAWING ARE SUPERSEDED BY THE LATEST REVISION. ALL DRAWINGS AND SPECIFICATIONS REMAIN THE PROPERTY OF MORRISON HERSHFIELD CORPORATION. NEITHER MORRISON HERSHFIELD NOR THE ARCHITECT WILL BE PROVIDING CONSTRUCTION REVIEW OF THIS PROJECT.

STATE OF CONNECTICUT ROBERT J. LARA LICENSED ARCHITECT
Jul 6 2016
ROBERT JERRY LARA
REGISTERED ARCHITECT
STATE OF CONNECTICUT
11509

No.	Date	Action
4	.	.
3	.	.
2	07/06/16	ISSUED FOR PERMIT
1	05/24/16	ISSUED FOR PERMIT
0	05/16/16	ISSUED FOR PERMIT
A	05/10/16	90% CD SUBMITTAL

Carrier:
eyeTOWER
2711 CENTERVILLE ROAD, STE 400, PMB 160
WILMINGTON, DE 19808

Tower Owner/Client:
CROWN CASTLE
100 REGENCY FOREST DRIVE, SUITE 150
CARY, NC 27518

A/E Consultant:
MORRISON HERSHFIELD
8604 Cliff Cameron Drive, Suite 152
Charlotte, NC 28269
TEL: 704.499.6861 FAX: 704.547.5231
www.morrisonhershfield.com

Project:
806372
BDL200
266R CENTER ST.
MANCHESTER, CT 06040

Drawing Title:
ELECTRICAL RISER DIAGRAM

Project No.: 7160018	
Designer: CG	Date: 05/10/16
Drawn By: RM	Checked By: RL
PM Review: CG	Client Approval
Issue No.: 2	Drawing No. E-3

SCALE IS BASE ON 22" X 34" "D" SIZE

I:\7160018.00_806372_BDL200_Final-CDs_Rev 2_2016.07.06.dwg 07/06/2016 2:42pm cgroth

GROUNDING REFERENCE NOTES

1. PROVIDE #2 AWG. SOLID TINNED COPPER CONDUCTOR AND RUN FROM ONE ICE BRIDGE TO THE NEXT. ATTACH TO EACH SUPPORT USING GROUND CLAMP. BOND SUPPORT POST TO GROUND RING.
2. WHERE APPLICABLE, BOND ALL STEEL SUPPORT BEAMS TOGETHER, EXOTHERMICALLY WELD CONNECTIONS TO STEEL SUPPORT BEAMS. TYPICAL FOR ALL. REFER TO STRUCTURAL AND ARCHITECTURAL DRAWINGS FOR EXACT LOCATION OF STEEL SUPPORT BEAMS.
3. BOND SHELTER STEEL TIE DOWN TO SHELTER GROUND RING. EXOTHERMICALLY WELD CONNECTION TO GROUND RING. TYPICAL OF FOUR (4).
4. PROVIDE PRIMARY GROUND RING BOND FROM WAVEGUIDE HATCH PLATE BAR NONE SOLUTION TO GROUND RING AT GROUND ROD INSPECTION SLEEVE. SUPPORT GROUND CONDUCTOR ON WALL EVERY 2 FEET. EXOTHERMICALLY WELD CONNECTIONS AT BAR NONE SOLUTION AND GROUND RING.
5. BOND A/C UNITS, DOOR FRAMES, H-FRAME POSTS, DIESEL TANK, GENERATOR HOUSING, MISCELLANEOUS METALLIC EQUIPMENT TO GROUND RING. EXOTHERMICALLY WELD CONNECTION TO EXTERIOR GROUND RING.
6. BOND SERVICE CONDUITS TO GROUND RING OUTSIDE AND HALO GROUND INSIDE SHELTER. CONNECT GROUND CONDUCTOR TO CONDUIT USING PIPE CLAMP. DO NOT EXOTHERMICALLY WELD TO CONDUIT. REFER TO TYPICAL MULTIPLE CONDUIT GROUNDING DETAIL 3/E-5.
7. PROVIDE SECONDARY GROUND RING BOND BY SHELTER DOWNLEAD CONDUCTOR FROM INTERIOR GROUND RING (HALO) SUPPLIED BY BUILDING MANUFACTURER TO THE EXTERIOR GROUND RING. EXOTHERMICALLY WELD CONNECTION TO GROUND RING. TYPICAL IN ALL FOUR (4) CORNERS OF HALO.
8. PROVIDE #2 AWG SOLID BARE TINNED COPPER CONDUCTOR FROM MASTER GROUND BAR (MGB), INSIDE SHELTER TO HALO AND EXTERIOR GROUND RING. EXOTHERMICALLY WELD CONNECTIONS AT GROUND BAR AND GROUND RING.
9. BOND TELCO GROUND BAR (TGB) TO MASTER GROUND BAR (MGB) USING ONE (1) #2 AWG STRANDED GREEN INSULATED COPPER CONDUCTOR. BOND TO EXTERIOR GROUND RING USING #2 AWG SOLID TINNED COPPER CONDUCTOR. EXOTHERMICALLY WELD CONNECTIONS TO ALL CONNECTION POINTS.
10. BOND EXISTING FENCE POST TO GROUND RING AS SHOWN USING AN EXOTHERMIC WELD. BOND FENCE GATE TO POST WITH A FLEXIBLE COPPER JUMPER STRAP IF NOT ALREADY PROVIDED. PROVIDE EXOTHERMIC WELD TO BOND STRAP TO GATE AND FENCE POST. PROVIDE LENGTH AS REQUIRED TO MAKE CONNECTION.
11. PROVIDE A GROUND RING BURIED 30" BELOW GRADE OR FROST LINE, WHICHEVER IS DEEPER.
12. PROVIDE NEW BOND OR VERIFY EXISTING BOND BETWEEN SERVICE ENTRANCE GROUND ELECTRODE AND GROUND RING SYSTEM W/A #2 AWG SOLID TINNED COPPER CONDUCTOR.
13. BOND REBAR IN CONCRETE FOR SHELTER, GENERATOR PAD (WHERE APPLICABLE) AND STOOP/STEPS TO BURIED GROUND RING. EXOTHERMICALLY WELD A #2 TINNED SOLID COPPER CONDUCTOR TO THE REBAR GROUNDING PIGTAIL AND CONNECT TO THE BURIED GROUND RING. TYPICAL ON 16' CENTERS.
14. PROVIDE 5/8" x 10'-0" LONG COPPER CLAD STEEL (COPPER WELD) GROUND ROD AS SHOWN. PROVIDE INSPECTION SLEEVE AT GROUND ROD TO SHOW BOND TO EXTERIOR BURIED GROUND RING. INSTALL SO THAT TOP OF GROUND ROD IS 30" BELOW GRADE OR FROST LINE, WHICHEVER IS DEEPER. EXACT LOCATION AND NUMBER OF GROUND RODS TO BE ESTABLISHED ON SITE AND BASED ON "FALL OF POTENTIAL GROUND RESISTANCE METHOD" FOR RESISTANCE < 5 OHMS.. UNLESS OTHERWISE NOTED, DRIVEN GROUND RODS ARE BONDED TO THE BURIED GROUND RING AT 16 FEET INTERVALS.
15. SHELTER GROUND RING AND EXISTING TOWER GROUND RING SHALL BE BONDED TOGETHER IN AT LEAST TWO (2) POINTS USING A #2 AWG SOLID BARE TINNED COPPER CONDUCTOR.
16. EXISTING TOWER GROUND RING AND GROUND RODS. (TO BE VERIFIED).
17. EXISTING #2 SOLID BARE TINNED COPPER CONDUCTOR FROM TOWER GROUNDING FLANGE AT BASE OF TOWER LEG TO TOWER GROUND RING. (TO BE VERIFIED)
18. REFER TO STRUCTURAL AND ARCHITECTURAL DRAWINGS FOR EXACT LOCATION OF ANTENNA(S) AND ANTENNA SUPPORT FRAMES.
19. EXTEND GROUNDING CONDUCTOR TO ANTENNA LOCATIONS AND BOND TO ANTENNA PIPE MOUNT. USE AN EXOTHERMIC WELD AT ANTENNA PIPE MOUNT. SUPPORT CONDUCTOR AS REQUIRED EVERY TWO (2) FEET MINIMUM.
20. PROVIDE #2 SOLID BARE TINNED COPPER CONDUCTOR FROM BAR NONE SOLUTION TO TOWER GROUND RING. TYPICAL OF TWO (2).
21. PROVIDE ANTENNA CABLE GROUND BAR AT THE TOP OF TOWER ONLY. BOND ANTENNA CABLE GROUNDING KITS AND LIGHTNING ROD TO GROUND BAR. ANTENNA CABLE GROUND KIT CONNECTION SHALL BE THE RESPONSIBILITY OF THE ANTENNA CABLE INSTALLER. PROVIDE A U.L. LISTED CONNECTOR SUITABLE FOR THE MATERIALS BEING CONNECTED. PROVIDE EXOTHERMIC WELDS FOR BONDS TO STEEL BEAM OR SUPPORT POSTS.
22. NEW BAR NONE GROUNDING SOLUTION SHALL BE INSTALLED BELOW THE TRANSMISSION LINE GROUND KITS, NEAR THE AREA OF THE TOWER AT THE POINT WHERE THE ANTENNA TRANSMISSION LINES TRANSITION FROM THE TOWER TO THE SHELTER. VERIFY EXACT LOCATION FOR PROPER CONDUCTOR LENGTH. BAR NONE SOLUTION SHALL BE PROVIDED BY THE ANTENNA CABLE INSTALLER. FINAL EXOTHERMIC WELD FROM THE BURIED GROUND RING SHALL BE THE RESPONSIBILITY OF THE ELECTRICAL CONTRACTOR. COORDINATE WITH ANTENNA CABLE INSTALLER FOR SCHEDULE TO MAKE CONNECTION. PROVIDE 3/4" PVC SLEEVE WITH SWEEP BEND FOR CONNECTION OF BAR NONE SOLUTION TO TOWER GROUND RING.
23. EXTEND GROUNDING CONDUCTORS TO REMAINING SECTOR ANTENNA PIPE MOUNT LOCATIONS AND BOND WITH EXOTHERMIC WELDS. SUPPORT CONDUCTOR AS REQUIRED EVERY TWO FEET MINIMUM.
24. THE TOWER STRUCTURE STEEL SHALL BE UTILIZED FOR DISSAPATING THE LIGHTNING ENERGY. THE TOWER GROUND BARS OR BAR NONE SOLUTION FOR ANTENNA GROUNDING SHALL BE DIRECTLY FASTENED TO THE STEEL STRUCTURE WITH STAINLESS STEEL HARDWARE AND/OR ANGLE ADAPTORS (E.G. PIROD/VALMONT PART #167105 OR EQUIVALENT – WITHOUT "CHERRY" INSULATORS). THIS TYPE OF INSTALLATION SPECIFICALLY PRECLUDES THE USE OF INSULATORS BETWEEN THE TOWER STRUCTURE AND THE GROUND BARS OR BAR NONE SOLUTION AND DOES NOT ALLOW ANY DRILLING OR WELDING TO THE TOWER.

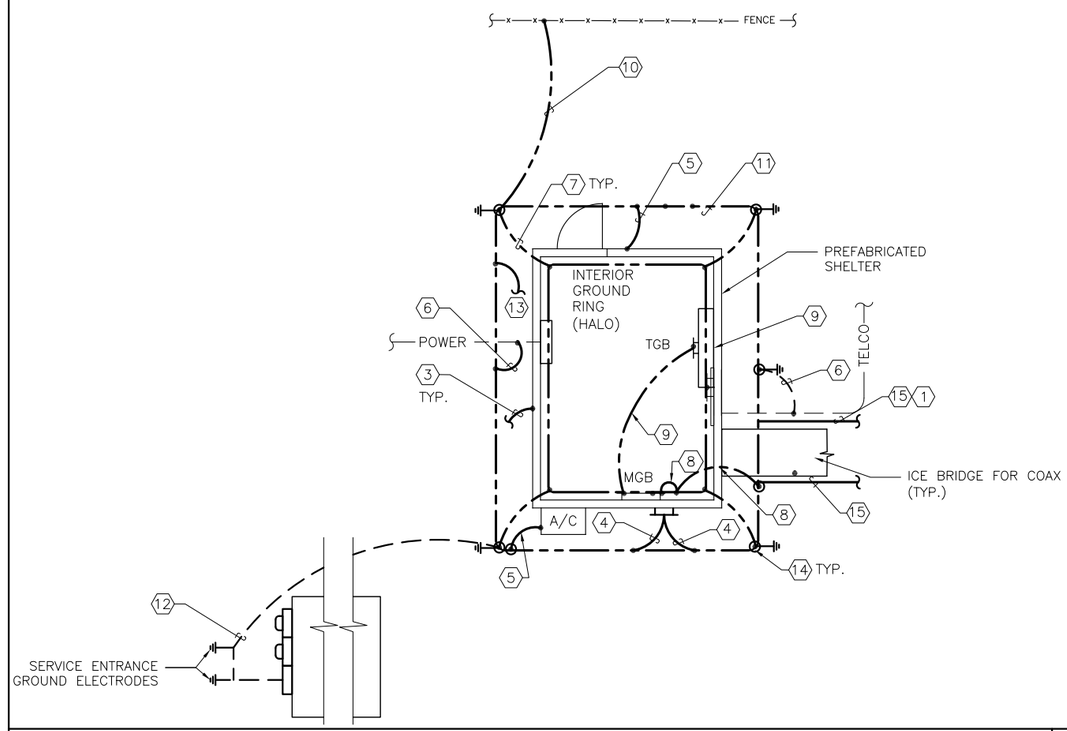

TYPICAL SHELTER AND GENERATOR GROUNDING PLAN

NTS | 1

NOTE: REFER TO ARCHITECTURAL SITE PLAN DRAWING FOR EXACT LOCATION OF CABLE BRIDGE AND ANTENNA SUPPORT STRUCTURE.

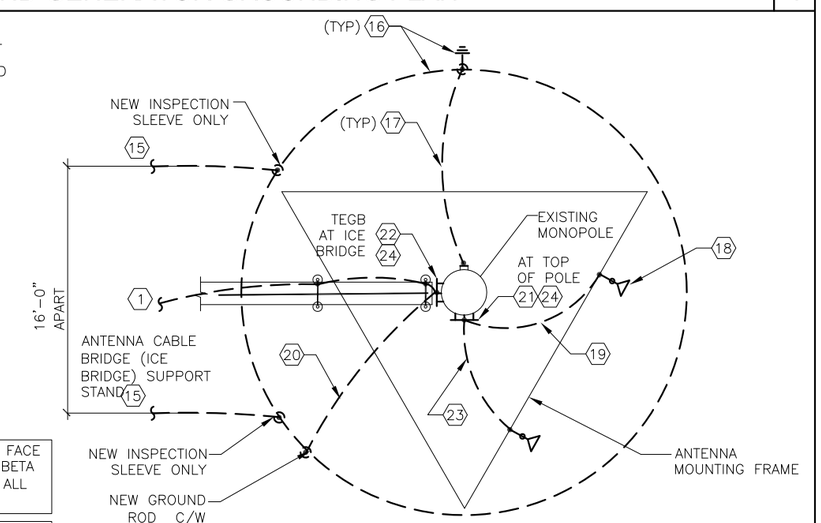

NOTE: GROUNDING FOR ONE FACE SHOWN–TYPICAL FOR ALPHA, BETA AND GAMMA FACES (EA. AND ALL ANTENNAS).

NOTE: REFER TO ARCHITECTURAL SITE PLAN DRAWING FOR EXACT LOCATION OF ANTENNA CABLE BRIDGE AND SUPPORT STRUCTURE.

TYPICAL MONOPOLE AND ANTENNA GROUNDING PLAN

NTS | 2

DO NOT SCALE DRAWINGS. CONTRACTOR MUST VERIFY ALL DIMENSIONS AND ADVISE CONSULTANTS OF ANY ERRORS OR OMISSIONS. NO VARIATIONS OR MODIFICATIONS TO WORK SHOWN SHALL BE IMPLEMENTED WITHOUT PRIOR WRITTEN APPROVAL. ALL PREVIOUS ISSUES OF THIS DRAWING ARE SUPERSEDED BY THE LATEST REVISION. ALL DRAWINGS AND SPECIFICATIONS REMAIN THE PROPERTY OF MORRISON HERSHFIELD CORPORATION. NEITHER MORRISON HERSHFIELD NOR THE ARCHITECT WILL BE PROVIDING CONSTRUCTION REVIEW OF THIS PROJECT.

STATE OF CONNECTICUT · ROBERT J. LARA · LICENSED ARCHITECT

Jul 6 2016

ROBERT JERRY LARA
REGISTERED ARCHITECT
STATE OF CONNECTICUT
11509

No.	Date	Action
4	.	.
3	.	.
2	07/06/16	ISSUED FOR PERMIT
1	05/24/16	ISSUED FOR PERMIT
0	05/16/16	ISSUED FOR PERMIT
A	05/10/16	90% CD SUBMITTAL

Carrier:

eyeTOWER
2711 CENTERVILLE ROAD, STE 400, PMB 160
WILMINGTON, DE 19808

Tower Owner/Client:

CROWN CASTLE
100 REGENCY FOREST DRIVE, SUITE 150
CARY, NC 27518

A/E Consultant:

MORRISON HERSHFIELD
8604 Cliff Cameron Drive, Suite 152
Charlotte, NC 28269
TEL: 704.499.6861 FAX: 704.547.5231
www.morrisonhershfield.com

Project:

806372
BDL200

266R CENTER ST.
MANCHESTER, CT 06040

Drawing Title:

GROUNDING PLAN

Project No.: 7160018	
Designer: CG	Date: 05/10/16
Drawn By: RM	Checked By: RL
PM Review: CG	Client Approval
Issue No.: 2	Drawing No. E-4

SCALE IS BASE ON 22" X 34" "D" SIZE

S:\716 Series\7160018.00 Crown Carolinas AE Services 2016\9.0 Sites\BDL200_HRT\9.2_Design & Development\CAD\7160018.00_806372_BDL200_Final-CD's_Rev 2_2016.07.06.dwg 07/06/2016 10:25am bfraser

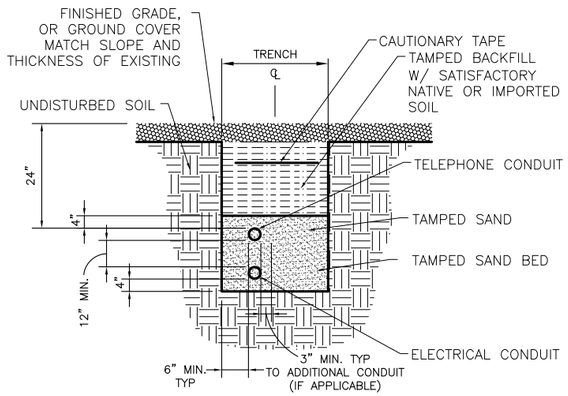

POWER/TELCO TRENCH

NTS | 1

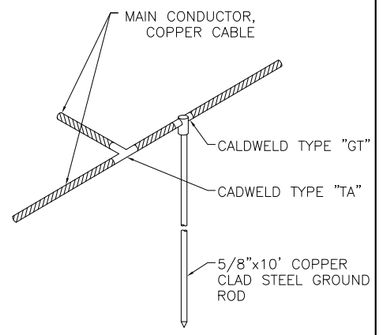

GROUND RING BOND

NTS | 2

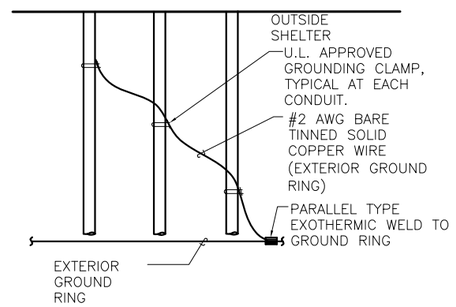

TYPICAL MULTIPLE CONDUITS GROUNDING DETAIL

NTS | 3

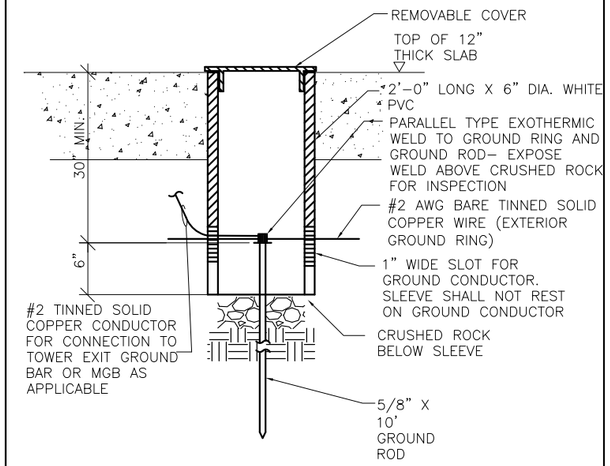

GROUNDING ROD INSPECTION SLEEVE DETAIL

NTS | 4

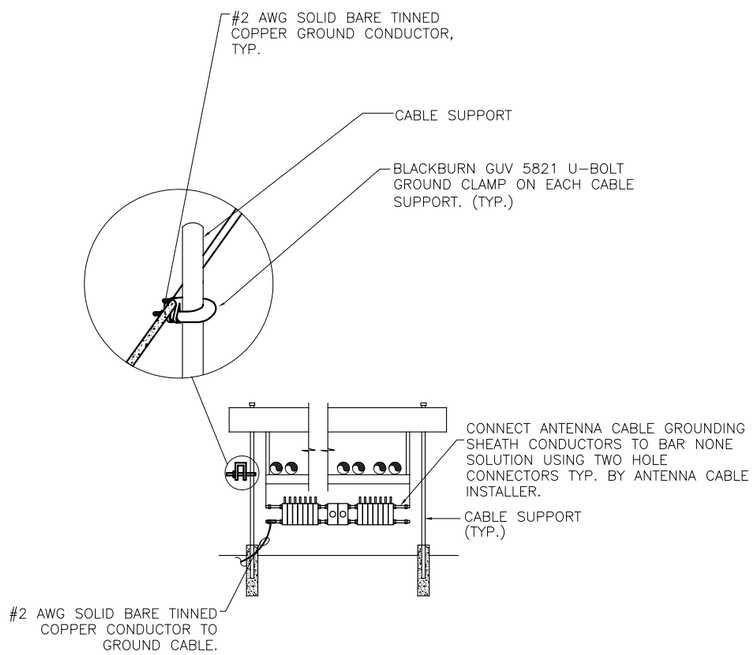

WAVEGUIDE BRIDGE AND CABLE GROUNDING DETAIL

NTS | 5

POWER PANEL 1 SCHEDULE (PANEL PP-1)

BUS VA A	BUS VA B	LOAD	WIRE	GND	COND	AMPS	BUS A	BUS B	AMPS	COND	GND	WIRE	LOAD	BUS VA A	BUS VA B
–		SPARE	–	–	–	30	1	2	30	3/4"	#10	#10	HVAC #1	2880	
	–						3	4							2880
–		SPARE	–	–	–	30	5	6	30	3/4"	#10	#10	HVAC #2	2880	
	–						7	8							2880
–		SPARE	–	–	–	30	9	10	–	–	–	–	SPACE	–	
	–						11	12	–	–	–	–	SPACE		–
–		SPACE	–	–	–	–	13	14	–	–	–	–	SPACE	–	
	–	SPACE	–	–	–	–	15	16	–	–	–	–	SPACE		–
–		SPACE	–	–	–	–	17	18	20	1/2"	#12	#12	INTERIOR LIGHTS	355	
	–	SPACE	–	–	–	–	19	20	20	1/2"	#12	#12	EXTERIOR LIGHT		109
–		SPACE	–	–	–	–	21	22	–	–	–	–	SPACE	–	
	–	SPACE	–	–	–	–	23	24	–	–	–	–	SPACE		–
–		SPACE	–	–	–	–	25	26	20	1/2"	#12	#12	CORD. REEL & RECEPT.	540	
	–	SPACE	–	–	–	–	27	28	20	1/2"	#12	#12	GFCI RECEPTACLE		180
–		SPACE	–	–	–	–	29	30	20	1/2"	#12	#12	EXHAUST FAN	180	
	–	SPACE	–	–	–	–	31	32	20	1/2"	#12	#12	EXTERIOR GFCI RECEPTACLE		180
–		SPACE	–	–	–	–	33	34	–	–	–	–	SPACE	–	
	–	SPACE	–	–	–	–	35	36	–	–	–	–	SPACE		–
10		POWER FAIL ALARM	#12	#12	3/4"	20	37	38	–	–	–	–	SPACE	–	
	10						39	40	–	–	–	–	SPACE		–
–		SPARE BREAKER	–	–	–	20	41	42	–	–	–	–	SPACE	–	

TOTAL VA: BUS A 6845 BUS B 6239 CONNECTED VA: 13084 AMPERES: BUS A 57 BUS B 52 TOTAL 55

RATED VOLTAGE: ☐ 120/208 ■ 120/240 ☐ 277/480 1 PHASE, 3 WIRE BRANCH POLES ☐12 ☐18 ☐20 ☐24 ☐30 ☐36 ■42

RATED AMPS: ☐ 100 ■ 200 ☐ 400 CABINET: ■ SURFACE ☐ FLUSH

FULL NEUTRAL BUS ■ GROUND BUS ■ HINGED DOOR ■ KEYED DOOR LATCH ENCLOSURE TYPE NEMA-1

BRANCH DEVICES ☐ FUSED ■ CIRCUIT BREAKER

■ MAIN LUGS ONLY MAIN ☐ BREAKER ☐ FUSED SWITCH

ALL BREAKERS MUST BE RATED TO INTERRUPT A SHORT CIRCUIT CURRENT OF MINIMUM 42,000 AMPS SYMMETRICAL.

NOTES:

ALL UNUSED BREAKERS TO BE LABELED "SPARE"

NOTE: THIS PANEL SCHEDULE IS FOR REFERENCE ONLY. REFER TO STATE APPROVED SHELTER MANUFACTURER DRAWINGS FOR EXACT PANEL SCHEDULE LAYOUT.

PANEL SCHEDULE

NTS | 6

DO NOT SCALE DRAWINGS. CONTRACTOR MUST VERIFY ALL DIMENSIONS AND ADVISE CONSULTANTS OF ANY ERRORS OR OMISSIONS. NO VARIATIONS OR MODIFICATIONS TO WORK SHOWN SHALL BE IMPLEMENTED WITHOUT PRIOR WRITTEN APPROVAL. ALL PREVIOUS ISSUES OF THIS DRAWING ARE SUPERSEDED BY THE LATEST REVISION. ALL DRAWINGS AND SPECIFICATIONS REMAIN THE PROPERTY OF MORRISON HERSHFIELD CORPORATION. NEITHER MORRISON HERSHFIELD NOR THE ARCHITECT WILL BE PROVIDING CONSTRUCTION REVIEW OF THIS PROJECT.

STATE OF CONNECTICUT ROBERT J. LARA LICENSED ARCHITECT

Jul 6 2016

ROBERT JERRY LARA REGISTERED ARCHITECT STATE OF CONNECTICUT 11508

No.	Date	Action
4	.	.
3	.	.
2	07/06/16	ISSUED FOR PERMIT
1	05/24/16	ISSUED FOR PERMIT
0	05/16/16	ISSUED FOR PERMIT
A	05/10/16	90% CD SUBMITTAL

Carrier:

eyeTOWER
2711 CENTERVILLE ROAD, STE 400, PMB 160
WILMINGTON, DE 19808

Tower Owner/Client:

CROWN CASTLE
100 REGENCY FOREST DRIVE, SUITE 150
CARY, NC 27518

A/E Consultant:

MORRISON HERSHFIELD
8604 Cliff Cameron Drive, Suite 152
Charlotte, NC 28269
TEL: 704.499.6861 FAX: 704.547.5231
www.morrisonhershfield.com

Project:

806372
BDL200

266R CENTER ST.
MANCHESTER, CT 06040

Drawing Title:

GROUNDING DETAILS

Project No.: 7160018

Designer: CG | Date: 05/10/16

Drawn By: RM | Checked By: RL

PM Review: CG | Client Approval

Issue No.: 2 | Drawing No. E-5

SCALE IS BASE ON 22" X 34" "D" SIZE

S:\716 Series\7160018.00 Crown Carolinas AE Services 2016\3.0 Sites\BDL200_JHR\9.2_Design & Development\CAD\7160018.00_806372_BDL200_Final-CDs_Rev 2_2016.07.06.dwg 07/06/2016 10:25am bfraser

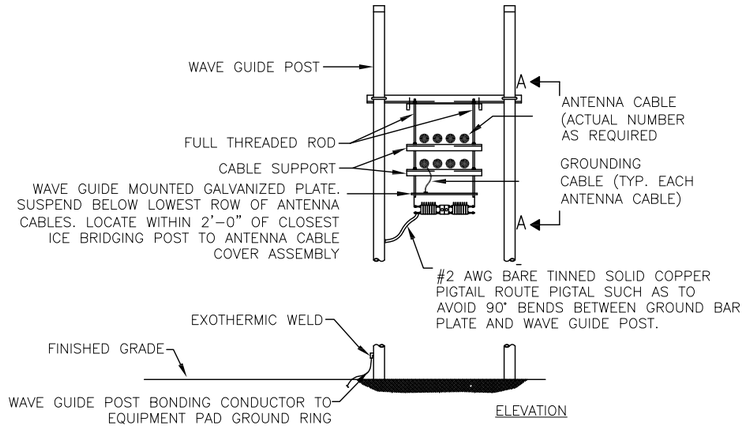

NOTE: SEE SHEET C-3 FOR CONSTRUCTION SPECIFICATIONS FOR WAVEGUIDE SUPPORT

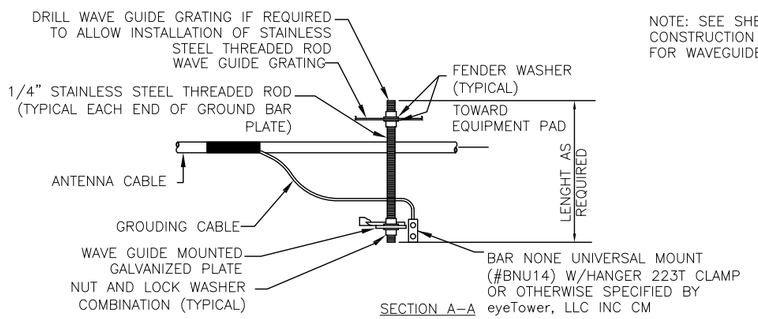

WAVEGUIDE MOUNTED BAR NONE SOLUTION INSTALLATION — NTS — 1

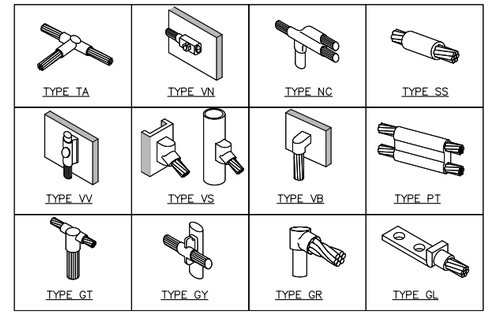

CADWELD GROUND CONNECTION DETAIL — NTS — 2

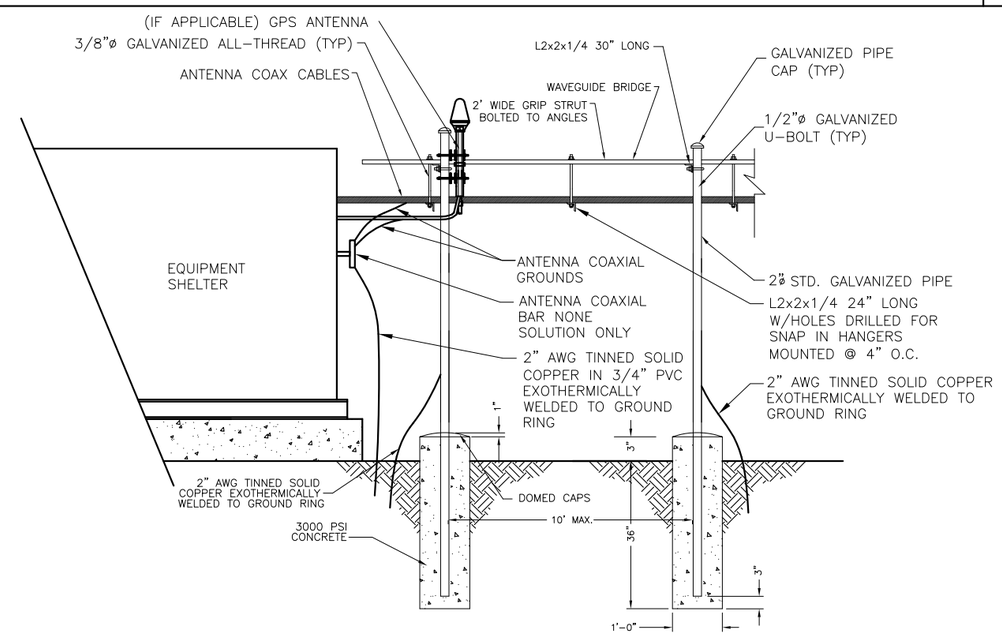

WAVEGUIDE BRIDGE — NTS — 3

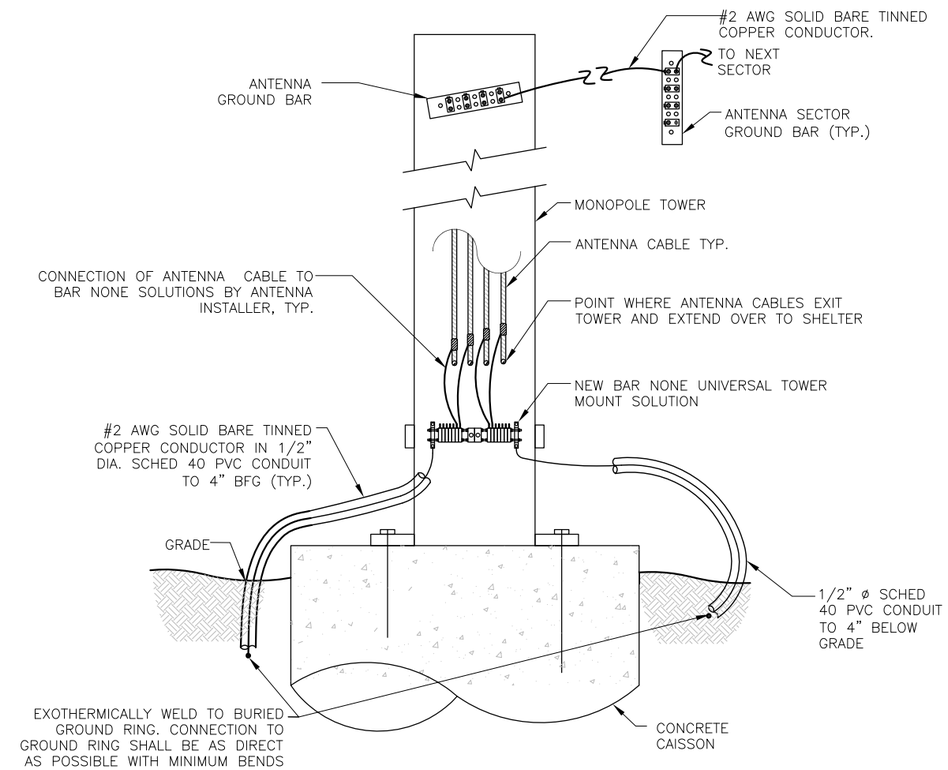

TOWER GROUNDING DETAIL — NTS — 4

DO NOT SCALE DRAWINGS. CONTRACTOR MUST VERIFY ALL DIMENSIONS AND ADVISE CONSULTANTS OF ANY ERRORS OR OMISSIONS. NO VARIATIONS OR MODIFICATIONS TO WORK SHOWN SHALL BE IMPLEMENTED WITHOUT PRIOR WRITTEN APPROVAL. ALL PREVIOUS ISSUES OF THIS DRAWING ARE SUPERSEDED BY THE LATEST REVISION. ALL DRAWINGS AND SPECIFICATIONS REMAIN THE PROPERTY OF MORRISON HERSHFIELD CORPORATION. NEITHER MORRISON HERSHFIELD NOR THE ARCHITECT WILL BE PROVIDING CONSTRUCTION REVIEW OF THIS PROJECT.

STATE OF CONNECTICUT — ROBERT J. LARA — LICENSED ARCHITECT

Jul 6 2016

ROBERT JERRY LARA
REGISTERED ARCHITECT
STATE OF CONNECTICUT
11509

No.	Date	Action
4	.	.
3	.	.
2	07/06/16	ISSUED FOR PERMIT
1	05/24/16	ISSUED FOR PERMIT
0	05/16/16	ISSUED FOR PERMIT
A	05/10/16	90% CD SUBMITTAL

Carrier:

eyeTOWER
2711 CENTERVILLE ROAD, STE 400, PMB 160
WILMINGTON, DE 19808

Tower Owner/Client:

CROWN CASTLE
100 REGENCY FOREST DRIVE, SUITE 150
CARY, NC 27518

A/E Consultant:

MORRISON HERSHFIELD
8604 Cliff Cameron Drive, Suite 152
Charlotte, NC 28269
TEL: 704.499.6861 FAX: 704.547.5231
www.morrisonhershfield.com

Project:

806372
BDL200

266R CENTER ST.
MANCHESTER, CT 06040

Drawing Title:

GROUNDING DETAILS

Project No.: 7160018	
Designer: CG	Date: 05/10/16
Drawn By: RM	Checked By: RL
PM Review: CG	Client Approval
Issue No.: 2	Drawing No. E-6

SCALE IS BASE ON 22" X 34" "D" SIZE

S:\716 Series\7160018.00 Crown Carolinas AE Services 2016\9.0 Sites\BDL200_HRT\9.2_Design & Development\CAD\7160018.00_806372_BDL200_Final-CD's_Rev 2_2016.07.06.dwg 07/06/2016 10:25am bfraser

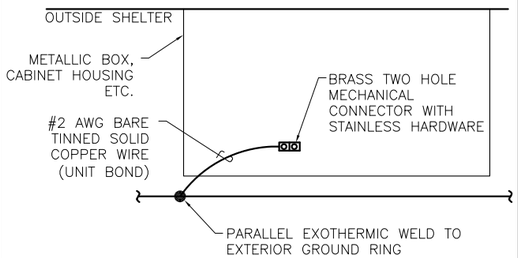

METALLIC CABINET GROUNDING DETAIL — NTS — 1

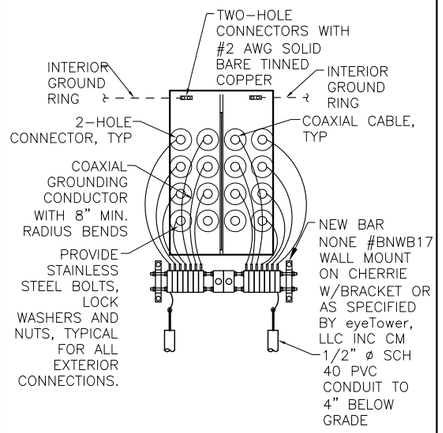

EXT HATCH PLATE GROUNDING DETAIL — NTS — 2

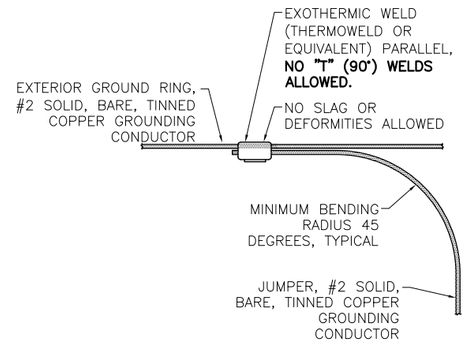

TYPICAL GROUNDING CONNECTION DETAIL — NTS — 3

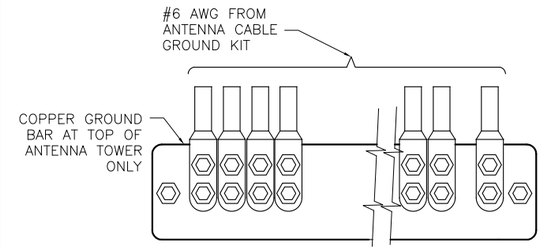

INSTALLATION OF GROUND WIRE TO GROUND BAR AT TOP OF TOWER — NTS — 4

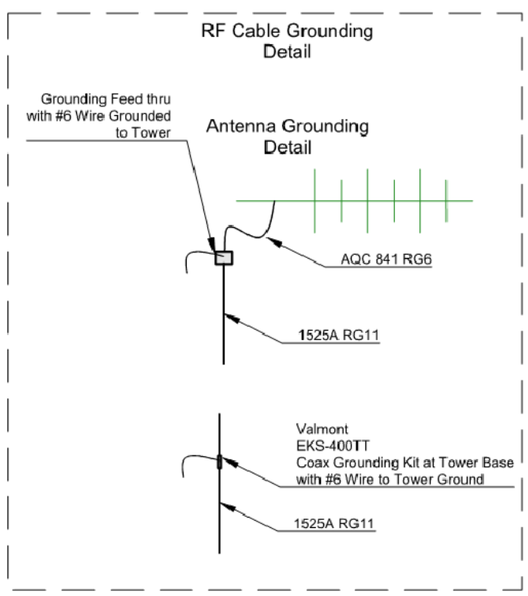

CONNECTION OF GROUND KIT TO ANTENNA CABLE — NTS — 5

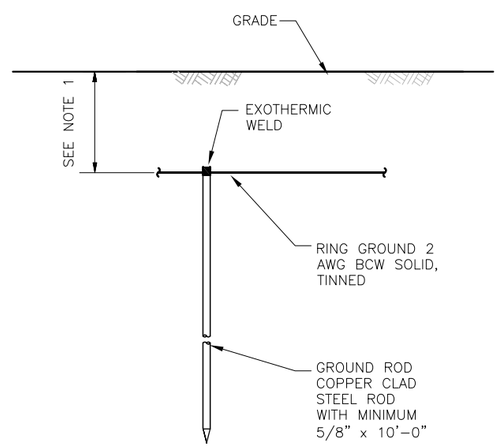

NOTES:

1. GROUND LINE TO BE A MIN. OF 30" OR BELOW FROST LINE, WHICHEVER IS DEEPER.
2. GROUND ROD SHALL BE DRIVEN VERTICALLY, NOT TO EXCEED 45 DEGREES FROM THE VERTICAL.

GROUND ROD — NTS — 6

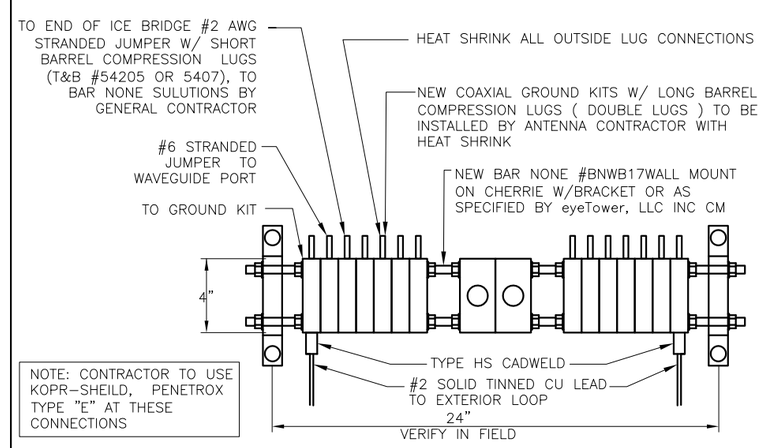

NOTES:

1. ALL HARDWARE 8-88 STAINLESS STEEL INCLUDING BELLVILLES COAT MATING SURFACES WITH KOPR-SHEILD BEFORE ATTACHMENT.
2. FOR GROUND BOND TO STEEL ONLY: INSERT A TOOTH WASHER BETWEEN LUG AND STEEL, COAT ALL SURFACES WITH KOPR-SHIELD.
3. ALL HOLES ARE COUNTERSUNK 1/16".
4. ALL LUGS ARE DOUBLE HOLED 5. HEAT SHRINK ALL OUTSIDE LUG CONNECTIONS

GROUND BAR DETAIL — NTS — 7

DO NOT SCALE DRAWINGS. CONTRACTOR MUST VERIFY ALL DIMENSIONS AND ADVISE CONSULTANTS OF ANY ERRORS OR OMISSIONS. NO VARIATIONS OR MODIFICATIONS TO WORK SHOWN SHALL BE IMPLEMENTED WITHOUT PRIOR WRITTEN APPROVAL. ALL PREVIOUS ISSUES OF THIS DRAWING ARE SUPERSEDED BY THE LATEST REVISION. ALL DRAWINGS AND SPECIFICATIONS REMAIN THE PROPERTY OF MORRISON HERSHFIELD CORPORATION. NEITHER MORRISON HERSHFIELD NOR THE ARCHITECT WILL BE PROVIDING CONSTRUCTION REVIEW OF THIS PROJECT.

STATE OF CONNECTICUT — ROBERT J. LARA — LICENSED ARCHITECT

Jul 6 2016

ROBERT JERRY LARA
REGISTERED ARCHITECT
STATE OF CONNECTICUT
11509

No.	Date	Action
4	.	.
3	.	.
2	07/06/16	ISSUED FOR PERMIT
1	05/24/16	ISSUED FOR PERMIT
0	05/16/16	ISSUED FOR PERMIT
A	05/10/16	90% CD SUBMITTAL

Carrier:

eyeTOWER
2711 CENTERVILLE ROAD, STE 400, PMB 160
WILMINGTON, DE 19808

Tower Owner/Client:

CROWN CASTLE
100 REGENCY FOREST DRIVE, SUITE 150
CARY, NC 27518

A/E Consultant:

MORRISON HERSHFIELD
8604 Cliff Cameron Drive, Suite 152
Charlotte, NC 28269
TEL: 704.499.6861 FAX: 704.547.5231
www.morrisonhershfield.com

Project:

806372
BDL200

266R CENTER ST.
MANCHESTER, CT 06040

Drawing Title:

GROUNDING DETAILS

Project No.: 7160018	
Designer: CG	Date: 05/10/16
Drawn By: RM	Checked By: RL
PM Review: CG	Client Approval
Issue No.: 2	Drawing No. E-7

SCALE IS BASE ON 22" X 34" "D" SIZE

S:\716 Series\7160018.00 Crown Carolinas AE Services 2016\3.0 Sites\BDL200_JHR\9.2_Design & Development\CAD\7160018.00_806372_BDL200_Final-CDs_Rev 2_2016.07.06.dwg 07/06/2016 10:25am bfraser