NORTHEAST SITE SOLUTIONS
Turnkey Wireless Development

Northeast Site Solutions
Denise Sabo
4 Angela's Way, Burlington CT 06013
203-435-3640
denise@northeastsitesolutions.com

December 16, 2022

Members of the Siting Council
Connecticut Siting Council
Ten Franklin Square
New Britain, CT 06051

RE: Tower Share Application
26 Mell Road, Lisbon CT 06351
Latitude: 41.591033
Longitude: -72.016960
Site #: CT00167-S_BOBOS00068C_SBA_DISH

Dear Ms. Bachman:

This letter and attachments are submitted on behalf of Dish Wireless LLC. Dish Wireless LLC plans to install antennas and related equipment to the tower site located at 26 Mell Road, Lisbon, Connecticut.

Dish Wireless LLC proposes to install three (3) 600/1900 MHz 5G antennas and six (6) RRUs, at the 145-foot level of the existing 195-foot tower, one (1) Fiber cable will also be installed. Dish Wireless LLC equipment cabinets will be placed within a 7' x 5' lease area within the fenced compound. Included are plans by B+T, dated January 6, 2023, Exhibit C. Also included is a structural analysis prepared by TES, stamped June 4, 2022, confirming that the existing tower is structurally capable of supporting the proposed equipment. Attached as Exhibit D. The facility was approved by the Town of Lisbon, Special Permit approval received on January 5, 1998. Please see attached Exhibit A.

Please accept this letter as notification pursuant to Regulations of Connecticut State Agencies 16-50aa, of Dish Wireless LLC intent to share a telecommunications facility pursuant to R.C.S.A. 16-50j-88. In accordance with R.C.S.A., a copy of this letter is being sent to The Honorable Thomas Sparkman and Carl Brown, Town Planner for the Town of Lisbon, as well as the tower owner (SBA) and property owner (Stanley Wildowski).

The planned modifications of the facility fall squarely within those activities explicitly provided for in R.C.S.A. 16-50j-89.

1. The proposed modification will not result in an increase in the height of the existing structure. The top of the existing tower is 195-feet and the Dish Wireless LLC antennas will be located at a center line height of 145-feet.

2. The proposed modifications will not result in an increase of the site boundary as depicted on the attached site plan.

3. The proposed modifications will not increase noise levels at the facility by six decibels or more, or to levels that exceed local and state criteria. The incremental effect of the proposed changes will be negligent.

4. The operation of the proposed antennas will not increase radio frequency emissions at the facility to a level at or above the Federal Communications Commission safety standard. The combined site operations will result in a total power density of 5.07% as evidenced by Exhibit F.

Connecticut General Statutes 16-50aa indicates that the Council must approve the shared use of a telecommunications facility provided it finds the shared use is technically, legally, environmentally, and economically feasible and meets public safety concerns. As demonstrated in this letter, Dish Wireless LLC respectfully submits that the shared use of this facility satisfies these criteria.

A. Technical Feasibility. The existing monopole has been deemed structurally capable of supporting Dish Wireless LLC proposed loading. The structural analysis is included as Exhibit D.

B. Legal Feasibility. As referenced above, C.G.S. 16-50aa has been authorized to issue orders approving the shared use of an existing tower such as this tower in Lisbon. Under the authority granted to the Council, an order of the Council approving the requested shared use would permit Dish Wireless LLC to obtain a building permit for the proposed installation. Further, a Letter of Authorization is included as Exhibit G, authorizing Dish Wireless LLC to file this application for shared use.

C. Environmental Feasibility. The proposed shared use of this facility would have a minimal environmental impact. The installation of Dish Wireless LLC equipment at the 145-foot level of the existing 195-foot tower would have an insignificant visual impact on the area around the tower. Dish Wireless LLC ground equipment would be installed within the existing facility compound. Dish Wireless LLC shared use would therefore not cause any significant alteration in the physical or environmental characteristics of the existing site. Additionally, as evidenced by Exhibit F, the proposed antennas would not increase radio frequency emissions to a level at or above the Federal Communications Commission safety standard.

D. Economic Feasibility. Dish Wireless LLC will be entering into an agreement with the owner of this facility to mutually agreeable terms. As previously mentioned, the Letter of Authorization has been provided by the owner to assist Dish Wireless LLC with this tower sharing application.

E. Public Safety Concerns. As discussed above, the tower is structurally capable of supporting Dish Wireless LLC proposed loading. Dish Wireless LLC is not aware of any public safety concerns relative to the proposed sharing of the existing tower. Dish Wireless LLC intentions of providing new and improved wireless service through the shared use of this facility is expected to enhance the safety and welfare of local residents and individuals traveling through Lisbon.

Sincerely,

Denise Sabo

Denise Sabo
Mobile: 203-435-3640
Fax: 413-521-0558
Office: 4 Angela's Way, Burlington CT 06013
Email: denise@northeastsitesolutions.com

NORTHEAST SITE SOLUTIONS
Turnkey Wireless Development

Attachments

Cc: The Honorable Thomas Sparkman
Town of Lisbon
1 Newent Road, Lisbon Ct 06351

Carl Brown, Town Planner
Town of Lisbon
1 Newent Road, Lisbon Ct 06351

Stanley Wildowski – Property Owner
20 Nygren Rd, Lisbon CT 06351

SBA - Tower Owner

Exhibit A

Original Facility Approval

PLANNING & ZONING COMMISSION
TOWN OF LISBON
1 Newent Road
Lisbon, Connecticut 06351

CERTIFIED MAIL
RETURN RECEIPT REQUESTED

January 5, 1998

Mr. Scott Thomae
SBA, Inc.
125 Shaws Cove #116
New London, Connecticut 06320

RE: Special Permit Application-SBA, Inc./NEXTEL Communications
26 Mell Road

Dear Mr. Thomae:

At the regular meeting of the Lisbon Planning and Zoning Commission held on January 5, 1998, your Special Permit application to construct a wireless telecommunications facility at 26 Mell Road was reviewed and approved with conditions which are attached to the enclosed form.

Please note that no approved Special Permit shall be effective until a copy of the enclosed completed form is recorded in the land records of the Town of Lisbon. The Town Clerk shall index the same in the grantor's index under the name of the record owner and the record owner shall pay for such recording, Section 8-3d, Connecticut General Statutes.

Sincerely,

Robert Adams, Chairman
Lisbon Planning and Zoning Commission

RA/ml

c: Rex Champany, Building Inspector/ZEO
File

P&Z

First-Cl
Postage
USPS -
Permit N
ox

PLANNING & ZONING COMMISSION
TOWN OF LISBON
1 Newent Road
Lisbon, Connecticut 06351

LEGAL NOTICE

NOTICE OF DECISION

At the regular meeting of the Lisbon Planning and Zoning Commission held in the Lisbon Town Hall on January 5, 1999, the following action was taken:

1. An application by Gran-Lee, LLC for a Special Permit to develop an eating and drinking establishment together with the development of joint access and parking facilities for lots 7 and 8 at 106 and 110 River Road.
   APPROVED WITH CONDITIONS
2. An application by Gran-Lee, LLC and Lisbon Land Assoc., Inc. for a Zoning Permit for an eating and drinking establishment together with the development of joint access and parking facilities for lots 7 and 8 at 106 and 110 River Road, Lisbon
   APPROVED WITH CONDITIONS
3. An application by SBA, Inc. And NEXTEL Communications for a Special Permit to construct a wireless telecommunications facility at 26 Mell Road, Lisbon, CT
   APPROVED WITH CONDITIONS

Robert Adams, Chairman

PLEASE PUBLISH "THE BULLETIN": 1 X IMMEDIATELY

FAX MEMO
PAGES 1 DATE 1/7/99 FAX
TO Lebanon Bulletin
FROM Lisbon P&Z - Marlene
CO. Town of Lisbon
PH # 376-3488 FAX # 376-6545

RECEIVED FOR RECORD AT LISBON,
ON: 1/7/99 AT 2:30pm
ATTEST: BETSY M. BARRETT, TOWN CLERK

b). Regulations - Final revisions in progress.

OLD BUSINESS:

a). Wheelabrator Boat Launch

Mr. John O'Rourke, Operations Mgr. representing Wheelabrator, informed the Commission that the open space improvements have been completed, and the conditions of the Special Permit have been completed. A final inspection is needed then the certificate of zoning compliance be issued.

A motion was made by William Kuusela, seconded by Dennis Savage, to have the Town's Attorney and Engineer look into the original permit and Host Town Agreement to make sure that they're in total compliance before we issue the final permits.

VOTE: UNANIMOUS MOTION CARRIED

b). Special Permit Apl., Gran-Lee LLC

Mr. Rabbitt read his Planner's Letter-1/5/99, with eleven (11) recommended conditions. He also recommended that #11 include "right hand only stop".

William Belisle motioned that we approve the Special Permit with the condition that the egress be limited to one lane at its intersection of Rt. 12, and the Planner's eleven conditions. There was no second to the motion.

Mr. Kuusela then motioned (to approve) and to ask to have the exit and entrance reversed and with the Planner's eleven conditions. The motion was seconded by George Williams. The motion was withdrawn by Mr. Kuusela. Mr. Williams withdrew his second.

A motion was made by Dennis Duplice to approve with a single lane exit (remove the right hand northbound turning lane), the addition of another handicapped space (western most space of the existing office space), and with the Planner's eleven conditions.

VOTE: William Belisle-YES, William Kuusela-NO, David Gagnon-YES, Lawrence Alice-ABSTAIN, George Williams-NO, Dennis Savage-YES, Dennis Duplice-YES, Robert Adams-ABSTAIN

MOTION CARRIED

c). Zoning Permit Apl. Gran-Lee LLC & Lisbon Land Assoc., Inc.

A motion was made by Dennis Duplice, seconded by William Belisle, to approve with the same conditions as the Special Permit: a single lane exit (remove the right hand northbound turning lane), the addition of another handicapped space (western most space of existing office space), and the Planners eleven conditions.

VOTE: William Belisle-YES, William Kuusela-NO, David Gagnon-YES, Lawrence Alice-ABSTAIN, George Williams-NO, Dennis Savage-YES, Dennis Duplice-YES, Robert Adams-ABSTAIN

MOTION CARRIED

d). Special Permit Apl. SBA Inc./NEXTEL

Mr. Rabbitt read his Planner's Letter, 1/5/99 with two (2) recommended conditions. He also

recommended a third condition; the applicant must meet with Section 9.13.5b. (of the Zoning Regulations) to control the fall zone.
A motion was made by Dennis Duplice, seconded by George Williams, to approve with the three conditions. VOTE: UNANIMOUS MOTION CARRIED

RECEIPT OF NEW APPLICATIONS: none

NEW BUSINESS:
a). Zoning Permit Apl.-M. Patterson
Mr. Adams noted a completed application from Mark Patterson, $60 fee payment for a Zoning Permit for a Home Occupation (hair salon) at 5 Kendall Road, and a Letter of Consent from Richard Patterson, owner.
A motion was made by William Kuusela, seconded by Lawrence Alice, to accept the application for review. VOTE: UNANIMOUS MOTION CARRIED
Dennis Duplice motioned to table. David Gagnon seconded the motion.
VOTE: UNANIMOUS MOTION CARRIED

OTHER BUSINESS:
After a brief discussion, it was the general consensus of those present to have Rex Champany, Building Inspector/ZEO, investigate reports of an active sand and gravel operation on Ross Hill Road.

Dennis Duplice motioned to adjourn at 8:35 p.m. David Gagnon seconded the motion.
VOTE: UNANIMOUS MOTION CARRIED

Marlene LePine, clerk

APPROVED_____
Robert Adams, Chairman

RECEIVED FOR RECORD AT LISBON,
CT THIS 1/7/99 AT 2:30pm
ATTEST: BETSY M. BARRETT, TOWN CLERK

Attn: Tom White

SOUTHEASTERN CONNECTICUT COUNCIL OF GOVERNMENTS
5 Connecticut Avenue, Norwich, Connecticut 06360
(860) 889-2324/Fax: (860) 889-1222/Email: seccog@snet.net

January 5, 1999

Robert Adams, Chairman
Lisbon Planning and Zoning Commission
Town of Lisbon
1 Newent Road
Lisbon, CT 06351

RE: SBA Inc. and Nextel Communications Special Permit Application

Dear: Mr. Adams:

I prepared a review of the application by SBA Inc. and Nextel Communications for a Wireless Telecommunications Facility at 26 Mell Road, Assessor's Map 9, Lot 73.

The application was received by the Lisbon Planning & Zoning Commission on October 6, 1998. The Commission scheduled a public hearing on October 29, 1998 at 7:00 PM. The Commission has 30 days to close the public hearing. The applicant may grant one or more extensions of time up to a total of an additional 30 days. The public hearing was closed on December 1, 1998. The Commission must make a decision within 65 days of the close of the public hearing, unless, the applicant agrees to one or more extensions of time, which may be up to a total of an additional 65 days. However, since a site plan is part of the application, the Commission has 65 days to render a decision on a site plan from the date of receipt. The applicant may consent to one or more extensions of such period, provided the total time does not exceed two further sixty-five-day periods, or may withdraw such application. The applicant did grant an extension on December 1, 1998, 35 days Consequently, decision needs to be made by January 5, 1999, unless the applicant grants and extension of time.

Presently the plans submitted by the applicant would meet the Town of Lisbon Zoning Regulations with the addition of the 2 conditions stated below. However, the planner reserves the right to comment on the application after reviewing the conditions with the Planning and Zoning Commission based on the public record.

1. The applicant shall modify their existing site plan to show that all new utilities will be installed underground.
2. The applicant shall post surety in the amount of $10,000 prior to any construction, grading and/or excavation activity, and/or prior to the issuance of a building permit. The final type of surety to be determined by Planning Commission Counsel.

If you have any questions please call me at 1-860-889-2324.

Sincerely,

James D. Rabbitt, AICP
Lisbon Town Planner/SCCOG Senior Planner

special permit review-3.wpd

Lisbon CT0167-S

PLANNING & ZONING COMMISSION
TOWN OF LISBON
1 Newent Road
Lisbon, Connecticut 06351

LEGAL NOTICE

NOTICE OF DECISION

At the regular meeting of the Lisbon Planning and Zoning Commission held in the Lisbon Town Hall on January 5, 1999, the following action was taken:

1. An application by Gran-Lee, LLC for a Special Permit to develop an eating and drinking establishment together with the development of joint access and parking facilities for lots 7 and 8 at 106 and 110 River Road.
   APPROVED WITH CONDITIONS
2. An application by Gran-Lee, LLC and Lisbon Land Assoc., Inc. for a Zoning Permit for an eating and drinking establishment together with the development of joint access and parking facilities for lots 7 and 8 at 106 and 110 River Road, Lisbon
   APPROVED WITH CONDITIONS
3. An application by SBA, Inc. And NEXTEL Communications for a Special Permit to construct a wireless telecommunications facility at 26 Mell Road, Lisbon, CT
   APPROVED WITH CONDITIONS

Robert Adams, Chairman

PLEASE PUBLISH "THE BULLETIN": 1 X IMMEDIATELY

RECEIVED FOR RECORD AT LISBON,
CT 1/7/99 AT 2:30pm
ATTEST: BETSY M. BARRETT, TOWN CLERK

BOOK 87 PAGE 781

APPLICATION FOR SPECIAL PERMIT

Lisbon Planning and Zoning Commission

To be completed by the Applicant: Date: 10/01/98

Name and Address of Applicant: SBA INC 125 SHAW STREET #116 NEW LONDON, CT
NEXTEL/NEXTEL COMMUNICATIONS 100 CORPORATE PLACE ROCKYHILL, CT 06067

The undersigned does hereby request a Special Permit as required by Section 4.2 11 9.1 36 7.11 of the Lisbon Zoning Regulations.

Location of Property 26 WELL ROAD / MAP 9 LOT 73

Owner of Record of Property STANLEY WILDONSKY

Description of Proposed Use PLEASE REFER TO PROJECT DESCRIPTION ON THE TITLE PAGE OF WELL ROAD ZONING DRAWINGS OR PAGE FOUR OF THE PROJECT NARRATIVE.

(The applicant shall submit with this completed application a site plan as prescribed in Section 10 of the Lisbon Zoning Regulations.)

Signature of Applicant: [signature] AS AGENT

To be completed by the Commission: Application No.

Date of Submission: 10-16-98

Date of Receipt: 10-16-98 Fee Paid: $ 810.00 P.C. 11/16/98

Date of Action: 1/5/99

Date of Public Hearing: 10/27/98

Approved: With attached conditions Denied:

Reasons for ~~[illegible]~~ or modifications: ~~Approved with the attached conditions:~~
Planner's (James D. Robbitt, AICP) letter January 5, 1999.

RECEIVED FOR RECORD AT LISBON, CT
01/20/99 AT 10:30 AM
ATTEST: BETSY M. BARRETT, TOWN CLERK

Approved with Conditions

Signature [signature]

(No approved special permit shall be effective until a copy of this completed form is recorded in the land records of the Town of Lisbon. The Town Clerk shall index the same in the grantor's index under the name of the record owner and the record owner shall pay for such recording. Sec. 8-3d, Connecticut General Statutes.)

Exhibit B

Property Card

26 MELL RD

Location	26 MELL RD	**Mblu**	09/ 073/ 0000/ /
Acct#	W1082500	**Owner**	WILDOWSKY STANLEY JR
Assessment		**Appraisal**	
PID	1972	**Building Count**	1

Current Value

Appraisal
No Data for Current Valuation
Assessment
No Data for Current Valuation

Owner of Record

Owner	WILDOWSKY STANLEY JR	**Sale Price**	$0
Co-Owner	AMERICAN TOWER/LAND MGMT	**Certificate**	
Care Of		**Book & Page**	77/11
Address	10 PRESIDENTIAL WAY WOBURN, MA 01801	**Sale Date**	09/27/1995
		Instrument	U

Ownership History

Ownership History					
Owner	**Sale Price**	**Certificate**	**Book & Page**	**Instrument**	**Sale Date**
WILDOWSKY STANLEY JR	$0		77/11	U	09/27/1995

Building Information

Building 1 : Section 1

Year Built:	
Living Area:	0
Replacement Cost:	$0
Building Percent Good:	
Replacement Cost Less Depreciation:	$0

Building Attributes	
Field	**Description**

Building Photo

Building Photo (http://images.vgsi.com/photos2/LisbonCTPhotos//LegacyPhotos

Building Layout

Building Layout (ParcelSketch.ashx?pid=1972&bid=1972)

Building Sub-Areas (sq ft)	Legend

Style	Outbuildings
Model	
Grade	
No. of Stories	
Occupancy	
Exterior Wall 1	
Exterior Wall 2	
Roof Structure	
Roof Cover	
Interior Wall 1	
Interior Wall 2	
Interior Flr 1	
Interior Flr 2	
Heat Fuel	
Heat Type	
AC Type	
Total Bedrooms	
Total Bathrms	
Total Half Baths	
Xtra Fixtrs.	
Total Rooms	
Bath Style	
Kitchen Style	
Wood Fireplaces	
Gas Fireplaces	
Rental Unit	
Fin. Bsmnt. Qual.	
Foundation	
Bsmnt Garage	
Int vs Ext	

No Data for Building Sub-Areas

Extra Features

Extra Features	Legend
No Data for Extra Features	

Land

Land Use

Use Code 4340

Land Line Valuation

Size (Acres) 0.23

Description	Cell Tower	**Assessed Value**	$0
Neighborhood	C1	**Appraised Value**	$0
Category			

Outbuildings

Outbuildings							Legend
Code	**Description**	**Sub Code**	**Sub Description**	**Size**	**Value**	**Assessed Value**	**Bldg #**
CELL	Cell Shed			286.00 S.F.	$32,180	$22,530	1
FN3	FENCE-6' CHAIN			280.00 L.F.	$1,680	$1,180	1
CELL	Cell Shed			280.00 S.F.	$31,500	$22,050	1

Valuation History

Appraisal			
Valuation Year	**Improvements**	**Land**	**Total**
2018	$65,360	$117,910	$183,270
2017	$65,360	$101,250	$166,610
2016	$65,360	$101,250	$166,610

Assessment			
Valuation Year	**Improvements**	**Land**	**Total**
2018	$45,760	$82,540	$128,300
2017	$45,760	$70,880	$116,640
2016	$45,760	$70,880	$116,640

(c) 2019 Vision Government Solutions, Inc. All rights reserved.

Google Maps 26 Mell Rd

Map data ©2019 100 ft

26 Mell Rd

Lisbon, CT 06351

Directions Save Nearby Send to your phone Share

HXRJ+7F Lisbon, Connecticut

Photos

Exhibit C

Construction Drawings

DISH Wireless L.L.C. SITE ID:

BOBOS00068C

DISH Wireless L.L.C. SITE ADDRESS:

26 MELL ROAD
LISBON, CT 06351

SCOPE OF WORK

THIS IS NOT AN ALL INCLUSIVE LIST. CONTRACTOR SHALL UTILIZE SPECIFIED EQUIPMENT PART OR ENGINEER APPROVED EQUIVALENT. CONTRACTOR SHALL VERIFY ALL NEEDED EQUIPMENT TO PROVIDE A FUNCTIONAL SITE. THE PROJECT GENERALLY CONSISTS OF THE FOLLOWING:

TOWER SCOPE OF WORK:
- INSTALL (3) PROPOSED PANEL ANTENNAS (1 PER SECTOR)
- INSTALL (1) PROPOSED ANTENNA PLATFORM MOUNT
- INSTALL PROPOSED JUMPERS
- INSTALL (6) PROPOSED RRUs (2 PER SECTOR)
- INSTALL (1) PROPOSED OVER VOLTAGE PROTECTION DEVICE (OVP)
- INSTALL (1) PROPOSED HYBRID CABLE

GROUND SCOPE OF WORK:
- INSTALL (1) PROPOSED 2'-0" x 5'-0" CONCRETE PAD
- INSTALL (1) PROPOSED ICE BRIDGE
- INSTALL (1) PROPOSED PPC CABINET
- INSTALL (1) PROPOSED EQUIPMENT CABINET
- INSTALL (1) PROPOSED POWER CONDUIT
- INSTALL (1) PROPOSED TELCO CONDUIT
- INSTALL (1) PROPOSED TELCO-FIBER BOX
- INSTALL (1) PROPOSED GPS UNIT
- INSTALL (1) PROPOSED SAFETY SWITCH (IF REQUIRED)
- INSTALL (1) PROPOSED FIBER NID (IF REQUIRED)
- INSTALL (1) PROPOSED METER SOCKET

SITE INFORMATION

PROPERTY OWNER:	WILDOWSKY STANLEY JR/ C/O SBA TOWERS INC
ADDRESS:	N/A N/A
TOWER TYPE:	MONOPOLE
TOWER CO SITE ID:	CT00167-S
TOWER APP NUMBER:	199417
COUNTY:	NEW LONDON
LATITUDE (NAD 83):	41° 35' 27.7" N 41.591033
LONGITUDE (NAD 83):	72° 01' 01.1" W -72.016960
ZONING JURISDICTION:	NEW LONDON COUNTY
ZONING DISTRICT:	RESIDENTIAL
PARCEL NUMBER:	09/073/0000
OCCUPANCY GROUP:	U
CONSTRUCTION TYPE:	II-B
POWER COMPANY:	EVERSOURCE
TELEPHONE COMPANY:	T.B.D

PROJECT DIRECTORY

APPLICANT:	DISH Wireless L.L.C. 5701 SOUTH SANTA FE DRIVE LITTLETON, CO 80120
TOWER OWNER:	SBA COMMUNICATAIONS CORP. 8051 CONGRESS AVENUE BOCA RATON, FL 33487 (800) 487-7483
SITE DESIGNER:	B+T GROUP 1717 S. BOULDER AVE, SUITE 300 TULSA, OK 74119 (918) 587-4630
SITE ACQUISITION:	APRIL PARROTT april.parrott@dish.com
CONST. MANAGER:	T.B.D T.B.D
RF ENGINEER:	DIPESH PARIKH dipesh.parikh@dish.com

CONNECTICUT CODE OF COMPLIANCE

ALL WORK SHALL BE PERFORMED AND MATERIALS INSTALLED IN ACCORDANCE WITH THE CURRENT EDITIONS OF THE FOLLOWING CODES AS ADOPTED BY THE LOCAL GOVERNING AUTHORITIES. NOTHING IN THESE PLANS IS TO BE CONSTRUED TO PERMIT WORK NOT CONFORMING TO THESE CODES

CODE TYPE	CODE
BUILDING	2021 IBC
MECHANICAL	2021 IMC
ELECTRICAL	2020 NEC

SITE PHOTO

DIRECTIONS

DIRECTIONS FROM BRADLEY INTERNATIONAL AIRPORT:

GET ON BRADLEY INTERNATIONAL AIRPORT CON FROM BRADLEY INTERNATIONAL AIRPORT, HEAD NORTH TOWARD BRADLEY INTERNATIONAL AIRPORT, SLIGHT LEFT ONTO BRADLEY INTERNATIONAL AIRPORT, CONTINUE STRAIGHT, KEEP RIGHT TO CONTINUE TOWARD BRADLEY INTERNATIONAL AIRPORT CON, TAKE I-91 S AND CT-2 E TO I-395 S IN LISBON, CONTINUE ONTO BRADLEY INTERNATIONAL AIRPORT CON, CONTINUE ONTO CT-20 E/BRADLEY INTERNATIONAL AIRPORT CON, USE THE RIGHT 2 LANES TO MERGE WITH I-91 S TOWARD HARTFORD, USE THE LEFT LANE TO STAY ON I-91 S, USE THE LEFT LANE TO STAY ON I-91 S, USE THE LEFT LANE TO TAKE EXIT 30 TO MERGE WITH I-84 E TOWARD CT-2/E. HARTFORD/NEW LONDON, TAKE EXIT 55 FOR CT-2 E TOWARD NORWICH/NEW LONDON/I-84 E, CONTINUE ONTO CT-2 E, KEEP LEFT AT THE Y JUNCTION TO STAY ON CT-2 E, FOLLOW SIGNS FOR 2 E, TAKE EXIT 28N TO MERGE WITH I-395 N TOWARD PROVIDENCE, TAKE EXIT 21 FOR CT-12 TOWARD GRISWOLD/JEWETT CITY, TURN RIGHT ONTO CT-12 N, TURN LEFT TO MERGE WITH I-395 S, DESTINATION WILL BE ON THE RIGHT.

SHEET INDEX

SHEET NO.	SHEET TITLE
T-1	TITLE SHEET
LS1	SITE SURVEY
A-1	OVERALL AND ENLARGED SITE PLAN
A-2	ELEVATION, ANTENNA LAYOUT AND SCHEDULE
A-3	EQUIPMENT PAD AND H-FRAME DETAILS
A-4	EQUIPMENT DETAILS
A-5	EQUIPMENT DETAILS
A-6	EQUIPMENT DETAILS
E-1	ELECTRICAL/FIBER ROUTE PLAN AND NOTES
E-2	ELECTRICAL DETAILS
E-3	ELECTRICAL ONE-LINE, FAULT CALCS & PANEL SCHEDULE
G-1	GROUNDING PLANS AND NOTES
G-2	GROUNDING DETAILS
G-3	GROUNDING DETAILS
RF-1	RF CABLE COLOR CODE
GN-1	LEGEND AND ABBREVIATIONS
GN-2	RF-SIGNAGE
GN-3	GENERAL NOTES
GN-4	GENERAL NOTES
GN-5	GENERAL NOTES

UNDERGROUND SERVICE ALERT CBYD 811
UTILITY NOTIFICATION CENTER OF CONNECTICUT
(800) 922-4455
WWW.CBYD.COM

CALL 2 WORKING DAYS UTILITY NOTIFICATION PRIOR TO CONSTRUCTION

811

GENERAL NOTES

THE FACILITY IS UNMANNED AND NOT FOR HUMAN HABITATION. A TECHNICIAN WILL VISIT THE SITE AS REQUIRED FOR ROUTINE MAINTENANCE. THE PROJECT WILL NOT RESULT IN ANY SIGNIFICANT DISTURBANCE OR EFFECT ON DRAINAGE. NO SANITARY SEWER SERVICE, POTABLE WATER, OR TRASH DISPOSAL IS REQUIRED AND NO COMMERCIAL SIGNAGE IS PROPOSED.

11"x17" PLOT WILL BE HALF SCALE UNLESS OTHERWISE NOTED

CONTRACTOR SHALL VERIFY ALL PLANS, EXISTING DIMENSIONS, AND CONDITIONS ON THE JOB SITE, AND SHALL IMMEDIATELY NOTIFY THE ENGINEER IN WRITING OF ANY DISCREPANCIES BEFORE PROCEEDING WITH THE WORK.

VICINITY MAP

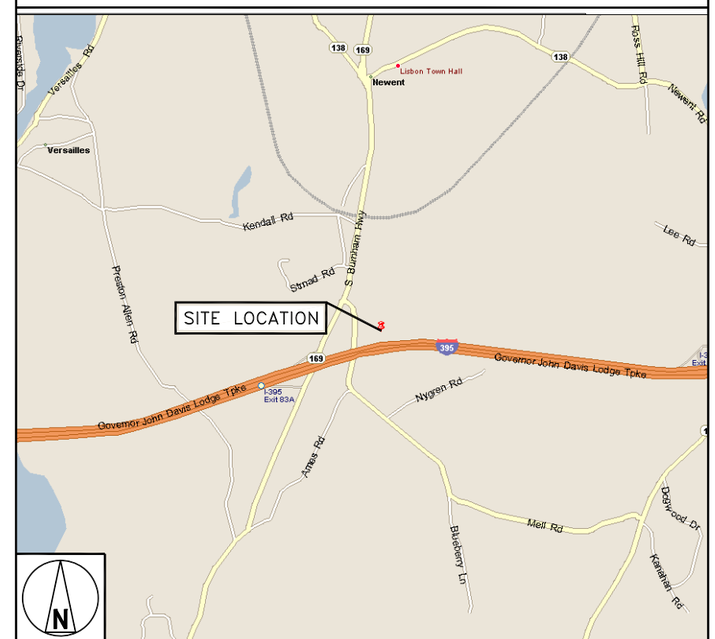

NO SCALE

5701 SOUTH SANTA FE DRIVE
LITTLETON, CO 80120

8051 CONGRESS AVENUE
BOCA RATON, FL 33487

B+T GRP
1717 S. BOULDER
SUITE 300
TULSA, OK 74119
PH: (918) 587-4630
www.btgrp.com

STATE OF CONNECTICUT
CHAD BUTLER
No. 23924
LICENSED
PROFESSIONAL ENGINEER
01/06/23

MTS ENGINEERING P.L.L.C.
BER:2386985
Expires 3/31/23

IT IS A VIOLATION OF LAW FOR ANY PERSON, UNLESS THEY ARE ACTING UNDER THE DIRECTION OF A LICENSED PROFESSIONAL ENGINEER, TO ALTER THIS DOCUMENT.

DRAWN BY:	CHECKED BY:	APPROVED BY:
MEH	RMC	RMC

RFDS REV #: 1.0

CONSTRUCTION DOCUMENTS

SUBMITTALS

REV	DATE	DESCRIPTION
A	6/2/22	ISSUED FOR REVIEW
0	6/14/22	ISSUED FOR CONSTRUCTION
1	01/06/23	ISSUED FOR CONSTRUCTION

A&E PROJECT NUMBER
164076.001.01

DISH Wireless L.L.C.
PROJECT INFORMATION
BOBOS00068C
26 MELL ROAD
LISBON, CT 06351

SHEET TITLE
TITLE SHEET

SHEET NUMBER
T-1

CT 167-5 Survey

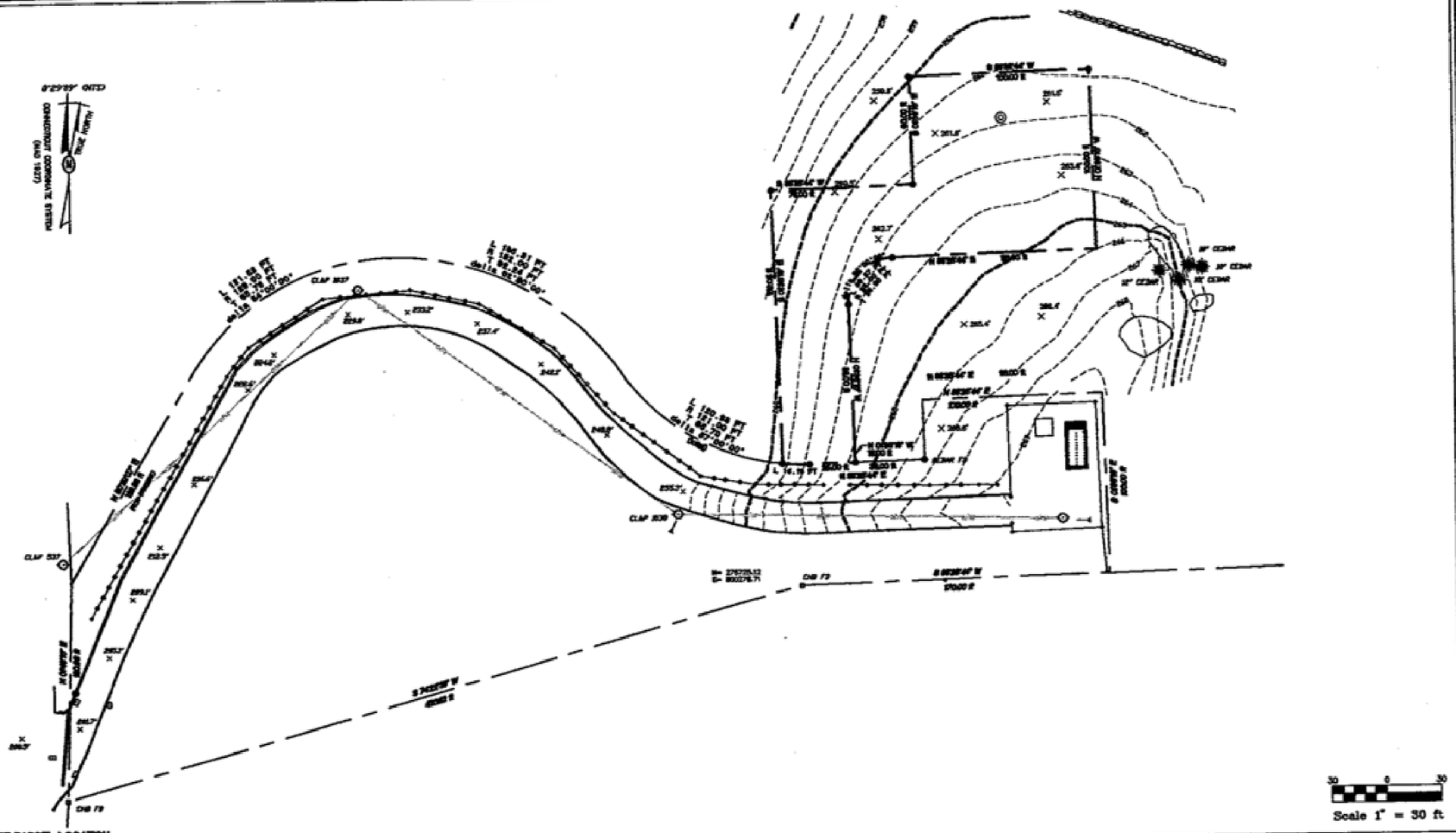

OVERALL VIEW OF LEASE PARCEL LOCATION

SURVEYORS & ENGINEERS

REVISIONS

SBA INC.

IN CONJUNCTION WITH
NEXTEL COMMUNICATIONS
OF THE MID-ATLANTIC, INC.

105 SHAW STREET SUITE 99
NEW LONDON, CONNECTICUT
(860) 439-0402

ONE TOWN CENTER RD, 3RD FL.
BOCA RATON, FL. 33486
(561) 995-7670

SBA Inc. Site:
#8622 26 MELL ROAD- LISBON
26 Mell Road
Lisbon, Connecticut

G&A PROJ # 97-0663B

Existing Conditions
of
Lease Parcel
26 Mel Road
Lisbon, Connecticut

June 30, 1999

S-1

LEASE PARCEL INFORMATION

PARCEL ADDRESS	26 MEL ROAD, LISBON CONNECTICUT
CURRENT OWNER	STANLEY WILDOWSKY JR.
DEED	VOL 77/12
ASSESSORS ID	MAP 8, LOT 73
ZONE	R-80
AREA OF LEASE PARCEL	17769.3 SQ FT , 0.4079 ACRES
AREA OF TOTAL PARCEL	150 ACRES

LEGEND

SYM.	DESCRIPTION	SYM.	DESCRIPTION
▲	PROPERTY CORNER		CONTOUR
●	IP/SH TO SET		INDEX CONTOUR
■	MONUMENT TO SET		PROPERTY LINE
◆	BENCH MARK	NS	NOT TO SCALE
7.0	SPOT ELEV		
	TREELINE		
	WETLANDS		

REFERENCE MAPS

1. "PARCEL TO BE LEASED BY SNET CELLULAR INC. FROM STANLEY WILDOWSKY JR. & MARY ANN WILDOWSKY VOL 77/12 LISBON, CONNECTICUT PREPARED BY GROMAN, WALLINGFORD, CT. DATED JULY, 1998 REV. MARC 12/11/98 SCALE 1"=40'
2. "CONNECTICUT STATE PLANE COORDINATES BASED ON THE MAP OF THE TOWN OF LISBON CONNECTICUT, SCALE 1"=1000' TOWN LINE REPRESENTED BY THE DASHED TOWN LINE NUMBER 13-11 SHEET 4 OF 7. DATED DEC 14, 1989 SCALE 1"=400'

NOTES

1. THIS SURVEY AND MAP WAS NOT PREPARED IN ACCORDANCE WITH SECTIONS 20-300b-1 THRU 20-300b-20 OF THE REGULATIONS OF CONNECTICUT STATE AGENCIES - "MINIMUM STANDARDS FOR SURVEYS AND MAPS IN THE STATE OF CONNECTICUT" AS ENDORSED BY THE CONNECTICUT ASSOCIATION OF LAND SURVEYORS, INC. IT IS A PROPERTY SURVEY BASED ON A REFERENCE MONUMENT (NOTED ON REF MAP #1) CONFORMING TO A-2 HORIZONTAL ACCURACY AND T-2 TOPOGRAPHIC ACCURACY AND INTENDED TO DEPICT AND NOTE THE POSITION OF A PROPOSED LEASE PARCEL, WITH RESPECT TO EXISTING STRUCTURES ON PARCEL.
2. NORTH IS BASED ON REFERENCE MAP CONNECTICUT COORDINATE SYSTEM NAD27
3. ELEVATIONS REFER TO APPROXIMATE ARBITRARY ELEVATION NORTH. DATUM OF THIS BASED UPON U.S. GEOLOGICAL SURVEY MAPPING.
4. BASE MAPPING PREPARED BY GESICK & ASSOCIATES P.C. FROM A NOV 96, FIELD SURVEY.
5. THIS SURVEY IS SUBJECT TO SUCH FACTS AS AN INDEPENDENT ACCURACY MAY DISCLOSE.
6. UNDERGROUND UTILITIES SHOWN FROM AERIAL FIELD LOCATION IF POSSIBLE. THEIR EXACT LOCATION MAY DIFFER FROM THAT SHOWN AND OTHERS MAY EXIST.
7. SUBJECT TO AN ACCURATE UP-TO-DATE ABSTRACT OF TITLE.
8. SUBJECT TO ALL RIGHTS, EASEMENTS, CONDITIONS OR RESTRICTIONS OF RECORD.

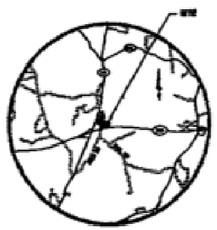

To the best of my knowledge and belief this map is substantially correct as noted hereon.

Donald L. Gesick Jr. L.S. Reg. No. 18417

SURVEYORS CERTIFICATION

Gesick & Associates P.C.
SURVEYORS & ENGINEERS
19 Cedar Island Ave.
Clinton, CT 06413
(860) 669-7799
FAX (860) 669-6833
e-mail Gesick@aol.com

NOTES

1. CONTRACTOR SHALL FIELD VERIFY ALL PROPOSED UNDERGROUND UTILITY CONDUIT ROUTE.
2. ANTENNAS AND MOUNTS OMITTED FOR CLARITY.

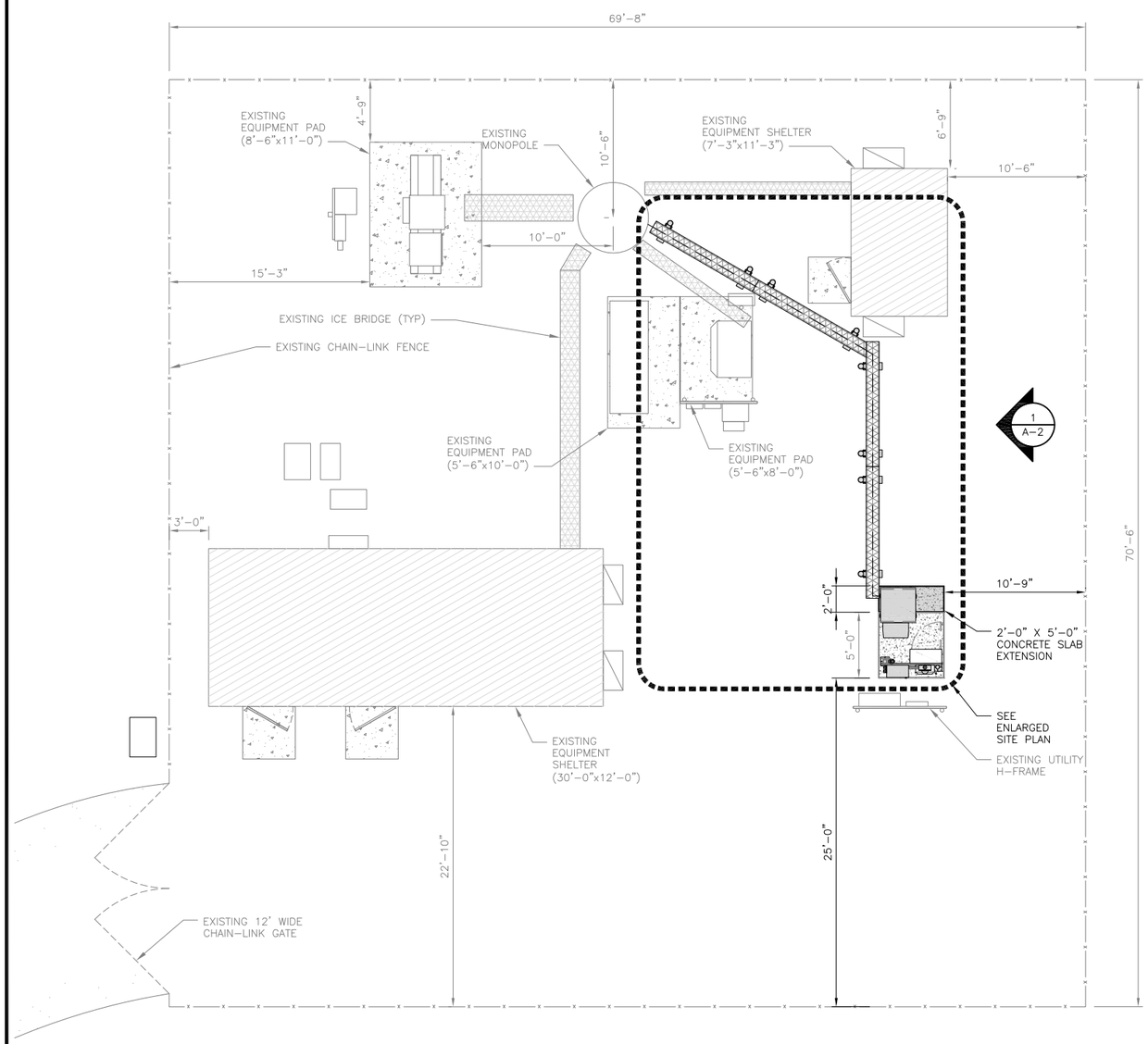

OVERALL SITE PLAN

6' 4' 2' 0 5' 10'
3/16"=1'-0"

1

NOTES

1. CONTRACTOR SHALL FIELD VERIFY ALL DIMENSIONS.
2. CONTRACTOR SHALL MAINTAIN A 10'-0" MINIMUM SEPARATION BETWEEN THE PROPOSED GPS UNIT, TRANSMITTING ANTENNAS AND EXISTING GPS UNITS.
3. ANTENNAS AND MOUNTS OMITTED FOR CLARITY.

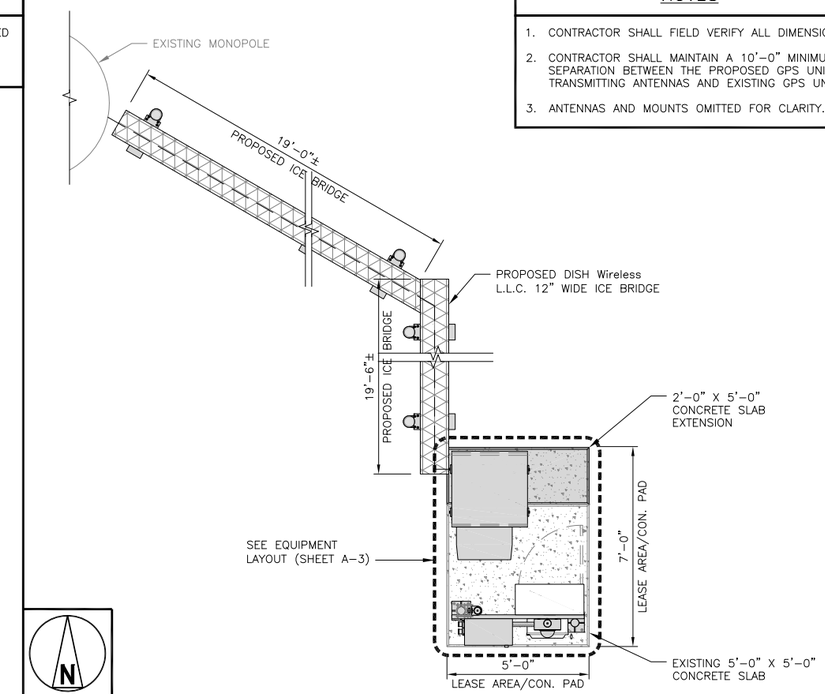

ENLARGED SITE PLAN

12" 6" 0 1' 2' 3' 4' 5' 6' 7'
3/8"=1'-0"

2

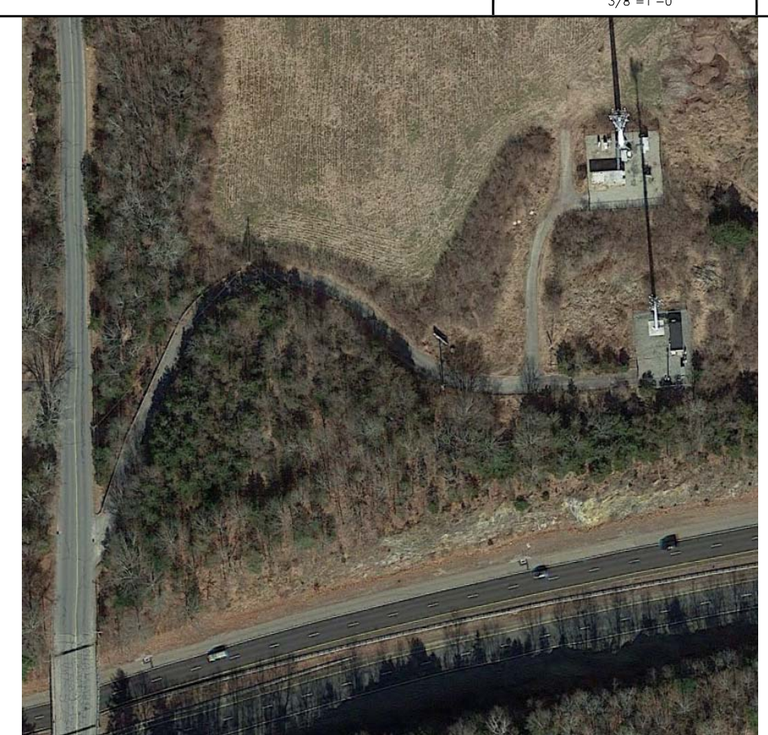

NOT USED

NO SCALE

3

dish wireless

5701 SOUTH SANTA FE DRIVE
LITTLETON, CO 80120

SBA

8051 CONGRESS AVENUE
BOCA RATON, FL 33487

B+T GRP
1717 S. BOULDER
SUITE 300
TULSA, OK 74119
PH: (918) 587-4630
www.btgrp.com

STATE OF CONNECTICUT
CHAD MILLE
No. 23924
LICENSED
PROFESSIONAL ENGINEER
01/06/23

MTS ENGINEERING P.L.L.C.
BER:2386985
Expires 3/31/23

IT IS A VIOLATION OF LAW FOR ANY PERSON, UNLESS THEY ARE ACTING UNDER THE DIRECTION OF A LICENSED PROFESSIONAL ENGINEER, TO ALTER THIS DOCUMENT.

DRAWN BY:	CHECKED BY:	APPROVED BY:
MEH	RMC	RMC

RFDS REV #: 1.0

CONSTRUCTION DOCUMENTS

SUBMITTALS

REV	DATE	DESCRIPTION
A	6/2/22	ISSUED FOR REVIEW
0	6/14/22	ISSUED FOR CONSTRUCTION
1	01/06/23	ISSUED FOR CONSTRUCTION

A&E PROJECT NUMBER

164076.001.01

DISH Wireless L.L.C.
PROJECT INFORMATION

BOBOS00068C
26 MELL ROAD
LISBON, CT 06351

SHEET TITLE

OVERALL AND ENLARGED SITE PLAN

SHEET NUMBER

A-1

NOTES

1. CONTRACTOR SHALL FIELD VERIFY ALL DIMENSIONS.
2. ANTENNA AND MW DISH SPECIFICATIONS REFER TO ANTENNA SCHEDULE AND TO FINAL CONSTRUCTION RFDS FOR ALL RF DETAILS
3. EXISTING EQUIPMENT AND FENCE OMITTED FOR CLARITY.

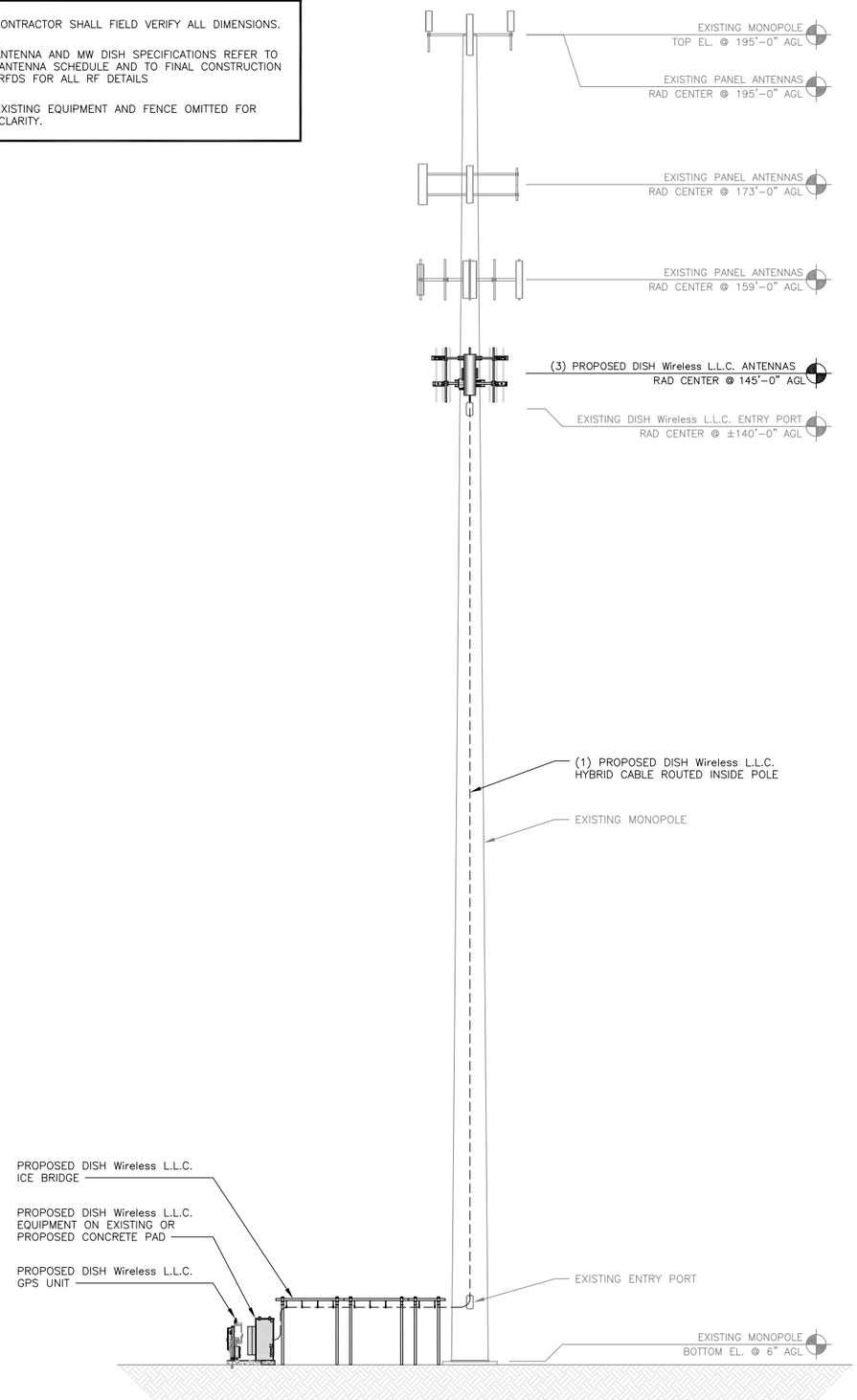

PROPOSED EAST ELEVATION

12' 8' 4' 0 10' 20'
3/32"=1'-0"

1

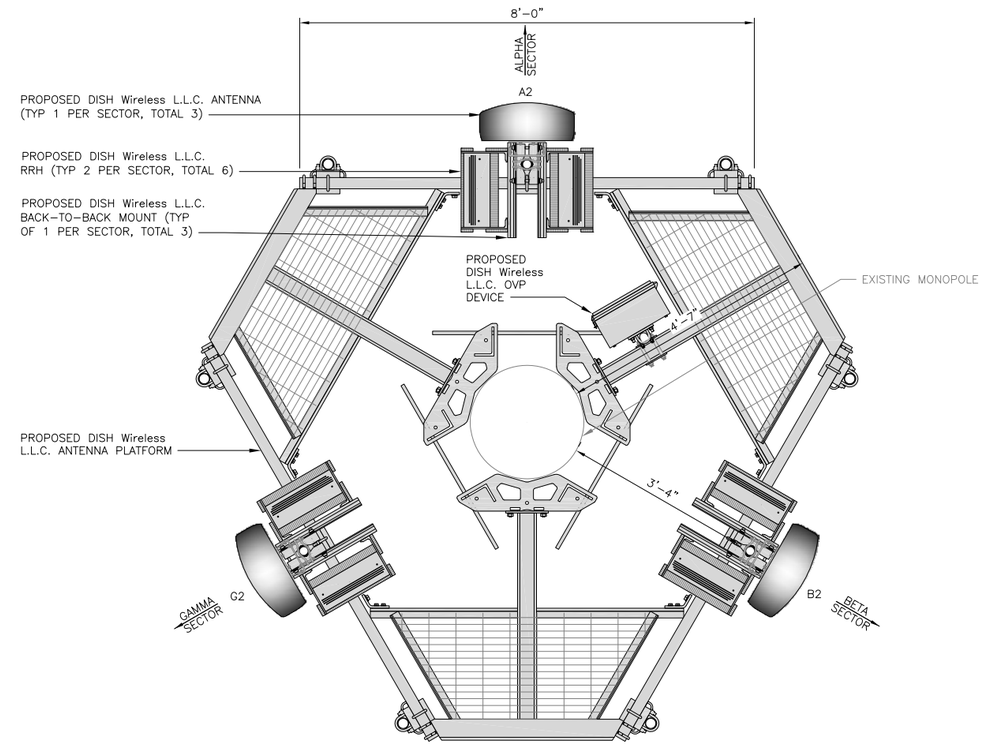

N

ANTENNA LAYOUT

12" 6" 0 1' 2' 3'
3/4"=1'-0"

2

SECTOR POS.	ANTENNA					TRANSMISSION CABLE	RRH			OVP
	EXISTING OR PROPOSED	MANUFACTURER – MODEL NUMBER	TECH	AZIMUTH	RAD CENTER	FEED LINE TYPE AND LENGTH	MANUFACTURER – MODEL NUMBER	TECH	POS.	MANUFACTURER MODEL
A1	--	--	--	--	--	(1) HIGH-CAPACITY HYBRID CABLE (219' LONG)	FUJITSU – TA08025-B604	5G	A2	RAYCAP RDIDC-9181-PF-48
A2	PROPOSED	COMMSCOPE – FFVV-65B-R2	5G	0°	145'-0"		FUJITSU – TA08025-B605	5G	A2	
A3	--	--	--	--	--		--	--	--	
B1	--	--	--	--	--	SHARED W/ALPHA	FUJITSU – TA08025-B604	5G	B2	SHARED W/ALPHA
B2	PROPOSED	COMMSCOPE – FFVV-65B-R2	5G	120°	145'-0"		FUJITSU – TA08025-B605	5G	B2	
B3	--	--	--	--	--		--	--	--	
G1	--	--	--	--	--	SHARED W/ALPHA	FUJITSU – TA08025-B604	5G	C2	SHARED W/ALPHA
G2	PROPOSED	COMMSCOPE – FFVV-65B-R2	5G	240°	145'-0"		FUJITSU – TA08025-B605	5G	C2	
G3	--	--	--	--	--		--	--	--	

NOTES

1. CONTRACTOR TO REFER TO FINAL CONSTRUCTION RFDS FOR ALL RF DETAILS.
2. ANTENNA AND RRH MODELS MAY CHANGE DUE TO EQUIPMENT AVAILABILITY. ALL EQUIPMENT CHANGES MUST BE APPROVED AND REMAIN IN COMPLIANCE WITH THE PROPOSED DESIGN AND STRUCTURAL ANALYSES.

ANTENNA SCHEDULE

NO SCALE

3

dish wireless
5701 SOUTH SANTA FE DRIVE
LITTLETON, CO 80120

SBA
8051 CONGRESS AVENUE
BOCA RATON, FL 33487

B+T GRP
1717 S. BOULDER
SUITE 300
TULSA, OK 74119
PH: (918) 587-4630
www.btgrp.com

STATE OF CONNECTICUT
CHAD MILLER
No. 23924
LICENSED
PROFESSIONAL ENGINEER
01/06/23

MTS ENGINEERING P.L.L.C.
BER:2386985
Expires 3/31/23

IT IS A VIOLATION OF LAW FOR ANY PERSON, UNLESS THEY ARE ACTING UNDER THE DIRECTION OF A LICENSED PROFESSIONAL ENGINEER, TO ALTER THIS DOCUMENT.

DRAWN BY:	CHECKED BY:	APPROVED BY:
MEH	RMC	RMC

RFDS REV #: 1.0

CONSTRUCTION DOCUMENTS

SUBMITTALS

REV	DATE	DESCRIPTION
A	6/2/22	ISSUED FOR REVIEW
0	6/14/22	ISSUED FOR CONSTRUCTION
1	01/06/23	ISSUED FOR CONSTRUCTION

A&E PROJECT NUMBER
164076.001.01

DISH Wireless L.L.C.
PROJECT INFORMATION
BOBOS00068C
26 MELL ROAD
LISBON, CT 06351

SHEET TITLE
ELEVATION, ANTENNA LAYOUT AND SCHEDULE

SHEET NUMBER
A-2

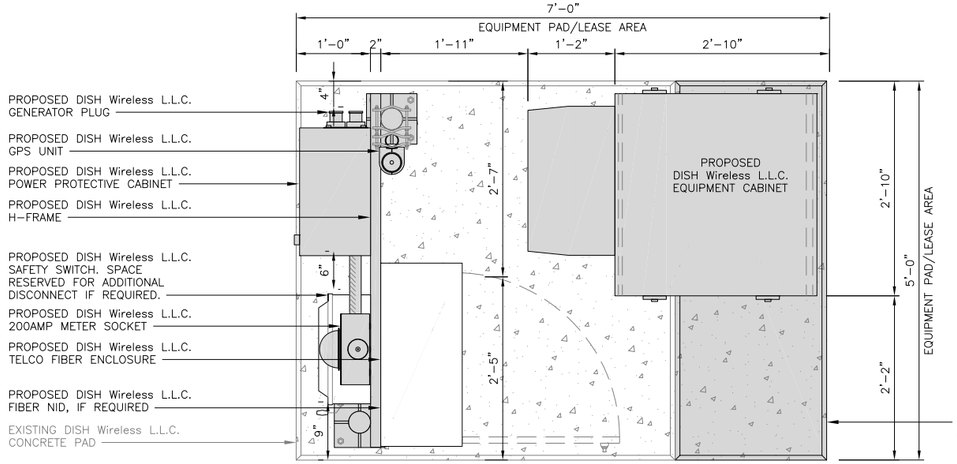

CONCRETE PAD EQUIPMENT PLAN

12" 9" 6" 3" 0 1' 2'
1"=1'-0"

1

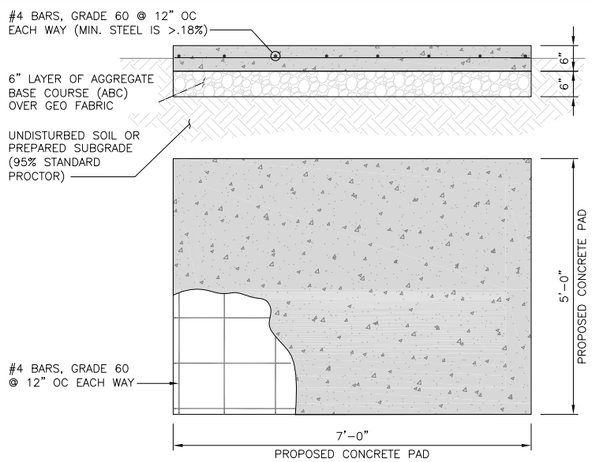

TYPICAL CONCRETE PAD DETAIL

2A

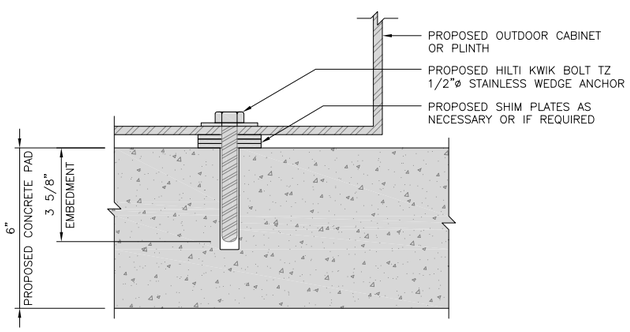

TYPICAL OUTDOOR EQUIPMENT TO CONCRETE SLAB ANCHORAGE

2B

COMMSCOPE MTC4045HFLD H-FRAME	
UNISTRUT/SUPPORT RAILS QTY	5
WEIGHT	59.74 lbs

NOTE:
OR DISH Wireless L.L.C. APPROVED EQUIVALENT

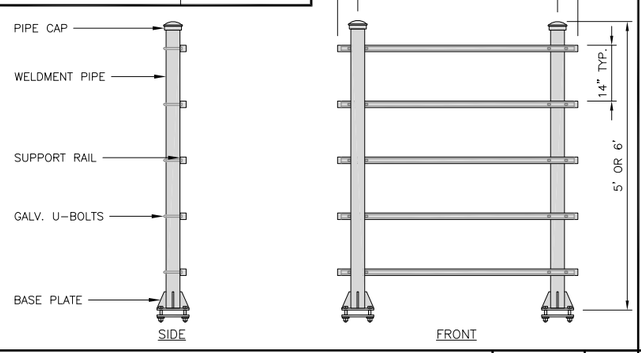

H-FRAME DETAIL

NO SCALE

3

CHARLES INDUSTRY LT-97-002422 PLINTH KIT	
DIMENSIONS (HxWxD):	6"x 32"x 32"
NOTE: GASKET AND MOUNTING HARDWARE INCLUDED	

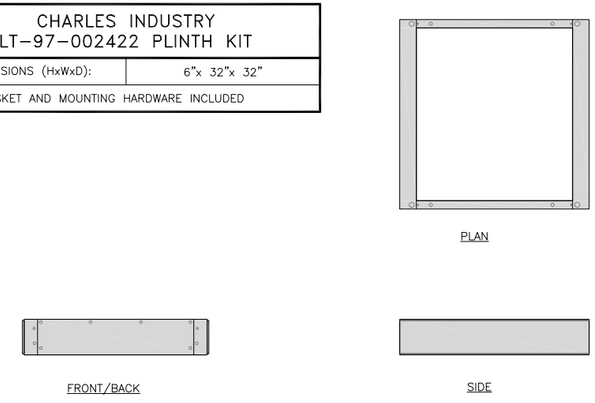

PLINTH DETAIL

NO SCALE

4

NOTES

1. CONTRACTOR TO BURY PLATFORM FEET WITH A MINIMUM OF 2" OF FILL PER EXISTING SITE SURFACE
2. WEED BARRIER FABRIC TO BE ADDED AT DISCRETION OF DISH Wireless L.L.C. CONSTRUCTION MANAGER AT TIME OF CONSTRUCTION. ONE SHEET 8'x8' INSTALLED UNDER ALL FOUR FEET OF THE PLATFORM (4 MIL BLACK PLASTIC)
3. EQUIPMENT CABINET OMITTED FOR CLARITY

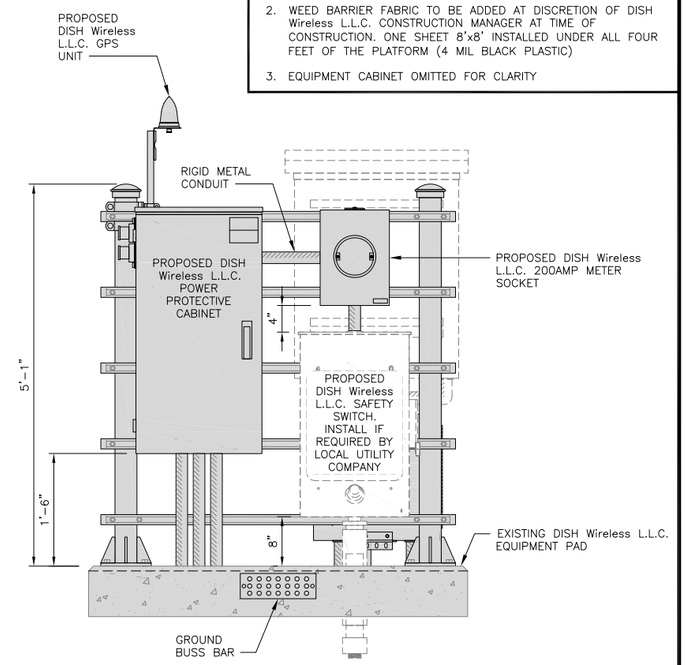

FRONT ELEVATION

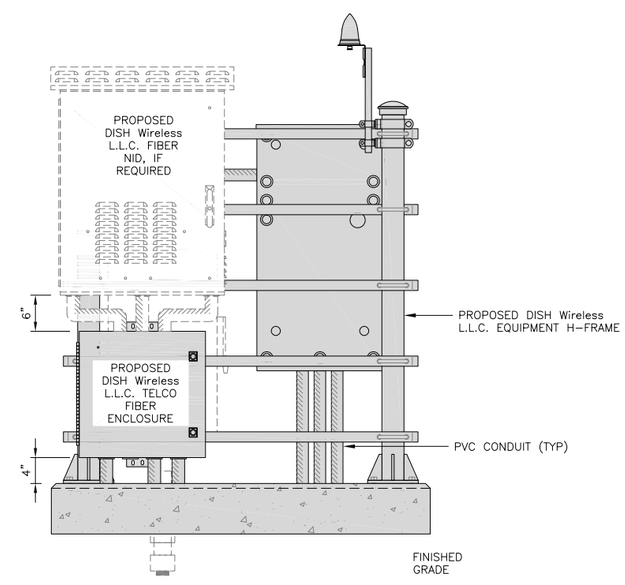

BACK ELEVATION

H-FRAME EQUIPMENT ELEVATION

12" 9" 6" 3" 0 1' 2'
1"=1'-0"

5

dish wireless
5701 SOUTH SANTA FE DRIVE
LITTLETON, CO 80120

SBA
8051 CONGRESS AVENUE
BOCA RATON, FL 33487

B+T GRP
1717 S. BOULDER
SUITE 300
TULSA, OK 74119
PH: (918) 587-4630
www.btgrp.com

STATE OF CONNECTICUT
CHAD MILLER
No. 23924
LICENSED
PROFESSIONAL ENGINEER
01/06/23

MTS ENGINEERING P.L.L.C.
BER:2386985
Expires 3/31/23

IT IS A VIOLATION OF LAW FOR ANY PERSON, UNLESS THEY ARE ACTING UNDER THE DIRECTION OF A LICENSED PROFESSIONAL ENGINEER, TO ALTER THIS DOCUMENT.

DRAWN BY:	CHECKED BY:	APPROVED BY:
MEH	RMC	RMC

RFDS REV #: 1.0

CONSTRUCTION DOCUMENTS

SUBMITTALS

REV	DATE	DESCRIPTION
A	6/2/22	ISSUED FOR REVIEW
0	6/14/22	ISSUED FOR CONSTRUCTION
1	01/06/23	ISSUED FOR CONSTRUCTION

A&E PROJECT NUMBER
164076.001.01

DISH Wireless L.L.C. PROJECT INFORMATION
BOBOS00068C
26 MELL ROAD
LISBON, CT 06351

SHEET TITLE
EQUIPMENT PAD AND H-FRAME DETAILS

SHEET NUMBER
A-3

CHARLES INDUSTRY HEX CUBE-PM639155N4	
DIMENSIONS (HxWxD)	74"x32"x32"
POWER PLANT	-48VDC ABB/600W
TOTAL WEIGHT (EMPTY)	408 lbs

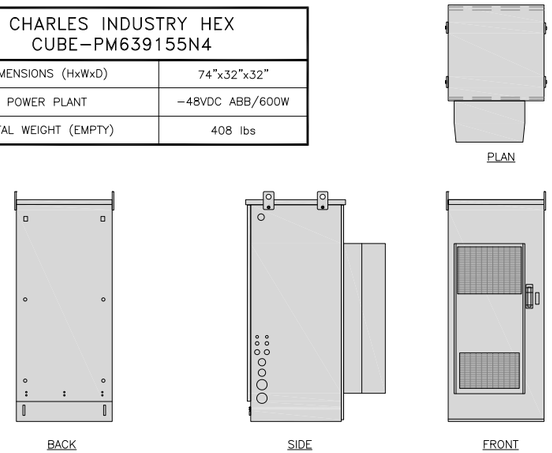

CABINET DETAIL — NO SCALE — 1

RAYCAP PPC RDIAC-2465-P-240-MTS	
ENCLOSURE DIMENSIONS (HxWxD):	39"x22.855"x12.593
WEIGHT:	80 lbs
OPERATING AC VOLTAGE	240/120 1 PHASE 3W+G

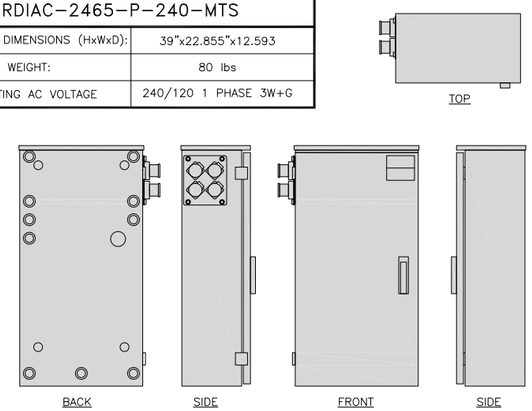

POWER PROTECTION CABINET (PPC) DETAIL — NO SCALE — 2

SQUARE D SAFETY SWITCHES D224NRB	
ENCLOSURE DIM (HxWxD)	29.25"x19.00"x8.50"
ENCLOSURE TYPE	NEMA 3R RAINPROOF
UL LISTED	FILE E-2875

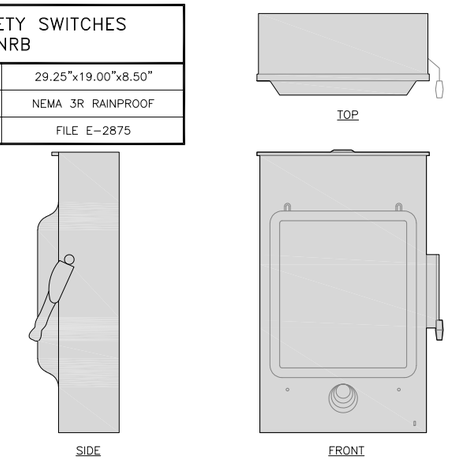

SAFETY SWITCH DETAIL — NO SCALE — 3

EATON METER SOCKET UNRRS213BEUSE	
DIMENSIONS (HxWxD)	16"x12"x6"
TYPE	RING
AMPERAGE RATING	200 CONT. AMP
WEIGHT	18 lbs

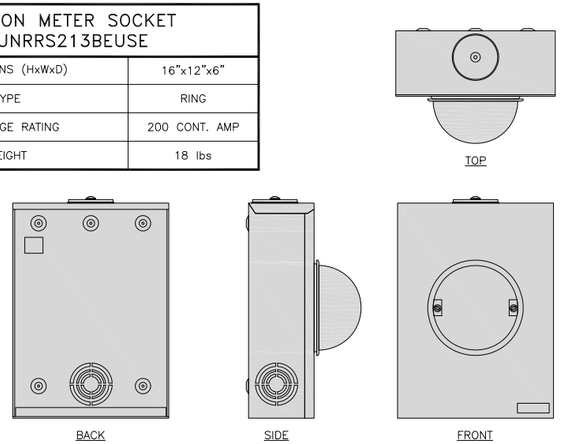

METER BANK DETAIL — NO SCALE — 4

CIENA 3931 FIBER NID ENCLOSURE	
DIMENSIONS (HxWxD)	17"x16.8"x7"
WEIGHT	28.6 lbs

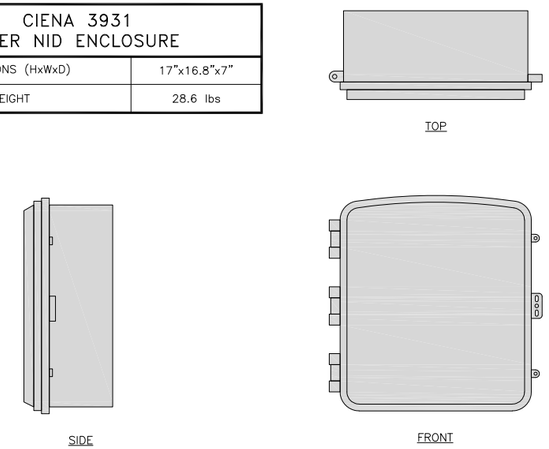

FIBER NID ENCLOSURE DETAIL — NO SCALE — 5

CHARLES CFIT-PF2020DSH1 FIBER TELCO ENCLOSURE	
ENCLOSURE DIMS (HxWxD)	20"x20"x9"
ENCLOSURE WEIGHT	20 lbs
MOUNTING	WALL
COMPLIANCE	TYPE 4

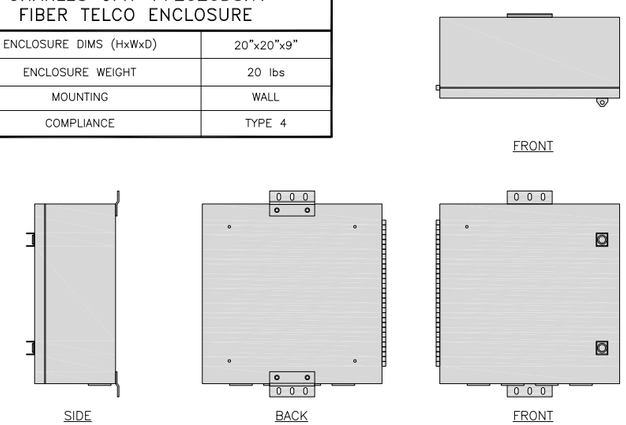

FIBER TELCO ENCLOSURE DETAIL — NO SCALE — 6

COMMSCOPE WB-K110-B WAVEGUIDE BRIDGE KIT	
DIMENSIONS (HxL)	160"x10'
WEIGHT/ VOLUME	325.0 LBS
CABLE RUN (QTY)	12

INCLUDED PRODUCTS:	
	WB-T12-3 TRAPEZE KIT, 3 RUNGS
	WB-LB12-3 SUPPORT BRACKET
	MF-130 DIRECT BURIAL PIPE COLUMN, 13'-4"

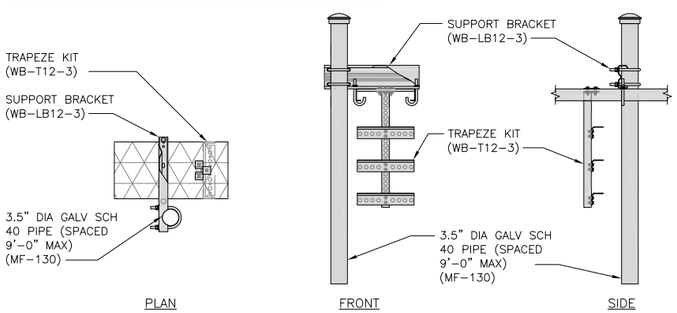

ICE BRIDGE DETAIL — NO SCALE — 7

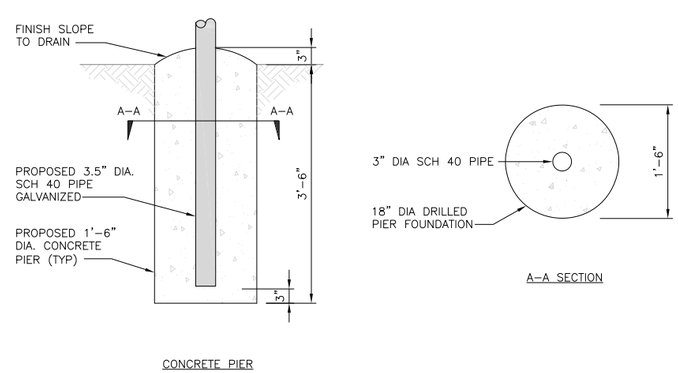

TYPICAL ICE BRIDGE CONCRETE PIER DETAIL — NO SCALE — 8

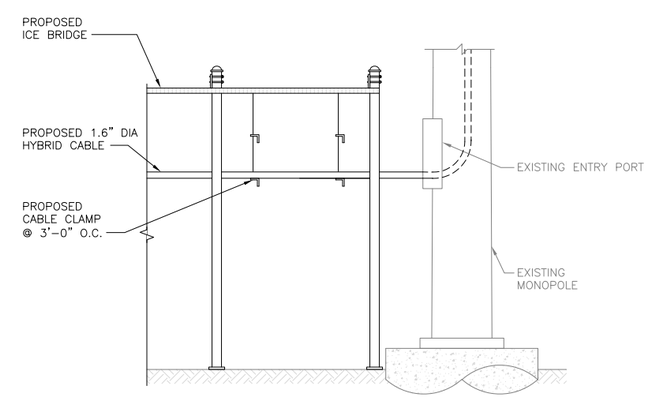

HYBRID CABLE RUN — NO SCALE — 9

dish wireless

5701 SOUTH SANTA FE DRIVE
LITTLETON, CO 80120

SBA

8051 CONGRESS AVENUE
BOCA RATON, FL 33487

B+T GRP
1717 S. BOULDER
SUITE 300
TULSA, OK 74119
PH: (918) 587-4630
www.btgrp.com

STATE OF CONNECTICUT
CHAD MILLER
No. 23924
LICENSED
PROFESSIONAL ENGINEER
01/06/23

MTS ENGINEERING P.L.L.C.
BER:2386985
Expires 3/31/23

IT IS A VIOLATION OF LAW FOR ANY PERSON, UNLESS THEY ARE ACTING UNDER THE DIRECTION OF A LICENSED PROFESSIONAL ENGINEER, TO ALTER THIS DOCUMENT.

DRAWN BY:	CHECKED BY:	APPROVED BY:
MEH	RMC	RMC

RFDS REV #: 1.0

CONSTRUCTION DOCUMENTS

SUBMITTALS

REV	DATE	DESCRIPTION
A	6/2/22	ISSUED FOR REVIEW
0	6/14/22	ISSUED FOR CONSTRUCTION
1	01/06/23	ISSUED FOR CONSTRUCTION

A&E PROJECT NUMBER
164076.001.01

DISH Wireless L.L.C. PROJECT INFORMATION
BOBOS00068C
26 MELL ROAD
LISBON, CT 06351

SHEET TITLE
EQUIPMENT DETAILS

SHEET NUMBER
A-4

PCTEL GPSGL-TMG-SPI-40NCB	
DIMENSIONS (DIAxH) MM/INCH	81x184mm 3.2"x7.25"
WEIGHT W/ACCESSORIES	075 lbs
CONNECTOR	N-FEMALE
FREQUENCY RANGE	1590 ± 30MHz

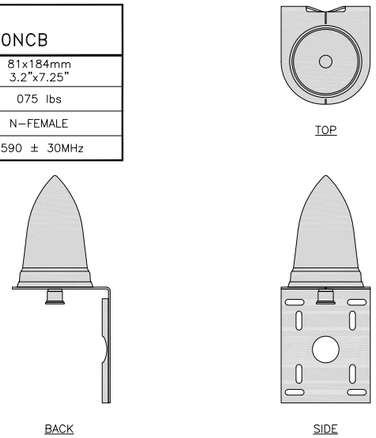

GPS DETAIL — NO SCALE — 1

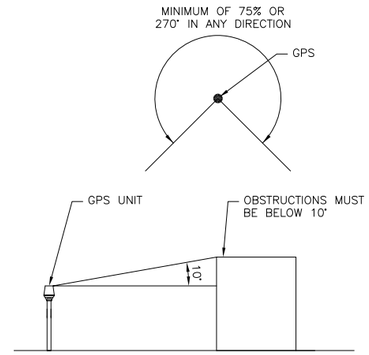

GPS MINIMUM SKY VIEW REQUIREMENTS — NO SCALE — 2

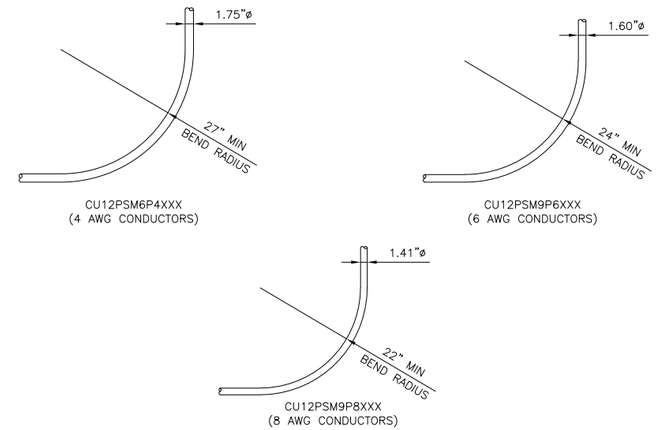

CABLES UNLIMITED HYBRID CABLE MINIMUM BEND RADIUSES — NO SCALE — 3

NOT USED — NO SCALE — 4

NOT USED — NO SCALE — 5

NOT USED — NO SCALE — 6

NOT USED — NO SCALE — 7

NOT USED — NO SCALE — 8

NOT USED — NO SCALE — 9

dish wireless
5701 SOUTH SANTA FE DRIVE
LITTLETON, CO 80120

SBA
8051 CONGRESS AVENUE
BOCA RATON, FL 33487

B+T GRP
1717 S. BOULDER
SUITE 300
TULSA, OK 74119
PH: (918) 587-4630
www.btgrp.com

STATE OF CONNECTICUT — CHAD MILLE — No. 23924 — LICENSED PROFESSIONAL ENGINEER
01/06/23

MTS ENGINEERING P.L.L.C.
BER:2386985
Expires 3/31/23

IT IS A VIOLATION OF LAW FOR ANY PERSON, UNLESS THEY ARE ACTING UNDER THE DIRECTION OF A LICENSED PROFESSIONAL ENGINEER, TO ALTER THIS DOCUMENT.

DRAWN BY:	CHECKED BY:	APPROVED BY:
MEH	RMC	RMC

RFDS REV #: 1.0

CONSTRUCTION DOCUMENTS

SUBMITTALS

REV	DATE	DESCRIPTION
A	6/2/22	ISSUED FOR REVIEW
0	6/14/22	ISSUED FOR CONSTRUCTION
1	01/06/23	ISSUED FOR CONSTRUCTION

A&E PROJECT NUMBER
164076.001.01

DISH Wireless L.L.C.
PROJECT INFORMATION
BOBOS00068C
26 MELL ROAD
LISBON, CT 06351

SHEET TITLE
EQUIPMENT DETAILS

SHEET NUMBER
A-5

FUJITSU TRIPLE BAND TA08025-B605	
DIMENSIONS (HxWxD)	14.9"x15.7"x9"
WEIGHT	74.95 lbs
CONNECTOR TYPE	4.3-10 RF CONNECTOR
POWER SUPPLY	DC -58~-36V

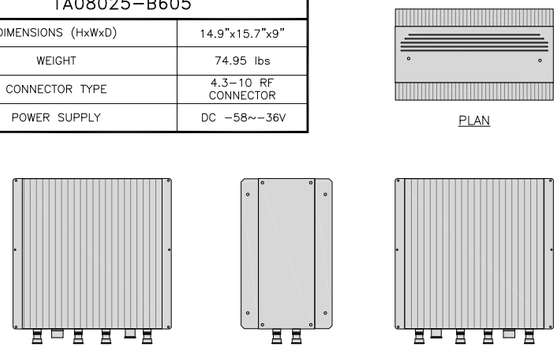

RRH DETAIL — NO SCALE — 1

FUJITSU DUAL BAND TA08025-B604	
DIMENSIONS (HxWxD)	14.9"x15.7"x7.8"
WEIGHT	63.9 lbs
CONNECTOR TYPE	4.3-10 RF CONNECTOR
POWER SUPPLY	DC -58~-36V

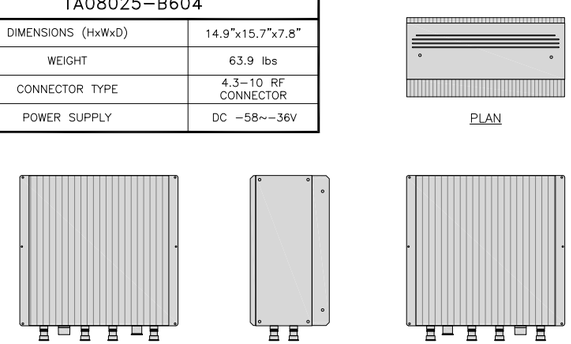

RRH DETAIL — NO SCALE — 2

COMMSCOPE RR-FA2 LARGE STABILIZER	
DIMENSIONS (HxWxD)	16.4"x8.5"x18"
WEIGHT	39.2 lbs

DESIGN NOTES:
MOUNT WILL FIT LEGS UP TO:
- 5.6" ROUND
- 6.0" 60° ANGLE
- 4.5" 90° ANGLE

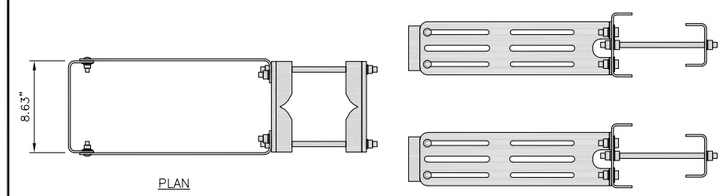

NOTE:
OR DISH Wireless L.L.C.
APPROVED EQUIVALENT

RRH MOUNT DETAIL — NO SCALE — 3

COMMSCOPE FFVV-65B-R2	
DIMENSIONS (HxWxD)(MM/IN)	1828x498x197 72"x19.6"x7.8"
RF CONNECTOR INTERFACE	4.3-10 FEMALE
WEIGHT	70.8 lbs
WEIGHT WITH BRACKETS	98.1 lbs

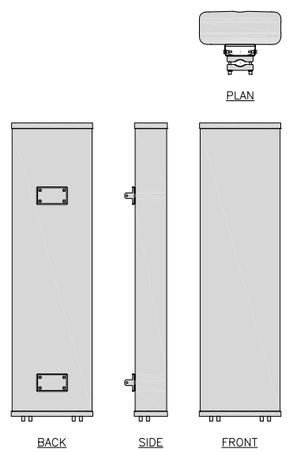

ANTENNA DETAIL — NO SCALE — 4

NOT USED — NO SCALE — 5

M04 MOUNTING BRACKET HPA-33R-BUU-H4-K	
WIDTH	5"
DEPTH	2"
HEIGHT	8"
TOTAL WEIGHT	1.5 lbs
HOUSING MATERIAL	ASA/ABS/ALUMINUM
RADOME COLOR	LIGHT GRAY
CONNECTOR	1x8-PIN DAISY CHAIN

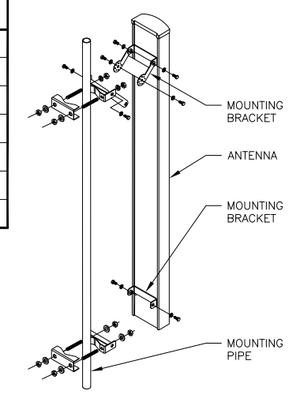

NOTE:
OR DISH Wireless L.L.C.
APPROVED EQUIVALENT

ANTENNA MOUNTING DETAIL — NO SCALE — 6

RAYCAP RDIDC-9181-PF-48 DC SURGE PROTECTION (OVP)	
DIMENSIONS (HxWxD)	18.98"x14.39"x8.15"
WEIGHT	21.82 LBS

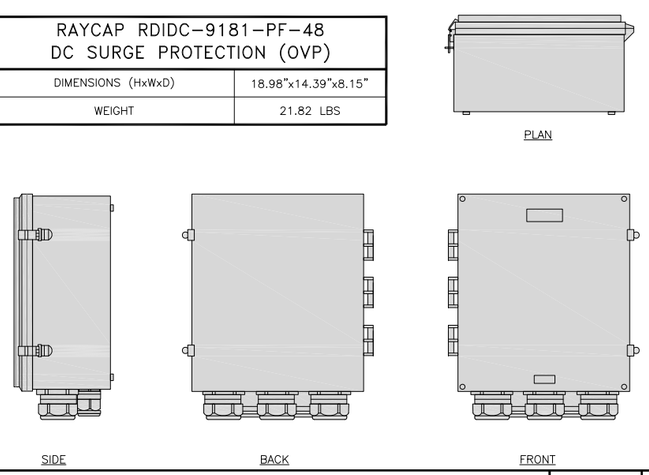

SURGE SUPPRESSION DETAIL (OVP) — NO SCALE — 7

COMMSCOPE XP-2040 CROSSOVER PLATE	
DIMENSIONS (HxW)	10"x12"
WEIGHT	11 lbs

NOTE:
OR DISH Wireless L.L.C.
APPROVED EQUIVALENT

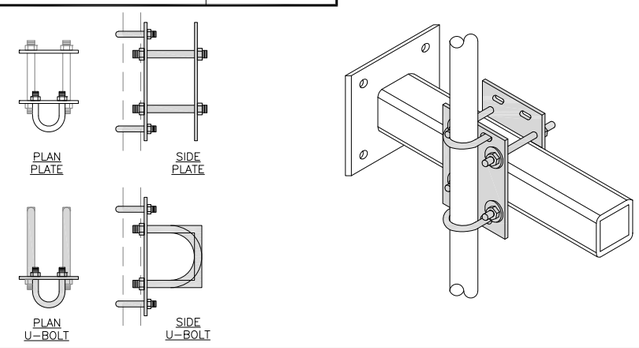

RRH/OVP MOUNT DETAIL — NO SCALE — 8

COMMSCOPE MC-PK8-DSH	
FACE WIDTH	96"
WEIGHT	1373.08 lbs
NOTE: 15" TO 38" O.D.	

NOTE:
OR DISH Wireless L.L.C.
APPROVED EQUIVALENT

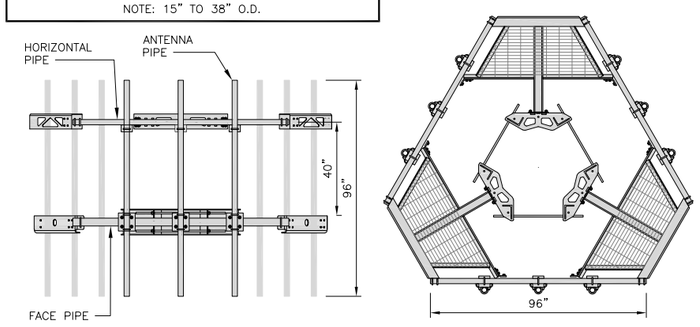

ANTENNA PLATFORM DETAIL — NO SCALE — 9

dish wireless
5701 SOUTH SANTA FE DRIVE
LITTLETON, CO 80120

SBA
8051 CONGRESS AVENUE
BOCA RATON, FL 33487

B+T GRP
1717 S. BOULDER
SUITE 300
TULSA, OK 74119
PH: (918) 587-4630
www.btgrp.com

STATE OF CONNECTICUT — CHAD MILLER — No. 23924 — LICENSED PROFESSIONAL ENGINEER
01/06/23

MTS ENGINEERING P.L.L.C.
BER:2386985
Expires 3/31/23

IT IS A VIOLATION OF LAW FOR ANY PERSON, UNLESS THEY ARE ACTING UNDER THE DIRECTION OF A LICENSED PROFESSIONAL ENGINEER, TO ALTER THIS DOCUMENT.

DRAWN BY:	CHECKED BY:	APPROVED BY:
MEH	RMC	RMC

RFDS REV #: 1.0

CONSTRUCTION DOCUMENTS

SUBMITTALS

REV	DATE	DESCRIPTION
A	6/2/22	ISSUED FOR REVIEW
0	6/14/22	ISSUED FOR CONSTRUCTION
1	01/06/23	ISSUED FOR CONSTRUCTION

A&E PROJECT NUMBER
164076.001.01

DISH Wireless L.L.C. PROJECT INFORMATION
BOBOS00068C
26 MELL ROAD
LISBON, CT 06351

SHEET TITLE
EQUIPMENT DETAILS

SHEET NUMBER
A-6

NOTES

1. CONTRACTOR SHALL FIELD VERIFY ALL PROPOSED UNDERGROUND UTILITY CONDUIT ROUTE.
2. ANTENNAS AND MOUNTS OMITTED FOR CLARITY.
3. THE GROUND LEASE PROVIDES BROAD/BLANKET UTILITY RIGHTS. "PWR" AND "FBR" PATH DEPICTED ON A-1 AND E-1 ARE BASED ON BEST AVAILABLE INFORMATION INCLUDING BUT NOT LIMITED TO FIELD VERIFICATION, PRIOR PROJECT DOCUMENTATION AND OTHER REAL PROPERTY RIGHTS DOCUMENTS. WHEN INSTALLING THE UTILITIES PLEASE LOCATE AND FOLLOW EXISTING PATH. IF EXISTING PATH IS NOT AN OPTION, PLEASE NOTIFY TOWER OWNER AS FURTHER COORDINATION MAY BE NEEDED.

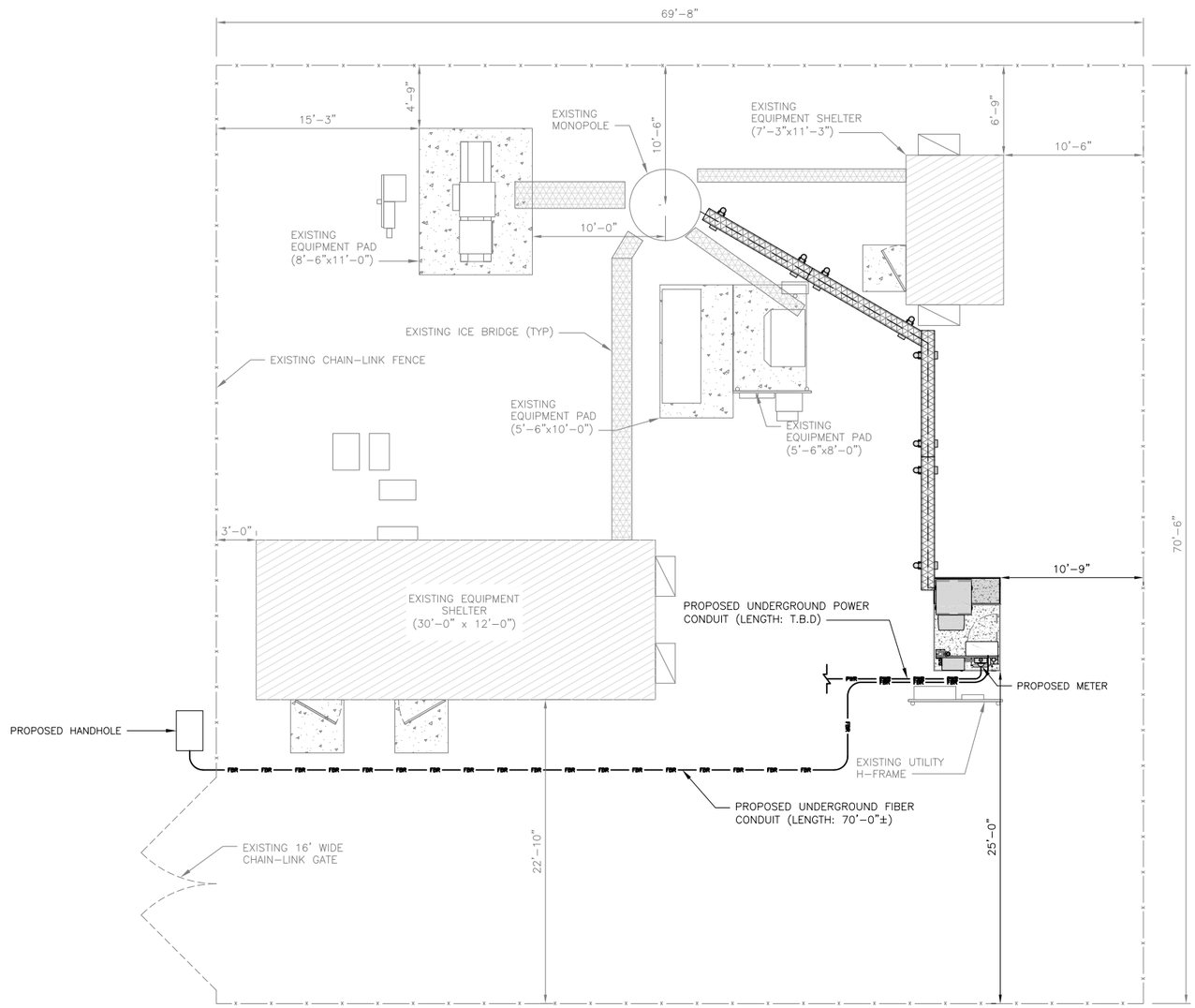

UTILITY ROUTE PLAN

6' 4' 2' 0 5' 10'
3/16"=1'-0"

1

DC POWER WIRING SHALL BE COLOR CODED AT EACH END FOR IDENTIFYING +24V AND −48V CONDUCTORS. RED MARKINGS SHALL IDENTIFY +24V AND BLUE MARKINGS SHALL IDENTIFY −48V.

1. CONTRACTOR SHALL INSPECT THE EXISTING CONDITIONS PRIOR TO SUBMITTING A BID. ANY QUESTIONS ARISING DURING THE BID PERIOD IN REGARDS TO THE CONTRACTOR'S FUNCTIONS, THE SCOPE OF WORK, OR ANY OTHER ISSUE RELATED TO THIS PROJECT SHALL BE BROUGHT UP DURING THE BID PERIOD WITH THE PROJECT MANAGER FOR CLARIFICATION, NOT AFTER THE CONTRACT HAS BEEN AWARDED.
2. ALL ELECTRICAL WORK SHALL BE DONE IN ACCORDANCE WITH CURRENT NATIONAL ELECTRICAL CODES AND ALL STATE AND LOCAL CODES, LAWS, AND ORDINANCES. PROVIDE ALL COMPONENTS AND WIRING SIZES AS REQUIRED TO MEET NEC STANDARDS.
3. LOCATION OF EQUIPMENT, CONDUIT AND DEVICES SHOWN ON THE DRAWINGS ARE APPROXIMATE AND SHALL BE COORDINATED WITH FIELD CONDITIONS PRIOR TO CONSTRUCTION.
4. CONDUIT ROUGH-IN SHALL BE COORDINATED WITH THE MECHANICAL EQUIPMENT TO AVOID LOCATION CONFLICTS. VERIFY WITH THE MECHANICAL EQUIPMENT CONTRACTOR AND COMPLY AS REQUIRED.
5. CONTRACTOR SHALL PROVIDE ALL BREAKERS, CONDUITS AND CIRCUITS AS REQUIRED FOR A COMPLETE SYSTEM.
6. CONTRACTOR SHALL PROVIDE PULL BOXES AND JUNCTION BOXES AS REQUIRED BY THE NEC ARTICLE 314.
7. CONTRACTOR SHALL PROVIDE ALL STRAIN RELIEF AND CABLE SUPPORTS FOR ALL CABLE ASSEMBLIES. INSTALLATION SHALL BE IN ACCORDANCE WITH MANUFACTURER'S SPECIFICATIONS AND RECOMMENDATIONS.
8. ALL DISCONNECTS AND CONTROLLING DEVICES SHALL BE PROVIDED WITH ENGRAVED PHENOLIC NAMEPLATES INDICATING EQUIPMENT CONTROLLED, BRANCH CIRCUITS INSTALLED ON, AND PANEL FIELD LOCATIONS FED FROM.
9. INSTALL AN EQUIPMENT GROUNDING CONDUCTOR IN ALL CONDUITS PER THE SPECIFICATIONS AND NEC 250. THE EQUIPMENT GROUNDING CONDUCTORS SHALL BE BONDED AT ALL JUNCTION BOXES, PULL BOXES, AND ALL DISCONNECT SWITCHES, AND EQUIPMENT CABINETS.
10. ALL NEW MATERIAL SHALL HAVE A U.L. LABEL.
11. PANEL SCHEDULE LOADING AND CIRCUIT ARRANGEMENTS REFLECT POST-CONSTRUCTION EQUIPMENT.
12. CONTRACTOR SHALL BE RESPONSIBLE FOR AS-BUILT PANEL SCHEDULE AND SITE DRAWINGS.
13. ALL TRENCHES IN COMPOUND TO BE HAND DUG

ELECTRICAL NOTES

NO SCALE

2

dish wireless
5701 SOUTH SANTA FE DRIVE
LITTLETON, CO 80120

SBA
8051 CONGRESS AVENUE
BOCA RATON, FL 33487

B+T GRP
1717 S. BOULDER
SUITE 300
TULSA, OK 74119
PH: (918) 587-4630
www.btgrp.com

STATE OF CONNECTICUT
CHAD MILLER
No. 23924
LICENSED
PROFESSIONAL ENGINEER
01/06/23

MTS ENGINEERING P.L.L.C.
BER:2386985
Expires 3/31/23

IT IS A VIOLATION OF LAW FOR ANY PERSON, UNLESS THEY ARE ACTING UNDER THE DIRECTION OF A LICENSED PROFESSIONAL ENGINEER, TO ALTER THIS DOCUMENT.

DRAWN BY:	CHECKED BY:	APPROVED BY:
MEH	RMC	RMC

RFDS REV #: 1.0

CONSTRUCTION DOCUMENTS

SUBMITTALS

REV	DATE	DESCRIPTION
A	6/2/22	ISSUED FOR REVIEW
0	6/14/22	ISSUED FOR CONSTRUCTION
1	01/06/23	ISSUED FOR CONSTRUCTION

A&E PROJECT NUMBER
164076.001.01

DISH Wireless L.L.C.
PROJECT INFORMATION
BOBOS00068C
26 MELL ROAD
LISBON, CT 06351

SHEET TITLE
ELECTRICAL/FIBER ROUTE PLAN AND NOTES

SHEET NUMBER
E-1

CARLON EXPANSION FITTINGS

COUPLING END PART#	MALE TERMINAL ADAPTER END PART#	SIZE	STD CTN QTY.	TRAVEL LENGTH
E945D	E945DX	1/2"	20	4"
E945E	E945EX	3/4"	15	4"
E945F	E945FX	1"	10	4"
E945G	E945GX	1 1/4"	5	4"
E945H	E945HX	1 1/2"	5	4"
E945J	E945JX	2"	15	8"
E945K	E945KX	2 1/2"	10	8"
E945L	E945LX	3"	10	8"
E945M	E945MX	3 1/2"	5	8"
E945N	E945NX	4"	5	8"
E945P	E945PX	5"	1	8"
E945R	E945RX	6"	1	8"

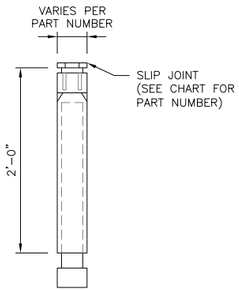

NOTE:
CONTRACTOR TO INSTALL EXPANSION FITTING SLIP JOINT AT METER CENTER CONDUIT TERMINATION, AS PER LOCAL UTILITY POLICY, ORDINANCE AND/OR SPECIFIED REQUIREMENT.

EXPANSION JOINT DETAIL | NO SCALE | 1

TRENCHING NOTES

1. CONTRACTOR SHALL RESTORE THE TRENCH TO ITS ORIGINAL CONDITIONS BY EITHER SEEDING OR SODDING GRASS AREAS, OR REPLACING ASPHALT OR CONCRETE AREAS TO ITS ORIGINAL CROSS SECTION.
2. TRENCHING SAFETY; INCLUDING, BUT NOT LIMITED TO SOIL CLASSIFICATION, SLOPING, AND SHORING, SHALL BE GOVERNED BY THE CURRENT OSHA TRENCHING AND EXCAVATION SAFETY STANDARDS.
3. ALL CONDUITS SHALL BE INSTALLED IN COMPLIANCE WITH THE CURRENT NATIONAL ELECTRIC CODE (NEC) OR AS REQUIRED BY THE LOCAL JURISDICTION, WHICHEVER IS THE MOST STRINGENT.

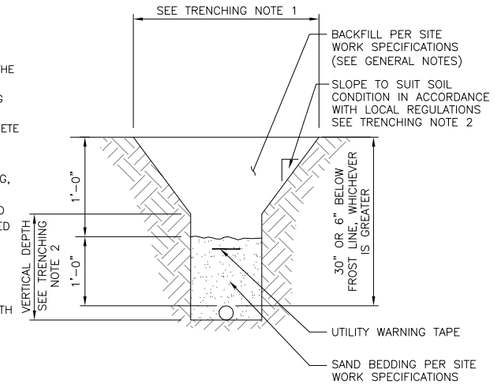

TYPICAL UNDERGROUND TRENCH DETAIL | NO SCALE | 2

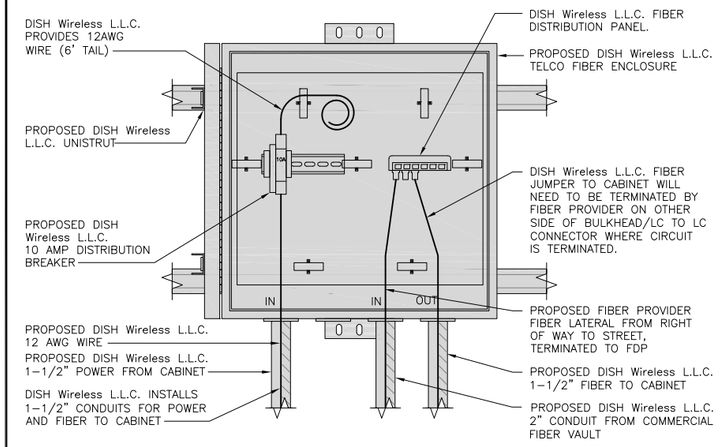

DARK TELCO BOX – INTERIOR WIRING LAYOUT | NO SCALE | 3

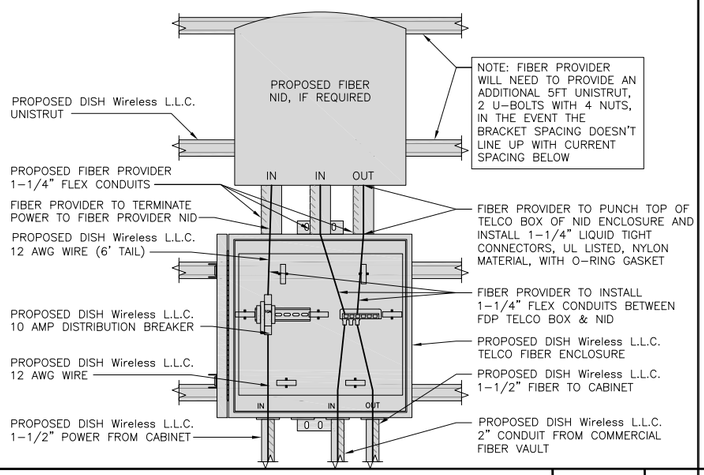

LIT TELCO BOX – INTERIOR WIRING LAYOUT (OPTIONAL) | NO SCALE | 4

NOT USED | NO SCALE | 5

NOT USED | NO SCALE | 6

NOT USED | NO SCALE | 7

NOT USED | NO SCALE | 8

NOT USED | NO SCALE | 9

dish wireless
5701 SOUTH SANTA FE DRIVE
LITTLETON, CO 80120

SBA
8051 CONGRESS AVENUE
BOCA RATON, FL 33487

B+T GRP
1717 S. BOULDER
SUITE 300
TULSA, OK 74119
PH: (918) 587-4630
www.btgrp.com

STATE OF CONNECTICUT
CHAD MILLER
No. 23924
LICENSED
PROFESSIONAL ENGINEER
01/06/23
MTS ENGINEERING P.L.L.C.
BER:2386985
Expires 3/31/23

IT IS A VIOLATION OF LAW FOR ANY PERSON, UNLESS THEY ARE ACTING UNDER THE DIRECTION OF A LICENSED PROFESSIONAL ENGINEER, TO ALTER THIS DOCUMENT.

DRAWN BY:	CHECKED BY:	APPROVED BY:
MEH	RMC	RMC

RFDS REV #: 1.0

CONSTRUCTION DOCUMENTS

SUBMITTALS

REV	DATE	DESCRIPTION
A	6/2/22	ISSUED FOR REVIEW
0	6/14/22	ISSUED FOR CONSTRUCTION
1	01/06/23	ISSUED FOR CONSTRUCTION

A&E PROJECT NUMBER
164076.001.01

DISH Wireless L.L.C.
PROJECT INFORMATION
BOBOS00068C
26 MELL ROAD
LISBON, CT 06351

SHEET TITLE
ELECTRICAL DETAILS

SHEET NUMBER
E-2

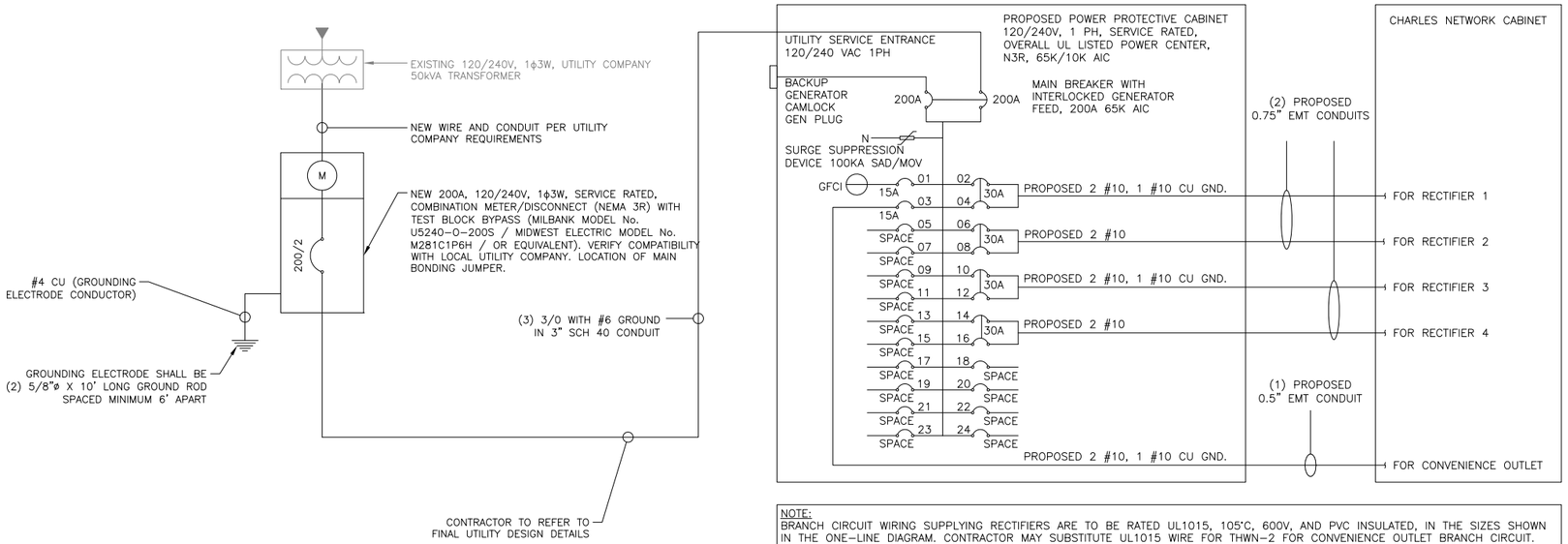

NOTE:
BRANCH CIRCUIT WIRING SUPPLYING RECTIFIERS ARE TO BE RATED UL1015, 105°C, 600V, AND PVC INSULATED, IN THE SIZES SHOWN IN THE ONE-LINE DIAGRAM. CONTRACTOR MAY SUBSTITUTE UL1015 WIRE FOR THHN-2 FOR CONVENIENCE OUTLET BRANCH CIRCUIT.

BREAKERS REQUIRED:
(4) 30A, 2P BREAKER – SQUARE D P/N:QO230
(1) 15A, 1P BREAKER – SQUARE D P/N:QO115

NOTES

THE ENGINEER OF RECORD HAS PERFORMED ALL REQUIRED SHORT CIRCUIT CALCULATIONS AND THE AIC RATINGS FOR EACH DEVICE IS ADEQUATE TO PROTECT THE EQUIPMENT AND THE ELECTRICAL SYSTEM.

THE ENGINEER OF RECORD HAS PERFORMED ALL REQUIRED VOLTAGE DROP CALCULATIONS AND ALL BRANCH CIRCUIT AND FEEDERS COMPLY WITH THE NEC (LISTED ON T-1) ARTICLE 210.19(A)(1) FPN NO. 4.

THE (2) CONDUITS WITH (4) CURRENT CARRYING CONDUCTORS EACH, SHALL APPLY THE ADJUSTMENT FACTOR OF 80% PER 2014/17 NEC TABLE 310.15(B)(3)(a) OR 2020 NEC TABLE 310.15(C)(1) FOR UL1015 WIRE.

#12 FOR 15A-20A/1P BREAKER: 0.8 x 30A = 24.0A
#10 FOR 25A-30A/2P BREAKER: 0.8 x 40A = 32.0A
#8 FOR 35A-40A/2P BREAKER: 0.8 x 55A = 44.0A
#6 FOR 45A-60A/2P BREAKER: 0.8 x 75A = 60.0A

CONDUIT SIZING: AT 40% FILL PER NEC CHAPTER 9, TABLE 4, ARTICLE 358.
0.5" CONDUIT – 0.122 SQ. IN AREA
0.75" CONDUIT – 0.213 SQ. IN AREA
2.0" CONDUIT – 1.316 SQ. IN AREA
3.0" CONDUIT – 2.907 SQ. IN AREA

CABINET CONVENIENCE OUTLET CONDUCTORS (1 CONDUIT): USING THWN-2, CU.

#10 – 0.0211 SQ. IN X 2 = 0.0422 SQ. IN
#10 – 0.0211 SQ. IN X 1 = 0.0211 SQ. IN <GROUND
TOTAL = 0.0633 SQ. IN

0.5" EMT CONDUIT IS ADEQUATE TO HANDLE THE TOTAL OF (3) WIRES, INCLUDING GROUND WIRE, AS INDICATED ABOVE.

RECTIFIER CONDUCTORS (2 CONDUITS): USING UL1015, CU.

#10 – 0.0266 SQ. IN X 4 = 0.1064 SQ. IN
#10 – 0.0082 SQ. IN X 1 = 0.0082 SQ. IN <BARE GROUND
TOTAL = 0.1146 SQ. IN

0.75" EMT CONDUIT IS ADEQUATE TO HANDLE THE TOTAL OF (5) WIRES, INCLUDING GROUND WIRE, AS INDICATED ABOVE.

PPC FEED CONDUCTORS (1 CONDUIT): USING THWN, CU.

3/0 – 0.2679 SQ. IN X 3 = 0.8037 SQ. IN
#6 – 0.0507 SQ. IN X 1 = 0.0507 SQ. IN <GROUND
TOTAL = 0.8544 SQ. IN

3.0" SCH 40 PVC CONDUIT IS ADEQUATE TO HANDLE THE TOTAL OF (4) WIRES, INCLUDING GROUND WIRE, AS INDICATED ABOVE.

PPC ONE-LINE DIAGRAM — NO SCALE — 1

PROPOSED CHARLES PANEL SCHEDULE

LOAD SERVED	VOLT AMPS (WATTS) L1	VOLT AMPS (WATTS) L2	TRIP	CKT #	PHASE		CKT #	TRIP	VOLT AMPS (WATTS) L1	VOLT AMPS (WATTS) L2	LOAD SERVED
PPC GFCI OUTLET	180		15A	1	A		2	30A	2880		ABB/GE INFINITY RECTIFIER 1
CHARLES GFCI OUTLET		180	15A	3	B		4			2880	
-SPACE-				5	A		6	30A	2880		ABB/GE INFINITY RECTIFIER 2
-SPACE-				7	B		8			2880	
-SPACE-				9	A		10	30A	2880		ABB/GE INFINITY RECTIFIER 3
-SPACE-				11	B		12			2880	
-SPACE-				13	A		14	30A	2880		ABB/GE INFINITY RECTIFIER 4
-SPACE-				15	B		16			2880	
-SPACE-				17	A		18				-SPACE-
-SPACE-				19	B		20				-SPACE-
-SPACE-				21	A		22				-SPACE-
-SPACE-				23	B		24				-SPACE-
VOLTAGE AMPS	180	180							11520	11520	
200A MCB, 1ϕ, 24 SPACE, 120/240V				L1		L2					
MB RATING: 65,000 AIC				11700		11700		VOLTAGE AMPS			
				98		98		AMPS			
				98				MAX AMPS			
				123				MAX 125%			

PANEL SCHEDULE — NO SCALE — 2

NOT USED — NO SCALE — 3

dish wireless
5701 SOUTH SANTA FE DRIVE
LITTLETON, CO 80120

SBA
8051 CONGRESS AVENUE
BOCA RATON, FL 33487

B+T GRP
1717 S. BOULDER
SUITE 300
TULSA, OK 74119
PH: (918) 587-4630
www.btgrp.com

STATE OF CONNECTICUT — CHAD MILLE — No. 23924 — LICENSED PROFESSIONAL ENGINEER
01/06/23

MTS ENGINEERING P.L.L.C.
BER:2386985
Expires 3/31/23

IT IS A VIOLATION OF LAW FOR ANY PERSON, UNLESS THEY ARE ACTING UNDER THE DIRECTION OF A LICENSED PROFESSIONAL ENGINEER, TO ALTER THIS DOCUMENT.

DRAWN BY:	CHECKED BY:	APPROVED BY:
MEH	RMC	RMC

RFDS REV #: 1.0

CONSTRUCTION DOCUMENTS

SUBMITTALS

REV	DATE	DESCRIPTION
A	6/2/22	ISSUED FOR REVIEW
0	6/14/22	ISSUED FOR CONSTRUCTION
1	01/06/23	ISSUED FOR CONSTRUCTION

A&E PROJECT NUMBER
164076.001.01

DISH Wireless L.L.C.
PROJECT INFORMATION
BOBOS00068C
26 MELL ROAD
LISBON, CT 06351

SHEET TITLE
ELECTRICAL ONE-LINE, FAULT CALCS & PANEL SCHEDULE

SHEET NUMBER
E-3

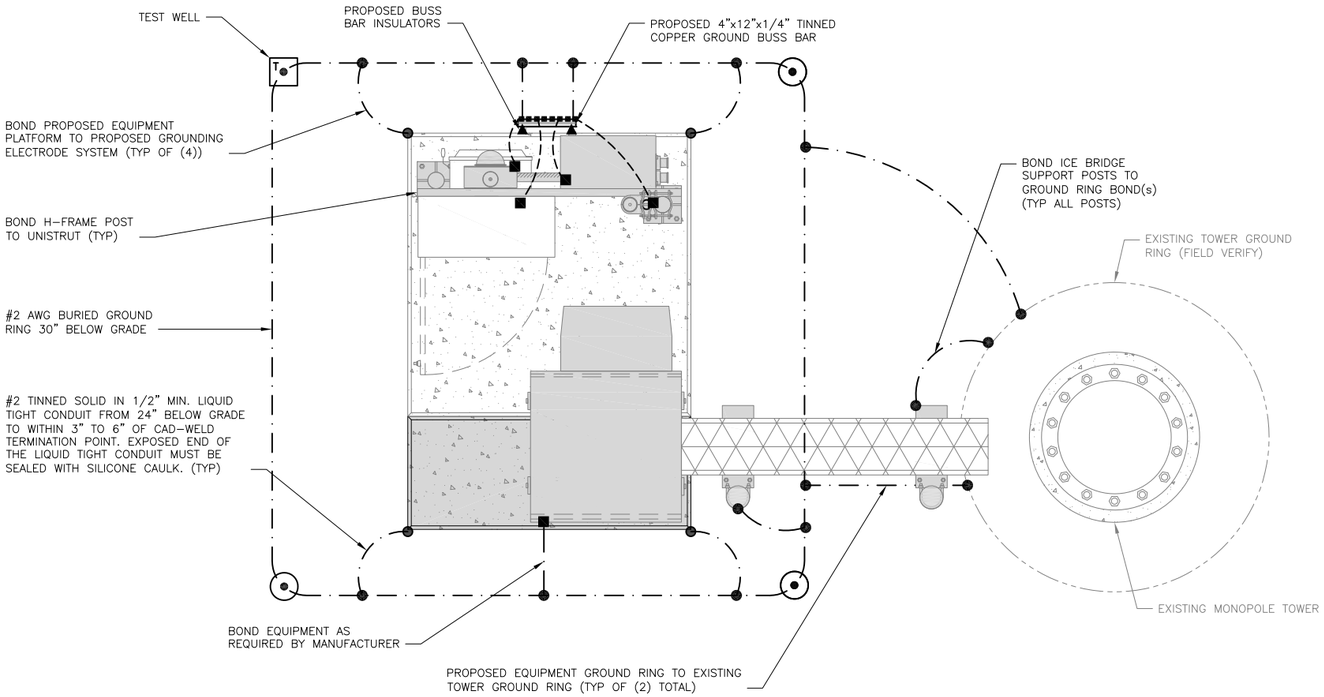

TYPICAL EQUIPMENT GROUNDING PLAN | NO SCALE | 1

NOTES

ANTENNAS AND OVP SHOWN ARE GENERIC AND NOT REFERENCING TO A SPECIFIC MANUFACTURER. THIS LAYOUT IS FOR REFERENCE PURPOSES ONLY

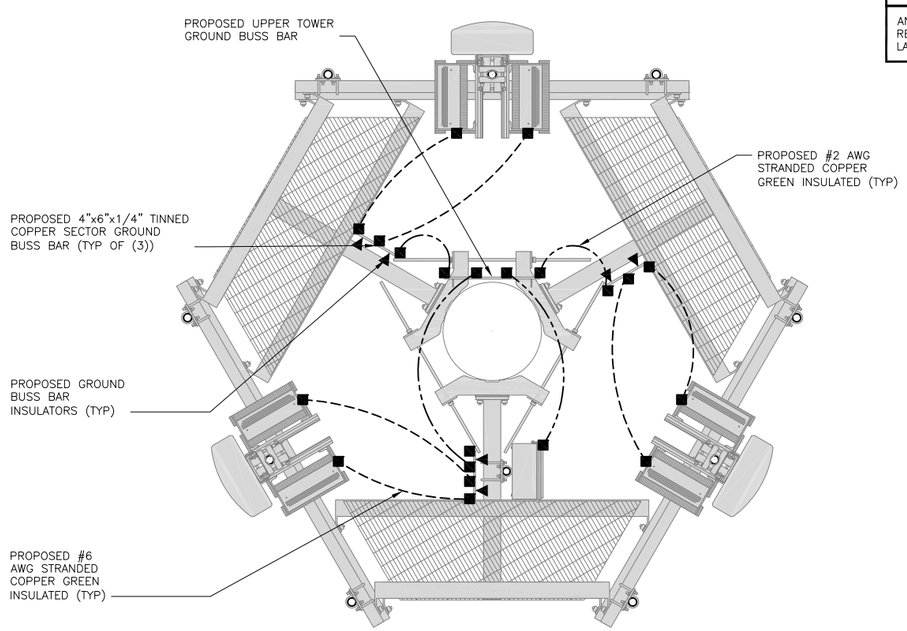

TYPICAL ANTENNA GROUNDING PLAN | NO SCALE | 2

- EXOTHERMIC CONNECTION
- MECHANICAL CONNECTION
- GROUND BUS BAR
- GROUND ROD
- TEST GROUND ROD WITH INSPECTION SLEEVE
- #6 AWG STRANDED & INSULATED
- #2 AWG SOLID COPPER TINNED
- #2 AWG STRANDED & INSULATED
- BUSS BAR INSULATOR

GROUNDING LEGEND

1. GROUNDING IS SHOWN DIAGRAMMATICALLY ONLY.
2. CONTRACTOR SHALL GROUND ALL EQUIPMENT AS A COMPLETE SYSTEM. GROUNDING SHALL BE IN COMPLIANCE WITH NEC SECTION 250 AND DISH Wireless L.L.C. GROUNDING AND BONDING REQUIREMENTS AND MANUFACTURER'S SPECIFICATIONS.
3. ALL GROUND CONDUCTORS SHALL BE COPPER; NO ALUMINUM CONDUCTORS SHALL BE USED.

GROUNDING KEY NOTES

(A) EXTERIOR GROUND RING: #2 AWG SOLID COPPER, BURIED AT A DEPTH OF AT LEAST 30 INCHES BELOW GRADE, OR 6 INCHES BELOW THE FROST LINE AND APPROXIMATELY 24 INCHES FROM THE EXTERIOR WALL OR FOOTING.

(B) TOWER GROUND RING: THE GROUND RING SYSTEM SHALL BE INSTALLED AROUND AN ANTENNA TOWER'S LEGS, AND/OR GUY ANCHORS. WHERE SEPARATE SYSTEMS HAVE BEEN PROVIDED FOR THE TOWER AND THE BUILDING, AT LEAST TWO BONDS SHALL BE MADE BETWEEN THE TOWER RING GROUND SYSTEM AND THE BUILDING RING GROUND SYSTEM USING MINIMUM #2 AWG SOLID COPPER CONDUCTORS.

(C) INTERIOR GROUND RING: #2 AWG STRANDED GREEN INSULATED COPPER CONDUCTOR EXTENDED AROUND THE PERIMETER OF THE EQUIPMENT AREA. ALL NON-TELECOMMUNICATIONS RELATED METALLIC OBJECTS FOUND WITHIN A SITE SHALL BE GROUNDED TO THE INTERIOR GROUND RING WITH #6 AWG STRANDED GREEN INSULATED CONDUCTOR.

(D) BOND TO INTERIOR GROUND RING: #2 AWG SOLID TINNED COPPER WIRE PRIMARY BONDS SHALL BE PROVIDED AT LEAST AT FOUR POINTS ON THE INTERIOR GROUND RING, LOCATED AT THE CORNERS OF THE BUILDING.

(E) GROUND ROD: UL LISTED COPPER CLAD STEEL. MINIMUM 1/2" DIAMETER BY EIGHT FEET LONG. GROUND RODS SHALL BE INSTALLED WITH INSPECTION SLEEVES. GROUND RODS SHALL BE DRIVEN TO THE DEPTH OF GROUND RING CONDUCTOR.

(F) CELL REFERENCE GROUND BAR: POINT OF GROUND REFERENCE FOR ALL COMMUNICATIONS EQUIPMENT FRAMES. ALL BONDS ARE MADE WITH #2 AWG UNLESS NOTED OTHERWISE STRANDED GREEN INSULATED COPPER CONDUCTORS. BOND TO GROUND RING WITH (2) #2 SOLID TINNED COPPER CONDUCTORS.

(G) HATCH PLATE GROUND BAR: BOND TO THE INTERIOR GROUND RING WITH TWO #2 AWG STRANDED GREEN INSULATED COPPER CONDUCTORS. WHEN A HATCH-PLATE AND A CELL REFERENCE GROUND BAR ARE BOTH PRESENT, THE CRGB MUST BE CONNECTED TO THE HATCH-PLATE AND TO THE INTERIOR GROUND RING USING (2) TWO #2 AWG STRANDED GREEN INSULATED COPPER CONDUCTORS EACH.

(H) EXTERIOR CABLE ENTRY PORT GROUND BARS: LOCATED AT THE ENTRANCE TO THE CELL SITE BUILDING. BOND TO GROUND RING WITH A #2 AWG SOLID TINNED COPPER CONDUCTORS WITH AN EXOTHERMIC WELD AND INSPECTION SLEEVE.

(I) TELCO GROUND BAR: BOND TO BOTH CELL REFERENCE GROUND BAR OR EXTERIOR GROUND RING.

(J) FRAME BONDING: THE BONDING POINT FOR TELECOM EQUIPMENT FRAMES SHALL BE THE GROUND BUS THAT IS NOT ISOLATED FROM THE EQUIPMENTS METAL FRAMEWORK.

(K) INTERIOR UNIT BONDS: METAL FRAMES, CABINETS AND INDIVIDUAL METALLIC UNITS LOCATED WITH THE AREA OF THE INTERIOR GROUND RING REQUIRE A #6 AWG STRANDED GREEN INSULATED COPPER BOND TO THE INTERIOR GROUND RING.

(L) FENCE AND GATE GROUNDING: METAL FENCES WITHIN 7 FEET OF THE EXTERIOR GROUND RING OR OBJECTS BONDED TO THE EXTERIOR GROUND RING SHALL BE BONDED TO THE GROUND RING WITH A #2 AWG SOLID TINNED COPPER CONDUCTOR AT AN INTERVAL NOT EXCEEDING 25 FEET. BONDS SHALL BE MADE AT EACH GATE POST AND ACROSS GATE OPENINGS.

(M) EXTERIOR UNIT BONDS: METALLIC OBJECTS, EXTERNAL TO OR MOUNTED TO THE BUILDING, SHALL BE BONDED TO THE EXTERIOR GROUND RING. USING #2 TINNED SOLID COPPER WIRE

(N) ICE BRIDGE SUPPORTS: EACH ICE BRIDGE LEG SHALL BE BONDED TO THE GROUND RING WITH #2 AWG BARE TINNED COPPER CONDUCTOR. PROVIDE EXOTHERMIC WELDS AT BOTH THE ICE BRIDGE LEG AND BURIED GROUND RING.

(O) DURING ALL DC POWER SYSTEM CHANGES INCLUDING DC SYSTEM CHANGE OUTS, RECTIFIER REPLACEMENTS OR ADDITIONS, BREAKER DISTRIBUTION CHANGES, BATTERY ADDITIONS, BATTERY REPLACEMENTS AND INSTALLATIONS OR CHANGES TO DC CONVERTER SYSTEMS IT SHALL BE REQUIRED THAT SERVICE CONTRACTORS VERIFY ALL DC POWER SYSTEMS ARE EQUIPPED WITH A MASTER DC SYSTEM RETURN GROUND CONDUCTOR FROM THE DC POWER SYSTEM COMMON RETURN BUS DIRECTLY CONNECTED TO THE CELL SITE REFERENCE GROUND BAR

(P) TOWER TOP COLLECTOR BUSS BAR IS TO BE MECHANICALLY BONDED TO PROPOSED ANTENNA MOUNT COLLAR.

REFER TO DISH Wireless L.L.C. GROUNDING NOTES.

GROUNDING KEY NOTES | NO SCALE | 3

dish wireless
5701 SOUTH SANTA FE DRIVE
LITTLETON, CO 80120

SBA
8051 CONGRESS AVENUE
BOCA RATON, FL 33487

B+T GRP
1717 S. BOULDER
SUITE 300
TULSA, OK 74119
PH: (918) 587-4630
www.btgrp.com

STATE OF CONNECTICUT
CHAD MILLER
No. 23924
LICENSED
PROFESSIONAL ENGINEER
01/06/23
MTS ENGINEERING P.L.L.C.
BER:2386985
Expires 3/31/23

IT IS A VIOLATION OF LAW FOR ANY PERSON, UNLESS THEY ARE ACTING UNDER THE DIRECTION OF A LICENSED PROFESSIONAL ENGINEER, TO ALTER THIS DOCUMENT.

DRAWN BY:	CHECKED BY:	APPROVED BY:
MEH	RMC	RMC

RFDS REV #: 1.0

CONSTRUCTION DOCUMENTS

SUBMITTALS

REV	DATE	DESCRIPTION
A	6/2/22	ISSUED FOR REVIEW
0	6/14/22	ISSUED FOR CONSTRUCTION
1	01/06/23	ISSUED FOR CONSTRUCTION

A&E PROJECT NUMBER
164076.001.01

DISH Wireless L.L.C.
PROJECT INFORMATION
BOBOS00068C
26 MELL ROAD
LISBON, CT 06351

SHEET TITLE
GROUNDING PLANS AND NOTES

SHEET NUMBER
G-1

NOTES

EQUIPMENT CABINET OMITTED FOR CLARITY

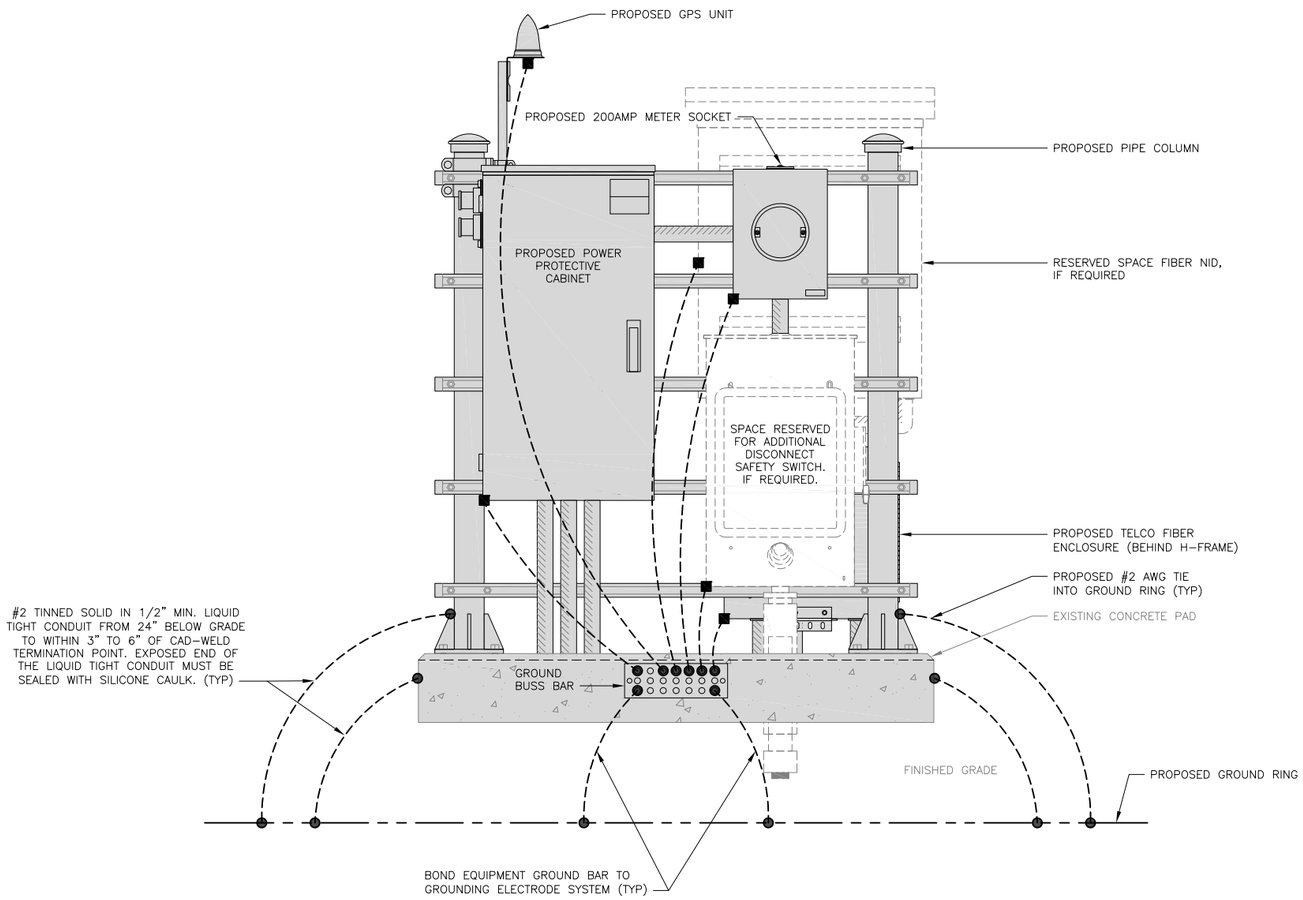

H-FRAME GROUNDING DETAIL | NO SCALE | 1

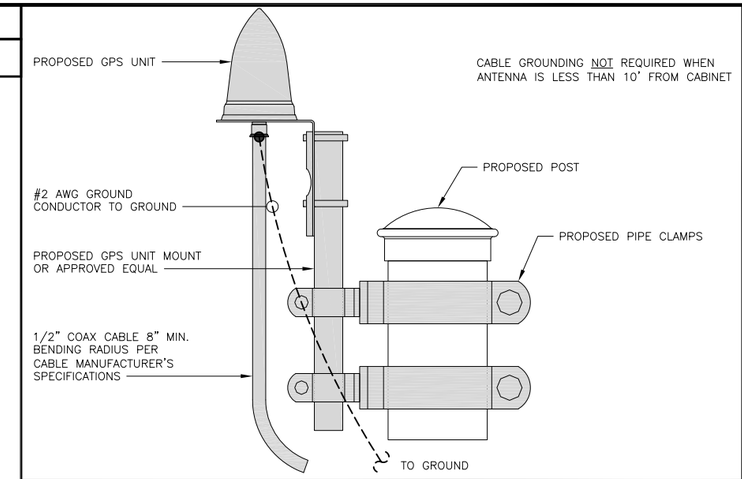

TYPICAL GPS UNIT GROUNDING | NO SCALE | 2

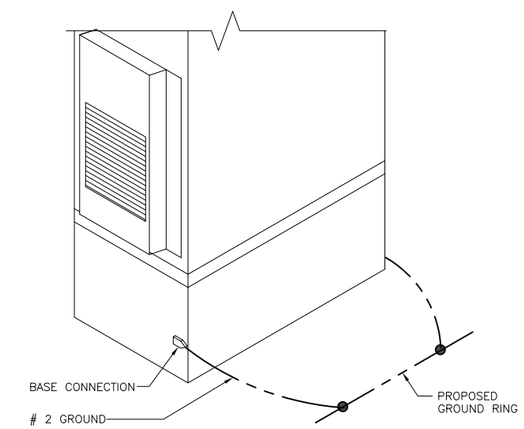

OUTDOOR CABINET GROUNDING | NO SCALE | 3

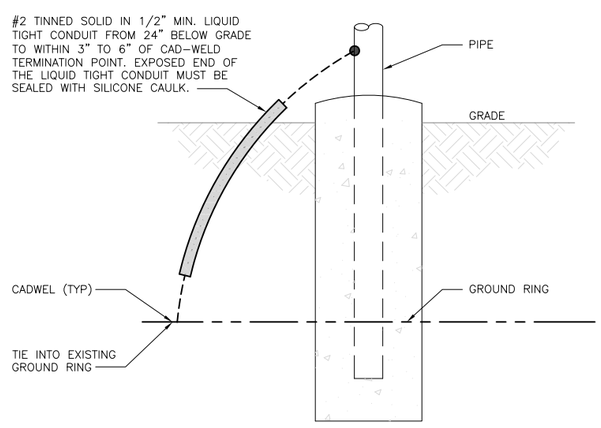

TRANSITIONING GROUND DETAIL | NO SCALE | 4

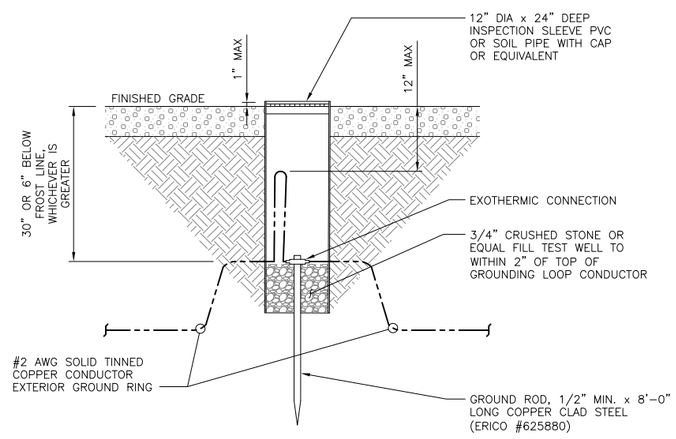

TYPICAL TEST GROUND ROD WITH INSPECTION SLEEVE | NO SCALE | 5

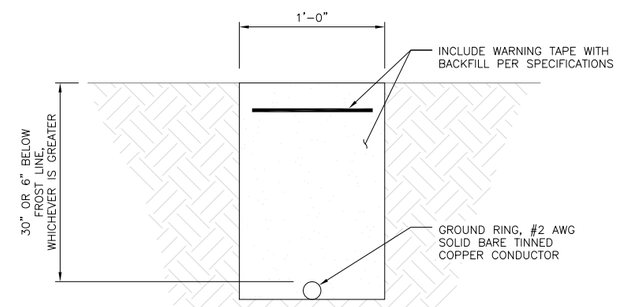

TYPICAL GROUND RING TRENCH | NO SCALE | 6

dish wireless
5701 SOUTH SANTA FE DRIVE
LITTLETON, CO 80120

SBA
8051 CONGRESS AVENUE
BOCA RATON, FL 33487

B+T GRP
1717 S. BOULDER
SUITE 300
TULSA, OK 74119
PH: (918) 587-4630
www.btgrp.com

STATE OF CONNECTICUT ★ CHAD MILLER ★ No. 23924 LICENSED PROFESSIONAL ENGINEER

01/06/23

MTS ENGINEERING P.L.L.C.
BER:2386985
Expires 3/31/23

IT IS A VIOLATION OF LAW FOR ANY PERSON, UNLESS THEY ARE ACTING UNDER THE DIRECTION OF A LICENSED PROFESSIONAL ENGINEER, TO ALTER THIS DOCUMENT.

DRAWN BY:	CHECKED BY:	APPROVED BY:
MEH	RMC	RMC

RFDS REV #: 1.0

CONSTRUCTION DOCUMENTS

SUBMITTALS

REV	DATE	DESCRIPTION
A	6/2/22	ISSUED FOR REVIEW
0	6/14/22	ISSUED FOR CONSTRUCTION
1	01/06/23	ISSUED FOR CONSTRUCTION

A&E PROJECT NUMBER

164076.001.01

DISH Wireless L.L.C. PROJECT INFORMATION

BOBOS00068C
26 MELL ROAD
LISBON, CT 06351

SHEET TITLE

GROUNDING DETAILS

SHEET NUMBER

G-2

1. EXOTHERMIC WELD (2) TWO, #2 AWG BARE TINNED SOLID COPPER CONDUCTORS TO GROUND BAR. ROUTE CONDUCTORS TO BURIED GROUND RING AND PROVIDE PARALLEL EXOTHERMIC WELD.
2. ALL EXTERIOR GROUNDING HARDWARE SHALL BE STAINLESS STEEL 3/8" DIAMETER OR LARGER. ALL HARDWARE 18-8 STAINLESS STEEL INCLUDING LOCK WASHERS, COAT ALL SURFACES WITH AN ANTI-OXIDANT COMPOUND BEFORE MATING.
3. FOR GROUND BOND TO STEEL ONLY: COAT ALL SURFACES WITH AN ANTI-OXIDANT COMPOUND BEFORE MATING.
4. DO NOT INSTALL CABLE GROUNDING KIT AT A BEND AND ALWAYS DIRECT GROUND CONDUCTOR DOWN TO GROUNDING BUS.
5. NUT & WASHER SHALL BE PLACED ON THE FRONT SIDE OF THE GROUND BAR AND BOLTED ON THE BACK SIDE.
6. ALL GROUNDING PARTS AND EQUIPMENT TO BE SUPPLIED AND INSTALLED BY CONTRACTOR.
7. THE CONTRACTOR SHALL BE RESPONSIBLE FOR INSTALLING ADDITIONAL GROUND BAR AS REQUIRED.
8. ENSURE THE WIRE INSULATION TERMINATION IS WITHIN 1/8" OF THE BARREL (NO SHINERS).

TYPICAL GROUNDING NOTES | NO SCALE | 1

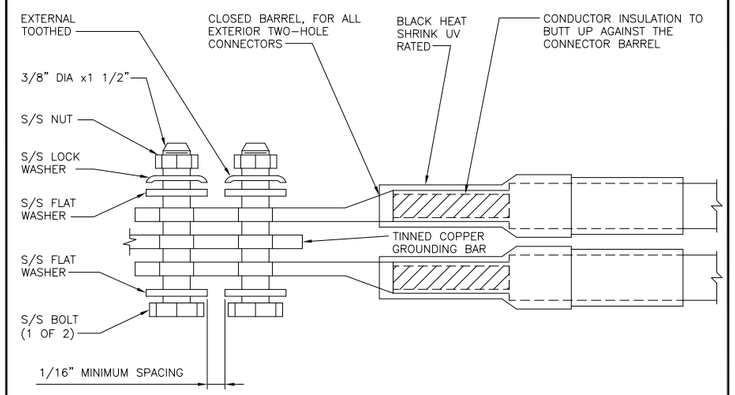

TYPICAL EXTERIOR TWO HOLE LUG | NO SCALE | 2

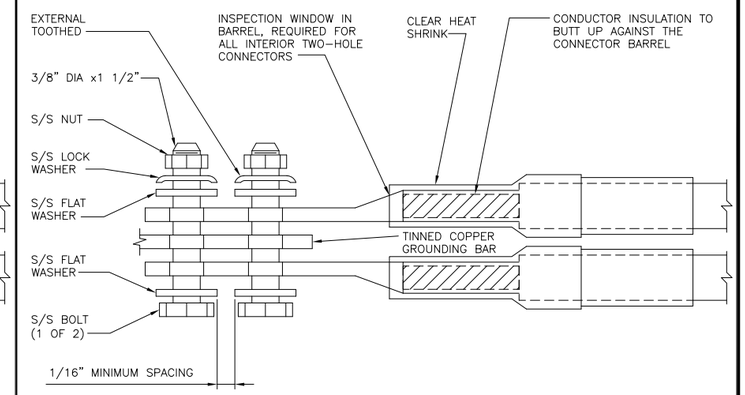

TYPICAL INTERIOR TWO HOLE LUG | NO SCALE | 3

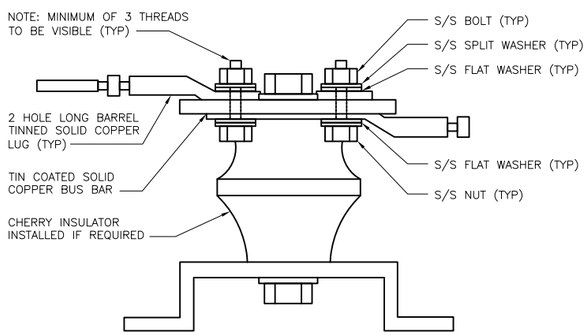

LUG DETAIL | NO SCALE | 4

NOT USED | NO SCALE | 5

NOT USED | NO SCALE | 6

NOT USED | NO SCALE | 7

NOT USED | NO SCALE | 8

NOT USED | NO SCALE | 9

dish wireless
5701 SOUTH SANTA FE DRIVE
LITTLETON, CO 80120

SBA
8051 CONGRESS AVENUE
BOCA RATON, FL 33487

B+T GRP
1717 S. BOULDER
SUITE 300
TULSA, OK 74119
PH: (918) 587-4630
www.btgrp.com

STATE OF CONNECTICUT ★ CHAD MILLER ★ No. 23924 LICENSED PROFESSIONAL ENGINEER
01/06/23

MTS ENGINEERING P.L.L.C.
BER:2386985
Expires 3/31/23

IT IS A VIOLATION OF LAW FOR ANY PERSON, UNLESS THEY ARE ACTING UNDER THE DIRECTION OF A LICENSED PROFESSIONAL ENGINEER, TO ALTER THIS DOCUMENT.

DRAWN BY:	CHECKED BY:	APPROVED BY:
MEH	RMC	RMC

RFDS REV #: 1.0

CONSTRUCTION DOCUMENTS

SUBMITTALS

REV	DATE	DESCRIPTION
A	6/2/22	ISSUED FOR REVIEW
0	6/14/22	ISSUED FOR CONSTRUCTION
1	01/06/23	ISSUED FOR CONSTRUCTION

A&E PROJECT NUMBER
164076.001.01

DISH Wireless L.L.C.
PROJECT INFORMATION
BOBOS00068C
26 MELL ROAD
LISBON, CT 06351

SHEET TITLE
GROUNDING DETAILS

SHEET NUMBER
G-3

HYBRID/DISCREET CABLES

3/4" TAPE WIDTHS WITH 3/4" SPACING

LOW–BAND RRH
(600 MHz N71 BASEBAND) +
(850 MHz N26 BAND) +
(700 MHz N29 BAND) – OPTIONAL PER MARKET

ADD FREQUENCY COLOR TO SECTOR BAND
(CBRS WILL USE YELLOW BAND)

ALPHA RRH				BETA RRH				GAMMA RRH			
PORT 1 + SLANT	PORT 2 – SLANT	PORT 3 + SLANT	PORT 4 – SLANT	PORT 1 + SLANT	PORT 2 – SLANT	PORT 3 + SLANT	PORT 4 – SLANT	PORT 1 + SLANT	PORT 2 – SLANT	PORT 3 + SLANT	PORT 4 – SLANT
RED	RED	RED	RED	BLUE	BLUE	BLUE	BLUE	GREEN	GREEN	GREEN	GREEN
ORANGE	ORANGE	RED	RED	ORANGE	ORANGE	BLUE	BLUE	ORANGE	ORANGE	GREEN	GREEN
	WHITE (–) PORT	ORANGE	ORANGE		WHITE (–) PORT	ORANGE	ORANGE		WHITE (–) PORT	ORANGE	ORANGE
			WHITE (–) PORT				WHITE (–) PORT				WHITE (–) PORT

MID–BAND RRH
(AWS BANDS N66+N70)

ADD FREQUENCY COLOR TO SECTOR BAND
(CBRS WILL USE YELLOW BANDS)

RED	RED	RED	RED	BLUE	BLUE	BLUE	BLUE	GREEN	GREEN	GREEN	GREEN
PURPLE	PURPLE	RED	RED	PURPLE	PURPLE	BLUE	BLUE	PURPLE	PURPLE	GREEN	GREEN
	WHITE (–) PORT	PURPLE	PURPLE		WHITE (–) PORT	PURPLE	PURPLE		WHITE (–) PORT	PURPLE	PURPLE
			WHITE (–) PORT				WHITE (–) PORT				WHITE (–) PORT

HYBRID/DISCREET CABLES

INCLUDE SECTOR BANDS BEING SUPPORTED ALONG WITH FREQUENCY BANDS.

EXAMPLE 1 – HYBRID, OR DISCREET, SUPPORTS ALL SECTORS, BOTH LOW–BANDS AND MID–BANDS.

EXAMPLE 2 – HYBRID, OR DISCREET, SUPPORTS CBRS ONLY, ALL SECTORS.

EXAMPLE 3 – MAIN COAX WITH GROUND MOUNTED RRHs.

EXAMPLE 1	EXAMPLE 2	EXAMPLE 3 COAX#1 (ALPHA)	CANISTER COAX #2 (ALPHA)
RED	RED	RED	RED
BLUE	BLUE		RED
GREEN	GREEN		
ORANGE	YELLOW		
PURPLE			

CONTRACTOR TO REFER TO FINAL CONSTRUCTION RFDS FOR ALL RD DETAILS. FINAL RFDS IS IN NEXSYSONE.

FIBER JUMPERS TO RRHs

LOW–BAND HHR FIBER CABLES HAVE SECTOR STRIPE ONLY.

LOW BAND RRH	MID BAND RRH	LOW BAND RRH	MID BAND RRH	LOW BAND RRH	MID BAND RRH
RED	RED	BLUE	BLUE	GREEN	GREEN
ORANGE	PURPLE	ORANGE	PURPLE	ORANGE	PURPLE

POWER CABLES TO RRHs

LOW–BAND RRH POWER CABLES HAVE SECTOR STRIPE ONLY

LOW BAND RRH	MID BAND RRH	LOW BAND RRH	MID BAND RRH	LOW BAND RRH	MID BAND RRH
RED	RED	BLUE	BLUE	GREEN	GREEN
ORANGE	PURPLE	ORANGE	PURPLE	ORANGE	PURPLE

RET MOTORS AT ANTENNAS

RET CONTROL IS HANDLED BY THE MID–BAND RRH WHEN ONE SET OF RET PORTS EXIST ON ANTENNA.

SEPARATE RET CABLES ARE USED WHEN ANTENNA PORTS PROVIDE INPUTS FOR BOTH LOW AND MID BANDS.

ANTENNA 1 MID BAND IN	ANTENNA 1 LOW BAND IN	ANTENNA 1 MID BAND IN	ANTENNA 1 LOW BAND IN	ANTENNA 1 MID BAND IN	ANTENNA 1 LOW BAND IN
RED	RED	BLUE	BLUE	GREEN	GREEN
PURPLE	ORANGE	PURPLE	ORANGE	PURPLE	ORANGE

MICROWAVE RADIO LINKS

LINKS WILL HAVE A 1.5–2 INCH WHITE WRAP WITH THE AZIMUTH COLOR OVERLAPPING IN THE MIDDLE.
ADD ADDITIONAL SECTOR COLOR BANDS FOR EACH ADDITIONAL MW RADIO.

MICROWAVE CABLES WILL REQUIRE P–TOUCH LABELS INSIDE THE CABINET TO IDENTIFY THE LOCAL AND REMOTE SITE ID's.

FORWARD AZIMUTH OF 0–120 DEGREES		FORWARD AZIMUTH OF 120–240 DEGREES		FORWARD AZIMUTH OF 240–359 DEGREES	
PRIMARY	SECONDARY	PRIMARY	SECONDARY	PRIMARY	SECONDARY
WHITE	WHITE	WHITE	WHITE	WHITE	WHITE
RED	RED	BLUE	BLUE	GREEN	GREEN
WHITE	WHITE	WHITE	WHITE	WHITE	WHITE
	RED		BLUE		GREEN
	WHITE		WHITE		WHITE

RF CABLE COLOR CODES | NO SCALE | 1

LOW BANDS (N71+N26)
OPTIONAL – (N29)
ORANGE

AWS
(N66+N70+H–BLOCK)
PURPLE

CBRS TECH
(3 GHz)
YELLOW

NEGATIVE SLANT PORT
ON ANT/RRH
WHITE

ALPHA SECTOR
RED

BETA SECTOR
BLUE

GAMMA SECTOR
GREEN

COLOR IDENTIFIER | NO SCALE | 2

NOT USED | NO SCALE | 3

NOT USED | NO SCALE | 4

dish wireless
5701 SOUTH SANTA FE DRIVE
LITTLETON, CO 80120

SBA
8051 CONGRESS AVENUE
BOCA RATON, FL 33487

B+T GRP
1717 S. BOULDER
SUITE 300
TULSA, OK 74119
PH: (918) 587-4630
www.btgrp.com

STATE OF CONNECTICUT
CHAD MILLER
No. 23924
LICENSED
PROFESSIONAL ENGINEER
01/06/23

MTS ENGINEERING P.L.L.C.
BER:2386985
Expires 3/31/23

IT IS A VIOLATION OF LAW FOR ANY PERSON, UNLESS THEY ARE ACTING UNDER THE DIRECTION OF A LICENSED PROFESSIONAL ENGINEER, TO ALTER THIS DOCUMENT.

DRAWN BY:	CHECKED BY:	APPROVED BY:
MEH	RMC	RMC

RFDS REV #: 1.0

CONSTRUCTION DOCUMENTS

SUBMITTALS

REV	DATE	DESCRIPTION
A	6/2/22	ISSUED FOR REVIEW
0	6/14/22	ISSUED FOR CONSTRUCTION
1	01/06/23	ISSUED FOR CONSTRUCTION

A&E PROJECT NUMBER
164076.001.01

DISH Wireless L.L.C.
PROJECT INFORMATION
BOBOS00068C
26 MELL ROAD
LISBON, CT 06351

SHEET TITLE
RF
CABLE COLOR CODES

SHEET NUMBER
RF-1

EXOTHERMIC CONNECTION

MECHANICAL CONNECTION

BUSS BAR INSULATOR

CHEMICAL ELECTROLYTIC GROUNDING SYSTEM

TEST CHEMICAL ELECTROLYTIC GROUNDING SYSTEM

EXOTHERMIC WITH INSPECTION SLEEVE

GROUNDING BAR

GROUND ROD

TEST GROUND ROD WITH INSPECTION SLEEVE

SINGLE POLE SWITCH

DUPLEX RECEPTACLE

DUPLEX GFCI RECEPTACLE

FLUORESCENT LIGHTING FIXTURE (2) TWO LAMPS 48–T8

SMOKE DETECTION (DC)

EMERGENCY LIGHTING (DC)

SECURITY LIGHT W/PHOTOCELL LITHONIA ALXW LED–1–25A400/51K–SR4–120–PE–DDBTXD

CHAIN LINK FENCE

WOOD/WROUGHT IRON FENCE

WALL STRUCTURE

LEASE AREA

PROPERTY LINE (PL)

SETBACKS

ICE BRIDGE

CABLE TRAY

WATER LINE

UNDERGROUND POWER

UNDERGROUND TELCO

OVERHEAD POWER

OVERHEAD TELCO

UNDERGROUND TELCO/POWER

ABOVE GROUND POWER

ABOVE GROUND TELCO

ABOVE GROUND TELCO/POWER

WORKPOINT

SECTION REFERENCE

DETAIL REFERENCE

LEGEND

AB	ANCHOR BOLT
ABV	ABOVE
AC	ALTERNATING CURRENT
ADDL	ADDITIONAL
AFF	ABOVE FINISHED FLOOR
AFG	ABOVE FINISHED GRADE
AGL	ABOVE GROUND LEVEL
AIC	AMPERAGE INTERRUPTION CAPACITY
ALUM	ALUMINUM
ALT	ALTERNATE
ANT	ANTENNA
APPROX	APPROXIMATE
ARCH	ARCHITECTURAL
ATS	AUTOMATIC TRANSFER SWITCH
AWG	AMERICAN WIRE GAUGE
BATT	BATTERY
BLDG	BUILDING
BLK	BLOCK
BLKG	BLOCKING
BM	BEAM
BTC	BARE TINNED COPPER CONDUCTOR
BOF	BOTTOM OF FOOTING
CAB	CABINET
CANT	CANTILEVERED
CHG	CHARGING
CLG	CEILING
CLR	CLEAR
COL	COLUMN
COMM	COMMON
CONC	CONCRETE
CONSTR	CONSTRUCTION
DBL	DOUBLE
DC	DIRECT CURRENT
DEPT	DEPARTMENT
DF	DOUGLAS FIR
DIA	DIAMETER
DIAG	DIAGONAL
DIM	DIMENSION
DWG	DRAWING
DWL	DOWEL
EA	EACH
EC	ELECTRICAL CONDUCTOR
EL.	ELEVATION
ELEC	ELECTRICAL
EMT	ELECTRICAL METALLIC TUBING
ENG	ENGINEER
EQ	EQUAL
EXP	EXPANSION
EXT	EXTERIOR
EW	EACH WAY
FAB	FABRICATION
FF	FINISH FLOOR
FG	FINISH GRADE
FIF	FACILITY INTERFACE FRAME
FIN	FINISH(ED)
FLR	FLOOR
FDN	FOUNDATION
FOC	FACE OF CONCRETE
FOM	FACE OF MASONRY
FOS	FACE OF STUD
FOW	FACE OF WALL
FS	FINISH SURFACE
FT	FOOT
FTG	FOOTING
GA	GAUGE
GEN	GENERATOR
GFCI	GROUND FAULT CIRCUIT INTERRUPTER
GLB	GLUE LAMINATED BEAM
GLV	GALVANIZED
GPS	GLOBAL POSITIONING SYSTEM
GND	GROUND
GSM	GLOBAL SYSTEM FOR MOBILE
HDG	HOT DIPPED GALVANIZED
HDR	HEADER
HGR	HANGER
HVAC	HEAT/VENTILATION/AIR CONDITIONING
HT	HEIGHT
IGR	INTERIOR GROUND RING
IN	INCH
INT	INTERIOR
LB(S)	POUND(S)
LF	LINEAR FEET
LTE	LONG TERM EVOLUTION
MAS	MASONRY
MAX	MAXIMUM
MB	MACHINE BOLT
MECH	MECHANICAL
MFR	MANUFACTURER
MGB	MASTER GROUND BAR
MIN	MINIMUM
MISC	MISCELLANEOUS
MTL	METAL
MTS	MANUAL TRANSFER SWITCH
MW	MICROWAVE
NEC	NATIONAL ELECTRIC CODE
NM	NEWTON METERS
NO.	NUMBER
#	NUMBER
NTS	NOT TO SCALE
OC	ON–CENTER
OSHA	OCCUPATIONAL SAFETY AND HEALTH ADMINISTRATION
OPNG	OPENING
P/C	PRECAST CONCRETE
PCS	PERSONAL COMMUNICATION SERVICES
PCU	PRIMARY CONTROL UNIT
PRC	PRIMARY RADIO CABINET
PP	POLARIZING PRESERVING
PSF	POUNDS PER SQUARE FOOT
PSI	POUNDS PER SQUARE INCH
PT	PRESSURE TREATED
PWR	POWER CABINET
QTY	QUANTITY
RAD	RADIUS
RECT	RECTIFIER
REF	REFERENCE
REINF	REINFORCEMENT
REQ'D	REQUIRED
RET	REMOTE ELECTRIC TILT
RF	RADIO FREQUENCY
RMC	RIGID METALLIC CONDUIT
RRH	REMOTE RADIO HEAD
RRU	REMOTE RADIO UNIT
RWY	RACEWAY
SCH	SCHEDULE
SHT	SHEET
SIAD	SMART INTEGRATED ACCESS DEVICE
SIM	SIMILAR
SPEC	SPECIFICATION
SQ	SQUARE
SS	STAINLESS STEEL
STD	STANDARD
STL	STEEL
TEMP	TEMPORARY
THK	THICKNESS
TMA	TOWER MOUNTED AMPLIFIER
TN	TOE NAIL
TOA	TOP OF ANTENNA
TOC	TOP OF CURB
TOF	TOP OF FOUNDATION
TOP	TOP OF PLATE (PARAPET)
TOS	TOP OF STEEL
TOW	TOP OF WALL
TVSS	TRANSIENT VOLTAGE SURGE SUPPRESSION
TYP	TYPICAL
UG	UNDERGROUND
UL	UNDERWRITERS LABORATORY
UNO	UNLESS NOTED OTHERWISE
UMTS	UNIVERSAL MOBILE TELECOMMUNICATIONS SYSTEM
UPS	UNITERRUPTIBLE POWER SYSTEM (DC POWER PLANT)
VIF	VERIFIED IN FIELD
W	WIDE
W/	WITH
WD	WOOD
WP	WEATHERPROOF
WT	WEIGHT

ABBREVIATIONS

dish wireless

5701 SOUTH SANTA FE DRIVE
LITTLETON, CO 80120

SBA

8051 CONGRESS AVENUE
BOCA RATON, FL 33487

B+T GRP
1717 S. BOULDER
SUITE 300
TULSA, OK 74119
PH: (918) 587-4630
www.btgrp.com

STATE OF CONNECTICUT
CHAD MILLER
No. 23924
LICENSED
PROFESSIONAL ENGINEER
01/06/23

MTS ENGINEERING P.L.L.C.
BER:2386985
Expires 3/31/23

IT IS A VIOLATION OF LAW FOR ANY PERSON, UNLESS THEY ARE ACTING UNDER THE DIRECTION OF A LICENSED PROFESSIONAL ENGINEER, TO ALTER THIS DOCUMENT.

DRAWN BY:	CHECKED BY:	APPROVED BY:
MEH	RMC	RMC

RFDS REV #: 1.0

CONSTRUCTION DOCUMENTS

SUBMITTALS

REV	DATE	DESCRIPTION
A	6/2/22	ISSUED FOR REVIEW
0	6/14/22	ISSUED FOR CONSTRUCTION
1	01/06/23	ISSUED FOR CONSTRUCTION

A&E PROJECT NUMBER

164076.001.01

DISH Wireless L.L.C.
PROJECT INFORMATION

BOBOS00068C
26 MELL ROAD
LISBON, CT 06351

SHEET TITLE

LEGEND AND ABBREVIATIONS

SHEET NUMBER

GN-1

SIGN TYPES		
TYPE	COLOR	COLOR CODE PURPOSE
INFORMATION	GREEN	**"INFORMATIONAL SIGN"** TO NOTIFY OTHERS OF SITE OWNERSHIP & CONTACT NUMBER AND POTENTIAL RF EXPOSURE.
NOTICE	BLUE	**"NOTICE BEYOND THIS POINT"** RF FIELDS BEYOND THIS POINT MAY EXCEED THE FCC GENERAL PUBLIC EXPOSURE LIMIT. OBEY ALL POSTED SIGNS AND SITE GUIDELINES FOR WORKING IN RF ENVIRONMENTS. IN ACCORDANCE WITH FEDERAL COMMUNICATIONS COMMISSION RULES ON RADIO FREQUENCY EMISSIONS 47 CFR-1.1307(b)
CAUTION	YELLOW	**"CAUTION BEYOND THIS POINT"** RF FIELDS BEYOND THIS POINT MAY EXCEED THE FCC GENERAL PUBLIC EXPOSURE LIMIT. OBEY ALL POSTED SIGNS AND SITE GUIDELINES FOR WORKING IN RF ENVIRONMENTS. IN ACCORDANCE WITH FEDERAL COMMUNICATIONS COMMISSION RULES ON RADIO FREQUENCY EMISSIONS 47 CFR-1.1307(b)
WARNING	ORANGE/RED	**"WARNING BEYOND THIS POINT"** RF FIELDS AT THIS SITE EXCEED FCC RULES FOR HUMAN EXPOSURE. FAILURE TO OBEY ALL POSTED SIGNS AND SITE GUIDELINES FOR WORKING IN RF ENVIRONMENTS COULD RESULT IN SERIOUS INJURY. IN ACCORDANCE WITH FEDERAL COMMUNICATIONS COMMISSION RULES ON RADIO FREQUENCY EMISSIONS 47 CFR-1.1307(b)

SIGN PLACEMENT:

- RF SIGNAGE PLACEMENT SHALL FOLLOW THE RECOMMENDATIONS OF AN EXISTING EME REPORT, CREATED BY A THIRD PARTY PREVIOUSLY AUTHORIZED BY DISH Wireless L.L.C.
- INFORMATION SIGN (GREEN) SHALL BE LOCATED ON EXISTING DISH Wireless L.L.C EQUIPMENT.
  A) IF THE INFORMATION SIGN IS A STICKER, IT SHALL BE PLACED ON EXISTING DISH Wireless L.L.C EQUIPMENT CABINET.
  B) IF THE INFORMATION SIGH IS A METAL SIGN IT SHALL BE PLACED ON EXISTING DISH Wireless L.L.C H-FRAME WITH A SECURE ATTACH METHOD.
- IF EME REPORT IS NOT AVAILABLE AT THE TIME OF CREATION OF CONSTRUCTION DOCUMENTS; PLEASE CONTACT DISH Wireless L.L.C. CONSTRUCTION MANAGER FOR FURTHER INSTRUCTION ON HOW TO PROCEED.

NOTES:

1. FOR DISH Wireless L.L.C. LOGO, SEE DISH Wireless L.L.C. DESIGN SPECIFICATIONS (PROVIDED BY DISH Wireless L.L.C.)
2. SITE ID SHALL BE APPLIED TO SIGNS USING "LASER ENGRAVING" OR ANY OTHER WEATHER RESISTANT METHOD (DISH Wireless L.L.C. APPROVAL REQUIRED)
3. TEXT FOR SIGNAGE SHALL INDICATE CORRECT SITE NAME AND NUMBER AS PER DISH Wireless L.L.C. CONSTRUCTION MANAGER RECOMMENDATIONS.
4. CABINET/SHELTER MOUNTING APPLICATION REQUIRES ANOTHER PLATE APPLIED TO THE FACE OF THE CABINET WITH WATER PROOF POLYURETHANE ADHESIVE
5. ALL SIGNS WILL BE SECURED WITH EITHER STAINLESS STEEL ZIP TIES OR STAINLESS STEEL TECH SCREWS
6. ALL SIGNS TO BE 8.5"x11" AND MADE WITH 0.04" OF ALUMINUM MATERIAL

INFORMATION

This is an access point to an area with transmitting antennas.

Obey all signs and barriers beyond this point.
Call the DISH Wireless L.L.C. NOC at 1-866-624-6874

Site ID: _____

THIS SIGN IS FOR REFERENCE PURPOSES ONLY

NOTICE

Transmitting Antenna(s)

Radio frequency fields beyond this point MAY *EXCEED* the FCC Occupational exposure limit.

Obey all posted signs and site guidelines for working in radio frequency environments.

Call the DISH Wireless L.L.C. NOC at 1-866-624-6874 prior to working beyond this point.

Site ID: _____

dish

THIS SIGN IS FOR REFERENCE PURPOSES ONLY

CAUTION

Transmitting Antenna(s)

Radio frequency fields beyond this point MAY *EXCEED* the FCC Occupational exposure limit.

Obey all posted signs and site guidelines for working in radio frequency environments.

Call the DISH Wireless L.L.C. NOC at 1-866-624-6874 prior to working beyond this point.

Site ID: _____

dish

THIS SIGN IS FOR REFERENCE PURPOSES ONLY

WARNING

Transmitting Antenna(s)

Radio frequency fields beyond this point *EXCEED* the FCC Occupational exposure limit.

Obey all posted signs and site guidelines for working in radio frequency environments.

Call the DISH Wireless L.L.C. NOC at 1-866-624-6874 prior to working beyond this point.

Site ID: _____

dish

THIS SIGN IS FOR REFERENCE PURPOSES ONLY

RF SIGNAGE

dish wireless.
5701 SOUTH SANTA FE DRIVE
LITTLETON, CO 80120

SBA
8051 CONGRESS AVENUE
BOCA RATON, FL 33487

B+T GRP
1717 S. BOULDER
SUITE 300
TULSA, OK 74119
PH: (918) 587-4630
www.btgrp.com

STATE OF CONNECTICUT ★ CHAD M. LITTLE ★ No. 23924 LICENSED PROFESSIONAL ENGINEER

01/06/23

MTS ENGINEERING P.L.L.C.
BER:2386985
Expires 3/31/23

IT IS A VIOLATION OF LAW FOR ANY PERSON, UNLESS THEY ARE ACTING UNDER THE DIRECTION OF A LICENSED PROFESSIONAL ENGINEER, TO ALTER THIS DOCUMENT.

DRAWN BY:	CHECKED BY:	APPROVED BY:
MEH	RMC	RMC

RFDS REV #: 1.0

CONSTRUCTION DOCUMENTS

SUBMITTALS

REV	DATE	DESCRIPTION
A	6/2/22	ISSUED FOR REVIEW
0	6/14/22	ISSUED FOR CONSTRUCTION
1	01/06/23	ISSUED FOR CONSTRUCTION

A&E PROJECT NUMBER
164076.001.01

DISH Wireless L.L.C.
PROJECT INFORMATION
BOBOS00068C
26 MELL ROAD
LISBON, CT 06351

SHEET TITLE
RF SIGNAGE

SHEET NUMBER
GN-2

SITE ACTIVITY REQUIREMENTS:

1. NOTICE TO PROCEED – NO WORK SHALL COMMENCE PRIOR TO CONTRACTOR RECEIVING A WRITTEN NOTICE TO PROCEED (NTP) AND THE ISSUANCE OF A PURCHASE ORDER. PRIOR TO ACCESSING/ENTERING THE SITE YOU MUST CONTACT THE DISH Wireless L.L.C. AND TOWER OWNER NOC & THE DISH Wireless L.L.C. AND TOWER OWNER CONSTRUCTION MANAGER.

2. "LOOK UP" – DISH Wireless L.L.C. AND TOWER OWNER SAFETY CLIMB REQUIREMENT:

THE INTEGRITY OF THE SAFETY CLIMB AND ALL COMPONENTS OF THE CLIMBING FACILITY SHALL BE CONSIDERED DURING ALL STAGES OF DESIGN, INSTALLATION, AND INSPECTION. TOWER MODIFICATION, MOUNT REINFORCEMENTS, AND/OR EQUIPMENT INSTALLATIONS SHALL NOT COMPROMISE THE INTEGRITY OR FUNCTIONAL USE OF THE SAFETY CLIMB OR ANY COMPONENTS OF THE CLIMBING FACILITY ON THE STRUCTURE. THIS SHALL INCLUDE, BUT NOT BE LIMITED TO: PINCHING OF THE WIRE ROPE, BENDING OF THE WIRE ROPE FROM ITS SUPPORTS, DIRECT CONTACT OR CLOSE PROXIMITY TO THE WIRE ROPE WHICH MAY CAUSE FRICTIONAL WEAR, IMPACT TO THE ANCHORAGE POINTS IN ANY WAY, OR TO IMPEDE/BLOCK ITS INTENDED USE. ANY COMPROMISED SAFETY CLIMB, INCLUDING EXISTING CONDITIONS MUST BE TAGGED OUT AND REPORTED TO YOUR DISH Wireless L.L.C. AND DISH Wireless L.L.C. AND TOWER OWNER POC OR CALL THE NOC TO GENERATE A SAFETY CLIMB MAINTENANCE AND CONTRACTOR NOTICE TICKET.

3. PRIOR TO THE START OF CONSTRUCTION, ALL REQUIRED JURISDICTIONAL PERMITS SHALL BE OBTAINED. THIS INCLUDES, BUT IS NOT LIMITED TO, BUILDING, ELECTRICAL, MECHANICAL, FIRE, FLOOD ZONE, ENVIRONMENTAL, AND ZONING. AFTER ONSITE ACTIVITIES AND CONSTRUCTION ARE COMPLETED, ALL REQUIRED PERMITS SHALL BE SATISFIED AND CLOSED OUT ACCORDING TO LOCAL JURISDICTIONAL REQUIREMENTS.

4. ALL CONSTRUCTION MEANS AND METHODS; INCLUDING BUT NOT LIMITED TO, ERECTION PLANS, RIGGING PLANS, CLIMBING PLANS, AND RESCUE PLANS SHALL BE THE RESPONSIBILITY OF THE GENERAL CONTRACTOR RESPONSIBLE FOR THE EXECUTION OF THE WORK CONTAINED HEREIN, AND SHALL MEET ANSI/ASSE A10.48 (LATEST EDITION); FEDERAL, STATE, AND LOCAL REGULATIONS; AND ANY APPLICABLE INDUSTRY CONSENSUS STANDARDS RELATED TO THE CONSTRUCTION ACTIVITIES BEING PERFORMED. ALL RIGGING PLANS SHALL ADHERE TO ANSI/ASSE A10.48 (LATEST EDITION) AND DISH Wireless L.L.C. AND TOWER OWNER STANDARDS, INCLUDING THE REQUIRED INVOLVEMENT OF A QUALIFIED ENGINEER FOR CLASS IV CONSTRUCTION, TO CERTIFY THE SUPPORTING STRUCTURE(S) IN ACCORDANCE WITH ANSI/TIA–322 (LATEST EDITION).

5. ALL SITE WORK TO COMPLY WITH DISH Wireless L.L.C. AND TOWER OWNER INSTALLATION STANDARDS FOR CONSTRUCTION ACTIVITIES ON DISH Wireless L.L.C. AND TOWER OWNER TOWER SITE AND LATEST VERSION OF ANSI/TIA–1019–A–2012 "STANDARD FOR INSTALLATION, ALTERATION, AND MAINTENANCE OF ANTENNA SUPPORTING STRUCTURES AND ANTENNAS."

6. IF THE SPECIFIED EQUIPMENT CAN NOT BE INSTALLED AS SHOWN ON THESE DRAWINGS, THE CONTRACTOR SHALL PROPOSE AN ALTERNATIVE INSTALLATION FOR APPROVAL BY DISH Wireless L.L.C. AND TOWER OWNER PRIOR TO PROCEEDING WITH ANY SUCH CHANGE OF INSTALLATION.

7. ALL MATERIALS FURNISHED AND INSTALLED SHALL BE IN STRICT ACCORDANCE WITH ALL APPLICABLE CODES, REGULATIONS AND ORDINANCES. CONTRACTOR SHALL ISSUE ALL APPROPRIATE NOTICES AND COMPLY WITH ALL LAWS, ORDINANCES, RULES, REGULATIONS AND LAWFUL ORDERS OF ANY PUBLIC AUTHORITY REGARDING THE PERFORMANCE OF THE WORK. ALL WORK CARRIED OUT SHALL COMPLY WITH ALL APPLICABLE MUNICIPAL AND UTILITY COMPANY SPECIFICATIONS AND LOCAL JURISDICTIONAL CODES, ORDINANCES AND APPLICABLE REGULATIONS.

8. THE CONTRACTOR SHALL INSTALL ALL EQUIPMENT AND MATERIALS IN ACCORDANCE WITH MANUFACTURER'S RECOMMENDATIONS UNLESS SPECIFICALLY STATED OTHERWISE.

9. THE CONTRACTOR SHALL CONTACT UTILITY LOCATING SERVICES INCLUDING PRIVATE LOCATES SERVICES PRIOR TO THE START OF CONSTRUCTION.

10. ALL EXISTING ACTIVE SEWER, WATER, GAS, ELECTRIC AND OTHER UTILITIES WHERE ENCOUNTERED IN THE WORK, SHALL BE PROTECTED AT ALL TIMES AND WHERE REQUIRED FOR THE PROPER EXECUTION OF THE WORK, SHALL BE RELOCATED AS DIRECTED BY CONTRACTOR. EXTREME CAUTION SHOULD BE USED BY THE CONTRACTOR WHEN EXCAVATING OR DRILLING PIERS AROUND OR NEAR UTILITIES. CONTRACTOR SHALL PROVIDE SAFETY TRAINING FOR THE WORKING CREW. THIS WILL INCLUDE BUT NOT BE LIMITED TO A) FALL PROTECTION B) CONFINED SPACE C) ELECTRICAL SAFETY D) TRENCHING AND EXCAVATION E) CONSTRUCTION SAFETY PROCEDURES.

11. ALL SITE WORK SHALL BE AS INDICATED ON THE STAMPED CONSTRUCTION DRAWINGS AND DISH PROJECT SPECIFICATIONS, LATEST APPROVED REVISION.

12. CONTRACTOR SHALL KEEP THE SITE FREE FROM ACCUMULATING WASTE MATERIAL, DEBRIS, AND TRASH AT THE COMPLETION OF THE WORK. IF NECESSARY, RUBBISH, STUMPS, DEBRIS, STICKS, STONES AND OTHER REFUSE SHALL BE REMOVED FROM THE SITE AND DISPOSED OF LEGALLY.

13. ALL EXISTING INACTIVE SEWER, WATER, GAS, ELECTRIC AND OTHER UTILITIES, WHICH INTERFERE WITH THE EXECUTION OF THE WORK, SHALL BE REMOVED AND/OR CAPPED, PLUGGED OR OTHERWISE DISCONTINUED AT POINTS WHICH WILL NOT INTERFERE WITH THE EXECUTION OF THE WORK, SUBJECT TO THE APPROVAL OF DISH Wireless L.L.C. AND TOWER OWNER, AND/OR LOCAL UTILITIES.

14. THE CONTRACTOR SHALL PROVIDE SITE SIGNAGE IN ACCORDANCE WITH THE TECHNICAL SPECIFICATION FOR SITE SIGNAGE REQUIRED BY LOCAL JURISDICTION AND SIGNAGE REQUIRED ON INDIVIDUAL PIECES OF EQUIPMENT, ROOMS, AND SHELTERS.

15. THE SITE SHALL BE GRADED TO CAUSE SURFACE WATER TO FLOW AWAY FROM THE CARRIER'S EQUIPMENT AND TOWER AREAS.

16. THE SUB GRADE SHALL BE COMPACTED AND BROUGHT TO A SMOOTH UNIFORM GRADE PRIOR TO FINISHED SURFACE APPLICATION.

17. THE AREAS OF THE OWNERS PROPERTY DISTURBED BY THE WORK AND NOT COVERED BY THE TOWER, EQUIPMENT OR DRIVEWAY, SHALL BE GRADED TO A UNIFORM SLOPE, AND STABILIZED TO PREVENT EROSION AS SPECIFIED ON THE CONSTRUCTION DRAWINGS AND/OR PROJECT SPECIFICATIONS.

18. CONTRACTOR SHALL MINIMIZE DISTURBANCE TO EXISTING SITE DURING CONSTRUCTION. EROSION CONTROL MEASURES, IF REQUIRED DURING CONSTRUCTION, SHALL BE IN CONFORMANCE WITH THE LOCAL GUIDELINES FOR EROSION AND SEDIMENT CONTROL.

19. THE CONTRACTOR SHALL PROTECT EXISTING IMPROVEMENTS, PAVEMENTS, CURBS, LANDSCAPING AND STRUCTURES. ANY DAMAGED PART SHALL BE REPAIRED AT CONTRACTOR'S EXPENSE TO THE SATISFACTION OF OWNER.

20. CONTRACTOR SHALL LEGALLY AND PROPERLY DISPOSE OF ALL SCRAP MATERIALS SUCH AS COAXIAL CABLES AND OTHER ITEMS REMOVED FROM THE EXISTING FACILITY. ANTENNAS AND RADIOS REMOVED SHALL BE RETURNED TO THE OWNER'S DESIGNATED LOCATION.

21. CONTRACTOR SHALL LEAVE PREMISES IN CLEAN CONDITION. TRASH AND DEBRIS SHOULD BE REMOVED FROM SITE ON A DAILY BASIS.

22. NO FILL OR EMBANKMENT MATERIAL SHALL BE PLACED ON FROZEN GROUND. FROZEN MATERIALS, SNOW OR ICE SHALL NOT BE PLACED IN ANY FILL OR EMBANKMENT.

GENERAL NOTES:

1.FOR THE PURPOSE OF CONSTRUCTION DRAWING, THE FOLLOWING DEFINITIONS SHALL APPLY:

CONTRACTOR:GENERAL CONTRACTOR RESPONSIBLE FOR CONSTRUCTION

CARRIER:DISH Wireless L.L.C.

TOWER OWNER:TOWER OWNER

2. THESE DRAWINGS HAVE BEEN PREPARED USING STANDARDS OF PROFESSIONAL CARE AND COMPLETENESS NORMALLY EXERCISED UNDER SIMILAR CIRCUMSTANCES BY REPUTABLE ENGINEERS IN THIS OR SIMILAR LOCALITIES. IT IS ASSUMED THAT THE WORK DEPICTED WILL BE PERFORMED BY AN EXPERIENCED CONTRACTOR AND/OR WORKPEOPLE WHO HAVE A WORKING KNOWLEDGE OF THE APPLICABLE CODE STANDARDS AND REQUIREMENTS AND OF INDUSTRY ACCEPTED STANDARD GOOD PRACTICE. AS NOT EVERY CONDITION OR ELEMENT IS (OR CAN BE) EXPLICITLY SHOWN ON THESE DRAWINGS, THE CONTRACTOR SHALL USE INDUSTRY ACCEPTED STANDARD GOOD PRACTICE FOR MISCELLANEOUS WORK NOT EXPLICITLY SHOWN.

3. THESE DRAWINGS REPRESENT THE FINISHED STRUCTURE. THEY DO NOT INDICATE THE MEANS OR METHODS OF CONSTRUCTION. THE CONTRACTOR SHALL BE SOLELY RESPONSIBLE FOR THE CONSTRUCTION MEANS, METHODS, TECHNIQUES, SEQUENCES, AND PROCEDURES. THE CONTRACTOR SHALL PROVIDE ALL MEASURES NECESSARY FOR PROTECTION OF LIFE AND PROPERTY DURING CONSTRUCTION. SUCH MEASURES SHALL INCLUDE, BUT NOT BE LIMITED TO, BRACING, FORMWORK, SHORING, ETC. SITE VISITS BY THE ENGINEER OR HIS REPRESENTATIVE WILL NOT INCLUDE INSPECTION OF THESE ITEMS AND IS FOR STRUCTURAL OBSERVATION OF THE FINISHED STRUCTURE ONLY.

4. NOTES AND DETAILS IN THE CONSTRUCTION DRAWINGS SHALL TAKE PRECEDENCE OVER GENERAL NOTES AND TYPICAL DETAILS. WHERE NO DETAILS ARE SHOWN, CONSTRUCTION SHALL CONFORM TO SIMILAR WORK ON THE PROJECT, AND/OR AS PROVIDED FOR IN THE CONTRACT DOCUMENTS. WHERE DISCREPANCIES OCCUR BETWEEN PLANS, DETAILS, GENERAL NOTES, AND SPECIFICATIONS, THE GREATER, MORE STRICT REQUIREMENTS, SHALL GOVERN. IF FURTHER CLARIFICATION IS REQUIRED CONTACT THE ENGINEER OF RECORD.

5. SUBSTANTIAL EFFORT HAS BEEN MADE TO PROVIDE ACCURATE DIMENSIONS AND MEASUREMENTS ON THE DRAWINGS TO ASSIST IN THE FABRICATION AND/OR PLACEMENT OF CONSTRUCTION ELEMENTS BUT IT IS THE SOLE RESPONSIBILITY OF THE CONTRACTOR TO FIELD VERIFY THE DIMENSIONS, MEASUREMENTS, AND/OR CLEARANCES SHOWN IN THE CONSTRUCTION DRAWINGS PRIOR TO FABRICATION OR CUTTING OF ANY NEW OR EXISTING CONSTRUCTION ELEMENTS. IF IT IS DETERMINED THAT THERE ARE DISCREPANCIES AND/OR CONFLICTS WITH THE CONSTRUCTION DRAWINGS THE ENGINEER OF RECORD IS TO BE NOTIFIED AS SOON AS POSSIBLE.

6. PRIOR TO THE SUBMISSION OF BIDS, THE BIDDING CONTRACTOR SHALL VISIT THE CELL SITE TO FAMILIARIZE WITH THE EXISTING CONDITIONS AND TO CONFIRM THAT THE WORK CAN BE ACCOMPLISHED AS SHOWN ON THE CONSTRUCTION DRAWINGS. ANY DISCREPANCY FOUND SHALL BE BROUGHT TO THE ATTENTION OF CARRIER POC AND TOWER OWNER.

7. ALL MATERIALS FURNISHED AND INSTALLED SHALL BE IN STRICT ACCORDANCE WITH ALL APPLICABLE CODES, REGULATIONS AND ORDINANCES. CONTRACTOR SHALL ISSUE ALL APPROPRIATE NOTICES AND COMPLY WITH ALL LAWS, ORDINANCES, RULES, REGULATIONS AND LAWFUL ORDERS OF ANY PUBLIC AUTHORITY REGARDING THE PERFORMANCE OF THE WORK. ALL WORK CARRIED OUT SHALL COMPLY WITH ALL APPLICABLE MUNICIPAL AND UTILITY COMPANY SPECIFICATIONS AND LOCAL JURISDICTIONAL CODES, ORDINANCES AND APPLICABLE REGULATIONS.

8. UNLESS NOTED OTHERWISE, THE WORK SHALL INCLUDE FURNISHING MATERIALS, EQUIPMENT, APPURTENANCES AND LABOR NECESSARY TO COMPLETE ALL INSTALLATIONS AS INDICATED ON THE DRAWINGS.

9. THE CONTRACTOR SHALL INSTALL ALL EQUIPMENT AND MATERIALS IN ACCORDANCE WITH MANUFACTURER'S RECOMMENDATIONS UNLESS SPECIFICALLY STATED OTHERWISE.

10. IF THE SPECIFIED EQUIPMENT CAN NOT BE INSTALLED AS SHOWN ON THESE DRAWINGS, THE CONTRACTOR SHALL PROPOSE AN ALTERNATIVE INSTALLATION FOR APPROVAL BY THE CARRIER AND TOWER OWNER PRIOR TO PROCEEDING WITH ANY SUCH CHANGE OF INSTALLATION.

11. CONTRACTOR IS TO PERFORM A SITE INVESTIGATION, BEFORE SUBMITTING BIDS, TO DETERMINE THE BEST ROUTING OF ALL CONDUITS FOR POWER, AND TELCO AND FOR GROUNDING CABLES AS SHOWN IN THE POWER, TELCO, AND GROUNDING PLAN DRAWINGS.

12. THE CONTRACTOR SHALL PROTECT EXISTING IMPROVEMENTS, PAVEMENTS, CURBS, LANDSCAPING AND STRUCTURES. ANY DAMAGED PART SHALL BE REPAIRED AT CONTRACTOR'S EXPENSE TO THE SATISFACTION OF DISH Wireless L.L.C. AND TOWER OWNER

13. CONTRACTOR SHALL LEGALLY AND PROPERLY DISPOSE OF ALL SCRAP MATERIALS SUCH AS COAXIAL CABLES AND OTHER ITEMS REMOVED FROM THE EXISTING FACILITY. ANTENNAS REMOVED SHALL BE RETURNED TO THE OWNER'S DESIGNATED LOCATION.

14. CONTRACTOR SHALL LEAVE PREMISES IN CLEAN CONDITION. TRASH AND DEBRIS SHOULD BE REMOVED FROM SITE ON A DAILY BASIS.

dish wireless

5701 SOUTH SANTA FE DRIVE
LITTLETON, CO 80120

SBA

8051 CONGRESS AVENUE
BOCA RATON, FL 33487

B+T GRP
1717 S. BOULDER
SUITE 300
TULSA, OK 74119
PH: (918) 587-4630
www.btgrp.com

STATE OF CONNECTICUT
CHAD MILLE
No. 23924
LICENSED
PROFESSIONAL ENGINEER
01/06/23

MTS ENGINEERING P.L.L.C.
BER:2386985
Expires 3/31/23

IT IS A VIOLATION OF LAW FOR ANY PERSON, UNLESS THEY ARE ACTING UNDER THE DIRECTION OF A LICENSED PROFESSIONAL ENGINEER, TO ALTER THIS DOCUMENT.

DRAWN BY:	CHECKED BY:	APPROVED BY:
MEH	RMC	RMC

RFDS REV #: 1.0

CONSTRUCTION DOCUMENTS

SUBMITTALS

REV	DATE	DESCRIPTION
A	6/2/22	ISSUED FOR REVIEW
0	6/14/22	ISSUED FOR CONSTRUCTION
1	01/06/23	ISSUED FOR CONSTRUCTION

A&E PROJECT NUMBER

164076.001.01

DISH Wireless L.L.C.
PROJECT INFORMATION

BOBOS00068C
26 MELL ROAD
LISBON, CT 06351

SHEET TITLE

GENERAL NOTES

SHEET NUMBER

GN-3

CONCRETE, FOUNDATIONS, AND REINFORCING STEEL:

1. ALL CONCRETE WORK SHALL BE IN ACCORDANCE WITH THE ACI 301, ACI 318, ACI 336, ASTM A184, ASTM A185 AND THE DESIGN AND CONSTRUCTION SPECIFICATION FOR CAST–IN–PLACE CONCRETE.

2. UNLESS NOTED OTHERWISE, SOIL BEARING PRESSURE USED FOR DESIGN OF SLABS AND FOUNDATIONS IS ASSUMED TO BE 1000 psf.

3. ALL CONCRETE SHALL HAVE A MINIMUM COMPRESSIVE STRENGTH (f'c) OF 3000 psi AT 28 DAYS, UNLESS NOTED OTHERWISE. NO MORE THAN 90 MINUTES SHALL ELAPSE FROM BATCH TIME TO TIME OF PLACEMENT UNLESS APPROVED BY THE ENGINEER OF RECORD. TEMPERATURE OF CONCRETE SHALL NOT EXCEED 90°f AT TIME OF PLACEMENT.

4. CONCRETE EXPOSED TO FREEZE–THAW CYCLES SHALL CONTAIN AIR ENTRAINING ADMIXTURES. AMOUNT OF AIR ENTRAINMENT TO BE BASED ON SIZE OF AGGREGATE AND F3 CLASS EXPOSURE (VERY SEVERE). CEMENT USED TO BE TYPE II PORTLAND CEMENT WITH A MAXIMUM WATER–TO–CEMENT RATIO (W/C) OF 0.45.

5. ALL STEEL REINFORCING SHALL CONFORM TO ASTM A615. ALL WELDED WIRE FABRIC (WWF) SHALL CONFORM TO ASTM A185. ALL SPLICES SHALL BE CLASS "B" TENSION SPLICES, UNLESS NOTED OTHERWISE. ALL HOOKS SHALL BE STANDARD 90 DEGREE HOOKS, UNLESS NOTED OTHERWISE. YIELD STRENGTH (Fy) OF STANDARD DEFORMED BARS ARE AS FOLLOWS:

#4 BARS AND SMALLER 40 ksi

#5 BARS AND LARGER 60 ksi

6. THE FOLLOWING MINIMUM CONCRETE COVER SHALL BE PROVIDED FOR REINFORCING STEEL UNLESS SHOWN OTHERWISE ON DRAWINGS:

- CONCRETE CAST AGAINST AND PERMANENTLY EXPOSED TO EARTH 3"
- CONCRETE EXPOSED TO EARTH OR WEATHER:
- #6 BARS AND LARGER 2"
- #5 BARS AND SMALLER 1–1/2"
- CONCRETE NOT EXPOSED TO EARTH OR WEATHER:
- SLAB AND WALLS 3/4"
- BEAMS AND COLUMNS 1–1/2"

7. A TOOLED EDGE OR A 3/4" CHAMFER SHALL BE PROVIDED AT ALL EXPOSED EDGES OF CONCRETE, UNLESS NOTED OTHERWISE, IN ACCORDANCE WITH ACI 301 SECTION 4.2.4.

ELECTRICAL INSTALLATION NOTES:

1. ALL ELECTRICAL WORK SHALL BE PERFORMED IN ACCORDANCE WITH THE PROJECT SPECIFICATIONS, NEC AND ALL APPLICABLE FEDERAL, STATE, AND LOCAL CODES/ORDINANCES.

2. CONDUIT ROUTINGS ARE SCHEMATIC. CONTRACTOR SHALL INSTALL CONDUITS SO THAT ACCESS TO EQUIPMENT IS NOT BLOCKED AND TRIP HAZARDS ARE ELIMINATED.

3. WIRING, RACEWAY AND SUPPORT METHODS AND MATERIALS SHALL COMPLY WITH THE REQUIREMENTS OF THE NEC.

4. ALL CIRCUITS SHALL BE SEGREGATED AND MAINTAIN MINIMUM CABLE SEPARATION AS REQUIRED BY THE NEC.

4.1. ALL EQUIPMENT SHALL BEAR THE UNDERWRITERS LABORATORIES LABEL OF APPROVAL, AND SHALL CONFORM TO REQUIREMENT OF THE NATIONAL ELECTRICAL CODE.

4.2. ALL OVERCURRENT DEVICES SHALL HAVE AN INTERRUPTING CURRENT RATING THAT SHALL BE GREATER THAN THE SHORT CIRCUIT CURRENT TO WHICH THEY ARE SUBJECTED, 22,000 AIC MINIMUM. VERIFY AVAILABLE SHORT CIRCUIT CURRENT DOES NOT EXCEED THE RATING OF ELECTRICAL EQUIPMENT IN ACCORDANCE WITH ARTICLE 110.24 NEC OR THE MOST CURRENT ADOPTED CODE PRE THE GOVERNING JURISDICTION.

5. EACH END OF EVERY POWER PHASE CONDUCTOR, GROUNDING CONDUCTOR, AND TELCO CONDUCTOR OR CABLE SHALL BE LABELED WITH COLOR–CODED INSULATION OR ELECTRICAL TAPE (3M BRAND, 1/2" PLASTIC ELECTRICAL TAPE WITH UV PROTECTION, OR EQUAL). THE IDENTIFICATION METHOD SHALL CONFORM WITH NEC AND OSHA.

6. ALL ELECTRICAL COMPONENTS SHALL BE CLEARLY LABELED WITH LAMICOID TAGS SHOWING THEIR RATED VOLTAGE, PHASE CONFIGURATION, WIRE CONFIGURATION, POWER OR AMPACITY RATING AND BRANCH CIRCUIT ID NUMBERS (i.e. PANEL BOARD AND CIRCUIT ID'S).

7. PANEL BOARDS (ID NUMBERS) SHALL BE CLEARLY LABELED WITH PLASTIC LABELS.

8. TIE WRAPS ARE NOT ALLOWED.

9. ALL POWER AND EQUIPMENT GROUND WIRING IN TUBING OR CONDUIT SHALL BE SINGLE COPPER CONDUCTOR (#14 OR LARGER) WITH TYPE THHW, THWN, THWN–2, XHHW, XHHW–2, THW, THW–2, RHW, OR RHW–2 INSULATION UNLESS OTHERWISE SPECIFIED.

10. SUPPLEMENTAL EQUIPMENT GROUND WIRING LOCATED INDOORS SHALL BE SINGLE COPPER CONDUCTOR (#6 OR LARGER) WITH TYPE THHW, THWN, THWN–2, XHHW, XHHW–2, THW, THW–2, RHW, OR RHW–2 INSULATION UNLESS OTHERWISE SPECIFIED.

11. POWER AND CONTROL WIRING IN FLEXIBLE CORD SHALL BE MULTI–CONDUCTOR, TYPE SOOW CORD (#14 OR LARGER) UNLESS OTHERWISE SPECIFIED.

12. POWER AND CONTROL WIRING FOR USE IN CABLE TRAY SHALL BE MULTI–CONDUCTOR, TYPE TC CABLE (#14 OR LARGER), WITH TYPE THHW, THWN, THWN–2, XHHW, XHHW–2, THW, THW–2, RHW, OR RHW–2 INSULATION UNLESS OTHERWISE SPECIFIED.

13. ALL POWER AND GROUNDING CONNECTIONS SHALL BE CRIMP–STYLE, COMPRESSION WIRE LUGS AND WIRE NUTS BY THOMAS AND BETTS (OR EQUAL). LUGS AND WIRE NUTS SHALL BE RATED FOR OPERATION NOT LESS THAN 75° C (90° C IF AVAILABLE).

14. RACEWAY AND CABLE TRAY SHALL BE LISTED OR LABELED FOR ELECTRICAL USE IN ACCORDANCE WITH NEMA, UL, ANSI/IEEE AND NEC.

15. ELECTRICAL METALLIC TUBING (EMT), INTERMEDIATE METAL CONDUIT (IMC), OR RIGID METAL CONDUIT (RMC) SHALL BE USED FOR EXPOSED INDOOR LOCATIONS.

16. ELECTRICAL METALLIC TUBING (EMT) OR METAL–CLAD CABLE (MC) SHALL BE USED FOR CONCEALED INDOOR LOCATIONS.

17. SCHEDULE 40 PVC UNDERGROUND ON STRAIGHTS AND SCHEDULE 80 PVC FOR ALL ELBOWS/90s AND ALL APPROVED ABOVE GRADE PVC CONDUIT.

18. LIQUID–TIGHT FLEXIBLE METALLIC CONDUIT (LIQUID–TITE FLEX) SHALL BE USED INDOORS AND OUTDOORS, WHERE VIBRATION OCCURS OR FLEXIBILITY IS NEEDED.

19. CONDUIT AND TUBING FITTINGS SHALL BE THREADED OR COMPRESSION–TYPE AND APPROVED FOR THE LOCATION USED. SET SCREW FITTINGS ARE NOT ACCEPTABLE.

20. CABINETS, BOXES AND WIRE WAYS SHALL BE LABELED FOR ELECTRICAL USE IN ACCORDANCE WITH NEMA, UL, ANSI/IEEE AND THE NEC.

21. WIREWAYS SHALL BE METAL WITH AN ENAMEL FINISH AND INCLUDE A HINGED COVER, DESIGNED TO SWING OPEN DOWNWARDS (WIREMOLD SPECMATE WIREWAY).

22. SLOTTED WIRING DUCT SHALL BE PVC AND INCLUDE COVER (PANDUIT TYPE E OR EQUAL).

23. CONDUITS SHALL BE FASTENED SECURELY IN PLACE WITH APPROVED NON–PERFORATED STRAPS AND HANGERS. EXPLOSIVE DEVICES (i.e. POWDER–ACTUATED) FOR ATTACHING HANGERS TO STRUCTURE WILL NOT BE PERMITTED. CLOSELY FOLLOW THE LINES OF THE STRUCTURE, MAINTAIN CLOSE PROXIMITY TO THE STRUCTURE AND KEEP CONDUITS IN TIGHT ENVELOPES. CHANGES IN DIRECTION TO ROUTE AROUND OBSTACLES SHALL BE MADE WITH CONDUIT OUTLET BODIES. CONDUIT SHALL BE INSTALLED IN A NEAT AND WORKMANLIKE MANNER. PARALLEL AND PERPENDICULAR TO STRUCTURE WALL AND CEILING LINES. ALL CONDUIT SHALL BE FISHED TO CLEAR OBSTRUCTIONS. ENDS OF CONDUITS SHALL BE TEMPORARILY CAPPED FLUSH TO FINISH GRADE TO PREVENT CONCRETE, PLASTER OR DIRT FROM ENTERING. CONDUITS SHALL BE RIGIDLY CLAMPED TO BOXES BY GALVANIZED MALLEABLE IRON BUSHING ON INSIDE AND GALVANIZED MALLEABLE IRON LOCKNUT ON OUTSIDE AND INSIDE.

24. EQUIPMENT CABINETS, TERMINAL BOXES, JUNCTION BOXES AND PULL BOXES SHALL BE GALVANIZED OR EPOXY–COATED SHEET STEEL. SHALL MEET OR EXCEED UL 50 AND BE RATED NEMA 1 (OR BETTER) FOR INTERIOR LOCATIONS AND NEMA 3 (OR BETTER) FOR EXTERIOR LOCATIONS.

25. METAL RECEPTACLE, SWITCH AND DEVICE BOXES SHALL BE GALVANIZED, EPOXY–COATED OR NON–CORRODING; SHALL MEET OR EXCEED UL 514A AND NEMA OS 1 AND BE RATED NEMA 1 (OR BETTER) FOR INTERIOR LOCATIONS AND WEATHER PROTECTED (WP OR BETTER) FOR EXTERIOR LOCATIONS.

26. NONMETALLIC RECEPTACLE, SWITCH AND DEVICE BOXES SHALL MEET OR EXCEED NEMA OS 2 (NEWEST REVISION) AND BE RATED NEMA 1 (OR BETTER) FOR INTERIOR LOCATIONS AND WEATHER PROTECTED (WP OR BETTER) FOR EXTERIOR LOCATIONS.

27. THE CONTRACTOR SHALL NOTIFY AND OBTAIN NECESSARY AUTHORIZATION FROM THE CARRIER AND/OR DISH Wireless L.L.C. AND TOWER OWNER BEFORE COMMENCING WORK ON THE AC POWER DISTRIBUTION PANELS.

28. THE CONTRACTOR SHALL PROVIDE NECESSARY TAGGING ON THE BREAKERS, CABLES AND DISTRIBUTION PANELS IN ACCORDANCE WITH THE APPLICABLE CODES AND STANDARDS TO SAFEGUARD LIFE AND PROPERTY.

29. INSTALL LAMICOID LABEL ON THE METER CENTER TO SHOW "DISH Wireless L.L.C.".

30. ALL EMPTY/SPARE CONDUITS THAT ARE INSTALLED ARE TO HAVE A METERED MULE TAPE PULL CORD INSTALLED.

dish wireless

5701 SOUTH SANTA FE DRIVE
LITTLETON, CO 80120

SBA

8051 CONGRESS AVENUE
BOCA RATON, FL 33487

B+T GRP
1717 S. BOULDER
SUITE 300
TULSA, OK 74119
PH: (918) 587-4630
www.btgrp.com

STATE OF CONNECTICUT
CHAD MULLE
No. 23924
LICENSED
PROFESSIONAL ENGINEER
01/06/23

MTS ENGINEERING P.L.L.C.
BER:2386985
Expires 3/31/23

IT IS A VIOLATION OF LAW FOR ANY PERSON, UNLESS THEY ARE ACTING UNDER THE DIRECTION OF A LICENSED PROFESSIONAL ENGINEER, TO ALTER THIS DOCUMENT.

DRAWN BY:	CHECKED BY:	APPROVED BY:
MEH	RMC	RMC

RFDS REV #: 1.0

CONSTRUCTION DOCUMENTS

SUBMITTALS

REV	DATE	DESCRIPTION
A	6/2/22	ISSUED FOR REVIEW
0	6/14/22	ISSUED FOR CONSTRUCTION
1	01/06/23	ISSUED FOR CONSTRUCTION

A&E PROJECT NUMBER

164076.001.01

DISH Wireless L.L.C.
PROJECT INFORMATION

BOBOS00068C
26 MELL ROAD
LISBON, CT 06351

SHEET TITLE

GENERAL NOTES

SHEET NUMBER

GN-4

GROUNDING NOTES:

1. ALL GROUND ELECTRODE SYSTEMS (INCLUDING TELECOMMUNICATION, RADIO, LIGHTNING PROTECTION AND AC POWER GES'S) SHALL BE BONDED TOGETHER AT OR BELOW GRADE, BY TWO OR MORE COPPER BONDING CONDUCTORS IN ACCORDANCE WITH THE NEC.

2. THE CONTRACTOR SHALL PERFORM IEEE FALL-OF-POTENTIAL RESISTANCE TO EARTH TESTING (PER IEEE 1100 AND 81) FOR GROUND ELECTRODE SYSTEMS, THE CONTRACTOR SHALL FURNISH AND INSTALL SUPPLEMENTAL GROUND ELECTRODES AS NEEDED TO ACHIEVE A TEST RESULT OF 5 OHMS OR LESS.

3. THE CONTRACTOR IS RESPONSIBLE FOR PROPERLY SEQUENCING GROUNDING AND UNDERGROUND CONDUIT INSTALLATION AS TO PREVENT ANY LOSS OF CONTINUITY IN THE GROUNDING SYSTEM OR DAMAGE TO THE CONDUIT AND PROVIDE TESTING RESULTS.

4. METAL CONDUIT AND TRAY SHALL BE GROUNDED AND MADE ELECTRICALLY CONTINUOUS WITH LISTED BONDING FITTINGS OR BY BONDING ACROSS THE DISCONTINUITY WITH #6 COPPER WIRE UL APPROVED GROUNDING TYPE CONDUIT CLAMPS.

5. METAL RACEWAY SHALL NOT BE USED AS THE NEC REQUIRED EQUIPMENT GROUND CONDUCTOR. STRANDED COPPER CONDUCTORS WITH GREEN INSULATION, SIZED IN ACCORDANCE WITH THE NEC, SHALL BE FURNISHED AND INSTALLED WITH THE POWER CIRCUITS TO BTS EQUIPMENT.

6. EACH CABINET FRAME SHALL BE DIRECTLY CONNECTED TO THE MASTER GROUND BAR WITH GREEN INSULATED SUPPLEMENTAL EQUIPMENT GROUND WIRES, #6 STRANDED COPPER OR LARGER FOR INDOOR BTS; #2 BARE SOLID TINNED COPPER FOR OUTDOOR BTS.

7. CONNECTIONS TO THE GROUND BUS SHALL NOT BE DOUBLED UP OR STACKED BACK TO BACK CONNECTIONS ON OPPOSITE SIDE OF THE GROUND BUS ARE PERMITTED.

8. ALL EXTERIOR GROUND CONDUCTORS BETWEEN EQUIPMENT/GROUND BARS AND THE GROUND RING SHALL BE #2 SOLID TINNED COPPER UNLESS OTHERWISE INDICATED.

9. ALUMINUM CONDUCTOR OR COPPER CLAD STEEL CONDUCTOR SHALL NOT BE USED FOR GROUNDING CONNECTIONS.

10. USE OF 90° BENDS IN THE PROTECTION GROUNDING CONDUCTORS SHALL BE AVOIDED WHEN 45° BENDS CAN BE ADEQUATELY SUPPORTED.

11. EXOTHERMIC WELDS SHALL BE USED FOR ALL GROUNDING CONNECTIONS BELOW GRADE.

12. ALL GROUND CONNECTIONS ABOVE GRADE (INTERIOR AND EXTERIOR) SHALL BE FORMED USING HIGH PRESS CRIMPS.

13. COMPRESSION GROUND CONNECTIONS MAY BE REPLACED BY EXOTHERMIC WELD CONNECTIONS.

14. ICE BRIDGE BONDING CONDUCTORS SHALL BE EXOTHERMICALLY BONDED OR BOLTED TO THE BRIDGE AND THE TOWER GROUND BAR.

15. APPROVED ANTIOXIDANT COATINGS (i.e. CONDUCTIVE GEL OR PASTE) SHALL BE USED ON ALL COMPRESSION AND BOLTED GROUND CONNECTIONS.

16. ALL EXTERIOR GROUND CONNECTIONS SHALL BE COATED WITH A CORROSION RESISTANT MATERIAL.

17. MISCELLANEOUS ELECTRICAL AND NON-ELECTRICAL METAL BOXES, FRAMES AND SUPPORTS SHALL BE BONDED TO THE GROUND RING, IN ACCORDANCE WITH THE NEC.

18. BOND ALL METALLIC OBJECTS WITHIN 6 ft OF MAIN GROUND RING WITH (1) #2 BARE SOLID TINNED COPPER GROUND CONDUCTOR.

19. GROUND CONDUCTORS USED FOR THE FACILITY GROUNDING AND LIGHTNING PROTECTION SYSTEMS SHALL NOT BE ROUTED THROUGH METALLIC OBJECTS THAT FORM A RING AROUND THE CONDUCTOR, SUCH AS METALLIC CONDUITS, METAL SUPPORT CLIPS OR SLEEVES THROUGH WALLS OR FLOORS. WHEN IT IS REQUIRED TO BE HOUSED IN CONDUIT TO MEET CODE REQUIREMENTS OR LOCAL CONDITIONS, NON-METALLIC MATERIAL SUCH AS PVC CONDUIT SHALL BE USED. WHERE USE OF METAL CONDUIT IS UNAVOIDABLE (i.e., NONMETALLIC CONDUIT PROHIBITED BY LOCAL CODE) THE GROUND CONDUCTOR SHALL BE BONDED TO EACH END OF THE METAL CONDUIT.

20. ALL GROUNDS THAT TRANSITION FROM BELOW GRADE TO ABOVE GRADE MUST BE #2 BARE SOLID TINNED COPPER IN 3/4" NON-METALLIC, FLEXIBLE CONDUIT FROM 24" BELOW GRADE TO WITHIN 3" TO 6" OF CAD-WELD TERMINATION POINT. THE EXPOSED END OF THE CONDUIT MUST BE SEALED WITH SILICONE CAULK. (ADD TRANSITIONING GROUND STANDARD DETAIL AS WELL).

21. BUILDINGS WHERE THE MAIN GROUNDING CONDUCTORS ARE REQUIRED TO BE ROUTED TO GRADE, THE CONTRACTOR SHALL ROUTE TWO GROUNDING CONDUCTORS FROM THE ROOFTOP, TOWERS, AND WATER TOWERS GROUNDING RING, TO THE EXISTING GROUNDING SYSTEM, THE GROUNDING CONDUCTORS SHALL NOT BE SMALLER THAN 2/0 COPPER. ROOFTOP GROUNDING RING SHALL BE BONDED TO THE EXISTING GROUNDING SYSTEM, THE BUILDING STEEL COLUMNS, LIGHTNING PROTECTION SYSTEM, AND BUILDING MAIN WATER LINE (FERROUS OR NONFERROUS METAL PIPING ONLY). DO NOT ATTACH GROUNDING TO FIRE SPRINKLER SYSTEM PIPES.

dish wireless

5701 SOUTH SANTA FE DRIVE
LITTLETON, CO 80120

SBA

8051 CONGRESS AVENUE
BOCA RATON, FL 33487

B+T GRP
1717 S. BOULDER
SUITE 300
TULSA, OK 74119
PH: (918) 587-4630
www.btgrp.com

STATE OF CONNECTICUT
CHAD MILLER
No. 23924
LICENSED
PROFESSIONAL ENGINEER

01/06/23

MTS ENGINEERING P.L.L.C.
BER:2386985
Expires 3/31/23

IT IS A VIOLATION OF LAW FOR ANY PERSON, UNLESS THEY ARE ACTING UNDER THE DIRECTION OF A LICENSED PROFESSIONAL ENGINEER, TO ALTER THIS DOCUMENT.

DRAWN BY:	CHECKED BY:	APPROVED BY:
MEH	RMC	RMC

RFDS REV #: 1.0

CONSTRUCTION DOCUMENTS

SUBMITTALS

REV	DATE	DESCRIPTION
A	6/2/22	ISSUED FOR REVIEW
0	6/14/22	ISSUED FOR CONSTRUCTION
1	01/06/23	ISSUED FOR CONSTRUCTION

A&E PROJECT NUMBER

164076.001.01

DISH Wireless L.L.C.
PROJECT INFORMATION

BOBOS00068C
26 MELL ROAD
LISBON, CT 06351

SHEET TITLE

GENERAL NOTES

SHEET NUMBER

GN-5

Exhibit D

Structural Analysis Report

Tower Engineering Solutions
Phone (972) 483-0607, Fax (972) 975-9615
1320 Greenway Drive, Suite 600, Irving, Texas 75038

Structural Analysis Report

Existing 195 ft Nudd Corporation Monopole
Customer Name: SBA Communications Corp
Customer Site Number: CT00167-S
Customer Site Name: Lisbon
Carrier Name: Dish Wireless (App#: 199417-1)
Carrier Site ID / Name: BOBOS00068C / 0
Site Location: 26 Mell Road
Lisbon, Connecticut
New London County
Latitude: 41.591033
Longitude: -72.016960

STATE OF CONNECTICUT
JARRYD TIBBETTS
No. 34170
LICENSED
PROFESSIONAL ENGINEER

1/4/23

Analysis Result:

Max Structural Usage: 85.1% [Pass]
Max Foundation Usage: 47.1% [Pass]
Additional Usage Caused by New Mount: +4.7%

Report Prepared By: Jacob C. Ehrmann

Tower Engineering Solutions
Phone (972) 483-0607, Fax (972) 975-9615
1320 Greenway Drive, Suite 600, Irving, Texas 75038

Structural Analysis Report

Existing 195 ft Nudd Corporation Monopole

Customer Name: SBA Communications Corp

Customer Site Number: CT00167-S

Customer Site Name: Lisbon

Carrier Name: Dish Wireless (App#: 199417-1)

Carrier Site ID / Name: BOBOS00068C / 0

Site Location: 26 Mell Road

Lisbon, Connecticut

New London County

Latitude: 41.591033

Longitude: -72.016960

Analysis Result:

Max Structural Usage: 85.1% [Pass]

Max Foundation Usage: 47.1% [Pass]

Additional Usage Caused by New Mount: +4.7%

Report Prepared By: Jacob C. Ehrmann

Introduction

The purpose of this report is to summarize the analysis results on the 195 ft Nudd Corporation Monopole to support the proposed antennas and transmission lines in addition to those currently installed. Any modification listed under Sources of Information was assumed completed and was included in this analysis.

Sources of Information

Tower Drawings	Fred A. Nudd Corporation Project #6531, dated February 4, 1999. Semaan Engineering solutions site #CT00167S Modification package, dated May 7, 2002.
Foundation Drawing	Fred A. Nudd Corporation Project #6531, dated February 4, 1999.
Geotechnical Report	Jaworski Geotech Inc., project #C98343G, dated August 5, 1998.
Modification Drawings	N/A
Mount Analysis	MTS Engineering P.L.L.C. Project Number 164076.002.01 Dated: 05/31/22

Analysis Criteria

The comprehensive analysis was performed in accordance with the requirements and stipulations of the TIA-222-H**.** In accordance with this standard, the structure was analyzed using **TESPoles,** a proprietary analysis software. The program considers the structure as an elastic 3-D model with second-order effects and temperature effects incorporated in the analysis. The analysis was performed using multiple wind directions.

Wind Speed Used in the Analysis:	125.0 mph (3-Sec. Gust) (Ultimate wind speed)
Wind Speed with Ice:	50 mph (3-Sec. Gust) with 1” radial ice concurrent
Service Load Wind Speed:	60 mph + 0” Radial ice
Standard/Codes:	TIA-222-H / 2021 IBC / 2022 Connecticut State Building Code
Exposure Category:	C
Risk Category:	II
Topographic Category:	1
Crest Height:	0 ft
Seismic Parameters:	$S_S = 0.19$, $S_1 = 0.054$

This structural analysis is based upon the tower being classified as a Risk Category II; however, if a different classification is required subsequent to the date hereof, the tower classification will be changed to meet such requirement and a new structural analysis will be run.

Existing Antennas, Mounts and Transmission Lines

The table below summarizes the antennas, mounts and transmission lines that were considered in the analysis as existing on the tower.

Items	Elevation (ft)	Qty.	Antenna Descriptions	Mount Type & Qty.	Transmission Lines	Owner
1	195.0	3	Ericsson - AIR6449 B41 - Panel	Site Pro RMQP-4096-HK	(6) 1 5/8" (6) 1.9" Fiber	T-Mobile
2		3	RFS - APXVAALL24-43-U-NA20 - Panel			
3		3	RFS - APX16DWV-16DWVS-E-A20 - Panel			
4		3	Ericsson KRY 112 144/1			
5		3	Ericsson 4449 B71 + B85			
6		3	Ericsson 4424 B25			
7		3	Ericsson 4415 B66A			
7	173.0	3	CommScope - DT465B-2XR - Panel	(3) Sector Frame (1) Tie-Back Components: (3) relocate pipe stiff-arms (1) Handrail Components-V-Brace Kit SitePro1 Park PRK-SFR-K-L (1) Handrail Components-(3) Pipe2.O STD (2.375" O.D.) x 7'+/- Horizontal Rail; Sitepro1 SCX x-K cross-over plates [(3) total rails; (6) SCX]	(4) 1-1/4" Fiber	Sprint Nextel
8		3	RFS - APXVSPP18-C-A20 - Panel			
9		4	RFS ACU-A20-N RET			
10		3	ALU 1900 MHz RRH			
11		6	ALU 800 MHz RRH			
12		3	ALU 800 MHz Filter			
13		3	ALU TD-RRH8x20-25 RRUs			
14	159.0	3	Samsung VZS01 - Panel	Low Profile Platform	(10) 1 5/8" (2) 1 5/8" Hybrid (1) 1/2"	Verizon
15		3	Antel BXA-70080-4BF- Panel			
16		6	Commscope SBNHH-1D65B- Panel			
17		3	Samsung B2/B66A RRH-BR049			
18		3	Samsung B5/B13 RRH-BR04C			
19		2	Rfs Celwave DB-T1-6Z-8AB-0Z-OVP			
20		1	Lucent KS24019-L112A-GPS			

Proposed Carrier's Final Configuration of Antennas, Mounts and Transmission Lines

Information pertaining to the proposed carrier's final configuration of antennas and transmission lines was provided by SBA Communications Corp. The proposed antennas and lines are listed below.

Items	Elevation (ft)	Qty.	Antenna Descriptions	Mount Type & Qty.	Transmission Lines	Owner
21	145.0	3	Commscope FFVV-65B-R2 - Panel	(1) Commscope Platform w/ handrail MC-PK8-DSH	(1) 1.6" Hybrid	Dish Wireless
22		3	Fujitsu TA08025-B604			
23		3	Fujitsu TA08025-B605			
24		1	Raycap RDIC-9181-PF-48			

The proposed transmission lines can be installed inside or outside of the pole shafts. If installed outside, the lines shall be strapped tightly to the face of the pole shafts. Stacking lines is not allowed.

Analysis Results

The results of the structural analysis, performed for the wind and ice loading and antenna equipment as defined above, are summarized as the following:

	Pole shafts	Anchor Bolts	Base Plate
Max. Usage:	**85.1%**	**69.5%**	**51.9%**
Pass/Fail	**Pass**	**Pass**	**Pass**

Foundations

	Moment (Kip-Ft)	Shear (Kips)	Axial (Kips)
Analysis Reactions	6220.4	46.3	63.4

The foundation has been investigated using the supplied documents and soils report and was found adequate. Therefore, no modification to the foundation will be required.

Service Load Condition (Rigidity):

Operational characteristics of the tower are found to be within the limits prescribed by TIA-222 for the installed antennas. The maximum twist/sway at the elevation of the proposed equipment is 1.2412 degrees under the operational wind speed as specified in the Analysis Criteria.

Conclusions

Based on the analysis results, the existing structure and its foundation were found to be adequate to safely support the existing and proposed equipment and meet the minimum requirements per the TIA-222 Standard under the design basic wind speed as specified in the Analysis Criteria.

Standard Conditions

1. This analysis was performed based on the information supplied to **(TES) Tower Engineering Solutions, LLC.** Verification of the information provided was not included in the Scope of Work for **TES**. The accuracy of the analysis is dependent on the accuracy of the information provided.

2. The structural analysis was performance based upon the evidence available at the time of this report. All information provided by the client is considered to be accurate.

3. The analyses will be performed based on the codes as specified by the client or based on the best knowledge of the engineering staff of **TES**. In the absence of information to the contrary, all work will be performed in accordance with the latest relevant revision of ANSI/TIA-222. If wind speed and/or ice loads are different from the minimum values recommended by the ANSI/TIA-222 standard or other codes, **TES** should be notified in writing and the applicable minimum values provided by the client.

4. The configuration of the existing mounts, antennas, coax and other appurtenances were supplied by the customer for the current structural analysis. **TES** has not visited the tower site to verify the adequacy of the information provided. If there is any discrepancy found in the report regarding the existing conditions, **TES** should be notified immediately to evaluate the effect of the discrepancy on the analysis results.

5. The client will assume responsibility for rework associated with the differences in initially provided information, including tower and foundation information, existing and/or proposed equipment and transmission lines.

6. If a feasibility analysis was performed, final acceptance of changed conditions shall be based upon a rigorous structural analysis.

Usage Diagram - Max Ratio 74.80% at 140.0ft

Structure:	CT00167-S-SBA	**Code:**	EIA/TIA-222-H	1/4/2023
Site Name:	Lisbon	**Exposure:**	C	
Height:	195.00 (ft)	**Gh:**	1.1	
Base Elev:	0.000 (ft)			Page: 1

Tower Engineering Solutions

Dead Load Factor: 1.20

Wind Load Factor: 1.00

Load Case : 1.2D + 1.0W 125 mph Wind

Iterations: 25

Copyright © 2023 by Tower Engineering Solutions, LLC. All rights reserved.

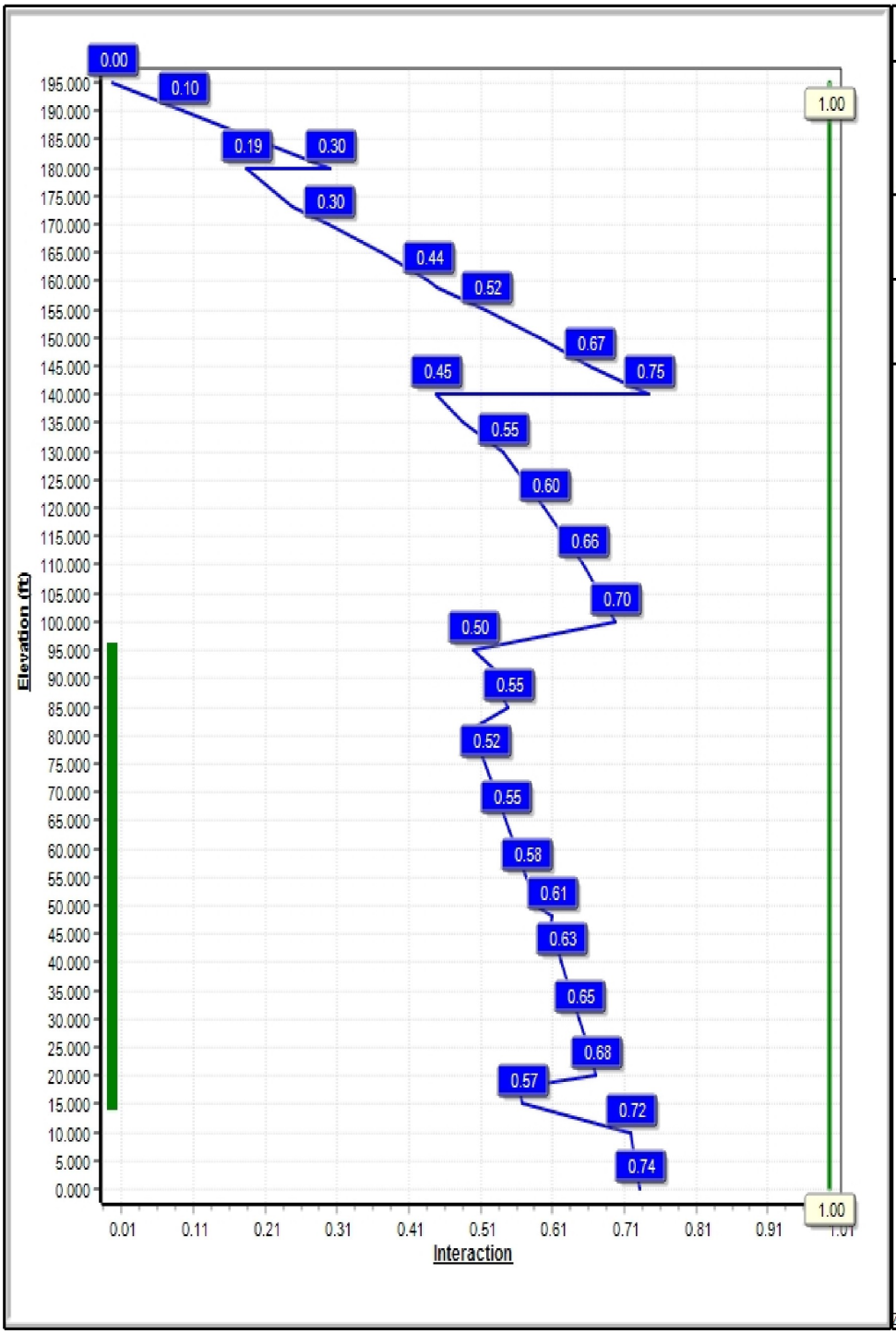

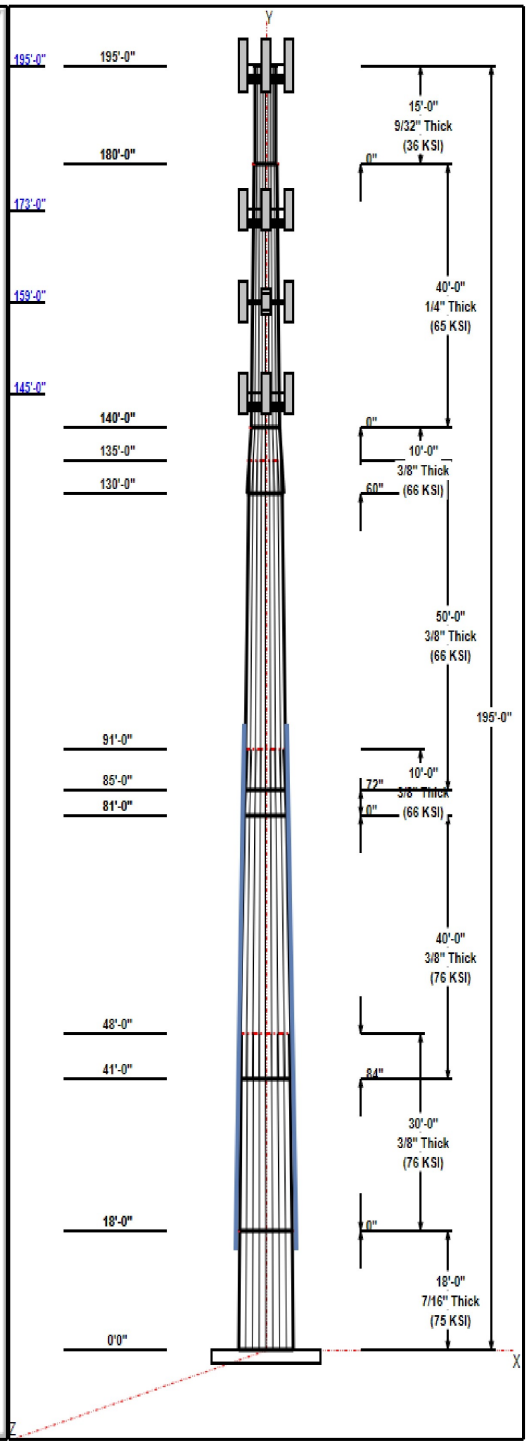

Structure: CT00167-S-SBA

Type:	Custom	**Base Shape:**	18 Sided	1/4/2023
Site Name:	Lisbon	**Taper:**	0.23750	
Height:	195.00 (ft)			
Base Elev:	0.00 (ft)			Page: 2

Tower Engineering Solutions

Shaft Properties

Seq	Length (ft)	Top (in)	Bottom (in)	Thick (in)	Joint Type	Taper	Grade (ksi)
1	18.00	60.23	64.50	0.438		0.23750	75
2	30.00	53.10	60.23	0.375	Butt	0.23750	76
3	40.00	46.01	55.51	0.375	Slip	0.23750	76
4	10.00	43.64	46.01	0.375	Butt	0.23750	66
5	50.00	33.94	45.81	0.375	Slip	0.23750	66
6	10.00	33.50	35.88	0.375	Slip	0.23750	66
7	40.00	24.00	33.50	0.250	Butt	0.23750	65
8	15.00	24.00	24.00	0.281	Butt	0.00000	36

Discrete Appurtenances

Attach Elev (ft)	Force Elev (ft)	Qty	Description	Carrier
195.00	195.00	3	AIR6449 B41	T-Mobile
195.00	195.00	3	APXVAALL24-43-U-NA20	T-Mobile
195.00	195.00	3	APX16DWV-16DWVS-E-A	T-Mobile
195.00	195.00	3	Ericsson KRY 112 144/1	T-Mobile
195.00	195.00	3	Ericsson 4449 B71 + B85	T-Mobile
195.00	195.00	3	Ericsson 4424 B25	T-Mobile
195.00	195.00	3	Ericsson 4415 B66A	T-Mobile
195.00	195.00	1	RMQP-4096-HK	T-Mobile
173.00	173.00	3	Sector Frame-Pipe/Rod	Sprint Nextel
173.00	173.00	3	APXVSPP18-C-A20	Sprint Nextel
173.00	173.00	3	ALU 1900 MHz RRH	Sprint Nextel
173.00	173.00	6	ALU 800 MHz RRH	Sprint Nextel
173.00	173.00	3	ALU 800 MHz Filter	Sprint Nextel
173.00	173.00	4	RFS ACU-A20-N RET	Sprint Nextel
173.00	173.00	3	DT465B-2XR	Sprint Nextel
173.00	173.00	3	ALU TD-RRH8x20-25	Sprint Nextel
159.00	159.00	3	Samsung VZS01	Verizon
159.00	159.00	3	Samsung B2/B66A	Verizon
159.00	159.00	3	Samsung B5/B13	Verizon
159.00	159.00	1	Lucent KS24019-L112A	Verizon
159.00	159.00	1	Low Profile Platform-flat	Verizon
159.00	159.00	6	SBNHH-1D65B	Verizon
159.00	159.00	3	BXA-70080-4BF	Verizon
159.00	159.00	2	Rfs Celwave	Verizon
145.00	145.00	3	FFVV-65B-R2	Dish Wireless
145.00	145.00	3	TA08025-B604	Dish Wireless
145.00	145.00	3	TA08025-B605	Dish Wireless
145.00	145.00	1	RDIC-9181-PF-48	Dish Wireless
145.00	145.00	1	MC-PK8-DSH	Dish Wireless

Linear Appurtenances

Elev From (ft)	Elev To (ft)	Placement	Description	Carrier
0.00	195.00	Inside	1 5/8" Coax	T-Mobile
0.00	195.00	Inside	1.9" Fiber	T-Mobile
0.00	195.00	Outside	Safety Cable	
0.00	195.00	Outside	Step bolts (ladder)	
0.00	173.00	Inside	1-1/4" Fiber	Sprint Nextel
0.00	159.00	Inside	1 5/8" Coax	Verizon
0.00	159.00	Inside	1 5/8" Hybrid	Verizon
0.00	159.00	Inside	1/2" Coax	Verizon
0.00	145.00	Outside	1.6" Hybrid	Dish Wireless

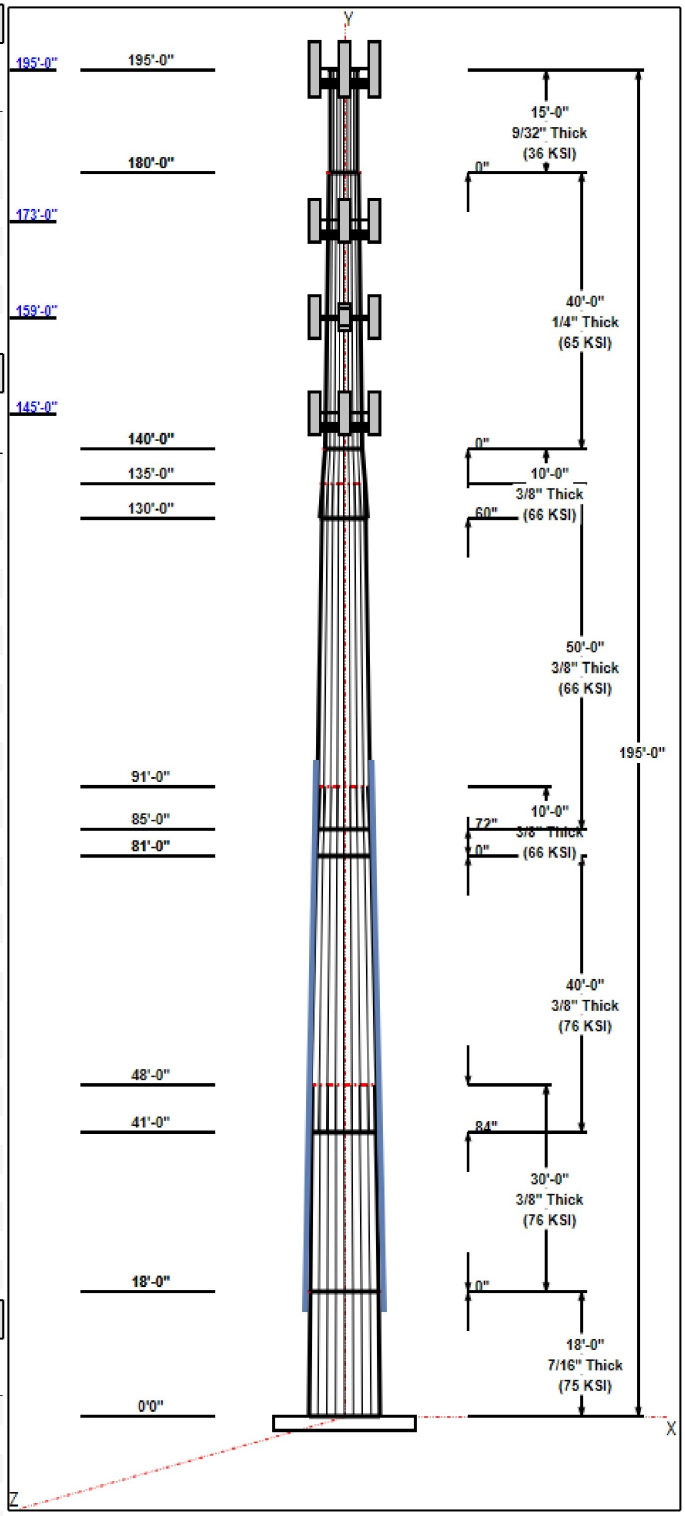

Copyright © 2023 by Tower Engineering Solutions, LLC. All rights reserved.

90.00	105.00	Outside	Reinforcing channels
60.00	90.00	Outside	Reinforcing channels
15.00	60.00	Outside	Reinforcing channels

Anchor Bolts

Qty	Specifications	Grade (ksi)	Arrangement
26	2.00" A687	105.0	Radial

Base Plate

Thickness (in)	Specifications (in)	Grade (ksi)	Geometry
1.7500	52.0	50.0	Round

Reactions

Load Case	Moment (FT-Kips)	Shear (Kips)	Axial (Kips)
1.2D + 1.0W 125 mph Wind	6220.4	46.3	63.4
0.9D + 1.0W 125 mph Wind	6143.4	46.2	47.5
1.2D + 1.0Di + 1.0Wi 50 mph Wind	1513.5	11.4	84.7
1.2D + 1.0Ev + 1.0Eh	252.9	1.4	64.7
0.9D + 1.0Ev + 1.0Eh	250.3	1.4	48.8
1.0D + 1.0W 60 mph Wind	1274.3	9.5	52.9

Copyright © 2023 by Tower Engineering Solutions, LLC. All rights reserved.

Structure: CT00167-S-SBA - Coax Line Placement

Type: Monopole
Site Name: Lisbon
Height: 195.00 (ft)

1/4/2023

Tower Engineering Solutions

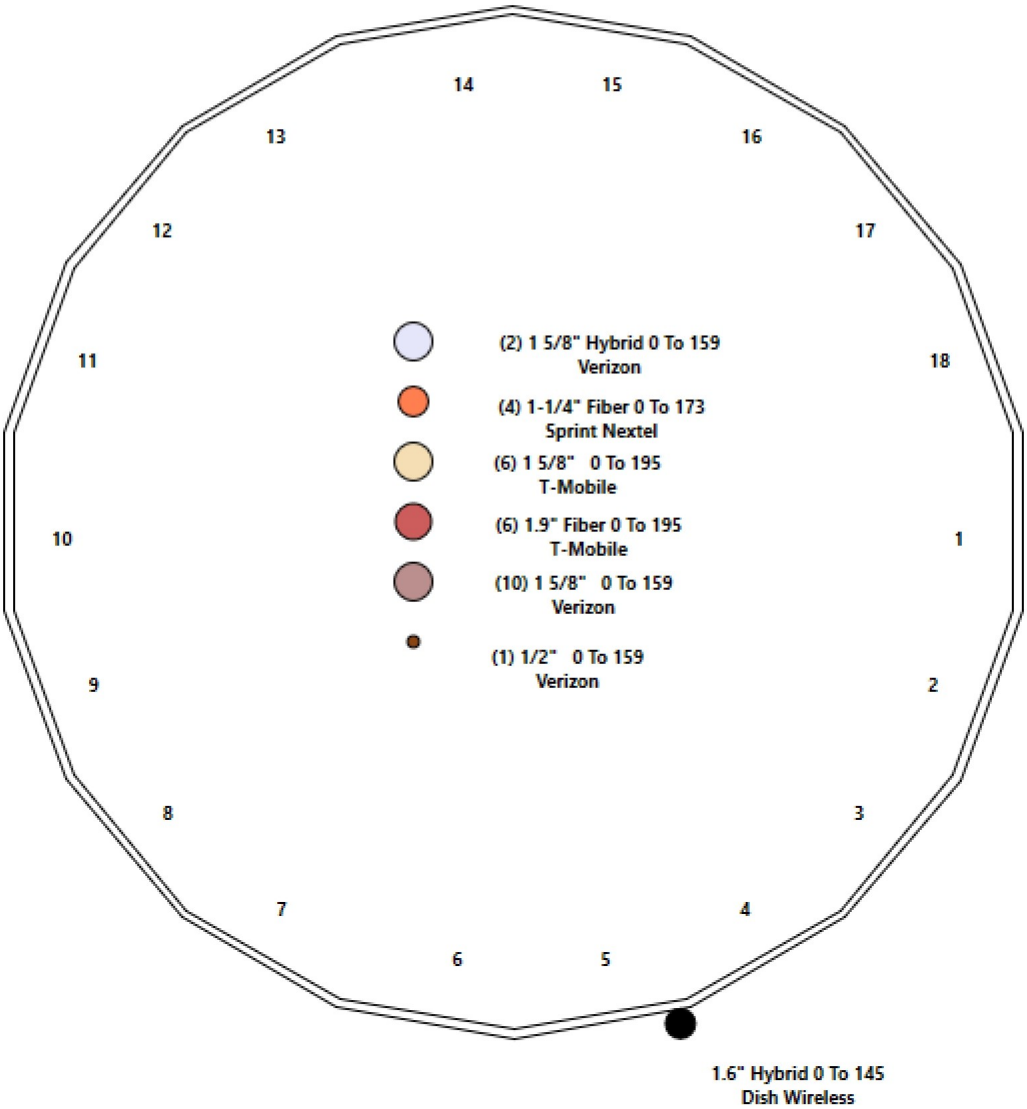

Copyright © 2023 by Tower Engineering Solutions, LLC. All rights reserved.

Final Analysis Summary

Structure:	CT00167-S-SBA	**Code:**	TIA-222-H	1/4/2023	
Site Name:	Lisbon	**Exposure:**	C		
Height:	195.00 (ft)	**Crest Height:**	0.00		
Base Elev:	0.000 (ft)	**Site Class:**	B - Competent Rock		
Gh:	1.1 **Topography:** 1	**Struct Class:**	II	Page: 62	

Tower Engineering Solutions

Reactions

Load Case	Shear FX (kips)	Shear FZ (kips)	Axial FY (kips)	Moment MX (ft-kips)	Moment MY (ft-kips)	Moment MZ (ft-kips)
1.2D + 1.0W 125 mph Wind	46.3	0.00	63.42	0.00	0.00	6220.42
0.9D + 1.0W 125 mph Wind	46.2	0.00	47.55	0.00	0.00	6143.40
1.2D + 1.0Di + 1.0Wi 50 mph Wind	11.4	0.00	84.73	0.00	0.00	1513.48
1.2D + 1.0Ev + 1.0Eh	1.4	0.00	64.73	0.00	0.00	252.87
0.9D + 1.0Ev + 1.0Eh	1.4	0.00	48.82	0.00	0.00	250.32
1.0D + 1.0W 60 mph Wind	9.5	0.00	52.91	0.00	0.00	1274.28

Max Stresses

Load Case	Pu FY (-) (kips)	Vu FX (-) (kips)	Tu MY (-) (ft-kips)	Mu MZ (ft-kips)	Mu MX (ft-kips)	Resultant Moment (ft-kips)	phi Pn (kips)	phi Vn (kips)	phi Tn (ft-kips)	phi Mn (ft-kips)	Elev (ft)	Stress Ratio
1.2D + 1.0W 125 mph Wind	-17.60	-28.64	0.00	-898.24	0.00	-898.24	2974.19	702.56	1930.89	2020.17	140.00	0.748
0.9D + 1.0W 125 mph Wind	-12.56	-28.08	0.00	-878.62	0.00	-878.62	2974.19	702.56	1930.89	2020.17	140.00	0.729
1.2D + 1.0Di + 1.0Wi 50 mph Wind	-31.36	-6.83	0.00	-211.42	0.00	-211.42	2974.19	702.56	1930.89	2020.17	140.00	0.191
1.2D + 1.0Ev + 1.0Eh	-20.87	-1.33	0.00	-51.26	0.00	-51.26	2974.19	702.56	1930.89	2020.17	140.00	0.054
0.9D + 1.0Ev + 1.0Eh	-15.74	-1.31	0.00	-50.90	0.00	-50.90	2974.19	702.56	1930.89	2020.17	140.00	0.050
1.0D + 1.0W 60 mph Wind	-16.94	-5.86	0.00	-183.67	0.00	-183.67	2974.19	702.56	1930.89	2020.17	140.00	0.160

Additional Steel Summary

			Intermediate Connectors			Lower Termination				Upper Termination				Max Member			
Elev From (ft)	Elev To (ft)	Member	VQ/I (lb/in)	Vu (kips)	phi Vn (kips)	MQ/I (kips)	phi Vn (kips)	Num Reqd	Num Actual	MQ/I (kips)	phi Vn (kips)	Num Reqd	Num Actual	Pu (kips)	phi Pn (kips)	phi Tn (kips)	Ratio
15.0	95.0	(6) PLT-C6x10.5 (no hole)	148.1	0.00	25.3	136.9	27.8	5	3	118.9	27.8	5	3	153.41	180.8	180.17	0.851

Copyright © 2023 by Tower Engineering Solutions, LLC. All rights reserved.

Monopole Mat Foundation Design

			Date
			1/4/2023
Customer Name:	Dish Wireless	**TIA Standard:**	TIA-222-H
Site Name:		**Structure Height (Ft.):**	195
Site Number:	CT00167-S-SBA	**Engineer Name:**	J. Tibbetts
Engr. Number:	137374	**Engineer Login ID:**	

Foundation Info Obtained from:	Drawings/Calculations
Structure Type:	Monopole
Analysis or Design?	Analysis

Base Reactions (Factored):

Axial Load (Kips):	63.4	Shear Force (Kips):	46.3
Uplift Force (Kips):	0.0	Moment (Kips-ft):	6220.4
Allowable overstress %:	5.0%		

Foundation Geometries:

		Mods required -Yes/No ?:	No
Diameter of Pier (ft.):	8.0	Depth of Base BG (ft.):	12.0
Pier Height A. G. (ft.):	0.50	Thickness of Pad (ft):	4.00
Length of Pad (ft.):	30	Width of Pad (ft.):	30
Final Length of pad (ft)	30.0	Final width of pad (ft):	30.0

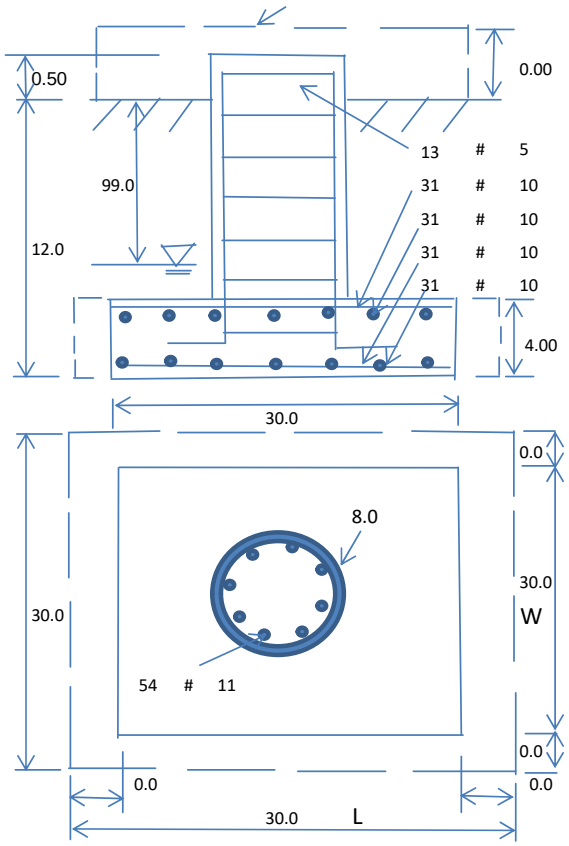

Material Properties and Reabr Info:

Concrete Strength (psi):	3000	Steel Elastic Modulus:	29000	ksi
Vertical bar yield (ksi)	60	Tie steel yield (ksi):	60	
Vertical Rebar Size #:	11	Tie / Stirrup Size #:	5	
Qty. of Vertical Rebars:	54	Tie Spacing (in):	12.0	
Pad Rebar Yield (Ksi):	60	Pad Steel Rebar Size (#):	10	
Concrete Cover (in.):	3	Unit Weight of Concrete:	150.0	pcf

Rebar at the bottom of the concrete pad:

Qty. of Rebar in Pad (L):	31	Qty. of Rebar in Pad (W):	31

Rebar at the top of the concrete pad:

Qty. of Rebar in Pad (L):	31	Qty. of Rebar in Pad (W):	31
Apply 1.35 factor for e/w Per G:	1.35		

Soil Design Parameters:

Soil Unit Weight (pcf):	125.0	Soil Buoyant Weight:	50.0	Pcf		
Water Table B.G.S. (ft):	99.0	Unit Weight of Water:	62.4	pcf	Angle from Top of Pad:	30
Ultimate Bearing Pressure (psf):	8000	Ultimate Skin Friction:	0	Psf	Angle from Bottm of Pad:	25
Consider Friction for O.T.M. (Y/N):	No	Consider Friction for bearing (Y/N):	No		Angle from Bottm of Pad:	25
Consider soil hor. resist. for OTM.:	No	Reduction factor on the maximum soil bearing pressure:			1.00	

Foundation Analysis and Design: Uplift Strength Reduction Factor: 0.75 Compression Strength Reduction Factor: 0.75

Total Dry Soil Volume (cu. Ft.):	6797.88	Total Dry Soil Weight (Kips):	849.73
Total Buoyant Soil Volume (cu. Ft.):	0.00	Total Buoyant Soil Weight (Kips):	0.00
Total Effective Soil Weight (Kips):	849.73	Weight from the Concrete Block at Top (K):	0.00
Total Dry Concrete Volume (cu. Ft.):	4027.26	Total Dry Concrete Weight (Kips):	604.09
Total Buoyant Concrete Volume (cu. Ft.):	0.00	Total Buoyant Concrete Weight (Kips):	0.00
Total Effective Concrete Weight (Kips):	604.09	Total Vertical Load on Base (Kips):	1517.22

Check Soil Capacities:

					Load/ Capacity Ratio	
Calculated Maxium Net Soil Pressure under the base (psf):	2824	<	Allowable Factored Soil Bearing (psf):	6000	0.47	OK!
Allowable Foundation Overturning Resistance (kips-ft.):	20577.6	>	Design Factored Momont (kips-ft):	6799	0.33	OK!
Factor of Safety Against Overturning (O. R. Moment/Design Moment):	3.03	OK!				

Check the capacities of Reinforceing Concrete:

Strength reduction factor (Flexure and axial tension):	0.90	Strength reduction factor (Shear):	0.75			
Strength reduction factor (Axial compresion):	0.65	Wind Load Factor on Concrete Design:	1.00			
				Load/ Capacity Ratio		
(1) Concrete Pier:						
Vertical Steel Rebar Area (sq. in./each):	1.56		Tie / Stirrup Area (sq. in./each):	0.31		
Calculated Moment Capacity (Mn,Kips-Ft):	15197.3	>	Design Factored Moment (Mu, Kips-F	6614.0	0.44	OK!
Calculated Shear Capacity (Kips):	832.8	>	Design Factored Shear (Kips):	46.3	0.06	OK!
Calculated Tension Capacity (Tn, Kips):	4549.0	>	Design Factored Tension (Tu Kips):	0.0	0.00	OK!
Calculated Compression Capacity (Pn, Kips):	9486.2	>	Design Factored Axial Load (Pu Kips):	63.4	0.01	OK!
Moment & Axial Strength Combination:	0.44	OK!	Check Tie Spacing (Design/Required):		1	OK!
Pier Reinforcement Ratio:	0.012		Reinforcement Ratio is satisfied per ACI			
(2).Concrete Pad:						
One-Way Design Shear Capacity (L-Direction, Kips):	1312.5	>	One-Way Factored Shear (L-D. Kips):	386.1	0.29	OK!
One-Way Design Shear Capacity (W-Direction, Kips):	1312.5	>	One-Way Factored Shear (W-D., Kips)	386.1	0.29	OK!
One-Way Design Shear Capacity (Corner-Corner. Kips):	1182.6	>	One-Way Factored Shear (C-C, Kips):	348.1	0.29	OK!
Lower Steel Pad Reinforcement Ratio (L-Direct.):	0.0025	OK!	Lower Steel Pad Reinf. Ratio (W-Direc	0.0025		
Lower Steel Pad Moment Capacity (L-Direction. Kips-ft):	7633.8	>	Moment at Bottom (L-Dir. K-Ft):	2725.8	0.36	OK!
Lower Steel Pad Moment Capacity (W-Direction. Kips-ft):	7633.8	>	Moment at Bottom (W-Dir. K-Ft):	2725.8	0.36	OK!
Lower Steel Pad Moment Capacity (Corner-Corner,K-ft):	10720.9	>	Moment at Bottom (C-C Dir. K-Ft):	3854.9	0.36	OK!
Upper Steel Pad Reinforcement Ratio (L-Direct.):	0.0025	OK!	Upper Steel Reinf. Ratio (W-Dir.):	0.0025		
Upper Steel Pad Moment Capacity (L-Direc. Kips-ft):	7633.8	>	Moment at the top (L-Dir K-Ft):	1151.4	0.15	OK!
Upper Steel Pad Moment Capacity (W-Direc. Kips-ft):	7633.8	>	Moment at the top (W-Dir K-Ft):	1151.4	0.15	OK!
Upper Steel Pad Moment Capacity (Corner-Corner. K-ft):	10720.9	>	Moment at the top (C-C Dir. K-Ft):	1078.5	0.10	OK!
(3).Check Punching Shear Capacity due to Moment in the Pier:						
Moment transferred by punching shear:	2488.2	k-ft.	Max. factored shear stress v_{u_CD}:		4.4	Psi
Max. factored shear stress v_{u_AB}:	9.3	Psi	Factored shear Strength ϕv_n:		164.3	Psi
Max. factored shear stress v_u:	9.3	Psi	Check Usage of Punching Shear Capacity:		0.06	OK!
(4).Check Bending Capacity of the Pad Within the Effective Slab Width:						
Overturning moment to be transferred by flexure:	1866.1	k-ft.	Effective Width for resisting OT moment:		20.0	ft.
Calculated number of Rebar in Effective width:	21		Actual number of Rebar in Effective width:		13	
Steel Pad Moment Capacity (L-Direc. Kips-ft):	3236.7	k-ft.	Check Usage of the Flexure Capacity:		0.58	OK!

Exhibit E

Mount Analysis

January 9, 2023

Sherri Knapik
SBA Network Services, LLC.
134 Flanders Road, Suite 125
Westborough, MA 01581
(508) 251-0720 x 3805

MTS Engineering, P.L.L.C.
1717 S. Boulder, Suite 300
Tulsa, OK 74119
(918) 587-4630
towersupport@btgrp.com

Subject:	**Appurtenance Mount Analysis Report**	
Carrier Designation:	***Dish Wireless* Co-Locate**	
	Site Number:	BOBOS00068C
	Site Name:	N/A
***SBA Network Services Designation*:**	**Site Number:**	CT00167-S
	Site Name:	Lisbon
	Application Number:	199417, v1
Engineering Firm Designation:	**Project Number:**	164076.002.01 Rev 1
Site Data:	**26 Mell Road, Lisbon, CT, 06351, New London County**	
	Latitude *41.59103*°, Longitude *-72.01696*°	
	Monopole	
	8' Platform Mount	

Dear Mr. Knapik,

We are pleased to submit this **"Appurtenance Mount Analysis Report"** to determine the structural integrity of the antenna mount on the above-mentioned structure.

The purpose of the analysis is to determine acceptability of the mount's stress level. Based on our analysis we have determined the stress level for the mount under the following load case to be:

Proposed Equipment Note: See Table 1 for the final loading configuration	**Sufficient Capacity** **(Passing at 55.7%)**

This analysis utilizes an ultimate 3-second gust wind speed of 124 mph as required by the 2022 Connecticut State Building Code. Applicable Standard references and design criteria are listed in Section 2 - Analysis Criteria.

All the equipment proposed in this report shall be installed in accordance with the drawings for the determined available structural capacity to be effective.

We appreciate the opportunity of providing our continuing professional services to you and *SBA Network Services, LLC.* If you have any questions or need further assistance on this or any other projects, please give us a call.

Mount structural analysis prepared by: Erika Ruiz

Respectfully submitted by: MTS Engineering, P.L.L.C.
COA: BER:2386985 Expires: 3/31/2023

STATE OF CONNECTICUT
CHAD TUTTLE
No. 23924
LICENSED
PROFESSIONAL ENGINEER

1-9-23

Chad E. Tuttle, P.E.

TABLE OF CONTENTS

1) INTRODUCTION

2) ANALYSIS CRITERIA
Table 1 - Proposed Equipment Information
Table 2 - Documents Provided

3) ANALYSIS PROCEDURE
3.1) Analysis Method
3.2) Assumptions

4) ANALYSIS RESULTS
Table 3 – Mount Component Stresses vs. Capacity

5) RECOMMENDATIONS

6) APPENDIX A
RISA-3D Output

7) APPENDIX B
Additional Calculations

1) INTRODUCTION

The appurtenance mount consists of Commscope platform mount, Part #MC-PK8-DSH at 145 ft., attached to monopole at 26 Mell Road, Lisbon, CT, 06351, New London County. The proposed antenna loading information was obtained from SBA Network Services, LLC. All information provided to us was assumed accurate and complete.

2) ANALYSIS CRITERIA

The structural analysis was performed for this mount in accordance with the ANSI/TIA-222-H-2017 Structural Standard for Antenna Supporting Structures and Antennas and Small Wind Turbine Support Structures using a 3-second gust wind speed of 124 mph with no ice and 50 mph with 1 inch escalated ice thickness. Exposure Category C, Topographic Category 1 and Risk Category II were used in this analysis. In addition, the platform mount has been analyzed for various live loading conditions consisting of a 250-lb man live load applied individually at the midpoint and cantilevered ends of horizontal members as well as a 500-pound man live load applied individually at mount pipe locations using a 3-second gust of 30 mph. The mount was analyzed under 30º increments in the wind direction. The analyzed loading is detailed in Table 1.

Table 1 – Proposed Equipment Information

Loading	RAD Center Elev. (ft.)	Position	Qty.	Description	Note
Proposed	145	1	3	Commscope FFVV-65B-R2	1
			3	Fujitsu TA08025-B605	2
			3	Fujitsu TA08025-B604	
		--	1	Raycap RDIDC-9181-PF-48	3

Note:
(1) Proposed Antenna to be installed on the Proposed Mount Pipe.
(2) Proposed Equipment to be installed directly behind the Antenna.
(3) Proposed Equipment to be installed on the Mount.

Table 2 - Documents Provided

Documents	Remarks	Reference	Source
Collo App	Proposed Loading	Date: 05/26/2022	SBA Network Services, LLC.
RFDS		Date: 05/26/2022	

3) ANALYSIS PROCEDURE

3.1) Analysis Method

RISA-3D (Version 20.0.1), a commercially available analysis software package, was used to create a three-dimensional model of the mount and calculate member stresses and deflections for various loading cases. Selected output from the analysis is included in Appendix A.

Manufacturers drawing were used to create the model.

3.2) Assumptions

1. The mount was built in accordance with the manufacturer's specifications.
2. The mount has been maintained in accordance with the manufacturer's specifications and is free of damage.
3. The configuration of antennas and other appurtenances are as specified in Table 1.
4. All mount components have been assumed to be in sufficient condition to carry their full design capacity for the analysis.
5. Mount areas and weights are determined from field measurements, standard material properties, and/or manufacturer product data.

6. Serviceability with respect to antenna twist, tilt, roll or lateral translation is not checked and is left to the carrier or tower owner to ensure conformance.
7. All prior structural modifications, if any are assumed to be correctly installed and fully effective.
8. All member connections are assumed to have been designed to meet or exceed the load carrying capacity of the connected member unless otherwise specified in this report.
9. The following material grades were assumed (Unless Noted Otherwise):
   a) Connection Bolts : ASTM A325
   b) Steel Pipe : ASTM A53 (GR. 35)
   c) HSS (Round) : ASTM 500 (GR. B-42)
   d) HSS (Rectangular) : ASTM 500 (GR. B-46)
   e) Channel : ASTM A36 (GR. 36)
   f) Steel Solid Rod : ASTM A36 (GR. 36)
   g) Steel Plate : ASTM A36 (GR. 36)
   h) Steel Angle : ASTM A36 (GR. 36)
   i) UNISTRUT : ASTM A570 (GR. 33)

This analysis may be affected if any assumptions are not valid or have been made in error. MTS Engineering, P.L.L.C. should be notified to determine the effect on the structural integrity of the antenna mounting system.

4) ANALYSIS RESULTS

Table 3 – Mount Component Stresses vs. Capacity

Notes	Component	Elevation (ft.)	% Capacity	Pass / Fail
-	Main Horizontals	145	8.3	Pass
-	Support Rails	145	14.5	Pass
-	Support Tubes	145	55.7	Pass
-	Support Channels	145	38.2	Pass
-	Support Angles	145	38.8	Pass
-	Mount Pipes	145	16.2	Pass
-	Connection Plates	145	20.2	Pass
-	Connection Angles	145	25.5	Pass

5) RECOMMENDATIONS

The Commscope platform mount, Part# MC-PK8-DSH has sufficient capacity to carry the proposed loads and is in compliance with the ANSI/TIA-222-H standard for the proposed loading. (Refer to the RISA output for the specific members).

ASCE 7 Hazards Report

Address:
No Address at This Location

Standard: ASCE/SEI 7-16
Risk Category: II
Soil Class: D - Default (see Section 11.4.3)

Elevation: 267.21 ft (NAVD 88)
Latitude: 41.591033
Longitude: -72.01696

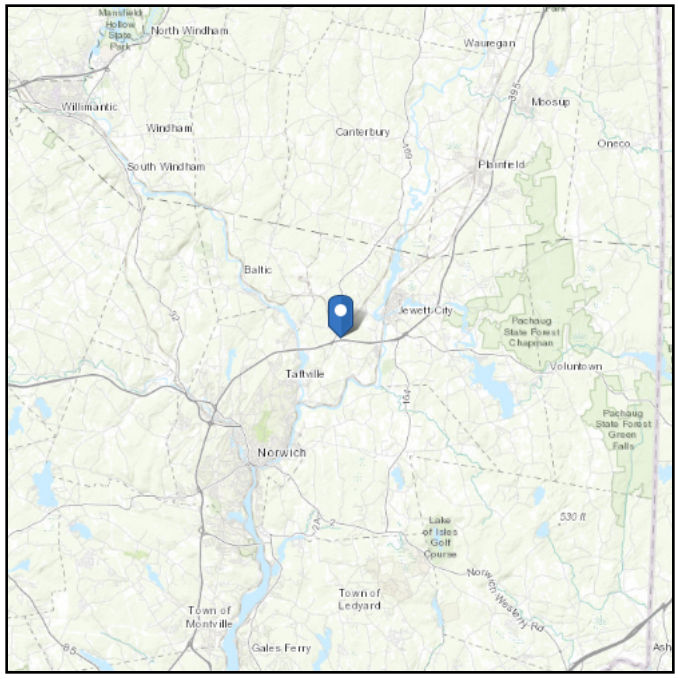

Wind

Results:

Wind Speed	124 Vmph
10-year MRI	75 Vmph
25-year MRI	85 Vmph
50-year MRI	96 Vmph
100-year MRI	102 Vmph

Data Source:	ASCE/SEI 7-16, Fig. 26.5-1B and Figs. CC.2-1–CC.2-4, and Section 26.5.2
Date Accessed:	Sat May 28 2022

Value provided is 3-second gust wind speeds at 33 ft above ground for Exposure C Category, based on linear interpolation between contours. Wind speeds are interpolated in accordance with the 7-16 Standard. Wind speeds correspond to approximately a 7% probability of exceedance in 50 years (annual exceedance probability = 0.00143, MRI = 700 years).

Site is in a hurricane-prone region as defined in ASCE/SEI 7-16 Section 26.2. Glazed openings need not be protected against wind-borne debris.

Seismic

Site Soil Class: D - Default (see Section 11.4.3)

Results:

S_S :	0.19	S_{D1} :	0.086
S_1 :	0.054	T_L :	6
F_a :	1.6	PGA :	0.104
F_v :	2.4	PGA_M :	0.166
S_{MS} :	0.305	F_{PGA} :	1.592
S_{M1} :	0.129	I_e :	1
S_{DS} :	0.203	C_v :	0.7

Seismic Design Category B

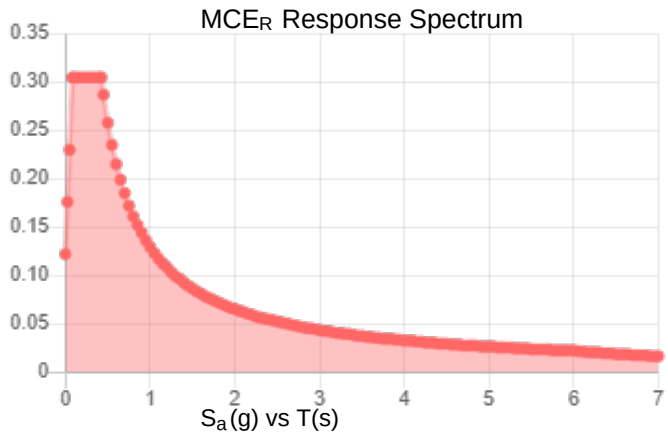

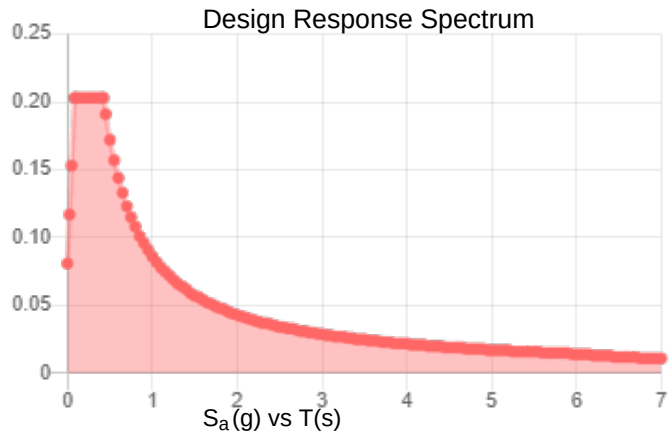

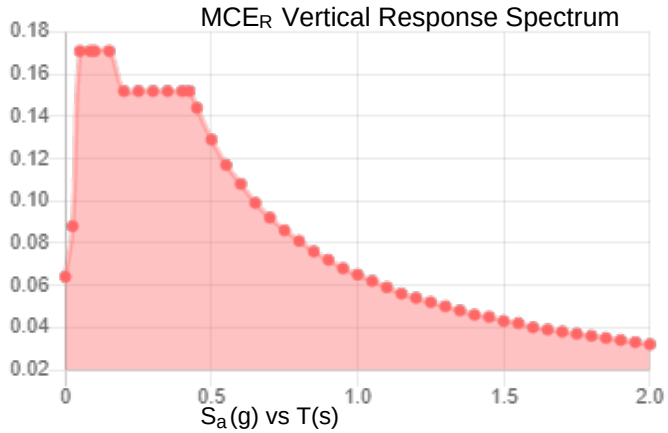

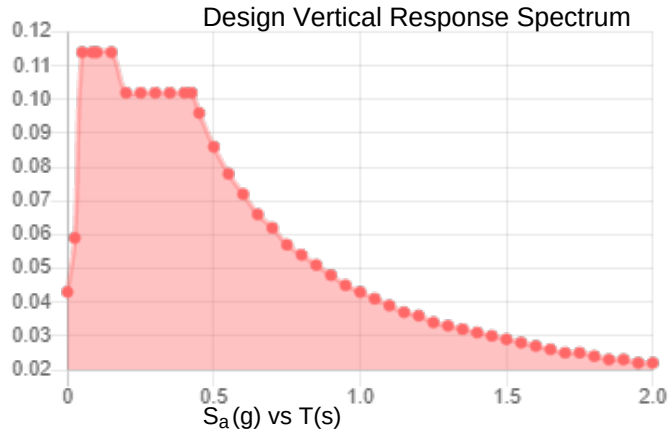

Data Accessed: **Sat May 28 2022**

Date Source:

USGS Seismic Design Maps based on ASCE/SEI 7-16 and ASCE/SEI 7-16 Table 1.5-2. Additional data for site-specific ground motion procedures in accordance with ASCE/SEI 7-16 Ch. 21 are available from USGS.

Ice

Results:

Ice Thickness:	1.00 in.
Concurrent Temperature:	15 F
Gust Speed	50 mph
Data Source:	Standard ASCE/SEI 7-16, Figs. 10-2 through 10-8
Date Accessed:	Sat May 28 2022

Ice thicknesses on structures in exposed locations at elevations higher than the surrounding terrain and in valleys and gorges may exceed the mapped values.

Values provided are equivalent radial ice thicknesses due to freezing rain with concurrent 3-second gust speeds, for a 500-year mean recurrence interval, and temperatures concurrent with ice thicknesses due to freezing rain. Thicknesses for ice accretions caused by other sources shall be obtained from local meteorological studies. Ice thicknesses in exposed locations at elevations higher than the surrounding terrain and in valleys and gorges may exceed the mapped values.

The ASCE 7 Hazard Tool is provided for your convenience, for informational purposes only, and is provided “as is” and without warranties of any kind. The location data included herein has been obtained from information developed, produced, and maintained by third party providers; or has been extrapolated from maps incorporated in the ASCE 7 standard. While ASCE has made every effort to use data obtained from reliable sources or methodologies, ASCE does not make any representations or warranties as to the accuracy, completeness, reliability, currency, or quality of any data provided herein. Any third-party links provided by this Tool should not be construed as an endorsement, affiliation, relationship, or sponsorship of such third-party content by or from ASCE.

ASCE does not intend, nor should anyone interpret, the results provided by this Tool to replace the sound judgment of a competent professional, having knowledge and experience in the appropriate field(s) of practice, nor to substitute for the standard of care required of such professionals in interpreting and applying the contents of this Tool or the ASCE 7 standard.

In using this Tool, you expressly assume all risks associated with your use. Under no circumstances shall ASCE or its officers, directors, employees, members, affiliates, or agents be liable to you or any other person for any direct, indirect, special, incidental, or consequential damages arising from or related to your use of, or reliance on, the Tool or any information obtained therein. To the fullest extent permitted by law, you agree to release and hold harmless ASCE from any and all liability of any nature arising out of or resulting from any use of data provided by the ASCE 7 Hazard Tool.

PROJECT	**164076.002.01 - Lisbon, CT**	**KSC**
SUBJECT	**Platform Mount Analysis**	
DATE	**05/31/22**	

B+T Group
1717 S. Boulder, Suite 300
Tulsa, OK 74119
(918) 587-4630

Tower Type		:	Monopole		
Ground Elevation	z_s	:	267	ft	[ASCE7 Hazard Tool]
Tower Height		:	195.00	ft	
Mount Elevation		:	145.00	ft	
Antenna Elevation		:	145.00	ft	
Crest Height		:	0	ft	
Risk Category		:	II		[Table 2-1]
Exposure Category		:	C		[Sec. 2.6.5.1.2]
Topography Category		:	1.00		[Sec. 2.6.6.2]
Wind Velocity	V	:	124	mph	[ASCE7 Hazard Tool]
Ice wind Velocity	V_i	:	50	mph	[ASCE7 Hazard Tool]
Service Velocity	V_s	:	30	mph	[ASCE7 Hazard Tool]
Base Ice thickness	t_i	:	1.00	in	[ASCE7 Hazard Tool]
Seismic Design Cat.		:	B		[ASCE7 Hazard Tool]
	S_S	:	0.19		
	S_1	:	0.05		
	S_{DS}	:	0.20		
	S_{D1}	:	0.09		
Gust Factor	G_h	:	1.00		[Sec. 16.6]
Pressure Coefficient	K_z	:	1.37		[Sec. 2.6.5.2]
Topography Facto	K_{zt}	:	1.00		[Sec. 2.6.6]
Elevation Factor	K_e	:	0.99		[Sec. 2.6.8]
Directionality Factor	K_d	:	0.95		[Sec. 16.6]
Shielding Factor	K_a	:	0.90		[Sec. 16.6]
Design Ice Thickness	t_{iz}	:	1.16	in	[Sec. 2.6.10]
Importance Factor	I_e	:	1		[Table 2-3]
Response Coefficient	C_s	:	0.102		[Sec. 2.7.7.1]
Amplification	A_s	:	1.974359		[Sec. 16.7]
	q_z	:	50.69	psf	

PROJECT	**164076.002.01 - Lisbon, CT**	**KSC**
SUBJECT	**Platform Mount Analysis**	
DATE	**05/31/22**	

B+T Group
1717 S. Boulder, Suite 300
Tulsa, OK 74119
(918) 587-4630

Manufacturer	Model	Qty	Height (in^2)	Width (in^2)	Depth (in^2)	Weight (lbs)	C_aA_a (N) (ft^2)	C_aA_a (T) (ft^2)	C_aA_a (N) Ice (ft^2)	C_aA_a (T) Ice (ft^2)	$F_{A\ (N)}$ (k)	$F_{A\ (T)}$ (k)	$F_{A\ (N)}$ Ice (k)	$F_{A\ (T)}$ Ice (k)
COMMSCOPE	FFVV-65B-R2	0.5	72.0	19.6	7.8	70.8	3.81	1.51	4.32	1.95	0.19	0.08	0.04	0.02
COMMSCOPE	FFVV-65B-R2	0.5					3.81	1.51	4.32	1.95	0.19	0.08	0.04	0.02
FUJITSU	TA08025-B605	1	15.8	15.0	9.1	75.0	1.96	1.19	2.60	1.71	0.09	0.05	0.01	0.01
FUJITSU	TA08025-B604	1	15.8	15.0	7.9	63.9	1.96	1.03	2.60	1.53	0.09	0.05	0.01	0.01
COMMSCOPE	FFVV-65B-R2	0.5	72.0	19.6	7.8	70.8	3.81	1.51	4.32	1.95	0.19	0.08	0.04	0.02
COMMSCOPE	FFVV-65B-R2	0.5					3.81	1.51	4.32	1.95	0.19	0.08	0.04	0.02
FUJITSU	TA08025-B605	1	15.8	15.0	9.1	75.0	1.96	1.19	2.60	1.71	0.09	0.05	0.01	0.01
FUJITSU	TA08025-B604	1	15.8	15.0	7.9	63.9	1.96	1.03	2.60	1.53	0.09	0.05	0.01	0.01
COMMSCOPE	FFVV-65B-R2	0.5	72.0	19.6	7.8	70.8	3.81	1.51	4.32	1.95	0.19	0.08	0.04	0.02
COMMSCOPE	FFVV-65B-R2	0.5					3.81	1.51	4.32	1.95	0.19	0.08	0.04	0.02
FUJITSU	TA08025-B605	1	15.8	15.0	9.1	75.0	1.96	1.19	2.60	1.71	0.09	0.05	0.01	0.01
FUJITSU	TA08025-B604	1	15.8	15.0	7.9	63.9	1.96	1.03	2.60	1.53	0.09	0.05	0.01	0.01
RAYCAP	RDIDC-9181-PF-48	1	19.0	16.2	9.6	21.9	2.56	1.52	3.29	2.12	0.12	0.07	0.02	0.01

Exhibit F

Power Density/RF Emissions Report

Fox Hill Telecom

Radio Frequency Emissions Analysis Report

Site ID: BOBOS00068C

SBA Lisbon
26 Mell Road
Lisbon, CT 06351

December 15, 2022

Fox Hill Telecom Project Number: 222031

Site Compliance Summary	
Compliance Status:	**COMPLIANT**
Site total MPE% of FCC general population allowable limit:	**5.07 %**

Fox Hill Telecom

December 15, 2022

Dish Wireless
5701 South Santa Fe Drive
Littleton, CO 80120

Emissions Analysis for Site: **BOBOS00068C – SBA Lisbon**

Fox Hill Telecom, Inc ("Fox Hill") was directed to analyze the proposed radio installation for Dish Wireless, LLC (Dish) facility located at **26 Mell Road, Lisbon, CT**, for the purpose of determining whether the emissions from the Proposed Dish radio and antenna installation located on this property are within specified federal limits.

All information used in this report was analyzed as a percentage of current Maximum Permissible Exposure (% MPE) as listed in the FCC OET Bulletin 65 Edition 97-01and ANSI/IEEE Std C95.1. The FCC regulates Maximum Permissible Exposure in units of microwatts per square centimeter (µW/cm2). The number of $\mu W/cm^2$ calculated at each sample point is called the power density. The exposure limit for power density varies depending upon the frequencies being utilized. Wireless Carriers and Paging Services use different frequency bands each with different exposure limits, therefore it is necessary to report results and limits in terms of percent MPE rather than power density.

All results were compared to the FCC (Federal Communications Commission) radio frequency exposure rules, 47 CFR 1.1307(b)(1) – (b)(3), to determine compliance with the Maximum Permissible Exposure (MPE) limits for General Population/Uncontrolled environments as defined below.

General population/uncontrolled exposure limits apply to situations in which the general population may be exposed or in which persons who are exposed as a consequence of their employment may not be made fully aware of the potential for exposure or cannot exercise control over their exposure. Therefore, members of the general population would always be considered under this category when exposure is not employment related, for example, in the case of a telecommunications tower that exposes persons in a nearby residential area.

Population exposure to radio frequencies is regulated and enforced in units of microwatts per square centimeter ($\mu W/cm^2$). The general population exposure limit for the 600 MHz band is approximately 400 $\mu W/cm^2$. The general population exposure limit for the 1900 MHz (PCS) and 2100 MHz (AWS / AWS-4) bands is 1000 $\mu W/cm^2$. Because each carrier will be using different frequency bands, and each frequency band has different exposure limits, it is necessary to report percent of MPE rather than power density.

Occupational/controlled exposure limits apply to situations in which persons are exposed as a consequence of their employment and in which those persons who are exposed have been made fully aware of the potential for exposure and can exercise control over their exposure. Occupational/controlled exposure limits also apply where exposure is of a transient nature as a result of incidental passage through a location where exposure levels may be above general population/uncontrolled limits (see below), as long as the exposed person has been made fully aware of the potential for exposure and can exercise control over his or her exposure by leaving the area or by some other appropriate means.

Additional details can be found in FCC OET 65.

CALCULATIONS

Calculations were performed for the proposed upgrades to the T-MOBILE antenna facility located at **26 Mell Road, Lisbon, CT**, using the equipment information listed below. All calculations were performed per the specifications under FCC OET 65 for far field modeling calculations.

In OET-65, plane wave power densities in the Far Field of an antenna are calculated by considering antenna gain and reflective waves that would contribute to exposure.

Since the radiation pattern of an antenna has developed in the **Far Field** region the power gain in specific directions needs to be considered in exposure predictions to yield an Effective Radiated Power (ERP) in each specific direction from the antenna. Also, since the vertical radiation pattern of the antenna is considered, the exposure calculations would most likely be reduced significantly at ground level, resulting in a more realistic estimate of the actual exposure levels. To determine a worst-case scenario at each point along the calculation radials, each point was calculated using the antenna gain value at each angle of incident and compared against the result using an isotropic radiator at the antenna height with the greater of the two used to yield the more pessimistic far field value for each point along the calculation radial.

Additionally, to model a truly "worst case" prediction of exposure levels at or near a surface, such as at ground-level or on a rooftop, reflection off the surface of antenna radiation power can be assumed, resulting in a potential 1.6 times increase in power density in calculating far field power density values.

With these factors Considered, the worst case **Far Field prediction model** utilized in this analysis is determined by the following equation:

Equation 9 per FCC OET65 for Far Field Modeling

$$S = \frac{33.4\ ERP}{R^2}$$

S = Power Density (in $\mu w/cm^2$)
ERP = Effective Radiated Power from antenna (watts)
R = Distance from the antenna (meters)

Predicted far field power density values for all carriers identified in this report were calculated 6 feet above the ground level and are displayed as a percentage of the applicable FCC standards. All emissions values for other carriers were calculated using the same Far Field model outlined above, using industry standard radio configurations and frequency band selection based upon available licenses in this geographic area for emissions contribution estimates.

For each Dish sector the following channel counts, frequency bands and power levels were utilized as shown in *Table 1*:

Technology	Frequency Band	Channel Count	Transmit Power per Channel (W)
5G	n71 (600 MHz)	4	61.5
5G	n70 (AWS-4 / 1995-2020)	4	40
5G	n66 (AWS-4 / 2180-2200)	4	40

Table 1: Channel Data Table

The following **Dish** antennas listed in *Table 2* were used in the modeling for transmission in the 600 MHz (n71) frequency band and the 2100 MHz (AWS 4) frequency bands at 1995-2020 MHz (n70) and 2180-2200 MHz (n66). This is based on feedback from Dish regarding anticipated antenna selection. Maximum gain values for all antennas are listed in the Inventory and Power Data table below.

Sector	Antenna Number	Antenna Make / Model	Antenna Centerline (ft)
A	1	Commscope FFVV-65B-R2	145
B	1	Commscope FFVV-65B-R2	145
C	1	Commscope FFVV-65B-R2	145

Table 2: Antenna Data

All calculations were done with respect to uncontrolled / general population threshold limits.

RESULTS

Per the calculations completed for the proposed **Dish** configurations *Table 3* shows resulting emissions power levels and percentages of the FCC's allowable general population limit.

Antenna ID	Antenna Make / Model	Frequency Bands	Antenna Gain (dBd)	Channel Count	Total TX Power (W)	ERP (W)	MPE %
Antenna A1	Commscope FFVV-65B-R2	n71 (600 MHz) / n70 (AWS-4 / 1995-2020) / n66 (AWS-4 / 2180-2200)	12.15 / 15.95 / 16.25	12	566	17,079.80	1.76
						Sector A Composite MPE%	**1.76**
Antenna B1	Commscope FFVV-65B-R2	n71 (600 MHz) / n70 (AWS-4 / 1995-2020) / n66 (AWS-4 / 2180-2200)	12.15 / 15.95 / 16.25	12	566	17,079.80	1.76
						Sector B Composite MPE%	**1.76**
Antenna C1	Commscope FFVV-65B-R2	n71 (600 MHz) / n70 (AWS-4 / 1995-2020) / n66 (AWS-4 / 2180-2200)	12.15 / 15.95 / 16.25	12	566	17,079.80	1.76
						Sector C Composite MPE%	**1.76**

Table 3: Dish Emissions Levels

The Following table (*Table 4*) shows all additional carriers on site and their emissions contribution estimates, along with the newly calculated **Dish** far field emissions contributions per this report. FCC OET 65 specifies that for carriers utilizing directional antennas that the highest recorded sector value be used for composite site emissions values due to their greatly reduced emissions contributions in the directions of the adjacent sectors. For this site, all three sectors have the same configuration yielding the same results on all three sectors. *Table 5* below shows a summary for each **Dish** Sector as well as the composite emissions value for the site.

Site Composite MPE%	
Carrier	**MPE%**
Dish – Max Per Sector Value	**1.76 %**
T-Mobile	0.94 %
Sprint	0.61 %
Verizon Wireless	1.76 %
Site Total MPE %:	**5.07 %**

Table 4: All Carrier MPE Contributions

Dish Sector A Total:	1.76 %
Dish Sector B Total:	1.76 %
Dish Sector C Total:	1.76 %
Site Total:	5.07 %

Table 5: Site MPE Summary

Table 6 below details a breakdown by frequency band and technology for the MPE power values for the maximum calculated **Dish** sector(s). For this site, all three sectors have the same configuration yielding the same results on all three sectors.

Dish _ Frequency Band / Technology Max Power Values (Per Sector)	# Channels	Watts ERP (Per Channel)	Height (feet)	Total Power Density ($\mu W/cm^2$)	Frequency (MHz)	Allowable MPE ($\mu W/cm^2$)	Calculated % MPE
Dish n71 (600 MHz) 5G	4	1,008.96	145	4.64	n71 (600 MHz)	400	1.16%
Dish n70 (AWS-4 / 1995-2020) 5G	4	1,574.20	145	3.00	n70 (AWS-4 / 1995-2020)	1000	0.30%
Dish n66 (AWS-4 / 2180-2200) 5G	4	1,686.79	145	3.00	n66 (AWS-4 / 2180-2200)	1000	0.30%
						Total:	**1.76%**

Table 6: Dish Maximum Sector MPE Power Values

Summary

All calculations performed for this analysis yielded results that were **within** the allowable limits for general population exposure to RF Emissions.

The anticipated maximum composite contributions from the Dish facility as well as the site composite emissions value with regards to compliance with FCC's allowable limits for general population exposure to RF Emissions are shown here:

Dish Sector	Power Density Value (%)
Sector A:	1.76 %
Sector B:	1.76 %
Sector C:	1.76 %
Dish Maximum Total (per sector):	1.76 %
Site Total:	5.07 %
Site Compliance Status:	**COMPLIANT**

The anticipated composite emissions value for this site, assuming all carriers present, is **5.07 %** of the allowable FCC established general population limit sampled at the ground level. This is based upon the far field calculations performed for all carriers identified in this report.

FCC guidelines state that if a site is found to be out of compliance (over allowable thresholds), that carriers over a 5% contribution to the composite value will require measures to bring the site into compliance. For this facility, the composite values calculated were well within the allowable 100% threshold standard per the federal government.

Scott Heffernan
Principal RF Engineer
Fox Hill Telecom, Inc
Worcester, MA 01609
(978)660-3998

Exhibit G

Letter of Authorization

SBA Letter of Authorization

CT - CONNECTICUT SITING COUNCIL
Melanie A. Bachman
Executive Director
Connecticut Siting Council
10 Franklin Square
New Britain, CT 06051

Re: Tower Share Application

SBA COMMUNICATIONS CORPORATION hereby authorizes DISH Wireless LLC, including their Agent, to act as our Agent in the processing of all zoning applications, building permits and approvals through the CONNECTICUT SITING COUNCIL for existing wireless communications towers.

SBA COMMUNICATIONS CORPORATION
134 Flanders Road, Suite 125
Westboro, MA 01581

Exhibit H

Recipient Mailings

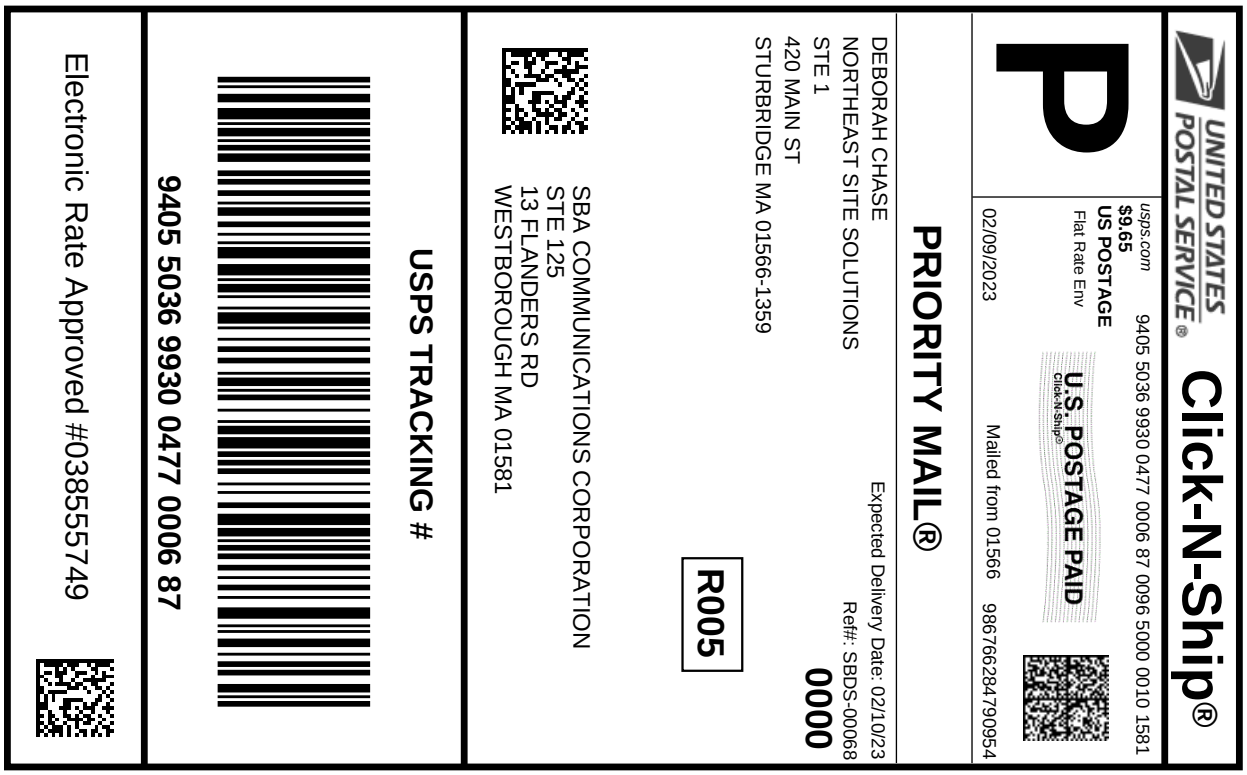

Cut on dotted line.

Instructions

1. **Each Click-N-Ship® label is unique. Labels are to be used as printed and used only once. DO NOT PHOTO COPY OR ALTER LABEL.**
2. **Place your label so it does not wrap around the edge of the package.**
3. **Adhere your label to the package. A self-adhesive label is recommended. If tape or glue is used, DO NOT TAPE OVER BARCODE. Be sure all edges are secure.**
4. **To mail your package with PC Postage®, you may schedule a Package Pickup online, hand to your letter carrier, take to a Post Office™, or drop in a USPS collection box.**
5. **Mail your package on the "Ship Date" you selected when creating this label.**

Click-N-Ship® Label Record

USPS TRACKING # :
9405 5036 9930 0477 0006 87

Trans. #:	582349262	Priority Mail® Postage:	**$9.65**
Print Date:	02/09/2023	Total:	**$9.65**
Ship Date:	02/09/2023		
Expected Delivery Date:	02/10/2023		

From: DEBORAH CHASE
NORTHEAST SITE SOLUTIONS
STE 1
420 MAIN ST
STURBRIDGE MA 01566-1359

Ref#: SBDS-00068

To: SBA COMMUNICATIONS CORPORATION
STE 125
13 FLANDERS RD
WESTBOROUGH MA 01581

* Retail Pricing Priority Mail rates apply. There is no fee for USPS Tracking® service on Priority Mail service with use of this electronic rate shipping label. Refunds for unused postage paid labels can be requested online 30 days from the print date.

Thank you for shipping with the United States Postal Service!
Check the status of your shipment on the USPS Tracking® page at usps.com

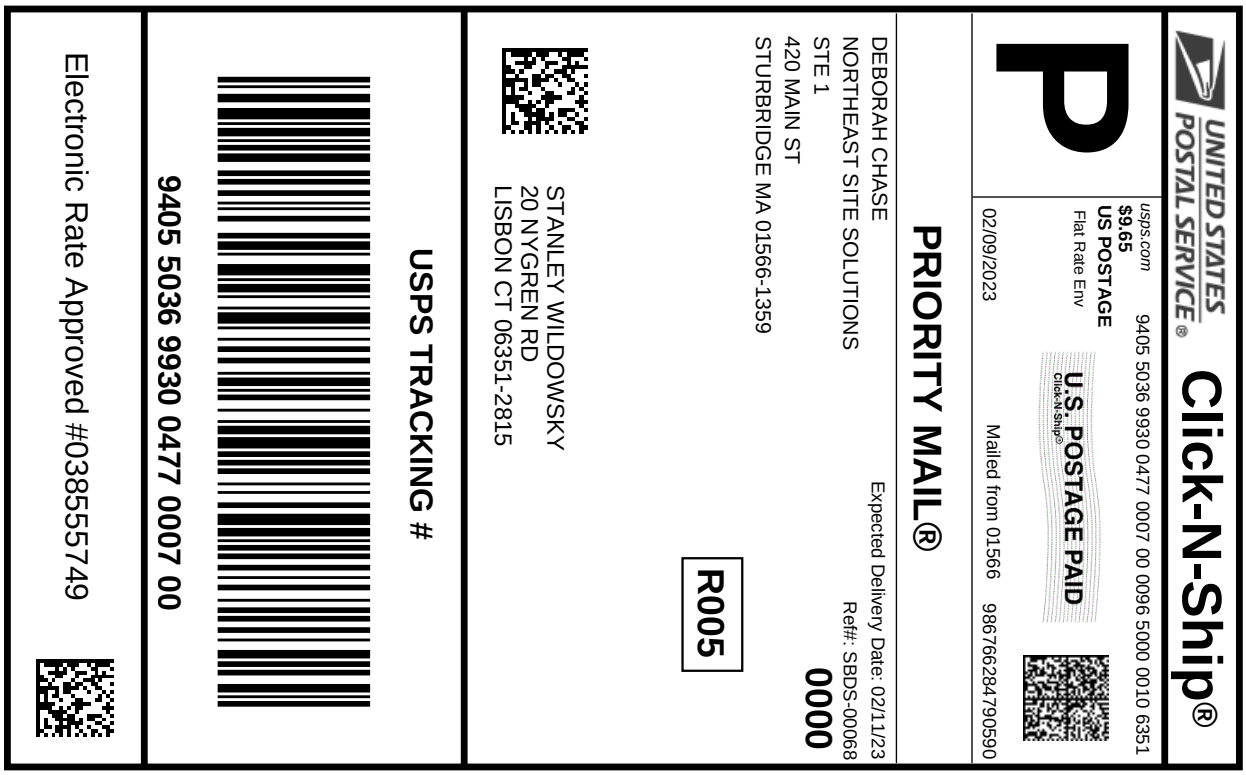

Cut on dotted line.

Instructions

1. **Each Click-N-Ship® label is unique. Labels are to be used as printed and used only once. DO NOT PHOTO COPY OR ALTER LABEL.**
2. **Place your label so it does not wrap around the edge of the package.**
3. **Adhere your label to the package. A self-adhesive label is recommended. If tape or glue is used, DO NOT TAPE OVER BARCODE. Be sure all edges are secure.**
4. **To mail your package with PC Postage®, you may schedule a Package Pickup online, hand to your letter carrier, take to a Post Office™, or drop in a USPS collection box.**
5. **Mail your package on the "Ship Date" you selected when creating this label.**

Click-N-Ship® Label Record

USPS TRACKING # :
9405 5036 9930 0477 0007 00

Trans. #:	582349262	Priority Mail® Postage:	**$9.65**
Print Date:	02/09/2023	Total:	**$9.65**
Ship Date:	02/09/2023		
Expected Delivery Date:	02/11/2023		

From: DEBORAH CHASE
NORTHEAST SITE SOLUTIONS
STE 1
420 MAIN ST
STURBRIDGE MA 01566-1359

Ref#: SBDS-00068

To: STANLEY WILDOWSKY
20 NYGREN RD
LISBON CT 06351-2815

* Retail Pricing Priority Mail rates apply. There is no fee for USPS Tracking® service on Priority Mail service with use of this electronic rate shipping label. Refunds for unused postage paid labels can be requested online 30 days from the print date.

Thank you for shipping with the United States Postal Service!
Check the status of your shipment on the USPS Tracking® page at usps.com

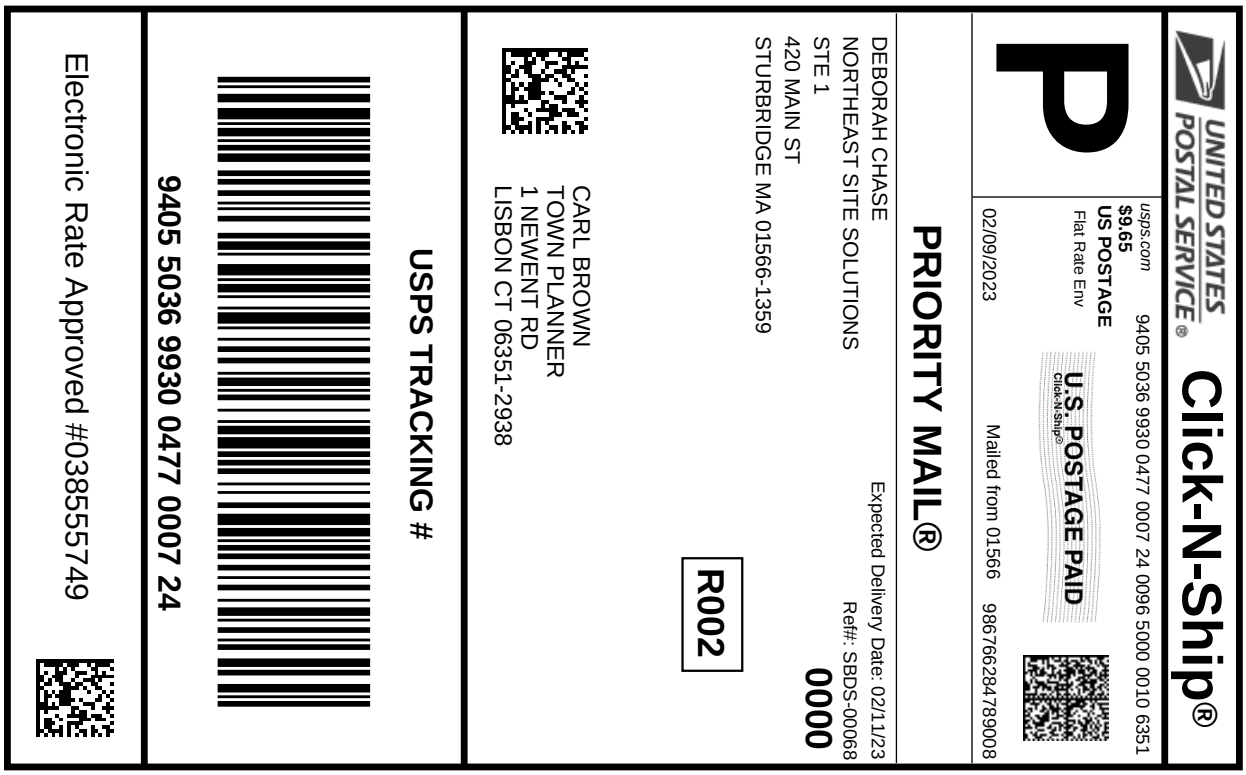

Cut on dotted line.

Instructions

1. **Each Click-N-Ship® label is unique. Labels are to be used as printed and used only once. DO NOT PHOTO COPY OR ALTER LABEL.**
2. **Place your label so it does not wrap around the edge of the package.**
3. **Adhere your label to the package. A self-adhesive label is recommended. If tape or glue is used, DO NOT TAPE OVER BARCODE. Be sure all edges are secure.**
4. **To mail your package with PC Postage®, you may schedule a Package Pickup online, hand to your letter carrier, take to a Post Office™, or drop in a USPS collection box.**
5. **Mail your package on the "Ship Date" you selected when creating this label.**

Click-N-Ship® Label Record

USPS TRACKING # :
9405 5036 9930 0477 0007 24

Trans. #:	582349262	Priority Mail® Postage:	**$9.65**
Print Date:	02/09/2023	Total:	**$9.65**
Ship Date:	02/09/2023		
Expected Delivery Date:	02/11/2023		

From: DEBORAH CHASE
NORTHEAST SITE SOLUTIONS
STE 1
420 MAIN ST
STURBRIDGE MA 01566-1359

Ref#: SBDS-00068

To: CARL BROWN
TOWN PLANNER
1 NEWENT RD
LISBON CT 06351-2938

* Retail Pricing Priority Mail rates apply. There is no fee for USPS Tracking® service on Priority Mail service with use of this electronic rate shipping label. Refunds for unused postage paid labels can be requested online 30 days from the print date.

Thank you for shipping with the United States Postal Service!
Check the status of your shipment on the USPS Tracking® page at usps.com

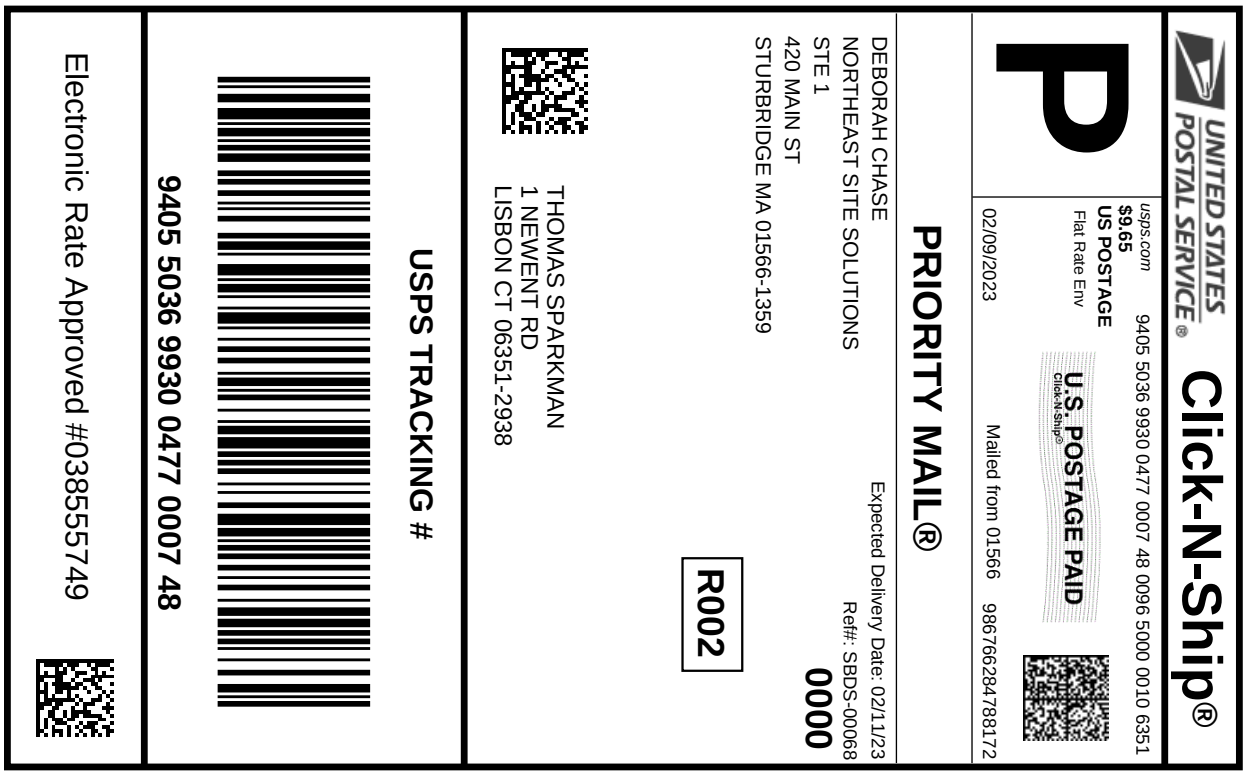

Cut on dotted line.

Instructions

1. **Each Click-N-Ship® label is unique. Labels are to be used as printed and used only once. DO NOT PHOTO COPY OR ALTER LABEL.**
2. **Place your label so it does not wrap around the edge of the package.**
3. **Adhere your label to the package. A self-adhesive label is recommended. If tape or glue is used, DO NOT TAPE OVER BARCODE. Be sure all edges are secure.**
4. **To mail your package with PC Postage®, you may schedule a Package Pickup online, hand to your letter carrier, take to a Post Office™, or drop in a USPS collection box.**
5. **Mail your package on the "Ship Date" you selected when creating this label.**

Click-N-Ship® Label Record

USPS TRACKING # :
9405 5036 9930 0477 0007 48

Trans. #:	582349262	Priority Mail® Postage:	**$9.65**
Print Date:	02/09/2023	Total:	**$9.65**
Ship Date:	02/09/2023		
Expected Delivery Date:	02/11/2023		

From: DEBORAH CHASE
NORTHEAST SITE SOLUTIONS
STE 1
420 MAIN ST
STURBRIDGE MA 01566-1359

Ref#: SBDS-00068

To: THOMAS SPARKMAN
1 NEWENT RD
LISBON CT 06351-2938

* Retail Pricing Priority Mail rates apply. There is no fee for USPS Tracking® service on Priority Mail service with use of this electronic rate shipping label. Refunds for unused postage paid labels can be requested online 30 days from the print date.

Thank you for shipping with the United States Postal Service!
Check the status of your shipment on the USPS Tracking® page at usps.com

SBA
B0B05000068C- DISH

UNITED STATES POSTAL SERVICE.

LINCOLN MALL
560 LINCOLN ST STE 8
WORCESTER, MA 01605-1925
(800)275-8777

02/10/2023 02:03 PM

Product	Qty	Unit Price	Price
Prepaid Mail	1		$0.00
Westborough, MA 01581			
Weight: 0 lb 2.00 oz			
Acceptance Date: Fri 02/10/2023			
Tracking #: 9405 5036 9930 0477 0006 87			
Prepaid Mail	1		$0.00
Jewett City, CT 06351			
Weight: 0 lb 14.50 oz			
Acceptance Date: Fri 02/10/2023			
Tracking #: 9405 5036 9930 0477 0007 48			
Prepaid Mail	1		$0.00
Jewett City, CT 06351			
Weight: 0 lb 14.60 oz			
Acceptance Date: Fri 02/10/2023			
Tracking #: 9405 5036 9930 0477 0007 00			
Prepaid Mail	1		$0.00
Jewett City, CT 06351			
Weight: 0 lb 14.60 oz			
Acceptance Date: Fri 02/10/2023			
Tracking #: 9405 5036 9930 0477 0007 24			

Grand Total: $0.00