Robinson+Cole

KENNETH C. BALDWIN

280 Trumbull Street
Hartford, CT 06103-3597
Main (860) 275-8200
Fax (860) 275-8299
kbaldwin@rc.com
Direct (860) 275-8345

Also admitted in Massachusetts
and New York

February 21, 2024

Via Electronic Mail

Melanie A. Bachman, Esq.
Executive Director/Staff Attorney
Connecticut Siting Council
10 Franklin Square
New Britain, CT 06051

Re: **Notice of Exempt Modification – Facility Modification**
889R Colonel Ledyard Highway, Ledyard, Connecticut

Dear Attorney Bachman:

Cellco Partnership d/b/a Verizon Wireless ("Cellco") currently maintains an existing wireless telecommunications facility at the above-referenced property address (the "Property"). The facility consists of antennas on an existing tower and related equipment on the ground, near the base of the tower. The original tower was approved by the Town of Ledyard ("Town"). Cellco's representatives did reach out to Town officials in an effort to obtain a copy of the original tower approval. Town officials were, however, unable to locate that approval. Cellco's shared use of the tower was approved by the Siting Council ("Council") in December of 2000 (TS-VER-072-001113). A copy of Cellco's TS-VER-072-001113 approval is included in Attachment 1.

Cellco now intends to modify its facility by removing nine (9) antennas and three (3) remote radio heads ("RRHs") and installing nine (9) new antennas and six (6) new RRHs on Cellco's existing antenna platform and mounting assemblies. A set of project plans showing Cellco's proposed facility modifications and the specifications for Cellco's new antenna and RRHs are included in Attachment 2.

Please accept this letter as notification pursuant to R.C.S.A. § 16-50j-73, for construction that constitutes an exempt modification pursuant to R.C.S.A. § 16-50j-72(b)(2). In accordance with R.C.S.A. § 16-50j-73, a copy of this letter is being sent to Ledyard's Chief Elected Official and Land Use Officer. The Town of Ledyard is the owner of the Property. A copy of this letter is being sent to Red Wolf Broadcasting, the tower owner.

The planned modifications to the facility fall squarely within those activities explicitly provided for in R.C.S.A. § 16-50j-72(b)(2).

1. The proposed modifications will not result in an increase in the height of the existing tower. Cellco's new antennas and RRHs will be installed at the same height on the tower.

2. The proposed modifications will not involve any change to ground-mounted equipment and, therefore, will not require the extension of the site boundary.

3. The proposed modifications will not increase noise levels at the facility by six decibels or more, or to levels that exceed state and local criteria.

4. The installation of Cellco's new antennas will not increase radio frequency (RF) emissions at the facility to a level at or above the Federal Communications Commission (FCC) safety standard. Included in Attachment 3 is a Calculated Radio Frequency Emissions Report demonstrating that the proposed modified facility will comply with the FCC safety standards. The modified facility will be capable of providing Cellco's 5G wireless service.

5. The proposed modifications will not cause a change or alteration in the physical or environmental characteristics of the site.

6. According to the attached Structural Analysis Report ("SA") and Post-Modification Antenna Mount Analysis Report ("MA"), the existing tower, tower foundation and antenna mounts, with certain modifications, can support Cellco's proposed modifications. Copies of the SA and MA are included in Attachment 4.

A copy of the parcel map and Property owner (and tower owner) information is included in Attachment 5. A Certificate of Mailing verifying that this filing was sent to municipal officials, the property owner, and tower owner is included in Attachment 6.

For the foregoing reasons, Cellco respectfully submits that the proposed modifications to the above-referenced telecommunications facility constitutes an exempt modification under R.C.S.A. § 16-50j-72(b)(2).

Sincerely,

Kenneth C. Baldwin

Enclosures
Copy to:
Fred Allyn, III, Mayor
Juliet Hodge, Director of Planning and Acting Zoning and Wetlands Enforcement Agent
Red Wolf Broadcasting, the tower owner
Aleksey Tyurin

ATTACHMENT 1

December 4, 2000

Sandy M. Carter
Verizon Wireless
20 Alexander Drive
P.O. Box 5029
Wallingford, CT 06492

RE: **TS-VER-072-001113** - Cellco Partnership d/b/a Verizon Wireless request for an order to approve tower sharing at an existing telecommunications facility located at 889A Colonel Ledyard Highway, Ledyard, Connecticut.

Dear Ms. Carter:

At a public meeting held November 30, 2000, the Connecticut Siting Council (Council) ruled that the shared use of this existing tower site is technically, legally, environmentally, and economically feasible and meets public safety concerns, and therefore, in compliance with General Statutes § 16-50aa, the Council has ordered the shared use of this facility to avoid the unnecessary proliferation of tower structures. This facility has also been carefully modeled to ensure that radio frequency emissions are conservatively below State and federal standards applicable to the frequencies now used on this tower.

This decision is under the exclusive jurisdiction of the Council. Any additional change to this facility may require an explicit request to this agency pursuant to General Statutes § 16-50aa or notice pursuant to Regulations of Connecticut State Agencies Section 16-50j-73, as applicable. Such request or notice shall include all relevant information regarding the proposed change with cumulative worst-case modeling of radio frequency exposure at the closest point uncontrolled access to the tower base, consistent with Federal Communications Commission, Office of Engineering and Technology, Bulletin 65. Any deviation from this format may result in the Council implementing enforcement proceedings pursuant to General Statutes § 16-50u including, without limitation, imposition of expenses resulting from such failure and of civil penalties in an amount not less than one thousand dollars per day for each day of construction or operation in material violation.

This decision applies only to this request for tower sharing and is not applicable to any other request or construction.

The proposed shared use is to be implemented as specified in your letter dated November 10, 2000.

Thank you for your attention and cooperation.

Very truly yours,

Mortimer A. Gelston
Chairman

MAG/laf

c: Honorable Wesley J. Johnson, Sr., Mayor, Town of Ledyard
Red Wold Broadcasting
Ronald C. Clark, Nextel Communications
Julie M. Cashin, Esq., Hurwitz & Sagarin, LLC

ATTACHMENT 2

verizon

LEDYARD CT
889 COLONEL LEDYARD HIGHWAY
LEDYARD, CT 06339

GENERAL NOTES AND SPECIFICATIONS

1. ALL WORK SHALL BE IN ACCORDANCE WITH THE 2021 INTERNATIONAL BUILDING CODE AS MODIFIED BY THE 2022 CONNECTICUT SUPPLEMENT, INCLUDING THE TIA/EIA-222 REVISION "H" STRUCTURAL STANDARDS FOR STEEL ANTENNA TOWERS AND SUPPORTING STRUCTURES, 2022 CONNECTICUT FIRE SAFETY CODE, NATIONAL ELECTRICAL CODE, AND LOCAL CODES.
2. SHOULD ANY FIELD CONDITIONS PRECLUDE COMPLIANCE WITH THE DRAWINGS, THE CONTRACTOR SHALL IMMEDIATELY NOTIFY THE ENGINEER AND SHALL NOT PROCEED WITH ANY AFFECTED WORK.
3. CONTRACTOR SHALL REVIEW ALL DRAWINGS AND SPECIFICATIONS IN THE CONTRACT DOCUMENT SET. CONTRACTOR SHALL COORDINATE ALL WORK SHOWN IN THE SET OF DRAWINGS. THE CONTRACTOR SHALL PROVIDE A COMPLETE SET OF DRAWINGS TO ALL SUBCONTRACTORS AND ALL RELATED PARTIES. THE SUBCONTRACTORS SHALL EXAMINE ALL THE DRAWINGS AND SPECIFICATIONS FOR THE INFORMATION THAT AFFECTS THEIR WORK.
4. CONTRACTOR SHALL PROVIDE A COMPLETE BUILD-OUT WITH ALL FINISHES, STRUCTURAL, MECHANICAL, AND ELECTRICAL COMPONENTS AND PROVIDE ALL ITEMS AS SHOWN OR INDICATED ON THE DRAWINGS OR IN THE WRITTEN SPECIFICATIONS.
5. CONTRACTOR SHALL FURNISH ALL MATERIAL, LABOR AND EQUIPMENT TO COMPLETE THE WORK AND FURNISH A COMPLETED JOB ALL IN ACCORDANCE WITH LOCAL AND STATE GOVERNING AUTHORITIES AND OTHER AUTHORITIES HAVING LAWFUL JURISDICTION OVER THE WORK.
6. CONTRACTOR SHALL SECURE AND PAY FOR ALL PERMITS AND ALL INSPECTIONS REQUIRED AND SHALL ALSO PAY FEES REQUIRED FOR THE GENERAL CONSTRUCTION, AND ALL TRADES AS APPLICABLE PERMITS SHALL BE PAID FOR BY THE RESPECTIVE SUBCONTRACTORS.
7. CONTRACTOR SHALL MAINTAIN A CURRENT SET OF DRAWINGS AND SPECIFICATIONS ON SITE AT ALL TIMES AND INSURE DISTRIBUTION OF NEW DRAWINGS TO SUBCONTRACTORS AND OTHER RELEVANT PARTIES AS SOON AS THEY ARE MADE AVAILABLE. ALL OLD DRAWINGS SHALL BE MARKED VOID AND REMOVED FROM THE CONTRACT AREA. THE CONTRACTOR SHALL FURNISH AN "AS-BUILT" SET OF DRAWINGS TO OWNER UPON COMPLETION OF PROJECT.
8. LOCATION OF EQUIPMENT, AND WORK SUPPLIED BY OTHERS THAT IS DIAGRAMMATICALLY INDICATED ON THE DRAWINGS SHALL BE DETERMINED BY THE CONTRACTOR. THE CONTRACTOR SHALL DETERMINE LOCATIONS AND DIMENSIONS SUBJECT TO STRUCTURAL CONDITIONS AND WORK OF THE SUBCONTRACTORS.
9. THE CONTRACTOR IS SOLELY RESPONSIBLE TO DETERMINE CONSTRUCTION PROCEDURE AND SEQUENCE, AND TO ENSURE THE SAFETY OF THE EXISTING STRUCTURES AND ITS COMPONENT PARTS DURING CONSTRUCTION. THIS INCLUDES THE ADDITION OF WHATEVER SHORING, BRACING, UNDERPINNING, ETC. THAT MAY BE NECESSARY. MAINTAIN EXISTING BUILDING'S/PROPERTY'S OPERATIONS, COORDINATE WORK WITH BUILDING/PROPERTY OWNER.
10. DRAWINGS INDICATE THE MINIMUM STANDARDS, BUT IF ANY WORK SHOULD BE INDICATED TO BE SUBSTANDARD TO ANY ORDINANCES, LAWS, CODES, RULES, OR REGULATIONS BEARING ON THE WORK, THE CONTRACTOR SHALL INCLUDE IN HIS WORK AND SHALL EXECUTE THE WORK CORRECTLY IN ACCORDANCE WITH SUCH ORDINANCES, LAWS, CODES, RULES OR REGULATIONS WITH NO INCREASE IN COSTS.
11. ALL UTILITY WORK SHALL BE IN ACCORDANCE WITH LOCAL UTILITY COMPANY REQUIREMENTS AND SPECIFICATIONS.
12. ALL EQUIPMENT AND PRODUCTS PURCHASED ARE TO BE REVIEWED BY CONTRACTOR AND ALL APPLICABLE SUBCONTRACTORS FOR ANY CONDITION PER MFR.'S RECOMMENDATIONS. CONTRACTOR TO SUPPLY THESE ITEMS AT NO COST TO OWNER OR CONSTRUCTION MANAGER.
13. ANY AND ALL ERRORS, DISCREPANCIES, AND "MISSED" ITEMS ARE TO BE BROUGHT TO THE ATTENTION OF THE VERIZON WIRELESS CONSTRUCTION MANAGER DURING THE BIDDING PROCESS BY THE CONTRACTOR. ALL THESE ITEMS ARE TO BE INCLUDED IN THE BID. NO "EXTRA" WILL BE ALLOWED FOR MISSED ITEMS.
14. CONTRACTOR SHALL BE RESPONSIBLE FOR ALL ON-SITE SAFETY FROM THE TIME THE JOB IS AWARDED UNTIL ALL WORK IS COMPLETE AND ACCEPTED BY THE OWNER.
15. CONTRACTOR TO REVIEW ALL SHOP DRAWINGS AND SUBMIT COPY TO ENGINEER FOR APPROVAL. DRAWINGS MUST BEAR THE CHECKER'S INITIALS BEFORE SUBMITTING TO THE CONSTRUCTION MANAGER FOR REVIEW.
16. THE CONTRACTOR SHALL FIELD VERIFY ALL DIMENSIONS, ELEVATIONS, ANGLES, AND EXISTING CONDITIONS AT THE SITE, PRIOR TO FABRICATION AND/OR INSTALLATION OF ANY WORK IN THE CONTRACT AREA.
17. COORDINATION, LAYOUT, FURNISHING AND INSTALLATION OF CONDUIT AND ALL APPURTENANCES REQUIRED FOR PROPER INSTALLATION OF ELECTRICAL AND TELECOMMUNICATION SERVICE SHALL BE THE SOLE RESPONSIBILITY OF THE CONTRACTOR.
18. ALL EQUIPMENT AND PRODUCTS PURCHASED ARE TO BE REVIEWED BY CONTRACTOR AND ALL APPLICABLE SUB- CONTRACTORS FOR ANY CONDITION PER THE MANUFACTURER'S RECOMMENDATIONS. CONTRACTOR TO SUPPLY THESE ITEMS AT NO COST TO OWNER OR CONSTRUCTION MANAGER.
19. ALL DAMAGE CAUSED TO ANY EXISTING STRUCTURE SHALL BE THE SOLE RESPONSIBILITY OF THE CONTRACTOR. THE CONTRACTOR WILL BE HELD LIABLE FOR ALL REPAIRS REQUIRED FOR EXISTING STRUCTURES IF DAMAGED DURING CONSTRUCTION ACTIVITIES.
20. THE CONTRACTOR SHALL CONTACT "CALL BEFORE YOU DIG" AT LEAST 48 HOURS PRIOR TO ANY EXCAVATIONS AT 1-800-922-4455. ALL UTILITIES SHALL BE IDENTIFIED AND CLEARLY MARKED PRIOR TO ANY EXCAVATION WORK. CONTRACTOR SHALL MAINTAIN AND PROTECT MARKED UTILITIES THROUGHOUT PROJECT COMPLETION.
21. ALL CONSTRUCTION SHALL BE IN COMPLIANCE WITH THE GOVERNING BUILDING CODE.
22. BEFORE BEGINNING THE WORK, THE CONTRACTOR IS RESPONSIBLE FOR MAKING SUCH INVESTIGATIONS CONCERNING PHYSICAL CONDITIONS (SURFACE AND SUBSURFACE) AT OR CONTIGUOUS TO THE SITE WHICH MAY AFFECT PERFORMANCE AND COST OF THE WORK.
23. ALL DIMENSIONS, ELEVATIONS, AND OTHER REFERENCES TO EXISTING STRUCTURES, SURFACE, AND SUBSURFACE CONDITIONS ARE APPROXIMATE. NO GUARANTEE IS MADE FOR THE ACCURACY OR COMPLETENESS OF THE INFORMATION SHOWN. THE CONTRACTOR SHALL VERIFY AND COORDINATE ALL DIMENSIONS, ELEVATIONS, ANGLES WITH EXISTING CONDITIONS AND WITH ARCHITECTURAL AND SITE DRAWINGS BEFORE PROCEEDING WITH ANY WORK.
24. AS THE WORK PROGRESSES, THE CONTRACTOR SHALL NOTIFY THE OWNER OF ANY CONDITIONS WHICH ARE IN CONFLICT OR OTHERWISE NOT CONSISTENT WITH THE CONSTRUCTION DOCUMENTS AND SHALL NOT PROCEED WITH SUCH WORK UNTIL THE CONFLICT IS SATISFACTORILY RESOLVED.

SITE DIRECTIONS

FROM: 20 ALEXANDER DRIVE WALLINGFORD, CONNECTICUT

TO: 889 COLONEL LEDYARD HIGHWAY LEDYARD, CT 06339

1.	START OUT GOING NORTH ON ALEXANDER DR TOWARD BARNES INDUSTRIAL RD.	0.18 MI
2.	TURN RIGHT ONTO BARNES INDUSTRIAL RD.	0.11 MI
3.	TAKE THE 1ST RIGHT ONTO CT-68.	1.82 MI
4.	MERGE ONTO I-91 N VIA THE RAMP ON THE LEFT TOWARD HARTFORD.	17.46 MI
5.	MERGE ONTO CT-3 N VIA EXIT 23 TOWARD GLASTONBURY.	2.35 MI
6.	MERGE ONTO CT-2 E TOWARD NORWICH.	33.56 MI
7.	MERGE ONTO I-395 S/CT-2A E VIA EXIT 28B TOWARD NEW HAVEN.	3.87 MI
8.	MERGE ONTO CT-2A E VIA EXIT 9 TOWARD PRESTON/LEDYARD.	3.20 MI
9.	TURN LEFT ONTO ROUTE 12/CT-12/CT-2A.	0.22 MI
10.	TURN RIGHT ONTO ROUTE 2A/CT-2A.	1.52 MI
11.	TURN SLIGHT RIGHT ONTO POQUETANUCK RD.	0.10 MI
12.	POQUETANUCK RD BECOMES CT-117.	2.06 MI
13.	889 COLONEL LEDYARD HWY, LEDYARD, CT 06339-1107, 889 COLONEL LEDYARD HWY IS ON THE RIGHT.	

VICINITY MAP

SCALE: 1" = 1000'

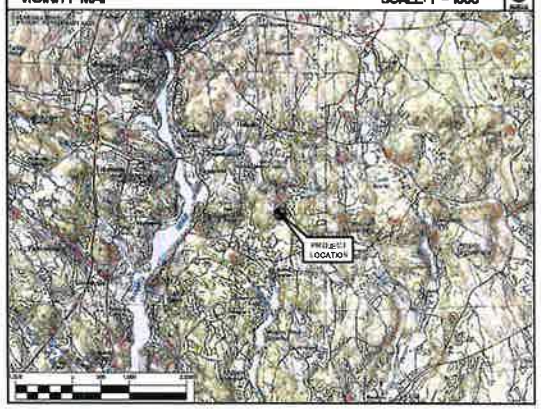

DESIGN BASIS

GOVERNING CODE: 2021 INTERNATIONAL BUILDING (IBC) AS MODIFIED BY THE 2022 CT STATE BUILDING CODE AND AMENDMENTS.

1. DESIGN CRITERIA:
   - RISK CATEGORY: II (BASED ON TABLE 1604.5 OF THE 2021 IBC)
   - NOMINAL DESIGN SPEED (3SECT): 105 MPH (V_{ASD}) (EXPOSURE B/IMPORTANCE FACTOR 1.0 BASED ON ASCE 7-16) PER 2021 INTERNATIONAL BUILDING CODE (IBC) AS MODIFIED BY THE 2022 CONNECTICUT STATE BUILDING CODE.
   - SEISMIC LOAD (DOES NOT CONTROL): PER ASCE 7-16 MINIMUM DESIGN LOADS FOR BUILDING AND OTHER STRUCTURES.

PROJECT SUMMARY

1. THE PROPOSED UPGRADE SCOPE OF WORK AT THE EXISTING UNMANNED TELECOMMUNICATIONS FACILITY GENERALLY INCLUDES THE FOLLOWING:

A. AT THE EXISTING GUYED TOWER MOUNTED ANTENNA SECTORS:
- REMOVE (3) EXISTING ANDREW - HBX-6516DS-A2M ANTENNAS.
- REMOVE (3) EXISTING ANDREW - LNX-6514DS-A1M ANTENNAS.
- REMOVE (3) EXISTING ANTEL - DXA-1710BS-12CF-EDIN ANTENNAS.
- REMOVE (3) EXISTING NOKIA RADIOS.
- RETAIN (3) EXISTING ANDREW - LNX-6514DS-A1M ANTENNAS.
- RETAIN (6) EXISTING 1-5/8" SPARE COAXIAL CABLES.
- RETAIN (6) EXISTING 1-5/8" CDMA COAXIAL CABLES.
- RETAIN (2) EXISTING 6x12 HYBREFLEX CABLES.
- RETAIN (2) EXISTING DWP-6 BOXES.
- INSTALL (6) COMMSCOPE - NHH-65B-R2B ANTENNAS.
- INSTALL (3) SAMSUNG - MT6413-77A ALL-IN-ONE ANTENNA/ RRUs.
- INSTALL (3) SAMSUNG - RF4439d-25A RRUs.
- INSTALL (3) SAMSUNG - RF4461d-13A RRUs.
- INSTALL (3) COMMSCOPE - BASWNT-585-1-2 ANTENNA MOUNTS.
- INSTALL MOUNT MODIFICATIONS OUTLINED IN THE VERIZON WIRELESS MOUNT MODIFICATION DESIGN PREPARED BY MASER CONSULTING CONNECTICUT DATED 12/05/2023 FOR ANTENNA MOUNT MODIFICATIONS.

B. AT THE EXISTING EQUIPMENT SHELTER:
- REMOVE (3) EXISTING NOKIA RADIOS.

PROJECT INFORMATION

SITE NAME:	LEDYARD CT
SITE ADDRESS:	889 COLONEL LEDYARD HIGHWAY LEDYARD, CT 06339
LESSEE/TENANT:	CELLCO PARTNERSHIP d.b.a. VERIZON WIRELESS 20 ALEXANDER DRIVE WALLINGFORD, CT 06492
CONTACT PERSON:	WALTER CHARCZEWSKI (CONSTRUCTION MANAGER) VERIZON WIRELESS (860) 306-1806
ENGINEER:	CENTEK ENGINEERING, INC. 63-2 NORTH BRANFORD RD. BRANFORD, CT. 06405 (203) 488-0580
PROJECT COORDINATES:	LATITUDE: 41° 27' 43.1498"N LONGITUDE: 72° 1' 24.9888"W (COORDINATES REFERENCED FROM VERIZON WIRELESS RFDS DATED 07/29/2021)

SHEET INDEX

REV.	DATE	DRAWN BY	CHK'D BY	DESCRIPTION
1	07/29/21	JS	JS	CONSTRUCTION DRAWINGS - UPDATED PLUMBING PER LATEST RFDS
2	01/20/22	JS	JS	CONSTRUCTION DRAWINGS - REVISED PER CLIENT COMMENTS
3	11/27/23	JS	JS	CONSTRUCTION DRAWINGS - REVISED PER LATEST RFDS
A	06/07/22	JS	JS	CONSTRUCTION DRAWINGS - REVISED PER CLIENT COMMENTS
B	08/30/22	JS	JS	CONSTRUCTION DRAWINGS - REVISED ANTENNA MO CONFIGS
C	10/27/23	JS	JS	CONSTRUCTION DRAWINGS - REVISED PER CLIENT COMMENTS
D	12/05/23	JS	JS	CONSTRUCTION DRAWINGS - REVISED PER CLIENT COMMENTS
E	10/21/24	JS	JS	CONSTRUCTION DRAWINGS - REVISED PER CLIENT REVIEW

PROFESSIONAL ENGINEER SEAL

verizon

CENTEK engineering
(203) 488-0580
(203) 488-8587 Fax
63-2 North Branford Road
Branford, CT 06405
www.CentekEng.com

Cellco Partnership d/b/a Verizon Wireless

LEDYARD CT
889 COLONEL LEDYARD HIGHWAY
LEDYARD, CT 06339

DATE: 10/21/21
SCALE: AS NOTED
JOB NO. 21007.36

TITLE SHEET

T-1

Sheet No. 1 of 9

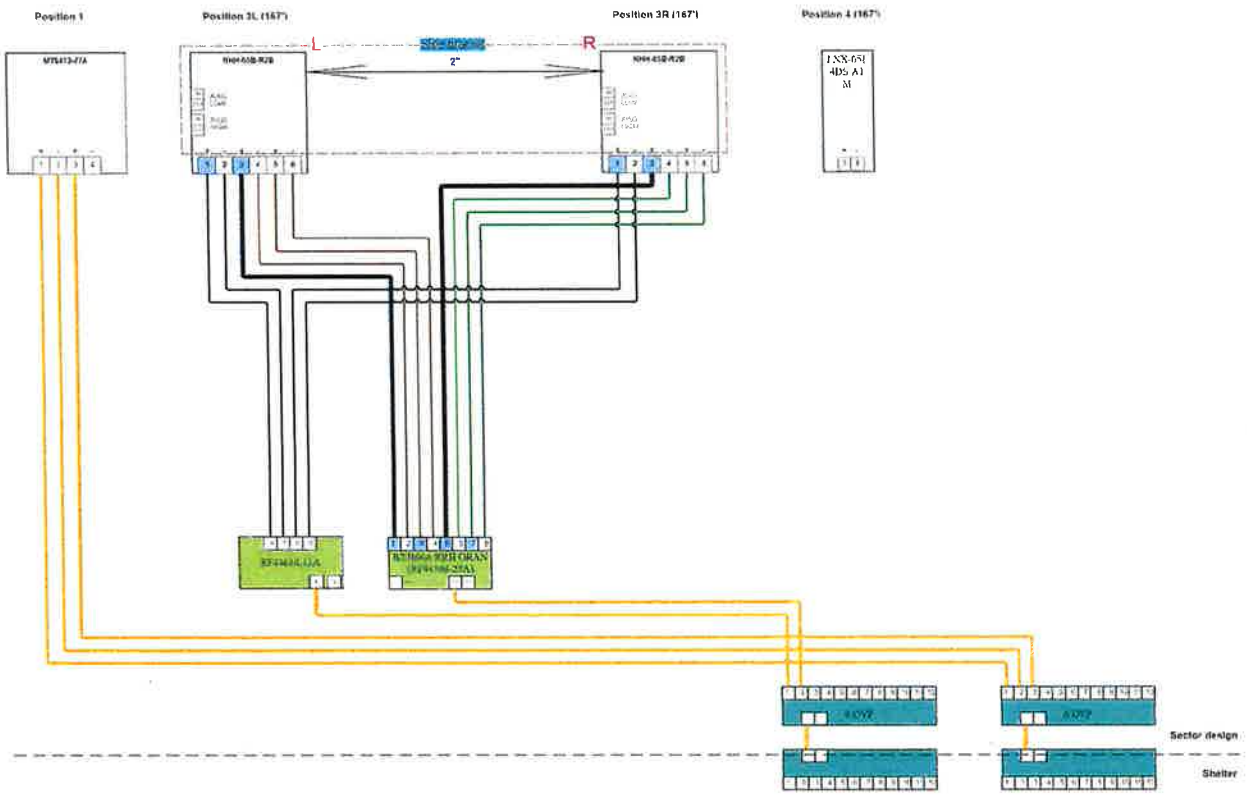

NOTES:

1. INFORMATION SHOWN HEREIN IS FOR USE BY VERIZON WIRELESS EQUIPMENT OPERATIONS.
2. THIS B.O.M. DRAWING IS BASED ON FACILITY UPGRADE DESIGN DRAWINGS PREPARED BY CENTEK ENGINEERING (REV.3 DATED: 01/25/24), & VERIZON WIRELESS RF ANTENNA EQUIPMENT RECOMMENDATION (DATED 11/14/23).

BILL OF MATERIALS

TECHNOLOGY	QUANTITY	ANTENNA
LTE 700 LTE 850 LTE PCS 1900 LTE AWS 2100	6	COMMSCOPE ANTENNA MODEL: NHH-65B-R2B
5G	3	SAMSUNG ANTENNA MODEL: MT6413-77A

CABLES	QUANTITY	LENGTH EA	COMMENTS
HYBRID CABLE	0	±– FT EA	–

RADIOS	QUANTITY	COMMENTS
LTE 700 LTE 850	3	SAMSUNG MODEL: RF4461d-13A
LTE PCS 1900 LTE AWS 2100	3	SAMSUNG MODEL: RF4439d-25A
5G	3	INTEGRATED INTO MT6413-77A ANTENNA

DIPLEXERS	QUANTITY	COMMENTS
–	0	–

OVP BOXES	QUANTITY	COMMENTS
OVP	0	–

ANTENNA MOUNT	QUANTITY	COMMENTS
SIDE-BY-SIDE MOUNTING KIT	3	COMMSCOPE MODEL: BSAMNT-SBS-1-2

REV.	DATE	DRAWN BY	CHK'D BY	DESCRIPTION
F	01/25/24	SP	LR	CONSTRUCTION DRAWINGS – UPDATED PLUMBING PER LATEST RFDS
E	01/23/24	SP	LR	CONSTRUCTION DRAWINGS – REVISED PER CLIENT COMMENTS
D	01/22/24	SP	LR	CONSTRUCTION DRAWINGS – REVISED PER NEWLY ISSUED RFDS
C	11/20/23	SP	LR	CONSTRUCTION DRAWINGS – ISSUED FOR CONSTRUCTION
B	06/07/23	SP	LR	CONSTRUCTION DRAWINGS – REVISED PER CLIENT COMMENTS
A	10/21/21	SP	BMD	CONSTRUCTION DRAWINGS – ISSUED FOR CLIENT REVIEW

PROFESSIONAL ENGINEER SEAL

verizon

CENTEK engineering
Centered on Solutions
(203) 488-0580
(203) 488-8587 Fax
63-2 North Branford Road
Branford, CT 06405
www.CentekEng.com

Cellco Partnership d/b/a Verizon Wireless

LEDYARD CT

659 COLONEL LEDYARD HIGHWAY
LEDYARD, CT 06339

DATE: 10/21/21
SCALE: AS NOTED
JOB NO. 21007.B0

RF BILL OF MATERIALS

B-1

Sheet No. 2 of 3

STRUCTURAL ANALYSIS REFERENCE NOTE:

REFER TO THE PASSING STRUCTURAL ANALYSIS REPORT PREPARED FOR VERIZON WIRELESS BY CENTEK ENGINEERING DATED 01/23/2024_REV3. CENTEK PROJECT NO. 21007.58 FOR ADDITIONAL INFORMATION.

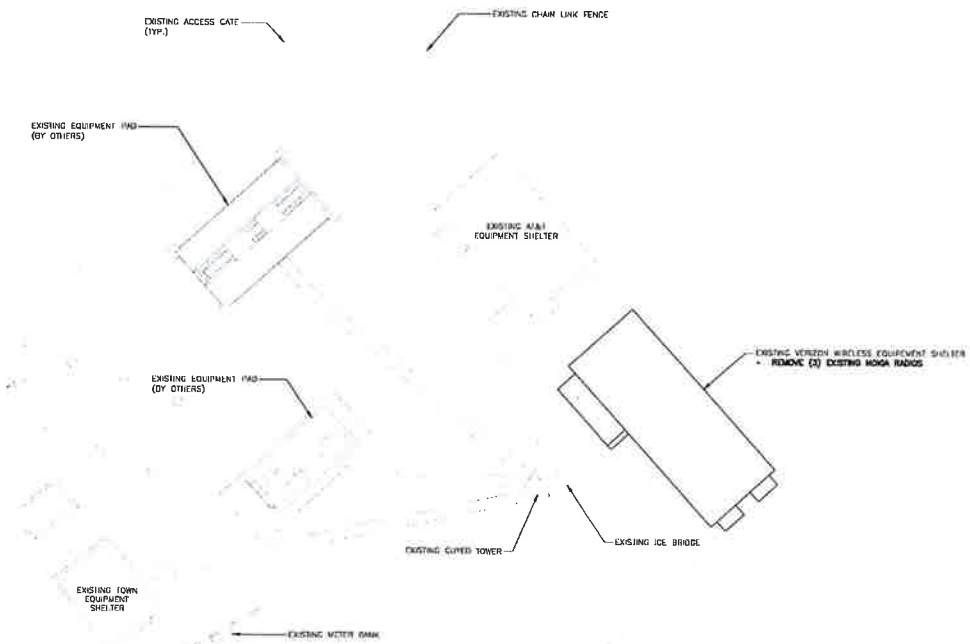

1 C-1 **COMPOUND PLAN**
SCALE: 1/8" = 1'

APPROXIMATE NORTH

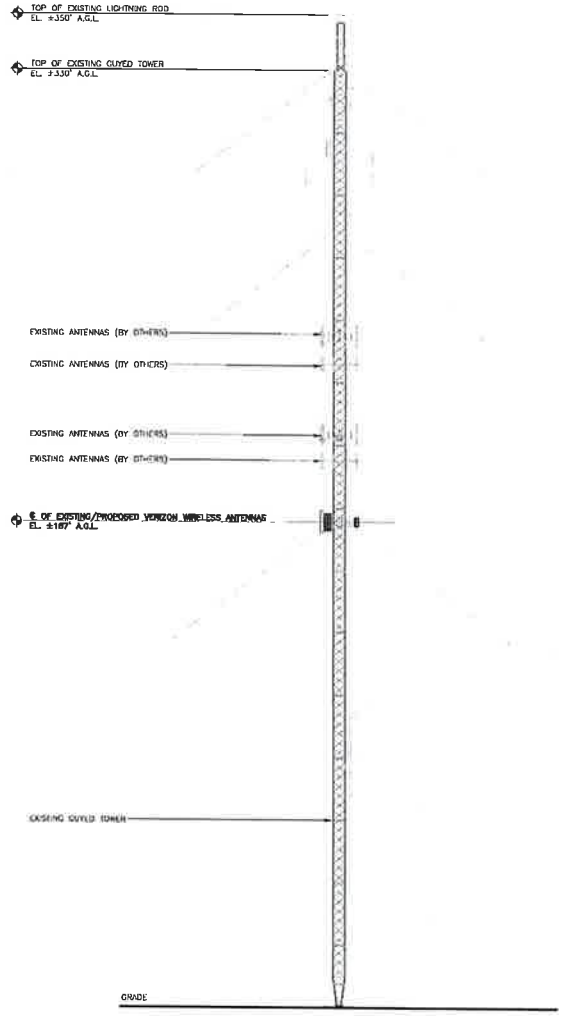

2 C-1 **TOWER ELEVATION - PROPOSED**
SCALE: 1" = 20'

GRAPHIC SCALE
1" = 20'-0"

REV.	DATE	DRWN BY	CHK'D BY	DESCRIPTION
3	01/29/24	BLR	BLR	CONSTRUCTION DRAWINGS - UPDATED PLANNING PER LATEST RFDS
2	01/23/24	BLR	BLR	CONSTRUCTION DRAWINGS - REVISED PER CLIENT COMMENTS
1	01/23/24	BLR	BLR	CONSTRUCTION DRAWINGS - REVISED PER REMOV RFDS
0	08/01/23	BLR	BLR	CONSTRUCTION DRAWINGS - REVISED PER CLIENT COMMENTS
B	08/01/23	BLR	BLR	CONSTRUCTION DRAWINGS - REVISED WITHOUT MAP CONTOUR
A	08/02/23	BLR	BLR	CONSTRUCTION DRAWINGS - REVISED PER CLIENT COMMENTS
A	10/31/21	JLP	DMD	CONSTRUCTION DRAWINGS - ISSUED FOR CLIENT REVIEW

PROFESSIONAL ENGINEER SEAL

verizon

CENTEK engineering
(203) 488-0580
(203) 488-8587 Fax
63-2 North Branford Road
Branford, CT 06405
www.CentekEng.com

Cellco Partnership d/b/a Verizon Wireless

LEDYARD CT

889 COLONEL LEDYARD HIGHWAY
LEDYARD, CT 06339

DATE: 10/21/21
SCALE: AS NOTED
JOB NO. 21007.58

COMPOUND PLAN AND ELEVATION

C-1

Sheet No. 3 of 8

EXISTING ANTENNA CONFIGURATIONS

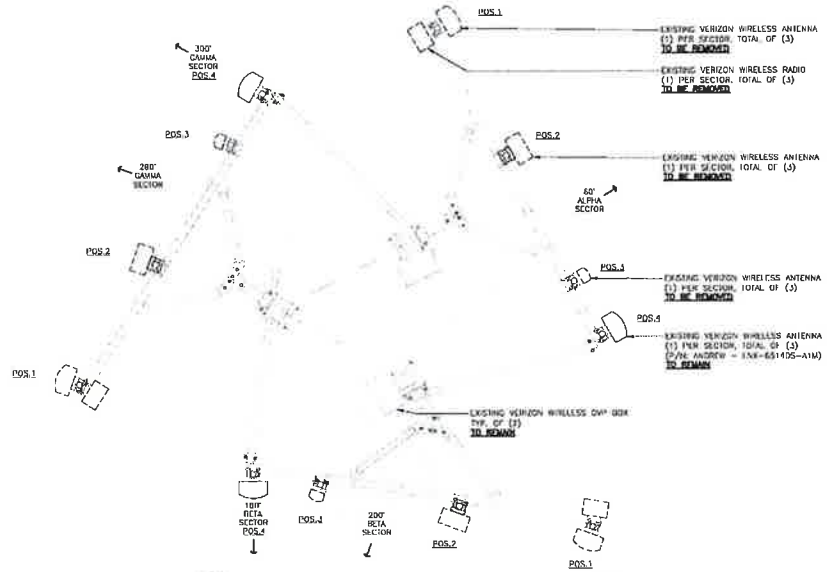

1 C-2 **EXISTING SECTOR CONFIGURATION PLAN**
SCALE: 1/2" = 1'

PROPOSED ANTENNA CONFIGURATIONS

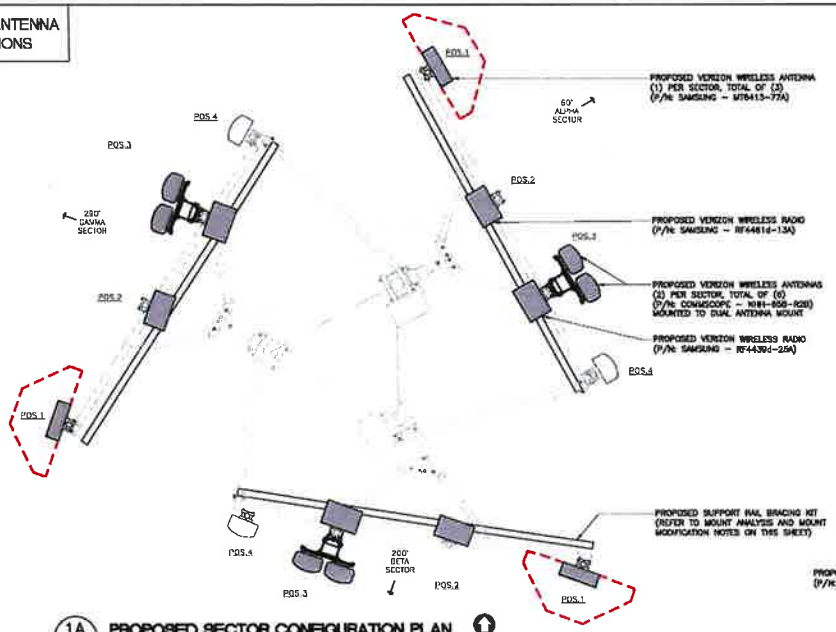

1A C-2 **PROPOSED SECTOR CONFIGURATION PLAN**
SCALE: 1/2" = 1'

LEGEND	
- - - - -	VERIZON WIRELESS VZ901 REQUIRED ANTENNA CLEARANCE LIMITS
ANTENNA CLEARANCE STATUS	ALPHA SECTOR: COMPLIANT BETA SECTOR: COMPLIANT GAMMA SECTOR: COMPLIANT

ANTENNA MOUNT ANALYSIS AND MOD NOTES:

1. REFER TO PASSING VERIZON WIRELESS MOUNT ANALYSIS REPORT WITH MODS PREPARED BY MASER CONSULTING CONNECTICUT DATED 12/08/2023 FOR ADDITIONAL INFORMATION.
2. REFER TO FINAL VERIZON WIRELESS MOUNT MODIFICATION DESIGN WITH MODS PREPARED BY MASER CONSULTING CONNECTICUT DATED 12/08/2023 FOR ANTENNA MOUNT MODIFICATIONS.

GROUNDING NOTE:

EXISTING GROUNDING SYSTEM MAY BE UTILIZED PROVIDED ALL ASPECTS ARE IN PROPER WORKING CONDITION. REFER TO THE ELECTRICAL DRAWINGS FOR ADDITIONAL GROUNDING INFORMATION.

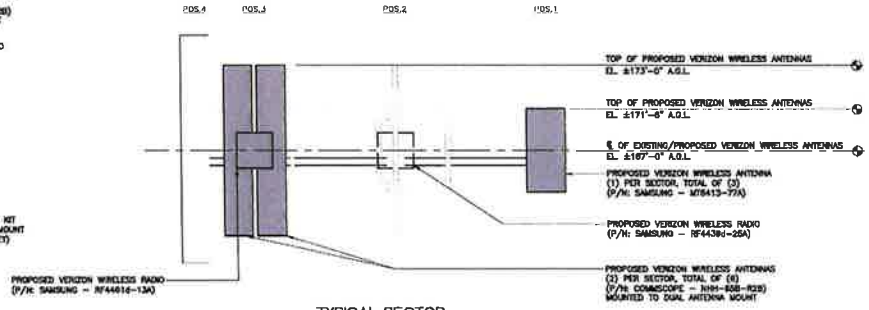

TYPICAL SECTOR

2 C-2 **PROPOSED SECTOR CONFIGURATION ELEVATION**
SCALE: 1/2" = 1'

REV.	DATE	DRAWN BY	CHKD BY	DESCRIPTION
1	01/25/24	S.S.	S.S.	CONSTRUCTION DRAWINGS - UPDATED PLUMBING PER LATEST RFDS
2	01/23/24	S.S.	S.S.	CONSTRUCTION DRAWINGS - REVISED PER REALTY ISSUED RFDS
3	11/07/23	S.S.	S.S.	CONSTRUCTION DRAWINGS - REVISED FOR CONSTRUCTION
4	08/07/23	S.S.	S.S.	CONSTRUCTION DRAWINGS - REVISED ANTENNA AND EQUIPMENT
5	08/01/23	S.S.	S.S.	CONSTRUCTION DRAWINGS - REVISED PER CLIENT COMMENTS
6	10/31/21	S.S.	S.S.	CONSTRUCTION DRAWINGS - REVISED PER CLIENT EDIT

PROFESSIONAL ENGINEER SEAL

verizon

CENTEK engineering
(203) 488-0580
(203) 488-8587 Fax
63-2 North Branford Road
Branford, CT 06405
www.CentekEng.com

Cellco Partnership d/b/a Verizon Wireless

LEDYARD CT
889 COLONEL LEDYARD HIGHWAY
LEDYARD, CT 06339

DATE: 10/21/21
SCALE: AS NOTED
JOB NO. 21007.06

ANTENNA SECTOR CONFIGURATION DETAILS

C-2

Sheet No. 4 of 8

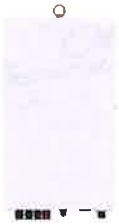

MT8413-77A

ANTENNA		
EQUIPMENT	DIMENSIONS	WEIGHT
MAKE: SAMSUNG MODEL: MT8413-77A	28.60"H x 13.75"W x 5.51"D	57.3 LBS.

NOTES:

1. THE CONTRACTOR IS RESPONSIBLE TO COORDINATE AND CONFIRM FINAL EQUIPMENT MAKE/MODEL AND QUANTITY SELECTION WITH VERIZON WIRELESS CONSTRUCTION MANAGER PRIOR TO ORDERING.
2. ANTENNA HAS ITS OWN BUILT-IN RRU.

1 / C-4 **SECTOR ANTENNA DETAIL**
NOT TO SCALE

ELEVATION - ISOMETRIC

NHH-65C-R2B (BOTTOM VIEW)

6 PORT SECTOR ANTENNA		
EQUIPMENT	DIMENSIONS	WEIGHT (WITH MOUNTING KIT)
MAKE: COMMSCOPE MODEL: NHH-65B-R2B	72.0"L x 11.9"W x 7.0"D	43.7 LBS.

2 / C-3 **ANTENNA DETAIL**
NOT TO SCALE

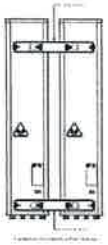

ELEVATION

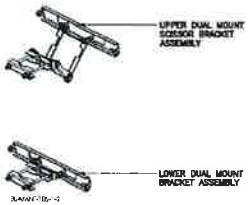

ISOMETRIC

SIDE-BY-SIDE ANTENNA MOUNTING KIT			
MOUNT	DESCRIPTION	SUPPORTED ANTENNAS	GAP BETWEEN ANTENNAS
MAKE: COMMSCOPE MODEL: BASMNT-SBS-1-2	(2) BRACKET KIT FOR MOUNTING (2) ANTENNAS SIDE-BY-SIDE	SBNHH 65" AND 65" NHH 65" AND 65"	3-3/8"

NOTES:

1. MOUNT ACCOMMODATES MAST DIAMETERS FROM 2.375" TO 4.5" (O.D.).
2. CONTRACTOR TO CONFIRM MOUNT MAKE/MODEL AND QUANTITY WITH VERIZON WIRELESS CONSTRUCTION MANAGER PRIOR TO ORDERING.

3 / C-3 **PROPOSED SIDE-BY-SIDE ANTENNA MOUNT**
NOT TO SCALE

RRU - ISOMETRIC

DUAL BAND RRU (REMOTE RADIO UNIT)			
EQUIPMENT	BANDS	DIMENSIONS	WEIGHT
MAKE: SAMSUNG MODEL: RF4439d-25A	B25: PCS (1900 MHz) B66: AWS (2100 MHz)	15.0"H x 15.0"W x 10.0"D	74.7 LBS.

NOTES:

1. CONTRACTOR TO COORDINATE FINAL EQUIPMENT MODEL SELECTION WITH VERIZON WIRELESS' CONSTRUCTION MANAGER PRIOR TO ORDERING.

4 / C-3 **DUAL-BAND AWS/PCS MACRO RADIO UNIT DETAIL**
NOT TO SCALE

RF4461d-13A

REMOTE RADIO UNIT (RRU)		
EQUIPMENT	DIMENSIONS	WEIGHT
MAKE: SAMSUNG MODEL: RF4461d-13A	14.96"H x 14.96"W x 10.23"D	79.1 LBS.

NOTES:

1. THE CONTRACTOR IS RESPONSIBLE TO COORDINATE AND CONFIRM FINAL EQUIPMENT MAKE/MODEL AND QUANTITY SELECTION WITH VERIZON WIRELESS CONSTRUCTION MANAGER PRIOR TO ORDERING.

5 / C-3 **DUAL-BAND 700/850 MHZ MACRO RADIO UNIT DETAIL**
NOT TO SCALE

REV.	DATE	DRWN BY	CHK'D BY	DESCRIPTION
3	01/25/21	DP	TJR	CONSTRUCTION DRAWINGS - UPDATED PLUMBING PER LATEST RFDS
2	01/22/21	DP	TJR	CONSTRUCTION DRAWINGS - REVISED PER CLIENT COMMENTS
1	01/12/21	DP	TJR	CONSTRUCTION DRAWINGS - REVISED PER NEW RFDS
C	08/17/20	DP	TJR	CONSTRUCTION DRAWINGS - REVISED PER CLIENT COMMENTS
B	08/07/20	DP	TJR	CONSTRUCTION DRAWINGS - REVISED ANTENNA, RRU CLOCKS
A	10/21/21	DP	TJR	CONSTRUCTION DRAWINGS - REVISED PER CLIENT COMMENTS
0	08/22/20	JB	DMD	CONSTRUCTION DRAWINGS - ISSUED FOR CLIENT REVIEW

PROFESSIONAL ENGINEER SEAL

verizon

CENTEK engineering

(203) 488-0580
(203) 488-8587 Fax
63-2 North Branford Road
Branford CT 06405
www.CentekEng.com

Cellco Partnership d/b/a Verizon Wireless

LEDYARD CT
859 COLONEL LEDYARD HIGHWAY
LEDYARD, CT 06339

DATE: 10/21/21
SCALE: AS NOTED
JOB NO. 31007.58

RF DETAILS

C-3

Sheet No. 5 of 5

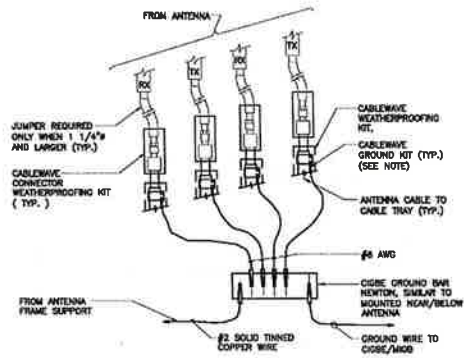

NOTES:

1. DO NOT INSTALL CABLE GROUND KIT AT A BEND AND ALWAYS DIRECT GROUND WIRE DOWN TO CGBE.

1 / E-1 CONNECTION OF GROUND WIRES TO GROUND BAR

NOT TO SCALE

EACH RRH CABINET SHALL BE GROUNDED IN THE FOLLOWING MANNER:

1. AT TOP OF THE CABINET
2. AT RIGHT SIDE OF THE CABINET.

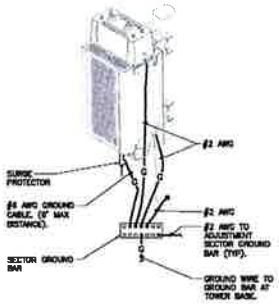

2 / E-1 RRH POLE MOUNT GROUNDING

NOT TO SCALE

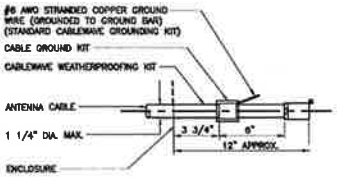

NOTES:

1. DO NOT INSTALL CABLE GROUND KIT AT A BEND AND ALWAYS DIRECT GROUND WIRE DOWN TO GROUND BAR.

3 / E-1 ANTENNA CABLE GROUNDING DETAIL

NOT TO SCALE

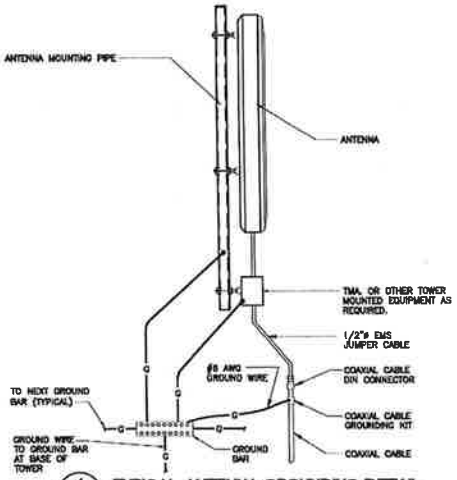

4 / E-1 TYPICAL ANTENNA GROUNDING DETAIL

NOT TO SCALE

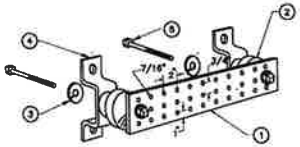

NOTES

1. TINNED COPPER GROUND BAR, 1/4" x 4" x 20", NEWTON INSTRUMENT CO. HOLE CENTERS TO MATCH NEMA DOUBLE LUG CONFIGURATION.
2. INSULATORS, NEWTON INSTRUMENT CAT. NO. 3061-4.
3. 5/8" LOCK WASHERS, NEWTON INSTRUMENT CO. CAT. NO. 3015-8.
4. WALL MOUNTING BRACKET, NEWTON INSTRUMENT CO. CAT NO. A-5056.
5. 5/8-11 x 1" STAINLESS STEEL TRUSS SPANNER MACHINE SCREWS.

5 / E-1 GROUND BAR DETAIL

NOT TO SCALE

ELECTRICAL SPECIFICATIONS

SECTION 16010

1.01. SCOPE OF WORK

A. WORK SHALL INCLUDE ALL LABOR, EQUIPMENT AND SERVICES REQUIRED TO COMPLETE (MAKE READY FOR OPERATION) ALL THE ELECTRICAL WORK INCLUDING, BUT NOT LIMITED TO, THE FOLLOWING:

1. CELLULAR GROUNDING SYSTEMS CONSISTING OF ANTENNA GROUNDING, GROUND BARS, ETC.

1.02. GENERAL REQUIREMENTS

A. THE ENTIRE ELECTRICAL INSTALLATION SHALL BE MADE IN STRICT ACCORDANCE WITH ALL LOCAL, STATE AND NATIONAL CODES AND REGULATIONS WHICH MAY APPLY AND NOTHING IN THE DRAWINGS OR SPECIFICATIONS SHALL BE INTERPRETED AS AN INFRINGEMENT OF SUCH CODES OR REGULATIONS.

B. THE ELECTRICAL CONTRACTOR IS TO BE RESPONSIBLE FOR THE COMPLETE INSTALLATION AND COORDINATION OF THE ENTIRE ELECTRICAL SERVICE. ALL ACTIVITIES TO BE COORDINATED THROUGH OWNERS REPRESENTATIVE, DESIGN ENGINEER AND OTHER AUTHORITIES HAVING JURISDICTION OF TRADES.

C. THE CONTRACTOR SHALL BE RESPONSIBLE FOR OBTAINING ALL PERMITS AND PAY ALL FEES THAT MAY BE REQUIRED FOR THE ELECTRICAL WORK AND FOR SCHEDULING OF ALL INSPECTIONS THAT MAY BE REQUIRED BY THE LOCAL AUTHORITY.

D. THE CONTRACTOR SHALL BE RESPONSIBLE FOR COORDINATION WITH THE BUILDING OWNER FOR NEW AND/OR DEMOLITION WORK INVOLVED.

E. NO MATERIAL OTHER THAN THAT CONTAINED IN THE "LATEST LIST OF ELECTRICAL FITTINGS" APPROVED BY THE UNDERWRITERS' LABORATORIES, SHALL BE USED IN ANY PART OF THE WORK. ALL MATERIAL FOR WHICH LABEL SERVICE HAS BEEN ESTABLISHED SHALL BEAR THE U.L. LABEL.

F. THE CONTRACTOR SHALL GUARANTEE ALL NEW WORK FOR A PERIOD OF ONE YEAR FROM THE ACCEPTANCE DATE BY THE OWNER. THE CONTRACTOR SHALL BE RESPONSIBLE FOR OBTAINING WARRANTIES FROM ALL EQUIPMENT MANUFACTURERS FOR SUBMISSION TO THE OWNER.

G. DRAWINGS INDICATE GENERAL ARRANGEMENT OF WORK INCLUDED IN CONTRACT. CONTRACTOR SHALL, WITHOUT EXTRA CHARGE, MAKE MODIFICATIONS TO THE LAYOUT OF THE WORK TO PREVENT CONFLICT WITH WORK OF OTHER TRADES AND FOR THE PROPER INSTALLATION OF WORK. CHECK ALL DRAWINGS AND VISIT JOB SITE TO VERIFY SPACE AND TYPE OF EXISTING CONDITIONS IN WHICH WORK WILL BE DONE, PRIOR TO SUBMITTAL OF BID.

H. THE ELECTRICAL CONTRACTOR SHALL SUPPLY THREE (3) COMPLETE SETS OF APPROVED DRAWINGS, ENGINEERING DATA SHEETS, MAINTENANCE AND OPERATING INSTRUCTION MANUALS FOR ALL SYSTEMS AND THEIR RESPECTIVE EQUIPMENT. THESE MANUALS SHALL BE INSERTED IN VINYL COVERED 3-RING BINDERS AND TURNED OVER TO OWNER'S REPRESENTATIVE ONE (1) WEEK PRIOR TO FINAL PUNCH LIST.

I. ALL WORK SHALL BE INSTALLED IN A NEAT AND WORKMAN LIKE MANNER AND WILL BE SUBJECT TO THE APPROVAL OF THE OWNER'S REPRESENTATIVE.

J. ALL EQUIPMENT AND MATERIALS TO BE INSTALLED SHALL BE NEW, UNLESS OTHERWISE NOTED.

K. BEFORE FINAL PAYMENT, THE CONTRACTOR SHALL PROVIDE A COMPLETE SET OF PRINTS (AS-BUILTS), LEGIBLY MARKED IN RED PENCIL TO SHOW ALL CHANGES FROM THE ORIGINAL PLANS.

L. ENTIRE ELECTRICAL INSTALLATION SHALL BE IN ACCORDANCE WITH OWNER'S SPECIFICATIONS, AND REQUIREMENTS OF ALL LOCAL AUTHORITIES HAVING JURISDICTION. IT IS THE CONTRACTOR'S RESPONSIBILITY TO COORDINATE WITH APPROPRIATE INDIVIDUALS TO OBTAIN ALL SUCH SPECIFICATIONS AND REQUIREMENTS. NOTHING CONTAINED IN, OR OMITTED FROM, THESE DOCUMENTS SHALL RELIEVE CONTRACTOR FROM THIS OBLIGATION.

SECTION 16450

1.01. GROUNDING

A. ALL NON-CURRENT CARRYING PARTS OF THE ELECTRICAL AND TELEPHONE CONDUIT SYSTEMS SHALL BE MECHANICALLY AND ELECTRICALLY CONNECTED TO PROVIDE AN INDEPENDENT RETURN PATH TO THE EQUIPMENT GROUNDING SOURCES.

B. GROUNDING SYSTEM WILL BE IN ACCORDANCE WITH THE LATEST ACCEPTABLE EDITION OF THE NATIONAL ELECTRICAL CODE AND REQUIREMENTS PER LOCAL INSPECTOR HAVING JURISDICTION.

C. EQUIPMENT GROUNDING CONDUCTOR:

1. EACH EQUIPMENT GROUND CONDUCTOR SHALL BE SIZED IN ACCORDANCE WITH THE N.E.C. ARTICLE 250-122.
2. THE MINIMUM SIZE OF EQUIPMENT GROUND CONDUCTOR SHALL BE #12 AWG COPPER.

D. CELLULAR GROUNDING SYSTEM:

PROVIDE THE CELLULAR GROUNDING SYSTEM AS SPECIFIED ON DRAWINGS, INCLUDING, BUT NOT LIMITED TO:

1. GROUND BARS
2. ANTENNA GROUND CONNECTIONS AND PLATES.

E. ALL EQUIPMENT SHALL BE BONDED TO GROUND AS REQUIRED BY N.E.C., MFG. SPECIFICATIONS, AND OWNER'S SPECIFICATIONS.

REV.	DATE	DRAWN BY	CHK'D BY	DESCRIPTION
3	01/25/24	DJ	TJS	CONSTRUCTION DRAWINGS UPDATED PLANSET PER LATEST RFDS
2	01/12/24	DJ	TJS	CONSTRUCTION DRAWINGS UPDATED PER CLIENT COMMENTS
1	01/12/24	DJ	TJS	CONSTRUCTION DRAWINGS REVISED PER NEWLY ISSUED RFDS
0	11/30/23	DJ	TJS	CONSTRUCTION DRAWINGS ISSUED FOR CONSTRUCTION
5	08/07/23	DJ	TJS	CONSTRUCTION DRAWINGS REVISED PER CLIENT COMMENTS
4	06/21/23	DJ	TJS	CONSTRUCTION DRAWINGS ISSUED FOR CLIENT REVIEW

PROFESSIONAL ENGINEER SEAL

verizon

CENTEK engineering

(203) 488-0580
(203) 488-8587 Fax
63-2 North Branford Road
Branford, CT 06405
www.CentekEng.com

Cellco Partnership d/b/a Verizon Wireless

LEDYARD CT

869 COLONEL LEDYARD HIGHWAY
LEDYARD, CT 06339

DATE: 10/21/21
SCALE: AS NOTED
JOB NO. 21007.88

ELECTRICAL DETAILS AND SPECIFICATIONS

E-1

Sheet No. 11 of 11

C-band 64T64R

SAMSUNG

Gen 2

Gen 2 : Higher conducted power radio with reduced size/volume/weight vs Gen 1 and also SOC embedded for flexibility to support new features

※ Preliminary Design: External appearance and mechanical design can be subject to change

Gen 2. 64T64R C-band MMU Dimensions	
Size (WxHxD)	**400 x 734 x 140 mm (15.75 x 28.90 x 5.51 inch)**
Weight	**26kg (57.3 lb)**

Item	Gen 2 64T64R (MT6413-77A)
Air Technology	NR n77/TDD
Frequency	3700 – 3980 MHz
IBW	200 MHz
OBW	200 MHz
Carrier Bandwidth	20(HW ready)/40/60/80/100 MHz
# of Carriers	2 carriers
Layer	DL : 16L, UL : 16RX (8L)
RF Chain	64T64R
Antenna Configuration	4V16H with 192 AE
EIRP	80.5 dBm @320W (55 dBm + 25.5 dBi)
Conductive Power	320W
Spectrum Analyzer	TX/RX support
RX Sensitivity	Typical -97.8dBm @(1Rx, 18.36MHz with 30kHz,51RBs)
Modulation	DL 256QAM support, (DL 1024QAM with 1~2dB power back-off)
Function Split	DL/UL option 7-2x
Input Power	-48 VDC (-38 VDC to -57 VDC)
Power Consumption	1,287W (100% load, room temp.)
Size (WHD)	**400 x 734 x 140 mm (15.75 x 28.90 x 5.51 inch)**
Volume	**41.1L**
Weight	**26kg (57.3 lb)**
Operating Temperature	-40°C - 55°C (w/o solar load)
Cooling	Natural convection
Unwanted Emission	3GPP 38.104 FCC 47 CFR 27.53 : < -13dBm/MHz < -40 dBm/MHz @ above 4 GHz <-50 dBm /MHz @ 4,040 ~ 4,050 MHz, <-60 dBm /MHz @ above 4,050 MHz
Optic Interface	15km, 4 ports (25Gbps x 4), SFP28, single mode, 8i-di (Option: Duplex)
Mounting Options	Pole, wall
NB-IoT	Not support
External Alarm	4RX
Fronthaul Interface	eCPRI

NHH-65B-R2B

6-port sector antenna, 2x 698–896 and 4x 1695–2360 MHz, 65° HPBW, 2x RET. Both high bands share the same electrical tilt.

- Interleaved dipole technology providing for attractive, low wind load mechanical package
- Internal SBT on low and high band allow remote RET control from the radio over the RF jumper cable
- Separate RS-485 RET input/output for low and high band
- One RET for low band and one RET for both high bands to ensure same tilt level for 4x Rx or 4x MIMO

General Specifications

Antenna Type	Sector
Band	Multiband
Color	Light gray
Grounding Type	RF connector body grounded to reflector and mounting bracket
Performance Note	Outdoor usage | Wind loading figures are validated by wind tunnel measurements described in white paper WP-112534-EN
Radome Material	Fiberglass, UV resistant
Radiator Material	Low loss circuit board
Reflector Material	Aluminum
RF Connector Interface	4.3-10 Female
RF Connector Location	Bottom
RF Connector Quantity, high band	4
RF Connector Quantity, low band	2
RF Connector Quantity, total	6

Remote Electrical Tilt (RET) Information

RET Interface	8-pin DIN Female | 8-pin DIN Male
RET Interface, quantity	2 female | 2 male
Input Voltage	10–30 Vdc
Internal Bias Tee	Port 1 | Port 3
Internal RET	High band (1) | Low band (1)
Power Consumption, idle state, maximum	2 W
Power Consumption, normal conditions, maximum	13 W

COMMSCOPE®

NHH-65B-R2B

Protocol	3GPP/AISG 2.0 (Single RET)

Dimensions

Width	301 mm | 11.85 in
Depth	180 mm | 7.087 in
Length	1828 mm | 71.969 in
Net Weight, without mounting kit	19.8 kg | 43.651 lb

Array Layout

NHH

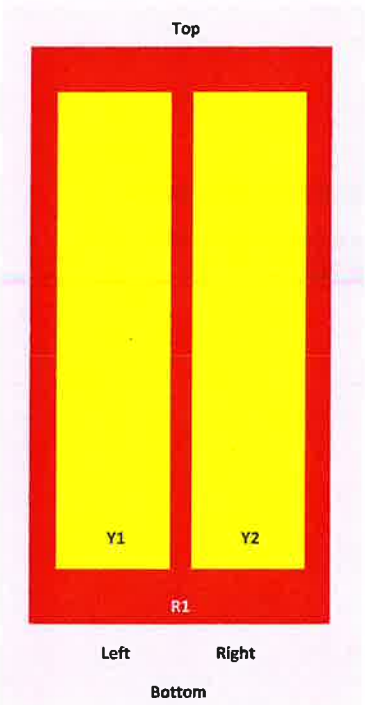

Array	Freq (MHz)	Conns	RET (SRET)	AISG RET UID
R1	698-896	1-2	1	AN\\\\\\\\\\\\\\\\\\\\\\\\\\\\\\\\1
Y1	1695-2360	3-4	2	AN\\\\\\\\\\\\\\\\\\\\\\\\\\\\\\\\2
Y2	1695-2360	5-6		

View from the front of the antenna

(Sizes of colored boxes are not true depictions of array sizes)

Electrical Specifications

Impedance	50 ohm
Operating Frequency Band	1695 – 2360 MHz | 698 – 896 MHz

COMMSCOPE®

NHH-65B-R2B

Polarization	±45°
Total Input Power, maximum	900 W @ 50 °C

Electrical Specifications

Frequency Band, MHz	**698–806**	**806–896**	**1695–1880**	**1850–1990**	**1920–2200**	**2300–2360**
Gain, dBi	14.9	15	17.7	17.9	18.4	18.7
Beamwidth, Horizontal, degrees	65	60	71	69	64	57
Beamwidth, Vertical, degrees	12.4	11.2	5.7	5.2	4.9	4.6
Beam Tilt, degrees	0–14	0–14	0–7	0–7	0–7	0–7
USLS (First Lobe), dB	13	14	18	18	19	18
Front-to-Back Ratio at 180°, dB	30	29	31	30	29	31
Isolation, Cross Polarization, dB	25	25	25	25	25	25
Isolation, Inter-band, dB	30	30	30	30	30	30
VSWR | Return loss, dB	1.5 | 14.0	1.5 | 14.0	1.5 | 14.0	1.5 | 14.0	1.5 | 14.0	1.5 | 14.0
PIM, 3rd Order, 2 x 20 W, dBc	-153	-153	-153	-153	-153	-153
Input Power per Port at 50°C, maximum, watts	300	300	300	300	300	300

Electrical Specifications, BASTA

Frequency Band, MHz	**698–806**	**806–896**	**1695–1880**	**1850–1990**	**1920–2200**	**2300–2360**
Gain by all Beam Tilts, average, dBi	14.5	14.5	17.3	17.7	18.1	18.5
Gain by all Beam Tilts Tolerance, dB	±0.6	±1.1	±0.4	±0.4	±0.5	±0.3
Gain by Beam Tilt, average, dBi	0 ° | 14.4 7 ° | 14.6 14 ° | 14.3	0 ° | 14.7 7 ° | 14.7 14 ° | 14.1	0 ° | 17.2 4 ° | 17.3 7 ° | 17.3	0 ° | 17.6 4 ° | 17.7 7 ° | 17.7	0 ° | 18.0 4 ° | 18.2 7 ° | 18.1	0 ° | 18.3 4 ° | 18.5 7 ° | 18.6
Beamwidth, Horizontal Tolerance, degrees	±2	±2.1	±3	±4.1	±6.5	±2.9
Beamwidth, Vertical Tolerance, degrees	±0.7	±0.7	±0.3	±0.2	±0.3	±0.2
USLS, beampeak to 20° above beampeak, dB	13	14	16	16	17	15
Front-to-Back Total Power at 180° ± 30°, dB	23	22	27	27	25	25
CPR at Boresight, dB	22	21	23	23	22	19

COMMSCOPE®

NHH-65B-R2B

CPR at Sector, dB	10	7	16	13	11	4

Mechanical Specifications

Effective Projective Area (EPA), frontal	0.26 m² | 2.799 ft²
Effective Projective Area (EPA), lateral	0.22 m² | 2.368 ft²
Wind Loading @ Velocity, frontal	278.0 N @ 150 km/h (62.5 lbf @ 150 km/h)
Wind Loading @ Velocity, lateral	230.0 N @ 150 km/h (51.7 lbf @ 150 km/h)
Wind Loading @ Velocity, maximum	537.0 N @ 150 km/h (120.7 lbf @ 150 km/h)
Wind Loading @ Velocity, rear	282.0 N @ 150 km/h (63.4 lbf @ 150 km/h)
Wind Speed, maximum	241 km/h | 149.75 mph

Packaging and Weights

Width, packed	409 mm | 16.102 in
Depth, packed	299 mm | 11.772 in
Length, packed	1952 mm | 76.85 in
Weight, gross	32.3 kg | 71.209 lb

Regulatory Compliance/Certifications

Agency	**Classification**
CHINA-ROHS	Below maximum concentration value
ISO 9001:2015	Designed, manufactured and/or distributed under this quality management system
ROHS	Compliant

Included Products

BSAMNT-3	–	Wide Profile Antenna Downtilt Mounting Kit for 2.4 - 4.5 in (60 - 115 mm) OD round members. Kit contains one scissor top bracket set and one bottom bracket set.

* Footnotes

Performance Note Severe environmental conditions may degrade optimum performance

COMMSCOPE®

700/850 4T4R Macro 320W ORU - New Filter (RF4461d-13A)

SAMSUNG

Specifications

Item	Specification	
Air Interface	LTE, NR(HW resource ready)	
Band	Band13 (700MHz)	Band5 (850MHz)
Frequency	DL: 746~756MHz UL: 777~787MHz	DL: 869~894MHz UL: 824~849MHz
IBW	10MHz	25MHz
OBW	10MHz	25MHz
Carrier Bandwidth	LTE/NR 5*/10MHz	LTE 5/10MHz NR 5/10/15/20MHz
# of carriers	2C*	3C
Total # of carriers	4C + B13 (SDL) 1C	
RF Chain	4T4R/2T4R/2T2R/1T2R 2T2R+2T2R bi-sector	
RF Output Power	Total : 320W	
	4 x 40W or 2 x 60W	4 x 40W or 2 x 60W
Spectrum Analyzer	TX/RX Support	
RX Sensitivity	Typ. -104.5dBm @1Rx (25RBs 5MHz)	
Modulation	256QAM support, (1024QAM with 1~2dB power back-off)	
Input Power	-48VDC (-38VDC to -57VDC)	
Power Consumption	1,165 Watt @ 100% RF load, room temperature	
Size (WHD)	380 x 380 x 260 mm (14.96 x 14.96 x 10.23 inch)	
Volume	37.5 L	
Weight (W/o Solar Shield & finger guard)	35.9 kg (79.1 lb)	
Operating Temperature	-40°C (-40°F) ~ 55°C (131°F) (Without solar load)	
Cooling	Natural convection	
Unwanted Emission	3GPP 36.104 FCC 47 CFR 27.53 c), f)	3GPP 36.104 FCC 47 CFR 22.917
	-	-69 dBm/100 kHz per path @ 836 ~901MHz
CPRI Cascade	Not supported	
Optic Interface	20km, 2 ports (9.8Gbps x 2), SFP+, single mode, Duplex (Option: Bi-di)	
RET & TMA Interface	AISG 3.0	
Bias-T	4 ports (2 ports per band)	
Mounting Options	Pole, wall	
NB-IoT	2GB+2IB or 4IB	2SA+2GB or 2GB+2IB or 4GB
PIM Cancellation	Support	
# of antenna port	4	
External Alarm	4	
Fronthaul Interface	Opt. 8 CPRI / Opt. 7-2x selectable (not simultaneous support)	
CPRI compression	Not Support	

* 5MHz supporting in B13(700MHz) depends on 3GPP std. and UE capability. External filters in interferer and victim sides for Mexican boarder to support 5MHz service need to be considered
** Finger guard is not needed.

SAMSUNG

AWS/PCS MACRO RADIO

DUAL-BAND AND HIGH POWER FOR MACRO COVERAGE

Samsung's future proof dual-band radio is designed to help effectively increase the coverage areas in wireless networks. This AWS/PCS 4T4R dual-band radio has 4Tx/4Rx to 2Tx/2Rx RF chains options and a total output power of 320W, making it ideal for macro sites.

Model Code	RF4439d-25A

Homepage
samsungnetworks.com

Youtube
www.youtube.com/samsung5g

Points of Differentiation

Continuous Migration

Samsung's AWS/PCS macro radio can support each incumbent CPRI interface as well as advanced eCPRI interfaces. This feature provides installable options for both legacy LTE networks and added NR networks.

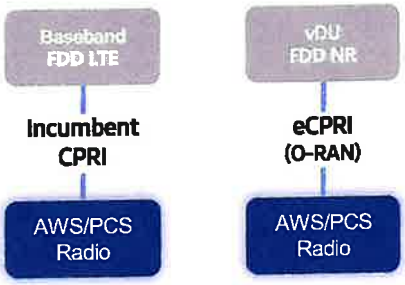

O-RAN Compliant

A standardized O-RAN radio can help in implementing cost-effective networks, which are capable of sending more data without compromising additional investments.

Samsung's state-of-the-art O-RAN technology will help accelerate the effort toward constructing a solid O-RAN ecosystem.

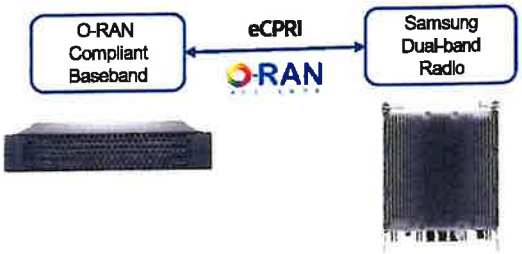

Optimum Spectrum Utilization

The number of required carriers varies according to site (region). Supporting many carriers is essential for using all frequencies that the operator has available.

The new AWS/PCS dual-band radio can support up to 3 carriers in the PCS (1.9GHz) band and 4 carriers in the AWS (2.1GHz) band, respectively.

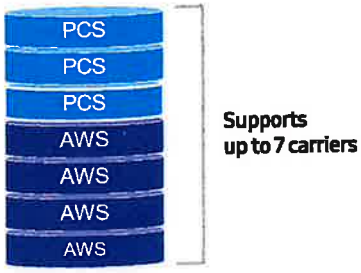

Brand New Features in a Compact Size

Samsung's AWS/PCS macro radio offers several features, such as dual connectivity for baseband for both CDU and vDU, O-RAN capability, more carriers and an enlarged PCS spectrum, combined into an incumbent radio volume of 36.8L.

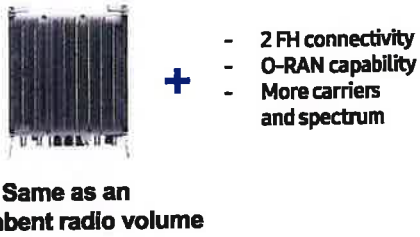

Technical Specifications

Item	Specification
Tech	LTE / NR
Brand	B25(PCS), B66(AWS)
Frequency Band	DL: 1930 – 1995MHz, UL: 1850 – 1915MHz DL: 2110 – 2200MHz, UL: 1710 – 1780MHz
RF Power	(B25) 4 × 40W or 2 × 60W (B66) 4 × 60W or 2 × 80W
IBW/OBW	(B25) 65MHz / 30MHz (B66) DL 90MHz, UL 70MHz / 60MHz
Installation	Pole, Wall
Size/ Weight	14.96 x 14.96 x 10.04inch (36.8L) / 74.7lb

ATTACHMENT 3

C Squared Systems, LLC
65 Dartmouth Drive
Auburn, NH 03032
(603) 644-2800
support@csquaredsystems.com

Calculated Radio Frequency Emissions Report

Ledyard CT

889 Colonel Ledyard Highway, Ledyard, CT 06339

February 9, 2024

Table of Contents

List of Figures

List of Tables

1. Introduction

The purpose of this report is to investigate compliance with applicable FCC regulations for the proposed modification of Verizon's antenna arrays to be mounted at 167' on an existing guyed tower located at 889 Colonel Ledyard Highway in Ledyard, CT. The coordinates of the tower are 41° 27' 43.15" N, 72° 01' 24.99" W.

Verizon is proposing the following:

1) Install nine (9) multi-band antennas, three (3) per sector to support its commercial LTE and 5G network.

This report considers the planned antenna configuration for Verizon[1] as well as existing antenna configuration[2][3] for AT&T, T-Mobile and Other's (FM, Town of Ledyard, Marcus, Unknown) to derive the resulting % MPE of its proposed modification.

2. FCC Guidelines for Evaluating RF Radiation Exposure Limits

In 1985, the FCC established rules to regulate radio frequency (RF) exposure from FCC licensed antenna facilities. In 1996, the FCC updated these rules, which were further amended in August 1997 by OET Bulletin 65 Edition 97-01. These new rules include Maximum Permissible Exposure (MPE) limits for transmitters operating between 300 kHz and 100 GHz. The FCC MPE limits are based upon those recommended by the National Council on Radiation Protection and Measurements (NCRP), developed by the Institute of Electrical and Electronics Engineers, Inc., (IEEE) and adopted by the American National Standards Institute (ANSI).

The FCC general population/uncontrolled limits set the maximum exposure to which most people may be subjected. General population/uncontrolled exposures apply in situations in which the general public may be exposed, or in which persons that are exposed as a consequence of their employment may not be fully aware of the potential for exposure or cannot exercise control over their exposure.

Public exposure to radio frequencies is regulated and enforced in units of milliwatts per square centimeter (mW/cm^2). The general population exposure limits for the various frequency ranges are defined in the attached "FCC Limits for Maximum Permissible Exposure (MPE)" in Attachment C of this report.

Higher exposure limits are permitted under the occupational/controlled exposure category, but only for persons who are exposed as a consequence of their employment and who have been made fully aware of the potential for exposure, and they must be able to exercise control over their exposure. General population/uncontrolled limits are five times more stringent than the levels that are acceptable for occupational, or radio frequency trained individuals. Attachment C contains excerpts from OET Bulletin 65 and defines the Maximum Exposure Limit.

Finally, it should be noted that the MPE limits adopted by the FCC for both general population/uncontrolled exposure and for occupational/controlled exposure incorporate a substantial margin of safety and have been established to be well below levels generally accepted as having the potential to cause adverse health effects.

[1] As referenced to Verizon's Radio Frequency Design Sheet updated 11/14/2023.

[2] As referenced to AT&'T's Connecticut Siting Council Notice of Exempt Modification – 889R Colonel Ledyard Highway, Ledyard, CT, dated August 18, 2020

[3] As referenced to T-Mobile's Connecticut Siting Council Notice of Exempt Modification – 889A Colonel Ledyard Hwy, Ledyard, CT, dated August 17, 2022

3. RF Exposure Prediction Methods

The emission field calculation results displayed in the following figures were generated using the following formula as outlined in FCC bulletin OET 65:

$$\text{Power Density} = \left(\frac{\text{GRF}^2 \times 1.64 \times \text{ERP}}{4\pi \times R^2}\right) \text{X Off Beam Loss}$$

Where:

EIRP = Effective Isotropic Radiated Power

R = Radial Distance = $\sqrt{(H^2 + V^2)}$

H = Horizontal Distance from antenna in meters

V = Vertical Distance from radiation center of antenna in meters

Off Beam Loss is determined by the selected antenna patterns

Ground reflection factor (GRF) of 1.6

These calculations assume that the antennas are operating at 100 percent capacity, that all antenna channels are transmitting simultaneously, and that the radio transmitters are operating at full power. Obstructions (trees, buildings, etc.) that would normally attenuate the signal are not taken into account. The calculations assume even terrain in the area of study and do not take into account actual terrain elevations which could attenuate the signal. As a result, the predicted signal levels reported below are much higher than the actual signal levels will be from the final installations.

4. Antenna Inventory

Table 1 below outlines Verizon's proposed antenna configuration for the site. The associated data sheets and antenna patterns for these specific antenna models are included in Attachments C.

Operator	Sector / Azimuth	TX Freq (MHz)	Power at Antenna (Watts)	Ant Gain (dBi)	Power EIRP (Watts)	Antenna Model	Beam Width	Mech. Tilt	Length (ft)	Antenna Centerline Height (ft)
Verizon	Alpha / 60°	700	160	14.9	4944	NHH-65B-R2B	65	0	6	167
		850	160	15.0	5060		60			
		1900	160	17.9	9866		69			
		2100	240	18.4	16604		64			
		3700	286	25.5	101477	MT6413-77A	105	0	2.46	167
	Beta / 200°	700	160	14.9	4944	NHH-65B-R2B	65	0	6	167
		850	160	15.0	5060		60			
		1900	160	17.9	9866		69			
		2100	240	18.4	16604		64			
		3700	286	25.5	101477	MT6413-77A	105	0	2.46	167
	Gamma / 290°	700	160	14.9	4944	NHH-65B-R2B	65	0	6	167
		850	160	15.0	5060		60			
		1900	160	17.9	9866		69			
		2100	240	18.4	16604		64			
		3700	286	25.5	101477	MT6413-77A	105	0	2.46	167

Table 1: Proposed Antenna Inventory[4][5]

[4] Antenna heights are in reference to Verizon's Radio Frequency Design Sheet updated 11/14/2023.

[5] Transmit power assumes 0 dB of cable loss.

5. Calculation Results

The calculated power density results are shown in Figure 1 below. For completeness, the calculations for this analysis range from 0 feet horizontal distance (directly below the antennas) to a value of 3,000 feet horizontal distance from the site. In addition to the other worst-case scenario considerations that were previously mentioned, the power density calculations to each horizontal distance point away from the antennas was completed using a local maximum off beam antenna gain (within ± 5 degrees of the true mathematical angle) to incorporate a realistic worst-case scenario.

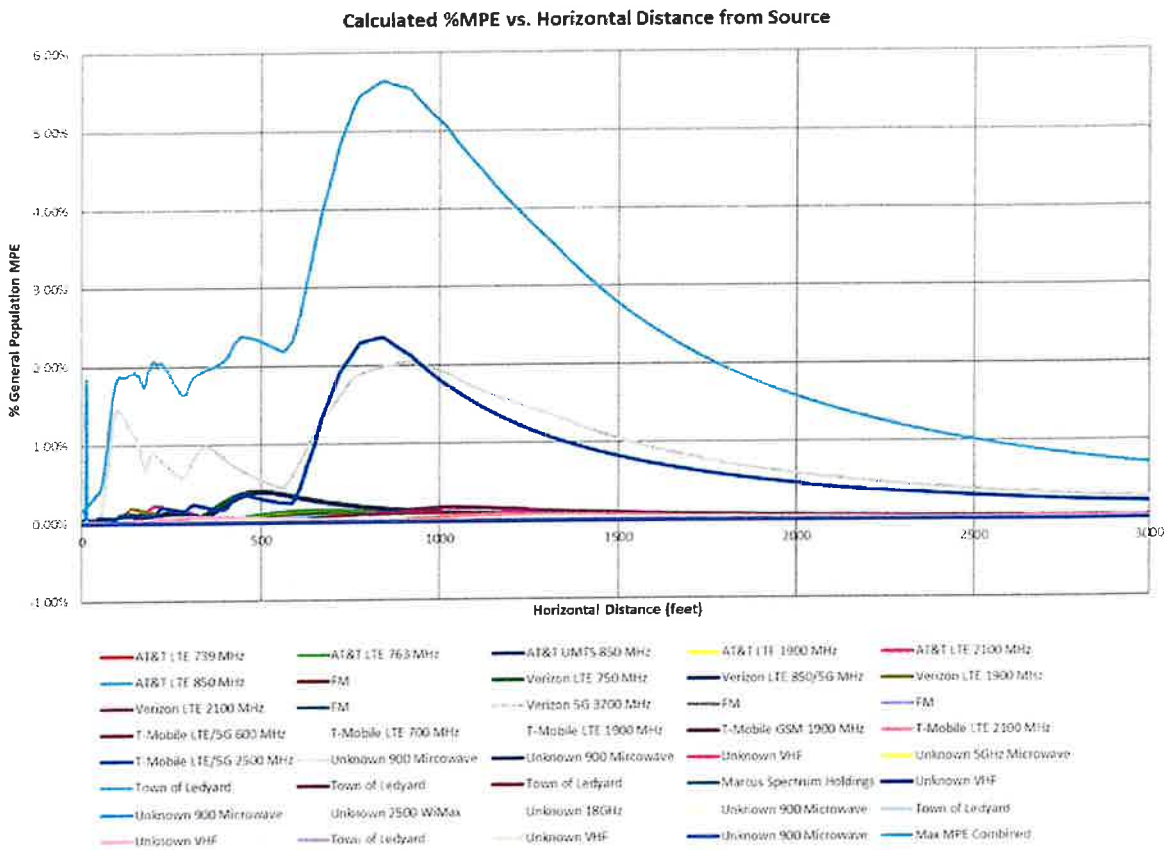

Figure 1: Graph of General Population % MPE vs. Distance

The highest percent of MPE (5.67% of the General Population limit) is calculated to occur at a horizontal distance of 842 feet from antennas. Please note that the percent of MPE calculations close to the site take into account off beam loss, which is determined from the vertical pattern of the antennas used. Therefore, RF power density levels may increase as the distance from the site increases. At distances of approximately 1500 feet and beyond, one would now be in the main beam of the antenna pattern and off beam loss is no longer considered. Beyond this point, RF levels become calculated solely on distance from the site and the percent of MPE decreases significantly as distance from the site increases.

Table 2 below lists percent of MPE values as well as the associated parameters that were included in the calculations. The highest percent of MPE value was calculated to occur at a horizontal distance of 842 feet from the site (reference Figure 1).

As stated in Section 3, all calculations assume that the antennas are operating at 100 percent capacity, that all antenna channels are transmitting simultaneously, and that the radio transmitters are operating at full power. Obstructions (trees, buildings etc.) that would normally attenuate the signal are not taken into account. In addition, a six foot height offset was considered in this analysis to account for average human height. As a result, the predicted signal levels are significantly higher than the actual signal levels will be from the final configuration. The results presented in Figure 1 and Table 2 assume level ground elevation from the base of the tower out to the horizontal distances calculated.

Carrier	Number of Transmitters	Power out of Base Station Per Transmitter (Watts)	Antenna Height (Feet)	Distance to the Base of Antennas (Feet)	Power Density (mW/cm^2)	Limit (mW/cm^2)	% MPE
AT&T LTE 1900 MHz	1	160.0	200.0	842	0.000216	1.000	0.02%
AT&T LTE 2100 MHz	1	240.0	200.0	842	0.000259	1.000	0.03%
AT&T LTE 739 MHz	1	120.0	200.0	842	0.000508	0.493	0.10%
AT&T LTE 763 MHz	1	160.0	200.0	842	0.000687	0.509	0.13%
AT&T LTE 850 MHz	1	120.0	200.0	842	0.000443	0.567	0.08%
AT&T UMTS 850 MHz	1	30.0	200.0	842	0.000084	0.567	0.01%
FM	1	60.0	219.5	842	0.000044	0.200	0.02%
FM	1	60.0	338.0	842	0.000028	0.200	0.01%
FM	1	60.0	312.0	842	0.000032	0.200	0.02%
FM	1	60.0	275.0	842	0.000037	0.200	0.02%
Marcus Spectrum Holdings	1	30.0	305.5	842	0.000003	0.300	0.00%
T-Mobile GSM 1900 MHz	1	15.0	185.0	842	0.000018	1.000	0.00%
T-Mobile LTE 1900 MHz	1	160.0	185.0	842	0.000188	1.000	0.02%
T-Mobile LTE 2100 MHz	1	160.0	185.0	842	0.000125	1.000	0.01%
T-Mobile LTE 700 MHz	1	40.0	185.0	842	0.000271	0.467	0.06%
T-Mobile LTE/5G 2500 MHz	1	240.0	185.0	842	0.023618	1.000	2.36%
T-Mobile LTE/5G 600 MHz	1	80.0	185.0	842	0.000462	0.400	0.12%
Town of Ledyard	1	30.0	274.3	842	0.000005	0.300	0.00%
Town of Ledyard	1	30.0	294.0	842	0.000003	0.300	0.00%
Town of Ledyard	1	30.0	294.0	842	0.000003	0.300	0.00%
Town of Ledyard	1	60.0	146.0	842	0.000051	0.200	0.03%
Town of Ledyard	1	60.0	208.0	842	0.000045	0.200	0.02%
Unknown 18GHz	1	0.5	123.5	842	0.000009	1.000	0.00%
Unknown 2500 WiMax	1	1.0	36.0	842	0.000001	1.000	0.00%
Unknown 5GHz Microwave	1	0.2	274.0	842	0.000000	1.000	0.00%
Unknown 900 Microwave	1	15.0	308.0	842	0.000002	0.600	0.00%
Unknown 900 Microwave	1	15.0	130.0	842	0.000012	0.600	0.00%
Unknown 900 Microwave	1	10.0	251.0	842	0.000002	0.600	0.00%
Unknown 900 Microwave	1	15.0	317.5	842	0.000002	0.600	0.00%
Unknown 900 Microwave	1	15.0	90.0	842	0.000012	0.600	0.00%
Unknown VHF	1	60.0	252.0	842	0.000040	0.200	0.02%
Unknown VHF	1	60.0	307.3	842	0.000032	0.200	0.02%
Unknown VHF	1	60.0	150.5	842	0.000050	0.200	0.03%
Unknown VHF	1	60.0	213.0	842	0.000044	0.200	0.02%
Verizon 5G 3700 MHz	1	320.0	167.0	842	0.019835	1.000	1.98%
Verizon LTE 1900 MHz	1	160.0	167.0	842	0.000682	1.000	0.07%
Verizon LTE 2100 MHz	1	240.0	167.0	842	0.000942	1.000	0.09%
Verizon LTE 750 MHz	1	160.0	167.0	842	0.000871	0.500	0.17%
Verizon LTE/5G 850 MHz	1	160.0	167.0	842	0.000935	0.567	0.17%
						Total	**5.64%**

Table 2: Maximum Percent of General Population Exposure Values[6,7,8]

[6] Frequencies listed are representative of the operating band and are not the specific operating frequency.

[7] The total % MPE listed is a summation of each unrounded contribution. Therefore, summing each rounded value may not reflect the total value listed in the table.

[8] In the case where antenna pattern data was unavailable from the manufacturer, generic antenna pattern was used based on the frequency, bandwidth and gain of the antenna.

6. Conclusion

The above analysis verifies that RF exposure levels from the site with Verizon's proposed antenna configuration will be well below the maximum permissible levels as outlined by the FCC in the OET Bulletin 65 Ed. 97-01. Using the conservative calculation methods and parameters detailed above, the maximum cumulative percent of MPE in consideration of all transmitters is calculated to be **5.64 %** of the FCC limit (General Population/Uncontrolled). This maximum cumulative percent of MPE value is calculated to occur 842 feet away from the site.

7. Statement of Certification

I certify to the best of my knowledge that the statements in this report are true and accurate. The calculations follow guidelines set forth in ANSI/IEEE Std. C95.3, ANSI/IEEE Std. C95.1 and FCC OET Bulletin 65 Edition 97-01.

Report Prepared By: Ram Acharya
RF Engineer
C Squared Systems, LLC

February 8, 2024
Date

Reviewed/Approved By: Martin Lavin
Senior RF Engineer
C Squared Systems, LLC

February 9, 2024
Date

Attachment A: References

OET Bulletin 65 - Edition 97-01 - August 1997 Federal Communications Commission Office of Engineering & Technology

IEEE C95.1-2019, IEEE Standard Safety Levels With Respect to Human Exposure to Electric, Magnetic, and Electromagnetic Fields, 0 Hz to 300 GHz IEEE-SA Standards Board

IEEE C95.3-2021, IEEE Recommended Practice for Measurements and Computations of Electric, Magnetic, and Electromagnetic Fields with Respect to Human Exposure to Such Fields, 0 Hz-300 GHz IEEE-SA Standards Board

Attachment B: FCC Limits for Maximum Permissible Exposure (MPE)

(A) Limits for Occupational/Controlled Exposure[9]

Frequency Range (MHz)	Electric Field Strength (E) (V/m)	Magnetic Field Strength (E) (A/m)	Power Density (S) (mW/cm^2)	Averaging Time $\|E\|^2$, $\|H\|^2$ or S (minutes)
0.3-3.0	614	1.63	(100)*	6
3.0-30	1842/f	4.89/f	($900/f^2$)*	6
30-300	61.4	0.163	1.0	6
300-1500	-	-	f/300	6
1500-100,000	-	-	5	6

(B) Limits for General Population/Uncontrolled Exposure[10]

Frequency Range (MHz)	Electric Field Strength (E) (V/m)	Magnetic Field Strength (E) (A/m)	Power Density (S) (mW/cm^2)	Averaging Time $\|E\|^2$, $\|H\|^2$ or S (minutes)
0.3-1.34	614	1.63	(100)*	30
1.34-30	824/f	2.19/f	($180/f^2$)*	30
30-300	27.5	0.073	0.2	30
300-1500	-	-	f/1500	30
1500-100,000	-	-	1.0	30

f = frequency in MHz * Plane-wave equivalent power density

Table 3: FCC Limits for Maximum Permissible Exposure

[9] Occupational/controlled limits apply in situations in which persons are exposed as a consequence of their employment provided those persons are fully aware of the potential for exposure and can exercise control over their exposure. Limits for occupational/controlled exposure also apply in situations when an individual is transient through a location where occupational/controlled limits apply provided he or she is made aware of the potential for exposure.

[10] General population/uncontrolled exposures apply in situations in which the general public may be exposed, or in which persons that are exposed as a consequence of their employment may not be fully aware of the potential for exposure or cannot exercise control over their exposure.

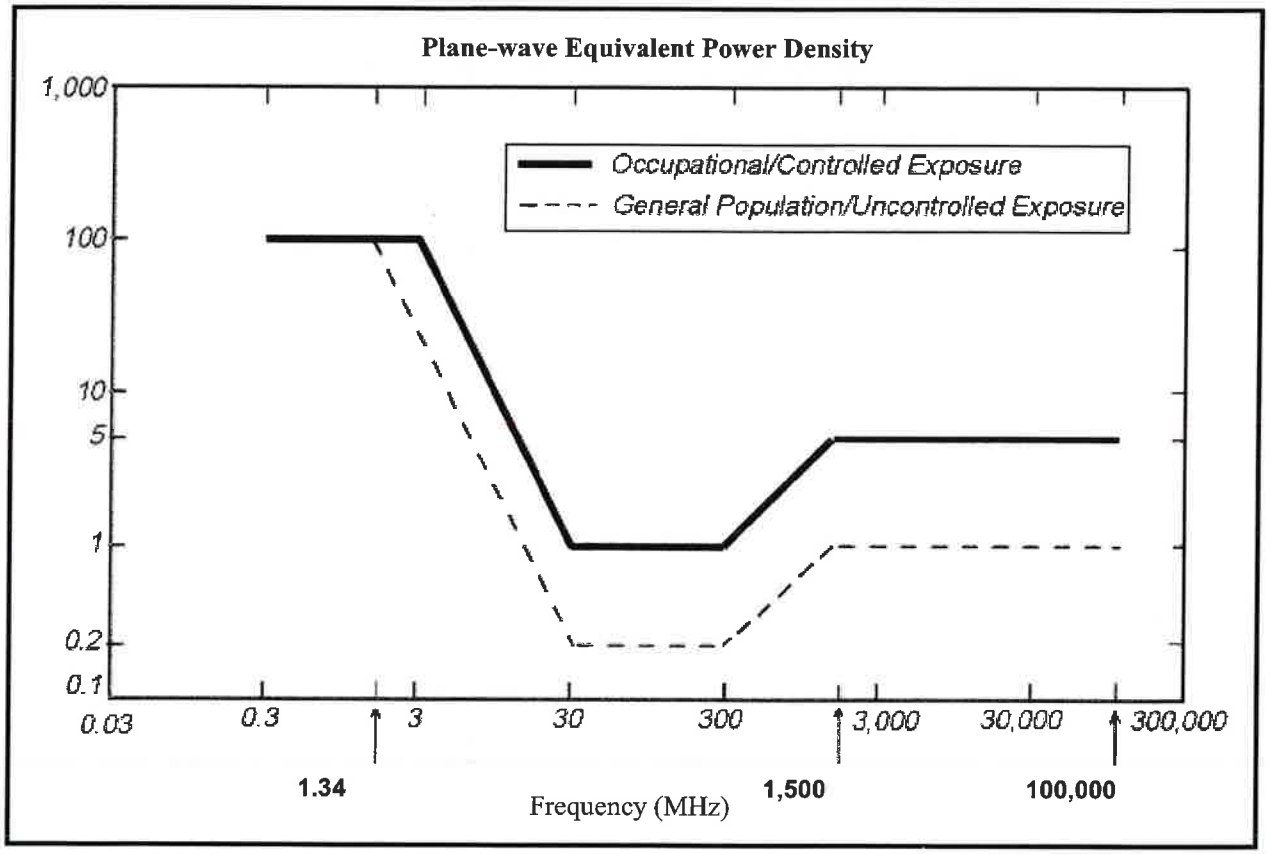

Figure 2: Graph of FCC Limits for Maximum Permissible Exposure (MPE)

Attachment C: Verizon Antenna Model Data Sheets and Electrical Patterns

750 MHz

Manufacturer:	COMMSCOPE
Model #:	NHH-65B-R2B
Frequency Band:	698-806 MHz
Gain:	14.9 dBi
Vertical Beamwidth:	12.4°
Horizontal Beamwidth:	65°
Polarization:	±45°
Dimensions (L x W x D):	72.0" x 11.9" x 7.1"

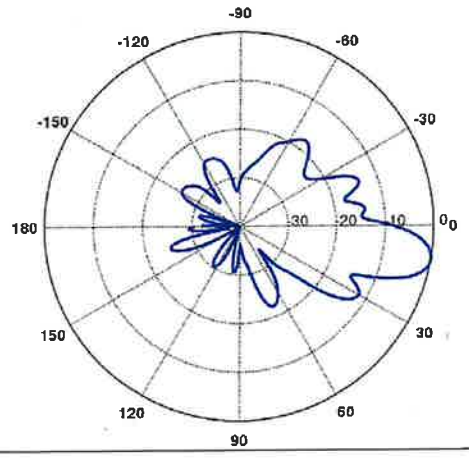

885 MHz

Manufacturer:	COMMSCOPE
Model #:	NHH-65B-R2B
Frequency Band:	806-896 MHz
Gain:	15.0 dBi
Vertical Beamwidth:	11.2°
Horizontal Beamwidth:	60°
Polarization:	±45°
Dimensions (L x W x D):	72.0" x 11.9" x 7.1"

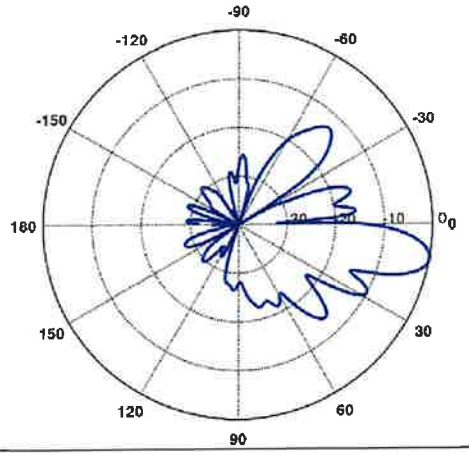

1900 MHz Manufacturer: COMMSCOPE Model #: NHH-65B-R2B Frequency Band: 1850-1990 MHz Gain: 17.9 dBi Vertical Beamwidth: 5.2° Horizontal Beamwidth: 69° Polarization: ±45° Dimensions (L x W x D): 72.0" x 11.9" x 7.1"	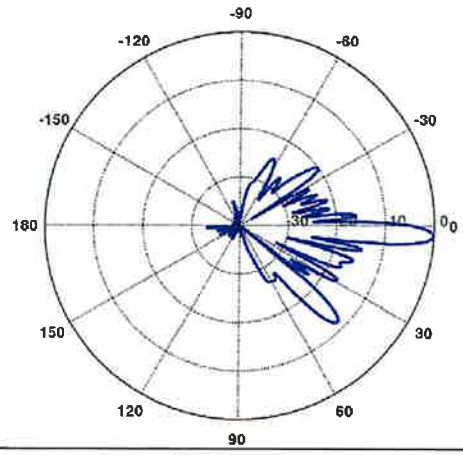
2100 MHz Manufacturer: COMMSCOPE Model #: NHH-65B-R2B Frequency Band: 1920-2200 MHz Gain: 18.4 dBi Vertical Beamwidth: 4.9° Horizontal Beamwidth: 64° Polarization: ±45° Dimensions (L x W x D): 72.0" x 11.9" x 7.1"	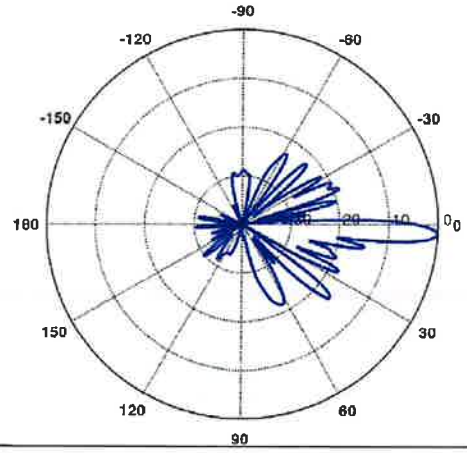

ATTACHMENT 4

CENTEK engineering

Centered on Solutions℠

Structural Analysis Report

347' Existing PiROD Guyed Lattice Tower

Proposed Verizon Wireless
Antenna Upgrade

Verizon Site Ref: Ledyard

889 Colonel Ledyard Highway
Ledyard, CT

Centek Project No. 21007.56

~~Date: October 21, 2021~~
Rev 3: January 23, 2024

Max Stress Ratio = 90.4%

STATE OF CONNECTICUT
TIMOTHY J. LYNN
No. 28336
LICENSED
PROFESSIONAL ENGINEER

Prepared for:

Verizon Wireless
20 Alexander Drive
Wallingford, CT 06492

63-2 North Branford Road, Branford, CT 06405 203.488.0580 Fax 203.488.8587 www.CentekEng.com

Table of Contents

Introduction

The purpose of this report is to summarize the results of the non-linear, P-Δ structural analysis of the antenna upgrade proposed by Verizon Wireless on the existing guyed lattice tower located in Ledyard, CT.

The host tower is a 347-ft, three legged, guyed lattice tower originally designed and manufactured by PiROD Inc.; eng file no: A-117547 dated December 5, 2000. The tower geometry, structure member sizes and foundation system information were taken from a the original design documents.

Antenna and appurtenance information were obtained from a previous structural report prepared by Maser Consulting job no. 17924004A dated April 12, 2018 (for Sprint), a previous structural report prepared by Infinigy job no. 1106-A0001-B dated August 4, 2020 (for AT&T), a previous structural report prepared by EFI Global job no. 049.03347-2275018 dated May 26, 2022 (for T-Mobile) and a Verizon RF data sheet.

The tower consists of nineteen (19) vertical sections consisting of solid round pipe legs conforming to ASTM A572-50. Diagonal and horizontal lateral support bracing consists of solid round pipe conforming to ASTM A572-50. The vertical tower sections are connected by bolted sleeves with the diagonal and horizontal bracing to pipe legs consisting of welded connections. The width of the tower face is 5.0-ft throughout its length with the exception of a 5'-4" tapered base section and a 17' long x 2.5-ft wide top section attached by rigid index plate.

Antenna and Appurtenance Summary

The existing and proposed loads considered in the analysis consist of the following:

- UNKNOWN (Existing):
  Antenna: One (1) flash beacon light with lighting canopy mounted with an elevation of ±348-ft above grade.
  Coax Cable: One (1) 1" ∅ rigid conduit running on a leg/face of the existing tower as specified in Section 3 of this report.
- UNKOWN (EXISTING):
  Antennas: One (1) LP-3E Radome mounted with an elevation of 339-ft above grade.
  Coax Cables: One (1) 1-5/8" ∅ coax cable running on a leg/face of the existing tower as specified in Section 3 of this report.
- UNKOWN (EXISTING):
  Antennas: One (1) 10-ft dish mounted on a 4-ft sidearm with a RAD center elevation of 320-ft above grade.
  Coax Cables: One (1) 1-5/8" ∅ coax cable running on a leg/face of the existing tower as specified in Section 3 of this report.
- UNKOWN (EXISTING):
  Antennas: One (1) DCRL antenna leg mounted with a RAD center elevation of 320-ft above grade.
  Coax Cables: One (1) 1/2" ∅ coax cable running on a leg/face of the existing tower as specified in Section 3 of this report.

- UNKOWN (EXISTING):
  Antennas: One (1) DCRL antenna mounted leg mounted with a RAD center elevation of 310-ft above grade.
  Coax Cables: One (1) 1/2" ∅ coax cable running on a leg/face of the existing tower as specified in Section 3 of this report.
- UNKOWN (EXISTING):
  Antennas: One (1) LP-3C Radome mounted with an elevation of 311-ft above grade.
  Coax Cables: One (1) 1-5/8" ∅ coax cable running on a leg/face of the existing tower as specified in Section 3 of this report.
- UNKOWN (EXISTING):
  Antennas: One (1) 10-ft dish leg mounted with a RAD center elevation of 310-ft above grade.
  Coax Cables: One (1) 1-5/8" ∅ coax cable running on a leg/face of the existing tower as specified in Section 3 of this report.
- UNKOWN (EXISTING):
  Antennas: Three (3) Decibel DB810KE-Y whips mounted on two (2) 10-ft candelabra arms with an elevation of 295-ft above grade.
  Coax Cables: Three (3) 1-1/4" ∅ coax cables on a leg/face of the existing tower as specified in Section 3 of this report.
- UNKOWN (EXISTING):
  Antennas: One (1) PD220 whip mounted on a 4-ft side arm with an elevation of 295-ft above grade.
  Coax Cables: One (1) 2-1/4" ∅ coax cable running on a leg/face of the existing tower as specified in Section 3 of this report.
- UNKOWN (EXISTING):
  Antennas: One (1) DCRL antenna leg mounted with a RAD center elevation of 290-ft above grade.
  Coax Cables: One (1) 1/2" ∅ coax cable running on a leg/face of the existing tower as specified in Section 3 of this report.
- UNKOWN (EXISTING):
  Antennas: One (1) DCRL antenna leg mounted with a RAD center elevation of 280-ft above grade.
  Coax Cables: One (1) 1/2" ∅ coax cable running on a leg/face of the existing tower as specified in Section 3 of this report.
- UNKOWN (EXISTING):
  Antennas: One (1) 6-ft dish pipe mounted with a RAD center elevation of 275-ft above grade.
  Coax Cables: One (1) 1-1/4" ∅ coax cable running on a leg/face of the existing tower as specified in Section 3 of this report.
- UNKOWN (EXISTING):
  Antennas: One (1) PD220 whip mounted on a 6-ft side arm with an elevation of 260-ft above grade.
  Coax Cables: One (1) 1-1/4" ∅ coax cable running on a leg/face of the existing tower as specified in Section 3 of this report.

- UNKOWN (EXISTING):
  Antennas: One (1) PD220 whip mounted on a 6-ft side arm with an elevation of 250-ft above grade.
  Coax Cables: One (1) 1-1/4" ∅ coax cable running on a leg/face of the existing tower as specified in Section 3 of this report.
- SPRINT (EXISTING):
  Antennas: Three (3) RFS APXVTM14 panel antennas, three (3) Commscope NNVV-65B-R4 panel antennas, six (6) 800Mhz RRHs, three (3) 1900 MHz RRHs and three (3) 2500 MHz RRHs mounted on three (3) 12-ft T-Frames with a RAD center elevation of 225-ft above grade.
  Coax Cables: Six (6) 1-5/8" ∅ coax cable running on a leg/face of the existing tower as specified in Section 3 of this report.
- UNKOWN (EXISTING):
  Antennas: One (1) PD1142 whip mounted on a 6-ft side arm with an elevation of 207-ft above grade.
  Coax Cables: One (1) 7/8" ∅ coax cable running on a leg/face of the existing tower as specified in Section 3 of this report.
- UNKOWN (EXISTING):
  Antennas: One (1) PD1150 whip mounted on a 6-ft side arm with an elevation of 205-ft above grade.
  Coax Cables: One (1) 1/2" ∅ coax cable running on a leg/face of the existing tower as specified in Section 3 of this report.
- AT&T (EXISTING):
  Antennas: Three (3) Powerwave 7770 panel antennas, three (3) CCI DMP65R-BU8D panel antennas, three (3) CCI OPA65R-BU8D panel antennas, twelve (12) Kathrein 860-10025 RCUs, six (6) Powerwave CM1007-DBPXBC, three (3) CCI DTMABP7819VG12A TMAs, three (3) Ericsson 4478 RRHs, three (3) 4449 RRHs, three (3) 8843 RRHs and two (2) Raycap surge arrestors mounted on three (3) 12-ft T-Frames with a RAD center elevation of 200-ft above grade.
  Coax Cables: Six (6) 1-5/8" ∅ coax cables, two (2) fiber cables and four (4) dc control cables running on a leg/face of the existing tower as specified in Section 3 of this report.
- T-MOBILE (EXISTING):
  Antennas: Three (3) Commscope VV-65A-R1 panel antennas, three (3) Ericsson AIR6419, three (3) RFS APXVAALL24_43 panel antennas, three (3) 4480 remote radio units and three (3) 4460 remote radio units mounted on three (3) 10-ft V-frames with a RAD center elevation of 185-ft above grade.
  Coax Cables: Three (3) 1-5/8" ∅ fiber cable running on a leg/face of the existing tower as specified in Section 3 of this report.
- UNKNOWN (Existing):
  Antenna: Three (3) obstruction lights mounted with an elevation of ±173-ft above grade.
  Coax Cable: One (1) 1" ∅ rigid conduit running on a leg/face of the existing tower as specified in Section 3 of this report.

- UNKOWN (EXISTING):
  Antennas: One (1)10-ft dipole leg mounted with an elevation of 150-ft above grade.
  Coax Cables: One (1) 1/2" ∅ coax cable running on a leg/face of the existing tower as specified in Section 3 of this report.
- UNKOWN (EXISTING):
  Antennas: One (1) 20-ft whip mounted on a 4-ft side arm with an elevation of 147-ft above grade.
  Coax Cables: One (1) 1-5/8" ∅ coax cable running on a leg/face of the existing tower as specified in Section 3 of this report.
- UNKOWN (EXISTING):
  Antennas: One (1) 6-ft dish pipe mounted with a RAD center elevation of 130-ft above grade.
  Coax Cables: One (1) 1-5/8" ∅ coax cable running on a leg/face of the existing tower as specified in Section 3 of this report.
- UNKOWN (EXISTING):
  Antennas: One (1) empty 4-ft sidearm mounted at 112-ft above grade.
- UNKOWN (EXISTING):
  Antennas: One (1) PR-450 paraflector antenna leg mounted with a RAD center elevation of 112-ft above grade.
  Coax Cables: One (1) 7/8" ∅ coax cable running on a leg/face of the existing tower as specified in Section 3 of this report.
- UNKOWN (EXISTING):
  Antennas: One (1) PR-450 paraflector antenna leg mounted with a RAD center elevation of 90-ft above grade.
  Coax Cables: One (1) 7/8" ∅ coax cable running on a leg/face of the existing tower as specified in Section 3 of this report.
- UNKOWN (EXISTING):
  Antennas: One (1) 1105-3A Radome mounted with an elevation of 68-ft above grade.
  Coax Cables: One (1) 1-1/4" ∅ coax cable running on a leg/face of the existing tower as specified in Section 3 of this report.
- VERIZON (EXISTING TO REMAIN):
  Antennas: Three (3) Commscope LNX-6514DS panel antennas and two (2) main distribution boxes mounted on three (3) Nudd 14-ft booms with a RAD center elevation of 167-ft above grade.
  Coax Cables: Twelve (12) 1-5/8" ∅ coax cables and two (2) 1-5/8" ∅ Hybriflex fiber cables running on a leg/face of the existing tower as specified in Section 3 of this report.
- **VERIZON (EXISTING TO REMOVE):**
  Antennas: Three (3) Andrew HBXX-6517DS panel antennas, three (3) Andrew LNX-6514DS panel antennas, three (3) BXA-171085-12CF panel antennas, three (3) Alcatel-Lucent RRH2x60-PCS remote radio heads and three (3) Alcatel-Lucent RRH4x45-AWS remote radio heads mounted on three (3) Nudd 14-ft booms with a RAD center elevation of 167-ft above grade.

- **VERIZON (PROPOSED):**
  Antennas: Six (6) Commscope NHH-65B-R2B panel antennas, three (3) Samsung MT6413-77A panel antennas, three (3) Samsung RF4439d-25A remote radio heads and three (3) Samsung RF4461d-13A remote radio heads mounted on three (3) Nudd 14-ft booms with a RAD center elevation of 167-ft above grade.
  Mount Modification: Install modifications per the mount analysis report prepared by Maser dated December 5, 2023.

Primary Assumptions Used in the Analysis

- The tower structure's theoretical capacity not including any assessment of the condition of the tower.
- The tower carries the horizontal and vertical loads due to the weight of antennas, ice load and wind.
- Tower is properly installed and maintained.
- Tower is in plumb condition.
- Tower loading for antennas and mounts as listed in this report.
- All bolts are appropriately tightened providing the necessary connection continuity.
- All welds are fabricated with ER-70S-6 electrodes.
- All members are assumed to be as specified in the original tower design documents or reinforcement drawings.
- All members are "hot dipped" galvanized in accordance with ASTM A123 and ASTM A153 Standards.
- All member protective coatings are in good condition.
- All tower members were properly designed, detailed, fabricated, installed and have been properly maintained since erection.
- Any deviation from the analyzed antenna loading will require a new analysis for verification of structural adequacy.
- All existing coax cables to be installed as indicated in this report.

Analysis

The existing tower was analyzed using a comprehensive computer program entitled tnxTower. The program analyzes the tower, considering the worst case loading condition. The tower is considered as loaded by concentric forces along the tower, and the model assumes that the tower members are subjected to bending, axial, and shear forces.

The existing tower was analyzed for the controlling basic wind speed (3-second gust) with no ice and the applicable wind and ice combination to determine stresses in members as per guidelines of TIA-222-H entitled "Structural Standard for Antenna Support Structures and Antennas", the American Institute of Steel Construction (AISC) and the Manual of Steel Construction; Load and Resistance Factor Design (LRFD).

The controlling wind speed is determined by evaluating the local available wind speed data as provided in Appendix P of the CSBC[1] and the wind speed data available in the TIA-222-H Standard.

Tower Loading

Tower loading was determined by the basic wind speed as applied to projected surface areas with modification factors per TIA-222-H, gravity loads of the tower structure and its components, and the application of 1.00" radial ice on the tower structure and its components.

Load Cases:	Load Case 1; 130 mph (Ultimate) wind speed w/ no ice plus gravity load – used in calculation of tower stresses and rotation.	*[Appendix P of the 2022 CT Building Code]*
	Load Case 2; 50 mph wind speed w/ 1.00" radial ice plus gravity load – used in calculation of tower stresses.	*[Annex B of TIA-222-H]*

[1] The 2021 International Building Code as amended by the 2022 Connecticut State Building Code (CSBC).

Tower Capacity

- Calculated stresses were found to be within allowable limits. In Load Case 2, per tnxTower "Section Capacity Table", this tower was found to be at **90.4%** of its total capacity.

Tower Section	Elevation	Stress Ratio (percentage of capacity)	Result
Leg (T15)	40'-0"-60'-0"	63.7%	**PASS**
Diagonal (T5)	240'-0"-260'-0"	90.4%	**PASS**
Guy A @ 220-ft radius (T12)	100'-3"	69.9%	**PASS**

Foundation and Anchors

The existing tower base foundation consists of a 3.5-ft ∅ x 2.0-ft long reinforced concrete pier on a 9.5-ft square x 2.5-ft thick reinforced concrete pad bearing directly on existing sub grade. The guy anchor foundation consists of three (3) 4.5-ft square x 20.5-ft long concrete blocks.

- The worst case tower base and guy anchor reactions developed from the governing Load Case were used in the verification of the anchorage foundations:

Tower Guy Reactions	
Vector	**Proposed Reactions Guy Anchor C @ Radius of 220-ft**
Horizontal (In Plane of GW)	**126 kips**
Horizontal (Out of Plane of GW)	**4 kips**
Vertical	**124 kips**
Resultant Force at end of Guy Wire	**176 kips**
Tower Base Reactions	
Vector	**Proposed Reaction**
Horizontal Shear	**8.2 kips**
Axial Compression	**296 kips**
Moment	**0 kip-ft**

Foundation	Design Limit	TIA-222-H FS(1)	Proposed Loading (FS)(1)	Result
Reinf. Conc. Anchor Block (C) at 220-ft radius.	Uplift	1.0	1.44	**PASS**
	Sliding	1.0	2.4	**PASS**
		Allowable	**Proposed**	
Base Foundation	Bearing	20.0 ksf	3.7 ksf	**PASS**
	Sliding	1.0	15.9	**PASS**

Note 1: FS denotes 'Factor of Safety'.

Conclusion

This analysis shows that the subject tower **is adequate** to support the proposed modified antenna configuration with the below recommendations.

The analysis is based, in part, on the information provided to this office by Verizon Wireless. If the existing conditions are different than the information in this report, Centek Engineering, Inc. must be contacted for resolution of any potential issues.

Please feel free to call with any questions or comments.

Respectfully Submitted by:

Timothy J. Lynn, PE
Structural Engineer

STATE OF CONNECTICUT
TIMOTHY J. LYNN
No. 29336
LICENSED
PROFESSIONAL ENGINEER

Standard Conditions for Furnishing of Professional Engineering Services on Existing Structures

All engineering services are performed on the basis that the information used is current and correct. This information may consist of, but is not necessarily limited to:

- Information supplied by the client regarding the structure itself, its foundations, the soil conditions, the antenna and feed line loading on the structure and its components, or other relevant information.
- Information from the field and/or drawings in the possession of Centek Engineering, Inc. or generated by field inspections or measurements of the structure.
- It is the responsibility of the client to ensure that the information provided to Centek Engineering, Inc. and used in the performance of our engineering services is correct and complete. In the absence of information to the contrary, we assume that all structures were constructed in accordance with the drawings and specifications and are in an un-corroded condition and have not deteriorated. It is therefore assumed that its capacity has not significantly changed from the "as new" condition.
- All services will be performed to the codes specified by the client, and we do not imply to meet any other codes or requirements unless explicitly agreed in writing. If wind and ice loads or other relevant parameters are to be different from the minimum values recommended by the codes, the client shall specify the exact requirement. In the absence of information to the contrary, all work will be performed in accordance with the latest revision of ANSI/ASCE10 & ANSI/EIA-222
- All services performed, results obtained, and recommendations made are in accordance with generally accepted engineering principles and practices. Centek Engineering, Inc. is not responsible for the conclusions, opinions and recommendations made by others based on the information we supply.

GENERAL DESCRIPTION OF STRUCTURAL ANALYSIS PROGRAM

tnxTower, is an integrated structural analysis and design software package for Designed specifically for the telecommunications industry, tnxTower, formerly ERITower, automates much of the tower analysis and design required by the TIA/EIA 222 Standard.

tnxTower Features:

- tnxTower can analyze and design 3- and 4-sided guyed towers, 3- and 4-sided self-supporting towers and either round or tapered ground mounted poles with or without guys.
- The program analyzes towers using the TIA-222-H standard or any of the previous TIA/EIA standards back to RS-222 (1959). Steel design is checked using the AISC ASD or the AISC LRFD specifications.
- Linear and non-linear (P-delta) analyses can be used in determining displacements and forces in the structure. Wind pressures and forces are automatically calculated.
- Extensive graphics plots include material take-off, shear-moment, leg compression, displacement, twist, feed line, guy anchor and stress plots.
- tnxTower contains unique features such as True Cable behavior, hog rod take-up, foundation stiffness and much more.

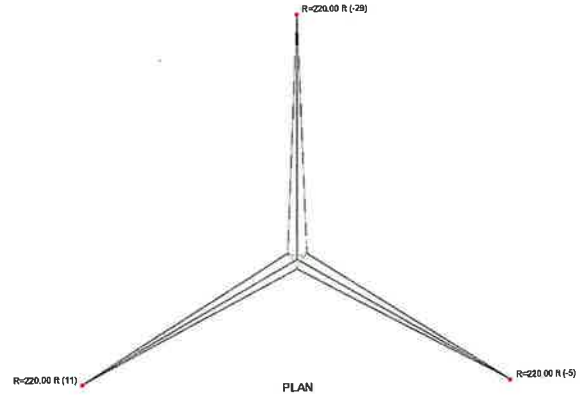

DESIGNED APPURTENANCE LOADING

TYPE	ELEVATION
Lighting Canopy	350
Beacon	349
LP 3E Radomes	339
PIROD Junction Box	320
ROHN 4 ft Side Arm	320
DCR-L2	320
10' dish	320
LP-3C	311
DCR-L2	310
10' dish	310
DB810KE-Y	255
DB810KE-Y	255
Pirod Candelabra Arm (1)	255
DB810KE-Y	255
Pirod Candelabra Arm (1)	255
PD220	255
Pirod 4' Side Mount Standoff (1)	255
DCR-L2	260
DCR-L2	260
4"x4" Pipe Mount	275
6' Dish	275
PIROD Junction Box	260.25
Pirod 6' Side Mount Standoff (1)	260
PD220	260
PD220	250
Pirod 6' Side Mount Standoff (1)	250
APXVTM14 (Sprint - Existing)	225
APXVTM14 (Sprint - Existing)	225
APXVTM14 (Sprint - Existing)	225
NNVV-65B-R4 (Sprint - Existing)	225
NNVV-65B-R4 (Sprint - Existing)	225
NNVV-65B-R4 (Sprint - Existing)	225
(2) FD-RRH 2x50-800 (Sprint - Existing)	225
(2) FD-RRH 2x50-800 (Sprint - Existing)	225
(2) FD-RRH 2x50-800 (Sprint - Existing)	225
FD-RRH 4x45-1900 (Sprint - Existing)	225
FD-RRH 4x45-1900 (Sprint - Existing)	225
FD-RRH 4x45-1900 (Sprint - Existing)	225
FD-RRHb26-25 (Sprint - Existing)	225
FD-RRHb26-25 (Sprint - Existing)	225
FD-RRHb26-25 (Sprint - Existing)	225
Pirod 12' T-Frame Sector Mount (1) (Sprint - Existing)	225
Pirod 12' T-Frame Sector Mount (1) (Sprint - Existing)	225
Pirod 12' T-Frame Sector Mount (1) (Sprint - Existing)	225
PD1142-1	207
Pirod 6' Side Mount Standoff (1)	207
PD1150	205
Pirod 6' Side Mount Standoff (1)	205
7770.00 (AT[- Existing)	200
DMP65R-BU8DA (AT[- Existing)	200
OPA65R-BU8D (AT[- Existing)	200
7770.00 (AT[- Existing)	200
DMP65R-BU8DA (AT[- Existing)	200
OPA65R-BU8D (AT[- Existing)	200
7770.00 (AT[- Existing)	200
DMP65R-BU8DA (AT[- Existing)	200
OPA65R-BU8D (AT[- Existing)	200
(4) 800 10025 RCU (AT[- Existing)	200
(4) 800 10025 RCU (AT[- Existing)	200
(4) 800 10025 RCU (AT[- Existing)	200
(2) CM 1007 DBPXBC Diplexer (AT[- Existing)	200
(2) CM 1007 DBPXBC Diplexer (AT[- Existing)	200
(2) CM 1007 DBPXBC Diplexer (AT[- Existing)	200
DTMABP7819VG12A TMA (AT[- Existing)	200
DTMABP7819VG12A TMA (AT[- Existing)	200
DTMABP7819VG12A TMA (AT[- Existing)	200
4478 B14 (AT[- Existing)	200
4478 B14 (AT[- Existing)	200
4478 B14 (AT[- Existing)	200
4449 B5/B12 (AT[- Existing)	200

TYPE	ELEVATION
4449 B5/B12 (AT[- Existing)	200
4449 B5/B12 (AT[- Existing)	200
8843 B2/B66A (AT[- Existing)	200
8843 B2/B66A (AT[- Existing)	200
8843 B2/B66A (AT[- Existing)	200
DC6-48-60-18-8F Surge Arrestor (AT[- Existing)	200
DC6-48-60-18-8F Surge Arrestor (AT[- Existing)	200
Pirod 12' T-Frame Sector Mount (1) (AT[- Existing)	200
Pirod 12' T-Frame Sector Mount (1) (AT[- Existing)	200
Pirod 12' T-Frame Sector Mount (1) (AT[- Existing)	200
VV-65A-R1 (T-Mobile - Existing)	185
APXVAALL24-43 (T-Mobile - Existing)	185
A8R6419 (T-Mobile - Existing)	185
VV-65A-R1 (T-Mobile - Existing)	185
APXVAALL24-43 (T-Mobile - Existing)	185
A8R6419 (T-Mobile - Existing)	185
VV-65A-R1 (T-Mobile - Existing)	185
APXVAALL24-43 (T-Mobile - Existing)	185
A8R6419 (T-Mobile - Existing)	185
4460 B25+B66 (T-Mobile - Existing)	185
4460 B25+B66 (T-Mobile - Existing)	185
4460 B25+B66 (T-Mobile - Existing)	185
4480 B71+B85 (T-Mobile - Existing)	185
4480 B71+B85 (T-Mobile - Existing)	185
4480 B71+B85 (T-Mobile - Existing)	185
SitePro VFA10-HD (T-Mobile - Existing)	185
SitePro VFA10-HD (T-Mobile - Existing)	185
SitePro VFA10-HD (T-Mobile - Existing)	185
Obstruction Light	173.5
Obstruction Light	173.5
PIROD Junction Box	173.5
Obstruction Light	173.5
DB-T1-6Z-8AB-0Z (Verizon - Existing)	167
Nudd 14' Boom (3) (Verizon - Existing)	167
(2) Commscope VZWSMART-SFK3 (Verizon - Proposed)	167
(2) Commscope VZWSMART-SFK3 (Verizon - Proposed)	167
(2) Commscope VZWSMART-SFK3 (Verizon - Proposed)	167
RF4461d-13A (Verizon - Proposed)	167
RF4461d-13A (Verizon - Proposed)	167
RF4461d-13A (Verizon - Proposed)	167
LNX-6514DS-VTM (Verizon - Existing)	167
(2) NHH-65B-R2B (Verizon - Proposed)	167
MT6413-77A (Verizon - Proposed)	167
LNX-6514DS-VTM (Verizon - Existing)	167
(2) NHH-65B-R2B (Verizon - Proposed)	167
MT6413-77A (Verizon - Proposed)	167
LNX-6514DS-VTM (Verizon - Existing)	167
(2) NHH-65B-R2B (Verizon - Proposed)	167
MT6413-77A (Verizon - Proposed)	167
RFS4350-2SA (B2/B66A RRH) (Verizon - Proposed)	167
RFS4350-2SA (B2/B66A RRH) (Verizon - Proposed)	167
RFS4350-2SA (B2/B66A RRH) (Verizon - Proposed)	167
DB-T1-6Z-8AB-0Z (Verizon - Existing)	167
Pirod 4' Side Mount Standoff (1)	156
10' Dipole	150
20' x 3" Dia Omni	147
Pirod 4' Side Mount Standoff (1)	138
6' Dish	130
Pirod 4' Side Mount Standoff (1)	112
PR-150	112
PR-450	90
PIROD Junction Box	86.75
1105-3A Radomes	68

SYMBOL LIST

MARK	SIZE	MARK	SIZE
A	SR 1 1/4	C	SR 3/4
B	6 x 3/4	D	2 @ 2.58333

MATERIAL STRENGTH

GRADE	Fy	Fu	GRADE	Fy	Fu
A572-50	50 ksi	65 ksi			

TOWER DESIGN NOTES

1. Tower designed for Exposure C to the TIA-222-H Standard.
2. Tower designed for a 130 mph basic wind in accordance with the TIA-222-H Standard.
3. Tower is also designed for a 50 mph basic wind with 1.00 in ice. Ice is considered to increase in thickness with height.
4. Deflections are based upon a 60 mph wind.
5. Tower Risk Category II.
6. Topographic Category 1 with Crest Height of 0.00 ft
7. Weld together tower sections have flange connections.
8. Connections use galvanized A325 bolts, nuts and locking devices. Installation per TIA/EIA-222 and AISC Specifications.
9. Tower members are "hot dipped" galvanized in accordance with ASTM A123 and ASTM A153 Standards.
10. Welds are fabricated with ER-70S-6 electrodes.
11. TOWER RATING: 90.4%

R=220.00 ft

Centek Engineering Inc.
63-2 North Branford Rd.
Branford, CT 06405
Phone: (203) 488-0580
FAX: (203) 488-8587

Job: 21007.56 - Ledyard			
Project: 347' Pirod Guyed Tower - 889 Colonel Ledyard Hwy, Ledyard, CT			
Client: Verizon Wireless	Drawn by: TJL	App'd:	
Code: TIA-222-H	Date: 11/08/23	Scale: NTS	
Path:		Dwg No. E-1	

Feed Line Plan

Round Flat App In Face App Out Face

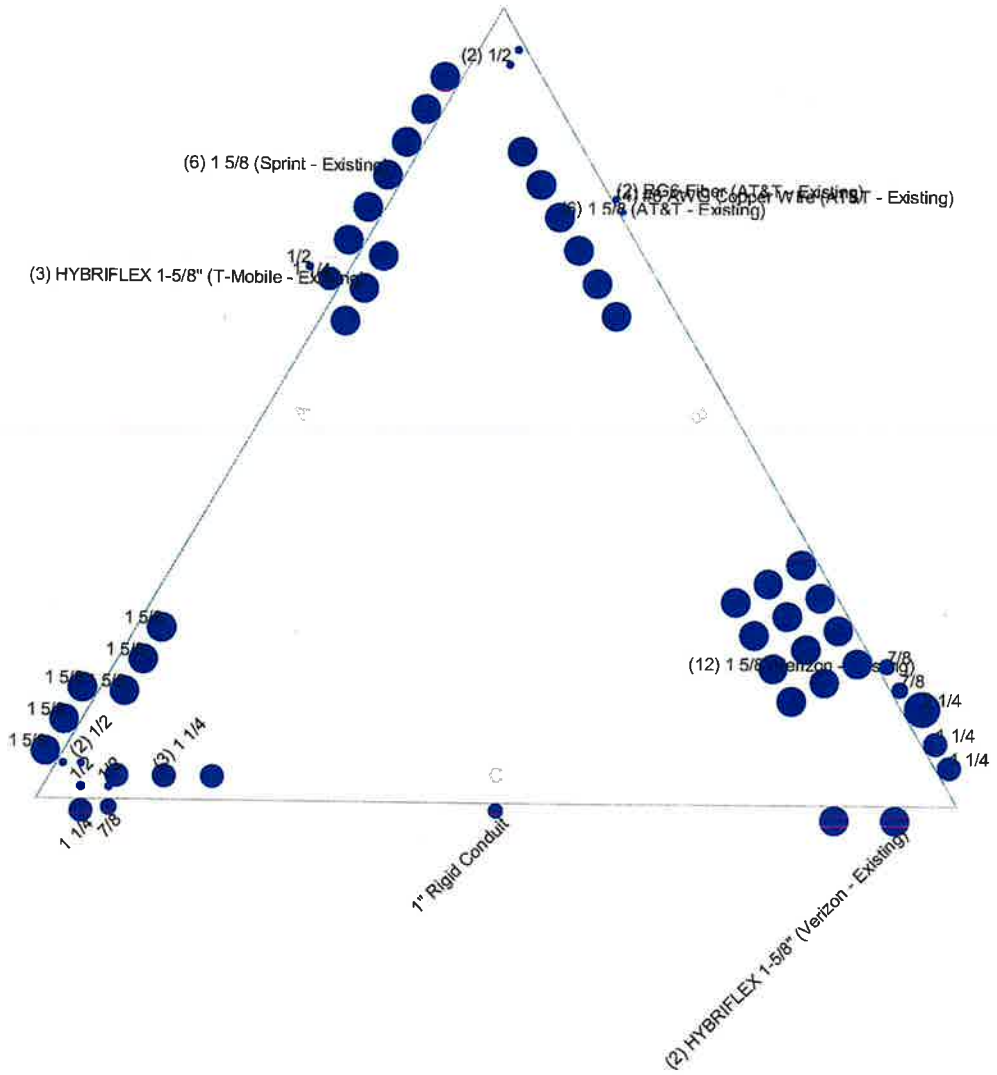

Centek Engineering Inc. 63-2 North Branford Rd. Branford, CT 06405 Phone: (203) 488-0580 FAX: (203) 488-8587	Job: ***21007.56 - Ledyard***		
	Project: ***347' Pirod Guyed Tower - 889 Colonel Ledyard Hwy, Ledyard, CT***		
	Client: Verizon Wireless	Drawn by: TJL	App'd:
	Code: TIA-222-H	Date: 11/08/23	Scale: NTS
	Path:		Dwg No. E-7

Feed Line Distribution Chart
5'3" - 347'

Round | Flat | App In Face | App Out Face | Truss Leg

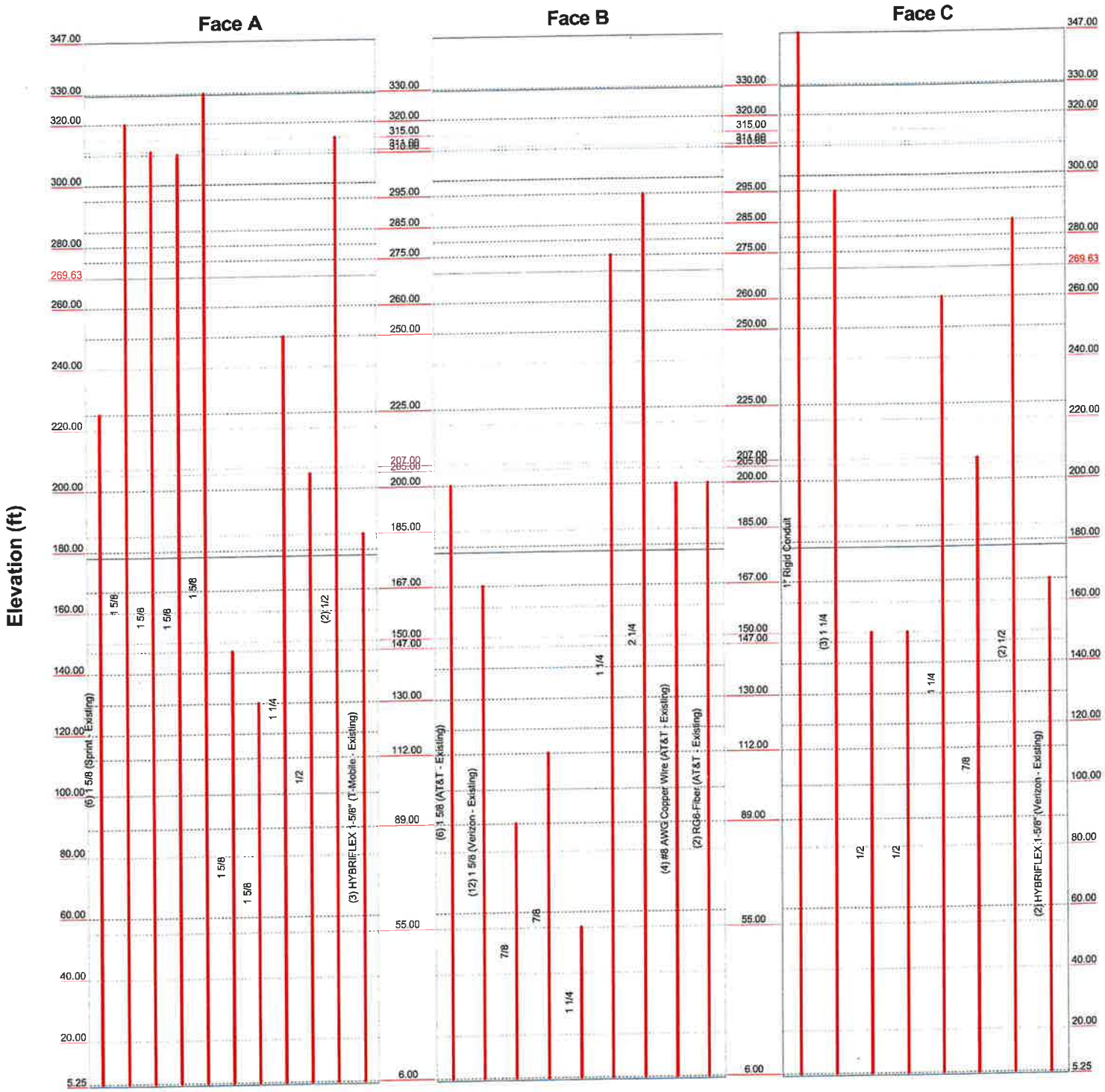

Centek Engineering Inc.
63-2 North Branford Rd.
Branford, CT 06405
Phone: (203) 488-0580
FAX: (203) 488-8587

Job:	21007.56 - Ledyard		
Project:	347' Pirod Guyed Tower - 889 Colonel Ledyard Hwy, Ledyard, CT		
Client: Verizon Wireless	Drawn by: TJL	App'd:	
Code: TIA-222-H	Date: 11/08/23	Scale: NTS	
Path:		Dwg No. E-7	

Guy Tensions and Tower Reactions

TIA-222-H - 130 mph/50 mph 1.0000 in Ice Exposure C

Maximum Values
Anchor 'A'@220 ft Azimuth 0 deg Elev -29 ft
Plane through centroid of tower

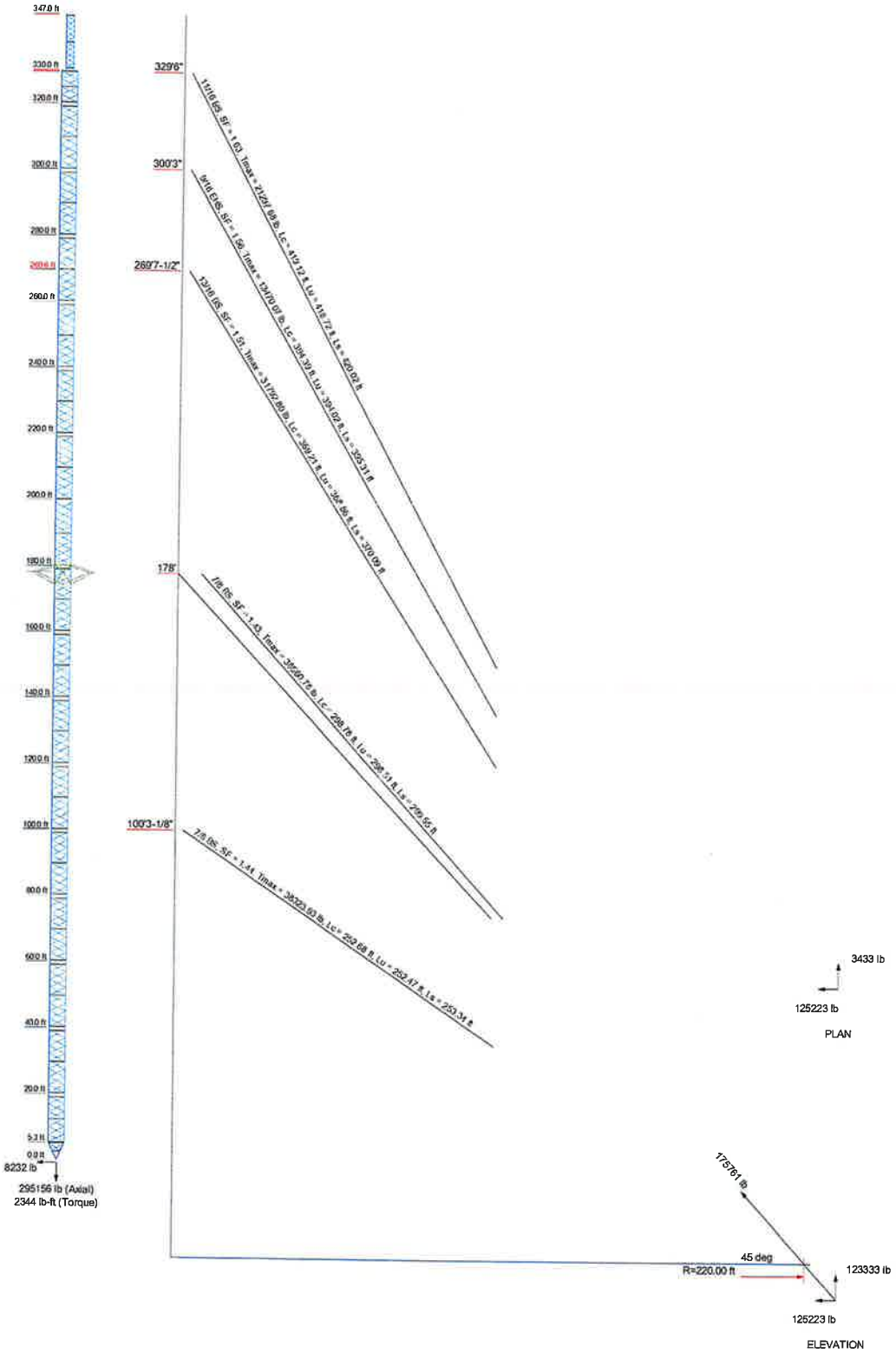

Centek Engineering Inc. 63-2 North Branford Rd. Branford, CT 06405 Phone: (203) 488-0580 FAX: (203) 488-8587	Job: 21007.56 - Ledyard Project: 347' Pirod Guyed Tower - 889 Colonel Ledyard Hwy, Ledyard, CT		
	Client: Verizon Wireless	Drawn by: TJL	App'd:
	Code: TIA-222-H	Date: 11/08/23	Scale: NTS
	Path:		Dwg No. E-6

Tower Input Data

The main tower is a 3x guyed tower with an overall height of 347.00 ft above the ground line.
The base of the tower is set at an elevation of 0.00 ft above the ground line.
The face width of the tower is 5.00 ft at the top and tapered at the base.
An index plate is provided at the 3 sided -tower connection.
There is a 3 sided latticed pole with a face width of 2.50 ft.
This tower is designed using the TIA-222-H standard.
The following design criteria apply:

Tower base elevation above sea level: 0.00 ft.
Basic wind speed of 130 mph.
Risk Category II.
Exposure Category C.
Simplified Topographic Factor Procedure for wind speed-up calculations is used.
Topographic Category: 1.
Crest Height: 0.00 ft.
Nominal ice thickness of 1.0000 in.
Ice thickness is considered to increase with height.
Ice density of 56 pcf.
A wind speed of 50 mph is used in combination with ice.
Temperature drop of 50 °F.
Deflections calculated using a wind speed of 60 mph.
Weld together tower sections have flange connections..
Connections use galvanized A325 bolts, nuts and locking devices. Installation per TIA/EIA-222 and AISC Specifications..
Tower members are "hot dipped" galvanized in accordance with ASTM A123 and ASTM A153 Standards..
Welds are fabricated with ER-70S-6 electrodes..
Pressures are calculated at each section.
Stress ratio used in latticed pole member design is 1.
Stress ratio used in tower member design is 1.
Safety factor used in guy design is 1.
Local bending stresses due to climbing loads, feed line supports, and appurtenance mounts are not considered.

Options

Consider Moments - Legs
Consider Moments - Horizontals
Consider Moments - Diagonals
Use Moment Magnification
√ Use Code Stress Ratios
√ Use Code Safety Factors - Guys
Escalate Ice
Always Use Max Kz
Use Special Wind Profile
√ Include Bolts In Member Capacity
√ Leg Bolts Are At Top Of Section
Secondary Horizontal Braces Leg
Use Diamond Inner Bracing (4 Sided)
√ SR Members Have Cut Ends
SR Members Are Concentric

Distribute Leg Loads As Uniform
Assume Legs Pinned
√ Assume Rigid Index Plate
√ Use Clear Spans For Wind Area
√ Use Clear Spans For KL/r
√ Retension Guys To Initial Tension
Bypass Mast Stability Checks
√ Use Azimuth Dish Coefficients
√ Project Wind Area of Appurt.
√ Autocalc Torque Arm Areas
Add IBC .6D+W Combination
√ Sort Capacity Reports By Component
Triangulate Diamond Inner Bracing
Treat Feed Line Bundles As Cylinder
Ignore KL/ry For 60 Deg. Angle Legs

Use ASCE 10 X-Brace Ly Rules
Calculate Redundant Bracing Forces
Ignore Redundant Members in FEA
√ SR Leg Bolts Resist Compression
√ All Leg Panels Have Same Allowable
Offset Girt At Foundation
√ Consider Feed Line Torque
Include Angle Block Shear Check
Use TIA-222-H Bracing Resist. Exemption
Use TIA-222-H Tension Splice Exemption

Poles

Include Shear-Torsion Interaction
Always Use Sub-Critical Flow
Use Top Mounted Sockets
Pole Without Linear Attachments

Pole With Shroud Or No Appurtenances
Outside and Inside Corner Radii Are
Known

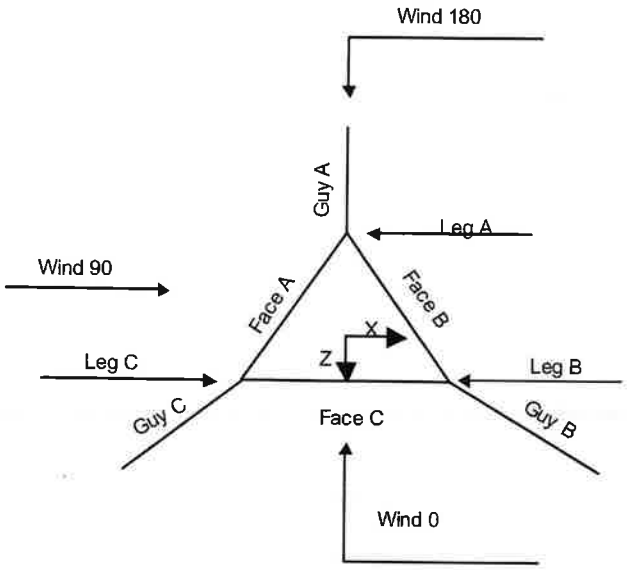

Corner & Starmount Guyed Tower

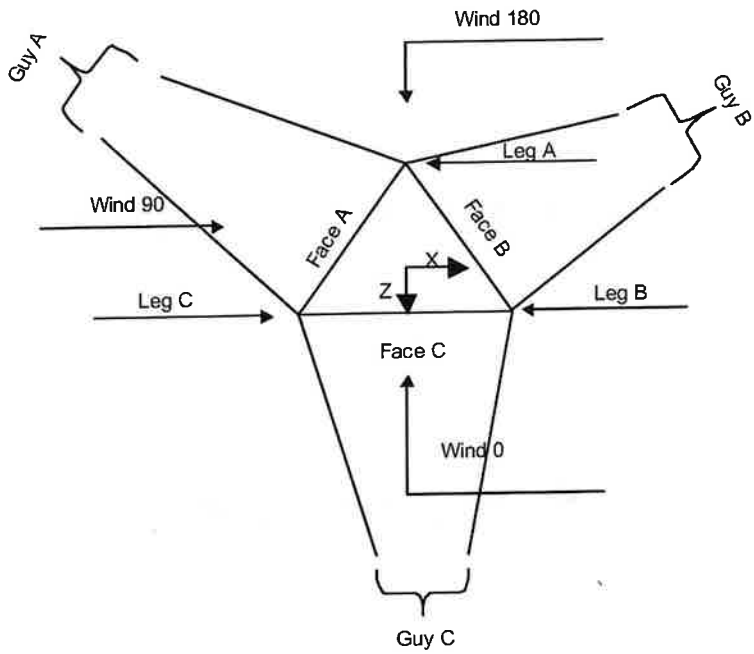

Face Guyed

3 Sided Latticed Pole Section Geometry

Tower Section	Tower Elevation	Assembly Database	Description	Section Width	Number of Sections	Section Length
	ft			ft		ft
L1	347.00-330.00			2.50	1	17.00

3 Sided Latticed Pole Section Geometry *(cont'd)*

Tower Section	Tower Elevation	Diagonal Spacing	Bracing Type	Has K Brace End Panels	Has Horizontals	Top Girt Offset	Bottom Girt Offset
	ft	ft				in	in
L1	347.00-330.00	1.60	X Brace	No	Yes	6.0000	6.0000

3 Sided Latticed Pole Section Geometry *(cont'd)*

Tower Elevation ft	Leg Type	Leg Size	Leg Grade	Diagonal Type	Diagonal Size	Diagonal Grade
L1 347.00-330.00	Solid Round	1 1/4	A572-50 (50 ksi)	Solid Round	1/2	A572-50 (50 ksi)

3 Sided Latticed Pole Section Geometry *(cont'd)*

Tower Elevation ft	Top Girt Type	Top Girt Size	Top Girt Grade	Bottom Girt Type	Bottom Girt Size	Bottom Girt Grade
L1 347.00-330.00	Solid Round	3/4	A572-50 (50 ksi)	Solid Round	3/4	A572-50 (50 ksi)

3 Sided Latticed Pole Section Geometry *(cont'd)*

Tower Elevation ft	No. of Mid Girts	Mid Girt Type	Mid Girt Size	Mid Girt Grade	Horizontal Type	Horizontal Size	Horizontal Grade
L1 347.00-330.00	1	Solid Round	3/4	A572-50 (50 ksi)	Solid Round		A572-50 (50 ksi)

3 Sided Latticed Pole Section Geometry *(cont'd)*

Tower Elevation ft	Gusset Area (per face) ft^2	Gusset Thickness in	Gusset Grade	Adjust. Factor A_f	Adjust. Factor A_r	Weight Mult.	Double Angle Stitch Bolt Spacing Diagonals in	Double Angle Stitch Bolt Spacing Horizontals in	Double Angle Stitch Bolt Spacing Redundants in
L1 347.00-330.00	0.00	0.0000	A36 (36 ksi)	1	1	1	36.0000	36.0000	36.0000

3 Sided Latticed Pole Section Geometry *(cont'd)*

Tower Elevation ft	Calc K Single Angles	Calc K Solid Rounds	K Factors[1] Legs	X Brace Diags X Y	K Brace Diags X Y	Single Diags X Y	Girts X Y	Horiz. X Y	Sec. Horiz. X Y	Inner Brace X Y
L1 347.00-330.00	Yes	Yes	1	0.9 0.9	1 1	1 1	1 1	1 1	1 1	1 1

[1]Note: K factors are applied to member segment lengths. K-braces without inner supporting members will have the K factor in the out-of-plane direction applied to the overall length.

3 Sided Latticed Pole Section Geometry *(cont'd)*

Tower Elevation ft	Leg		Diagonal		Top Girt		Bottom Girt		Mid Girt		Long Horizontal		Short Horizontal	
	Net Width Deduct in	U	Net Width Deduct in	U	Net Width Deduct in	U	Net Width Deduct in	U	Net Width Deduct in	U	Net Width Deduct in	U	Net Width Deduct in	U
L1 347.00-330.00	0.0000	1	0.0000	0.75	0.0000	0.75	0.0000	0.75	0.0000	0.75	0.0000	0.75	0.0000	0.75

Tower Elevation ft	Redundant Horizontal		Redundant Diagonal		Redundant Sub-Diagonal		Redundant Sub-Horizontal		Redundant Vertical		Redundant Hip		Redundant Hip Diagonal	
	Net Width Deduct in	U	Net Width Deduct in	U	Net Width Deduct in	U	Net Width Deduct in	U	Net Width Deduct in	U	Net Width Deduct in	U	Net Width Deduct in	U
L1 347.00-330.00	0.0000	0.75	0.0000	0.75	0.0000	0.75	0.0000	0.75	0.0000	0.75	0.0000	0.75	0.0000	0.75

Tower Section Geometry

Tower Section	Tower Elevation ft	Assembly Database	Description	Section Width ft	Number of Sections	Section Length ft
T1	330.00-320.00		#60 109900	5.00	1	10.00
T2-T6	320.00-220.00		#60 109900	5.00	5	20.00
T7	220.00-200.00		#60 110091	5.00	1	20.00
T8	200.00-180.00		#60 130640	5.00	1	20.00
T9	180.00-160.00		#60 130640	5.00	1	20.00
T10-T16	160.00-20.00		#60 110092	5.00	7	20.00
T17	20.00-5.25		#60 130638	5.00	1	14.75
T18	5.25-0.00		#60 130638	5.00	1	5.25

Tower Section Geometry *(cont'd)*

Tower Section	Tower Elevation ft	Diagonal Spacing ft	Bracing Type	Has K Brace End Panels	Has Horizontals	Top Girt Offset in	Bottom Girt Offset in
T1	330.00-320.00	2.31	X Brace	No	Steps	6.0000	3.0000
T2-T6	320.00-220.00	2.34	X Brace	No	Steps	12.0000	3.0000
T7	220.00-200.00	2.35	X Brace	No	Steps	11.3750	3.1250
T8	200.00-180.00	2.34	X Brace	No	Steps	12.0000	3.2500

Tower Section	Tower Elevation ft	Diagonal Spacing ft	Bracing Type	Has K Brace End Panels	Has Horizontals	Top Girt Offset in	Bottom Girt Offset in
T9	180.00-160.00	2.34	X Brace	No	Steps	12.0000	3.2500
T10-T16	160.00-20.00	2.34	X Brace	No	Steps	12.0000	3.1250
T17	20.00-5.25	2.28	X Brace	No	Yes	12.0000	1.0000
T18	5.25-0.00	2.58	X Brace	No	Yes	1.0000	0.0000

Tower Section Geometry *(cont'd)*

Tower Elevation ft	Leg Type	Leg Size	Leg Grade	Diagonal Type	Diagonal Size	Diagonal Grade
T1 330.00-320.00	Solid Round	2 1/4	A572-50 (50 ksi)	Solid Round	7/8	A572-50 (50 ksi)
T2-T6 320.00-220.00	Solid Round	2 1/4	A572-50 (50 ksi)	Solid Round	7/8	A572-50 (50 ksi)
T7 220.00-200.00	Solid Round	2 1/2	A572-50 (50 ksi)	Solid Round	1	A572-50 (50 ksi)
T8 200.00-180.00	Solid Round	2 3/4	A572-50 (50 ksi)	Solid Round	1 1/4	A572-50 (50 ksi)
T9 180.00-160.00	Solid Round	2 3/4	A572-50 (50 ksi)	Solid Round	1 1/4	A572-50 (50 ksi)
T10-T16 160.00-20.00	Solid Round	2 3/4	A572-50 (50 ksi)	Solid Round	1	A572-50 (50 ksi)
T17 20.00-5.25	Solid Round	2 3/4	A572-50 (50 ksi)	Solid Round	1	A572-50 (50 ksi)
T18 5.25-0.00	Solid Round	2 3/4	A572-50 (50 ksi)	Solid Round	1 1/4	A572-50 (50 ksi)

Tower Section Geometry *(cont'd)*

Tower Elevation ft	Top Girt Type	Top Girt Size	Top Girt Grade	Bottom Girt Type	Bottom Girt Size	Bottom Girt Grade
T1 330.00-320.00	Solid Round	1	A572-50 (50 ksi)	Solid Round	1	A572-50 (50 ksi)
T2-T6 320.00-220.00	Solid Round	1	A572-50 (50 ksi)	Solid Round	1	A572-50 (50 ksi)
T7 220.00-200.00	Solid Round	1 1/4	A572-50 (50 ksi)	Solid Round	1 1/4	A572-50 (50 ksi)
T8 200.00-180.00	Solid Round	1 1/2	A572-50 (50 ksi)	Solid Round	1 1/2	A572-50 (50 ksi)
T9 180.00-160.00	Solid Round	1 1/2	A572-50 (50 ksi)	Solid Round	1 1/2	A572-50 (50 ksi)
T10-T16 160.00-20.00	Solid Round	1 1/4	A572-50 (50 ksi)	Solid Round	1 1/4	A572-50 (50 ksi)
T17 20.00-5.25	Solid Round	1 1/4	A572-50 (50 ksi)	Solid Round	1 1/4	A572-50 (50 ksi)
T18 5.25-0.00	Flat Bar	6 x 3/4	A36 (36 ksi)	Flat Bar	6 x 3/4	A36 (36 ksi)

Tower Section Geometry *(cont'd)*

Tower Elevation ft	No. of Mid Girts	Mid Girt Type	Mid Girt Size	Mid Girt Grade	Horizontal Type	Horizontal Size	Horizontal Grade
T1 330.00-320.00	1	Solid Round	1	A572-50 (50 ksi)	Solid Round		A572-50 (50 ksi)
T2-T6 320.00-220.00	1	Solid Round	1	A572-50 (50 ksi)	Solid Round		A572-50 (50 ksi)
T7 220.00-200.00	1	Solid Round	1 1/4	A572-50 (50 ksi)	Solid Round		A572-50 (50 ksi)
T8 200.00-180.00	1	Solid Round	1 1/2	A572-50 (50 ksi)	Solid Round		A572-50 (50 ksi)
T9 180.00-160.00	1	Solid Round	1 1/2	A572-50 (50 ksi)	Solid Round		A572-50 (50 ksi)
T10-T16 160.00-20.00	1	Solid Round	1 1/4	A572-50 (50 ksi)	Solid Round		A572-50 (50 ksi)
T17 20.00-5.25	1	Solid Round	1 1/4	A572-50 (50 ksi)	Solid Round		A572-50 (50 ksi)
T18 5.25-0.00	1	Flat Bar	6 x 3/4	A36 (36 ksi)	Solid Round	3/4	A572-50 (50 ksi)

Tower Section Geometry *(cont'd)*

Tower Elevation ft	Secondary Horizontal Type	Secondary Horizontal Size	Secondary Horizontal Grade	Inner Bracing Type	Inner Bracing Size	Inner Bracing Grade
T18 5.25-0.00	Solid Round	3/4	A572-50 (50 ksi)	Solid Round		A572-50 (50 ksi)

Tower Section Geometry *(cont'd)*

Tower Elevation ft	Gusset Area (per face) ft^2	Gusset Thickness in	Gusset Grade	Adjust. Factor A_f	Adjust. Factor A_r	Weight Mult.	Double Angle Stitch Bolt Spacing Diagonals in	Double Angle Stitch Bolt Spacing Horizontals in	Double Angle Stitch Bolt Spacing Redundants in
T1 330.00-320.00	0.00	0.0000	A36 (36 ksi)	1	1	1	36.0000	36.0000	36.0000
T2-T6 320.00-220.00	0.00	0.0000	A36 (36 ksi)	1	1	1	36.0000	36.0000	36.0000
T7 220.00-200.00	0.00	0.0000	A36 (36 ksi)	1	1	1	36.0000	36.0000	36.0000
T8 200.00-180.00	0.00	0.0000	A36 (36 ksi)	1	1	1	36.0000	36.0000	36.0000
T9 180.00-160.00	0.00	0.0000	A36 (36 ksi)	1	1	1	36.0000	36.0000	36.0000
T10-T16 160.00-20.00	0.00	0.0000	A36 (36 ksi)	1	1	1	36.0000	36.0000	36.0000
T17 20.00-5.25	0.00	0.0000	A36 (36 ksi)	1	1	1	36.0000	36.0000	36.0000
T18 5.25-0.00	0.00	0.0000	A36	1	1	1	36.0000	36.0000	36.0000

Tower Elevation ft	Gusset Area (per face) ft²	Gusset Thickness in	Gusset Grade (36 ksi)	Adjust. Factor A_f	Adjust. Factor A_r	Weight Mult.	Double Angle Stitch Bolt Spacing Diagonals in	Double Angle Stitch Bolt Spacing Horizontals in	Double Angle Stitch Bolt Spacing Redundants in

Tower Section Geometry *(cont'd)*

Tower Elevation ft	Calc K Single Angles	Calc K Solid Rounds	K Factors[1] Legs	X Brace Diags X Y	K Brace Diags X Y	Single Diags X Y	Girts X Y	Horiz. X Y	Sec. Horiz. X Y	Inner Brace X Y
T1 330.00-320.00	Yes	Yes	1	1 1	1 1	1 1	1 1	1 1	1 1	1 1
T2-T6 320.00-220.00	Yes	Yes	1	1 1	1 1	1 1	1 1	1 1	1 1	1 1
T7 220.00-200.00	Yes	Yes	1	1 1	1 1	1 1	1 1	1 1	1 1	1 1
T8 200.00-180.00	Yes	Yes	1	1 1	1 1	1 1	1 1	1 1	1 1	1 1
T9 180.00-160.00	Yes	Yes	1	1 1	1 1	1 1	1 1	1 1	1 1	1 1
T10-T16 160.00-20.00	Yes	Yes	1	1 1	1 1	1 1	1 1	1 1	1 1	1 1
T17 20.00-5.25	Yes	Yes	1	1 1	1 1	1 1	1 1	1 1	1 1	1 1
T18 5.25-0.00	Yes	Yes	1	1 1	1 1	1 1	1 1	1 1	1 1	1 1

[1]*Note: K factors are applied to member segment lengths. K-braces without inner supporting members will have the K factor in the out-of-plane direction applied to the overall length.*

Tower Section Geometry *(cont'd)*

Tower Elevation ft	Leg Net Width Deduct in	Leg U	Diagonal Net Width Deduct in	Diagonal U	Top Girt Net Width Deduct in	Top Girt U	Bottom Girt Net Width Deduct in	Bottom Girt U	Mid Girt Net Width Deduct in	Mid Girt U	Long Horizontal Net Width Deduct in	Long Horizontal U	Short Horizontal Net Width Deduct in	Short Horizontal U
T1 330.00-320.00	0.0000	0.75	0.0000	0.75	0.0000	0.75	0.0000	0.75	0.0000	0.75	0.0000	0.75	0.0000	0.75
T2-T6 320.00-220.00	0.0000	0.75	0.0000	0.75	0.0000	0.75	0.0000	0.75	0.0000	0.75	0.0000	0.75	0.0000	0.75
T7 220.00-200.00	0.0000	0.75	0.0000	0.75	0.0000	0.75	0.0000	0.75	0.0000	0.75	0.0000	0.75	0.0000	0.75
T8 200.00-180.00	0.0000	0.75	0.0000	0.75	0.0000	0.75	0.0000	0.75	0.0000	0.75	0.0000	0.75	0.0000	0.75
T9 180.00-160.00	0.0000	0.75	0.0000	0.75	0.0000	0.75	0.0000	0.75	0.0000	0.75	0.0000	0.75	0.0000	0.75
T10-T16 160.00-20.00	0.0000	0.75	0.0000	0.75	0.0000	0.75	0.0000	0.75	0.0000	0.75	0.0000	0.75	0.0000	0.75
T17 20.00-5.25	0.0000	0.75	0.0000	0.75	0.0000	0.75	0.0000	0.75	0.0000	0.75	0.0000	0.75	0.0000	0.75

Tower Elevation ft	Leg		Diagonal		Top Girt		Bottom Girt		Mid Girt		Long Horizontal		Short Horizontal	
	Net Width Deduct in	U	Net Width Deduct in	U	Net Width Deduct in	U	Net Width Deduct in	U	Net Width Deduct in	U	Net Width Deduct in	U	Net Width Deduct in	U
T18 5.25-0.00	0.0000	0.75	0.0000	0.75	0.0000	0.75	0.0000	0.75	0.0000	0.75	0.0000	0.75	0.0000	0.75

Tower Elevation ft	Redundant Horizontal		Redundant Diagonal		Redundant Sub-Diagonal		Redundant Sub-Horizontal		Redundant Vertical		Redundant Hip		Redundant Hip Diagonal	
	Net Width Deduct in	U	Net Width Deduct in	U	Net Width Deduct in	U	Net Width Deduct in	U	Net Width Deduct in	U	Net Width Deduct in	U	Net Width Deduct in	U
T1 330.00-320.00	0.0000	0.75	0.0000	0.75	0.0000	0.75	0.0000	0.75	0.0000	0.75	0.0000	0.75	0.0000	0.75
T2-T6 320.00-220.00	0.0000	0.75	0.0000	0.75	0.0000	0.75	0.0000	0.75	0.0000	0.75	0.0000	0.75	0.0000	0.75
T7 220.00-200.00	0.0000	0.75	0.0000	0.75	0.0000	0.75	0.0000	0.75	0.0000	0.75	0.0000	0.75	0.0000	0.75
T8 200.00-180.00	0.0000	0.75	0.0000	0.75	0.0000	0.75	0.0000	0.75	0.0000	0.75	0.0000	0.75	0.0000	0.75
T9 180.00-160.00	0.0000	0.75	0.0000	0.75	0.0000	0.75	0.0000	0.75	0.0000	0.75	0.0000	0.75	0.0000	0.75
T10-T16 160.00-20.00	0.0000	0.75	0.0000	0.75	0.0000	0.75	0.0000	0.75	0.0000	0.75	0.0000	0.75	0.0000	0.75
T17 20.00-5.25	0.0000	0.75	0.0000	0.75	0.0000	0.75	0.0000	0.75	0.0000	0.75	0.0000	0.75	0.0000	0.75
T18 5.25-0.00	0.0000	0.75	0.0000	0.75	0.0000	0.75	0.0000	0.75	0.0000	0.75	0.0000	0.75	0.0000	0.75

Tower Section Geometry *(cont'd)*

Tower Elevation ft	Leg Connection Type	Leg		Diagonal		Top Girt		Bottom Girt		Mid Girt		Long Horizontal		Short Horizontal	
		Bolt Size in	No.	Bolt Size in	No.	Bolt Size in	No.	Bolt Size in	No.	Bolt Size in	No.	Bolt Size in	No.	Bolt Size in	No.
T1 330.00-320.00	Flange	0.0000 A325N	0	0.6250 A325X	0	0.6250 A325X	0	0.6250 A325X	0	0.6250 A325X	0	0.6250 A325X	0	0.6250 A325X	0
T2-T6 320.00-220.00	Sleeve DS	0.7500 A325N	5	0.6250 A325X	0	0.6250 A325X	0	0.6250 A325X	0	0.6250 A325X	0	0.6250 A325X	0	0.6250 A325X	0
T7 220.00-200.00	Sleeve DS	0.7500 A325N	5	0.6250 A325X	0	0.6250 A325X	0	0.6250 A325X	0	0.6250 A325X	0	0.6250 A325X	0	0.6250 A325X	0
T8 200.00-180.00	Sleeve DS	0.8750 A325N	5	0.6250 A325X	0	0.6250 A325X	0	0.6250 A325X	0	0.6250 A325X	0	0.6250 A325X	0	0.6250 A325X	0
T9 180.00-160.00	Sleeve DS	0.8750 A490N	5	0.6250 A325X	0	0.6250 A325X	0	0.6250 A325X	0	0.6250 A325X	0	0.6250 A325X	0	0.6250 A325X	0
T10-T16 160.00-20.00	Sleeve DS	0.8750 A325N	5	0.6250 A325X	0	0.6250 A325X	0	0.6250 A325X	0	0.6250 A325X	0	0.6250 A325X	0	0.6250 A325X	0
T17 20.00-5.25	Sleeve DS	0.8750 A325N	5	0.6250 A325X	0	0.6250 A325X	0	0.6250 A325X	0	0.6250 A325X	0	0.6250 A325X	0	0.6250 A325X	0
T18 5.25-0.00	Sleeve DS	0.0000 A325N	0	0.6250 A325X	0	0.6250 A325X	0	0.6250 A325X	0	0.6250 A325X	0	0.6250 A325X	0	0.6250 A325X	0

Guy Data

Guy Elevation ft	Guy Grade		Guy Size	Initial Tension lb	%	Guy Modulus ksi	Guy Weight plf	L_u ft	Anchor Radius ft	Anchor Azimuth Adj. °	Anchor Elevation ft	End Fitting Efficiency %
329.5	BS	A	11/16	5800.00	10%	24000	0.990	418.77	220.00	0.0000	-29.00	100%
		B	11/16	5800.00	10%	24000	0.990	398.46	220.00	0.0000	-5.00	100%
		C	11/16	5800.00	10%	24000	0.990	385.15	220.00	0.0000	11.00	100%
269.625	BS	A	13/16	8000.00	10%	24000	1.390	368.91	220.00	0.0000	-29.00	100%
		B	13/16	8000.00	10%	24000	1.390	349.80	220.00	0.0000	-5.00	100%
		C	13/16	8000.00	10%	24000	1.390	337.40	220.00	0.0000	11.00	100%
178	BS	A	7/8	9200.00	10%	24000	1.610	298.54	220.00	0.0000	-29.00	100%
		B	7/8	9200.00	10%	24000	1.610	282.46	220.00	0.0000	-5.00	100%
		C	7/8	9200.00	10%	24000	1.610	272.38	220.00	0.0000	11.00	100%
100.26	BS	A	7/8	9200.00	10%	24000	1.610	252.48	220.00	0.0000	-29.00	100%
		B	7/8	9200.00	10%	24000	1.610	241.09	220.00	0.0000	-5.00	100%
		C	7/8	9200.00	10%	24000	1.610	234.56	220.00	0.0000	11.00	100%
300.25	EHS	A	9/16	3500.00	10%	21000	0.671	394.07	220.00	0.0000	-29.00	100%
		B	9/16	3500.00	10%	21000	0.671	374.28	220.00	0.0000	-5.00	100%
		C	9/16	3500.00	10%	21000	0.671	361.37	220.00	0.0000	11.00	100%

Guy Data *(cont'd)*

Guy Elevation ft	Mount Type	Torque-Arm Spread ft	Torque-Arm Leg Angle °	Torque-Arm Style	Torque-Arm Grade	Torque-Arm Type	Torque-Arm Size
329.5	Corner						
269.625	Corner						
178	Torque Arm	16.30	15.0000	Wing	A36 (36 ksi)	Double Equal Angle	2L4x4x3/8
100.26	Corner						
300.25	Corner						

Guy Data *(cont'd)*

Guy Elevation ft	Diagonal Grade	Diagonal Type	Upper Diagonal Size	Lower Diagonal Size	Is Strap.	Pull-Off Grade	Pull-Off Type	Pull-Off Size
329.50	A572-50 (50 ksi)	Solid Round				A36 (36 ksi)	Flat Bar	
269.63	A572-50 (50 ksi)	Solid Round				A36 (36 ksi)	Flat Bar	
178.00	A572-50 (50 ksi)	Solid Round			No	A572-50 (50 ksi)	Solid Round	1 1/2
100.26	A572-50 (50 ksi)	Solid Round				A36 (36 ksi)	Flat Bar	
300.25	A572-50 (50 ksi)	Solid Round				A36 (36 ksi)	Flat Bar	

Guy Data *(cont'd)*

Guy Elevation ft	Cable Weight A lb	Cable Weight B lb	Cable Weight C lb	Cable Weight D lb	Tower Intercept A ft	Tower Intercept B ft	Tower Intercept C ft	Tower Intercept D ft
329.5	414.59	394.47	381.29		14.54 6.6 sec/pulse	13.19 6.3 sec/pulse	12.34 6.1 sec/pulse	
269.625	512.79	486.22	468.99		11.54 5.9 sec/pulse	10.39 5.6 sec/pulse	9.68 5.4 sec/pulse	
178	480.65	454.75	438.53		7.67 4.8 sec/pulse	6.88 4.5 sec/pulse	6.40 4.4 sec/pulse	
100.26	406.49	388.16	377.65		5.52 4.1 sec/pulse	5.04 3.9 sec/pulse	4.78 3.8 sec/pulse	
300.25	264.42	251.14	242.48		14.45 6.6 sec/pulse	13.06 6.2 sec/pulse	12.19 6.0 sec/pulse	

Guy Data *(cont'd)*

Guy Elevation ft	Calc K Single Angles	Calc K Solid Rounds	Torque Arm K_x	Torque Arm K_y	Pull Off K_x	Pull Off K_y	Diagonal K_x	Diagonal K_y
329.5	No	No			1	1	1	1
269.625	No	No			1	1	1	1
178	Yes	Yes	1	1	1	1	1	1
100.26	No	No			1	1	1	1
300.25	No	No			1	1	1	1

Guy Data *(cont'd)*

Guy Elevation ft	Torque-Arm Bolt Size in	Torque-Arm Number	Torque-Arm Net Width Deduct in	Torque-Arm U	Pull Off Bolt Size in	Pull Off Number	Pull Off Net Width Deduct in	Pull Off U	Diagonal Bolt Size in	Diagonal Number	Diagonal Net Width Deduct in	Diagonal U
329.5	1.0000 A325N	2	0.0000	1	0.6250 A325N	0	0.0000	0.75	0.6250 A325N	0	0.0000	0.75
269.625	0.0000 A325N	0	0.0000	1	0.6250 A325N	0	0.0000	0.75	0.6250 A325N	0	0.0000	0.75
178	1.0000 A325N	2	0.0000	1	0.6250 A325N	0	0.0000	0.75	0.6250 A325N	0	0.0000	0.75
100.26	0.6250 A325N	0	0.0000	0.75	0.6250 A325N	0	0.0000	0.75	0.6250 A325N	0	0.0000	0.75
300.25	0.6250 A325N	0	0.0000	0.75	0.6250 A325N	0	0.0000	0.75	0.6250 A325N	0	0.0000	0.75

Guy Pressures

Guy Elevation ft	Guy Location	z ft	q_z psf	q_z Ice psf	Ice Thickness in
329.5	A	150.25	51	8	1.1637
	B	162.25	52	8	1.1726
	C	170.25	52	8	1.1783
269.625	A	120.31	48	7	1.1381
	B	132.31	49	7	1.1490
	C	140.31	50	7	1.1557
178	A	74.50	44	6	1.0848
	B	86.50	45	7	1.1012
	C	94.50	46	7	1.1109
100.26	A	35.63	37	6	1.0077
	B	47.63	40	6	1.0374
	C	55.63	41	6	1.0536
300.25	A	135.63	50	7	1.1518
	B	147.63	51	7	1.1616
	C	155.63	51	8	1.1678

Guy-Tensioning Information

				Temperature At Time Of Tensioning													
				0 F		20 F		40 F		60 F		80 F		100 F		120 F	
Guy Elevation ft		H ft	V ft	Initial Tension lb	Intercept ft	Initial Tension lb	Intercept ft	Initial Tension lb	Intercept ft	Initial Tension lb	Intercept ft	Initial Tension lb	Intercept ft	Initial Tension lb	Intercept ft	Initial Tension lb	Intercept ft
329.5	A	217.11	358.50	6446	13.11	6229	13.56	6013	14.03	5800	14.54	5589	15.07	5382	15.64	5177	16.24
	B	217.11	334.50	6514	11.77	6274	12.21	6035	12.68	5800	13.19	5568	13.72	5339	14.30	5114	14.91
	C	217.11	318.50	6565	10.93	6307	11.37	6052	11.83	5800	12.34	5552	12.88	5307	13.45	5067	14.07
269.625	A	217.11	298.63	9159	10.10	8768	10.55	8381	11.02	8000	11.54	7625	12.09	7257	12.69	6897	13.33
	B	217.11	274.63	9292	8.97	8855	9.41	8424	9.88	8000	10.39	7583	10.95	7176	11.56	6778	12.22
	C	217.11	258.63	9390	8.27	8920	8.70	8456	9.17	8000	9.68	7553	10.24	7116	10.86	6691	11.53
178	A	215.45	207.00	11232	6.30	10543	6.70	9865	7.16	9200	7.67	8552	8.24	7924	8.88	7306	9.62
	B	215.45	183.00	11476	5.53	10703	5.92	9943	6.37	9200	6.88	8478	7.45	7782	8.11	7118	8.85
	C	215.45	167.00	11651	5.07	10818	5.46	9999	5.90	9200	6.40	8425	6.99	7680	7.65	6974	8.41
100.26	A	217.11	129.26	12104	4.21	11115	4.58	10144	5.01	9200	5.52	8290	6.12	7425	6.82	6619	7.64
	B	217.11	105.26	12393	3.75	11304	4.11	10237	4.54	9200	5.04	8205	5.65	7266	6.37	6402	7.22
	C	217.11	89.26	12578	3.50	11425	3.85	10296	4.28	9200	4.78	8151	5.39	7166	6.13	6266	7.00
300.25	A	217.11	329.25	3927	12.91	3783	13.39	3641	13.90	3500	14.45	3362	15.02	3226	15.64	3092	16.29
	B	217.11	305.25	3974	11.54	3814	12.01	3656	12.52	3500	13.06	3347	13.64	3197	14.26	3050	14.93
	C	217.11	289.25	4009	10.68	3837	11.15	3667	11.65	3500	12.19	3336	12.78	3175	13.41	3019	14.08

Feed Line/Linear Appurtenances - Entered As Round Or Flat

Description	Face or Leg	Allow Shield	Exclude From Torque Calculation	Component Type	Placement ft	Face Offset in	Lateral Offset (Frac FW)	#	# Per Row	Clear Spacing in	Width or Diameter in	Perimeter in	Weight plf
1" Rigid Conduit	C	No	No	Ar (CaAa)	347.00 - 6.00	0.0000	0	1	1	1.0000	1.0000		0.70
1 5/8 (Sprint - Existing)	A	No	No	Ar (CaAa)	225.00 - 6.00	0.0000	0.3	6	6	0.5000	1.9800		1.04
1 5/8 (AT&T - Existing)	B	No	No	Ar (CaAa)	200.00 - 6.00	-2.5000	-0.25	6	6	0.5000	1.9800		1.04
1 5/8 (Verizon - Existing)	B	No	No	Ar (CaAa)	167.00 - 6.00	-5.0000	0.25	12	4	0.5000	1.9800		1.04
1 5/8	A	No	No	Ar (CaAa)	320.00 - 6.00	0.0000	-0.45	1	1	1.9800	1.9800		1.04

Description	Face or Leg	Allow Shield	Exclude From Torque Calculation	Component Type	Placement ft	Face Offset in	Lateral Offset (Frac FW)	#	# Per Row	Clear Spacing in	Width or Diameter in	Perimeter in	Weight plf
1 5/8	A	No	No	Ar (CaAa)	311.00 - 6.00	0.0000	-0.41	1	1	1.9800	1.9800		1.04
1 5/8	A	No	No	Ar (CaAa)	310.00 - 6.00	0.0000	-0.37	1	1	1.9800	1.9800		1.04
1 5/8	A	No	No	Ar (CaAa)	330.00 - 6.00	-0.5000	-0.35	1	1	1.9800	1.9800		1.04
1 5/8	A	No	No	Ar (CaAa)	147.00 - 6.00	-0.5000	-0.31	1	1	1.9800	1.9800		1.04
1 5/8	A	No	No	Ar (CaAa)	130.00 - 6.00	-0.5000	-0.27	1	1	1.9800	1.9800		1.04
1 1/4	A	No	No	Ar (CaAa)	250.00 - 6.00	0.0000	0.15	1	1	1.5500	1.5500		0.66
1/2	A	No	No	Ar (CaAa)	205.00 - 6.00	2.0000	0.15	1	1	0.5800	0.5800		0.25
7/8	B	No	No	Ar (CaAa)	89.00 - 6.00	0.0000	0.36	1	1	1.1100	1.1100		0.54
7/8	B	No	No	Ar (CaAa)	112.00 - 6.00	0.0000	0.33	1	1	1.1100	1.1100		0.54
1 1/4	B	No	No	Ar (CaAa)	55.00 - 6.00	0.0000	0.46	1	1	1.5500	1.5500		0.66
1 1/4	B	No	No	Ar (CaAa)	275.00 - 6.00	0.0000	0.43	1	1	1.5500	1.5500		0.66
2 1/4	B	No	No	Ar (CaAa)	295.00 - 6.00	0.0000	0.39	1	1	2.3800	2.3800		1.16
1 1/4	C	No	No	Ar (CaAa)	295.00 - 6.00	-0.7500	0.36	3	3	1.5500	1.5500		0.66
1/2	C	No	No	Ar (CaAa)	150.00 - 6.00	-0.5000	0.42	1	1	0.5800	0.5800		0.25
1/2	C	No	No	Ar (CaAa)	150.00 - 6.00	-0.5000	0.45	1	1	0.5800	0.5800		0.25
1 1/4	C	No	No	Ar (CaAa)	260.00 - 6.00	0.0000	0.45	1	1	1.5500	1.5500		0.66
7/8	C	No	No	Ar (CaAa)	207.00 - 6.00	0.0000	0.42	1	1	1.1100	1.1100		0.54
1/2	A	No	No	Ar (CaAa)	315.00 - 6.00	-2.0000	0.46	2	2	0.5800	0.5800		0.25
1/2	C	No	No	Ar (CaAa)	285.00 - 6.00	-2.0000	0.46	2	2	0.5800	0.5800		0.25
#8 AWG Copper WIre (AT&T - Existing)	B	No	No	Ar (CaAa)	200.00 - 6.00	0.0000	-0.25	4	4	0.2500	0.1285		0.05
RG6-Fiber (AT&T - Existing)	B	No	No	Ar (CaAa)	200.00 - 6.00	0.0000	-0.25	2	2	0.5000	0.5000		1.00
HYBRIFLEX 1-5/8" (Verizon - Existing)	C	No	No	Ar (CaAa)	167.00 - 6.00	0.0000	-0.4	2	2	1.9800	1.9800		1.90
HYBRIFLEX 1-5/8" (T-Mobile - Existing)	A	No	No	Ar (CaAa)	185.00 - 6.00	-0.5000	0.16	3	3	0.5000 1.9800	1.9800		1.90

Feed Line/Linear Appurtenances Section Areas

Tower Section	Tower Elevation ft	Face	A_R ft^2	A_F ft^2	C_AA_A In Face ft^2	C_AA_A Out Face ft^2	Weight lb
L1	347.00-330.00	A	0.000	0.000	0.000	0.000	0.00
		B	0.000	0.000	0.000	0.000	0.00
		C	0.000	0.000	1.700	0.000	11.90
T1	330.00-320.00	A	0.000	0.000	1.980	0.000	10.40
		B	0.000	0.000	0.000	0.000	0.00
		C	0.000	0.000	1.000	0.000	7.00
T2	320.00-300.00	A	0.000	0.000	13.818	0.000	70.94
		B	0.000	0.000	0.000	0.000	0.00
		C	0.000	0.000	2.000	0.000	14.00
T3	300.00-280.00	A	0.000	0.000	18.160	0.000	93.20
		B	0.000	0.000	3.570	0.000	17.40
		C	0.000	0.000	9.555	0.000	46.20
T4	280.00-260.00	A	0.000	0.000	18.160	0.000	93.20
		B	0.000	0.000	7.085	0.000	33.10
		C	0.000	0.000	13.620	0.000	63.60
T5	260.00-240.00	A	0.000	0.000	19.710	0.000	99.80
		B	0.000	0.000	7.860	0.000	36.40
		C	0.000	0.000	16.720	0.000	76.80
T6	240.00-220.00	A	0.000	0.000	27.200	0.000	137.60
		B	0.000	0.000	7.860	0.000	36.40
		C	0.000	0.000	16.720	0.000	76.80
T7	220.00-200.00	A	0.000	0.000	45.310	0.000	232.45
		B	0.000	0.000	7.860	0.000	36.40
		C	0.000	0.000	17.497	0.000	80.58
T8	200.00-180.00	A	0.000	0.000	49.150	0.000	264.70
		B	0.000	0.000	34.648	0.000	205.20
		C	0.000	0.000	18.940	0.000	87.60
T9	180.00-160.00	A	0.000	0.000	58.060	0.000	350.20
		B	0.000	0.000	51.280	0.000	292.56
		C	0.000	0.000	21.712	0.000	114.20
T10	160.00-140.00	A	0.000	0.000	59.446	0.000	357.48
		B	0.000	0.000	82.168	0.000	454.80
		C	0.000	0.000	28.020	0.000	168.60
T11	140.00-120.00	A	0.000	0.000	64.000	0.000	381.40
		B	0.000	0.000	82.168	0.000	454.80
		C	0.000	0.000	29.180	0.000	173.60
T12	120.00-100.00	A	0.000	0.000	65.980	0.000	391.80
		B	0.000	0.000	83.500	0.000	461.28
		C	0.000	0.000	29.180	0.000	173.60
T13	100.00-80.00	A	0.000	0.000	65.980	0.000	391.80
		B	0.000	0.000	85.387	0.000	470.46
		C	0.000	0.000	29.180	0.000	173.60
T14	80.00-60.00	A	0.000	0.000	65.980	0.000	391.80
		B	0.000	0.000	86.608	0.000	476.40
		C	0.000	0.000	29.180	0.000	173.60
T15	60.00-40.00	A	0.000	0.000	65.980	0.000	391.80
		B	0.000	0.000	88.933	0.000	486.30
		C	0.000	0.000	29.180	0.000	173.60
T16	40.00-20.00	A	0.000	0.000	65.980	0.000	391.80
		B	0.000	0.000	89.708	0.000	489.60
		C	0.000	0.000	29.180	0.000	173.60
T17	20.00-5.25	A	0.000	0.000	46.186	0.000	274.26
		B	0.000	0.000	62.796	0.000	342.72
		C	0.000	0.000	20.426	0.000	121.52
T18	5.25-0.00	A	0.000	0.000	0.000	0.000	0.00
		B	0.000	0.000	0.000	0.000	0.00
		C	0.000	0.000	0.000	0.000	0.00

Feed Line/Linear Appurtenances Section Areas - With Ice

Tower Section	Tower Elevation ft	Face or Leg	Ice Thickness in	A_R ft^2	A_F ft^2	C_AA_A In Face ft^2	C_AA_A Out Face ft^2	Weight lb
L1	347.00-330.00	A	1.262	0.000	0.000	0.000	0.000	0.00
		B		0.000	0.000	0.000	0.000	0.00
		C		0.000	0.000	5.991	0.000	71.20
T1	330.00-320.00	A	1.257	0.000	0.000	4.494	0.000	60.11
		B		0.000	0.000	0.000	0.000	0.00
		C		0.000	0.000	3.514	0.000	41.66
T2	320.00-300.00	A	1.251	0.000	0.000	37.173	0.000	433.49
		B		0.000	0.000	0.000	0.000	0.00
		C		0.000	0.000	7.004	0.000	82.81
T3	300.00-280.00	A	1.243	0.000	0.000	48.775	0.000	565.61
		B		0.000	0.000	7.298	0.000	99.91
		C		0.000	0.000	30.863	0.000	322.09
T4	280.00-260.00	A	1.234	0.000	0.000	48.572	0.000	560.93
		B		0.000	0.000	15.722	0.000	205.01
		C		0.000	0.000	47.373	0.000	459.42
T5	260.00-240.00	A	1.224	0.000	0.000	52.353	0.000	604.06
		B		0.000	0.000	17.656	0.000	227.25
		C		0.000	0.000	55.206	0.000	552.12
T6	240.00-220.00	A	1.214	0.000	0.000	66.939	0.000	777.11
		B		0.000	0.000	17.574	0.000	225.06
		C		0.000	0.000	54.988	0.000	547.37
T7	220.00-200.00	A	1.203	0.000	0.000	100.650	0.000	1175.13
		B		0.000	0.000	17.486	0.000	222.71
		C		0.000	0.000	57.213	0.000	569.84
T8	200.00-180.00	A	1.191	0.000	0.000	111.119	0.000	1288.05
		B		0.000	0.000	83.851	0.000	912.70
		C		0.000	0.000	61.480	0.000	614.49
T9	180.00-160.00	A	1.178	0.000	0.000	129.842	0.000	1517.73
		B		0.000	0.000	96.610	0.000	1177.60
		C		0.000	0.000	69.336	0.000	704.09
T10	160.00-140.00	A	1.163	0.000	0.000	132.216	0.000	1539.30
		B		0.000	0.000	120.476	0.000	1671.88
		C		0.000	0.000	89.890	0.000	928.00
T11	140.00-120.00	A	1.147	0.000	0.000	141.301	0.000	1644.33
		B		0.000	0.000	119.897	0.000	1655.92
		C		0.000	0.000	95.040	0.000	968.58
T12	120.00-100.00	A	1.128	0.000	0.000	144.592	0.000	1672.85
		B		0.000	0.000	123.270	0.000	1681.15
		C		0.000	0.000	94.276	0.000	952.64
T13	100.00-80.00	A	1.106	0.000	0.000	143.434	0.000	1642.78
		B		0.000	0.000	128.077	0.000	1718.71
		C		0.000	0.000	93.377	0.000	934.02
T14	80.00-60.00	A	1.078	0.000	0.000	142.017	0.000	1606.34
		B		0.000	0.000	130.550	0.000	1727.16
		C		0.000	0.000	92.275	0.000	911.49
T15	60.00-40.00	A	1.042	0.000	0.000	140.175	0.000	1559.56
		B		0.000	0.000	134.469	0.000	1747.50
		C		0.000	0.000	90.844	0.000	882.64
T16	40.00-20.00	A	0.991	0.000	0.000	137.496	0.000	1492.71
		B		0.000	0.000	133.849	0.000	1706.76
		C		0.000	0.000	88.763	0.000	841.54
T17	20.00-5.25	A	0.908	0.000	0.000	93.283	0.000	972.94
		B		0.000	0.000	90.997	0.000	1129.37
		C		0.000	0.000	55.350	0.000	524.86
T18	5.25-0.00	A	0.776	0.000	0.000	0.000	0.000	0.00
		B		0.000	0.000	0.000	0.000	0.00
		C		0.000	0.000	0.000	0.000	0.00

Feed Line Center of Pressure

Section	Elevation ft	CP_X in	CP_Z in	CP_X Ice in	CP_Z Ice in
L1	347.00-330.00	0.0000	0.8418	0.0000	0.6251
T1	330.00-320.00	-2.0014	1.5932	-1.6769	1.6767
T2	320.00-300.00	-5.8984	2.2543	-5.1747	0.9936
T3	300.00-280.00	-7.0243	4.3308	-7.0468	3.1957
T4	280.00-260.00	-6.3285	5.2776	-7.0657	4.5602
T5	260.00-240.00	-6.8610	5.4171	-7.5541	4.7527
T6	240.00-220.00	-6.9340	3.0728	-7.5977	3.0266
T7	220.00-200.00	-6.7987	-1.3301	-7.5298	-0.3002
T8	200.00-180.00	-4.7356	-4.7825	-5.2538	-4.2455
T9	180.00-160.00	-2.2580	-3.9657	-3.9761	-3.9788
T10	160.00-140.00	1.1712	-1.8999	-2.2729	-2.4468
T11	140.00-120.00	0.5397	-1.6134	-3.0050	-2.0100
T12	120.00-100.00	0.4899	-1.4867	-2.9187	-1.8622
T13	100.00-80.00	0.7017	-1.3988	-2.5530	-1.7487
T14	80.00-60.00	0.8392	-1.3388	-2.3094	-1.6814
T15	60.00-40.00	1.1293	-1.1747	-1.9090	-1.5153
T16	40.00-20.00	1.2247	-1.1208	-1.7566	-1.4992
T17	20.00-5.25	1.2050	-1.1027	-2.0571	-1.8451
T18	5.25-0.00	0.0000	0.0000	0.0000	0.0000

Shielding Factor Ka

Tower Section	Feed Line Record No.	Description	Feed Line Segment Elev.	K_a No Ice	K_a Ice
L1	1	1" Rigid Conduit	330.00 - 347.00	0.6000	0.4359
T1	1	1" Rigid Conduit	320.00 - 330.00	0.6000	0.5526
T1	10	1 5/8	320.00 - 330.00	0.6000	0.5526
T2	1	1" Rigid Conduit	300.00 - 320.00	0.6000	0.5924
T2	7	1 5/8	300.00 - 320.00	0.6000	0.5924
T2	8	1 5/8	300.00 - 311.00	0.6000	0.5924
T2	9	1 5/8	300.00 - 310.00	0.6000	0.5924
T2	10	1 5/8	300.00 - 320.00	0.6000	0.5924
T2	25	1/2	300.00 - 315.00	0.6000	0.5924
T3	1	1" Rigid Conduit	280.00 - 300.00	0.6000	0.5941
T3	7	1 5/8	280.00 - 300.00	0.6000	0.5941
T3	8	1 5/8	280.00 - 300.00	0.6000	0.5941

Tower Section	Feed Line Record No.	Description	Feed Line Segment Elev.	K_a No Ice	K_a Ice
T3	9	1 5/8	280.00 - 300.00	0.6000	0.5941
T3	10	1 5/8	280.00 - 300.00	0.6000	0.5941
T3	19	2 1/4	280.00 - 295.00	0.6000	0.5941
T3	20	1 1/4	280.00 - 295.00	0.6000	0.5941
T3	25	1/2	280.00 - 300.00	0.6000	0.5941
T3	26	1/2	280.00 - 285.00	0.6000	0.5941
T4	1	1" Rigid Conduit	260.00 - 280.00	0.6000	0.5959
T4	7	1 5/8	260.00 - 280.00	0.6000	0.5959
T4	8	1 5/8	260.00 - 280.00	0.6000	0.5959
T4	9	1 5/8	260.00 - 280.00	0.6000	0.5959
T4	10	1 5/8	260.00 - 280.00	0.6000	0.5959
T4	18	1 1/4	260.00 - 275.00	0.6000	0.5959
T4	19	2 1/4	260.00 - 280.00	0.6000	0.5959
T4	20	1 1/4	260.00 - 280.00	0.6000	0.5959
T4	25	1/2	260.00 - 280.00	0.6000	0.5959
T4	26	1/2	260.00 - 280.00	0.6000	0.5959
T5	1	1" Rigid Conduit	240.00 - 260.00	0.6000	0.5978
T5	7	1 5/8	240.00 - 260.00	0.6000	0.5978
T5	8	1 5/8	240.00 - 260.00	0.6000	0.5978
T5	9	1 5/8	240.00 - 260.00	0.6000	0.5978
T5	10	1 5/8	240.00 - 260.00	0.6000	0.5978
T5	13	1 1/4	240.00 - 250.00	0.6000	0.5978
T5	18	1 1/4	240.00 - 260.00	0.6000	0.5978
T5	19	2 1/4	240.00 - 260.00	0.6000	0.5978
T5	20	1 1/4	240.00 - 260.00	0.6000	0.5978
T5	23	1 1/4	240.00 - 260.00	0.6000	0.5978
T5	25	1/2	240.00 - 260.00	0.6000	0.5978
T5	26	1/2	240.00 - 260.00	0.6000	0.5978
T6	1	1" Rigid Conduit	220.00 - 240.00	0.6000	0.5999
T6	3	1 5/8	220.00 - 225.00	0.6000	0.5999
T6	7	1 5/8	220.00 - 240.00	0.6000	0.5999

Tower Section	Feed Line Record No.	Description	Feed Line Segment Elev.	K_a No Ice	K_a Ice
T6	8	1 5/8	220.00 - 240.00	0.6000	0.5999
T6	9	1 5/8	220.00 - 240.00	0.6000	0.5999
T6	10	1 5/8	220.00 - 240.00	0.6000	0.5999
T6	13	1 1/4	220.00 - 240.00	0.6000	0.5999
T6	18	1 1/4	220.00 - 240.00	0.6000	0.5999
T6	19	2 1/4	220.00 - 240.00	0.6000	0.5999
T6	20	1 1/4	220.00 - 240.00	0.6000	0.5999
T6	23	1 1/4	220.00 - 240.00	0.6000	0.5999
T6	25	1/2	220.00 - 240.00	0.6000	0.5999
T6	26	1/2	220.00 - 240.00	0.6000	0.5999
T7	1	1" Rigid Conduit	200.00 - 220.00	0.6000	0.5860
T7	3	1 5/8	200.00 - 220.00	0.6000	0.5860
T7	7	1 5/8	200.00 - 220.00	0.6000	0.5860
T7	8	1 5/8	200.00 - 220.00	0.6000	0.5860
T7	9	1 5/8	200.00 - 220.00	0.6000	0.5860
T7	10	1 5/8	200.00 - 220.00	0.6000	0.5860
T7	13	1 1/4	200.00 - 220.00	0.6000	0.5860
T7	14	1/2	200.00 - 205.00	0.6000	0.5860
T7	18	1 1/4	200.00 - 220.00	0.6000	0.5860
T7	19	2 1/4	200.00 - 220.00	0.6000	0.5860
T7	20	1 1/4	200.00 - 220.00	0.6000	0.5860
T7	23	1 1/4	200.00 - 220.00	0.6000	0.5860
T7	24	7/8	200.00 - 207.00	0.6000	0.5860
T7	25	1/2	200.00 - 220.00	0.6000	0.5860
T7	26	1/2	200.00 - 220.00	0.6000	0.5860
T8	1	1" Rigid Conduit	180.00 - 200.00	0.6000	0.5647
T8	3	1 5/8	180.00 - 200.00	0.6000	0.5647
T8	4	1 5/8	180.00 - 200.00	0.6000	0.5647
T8	7	1 5/8	180.00 - 200.00	0.6000	0.5647
T8	8	1 5/8	180.00 - 200.00	0.6000	0.5647
T8	9	1 5/8	180.00 - 200.00	0.6000	0.5647

Tower Section	Feed Line Record No.	Description	Feed Line Segment Elev.	K_a No Ice	K_a Ice
T8	10	1 5/8	180.00 - 200.00	0.6000	0.5647
T8	13	1 1/4	180.00 - 200.00	0.6000	0.5647
T8	14	1/2	180.00 - 200.00	0.6000	0.5647
T8	18	1 1/4	180.00 - 200.00	0.6000	0.5647
T8	19	2 1/4	180.00 - 200.00	0.6000	0.5647
T8	20	1 1/4	180.00 - 200.00	0.6000	0.5647
T8	23	1 1/4	180.00 - 200.00	0.6000	0.5647
T8	24	7/8	180.00 - 200.00	0.6000	0.5647
T8	25	1/2	180.00 - 200.00	0.6000	0.5647
T8	26	1/2	180.00 - 200.00	0.6000	0.5647
T8	27	#8 AWG Copper WIre	180.00 - 200.00	0.6000	0.5647
T8	28	RG6-Fiber	180.00 - 200.00	0.6000	0.5647
T8	31	HYBRIFLEX 1-5/8"	180.00 - 185.00	0.6000	0.5647
T9	1	1" Rigid Conduit	160.00 - 180.00	0.6000	0.5532
T9	3	1 5/8	160.00 - 180.00	0.6000	0.5532
T9	4	1 5/8	160.00 - 180.00	0.6000	0.5532
T9	6	1 5/8	160.00 - 167.00	0.6000	0.5532
T9	7	1 5/8	160.00 - 180.00	0.6000	0.5532
T9	8	1 5/8	160.00 - 180.00	0.6000	0.5532
T9	9	1 5/8	160.00 - 180.00	0.6000	0.5532
T9	10	1 5/8	160.00 - 180.00	0.6000	0.5532
T9	13	1 1/4	160.00 - 180.00	0.6000	0.5532
T9	14	1/2	160.00 - 180.00	0.6000	0.5532
T9	18	1 1/4	160.00 - 180.00	0.6000	0.5532
T9	19	2 1/4	160.00 - 180.00	0.6000	0.5532
T9	20	1 1/4	160.00 - 180.00	0.6000	0.5532
T9	23	1 1/4	160.00 - 180.00	0.6000	0.5532
T9	24	7/8	160.00 - 180.00	0.6000	0.5532
T9	25	1/2	160.00 - 180.00	0.6000	0.5532
T9	26	1/2	160.00 - 180.00	0.6000	0.5532
T9	27	#8 AWG Copper WIre	160.00 - 180.00	0.6000	0.5532

Tower Section	Feed Line Record No.	Description	Feed Line Segment Elev.	K_a No Ice	K_a Ice
T9	28	RG6-Fiber	160.00 - 180.00	0.6000	0.5532
T9	29	HYBRIFLEX 1-5/8"	160.00 - 167.00	0.6000	0.5532
T9	31	HYBRIFLEX 1-5/8"	160.00 - 180.00	0.6000	0.5532
T10	1	1" Rigid Conduit	140.00 - 160.00	0.6000	0.5892
T10	3	1 5/8	140.00 - 160.00	0.6000	0.5892
T10	4	1 5/8	140.00 - 160.00	0.6000	0.5892
T10	6	1 5/8	140.00 - 160.00	0.6000	0.5892
T10	7	1 5/8	140.00 - 160.00	0.6000	0.5892
T10	8	1 5/8	140.00 - 160.00	0.6000	0.5892
T10	9	1 5/8	140.00 - 160.00	0.6000	0.5892
T10	10	1 5/8	140.00 - 160.00	0.6000	0.5892
T10	11	1 5/8	140.00 - 147.00	0.6000	0.5892
T10	13	1 1/4	140.00 - 160.00	0.6000	0.5892
T10	14	1/2	140.00 - 160.00	0.6000	0.5892
T10	18	1 1/4	140.00 - 160.00	0.6000	0.5892
T10	19	2 1/4	140.00 - 160.00	0.6000	0.5892
T10	20	1 1/4	140.00 - 160.00	0.6000	0.5892
T10	21	1/2	140.00 - 150.00	0.6000	0.5892
T10	22	1/2	140.00 - 150.00	0.6000	0.5892
T10	23	1 1/4	140.00 - 160.00	0.6000	0.5892
T10	24	7/8	140.00 - 160.00	0.6000	0.5892
T10	25	1/2	140.00 - 160.00	0.6000	0.5892
T10	26	1/2	140.00 - 160.00	0.6000	0.5892
T10	27	#8 AWG Copper WIre	140.00 - 160.00	0.6000	0.5892
T10	28	RG6-Fiber	140.00 - 160.00	0.6000	0.5892
T10	29	HYBRIFLEX 1-5/8"	140.00 - 160.00	0.6000	0.5892
T10	31	HYBRIFLEX 1-5/8"	140.00 - 160.00	0.6000	0.5892
T11	1	1" Rigid Conduit	120.00 - 140.00	0.6000	0.5925
T11	3	1 5/8	120.00 - 140.00	0.6000	0.5925
T11	4	1 5/8	120.00 - 140.00	0.6000	0.5925
T11	6	1 5/8	120.00 - 140.00	0.6000	0.5925

Tower Section	Feed Line Record No.	Description	Feed Line Segment Elev.	K_a No Ice	K_a Ice
T11	7	1 5/8	120.00 - 140.00	0.6000	0.5925
T11	8	1 5/8	120.00 - 140.00	0.6000	0.5925
T11	9	1 5/8	120.00 - 140.00	0.6000	0.5925
T11	10	1 5/8	120.00 - 140.00	0.6000	0.5925
T11	11	1 5/8	120.00 - 140.00	0.6000	0.5925
T11	12	1 5/8	120.00 - 130.00	0.6000	0.5925
T11	13	1 1/4	120.00 - 140.00	0.6000	0.5925
T11	14	1/2	120.00 - 140.00	0.6000	0.5925
T11	18	1 1/4	120.00 - 140.00	0.6000	0.5925
T11	19	2 1/4	120.00 - 140.00	0.6000	0.5925
T11	20	1 1/4	120.00 - 140.00	0.6000	0.5925
T11	21	1/2	120.00 - 140.00	0.6000	0.5925
T11	22	1/2	120.00 - 140.00	0.6000	0.5925
T11	23	1 1/4	120.00 - 140.00	0.6000	0.5925
T11	24	7/8	120.00 - 140.00	0.6000	0.5925
T11	25	1/2	120.00 - 140.00	0.6000	0.5925
T11	26	1/2	120.00 - 140.00	0.6000	0.5925
T11	27	#8 AWG Copper WIre	120.00 - 140.00	0.6000	0.5925
T11	28	RG6-Fiber	120.00 - 140.00	0.6000	0.5925
T11	29	HYBRIFLEX 1-5/8"	120.00 - 140.00	0.6000	0.5925
T11	31	HYBRIFLEX 1-5/8"	120.00 - 140.00	0.6000	0.5925
T12	1	1" Rigid Conduit	100.00 - 120.00	0.6000	0.5963
T12	3	1 5/8	100.00 - 120.00	0.6000	0.5963
T12	4	1 5/8	100.00 - 120.00	0.6000	0.5963
T12	6	1 5/8	100.00 - 120.00	0.6000	0.5963
T12	7	1 5/8	100.00 - 120.00	0.6000	0.5963
T12	8	1 5/8	100.00 - 120.00	0.6000	0.5963
T12	9	1 5/8	100.00 - 120.00	0.6000	0.5963
T12	10	1 5/8	100.00 - 120.00	0.6000	0.5963
T12	11	1 5/8	100.00 - 120.00	0.6000	0.5963
T12	12	1 5/8	100.00 - 120.00	0.6000	0.5963

Tower Section	Feed Line Record No.	Description	Feed Line Segment Elev.	K_a No Ice	K_a Ice
T12	13	1 1/4	100.00 - 120.00	0.6000	0.5963
T12	14	1/2	100.00 - 120.00	0.6000	0.5963
T12	16	7/8	100.00 - 112.00	0.6000	0.5963
T12	18	1 1/4	100.00 - 120.00	0.6000	0.5963
T12	19	2 1/4	100.00 - 120.00	0.6000	0.5963
T12	20	1 1/4	100.00 - 120.00	0.6000	0.5963
T12	21	1/2	100.00 - 120.00	0.6000	0.5963
T12	22	1/2	100.00 - 120.00	0.6000	0.5963
T12	23	1 1/4	100.00 - 120.00	0.6000	0.5963
T12	24	7/8	100.00 - 120.00	0.6000	0.5963
T12	25	1/2	100.00 - 120.00	0.6000	0.5963
T12	26	1/2	100.00 - 120.00	0.6000	0.5963
T12	27	#8 AWG Copper WIre	100.00 - 120.00	0.6000	0.5963
T12	28	RG6-Fiber	100.00 - 120.00	0.6000	0.5963
T12	29	HYBRIFLEX 1-5/8"	100.00 - 120.00	0.6000	0.5963
T12	31	HYBRIFLEX 1-5/8"	100.00 - 120.00	0.6000	0.5963
T13	1	1" Rigid Conduit	80.00 - 100.00	0.6000	0.6000
T13	3	1 5/8	80.00 - 100.00	0.6000	0.6000
T13	4	1 5/8	80.00 - 100.00	0.6000	0.6000
T13	6	1 5/8	80.00 - 100.00	0.6000	0.6000
T13	7	1 5/8	80.00 - 100.00	0.6000	0.6000
T13	8	1 5/8	80.00 - 100.00	0.6000	0.6000
T13	9	1 5/8	80.00 - 100.00	0.6000	0.6000
T13	10	1 5/8	80.00 - 100.00	0.6000	0.6000
T13	11	1 5/8	80.00 - 100.00	0.6000	0.6000
T13	12	1 5/8	80.00 - 100.00	0.6000	0.6000
T13	13	1 1/4	80.00 - 100.00	0.6000	0.6000
T13	14	1/2	80.00 - 100.00	0.6000	0.6000
T13	15	7/8	80.00 - 89.00	0.6000	0.6000
T13	16	7/8	80.00 - 100.00	0.6000	0.6000
T13	18	1 1/4	80.00 - 100.00	0.6000	0.6000
T13	19	2 1/4	80.00 - 100.00	0.6000	0.6000
T13	20	1 1/4	80.00 - 100.00	0.6000	0.6000
T13	21	1/2	80.00 - 100.00	0.6000	0.6000
T13	22	1/2	80.00 - 100.00	0.6000	0.6000
T13	23	1 1/4	80.00 - 100.00	0.6000	0.6000
T13	24	7/8	80.00 - 100.00	0.6000	0.6000
T13	25	1/2	80.00 - 100.00	0.6000	0.6000
T13	26	1/2	80.00 - 100.00	0.6000	0.6000
T13	27	#8 AWG Copper WIre	80.00 - 100.00	0.6000	0.6000
T13	28	RG6-Fiber	80.00 - 100.00	0.6000	0.6000
T13	29	HYBRIFLEX 1-5/8"	80.00 - 100.00	0.6000	0.6000
T13	31	HYBRIFLEX 1-5/8"	80.00 - 100.00	0.6000	0.6000
T14	1	1" Rigid Conduit	60.00 - 80.00	0.6000	0.6000
T14	3	1 5/8	60.00 - 80.00	0.6000	0.6000
T14	4	1 5/8	60.00 - 80.00	0.6000	0.6000

Tower Section	Feed Line Record No.	Description	Feed Line Segment Elev.	K_a No Ice	K_a Ice
T14	6	1 5/8	60.00 - 80.00	0.6000	0.6000
T14	7	1 5/8	60.00 - 80.00	0.6000	0.6000
T14	8	1 5/8	60.00 - 80.00	0.6000	0.6000
T14	9	1 5/8	60.00 - 80.00	0.6000	0.6000
T14	10	1 5/8	60.00 - 80.00	0.6000	0.6000
T14	11	1 5/8	60.00 - 80.00	0.6000	0.6000
T14	12	1 5/8	60.00 - 80.00	0.6000	0.6000
T14	13	1 1/4	60.00 - 80.00	0.6000	0.6000
T14	14	1/2	60.00 - 80.00	0.6000	0.6000
T14	15	7/8	60.00 - 80.00	0.6000	0.6000
T14	16	7/8	60.00 - 80.00	0.6000	0.6000
T14	18	1 1/4	60.00 - 80.00	0.6000	0.6000
T14	19	2 1/4	60.00 - 80.00	0.6000	0.6000
T14	20	1 1/4	60.00 - 80.00	0.6000	0.6000
T14	21	1/2	60.00 - 80.00	0.6000	0.6000
T14	22	1/2	60.00 - 80.00	0.6000	0.6000
T14	23	1 1/4	60.00 - 80.00	0.6000	0.6000
T14	24	7/8	60.00 - 80.00	0.6000	0.6000
T14	25	1/2	60.00 - 80.00	0.6000	0.6000
T14	26	1/2	60.00 - 80.00	0.6000	0.6000
T14	27	#8 AWG Copper Wire	60.00 - 80.00	0.6000	0.6000
T14	28	RG6-Fiber	60.00 - 80.00	0.6000	0.6000
T14	29	HYBRIFLEX 1-5/8"	60.00 - 80.00	0.6000	0.6000
T14	31	HYBRIFLEX 1-5/8"	60.00 - 80.00	0.6000	0.6000
T15	1	1" Rigid Conduit	40.00 - 60.00	0.6000	0.6000
T15	3	1 5/8	40.00 - 60.00	0.6000	0.6000
T15	4	1 5/8	40.00 - 60.00	0.6000	0.6000
T15	6	1 5/8	40.00 - 60.00	0.6000	0.6000
T15	7	1 5/8	40.00 - 60.00	0.6000	0.6000
T15	8	1 5/8	40.00 - 60.00	0.6000	0.6000
T15	9	1 5/8	40.00 - 60.00	0.6000	0.6000
T15	10	1 5/8	40.00 - 60.00	0.6000	0.6000
T15	11	1 5/8	40.00 - 60.00	0.6000	0.6000
T15	12	1 5/8	40.00 - 60.00	0.6000	0.6000
T15	13	1 1/4	40.00 - 60.00	0.6000	0.6000
T15	14	1/2	40.00 - 60.00	0.6000	0.6000
T15	15	7/8	40.00 - 60.00	0.6000	0.6000
T15	16	7/8	40.00 - 60.00	0.6000	0.6000
T15	17	1 1/4	40.00 - 55.00	0.6000	0.6000
T15	18	1 1/4	40.00 - 60.00	0.6000	0.6000
T15	19	2 1/4	40.00 - 60.00	0.6000	0.6000
T15	20	1 1/4	40.00 - 60.00	0.6000	0.6000
T15	21	1/2	40.00 - 60.00	0.6000	0.6000
T15	22	1/2	40.00 - 60.00	0.6000	0.6000
T15	23	1 1/4	40.00 - 60.00	0.6000	0.6000
T15	24	7/8	40.00 - 60.00	0.6000	0.6000
T15	25	1/2	40.00 - 60.00	0.6000	0.6000
T15	26	1/2	40.00 - 60.00	0.6000	0.6000
T15	27	#8 AWG Copper Wire	40.00 - 60.00	0.6000	0.6000
T15	28	RG6-Fiber	40.00 - 60.00	0.6000	0.6000
T15	29	HYBRIFLEX 1-5/8"	40.00 - 60.00	0.6000	0.6000
T15	31	HYBRIFLEX 1-5/8"	40.00 - 60.00	0.6000	0.6000
T16	1	1" Rigid Conduit	20.00 - 40.00	0.6000	0.6000
T16	3	1 5/8	20.00 - 40.00	0.6000	0.6000
T16	4	1 5/8	20.00 - 40.00	0.6000	0.6000
T16	6	1 5/8	20.00 - 40.00	0.6000	0.6000
T16	7	1 5/8	20.00 - 40.00	0.6000	0.6000
T16	8	1 5/8	20.00 - 40.00	0.6000	0.6000
T16	9	1 5/8	20.00 - 40.00	0.6000	0.6000
T16	10	1 5/8	20.00 - 40.00	0.6000	0.6000
T16	11	1 5/8	20.00 - 40.00	0.6000	0.6000
T16	12	1 5/8	20.00 - 40.00	0.6000	0.6000

Tower Section	Feed Line Record No.	Description	Feed Line Segment Elev.	K_a No Ice	K_a Ice
T16	13	1 1/4	20.00 - 40.00	0.6000	0.6000
T16	14	1/2	20.00 - 40.00	0.6000	0.6000
T16	15	7/8	20.00 - 40.00	0.6000	0.6000
T16	16	7/8	20.00 - 40.00	0.6000	0.6000
T16	17	1 1/4	20.00 - 40.00	0.6000	0.6000
T16	18	1 1/4	20.00 - 40.00	0.6000	0.6000
T16	19	2 1/4	20.00 - 40.00	0.6000	0.6000
T16	20	1 1/4	20.00 - 40.00	0.6000	0.6000
T16	21	1/2	20.00 - 40.00	0.6000	0.6000
T16	22	1/2	20.00 - 40.00	0.6000	0.6000
T16	23	1 1/4	20.00 - 40.00	0.6000	0.6000
T16	24	7/8	20.00 - 40.00	0.6000	0.6000
T16	25	1/2	20.00 - 40.00	0.6000	0.6000
T16	26	1/2	20.00 - 40.00	0.6000	0.6000
T16	27	#8 AWG Copper WIre	20.00 - 40.00	0.6000	0.6000
T16	28	RG6-Fiber	20.00 - 40.00	0.6000	0.6000
T16	29	HYBRIFLEX 1-5/8"	20.00 - 40.00	0.6000	0.6000
T16	31	HYBRIFLEX 1-5/8"	20.00 - 40.00	0.6000	0.6000
T17	1	1" Rigid Conduit	6.00 - 20.00	0.6000	0.6000
T17	3	1 5/8	6.00 - 20.00	0.6000	0.6000
T17	4	1 5/8	6.00 - 20.00	0.6000	0.6000
T17	6	1 5/8	6.00 - 20.00	0.6000	0.6000
T17	7	1 5/8	6.00 - 20.00	0.6000	0.6000
T17	8	1 5/8	6.00 - 20.00	0.6000	0.6000
T17	9	1 5/8	6.00 - 20.00	0.6000	0.6000
T17	10	1 5/8	6.00 - 20.00	0.6000	0.6000
T17	11	1 5/8	6.00 - 20.00	0.6000	0.6000
T17	12	1 5/8	6.00 - 20.00	0.6000	0.6000
T17	13	1 1/4	6.00 - 20.00	0.6000	0.6000
T17	14	1/2	6.00 - 20.00	0.6000	0.6000
T17	15	7/8	6.00 - 20.00	0.6000	0.6000
T17	16	7/8	6.00 - 20.00	0.6000	0.6000
T17	17	1 1/4	6.00 - 20.00	0.6000	0.6000
T17	18	1 1/4	6.00 - 20.00	0.6000	0.6000
T17	19	2 1/4	6.00 - 20.00	0.6000	0.6000
T17	20	1 1/4	6.00 - 20.00	0.6000	0.6000
T17	21	1/2	6.00 - 20.00	0.6000	0.6000
T17	22	1/2	6.00 - 20.00	0.6000	0.6000
T17	23	1 1/4	6.00 - 20.00	0.6000	0.6000
T17	24	7/8	6.00 - 20.00	0.6000	0.6000
T17	25	1/2	6.00 - 20.00	0.6000	0.6000
T17	26	1/2	6.00 - 20.00	0.6000	0.6000
T17	27	#8 AWG Copper WIre	6.00 - 20.00	0.6000	0.6000
T17	28	RG6-Fiber	6.00 - 20.00	0.6000	0.6000
T17	29	HYBRIFLEX 1-5/8"	6.00 - 20.00	0.6000	0.6000
T17	31	HYBRIFLEX 1-5/8"	6.00 - 20.00	0.6000	0.6000

Discrete Tower Loads

Description	Face or Leg	Offset Type	Offsets: Horz Lateral Vert ft ft ft	Azimuth Adjustment °	Placement ft		C_AA_A Front ft^2	C_AA_A Side ft^2	Weight lb
Lighting Canopy	C	None		0.0000	350.00	No Ice	6.80	4.00	20.00
						1/2" Ice	7.38	4.92	50.00
						1" Ice	7.96	5.84	80.00
Beacon	C	None		0.0000	348.00	No Ice	0.17	0.17	10.00
						1/2" Ice	0.31	0.31	13.89
						1" Ice	0.39	0.39	18.96
Obstruction Light	A	From Leg	0.50 0.00 0.00	0.0000	173.50	No Ice	0.18	0.18	10.00
						1/2" Ice	0.25	0.25	15.00
						1" Ice	0.32	0.32	20.00
Obstruction Light	B	From Leg	0.50 0.00 0.00	0.0000	173.50	No Ice	0.18	0.18	10.00
						1/2" Ice	0.25	0.25	15.00
						1" Ice	0.32	0.32	20.00
Obstruction Light	C	From Leg	0.50 0.00 0.00	0.0000	173.50	No Ice	0.18	0.18	10.00
						1/2" Ice	0.25	0.25	15.00
						1" Ice	0.32	0.32	20.00
PiROD Junction Box	C	From Face	0.25 0.00 0.00	0.0000	330.00	No Ice	0.16	0.16	20.00
						1/2" Ice	0.21	0.21	21.98
						1" Ice	0.28	0.28	24.93
PiROD Junction Box	C	From Face	0.25 0.00 0.00	0.0000	260.25	No Ice	0.16	0.16	20.00
						1/2" Ice	0.21	0.21	21.98
						1" Ice	0.28	0.28	24.93
PiROD Junction Box	C	From Face	0.25 0.00 0.00	0.0000	173.50	No Ice	0.16	0.16	20.00
						1/2" Ice	0.21	0.21	21.98
						1" Ice	0.28	0.28	24.93
PiROD Junction Box	C	From Face	0.25 0.00 0.00	0.0000	86.75	No Ice	0.16	0.16	20.00
						1/2" Ice	0.21	0.21	21.98
						1" Ice	0.28	0.28	24.93
ROHN 4-ft Side Arm	A	From Leg	2.00 0.00 0.00	0.0000	320.00	No Ice	5.28	5.28	65.00
						1/2" Ice	7.88	7.88	84.50
						1" Ice	10.48	10.48	104.00
4'x4" Pipe Mount	C	From Leg	0.25 0.00 0.00	0.0000	275.00	No Ice	1.03	1.03	44.00
						1/2" Ice	1.58	1.58	56.99
						1" Ice	1.84	1.84	73.03
LP-3E-Radomes	B	From Leg	3.00 0.00 0.00	0.0000	339.00	No Ice	16.00	16.00	320.00
						1/2" Ice	21.00	21.00	530.00
						1" Ice	26.00	26.00	740.00
LP-3C	B	From Leg	3.00 0.00 0.00	0.0000	311.00	No Ice	12.00	12.00	225.00
						1/2" Ice	18.00	18.00	360.00
						1" Ice	24.00	24.00	495.00
DB810KE-Y	A	From Face	10.00 0.00 8.00	0.0000	295.00	No Ice	4.65	4.65	35.00
						1/2" Ice	6.55	6.55	70.26
						1" Ice	8.23	8.23	115.93
DB810KE-Y	A	From Face	10.00 0.00 -8.00	0.0000	295.00	No Ice	4.65	4.65	35.00
						1/2" Ice	6.55	6.55	70.26
						1" Ice	8.23	8.23	115.93
Pirod Candelabra Arm (1)	A	From Face	5.00 0.00 0.00	0.0000	295.00	No Ice	11.58	11.58	250.00
						1/2" Ice	16.25	16.25	350.00
						1" Ice	20.92	20.92	450.00
DB810KE-Y	C	From Face	10.00 0.00 -8.00	0.0000	295.00	No Ice	4.65	4.65	35.00
						1/2" Ice	6.55	6.55	70.26
						1" Ice	8.23	8.23	115.93
Pirod Candelabra Arm (1)	C	From Face	5.00 0.00 0.00	0.0000	295.00	No Ice	11.58	11.58	250.00
						1/2" Ice	16.25	16.25	350.00
						1" Ice	20.92	20.92	450.00
PD220	B	From Leg	6.00 0.00 10.00	0.0000	295.00	No Ice	3.08	3.08	23.00
						1/2" Ice	5.30	5.30	48.68
						1" Ice	7.54	7.54	88.10

Description	Face or Leg	Offset Type	Offsets: Horz Lateral Vert ft ft ft	Azimuth Adjustment °	Placement ft		C_AA_A Front ft^2	C_AA_A Side ft^2	Weight lb
Pirod 4' Side Mount Standoff (1)	B	From Leg	2.00 0.00 0.00	0.0000	295.00	No Ice 1/2" Ice 1" Ice	2.72 4.91 7.10	2.72 4.91 7.10	50.00 89.00 128.00
PD220	C	From Leg	6.00 0.00 10.00	0.0000	260.00	No Ice 1/2" Ice 1" Ice	3.08 5.30 7.54	3.08 5.30 7.54	23.00 48.68 88.10
Pirod 6' Side Mount Standoff (1)	C	From Leg	3.00 0.00 0.00	0.0000	260.00	No Ice 1/2" Ice 1" Ice	4.97 6.12 7.27	4.97 6.12 7.27	70.00 130.00 190.00
PD220	A	From Leg	6.00 0.00 10.00	0.0000	250.00	No Ice 1/2" Ice 1" Ice	3.08 5.30 7.54	3.08 5.30 7.54	23.00 48.68 88.10
Pirod 6' Side Mount Standoff (1)	A	From Leg	3.00 0.00 0.00	0.0000	250.00	No Ice 1/2" Ice 1" Ice	4.97 6.12 7.27	4.97 6.12 7.27	70.00 130.00 190.00
PD1142-1	B	From Leg	6.00 0.00 10.00	0.0000	207.00	No Ice 1/2" Ice 1" Ice	1.32 3.21 5.12	1.32 3.21 5.12	10.00 23.85 49.42
Pirod 6' Side Mount Standoff (1)	B	From Leg	3.00 0.00 0.00	0.0000	207.00	No Ice 1/2" Ice 1" Ice	4.97 6.12 7.27	4.97 6.12 7.27	70.00 130.00 190.00
PD1150	A	From Leg	2.00 0.00 5.00	0.0000	205.00	No Ice 1/2" Ice 1" Ice	1.22 2.43 3.64	1.22 2.43 3.64	8.00 16.00 24.00
Pirod 6' Side Mount Standoff (1)	A	From Face	0.00 0.00 0.00	0.0000	205.00	No Ice 1/2" Ice 1" Ice	4.97 6.12 7.27	4.97 6.12 7.27	70.00 130.00 190.00
10' Dipole	A	From Leg	3.00 0.00 0.00	0.0000	150.00	No Ice 1/2" Ice 1" Ice	4.00 6.00 8.00	4.00 6.00 8.00	50.00 71.79 100.14
20' x 3" Dia Omni	B	From Leg	4.00 0.00 0.00	0.0000	147.00	No Ice 1/2" Ice 1" Ice	6.00 8.03 10.08	6.00 8.03 10.08	50.00 93.17 149.01
Pirod 4' Side Mount Standoff (1)	B	From Leg	2.00 0.00 0.00	0.0000	156.00	No Ice 1/2" Ice 1" Ice	2.72 4.91 7.10	2.72 4.91 7.10	50.00 89.00 128.00
Pirod 4' Side Mount Standoff (1)	B	From Leg	2.00 0.00 0.00	0.0000	138.00	No Ice 1/2" Ice 1" Ice	2.72 4.91 7.10	2.72 4.91 7.10	50.00 89.00 128.00
PR-450	B	From Leg	1.00 0.00 0.00	0.0000	112.00	No Ice 1/2" Ice 1" Ice	6.35 11.43 16.51	6.35 11.43 16.51	38.00 49.40 60.80
Pirod 4' Side Mount Standoff (1)	C	From Leg	2.00 0.00 0.00	0.0000	112.00	No Ice 1/2" Ice 1" Ice	2.72 4.91 7.10	2.72 4.91 7.10	50.00 89.00 128.00
PR-450	B	From Leg	1.00 0.00 0.00	0.0000	90.00	No Ice 1/2" Ice 1" Ice	6.35 11.43 16.51	6.35 11.43 16.51	38.00 49.40 60.80
1105-3A-Radomes	B	From Leg	2.00 0.00 0.00	0.0000	68.00	No Ice 1/2" Ice 1" Ice	23.00 29.00 35.00	23.00 29.00 35.00	175.00 350.00 525.00
APXVTM14 (Sprint - Existing)	A	From Leg	3.00 3.00 0.00	0.0000	225.00	No Ice 1/2" Ice 1" Ice	6.34 6.72 7.10	3.61 3.97 4.33	56.00 95.53 140.12
APXVTM14 (Sprint - Existing)	B	From Leg	3.00 3.00 0.00	0.0000	225.00	No Ice 1/2" Ice 1" Ice	6.34 6.72 7.10	3.61 3.97 4.33	56.00 95.53 140.12

Description	Face or Leg	Offset Type	Offsets: Horz Lateral Vert ft ft ft	Azimuth Adjustment °	Placement ft		C_AA_A Front ft^2	C_AA_A Side ft^2	Weight lb
APXVTM14 (Sprint - Existing)	C	From Leg	3.00 3.00 0.00	0.0000	225.00	No Ice 1/2" Ice 1" Ice	6.34 6.72 7.10	3.61 3.97 4.33	56.00 95.53 140.12
NNVV-65B-R4 (Sprint - Existing)	A	From Leg	3.00 -3.00 0.00	0.0000	225.00	No Ice 1/2" Ice 1" Ice	14.61 15.13 15.65	9.17 9.63 10.11	108.00 210.56 320.42
NNVV-65B-R4 (Sprint - Existing)	B	From Leg	3.00 -3.00 0.00	0.0000	225.00	No Ice 1/2" Ice 1" Ice	14.61 15.13 15.65	9.17 9.63 10.11	108.00 210.56 320.42
NNVV-65B-R4 (Sprint - Existing)	C	From Leg	3.00 -3.00 0.00	0.0000	225.00	No Ice 1/2" Ice 1" Ice	14.61 15.13 15.65	9.17 9.63 10.11	108.00 210.56 320.42
(2) FD-RRH 2x50 800 (Sprint - Existing)	A	From Leg	3.00 0.00 0.00	0.0000	225.00	No Ice 1/2" Ice 1" Ice	2.06 2.24 2.43	1.93 2.11 2.29	64.00 86.12 111.30
(2) FD-RRH 2x50 800 (Sprint - Existing)	B	From Leg	3.00 0.00 0.00	0.0000	225.00	No Ice 1/2" Ice 1" Ice	2.06 2.24 2.43	1.93 2.11 2.29	64.00 86.12 111.30
(2) FD-RRH 2x50 800 (Sprint - Existing)	C	From Leg	3.00 0.00 0.00	0.0000	225.00	No Ice 1/2" Ice 1" Ice	2.06 2.24 2.43	1.93 2.11 2.29	64.00 86.12 111.30
FD-RRH 4x45 1900 (Sprint - Existing)	A	From Leg	3.00 0.00 0.00	0.0000	225.00	No Ice 1/2" Ice 1" Ice	2.32 2.52 2.74	2.38 2.59 2.80	60.00 83.97 111.21
FD-RRH 4x45 1900 (Sprint - Existing)	B	From Leg	3.00 0.00 0.00	0.0000	225.00	No Ice 1/2" Ice 1" Ice	2.32 2.52 2.74	2.38 2.59 2.80	60.00 83.97 111.21
FD-RRH 4x45 1900 (Sprint - Existing)	C	From Leg	3.00 0.00 0.00	0.0000	225.00	No Ice 1/2" Ice 1" Ice	2.32 2.52 2.74	2.38 2.59 2.80	60.00 83.97 111.21
TD-RRH8x20-25 (Sprint - Existing)	A	From Leg	3.00 0.00 0.00	0.0000	225.00	No Ice 1/2" Ice 1" Ice	4.05 4.30 4.56	1.53 1.71 1.90	70.00 97.14 127.80
TD-RRH8x20-25 (Sprint - Existing)	B	From Leg	3.00 0.00 0.00	0.0000	225.00	No Ice 1/2" Ice 1" Ice	4.05 4.30 4.56	1.53 1.71 1.90	70.00 97.14 127.80
TD-RRH8x20-25 (Sprint - Existing)	C	From Leg	3.00 0.00 0.00	0.0000	225.00	No Ice 1/2" Ice 1" Ice	4.05 4.30 4.56	1.53 1.71 1.90	70.00 97.14 127.80
Pirod 12' T-Frame Sector Mount (1) (Sprint - Existing)	A	From Leg	2.00 0.00 0.00	0.0000	225.00	No Ice 1/2" Ice 1" Ice	13.60 18.40 23.20	13.60 18.40 23.20	465.00 600.00 735.00
Pirod 12' T-Frame Sector Mount (1) (Sprint - Existing)	B	From Leg	2.00 0.00 0.00	0.0000	225.00	No Ice 1/2" Ice 1" Ice	13.60 18.40 23.20	13.60 18.40 23.20	465.00 600.00 735.00
Pirod 12' T-Frame Sector Mount (1) (Sprint - Existing)	C	From Leg	2.00 0.00 0.00	0.0000	225.00	No Ice 1/2" Ice 1" Ice	13.60 18.40 23.20	13.60 18.40 23.20	465.00 600.00 735.00
7770.00 (AT&T - Existing)	A	From Leg	3.00 0.00 0.00	0.0000	200.00	No Ice 1/2" Ice 1" Ice	5.51 5.87 6.23	2.93 3.27 3.63	35.00 67.63 105.06
DMP65R-BU8DA (AT&T - Existing)	A	From Leg	3.00 0.00 0.00	0.0000	200.00	No Ice 1/2" Ice 1" Ice	17.87 18.50 19.14	8.12 8.72 9.32	120.00 217.58 323.43
OPA65R-BU8D (AT&T - Existing)	A	From Leg	3.00 0.00 0.00	0.0000	200.00	No Ice 1/2" Ice 1" Ice	17.87 18.50 19.14	8.12 8.72 9.32	80.00 177.58 283.43

Description	Face or Leg	Offset Type	Offsets: Horz Lateral Vert ft ft ft	Azimuth Adjustment °	Placement ft		C_AA_A Front ft^2	C_AA_A Side ft^2	Weight lb
7770.00 (AT&T - Existing)	B	From Leg	3.00 0.00 0.00	0.0000	200.00	No Ice 1/2" Ice 1" Ice	5.51 5.87 6.23	2.93 3.27 3.63	35.00 67.63 105.06
DMP65R-BU8DA (AT&T - Existing)	B	From Leg	3.00 0.00 0.00	0.0000	200.00	No Ice 1/2" Ice 1" Ice	17.87 18.50 19.14	8.12 8.72 9.32	120.00 217.58 323.43
OPA65R-BU8D (AT&T - Existing)	B	From Leg	3.00 0.00 0.00	0.0000	200.00	No Ice 1/2" Ice 1" Ice	17.87 18.50 19.14	8.12 8.72 9.32	80.00 177.58 283.43
7770.00 (AT&T - Existing)	C	From Leg	3.00 0.00 0.00	0.0000	200.00	No Ice 1/2" Ice 1" Ice	5.51 5.87 6.23	2.93 3.27 3.63	35.00 67.63 105.06
DMP65R-BU8DA (AT&T - Existing)	C	From Leg	3.00 0.00 0.00	0.0000	200.00	No Ice 1/2" Ice 1" Ice	17.87 18.50 19.14	8.12 8.72 9.32	120.00 217.58 323.43
OPA65R-BU8D (AT&T - Existing)	C	From Leg	3.00 0.00 0.00	0.0000	200.00	No Ice 1/2" Ice 1" Ice	17.87 18.50 19.14	8.12 8.72 9.32	80.00 177.58 283.43
(4) 860 10025 RCU (AT&T - Existing)	A	From Leg	3.00 0.00 0.00	0.0000	200.00	No Ice 1/2" Ice 1" Ice	0.14 0.19 0.25	0.12 0.17 0.23	2.00 3.49 5.90
(4) 860 10025 RCU (AT&T - Existing)	B	From Leg	3.00 0.00 0.00	0.0000	200.00	No Ice 1/2" Ice 1" Ice	0.14 0.19 0.25	0.12 0.17 0.23	2.00 3.49 5.90
(4) 860 10025 RCU (AT&T - Existing)	C	From Leg	3.00 0.00 0.00	0.0000	200.00	No Ice 1/2" Ice 1" Ice	0.14 0.19 0.25	0.12 0.17 0.23	2.00 3.49 5.90
(2) CM1007-DBPXBC Diplexer (AT&T - Existing)	A	From Leg	3.00 0.00 0.00	0.0000	200.00	No Ice 1/2" Ice 1" Ice	0.37 0.45 0.54	0.13 0.18 0.24	3.00 6.49 11.28
(2) CM1007-DBPXBC Diplexer (AT&T - Existing)	B	From Leg	3.00 0.00 0.00	0.0000	200.00	No Ice 1/2" Ice 1" Ice	0.37 0.45 0.54	0.13 0.18 0.24	3.00 6.49 11.28
(2) CM1007-DBPXBC Diplexer (AT&T - Existing)	C	From Leg	3.00 0.00 0.00	0.0000	200.00	No Ice 1/2" Ice 1" Ice	0.37 0.45 0.54	0.13 0.18 0.24	3.00 6.49 11.28
DTMABP7819VG12A TMA (AT&T - Existing)	A	From Leg	3.00 0.00 0.00	0.0000	200.00	No Ice 1/2" Ice 1" Ice	1.36 1.51 1.66	0.51 0.61 0.72	20.00 29.77 41.67
DTMABP7819VG12A TMA (AT&T - Existing)	B	From Leg	3.00 0.00 0.00	0.0000	200.00	No Ice 1/2" Ice 1" Ice	1.36 1.51 1.66	0.51 0.61 0.72	20.00 29.77 41.67
DTMABP7819VG12A TMA (AT&T - Existing)	C	From Leg	3.00 0.00 0.00	0.0000	200.00	No Ice 1/2" Ice 1" Ice	1.36 1.51 1.66	0.51 0.61 0.72	20.00 29.77 41.67
4478 B14 (AT&T - Existing)	A	From Leg	3.00 0.00 0.00	0.0000	200.00	No Ice 1/2" Ice 1" Ice	1.84 2.01 2.19	1.06 1.20 1.34	60.00 75.88 94.39
4478 B14 (AT&T - Existing)	B	From Leg	3.00 0.00 0.00	0.0000	200.00	No Ice 1/2" Ice 1" Ice	1.84 2.01 2.19	1.06 1.20 1.34	60.00 75.88 94.39
4478 B14 (AT&T - Existing)	C	From Leg	3.00 0.00 0.00	0.0000	200.00	No Ice 1/2" Ice 1" Ice	1.84 2.01 2.19	1.06 1.20 1.34	60.00 75.88 94.39
4449 B5/B12 (AT&T - Existing)	A	From Leg	3.00 0.00 0.00	0.0000	200.00	No Ice 1/2" Ice 1" Ice	1.97 2.14 2.33	1.41 1.56 1.73	71.00 89.51 110.84

Description	Face or Leg	Offset Type	Offsets: Horz Lateral Vert ft ft ft	Azimuth Adjustment °	Placement ft		C_AA_A Front ft^2	C_AA_A Side ft^2	Weight lb
4449 B5/B12 (AT&T - Existing)	B	From Leg	3.00 0.00 0.00	0.0000	200.00	No Ice 1/2" Ice 1" Ice	1.97 2.14 2.33	1.41 1.56 1.73	71.00 89.51 110.84
4449 B5/B12 (AT&T - Existing)	C	From Leg	3.00 0.00 0.00	0.0000	200.00	No Ice 1/2" Ice 1" Ice	1.97 2.14 2.33	1.41 1.56 1.73	71.00 89.51 110.84
8843 B2/B66A (AT&T - Existing)	A	From Leg	3.00 0.00 0.00	0.0000	200.00	No Ice 1/2" Ice 1" Ice	1.64 1.80 1.97	1.35 1.50 1.65	72.00 89.60 109.91
8843 B2/B66A (AT&T - Existing)	B	From Leg	3.00 0.00 0.00	0.0000	200.00	No Ice 1/2" Ice 1" Ice	1.64 1.80 1.97	1.35 1.50 1.65	72.00 89.60 109.91
8843 B2/B66A (AT&T - Existing)	C	From Leg	3.00 0.00 0.00	0.0000	200.00	No Ice 1/2" Ice 1" Ice	1.64 1.80 1.97	1.35 1.50 1.65	72.00 89.60 109.91
DC6-48-60-18-8F Surge Arrestor (AT&T - Existing)	A	From Leg	3.00 0.00 0.00	0.0000	200.00	No Ice 1/2" Ice 1" Ice	1.91 2.10 2.29	1.91 2.10 2.29	26.00 45.36 67.70
DC6-48-60-18-8F Surge Arrestor (AT&T - Existing)	B	From Leg	3.00 0.00 0.00	0.0000	200.00	No Ice 1/2" Ice 1" Ice	1.91 2.10 2.29	1.91 2.10 2.29	26.00 45.36 67.70
Pirod 12' T-Frame Sector Mount (1) (AT&T - Existing)	A	From Leg	2.00 0.00 0.00	0.0000	200.00	No Ice 1/2" Ice 1" Ice	13.60 18.40 23.20	13.60 18.40 23.20	465.00 600.00 735.00
Pirod 12' T-Frame Sector Mount (1) (AT&T - Existing)	B	From Leg	2.00 0.00 0.00	0.0000	200.00	No Ice 1/2" Ice 1" Ice	13.60 18.40 23.20	13.60 18.40 23.20	465.00 600.00 735.00
Pirod 12' T-Frame Sector Mount (1) (AT&T - Existing)	C	From Leg	2.00 0.00 0.00	0.0000	200.00	No Ice 1/2" Ice 1" Ice	13.60 18.40 23.20	13.60 18.40 23.20	465.00 600.00 735.00
LNX-6514DS-VTM (Verizon - Existing)	A	From Leg	3.00 -6.00 0.00	0.0000	167.00	No Ice 1/2" Ice 1" Ice	8.17 8.63 9.10	5.41 5.86 6.33	39.00 89.51 146.15
(2) NHH-65B-R2B (Verizon - Proposed)	A	From Leg	3.00 -6.00 0.00	0.0000	167.00	No Ice 1/2" Ice 1" Ice	11.19 11.69 12.20	8.69 9.17 9.66	71.20 150.32 236.42
MT6413-77A (Verizon - Proposed)	A	From Leg	3.00 -6.00 0.00	0.0000	167.00	No Ice 1/2" Ice 1" Ice	3.79 4.04 4.30	1.46 1.65 1.85	60.00 84.38 112.21
LNX-6514DS-VTM (Verizon - Existing)	B	From Leg	3.00 -6.00 0.00	0.0000	167.00	No Ice 1/2" Ice 1" Ice	8.17 8.63 9.10	5.41 5.86 6.33	39.00 89.51 146.15
(2) NHH-65B-R2B (Verizon - Proposed)	B	From Leg	3.00 -6.00 0.00	0.0000	167.00	No Ice 1/2" Ice 1" Ice	11.19 11.69 12.20	8.69 9.17 9.66	71.20 150.32 236.42
MT6413-77A (Verizon - Proposed)	B	From Leg	3.00 -6.00 0.00	0.0000	167.00	No Ice 1/2" Ice 1" Ice	3.79 4.04 4.30	1.46 1.65 1.85	60.00 84.38 112.21
LNX-6514DS-VTM (Verizon - Existing)	C	From Leg	3.00 -6.00 0.00	0.0000	167.00	No Ice 1/2" Ice 1" Ice	8.17 8.63 9.10	5.41 5.86 6.33	39.00 89.51 146.15
(2) NHH-65B-R2B (Verizon - Proposed)	C	From Leg	3.00 -6.00 0.00	0.0000	167.00	No Ice 1/2" Ice 1" Ice	11.19 11.69 12.20	8.69 9.17 9.66	71.20 150.32 236.42
MT6413-77A (Verizon - Proposed)	C	From Leg	3.00 -6.00 0.00	0.0000	167.00	No Ice 1/2" Ice 1" Ice	3.79 4.04 4.30	1.46 1.65 1.85	60.00 84.38 112.21

Description	Face or Leg	Offset Type	Offsets: Horz Lateral Vert ft ft ft	Azimuth Adjustment °	Placement ft		C_AA_A Front ft^2	C_AA_A Side ft^2	Weight lb
RF4439d-25A (B2/B66A RRH) (Verizon - Proposed)	A	From Leg	3.00 -6.00 0.00	0.0000	167.00	No Ice 1/2" Ice 1" Ice	1.88 2.05 2.22	1.25 1.39 1.54	75.00 93.34 114.47
RF4439d-25A (B2/B66A RRH) (Verizon - Proposed)	B	From Leg	3.00 -6.00 0.00	0.0000	167.00	No Ice 1/2" Ice 1" Ice	1.88 2.05 2.22	1.25 1.39 1.54	75.00 93.34 114.47
RF4439d-25A (B2/B66A RRH) (Verizon - Proposed)	C	From Leg	3.00 -6.00 0.00	0.0000	167.00	No Ice 1/2" Ice 1" Ice	1.88 2.05 2.22	1.25 1.39 1.54	75.00 93.34 114.47
RF4461d-13A (Verizon - Proposed)	A	From Leg	3.00 -6.00 0.00	0.0000	167.00	No Ice 1/2" Ice 1" Ice	1.87 2.03 2.21	1.28 1.42 1.57	80.00 98.51 119.81
RF4461d-13A (Verizon - Proposed)	B	From Leg	3.00 -6.00 0.00	0.0000	167.00	No Ice 1/2" Ice 1" Ice	1.87 2.03 2.21	1.28 1.42 1.57	80.00 98.51 119.81
RF4461d-13A (Verizon - Proposed)	C	From Leg	3.00 -6.00 0.00	0.0000	167.00	No Ice 1/2" Ice 1" Ice	1.87 2.03 2.21	1.28 1.42 1.57	80.00 98.51 119.81
DB-T1-6Z-8AB-0Z (Verizon - Existing)	A	From Leg	3.00 0.00 0.00	0.0000	167.00	No Ice 1/2" Ice 1" Ice	4.80 5.07 5.35	2.00 2.19 2.39	44.00 80.13 120.22
DB-T1-6Z-8AB-0Z (Verizon - Existing)	B	From Leg	3.00 0.00 0.00	0.0000	167.00	No Ice 1/2" Ice 1" Ice	4.80 5.07 5.35	2.00 2.19 2.39	44.00 80.13 120.22
Nudd 14' Boom (3) (Verizon - Existing)	C	None		0.0000	167.00	No Ice 1/2" Ice 1" Ice	47.00 67.00 87.00	47.00 67.00 87.00	1600.00 2050.00 2500.00
(2) Commscope VZWSMART-SFK3 (Verizon - Proposed)	A	None		0.0000	167.00	No Ice 1/2" Ice 1" Ice	5.00 7.00 9.00	5.00 7.00 9.00	85.00 120.00 155.00
(2) Commscope VZWSMART-SFK3 (Verizon - Proposed)	B	None		0.0000	167.00	No Ice 1/2" Ice 1" Ice	5.00 7.00 9.00	5.00 7.00 9.00	85.00 120.00 155.00
(2) Commscope VZWSMART-SFK3 (Verizon - Proposed)	C	None		0.0000	167.00	No Ice 1/2" Ice 1" Ice	5.00 7.00 9.00	5.00 7.00 9.00	85.00 120.00 155.00
DCR-L2	A	From Leg	1.00 0.00 0.00	0.0000	320.00	No Ice 1/2" Ice 1" Ice	6.30 7.25 8.20	6.30 7.25 8.20	0.05 0.06 0.07
DCR-L2	A	From Leg	1.00 0.00 0.00	0.0000	310.00	No Ice 1/2" Ice 1" Ice	6.30 7.25 8.20	6.30 7.25 8.20	0.05 0.06 0.07
DCR-L2	C	From Leg	1.00 0.00 0.00	0.0000	290.00	No Ice 1/2" Ice 1" Ice	6.30 7.25 8.20	6.30 7.25 8.20	0.05 0.06 0.07
DCR-L2	C	From Leg	1.00 0.00 0.00	0.0000	280.00	No Ice 1/2" Ice 1" Ice	6.30 7.25 8.20	6.30 7.25 8.20	0.05 0.06 0.07
VV-65A-R1 (T-Mobile - Existing)	A	From Leg	1.00 -4.00 0.00	0.0000	185.00	No Ice 1/2" Ice 1" Ice	5.93 6.29 6.66	2.76 3.10 3.45	30.00 63.86 102.55
APXVAALL24-43 (T-Mobile - Existing)	A	From Leg	1.00 0.00 0.00	0.0000	185.00	No Ice 1/2" Ice 1" Ice	20.24 20.89 21.54	8.89 9.49 10.09	153.00 265.59 386.72
AIR6419 (T-Mobile - Existing)	A	From Leg	1.00 4.00 0.00	0.0000	185.00	No Ice 1/2" Ice 1" Ice	4.17 4.44 4.71	2.02 2.23 2.44	56.00 85.19 118.11

Description	Face or Leg	Offset Type	Offsets: Horz Lateral Vert ft ft ft	Azimuth Adjustment °	Placement ft		C_AA_A Front ft^2	C_AA_A Side ft^2	Weight lb
VV-65A-R1 (T-Mobile - Existing)	B	From Leg	1.00 -4.00 0.00	0.0000	185.00	No Ice 1/2" Ice 1" Ice	5.93 6.29 6.66	2.76 3.10 3.45	30.00 63.86 102.55
APXVAALL24-43 (T-Mobile - Existing)	B	From Leg	1.00 0.00 0.00	0.0000	185.00	No Ice 1/2" Ice 1" Ice	20.24 20.89 21.54	8.89 9.49 10.09	153.00 265.59 386.72
AIR6419 (T-Mobile - Existing)	B	From Leg	1.00 4.00 0.00	0.0000	185.00	No Ice 1/2" Ice 1" Ice	4.17 4.44 4.71	2.02 2.23 2.44	56.00 85.19 118.11
VV-65A-R1 (T-Mobile - Existing)	C	From Leg	1.00 -4.00 0.00	0.0000	185.00	No Ice 1/2" Ice 1" Ice	5.93 6.29 6.66	2.76 3.10 3.45	30.00 63.86 102.55
APXVAALL24-43 (T-Mobile - Existing)	C	From Leg	1.00 0.00 0.00	0.0000	185.00	No Ice 1/2" Ice 1" Ice	20.24 20.89 21.54	8.89 9.49 10.09	153.00 265.59 386.72
AIR6419 (T-Mobile - Existing)	C	From Leg	1.00 4.00 0.00	0.0000	185.00	No Ice 1/2" Ice 1" Ice	4.17 4.44 4.71	2.02 2.23 2.44	56.00 85.19 118.11
4460 B25+B66 (T-Mobile - Existing)	A	From Leg	1.00 4.00 0.00	0.0000	185.00	No Ice 1/2" Ice 1" Ice	2.56 2.76 2.97	1.98 2.16 2.34	109.00 134.38 163.03
4460 B25+B66 (T-Mobile - Existing)	B	From Leg	1.00 4.00 0.00	0.0000	185.00	No Ice 1/2" Ice 1" Ice	2.56 2.76 2.97	1.98 2.16 2.34	109.00 134.38 163.03
4460 B25+B66 (T-Mobile - Existing)	C	From Leg	1.00 4.00 0.00	0.0000	185.00	No Ice 1/2" Ice 1" Ice	2.56 2.76 2.97	1.98 2.16 2.34	109.00 134.38 163.03
4480 B71+B85 (T-Mobile - Existing)	A	From Leg	1.00 4.00 0.00	0.0000	185.00	No Ice 1/2" Ice 1" Ice	2.85 3.06 3.28	1.38 1.54 1.71	84.00 105.70 130.51
4480 B71+B85 (T-Mobile - Existing)	B	From Leg	1.00 4.00 0.00	0.0000	185.00	No Ice 1/2" Ice 1" Ice	2.85 3.06 3.28	1.38 1.54 1.71	84.00 105.70 130.51
4480 B71+B85 (T-Mobile - Existing)	C	From Leg	1.00 4.00 0.00	0.0000	185.00	No Ice 1/2" Ice 1" Ice	2.85 3.06 3.28	1.38 1.54 1.71	84.00 105.70 130.51
SitePro VFA10-HD (T-Mobile - Existing)	A	From Leg	1.00 4.00 0.00	0.0000	185.00	No Ice 1/2" Ice 1" Ice	17.00 21.00 25.00	17.00 21.00 25.00	600.00 750.00 900.00
SitePro VFA10-HD (T-Mobile - Existing)	B	From Leg	1.00 4.00 0.00	0.0000	185.00	No Ice 1/2" Ice 1" Ice	17.00 21.00 25.00	17.00 21.00 25.00	600.00 750.00 900.00
SitePro VFA10-HD (T-Mobile - Existing)	C	From Leg	1.00 4.00 0.00	0.0000	185.00	No Ice 1/2" Ice 1" Ice	17.00 21.00 25.00	17.00 21.00 25.00	600.00 750.00 900.00

Dishes

Description	Face or Leg	Dish Type	Offset Type	Offsets: Horz Lateral Vert ft	Azimuth Adjustment °	3 dB Beam Width °	Elevation ft	Outside Diameter ft		Aperture Area ft^2	Weight lb
10' dish	C	Grid	From Leg	4.00 0.00 0.00	-60.0000		320.00	10.00	No Ice 1/2" Ice 1" Ice	78.54 79.85 81.16	500.00 910.00 1320.00
10' dish	C	Grid	From Leg	1.00 0.00 0.00	45.0000		310.00	10.00	No Ice 1/2" Ice 1" Ice	78.54 79.85 81.16	500.00 910.00 1320.00
6' Dish	A	Paraboloid w/Radome	From Leg	1.50 0.00 0.00	-45.0000		275.00	6.00	No Ice 1/2" Ice 1" Ice	28.27 29.07 29.87	80.00 100.00 120.00
6' Dish	B	Grid	From Leg	1.00 0.00 0.00	45.0000		130.00	6.00	No Ice 1/2" Ice 1" Ice	28.27 29.07 29.87	80.00 100.00 120.00

Tower Pressures - No Ice

G_H = 0.850 (base tower), 1.100 (upper structure)

Section Elevation ft	z ft	K_Z	q_z psf	A_G ft^2	Face	A_F ft^2	A_R ft^2	A_{leg} ft^2	Leg %	C_AA_A In Face ft^2	C_AA_A Out Face ft^2
L1 347.00-330.00	338.50	1.636	60	44.271	A	0.000	6.361	3.542	55.68	0.000	0.000
					B	0.000	6.361		55.68	0.000	0.000
					C	0.000	6.361		55.68	1.700	0.000
T1 330.00-320.00	325.00	1.622	60	51.875	A	0.000	8.046	3.750	46.61	1.980	0.000
					B	0.000	8.046		46.61	0.000	0.000
					C	0.000	8.046		46.61	1.000	0.000
T2 320.00-300.00	310.00	1.606	59	103.750	A	0.000	14.904	7.500	50.32	13.818	0.000
					B	0.000	14.904		50.32	0.000	0.000
					C	0.000	14.904		50.32	2.000	0.000
T3 300.00-280.00	290.00	1.584	58	103.750	A	0.000	14.904	7.500	50.32	18.160	0.000
					B	0.000	14.904		50.32	3.570	0.000
					C	0.000	14.904		50.32	9.555	0.000
T4 280.00-260.00	270.00	1.56	57	103.750	A	0.000	14.904	7.500	50.32	18.160	0.000
					B	0.000	14.904		50.32	7.085	0.000
					C	0.000	14.904		50.32	13.620	0.000
T5 260.00-240.00	250.00	1.535	56	103.750	A	0.000	14.904	7.500	50.32	19.710	0.000
					B	0.000	14.904		50.32	7.860	0.000
					C	0.000	14.904		50.32	16.720	0.000
T6 240.00-220.00	230.00	1.508	55	103.750	A	0.000	14.904	7.500	50.32	27.200	0.000
					B	0.000	14.904		50.32	7.860	0.000
					C	0.000	14.904		50.32	16.720	0.000
T7 220.00-200.00	210.00	1.48	54	104.167	A	0.000	16.890	8.333	49.34	45.310	0.000
					B	0.000	16.890		49.34	7.860	0.000
					C	0.000	16.890		49.34	17.497	0.000
T8 200.00-180.00	190.00	1.449	53	104.583	A	0.000	19.736	9.167	46.45	49.150	0.000
					B	0.000	19.736		46.45	34.648	0.000
					C	0.000	19.736		46.45	18.940	0.000
T9 180.00-160.00	170.00	1.415	52	104.583	A	0.000	20.332	9.167	45.09	58.060	0.000
					B	0.000	20.332		45.09	51.280	0.000
					C	0.000	20.332		45.09	21.712	0.000
T10 160.00-140.00	150.00	1.378	51	104.583	A	0.000	17.682	9.167	51.84	59.446	0.000
					B	0.000	17.682		51.84	82.168	0.000
					C	0.000	17.682		51.84	28.020	0.000
T11	130.00	1.337	49	104.583	A	0.000	17.682	9.167	51.84	64.000	0.000

Section Elevation ft	z ft	K_Z	q_z psf	A_G ft²	Face	A_F ft²	A_R ft²	A_{leg} ft²	Leg %	C_AA_A In Face ft²	C_AA_A Out Face ft²
140.00-120.00					B	0.000	17.682		51.84	82.168	0.000
					C	0.000	17.682		51.84	29.180	0.000
T12	110.00	1.291	47	104.583	A	0.000	17.682	9.167	51.84	65.980	0.000
120.00-100.00					B	0.000	17.682		51.84	83.500	0.000
					C	0.000	17.682		51.84	29.180	0.000
T13	90.00	1.238	46	104.583	A	0.000	17.682	9.167	51.84	65.980	0.000
100.00-80.00					B	0.000	17.682		51.84	85.387	0.000
					C	0.000	17.682		51.84	29.180	0.000
T14	70.00	1.174	43	104.583	A	0.000	17.682	9.167	51.84	65.980	0.000
80.00-60.00					B	0.000	17.682		51.84	86.608	0.000
					C	0.000	17.682		51.84	29.180	0.000
T15	50.00	1.094	40	104.583	A	0.000	17.682	9.167	51.84	65.980	0.000
60.00-40.00					B	0.000	17.682		51.84	88.933	0.000
					C	0.000	17.682		51.84	29.180	0.000
T16	30.00	0.982	36	104.583	A	0.000	17.682	9.167	51.84	65.980	0.000
40.00-20.00					B	0.000	17.682		51.84	89.708	0.000
					C	0.000	17.682		51.84	29.180	0.000
T17 20.00-5.25	12.63	0.85	31	77.130	A	0.000	13.494	6.760	50.10	46.186	0.000
					B	0.000	13.494		50.10	62.796	0.000
					C	0.000	13.494		50.10	20.426	0.000
T18 5.25-0.00	2.63	0.85	31	14.458	A	3.461	3.829	2.746	37.67	0.000	0.000
					B	3.461	3.829		37.67	0.000	0.000
					C	3.461	3.829		37.67	0.000	0.000

Tower Pressure - With Ice

G_H = 0.850 (base tower), 1.100 (upper structure)

Section Elevation ft	z ft	K_Z	q_z psf	t_Z in	A_G ft²	Face	A_F ft²	A_R ft²	A_{leg} ft²	Leg %	C_AA_A In Face ft²	C_AA_A Out Face ft²
L1	338.50	1.636	9	1.2621	47.847	A	0.000	26.992	10.694	39.62	0.000	0.000
347.00-330.00						B	0.000	26.992		39.62	0.000	0.000
						C	0.000	26.992		39.62	5.991	0.000
T1	325.00	1.622	9	1.2570	53.970	A	0.000	24.147	7.940	32.88	4.494	0.000
330.00-320.00						B	0.000	24.147		32.88	0.000	0.000
						C	0.000	24.147		32.88	3.514	0.000
T2	310.00	1.606	9	1.2511	107.920	A	0.000	43.987	15.841	36.01	37.173	0.000
320.00-300.00						B	0.000	43.987		36.01	0.000	0.000
						C	0.000	43.987		36.01	7.004	0.000
T3	290.00	1.584	9	1.2428	107.893	A	0.000	43.793	15.785	36.04	48.775	0.000
300.00-280.00						B	0.000	43.793		36.04	7.298	0.000
						C	0.000	43.793		36.04	30.863	0.000
T4	270.00	1.56	8	1.2339	107.863	A	0.000	43.588	15.726	36.08	48.572	0.000
280.00-260.00						B	0.000	43.588		36.08	15.722	0.000
						C	0.000	43.588		36.08	47.373	0.000
T5	250.00	1.535	8	1.2245	107.832	A	0.000	43.368	15.663	36.12	52.353	0.000
260.00-240.00						B	0.000	43.368		36.12	17.656	0.000
						C	0.000	43.368		36.12	55.206	0.000
T6	230.00	1.508	8	1.2143	107.798	A	0.000	43.132	15.595	36.16	66.939	0.000
240.00-220.00						B	0.000	43.132		36.16	17.574	0.000
						C	0.000	43.132		36.16	54.988	0.000
T7	210.00	1.48	8	1.2033	108.178	A	0.000	44.782	16.355	36.52	100.650	0.000
220.00-200.00						B	0.000	44.782		36.52	17.486	0.000
						C	0.000	44.782		36.52	57.213	0.000

Section Elevation ft	z ft	K_z	q_z psf	t_z in	A_G ft²	Face	A_F ft²	A_R ft²	A_{leg} ft²	Leg %	C_AA_A In Face ft²	C_AA_A Out Face ft²
T8 200.00-180.00	190.00	1.449	8	1.1913	108.554	A	0.000	47.255	17.109	36.21	111.119	0.000
						B	0.000	47.255		36.21	83.851	0.000
						C	0.000	47.255		36.21	61.480	0.000
T9 180.00-160.00	170.00	1.415	8	1.1781	108.510	A	0.000	48.483	17.021	35.11	129.842	0.000
						B	0.000	48.483		35.11	96.610	0.000
						C	0.000	48.483		35.11	69.336	0.000
T10 160.00-140.00	150.00	1.378	7	1.1635	108.462	A	0.000	44.560	16.923	37.98	132.216	0.000
						B	0.000	44.560		37.98	120.476	0.000
						C	0.000	44.560		37.98	89.890	0.000
T11 140.00-120.00	130.00	1.337	7	1.1469	108.406	A	0.000	44.178	16.813	38.06	141.301	0.000
						B	0.000	44.178		38.06	119.897	0.000
						C	0.000	44.178		38.06	95.040	0.000
T12 120.00-100.00	110.00	1.291	7	1.1279	108.343	A	0.000	43.739	16.686	38.15	144.592	0.000
						B	0.000	43.739		38.15	123.270	0.000
						C	0.000	43.739		38.15	94.276	0.000
T13 100.00-80.00	90.00	1.238	7	1.1055	108.268	A	0.000	43.221	16.537	38.26	143.434	0.000
						B	0.000	43.221		38.26	128.077	0.000
						C	0.000	43.221		38.26	93.377	0.000
T14 80.00-60.00	70.00	1.174	6	1.0781	108.177	A	0.000	42.588	16.354	38.40	142.017	0.000
						B	0.000	42.588		38.40	130.550	0.000
						C	0.000	42.588		38.40	92.275	0.000
T15 60.00-40.00	50.00	1.094	6	1.0424	108.058	A	0.000	41.764	16.116	38.59	140.175	0.000
						B	0.000	41.764		38.59	134.469	0.000
						C	0.000	41.764		38.59	90.844	0.000
T16 40.00-20.00	30.00	0.982	5	0.9905	107.885	A	0.000	40.564	15.770	38.88	137.496	0.000
						B	0.000	40.564		38.88	133.849	0.000
						C	0.000	40.564		38.88	88.763	0.000
T17 20.00-5.25	12.63	0.85	5	0.9084	79.363	A	0.000	29.652	11.227	37.86	93.283	0.000
						B	0.000	29.652		37.86	90.997	0.000
						C	0.000	29.652		37.86	55.350	0.000
T18 5.25-0.00	2.63	0.85	5	0.7764	15.210	A	3.461	7.778	4.296	38.23	0.000	0.000
						B	3.461	7.778		38.23	0.000	0.000
						C	3.461	7.778		38.23	0.000	0.000

Tower Pressure - Service

G_H = 0.850 (base tower), 1.100 (upper structure)

Section Elevation ft	z ft	K_z	q_z psf	A_G ft²	Face	A_F ft²	A_R ft²	A_{leg} ft²	Leg %	C_AA_A In Face ft²	C_AA_A Out Face ft²
L1 347.00-330.00	338.50	1.636	13	44.271	A	0.000	6.361	3.542	55.68	0.000	0.000
					B	0.000	6.361		55.68	0.000	0.000
					C	0.000	6.361		55.68	1.700	0.000
T1 330.00-320.00	325.00	1.622	13	51.875	A	0.000	8.046	3.750	46.61	1.980	0.000
					B	0.000	8.046		46.61	0.000	0.000
					C	0.000	8.046		46.61	1.000	0.000
T2 320.00-300.00	310.00	1.606	13	103.750	A	0.000	14.904	7.500	50.32	13.818	0.000
					B	0.000	14.904		50.32	0.000	0.000
					C	0.000	14.904		50.32	2.000	0.000
T3 300.00-280.00	290.00	1.584	12	103.750	A	0.000	14.904	7.500	50.32	18.160	0.000
					B	0.000	14.904		50.32	3.570	0.000
					C	0.000	14.904		50.32	9.555	0.000
T4	270.00	1.56	12	103.750	A	0.000	14.904	7.500	50.32	18.160	0.000

Section Elevation ft	z ft	K_Z	q_z psf	A_G ft²	Face	A_F ft²	A_R ft²	A_{leg} ft²	Leg %	C_AA_A In Face ft²	C_AA_A Out Face ft²
280.00-260.00					B	0.000	14.904		50.32	7.085	0.000
					C	0.000	14.904		50.32	13.620	0.000
T5	250.00	1.535	12	103.750	A	0.000	14.904	7.500	50.32	19.710	0.000
260.00-240.00					B	0.000	14.904		50.32	7.860	0.000
					C	0.000	14.904		50.32	16.720	0.000
T6	230.00	1.508	12	103.750	A	0.000	14.904	7.500	50.32	27.200	0.000
240.00-220.00					B	0.000	14.904		50.32	7.860	0.000
					C	0.000	14.904		50.32	16.720	0.000
T7	210.00	1.48	12	104.167	A	0.000	16.890	8.333	49.34	45.310	0.000
220.00-200.00					B	0.000	16.890		49.34	7.860	0.000
					C	0.000	16.890		49.34	17.497	0.000
T8	190.00	1.449	11	104.583	A	0.000	19.736	9.167	46.45	49.150	0.000
200.00-180.00					B	0.000	19.736		46.45	34.648	0.000
					C	0.000	19.736		46.45	18.940	0.000
T9	170.00	1.415	11	104.583	A	0.000	20.332	9.167	45.09	58.060	0.000
180.00-160.00					B	0.000	20.332		45.09	51.280	0.000
					C	0.000	20.332		45.09	21.712	0.000
T10	150.00	1.378	11	104.583	A	0.000	17.682	9.167	51.84	59.446	0.000
160.00-140.00					B	0.000	17.682		51.84	82.168	0.000
					C	0.000	17.682		51.84	28.020	0.000
T11	130.00	1.337	10	104.583	A	0.000	17.682	9.167	51.84	64.000	0.000
140.00-120.00					B	0.000	17.682		51.84	82.168	0.000
					C	0.000	17.682		51.84	29.180	0.000
T12	110.00	1.291	10	104.583	A	0.000	17.682	9.167	51.84	65.980	0.000
120.00-100.00					B	0.000	17.682		51.84	83.500	0.000
					C	0.000	17.682		51.84	29.180	0.000
T13	90.00	1.238	10	104.583	A	0.000	17.682	9.167	51.84	65.980	0.000
100.00-80.00					B	0.000	17.682		51.84	85.387	0.000
					C	0.000	17.682		51.84	29.180	0.000
T14	70.00	1.174	9	104.583	A	0.000	17.682	9.167	51.84	65.980	0.000
80.00-60.00					B	0.000	17.682		51.84	86.608	0.000
					C	0.000	17.682		51.84	29.180	0.000
T15	50.00	1.094	9	104.583	A	0.000	17.682	9.167	51.84	65.980	0.000
60.00-40.00					B	0.000	17.682		51.84	88.933	0.000
					C	0.000	17.682		51.84	29.180	0.000
T16	30.00	0.982	8	104.583	A	0.000	17.682	9.167	51.84	65.980	0.000
40.00-20.00					B	0.000	17.682		51.84	89.708	0.000
					C	0.000	17.682		51.84	29.180	0.000
T17 20.00-5.25	12.63	0.85	7	77.130	A	0.000	13.494	6.760	50.10	46.186	0.000
					B	0.000	13.494		50.10	62.796	0.000
					C	0.000	13.494		50.10	20.426	0.000
T18 5.25-0.00	2.63	0.85	7	14.458	A	3.461	3.829	2.746	37.67	0.000	0.000
					B	3.461	3.829		37.67	0.000	0.000
					C	3.461	3.829		37.67	0.000	0.000

Tower Forces - No Ice - Wind Normal To Face

Section Elevation ft	Add Weight lb	Self Weight lb	Face	e	C_F	q_z psf	D_F	D_R	A_E ft²	F lb	w plf	Ctrl. Face
L1	11.90	365.78	A	0.144	2.795	60	1	1	3.606	734.56	43.21	C
347.00-330.00			B	0.144	2.795		1	1	3.606			
			C	0.144	2.795		1	1	3.606			
T1	17.40	796.69	A	0.155	2.753	60	1	1	4.571	728.63	72.86	C
330.00-320.00			B	0.155	2.753		1	1	4.571			
			C	0.155	2.753		1	1	4.571			

Section Elevation ft	Add Weight lb	Self Weight lb	Face	e	C_F	q_z psf	D_F	D_R	A_E ft^2	F lb	w plf	Ctrl. Face
T2 320.00-300.00	84.94	1474.41	A	0.144	2.795	59	1	1	8.449	1662.00	83.10	C
			B	0.144	2.795		1	1	8.449			
			C	0.144	2.795		1	1	8.449			
T3 300.00-280.00	156.80	1474.41	A	0.144	2.795	58	1	1	8.449	2098.20	104.91	C
			B	0.144	2.795		1	1	8.449			
			C	0.144	2.795		1	1	8.449			
T4 280.00-260.00	189.90	1474.41	A	0.144	2.795	57	1	1	8.449	2288.64	114.43	C
			B	0.144	2.795		1	1	8.449			
			C	0.144	2.795		1	1	8.449			
T5 260.00-240.00	213.00	1474.41	A	0.144	2.795	56	1	1	8.449	2408.03	120.40	C
			B	0.144	2.795		1	1	8.449			
			C	0.144	2.795		1	1	8.449			
T6 240.00-220.00	250.80	1474.41	A	0.144	2.795	55	1	1	8.449	2577.99	128.90	C
			B	0.144	2.795		1	1	8.449			
			C	0.144	2.795		1	1	8.449			
T7 220.00-200.00	349.43	1898.78	A	0.162	2.727	54	1	1	9.608	3172.92	158.65	C
			B	0.162	2.727		1	1	9.608			
			C	0.162	2.727		1	1	9.608			
T8 200.00-180.00	557.50	2589.89	A	0.189	2.634	53	1	1	11.300	4139.48	206.97	C
			B	0.189	2.634		1	1	11.300			
			C	0.189	2.634		1	1	11.300			
T9 180.00-160.00	756.96	2680.09	A	0.194	2.615	52	1	1	11.661	4827.19	241.36	C
		TA	B	0.194	2.615		1	1	11.661			
		2076.41	C	0.194	2.615		1	1	11.661			
T10 160.00-140.00	980.88	2108.89	A	0.169	2.703	51	1	1	10.074	5558.44	277.92	C
			B	0.169	2.703		1	1	10.074			
			C	0.169	2.703		1	1	10.074			
T11 140.00-120.00	1009.80	2108.89	A	0.169	2.703	49	1	1	10.074	5536.82	276.84	C
			B	0.169	2.703		1	1	10.074			
			C	0.169	2.703		1	1	10.074			
T12 120.00-100.00	1026.68	2108.89	A	0.169	2.703	47	1	1	10.074	5425.68	271.28	C
			B	0.169	2.703		1	1	10.074			
			C	0.169	2.703		1	1	10.074			
T13 100.00-80.00	1035.86	2108.89	A	0.169	2.703	46	1	1	10.074	5245.05	262.25	C
			B	0.169	2.703		1	1	10.074			
			C	0.169	2.703		1	1	10.074			
T14 80.00-60.00	1041.80	2108.89	A	0.169	2.703	43	1	1	10.074	5001.64	250.08	C
			B	0.169	2.703		1	1	10.074			
			C	0.169	2.703		1	1	10.074			
T15 60.00-40.00	1051.70	2108.89	A	0.169	2.703	40	1	1	10.074	4707.30	235.36	C
			B	0.169	2.703		1	1	10.074			
			C	0.169	2.703		1	1	10.074			
T16 40.00-20.00	1055.00	2108.89	A	0.169	2.703	36	1	1	10.074	4241.61	212.08	C
			B	0.169	2.703		1	1	10.074			
			C	0.169	2.703		1	1	10.074			
T17 20.00-5.25	738.50	1610.88	A	0.175	2.682	31	1	1	7.699	2611.55	177.05	C
			B	0.175	2.682		1	1	7.699			
			C	0.175	2.682		1	1	7.699			
T18 5.25-0.00	0.00	831.39	A	0.504	1.895	31	1	1	6.093	306.70	58.42	C
			B	0.504	1.895		1	1	6.093			
			C	0.504	1.895		1	1	6.093			
Sum Weight:	10528.85	34984.18								63272.42		

Tower Forces - No Ice - Wind 45 To Face

Section Elevation ft	Add Weight lb	Self Weight lb	Face	e	C_F	q_z psf	D_F	D_R	A_E ft²	F lb	w plf	Ctrl. Face
L1	11.90	365.78	A	0.144	2.795	60	0.825	1	3.606	734.56	43.21	C
347.00-330.00			B	0.144	2.795		0.825	1	3.606			
			C	0.144	2.795		0.825	1	3.606			
T1	17.40	796.69	A	0.155	2.753	60	0.825	1	4.571	728.63	72.86	C
330.00-320.00			B	0.155	2.753		0.825	1	4.571			
			C	0.155	2.753		0.825	1	4.571			
T2	84.94	1474.41	A	0.144	2.795	59	0.825	1	8.449	1662.00	83.10	C
320.00-300.00			B	0.144	2.795		0.825	1	8.449			
			C	0.144	2.795		0.825	1	8.449			
T3	156.80	1474.41	A	0.144	2.795	58	0.825	1	8.449	2098.20	104.91	C
300.00-280.00			B	0.144	2.795		0.825	1	8.449			
			C	0.144	2.795		0.825	1	8.449			
T4	189.90	1474.41	A	0.144	2.795	57	0.825	1	8.449	2288.64	114.43	C
280.00-260.00			B	0.144	2.795		0.825	1	8.449			
			C	0.144	2.795		0.825	1	8.449			
T5	213.00	1474.41	A	0.144	2.795	56	0.825	1	8.449	2408.03	120.40	C
260.00-240.00			B	0.144	2.795		0.825	1	8.449			
			C	0.144	2.795		0.825	1	8.449			
T6	250.80	1474.41	A	0.144	2.795	55	0.825	1	8.449	2577.99	128.90	C
240.00-220.00			B	0.144	2.795		0.825	1	8.449			
			C	0.144	2.795		0.825	1	8.449			
T7	349.43	1898.78	A	0.162	2.727	54	0.825	1	9.608	3172.92	158.65	C
220.00-200.00			B	0.162	2.727		0.825	1	9.608			
			C	0.162	2.727		0.825	1	9.608			
T8	557.50	2589.89	A	0.189	2.634	53	0.825	1	11.300	4139.48	206.97	C
200.00-180.00			B	0.189	2.634		0.825	1	11.300			
			C	0.189	2.634		0.825	1	11.300			
T9	756.96	2680.09	A	0.194	2.615	52	0.825	1	11.661	4827.19	241.36	C
180.00-160.00		TA	B	0.194	2.615		0.825	1	11.661			
		2076.41	C	0.194	2.615		0.825	1	11.661			
T10	980.88	2108.89	A	0.169	2.703	51	0.825	1	10.074	5558.44	277.92	C
160.00-140.00			B	0.169	2.703		0.825	1	10.074			
			C	0.169	2.703		0.825	1	10.074			
T11	1009.80	2108.89	A	0.169	2.703	49	0.825	1	10.074	5536.82	276.84	C
140.00-120.00			B	0.169	2.703		0.825	1	10.074			
			C	0.169	2.703		0.825	1	10.074			
T12	1026.68	2108.89	A	0.169	2.703	47	0.825	1	10.074	5425.68	271.28	C
120.00-100.00			B	0.169	2.703		0.825	1	10.074			
			C	0.169	2.703		0.825	1	10.074			
T13	1035.86	2108.89	A	0.169	2.703	46	0.825	1	10.074	5245.05	262.25	C
100.00-80.00			B	0.169	2.703		0.825	1	10.074			
			C	0.169	2.703		0.825	1	10.074			
T14	1041.80	2108.89	A	0.169	2.703	43	0.825	1	10.074	5001.64	250.08	C
80.00-60.00			B	0.169	2.703		0.825	1	10.074			
			C	0.169	2.703		0.825	1	10.074			
T15	1051.70	2108.89	A	0.169	2.703	40	0.825	1	10.074	4707.30	235.36	C
60.00-40.00			B	0.169	2.703		0.825	1	10.074			
			C	0.169	2.703		0.825	1	10.074			
T16	1055.00	2108.89	A	0.169	2.703	36	0.825	1	10.074	4241.61	212.08	C
40.00-20.00			B	0.169	2.703		0.825	1	10.074			
			C	0.169	2.703		0.825	1	10.074			
T17	738.50	1610.88	A	0.175	2.682	31	0.825	1	7.699	2611.55	177.05	C
20.00-5.25			B	0.175	2.682		0.825	1	7.699			
			C	0.175	2.682		0.825	1	7.699			
T18 5.25-0.00	0.00	831.39	A	0.504	1.895	31	0.825	1	5.487	276.21	52.61	C
			B	0.504	1.895		0.825	1	5.487			
			C	0.504	1.895		0.825	1	5.487			
Sum Weight:	10528.85	34984.18								63241.93		

Tower Forces - No Ice - Wind 60 To Face

Section Elevation ft	Add Weight lb	Self Weight lb	Face	e	C_F	q_z psf	D_F	D_R	A_E ft^2	F lb	w plf	Ctrl. Face
L1	11.90	365.78	A	0.144	2.795	60	0.8	1	3.606	734.56	43.21	C
347.00-330.00			B	0.144	2.795		0.8	1	3.606			
			C	0.144	2.795		0.8	1	3.606			
T1	17.40	796.69	A	0.155	2.753	60	0.8	1	4.571	728.63	72.86	C
330.00-320.00			B	0.155	2.753		0.8	1	4.571			
			C	0.155	2.753		0.8	1	4.571			
T2	84.94	1474.41	A	0.144	2.795	59	0.8	1	8.449	1662.00	83.10	C
320.00-300.00			B	0.144	2.795		0.8	1	8.449			
			C	0.144	2.795		0.8	1	8.449			
T3	156.80	1474.41	A	0.144	2.795	58	0.8	1	8.449	2098.20	104.91	C
300.00-280.00			B	0.144	2.795		0.8	1	8.449			
			C	0.144	2.795		0.8	1	8.449			
T4	189.90	1474.41	A	0.144	2.795	57	0.8	1	8.449	2288.64	114.43	C
280.00-260.00			B	0.144	2.795		0.8	1	8.449			
			C	0.144	2.795		0.8	1	8.449			
T5	213.00	1474.41	A	0.144	2.795	56	0.8	1	8.449	2408.03	120.40	C
260.00-240.00			B	0.144	2.795		0.8	1	8.449			
			C	0.144	2.795		0.8	1	8.449			
T6	250.80	1474.41	A	0.144	2.795	55	0.8	1	8.449	2577.99	128.90	C
240.00-220.00			B	0.144	2.795		0.8	1	8.449			
			C	0.144	2.795		0.8	1	8.449			
T7	349.43	1898.78	A	0.162	2.727	54	0.8	1	9.608	3172.92	158.65	C
220.00-200.00			B	0.162	2.727		0.8	1	9.608			
			C	0.162	2.727		0.8	1	9.608			
T8	557.50	2589.89	A	0.189	2.634	53	0.8	1	11.300	4139.48	206.97	C
200.00-180.00			B	0.189	2.634		0.8	1	11.300			
			C	0.189	2.634		0.8	1	11.300			
T9	756.96	2680.09	A	0.194	2.615	52	0.8	1	11.661	4827.19	241.36	C
180.00-160.00		TA	B	0.194	2.615		0.8	1	11.661			
		2076.41	C	0.194	2.615		0.8	1	11.661			
T10	980.88	2108.89	A	0.169	2.703	51	0.8	1	10.074	5558.44	277.92	C
160.00-140.00			B	0.169	2.703		0.8	1	10.074			
			C	0.169	2.703		0.8	1	10.074			
T11	1009.80	2108.89	A	0.169	2.703	49	0.8	1	10.074	5536.82	276.84	C
140.00-120.00			B	0.169	2.703		0.8	1	10.074			
			C	0.169	2.703		0.8	1	10.074			
T12	1026.68	2108.89	A	0.169	2.703	47	0.8	1	10.074	5425.68	271.28	C
120.00-100.00			B	0.169	2.703		0.8	1	10.074			
			C	0.169	2.703		0.8	1	10.074			
T13	1035.86	2108.89	A	0.169	2.703	46	0.8	1	10.074	5245.05	262.25	C
100.00-80.00			B	0.169	2.703		0.8	1	10.074			
			C	0.169	2.703		0.8	1	10.074			
T14	1041.80	2108.89	A	0.169	2.703	43	0.8	1	10.074	5001.64	250.08	C
80.00-60.00			B	0.169	2.703		0.8	1	10.074			
			C	0.169	2.703		0.8	1	10.074			
T15	1051.70	2108.89	A	0.169	2.703	40	0.8	1	10.074	4707.30	235.36	C
60.00-40.00			B	0.169	2.703		0.8	1	10.074			
			C	0.169	2.703		0.8	1	10.074			
T16	1055.00	2108.89	A	0.169	2.703	36	0.8	1	10.074	4241.61	212.08	C
40.00-20.00			B	0.169	2.703		0.8	1	10.074			
			C	0.169	2.703		0.8	1	10.074			
T17	738.50	1610.88	A	0.175	2.682	31	0.8	1	7.699	2611.55	177.05	C
20.00-5.25			B	0.175	2.682		0.8	1	7.699			

Section Elevation ft	Add Weight lb	Self Weight lb	Face	e	C_F	q_z psf	D_F	D_R	A_E ft²	F lb	w plf	Ctrl. Face
T18 5.25-0.00	0.00	831.39	C	0.175	2.682	31	0.8	1	7.699	271.85	51.78	C
			A	0.504	1.895		0.8	1	5.401			
			B	0.504	1.895		0.8	1	5.401			
			C	0.504	1.895		0.8	1	5.401			
Sum Weight:	10528.85	34984.18								63237.58		

Tower Forces - No Ice - Wind 90 To Face

Section Elevation ft	Add Weight lb	Self Weight lb	Face	e	C_F	q_z psf	D_F	D_R	A_E ft²	F lb	w plf	Ctrl. Face
L1 347.00-330.00	11.90	365.78	A	0.144	2.795	60	0.85	1	3.606	734.56	43.21	C
			B	0.144	2.795		0.85	1	3.606			
			C	0.144	2.795		0.85	1	3.606			
T1 330.00-320.00	17.40	796.69	A	0.155	2.753	60	0.85	1	4.571	728.63	72.86	C
			B	0.155	2.753		0.85	1	4.571			
			C	0.155	2.753		0.85	1	4.571			
T2 320.00-300.00	84.94	1474.41	A	0.144	2.795	59	0.85	1	8.449	1662.00	83.10	C
			B	0.144	2.795		0.85	1	8.449			
			C	0.144	2.795		0.85	1	8.449			
T3 300.00-280.00	156.80	1474.41	A	0.144	2.795	58	0.85	1	8.449	2098.20	104.91	C
			B	0.144	2.795		0.85	1	8.449			
			C	0.144	2.795		0.85	1	8.449			
T4 280.00-260.00	189.90	1474.41	A	0.144	2.795	57	0.85	1	8.449	2288.64	114.43	C
			B	0.144	2.795		0.85	1	8.449			
			C	0.144	2.795		0.85	1	8.449			
T5 260.00-240.00	213.00	1474.41	A	0.144	2.795	56	0.85	1	8.449	2408.03	120.40	C
			B	0.144	2.795		0.85	1	8.449			
			C	0.144	2.795		0.85	1	8.449			
T6 240.00-220.00	250.80	1474.41	A	0.144	2.795	55	0.85	1	8.449	2577.99	128.90	C
			B	0.144	2.795		0.85	1	8.449			
			C	0.144	2.795		0.85	1	8.449			
T7 220.00-200.00	349.43	1898.78	A	0.162	2.727	54	0.85	1	9.608	3172.92	158.65	C
			B	0.162	2.727		0.85	1	9.608			
			C	0.162	2.727		0.85	1	9.608			
T8 200.00-180.00	557.50	2589.89	A	0.189	2.634	53	0.85	1	11.300	4139.48	206.97	C
			B	0.189	2.634		0.85	1	11.300			
			C	0.189	2.634		0.85	1	11.300			
T9 180.00-160.00	756.96	2680.09	A	0.194	2.615	52	0.85	1	11.661	4827.19	241.36	C
		TA	B	0.194	2.615		0.85	1	11.661			
		2076.41	C	0.194	2.615		0.85	1	11.661			
T10 160.00-140.00	980.88	2108.89	A	0.169	2.703	51	0.85	1	10.074	5558.44	277.92	C
			B	0.169	2.703		0.85	1	10.074			
			C	0.169	2.703		0.85	1	10.074			
T11 140.00-120.00	1009.80	2108.89	A	0.169	2.703	49	0.85	1	10.074	5536.82	276.84	C
			B	0.169	2.703		0.85	1	10.074			
			C	0.169	2.703		0.85	1	10.074			
T12 120.00-100.00	1026.68	2108.89	A	0.169	2.703	47	0.85	1	10.074	5425.68	271.28	C
			B	0.169	2.703		0.85	1	10.074			
			C	0.169	2.703		0.85	1	10.074			
T13 100.00-80.00	1035.86	2108.89	A	0.169	2.703	46	0.85	1	10.074	5245.05	262.25	C
			B	0.169	2.703		0.85	1	10.074			
			C	0.169	2.703		0.85	1	10.074			

Section Elevation ft	Add Weight lb	Self Weight lb	Face	e	C_F	q_z psf	D_F	D_R	A_E ft²	F lb	w plf	Ctrl. Face
T14 80.00-60.00	1041.80	2108.89	A	0.169	2.703	43	0.85	1	10.074	5001.64	250.08	C
			B	0.169	2.703		0.85	1	10.074			
			C	0.169	2.703		0.85	1	10.074			
T15 60.00-40.00	1051.70	2108.89	A	0.169	2.703	40	0.85	1	10.074	4707.30	235.36	C
			B	0.169	2.703		0.85	1	10.074			
			C	0.169	2.703		0.85	1	10.074			
T16 40.00-20.00	1055.00	2108.89	A	0.169	2.703	36	0.85	1	10.074	4241.61	212.08	C
			B	0.169	2.703		0.85	1	10.074			
			C	0.169	2.703		0.85	1	10.074			
T17 20.00-5.25	738.50	1610.88	A	0.175	2.682	31	0.85	1	7.699	2611.55	177.05	C
			B	0.175	2.682		0.85	1	7.699			
			C	0.175	2.682		0.85	1	7.699			
T18 5.25-0.00	0.00	831.39	A	0.504	1.895	31	0.85	1	5.574	280.56	53.44	C
			B	0.504	1.895		0.85	1	5.574			
			C	0.504	1.895		0.85	1	5.574			
Sum Weight:	10528.85	34984.18								63246.29		

Tower Forces - With Ice - Wind Normal To Face

Section Elevation ft	Add Weight lb	Self Weight lb	Face	e	C_F	q_z psf	D_F	D_R	A_E ft²	F lb	w plf	Ctrl. Face
L1 347.00-330.00	71.20	1117.05	A	0.564	1.831	9	1	1	19.478	374.65	22.04	C
			B	0.564	1.831		1	1	19.478			
			C	0.564	1.831		1	1	19.478			
T1 330.00-320.00	101.77	1547.12	A	0.447	1.978	9	1	1	15.890	268.90	26.89	C
			B	0.447	1.978		1	1	15.890			
			C	0.447	1.978		1	1	15.890			
T2 320.00-300.00	516.31	2811.67	A	0.408	2.049	9	1	1	28.132	622.45	31.12	C
			B	0.408	2.049		1	1	28.132			
			C	0.408	2.049		1	1	28.132			
T3 300.00-280.00	987.60	2798.11	A	0.406	2.052	9	1	1	27.976	798.66	39.93	C
			B	0.406	2.052		1	1	27.976			
			C	0.406	2.052		1	1	27.976			
T4 280.00-260.00	1225.36	2783.75	A	0.404	2.056	8	1	1	27.810	892.42	44.62	C
			B	0.404	2.056		1	1	27.810			
			C	0.404	2.056		1	1	27.810			
T5 260.00-240.00	1383.43	2768.48	A	0.402	2.06	8	1	1	27.633	935.24	46.76	C
			B	0.402	2.06		1	1	27.633			
			C	0.402	2.06		1	1	27.633			
T6 240.00-220.00	1549.53	2752.15	A	0.4	2.064	8	1	1	27.444	978.59	48.93	C
			B	0.4	2.064		1	1	27.444			
			C	0.4	2.064		1	1	27.444			
T7 220.00-200.00	1967.67	3246.62	A	0.414	2.037	8	1	1	28.768	1103.96	55.20	C
			B	0.414	2.037		1	1	28.768			
			C	0.414	2.037		1	1	28.768			
T8 200.00-180.00	2815.24	4051.97	A	0.435	1.998	8	1	1	30.821	1382.69	69.13	C
			B	0.435	1.998		1	1	30.821			
			C	0.435	1.998		1	1	30.821			
T9 180.00-160.00	3399.42	4176.80	A	0.447	1.979	8	1	1	31.889	1483.68	74.18	C
		TA	B	0.447	1.979		1	1	31.889			
		3485.72	C	0.447	1.979		1	1	31.889			
T10	4139.18	3412.09	A	0.411	2.043	7	1	1	28.563	1451.74*	72.59	C

Section Elevation ft	Add Weight lb	Self Weight lb	Face	e	C_F	q_z psf	D_F	D_R	A_E ft²	F lb	w plf	Ctrl. Face
160.00-140.00			B	0.411	2.043		1	1	28.563			
			C	0.411	2.043		1	1	28.563			
T11	4268.83	3385.00	A	0.408	2.049	7	1	1	28.253	1407.94*	70.40	C
140.00-120.00			B	0.408	2.049		1	1	28.253			
			C	0.408	2.049		1	1	28.253			
T12	4306.64	3354.17	A	0.404	2.057	7	1	1	27.899	1358.49*	67.92	C
120.00-100.00			B	0.404	2.057		1	1	27.899			
			C	0.404	2.057		1	1	27.899			
T13	4295.52	3318.23	A	0.399	2.066	7	1	1	27.484	1301.39*	65.07	C
100.00-80.00			B	0.399	2.066		1	1	27.484			
			C	0.399	2.066		1	1	27.484			
T14	4244.99	3274.85	A	0.394	2.077	6	1	1	26.980	1233.29*	61.66	C
80.00-60.00			B	0.394	2.077		1	1	26.980			
			C	0.394	2.077		1	1	26.980			
T15	4189.70	3219.46	A	0.386	2.091	6	1	1	26.332	1147.68*	57.38	C
60.00-40.00			B	0.386	2.091		1	1	26.332			
			C	0.386	2.091		1	1	26.332			
T16	4041.01	3140.91	A	0.376	2.113	5	1	1	25.401	1029.01*	51.45	C
40.00-20.00			B	0.376	2.113		1	1	25.401			
			C	0.376	2.113		1	1	25.401			
T17	2627.17	2317.26	A	0.374	2.119	5	1	1	18.539	655.05*	44.41	C
20.00-5.25			B	0.374	2.119		1	1	18.539			
			C	0.374	2.119		1	1	18.539			
T18 5.25-0.00	0.00	1101.65	A	0.739	1.783	5	1	1	9.990	70.03	13.34	C
			B	0.739	1.783		1	1	9.990			
			C	0.739	1.783		1	1	9.990			
Sum Weight:	46130.57	58063.05			*2.1A_g limit					18495.87		

Tower Forces - With Ice - Wind 45 To Face

Section Elevation ft	Add Weight lb	Self Weight lb	Face	e	C_F	q_z psf	D_F	D_R	A_E ft²	F lb	w plf	Ctrl. Face
L1	71.20	1117.05	A	0.564	1.831	9	0.825	1	19.478	374.65	22.04	C
347.00-330.00			B	0.564	1.831		0.825	1	19.478			
			C	0.564	1.831		0.825	1	19.478			
T1	101.77	1547.12	A	0.447	1.978	9	0.825	1	15.890	268.90	26.89	C
330.00-320.00			B	0.447	1.978		0.825	1	15.890			
			C	0.447	1.978		0.825	1	15.890			
T2	516.31	2811.67	A	0.408	2.049	9	0.825	1	28.132	622.45	31.12	C
320.00-300.00			B	0.408	2.049		0.825	1	28.132			
			C	0.408	2.049		0.825	1	28.132			
T3	987.60	2798.11	A	0.406	2.052	9	0.825	1	27.976	798.66	39.93	C
300.00-280.00			B	0.406	2.052		0.825	1	27.976			
			C	0.406	2.052		0.825	1	27.976			
T4	1225.36	2783.75	A	0.404	2.056	8	0.825	1	27.810	892.42	44.62	C
280.00-260.00			B	0.404	2.056		0.825	1	27.810			
			C	0.404	2.056		0.825	1	27.810			
T5	1383.43	2768.48	A	0.402	2.06	8	0.825	1	27.633	935.24	46.76	C
260.00-240.00			B	0.402	2.06		0.825	1	27.633			
			C	0.402	2.06		0.825	1	27.633			
T6	1549.53	2752.15	A	0.4	2.064	8	0.825	1	27.444	978.59	48.93	C

Section Elevation ft	Add Weight lb	Self Weight lb	Face	e	C_F	q_z psf	D_F	D_R	A_E ft²	F lb	w plf	Ctrl. Face
240.00-220.00			B	0.4	2.064		0.825	1	27.444			
			C	0.4	2.064		0.825	1	27.444			
T7 220.00-200.00	1967.67	3246.62	A	0.414	2.037	8	0.825	1	28.768	1103.96	55.20	C
			B	0.414	2.037		0.825	1	28.768			
			C	0.414	2.037		0.825	1	28.768			
T8 200.00-180.00	2815.24	4051.97	A	0.435	1.998	8	0.825	1	30.821	1382.69	69.13	C
			B	0.435	1.998		0.825	1	30.821			
			C	0.435	1.998		0.825	1	30.821			
T9 180.00-160.00	3399.42	4176.80	A	0.447	1.979	8	0.825	1	31.889	1483.68	74.18	C
		TA	B	0.447	1.979		0.825	1	31.889			
		3485.72	C	0.447	1.979		0.825	1	31.889			
T10 160.00-140.00	4139.18	3412.09	A	0.411	2.043	7	0.825	1	28.563	1451.74*	72.59	C
			B	0.411	2.043		0.825	1	28.563			
			C	0.411	2.043		0.825	1	28.563			
T11 140.00-120.00	4268.83	3385.00	A	0.408	2.049	7	0.825	1	28.253	1407.94*	70.40	C
			B	0.408	2.049		0.825	1	28.253			
			C	0.408	2.049		0.825	1	28.253			
T12 120.00-100.00	4306.64	3354.17	A	0.404	2.057	7	0.825	1	27.899	1358.49*	67.92	C
			B	0.404	2.057		0.825	1	27.899			
			C	0.404	2.057		0.825	1	27.899			
T13 100.00-80.00	4295.52	3318.23	A	0.399	2.066	7	0.825	1	27.484	1301.39*	65.07	C
			B	0.399	2.066		0.825	1	27.484			
			C	0.399	2.066		0.825	1	27.484			
T14 80.00-60.00	4244.99	3274.85	A	0.394	2.077	6	0.825	1	26.980	1233.29*	61.66	C
			B	0.394	2.077		0.825	1	26.980			
			C	0.394	2.077		0.825	1	26.980			
T15 60.00-40.00	4189.70	3219.46	A	0.386	2.091	6	0.825	1	26.332	1147.68*	57.38	C
			B	0.386	2.091		0.825	1	26.332			
			C	0.386	2.091		0.825	1	26.332			
T16 40.00-20.00	4041.01	3140.91	A	0.376	2.113	5	0.825	1	25.401	1029.01*	51.45	C
			B	0.376	2.113		0.825	1	25.401			
			C	0.376	2.113		0.825	1	25.401			
T17 20.00-5.25	2627.17	2317.26	A	0.374	2.119	5	0.825	1	18.539	655.05*	44.41	C
			B	0.374	2.119		0.825	1	18.539			
			C	0.374	2.119		0.825	1	18.539			
T18 5.25-0.00	0.00	1101.65	A	0.739	1.783	5	0.825	1	9.384	65.78	12.53	C
			B	0.739	1.783		0.825	1	9.384			
			C	0.739	1.783		0.825	1	9.384			
Sum Weight:	46130.57	58063.05			*2.1A_g limit					18491.62		

Tower Forces - With Ice - Wind 60 To Face

Section Elevation ft	Add Weight lb	Self Weight lb	Face	e	C_F	q_z psf	D_F	D_R	A_E ft²	F lb	w plf	Ctrl. Face
L1 347.00-330.00	71.20	1117.05	A	0.564	1.831	9	0.8	1	19.478	374.65	22.04	C
			B	0.564	1.831		0.8	1	19.478			
			C	0.564	1.831		0.8	1	19.478			
T1 330.00-320.00	101.77	1547.12	A	0.447	1.978	9	0.8	1	15.890	268.90	26.89	C
			B	0.447	1.978		0.8	1	15.890			
			C	0.447	1.978		0.8	1	15.890			
T2	516.31	2811.67	A	0.408	2.049	9	0.8	1	28.132	622.45	31.12	C

Section Elevation ft	Add Weight lb	Self Weight lb	Face	e	C_F	q_z psf	D_F	D_R	A_E ft²	F lb	w plf	Ctrl. Face
320.00-300.00			B	0.408	2.049		0.8	1	28.132			
			C	0.408	2.049		0.8	1	28.132			
T3	987.60	2798.11	A	0.406	2.052	9	0.8	1	27.976	798.66	39.93	C
300.00-280.00			B	0.406	2.052		0.8	1	27.976			
			C	0.406	2.052		0.8	1	27.976			
T4	1225.36	2783.75	A	0.404	2.056	8	0.8	1	27.810	892.42	44.62	C
280.00-260.00			B	0.404	2.056		0.8	1	27.810			
			C	0.404	2.056		0.8	1	27.810			
T5	1383.43	2768.48	A	0.402	2.06	8	0.8	1	27.633	935.24	46.76	C
260.00-240.00			B	0.402	2.06		0.8	1	27.633			
			C	0.402	2.06		0.8	1	27.633			
T6	1549.53	2752.15	A	0.4	2.064	8	0.8	1	27.444	978.59	48.93	C
240.00-220.00			B	0.4	2.064		0.8	1	27.444			
			C	0.4	2.064		0.8	1	27.444			
T7	1967.67	3246.62	A	0.414	2.037	8	0.8	1	28.768	1103.96	55.20	C
220.00-200.00			B	0.414	2.037		0.8	1	28.768			
			C	0.414	2.037		0.8	1	28.768			
T8	2815.24	4051.97	A	0.435	1.998	8	0.8	1	30.821	1382.69	69.13	C
200.00-180.00			B	0.435	1.998		0.8	1	30.821			
			C	0.435	1.998		0.8	1	30.821			
T9	3399.42	4176.80	A	0.447	1.979	8	0.8	1	31.889	1483.68	74.18	C
180.00-160.00		TA	B	0.447	1.979		0.8	1	31.889			
		3485.72	C	0.447	1.979		0.8	1	31.889			
T10	4139.18	3412.09	A	0.411	2.043	7	0.8	1	28.563	1451.74*	72.59	C
160.00-140.00			B	0.411	2.043		0.8	1	28.563			
			C	0.411	2.043		0.8	1	28.563			
T11	4268.83	3385.00	A	0.408	2.049	7	0.8	1	28.253	1407.94*	70.40	C
140.00-120.00			B	0.408	2.049		0.8	1	28.253			
			C	0.408	2.049		0.8	1	28.253			
T12	4306.64	3354.17	A	0.404	2.057	7	0.8	1	27.899	1358.49*	67.92	C
120.00-100.00			B	0.404	2.057		0.8	1	27.899			
			C	0.404	2.057		0.8	1	27.899			
T13	4295.52	3318.23	A	0.399	2.066	7	0.8	1	27.484	1301.39*	65.07	C
100.00-80.00			B	0.399	2.066		0.8	1	27.484			
			C	0.399	2.066		0.8	1	27.484			
T14	4244.99	3274.85	A	0.394	2.077	6	0.8	1	26.980	1233.29*	61.66	C
80.00-60.00			B	0.394	2.077		0.8	1	26.980			
			C	0.394	2.077		0.8	1	26.980			
T15	4189.70	3219.46	A	0.386	2.091	6	0.8	1	26.332	1147.68*	57.38	C
60.00-40.00			B	0.386	2.091		0.8	1	26.332			
			C	0.386	2.091		0.8	1	26.332			
T16	4041.01	3140.91	A	0.376	2.113	5	0.8	1	25.401	1029.01*	51.45	C
40.00-20.00			B	0.376	2.113		0.8	1	25.401			
			C	0.376	2.113		0.8	1	25.401			
T17	2627.17	2317.26	A	0.374	2.119	5	0.8	1	18.539	655.05*	44.41	C
20.00-5.25			B	0.374	2.119		0.8	1	18.539			
			C	0.374	2.119		0.8	1	18.539			
T18 5.25-0.00	0.00	1101.65	A	0.739	1.783	5	0.8	1	9.297	65.17	12.41	C
			B	0.739	1.783		0.8	1	9.297			
			C	0.739	1.783		0.8	1	9.297			
Sum Weight:	46130.57	58063.05			*2.1A_g limit					18491.01		

Tower Forces - With Ice - Wind 90 To Face

Section Elevation ft	Add Weight lb	Self Weight lb	Face	e	C_F	q_z psf	D_F	D_R	A_E ft²	F lb	w plf	Ctrl. Face
L1 347.00-330.00	71.20	1117.05	A	0.564	1.831	9	0.85	1	19.478	374.65	22.04	C
			B	0.564	1.831		0.85	1	19.478			
			C	0.564	1.831		0.85	1	19.478			
T1 330.00-320.00	101.77	1547.12	A	0.447	1.978	9	0.85	1	15.890	268.90	26.89	C
			B	0.447	1.978		0.85	1	15.890			
			C	0.447	1.978		0.85	1	15.890			
T2 320.00-300.00	516.31	2811.67	A	0.408	2.049	9	0.85	1	28.132	622.45	31.12	C
			B	0.408	2.049		0.85	1	28.132			
			C	0.408	2.049		0.85	1	28.132			
T3 300.00-280.00	987.60	2798.11	A	0.406	2.052	9	0.85	1	27.976	798.66	39.93	C
			B	0.406	2.052		0.85	1	27.976			
			C	0.406	2.052		0.85	1	27.976			
T4 280.00-260.00	1225.36	2783.75	A	0.404	2.056	8	0.85	1	27.810	892.42	44.62	C
			B	0.404	2.056		0.85	1	27.810			
			C	0.404	2.056		0.85	1	27.810			
T5 260.00-240.00	1383.43	2768.48	A	0.402	2.06	8	0.85	1	27.633	935.24	46.76	C
			B	0.402	2.06		0.85	1	27.633			
			C	0.402	2.06		0.85	1	27.633			
T6 240.00-220.00	1549.53	2752.15	A	0.4	2.064	8	0.85	1	27.444	978.59	48.93	C
			B	0.4	2.064		0.85	1	27.444			
			C	0.4	2.064		0.85	1	27.444			
T7 220.00-200.00	1967.67	3246.62	A	0.414	2.037	8	0.85	1	28.768	1103.96	55.20	C
			B	0.414	2.037		0.85	1	28.768			
			C	0.414	2.037		0.85	1	28.768			
T8 200.00-180.00	2815.24	4051.97	A	0.435	1.998	8	0.85	1	30.821	1382.69	69.13	C
			B	0.435	1.998		0.85	1	30.821			
			C	0.435	1.998		0.85	1	30.821			
T9 180.00-160.00	3399.42	4176.80	A	0.447	1.979	8	0.85	1	31.889	1483.68	74.18	C
		TA	B	0.447	1.979		0.85	1	31.889			
		3485.72	C	0.447	1.979		0.85	1	31.889			
T10 160.00-140.00	4139.18	3412.09	A	0.411	2.043	7	0.85	1	28.563	1451.74*	72.59	C
			B	0.411	2.043		0.85	1	28.563			
			C	0.411	2.043		0.85	1	28.563			
T11 140.00-120.00	4268.83	3385.00	A	0.408	2.049	7	0.85	1	28.253	1407.94*	70.40	C
			B	0.408	2.049		0.85	1	28.253			
			C	0.408	2.049		0.85	1	28.253			
T12 120.00-100.00	4306.64	3354.17	A	0.404	2.057	7	0.85	1	27.899	1358.49*	67.92	C
			B	0.404	2.057		0.85	1	27.899			
			C	0.404	2.057		0.85	1	27.899			
T13 100.00-80.00	4295.52	3318.23	A	0.399	2.066	7	0.85	1	27.484	1301.39*	65.07	C
			B	0.399	2.066		0.85	1	27.484			
			C	0.399	2.066		0.85	1	27.484			
T14 80.00-60.00	4244.99	3274.85	A	0.394	2.077	6	0.85	1	26.980	1233.29*	61.66	C
			B	0.394	2.077		0.85	1	26.980			
			C	0.394	2.077		0.85	1	26.980			
T15 60.00-40.00	4189.70	3219.46	A	0.386	2.091	6	0.85	1	26.332	1147.68*	57.38	C
			B	0.386	2.091		0.85	1	26.332			
			C	0.386	2.091		0.85	1	26.332			
T16 40.00-20.00	4041.01	3140.91	A	0.376	2.113	5	0.85	1	25.401	1029.01*	51.45	C
			B	0.376	2.113		0.85	1	25.401			
			C	0.376	2.113		0.85	1	25.401			
T17 20.00-5.25	2627.17	2317.26	A	0.374	2.119	5	0.85	1	18.539	655.05*	44.41	C
			B	0.374	2.119		0.85	1	18.539			
			C	0.374	2.119		0.85	1	18.539			
T18 5.25-0.00	0.00	1101.65	A	0.739	1.783	5	0.85	1	9.470	66.39	12.64	C
			B	0.739	1.783		0.85	1	9.470			
			C	0.739	1.783		0.85	1	9.470			
Sum Weight:	46130.57	58063.05			*2.1A_g limit					18492.23		

Tower Forces - Service - Wind Normal To Face

Section Elevation ft	Add Weight lb	Self Weight lb	Face	e	C_F	q_z psf	D_F	D_R	A_E ft²	F lb	w plf	Ctrl. Face
L1	11.90	365.78	A	0.144	2.795	13	1	1	3.606	156.47	9.20	C
347.00-330.00			B	0.144	2.795		1	1	3.606			
			C	0.144	2.795		1	1	3.606			
T1	17.40	796.69	A	0.155	2.753	13	1	1	4.571	155.21	15.52	C
330.00-320.00			B	0.155	2.753		1	1	4.571			
			C	0.155	2.753		1	1	4.571			
T2	84.94	1474.41	A	0.144	2.795	13	1	1	8.449	354.03	17.70	C
320.00-300.00			B	0.144	2.795		1	1	8.449			
			C	0.144	2.795		1	1	8.449			
T3	156.80	1474.41	A	0.144	2.795	12	1	1	8.449	446.95	22.35	C
300.00-280.00			B	0.144	2.795		1	1	8.449			
			C	0.144	2.795		1	1	8.449			
T4	189.90	1474.41	A	0.144	2.795	12	1	1	8.449	487.52	24.38	C
280.00-260.00			B	0.144	2.795		1	1	8.449			
			C	0.144	2.795		1	1	8.449			
T5	213.00	1474.41	A	0.144	2.795	12	1	1	8.449	512.95	25.65	C
260.00-240.00			B	0.144	2.795		1	1	8.449			
			C	0.144	2.795		1	1	8.449			
T6	250.80	1474.41	A	0.144	2.795	12	1	1	8.449	549.16	27.46	C
240.00-220.00			B	0.144	2.795		1	1	8.449			
			C	0.144	2.795		1	1	8.449			
T7	349.43	1898.78	A	0.162	2.727	12	1	1	9.608	675.89	33.79	C
220.00-200.00			B	0.162	2.727		1	1	9.608			
			C	0.162	2.727		1	1	9.608			
T8	557.50	2589.89	A	0.189	2.634	11	1	1	11.300	881.78	44.09	C
200.00-180.00			B	0.189	2.634		1	1	11.300			
			C	0.189	2.634		1	1	11.300			
T9	756.96	2680.09	A	0.194	2.615	11	1	1	11.661	1028.28	51.41	C
180.00-160.00		TA	B	0.194	2.615		1	1	11.661			
		2076.41	C	0.194	2.615		1	1	11.661			
T10	980.88	2108.89	A	0.169	2.703	11	1	1	10.074	1184.05	59.20	C
160.00-140.00			B	0.169	2.703		1	1	10.074			
			C	0.169	2.703		1	1	10.074			
T11	1009.80	2108.89	A	0.169	2.703	10	1	1	10.074	1179.44	58.97	C
140.00-120.00			B	0.169	2.703		1	1	10.074			
			C	0.169	2.703		1	1	10.074			
T12	1026.68	2108.89	A	0.169	2.703	10	1	1	10.074	1155.77	57.79	C
120.00-100.00			B	0.169	2.703		1	1	10.074			
			C	0.169	2.703		1	1	10.074			
T13	1035.86	2108.89	A	0.169	2.703	10	1	1	10.074	1117.29	55.86	C
100.00-80.00			B	0.169	2.703		1	1	10.074			
			C	0.169	2.703		1	1	10.074			
T14	1041.80	2108.89	A	0.169	2.703	9	1	1	10.074	1065.44	53.27	C
80.00-60.00			B	0.169	2.703		1	1	10.074			
			C	0.169	2.703		1	1	10.074			
T15	1051.70	2108.89	A	0.169	2.703	9	1	1	10.074	1002.74	50.14	C
60.00-40.00			B	0.169	2.703		1	1	10.074			
			C	0.169	2.703		1	1	10.074			
T16	1055.00	2108.89	A	0.169	2.703	8	1	1	10.074	903.54	45.18	C
40.00-20.00			B	0.169	2.703		1	1	10.074			
			C	0.169	2.703		1	1	10.074			
T17	738.50	1610.88	A	0.175	2.682	7	1	1	7.699	556.31	37.72	C

Section Elevation ft	Add Weight lb	Self Weight lb	Face	e	C_F	q_z psf	D_F	D_R	A_E ft²	F lb	w plf	Ctrl. Face
20.00-5.25			B	0.175	2.682		1	1	7.699			
			C	0.175	2.682		1	1	7.699			
T18 5.25-0.00	0.00	831.39	A	0.504	1.895	7	1	1	6.093	65.33	12.44	C
			B	0.504	1.895		1	1	6.093			
			C	0.504	1.895		1	1	6.093			
Sum Weight:	10528.85	34984.18								13478.15		

Tower Forces - Service - Wind 45 To Face

Section Elevation ft	Add Weight lb	Self Weight lb	Face	e	C_F	q_z psf	D_F	D_R	A_E ft²	F lb	w plf	Ctrl. Face
L1	11.90	365.78	A	0.144	2.795	13	0.825	1	3.606	156.47	9.20	C
347.00-330.00			B	0.144	2.795		0.825	1	3.606			
			C	0.144	2.795		0.825	1	3.606			
T1	17.40	796.69	A	0.155	2.753	13	0.825	1	4.571	155.21	15.52	C
330.00-320.00			B	0.155	2.753		0.825	1	4.571			
			C	0.155	2.753		0.825	1	4.571			
T2	84.94	1474.41	A	0.144	2.795	13	0.825	1	8.449	354.03	17.70	C
320.00-300.00			B	0.144	2.795		0.825	1	8.449			
			C	0.144	2.795		0.825	1	8.449			
T3	156.80	1474.41	A	0.144	2.795	12	0.825	1	8.449	446.95	22.35	C
300.00-280.00			B	0.144	2.795		0.825	1	8.449			
			C	0.144	2.795		0.825	1	8.449			
T4	189.90	1474.41	A	0.144	2.795	12	0.825	1	8.449	487.52	24.38	C
280.00-260.00			B	0.144	2.795		0.825	1	8.449			
			C	0.144	2.795		0.825	1	8.449			
T5	213.00	1474.41	A	0.144	2.795	12	0.825	1	8.449	512.95	25.65	C
260.00-240.00			B	0.144	2.795		0.825	1	8.449			
			C	0.144	2.795		0.825	1	8.449			
T6	250.80	1474.41	A	0.144	2.795	12	0.825	1	8.449	549.16	27.46	C
240.00-220.00			B	0.144	2.795		0.825	1	8.449			
			C	0.144	2.795		0.825	1	8.449			
T7	349.43	1898.78	A	0.162	2.727	12	0.825	1	9.608	675.89	33.79	C
220.00-200.00			B	0.162	2.727		0.825	1	9.608			
			C	0.162	2.727		0.825	1	9.608			
T8	557.50	2589.89	A	0.189	2.634	11	0.825	1	11.300	881.78	44.09	C
200.00-180.00			B	0.189	2.634		0.825	1	11.300			
			C	0.189	2.634		0.825	1	11.300			
T9	756.96	2680.09	A	0.194	2.615	11	0.825	1	11.661	1028.28	51.41	C
180.00-160.00		TA	B	0.194	2.615		0.825	1	11.661			
		2076.41	C	0.194	2.615		0.825	1	11.661			
T10	980.88	2108.89	A	0.169	2.703	11	0.825	1	10.074	1184.05	59.20	C
160.00-140.00			B	0.169	2.703		0.825	1	10.074			
			C	0.169	2.703		0.825	1	10.074			
T11	1009.80	2108.89	A	0.169	2.703	10	0.825	1	10.074	1179.44	58.97	C
140.00-120.00			B	0.169	2.703		0.825	1	10.074			
			C	0.169	2.703		0.825	1	10.074			
T12	1026.68	2108.89	A	0.169	2.703	10	0.825	1	10.074	1155.77	57.79	C
120.00-100.00			B	0.169	2.703		0.825	1	10.074			
			C	0.169	2.703		0.825	1	10.074			
T13	1035.86	2108.89	A	0.169	2.703	10	0.825	1	10.074	1117.29	55.86	C
100.00-80.00			B	0.169	2.703		0.825	1	10.074			

Section Elevation ft	Add Weight lb	Self Weight lb	Face	e	C_F	q_z psf	D_F	D_R	A_E ft²	F lb	w plf	Ctrl. Face
			C	0.169	2.703		0.825	1	10.074			
T14	1041.80	2108.89	A	0.169	2.703	9	0.825	1	10.074	1065.44	53.27	C
80.00-60.00			B	0.169	2.703		0.825	1	10.074			
			C	0.169	2.703		0.825	1	10.074			
T15	1051.70	2108.89	A	0.169	2.703	9	0.825	1	10.074	1002.74	50.14	C
60.00-40.00			B	0.169	2.703		0.825	1	10.074			
			C	0.169	2.703		0.825	1	10.074			
T16	1055.00	2108.89	A	0.169	2.703	8	0.825	1	10.074	903.54	45.18	C
40.00-20.00			B	0.169	2.703		0.825	1	10.074			
			C	0.169	2.703		0.825	1	10.074			
T17	738.50	1610.88	A	0.175	2.682	7	0.825	1	7.699	556.31	37.72	C
20.00-5.25			B	0.175	2.682		0.825	1	7.699			
			C	0.175	2.682		0.825	1	7.699			
T18 5.25-0.00	0.00	831.39	A	0.504	1.895	7	0.825	1	5.487	58.84	11.21	C
			B	0.504	1.895		0.825	1	5.487			
			C	0.504	1.895		0.825	1	5.487			
Sum Weight:	10528.85	34984.18								13471.65		

Tower Forces - Service - Wind 60 To Face

Section Elevation ft	Add Weight lb	Self Weight lb	Face	e	C_F	q_z psf	D_F	D_R	A_E ft²	F lb	w plf	Ctrl. Face
L1	11.90	365.78	A	0.144	2.795	13	0.8	1	3.606	156.47	9.20	C
347.00-330.00			B	0.144	2.795		0.8	1	3.606			
			C	0.144	2.795		0.8	1	3.606			
T1	17.40	796.69	A	0.155	2.753	13	0.8	1	4.571	155.21	15.52	C
330.00-320.00			B	0.155	2.753		0.8	1	4.571			
			C	0.155	2.753		0.8	1	4.571			
T2	84.94	1474.41	A	0.144	2.795	13	0.8	1	8.449	354.03	17.70	C
320.00-300.00			B	0.144	2.795		0.8	1	8.449			
			C	0.144	2.795		0.8	1	8.449			
T3	156.80	1474.41	A	0.144	2.795	12	0.8	1	8.449	446.95	22.35	C
300.00-280.00			B	0.144	2.795		0.8	1	8.449			
			C	0.144	2.795		0.8	1	8.449			
T4	189.90	1474.41	A	0.144	2.795	12	0.8	1	8.449	487.52	24.38	C
280.00-260.00			B	0.144	2.795		0.8	1	8.449			
			C	0.144	2.795		0.8	1	8.449			
T5	213.00	1474.41	A	0.144	2.795	12	0.8	1	8.449	512.95	25.65	C
260.00-240.00			B	0.144	2.795		0.8	1	8.449			
			C	0.144	2.795		0.8	1	8.449			
T6	250.80	1474.41	A	0.144	2.795	12	0.8	1	8.449	549.16	27.46	C
240.00-220.00			B	0.144	2.795		0.8	1	8.449			
			C	0.144	2.795		0.8	1	8.449			
T7	349.43	1898.78	A	0.162	2.727	12	0.8	1	9.608	675.89	33.79	C
220.00-200.00			B	0.162	2.727		0.8	1	9.608			
			C	0.162	2.727		0.8	1	9.608			
T8	557.50	2589.89	A	0.189	2.634	11	0.8	1	11.300	881.78	44.09	C
200.00-180.00			B	0.189	2.634		0.8	1	11.300			
			C	0.189	2.634		0.8	1	11.300			
T9	756.96	2680.09	A	0.194	2.615	11	0.8	1	11.661	1028.28	51.41	C
180.00-160.00		TA	B	0.194	2.615		0.8	1	11.661			
		2076.41	C	0.194	2.615		0.8	1	11.661			

Section Elevation ft	Add Weight lb	Self Weight lb	Face	e	C_F	q_z psf	D_F	D_R	A_E ft²	F lb	w plf	Ctrl. Face
T10 160.00-140.00	980.88	2108.89	A	0.169	2.703	11	0.8	1	10.074	1184.05	59.20	C
			B	0.169	2.703		0.8	1	10.074			
			C	0.169	2.703		0.8	1	10.074			
T11 140.00-120.00	1009.80	2108.89	A	0.169	2.703	10	0.8	1	10.074	1179.44	58.97	C
			B	0.169	2.703		0.8	1	10.074			
			C	0.169	2.703		0.8	1	10.074			
T12 120.00-100.00	1026.68	2108.89	A	0.169	2.703	10	0.8	1	10.074	1155.77	57.79	C
			B	0.169	2.703		0.8	1	10.074			
			C	0.169	2.703		0.8	1	10.074			
T13 100.00-80.00	1035.86	2108.89	A	0.169	2.703	10	0.8	1	10.074	1117.29	55.86	C
			B	0.169	2.703		0.8	1	10.074			
			C	0.169	2.703		0.8	1	10.074			
T14 80.00-60.00	1041.80	2108.89	A	0.169	2.703	9	0.8	1	10.074	1065.44	53.27	C
			B	0.169	2.703		0.8	1	10.074			
			C	0.169	2.703		0.8	1	10.074			
T15 60.00-40.00	1051.70	2108.89	A	0.169	2.703	9	0.8	1	10.074	1002.74	50.14	C
			B	0.169	2.703		0.8	1	10.074			
			C	0.169	2.703		0.8	1	10.074			
T16 40.00-20.00	1055.00	2108.89	A	0.169	2.703	8	0.8	1	10.074	903.54	45.18	C
			B	0.169	2.703		0.8	1	10.074			
			C	0.169	2.703		0.8	1	10.074			
T17 20.00-5.25	738.50	1610.88	A	0.175	2.682	7	0.8	1	7.699	556.31	37.72	C
			B	0.175	2.682		0.8	1	7.699			
			C	0.175	2.682		0.8	1	7.699			
T18 5.25-0.00	0.00	831.39	A	0.504	1.895	7	0.8	1	5.401	57.91	11.03	C
			B	0.504	1.895		0.8	1	5.401			
			C	0.504	1.895		0.8	1	5.401			
Sum Weight:	10528.85	34984.18								13470.73		

Tower Forces - Service - Wind 90 To Face

Section Elevation ft	Add Weight lb	Self Weight lb	Face	e	C_F	q_z psf	D_F	D_R	A_E ft²	F lb	w plf	Ctrl. Face
L1 347.00-330.00	11.90	365.78	A	0.144	2.795	13	0.85	1	3.606	156.47	9.20	C
			B	0.144	2.795		0.85	1	3.606			
			C	0.144	2.795		0.85	1	3.606			
T1 330.00-320.00	17.40	796.69	A	0.155	2.753	13	0.85	1	4.571	155.21	15.52	C
			B	0.155	2.753		0.85	1	4.571			
			C	0.155	2.753		0.85	1	4.571			
T2 320.00-300.00	84.94	1474.41	A	0.144	2.795	13	0.85	1	8.449	354.03	17.70	C
			B	0.144	2.795		0.85	1	8.449			
			C	0.144	2.795		0.85	1	8.449			
T3 300.00-280.00	156.80	1474.41	A	0.144	2.795	12	0.85	1	8.449	446.95	22.35	C
			B	0.144	2.795		0.85	1	8.449			
			C	0.144	2.795		0.85	1	8.449			
T4 280.00-260.00	189.90	1474.41	A	0.144	2.795	12	0.85	1	8.449	487.52	24.38	C
			B	0.144	2.795		0.85	1	8.449			
			C	0.144	2.795		0.85	1	8.449			
T5 260.00-240.00	213.00	1474.41	A	0.144	2.795	12	0.85	1	8.449	512.95	25.65	C
			B	0.144	2.795		0.85	1	8.449			
			C	0.144	2.795		0.85	1	8.449			
T6	250.80	1474.41	A	0.144	2.795	12	0.85	1	8.449	549.16	27.46	C

Section Elevation ft	Add Weight lb	Self Weight lb	Face	e	C_F	q_z psf	D_F	D_R	A_E ft²	F lb	w plf	Ctrl. Face
240.00-220.00			B	0.144	2.795		0.85	1	8.449			
			C	0.144	2.795		0.85	1	8.449			
T7	349.43	1898.78	A	0.162	2.727	12	0.85	1	9.608	675.89	33.79	C
220.00-200.00			B	0.162	2.727		0.85	1	9.608			
			C	0.162	2.727		0.85	1	9.608			
T8	557.50	2589.89	A	0.189	2.634	11	0.85	1	11.300	881.78	44.09	C
200.00-180.00			B	0.189	2.634		0.85	1	11.300			
			C	0.189	2.634		0.85	1	11.300			
T9	756.96	2680.09	A	0.194	2.615	11	0.85	1	11.661	1028.28	51.41	C
180.00-160.00		TA	B	0.194	2.615		0.85	1	11.661			
		2076.41	C	0.194	2.615		0.85	1	11.661			
T10	980.88	2108.89	A	0.169	2.703	11	0.85	1	10.074	1184.05	59.20	C
160.00-140.00			B	0.169	2.703		0.85	1	10.074			
			C	0.169	2.703		0.85	1	10.074			
T11	1009.80	2108.89	A	0.169	2.703	10	0.85	1	10.074	1179.44	58.97	C
140.00-120.00			B	0.169	2.703		0.85	1	10.074			
			C	0.169	2.703		0.85	1	10.074			
T12	1026.68	2108.89	A	0.169	2.703	10	0.85	1	10.074	1155.77	57.79	C
120.00-100.00			B	0.169	2.703		0.85	1	10.074			
			C	0.169	2.703		0.85	1	10.074			
T13	1035.86	2108.89	A	0.169	2.703	10	0.85	1	10.074	1117.29	55.86	C
100.00-80.00			B	0.169	2.703		0.85	1	10.074			
			C	0.169	2.703		0.85	1	10.074			
T14	1041.80	2108.89	A	0.169	2.703	9	0.85	1	10.074	1065.44	53.27	C
80.00-60.00			B	0.169	2.703		0.85	1	10.074			
			C	0.169	2.703		0.85	1	10.074			
T15	1051.70	2108.89	A	0.169	2.703	9	0.85	1	10.074	1002.74	50.14	C
60.00-40.00			B	0.169	2.703		0.85	1	10.074			
			C	0.169	2.703		0.85	1	10.074			
T16	1055.00	2108.89	A	0.169	2.703	8	0.85	1	10.074	903.54	45.18	C
40.00-20.00			B	0.169	2.703		0.85	1	10.074			
			C	0.169	2.703		0.85	1	10.074			
T17	738.50	1610.88	A	0.175	2.682	7	0.85	1	7.699	556.31	37.72	C
20.00-5.25			B	0.175	2.682		0.85	1	7.699			
			C	0.175	2.682		0.85	1	7.699			
T18 5.25-0.00	0.00	831.39	A	0.504	1.895	7	0.85	1	5.574	59.77	11.38	C
			B	0.504	1.895		0.85	1	5.574			
			C	0.504	1.895		0.85	1	5.574			
Sum Weight:	10528.85	34984.18								13472.58		

Force Totals (Does not include forces on guys)

Load Case	Vertical Forces lb	Sum of Forces X lb	Sum of Forces Z lb	Sum of Torques lb-ft
Leg Weight	17851.62			
Bracing Weight	17132.56			
Total Member Self-Weight	34984.18			
Guy Weight	7336.56			
Total Weight	68334.00			
Wind 0 deg - No Ice		-373.34	-101407.65	-19655.58
Wind 30 deg - No Ice		50364.62	-87412.87	-10985.56
Wind 45 deg - No Ice		71367.70	-71325.62	-6801.61

Load Case	Vertical Forces lb	Sum of Forces X lb	Sum of Forces Z lb	Sum of Torques lb-ft
Wind 60 deg - No Ice		87516.10	-50255.43	-1044.55
Wind 90 deg - No Ice		101232.64	417.06	8714.45
Wind 120 deg - No Ice		88152.49	51496.23	19689.40
Wind 135 deg - No Ice		72149.15	72604.53	22058.48
Wind 150 deg - No Ice		51267.51	88757.75	22677.82
Wind 180 deg - No Ice		224.19	101962.15	18453.08
Wind 210 deg - No Ice		-50333.62	87775.07	9625.80
Wind 225 deg - No Ice		-71131.27	71557.75	5323.33
Wind 240 deg - No Ice		-87181.69	50589.56	837.67
Wind 270 deg - No Ice		-100923.65	-12.05	-7796.84
Wind 300 deg - No Ice		-88133.83	-51158.68	-19512.01
Wind 315 deg - No Ice		-72160.01	-72325.14	-23138.12
Wind 330 deg - No Ice		-51215.85	-88312.60	-24392.74
Member Ice	23078.87			
Guy Ice	15131.44			
Total Weight Ice	161106.42			
Wind 0 deg - Ice		-286.59	-27825.43	-11219.61
Wind 30 deg - Ice		13744.86	-24066.78	-7710.74
Wind 45 deg - Ice		19593.86	-19746.21	-4991.02
Wind 60 deg - Ice		23920.02	-14110.59	-3749.15
Wind 90 deg - Ice		27558.97	358.45	5080.39
Wind 120 deg - Ice		24148.64	13765.28	8362.66
Wind 135 deg - Ice		19960.24	19326.72	9002.84
Wind 150 deg - Ice		14464.52	23762.48	9958.44
Wind 180 deg - Ice		584.88	27596.34	9777.80
Wind 210 deg - Ice		-13726.82	23547.02	4493.10
Wind 225 deg - Ice		-19233.05	19219.42	2673.24
Wind 240 deg - Ice		-23447.28	13711.59	1427.35
Wind 270 deg - Ice		-27191.50	-191.04	-2546.89
Wind 300 deg - Ice		-23539.08	-14740.21	-9853.97
Wind 315 deg - Ice		-19119.12	-20261.42	-10606.25
Wind 330 deg - Ice		-13447.65	-24395.12	-10741.35
Total Weight	68334.00			
Wind 0 deg - Service		-79.53	-21613.10	-4244.68
Wind 30 deg - Service		10734.29	-18630.43	-2387.76
Wind 45 deg - Service		15210.70	-15201.73	-1486.38
Wind 60 deg - Service		18652.42	-10711.03	-247.33
Wind 90 deg - Service		21575.82	88.84	1860.98
Wind 120 deg - Service		18787.98	10975.35	4227.06
Wind 135 deg - Service		15377.16	15474.16	4742.93
Wind 150 deg - Service		10926.62	18916.91	4883.07
Wind 180 deg - Service		47.76	21731.22	3988.53
Wind 210 deg - Service		-10727.69	18707.58	2098.11
Wind 225 deg - Service		-15160.33	15251.18	1171.48
Wind 240 deg - Service		-18581.18	10782.21	203.26
Wind 270 deg - Service		-21510.00	-2.57	-1665.51
Wind 300 deg - Service		-18784.00	-10903.44	-4189.28
Wind 315 deg - Service		-15379.47	-15414.65	-4972.91
Wind 330 deg - Service		-10915.62	-18822.08	-5248.38

Load Combinations

Comb. No.	Description

Comb. No.	Description
1	Dead Only
2	1.2 Dead+1.0 Wind 0 deg - No Ice+1.0 Guy
3	1.2D+1.0W (pattern 1) 0 deg - No Ice+1.0 Guy
4	1.2D+1.0W (pattern 2) 0 deg - No Ice+1.0 Guy
5	1.2D+1.0W (pattern 3) 0 deg - No Ice+1.0 Guy
6	1.2D+1.0W (pattern 4) 0 deg - No Ice+1.0 Guy
7	1.2D+1.0W (pattern 5) 0 deg - No Ice+1.0 Guy
8	1.2D+1.0W (pattern 6) 0 deg - No Ice+1.0 Guy
9	1.2 Dead+1.0 Wind 30 deg - No Ice+1.0 Guy
10	1.2D+1.0W (pattern 1) 30 deg - No Ice+1.0 Guy
11	1.2D+1.0W (pattern 2) 30 deg - No Ice+1.0 Guy
12	1.2D+1.0W (pattern 3) 30 deg - No Ice+1.0 Guy
13	1.2D+1.0W (pattern 4) 30 deg - No Ice+1.0 Guy
14	1.2D+1.0W (pattern 5) 30 deg - No Ice+1.0 Guy
15	1.2D+1.0W (pattern 6) 30 deg - No Ice+1.0 Guy
16	1.2 Dead+1.0 Wind 45 deg - No Ice+1.0 Guy
17	1.2D+1.0W (pattern 1) 45 deg - No Ice+1.0 Guy
18	1.2D+1.0W (pattern 2) 45 deg - No Ice+1.0 Guy
19	1.2D+1.0W (pattern 3) 45 deg - No Ice+1.0 Guy
20	1.2D+1.0W (pattern 4) 45 deg - No Ice+1.0 Guy
21	1.2D+1.0W (pattern 5) 45 deg - No Ice+1.0 Guy
22	1.2D+1.0W (pattern 6) 45 deg - No Ice+1.0 Guy
23	1.2 Dead+1.0 Wind 60 deg - No Ice+1.0 Guy
24	1.2D+1.0W (pattern 1) 60 deg - No Ice+1.0 Guy
25	1.2D+1.0W (pattern 2) 60 deg - No Ice+1.0 Guy
26	1.2D+1.0W (pattern 3) 60 deg - No Ice+1.0 Guy
27	1.2D+1.0W (pattern 4) 60 deg - No Ice+1.0 Guy
28	1.2D+1.0W (pattern 5) 60 deg - No Ice+1.0 Guy
29	1.2D+1.0W (pattern 6) 60 deg - No Ice+1.0 Guy
30	1.2 Dead+1.0 Wind 90 deg - No Ice+1.0 Guy
31	1.2D+1.0W (pattern 1) 90 deg - No Ice+1.0 Guy
32	1.2D+1.0W (pattern 2) 90 deg - No Ice+1.0 Guy
33	1.2D+1.0W (pattern 3) 90 deg - No Ice+1.0 Guy
34	1.2D+1.0W (pattern 4) 90 deg - No Ice+1.0 Guy
35	1.2D+1.0W (pattern 5) 90 deg - No Ice+1.0 Guy
36	1.2D+1.0W (pattern 6) 90 deg - No Ice+1.0 Guy
37	1.2 Dead+1.0 Wind 120 deg - No Ice+1.0 Guy
38	1.2D+1.0W (pattern 1) 120 deg - No Ice+1.0 Guy
39	1.2D+1.0W (pattern 2) 120 deg - No Ice+1.0 Guy
40	1.2D+1.0W (pattern 3) 120 deg - No Ice+1.0 Guy
41	1.2D+1.0W (pattern 4) 120 deg - No Ice+1.0 Guy
42	1.2D+1.0W (pattern 5) 120 deg - No Ice+1.0 Guy
43	1.2D+1.0W (pattern 6) 120 deg - No Ice+1.0 Guy
44	1.2 Dead+1.0 Wind 135 deg - No Ice+1.0 Guy
45	1.2D+1.0W (pattern 1) 135 deg - No Ice+1.0 Guy
46	1.2D+1.0W (pattern 2) 135 deg - No Ice+1.0 Guy
47	1.2D+1.0W (pattern 3) 135 deg - No Ice+1.0 Guy
48	1.2D+1.0W (pattern 4) 135 deg - No Ice+1.0 Guy
49	1.2D+1.0W (pattern 5) 135 deg - No Ice+1.0 Guy
50	1.2D+1.0W (pattern 6) 135 deg - No Ice+1.0 Guy
51	1.2 Dead+1.0 Wind 150 deg - No Ice+1.0 Guy
52	1.2D+1.0W (pattern 1) 150 deg - No Ice+1.0 Guy
53	1.2D+1.0W (pattern 2) 150 deg - No Ice+1.0 Guy
54	1.2D+1.0W (pattern 3) 150 deg - No Ice+1.0 Guy
55	1.2D+1.0W (pattern 4) 150 deg - No Ice+1.0 Guy
56	1.2D+1.0W (pattern 5) 150 deg - No Ice+1.0 Guy
57	1.2D+1.0W (pattern 6) 150 deg - No Ice+1.0 Guy
58	1.2 Dead+1.0 Wind 180 deg - No Ice+1.0 Guy
59	1.2D+1.0W (pattern 1) 180 deg - No Ice+1.0 Guy
60	1.2D+1.0W (pattern 2) 180 deg - No Ice+1.0 Guy
61	1.2D+1.0W (pattern 3) 180 deg - No Ice+1.0 Guy
62	1.2D+1.0W (pattern 4) 180 deg - No Ice+1.0 Guy

Comb. No.	Description
63	1.2D+1.0W (pattern 5) 180 deg - No Ice+1.0 Guy
64	1.2D+1.0W (pattern 6) 180 deg - No Ice+1.0 Guy
65	1.2 Dead+1.0 Wind 210 deg - No Ice+1.0 Guy
66	1.2D+1.0W (pattern 1) 210 deg - No Ice+1.0 Guy
67	1.2D+1.0W (pattern 2) 210 deg - No Ice+1.0 Guy
68	1.2D+1.0W (pattern 3) 210 deg - No Ice+1.0 Guy
69	1.2D+1.0W (pattern 4) 210 deg - No Ice+1.0 Guy
70	1.2D+1.0W (pattern 5) 210 deg - No Ice+1.0 Guy
71	1.2D+1.0W (pattern 6) 210 deg - No Ice+1.0 Guy
72	1.2 Dead+1.0 Wind 225 deg - No Ice+1.0 Guy
73	1.2D+1.0W (pattern 1) 225 deg - No Ice+1.0 Guy
74	1.2D+1.0W (pattern 2) 225 deg - No Ice+1.0 Guy
75	1.2D+1.0W (pattern 3) 225 deg - No Ice+1.0 Guy
76	1.2D+1.0W (pattern 4) 225 deg - No Ice+1.0 Guy
77	1.2D+1.0W (pattern 5) 225 deg - No Ice+1.0 Guy
78	1.2D+1.0W (pattern 6) 225 deg - No Ice+1.0 Guy
79	1.2 Dead+1.0 Wind 240 deg - No Ice+1.0 Guy
80	1.2D+1.0W (pattern 1) 240 deg - No Ice+1.0 Guy
81	1.2D+1.0W (pattern 2) 240 deg - No Ice+1.0 Guy
82	1.2D+1.0W (pattern 3) 240 deg - No Ice+1.0 Guy
83	1.2D+1.0W (pattern 4) 240 deg - No Ice+1.0 Guy
84	1.2D+1.0W (pattern 5) 240 deg - No Ice+1.0 Guy
85	1.2D+1.0W (pattern 6) 240 deg - No Ice+1.0 Guy
86	1.2 Dead+1.0 Wind 270 deg - No Ice+1.0 Guy
87	1.2D+1.0W (pattern 1) 270 deg - No Ice+1.0 Guy
88	1.2D+1.0W (pattern 2) 270 deg - No Ice+1.0 Guy
89	1.2D+1.0W (pattern 3) 270 deg - No Ice+1.0 Guy
90	1.2D+1.0W (pattern 4) 270 deg - No Ice+1.0 Guy
91	1.2D+1.0W (pattern 5) 270 deg - No Ice+1.0 Guy
92	1.2D+1.0W (pattern 6) 270 deg - No Ice+1.0 Guy
93	1.2 Dead+1.0 Wind 300 deg - No Ice+1.0 Guy
94	1.2D+1.0W (pattern 1) 300 deg - No Ice+1.0 Guy
95	1.2D+1.0W (pattern 2) 300 deg - No Ice+1.0 Guy
96	1.2D+1.0W (pattern 3) 300 deg - No Ice+1.0 Guy
97	1.2D+1.0W (pattern 4) 300 deg - No Ice+1.0 Guy
98	1.2D+1.0W (pattern 5) 300 deg - No Ice+1.0 Guy
99	1.2D+1.0W (pattern 6) 300 deg - No Ice+1.0 Guy
100	1.2 Dead+1.0 Wind 315 deg - No Ice+1.0 Guy
101	1.2D+1.0W (pattern 1) 315 deg - No Ice+1.0 Guy
102	1.2D+1.0W (pattern 2) 315 deg - No Ice+1.0 Guy
103	1.2D+1.0W (pattern 3) 315 deg - No Ice+1.0 Guy
104	1.2D+1.0W (pattern 4) 315 deg - No Ice+1.0 Guy
105	1.2D+1.0W (pattern 5) 315 deg - No Ice+1.0 Guy
106	1.2D+1.0W (pattern 6) 315 deg - No Ice+1.0 Guy
107	1.2 Dead+1.0 Wind 330 deg - No Ice+1.0 Guy
108	1.2D+1.0W (pattern 1) 330 deg - No Ice+1.0 Guy
109	1.2D+1.0W (pattern 2) 330 deg - No Ice+1.0 Guy
110	1.2D+1.0W (pattern 3) 330 deg - No Ice+1.0 Guy
111	1.2D+1.0W (pattern 4) 330 deg - No Ice+1.0 Guy
112	1.2D+1.0W (pattern 5) 330 deg - No Ice+1.0 Guy
113	1.2D+1.0W (pattern 6) 330 deg - No Ice+1.0 Guy
114	1.2 Dead+1.0 Ice+1.0 Temp+Guy
115	1.2 Dead+1.0 Wind 0 deg+1.0 Ice+1.0 Temp+1.0 Guy
116	1.2 Dead+1.0 Wind 30 deg+1.0 Ice+1.0 Temp+1.0 Guy
117	1.2 Dead+1.0 Wind 45 deg+1.0 Ice+1.0 Temp+1.0 Guy
118	1.2 Dead+1.0 Wind 60 deg+1.0 Ice+1.0 Temp+1.0 Guy
119	1.2 Dead+1.0 Wind 90 deg+1.0 Ice+1.0 Temp+1.0 Guy
120	1.2 Dead+1.0 Wind 120 deg+1.0 Ice+1.0 Temp+1.0 Guy
121	1.2 Dead+1.0 Wind 135 deg+1.0 Ice+1.0 Temp+1.0 Guy
122	1.2 Dead+1.0 Wind 150 deg+1.0 Ice+1.0 Temp+1.0 Guy
123	1.2 Dead+1.0 Wind 180 deg+1.0 Ice+1.0 Temp+1.0 Guy
124	1.2 Dead+1.0 Wind 210 deg+1.0 Ice+1.0 Temp+1.0 Guy

Comb. No.	Description
125	1.2 Dead+1.0 Wind 225 deg+1.0 Ice+1.0 Temp+1.0 Guy
126	1.2 Dead+1.0 Wind 240 deg+1.0 Ice+1.0 Temp+1.0 Guy
127	1.2 Dead+1.0 Wind 270 deg+1.0 Ice+1.0 Temp+1.0 Guy
128	1.2 Dead+1.0 Wind 300 deg+1.0 Ice+1.0 Temp+1.0 Guy
129	1.2 Dead+1.0 Wind 315 deg+1.0 Ice+1.0 Temp+1.0 Guy
130	1.2 Dead+1.0 Wind 330 deg+1.0 Ice+1.0 Temp+1.0 Guy
131	Dead+Wind 0 deg - Service+Guy
132	Dead+Wind 30 deg - Service+Guy
133	Dead+Wind 45 deg - Service+Guy
134	Dead+Wind 60 deg - Service+Guy
135	Dead+Wind 90 deg - Service+Guy
136	Dead+Wind 120 deg - Service+Guy
137	Dead+Wind 135 deg - Service+Guy
138	Dead+Wind 150 deg - Service+Guy
139	Dead+Wind 180 deg - Service+Guy
140	Dead+Wind 210 deg - Service+Guy
141	Dead+Wind 225 deg - Service+Guy
142	Dead+Wind 240 deg - Service+Guy
143	Dead+Wind 270 deg - Service+Guy
144	Dead+Wind 300 deg - Service+Guy
145	Dead+Wind 315 deg - Service+Guy
146	Dead+Wind 330 deg - Service+Guy

Maximum Member Forces

Section No.	Elevation ft	Component Type	Condition	Gov. Load Comb.	Axial lb	Major Axis Moment lb-ft	Minor Axis Moment lb-ft
L1	347 - 330	Latticed Pole Leg	Max Tension	27	11748.88	559.97	185.28
			Max. Compression	40	-12566.00	0.00	0.00
			Max. Mx	82	-10176.36	-599.99	-256.66
			Max. My	12	-915.23	401.19	-830.18
			Max. Vy	82	-1201.63	0.00	0.00
			Max. Vx	12	-1661.95	0.00	0.00
		Latticed Pole Diagonal	Max Tension	26	2765.00	0.00	0.00
			Max. Compression	74	-2788.13	0.00	0.00
			Max. Mx	113	-128.05	-1.32	0.21
			Max. My	65	-2649.07	0.14	-4.06
			Max. Vy	122	2.91	-1.06	-0.10
			Max. Vx	65	-2.74	0.00	0.00
		Latticed Pole Top Girt	Max Tension	84	154.72	0.00	0.00
			Max. Compression	61	-160.14	0.00	0.00
			Max. Mx	128	-34.40	3.83	0.00
			Max. My	54	14.95	0.00	-0.00
			Max. Vy	128	6.13	0.00	0.00
			Max. Vx	54	0.00	0.00	0.00
		Latticed Pole Bottom Girt	Max Tension	61	746.80	0.00	0.00
			Max. Compression	40	-747.26	0.00	0.00
			Max. Mx	124	76.12	3.83	0.00
			Max. My	54	108.88	0.00	-0.00
			Max. Vy	124	6.13	0.00	0.00
			Max. Vx	54	0.00	0.00	0.00
		Latticed Pole Mid Girt	Max Tension	82	115.50	0.00	0.00
			Max. Compression	61	-116.93	0.00	0.00
			Max. Mx	128	-41.88	3.83	0.00

Section No.	Elevation ft	Component Type	Condition	Gov. Load Comb.	Axial lb	Major Axis Moment lb-ft	Minor Axis Moment lb-ft
			Max. My	54	5.91	0.00	-0.00
			Max. Vy	128	6.13	0.00	0.00
			Max. Vx	54	0.00	0.00	0.00
T1	330 - 320	Leg	Max Tension	60	6236.44	203.56	1463.35
			Max. Compression	106	-21934.88	-161.64	541.02
			Max. Mx	125	-2002.88	-1460.28	743.62
			Max. My	115	-2099.93	-66.61	-1627.40
			Max. Vy	18	3743.53	-442.32	247.74
			Max. Vx	115	-3944.29	-0.29	344.42
		Diagonal	Max Tension	67	2508.75	0.00	0.00
			Max. Compression	67	-2400.38	0.00	0.00
			Max. Mx	129	1078.03	-7.71	0.09
			Max. My	60	-2321.84	0.98	-1.43
			Max. Vy	129	9.96	-7.71	0.09
			Max. Vx	60	-0.58	0.00	0.00
		Top Girt	Max Tension	115	4508.23	0.00	0.00
			Max. Compression	1	0.00	0.00	0.00
			Max. Mx	124	4137.26	20.85	0.00
			Max. My	54	1773.84	0.00	-0.00
			Max. Vy	124	16.68	0.00	0.00
			Max. Vx	54	-0.00	0.00	0.00
		Bottom Girt	Max Tension	43	742.57	0.00	0.00
			Max. Compression	99	-631.00	0.00	0.00
			Max. Mx	118	164.15	20.85	0.00
			Max. My	54	90.99	0.00	-0.00
			Max. Vy	118	16.68	0.00	0.00
			Max. Vx	54	-0.00	0.00	0.00
		Mid Girt	Max Tension	126	527.00	0.00	0.00
			Max. Compression	99	-27.90	0.00	0.00
			Max. Mx	124	456.91	20.85	0.00
			Max. My	54	146.30	0.00	-0.00
			Max. Vy	124	16.68	0.00	0.00
			Max. Vx	54	-0.00	0.00	0.00
		Guy A	Bottom Tension	60	20947.37		
			Top Tension	60	21297.68		
			Top Cable Vert	60	18463.02		
			Top Cable Norm	60	10616.41		
			Top Cable Tan	60	5.23		
			Bot Cable Vert	60	-17578.22		
			Bot Cable Norm	60	11392.92		
			Bot Cable Tan	60	5.23		
		Guy B	Bottom Tension	102	20464.40		
			Top Tension	102	20791.21		
			Top Cable Vert	102	17680.94		
			Top Cable Norm	102	10938.39		
			Top Cable Tan	102	101.22		
			Bot Cable Vert	102	-16836.37		
			Bot Cable Norm	102	11631.94		
			Bot Cable Tan	102	162.90		
		Guy C	Bottom Tension	25	19310.38		
			Top Tension	25	19622.27		
			Top Cable Vert	25	16462.49		
			Top Cable Norm	25	10678.00		
			Top Cable Tan	25	0.20		
			Bot Cable Vert	25	-15630.73		
			Bot Cable Norm	25	11338.91		
			Bot Cable Tan	25	0.20		
T2	320 - 300	Leg	Max Tension	43	4281.30	-95.28	0.34
			Max. Compression	57	-28650.31	-773.31	-204.88
			Max. Mx	57	-28646.48	-1294.80	-309.81
			Max. My	55	-19110.47	446.95	1256.05

Section No.	Elevation ft	Component Type	Condition	Gov. Load Comb.	Axial lb	Major Axis Moment lb-ft	Minor Axis Moment lb-ft
			Max. Vy	57	-2086.03	-773.31	-204.88
			Max. Vx	55	2029.41	272.79	749.12
		Diagonal	Max Tension	104	4469.18	0.00	0.00
			Max. Compression	104	-3738.03	0.00	0.00
			Max. Mx	113	-1013.23	-7.14	-1.31
			Max. My	104	-3720.86	-4.26	-4.76
			Max. Vy	115	9.34	-6.08	-0.39
			Max. Vx	104	1.79	-4.26	-4.76
		Top Girt	Max Tension	92	334.01	0.00	0.00
			Max. Compression	92	-286.95	0.00	0.00
			Max. Mx	118	-119.30	20.77	0.00
			Max. My	54	98.29	0.00	-0.00
			Max. Vy	118	-16.62	0.00	0.00
			Max. Vx	54	-0.00	0.00	0.00
		Bottom Girt	Max Tension	38	3498.95	0.00	0.00
			Max. Compression	1	0.00	0.00	0.00
			Max. Mx	122	1735.43	20.77	0.00
			Max. My	54	1836.70	0.00	-0.00
			Max. Vy	122	-16.62	0.00	0.00
			Max. Vx	54	-0.00	0.00	0.00
		Mid Girt	Max Tension	43	547.25	0.00	0.00
			Max. Compression	99	-279.37	0.00	0.00
			Max. Mx	118	125.33	20.77	0.00
			Max. My	54	118.64	0.00	-0.00
			Max. Vy	118	-16.62	0.00	0.00
			Max. Vx	54	-0.00	0.00	0.00
		Guy A	Bottom Tension	52	13253.42		
			Top Tension	52	13470.07		
			Top Cable Vert	52	11417.79		
			Top Cable Norm	52	7144.90		
			Top Cable Tan	52	165.31		
			Bot Cable Vert	52	-10826.32		
			Bot Cable Norm	52	7640.92		
			Bot Cable Tan	52	245.60		
		Guy B	Bottom Tension	101	12944.01		
			Top Tension	101	13145.80		
			Top Cable Vert	101	10896.95		
			Top Cable Norm	101	7352.72		
			Top Cable Tan	101	76.21		
			Bot Cable Vert	101	-10304.13		
			Bot Cable Norm	101	7833.15		
			Bot Cable Tan	101	117.65		
		Guy C	Bottom Tension	17	12270.39		
			Top Tension	17	12461.78		
			Top Cable Vert	17	10151.80		
			Top Cable Norm	17	7227.18		
			Top Cable Tan	17	68.89		
			Bot Cable Vert	17	-9575.92		
			Bot Cable Norm	17	7671.41		
			Bot Cable Tan	17	117.20		
T3	300 - 280	Leg	Max Tension	1	0.00	0.00	0.00
			Max. Compression	36	-29527.73	-109.29	-75.64
			Max. Mx	96	-9809.31	-1913.71	781.88
			Max. My	54	-20594.94	1383.53	2554.59
			Max. Vy	96	-2914.94	-1181.36	478.72
			Max. Vx	54	3949.77	865.90	1567.66
		Diagonal	Max Tension	103	5995.92	0.00	0.00
			Max. Compression	103	-5861.18	0.00	0.00
			Max. Mx	113	5454.54	-6.38	3.98
			Max. My	47	-5801.26	-4.64	11.02
			Max. Vy	130	9.40	-6.36	-0.30

Section No.	Elevation ft	Component Type	Condition	Gov. Load Comb.	Axial lb	Major Axis Moment lb-ft	Minor Axis Moment lb-ft
			Max. Vx	47	-4.05	-4.64	11.02
		Top Girt	Max Tension	56	402.12	0.00	0.00
			Max. Compression	84	-173.66	0.00	0.00
			Max. Mx	122	107.25	20.66	0.00
			Max. My	54	231.07	0.00	-0.00
			Max. Vy	122	-16.53	0.00	0.00
			Max. Vx	54	-0.00	0.00	0.00
		Bottom Girt	Max Tension	26	1149.74	0.00	0.00
			Max. Compression	5	-1017.96	0.00	0.00
			Max. Mx	119	-105.60	20.66	0.00
			Max. My	54	-75.30	0.00	-0.00
			Max. Vy	119	-16.53	0.00	0.00
			Max. Vx	54	-0.00	0.00	0.00
		Mid Girt	Max Tension	43	302.87	0.00	0.00
			Max. Compression	1	0.00	0.00	0.00
			Max. Mx	117	160.75	20.66	0.00
			Max. My	54	138.68	0.00	-0.00
			Max. Vy	117	-16.53	0.00	0.00
			Max. Vx	54	-0.00	0.00	0.00
T4	280 - 260	Leg	Max Tension	61	5151.27	-21.29	221.92
			Max. Compression	56	-49447.45	-1195.87	-668.14
			Max. Mx	101	-19693.57	2553.57	959.47
			Max. My	108	-42150.27	-64.14	2748.39
			Max. Vy	101	3877.39	2549.09	958.84
			Max. Vx	108	4243.30	-70.89	2747.46
		Diagonal	Max Tension	108	6678.89	0.00	0.00
			Max. Compression	108	-7120.08	0.00	0.00
			Max. Mx	113	2209.62	-7.58	-1.20
			Max. My	103	-6537.85	-4.64	-13.50
			Max. Vy	115	9.67	-7.24	-0.48
			Max. Vx	103	4.94	-4.64	-13.50
		Top Girt	Max Tension	40	1303.87	0.00	0.00
			Max. Compression	26	-941.48	0.00	0.00
			Max. Mx	119	383.14	20.55	0.00
			Max. My	54	309.10	0.00	-0.00
			Max. Vy	119	16.44	0.00	0.00
			Max. Vx	54	-0.00	0.00	0.00
		Bottom Girt	Max Tension	83	1694.35	0.00	0.00
			Max. Compression	97	-1210.23	0.00	0.00
			Max. Mx	130	211.39	20.55	0.00
			Max. My	53	294.08	0.00	-0.00
			Max. Vy	130	16.44	0.00	0.00
			Max. Vx	53	-0.00	0.00	0.00
		Mid Girt	Max Tension	38	7495.28	0.00	0.00
			Max. Compression	1	0.00	0.00	0.00
			Max. Mx	119	4074.72	20.55	0.00
			Max. My	54	4035.46	0.00	-0.00
			Max. Vy	119	16.44	0.00	0.00
			Max. Vx	54	-0.00	0.00	0.00
		Guy A	Bottom Tension	52	31383.66		
			Top Tension	52	31792.80		
			Top Cable Vert	52	25952.20		
			Top Cable Norm	52	18364.05		
			Top Cable Tan	52	164.21		
			Bot Cable Vert	52	-25002.50		
			Bot Cable Norm	52	18965.10		
			Bot Cable Tan	52	366.23		
		Guy B	Bottom Tension	101	30706.77		
			Top Tension	101	31084.32		
			Top Cable Vert	101	24637.93		
			Top Cable Norm	101	18952.65		

Section No.	Elevation ft	Component Type	Condition	Gov. Load Comb.	Axial lb	Major Axis Moment lb-ft	Minor Axis Moment lb-ft
			Top Cable Tan	101	69.39		
			Bot Cable Vert	101	-23703.07		
			Bot Cable Norm	101	19520.21		
			Bot Cable Tan	101	177.74		
		Guy C	Bottom Tension	17	29307.84		
			Top Tension	17	29663.62		
			Top Cable Vert	17	22976.21		
			Top Cable Norm	17	18762.22		
			Top Cable Tan	17	58.40		
			Bot Cable Vert	17	-22073.14		
			Bot Cable Norm	17	19279.38		
			Bot Cable Tan	17	177.83		
T5	260 - 240	Leg	Max Tension	84	13029.27	663.70	-220.54
			Max. Compression	56	-64995.43	-1044.17	-223.99
			Max. Mx	101	-17016.84	-2570.45	-925.27
			Max. My	108	-45929.20	17.72	-2791.77
			Max. Vy	101	4145.89	-2569.30	-924.24
			Max. Vx	108	4477.78	18.96	-2791.44
		Diagonal	Max Tension	108	6903.41	0.00	0.00
			Max. Compression	108	-7132.69	0.00	0.00
			Max. Mx	115	1020.98	-6.73	-0.46
			Max. My	113	-7057.18	-3.19	-14.50
			Max. Vy	115	9.43	-6.73	-0.46
			Max. Vx	113	5.30	-3.19	-14.50
		Top Girt	Max Tension	104	1413.95	0.00	0.00
			Max. Compression	83	-1183.56	0.00	0.00
			Max. Mx	118	389.85	20.42	0.00
			Max. My	53	53.92	0.00	-0.00
			Max. Vy	118	16.34	0.00	0.00
			Max. Vx	53	-0.00	0.00	0.00
		Bottom Girt	Max Tension	83	956.42	0.00	0.00
			Max. Compression	104	-701.45	0.00	0.00
			Max. Mx	118	28.13	20.42	0.00
			Max. My	53	172.17	0.00	-0.00
			Max. Vy	118	16.34	0.00	0.00
			Max. Vx	53	-0.00	0.00	0.00
		Mid Girt	Max Tension	42	470.32	0.00	0.00
			Max. Compression	1	0.00	0.00	0.00
			Max. Mx	116	215.42	20.42	0.00
			Max. My	53	216.85	0.00	-0.00
			Max. Vy	116	16.34	0.00	0.00
			Max. Vx	53	-0.00	0.00	0.00
T6	240 - 220	Leg	Max Tension	84	18383.10	-53.36	29.79
			Max. Compression	56	-70279.02	-11.66	146.16
			Max. Mx	57	-62348.49	2223.86	546.95
			Max. My	108	-62609.63	533.17	-2311.72
			Max. Vy	57	-3572.49	2223.86	546.95
			Max. Vx	57	4485.54	630.52	1118.93
		Diagonal	Max Tension	8	5935.76	0.00	0.00
			Max. Compression	64	-6310.25	0.00	0.00
			Max. Mx	115	1268.88	-6.93	-0.34
			Max. My	113	-6024.39	-5.33	-12.62
			Max. Vy	115	9.45	-6.93	-0.34
			Max. Vx	113	4.59	-5.33	-12.62
		Top Girt	Max Tension	104	737.05	0.00	0.00
			Max. Compression	83	-509.06	0.00	0.00
			Max. Mx	129	187.48	20.29	0.00
			Max. My	53	41.99	0.00	-0.00
			Max. Vy	129	16.23	0.00	0.00
			Max. Vx	53	-0.00	0.00	0.00
		Bottom Girt	Max Tension	60	981.19	0.00	0.00

Section No.	Elevation ft	Component Type	Condition	Gov. Load Comb.	Axial lb	Major Axis Moment lb-ft	Minor Axis Moment lb-ft
			Max. Compression	39	-834.31	0.00	0.00
			Max. Mx	114	155.46	20.29	0.00
			Max. My	53	51.18	0.00	-0.00
			Max. Vy	114	16.23	0.00	0.00
			Max. Vx	53	-0.00	0.00	0.00
		Mid Girt	Max Tension	84	559.33	0.00	0.00
			Max. Compression	28	-67.12	0.00	0.00
			Max. Mx	114	211.50	20.29	0.00
			Max. My	53	229.19	0.00	-0.00
			Max. Vy	114	16.23	0.00	0.00
			Max. Vx	53	-0.00	0.00	0.00
T7	220 - 200	Leg	Max Tension	84	11541.84	-387.24	296.17
			Max. Compression	31	-65668.48	-1557.82	-621.94
			Max. Mx	39	-42513.01	3116.50	364.99
			Max. My	8	-37518.90	-549.52	-3699.14
			Max. Vy	39	4727.03	1883.98	372.15
			Max. Vx	64	5581.67	278.86	2236.45
		Diagonal	Max Tension	64	8177.24	0.00	0.00
			Max. Compression	8	-8349.00	0.00	0.00
			Max. Mx	115	1388.98	-8.60	-0.81
			Max. My	8	-8345.18	-1.81	-13.59
			Max. Vy	115	11.17	-8.60	-0.81
			Max. Vx	8	4.94	-4.31	-13.59
		Top Girt	Max Tension	39	1640.32	0.00	0.00
			Max. Compression	63	-1251.15	0.00	0.00
			Max. Mx	114	96.41	26.93	0.00
			Max. My	53	208.10	0.00	-0.00
			Max. Vy	114	-21.54	0.00	0.00
			Max. Vx	53	0.00	0.00	0.00
		Bottom Girt	Max Tension	60	2179.21	0.00	0.00
			Max. Compression	39	-2017.21	0.00	0.00
			Max. Mx	114	195.46	26.93	0.00
			Max. My	53	143.18	0.00	-0.00
			Max. Vy	114	-21.54	0.00	0.00
			Max. Vx	53	0.00	0.00	0.00
		Mid Girt	Max Tension	84	483.38	0.00	0.00
			Max. Compression	1	0.00	0.00	0.00
			Max. Mx	114	291.69	26.93	0.00
			Max. My	53	299.38	0.00	-0.00
			Max. Vy	114	-21.54	0.00	0.00
			Max. Vx	53	0.00	0.00	0.00
T8	200 - 180	Leg	Max Tension	60	47608.33	-31.26	454.32
			Max. Compression	39	-142744.99	-1022.71	-707.80
			Max. Mx	39	-53537.40	-4481.30	-599.89
			Max. My	64	-40785.34	-613.23	-5232.68
			Max. Vy	39	6365.65	-4480.33	-601.56
			Max. Vx	64	7476.58	-612.78	-5232.12
		Diagonal	Max Tension	64	11210.93	0.00	0.00
			Max. Compression	8	-11682.67	0.00	0.00
			Max. Mx	123	1223.56	-13.66	1.25
			Max. My	64	-11148.14	-6.25	16.83
			Max. Vy	123	15.66	-13.66	1.25
			Max. Vx	64	-6.11	-6.25	16.83
		Top Girt	Max Tension	39	3673.25	0.00	0.00
			Max. Compression	63	-3177.54	0.00	0.00
			Max. Mx	114	152.67	34.79	0.00
			Max. My	53	198.80	0.00	-0.00
			Max. Vy	114	-27.83	0.00	0.00
			Max. Vx	53	0.00	0.00	0.00
		Mid Girt	Max Tension	54	665.66	0.00	0.00
			Max. Compression	1	0.00	0.00	0.00

Section No.	Elevation ft	Component Type	Condition	Gov. Load Comb.	Axial lb	Major Axis Moment lb-ft	Minor Axis Moment lb-ft
			Max. Mx	114	489.27	34.79	0.00
			Max. My	53	491.61	0.00	-0.00
			Max. Vy	114	-27.83	0.00	0.00
			Max. Vx	53	0.00	0.00	0.00
		Top Guy Pull-Off	Max Tension	29	18227.48	0.00	0.00
			Max. Compression	4	-9228.42	0.00	0.00
			Max. Mx	114	3883.62	34.79	0.00
			Max. My	53	4445.27	0.00	-0.00
			Max. Vy	114	-27.83	0.00	0.00
			Max. Vx	53	0.00	0.00	0.00
T9	180 - 160	Leg	Max Tension	60	41412.35	119.35	-1496.91
			Max. Compression	39	-142762.69	985.37	961.54
			Max. Mx	89	14463.31	-2664.95	-104.08
			Max. My	61	30292.77	36.22	3190.31
			Max. Vy	86	4708.21	2349.93	-232.74
			Max. Vx	61	-5296.72	136.19	-2101.43
		Diagonal	Max Tension	54	7926.07	0.00	0.00
			Max. Compression	61	-8294.71	0.00	0.00
			Max. Mx	77	-3391.50	-24.54	-1.56
			Max. My	57	-7773.94	-4.02	12.02
			Max. Vy	127	17.53	-19.02	0.67
			Max. Vx	57	-4.36	-4.02	12.02
		Top Girt	Max Tension	58	5311.61	0.00	0.00
			Max. Compression	79	-4717.42	0.00	0.00
			Max. Mx	114	45.92	34.60	0.00
			Max. My	53	215.68	0.00	-0.00
			Max. Vy	114	-27.68	0.00	0.00
			Max. Vx	53	0.00	0.00	0.00
		Bottom Girt	Max Tension	40	2222.47	0.00	0.00
			Max. Compression	61	-1224.63	0.00	0.00
			Max. Mx	114	384.56	34.60	0.00
			Max. My	53	283.72	0.00	-0.00
			Max. Vy	114	-27.68	0.00	0.00
			Max. Vx	53	0.00	0.00	0.00
		Mid Girt	Max Tension	93	1600.43	0.00	0.00
			Max. Compression	37	-851.30	0.00	0.00
			Max. Mx	114	393.40	34.60	0.00
			Max. My	53	348.72	0.00	-0.00
			Max. Vy	114	-27.68	0.00	0.00
			Max. Vx	53	0.00	0.00	0.00
		Guy A	Bottom Tension	71	38231.27		
			Top Tension	71	38560.78		
			Top Cable Vert	71	26925.29		
			Top Cable Norm	71	27603.61		
			Top Cable Tan	71	52.41		
			Bot Cable Vert	71	-26114.18		
			Bot Cable Norm	71	27921.17		
			Bot Cable Tan	71	296.88		
		Guy B	Bottom Tension	106	36399.84		
			Top Tension	106	36692.10		
			Top Cable Vert	106	23975.17		
			Top Cable Norm	106	27775.90		
			Top Cable Tan	106	21.57		
			Bot Cable Vert	106	-23214.10		
			Bot Cable Norm	106	28036.13		
			Bot Cable Tan	106	170.25		
		Guy C	Bottom Tension	15	35484.34		
			Top Tension	15	35750.45		
			Top Cable Vert	15	22118.89		
			Top Cable Norm	15	28086.42		
			Top Cable Tan	15	48.37		

Section No.	Elevation ft	Component Type	Condition	Gov. Load Comb.	Axial lb	Major Axis Moment lb-ft	Minor Axis Moment lb-ft
			Bot Cable Vert	15	-21395.12		
			Bot Cable Norm	15	28307.56		
			Bot Cable Tan	15	262.70		
		Bottom Guy Pull-Off	Max Tension	58	14454.50	0.00	0.00
			Max. Compression	37	-19356.48	0.00	0.00
			Max. Mx	114	-1772.10	34.60	0.00
			Max. My	53	-2388.09	0.00	-0.00
			Max. Vy	114	-27.68	0.00	0.00
			Max. Vx	53	0.00	0.00	0.00
		Torque Arm Top	Max Tension	85	39608.39	0.00	0.00
			Max. Compression	1	0.00	0.00	0.00
			Max. Mx	128	18954.89	330.38	0.00
			Max. My	60	20886.98	0.00	0.32
			Max. Vy	128	-152.71	0.00	0.00
			Max. Vx	60	-0.15	0.00	0.00
		Torque Arm Bottom	Max Tension	51	20680.86	0.00	0.00
			Max. Compression	51	-57688.08	0.00	0.00
			Max. Mx	118	-9727.11	348.55	0.00
			Max. My	60	-43077.51	0.00	-0.47
			Max. Vy	118	-152.77	0.00	0.00
			Max. Vx	60	0.21	0.00	0.00
T10	160 - 140	Leg	Max Tension	1	0.00	0.00	0.00
			Max. Compression	39	-96474.56	828.21	853.40
			Max. Mx	82	-52794.83	-1933.74	698.82
			Max. My	5	-69293.15	43.55	-2436.11
			Max. Vy	82	3229.07	1291.68	-480.75
			Max. Vx	5	3889.71	-223.47	1447.22
		Diagonal	Max Tension	54	4885.64	0.00	0.00
			Max. Compression	5	-5485.68	0.00	0.00
			Max. Mx	126	-190.47	-9.24	0.07
			Max. My	5	-5461.26	-3.53	-4.91
			Max. Vy	126	11.20	-9.24	0.07
			Max. Vx	5	1.78	-3.53	-4.91
		Top Girt	Max Tension	96	1593.65	0.00	0.00
			Max. Compression	40	-1356.68	0.00	0.00
			Max. Mx	114	290.89	26.38	0.00
			Max. My	53	364.54	0.00	-0.00
			Max. Vy	114	-21.10	0.00	0.00
			Max. Vx	53	0.00	0.00	0.00
		Bottom Girt	Max Tension	40	855.28	0.00	0.00
			Max. Compression	110	-1.48	0.00	0.00
			Max. Mx	114	320.01	26.38	0.00
			Max. My	14	273.56	0.00	-0.00
			Max. Vy	114	-21.10	0.00	0.00
			Max. Vx	14	0.00	0.00	0.00
		Mid Girt	Max Tension	84	870.31	0.00	0.00
			Max. Compression	1	0.00	0.00	0.00
			Max. Mx	114	623.06	26.38	0.00
			Max. My	102	526.06	0.00	-0.00
			Max. Vy	114	-21.10	0.00	0.00
			Max. Vx	102	0.00	0.00	0.00
T11	140 - 120	Leg	Max Tension	1	0.00	0.00	0.00
			Max. Compression	76	-94254.80	363.68	141.06
			Max. Mx	87	-73120.76	-1773.08	-101.32
			Max. My	59	-66304.63	-279.57	1913.31
			Max. Vy	87	-2681.14	-911.06	103.53
			Max. Vx	59	2841.33	-165.16	1173.56
		Diagonal	Max Tension	66	3736.92	0.00	0.00
			Max. Compression	66	-4285.68	0.00	0.00
			Max. Mx	126	-275.68	-9.46	-0.02

Section No.	Elevation ft	Component Type	Condition	Gov. Load Comb.	Axial lb	Major Axis Moment lb-ft	Minor Axis Moment lb-ft
			Max. My	69	-3998.12	-2.85	2.15
			Max. Vy	126	11.20	-9.46	-0.02
			Max. Vx	69	0.78	0.00	0.00
		Top Girt	Max Tension	73	591.80	0.00	0.00
			Max. Compression	4	-30.60	0.00	0.00
			Max. Mx	114	314.45	26.16	0.00
			Max. My	70	309.29	0.00	-0.00
			Max. Vy	114	-20.92	0.00	0.00
			Max. Vx	70	0.00	0.00	0.00
		Bottom Girt	Max Tension	59	1620.46	0.00	0.00
			Max. Compression	80	-976.59	0.00	0.00
			Max. Mx	114	328.53	26.16	0.00
			Max. My	70	213.83	0.00	-0.00
			Max. Vy	114	-20.92	0.00	0.00
			Max. Vx	70	0.00	0.00	0.00
		Mid Girt	Max Tension	83	928.80	0.00	0.00
			Max. Compression	1	0.00	0.00	0.00
			Max. Mx	114	646.34	26.16	0.00
			Max. My	70	570.15	0.00	-0.00
			Max. Vy	114	-20.92	0.00	0.00
			Max. Vx	70	0.00	0.00	0.00
T12	120 - 100	Leg	Max Tension	1	0.00	0.00	0.00
			Max. Compression	38	-115091.82	-1313.39	-875.12
			Max. Mx	30	-57285.24	-4470.03	908.85
			Max. My	64	-47237.15	-304.14	-4764.87
			Max. Vy	30	-6595.51	-4470.03	908.85
			Max. Vx	64	-7017.34	-304.14	-4764.87
		Diagonal	Max Tension	66	4784.86	0.00	0.00
			Max. Compression	70	-5424.38	0.00	0.00
			Max. Mx	128	424.15	-9.00	-0.04
			Max. My	71	-5332.25	-1.23	3.42
			Max. Vy	123	10.94	-9.00	0.05
			Max. Vx	71	1.25	0.00	0.00
		Top Girt	Max Tension	80	1714.73	0.00	0.00
			Max. Compression	59	-1102.23	0.00	0.00
			Max. Mx	114	325.39	25.90	0.00
			Max. My	70	340.18	0.00	-0.00
			Max. Vy	114	-20.72	0.00	0.00
			Max. Vx	70	0.00	0.00	0.00
		Bottom Girt	Max Tension	84	16350.14	0.00	0.00
			Max. Compression	63	-700.28	0.00	0.00
			Max. Mx	118	4334.29	25.90	0.00
			Max. My	70	8336.23	0.00	-0.00
			Max. Vy	118	-20.72	0.00	0.00
			Max. Vx	70	0.00	0.00	0.00
		Mid Girt	Max Tension	82	847.55	0.00	0.00
			Max. Compression	1	0.00	0.00	0.00
			Max. Mx	114	719.30	25.90	0.00
			Max. My	70	636.74	0.00	-0.00
			Max. Vy	114	-20.72	0.00	0.00
			Max. Vx	70	0.00	0.00	0.00
		Guy A	Bottom Tension	56	38117.62		
			Top Tension	56	38323.93		
			Top Cable Vert	56	19787.06		
			Top Cable Norm	56	32820.66		
			Top Cable Tan	56	12.46		
			Bot Cable Vert	56	-19201.75		
			Bot Cable Norm	56	32927.14		
			Bot Cable Tan	56	222.44		
		Guy B	Bottom Tension	112	36037.87		
			Top Tension	112	36205.91		

Section No.	Elevation ft	Component Type	Condition	Gov. Load Comb.	Axial lb	Major Axis Moment lb-ft	Minor Axis Moment lb-ft
			Top Cable Vert	112	15983.48		
			Top Cable Norm	112	32486.86		
			Top Cable Tan	112	18.50		
			Bot Cable Vert	112	-15443.25		
			Bot Cable Norm	112	32560.60		
			Bot Cable Tan	112	205.19		
		Guy C	Bottom Tension	14	34783.08		
			Top Tension	14	34925.56		
			Top Cable Vert	14	13470.08		
			Top Cable Norm	14	32223.46		
			Top Cable Tan	14	18.72		
			Bot Cable Vert	14	-12961.60		
			Bot Cable Norm	14	32277.26		
			Bot Cable Tan	14	196.10		
T13	100 - 80	Leg	Max Tension	1	0.00	0.00	0.00
			Max. Compression	68	-120923.56	323.23	-982.39
			Max. Mx	30	-57303.26	3907.62	-743.19
			Max. My	58	-47562.20	304.51	4136.18
			Max. Vy	30	-6664.01	-2752.74	570.51
			Max. Vx	64	-7077.17	-178.78	-2937.83
		Diagonal	Max Tension	109	7676.97	0.00	0.00
			Max. Compression	53	-8307.01	0.00	0.00
			Max. Mx	127	276.85	-9.87	-0.05
			Max. My	53	-8303.29	0.25	4.23
			Max. Vy	127	11.14	-9.87	-0.05
			Max. Vx	53	1.53	0.00	0.00
		Top Girt	Max Tension	25	3168.85	0.00	0.00
			Max. Compression	4	-1714.02	0.00	0.00
			Max. Mx	118	1382.65	25.60	0.00
			Max. My	70	873.03	0.00	-0.00
			Max. Vy	118	-20.48	0.00	0.00
			Max. Vx	70	0.00	0.00	0.00
		Bottom Girt	Max Tension	37	2321.14	0.00	0.00
			Max. Compression	29	-1644.27	0.00	0.00
			Max. Mx	118	-107.10	25.60	0.00
			Max. My	70	492.05	0.00	-0.00
			Max. Vy	118	-20.48	0.00	0.00
			Max. Vx	70	0.00	0.00	0.00
		Mid Girt	Max Tension	82	1059.84	0.00	0.00
			Max. Compression	1	0.00	0.00	0.00
			Max. Mx	118	758.85	25.60	0.00
			Max. My	70	693.95	0.00	-0.00
			Max. Vy	118	-20.48	0.00	0.00
			Max. Vx	70	0.00	0.00	0.00
T14	80 - 60	Leg	Max Tension	82	4487.92	303.43	-290.11
			Max. Compression	68	-144563.59	136.67	-59.12
			Max. Mx	32	-102130.10	2492.07	-293.26
			Max. My	58	-105663.27	245.30	2633.26
			Max. Vy	32	-3736.55	-1240.98	47.82
			Max. Vx	58	-3921.33	-149.03	-1283.75
		Diagonal	Max Tension	109	4757.32	0.00	0.00
			Max. Compression	53	-5392.06	0.00	0.00
			Max. Mx	123	-10.05	-10.09	-0.07
			Max. My	109	-5384.31	1.92	-2.77
			Max. Vy	123	11.08	-10.09	-0.07
			Max. Vx	109	-1.01	0.00	0.00
		Top Girt	Max Tension	93	2021.14	0.00	0.00
			Max. Compression	4	-1327.48	0.00	0.00
			Max. Mx	114	342.28	25.24	0.00
			Max. My	70	172.84	0.00	-0.00
			Max. Vy	114	-20.19	0.00	0.00

Section No.	Elevation ft	Component Type	Condition	Gov. Load Comb.	Axial lb	Major Axis Moment lb-ft	Minor Axis Moment lb-ft
			Max. Vx	70	0.00	0.00	0.00
		Bottom Girt	Max Tension	39	1166.37	0.00	0.00
			Max. Compression	29	-522.86	0.00	0.00
			Max. Mx	114	410.63	25.24	0.00
			Max. My	70	462.56	0.00	-0.00
			Max. Vy	114	-20.19	0.00	0.00
			Max. Vx	70	0.00	0.00	0.00
		Mid Girt	Max Tension	82	1257.12	0.00	0.00
			Max. Compression	1	0.00	0.00	0.00
			Max. Mx	114	752.98	25.24	0.00
			Max. My	70	680.92	0.00	-0.00
			Max. Vy	114	-20.19	0.00	0.00
			Max. Vx	70	0.00	0.00	0.00
T15	60 - 40	Leg	Max Tension	82	5301.87	-136.53	57.43
			Max. Compression	68	-146844.35	-116.83	-172.37
			Max. Mx	89	-139613.86	-1048.46	-24.14
			Max. My	58	-137125.48	-67.10	1016.39
			Max. Vy	82	-1513.44	-553.03	263.76
			Max. Vx	5	-1509.97	-79.69	-550.49
		Diagonal	Max Tension	82	1554.97	0.00	0.00
			Max. Compression	82	-2111.29	0.00	0.00
			Max. Mx	124	-536.31	-10.27	-0.17
			Max. My	14	-1879.08	-1.57	1.03
			Max. Vy	124	10.98	-10.27	-0.17
			Max. Vx	14	-0.38	-1.57	1.03
		Top Girt	Max Tension	59	729.78	0.00	0.00
			Max. Compression	3	-47.48	0.00	0.00
			Max. Mx	114	354.05	24.78	0.00
			Max. My	70	214.09	0.00	-0.00
			Max. Vy	114	-19.83	0.00	0.00
			Max. Vx	70	0.00	0.00	0.00
		Bottom Girt	Max Tension	68	668.36	0.00	0.00
			Max. Compression	82	-108.97	0.00	0.00
			Max. Mx	114	423.84	24.78	0.00
			Max. My	70	387.87	0.00	-0.00
			Max. Vy	114	-19.83	0.00	0.00
			Max. Vx	70	0.00	0.00	0.00
		Mid Girt	Max Tension	82	1310.67	0.00	0.00
			Max. Compression	1	0.00	0.00	0.00
			Max. Mx	114	781.22	24.78	0.00
			Max. My	70	699.77	0.00	-0.00
			Max. Vy	114	-19.83	0.00	0.00
			Max. Vx	70	0.00	0.00	0.00
T16	40 - 20	Leg	Max Tension	1	0.00	0.00	0.00
			Max. Compression	65	-144137.55	187.06	-390.11
			Max. Mx	89	-120581.84	-2214.02	-176.70
			Max. My	61	-118753.94	132.28	2221.72
			Max. Vy	82	-3255.28	-1171.40	628.15
			Max. Vx	5	-3501.14	-100.80	-1258.82
		Diagonal	Max Tension	54	4002.15	0.00	0.00
			Max. Compression	54	-4687.44	0.00	0.00
			Max. Mx	124	-791.57	-10.19	-0.20
			Max. My	54	-4683.57	-3.41	-2.04
			Max. Vy	124	10.71	-10.19	-0.20
			Max. Vx	54	0.75	-7.96	-2.04
		Top Girt	Max Tension	82	1411.25	0.00	0.00
			Max. Compression	61	-517.94	0.00	0.00
			Max. Mx	114	364.25	24.13	0.00
			Max. My	70	309.01	0.00	-0.00
			Max. Vy	114	-19.31	0.00	0.00
			Max. Vx	70	0.00	0.00	0.00

Section No.	Elevation ft	Component Type	Condition	Gov. Load Comb.	Axial lb	Major Axis Moment lb-ft	Minor Axis Moment lb-ft
		Bottom Girt	Max Tension	61	1709.66	0.00	0.00
			Max. Compression	82	-1122.64	0.00	0.00
			Max. Mx	118	755.00	24.13	0.00
			Max. My	70	411.30	0.00	-0.00
			Max. Vy	114	-19.31	0.00	0.00
			Max. Vx	70	0.00	0.00	0.00
		Mid Girt	Max Tension	79	1222.66	0.00	0.00
			Max. Compression	1	0.00	0.00	0.00
			Max. Mx	114	806.46	24.13	0.00
			Max. My	70	724.36	0.00	-0.00
			Max. Vy	114	-19.31	0.00	0.00
			Max. Vx	70	0.00	0.00	0.00
T17	20 - 5.25	Leg	Max Tension	1	0.00	0.00	0.00
			Max. Compression	65	-124676.36	677.55	-1634.98
			Max. Mx	37	-98075.81	-2343.71	1100.17
			Max. My	72	-101279.92	262.44	-2701.02
			Max. Vy	86	-17421.85	2303.46	1260.80
			Max. Vx	65	20151.33	305.52	-2686.92
		Diagonal	Max Tension	54	5032.47	0.00	0.00
			Max. Compression	54	-5095.19	0.00	0.00
			Max. Mx	123	-781.88	-8.79	0.07
			Max. My	54	-5091.43	-0.19	-1.31
			Max. Vy	123	9.85	-8.79	-0.03
			Max. Vx	54	-0.48	-0.19	-1.31
		Top Girt	Max Tension	82	2351.16	0.00	0.00
			Max. Compression	61	-1276.46	0.00	0.00
			Max. Mx	118	141.53	23.15	0.00
			Max. My	70	441.64	0.00	-0.00
			Max. Vy	114	18.52	0.00	0.00
			Max. Vx	70	0.00	0.00	0.00
		Bottom Girt	Max Tension	126	8916.80	0.00	0.00
			Max. Compression	1	0.00	0.00	0.00
			Max. Mx	118	8660.41	23.15	0.00
			Max. My	70	7755.92	0.00	-0.00
			Max. Vy	114	18.52	0.00	0.00
			Max. Vx	70	0.00	0.00	0.00
		Mid Girt	Max Tension	79	1116.05	0.00	0.00
			Max. Compression	1	0.00	0.00	0.00
			Max. Mx	118	1000.00	23.15	0.00
			Max. My	70	917.93	0.00	-0.00
			Max. Vy	114	18.52	0.00	0.00
			Max. Vx	70	0.00	0.00	0.00
T18	5.25 - 0	Leg	Max Tension	1	0.00	0.00	0.00
			Max. Compression	123	-115768.29	-334.82	118.26
			Max. Mx	72	-98352.25	2702.01	235.04
			Max. My	7	-83145.41	-255.74	1388.81
			Max. Vy	123	32766.09	-483.47	-0.83
			Max. Vx	68	1691.67	-483.61	33.50
		Diagonal	Max Tension	1	0.00	0.00	0.00
			Max. Compression	2	-7157.91	0.00	0.00
			Max. Mx	123	-6441.27	16.00	2.69
			Max. My	130	-6411.34	-15.13	-12.45
			Max. Vy	123	14.88	0.00	0.00
			Max. Vx	130	4.11	-15.13	-12.45
		Secondary Horizontal	Max Tension	14	777.45	0.00	0.00
			Max. Compression	7	-809.33	0.00	0.00
			Max. Mx	115	-19.31	0.79	2.40
			Max. My	130	11.06	-0.66	2.43
			Max. Vy	123	-3.09	-0.70	2.36
			Max. Vx	122	-1.49	-0.66	2.43

Section No.	Elevation ft	Component Type	Condition	Gov. Load Comb.	Axial lb	Major Axis Moment lb-ft	Minor Axis Moment lb-ft
		Top Girt	Max Tension	79	25525.27	0.00	0.00
			Max. Compression	1	0.00	0.00	0.00
			Max. Mx	123	24590.48	72.51	0.00
			Max. My	122	24561.04	0.00	19.94
			Max. Vy	123	-58.94	0.00	0.00
			Max. Vx	122	16.21	0.00	0.00
		Mid Girt	Max Tension	126	6832.39	0.00	0.00
			Max. Compression	1	0.00	0.00	0.00
			Max. Mx	123	6629.51	18.13	0.00
			Max. My	122	6619.91	0.00	4.98
			Max. Vy	123	-29.47	0.00	0.00
			Max. Vx	122	-8.10	0.00	0.00

Maximum Reactions

Location	Condition	Gov. Load Comb.	Vertical lb	Horizontal, X lb	Horizontal, Z lb
Mast	Max. Vert	123	295156.24	32.56	-1708.33
	Max. H_x	89	243175.70	8138.89	-14.75
	Max. H_z	5	245936.07	2.34	8159.14
	Max. M_x	1	0.00	19.56	-12.49
	Max. M_z	1	0.00	19.56	-12.49
	Max. Torsion	63	2150.18	73.24	-7435.93
	Min. Vert	1	156584.23	19.56	-12.49
	Min. H_x	33	239002.71	-8141.92	14.00
	Min. H_z	61	229347.76	64.62	-8111.13
	Min. M_x	1	0.00	19.56	-12.49
	Min. M_z	1	0.00	19.56	-12.49
	Min. Torsion	7	-2343.87	-26.31	7117.18
Guy C @ 220 ft Elev 11 ft Azimuth 240 deg	Max. Vert	79	-4279.75	-2510.78	1447.30
	Max. H_x	79	-4279.75	-2510.78	1447.30
	Max. H_z	9	-100154.44	-106621.16	63492.15
	Min. Vert	16	-101177.33	-107619.70	63128.73
	Min. H_x	30	-99752.63	-107923.66	60339.34
	Min. H_z	79	-4279.75	-2510.78	1447.30
Guy B @ 220 ft Elev -5 ft Azimuth 120 deg	Max. Vert	37	-5025.94	2688.11	1549.80
	Max. H_x	100	-111179.36	108527.19	63621.08
	Max. H_z	107	-110499.83	107783.22	64130.00
	Min. Vert	100	-111179.36	108527.19	63621.08
	Min. H_x	37	-5025.94	2688.11	1549.80
	Min. H_z	44	-5904.09	3716.80	1507.24
Guy A @ 220 ft Elev -29 ft Azimuth 0 deg	Max. Vert	2	-6693.65	-0.45	-3766.90
	Max. H_x	86	-64902.68	3433.03	-64304.76
	Max. H_z	2	-6693.65	-0.45	-3766.90
	Min. Vert	51	-123333.21	-1772.40	-125222.94
	Min. H_x	30	-66323.85	-3409.28	-65512.26
	Min. H_z	51	-123333.21	-1772.40	-125222.94

Tower Mast Reaction Summary

Load Combination	Vertical lb	$Shear_x$ lb	$Shear_z$ lb	Overturning Moment, M_x lb-ft	Overturning Moment, M_z lb-ft	Torque lb-ft
Dead Only	156584.23	-19.56	12.49	0.00	0.00	-1.23
1.2 Dead+1.0 Wind 0 deg - No Ice+1.0 Guy	265663.66	29.07	-6969.27	0.00	0.00	2179.96
1.2D+1.0W (pattern 1) 0 deg - No Ice+1.0 Guy	261135.69	41.26	-2737.94	0.00	0.00	1613.00
1.2D+1.0W (pattern 2) 0 deg - No Ice+1.0 Guy	249261.92	20.81	-7517.83	0.00	0.00	1890.18
1.2D+1.0W (pattern 3) 0 deg - No Ice+1.0 Guy	245936.07	-2.34	-8159.14	0.00	0.00	2132.24
1.2D+1.0W (pattern 4) 0 deg - No Ice+1.0 Guy	259210.88	22.29	-7196.21	0.00	0.00	2259.56
1.2D+1.0W (pattern 5) 0 deg - No Ice+1.0 Guy	258878.79	26.31	-7117.18	0.00	0.00	2343.87
1.2D+1.0W (pattern 6) 0 deg - No Ice+1.0 Guy	263952.71	27.36	-6990.39	0.00	0.00	2134.85
1.2 Dead+1.0 Wind 30 deg - No Ice+1.0 Guy	250716.89	3869.76	-6175.02	0.00	0.00	2156.50
1.2D+1.0W (pattern 1) 30 deg - No Ice+1.0 Guy	247070.23	1934.66	-2499.92	0.00	0.00	1498.21
1.2D+1.0W (pattern 2) 30 deg - No Ice+1.0 Guy	237890.19	4083.50	-6574.62	0.00	0.00	1889.65
1.2D+1.0W (pattern 3) 30 deg - No Ice+1.0 Guy	235512.17	4072.73	-7111.65	0.00	0.00	2120.66
1.2D+1.0W (pattern 4) 30 deg - No Ice+1.0 Guy	245923.73	3885.48	-6343.53	0.00	0.00	2227.09
1.2D+1.0W (pattern 5) 30 deg - No Ice+1.0 Guy	245746.43	3872.94	-6279.64	0.00	0.00	2262.47
1.2D+1.0W (pattern 6) 30 deg - No Ice+1.0 Guy	249432.19	3867.54	-6189.17	0.00	0.00	2107.50
1.2 Dead+1.0 Wind 45 deg - No Ice+1.0 Guy	236476.71	5476.22	-5194.20	0.00	0.00	1757.18
1.2D+1.0W (pattern 1) 45 deg - No Ice+1.0 Guy	233956.81	2712.43	-2195.63	0.00	0.00	1098.11
1.2D+1.0W (pattern 2) 45 deg - No Ice+1.0 Guy	227720.52	5762.96	-5468.67	0.00	0.00	1493.11
1.2D+1.0W (pattern 3) 45 deg - No Ice+1.0 Guy	226029.18	5779.30	-5862.31	0.00	0.00	1735.61
1.2D+1.0W (pattern 4) 45 deg - No Ice+1.0 Guy	233166.17	5497.80	-5308.17	0.00	0.00	1819.53
1.2D+1.0W (pattern 5) 45 deg - No Ice+1.0 Guy	233001.11	5475.61	-5262.65	0.00	0.00	1840.39
1.2D+1.0W (pattern 6) 45 deg - No Ice+1.0 Guy	235574.69	5471.67	-5203.08	0.00	0.00	1707.58
1.2 Dead+1.0 Wind 60 deg - No Ice+1.0 Guy	226853.98	6655.81	-3827.22	0.00	0.00	1157.57
1.2D+1.0W (pattern 1) 60 deg - No Ice+1.0 Guy	225581.52	3178.26	-1816.15	0.00	0.00	564.98
1.2D+1.0W (pattern 2) 60 deg - No Ice+1.0 Guy	221816.20	6981.24	-4015.66	0.00	0.00	922.26
1.2D+1.0W (pattern 3) 60 deg - No Ice+1.0 Guy	220323.05	7131.64	-4107.87	0.00	0.00	1182.01
1.2D+1.0W (pattern 4) 60 deg - No Ice+1.0 Guy	224529.51	6708.62	-3852.43	0.00	0.00	1199.99
1.2D+1.0W (pattern 5) 60 deg - No Ice+1.0 Guy	224391.86	6668.66	-3834.92	0.00	0.00	1180.55
1.2D+1.0W (pattern 6) 60 deg -	226217.05	6651.91	-3825.80	0.00	0.00	1101.46

Load Combination	Vertical lb	$Shear_x$ lb	$Shear_z$ lb	Overturning Moment, M_x lb-ft	Overturning Moment, M_z lb-ft	Torque lb-ft
No Ice+1.0 Guy						
1.2 Dead+1.0 Wind 90 deg - No Ice+1.0 Guy	255319.81	7193.81	-351.41	0.00	0.00	-144.39
1.2D+1.0W (pattern 1) 90 deg - No Ice+1.0 Guy	251348.36	3051.68	-521.75	0.00	0.00	-465.34
1.2D+1.0W (pattern 2) 90 deg - No Ice+1.0 Guy	241546.99	7672.29	-318.76	0.00	0.00	-261.03
1.2D+1.0W (pattern 3) 90 deg - No Ice+1.0 Guy	239002.71	8141.92	-14.00	0.00	0.00	-64.88
1.2D+1.0W (pattern 4) 90 deg - No Ice+1.0 Guy	249738.34	7375.62	-255.48	0.00	0.00	-153.73
1.2D+1.0W (pattern 5) 90 deg - No Ice+1.0 Guy	250018.18	7300.88	-286.41	0.00	0.00	-229.39
1.2D+1.0W (pattern 6) 90 deg - No Ice+1.0 Guy	253956.68	7207.72	-340.59	0.00	0.00	-174.98
1.2 Dead+1.0 Wind 120 deg - No Ice+1.0 Guy	275373.06	5866.46	3239.29	0.00	0.00	-990.15
1.2D+1.0W (pattern 1) 120 deg - No Ice+1.0 Guy	270239.81	2227.03	1099.03	0.00	0.00	-968.12
1.2D+1.0W (pattern 2) 120 deg - No Ice+1.0 Guy	257314.07	6394.91	3572.02	0.00	0.00	-900.61
1.2D+1.0W (pattern 3) 120 deg - No Ice+1.0 Guy	253840.24	6950.92	3966.04	0.00	0.00	-903.48
1.2D+1.0W (pattern 4) 120 deg - No Ice+1.0 Guy	267865.95	6096.70	3399.47	0.00	0.00	-1034.87
1.2D+1.0W (pattern 5) 120 deg - No Ice+1.0 Guy	267695.86	6022.76	3346.56	0.00	0.00	-1167.29
1.2D+1.0W (pattern 6) 120 deg - No Ice+1.0 Guy	273506.50	5888.77	3255.85	0.00	0.00	-988.44
1.2 Dead+1.0 Wind 135 deg - No Ice+1.0 Guy	275007.07	4613.81	4768.21	0.00	0.00	-1327.41
1.2D+1.0W (pattern 1) 135 deg - No Ice+1.0 Guy	269941.19	1594.69	1826.22	0.00	0.00	-1130.21
1.2D+1.0W (pattern 2) 135 deg - No Ice+1.0 Guy	257449.51	5054.79	5195.69	0.00	0.00	-1127.38
1.2D+1.0W (pattern 3) 135 deg - No Ice+1.0 Guy	254300.56	5599.29	5589.72	0.00	0.00	-1244.82
1.2D+1.0W (pattern 4) 135 deg - No Ice+1.0 Guy	267807.20	4829.60	4937.62	0.00	0.00	-1381.39
1.2D+1.0W (pattern 5) 135 deg - No Ice+1.0 Guy	267539.16	4763.45	4879.40	0.00	0.00	-1531.14
1.2D+1.0W (pattern 6) 135 deg - No Ice+1.0 Guy	273218.67	4635.01	4784.72	0.00	0.00	-1309.96
1.2 Dead+1.0 Wind 150 deg - No Ice+1.0 Guy	266469.23	3137.68	6045.96	0.00	0.00	-1644.61
1.2D+1.0W (pattern 1) 150 deg - No Ice+1.0 Guy	261890.86	932.64	2490.42	0.00	0.00	-1287.29
1.2D+1.0W (pattern 2) 150 deg - No Ice+1.0 Guy	250956.78	3436.06	6512.87	0.00	0.00	-1350.91
1.2D+1.0W (pattern 3) 150 deg - No Ice+1.0 Guy	248503.24	3934.17	6882.16	0.00	0.00	-1569.68
1.2D+1.0W (pattern 4) 150 deg - No Ice+1.0 Guy	260280.14	3320.21	6205.99	0.00	0.00	-1704.77
1.2D+1.0W (pattern 5) 150 deg - No Ice+1.0 Guy	260055.41	3264.76	6144.72	0.00	0.00	-1868.33
1.2D+1.0W (pattern 6) 150 deg - No Ice+1.0 Guy	264965.11	3155.30	6059.07	0.00	0.00	-1611.39
1.2 Dead+1.0 Wind 180 deg - No Ice+1.0 Guy	238054.30	-77.81	7403.58	0.00	0.00	-1847.86
1.2D+1.0W (pattern 1) 180 deg - No Ice+1.0 Guy	235752.34	-83.64	3319.29	0.00	0.00	-1252.31

Load Combination	Vertical lb	$Shear_x$ lb	$Shear_z$ lb	Overturning Moment, M_x lb-ft	Overturning Moment, M_z lb-ft	Torque lb-ft
1.2D+1.0W (pattern 2) 180 deg - No Ice+1.0 Guy	230433.10	-75.93	7822.02	0.00	0.00	-1581.11
1.2D+1.0W (pattern 3) 180 deg - No Ice+1.0 Guy	229347.76	-64.62	8111.13	0.00	0.00	-1877.68
1.2D+1.0W (pattern 4) 180 deg - No Ice+1.0 Guy	235076.62	-70.32	7499.26	0.00	0.00	-1971.70
1.2D+1.0W (pattern 5) 180 deg - No Ice+1.0 Guy	235054.36	-73.24	7435.93	0.00	0.00	-2150.18
1.2D+1.0W (pattern 6) 180 deg - No Ice+1.0 Guy	237334.55	-76.76	7401.74	0.00	0.00	-1773.03
1.2 Dead+1.0 Wind 210 deg - No Ice+1.0 Guy	266375.06	-3220.07	6090.31	0.00	0.00	-1980.71
1.2D+1.0W (pattern 1) 210 deg - No Ice+1.0 Guy	261634.11	-1013.34	2535.50	0.00	0.00	-1338.80
1.2D+1.0W (pattern 2) 210 deg - No Ice+1.0 Guy	250476.04	-3528.89	6557.41	0.00	0.00	-1777.05
1.2D+1.0W (pattern 3) 210 deg - No Ice+1.0 Guy	247972.96	-4042.35	6927.44	0.00	0.00	-1971.46
1.2D+1.0W (pattern 4) 210 deg - No Ice+1.0 Guy	260607.37	-3393.75	6239.10	0.00	0.00	-2039.93
1.2D+1.0W (pattern 5) 210 deg - No Ice+1.0 Guy	260419.22	-3342.54	6184.66	0.00	0.00	-2098.74
1.2D+1.0W (pattern 6) 210 deg - No Ice+1.0 Guy	264865.96	-3240.61	6102.66	0.00	0.00	-1923.32
1.2 Dead+1.0 Wind 225 deg - No Ice+1.0 Guy	276341.33	-4635.87	4794.21	0.00	0.00	-1621.02
1.2D+1.0W (pattern 1) 225 deg - No Ice+1.0 Guy	270978.70	-1618.67	1864.01	0.00	0.00	-1009.90
1.2D+1.0W (pattern 2) 225 deg - No Ice+1.0 Guy	258101.56	-5100.50	5228.34	0.00	0.00	-1435.08
1.2D+1.0W (pattern 3) 225 deg - No Ice+1.0 Guy	254808.77	-5674.38	5620.76	0.00	0.00	-1635.45
1.2D+1.0W (pattern 4) 225 deg - No Ice+1.0 Guy	269492.19	-4848.55	4953.90	0.00	0.00	-1662.39
1.2D+1.0W (pattern 5) 225 deg - No Ice+1.0 Guy	269180.67	-4787.83	4904.33	0.00	0.00	-1685.73
1.2D+1.0W (pattern 6) 225 deg - No Ice+1.0 Guy	274458.07	-4662.93	4811.90	0.00	0.00	-1566.09
1.2 Dead+1.0 Wind 240 deg - No Ice+1.0 Guy	278146.30	-5855.04	3271.50	0.00	0.00	-1072.89
1.2D+1.0W (pattern 1) 240 deg - No Ice+1.0 Guy	272640.04	-2210.84	1142.28	0.00	0.00	-521.25
1.2D+1.0W (pattern 2) 240 deg - No Ice+1.0 Guy	259170.25	-6419.29	3614.66	0.00	0.00	-887.99
1.2D+1.0W (pattern 3) 240 deg - No Ice+1.0 Guy	255588.52	-7011.59	4003.38	0.00	0.00	-1106.85
1.2D+1.0W (pattern 4) 240 deg - No Ice+1.0 Guy	270943.10	-6085.95	3422.86	0.00	0.00	-1096.12
1.2D+1.0W (pattern 5) 240 deg - No Ice+1.0 Guy	270604.61	-6019.48	3379.81	0.00	0.00	-1091.29
1.2D+1.0W (pattern 6) 240 deg - No Ice+1.0 Guy	276220.76	-5881.70	3288.44	0.00	0.00	-1022.99
1.2 Dead+1.0 Wind 270 deg - No Ice+1.0 Guy	260686.92	-7108.01	-323.13	0.00	0.00	83.23
1.2D+1.0W (pattern 1) 270 deg - No Ice+1.0 Guy	256260.55	-2953.99	-481.62	0.00	0.00	412.47
1.2D+1.0W (pattern 2) 270 deg - No Ice+1.0 Guy	245757.06	-7625.98	-283.83	0.00	0.00	238.57
1.2D+1.0W (pattern 3) 270 deg - No Ice+1.0 Guy	243175.70	-8138.89	14.75	0.00	0.00	15.10
1.2D+1.0W (pattern 4) 270 deg	255127.31	-7298.68	-232.49	0.00	0.00	98.64

Load Combination	Vertical lb	$Shear_x$ lb	$Shear_z$ lb	Overturning Moment, M_x lb-ft	Overturning Moment, M_z lb-ft	Torque lb-ft
- No Ice+1.0 Guy 1.2D+1.0W (pattern 5) 270 deg	254991.98	-7233.74	-253.55	0.00	0.00	153.22
- No Ice+1.0 Guy 1.2D+1.0W (pattern 6) 270 deg	259204.33	-7126.82	-310.23	0.00	0.00	115.64
- No Ice+1.0 Guy 1.2 Dead+1.0 Wind 300 deg - No Ice+1.0 Guy	231806.32	-6621.15	-3706.16	0.00	0.00	643.65
1.2D+1.0W (pattern 1) 300 deg	230123.88	-3125.26	-1677.33	0.00	0.00	652.02
- No Ice+1.0 Guy 1.2D+1.0W (pattern 2) 300 deg	225744.65	-6962.38	-3906.50	0.00	0.00	678.13
- No Ice+1.0 Guy 1.2D+1.0W (pattern 3) 300 deg	224427.07	-7141.09	-4028.87	0.00	0.00	641.00
- No Ice+1.0 Guy 1.2D+1.0W (pattern 4) 300 deg	229197.12	-6681.24	-3748.51	0.00	0.00	715.79
- No Ice+1.0 Guy 1.2D+1.0W (pattern 5) 300 deg	228966.55	-6637.52	-3725.68	0.00	0.00	876.64
- No Ice+1.0 Guy 1.2D+1.0W (pattern 6) 300 deg	231128.64	-6617.39	-3705.79	0.00	0.00	639.81
- No Ice+1.0 Guy 1.2 Dead+1.0 Wind 315 deg - No Ice+1.0 Guy	242585.80	-5431.53	-5029.51	0.00	0.00	1078.11
1.2D+1.0W (pattern 1) 315 deg	239685.64	-2654.59	-2015.90	0.00	0.00	906.78
- No Ice+1.0 Guy 1.2D+1.0W (pattern 2) 315 deg	232743.48	-5736.66	-5327.43	0.00	0.00	950.80
- No Ice+1.0 Guy 1.2D+1.0W (pattern 3) 315 deg	231112.89	-5775.97	-5757.78	0.00	0.00	1036.08
- No Ice+1.0 Guy 1.2D+1.0W (pattern 4) 315 deg	238719.25	-5461.71	-5170.39	0.00	0.00	1141.91
- No Ice+1.0 Guy 1.2D+1.0W (pattern 5) 315 deg	238470.76	-5435.32	-5116.49	0.00	0.00	1289.79
- No Ice+1.0 Guy 1.2D+1.0W (pattern 6) 315 deg	241630.86	-5428.55	-5039.11	0.00	0.00	1055.46
- No Ice+1.0 Guy 1.2 Dead+1.0 Wind 330 deg - No Ice+1.0 Guy	256153.38	-3812.61	-6020.51	0.00	0.00	1505.31
1.2D+1.0W (pattern 1) 330 deg	252263.30	-1859.37	-2339.65	0.00	0.00	1166.78
- No Ice+1.0 Guy 1.2D+1.0W (pattern 2) 330 deg	242615.74	-4044.83	-6445.40	0.00	0.00	1280.37
- No Ice+1.0 Guy 1.2D+1.0W (pattern 3) 330 deg	240220.76	-4067.97	-7004.02	0.00	0.00	1454.79
- No Ice+1.0 Guy 1.2D+1.0W (pattern 4) 330 deg	250807.10	-3840.19	-6212.78	0.00	0.00	1578.39
- No Ice+1.0 Guy 1.2D+1.0W (pattern 5) 330 deg	250549.13	-3821.49	-6141.60	0.00	0.00	1709.93
- No Ice+1.0 Guy 1.2D+1.0W (pattern 6) 330 deg	254799.89	-3813.00	-6035.93	0.00	0.00	1473.49
- No Ice+1.0 Guy 1.2 Dead+1.0 Ice+1.0 Temp+Guy	287945.08	-19.69	-2.06	0.00	0.00	1.02
1.2 Dead+1.0 Wind 0 deg+1.0 Ice+1.0 Temp+1.0 Guy	291769.37	-9.85	-1798.57	0.00	0.00	-232.99
1.2 Dead+1.0 Wind 30 deg+1.0 Ice+1.0 Temp+1.0 Guy	292483.72	862.29	-1552.43	0.00	0.00	-88.90
1.2 Dead+1.0 Wind 45 deg+1.0 Ice+1.0 Temp+1.0 Guy	293084.35	1227.93	-1258.16	0.00	0.00	-40.80
1.2 Dead+1.0 Wind 60 deg+1.0 Ice+1.0 Temp+1.0 Guy	293433.28	1513.76	-878.68	0.00	0.00	-84.99
1.2 Dead+1.0 Wind 90 deg+1.0 Ice+1.0 Temp+1.0 Guy	293231.78	1767.90	14.20	0.00	0.00	-1.35
1.2 Dead+1.0 Wind 120 deg+1.0 Ice+1.0 Temp+1.0 Guy	293275.87	1540.68	877.83	0.00	0.00	184.09

Load Combination	Vertical lb	$Shear_x$ lb	$Shear_z$ lb	Overturning Moment, M_x lb-ft	Overturning Moment, M_z lb-ft	Torque lb-ft
1.2 Dead+1.0 Wind 135 deg+1.0 Ice+1.0 Temp+1.0 Guy	293636.45	1256.41	1225.06	0.00	0.00	248.72
1.2 Dead+1.0 Wind 150 deg+1.0 Ice+1.0 Temp+1.0 Guy	294199.14	881.97	1487.86	0.00	0.00	297.44
1.2 Dead+1.0 Wind 180 deg+1.0 Ice+1.0 Temp+1.0 Guy	295156.24	-32.56	1708.33	0.00	0.00	221.15
1.2 Dead+1.0 Wind 210 deg+1.0 Ice+1.0 Temp+1.0 Guy	294856.21	-937.29	1493.95	0.00	0.00	33.08
1.2 Dead+1.0 Wind 225 deg+1.0 Ice+1.0 Temp+1.0 Guy	294674.45	-1302.58	1229.85	0.00	0.00	21.35
1.2 Dead+1.0 Wind 240 deg+1.0 Ice+1.0 Temp+1.0 Guy	294533.15	-1581.63	885.61	0.00	0.00	56.18
1.2 Dead+1.0 Wind 270 deg+1.0 Ice+1.0 Temp+1.0 Guy	294356.47	-1796.89	38.15	0.00	0.00	121.03
1.2 Dead+1.0 Wind 300 deg+1.0 Ice+1.0 Temp+1.0 Guy	294299.70	-1537.62	-851.93	0.00	0.00	-105.06
1.2 Dead+1.0 Wind 315 deg+1.0 Ice+1.0 Temp+1.0 Guy	293710.40	-1249.43	-1235.87	0.00	0.00	-195.44
1.2 Dead+1.0 Wind 330 deg+1.0 Ice+1.0 Temp+1.0 Guy	292894.50	-882.36	-1535.82	0.00	0.00	-237.97
Dead+Wind 0 deg - Service+Guy	158508.88	-17.04	-1784.59	0.00	0.00	458.49
Dead+Wind 30 deg - Service+Guy	158522.19	860.19	-1533.93	0.00	0.00	453.57
Dead+Wind 45 deg - Service+Guy	158574.86	1225.32	-1244.04	0.00	0.00	370.46
Dead+Wind 60 deg - Service+Guy	158601.68	1507.92	-870.00	0.00	0.00	255.17
Dead+Wind 90 deg - Service+Guy	158536.30	1759.89	23.61	0.00	0.00	1.28
Dead+Wind 120 deg - Service+Guy	158544.34	1540.96	907.59	0.00	0.00	-176.54
Dead+Wind 135 deg - Service+Guy	158528.53	1256.18	1265.98	0.00	0.00	-255.98
Dead+Wind 150 deg - Service+Guy	158529.66	881.43	1536.86	0.00	0.00	-333.05
Dead+Wind 180 deg - Service+Guy	158636.25	-23.80	1764.48	0.00	0.00	-461.48
Dead+Wind 210 deg - Service+Guy	158687.72	-929.33	1541.33	0.00	0.00	-451.25
Dead+Wind 225 deg - Service+Guy	158774.38	-1301.01	1269.16	0.00	0.00	-372.95
Dead+Wind 240 deg - Service+Guy	158835.56	-1587.08	914.37	0.00	0.00	-259.39
Dead+Wind 270 deg - Service+Guy	158752.36	-1801.20	31.37	0.00	0.00	-3.11
Dead+Wind 300 deg - Service+Guy	158753.28	-1543.65	-862.36	0.00	0.00	175.48
Dead+Wind 315 deg - Service+Guy	158692.27	-1259.61	-1237.20	0.00	0.00	246.15
Dead+Wind 330 deg - Service+Guy	158597.95	-894.18	-1528.81	0.00	0.00	320.08

Solution Summary

Load Comb.	Sum of Applied Forces PX lb	PY lb	PZ lb	Sum of Reactions PX lb	PY lb	PZ lb	% Error
1	-0.00	-68333.16	0.00	-1.13	68333.21	3.77	0.006%
2	-427.63	-80960.26	-113747.83	424.86	80958.10	113673.28	0.053%
3	-427.63	-80960.26	-104466.04	425.66	80958.64	104413.19	0.040%
4	-411.66	-80960.26	-100868.85	409.79	80958.66	100818.36	0.039%
5	-427.63	-80960.26	-102344.45	425.49	80958.65	102285.98	0.045%
6	-412.34	-80960.26	-110706.19	410.03	80958.62	110644.04	0.045%
7	-309.56	-80960.26	-110697.88	307.34	80958.82	110640.10	0.042%
8	-427.63	-80960.26	-113026.23	425.07	80958.32	112956.53	0.050%
9	56414.02	-80346.46	-98031.85	-56423.78	80345.09	97974.93	0.042%
10	51778.36	-80346.46	-90002.64	-51788.29	80344.94	89943.52	0.046%
11	50049.24	-80346.46	-86901.70	-50058.83	80345.00	86845.95	0.044%
12	50712.33	-80346.46	-88156.23	-50720.62	80345.52	88113.68	0.033%
13	54880.97	-80346.46	-95466.86	-54889.63	80345.47	95420.76	0.034%
14	54957.03	-80346.46	-95452.43	-54965.27	80345.60	95410.06	0.032%
15	56053.22	-80346.46	-97406.92	-56062.54	80345.25	97354.35	0.039%
16	79931.02	-79927.34	-79975.28	-79943.22	79926.72	79936.92	0.029%
17	73376.43	-79927.34	-73420.69	-73389.11	79926.63	73380.33	0.032%
18	70929.16	-79927.34	-70917.77	-70940.99	79926.70	70881.05	0.030%
19	71867.61	-79927.34	-71911.87	-71880.36	79926.82	71875.39	0.030%
20	77753.05	-79927.34	-77901.28	-77767.11	79926.73	77859.25	0.033%
21	77823.33	-79927.34	-77836.10	-77836.30	79926.82	77798.04	0.030%
22	79420.77	-79927.34	-79465.03	-79436.96	79926.56	79415.31	0.038%
23	97967.41	-79765.86	-56384.94	-97960.16	79766.27	56434.09	0.036%
24	89941.22	-79765.86	-51751.01	-89934.52	79766.28	51799.02	0.037%
25	86949.11	-79765.86	-50016.21	-86944.29	79766.28	50059.91	0.034%
26	88091.79	-79765.86	-50683.25	-88087.88	79766.20	50721.23	0.030%
27	95277.05	-79765.86	-54923.75	-95276.37	79766.48	54983.70	0.044%
28	95357.21	-79765.86	-54901.96	-95350.69	79766.15	54942.82	0.030%
29	97342.48	-79765.86	-56024.14	-97335.34	79766.23	56070.93	0.034%
30	113262.94	-80448.36	442.66	-113225.75	80447.20	-408.85	0.036%
31	103991.61	-80448.36	442.66	-103952.92	80447.07	-407.71	0.040%
32	100510.19	-80448.36	390.17	-100473.64	80447.11	-356.94	0.038%
33	101859.56	-80448.36	442.66	-101820.68	80447.22	-405.77	0.041%
34	110044.71	-80448.36	405.20	-110003.52	80447.20	-366.41	0.042%
35	110322.90	-80448.36	365.79	-110284.48	80447.32	-329.25	0.039%
36	112541.34	-80448.36	442.66	-112507.23	80447.34	-411.30	0.033%
37	98649.45	-81146.15	57714.79	-98595.13	81144.23	-57676.03	0.048%
38	90611.19	-81146.15	53073.90	-90554.89	81144.03	-53033.73	0.052%
39	87564.61	-81146.15	51247.72	-87510.52	81144.05	-51209.16	0.051%
40	88773.84	-81146.15	52013.10	-88730.44	81144.70	-51982.17	0.041%
41	95824.54	-81146.15	56082.36	-95779.56	81144.72	-56050.26	0.040%
42	95997.85	-81146.15	56012.05	-95937.69	81144.32	-55968.95	0.054%
43	98024.53	-81146.15	57353.99	-97973.59	81144.43	-57317.65	0.045%
44	80775.66	-81014.17	81360.16	-80721.21	81012.34	-81325.13	0.046%
45	74216.14	-81014.17	74800.64	-74159.77	81012.14	-74764.25	0.051%
46	71698.31	-81014.17	72227.15	-71644.15	81012.16	-72192.33	0.050%
47	72712.25	-81014.17	73296.76	-72668.53	81012.79	-73269.36	0.039%
48	78470.79	-81014.17	79055.30	-78425.47	81012.81	-79026.77	0.039%
49	78562.72	-81014.17	79020.73	-78502.39	81012.44	-78982.94	0.052%
50	80265.41	-81014.17	80849.91	-80214.29	81012.53	-80817.28	0.043%
51	57400.52	-80634.54	99470.33	-57349.61	80633.06	-99443.08	0.041%
52	52764.85	-80634.54	91441.12	-52712.21	80632.90	-91412.68	0.045%
53	50957.82	-80634.54	88283.24	-50907.40	80632.93	-88256.32	0.044%
54	51698.83	-80634.54	89594.72	-51641.98	80633.02	-89566.19	0.049%
55	55768.09	-80634.54	96645.42	-55708.85	80633.02	-96615.21	0.048%
56	55759.66	-80634.54	96669.83	-55705.05	80633.22	-96642.31	0.044%
57	57039.72	-80634.54	98845.41	-56992.24	80633.23	-98820.38	0.038%
58	278.49	-80105.03	114302.33	-304.97	80105.08	-114308.05	0.019%
59	278.49	-80105.03	105034.48	-306.46	80105.10	-105039.55	0.022%
60	247.38	-80105.03	101402.55	-283.60	80105.08	-101405.28	0.028%
61	278.49	-80105.03	102898.95	-312.87	80104.94	-102901.11	0.026%

Load Comb.	Sum of Applied Forces PX lb	PY lb	PZ lb	Sum of Reactions PX lb	PY lb	PZ lb	% Error
62	241.03	-80105.03	111084.10	-278.80	80104.52	-111074.72	0.028%
63	257.38	-80105.03	111214.03	-290.15	80104.32	-111198.03	0.027%
64	278.49	-80105.03	113580.73	-304.72	80105.00	-113584.45	0.019%
65	-56383.02	-80718.83	98394.05	56316.42	80717.04	-98362.20	0.053%
66	-51747.35	-80718.83	90364.84	51698.00	80717.40	-90340.92	0.042%
67	-50026.68	-80718.83	87268.08	49979.56	80717.44	-87245.55	0.041%
68	-50681.33	-80718.83	88518.44	50630.12	80717.58	-88495.58	0.043%
69	-54921.83	-80718.83	95703.69	54867.58	80717.55	-95678.91	0.044%
70	-54858.12	-80718.83	95790.95	54808.40	80717.72	-95768.67	0.040%
71	-56022.22	-80718.83	97769.13	55960.50	80717.26	-97740.09	0.049%
72	-79694.58	-81137.95	80207.41	79643.68	81136.35	-80177.45	0.042%
73	-73139.99	-81137.95	73652.82	73087.26	81136.17	-73621.67	0.047%
74	-70698.33	-81137.95	71136.11	70647.78	81136.20	-71106.38	0.045%
75	-71631.18	-81137.95	72144.00	71574.68	81136.29	-72111.77	0.050%
76	-77620.59	-81137.95	78029.44	77560.91	81136.27	-77995.13	0.050%
77	-77571.90	-81137.95	78093.14	77516.63	81136.48	-78061.66	0.047%
78	-79184.33	-81137.95	79697.16	79117.48	81135.95	-79658.19	0.056%
79	-97633.00	-81299.43	56719.07	97581.72	81297.73	-56685.20	0.044%
80	-89594.74	-81299.43	52078.18	89541.55	81297.54	-52043.06	0.048%
81	-86615.04	-81299.43	50316.98	86563.99	81297.56	-50283.29	0.047%
82	-87757.38	-81299.43	51017.38	87716.90	81298.16	-50990.64	0.037%
83	-95068.01	-81299.43	55186.02	95007.90	81297.63	-55146.29	0.053%
84	-95042.92	-81299.43	55214.63	94987.25	81297.85	-55177.82	0.049%
85	-97008.08	-81299.43	56358.27	96960.20	81297.91	-56326.63	0.041%
86	-112953.95	-80616.93	-37.65	112916.03	80615.78	70.11	0.036%
87	-103682.61	-80616.93	-37.65	103643.17	80615.65	71.18	0.039%
88	-100217.59	-80616.93	-14.23	100180.28	80615.69	46.20	0.038%
89	-101550.57	-80616.93	-37.65	101511.71	80615.83	72.56	0.040%
90	-109912.31	-80616.93	-22.36	109870.63	80615.79	59.36	0.041%
91	-109944.52	-80616.93	-71.55	109906.71	80615.95	105.55	0.037%
92	-112232.35	-80616.93	-37.65	112183.93	80615.52	79.70	0.046%
93	-98630.79	-79919.14	-57377.25	98619.95	79919.62	57437.00	0.044%
94	-90604.60	-79919.14	-52743.32	90594.38	79919.63	52801.32	0.045%
95	-87536.56	-79919.14	-50910.78	87528.71	79919.63	50963.46	0.041%
96	-88755.18	-79919.14	-51675.56	88748.51	79919.55	51722.48	0.036%
97	-95902.20	-79919.14	-55813.62	95892.78	79919.53	55865.36	0.038%
98	-95887.65	-79919.14	-55733.15	95875.72	79919.47	55786.41	0.040%
99	-98005.87	-79919.14	-57016.45	97994.94	79919.58	57073.94	0.042%
100	-80786.53	-80051.12	-81080.77	80798.23	80050.30	81035.16	0.034%
101	-74231.94	-80051.12	-74526.18	74244.03	80050.20	74478.30	0.037%
102	-71698.60	-80051.12	-71958.24	71710.08	80050.27	71914.31	0.035%
103	-72723.12	-80051.12	-73017.36	72735.94	80050.41	72973.05	0.035%
104	-78548.93	-80051.12	-78843.18	78562.58	80050.33	78793.56	0.038%
105	-78507.61	-80051.12	-78770.41	78520.12	80050.44	78725.51	0.034%
106	-80276.28	-80051.12	-80570.52	80287.10	80050.41	80529.14	0.031%
107	-57348.86	-80430.75	-99025.19	57354.97	80429.16	98962.66	0.045%
108	-52713.20	-80430.75	-90995.98	52719.29	80428.99	90931.11	0.049%
109	-50903.46	-80430.75	-87863.67	50909.52	80429.05	87802.17	0.048%
110	-51647.18	-80430.75	-89149.57	51653.04	80429.63	89101.73	0.037%
111	-55785.24	-80430.75	-96296.60	55791.13	80429.59	96245.76	0.037%
112	-55662.57	-80430.75	-96280.84	55668.15	80429.74	96234.18	0.034%
113	-56988.06	-80430.75	-98400.26	56994.11	80429.34	98342.24	0.042%
114	-0.00	-173303.24	0.00	-4.19	173303.24	8.05	0.005%
115	-321.22	-173560.81	-35229.36	311.61	173560.76	35211.25	0.012%
116	17365.01	-173217.38	-30435.78	-17358.59	173217.33	30428.67	0.005%
117	24717.45	-172980.80	-24932.23	-24707.55	172980.71	24926.57	0.006%
118	30174.58	-172887.73	-17782.09	-30162.95	172887.62	17778.40	0.007%
119	34762.41	-173262.62	376.77	-34748.50	173262.57	-369.48	0.009%
120	30435.79	-173644.35	17495.57	-30429.01	173644.34	-17484.18	0.007%
121	25127.80	-173565.66	24580.93	-25121.20	173565.61	-24563.81	0.010%
122	18140.34	-173348.48	30191.26	-18134.73	173348.40	-30177.08	0.009%

Load Comb.	Sum of Applied Forces PX lb	PY lb	PZ lb	Sum of Reactions PX lb	PY lb	PZ lb	% Error
123	619.51	-173045.67	35000.26	-617.55	173045.52	-34982.92	0.010%
124	-17346.97	-173389.10	29916.02	17340.17	173389.02	-29902.48	0.009%
125	-24356.64	-173625.69	24405.44	24351.31	173625.66	-24395.68	0.006%
126	-29701.84	-173718.76	17383.08	29691.23	173718.74	-17371.75	0.009%
127	-34394.93	-173343.86	-209.36	34384.60	173343.82	212.78	0.006%
128	-29826.23	-172962.14	-18470.51	29811.56	172961.98	18460.86	0.010%
129	-24286.67	-173040.82	-25515.63	24274.01	173040.68	25503.95	0.010%
130	-17123.47	-173258.00	-30823.90	17112.96	173257.91	30814.22	0.008%
131	-91.09	-68424.25	-24241.78	88.65	68424.12	24219.48	0.031%
132	12022.92	-68293.50	-20892.46	-12021.38	68293.42	20874.44	0.025%
133	17034.84	-68204.22	-17044.26	-17027.83	68204.16	17033.53	0.018%
134	20878.73	-68169.82	-12016.73	-20864.58	68169.77	12017.22	0.020%
135	24138.49	-68315.20	94.29	-24127.59	68315.18	-85.32	0.019%
136	21024.02	-68463.84	12300.01	-21012.79	68463.77	-12289.36	0.021%
137	17214.76	-68435.73	17339.27	-17204.48	68435.66	-17328.16	0.021%
138	12233.06	-68354.86	21198.88	-12224.82	68354.81	-21185.93	0.021%
139	59.32	-68242.07	24359.89	-62.07	68242.02	-24343.97	0.022%
140	-12016.32	-68372.82	20969.61	12003.81	68372.77	-20956.94	0.025%
141	-16984.47	-68462.10	17093.71	16969.98	68462.02	-17082.33	0.025%
142	-20807.50	-68496.50	12087.90	20792.34	68496.40	-12076.51	0.026%
143	-24072.67	-68351.11	-8.02	24058.62	68351.08	17.95	0.024%
144	-21020.04	-68202.47	-12228.11	21009.21	68202.44	12229.30	0.015%
145	-17217.07	-68230.58	-17279.75	17203.64	68230.52	17270.21	0.023%
146	-12222.06	-68311.45	-21104.06	12214.83	68311.36	21087.12	0.025%

Non-Linear Convergence Results

Load Combination	Converged?	Number of Cycles	Displacement Tolerance	Force Tolerance
1	Yes	13	0.00093031	0.00005147
2	Yes	21	0.00097864	0.00080818
3	Yes	22	0.00072448	0.00062243
4	Yes	22	0.00074422	0.00059826
5	Yes	21	0.00091585	0.00066496
6	Yes	21	0.00087954	0.00066202
7	Yes	21	0.00082739	0.00058500
8	Yes	21	0.00093668	0.00076612
9	Yes	21	0.00091024	0.00059281
10	Yes	21	0.00097325	0.00064984
11	Yes	21	0.00098695	0.00061256
12	Yes	21	0.00081232	0.00046215
13	Yes	21	0.00079295	0.00047541
14	Yes	21	0.00073606	0.00042611
15	Yes	21	0.00086011	0.00055180
16	Yes	21	0.00076527	0.00039641
17	Yes	21	0.00082504	0.00043746
18	Yes	21	0.00080492	0.00039907
19	Yes	20	0.00084398	0.00038702
20	Yes	20	0.00087360	0.00041618
21	Yes	20	0.00079405	0.00036666
22	Yes	20	0.00099125	0.00049510
23	Yes	15	0.00085107	0.00031930
24	Yes	15	0.00087242	0.00034662
25	Yes	15	0.00085771	0.00034432
26	Yes	15	0.00076901	0.00029708
27	Yes	14	0.00098981	0.00039034

28	Yes	15	0.00073081	0.00025046
29	Yes	15	0.00081418	0.00029643
30	Yes	23	0.00078701	0.00050581
31	Yes	23	0.00083988	0.00055261
32	Yes	23	0.00085613	0.00052218
33	Yes	22	0.00099134	0.00055124
34	Yes	22	0.00094761	0.00055606
35	Yes	22	0.00088955	0.00050745
36	Yes	23	0.00074179	0.00046106
37	Yes	23	0.00082285	0.00069964
38	Yes	23	0.00087898	0.00076694
39	Yes	23	0.00090825	0.00074198
40	Yes	23	0.00078361	0.00058713
41	Yes	23	0.00073881	0.00057594
42	Yes	22	0.00098793	0.00071449
43	Yes	23	0.00078991	0.00065426
44	Yes	23	0.00079233	0.00070331
45	Yes	23	0.00084568	0.00077008
46	Yes	23	0.00087182	0.00074538
47	Yes	23	0.00074936	0.00058925
48	Yes	23	0.00070881	0.00057676
49	Yes	22	0.00094130	0.00070184
50	Yes	23	0.00075934	0.00066071
51	Yes	23	0.00075525	0.00064842
52	Yes	23	0.00080415	0.00070836
53	Yes	23	0.00082353	0.00067942
54	Yes	22	0.00097074	0.00072889
55	Yes	22	0.00092697	0.00071952
56	Yes	22	0.00086013	0.00061578
57	Yes	23	0.00071712	0.00060709
58	Yes	13	0.00054328	0.00058524
59	Yes	13	0.00053233	0.00057192
60	Yes	12	0.00069211	0.00078072
61	Yes	12	0.00071561	0.00074722
62	Yes	12	0.00072952	0.00090249
63	Yes	12	0.00063645	0.00080541
64	Yes	13	0.00054308	0.00059641
65	Yes	23	0.00099372	0.00070929
66	Yes	24	0.00076630	0.00056615
67	Yes	24	0.00078551	0.00054013
68	Yes	23	0.00089782	0.00055683
69	Yes	23	0.00086155	0.00056748
70	Yes	23	0.00079323	0.00050521
71	Yes	23	0.00093827	0.00065831
72	Yes	24	0.00073957	0.00055377
73	Yes	24	0.00079146	0.00060952
74	Yes	24	0.00081823	0.00058797
75	Yes	23	0.00096902	0.00062389
76	Yes	23	0.00092104	0.00063369
77	Yes	23	0.00085977	0.00057516
78	Yes	23	0.00098371	0.00071525
79	Yes	24	0.00076249	0.00056780
80	Yes	24	0.00081676	0.00062583
81	Yes	24	0.00084704	0.00060450
82	Yes	24	0.00072495	0.00046534
83	Yes	23	0.00095700	0.00065556
84	Yes	23	0.00089637	0.00059812
85	Yes	24	0.00072956	0.00052817
86	Yes	24	0.00074751	0.00048968
87	Yes	24	0.00079801	0.00053592
88	Yes	24	0.00081613	0.00050788
89	Yes	23	0.00092778	0.00052361
90	Yes	23	0.00089075	0.00053575
91	Yes	23	0.00081865	0.00047816

92	Yes	23	0.00097411	0.00061313
93	Yes	15	0.00093761	0.00042897
94	Yes	15	0.00095577	0.00046002
95	Yes	15	0.00093409	0.00045065
96	Yes	15	0.00084703	0.00039494
97	Yes	15	0.00083485	0.00035637
98	Yes	15	0.00087107	0.00032388
99	Yes	15	0.00091013	0.00040377
100	Yes	21	0.00079603	0.00053204
101	Yes	21	0.00085460	0.00058597
102	Yes	21	0.00083918	0.00054066
103	Yes	20	0.00089033	0.00052924
104	Yes	20	0.00090456	0.00054340
105	Yes	20	0.00082244	0.00045635
106	Yes	21	0.00073475	0.00048243
107	Yes	21	0.00090790	0.00074206
108	Yes	21	0.00096802	0.00081124
109	Yes	21	0.00098366	0.00077134
110	Yes	21	0.00082157	0.00059677
111	Yes	21	0.00079541	0.00059297
112	Yes	21	0.00073727	0.00050531
113	Yes	21	0.00086147	0.00069431
114	Yes	14	0.00090051	0.00008264
115	Yes	13	0.00097128	0.00013133
116	Yes	15	0.00059007	0.00009032
117	Yes	15	0.00066059	0.00011376
118	Yes	15	0.00068595	0.00012104
119	Yes	15	0.00094006	0.00012703
120	Yes	15	0.00071613	0.00009456
121	Yes	15	0.00096393	0.00015025
122	Yes	16	0.00076650	0.00014624
123	Yes	16	0.00078873	0.00017656
124	Yes	16	0.00076867	0.00013712
125	Yes	16	0.00060023	0.00009292
126	Yes	15	0.00079581	0.00010386
127	Yes	16	0.00061947	0.00009663
128	Yes	15	0.00088542	0.00018252
129	Yes	15	0.00090257	0.00017551
130	Yes	15	0.00080838	0.00014027
131	Yes	10	0.00072815	0.00035879
132	Yes	10	0.00068791	0.00022850
133	Yes	10	0.00068471	0.00014115
134	Yes	10	0.00085963	0.00012144
135	Yes	11	0.00066034	0.00013890
136	Yes	11	0.00049849	0.00022318
137	Yes	11	0.00049434	0.00020972
138	Yes	11	0.00061311	0.00017016
139	Yes	11	0.00082590	0.00015271
140	Yes	11	0.00067135	0.00018304
141	Yes	11	0.00057860	0.00023655
142	Yes	11	0.00059259	0.00026057
143	Yes	11	0.00073625	0.00016819
144	Yes	11	0.00066663	0.00011256
145	Yes	10	0.00087783	0.00018201
146	Yes	10	0.00073555	0.00025511

Maximum Tower Deflections - Service Wind

Section No.	Elevation ft	Horz. Deflection in	Gov. Load Comb.	Tilt °	Twist °
L1	347 - 330	3.212	139	0.0263	0.7068
T1	330 - 320	3.115	139	0.0416	0.7773
T2	320 - 300	3.108	139	0.0402	0.7813
T3	300 - 280	3.064	139	0.0341	0.7224
T4	280 - 260	3.001	139	0.0283	0.6179
T5	260 - 240	2.947	139	0.0258	0.4899
T6	240 - 220	2.890	139	0.0281	0.3522
T7	220 - 200	2.726	139	0.0513	0.2116
T8	200 - 180	2.460	139	0.0591	0.1013
T9	180 - 160	2.205	139	0.0385	0.0323
T10	160 - 140	2.120	139	0.0263	0.0211
T11	140 - 120	2.006	139	0.0351	0.0237
T12	120 - 100	1.829	139	0.0431	0.0418
T13	100 - 80	1.633	139	0.0362	0.0540
T14	80 - 60	1.527	139	0.0393	0.0637
T15	60 - 40	1.347	141	0.0630	0.0667
T16	40 - 20	1.024	141	0.0937	0.0613
T17	20 - 5.25	0.557	141	0.1203	0.0552
T18	5.25 - 0	0.146	141	0.1303	0.0492

Critical Deflections and Radius of Curvature - Service Wind

Elevation ft	Appurtenance	Gov. Load Comb.	Deflection in	Tilt °	Twist °	Radius of Curvature ft
350.00	Lighting Canopy	139	3.212	0.0263	0.7068	61785
348.00	Beacon	139	3.212	0.0263	0.7068	61785
339.00	LP-3E-Radomes	139	3.155	0.0352	0.7465	38615
330.00	PiROD Junction Box	139	3.115	0.0416	0.7773	21642
329.50	Guy	139	3.114	0.0417	0.7782	22261
320.00	10' dish	139	3.108	0.0402	0.7813	71729
311.00	LP-3C	139	3.095	0.0376	0.7633	78009
310.00	10' dish	139	3.093	0.0373	0.7603	82103
300.25	Guy	139	3.065	0.0342	0.7234	160036
295.00	DB810KE-Y	139	3.048	0.0322	0.6993	211505
290.00	DCR-L2	139	3.032	0.0304	0.6740	242799
280.00	DCR-L2	139	3.001	0.0283	0.6179	364799
275.00	6' Dish	139	2.986	0.0285	0.5874	305583
269.63	Guy	139	2.970	0.0288	0.5533	230983
260.25	PiROD Junction Box	139	2.947	0.0260	0.4916	182599
260.00	PD220	139	2.947	0.0258	0.4899	188892
250.00	PD220	139	2.925	0.0195	0.4223	65707
225.00	APXVTM14	139	2.779	0.0460	0.2450	32948
207.00	PD1142-1	139	2.560	0.0598	0.1360	54912
205.00	PD1150	139	2.532	0.0601	0.1257	60496
200.00	7770.00	139	2.460	0.0591	0.1013	97019
185.00	VV-65A-R1	139	2.254	0.0444	0.0433	22990
178.00	Guy	139	2.190	0.0364	0.0294	19829
173.50	Obstruction Light	139	2.165	0.0322	0.0255	29339
167.00	LNX-6514DS-VTM	139	2.142	0.0280	0.0236	80128
156.00	Pirod 4' Side Mount Standoff (1)	139	2.104	0.0268	0.0176	49310
150.00	10' Dipole	139	2.073	0.0291	0.0128	56998
147.00	20' x 3" Dia Omni	139	2.055	0.0307	0.0149	61873
138.00	Pirod 4' Side Mount Standoff (1)	139	1.991	0.0364	0.0260	74595
130.00	6' Dish	139	1.925	0.0408	0.0340	71382
112.00	PR-450	139	1.745	0.0412	0.0470	120249
100.26	Guy	139	1.635	0.0363	0.0538	29945

Elevation ft	Appurtenance	Gov. Load Comb.	Deflection in	Tilt °	Twist °	Radius of Curvature ft
90.00	PR-450	139	1.577	0.0352	0.0594	148631
86.75	PiROD Junction Box	139	1.562	0.0359	0.0610	141928
68.00	1105-3A-Radomes	141	1.436	0.0518	0.0662	33593

Maximum Tower Deflections - Design Wind

Section No.	Elevation ft	Horz. Deflection in	Gov. Load Comb.	Tilt °	Twist °
L1	347 - 330	29.837	46	0.4324	3.1843
T1	330 - 320	28.524	46	0.3387	3.3811
T2	320 - 300	28.147	45	0.3474	3.4033
T3	300 - 280	27.485	45	0.3731	3.1354
T4	280 - 260	26.632	45	0.3758	2.6733
T5	260 - 240	25.713	45	0.3653	2.1147
T6	240 - 220	24.673	45	0.4519	1.5288
T7	220 - 200	23.198	79	0.5653	0.9279
T8	200 - 180	21.372	79	0.5974	0.4788
T9	180 - 160	19.523	79	0.4890	0.2193
T10	160 - 140	18.479	85	0.4259	0.1618
T11	140 - 120	17.341	84	0.4663	0.1420
T12	120 - 100	15.859	84	0.5001	0.2214
T13	100 - 80	14.119	84	0.4657	0.2729
T14	80 - 60	12.626	84	0.4434	0.3186
T15	60 - 40	10.591	84	0.5922	0.3325
T16	40 - 20	7.741	84	0.7695	0.3085
T17	20 - 5.25	4.109	84	0.9132	0.2773
T18	5.25 - 0	1.076	84	0.9664	0.2472

Critical Deflections and Radius of Curvature - Design Wind

Elevation ft	Appurtenance	Gov. Load Comb.	Deflection in	Tilt °	Twist °	Radius of Curvature ft
350.00	Lighting Canopy	46	29.837	0.4324	3.1843	14735
348.00	Beacon	46	29.837	0.4324	3.1843	14735
339.00	LP-3E-Radomes	46	29.170	0.3756	3.2910	9209
330.00	PiROD Junction Box	46	28.524	0.3387	3.3811	5204
329.50	Guy	46	28.494	0.3381	3.3846	5369
320.00	10' dish	45	28.147	0.3474	3.4033	14569
311.00	LP-3C	45	27.887	0.3612	3.3244	14219
310.00	10' dish	45	27.854	0.3625	3.3106	14749
300.25	Guy	45	27.494	0.3728	3.1404	21957
295.00	DB810KE-Y	45	27.283	0.3773	3.0315	25566
290.00	DCR-L2	45	27.073	0.3800	2.9196	29230
280.00	DCR-L2	45	26.632	0.3758	2.6733	23550
275.00	6' Dish	45	26.405	0.3672	2.5396	21399
269.63	Guy	45	26.157	0.3554	2.3902	19594
260.25	PiROD Junction Box	45	25.725	0.3648	2.1219	13963
260.00	PD220	45	25.713	0.3653	2.1147	14017
250.00	PD220	45	25.242	0.3993	1.8258	9788
225.00	APXVTM14	79	23.576	0.5402	1.0707	6040

Elevation ft	Appurtenance	Gov. Load Comb.	Deflection in	Tilt °	Twist °	Radius of Curvature ft
207.00	PD1142-1	79	22.056	0.6023	0.6156	9987
205.00	PD1150	79	21.864	0.6030	0.5730	10979
200.00	7770.00	79	21.372	0.5974	0.4788	16887
185.00	VV-65A-R1	79	19.922	0.5233	0.2613	4675
178.00	Guy	85	19.389	0.4751	0.2082	3972
173.50	Obstruction Light	85	19.127	0.4511	0.1926	5153
167.00	LNX-6514DS-VTM	85	18.807	0.4332	0.1795	9700
156.00	Pirod 4' Side Mount Standoff (1)	85	18.274	0.4283	0.1409	9634
150.00	10' Dipole	85	17.935	0.4390	0.1087	10379
147.00	20' x 3" Dia Omni	84	17.761	0.4465	0.0975	10805
138.00	Pirod 4' Side Mount Standoff (1)	84	17.212	0.4720	0.1531	10892
130.00	6' Dish	84	16.654	0.4912	0.1891	10004
112.00	PR-450	84	15.154	0.4921	0.2428	15590
100.26	Guy	84	14.140	0.4663	0.2722	6140
90.00	PR-450	84	13.379	0.4490	0.2982	15867
86.75	PiROD Junction Box	84	13.144	0.4457	0.3057	11058
68.00	1105-3A-Radomes	84	11.501	0.5159	0.3301	5259

Bolt Design Data

Section No.	Elevation ft	Component Type	Bolt Grade	Bolt Size in	Number Of Bolts	Maximum Load per Bolt lb	Allowable Load per Bolt lb	Ratio Load / Allowable	Allowable Ratio	Criteria
T2	320	Leg	A325N	0.7500	5	4387.00	39760.80	0.110 ✔	1	Bolt DS
T3	300	Leg	A325N	0.7500	5	5732.65	39760.80	0.144 ✔	1	Bolt DS
T4	280	Leg	A325N	0.7500	5	5852.95	39760.80	0.147 ✔	1	Bolt DS
T5	260	Leg	A325N	0.7500	5	9888.73	39760.80	0.249 ✔	1	Bolt DS
T6	240	Leg	A325N	0.7500	5	13001.50	39760.80	0.327 ✔	1	Bolt DS
T7	220	Leg	A325N	0.7500	5	13133.70	39760.80	0.330 ✔	1	Bolt DS
T8	200	Leg	A325N	0.8750	5	13192.00	54118.80	0.244 ✔	1	Bolt DS
T9	180	Leg	A490N	0.8750	5	28552.50	67648.60	0.422 ✔	1	Bolt DS
		Torque Arm Top@178	A325N	1.0000	2	19804.20	67207.50	0.295 ✔	1	Member Bearing
		Torque Arm Bottom@178	A325N	1.0000	2	28844.00	70685.80	0.408 ✔	1	Bolt Shear
T10	160	Leg	A325N	0.8750	5	19294.90	54118.80	0.357 ✔	1	Bolt DS
T11	140	Leg	A325N	0.8750	5	18851.00	54118.80	0.348 ✔	1	Bolt DS
T12	120	Leg	A325N	0.8750	5	17172.70	54118.80	0.317 ✔	1	Bolt DS
T13	100	Leg	A325N	0.8750	5	23022.70	54118.80	0.425 ✔	1	Bolt DS
T14	80	Leg	A325N	0.8750	5	24190.00	54118.80	0.447 ✔	1	Bolt DS
T15	60	Leg	A325N	0.8750	5	28918.10	54118.80	0.534 ✔	1	Bolt DS
T16	40	Leg	A325N	0.8750	5	28827.50	54118.80	0.533 ✔	1	Bolt DS
T17	20	Leg	A325N	0.8750	5	24935.30	54118.80	0.461 ✔	1	Bolt DS

Guy Design Data

Section No.	Elevation ft	Size	Initial Tension lb	Breaking Load lb	Actual T_u lb	Allowable ϕT_n lb	Required S.F.	Actual S.F.
T1	329.50 (A) (1077)	11/16 BS	5800.00	57999.90	21297.70	34800.00	1.000	1.634 ✔
	329.50 (B) (1076)	11/16 BS	5800.00	57999.90	20791.20	34800.00	1.000	1.674 ✔
	329.50 (C) (1075)	11/16 BS	5800.00	57999.90	19622.30	34800.00	1.000	1.773 ✔
T2	300.25 (A) (1107)	9/16 EHS	3500.00	35000.04	13470.10	21000.00	1.000	1.559 ✔
	300.25 (B) (1106)	9/16 EHS	3500.00	35000.04	13145.80	21000.00	1.000	1.597 ✔
	300.25 (C) (1105)	9/16 EHS	3500.00	35000.04	12461.80	21000.00	1.000	1.685 ✔
T4	269.63 (A) (1080)	13/16 BS	8000.00	79999.92	31792.80	48000.00	1.000	1.510 ✔
	269.63 (B) (1079)	13/16 BS	8000.00	79999.92	31084.30	48000.00	1.000	1.544 ✔
	269.63 (C) (1078)	13/16 BS	8000.00	79999.92	29663.60	48000.00	1.000	1.618 ✔
T9	178.00 (A) (1096)	7/8 BS	9200.00	92000.13	38063.60	55200.00	1.000	1.450 ✔
	178.00 (A) (1097)	7/8 BS	9200.00	92000.13	38560.80	55200.00	1.000	1.432 ✔
	178.00 (B) (1090)	7/8 BS	9200.00	92000.13	36692.10	55200.00	1.000	1.504 ✔
	178.00 (B) (1091)	7/8 BS	9200.00	92000.13	36133.80	55200.00	1.000	1.528 ✔
	178.00 (C) (1081)	7/8 BS	9200.00	92000.13	35750.50	55200.00	1.000	1.544 ✔
	178.00 (C) (1082)	7/8 BS	9200.00	92000.13	35375.20	55200.00	1.000	1.560 ✔
T12	100.26 (A) (1104)	7/8 BS	9200.00	92000.13	38323.90	55200.00	1.000	1.440 ✔
	100.26 (B) (1103)	7/8 BS	9200.00	92000.13	36205.90	55200.00	1.000	1.525 ✔
	100.26 (C) (1102)	7/8 BS	9200.00	92000.13	34925.60	55200.00	1.000	1.581 ✔

Compression Checks

Leg Design Data (Compression)

Section No.	Elevation ft	Size	L ft	L_u ft	Kl/r	A in^2	Mast Stability Index	P_u lb	ϕP_n lb	Ratio $\frac{P_u}{\phi P_n}$
L1	347 - 330	1 1/4	17.00	1.60	61.4 K=1.00	1.2272	1.00	-12566.00	41903.80	0.300 [1] ✔
T1	330 - 320	2 1/4	10.00	2.31	49.3 K=1.00	3.9761	1.00	-21934.90	149756.00	0.146 [1] ✔

Section No.	Elevation ft	Size	L ft	L_u ft	Kl/r	A in^2	Mast Stability Index	P_u lb	ϕP_n lb	Ratio $\frac{P_u}{\phi P_n}$
T2	320 - 300	2 1/4	20.00	2.34	50.0 K=1.00	3.9761	1.00	-28650.30	149033.00	0.192 [1] ✓
T3	300 - 280	2 1/4	20.00	2.34	50.0 K=1.00	3.9761	1.00	-29527.70	149033.00	0.198 [1] ✓
T4	280 - 260	2 1/4	20.00	2.34	50.0 K=1.00	3.9761	1.00	-49447.40	149033.00	0.332 [1] ✓
T5	260 - 240	2 1/4	20.00	2.34	50.0 K=1.00	3.9761	1.00	-64995.40	149033.00	0.436 [1] ✓
T6	240 - 220	2 1/4	20.00	2.34	50.0 K=1.00	3.9761	1.00	-70279.00	149033.00	0.472 [1] ✓
T7	220 - 200	2 1/2	20.00	2.35	45.1 K=1.00	4.9087	1.00	-65668.50	189920.00	0.346 [1] ✓
T8	200 - 180	2 3/4	20.00	2.34	40.9 K=1.00	5.9396	0.99	-142745.00	234584.00	0.609 [1] ✓
T9	180 - 160	2 3/4	20.00	2.34	40.9 K=1.00	5.9396	1.00	-142763.00	236561.00	0.603 [1] ✓
T10	160 - 140	2 3/4	20.00	2.34	40.9 K=1.00	5.9396	0.97	-96474.60	229244.00	0.421 [1] ✓
T11	140 - 120	2 3/4	20.00	2.34	40.9 K=1.00	5.9396	0.97	-94254.80	228720.00	0.412 [1] ✓
T12	120 - 100	2 3/4	20.00	2.34	40.9 K=1.00	5.9396	0.97	-115092.00	229226.00	0.502 [1] ✓
T13	100 - 80	2 3/4	20.00	2.34	40.9 K=1.00	5.9396	0.97	-120924.00	229333.00	0.527 [1] ✓
T14	80 - 60	2 3/4	20.00	2.34	40.9 K=1.00	5.9396	0.97	-144564.00	230366.00	0.628 [1] ✓
T15	60 - 40	2 3/4	20.00	2.34	40.9 K=1.00	5.9396	0.97	-146844.00	230414.00	0.637 [1] ✓
T16	40 - 20	2 3/4	20.00	2.34	40.9 K=1.00	5.9396	0.97	-144138.00	230227.00	0.626 [1] ✓
T17	20 - 5.25	2 3/4	14.75	2.28	39.8 K=1.00	5.9396	0.97	-124676.00	229887.00	0.542 [1] ✓
T18	5.25 - 0	2 3/4	5.99	2.95	51.5 K=1.00	5.9396	1.00	-115768.00	220234.00	0.526 [1] ✓

[1] P_u / ϕP_n controls

Diagonal Design Data (Compression)

Section No.	Elevation ft	Size	L ft	L_u ft	Kl/r	A in^2	P_u lb	ϕP_n lb	Ratio $\frac{P_u}{\phi P_n}$
L1	347 - 330	1/2	2.97	1.42	110.6 K=0.81	0.1963	-2788.13	3612.89	0.772 [1] ✓
T1	330 - 320	7/8	5.51	2.65	130.9 K=0.90	0.6013	-2400.38	7929.17	0.303 [1] ✓
T2	320 - 300	7/8	5.52	2.66	131.2 K=0.90	0.6013	-3738.03	7891.33	0.474 [1] ✓
T3	300 - 280	7/8	5.52	2.66	131.2 K=0.90	0.6013	-5861.18	7891.33	0.743 [1] ✓

Section No.	Elevation ft	Size	L ft	L_u ft	Kl/r	A in^2	P_u lb	ϕP_n lb	Ratio $\frac{P_u}{\phi P_n}$
T4	280 - 260	7/8	5.52	2.66	131.2 K=0.90	0.6013	-7120.08	7891.33	0.902 [1] ✔
T5	260 - 240	7/8	5.52	2.66	131.2 K=0.90	0.6013	-7132.69	7891.33	0.904 [1] ✔
T6	240 - 220	7/8	5.52	2.66	131.2 K=0.90	0.6013	-6310.25	7891.33	0.800 [1] ✔
T7	220 - 200	1	5.52	2.65	114.4 K=0.90	0.7854	-8349.00	13568.70	0.615 [1] ✔
T8	200 - 180	1 1/4	5.52	2.63	100.6 K=0.99	1.2272	-11682.70	26361.90	0.443 [1] ✔
T9	180 - 160	1 1/4	5.52	2.63	100.6 K=0.99	1.2272	-8294.71	26361.90	0.315 [1] ✔
T10	160 - 140	1	5.52	2.63	113.8 K=0.90	0.7854	-5485.68	13701.20	0.400 [1] ✔
T11	140 - 120	1	5.52	2.63	113.8 K=0.90	0.7854	-4285.68	13701.20	0.313 [1] ✔
T12	120 - 100	1	5.52	2.63	113.8 K=0.90	0.7854	-5424.38	13701.20	0.396 [1] ✔
T13	100 - 80	1	5.52	2.63	113.8 K=0.90	0.7854	-8307.01	13701.20	0.606 [1] ✔
T14	80 - 60	1	5.52	2.63	113.8 K=0.90	0.7854	-5392.06	13701.20	0.394 [1] ✔
T15	60 - 40	1	5.52	2.63	113.8 K=0.90	0.7854	-2111.29	13701.20	0.154 [1] ✔
T16	40 - 20	1	5.52	2.63	113.8 K=0.90	0.7854	-4687.44	13701.20	0.342 [1] ✔
T17	20 - 5.25	1	5.49	2.62	113.2 K=0.90	0.7854	-5095.19	13839.20	0.368 [1] ✔
T18	5.25 - 0	1 1/4	4.56	2.90	105.1 K=0.94	1.2272	-7157.91	24641.90	0.290 [1] ✔

[1] P_u / ϕP_n controls

Secondary Horizontal Design Data (Compression)

Section No.	Elevation ft	Size	L ft	L_u ft	Kl/r	A in^2	P_u lb	ϕP_n lb	Ratio $\frac{P_u}{\phi P_n}$
T18	5.25 - 0	3/4	3.28	3.05	136.7 K=0.70	0.4418	-809.33	5341.20	0.152 [1] ✔

[1] P_u / ϕP_n controls

Top Girt Design Data (Compression)

Section No.	Elevation ft	Size	L ft	L_u ft	Kl/r	A in^2	P_u lb	ϕP_n lb	Ratio $\frac{P_u}{\phi P_n}$
L1	347 - 330	3/4	2.50	2.40	107.3 K=0.70	0.4418	-160.13	8562.48	0.019 [1] ✓
T2	320 - 300	1	5.00	4.81	161.7 K=0.70	0.7854	-286.95	6785.94	0.042 [1] ✓
T3	300 - 280	1	5.00	4.81	161.7 K=0.70	0.7854	-173.66	6785.94	0.026 [1] ✓
T4	280 - 260	1	5.00	4.81	161.7 K=0.70	0.7854	-941.48	6785.94	0.139 [1] ✓
T5	260 - 240	1	5.00	4.81	161.7 K=0.70	0.7854	-1183.56	6785.94	0.174 [1] ✓
T6	240 - 220	1	5.00	4.81	161.7 K=0.70	0.7854	-509.06	6785.94	0.075 [1] ✓
T7	220 - 200	1 1/4	5.00	4.79	128.8 K=0.70	1.2272	-1251.15	16711.60	0.075 [1] ✓
T8	200 - 180	1 1/2	5.00	4.77	106.9 K=0.70	1.7672	-3177.54	34501.20	0.092 [1] ✓
T9	180 - 160	1 1/2	5.00	4.77	106.9 K=0.70	1.7672	-4717.42	34501.20	0.137 [1] ✓
T10	160 - 140	1 1/4	5.00	4.77	128.2 K=0.70	1.2272	-1356.68	16857.90	0.080 [1] ✓
T11	140 - 120	1 1/4	5.00	4.77	128.2 K=0.70	1.2272	-30.60	16857.90	0.002 [1] ✓
T12	120 - 100	1 1/4	5.00	4.77	128.2 K=0.70	1.2272	-1102.23	16857.90	0.065 [1] ✓
T13	100 - 80	1 1/4	5.00	4.77	128.2 K=0.70	1.2272	-1714.02	16857.90	0.102 [1] ✓
T14	80 - 60	1 1/4	5.00	4.77	128.2 K=0.70	1.2272	-1327.48	16857.90	0.079 [1] ✓
T15	60 - 40	1 1/4	5.00	4.77	128.2 K=0.70	1.2272	-47.48	16857.90	0.003 [1] ✓
T16	40 - 20	1 1/4	5.00	4.77	128.2 K=0.70	1.2272	-517.94	16857.90	0.031 [1] ✓
T17	20 - 5.25	1 1/4	5.00	4.77	128.2 K=0.70	1.2272	-1276.46	16857.90	0.076 [1] ✓

[1] P_u / ϕP_n controls

Bottom Girt Design Data (Compression)

Section No.	Elevation ft	Size	L ft	L_u ft	Kl/r	A in^2	P_u lb	ϕP_n lb	Ratio $\frac{P_u}{\phi P_n}$
L1	347 - 330	3/4	2.50	2.40	107.3 K=0.70	0.4418	-747.26	8562.48	0.087 [1] ✓
T1	330 - 320	1	5.00	4.81	161.7 K=0.70	0.7854	-631.00	6785.94	0.093 [1] ✓
T3	300 - 280	1	5.00	4.81	161.7 K=0.70	0.7854	-1017.96	6785.94	0.150 [1] ✓
T4	280 - 260	1	5.00	4.81	161.7 K=0.70	0.7854	-1210.23	6785.94	0.178 [1] ✓

Section No.	Elevation ft	Size	L ft	L_u ft	Kl/r	A in^2	P_u lb	ϕP_n lb	Ratio $\frac{P_u}{\phi P_n}$
T5	260 - 240	1	5.00	4.81	161.7 K=0.70	0.7854	-701.45	6785.94	0.103 [1]
T6	240 - 220	1	5.00	4.81	161.7 K=0.70	0.7854	-834.31	6785.94	0.123 [1]
T7	220 - 200	1 1/4	5.00	4.79	128.8 K=0.70	1.2272	-2017.21	16711.60	0.121 [1]
T9	180 - 160	1 1/2	5.00	4.77	106.9 K=0.70	1.7672	-1224.63	34501.20	0.035 [1]
T10	160 - 140	1 1/4	5.00	4.77	128.2 K=0.70	1.2272	-1.48	16857.90	0.000 [1]
T11	140 - 120	1 1/4	5.00	4.77	128.2 K=0.70	1.2272	-976.59	16857.90	0.058 [1]
T12	120 - 100	1 1/4	5.00	4.77	128.2 K=0.70	1.2272	-700.28	16857.90	0.042 [1]
T13	100 - 80	1 1/4	5.00	4.77	128.2 K=0.70	1.2272	-1644.27	16857.90	0.098 [1]
T14	80 - 60	1 1/4	5.00	4.77	128.2 K=0.70	1.2272	-522.86	16857.90	0.031 [1]
T15	60 - 40	1 1/4	5.00	4.77	128.2 K=0.70	1.2272	-108.97	16857.90	0.006 [1]
T16	40 - 20	1 1/4	5.00	4.77	128.2 K=0.70	1.2272	-1122.64	16857.90	0.067 [1]

[1] P_u / ϕP_n controls

Mid Girt Design Data (Compression)

Section No.	Elevation ft	Size	L ft	L_u ft	Kl/r	A in^2	P_u lb	ϕP_n lb	Ratio $\frac{P_u}{\phi P_n}$
L1	347 - 330	3/4	2.50	2.40	107.3 K=0.70	0.4418	-116.93	8562.48	0.014 [1]
T1	330 - 320	1	5.00	4.81	161.7 K=0.70	0.7854	-27.90	6785.94	0.004 [1]
T2	320 - 300	1	5.00	4.81	161.7 K=0.70	0.7854	-279.37	6785.94	0.041 [1]
T6	240 - 220	1	5.00	4.81	161.7 K=0.70	0.7854	-67.12	6785.94	0.010 [1]
T9	180 - 160	1 1/2	5.00	4.77	106.9 K=0.70	1.7672	-851.29	34501.20	0.025 [1]

[1] P_u / ϕP_n controls

Top Guy Pull-Off Design Data (Compression)

Section No.	Elevation ft	Size	L ft	L_u ft	Kl/r	A in^2	P_u lb	ϕP_n lb	Ratio $\frac{P_u}{\phi P_n}$
T8	200 - 180	1 1/2	5.00	4.77	106.9 K=0.70	1.7672	-9228.42	34501.20	0.267 [1] ✔

[1] P_u / ϕP_n controls

Bottom Guy Pull-Off Design Data (Compression)

Section No.	Elevation ft	Size	L ft	L_u ft	Kl/r	A in^2	P_u lb	ϕP_n lb	Ratio $\frac{P_u}{\phi P_n}$
T9	180 - 160	1 1/2	5.00	4.77	106.9 K=0.70	1.7672	-19356.50	34501.20	0.561 [1] ✔

[1] P_u / ϕP_n controls

Torque-Arm Bottom Design Data

Section No.	Elevation ft	Size	L ft	L_u ft	Kl/r	A in^2	P_u lb	ϕP_n lb	Ratio $\frac{P_u}{\phi P_n}$
T9	180 - 160 (1085)	2L4x4x3/8	9.13	8.42	82.1 K=1.00	5.7200	-49327.30	162250.00	0.304 [1] ✔
T9	180 - 160 (1086)	2L4x4x3/8	9.13	8.42	82.1 K=1.00	5.7200	-56590.50	162250.00	0.349 [1] ✔
T9	180 - 160 (1094)	2L4x4x3/8	9.13	8.42	82.1 K=1.00	5.7200	-52195.20	162250.00	0.322 [1] ✔
T9	180 - 160 (1095)	2L4x4x3/8	9.13	8.42	82.1 K=1.00	5.7200	-49526.40	162250.00	0.305 [1] ✔
T9	180 - 160 (1100)	2L4x4x3/8	9.13	8.42	82.1 K=1.00	5.7200	-53051.80	162250.00	0.327 [1] ✔
T9	180 - 160 (1101)	2L4x4x3/8	9.13	8.42	82.1 K=1.00	5.7200	-57688.10	162250.00	0.356 [1] ✔

[1] P_u / ϕP_n controls

Tension Checks

Leg Design Data (Tension)

Section No.	Elevation ft	Size	L ft	L_u ft	Kl/r	A in^2	P_u lb	ϕP_n lb	Ratio $\frac{P_u}{\phi P_n}$

Section No.	Elevation ft	Size	L ft	L_u ft	Kl/r	A in^2	P_u lb	ϕP_n lb	Ratio $\frac{P_u}{\phi P_n}$
L1	347 - 330	1 1/4	17.00	1.60	61.4	1.2272	11748.90	55223.30	0.213 [1] ✓
T1	330 - 320	2 1/4	10.00	2.31	49.3	3.9761	6236.44	178924.00	0.035 [1] ✓
T2	320 - 300	2 1/4	20.00	2.34	50.0	3.9761	4281.30	178924.00	0.024 [1] ✓
T4	280 - 260	2 1/4	20.00	2.34	50.0	3.9761	5151.27	178924.00	0.029 [1] ✓
T5	260 - 240	2 1/4	20.00	2.34	50.0	3.9761	13029.30	178924.00	0.073 [1] ✓
T6	240 - 220	2 1/4	20.00	2.34	50.0	2.1885	13024.60	106689.00	0.122 [1] ✓
T7	220 - 200	2 1/2	20.00	2.35	45.1	2.9138	11541.80	142050.00	0.081 [1] ✓
T8	200 - 180	2 3/4	20.00	2.34	40.9	5.9396	47608.30	267281.00	0.178 [1] ✓
T9	180 - 160	2 3/4	20.00	2.34	40.9	3.4123	41412.30	166349.00	0.249 [1] ✓
T14	80 - 60	2 3/4	20.00	2.34	40.9	5.9396	4487.92	267281.00	0.017 [1] ✓
T15	60 - 40	2 3/4	20.00	2.34	40.9	3.4123	4482.56	166349.00	0.027 [1] ✓

[1] P_u / ϕP_n controls

Diagonal Design Data (Tension)

Section No.	Elevation ft	Size	L ft	L_u ft	Kl/r	A in^2	P_u lb	ϕP_n lb	Ratio $\frac{P_u}{\phi P_n}$
L1	347 - 330	1/2	2.97	1.42	136.5	0.1963	2765.00	8835.73	0.313 [1] ✓
T1	330 - 320	7/8	5.51	2.65	145.4	0.6013	2508.75	27059.40	0.093 [1] ✓
T2	320 - 300	7/8	5.52	2.66	145.8	0.6013	4469.18	27059.40	0.165 [1] ✓
T3	300 - 280	7/8	5.52	2.66	145.8	0.6013	5995.92	27059.40	0.222 [1] ✓
T4	280 - 260	7/8	5.52	2.66	145.8	0.6013	6678.89	27059.40	0.247 [1] ✓
T5	260 - 240	7/8	5.52	2.66	145.8	0.6013	6903.41	27059.40	0.255 [1] ✓
T6	240 - 220	7/8	5.52	2.66	145.8	0.6013	5935.76	27059.40	0.219 [1] ✓
T7	220 - 200	1	5.52	2.65	127.1	0.7854	8177.24	35342.90	0.231 [1] ✓
T8	200 - 180	1 1/4	5.52	2.63	101.1	1.2272	11210.90	55223.30	0.203 [1] ✓
T9	180 - 160	1 1/4	5.52	2.63	101.1	1.2272	7926.07	55223.30	0.144 [1]

Section No.	Elevation ft	Size	L ft	L_u ft	Kl/r	A in^2	P_u lb	ϕP_n lb	Ratio $\frac{P_u}{\phi P_n}$
T10	160 - 140	1	5.52	2.63	126.4	0.7854	4885.64	35342.90	0.138 [1]
T11	140 - 120	1	5.52	2.63	126.4	0.7854	3736.92	35342.90	0.106 [1]
T12	120 - 100	1	5.52	2.63	126.4	0.7854	4784.86	35342.90	0.135 [1]
T13	100 - 80	1	5.52	2.63	126.4	0.7854	7676.97	35342.90	0.217 [1]
T14	80 - 60	1	5.52	2.63	126.4	0.7854	4757.32	35342.90	0.135 [1]
T15	60 - 40	1	5.52	2.63	126.4	0.7854	1554.97	35342.90	0.044 [1]
T16	40 - 20	1	5.52	2.63	126.4	0.7854	4002.15	35342.90	0.113 [1]
T17	20 - 5.25	1	5.49	2.62	125.8	0.7854	5032.47	35342.90	0.142 [1]

[1] P_u / ϕP_n controls

Secondary Horizontal Design Data (Tension)

Section No.	Elevation ft	Size	L ft	L_u ft	Kl/r	A in^2	P_u lb	ϕP_n lb	Ratio $\frac{P_u}{\phi P_n}$
T18	5.25 - 0	3/4	3.28	3.05	195.3	0.4418	777.45	19880.40	0.039 [1]

[1] P_u / ϕP_n controls

Top Girt Design Data (Tension)

Section No.	Elevation ft	Size	L ft	L_u ft	Kl/r	A in^2	P_u lb	ϕP_n lb	Ratio $\frac{P_u}{\phi P_n}$
L1	347 - 330	3/4	2.50	2.40	153.3	0.4418	154.71	19880.40	0.008 [1]
T1	330 - 320	1	5.00	4.81	231.0	0.7854	4508.23	35342.90	0.128 [1]
T2	320 - 300	1	5.00	4.81	231.0	0.7854	334.01	35342.90	0.009 [1]
T3	300 - 280	1	5.00	4.81	231.0	0.7854	402.12	35342.90	0.011 [1]
T4	280 - 260	1	5.00	4.81	231.0	0.7854	1303.87	35342.90	0.037 [1]
T5	260 - 240	1	5.00	4.81	231.0	0.7854	1413.95	35342.90	0.040 [1]

Section No.	Elevation ft	Size	L ft	L_u ft	Kl/r	A in^2	P_u lb	ϕP_n lb	Ratio $\frac{P_u}{\phi P_n}$
T6	240 - 220	1	5.00	4.81	231.0	0.7854	737.05	35342.90	0.021 [1]
T7	220 - 200	1 1/4	5.00	4.79	184.0	1.2272	1640.32	55223.30	0.030 [1]
T8	200 - 180	1 1/2	5.00	4.77	152.7	1.7672	3673.25	79521.60	0.046 [1]
T9	180 - 160	1 1/2	5.00	4.77	152.7	1.7672	5311.61	79521.60	0.067 [1]
T10	160 - 140	1 1/4	5.00	4.77	183.2	1.2272	1593.65	55223.30	0.029 [1]
T11	140 - 120	1 1/4	5.00	4.77	183.2	1.2272	591.80	55223.30	0.011 [1]
T12	120 - 100	1 1/4	5.00	4.77	183.2	1.2272	1714.73	55223.30	0.031 [1]
T13	100 - 80	1 1/4	5.00	4.77	183.2	1.2272	3168.85	55223.30	0.057 [1]
T14	80 - 60	1 1/4	5.00	4.77	183.2	1.2272	2021.14	55223.30	0.037 [1]
T15	60 - 40	1 1/4	5.00	4.77	183.2	1.2272	729.78	55223.30	0.013 [1]
T16	40 - 20	1 1/4	5.00	4.77	183.2	1.2272	1411.25	55223.30	0.026 [1]
T17	20 - 5.25	1 1/4	5.00	4.77	183.2	1.2272	2351.16	55223.30	0.043 [1]
T18	5.25 - 0	6 x 3/4	4.92	4.69	260.0	4.5000	25525.30	145800.00	0.175 [1]

[1] P_u / ϕP_n controls

Bottom Girt Design Data (Tension)

Section No.	Elevation ft	Size	L ft	L_u ft	Kl/r	A in^2	P_u lb	ϕP_n lb	Ratio $\frac{P_u}{\phi P_n}$
L1	347 - 330	3/4	2.50	2.40	153.3	0.4418	746.80	19880.40	0.038 [1]
T1	330 - 320	1	5.00	4.81	231.0	0.7854	742.57	35342.90	0.021 [1]
T2	320 - 300	1	5.00	4.81	231.0	0.7854	3498.95	35342.90	0.099 [1]
T3	300 - 280	1	5.00	4.81	231.0	0.7854	1149.74	35342.90	0.033 [1]
T4	280 - 260	1	5.00	4.81	231.0	0.7854	1694.35	35342.90	0.048 [1]
T5	260 - 240	1	5.00	4.81	231.0	0.7854	956.42	35342.90	0.027 [1]
T6	240 - 220	1	5.00	4.81	231.0	0.7854	981.19	35342.90	0.028 [1]

Section No.	Elevation ft	Size	L ft	L_u ft	Kl/r	A in^2	P_u lb	ϕP_n lb	Ratio $\frac{P_u}{\phi P_n}$
T7	220 - 200	1 1/4	5.00	4.79	184.0	1.2272	2179.21	55223.30	0.039 [1] ✓
T9	180 - 160	1 1/2	5.00	4.77	152.7	1.7672	2222.47	79521.60	0.028 [1] ✓
T10	160 - 140	1 1/4	5.00	4.77	183.2	1.2272	855.28	55223.30	0.015 [1] ✓
T11	140 - 120	1 1/4	5.00	4.77	183.2	1.2272	1620.46	55223.30	0.029 [1] ✓
T12	120 - 100	1 1/4	5.00	4.77	183.2	1.2272	16350.10	55223.30	0.296 [1] ✓
T13	100 - 80	1 1/4	5.00	4.77	183.2	1.2272	2321.14	55223.30	0.042 [1] ✓
T14	80 - 60	1 1/4	5.00	4.77	183.2	1.2272	1166.37	55223.30	0.021 [1] ✓
T15	60 - 40	1 1/4	5.00	4.77	183.2	1.2272	668.35	55223.30	0.012 [1] ✓
T16	40 - 20	1 1/4	5.00	4.77	183.2	1.2272	1709.66	55223.30	0.031 [1] ✓
T17	20 - 5.25	1 1/4	5.00	4.77	183.2	1.2272	8916.80	55223.30	0.161 [1] ✓

[1] P_u / ϕP_n controls

Mid Girt Design Data (Tension)

Section No.	Elevation ft	Size	L ft	L_u ft	Kl/r	A in^2	P_u lb	ϕP_n lb	Ratio $\frac{P_u}{\phi P_n}$
L1	347 - 330	3/4	2.50	2.40	153.3	0.4418	115.50	19880.40	0.006 [1] ✓
T1	330 - 320	1	5.00	4.81	231.0	0.7854	527.00	35342.90	0.015 [1] ✓
T2	320 - 300	1	5.00	4.81	231.0	0.7854	547.25	35342.90	0.015 [1] ✓
T3	300 - 280	1	5.00	4.81	231.0	0.7854	302.87	35342.90	0.009 [1] ✓
T4	280 - 260	1	5.00	4.81	231.0	0.7854	7495.28	35342.90	0.212 [1] ✓
T5	260 - 240	1	5.00	4.81	231.0	0.7854	470.32	35342.90	0.013 [1] ✓
T6	240 - 220	1	5.00	4.81	231.0	0.7854	559.33	35342.90	0.016 [1] ✓
T7	220 - 200	1 1/4	5.00	4.79	184.0	1.2272	483.38	55223.30	0.009 [1] ✓
T8	200 - 180	1 1/2	5.00	4.77	152.7	1.7672	665.66	79521.60	0.008 [1] ✓
T9	180 - 160	1 1/2	5.00	4.77	152.7	1.7672	1600.43	79521.60	0.020 [1] ✓
T10	160 - 140	1 1/4	5.00	4.77	183.2	1.2272	870.31	55223.30	0.016 [1] ✓

Section No.	Elevation ft	Size	L ft	L_u ft	Kl/r	A in^2	P_u lb	ϕP_n lb	Ratio $\frac{P_u}{\phi P_n}$
T11	140 - 120	1 1/4	5.00	4.77	183.2	1.2272	928.80	55223.30	0.017 [1] ✔
T12	120 - 100	1 1/4	5.00	4.77	183.2	1.2272	847.55	55223.30	0.015 [1] ✔
T13	100 - 80	1 1/4	5.00	4.77	183.2	1.2272	1059.84	55223.30	0.019 [1] ✔
T14	80 - 60	1 1/4	5.00	4.77	183.2	1.2272	1257.12	55223.30	0.023 [1] ✔
T15	60 - 40	1 1/4	5.00	4.77	183.2	1.2272	1310.67	55223.30	0.024 [1] ✔
T16	40 - 20	1 1/4	5.00	4.77	183.2	1.2272	1222.66	55223.30	0.022 [1] ✔
T17	20 - 5.25	1 1/4	5.00	4.77	183.2	1.2272	1116.05	55223.30	0.020 [1] ✔
T18	5.25 - 0	6 x 3/4	2.46	2.23	123.7	4.5000	6832.39	145800.00	0.047 [1] ✔

[1] P_u / ϕP_n controls

Top Guy Pull-Off Design Data (Tension)

Section No.	Elevation ft	Size	L ft	L_u ft	Kl/r	A in^2	P_u lb	ϕP_n lb	Ratio $\frac{P_u}{\phi P_n}$
T8	200 - 180	1 1/2	5.00	4.77	152.7	1.7672	18227.50	79521.60	0.229 [1] ✔

[1] P_u / ϕP_n controls

Bottom Guy Pull-Off Design Data (Tension)

Section No.	Elevation ft	Size	L ft	L_u ft	Kl/r	A in^2	P_u lb	ϕP_n lb	Ratio $\frac{P_u}{\phi P_n}$
T9	180 - 160	1 1/2	5.00	4.77	152.7	1.7672	14454.50	79521.60	0.182 [1] ✔

[1] P_u / ϕP_n controls

Torque-Arm Top Design Data

Section No.	Elevation ft	Size	L ft	L_u ft	Kl/r	A in^2	P_u lb	ϕP_n lb	Ratio $\frac{P_u}{\phi P_n}$
T9	180 - 160 (1083)	2L4x4x3/8	8.65	8.07	84.4	5.7200	36801.90	185328.00	0.199 [1] ✓
T9	180 - 160 (1084)	2L4x4x3/8	8.65	8.07	84.4	5.7200	37780.40	185328.00	0.204 [1] ✓
T9	180 - 160 (1092)	2L4x4x3/8	8.65	8.07	84.4	5.7200	36454.90	185328.00	0.197 [1] ✓
T9	180 - 160 (1093)	2L4x4x3/8	8.65	8.07	84.4	5.7200	33805.00	185328.00	0.182 [1] ✓
T9	180 - 160 (1098)	2L4x4x3/8	8.65	8.07	84.4	5.7200	35008.70	185328.00	0.189 [1] ✓
T9	180 - 160 (1099)	2L4x4x3/8	8.65	8.07	84.4	5.7200	39608.40	185328.00	0.214 [1] ✓

[1] P_u / ϕP_n controls

Torque-Arm Bottom Design Data

Section No.	Elevation ft	Size	L ft	L_u ft	Kl/r	A in^2	P_u lb	ϕP_n lb	Ratio $\frac{P_u}{\phi P_n}$
T9	180 - 160 (1085)	2L4x4x3/8	9.13	8.42	87.8	5.7200	19294.40	185328.00	0.104 [1] ✓
T9	180 - 160 (1086)	2L4x4x3/8	9.13	8.42	87.8	5.7200	18879.30	185328.00	0.102 [1] ✓
T9	180 - 160 (1094)	2L4x4x3/8	9.13	8.42	87.8	5.7200	19704.80	185328.00	0.106 [1] ✓
T9	180 - 160 (1095)	2L4x4x3/8	9.13	8.42	87.8	5.7200	19728.00	185328.00	0.106 [1] ✓
T9	180 - 160 (1100)	2L4x4x3/8	9.13	8.42	87.8	5.7200	20680.90	185328.00	0.112 [1] ✓
T9	180 - 160 (1101)	2L4x4x3/8	9.13	8.42	87.8	5.7200	20276.10	185328.00	0.109 [1] ✓

[1] P_u / ϕP_n controls

Section Capacity Table

Section No.	Elevation ft	Component Type	Size	Critical Element	P lb	ϕP_{allow} lb	% Capacity	Pass Fail
L1	347 - 330	Latticed Pole Leg	1 1/4	2	-12566.00	41903.80	30.0	Pass
L1	347 - 330	Latticed Pole Diagonal	1/2	13	-2788.13	3612.89	77.2	Pass
L1	347 - 330	Latticed Pole Top Girt	3/4	4	-160.13	8562.48	1.9	Pass
L1	347 - 330	Latticed Pole Bottom Girt	3/4	9	-747.26	8562.48	8.7	Pass
L1	347 - 330	Latticed Pole Mid Girt	3/4	10	-116.93	8562.48	1.4	Pass

Section No.	Elevation ft	Component Type	Size	Critical Element	P lb	ϕP_{allow} lb	% Capacity	Pass Fail
T1	330 - 320	Leg	2 1/4	74	-21934.90	149756.00	14.6	Pass
T2	320 - 300	Leg	2 1/4	111	-28650.30	149033.00	19.2	Pass
T3	300 - 280	Leg	2 1/4	169	-29527.70	149033.00	19.8	Pass
T4	280 - 260	Leg	2 1/4	231	-49447.40	149033.00	33.2	Pass
T5	260 - 240	Leg	2 1/4	291	-64995.40	149033.00	43.6	Pass
T6	240 - 220	Leg	2 1/4	351	-70279.00	149033.00	47.2	Pass
T7	220 - 200	Leg	2 1/2	409	-65668.50	189920.00	34.6	Pass
T8	200 - 180	Leg	2 3/4	470	-142745.00	234584.00	60.9	Pass
T9	180 - 160	Leg	2 3/4	530	-142763.00	236561.00	60.3	Pass
T10	160 - 140	Leg	2 3/4	590	-96474.60	229244.00	42.1	Pass
T11	140 - 120	Leg	2 3/4	651	-94254.80	228720.00	41.2	Pass
T12	120 - 100	Leg	2 3/4	710	-115092.00	229226.00	50.2	Pass
T13	100 - 80	Leg	2 3/4	771	-120924.00	229333.00	52.7	Pass
T14	80 - 60	Leg	2 3/4	831	-144564.00	230366.00	62.8	Pass
T15	60 - 40	Leg	2 3/4	891	-146844.00	230414.00	63.7	Pass
T16	40 - 20	Leg	2 3/4	951	-144138.00	230227.00	62.6	Pass
T17	20 - 5.25	Leg	2 3/4	1011	-124676.00	229887.00	54.2	Pass
T18	5.25 - 0	Leg	2 3/4	1059	-115768.00	220234.00	52.6	Pass
T1	330 - 320	Diagonal	7/8	101	-2400.38	7929.17	30.3	Pass
T2	320 - 300	Diagonal	7/8	121	-3738.03	7891.33	47.4	Pass
T3	300 - 280	Diagonal	7/8	181	-5861.18	7891.33	74.3	Pass
T4	280 - 260	Diagonal	7/8	243	-7120.08	7891.33	90.2	Pass
T5	260 - 240	Diagonal	7/8	345	-7132.69	7891.33	90.4	Pass
T6	240 - 220	Diagonal	7/8	366	-6310.25	7891.33	80.0	Pass
T7	220 - 200	Diagonal	1	425	-8349.00	13568.70	61.5	Pass
T8	200 - 180	Diagonal	1 1/4	491	-11682.70	26361.90	44.3	Pass
T9	180 - 160	Diagonal	1 1/4	574	-8294.71	26361.90	31.5	Pass
T10	160 - 140	Diagonal	1	645	-5485.68	13701.20	40.0	Pass
T11	140 - 120	Diagonal	1	666	-4285.68	13701.20	31.3	Pass
T12	120 - 100	Diagonal	1	732	-5424.38	13701.20	39.6	Pass
T13	100 - 80	Diagonal	1	826	-8307.01	13701.20	60.6	Pass
T14	80 - 60	Diagonal	1	886	-5392.06	13701.20	39.4	Pass
T15	60 - 40	Diagonal	1	901	-2111.29	13701.20	15.4	Pass
T16	40 - 20	Diagonal	1	963	-4687.44	13701.20	34.2	Pass
T17	20 - 5.25	Diagonal	1	1053	-5095.19	13839.20	36.8	Pass
T18	5.25 - 0	Diagonal	1 1/4	1067	-7157.91	24641.90	29.0	Pass
T18	5.25 - 0	Secondary Horizontal	3/4	1074	-809.33	5341.20	15.2	Pass
T1	330 - 320	Top Girt	1	76	4508.23	35342.90	12.8	Pass
T2	320 - 300	Top Girt	1	113	-286.95	6785.94	4.2	Pass
T3	300 - 280	Top Girt	1	173	-173.66	6785.94	2.6	Pass
T4	280 - 260	Top Girt	1	233	-941.48	6785.94	13.9	Pass
T5	260 - 240	Top Girt	1	293	-1183.56	6785.94	17.4	Pass
T6	240 - 220	Top Girt	1	353	-509.06	6785.94	7.5	Pass
T7	220 - 200	Top Girt	1 1/4	412	-1251.15	16711.60	7.5	Pass
T8	200 - 180	Top Girt	1 1/2	472	-3177.54	34501.20	9.2	Pass
T9	180 - 160	Top Girt	1 1/2	533	-4717.42	34501.20	13.7	Pass
T10	160 - 140	Top Girt	1 1/4	594	-1356.68	16857.90	8.0	Pass
T11	140 - 120	Top Girt	1 1/4	653	591.80	55223.30	1.1	Pass
T12	120 - 100	Top Girt	1 1/4	712	-1102.23	16857.90	6.5	Pass
T13	100 - 80	Top Girt	1 1/4	772	-1714.02	16857.90	10.2	Pass
T14	80 - 60	Top Girt	1 1/4	832	-1327.48	16857.90	7.9	Pass
T15	60 - 40	Top Girt	1 1/4	892	729.78	55223.30	1.3	Pass
T16	40 - 20	Top Girt	1 1/4	952	-517.94	16857.90	3.1	Pass
T17	20 - 5.25	Top Girt	1 1/4	1012	-1276.46	16857.90	7.6	Pass
T18	5.25 - 0	Top Girt	6 x 3/4	1061	25525.30	145800.00	17.5	Pass
T1	330 - 320	Bottom Girt	1	81	-631.00	6785.94	9.3	Pass
T2	320 - 300	Bottom Girt	1	117	3498.95	35342.90	9.9	Pass
T3	300 - 280	Bottom Girt	1	175	-1017.96	6785.94	15.0	Pass
T4	280 - 260	Bottom Girt	1	237	-1210.23	6785.94	17.8	Pass
T5	260 - 240	Bottom Girt	1	297	-701.45	6785.94	10.3	Pass
T6	240 - 220	Bottom Girt	1	357	-834.31	6785.94	12.3	Pass

Section No.	Elevation ft	Component Type	Size	Critical Element	P lb	ϕP_{allow} lb	% Capacity	Pass Fail
T7	220 - 200	Bottom Girt	1 1/4	417	-2017.21	16711.60	12.1	Pass
T9	180 - 160	Bottom Girt	1 1/2	535	-1224.63	34501.20	3.5	Pass
T10	160 - 140	Bottom Girt	1 1/4	597	855.28	55223.30	1.5	Pass
T11	140 - 120	Bottom Girt	1 1/4	656	-976.59	16857.90	5.8	Pass
T12	120 - 100	Bottom Girt	1 1/4	716	16350.10	55223.30	29.6	Pass
T13	100 - 80	Bottom Girt	1 1/4	776	-1644.27	16857.90	9.8	Pass
T14	80 - 60	Bottom Girt	1 1/4	836	-522.86	16857.90	3.1	Pass
T15	60 - 40	Bottom Girt	1 1/4	895	668.35	55223.30	1.2	Pass
T16	40 - 20	Bottom Girt	1 1/4	956	-1122.64	16857.90	6.7	Pass
T17	20 - 5.25	Bottom Girt	1 1/4	1016	8916.80	55223.30	16.1	Pass
T1	330 - 320	Mid Girt	1	83	527.00	35342.90	1.5	Pass
T2	320 - 300	Mid Girt	1	120	-279.37	6785.94	4.1	Pass
T3	300 - 280	Mid Girt	1	180	302.87	35342.90	0.9	Pass
T4	280 - 260	Mid Girt	1	240	7495.28	35342.90	21.2	Pass
T5	260 - 240	Mid Girt	1	300	470.32	35342.90	1.3	Pass
T6	240 - 220	Mid Girt	1	359	559.33	35342.90	1.6	Pass
T7	220 - 200	Mid Girt	1 1/4	419	483.38	55223.30	0.9	Pass
T8	200 - 180	Mid Girt	1 1/2	478	665.66	79521.60	0.8	Pass
T9	180 - 160	Mid Girt	1 1/2	540	-851.29	34501.20	2.5	Pass
T10	160 - 140	Mid Girt	1 1/4	599	870.31	55223.30	1.6	Pass
T11	140 - 120	Mid Girt	1 1/4	659	928.80	55223.30	1.7	Pass
T12	120 - 100	Mid Girt	1 1/4	719	847.55	55223.30	1.5	Pass
T13	100 - 80	Mid Girt	1 1/4	779	1059.84	55223.30	1.9	Pass
T14	80 - 60	Mid Girt	1 1/4	839	1257.12	55223.30	2.3	Pass
T15	60 - 40	Mid Girt	1 1/4	899	1310.67	55223.30	2.4	Pass
T16	40 - 20	Mid Girt	1 1/4	959	1222.66	55223.30	2.2	Pass
T17	20 - 5.25	Mid Girt	1 1/4	1019	1116.05	55223.30	2.0	Pass
T18	5.25 - 0	Mid Girt	6 x 3/4	1064	6832.39	145800.00	4.7	Pass
T1	330 - 320	Guy A@329.5	11/16	1077	21297.70	34800.00	61.2	Pass
T2	320 - 300	Guy A@300.25	9/16	1107	13470.10	21000.00	64.1	Pass
T4	280 - 260	Guy A@269.625	13/16	1080	31792.80	48000.00	66.2	Pass
T9	180 - 160	Guy A@178	7/8	1097	38560.80	55200.00	69.9	Pass
T12	120 - 100	Guy A@100.26	7/8	1104	38323.90	55200.00	69.4	Pass
T1	330 - 320	Guy B@329.5	11/16	1076	20791.20	34800.00	59.7	Pass
T2	320 - 300	Guy B@300.25	9/16	1106	13145.80	21000.00	62.6	Pass
T4	280 - 260	Guy B@269.625	13/16	1079	31084.30	48000.00	64.8	Pass
T9	180 - 160	Guy B@178	7/8	1090	36692.10	55200.00	66.5	Pass
T12	120 - 100	Guy B@100.26	7/8	1103	36205.90	55200.00	65.6	Pass
T1	330 - 320	Guy C@329.5	11/16	1075	19622.30	34800.00	56.4	Pass
T2	320 - 300	Guy C@300.25	9/16	1105	12461.80	21000.00	59.3	Pass
T4	280 - 260	Guy C@269.625	13/16	1078	29663.60	48000.00	61.8	Pass
T9	180 - 160	Guy C@178	7/8	1081	35750.50	55200.00	64.8	Pass
T12	120 - 100	Guy C@100.26	7/8	1102	34925.60	55200.00	63.3	Pass
T8	200 - 180	Top Guy Pull-Off@178	1 1/2	475	-9228.42	34501.20	26.7	Pass
T9	180 - 160	Bottom Guy Pull-Off@178	1 1/2	1089	-19356.50	34501.20	56.1	Pass
T9	180 - 160	Torque Arm Top@178	2L4x4x3/8	1099	39608.40	185328.00	21.4	Pass
T9	180 - 160	Torque Arm Bottom@178	2L4x4x3/8	1101	-57688.10	162250.00	29.5 (b) 35.6 40.8 (b)	Pass
						Summary		
						Latticed Pole Leg (L1)	30.0	Pass
						Latticed Pole Diagonal (L1)	77.2	Pass
						Latticed Pole Top	1.9	Pass

Section No.	Elevation ft	Component Type	Size	Critical Element	P lb	ϕP_{allow} lb	% Capacity	Pass Fail
						Girt (L1) Latticed Pole Bottom	8.7	Pass
						Girt (L1) Latticed Pole Mid	1.4	Pass
						Girt (L1) Leg (T15)	63.7	Pass
						Diagonal (T5)	90.4	Pass
						Secondary Horizontal (T18)	15.2	Pass
						Top Girt (T18)	17.5	Pass
						Bottom Girt (T12)	29.6	Pass
						Mid Girt (T4)	21.2	Pass
						Guy A (T9)	69.9	Pass
						Guy B (T9)	66.5	Pass
						Guy C (T9)	64.8	Pass
						Top Guy Pull-Off (T8)	26.7	Pass
						Bottom Guy Pull-Off (T9)	56.1	Pass
						Torque Arm Top (T9)	29.5	Pass
						Torque Arm Bottom (T9)	40.8	Pass
						Bolt Checks	53.4	Pass
						RATING =	**90.4**	**Pass**

CENTEK engineering
Centered on Solutions
63-2 North Branford Road
Branford, CT 06405
www.centekeng.com
P: (203) 488-0580
F: (203) 488-8587

Job :	Verizon ~ Ledyard: 347-ft Guyed Lattice Tower	**Project No.**	21007.56	**Sheet**	1	of	2
Address:	889 Colonel Ledyard Highway Ledyard, CT	**Computed by**	TJL	**Date**		8/31/23	
Description:	Guy Anchor Evaluation	**Checked by**	CFC	**Date**			

CHECK UPLIFT RESISTANCE

ANCHOR (A) AT 220ft RADIUS

RESULTS FROM COMPUTER ANALYSIS:

Uplift =	124	kips
Sliding =	126	kips
Wdepth =	20	ft

CONCRETE PARAMETERS:

γ conc =	150	pcf
γ conc.sub =	87.6	pcf
w =	4.5	ft
h =	4.5	ft
d =	20.5	ft
Vol. =	415.13	ft^3
Vol.sub =	0.00	ft^3
Wc =	*62.27*	kips
Ø =	*0.90*	
	56.04	

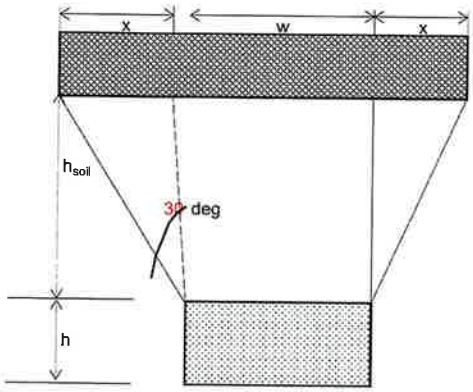

Foundation Section

SOIL PARAMETERS:

γ_{soil} =	110	pcf
$\gamma_{soil.sub}$ =	47.6	pcf
h_{soil} =	7	ft
x =	*4.04*	ft

Soil Weight (Wr):

B1 =	92.25
B2 =	92.25
B3 =	359.66

W.soil =	162.74	kips
W.soil.sub =	0.00	kips
Total =	*162.74*	kips
Ø =	*0.75*	
	122.06	

SF AGAINST SLIDING

1.44 > *1* ***OK***

GUY ANCHORS AGAINST UPLIFT ARE ADEQUATE

CENTEK engineering
Centered on Solutions
63-2 North Branford Road
Branford, CT 06405
www.centekeng.com
P: (203) 488-0580
F: (203) 488-8587

Job :	Verizon ~ Ledyard: 347-ft Guyed Lattice Tower	**Project No.**	21007.56	**Sheet**	2 of 2
Address:	889 Colonel Ledyard Highway Ledyard, CT	**Computed by**	TJL	**Date**	8/31/23
Description:	Guy Anchor Evaluation	**Checked by**	CFC	**Date**	

CHECK SLIDING RESISTANCE

SOIL PARAMETERS

$\gamma soil$ =	110	pcf
$\gamma soil$ =	47.6	pcf
h_{soil} =	7	ft
h =	4.5	ft
ϕ =	30	degrees

ANCHOR PARAMETERS

w =	4.5	ft
h =	4.5	ft
d =	20.5	ft

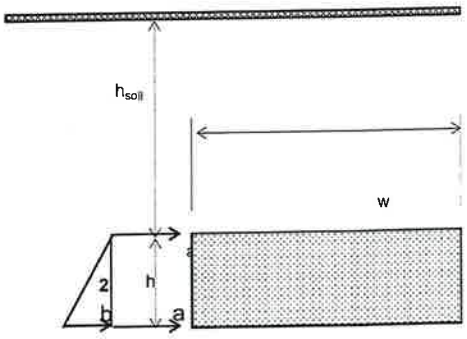

Foundation Elevation View

K_p = 3.00

HORIZONTAL FORCES

	2.31	ksf
	3.80	ksf
RESIST TO SLIDING =	281.59	k

SOIL & CONCRETE WEIGHT =	Wr + Wc = 178.10	k
UPLIFT REACTIONS =	-124	k
SUM =	54.10	k

COEF. OF FRICTION, (0.45) =	24.34	k
RESIST TO SLIDING =	281.59	k
SUM =	305.94	k

SF AGAINST SLIDING

SF = 2.4 > 1 OK

GUY ANCHORS AGAINST SLIDING ARE ADEQUATE

Guyed Tower Base Foundation:

Input Data:

Tower Data

Shear Force =	$Shear := 8.2 \cdot kip$	(User Input from tnxTower)	
Axial Force =	$Axial := 296 \cdot kip$	(User Input from tnxTower)	
Tower Height =	$H_t := 347 \cdot ft$	(User Input)	

Footing Data:

Overall Depth of Footing =	$D_f := 4.0 \cdot ft$	(User Input)	
Length of Pier =	$L_p := 2.0 \cdot ft$	(User Input)	
Extension of Pier Above Grade =	$L_{pag} := 0.5 \cdot ft$	(User Input)	
Width of Pier =	$W_p := 3.5 \cdot ft$	(User Input)	
Thickness of Footing =	$T_f := 2.5 \cdot ft$	(User Input)	
Width of Footing =	$W_{f1} := 9.5 \cdot ft$	(User Input)	
Length of Footing =	$W_{f2} := 9.5 \cdot ft$	(User Input)	

Material Properties:

Concrete Compressive Strength =	$f_c := 3000 \cdot psi$	(User Input)	
Steel Reinforcment Yield Strength =	$f_y := 60000 \cdot psi$	(User Input)	
Internal Friction Angle of Soil =	$\Phi_s := 30 \cdot deg$	(User Input)	
Ultimate Soil Bearing Capacity =	$q_s := 40000 \cdot psf$	(User Input)	
Unit Weight of Soil =	$\gamma_{soil} := 120 \cdot pcf$	(User Input)	
Unit Weight of Concrete =	$\gamma_{conc} := 150 \cdot pcf$	(User Input)	
Foundation Bouyancy =	$Bouyancy := 0$	(User Input)	(Yes=1 / No=0)
Depth to Neglect =	$n := 0 \cdot ft$	(User Input)	
Cohesion of Clay Type Soil =	$c := 0 \cdot ksf$	(User Input)	(Use 0 for Sandy Soil)
Seismic Zone Factor =	$Z := 2$	(User Input)	
Coefficient of Friction Between Concrete =	$\mu := 0.45$	(User Input)	

Calculated Factors:

Coefficient of Lateral Soil Pressure =

$$K_p := \frac{1 + \sin(\Phi_s)}{1 - \sin(\Phi_s)} = 3$$

Load Factor =

$$LF := \begin{cases} 1.333 & \text{if } H_t \le 700 \cdot ft \\ 1.7 & \text{if } H_t \ge 1200 \cdot ft \\ 1.333 + \left(\frac{H_t - 700ft}{1200ft - 700ft}\right) \cdot 0.4 & \text{otherwise} \end{cases} = 1.333$$

Stability of Footing:

Adjusted Concrete Unit Weight = $\gamma_c := \text{if}(\text{Bouyancy} = 1, \gamma_{conc} - 62.4\text{pcf}, \gamma_{conc}) = 150 \cdot \text{pcf}$

Adjusted Soil Unit Weight = $\gamma_s := \text{if}(\text{Bouyancy} = 1, \gamma_{soil} - 62.4\text{pcf}, \gamma_{soil}) = 120 \cdot \text{pcf}$

Passive Pressure = $P_{pn} := K_p \cdot \gamma_s \cdot n + c \cdot 2 \cdot \sqrt{K_p} = 0 \cdot \text{ksf}$

$P_{pt} := K_p \cdot \gamma_s \cdot (D_f - T_f) + c \cdot 2 \cdot \sqrt{K_p} = 0.54 \cdot \text{ksf}$

$P_{top} := \text{if}[n < (D_f - T_f), P_{pt}, P_{pn}] = 0.54 \cdot \text{ksf}$

$P_{bot} := K_p \cdot \gamma_s \cdot D_f + c \cdot 2 \cdot \sqrt{K_p} = 1.44 \cdot \text{ksf}$

$P_{ave} := \frac{P_{top} + P_{bot}}{2} = 0.99 \cdot \text{ksf}$

$T_p := \text{if}[n < (D_f - T_f), T_f, (D_f - n)] = 2.5$

$A_p := W_{f1} \cdot T_p = 23.75$

Soil Shear Resistance = $Sl_1 := P_{ave} \cdot A_p = 23.51 \cdot \text{kip}$

Weight of Concrete = $WT_c := \left[(W_{f1} \cdot W_{f2} \cdot T_f) + W_p^2 L_p\right] \cdot \gamma_c = 37.52 \cdot \text{kip}$

Total Weight = $WT_{tot} := WT_c + \text{Axial} = 333.52 \cdot \text{kip}$

Soil/Concrete Friction Resistance = $Sl_2 := \mu \cdot WT_{tot} = 150.08 \cdot \text{kips}$

Total Sliding Resistance = $Sl_{tot} := Sl_1 + Sl_2 = 173.6 \cdot \text{kips}$

Sliding Resistance Ratio = $\text{Sliding\_Resistance}_{ratio} := \frac{0.75 Sl_{tot}}{\text{Shear}} = 15.88$

$\text{Sliding\_Resistance\_Check} := \text{if}\left[\left(\frac{\text{Shear}}{0.75 Sl_{tot}} < 1.0\right), \text{"Okay"}, \text{"No Good"}\right]$

Sliding_Resistance_Check = "Okay"

Bearing Pressure Caused by Footing:

Area of the Mat = $A_{mat} := W_{f1} \cdot W_{f2} = 90.25$

Maximum Pressure in Mat = $P_{max} := \frac{WT_{tot}}{A_{mat}} = 3.7 \cdot \text{ksf}$

$\text{Max\_Pressure\_Check} := \text{if}(P_{max} < 0.6 q_s, \text{"Okay"}, \text{"No Good"})$

Max_Pressure_Check = "Okay"

verizon
NPP RFDS

NORTHEAST > North East > New England > Wallingford-1 > LEDYARD CT

SUMMERS, MELISSA - melissa.summers@verizonwireless.com - 20230727_092839

Project Details	
Carrier Aggregation	N
Ecip	N
Project Name	5G L-SUB6 - CARRIER ADD
Project Alt Name	LEDYARD CT - MKT 64 - MODIFICATION
Project Id	16271967
Designed Sector Carrier 4G	12
Designed Sector Carrier 5G	6
Additional Sector Carrier 4G	0
Additional Sector Carrier 5G	0
Suffix	REV1
FP Solution Type & Tech Type	MODIFICATION;5G_850;4G_850;5G_L-Sub6;4G_PCS;4G_Radio Swap;5G_Radio Swap

Location Information	
Site Id	324217
Search Ring#	
E-NodeB ID#	064090
PSLC#	468694
Switch Name	Wallingford-1
Tower Type	
Site Type	MACRO
Street Address	889 Colonel Ledyard Highway
City	Ledyard
State	CT
Zip Code	06339
County	New London
Latitude	41.46199/ 41° 27' 43.164"
Longitude	-72.02361/ 72° 1' 24.996"

Project Scope

RFDS SOW: 850 5GNR/ PCS/ L-SUB6 carrier add, Samsung dual band RRH swap, antenna change

REV1 (7/27/23): Upgrades LB/ C-Band RRH

1- Retain 700/ AWS carriers and add 850 5GNR/ PCS/ L-SUB6 carriers
2- Replace (6) existing antennas in positions 2 & 4 with (6) new Commscope NHH-65B-R2B antennas on new BSAMNT-SBS-1-2 mounts to position 2. Retain (3) spare antennas in position 4
3- Replace (3) existing antennas in position 1 with (3) MT6413-77A L-Sub6 All-in-One antenna/ RRHs
4- Replace (3) existing Nokia RRHs on tower and (3) in shelter with (3) new B5/B13 RRH- RF4461d-13A and (3) new Samsung B2/B66A RRHRF4439d-25A on tower
5- Plumb 700/ 850/ PCS/ AWS/ L-SUB6 according to the plumbing diagram
6- Use RF ports on dual band RRHs to communicate with RETs via Smart bias-T built into the antenna

Project Scope

7- Cap and weatherproof unused ports/connectors

Antenna Summary

Added Antenna

700	850	1900	AWS	L-Sub6	Make	Model	Centerline	Tip Height	Azimuth	Install Type	Quantity
				5G	Samsung	MT6413-77A	180	181.2	60(A),200(B),290(C)	PHYSICAL	3
LTE	5G,LTE	LTE	LTE		COMMSCOPE	NHH-65B-R2B	180	183	60(A),200(B),290(C)	PHYSICAL	6

Removed Antenna

700	850	1900	AWS	L-Sub6	Make	Model	Centerline	Tip Height	Azimuth	Install Type	Quantity
			LTE		ANDREW	HBXX-6517DS-A2M	180	183.1	60(A),200(B),290(C)	PHYSICAL	6
LTE					COMMSCOPE,ANDREW	LNX-6514DS-A1M	180	183	60(A),200(B),290(C)	PHYSICAL	3

Retained Antenna

700	850	1900	AWS	L-Sub6	Make	Model	Centerline	Tip Height	Azimuth	Install Type	Quantity
					COMMSCOPE	LNX-6514DS-A1M	180	183	60(A),200(B),290(C)	SPARE	3

Added: 9	Removed: 9	Retained: 3

Non Antenna Summary

Added Non Antenna

Equipment Type	Location	700	850	1900	AWS	Make	Model	Install Type	Quantity
RRU	Tower			LTE	LTE	Samsung	B2/B66A RRH ORAN (RF4439d-25A)	PHYSICAL	3
Mount	Tower					Commscope	BSAMNT-SBS-1-2	PHYSICAL	3
RRU	Tower	LTE	5G,LTE			Samsung	RF4461d-13A	PHYSICAL	3

Removed Non Antenna

Equipment Type	Location	700	850	1900	AWS	Make	Model	Install Type	Quantity
RRU	Shelter	LTE				Nokia	UHBA B13 RRH 4x30	PHYSICAL	3
RRU	Tower				LTE	Nokia	UHIC B4 RRH 2x60-4R	PHYSICAL	3

Retained Non Antenna

Equipment Type	Location	700	850	1900	AWS	Make	Model	Install Type	Quantity
Coaxial Cables	Tower					N/A	1-5/8" Coax	PHYSICAL	12
OVP	Tower						6 OVP	PHYSICAL	2
Hybrid Cable	Tower					N/A	6x12 Hybriflex	PHYSICAL	2

Added: 9	Removed: 6	Retained: 16

Services				
1900 LTE	0000	5GLS		
Sector		01	02	03
Azimuth		60	200	290
Cell/Enodeb-Id		064090	064090	064090
Antenna Model		NHH-65B-R2B	NHH-65B-R2B	NHH-65B-R2B
Antenna Make		COMMSCOPE	COMMSCOPE	COMMSCOPE
Centerline		180	180	180
DLEARFCN		1075	1075	1075
Mech Down-tilt		0	0	0
Elect Down-tilt		3	3	3
Tip Height		183	183	183
Regulatory Power		182.25 (W/MHz) EIRP	182.25 (W/MHz) EIRP	182.25 (W/MHz) EIRP
Cell Max Power		46.0 dBm	46.0 dBm	46.0 dBm
TMA Make				
TMA Model				
RRU Make		Samsung	Samsung	Samsung
RRU Model		B2/B66A RRH ORAN (RF4439d-25A)	B2/B66A RRH ORAN (RF4439d-25A)	B2/B66A RRH ORAN (RF4439d-25A)
Number of Tx,Rx		4 , 4	4 , 4	4 , 4
Position		3R	3R	3R
Transmitter Id		10681651	10681652	10681653
Source		VZNPP	VZNPP	VZNPP
Bandwidth		15	15	15
Ant. Dimensions H x W x D(inch)		72.0 x 11.88 x 7.08	72.0 x 11.88 x 7.08	72.0 x 11.88 x 7.08
Weight(lb)		43.6	43.6	43.6

Services						
700 LTE	**0000**			**5GLS**		
Sector	01	02	03	01	02	03
Azimuth	60	200	290	60	200	290
Cell/Enodeb-Id	064090	064090	064090	064090	064090	064090
Antenna Model	LNX-6514DS-A1M	LNX-6514DS-A1M	LNX-6514DS-A1M	NHH-65B-R2B	NHH-65B-R2B	NHH-65B-R2B
Antenna Make	ANDREW	COMMSCOPE	ANDREW	COMMSCOPE	COMMSCOPE	COMMSCOPE
Centerline	180	180	180	180	180	180
DLEARFCN	5230	5230	5230	5230	5230	5230
Mech Down-tilt	0	0	0	0	0	0
Elect Down-tilt	10	6	8	10	6	10
Tip Height	183	183	183	183	183	183
Regulatory Power	134.26 (W/MHz) ERP	133.92 (W/MHz) ERP	134.26 (W/MHz) ERP	76.52 (W/MHz) ERP	76.52 (W/MHz) ERP	76.52 (W/MHz) ERP
Cell Max Power	48.8 dBm	48.8 dBm	48.8 dBm	46.0 dBm	46.0 dBm	46.0 dBm
TMA Make						
TMA Model						
RRU Make	Nokia	Nokia	Nokia	Samsung	Samsung	Samsung
RRU Model	UHBA B13 RRH 4x30	UHBA B13 RRH 4x30	UHBA B13 RRH 4x30	RF4461d-13A	RF4461d-13A	RF4461d-13A
Number of Tx,Rx	4 , 2	4 , 2	4 , 2	4 , 4	4 , 4	4 , 4
Position	2,4	2,4	2,4	3L,3R	3L,3R	3L,3R
Transmitter Id	1959364	1959368	1959363	9035837	9035841	9035833
Source	VZNPP	VZNPP	VZNPP	VZNPP	VZNPP	VZNPP
Bandwidth	10	10	10	10	10	10
Ant. Dimensions H x W x D(inch)	72.71 x 11.88 x 7.08	71.99 x 11.89 x 7.09	72.71 x 11.88 x 7.08	72.0 x 11.88 x 7.08	72.0 x 11.88 x 7.08	72.0 x 11.88 x 7.08
Weight(lb)	44.0	39.18	31.23	43.6	43.6	43.6

Services				
850 LTE	0000	5GLS		
Sector		01	02	03
Azimuth		60	200	290
Cell/Enodeb-Id		064090	064090	064090
Antenna Model		NHH-65B-R2B	NHH-65B-R2B	NHH-65B-R2B
Antenna Make		COMMSCOPE	COMMSCOPE	COMMSCOPE
Centerline		180	180	180
DLEARFCN		2450	2450	2450
Mech Down-tilt		0	0	0
Elect Down-tilt		10	6	10
Tip Height		183	183	183
Regulatory Power		311.04 (W/MHz) ERPSD	311.04 (W/MHz) ERPSD	311.04 (W/MHz) ERPSD
Cell Max Power		46.0 dBm	46.0 dBm	46.0 dBm
TMA Make				
TMA Model				
RRU Make		Samsung	Samsung	Samsung
RRU Model		RF4461d-13A	RF4461d-13A	RF4461d-13A
Number of Tx,Rx		4 , 4	4 , 4	4 , 4
Position		3L,3R	3L,3R	3L,3R
Transmitter Id		10681682	10681683	10681681
Source		VZNPP	VZNPP	VZNPP
Bandwidth		10	10	10
Ant. Dimensions H x W x D(inch)		72.0 x 11.88 x 7.08	72.0 x 11.88 x 7.08	72.0 x 11.88 x 7.08
Weight(lb)		43.6	43.6	43.6

Services				
850 NR	0000	5GLS		
Sector		0076	0077	0078
Azimuth		60	200	290
Cell/Enodeb-Id		0649403	0649403	0649403
Antenna Model		NHH-65B-R2B	NHH-65B-R2B	NHH-65B-R2B
Antenna Make		COMMSCOPE	COMMSCOPE	COMMSCOPE
Centerline		180	180	180
DLEARFCN		2450	2450	2450
Mech Down-tilt		0	0	0
Elect Down-tilt		10	6	10
Tip Height		183	183	183
Regulatory Power		311.04 (W/MHz) ERPSD	311.04 (W/MHz) ERPSD	311.04 (W/MHz) ERPSD
Cell Max Power		46.0 dBm	46.0 dBm	46.0 dBm
TMA Make				
TMA Model				
RRU Make		Samsung	Samsung	Samsung
RRU Model		RF4461d-13A	RF4461d-13A	RF4461d-13A
Number of Tx,Rx		4 , 4	4 , 4	4 , 4
Position		3L,3R	3L,3R	3L,3R
Transmitter Id		10681682	10681683	10681681
Source		VZNPP	VZNPP	VZNPP
Bandwidth		10	10	10
Ant. Dimensions H x W x D(inch)		72.0 x 11.88 x 7.08	72.0 x 11.88 x 7.08	72.0 x 11.88 x 7.08
Weight(lb)		43.6	43.6	43.6

Services						
AWS LTE	0000			5GLS		
Sector	01	02	03	01	02	03
Azimuth	60	200	290	60	200	290
Cell/Enodeb-Id	064090	064090	064090	064090	064090	064090
Antenna Model	HBXX-6517DS-A2M	HBXX-6517DS-A2M	HBXX-6517DS-A2M	NHH-65B-R2B	NHH-65B-R2B	NHH-65B-R2B
Antenna Make	ANDREW	ANDREW	ANDREW	COMMSCOPE	COMMSCOPE	COMMSCOPE
Centerline	180	180	180	180	180	180
DLEARFCN	2050	2050	2050	2050	2050	2050
Mech Down-tilt	0	0	0	0	0	0
Elect Down-tilt	3	2	3	3	3	3
Tip Height	183.1	183.1	183.1	183	183	183
Regulatory Power	352.47 (W/MHz) EIRP	352.47 (W/MHz) EIRP	352.47 (W/MHz) EIRP	154.07 (W/MHz) EIRP	154.07 (W/MHz) EIRP	154.07 (W/MHz) EIRP
Cell Max Power	48.8 dBm	48.8 dBm	48.8 dBm	46.0 dBm	46.0 dBm	46.0 dBm
TMA Make						
TMA Model						
RRU Make	Nokia	Nokia	Nokia	Samsung	Samsung	Samsung
RRU Model	UHIC B4 RRH 2x60-4R	UHIC B4 RRH 2x60-4R	UHIC B4 RRH 2x60-4R	B2/B66A RRH ORAN (RF4439d-25A)	B2/B66A RRH ORAN (RF4439d-25A)	B2/B66A RRH ORAN (RF4439d-25A)
Number of Tx,Rx	4 , 2	4 , 2	4 , 2	4 , 4	4 , 4	4 , 4
Position	1,3	1,3	1,3	3L	3L	3L
Transmitter Id	1959365	1959366	1959367	9035845	9035849	9035852
Source	VZNPP	VZNPP	VZNPP	VZNPP	VZNPP	VZNPP
Bandwidth	20	20	20	20	20	20
Ant. Dimensions H x W x D(inch)	74.88 x 12.0 x 6.49	74.88 x 12.0 x 6.49	74.88 x 12.0 x 6.49	72.0 x 11.88 x 7.08	72.0 x 11.88 x 7.08	72.0 x 11.88 x 7.08
Weight(lb)	42.9	42.9	42.9	43.6	43.6	43.6

Services				
CBAND NR	**0000**	**5GLS**		
Sector		0076	0077	0078
Azimuth		60	200	290
Cell/Enodeb-Id		0649403	0649403	0649403
Antenna Model		MT6413-77A	MT6413-77A	MT6413-77A
Antenna Make		Samsung	Samsung	Samsung
Centerline		180	180	180
DLEARFCN		650006	650006	650006
Mech Down-tilt		0	0	0
Elect Down-tilt		3	3	3
Tip Height		181.2	181.2	181.2
Regulatory Power		1183.88 (W/MHz) EIRP	1183.88 (W/MHz) EIRP	1183.88 (W/MHz) EIRP
Cell Max Power		52.0 dBm	52.0 dBm	52.0 dBm
TMA Make				
TMA Model				
RRU Make		Samsung	Samsung	Samsung
RRU Model		MT6413-77A	MT6413-77A	MT6413-77A
Number of Tx,Rx		2 , 2	2 , 2	2 , 2
Position		1	1	1
Transmitter Id		9035880	9035881	9035882
Source		VZNPP	VZNPP	VZNPP
Bandwidth		100	100	100
Ant. Dimensions H x W x D(inch)		29.53 x 15.75 x 5.51	29.53 x 15.75 x 5.51	29.53 x 15.75 x 5.51
Weight(lb)		55.1	55.1	55.1

Callsigns Per Antenna

Sector	Make	Model	Ant CL Height AG	Ant Tip Height	Azimuth	Elect Down-tilt	Mech Down-tilt	Gain	Bandwidth	Regulatory Power	700	850	1900	2100	28 GHz	31 GHz	39 GHz	LSub-6	CBRS
0076	COMMSCOPE	NHH-65B-R2	180	183	60	10	0	12.643	61	311.04		KNKA745							
0077	COMMSCOPE	NHH-65B-R2	180	183	200	6	0	12.56	61.5	311.04		KNKA745							
03	COMMSCOPE	NHH-65B-R2	180	183	290	10	0	12.58	65.75	76.52	WQJQ689								
02	COMMSCOPE	NHH-65B-R2	180	183	200	3	0	16.379999	62.75	154.07				WQGA906,WQGD494					
01	COMMSCOPE	NHH-65B-R2	180	183	60	3	0	16.379999	62.75	154.07				WQGA906,WQGD494					
0078	Samsung	MT6413-77A	180	181.2	290	3	0	23.35	105	1183.88								WRNE581,WRNE582,WRNE583,WRNE584,WRNE585	
02	COMMSCOPE	NHH-65B-R2	180	183	200	6	0	12.56	61.5	311.04		KNKA745							
02	COMMSCOPE	NHH-65B-R2	180	183	200	3	0	15.92	66	182.25			KNLH263,WQDU931,WQEM954						
02	COMMSCOPE	NHH-65B-R2	180	183	200	6	0	12.517	64.25	76.52	WQJQ689								
0076	Samsung	MT6413-77A	180	181.2	60	3	0	23.35	105	1183.88								WRNE581,WRNE582,WRNE583,WRNE584,WRNE585	
01	COMMSCOPE	NHH-65B-R2	180	183	60	10	0	12.643	61	311.04		KNKA745							
03	COMMSCOPE	NHH-65B-R2	180	183	290	3	0	15.92	66	182.25			KNLH263,WQDU931,WQEM954						
03	COMMSCOPE	NHH-65B-R2	180	183	290	3	0	16.379999	62.75	154.07				WQGA906,WQGD494					
01	COMMSCOPE	NHH-65B-R2	180	183	60	10	0	12.58	65.75	76.52	WQJQ689								
0078	COMMSCOPE	NHH-65B-R2	180	183	290	10	0	12.643	61	311.04		KNKA745							
01	COMMSCOPE	NHH-65B-R2	180	183	60	3	0	15.92	66	182.25			KNLH263,WQDU931,WQEM954						
03	COMMSCOPE	NHH-65B-R2	180	183	290	10	0	12.643	61	311.04		KNKA745							
0077	Samsung	MT6413-77A	180	181.2	200	3	0	23.35	105	1183.88								WRNE581,WRNE582,WRNE583,WRNE584,WRNE585	

Callsigns

Callsign	Market	Radio Code	Market #	Block	State	County	License Name	Wholly Owner	Total MHZ	Freq Range 1	Freq Range 2	Freq Range 3	Freq Range 4	Regulatory Power	Threshold (W)	POPs/Sq. mil	Status	Action	Approve for Insvc
WQJQ689	Northeast	WU	REA001	C	CT	9011	Cellco Partnershi	Yes	22.000	746.000 - 757.000/.000 - .000	776.000 - 787.000/.000 - .000	746.000 - 757.000/.000 - .000	776.000 - 787.000/.000 - .000	76.52	1000	403.90	proposed	added	1
KNKA745	New London-Norwich, CT	CL	CMA154	A	CT	9011	Cellco Partnershi	Yes	25.000	824.000 - 835.000/845.000 - 846.500	869.000 - 880.000/890.000 - 891.500	824.000 - 835.000/845.000 - 846.500	869.000 - 880.000/890.000 - 891.500	311.04	400	403.90	proposed	added	1
WQEM954	New London-Norwich, CT	CW	BTA319	C	CT	9011	Cellco Partnershi	Yes	10.000	1895.000 - 1900.000/.000 - .000	1975.000 - 1980.000/.000 - .000	1895.000 - 1900.000/.000 - .000	1975.000 - 1980.000/.000 - .000	182.25	1640	403.90	proposed	added	1
WQDU931	New London-Norwich, CT	CW	BTA319	C	CT	9011	Cellco Partnershi	Yes	10.000	1900.000 - 1905.000/.000 - .000	1980.000 - 1985.000/.000 - .000	1900.000 - 1905.000/.000 - .000	1980.000 - 1985.000/.000 - .000	182.25	1640	403.90	proposed	added	1
KNLH263	New London-Norwich, CT	CW	BTA319	F	CT	9011	Cellco Partnershi	Yes	10.000	1890.000 - 1895.000/.000 - .000	1970.000 - 1975.000/.000 - .000	1890.000 - 1895.000/.000 - .000	1970.000 - 1975.000/.000 - .000	182.25	1640	403.90	proposed	added	1
WQGD494	New London-Norwich, CT	AW	CMA154	A	CT	9011	Cellco Partnershi	Yes	20.000	1710.000 - 1720.000/.000 - .000	2110.000 - 2120.000/.000 - .000	1710.000 - 1720.000/.000 - .000	2110.000 - 2120.000/.000 - .000	154.07	1640	403.90	proposed	added	1
WRNE581	New York, NY	PM	PEA001	A1	CT	9011	Cellco Partnershi	Yes	20.000	3700.000 - 3720.000/.000 - .000	.000 - .000/.000 - .000	3700.000 - 3720.000/.000 - .000	.000 - .000/.000 - .000	1183.88	1640	403.90	proposed	added	1
WRNE582	New York, NY	PM	PEA001	A2	CT	9011	Cellco Partnershi	Yes	20.000	3720.000 - 3740.000/.000 - .000	.000 - .000/.000 - .000	3720.000 - 3740.000/.000 - .000	.000 - .000/.000 - .000	1183.88	1640	403.90	proposed	added	1
WRNE583	New York, NY	PM	PEA001	A3	CT	9011	Cellco Partnershi	Yes	20.000	3740.000 - 3760.000/.000 - .000	.000 - .000/.000 - .000	3740.000 - 3760.000/.000 - .000	.000 - .000/.000 - .000	1183.88	1640	403.90	proposed	added	1
WRNE584	New York, NY	PM	PEA001	A4	CT	9011	Cellco Partnershi	Yes	20.000	3760.000 - 3780.000/.000 - .000	.000 - .000/.000 - .000	3760.000 - 3780.000/.000 - .000	.000 - .000/.000 - .000	1183.88	1640	403.90	proposed	added	0
WRNE585	New York, NY	PM	PEA001	A5	CT	9011	Cellco Partnershi	Yes	20.000	3780.000 - 3800.000/.000 - .000	.000 - .000/.000 - .000	3780.000 - 3800.000/.000 - .000	.000 - .000/.000 - .000	1183.88	1640	403.90	proposed	added	0
WQGA906	New York-No. New Jer.-Long Island, NY-NJ-CT-PA-MA-	AW	BEA010	B	CT	9011	Cellco Partnershi	Yes	20.000	1720.000 - 1730.000/.000 - .000	2120.000 - 2130.000/.000 - .000	1720.000 - 1730.000/.000 - .000	2120.000 - 2130.000/.000 - .000	154.07	1640	403.90	proposed	added	1

Alpha
(Proposed)

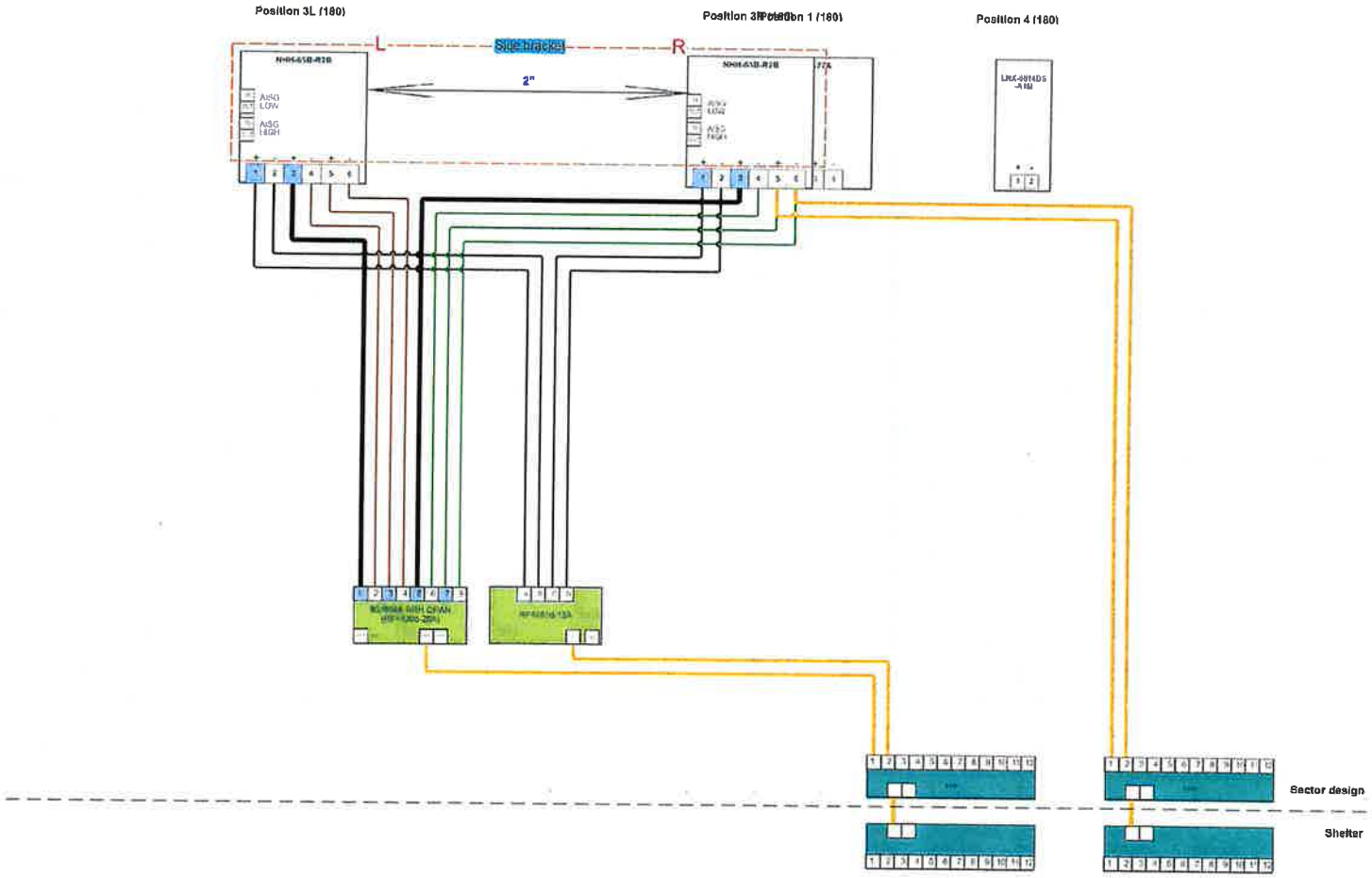

Legends

RET dc signal capable port

700/850(LB)
700(LT)
850(CB)
AWS(AW)
PCS(PC)
AWS/PCS(HB)
28GHz(U28)
39GHz(U39)
L-Sub6(S6)
CBRS(RS)
LAA(LA)
Fiber
AISG
DC

Coax
Coax Jumper
Sectors Shared Equipments

Notes:

-Antenna view is from the back of the antennas
-Colors of connections are just for clarification
-Size of objects in drawing doesn't reflect equipment true dimensions

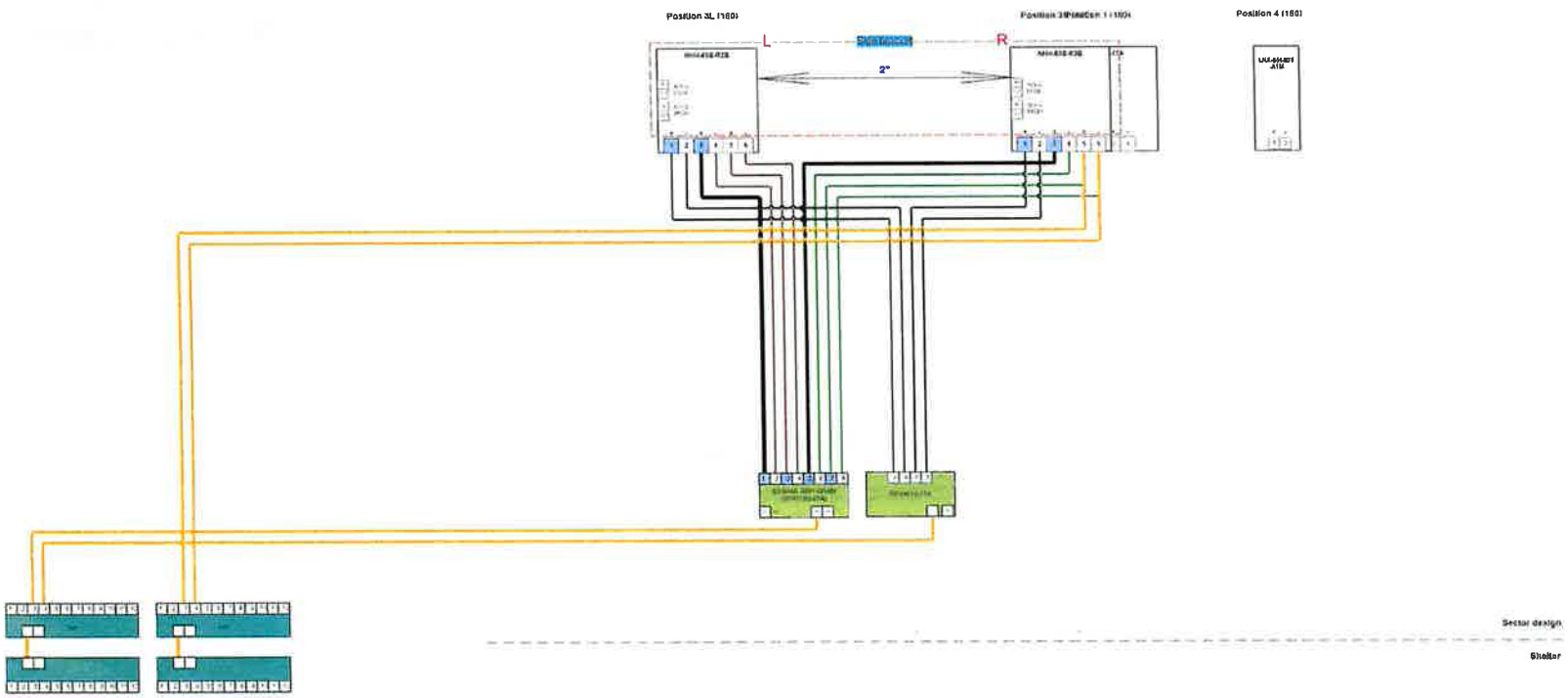

Beta
(Proposed)

Legends

RET dc signal capable port

700/850(LB)
700(LT)
850(CB)
AWS(AW)
PCS(PC)
AWS/PCS(HB)
28GHz(U28)
39GHz(U39)
L-Sub6(S6)
CBRS(RS)
LAA(LA)
Fiber
AISG
DC

Coax
Coax Jumper
Sectors Shared Equipments

Notes:

-Antenna view is from the back of the antennas
-Colors of connections are just for clarification
-Size of objects in drawing doesn't reflect equipment true dimensions

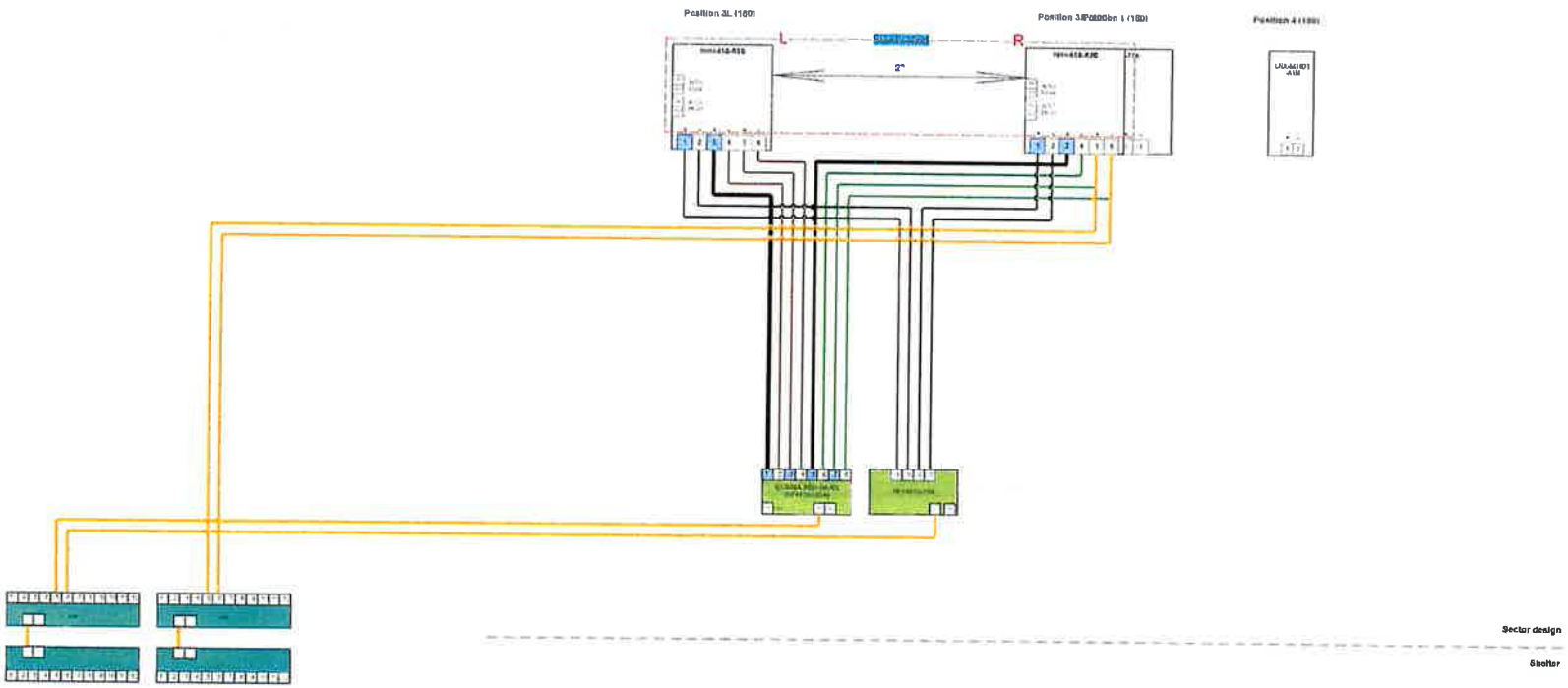

Gamma
(Proposed)

Legends

RET dc signal capable port

700/850(LB)
700(LT)
850(CB)
AWS(AW)
PCS(PC)
AWS/PCS(HB)
28GHz(U28)
39GHz(U39)
L-Sub6(S6)
CBRS(RS)
LAA(LA)
Fiber
AISG
DC

Coax
Coax Jumper
Sectors Shared Equipments

Notes:

-Antenna view is from the back of the antennas
-Colors of connections are just for clarification
-Size of objects in drawing doesn't reflect equipment true dimensions

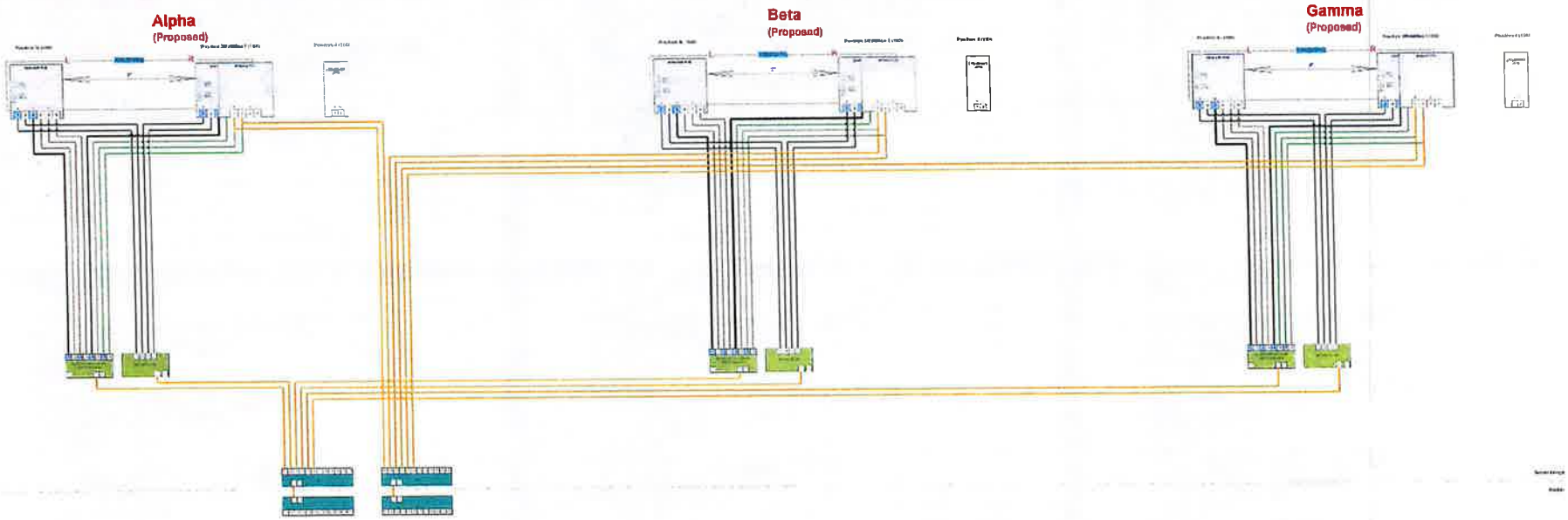
Alpha
(Proposed)
Beta
(Proposed)
Gamma
(Proposed)

Band	Sector 1 (Alpha) Color Codes							
850 CDMA	R							
	R	R						
700	R	P						
	R	R	P					
	R	R	R	P				
	R	R	R	R	P			
850 LTE	R	P	P					
	R	R	P	P				
	R	R	R	P	P			
	R	R	R	R	P	P		
700 / 850	R	P	P	P				
	R	R	P	P	P			
	R	R	R	P	P	P		
	R	R	R	R	P	P	P	
AWS	R	W						
	R	R	W					
	R	R	R	W				
	R	R	R	R	W			
PCS	R	W	W					
	R	R	W	W				
	R	R	R	W	W			
	R	R	R	R	W	W		
AWS / PCS	R	W	W	W				
	R	R	W	W	W			
	R	R	R	W	W	W		
	R	R	R	R	W	W	W	
CBRS	R	Y						
	R	R	Y					
	R	R	R	Y				
	R	R	R	R	Y			
LAA	R	Y	Y					
	R	R	Y	Y				

Sector 2 (Beta) Color Codes							
B							
B	B						
B	P						
B	B	P					
B	B	B	P				
B	B	B	B	P			
B	P	P					
B	B	P	P				
B	B	B	P	P			
B	B	B	B	P	P		
B	P	P	P				
B	B	P	P	P			
B	B	B	P	P	P		
B	B	B	B	P	P	P	
B	W						
B	B	W					
B	B	B	W				
B	B	B	B	W			
B	W	W					
B	B	W	W				
B	B	B	W	W			
B	B	B	B	W	W		
B	W	W	W				
B	B	W	W	W			
B	B	B	W	W	W		
B	B	B	B	W	W	W	
B	Y						
B	B	Y					
B	B	B	Y				
B	B	B	B	Y			
B	Y	Y					
B	B	Y	Y				

Sector 3 (Gamma) Color Codes							
G							
G	G						
G	P						
G	G	P					
G	G	G	P				
G	G	G	G	P			
G	P	P					
G	G	P	P				
G	G	G	P	P			
G	G	G	G	P	P		
G	P	P	P				
G	G	P	P	P			
G	G	G	P	P	P		
G	G	G	G	P	P	P	
G	W						
G	G	W					
G	G	G	W				
G	G	G	G	W			
G	W	W					
G	G	W	W				
G	G	G	W	W			
G	G	G	G	W	W		
G	W	W	W				
G	G	W	W	W			
G	G	G	W	W	W		
G	G	G	G	W	W	W	
G	Y						
G	G	Y					
G	G	G	Y				
G	G	G	G	Y			
G	Y	Y					
G	G	Y	Y				

	Sector 4 (Delta) Color Codes							
850 CDMA	Gray	R						
	Gray	R	R					
700	Gray	R	P					
	Gray	R	R	P				
	Gray	R	R	R	P			
	Gray	R	R	R	R	P		
850 LTE	Gray	R	P	P				
	Gray	R	R	P	P			
	Gray	R	R	R	P	P		
	Gray	R	R	R	R	P	P	
700 / 850	Gray	R	P	P	P			
	Gray	R	R	P	P	P		
	Gray	R	R	R	P	P	P	
	Gray	R	R	R	R	P	P	P
AWS	Gray	R	W					
	Gray	R	R	W				
	Gray	R	R	R	W			
	Gray	R	R	R	R	W		
PCS	Gray	R	W	W				
	Gray	R	R	W	W			
	Gray	R	R	R	W	W		
	Gray	R	R	R	R	W	W	
AWS / PCS	Gray	R	W	W	W			
	Gray	R	R	W	W	W		
	Gray	R	R	R	W	W	W	
	Gray	R	R	R	R	W	W	W
CBRS	Gray	R	Y					
	Gray	R	R	Y				
	Gray	R	R	R	Y			
	Gray	R	R	R	R	Y		
LAA	Gray	R	Y	Y				
	Gray	R	R	Y	Y			

Sector 5 (Epsilon) Color Codes							
Gray	B						
Gray	B	B					
Gray	B	P					
Gray	B	B	P				
Gray	B	B	B	P			
Gray	B	B	B	B	P		
Gray	B	P	P				
Gray	B	B	P	P			
Gray	B	B	B	P	P		
Gray	B	B	B	B	P	P	
Gray	B	P	P	P			
Gray	B	B	P	P	P		
Gray	B	B	B	P	P	P	
Gray	B	B	B	B	P	P	P
Gray	B	W					
Gray	B	B	W				
Gray	B	B	B	W			
Gray	B	B	B	B	W		
Gray	B	W	W				
Gray	B	B	W	W			
Gray	B	B	B	W	W		
Gray	B	B	B	B	W	W	
Gray	B	W	W	W			
Gray	B	B	W	W	W		
Gray	B	B	B	W	W	W	
Gray	B	B	B	B	W	W	W
Gray	B	Y					
Gray	B	B	Y				
Gray	B	B	B	Y			
Gray	B	B	B	B	Y		
Gray	B	Y	Y				
Gray	B	B	Y	Y			

Sector 6 (Zeta) Color Codes							
Gray	G						
Gray	G	G					
Gray	G	P					
Gray	G	G	P				
Gray	G	G	G	P			
Gray	G	G	G	G	P		
Gray	G	P	P				
Gray	G	G	P	P			
Gray	G	G	G	P	P		
Gray	G	G	G	G	P	P	
Gray	G	P	P	P			
Gray	G	G	P	P	P		
Gray	G	G	G	P	P	P	
Gray	G	G	G	G	P	P	P
Gray	G	W					
Gray	G	G	W				
Gray	G	G	G	W			
Gray	G	G	G	G	W		
Gray	G	W	W				
Gray	G	G	W	W			
Gray	G	G	G	W	W		
Gray	G	G	G	G	W	W	
Gray	G	W	W	W			
Gray	G	G	W	W	W		
Gray	G	G	G	W	W	W	
Gray	G	G	G	G	W	W	W
Gray	G	Y					
Gray	G	G	Y				
Gray	G	G	G	Y			
Gray	G	G	G	G	Y		
Gray	G	Y	Y				
Gray	G	G	Y	Y			

Sector	Antenna Desc	Base Station ID	Sector ID
Alpha	700-850	064090_1_16	064090_1,064090_1_6
Alpha	AWS	064090_1_2	064090_1_2
Alpha	PCS	064090_1_4	064090_1_4
Beta	700-850	064090_2_16	064090_2,064090_2_6
Beta	AWS	064090_2_2	064090_2_2
Beta	PCS	064090_2_4	064090_2_4
Gamma	700-850	064090_3_16	064090_3,064090_3_6
Gamma	AWS	064090_3_2	064090_3_2
Gamma	PCS	064090_3_4	064090_3_4

Colliers Engineering & Design, Architecture, Landscape Architecture, Surveying, CT P.C.
1055 Washington Boulevard
Stamford, CT 06901
203.324.0800
peter.albano@collierseng.com

Post-Modification Antenna Mount Analysis Report and PMI Requirements

Mount Fix

SMART Tool Project #: 10214241
Colliers Engineering & Design Project #: 21777011 (Rev 2)

December 5, 2023

Site Information	*Site ID:*	*5000247301-VZW / Ledyard CT*
	Site Name:	*Ledyard CT*
	Carrier Name:	*Verizon Wireless*
	Address:	*889 Colonel Ledyard Highway* *Ledyard, Connecticut 06339* *New London County*
	Latitude:	*41.461986°*
	Longitude:	*-72.023608°*
Structure Information	*Tower Type:*	*Guyed*
	Mount Type:	*12.25-Ft Sector Frame*

FUZE ID # 16271967

Analysis Results

Sector Frame: **57.9% Pass w/ Modifications***

***Antennas and equipment to be installed in compliance with PMI Requirements of this mount analysis.**

******Contractor PMI Requirements:***
Included at the end of this MA report
Available & Submitted via portal at https://pmi.vzwsmart.com
For additional questions and support, please reach out to:
pmisupport@colliersengineering.com

Report Prepared By: Gianna Argentina

STATE OF CONNECTICUT
DEJIAN XU
No. 33733
LICENSED
PROFESSIONAL ENGINEER
12/06/2023

Executive Summary:

The objective of this report is to summarize the analysis results of the antenna support mount including the proposed modifications at the subject facility for the final wireless telecommunications configuration, per the applicable codes and standards.

This analysis is inclusive of the mount structure only and does not address the structural capacity of the supporting structure. This mounting frame was not analyzed as an anchor attachment point for fall protection. All climbing activities are required to have a fall protection plan completed by a competent person.

Sources of Information:

Document Type	Remarks
Radio Frequency Data Sheet (RFDS)	*Verizon RFDS, Site ID: 324217, dated November 14, 2023*
Mount Mapping Report	*Hudson Design Group LLC, Site ID: 468694, dated February 9, 2021*
Preliminary Construction Drawings	*Centek Engineering, Inc., Job #: 21007.56, dated September 7, 2023*
Previous Mount Analysis	*Colliers Engineering & Design CT, P.C., Project #: 21777011 (Rev 1), dated September 27, 2023*
Mount Modification Drawing	*Colliers Engineering & Design, Project #: 21777011 (Rev 1), dated December 5, 2023*

Analysis Criteria:

Codes and Standards:	ANSI/TIA-222-H 2022 Connecticut State Building Code (CSBC), Effective October 1, 2022	
Wind Parameters:	Basic Wind Speed (Ultimate 3-sec. Gust), V_{ULT}:	130 mph
	Ice Wind Speed (3-sec. Gust):	50 mph
	Design Ice Thickness:	1.00 in
	Risk Category:	II
	Exposure Category:	C
	Topographic Category:	1
	Topographic Feature Considered:	N/A
	Topographic Method:	N/A
	Ground Elevation Factor, K_e:	0.989
Seismic Parameters:	S_S:	0.190 g
	S_1:	0.053 g
Maintenance Parameters:	Wind Speed (3-sec. Gust):	30 mph
	Maintenance Load, Lv:	250 lbs.
	Maintenance Load, Lm:	500 lbs.
Analysis Software:	RISA-3D (V17)	

Final Loading Configuration:

The following equipment has been considered for the analysis of the mounts:

Mount Elevation (ft)	Equipment Elevation (ft)	Quantity	Manufacturer	Model	Status
166.50	167.00	6	Commscope	NHH-65B-R2B	Added
		3	Samsung	MT6413-77A	
		3	Samsung	RF4439d-25A	
		3	Samsung	RF4461d-13A	
		3	Andrew	LNX-6514DS-A1M	Retained
		2	Raycap	RRFDC-3315-PF-48	

The recent mount mapping reported existing OVP units. It is acceptable to install up to any three (3) of the OVP model numbers listed below as required at any location other than the mount face without affecting the structural capacity of the mount. If OVP units are installed on the mount face, a mount re-analysis may be required unless replacing an existing OVP.

Model Number	Ports	AKA
DB-B1-6C-12AB-0Z	6	OVP-6
RVZDC-6627-PF-48	12	OVP-12

Standard Conditions:

1. All engineering services are performed on the basis that the information provided to Colliers Engineering & Design and used in this analysis is current and correct. The existing equipment loading has been applied at locations determined from the supplied documentation. Any deviation from the loading locations specified in this report shall be communicated to Colliers Engineering & Design to verify deviation will not adversely impact the analysis.

2. Mounts are assumed to have been properly fabricated, installed and maintained in good condition, twist free and plumb in accordance with its original design and manufacturer's specifications.

   Obvious safety and structural issues/deficiencies noticed at the time of the mount mapping and reported in the Mount Mapping Report are assumed to be corrected and documented as part of the PMI process and are not considered in the mount analysis.

   The mount analysis and the mount mapping are not a condition assessment of the mount. Proper maintenance and condition assessments are still required post analysis.

3. For mount analyses completed from other data sources (including new replacement mounts) and not specifically mapped in accordance with the NSTD-446 Standard, the mounts are assumed to have been properly fabricated, installed and maintained in good condition, twist free and plumb in accordance with its original design and manufacturer's specifications.

4. All member connections are assumed to have been designed to meet or exceed the load carrying capacity of the connected member unless otherwise specified in this report.

5. The mount was checked up to, and including, the bolts that fasten it to the mount collar/attachment and threaded rod connections in collar members if applicable. Local deformation and interaction between the mount collar/attachment and the supporting tower structure are outside the scope of this analysis.

6. All services are performed, results obtained, and recommendations made in accordance with generally accepted engineering principles and practices. Colliers Engineering & Design is not responsible for the conclusion, opinions, and recommendations made by others based on the information supplied.

7. Structural Steel Grades have been assumed as follows, if applicable, unless otherwise noted in this analysis:
   - Channel, Solid Round, Angle, Plate — ASTM A36 (Gr. 36)
   - HSS (Rectangular) — ASTM 500 (Gr. B-46)
   - Pipe — ASTM A53 (Gr. B-35)
   - Threaded Rod — F1554 (Gr. 36)
   - Bolts — ASTM A325

8. Any mount modifications listed under Sources of Information are assumed to have been installed per the design specifications.

Discrepancies between in-field conditions and the assumptions listed above may render this analysis invalid unless explicitly approved by Colliers Engineering & Design.

Analysis Results:

Component	Utilization %	Pass/Fail
Face Horizontal	56.1 %	Pass
Face Vertical	39.9 %	Pass
Top Standoff	57.9 %	Pass
Standoff Vertical	24.2 %	Pass
Mast Pipe	30.4 %	Pass
Connection Plate	21.9 %	Pass
Tube Standoff	9.3 %	Pass
Mount Pipe	31.2 %	Pass
Tieback	3.8 %	Pass
Secondary Horizontal	43.3 %	Pass
V-Brace	28.5 %	Pass
Mount Connection	12.9 %	Pass

Structure Rating – *(Controlling Utilization of all Components)*	**57.9%**

Mount Connection Envelope Reactions:

Connection Description	Elev. AGL (Ft)	Node Label	Envelope Wind Reactions				Envelope Wind + Ice Reactions			
			Axial (Lbs)	Lateral (Lbs)	Moment (K-Ft)	Torsion (K-Ft)	Axial (Lbs)	Lateral (Lbs)	Moment (K-Ft)	Torsion (K-Ft)
Sector B Top Standoff	168	N31	134	1567	0.103	0.000	214	777	0.084	0.000
Sector B Bottom Standoff	165	N32	143	511	0.105	0.000	159	267	0.069	0.000
Sector B Bottom Reinforcement	163.5	N71	2684	2061	0.005	0.004	1367	955	0.003	0.002
Sector B Top Reinforcement	171	N74	2864	1333	0.003	0.000	1766	668	0.001	0.000

Notes:
- Axial loads act along the axis of the tower leg
- Lateral reactions act perpendicular to the tower leg
- Moment loads introduce bending moment to the tower leg
- Torsion loads introduce twisting moment to the tower leg
- Batch solutions by individual load cases are included at the end of this document

Mount Steel (EPA)a per ANSI/TIA-222-H Section 2.6.11.2:

Ice Thickness (In)	Mount Pipes Excluded		Mount Pipes Included	
	Front (EPA)a (Sq. Ft.)	Side (EPA)a (Sq. Ft.)	Front (EPA)a (Sq. Ft.)	Side (EPA)a (Sq. Ft.)
0	41.9	15.2	48.7	22.0
0.5	53.5	20.4	63.2	30.2
1	63.8	24.5	76.4	37.1

Notes:
- (EPA)a values listed above may be used in the absence of more precise information
- (EPA)a values in the table above include 1 sector(s).
- Ka factors included in (EPA)a calculations

Requirements:

The existing mounts will be **SUFFICIENT** for the final loading configuration (attachment 2) after the modifications detailed in attachment 3 are successfully completed.

ANSI/ASSP rigging plan review services compliant with the requirements of ANSI/TIA 322 are available for a Construction Class IV site or other, if required. Separate review fees will apply.

Attachments:

1. **Contractor Required PMI Report Deliverables**
2. Antenna Placement Diagrams
3. Mount Modification Drawings
4. Mount Photos
5. Mount Mapping Report (for reference only)
6. Analysis Calculations

Mount Desktop – Post Modification Inspection (PMI) Report Requirements

Documents & Photos Required from Contractor – Mount Modification

Electronic pdf version of this can be downloaded at https://pmi.vzwsmart.com
For additional questions and support, please reach out to pmisupport@colliersengineering.com

---

MDG #: 5000247301 SMART Project #: 10211110 Fuze Project ID: 16271967

Purpose – to upload the proper documentation to the SMART Tool in order to allow the SMART Tool engineering vendor to complete the required Mount Desktop review of the Post Modification Inspection Report.

- Contractor is responsible for making certain the photos provided as noted below provide confirmation that the modification was completed in accordance with the modification drawings.
- Contractor shall relay any data that can impact the performance of the mount or the mount modification, this includes safety issues.

Base Requirements:

- If installation of the modification will cause damage to the structure, the climbing facility, or safety climb if present or any installed system, SMART Tool vendor to be notified prior to install. Any special photos outside of the standard requirements will be indicated on the drawings.
- Provide "as built drawings" showing contractor's name, preparer's signature, and date. Any deviations from the drawings (proposed modification) shall be shown. NOTE: If loading is different than what is conveyed in the post-modification passing mount analysis (MA) contact the SMART Tool vendor immediately.
- Each photo shall be time and date stamped.
- Photos should be high resolution.
- Contractor shall ensure that the safety climb wire rope is not adversely impacted by the install of the modification components. This may involve the install of wire rope guides, or other items to protect the wire rope. If there is conflict, contact the SMART Tool engineer for recommendations.
- The PMI can be accessed at the following portal: **https://pmi.vzwsmart.com**

Photo Requirements:

- *Photos taken at ground level*
  - Photo of Gate Signs showing the tower owner, site name, and number.
  - Overall tower structure after installation of the modifications.
  - Photos of the mount after installation of the modifications; if the mounts are at different rad elevations, pictures must be provided for all elevations that the modifications were installed

- *Photos taken at Mount Elevation*
  - Photos showing the safety climb wire rope above and below the mount prior to modification.
  - Photos showing the climbing facility and safety climb if present.

- Photos showing each individual sector after installation of modifications. Each entire sector must be in one photo to show the interconnection of members.
    - These photos shall also certify that the placement and geometry of the equipment on the mount is as depicted in the antenna placement diagram in this form.
- Photos that show the model number of each antenna and piece of equipment installed per sector.
- Photos of each installed modification per the modification drawings; pictures shall also include connection hardware (U-bolts, bolts, nuts, all-threaded rods, etc.)
- Photos showing the distances (relative distance between collars) of the installed modifications from the appropriate reference locations shown in the modification drawings.
- Photos showing the installed modifications onto the tower (i.e. ring/collar mounts, tie-backs, V-bracing kits, etc.); if the existing mount elevation needs to be changed according to the modification drawings, an elevation measurement shall be provided before the elevation change.

Material Certification:

- Materials utilized must be as per specification on the drawings or the equivalent as validated by the SMART Tool vendor.
    - If the materials are as specified on the drawings
        - The contractor shall provide the packing list, or the materials certifications for the materials utilized to perform the mount modification
        - Commscope, Metrosite, Perfect Vision, Sabre, and Site Pro have all agreed to support Verizon vendors with the necessary material certifications
    - If seeking permission to use an equivalent
        - It is required that the SMART Tool engineering vendor approval of such is included in the contractor submission package. There may be an additional charge for approval if the equivalent submission doesn't meet specifications as prescribed in the drawings.

☐ All hardware has been properly installed, and the existing hardware was inspected.

☐ The material utilized was as specified on the SMART Tool engineering vendor Mount Modification Drawings and included in the material certification folder is a packing list or invoice for these materials.

OR

☐ The material utilized was approved by a SMART Tool engineering vendor as an "equivalent" and this approval is included as part of the contractor submission.

Antenna & Equipment Placement and Geometry Confirmation:

☐ The contractor certifies that the photos support and the equipment on the mount is as depicted on the sketch and table included in this form and with the mount analysis provided.

OR

☐ The contractor notes that the equipment on the mount is not in accordance with the sketch and has noted the differences below and provided photo documentation of any alterations.

Comments:

Was the mount modification completed in conjunction with the equipment change / installation?

☐ Yes ☐ No

Special Instructions / Validation as required from the MA or Mod Drawings:

Issue:

Response:

Special Instruction Confirmation:

☐ The contractor has read and acknowledges the above special instructions.

Comments:

Contractor certifies that the climbing facility / safety climb was not damaged prior to starting work:

☐ Yes ☐ No

Contractor certifies no new damage created during the current installation:

☐ Yes ☐ No

Contractor to certify the condition of the safety climb and verify no damage when leaving the site:

☐ Safety Climb in Good Condition ☐ Safety Climb Damaged

Comments:

Certifying Individual:

Company:	
Employee Name:	
Contact Phone:	
Email:	
Date:	

Structure: 5000247301-VZW - Ledyard CT

Sector: **A**

Structure Type: Guyed

Mount Elev: 166.50

10214241

11/30/2023

Colliers Engineering & Design

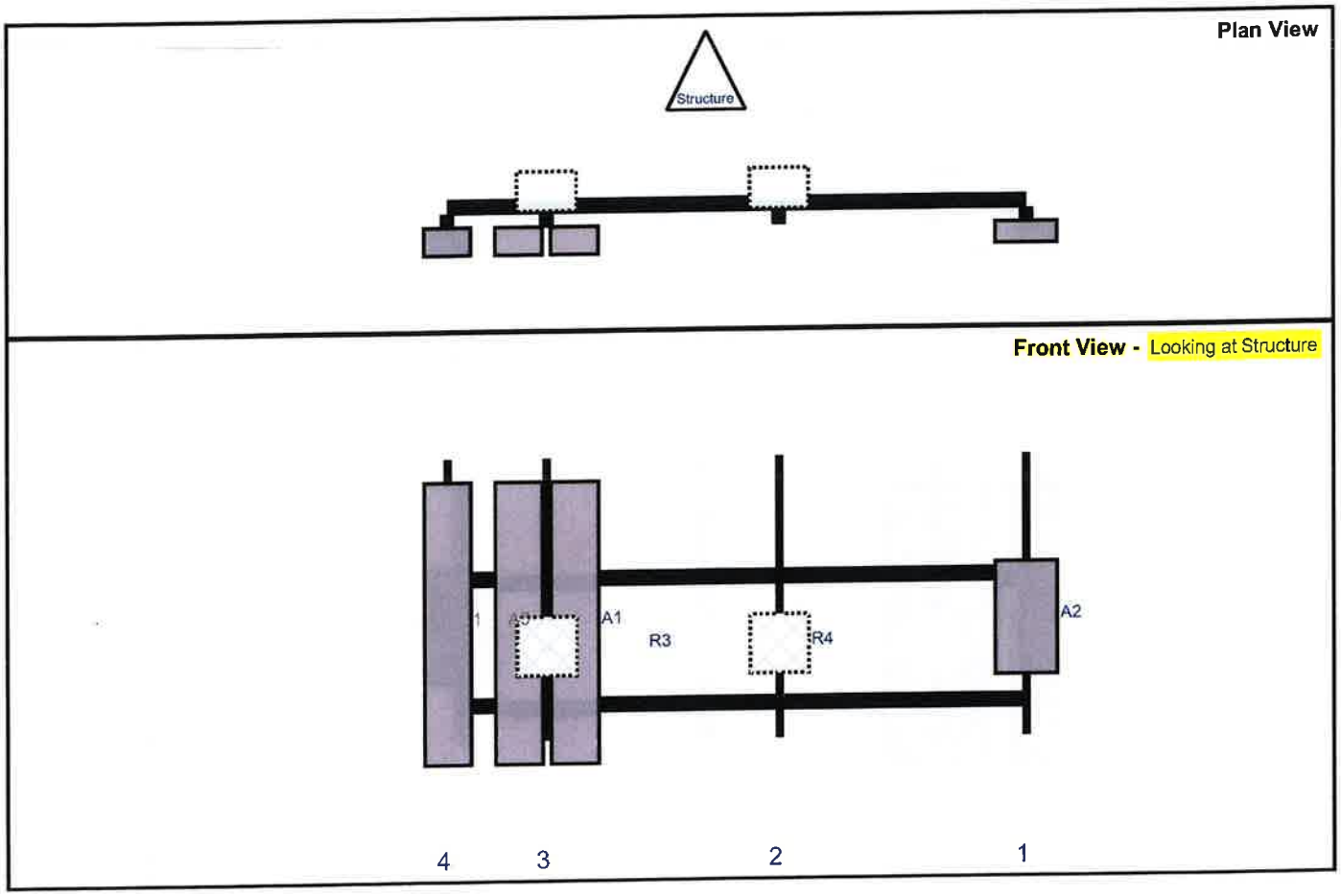

Ref#	Model	Height (in)	Width (in)	H Dist Frm L.	Pipe #	Pipe Pos V	Ant Pos	C. Ant Frm T.	Ant H Off	Status	Validation
A2	MT6413-77A	28.9	15.8	147	1	a	Front	42	0	Added	
R4	RF4461d-13A	15	15	84	2	a	Behind	48	0	Added	
A1	NHH-65B-R2B	72	11.9	25	3	a	Front	42	7	Added	
A1	NHH-65B-R2B	72	11.9	25	3	b	Front	42	-7	Added	
R3	RF4439d-25A	15	15	25	3	a	Behind	48	0	Added	
A5	LNX-6514DS-A1M	72	11.9		4	a	Front	42	0	Retained	02/09/2021
M21A	RRFDC-3315-PF-48	29.5	16.5		Member					Retained	02/09/2021

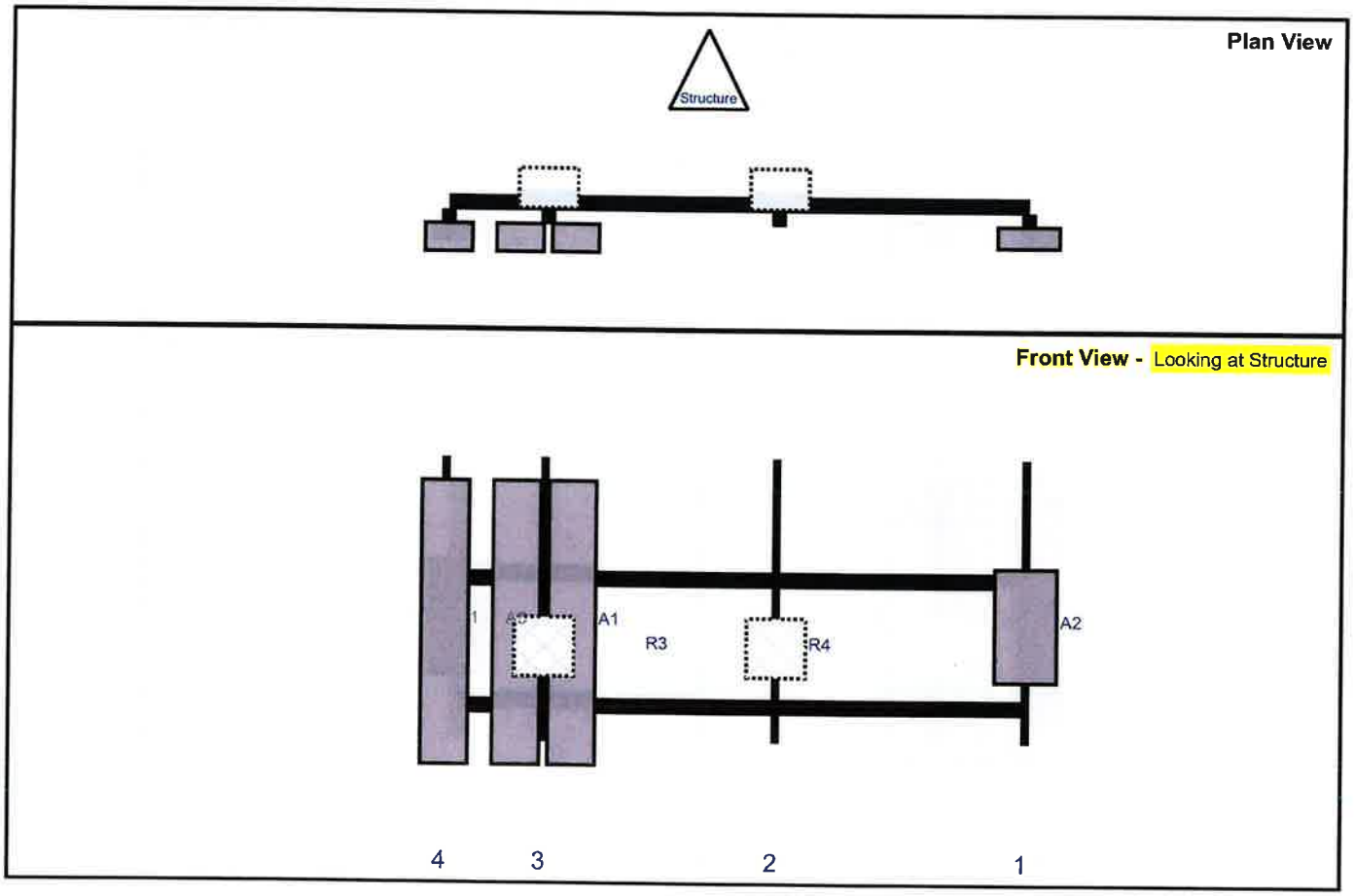

Ref#	Model	Height (in)	Width (in)	H Dist Frm L.	Pipe #	Pipe Pos V	Ant Pos	C. Ant Frm T.	Ant H Off	Status	Validation
A2	MT6413-77A	28.9	15.8	147	1	a	Front	42	0	Added	
R4	RF4461d-13A	15	15	84	2	a	Behind	48	0	Added	
A1	NHH-65B-R2B	72	11.9	25	3	a	Front	42	7	Added	
A1	NHH-65B-R2B	72	11.9	25	3	b	Front	42	-7	Added	
R3	RF4439d-25A	15	15	25	3	a	Behind	48	0	Added	
A5	LNX-6514DS-A1M	72	11.9		4	a	Front	42	0	Retained	02/09/2021

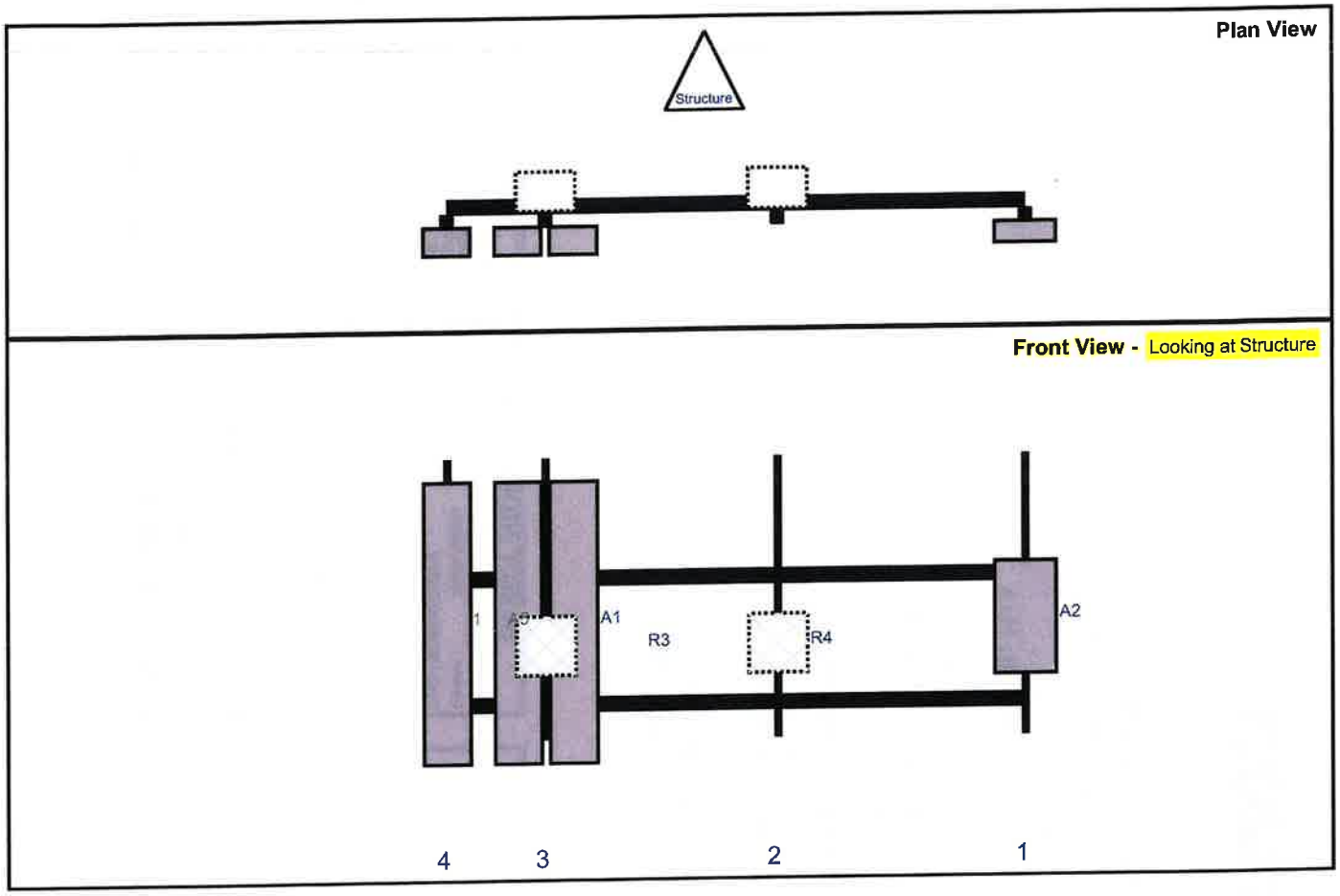

Ref#	Model	Height (in)	Width (in)	H Dist Frm L.	Pipe #	Pipe Pos V	Ant Pos	C. Ant Frm T.	Ant H Off	Status	Validation
A2	MT6413-77A	28.9	15.8	147	1	a	Front	42	0	Added	
R4	RF4461d-13A	15	15	84	2	a	Behind	48	0	Added	
A1	NHH-65B-R2B	72	11.9	25	3	a	Front	42	7	Added	
A1	NHH-65B-R2B	72	11.9	25	3	b	Front	42	-7	Added	
R3	RF4439d-25A	15	15	25	3	a	Behind	48	0	Added	
A5	LNX-6514DS-A1M	72	11.9		4	a	Front	42	0	Retained	02/09/2021

verizon

MOUNT MODIFICATION DRAWINGS
EXISTING 12.50' SECTOR FRAME

TOWER OWNER: N/A
TOWER OWNER SITE NUMBER: N/A

CARRIER SITE NAME: LEDYARD CT
CARRIER SITE NUMBER: 5000247301
FUZE ID: 16271967

889A COLONEL LEDYARD HWY
LEDYARD, CT 06339
NEW LONDON COUNTY

LATITUDE: 41.46198600° N
LONGITUDE: 72.02360800° W

DESIGN CRITERIA

WIND LOADS

BASIC WIND SPEED (3 SECOND GUST), V = 130 MPH
EXPOSURE CATEGORY C
TOPOGRAPHIC CATEGORY: 1
TOPOGRAPHY CONSIDERED: N/A
TOPOGRAPHIC METHOD: N/A
MEAN BASE ELEVATION (AMSL) = 309'

ICE LOADS

ICE WIND SPEED (3 SECOND GUST), V = 50 MPH
ICE THICKNESS = 1.00 IN

SEISMIC LOADS

SEISMIC DESIGN CATEGORY B
SHORT TERM MCER GROUND MOTION, S_S = .191
LONG TERM MCER GROUND MOTION, S_1 = .053

PROJECT INFORMATION

APPLICANT/LESSEE

COMPANY: VERIZON WIRELESS

CLIENT REPRESENTATIVE

COMPANY: VERIZON WIRELESS

PROJECT MANAGER

COMPANY: COLLIERS ENGINEERING & DESIGN
CONTACT: PETER ALBANO
PHONE: 856.797.0412
E-MAIL: PETER.ALBANO@COLLIERSENG.COM

CONTRACTOR PMI REQUIREMENTS

PMI LOCATION: HTTPS://PMI.VZWSMART.COM
SMART TOOL PROJECT #: 10214241
VZW MDG #: 5000247301
ANALYSIS DATE: 12/05/2023

PMI REQUIREMENTS EMBEDDED WITHIN MOUNT MODIFICATION REPORT

SHEET INDEX

SHEET	DESCRIPTION
ST-1	TITLE SHEET
SBOM-1	BILL OF MATERIALS
SGN-1	GENERAL NOTES
SCF-1	CLIMBING FACILITY DETAIL
SS-1	MODIFICATION DETAILS
SS-2	MOUNT PHOTOS
	SPECIFICATION SHEETS

Colliers Engineering & Design
www.colliersengineering.com

verizon

811 Know what's below. Call before you dig.

AS SHOWN

SITE NAME:
LEDYARD CT
5000247301
889A COLONEL LEDYARD HWY
LEDYARD, CT 06339
NEW LONDON COUNTY

Colliers Engineering & Design
Stamford, CT 06901
Phone: 203.324.0800

TITLE SHEET

ST-1

NOTE: DO NOT SCALE DRAWINGS FOR CONSTRUCTION

BILL OF MATERIALS

SECTION 1 - VZWSMART KITS

QUANTITY	MANUFACTURER	PART NUMBER	DESCRIPTION	NOTES	UNIT WEIGHT (LBS.)	WEIGHT (LBS.)
15	VZWSMART	VZWSMART-MSK1	CROSSOVER PLATE		14	210
6		VZWSMART-SFK3	V-BRACING KIT	CONTRACTOR TO VERIFY THE LENGTH REQUIRED AND TRIM AS NECESSARY IN ACCORDANCE WITH THE 'STRUCTURAL STEEL' NOTES ON SHEET SGN-1.	122	732
6		VZWSMART-AL333	CLIP ANGLE		3	18

SECTION 2 - OTHER REQUIRED PARTS

QUANTITY	MANUFACTURER	PART NUMBER	DESCRIPTION	NOTES	UNIT WEIGHT (LBS.)	WEIGHT (LBS.)
3	-	-	162" LONG, PIPE 2.5 SCH40	GALVANIZED	78	234

SECTION 3 - REQUIRED SAFETY CLIMB PARTS

QUANTITY	MANUFACTURER	PART NUMBER	DESCRIPTION	NOTES	UNIT WEIGHT (LBS.)	WEIGHT (LBS.)
					TOTAL:	1194

NOTES:

1. THE MANUFACTURERS LISTED ARE THE APPROVED VENDORS FOR THE VZW MOUNT KITS. EACH MANUFACTURER WILL BE AWARE OF WHICH KITS HAVE BEEN THROUGH THE VZW APPROVAL PROCESS AND THEY ARE IN TURN APPROVED TO SELL. PLEASE NOTE THAT THE MATERIAL UTILIZED ON THE MOUNT MODIFICATIONS WILL BE REVIEWED AS A PART OF THE DESKTOP PMI COMPLETED BY THE SMART TOOL VENDOR. IT WILL BE REQUIRED THAT THE VZW KITS SPECIFIED ARE UTILIZED IN THE MODIFICATIONS.
2. ALL MATERIALS REQUIRED FOR THE DESIGNED MODIFICATIONS BUT NOT LISTED IN THIS SHEET ARE ASSUMED TO BE PROVIDED BY THE CONTRACTOR.

VZWSMART KITS - APPROVED VENDORS

COMMSCOPE	
CONTACT	SALVADOR ANGUIANO
PHONE	(817) 304-7492
EMAIL	SALVADOR.ANGUIANO@COMMSCOPE.COM
WEBSITE	WWW.COMMSCOPE.COM

METROSITE FABRICATORS, LLC	
CONTACT	KENT RAMEY
PHONE	(706) 335-7045 (O), (706) 982-9788 (M)
EMAIL	KENT@METROSITELLC.COM
WEBSITE	METROSITEFABRICATORS.COM

PERFECTVISION	
CONTACT	WIRELESS SALES
PHONE	(844) 887-6721
EMAIL	WWW.PERFECT-VISION.COM
WEBSITE	WIRELESSSALES@PERFECT-VISION.COM

SABRE INDUSTRIES, INC.	
CONTACT	ANGIE WELCH
PHONE	(866) 428-6937
EMAIL	AKWELCH@SABREINDUSTRIES.COM
WEBSITE	WWW.SABREITESOLUTIONS.COM

SITE PRO 1	
CONTACT	PAULA BOSWELL
PHONE	(972) 236-9843
EMAIL	PAULA.BOSWELL@VALMONT.COM
WEBSITE	WWW.SITEPRO1.COM

NEWAVE	
CONTACT	NEWAVE SALES TEAM
PHONE	(971) 239-4762
EMAIL	SALES@NEWAVETC.COM
WEBSITE	WWW.NEWAVETC.COM

BETTER METAL, LLC	
CONTACT	DAVID STANSBERRY
PHONE	(615) 535-0990 (O), (615) 631-2520 (M)
EMAIL	DLS@BETTERMETAL.COM
WEBSITE	WWW.BETTERMETAL.COM

Colliers Engineering & Design

www.colliersengineering.com

verizon

811 Know what's below. Call before you dig.

PROTECT YOURSELF
AS STATED IN SAFE INTERPRETATION OF ENGINEERING DESIGNS, CA AND TRENCH PREPARED TO ASSUME THE SAFETY, SURFACE MAINTENANCE ETC.

FOR STATE SPECIFIC DIGSAFE PHONE NUMBERS VISIT WWW.CALL811.COM

SCALE:	DATE:
AS SHOWN	2/27/2021

REV.	DATE	DESCRIPTION	DRAWN BY	CHECKED BY
1	12/06/2021	PROPERTY CONFIRMATION	GA	DH
0	9/14/2021	ISSUED FOR CONSTRUCTION	GA	DH

COLLIERS ENGINEERING & DESIGN CT, P.C.
CT PC.0000731

IT IS A VIOLATION OF LAW FOR ANY PERSON, UNLESS THEY ARE ACTING UNDER THE DIRECTION OF THE RESPONSIBLE LICENSED PROFESSIONAL ENGINEER, TO ALTER THIS DOCUMENT.

SITE NAME:

LEDYARD CT
5000247301

889A COLONEL LEDYARD HWY
LEDYARD, CT 06339
NEW LONDON COUNTY

Colliers Engineering & Design

STAMFORD
Stamford, CT 06901
Phone: 203 324 0820
COLLIERS ENGINEERING & DESIGN CT, P.C.
LICENSED ARCHITECT AND PROFESSIONAL ENGINEERING

SHEET TITLE
BILL OF MATERIALS

SHEET NUMBER
SBOM-1

GENERAL NOTES

1. THESE MODIFICATIONS HAVE BEEN DESIGNED IN ACCORDANCE WITH THE GOVERNING PROVISIONS OF THE TELECOMMUNICATIONS INDUSTRY STANDARD TIA-222-H. MATERIALS AND SERVICES PROVIDED BY THE CONTRACTOR SHALL CONFORM TO THE ABOVE MENTIONED CODES.
2. CONTRACTOR SHALL TAKE ALL PRECAUTIONS NECESSARY TO PREVENT DAMAGE TO EXISTING STRUCTURES. ANY DAMAGE TO EXISTING STRUCTURES AS A RESULT OF THE CONTRACTOR'S WORK OR FROM DAMAGE DUE TO OTHER CAUSES SHALL BE REPAIRED AT THE CONTRACTOR'S EXPENSE TO THE SATISFACTION OF THE OWNER.
3. CONTRACTOR SHALL VERIFY ALL DIMENSIONS AND EXISTING CONDITIONS BEFORE BEGINNING WORK, ORDERING MATERIAL, AND PREPARING OF SHOP DRAWINGS. ANY DISCREPANCIES BETWEEN FIELD CONDITIONS AND THE CONTRACT DOCUMENTS SHALL BE BROUGHT TO THE IMMEDIATE ATTENTION OF THE ENGINEER. IF THE CONTRACTOR DISCOVERS ANY EXISTING CONDITIONS THAT ARE NOT REPRESENTED ON THESE DRAWINGS, OR ANY CONDITIONS THAT WOULD INTERFERE WITH THE INSTALLATION OF THE MODIFICATIONS, NOTIFY THE ENGINEER IMMEDIATELY.
4. IT IS ASSUMED THAT ANY STRUCTURAL MODIFICATION WORK SPECIFIED ON THESE PLANS WILL BE ACCOMPLISHED BY KNOWLEDGEABLE WORKMEN WITH TOWER CONSTRUCTION EXPERIENCE.
5. THE CONTRACTOR SHALL SUPERVISE AND DIRECT THE WORK AND SHALL BE SOLELY RESPONSIBLE FOR ALL CONSTRUCTION METHODS, MEANS, TECHNIQUES, SEQUENCES, AND PROCEDURES.
6. ALL CONSTRUCTION MEANS AND METHODS; INCLUDING BUT NOT LIMITED TO, ERECTION PLANS, RIGGING PLANS, CLIMBING PLANS, AND RESCUE PLANS SHALL BE THE RESPONSIBILITY OF THE GENERAL CONTRACTOR RESPONSIBLE FOR THE EXECUTION OF THE WORK CONTAINED HEREIN AND SHALL MEET ANSI/TIA-322 (LATEST EDITION), OSHA, AND GENERAL INDUSTRY STANDARDS. ALL RIGGING PLANS SHALL ADHERE TO ANSI/TIA-322 (LATEST EDITION) INCLUDING THE REQUIRED INVOLVEMENT OF A QUALIFIED ENGINEER FOR CLASS IV CONSTRUCTION.
7. THE CONTRACTOR IS SOLELY RESPONSIBLE FOR INITIATING, MAINTAINING, AND SUPERVISING ALL SAFETY PROGRAMS IN ACCORDANCE WITH APPLICABLE SAFETY CODES.
8. WORK SHALL ONLY BE PERFORMED DURING CALM DRY DAYS (WINDS LESS THAN 30-MPH). THE STRUCTURE SHOWN ON THE DRAWINGS IS STRUCTURALLY SOUND ONLY IN THE COMPLETED FORM. THE CONTRACTOR SHALL BE RESPONSIBLE FOR THE STRENGTH AND STABILITY OF THE STRUCTURE DURING ERECTION. CONTRACTOR SHALL PROVIDE TEMPORARY SUPPORT, SHORING, BRACING AND ANY OTHER STRUCTURAL SYSTEMS AS REQUIRED TO RESIST ALL FORCES THAT MAY OCCUR DURING HANDLING AND ERECTION UNTIL THE STRUCTURE IS FULLY COMPLETED. TEMPORARY SUPPORTS, BRACING AND OTHER STRUCTURAL SYSTEMS REQUIRED DURING CONSTRUCTION SHALL REMAIN THE CONTRACTOR'S PROPERTY AFTER THEIR USE.
9. ALL INSTALLATIONS PERFORMED ON THIS STRUCTURE SHALL BE COMPLETED IN ACCORDANCE WITH THE GOVERNING PROVISIONS OF THE STANDARD FOR INSTALLATION, ALTERATION AND MAINTENANCE OF ANTENNA SUPPORTING STRUCTURES AND ANTENNAS, ANSI/TIA-322.
10. CONTRACTOR SHALL SECURE SITE BACK TO EXISTING CONDITION UNDER SUPERVISION OF OWNER. ALL FENCE, STONE, GEOFABRIC, GROUNDING, AND SURROUNDING GRADE SHALL BE REPLACED AND REPAIRED AS REQUIRED TO ACHIEVE OWNER APPROVAL. POSITIVE DRAINAGE AWAY FROM TOWER SITE SHALL BE MAINTAINED.
11. CONNECTIONS BETWEEN ITEMS SUPPORTED BY THE STRUCTURE AND THE STRUCTURE NOT SPECIFICALLY DETAILED IN THE CONTRACT DOCUMENTS ARE THE RESPONSIBILITY OF THE CONTRACTOR. SUCH CONNECTIONS SHALL BE DESIGNED, COORDINATED AND INSPECTED BY A PROFESSIONAL STRUCTURAL ENGINEER LICENSED IN THE STATE OF THE PROJECT. SUBMIT SIGNED AND SEALED CALCULATIONS DURING SHOP DRAWING REVIEW.
12. DO NOT SCALE DRAWINGS.
13. DO NOT USE THESE DRAWINGS FOR ANY OTHER SITE.
14. ALL MATERIAL UTILIZED FOR THIS PROJECT MUST BE NEW AND FREE OF ANY DEFECTS. ANY MATERIAL SUBSTITUTIONS, INCLUDING BUT NOT LIMITED TO ALTERED SIZE AND/OR STRENGTHS, MUST BE APPROVED BY THE OWNER AND ENGINEER IN WRITING.
15. THE MOUNT UNDER NO CIRCUMSTANCES SHOULD BE USED AS A TIE OFF POINT.

STRUCTURAL STEEL

1. DESIGN, DETAILING, FABRICATION AND ERECTION OF STRUCTURAL STEEL SHALL CONFORM TO THE FOLLOWING PUBLICATIONS EXCEPT AS SPECIFICALLY INDICATED IN THE CONTRACT DOCUMENTS.
   a. AMERICAN INSTITUTE OF STEEL CONSTRUCTION (AISC) MANUAL OF STEEL CONSTRUCTION (15TH EDITION)
   b. SPECIFICATION FOR STRUCTURAL JOINTS USING ASTM A325 OR A490 BOLTS
   c. AISC CODE OF STANDARD PRACTICE
2. STRUCTURAL STEEL SHALL CONFORM TO THE FOLLOWING UNLESS OTHERWISE SHOWN:

CHANNELS, ANGLES, PLATES, ETC.	ASTM A36 (GR 36)
STEEL PIPE	ASTM A53 (GR 35)
BOLTS	ASTM A325
NUTS	ASTM A563
LOCK WASHERS	LOCKING STRUCTURAL GRADE

3. ALL SUBSTITUTIONS PROPOSED BY THE CONTRACTOR SHALL BE APPROVED IN WRITING BY THE ENGINEER. CONTRACTOR SHALL PROVIDE DOCUMENTATION TO ENGINEER FOR VERIFYING THE SUBSTITUTE IS SUITABLE FOR USE AND MEETS ORIGINAL DESIGN CRITERIA. DIFFERENCES FROM THE ORIGINAL DESIGN, INCLUDING MAINTENANCE, REPAIR AND REPLACEMENT, SHALL BE NOTED. ESTIMATES OF COSTS/CREDITS ASSOCIATED WITH THE SUBSTITUTION (INCLUDING RE-DESIGN COSTS AND COSTS TO SUB-CONTRACTORS) SHALL BE PROVIDED TO THE ENGINEER. CONTRACTOR SHALL PROVIDE ADDITIONAL DOCUMENTATION AND/OR SPECIFICATIONS TO THE ENGINEER AS REQUESTED.
4. PROVIDE STRUCTURAL STEEL SHOP DRAWINGS TO ENGINEER FOR APPROVAL PRIOR TO FABRICATION.
   a. SUBMIT SHOP DRAWINGS TO

      PETER.ALBANO@COLLIERSENG.COM

   b. PROVIDE COLLIERS ENGINEERING & DESIGN PROJECT # AND COLLIERS ENGINEERING & DESIGN PROJECT ENGINEER CONTACT IN THE BODY OF THE EMAIL.
5. DRILL NO HOLES IN ANY NEW OR EXISTING STRUCTURAL STEEL MEMBERS OTHER THAN THOSE SHOWN ON STRUCTURAL DRAWINGS WITHOUT THE APPROVAL OF THE ENGINEER OF RECORD.
6. GALVANIZED ASTM A325 BOLTS SHALL NOT BE REUSED.
7. ALL NEW STEEL SHALL BE HOT BE DIPPED GALVANIZED FOR FULL WEATHER PROTECTION. IN ADDITION ALL NEW STEEL SHALL BE PAINTED TO MATCH EXISTING STEEL. CONTRACTOR SHALL OBTAIN WRITTEN PERMISSION TO PROTECT STEEL BY ANY OTHER MEANS.
8. ALL BOLT ASSEMBLIES FOR STRUCTURAL MEMBERS REPRESENTED IN THIS DRAWING REQUIRE LOCKING DEVICES TO BE INSTALLED IN ACCORDANCE WITH TIA-222-H SECTION 4.9.2 REQUIREMENTS.
9. WHERE CONNECTIONS ARE NOT FULLY DETAILED ON THESE DRAWINGS, FABRICATOR SHALL DESIGN CONNECTIONS TO RESIST LOADS AND FORCES WHERE SHOWN ON DRAWINGS AND AS OUTLINED IN SPECIFICATIONS.
10. FOR MEMBERS BEING REPLACED, PROVIDE NEW BOLTS AND MATCH EXISTING SIZE AND GRADE. MAINTAIN AISC REQUIREMENTS FOR MINIMUM BOLT DISTANCE AND SPACING.
11. ALL PROPOSED AND/OR REPLACED BOLTS SHALL BE OF SUFFICIENT LENGTH SUCH THAT THE END OF THE BOLT IS AT LEAST FLUSH WITH THE FACE OF THE NUT. IT IS NOT PERMITTED FOR THE BOLT END TO BE BELOW THE FACE OF THE NUT AFTER TIGHTENING IS COMPLETED.
12. GALVANIZED ASTM A325 BOLTS SHALL NOT BE REUSED.
13. ALL NEW STEEL SHALL BE HOT BE DIPPED GALVANIZED FOR FULL WEATHER PROTECTION. CONTRACTOR SHALL OBTAIN WRITTEN PERMISSION TO PROTECT STEEL BY ANY OTHER MEANS.
14. ALL EXISTING PAINTED/GALVANIZED SURFACES DAMAGED DURING REHAB INCLUDING AREAS UNDER STIFFENER PLATES SHALL BE WIRE BRUSHED CLEAN, REPAIRED BY COLD GALVANIZING (ZINC COTE, OR EOR APPROVED EQUAL), AND REPAINTED TO MATCH THE EXISTING FINISH (IF APPLICABLE).
15. ALL HOLES IN STEEL MEMBERS SHALL BE SIZED 1/16" LARGER THAN THE BOLT DIAMETER. STANDARD HOLES SHALL BE USED UNLESS NOTED OTHERWISE

BOLT SCHEDULE (IN.)

BOLT DIAMETER	STANDARD HOLE	SHORT SLOT	MIN. EDGE DISTANCE	SPACING
1/2	9/16	9/16 x 11/16	7/8	1 1/2
5/8	11/16	11/16 x 7/8	1 1/8	1 7/8
3/4	13/16	13/16 x 1	1 1/4	2 1/4
7/8	15/16	15/16 x 1 1/8	1 1/2	2 5/8
1	1 1/16	1 1/16 x 1 5/16	1 3/4	3

WORKABLE GAGES (IN.)

LEG	GAGE
4	2 1/2
3 1/2	2
3	1 3/4
2 1/2	1 3/8
2	1 1/8

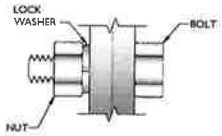

TYP. BOLT ASSEMBLY

NOTES:

1. ALL DIMENSIONS REPRESENTED IN THE ABOVE TABLES ARE AISC MINIMUM REQUIREMENTS. CONTRACTOR SHALL VERIFY EXISTING CONDITIONS IN FIELD AND NOTIFY ENGINEER IF DISTANCES ARE LESS THAN THOSE PROVIDED.
2. THE DIMENSIONS PROVIDED ARE MINIMUM REQUIREMENTS. ACTUAL DIMENSIONS OF PROPOSED MEMBERS WITHIN THESE DRAWINGS MAY VARY FROM THE AISC MINIMUM REQUIREMENTS.
3. SHORT SLOT HOLES SHALL ONLY BE USED WHEN DEPICTED IN THE DRAWINGS
4. MATCH EXISTING GAGES WHEN APPLICABLE, UNLESS MINIMUM EDGE DISTANCES ARE COMPROMISED.

ALLOWABLE COPING

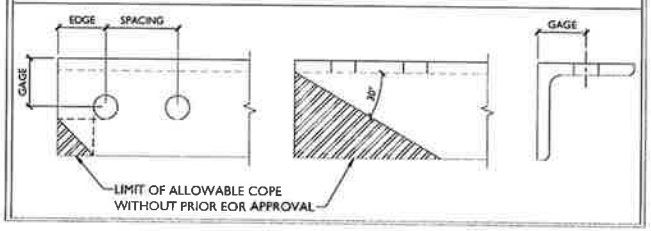

Colliers Engineering & Design

www.colliersengineering.com

verizon

811 Know what's below. Call before you dig.

AS SHOWN

COLLIERS ENGINEERING & DESIGN (E) P.C.
CT PC.0001111

IT IS A VIOLATION OF LAW FOR ANY PERSON, UNLESS THEY ARE ACTING UNDER THE DIRECTION OF THE RESPONSIBLE LICENSED PROFESSIONAL ENGINEER, TO ALTER THIS DOCUMENT.

SITE NAME:

LEDYARD CT
5000247301

889A COLONEL LEDYARD HWY
LEDYARD, CT 06339
NEW LONDON COUNTY

Colliers Engineering & Design

STAMFORD
1055 Washington Blvd Floor 6
Stamford, CT 06901
Phone: 203.324.0800

GENERAL NOTES

SGN-1

NOTE: DO NOT SCALE DRAWINGS FOR CONSTRUCTION.

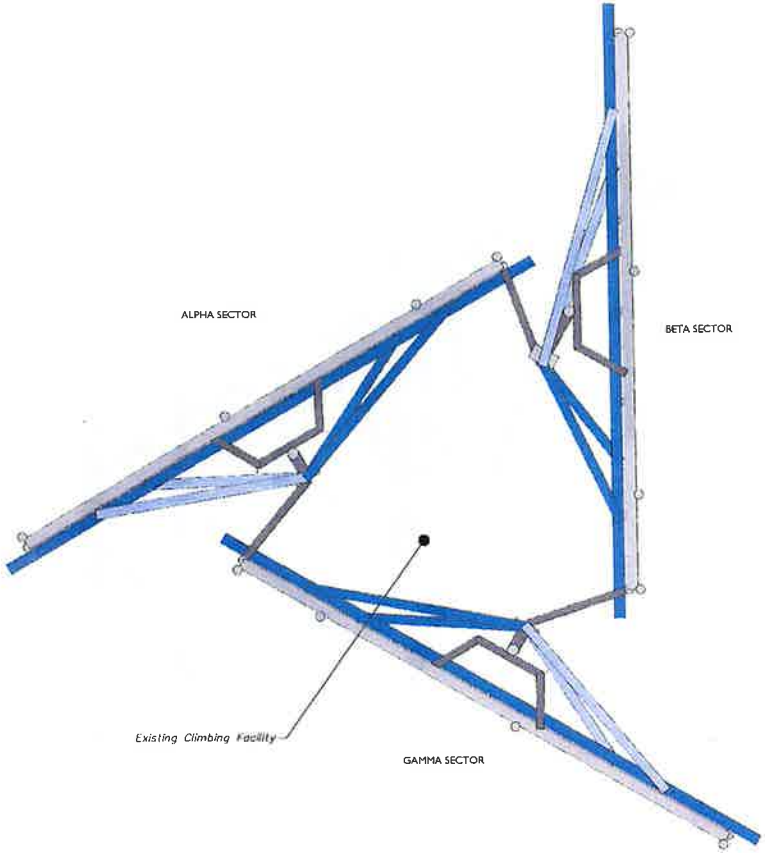

1 CLIMBING FACILITY LOCATION

SCALE : N.T.S.

STRUCTURAL NOTES:

1. PER THE MOUNT MAPPING COMPLETED BY HUDSON DESIGN GROUP LLC ON 2/9/2021, THE SAFETY CLIMB AND CLIMBING FACILITIES UP TO THE VERIZON MOUNT ELEVATION (166'-06") ARE IN GOOD CONDITION. COLLIERS ENGINEERING & DESIGN DOES NOT WARRANT THIS INFORMATION.

2. INSTALL SHALL NOT CAUSE HARM TO THE STRUCTURE, CLIMBING FACILITY, SAFETY CLIMB, OR ANY SYSTEM INSTALLED ON THE STRUCTURE. TIMELY NOTICE AND DOCUMENTATION SHALL BE PROVIDED BY CONTRACTORS TO THE EOR (OF STRUCTURAL DESIGN) IF AN OBSTRUCTION WAS REQUIRED TO MEET THE RF SYSTEM DESIGN REQUIREMENTS AND PERFORMANCES.

CLIMBING FACILITY PHOTO

Colliers Engineering & Design

www.colliersengineering.com

verizon

811 Know what's below. Call before you dig.

PROTECT YOURSELF

ALL STATE REQUIRED NOTIFICATION OF EXCAVATION, DEGRADE, OR AND HANDLING THE DISTURBANCE OF THE EARTH SURFACE, TRANSMITTER, AND OTHER

FOR STATE SPECIFIC DIRECT PHONE NUMBERS VISIT WWW.CALL811.COM

SCALE:	DATE:
AS SHOWN	2/17/2021

REV	DATE	DESCRIPTION	DRAWN BY	CHECKED BY
F	12/06/2021	REVISED FOR CONSTRUCTION	GA	BH
B	8/18/2021	REVISED FOR CONSTRUCTION	EP	BH

COLLIERS ENGINEERING & DESIGN CT, P.C.
CT PC0000111

IT IS A VIOLATION OF LAW FOR ANY PERSON, UNLESS THEY ARE ACTING UNDER THE DIRECTION OF THE RESPONSIBLE LICENSED PROFESSIONAL ENGINEER, TO ALTER THIS DOCUMENT.

SITE NAME:

LEDYARD CT
5000247301

889A COLONEL LEDYARD HWY
LEDYARD, CT 06339
NEW LONDON COUNTY

Colliers Engineering & Design

STAMFORD
1055 Washington Boulevard
Stamford, CT 06901
Phone: 203.324.6800
CONTACT@COLLIERSENGINEERING.COM
CONTACT@PROFESSIONALENGINEERS.COM

SHEET TITLE

CLIMBING FACILITY DETAIL

SHEET NUMBER

SCF-1

LEGEND:

- PROPOSED
- RELOCATED
- EXISTING

MOUNT MODIFICATION SCHEDULE

NO.	ELEVATION	QUANTITY	DESCRIPTION	NOTES
1	166'-06"	6	PROPOSED V-BRACING KIT (PART # VZWSMART-SFK3)	CONTRACTOR SHALL INSTALL ONE PROPOSED CLIP ANGLE (PART #VZWSMART-AL333) AT EITHER END OF EACH LONG ANGLE IN THE SFK3 KIT. CONTRACTOR TO VERIFY THE LENGTH REQUIRED AND TRIM AS NECESSARY IN ACCORDANCE WITH THE 'STRUCTURAL STEEL' NOTES ON SHEET SGN-1. SEE GENERAL NOTE B.
2		3	162" LONG, PIPE 2.5 SCH40	CONNECT NEW HORIZONTAL TO ALL EXISTING VERTICAL MOUNT PIPES WITH CROSSOVER PLATES (PART #: VZWSMART-HSK1). RADIO AND/OR TMB POSITIONS SHALL BE ADJUSTED VERTICALLY AS NEEDED IN ORDER TO ACHIEVE INSTALLATION OF HORIZONTAL AS SHOWN. EOR SHALL BE NOTIFIED IF EQUIPMENT NEEDS TO BE RELOCATED TO ANOTHER MOUNT PIPE

GENERAL NOTES:

A. CONTRACTOR SHALL VERIFY THAT NEW & EXISTING STEEL IS FREE OF CORROSION. VISIBLE MINOR CORROSION SHALL BE WIRE BRUSHED CLEAN AND TREATED WITH COLD GALVANIZATION. REPORT ANY SIGNIFICANT CORROSION TO EOR

B. THREADED ROD FROM PROPOSED KITS SHALL BE TRIMMED TO EXTEND NO MORE THAN 3" BEYOND THE LOCK NUT. TREAT ALL CUT ENDS WITH (2) COATS OF COLD GALVANIZATION (ZINC KOTE, OR EOR APPROVED EQUAL).

C. MOUNT MEMBERS NOT SHOWN FOR CLARITY U.N.O.

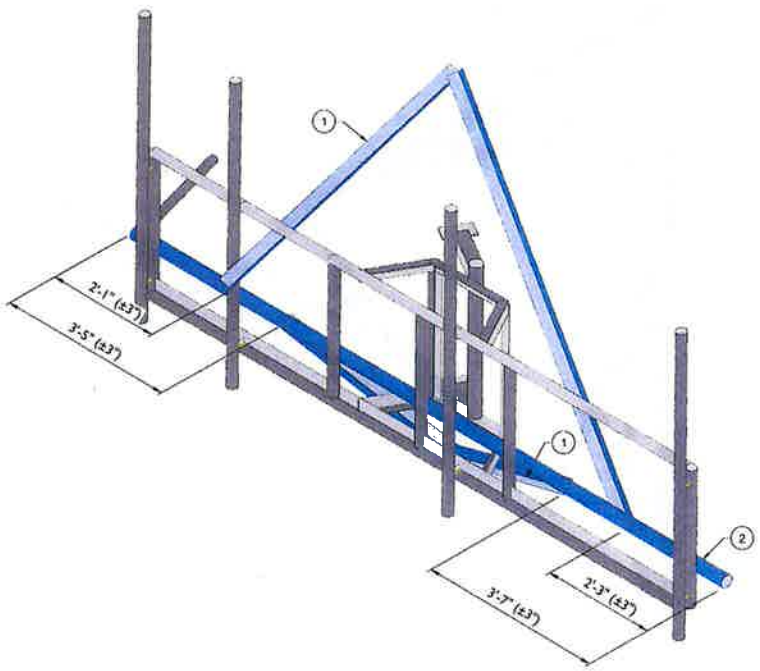

1 PROPOSED ISOMETRIC VIEW (TYP. ALL SECTORS)

SCALE : N.T.S.

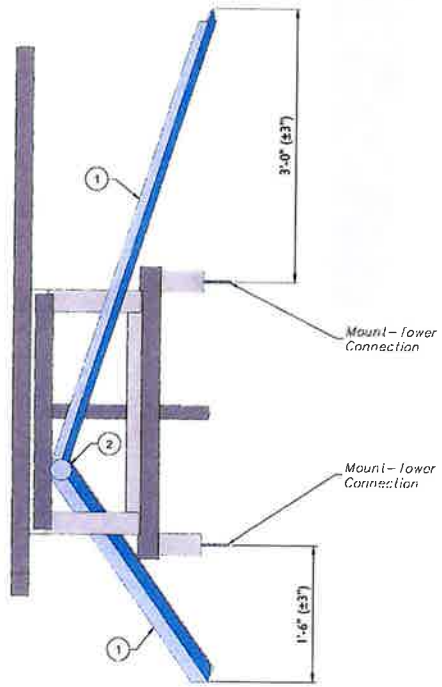

2 PROPOSED SIDE ELEVATION VIEW (TYP. ALL SECTORS)

SCALE : N.T.S.

Colliers Engineering & Design

www.collersengineering.com

verizon

811 Know what's below. Call before you dig.

PROTECT YOURSELF

FOR STATE SPECIFIC DIRECT PHONE NUMBER VISIT WWW.CALL811.COM

REV	DATE	DESCRIPTION	DRAWN BY	CHECKED BY
1	12/06/2023	REVISED FOR CONSTRUCTION	GA	DA
0	8/18/2023	ISSUED FOR CONSTRUCTION	SH	DA

COLLIERS ENGINEERING & DESIGN CT, P.C.
CT PC-0002111

IT IS A VIOLATION OF LAW FOR ANY PERSON, UNLESS THEY ARE ACTING UNDER THE DIRECTION OF THE RESPONSIBLE LICENSED PROFESSIONAL ENGINEER, TO ALTER THIS DOCUMENT.

SITE NAME:

LEDYARD CT
5000247301

889A COLONEL LEDYARD HWY
LEDYARD, CT 06339
NEW LONDON COUNTY

Colliers Engineering & Design

STAMFORD

Stamford, CT 06901
Phone: 203.324.6800
COLLIERSENGINEERING.COM
CORPORATE REGISTRATION #

MODIFICATION DETAILS

SS-1

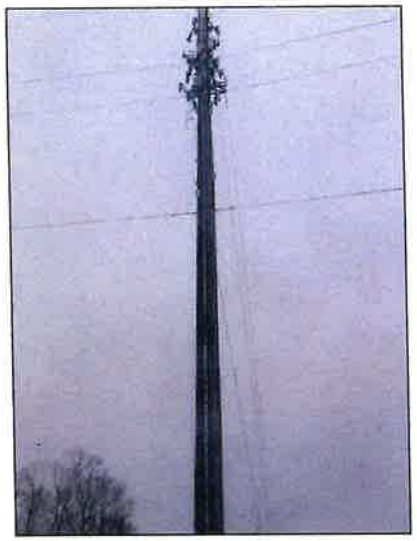

MOUNT PHOTO 1

MOUNT PHOTO 2

MOUNT PHOTO 3

MOUNT PHOTO 4

Colliers Engineering & Design

www.colliersengineering.com

verizon

811 Know what's below. Call before you dig.

PROTECT YOURSELF

ALL STATE & FEDERAL NOTIFICATIONS OF EXCAVATION, DEMOLITION OR ANY PERSON PREPARING TO DIG MUST BE MADE BY NUMBER AND NUMBER PLACARD SHOWN

FOR STATE RECORD CONTACT PHONE NUMBER 8 WEEKS WWW.CBYS.NET

SCALE	DATE
AS SHOWN	23.07.2021

REV	DATE	DESCRIPTION	DRAWN BY	CHECKED BY
1	12/05/2023	ISSUED FOR CONSTRUCTION	SA	EA
0	8/15/2023	ISSUED FOR CONSTRUCTION	SA	EA

COLLIERS ENGINEERING & DESIGN CT, P.C.
CT PC0000351

IT IS A VIOLATION OF LAW FOR ANY PERSON, UNLESS THEY ARE ACTING UNDER THE DIRECTION OF THE RESPONSIBLE LICENSED PROFESSIONAL ENGINEER, TO ALTER THIS DOCUMENT.

SITE NAME:

LEDYARD CT
5000247301

889A COLONEL LEDYARD HWY
LEDYARD, CT 06339
NEW LONDON COUNTY

Colliers Engineering & Design

STAMFORD
1055 Washington Boulevard
Stamford, CT 06901
Phone: 203.324.1670
COLLIERS ENGINEERING & DESIGN CT, P.C.
DOING BUSINESS AS MILLER CONSULTING

SHEET TITLE

MOUNT PHOTOS

SHEET NUMBER

SS-2

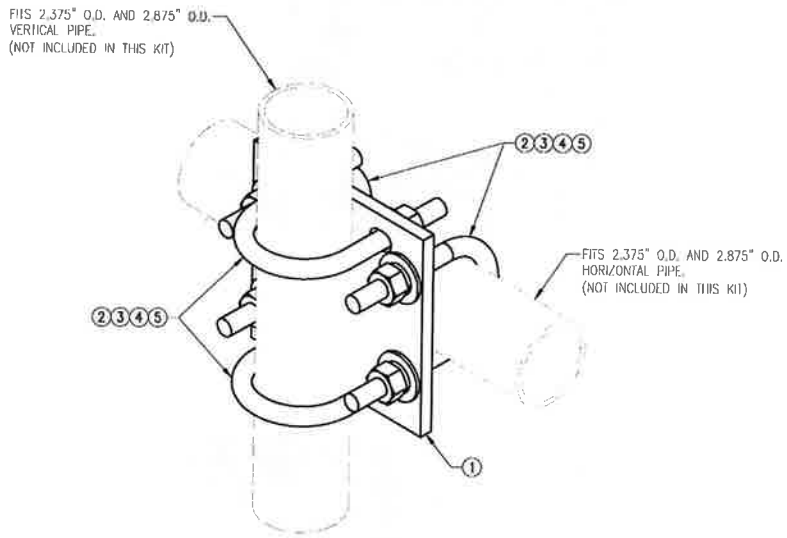

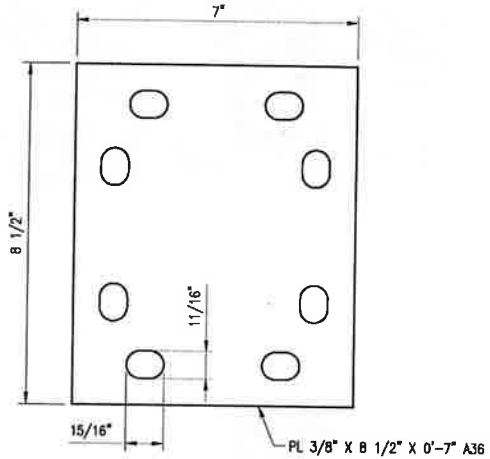

PL375-857

NOTES:
1. HOT-DIPPED GALVANIZED PER ASTM A123.

VZWSMART-MSK1 (CROSSOVER PLATE)

ITEM NO.	QTY.	PART NO.	DESCRIPTION	SHEET #	WT
1	1	PL375-857	PL 3/8" X 8 1/2" X 0'-7" A36	MSK1-F1	6
2	4	MS02-625-300-500	RU-BOLT 5/8" X 3" I.W. X 5" L.L. A36 (OR EQUIV.)	RBC-1	5
3	8	FW-625	5/8" HDG USS FLAT WASHER	---	1
4	8	LW-625	5/8" HDG LOCK WASHER	---	0
5	8	NUT-625	5/8" HDG HEX NUT	---	1
				GALVANIZED WT	14

VzW
SMART Tool©
Vendor

verizon

FOR REFERENCE ONLY

DRAWN BY: HLR | CHECKED BY: HMA

REV	DESCRIPTION	BY	DATE
1	FIRST ISSUE	HLR	05/08/20

SHEET TITLE:
VZWSMART-MSK1
CROSSOVER PLATE

SHEET NUMBER: VZWSMART-MSK1

REV #: 0

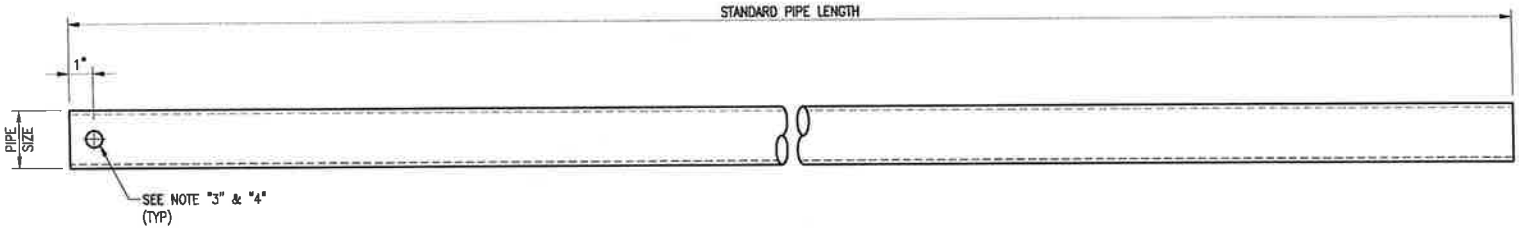

VZWSMART Standard Pipe		
VZWSMART Number	Size	Length
P40-238X048	PIPE 2 SCH40 (2.375" OD x 0.154" THK)	48"
P40-238X072	PIPE 2 SCH40 (2.375" OD x 0.154" THK)	72"
P40-238X096	PIPE 2 SCH40 (2.375" OD x 0.154" THK)	96"
P40-238X120	PIPE 2 SCH40 (2.375" OD x 0.154" THK)	120"
P40-238X126	PIPE 2 SCH40 (2.375" OD x 0.154" THK)	126"
P40-238X150	PIPE 2 SCH40 (2.375" OD x 0.154" THK)	150"
P40-238X174	PIPE 2 SCH40 (2.375" OD x 0.154" THK)	174"
P40-278X048	PIPE 2.5 SCH40 (2.875" OD x 0.203" THK)	48"
P40-278X072	PIPE 2.5 SCH40 (2.875" OD x 0.203" THK)	72"
P40-278X096	PIPE 2.5 SCH40 (2.875" OD x 0.203" THK)	96"
P40-278X120	PIPE 2.5 SCH40 (2.875" OD x 0.203" THK)	120"
P40-278X126	PIPE 2.5 SCH40 (2.875" OD x 0.203" THK)	126"
P40-278X150	PIPE 2.5 SCH40 (2.875" OD x 0.203" THK)	150"
P40-278X174	PIPE 2.5 SCH40 (2.875" OD x 0.203" THK)	174"
P40-312X048	PIPE 3 SCH40 (3.5" OD x 0.216" THK)	48"
P40-312X072	PIPE 3 SCH40 (3.5" OD x 0.216" THK)	72"
P40-312X126	PIPE 3 SCH40 (3.5" OD x 0.216" THK)	126"
P40-312X150	PIPE 3 SCH40 (3.5" OD x 0.216" THK)	150"
P40-312X174	PIPE 3 SCH40 (3.5" OD x 0.216" THK)	174"

NOTE:
APPROVED SMART KIT VENDORS ARE ALLOWED TO SUBSTITUTE AT THEIR DISCRETION PIPES LISTED ON THIS PAGE FOR CUSTOM LENGTH COMPONENTS OF MATCHING SIZE. SUBSTITUTIONS SHALL MEET THE ORIGINAL STRUCTURAL INTENT.

NOTES:
1. ALL PIPE GRADE A53-B OR BETTER.
2. HOT-DIPPED GALVANIZED PER ASTM A123.
3. ALL HOLES ARE 11/16" DIA. U.N.O
4. HOLES MAY OR MAY NOT BE PRESENT, DEPEND UPON MANUFACTURE DISCRETION.
5. ALL FIELD CUT AND DRILLED SURFACES SHALL BE REPAIRED WITH A MINIMUM OF TWO COATS OF ZINGA OR ZINC COTE PER ASTM A780 AND MANUFACTURER'S RECOMMENDATIONS.

VzW SMART Tool© Vendor

verizon

FOR REFERENCE ONLY

DRAWN BY: ET | CHECKED BY: HMA/KW

REV	DESCRIPTION	BY	DATE
1	FIRST ISSUE	BT	06/04/21
2			
3			
4			
5			

SHEET TITLE:
VZWSMART STANDARD PIPE

SHEET NUMBER: VZWSMART-PIPE

REV #: 0

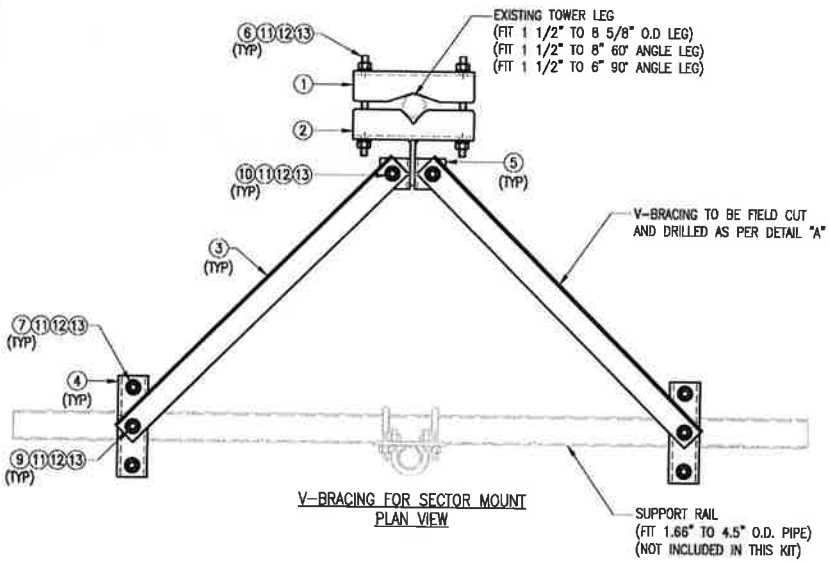

V-BRACING FOR SECTOR MOUNT
PLAN VIEW

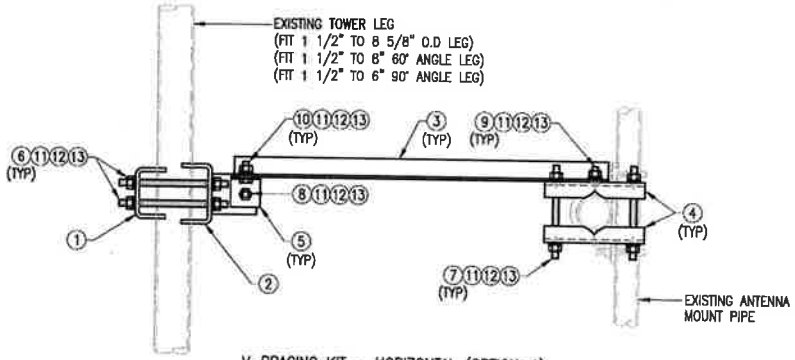

V-BRACING KIT - HORIZONTAL (OPTION-1)
SIDE VIEW

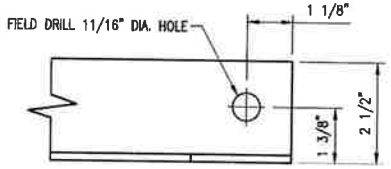

PLAN VIEW

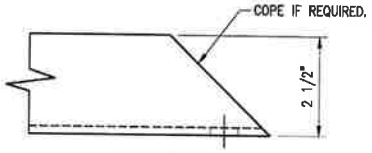

FRONT VIEW
DETAIL "A"

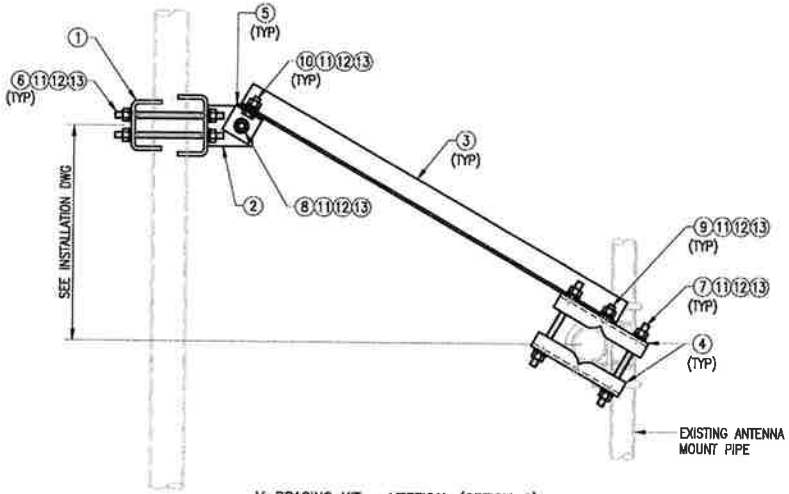

V-BRACING KIT - VERTICAL (OPTION-2)
SIDE VIEW

NOTES:
1. HOT-DIPPED GALVANIZED PER ASTM A123.

VZWSMART-SFK3 (V-BRACING KIT)

ITEM NO.	QTY.	PART NO.	DESCRIPTION	SHEET #	WT
1	1	BP9625-12	PL 3/8" X 9 5/8" X 1'-0" A36 BENT PLATE	VBSM-F1	12
2	1	BRKW-VBSM	WELDMENT BRACKET	VBSM-F3	16
3	2	L252525-8	L 2 1/2" X 2 1/2" X 1/4" X 8'-0" A36	VBSM-F5	67
4	4	BP6875-10	PL 3/8" X 6 7/8" X 10" A36 BENT PLATE	VBSM-F2	20
5	2	AL-333	L 3" X 3" X 1/4" X 3" A36	VBSM-F2	3
6	4	---	THREADED ROD 5/8" DIA. X 1'-6" F1554-36 HDG	---	--
7	4	---	THREADED ROD 5/8" DIA. X 10" F1554-36 HDG	---	--
8	1	---	BOLT 5/8" X 2 1/4" A325	---	--
9	2	---	BOLT 5/8" X 2" A325	---	--
10	2	---	BOLT 5/8" X 1 3/4" A325	---	--
11	21	FW-625	5/8" HDG USS FLAT WASHER	---	2
12	21	LW-625	5/8" HDG LOCK WASHER	---	0
13	21	NUT-625	5/8" HDG HEX NUT	---	2
				GALVANIZED WT	122

VzW
SMART Tool©
Vendor

verizon

FOR REFERENCE ONLY

DRAWN BY: H.R. | CHECKED BY: HMA

REV	DESCRIPTION	BY	DATE
1	FIRST ISSUE	H.R.	05/08/20

SHEET TITLE:
VZWSMART-SFK3
V-BRACING KIT

SHEET NUMBER: VZWSMART-SFK3
REV #: 0

V3.0 Updated on 8-31-2020

Antenna Mount Mapping Form (PATENT PENDING)

FCC #

Tower Owner:	OTHER	Mapping Date:	2/9/2021
Site Name:	Ledyard CT	Tower Type:	Guyed Tower
Site Number or ID:	468694	Tower Height (Ft.):	
Mapping Contractor:	Hudson Design Group LLC	Mount Elevation (Ft.):	168.8

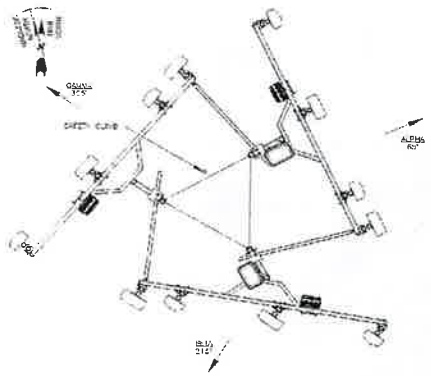

ANTENNA PLAN

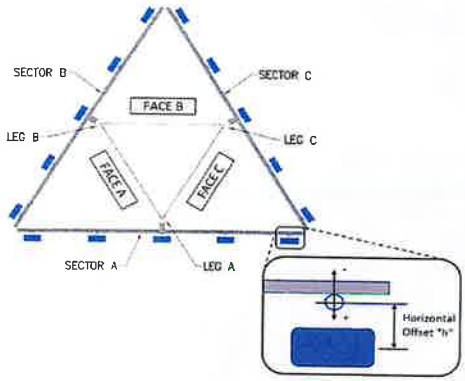

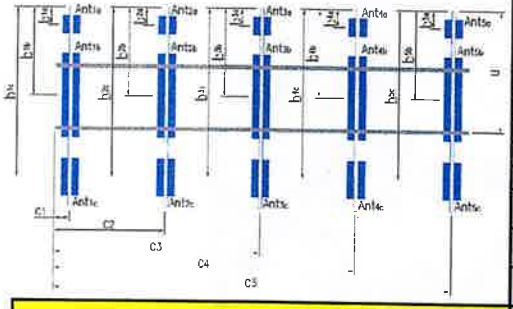

Antenna Layout (Looking Out From Tower)

Mount Pipe Configuration and Geometries [Unit = Inches]

Sector / Position	Mount Pipe Size & Length	Vertical Offset Dimension "u"	Horizontal Offset "C1, C2, C3, etc."	Sector / Position	Mount Pipe Size & Length	Vertical Offset Dimension "u"	Horizontal Offset "C1, C2, C3, etc."
A1	PIPE 2" STD. X 72" LONG	63.00	1.00	C1	PIPE 2" STD. X 72" LONG	63.00	1.00
A2	PIPE 2" STD. X 72" LONG	63.00	63.00	C2	PIPE 2" STD. X 72" LONG	63.00	63.00
A3	PIPE 2" STD. X 72" LONG	63.00	122.00	C3	PIPE 2" STD. X 96" LONG	63.00	122.00
A4	PIPE 2" STD. X 72" LONG	63.00	146.00	C4	PIPE 2" STD. X 72" LONG	63.00	146.00
A5				C5			
A6				C6			
B1	PIPE 2" STD. X 72" LONG	63.00	1.00	D1			
B2	PIPE 2" STD. X 72" LONG	63.00	63.00	D2			
B3	PIPE 2" STD. X 72" LONG	63.00	122.00	D3			
B4	PIPE 2" STD. X 72" LONG	63.00	146.00	D4			
B5				D5			
B6				D6			

Distance between bottom rail and mount CL elevation (dim d). Unit is inches. See 'Mount Elev Ref' tab for details. :	
Distance from top of bottom support rail to lowest tip of ant./eqpt. of Carrier above. (N/A if > 10 ft.) :	8.5
Distance from top of bottom support rail to highest tip of ant./eqpt. of Carrier below. (N/A if > 10 ft.) :	

Please enter additional infomation or comments below.

(1) 1-3/4"Ø STIFF ARM PER SECTOR

Tower Face Width at Mount Elev. (ft.):	5	Tower Leg Size or Pole Shaft Diameter at Mount Elev. (in.):	2.75

	Enter antenna model. If not labeled, enter "Unknown".						Mounting Locations [Units are inches and degrees]			Photos of antennas
Ants. Items	Antenna Models if Known	Width (in.)	Depth (in.)	Height (in.)	Coax Size and Qty	Antenna Center-line (Ft.)	Vertical Distances"b_{1a}, b_{2a}, b_{3a}, b_{3b}...." (Inches)	Horiz. Offset "h" (Use "-" if Ant. is behind)	Antenna Azimuth (Degrees)	Photo Numbers
Sector A										
Ant_{1a}										
Ant_{1b}	HBXX-6512DS-A2M	12.00	6.50	96.00		168.383	68.00	9.00	65.00	68
Ant_{1c}										
Ant_{2a}	B4 RRH2x60-4R	11.00	7.00	37.00		172.217	22.00	-9.00		124
Ant_{2b}	LNX-6514DS-A1M	12.00	7.00	73.00		167.8	75.00	8.00	65.00	67
Ant_{2c}										
Ant_{3a}										
Ant_{3b}	HBXX-6512DS-A2M	12.00	6.50	96.00		168.383	68.00	9.00	65.00	68
Ant_{3c}										
Ant_{4a}										
Ant_{4b}	LNX-6514DS-A1M	12.00	7.00	73.00		167.8	75.00	8.00	65.00	67
Ant_{4c}										
Ant_{5a}										
Ant_{5b}										
Ant_{5c}										
Ant on Standoff	RRFDC-3315-PF-48	15.00	10.00	28.00			51.00	5.00		149
Ant on Standoff										
Ant on Tower										
Ant on Tower										

Mount Azimuth (Degree) for Each Sector			Tower Leg Azimuth (Degree) for Each Sector	
Sector A:	65.00	Deg	Leg A: 30.00	Deg
Sector B:	190.00	Deg	Leg B: 150.00	Deg
Sector C:	305.00	Deg	Leg C: 270.00	Deg
Sector D:		Deg	Leg D:	Deg

Climbing Facility Information		
Location:	330.00 Deg	On Leg A
Climbing Facility	Corrosion Type:	Good condition.
	Access:	Climbing path was unobstructed.
	Condition:	Good condition.

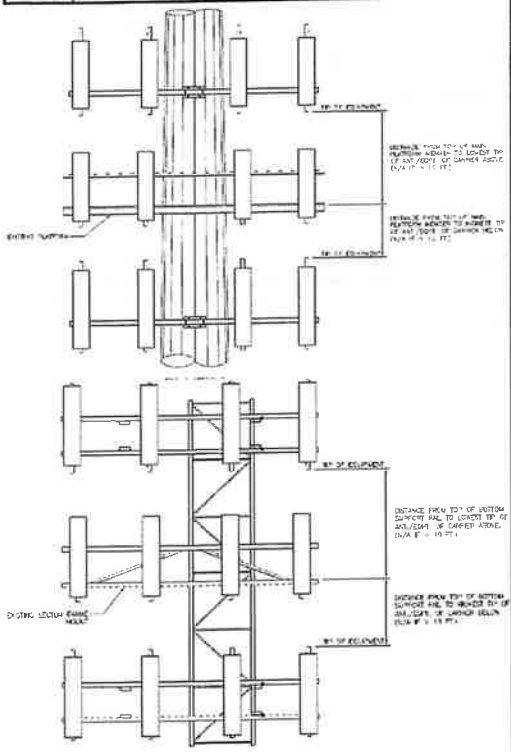

Sector B										
Ant_{1a}										
Ant_{1b}	HBXX-6512DS-A2M	12.00	6.50	96.00		168.383	68.00	9.00	215.00	68
Ant_{1c}										
Ant_{2a}	B4 RRH2x60-4R	11.00	7.00	37.00		172.217	22.00	-9.00		124
Ant_{2b}	LNX-6514DS-A1M	12.00	7.00	73.00		167.8	75.00	8.00	215.00	67
Ant_{2c}										
Ant_{3a}										
Ant_{3b}	HBXX-6512DS-A2M	12.00	6.50	96.00		168.383	68.00	9.00	215.00	68
Ant_{3c}										
Ant_{4a}										
Ant_{4b}	LNX-6514DS-A1M	12.00	7.00	73.00		167.8	75.00	8.00	215.00	67
Ant_{4c}										
Ant_{5a}										
Ant_{5b}										
Ant_{5c}										
Ant on Standoff	RRFDC-3315-PF-48	15.00	10.00	28.00			51.00	5.00		149
Ant on Standoff										
Ant on Tower										
Ant on Tower										
Sector C										
Ant_{1a}										
Ant_{1b}	HBXX-6512DS-A2M	12.00	6.50	96.00		168.383	68.00	9.00	305.00	68
Ant_{1c}										
Ant_{2a}	B4 RRH2x60-4R	11.00	7.00	37.00		172.217	22.00	-9.00		124
Ant_{2b}	LNX-6514DS-A1M	12.00	7.00	73.00		167.8	75.00	8.00	305.00	67
Ant_{2c}										
Ant_{3a}										
Ant_{3b}	ANATEL ANTENNA	12.00	6.50	96.00		168.383	68.00	9.00	305.00	68
Ant_{3c}										
Ant_{4a}										
Ant_{4b}	LNX-6514DS-A1M	12.00	7.00	73.00		167.8	75.00	8.00	305.00	67
Ant_{4c}										
Ant_{5a}										
Ant_{5b}										
Ant_{5c}										
Ant on Standoff										
Ant on Standoff										
Ant on Tower										
Ant on Tower										
Sector D										
Ant_{1a}										
Ant_{1b}										
Ant_{1c}										
Ant_{2a}										
Ant_{2b}										
Ant_{2c}										
Ant_{3a}										
Ant_{3b}										
Ant_{3c}										
Ant_{4a}										
Ant_{4b}										
Ant_{4c}										
Ant_{5a}										
Ant_{5b}										
Ant_{5c}										
Ant on Standoff										
Ant on Standoff										
Ant on Tower										
Ant on Tower										

Observed Safety and Structural Issues During the Mount Mapping

Issue #	Description of Issue	Photo #

1		
2	(2) 1-1/2"Ø HYBRID, (12) 1-5/8"Ø COAX	36-40
3		
4		
5		
6		
7		
8		

Mapping Notes
1. Please report any visible structural or safety issues observed on the antenna mounts (Damaged members, loose connections, tilting mounts, safety climb issues, etc.)
2. If the thickness of the existing pipes or tubing can't be obtained from a general tool (such as Caliper), please use an ultrasonic measurement tool (thickness gauge) to measure the thickness.
3. Please create all required detail sketches of the mounts and insert them into the "Sketches" tab.
4. Please measure and enter the bolt sizes and types under the Members Box in the spreadsheet of the mount type.
5. Take and label the photos of the tower, mounts, connections, antennas and all measurements. Minimum 50 photos are required.
6. Please measure and report the size and length of all existing antenna mounting pipes.
7. Please measure and report the antenna information for all sectors.
8. Don't delete or rearrange any sheet or contents of any sheet from this mapping form.

Standard Conditions
1. Obvious safety and structural issues/deficiencies noticed at the time of the mount mapping are to be reported in this mapping. However, this mount mapping is not a condition assessment of the mount.

V3.0 Updated on 8-31-2020

Antenna Mount Mapping Form (PATENT PENDING)

FCC #

Tower Owner:	OTHER	Mapping Date:	2/9/2021
Site Name:	Ledyard CT	Tower Type:	Guyed Tower
Site Number or ID:	468694	Tower Height (Ft.):	
Mapping Contractor:	Hudson Design Group LLC	Mount Elevation (Ft.):	168.8

Please Insert Sketches of the Antenna Mount

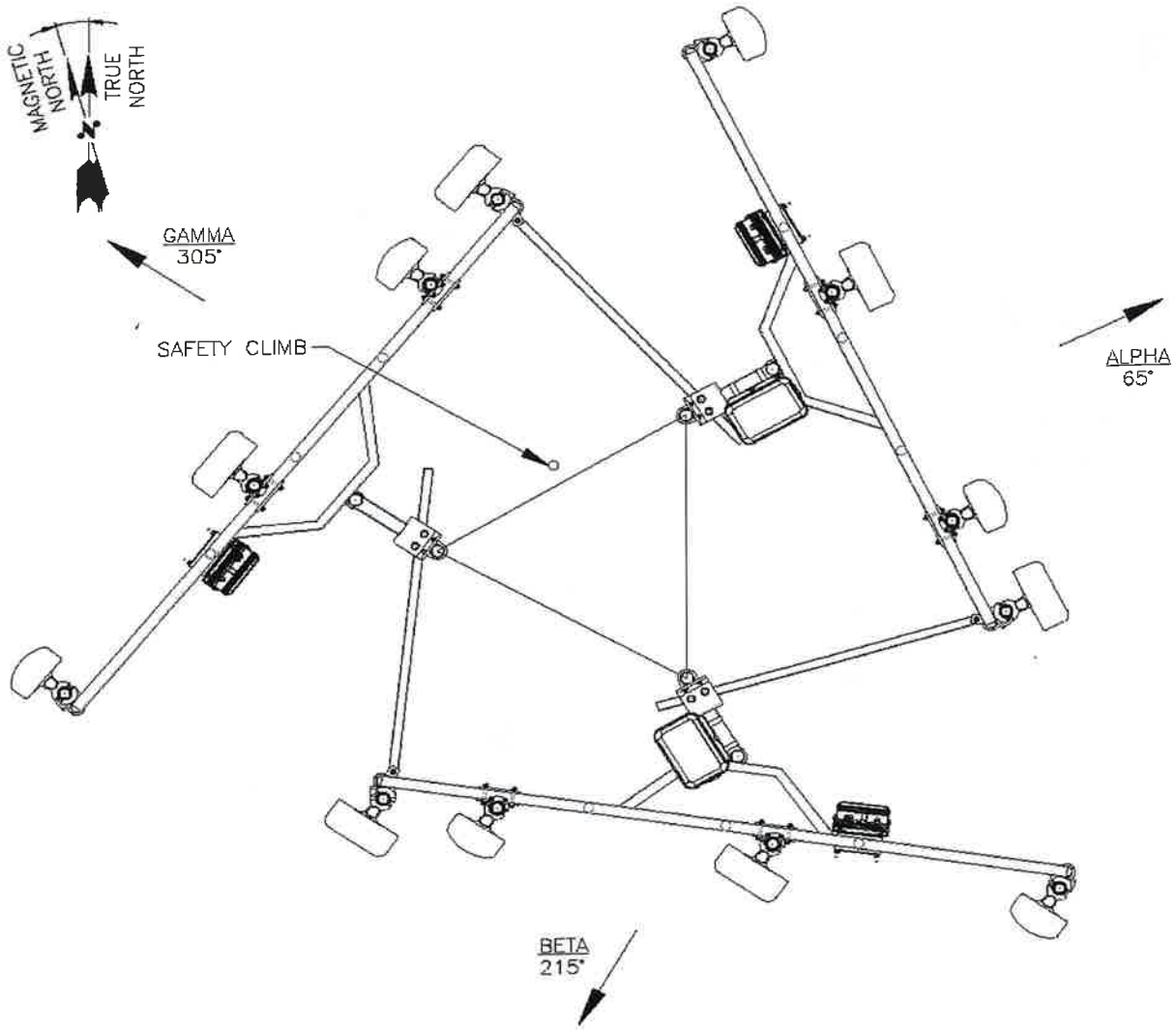

ANTENNA PLAN
SCALE: N.T.S

1
SK-1

Please Insert Sketches of the Antenna Mount, cont'd

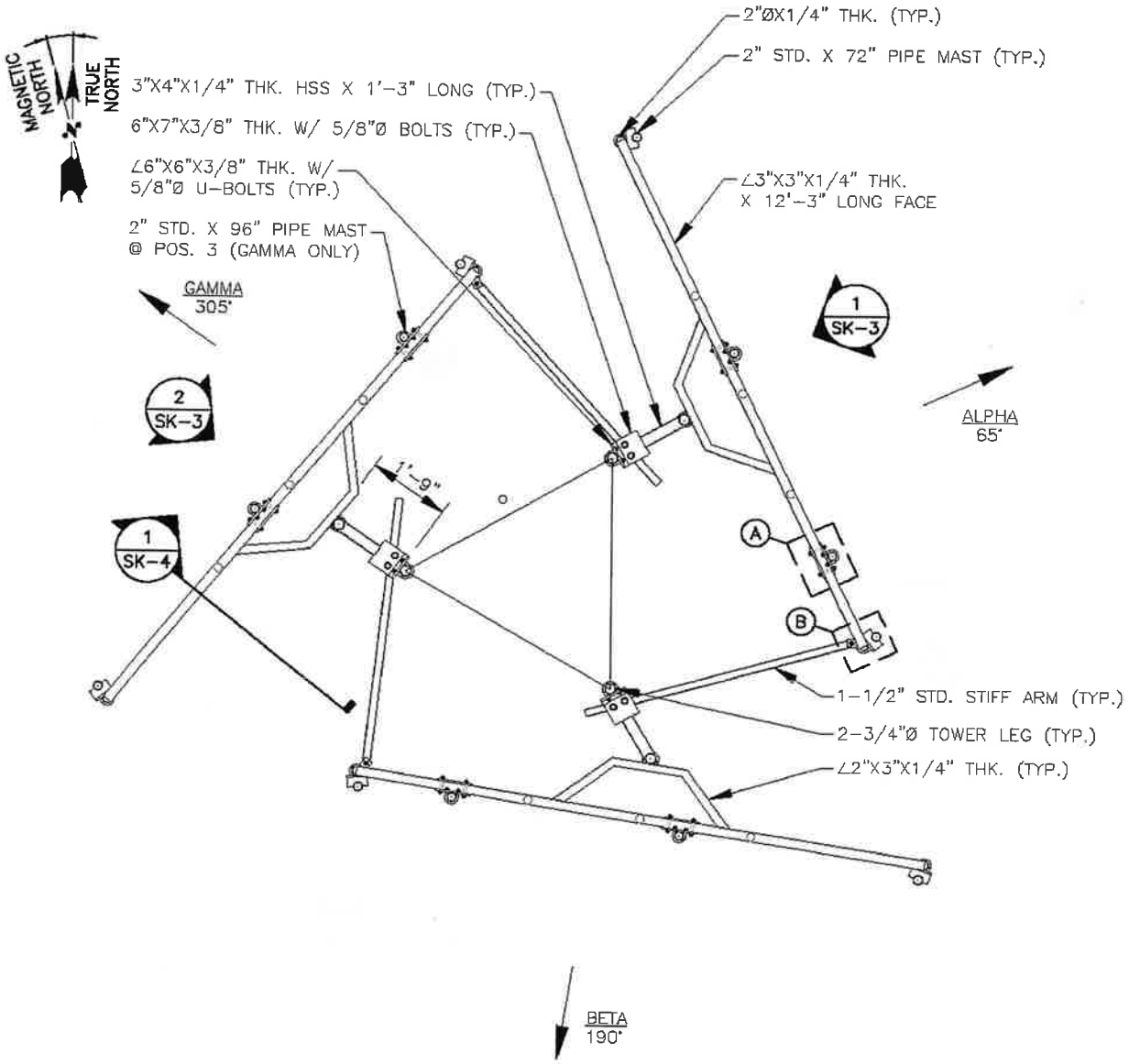

MOUNT PLAN (1 / SK-2)

SCALE: N.T.S

Please Insert Sketches of the Antenna Mount, cont'd

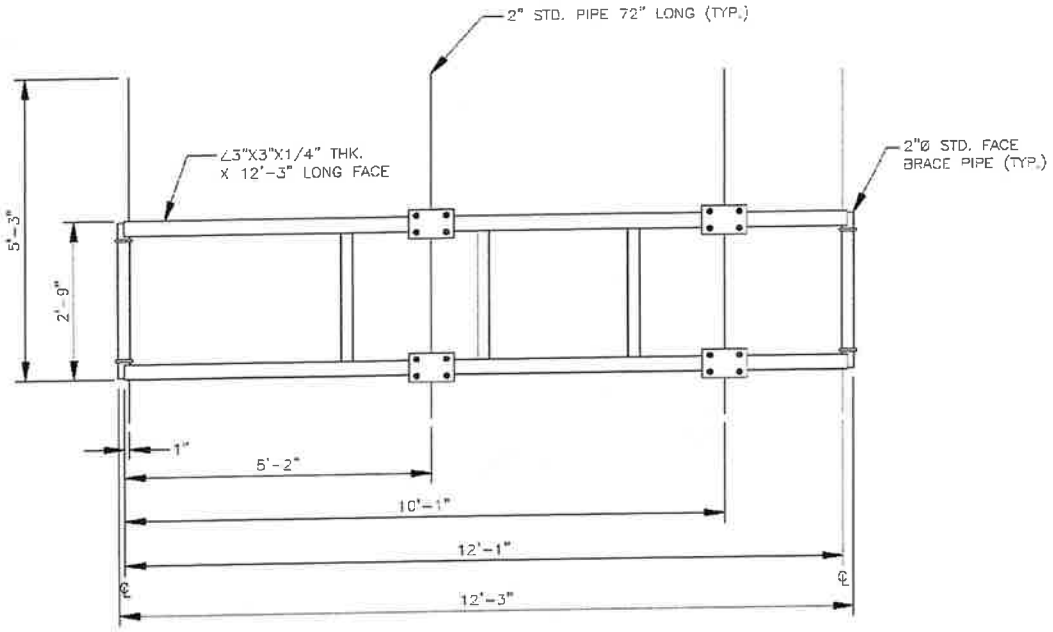

FACE ELEVATION (ALPHA & BETA SECTORS) 1 SK-3

SCALE: N.T.S

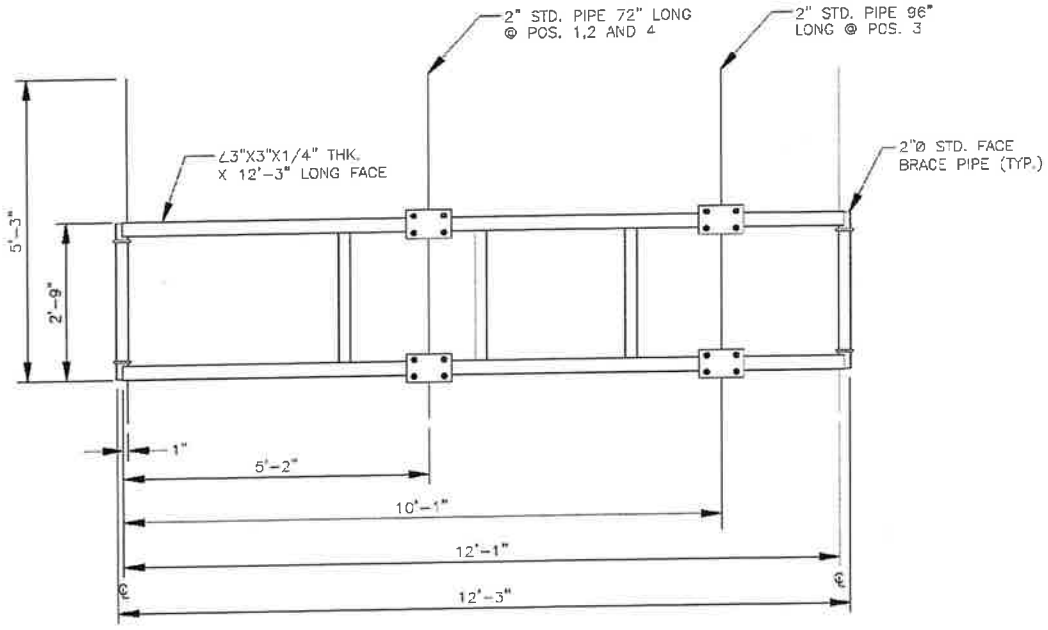

FACE ELEVATION (GAMMA SECTOR) 2 SK-3

SCALE: N.T.S

Please Insert Sketches of the Antenna Mount, cont'd

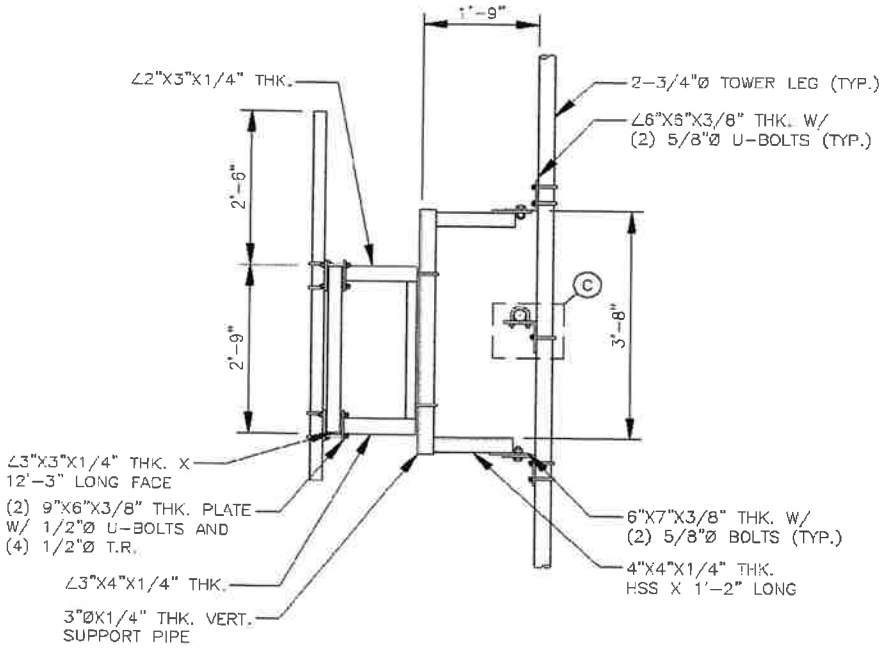

MOUNT SIDE ELEVATION (1 / SK-4)

SCALE: N.T.S

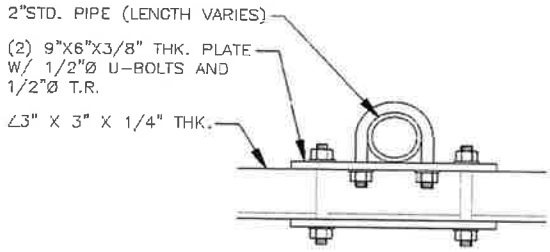

DETAIL A

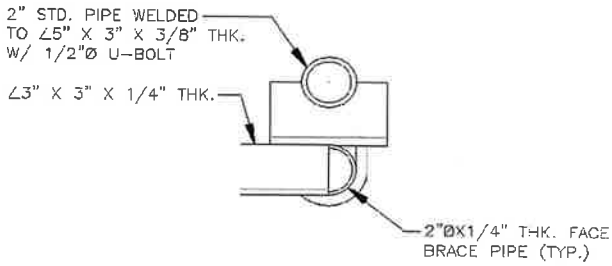

DETAIL B

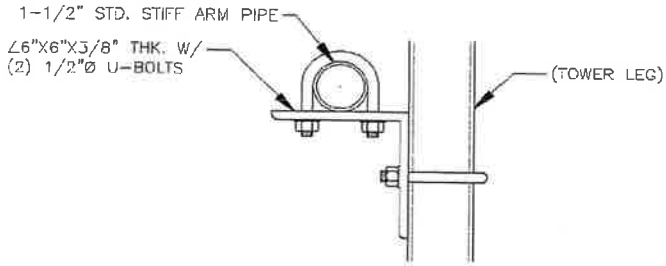

DETAIL C

	5000247301-VZW_MT_LOT_SectorB_H	SK - 1
		Nov 30, 2023 at 12:31 PM
		5000247301-VZW_MT_LOT_B_H.r3d

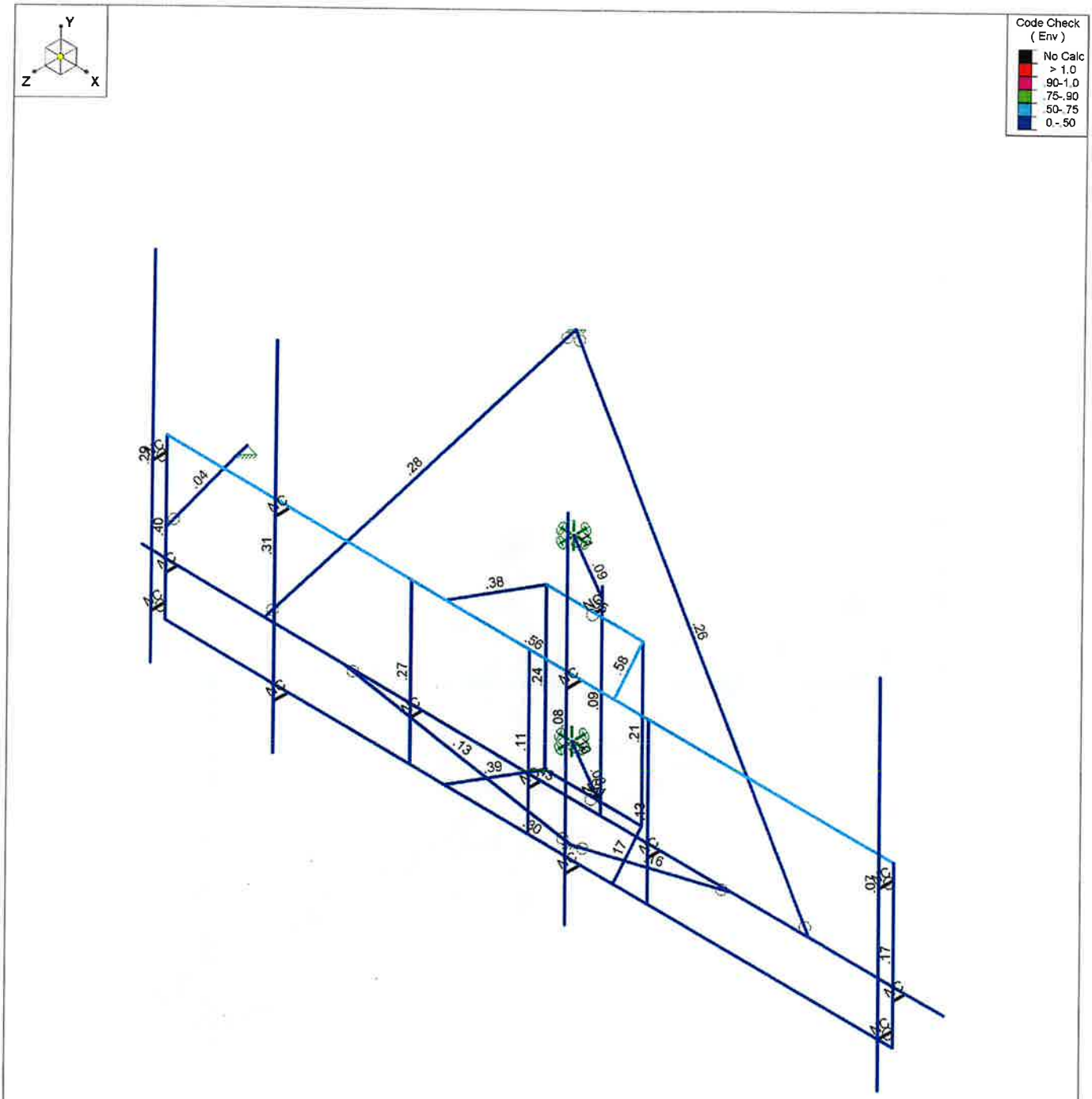

Member Code Checks Displayed (Enveloped)
Envelope Only Solution

	5000247301-VZW_MT_LOT_SectorB_H	SK - 2
		Nov 30, 2023 at 12:32 PM
		5000247301-VZW_MT_LOT_B_H.r3d

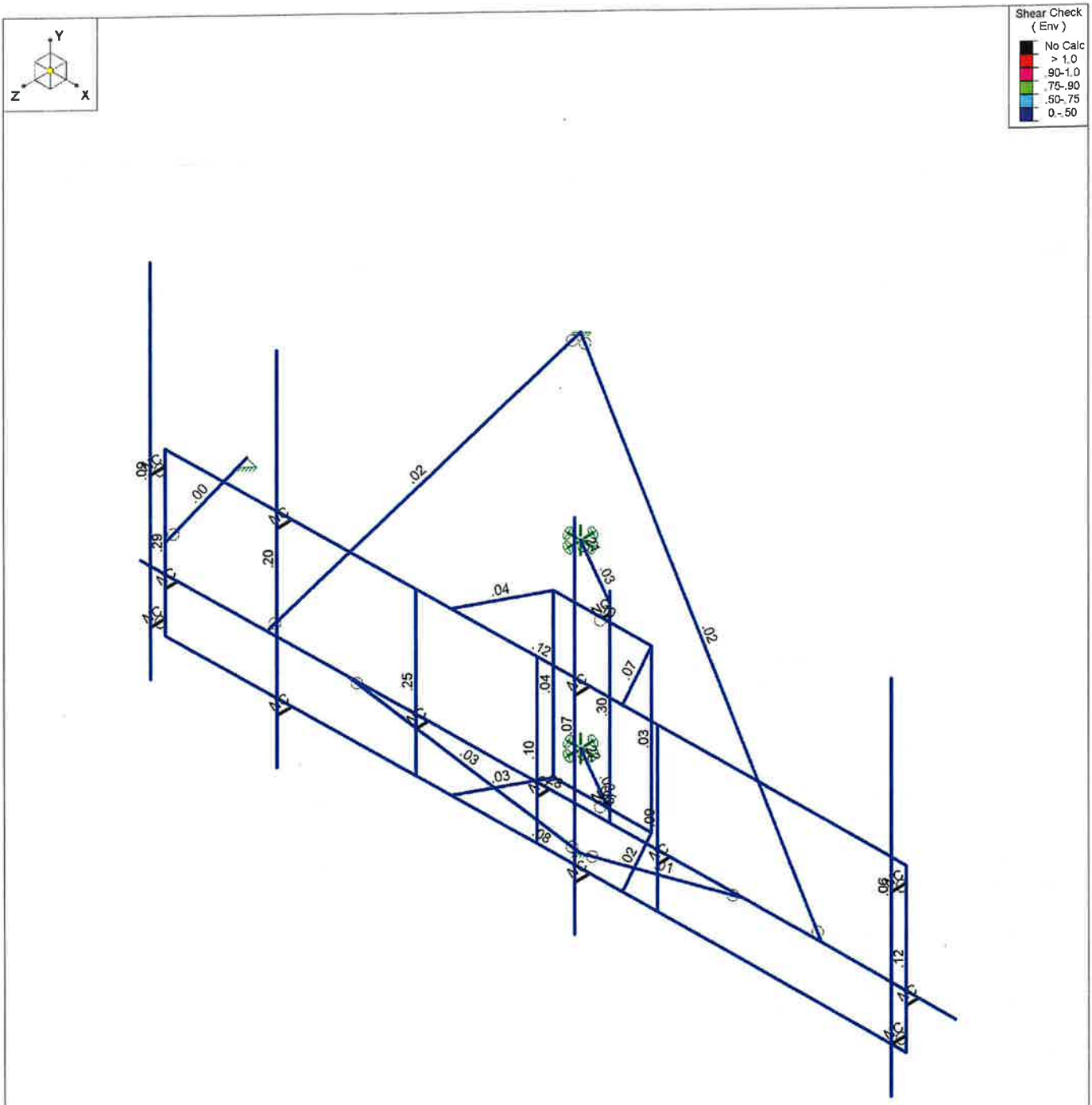

Member Shear Checks Displayed (Enveloped)
Envelope Only Solution

	5000247301-VZW_MT_LOT_SectorB_H	SK - 3
		Nov 30, 2023 at 12:32 PM
		5000247301-VZW_MT_LOT_B_H.r3d

Basic Load Cases

	BLC Description	Category	X Gravity	Y Gravity	Z Gravity	Joint	Point	Distributed	Area(Me...	Surface(P...
1	Antenna D	None					33			
2	Antenna Di	None					33			
3	Antenna Wo (0 Deg)	None					33			
4	Antenna Wo (30 Deg)	None					33			
5	Antenna Wo (60 Deg)	None					33			
6	Antenna Wo (90 Deg)	None					33			
7	Antenna Wo (120 Deg)	None					33			
8	Antenna Wo (150 Deg)	None					33			
9	Antenna Wo (180 Deg)	None					33			
10	Antenna Wo (210 Deg)	None					33			
11	Antenna Wo (240 Deg)	None					33			
12	Antenna Wo (270 Deg)	None					33			
13	Antenna Wo (300 Deg)	None					33			
14	Antenna Wo (330 Deg)	None					33			
15	Antenna Wi (0 Deg)	None					33			
16	Antenna Wi (30 Deg)	None					33			
17	Antenna Wi (60 Deg)	None					33			
18	Antenna Wi (90 Deg)	None					33			
19	Antenna Wi (120 Deg)	None					33			
20	Antenna Wi (150 Deg)	None					33			
21	Antenna Wi (180 Deg)	None					33			
22	Antenna Wi (210 Deg)	None					33			
23	Antenna Wi (240 Deg)	None					33			
24	Antenna Wi (270 Deg)	None					33			
25	Antenna Wi (300 Deg)	None					33			
26	Antenna Wi (330 Deg)	None					33			
27	Antenna Wm (0 Deg)	None					33			
28	Antenna Wm (30 Deg)	None					33			
29	Antenna Wm (60 Deg)	None					33			
30	Antenna Wm (90 Deg)	None					33			
31	Antenna Wm (120 De...	None					33			
32	Antenna Wm (150 De...	None					33			
33	Antenna Wm (180 De...	None					33			
34	Antenna Wm (210 De...	None					33			
35	Antenna Wm (240 De...	None					33			
36	Antenna Wm (270 De...	None					33			
37	Antenna Wm (300 De...	None					33			
38	Antenna Wm (330 De...	None					33			
39	Structure D	None		-1						
40	Structure Di	None						30		
41	Structure Wo (0 Deg)	None						60		
42	Structure Wo (30 Deg)	None						60		
43	Structure Wo (60 Deg)	None						60		
44	Structure Wo (90 Deg)	None						60		
45	Structure Wo (120 D...	None						60		
46	Structure Wo (150 D...	None						60		
47	Structure Wo (180 D...	None						60		
48	Structure Wo (210 D...	None						60		

Basic Load Cases (Continued)

	BLC Description	Category	X Gravity	Y Gravity	Z Gravity	Joint	Point	Distributed	Area(Me...	Surface(P...
49	Structure Wo (240 D...	None						60		
50	Structure Wo (270 D...	None						60		
51	Structure Wo (300 D...	None						60		
52	Structure Wo (330 D...	None						60		
53	Structure Wi (0 Deg)	None						60		
54	Structure Wi (30 Deg)	None						60		
55	Structure Wi (60 Deg)	None						60		
56	Structure Wi (90 Deg)	None						60		
57	Structure Wi (120 De...	None						60		
58	Structure Wi (150 De...	None						60		
59	Structure Wi (180 De...	None						60		
60	Structure Wi (210 De...	None						60		
61	Structure Wi (240 De...	None						60		
62	Structure Wi (270 De...	None						60		
63	Structure Wi (300 De...	None						60		
64	Structure Wi (330 De...	None						60		
65	Structure Wm (0 Deg)	None						60		
66	Structure Wm (30 D...	None						60		
67	Structure Wm (60 D...	None						60		
68	Structure Wm (90 D...	None						60		
69	Structure Wm (120 ...	None						60		
70	Structure Wm (150 ...	None						60		
71	Structure Wm (180 ...	None						60		
72	Structure Wm (210 ...	None						60		
73	Structure Wm (240 ...	None						60		
74	Structure Wm (270 ...	None						60		
75	Structure Wm (300 ...	None						60		
76	Structure Wm (330 ...	None						60		
77	Lm1	None					1			
78	Lm2	None					1			
79	Lv1	None					1			
80	Lv2	None					1			
81	Antenna Ev	None					33			
82	Antenna Eh (0 Deg)	None					22			
83	Antenna Eh (90 Deg)	None					22			
84	Structure Ev	ELY		-.041						
85	Structure Eh (0 Deg)	ELZ			-.101					
86	Structure Eh (90 Deg)	ELX	.101							

Load Combinations

	Description	So...	P...	S...	B...	Fac..	B...	Fac..	B...	Fac..	B...	Fac..	B...	Fac..	B...	Fac..	B...	Fac..	B...	Fac..	B...	Fac..	B...	Fac...
1	1.2D+1.0Wo (0 Deg)	Yes	Y		1	1.2	39	1.2	3	1	41	1												
2	1.2D+1.0Wo (30 Deg)	Yes	Y		1	1.2	39	1.2	4	1	42	1												
3	1.2D+1.0Wo (60 Deg)	Yes	Y		1	1.2	39	1.2	5	1	43	1												
4	1.2D+1.0Wo (90 Deg)	Yes	Y		1	1.2	39	1.2	6	1	44	1												
5	1.2D+1.0Wo (120 Deg)	Yes	Y		1	1.2	39	1.2	7	1	45	1												
6	1.2D+1.0Wo (150 Deg)	Yes	Y		1	1.2	39	1.2	8	1	46	1												
7	1.2D+1.0Wo (180 Deg)	Yes	Y		1	1.2	39	1.2	9	1	47	1												
8	1.2D+1.0Wo (210 Deg)	Yes	Y		1	1.2	39	1.2	10	1	48	1												
9	1.2D+1.0Wo (240 Deg)	Yes	Y		1	1.2	39	1.2	11	1	49	1												

Load Combinations (Continued)

	Description	So...	P...	S...	B...	Fac...	B...	Fac...	B...	Fac...	B...	Fac...	B...	Fac...	B...	Fac...	B...	Fac...	B...	Fac...	B...	Fac...	B...	Fac...
10	1.2D+1.0Wo (270 Deg)	Yes	Y		1	1.2	39	1.2	12	1	50	1												
11	1.2D+1.0Wo (300 Deg)	Yes	Y		1	1.2	39	1.2	13	1	51	1												
12	1.2D+1.0Wo (330 Deg)	Yes	Y		1	1.2	39	1.2	14	1	52	1												
13	1.2D + 1.0Di + 1.0Wi (0 Deg)	Yes	Y		1	1.2	39	1.2	2	1	40	1	15	1	53	1								
14	1.2D + 1.0Di + 1.0Wi (30 Deg)	Yes	Y		1	1.2	39	1.2	2	1	40	1	16	1	54	1								
15	1.2D + 1.0Di + 1.0Wi (60 Deg)	Yes	Y		1	1.2	39	1.2	2	1	40	1	17	1	55	1								
16	1.2D + 1.0Di + 1.0Wi (90 Deg)	Yes	Y		1	1.2	39	1.2	2	1	40	1	18	1	56	1								
17	1.2D + 1.0Di + 1.0Wi (120 D...	Yes	Y		1	1.2	39	1.2	2	1	40	1	19	1	57	1								
18	1.2D + 1.0Di + 1.0Wi (150 D...	Yes	Y		1	1.2	39	1.2	2	1	40	1	20	1	58	1								
19	1.2D + 1.0Di + 1.0Wi (180 D...	Yes	Y		1	1.2	39	1.2	2	1	40	1	21	1	59	1								
20	1.2D + 1.0Di + 1.0Wi (210 D...	Yes	Y		1	1.2	39	1.2	2	1	40	1	22	1	60	1								
21	1.2D + 1.0Di + 1.0Wi (240 D...	Yes	Y		1	1.2	39	1.2	2	1	40	1	23	1	61	1								
22	1.2D + 1.0Di + 1.0Wi (270 D...	Yes	Y		1	1.2	39	1.2	2	1	40	1	24	1	62	1								
23	1.2D + 1.0Di + 1.0Wi (300 D...	Yes	Y		1	1.2	39	1.2	2	1	40	1	25	1	63	1								
24	1.2D + 1.0Di + 1.0Wi (330 D...	Yes	Y		1	1.2	39	1.2	2	1	40	1	26	1	64	1								
25	1.2D + 1.5Lm1 + 1.0Wm (0 ...	Yes	Y		1	1.2	39	1.2	77	1.5	27	1	65	1										
26	1.2D + 1.5Lm1 + 1.0Wm (30 ...	Yes	Y		1	1.2	39	1.2	77	1.5	28	1	66	1										
27	1.2D + 1.5Lm1 + 1.0Wm (60 ...	Yes	Y		1	1.2	39	1.2	77	1.5	29	1	67	1										
28	1.2D + 1.5Lm1 + 1.0Wm (90 ...	Yes	Y		1	1.2	39	1.2	77	1.5	30	1	68	1										
29	1.2D + 1.5Lm1 + 1.0Wm (12...	Yes	Y		1	1.2	39	1.2	77	1.5	31	1	69	1										
30	1.2D + 1.5Lm1 + 1.0Wm (15...	Yes	Y		1	1.2	39	1.2	77	1.5	32	1	70	1										
31	1.2D + 1.5Lm1 + 1.0Wm (18...	Yes	Y		1	1.2	39	1.2	77	1.5	33	1	71	1										
32	1.2D + 1.5Lm1 + 1.0Wm (21...	Yes	Y		1	1.2	39	1.2	77	1.5	34	1	72	1										
33	1.2D + 1.5Lm1 + 1.0Wm (24...	Yes	Y		1	1.2	39	1.2	77	1.5	35	1	73	1										
34	1.2D + 1.5Lm1 + 1.0Wm (27...	Yes	Y		1	1.2	39	1.2	77	1.5	36	1	74	1										
35	1.2D + 1.5Lm1 + 1.0Wm (30...	Yes	Y		1	1.2	39	1.2	77	1.5	37	1	75	1										
36	1.2D + 1.5Lm1 + 1.0Wm (33...	Yes	Y		1	1.2	39	1.2	77	1.5	38	1	76	1										
37	1.2D + 1.5Lm2 + 1.0Wm (0 ...	Yes	Y		1	1.2	39	1.2	78	1.5	27	1	65	1										
38	1.2D + 1.5Lm2 + 1.0Wm (30 ...	Yes	Y		1	1.2	39	1.2	78	1.5	28	1	66	1										
39	1.2D + 1.5Lm2 + 1.0Wm (60 ...	Yes	Y		1	1.2	39	1.2	78	1.5	29	1	67	1										
40	1.2D + 1.5Lm2 + 1.0Wm (90 ...	Yes	Y		1	1.2	39	1.2	78	1.5	30	1	68	1										
41	1.2D + 1.5Lm2 + 1.0Wm (12...	Yes	Y		1	1.2	39	1.2	78	1.5	31	1	69	1										
42	1.2D + 1.5Lm2 + 1.0Wm (15...	Yes	Y		1	1.2	39	1.2	78	1.5	32	1	70	1										
43	1.2D + 1.5Lm2 + 1.0Wm (18...	Yes	Y		1	1.2	39	1.2	78	1.5	33	1	71	1										
44	1.2D + 1.5Lm2 + 1.0Wm (21...	Yes	Y		1	1.2	39	1.2	78	1.5	34	1	72	1										
45	1.2D + 1.5Lm2 + 1.0Wm (24...	Yes	Y		1	1.2	39	1.2	78	1.5	35	1	73	1										
46	1.2D + 1.5Lm2 + 1.0Wm (27...	Yes	Y		1	1.2	39	1.2	78	1.5	36	1	74	1										
47	1.2D + 1.5Lm2 + 1.0Wm (30...	Yes	Y		1	1.2	39	1.2	78	1.5	37	1	75	1										
48	1.2D + 1.5Lm2 + 1.0Wm (33...	Yes	Y		1	1.2	39	1.2	78	1.5	38	1	76	1										
49	1.2D + 1.5Lv1	Yes	Y		1	1.2	39	1.2	79	1.5														
50	1.2D + 1.5Lv2	Yes	Y		1	1.2	39	1.2	80	1.5														
51	1.4D	Yes	Y		1	1.4	39	1.4																
52	1.2D + 1.0Ev + 1.0Eh (0 Deg)	Yes	Y		1	1.2	39	1.2	81	1	E...	1	82	1	83		ELZ	1	E...					
53	1.2D + 1.0Ev + 1.0Eh (30 Deg)	Yes	Y		1	1.2	39	1.2	81	1	E...	1	82	.866	83	.5	ELZ	.866	E...	.5				
54	1.2D + 1.0Ev + 1.0Eh (60 Deg)	Yes	Y		1	1.2	39	1.2	81	1	E...	1	82	.5	83	.866	ELZ	.5	E...	.866				
55	1.2D + 1.0Ev + 1.0Eh (90 Deg)	Yes	Y		1	1.2	39	1.2	81	1	E...	1	82		83	1	ELZ		E...	1				
56	1.2D + 1.0Ev + 1.0Eh (120 D...	Yes	Y		1	1.2	39	1.2	81	1	E...	1	82	-.5	83	.866	ELZ	-.5	E...	.866				
57	1.2D + 1.0Ev + 1.0Eh (150 D...	Yes	Y		1	1.2	39	1.2	81	1	E...	1	82	-.866	83	.5	ELZ	-.866	E...	.5				
58	1.2D + 1.0Ev + 1.0Eh (180 D...	Yes	Y		1	1.2	39	1.2	81	1	E...	1	82	-1	83		ELZ	-1	E...					
59	1.2D + 1.0Ev + 1.0Eh (210 D...	Yes	Y		1	1.2	39	1.2	81	1	E...	1	82	-.866	83	-.5	ELZ	-.866	E...	-.5				
60	1.2D + 1.0Ev + 1.0Eh (240 D...	Yes	Y		1	1.2	39	1.2	81	1	E...	1	82	-.5	83	-.866	ELZ	-.5	E...	-.866				
61	1.2D + 1.0Ev + 1.0Eh (270 D...	Yes	Y		1	1.2	39	1.2	81	1	E...	1	82		83	-1	ELZ		E...	-1				

Load Combinations (Continued)

	Description	So...	P...	S...	B...	Fac...	B...	Fac...	B...	Fac...	B...	Fac...	B...	Fac...	B...	Fac...	B...	Fac...	B...	Fac...	B...	Fac...	B...	Fac...
62	1.2D + 1.0Ev + 1.0Eh (300 D...	Yes	Y		1	1.2	39	1.2	81	1	E...	1	82	.5	83	-.866	ELZ	.5	E...	-.866				
63	1.2D + 1.0Ev + 1.0Eh (330 D...	Yes	Y		1	1.2	39	1.2	81	1	E...	1	82	.866	83	-.5	ELZ	.866	E...	-.5				
64	0.9D - 1.0Ev + 1.0Eh (0 Deg)	Yes	Y		1	.9	39	.9	81	-1	E...	-1	82	1	83		ELZ	1	E...					
65	0.9D - 1.0Ev + 1.0Eh (30 Deg)	Yes	Y		1	.9	39	.9	81	-1	E...	-1	82	.866	83	.5	ELZ	.866	E...	.5				
66	0.9D - 1.0Ev + 1.0Eh (60 Deg)	Yes	Y		1	.9	39	.9	81	-1	E...	-1	82	.5	83	.866	ELZ	.5	E...	.866				
67	0.9D - 1.0Ev + 1.0Eh (90 Deg)	Yes	Y		1	.9	39	.9	81	-1	E...	-1	82		83	1	ELZ		E...	1				
68	0.9D - 1.0Ev + 1.0Eh (120 D...	Yes	Y		1	.9	39	.9	81	-1	E...	-1	82	-.5	83	.866	ELZ	-.5	E...	.866				
69	0.9D - 1.0Ev + 1.0Eh (150 D...	Yes	Y		1	.9	39	.9	81	-1	E...	-1	82	-.866	83	.5	ELZ	-.866	E...	.5				
70	0.9D - 1.0Ev + 1.0Eh (180 D...	Yes	Y		1	.9	39	.9	81	-1	E...	-1	82	-1	83		ELZ	-1	E...					
71	0.9D - 1.0Ev + 1.0Eh (210 D...	Yes	Y		1	.9	39	.9	81	-1	E...	-1	82	-.866	83	-.5	ELZ	-.866	E...	-.5				
72	0.9D - 1.0Ev + 1.0Eh (240 D...	Yes	Y		1	.9	39	.9	81	-1	E...	-1	82	-.5	83	-.866	ELZ	-.5	E...	-.866				
73	0.9D - 1.0Ev + 1.0Eh (270 D...	Yes	Y		1	.9	39	.9	81	-1	E...	-1	82		83	-1	ELZ		E...	-1				
74	0.9D - 1.0Ev + 1.0Eh (300 D...	Yes	Y		1	.9	39	.9	81	-1	E...	-1	82	.5	83	-.866	ELZ	.5	E...	-.866				
75	0.9D - 1.0Ev + 1.0Eh (330 D...	Yes	Y		1	.9	39	.9	81	-1	E...	-1	82	.866	83	-.5	ELZ	.866	E...	-.5				

Joint Coordinates and Temperatures

	Label	X [ft]	Y [ft]	Z [ft]	Temp [F]	Detach From Diap...
1	N179A	-6.125	0	0	0	
2	N180	6.125	0	0	0	
3	N181	-6.125	2.6875	0	0	
4	N182	6.125	2.6875	0	0	
5	N183	-2	0	0	0	
6	N184	-2	2.6875	0	0	
7	N185	0	0	0	0	
8	N186	0	2.6875	0	0	
9	N187	2	0	0	0	
10	N188	2	2.6875	0	0	
11	N189	0	0	-1.083333	0	
12	N190	0	2.6875	-1.083333	0	
13	N191	1.416667	0	0	0	
14	N192	1.416667	2.6875	0	0	
15	N193	-1.416667	0	0	0	
16	N194	-1.416667	2.6875	0	0	
17	N195	0.8125	0	-1.083333	0	
18	N196	0.8125	2.6875	-1.083333	0	
19	N197	-0.8125	0	-1.083333	0	
20	N198	-0.8125	2.6875	-1.083333	0	
21	N199	0	0	-1.208333	0	
22	N200	0	2.6875	-1.208333	0	
23	N23	0	3.010417	-1.208333	0	
24	N24	0	-0.322917	-1.208333	0	
25	N25	0	2.84375	-1.208333	0	
26	N26	0	-0.15625	-1.208333	0	
27	N29	-0.866025	2.84375	-1.708333	0	
28	N30	-0.866025	-0.15625	-1.708333	0	
29	N31	-1.154701	2.84375	-1.875	0	
30	N32	-1.154701	-0.15625	-1.875	0	
31	N31A	6.125	2.4375	0	0	
32	N32A	6.125	.25	0	0	
33	N33	6.125	2.4375	.25	0	

Joint Coordinates and Temperatures (Continued)

	Label	X [ft]	Y [ft]	Z [ft]	Temp [F]	Detach From Diap...
34	N34	6.125	.25	.25	0	
35	N35	6.125	5.5	.25	0	
36	N36	6.125	-.5	.25	0	
37	N39	-6.125	.25	.25	0	
38	N40	-6.125	5.5	.25	0	
39	N41	-6.125	-.5	.25	0	
40	N40A	.875	0	0	0	
41	N41A	.875	2.6875	0	0	
42	N42	.875	0	.25	0	
43	N43	.875	2.6875	.25	0	
44	N44	.875	5.25	.25	0	
45	N45	.875	-.75	.25	0	
46	N48	-6.125	2.4375	0	0	
47	N49	-6.125	.25	0	0	
48	N50	-6.125	2.4375	.25	0	
49	N49A	-4.041667	0	0	0	
50	N50A	-4.041667	2.6875	0	0	
51	N51	-4.041667	0	.25	0	
52	N52	-4.041667	2.6875	.25	0	
53	N53	-4.041667	5.25	.25	0	
54	N54	-4.041667	-.75	.25	0	
55	N55	-6.125	1.34375	0	0	
56	N56	-6.654701	1.34375	-1.875	0	
57	N57	-6.125	0.677083	0	0	
58	N58	-6.125	0.677083	-0.208333	0	
59	N59	-2	0.677083	0	0	
60	N60	-2	0.677083	-0.208333	0	
61	N61	0	0.677083	0	0	
62	N62	0	0.677083	-0.208333	0	
63	N63	2	0.677083	0	0	
64	N64	2	0.677083	-0.208333	0	
65	N65	6.125	0.677083	0	0	
66	N66	6.125	0.677083	-0.208333	0	
67	N67	-6.75	0.677083	-0.208333	0	
68	N68	6.75	0.677083	-0.208333	0	
69	N69	-3.333333	0.677083	-0.208333	0	
70	N70	3.208333	0.677083	-0.208333	0	
71	N71	-1.1547	-1.666667	-1.875	0	
72	N72	-4.666667	0.677083	-0.208333	0	
73	N73	4.5	0.677083	-0.208333	0	
74	N74	-1.1547	5.833333	-1.875	0	

Hot Rolled Steel Section Sets

	Label	Shape	Type	Design Li...	Material	Design R...	A [in2]	Iyy [in4]	Izz [in4]	J [in4]
1	Face Horizontal	L3X3X4	Beam	Single A...	A36 Gr.36	Typical	1.44	1.23	1.23	.031
2	Face Vertical	PIPE_2.0	Column	Pipe	A53 Gr. B	Typical	1.02	.627	.627	1.25
3	Mount Pipe	PIPE_2.0	Column	Pipe	A53 Gr. B	Typical	1.02	.627	.627	1.25
4	Top Standoff	L3X2X4	Beam	Single A...	A36 Gr.36	Typical	1.2	.39	1.09	.027
5	TES Standoff	L3X2X4	Beam	Single A...	A36 Gr.36	Typical	1.2	.39	1.09	.027
6	Mount Pipe Plate	PL1/4x3	Beam	Single A...	A36 Gr.36	Typical	.75	.004	.563	.015

Hot Rolled Steel Section Sets (Continued)

	Label	Shape	Type	Design Li...	Material	Design R...	A [in2]	Iyy [in4]	Izz [in4]	J [in4]
7	Mast Pipe	PIPE_2.5	Column	Pipe	A53 Gr. B	Typical	1.61	1.45	1.45	2.89
8	Standof verticals	L2x2x4	Column	Single A...	A36 Gr.36	Typical	.944	.346	.346	.021
9	Tube Standoff	HSS3X3X4	Beam	Tube	A500 Gr. B 46	Typical	2.44	3.02	3.02	5.08
10	Tieback	PIPE_1.5	Beam	Pipe	A53 Gr. B	Typical	.749	.293	.293	.586
11	Bottom Standoff	L4X3X4	Beam	Single A...	A36 Gr.36	Typical	1.69	1.33	2.75	.039
12	Connection Plate	PL3/8x7	Beam	RECT	A36 Gr.36	Typical	2.625	.031	10.719	.119
13	Secondary Horizontal	PIPE_2.5	Beam	Pipe	A53 Gr. B	Typical	1.61	1.45	1.45	2.89
14	V-Brace	L2.5x2.5x4	Beam	Single A...	A36 Gr.36	Typical	1.19	.692	.692	.026

Hot Rolled Steel Properties

	Label	E [ksi]	G [ksi]	Nu	Therm (/1E...	Density[k/ft...	Yield[ksi]	Ry	Fu[ksi]	Rt
1	A36 Gr.36	29000	11154	.3	.65	.49	36	1.5	58	1.2
2	A53 Gr. B	29000	11154	.3	.65	.49	35	1.5	60	1.2
3	A572 Gr.50	29000	11154	.3	.65	.49	50	1.1	65	1.1
4	A992	29000	11154	.3	.65	.49	50	1.1	65	1.1
5	A500 Gr. B 42	29000	11154	.3	.65	.49	42	1.4	58	1.3
6	A500 Gr. B 46	29000	11154	.3	.65	.49	46	1.4	58	1.3

Member Primary Data

	Label	I Joint	J Joint	K Joint	Rotate(deg)	Section/Shape	Type	Design List	Material	Design Rules
1	LV	N179A	N180			Face Horizontal	Beam	Single Angle	A36 Gr.36	Typical
2	M110	N181	N182		90	Face Horizontal	Beam	Single Angle	A36 Gr.36	Typical
3	M111	N179A	N181			Face Vertical	Column	Pipe	A53 Gr. B	Typical
4	M112	N183	N184			Face Vertical	Column	Pipe	A53 Gr. B	Typical
5	M113	N185	N186			Face Vertical	Column	Pipe	A53 Gr. B	Typical
6	M114	N187	N188			Face Vertical	Column	Pipe	A53 Gr. B	Typical
7	M115	N180	N182			Face Vertical	Column	Pipe	A53 Gr. B	Typical
8	M116	N198	N194		180	Top Standoff	Beam	Single Angle	A36 Gr.36	Typical
9	M117	N196	N198		180	Top Standoff	Beam	Single Angle	A36 Gr.36	Typical
10	M118	N192	N196		180	Top Standoff	Beam	Single Angle	A36 Gr.36	Typical
11	M119	N193	N197			Top Standoff	Beam	Single Angle	A36 Gr.36	Typical
12	M120	N197	N195			Top Standoff	Beam	Single Angle	A36 Gr.36	Typical
13	M121	N195	N191			Top Standoff	Beam	Single Angle	A36 Gr.36	Typical
14	M122	N190	N200			RIGID	None	None	RIGID	Typical
15	M123	N189	N199			RIGID	None	None	RIGID	Typical
16	M127	N198	N197		180	Standof verticals	Column	Single Angle	A36 Gr.36	Typical
17	M128	N196	N195		270	Standof verticals	Column	Single Angle	A36 Gr.36	Typical
18	M18	N23	N24			Mast Pipe	Column	Pipe	A53 Gr. B	Typical
19	M21	N29	N31		90	Connection Pla...	Beam	RECT	A36 Gr.36	Typical
20	M22	N30	N32		90	Connection Pla...	Beam	RECT	A36 Gr.36	Typical
21	M21A	N25	N29			Tube Standoff	Beam	Tube	A500 Gr. ...	Typical
22	M22A	N26	N30			Tube Standoff	Beam	Tube	A500 Gr. ...	Typical
23	M23	N31A	N33			RIGID	None	None	RIGID	Typical
24	M24	N32A	N34			RIGID	None	None	RIGID	Typical
25	MP1A	N35	N36			Mount Pipe	Column	Pipe	A53 Gr. B	Typical
26	MP4A	N40	N41			Mount Pipe	Column	Pipe	A53 Gr. B	Typical
27	M27	N41A	N43			RIGID	None	None	RIGID	Typical
28	LM1	N40A	N42			RIGID	None	None	RIGID	Typical
29	MP2A	N44	N45			Mount Pipe	Column	Pipe	A53 Gr. B	Typical

Member Primary Data (Continued)

	Label	I Joint	J Joint	K Joint	Rotate(deg)	Section/Shape	Type	Design List	Material	Design Rules
30	M30	N48	N50			RIGID	None	None	RIGID	Typical
31	M31	N49	N39			RIGID	None	None	RIGID	Typical
32	M32	N50A	N52			RIGID	None	None	RIGID	Typical
33	LM2	N49A	N51			RIGID	None	None	RIGID	Typical
34	MP3A	N53	N54			Mount Pipe	Column	Pipe	A53 Gr. B	Typical
35	M35	N56	N55			Tieback	Beam	Pipe	A53 Gr. B	Typical
36	M36	N57	N58			RIGID	None	None	RIGID	Typical
37	M37	N59	N60			RIGID	None	None	RIGID	Typical
38	M38	N61	N62			RIGID	None	None	RIGID	Typical
39	M39	N63	N64			RIGID	None	None	RIGID	Typical
40	M40	N65	N66			RIGID	None	None	RIGID	Typical
41	M41	N67	N68			Secondary Hor...	Beam	Pipe	A53 Gr. B	Typical
42	M42	N69	N71			V-Brace	Beam	Single Angle	A36 Gr.36	Typical
43	M43	N70	N71		270	V-Brace	Beam	Single Angle	A36 Gr.36	Typical
44	M44	N72	N74			V-Brace	Beam	Single Angle	A36 Gr.36	Typical
45	M45	N73	N74		270	V-Brace	Beam	Single Angle	A36 Gr.36	Typical

Member Advanced Data

	Label	I Release	J Release	I Offset[in]	J Offset[in]	T/C Only	Physical	Defl Rat...	Analysis ...	Inactive	Seismic...
1	LV						Yes				None
2	M110						Yes	Default			None
3	M111						Yes	** NA **			None
4	M112						Yes	** NA **			None
5	M113						Yes	** NA **			None
6	M114						Yes	** NA **			None
7	M115						Yes	** NA **			None
8	M116						Yes	Default			None
9	M117						Yes	Default			None
10	M118						Yes	Default			None
11	M119						Yes				None
12	M120						Yes				None
13	M121						Yes				None
14	M122		OOOOOO				Yes	** NA **			None
15	M123		OOOOOO				Yes	** NA **			None
16	M127						Yes	** NA **			None
17	M128						Yes	** NA **			None
18	M18						Yes	** NA **			None
19	M21	OOOOXO					Yes	Default			None
20	M22	OOOOXO					Yes	Default			None
21	M21A						Yes				None
22	M22A						Yes				None
23	M23		OOOXOO				Yes	** NA **			None
24	M24		OOOXOO				Yes	** NA **			None
25	MP1A						Yes	** NA **			None
26	MP4A						Yes	** NA **			None
27	M27						Yes	** NA **			None
28	LM1						Yes	** NA **			None
29	MP2A						Yes	** NA **			None
30	M30		OOOXOO				Yes	** NA **			None
31	M31		OOOXOO				Yes	** NA **			None

Member Advanced Data (Continued)

	Label	I Release	J Release	I Offset[in]	J Offset[in]	T/C Only	Physical	Defl Rat...	Analysis ...	Inactive	Seismic...
32	M32						Yes	** NA **			None
33	LM2						Yes	** NA **			None
34	MP3A						Yes	** NA **			None
35	M35		BenPIN				Yes	Default			None
36	M36						Yes	** NA **			None
37	M37						Yes	** NA **			None
38	M38						Yes	** NA **			None
39	M39						Yes	** NA **			None
40	M40						Yes	** NA **			None
41	M41						Yes				None
42	M42	BenPIN	BenPIN				Yes				None
43	M43	BenPIN	BenPIN				Yes				None
44	M44	BenPIN	BenPIN				Yes				None
45	M45	BenPIN	BenPIN				Yes				None

Member Point Loads (BLC 1 : Antenna D)

	Member Label	Direction	Magnitude[lb,k-ft]	Location[ft,%]
1	MP3A	Y	-21.85	1
2	MP3A	My	-.006	1
3	MP3A	Mz	.016	1
4	MP3A	Y	-21.85	6
5	MP3A	My	-.006	6
6	MP3A	Mz	.016	6
7	MP3A	Y	-21.85	1
8	MP3A	My	-.015	1
9	MP3A	Mz	-.008	1
10	MP3A	Y	-21.85	6
11	MP3A	My	-.015	6
12	MP3A	Mz	-.008	6
13	MP1A	Y	-28.65	2.5
14	MP1A	My	-.013	2.5
15	MP1A	Mz	.005	2.5
16	MP1A	Y	-28.65	4.5
17	MP1A	My	-.013	4.5
18	MP1A	Mz	.005	4.5
19	MP3A	Y	-74.7	4
20	MP3A	My	.035	4
21	MP3A	Mz	-.013	4
22	MP2A	Y	-79.1	4
23	MP2A	My	.037	4
24	MP2A	Mz	-.014	4
25	MP4A	Y	-16.55	1
26	MP4A	My	-.008	1
27	MP4A	Mz	.003	1
28	MP4A	Y	-16.55	6
29	MP4A	My	-.008	6
30	MP4A	Mz	.003	6
31	M21A	Y	-32	.5
32	M21A	My	0	.5
33	M21A	Mz	0	.5

Member Point Loads (BLC 2 : Antenna Di)

	Member Label	Direction	Magnitude[lb,k-ft]	Location[ft,%]
1	MP3A	Y	-61.854	1
2	MP3A	My	-.017	1
3	MP3A	Mz	.044	1
4	MP3A	Y	-61.854	6
5	MP3A	My	-.017	6
6	MP3A	Mz	.044	6
7	MP3A	Y	-61.854	1
8	MP3A	My	-.041	1
9	MP3A	Mz	-.023	1
10	MP3A	Y	-61.854	6
11	MP3A	My	-.041	6
12	MP3A	Mz	-.023	6
13	MP1A	Y	-30.407	2.5
14	MP1A	My	-.014	2.5
15	MP1A	Mz	.005	2.5
16	MP1A	Y	-30.407	4.5
17	MP1A	My	-.014	4.5
18	MP1A	Mz	.005	4.5
19	MP3A	Y	-45.855	4
20	MP3A	My	.022	4
21	MP3A	Mz	-.008	4
22	MP2A	Y	-46.341	4
23	MP2A	My	.022	4
24	MP2A	Mz	-.008	4
25	MP4A	Y	-61.854	1
26	MP4A	My	-.029	1
27	MP4A	Mz	.011	1
28	MP4A	Y	-61.854	6
29	MP4A	My	-.029	6
30	MP4A	Mz	.011	6
31	M21A	Y	-89.725	.5
32	M21A	My	0	.5
33	M21A	Mz	0	.5

Member Point Loads (BLC 3 : Antenna Wo (0 Deg))

	Member Label	Direction	Magnitude[lb,k-ft]	Location[ft,%]
1	MP3A	X	0	1
2	MP3A	Z	-130.588	1
3	MP3A	Mx	-.094	1
4	MP3A	X	0	6
5	MP3A	Z	-130.588	6
6	MP3A	Mx	-.094	6
7	MP3A	X	0	1
8	MP3A	Z	-130.588	1
9	MP3A	Mx	.049	1
10	MP3A	X	0	6
11	MP3A	Z	-130.588	6
12	MP3A	Mx	.049	6
13	MP1A	X	0	2.5
14	MP1A	Z	-90.645	2.5
15	MP1A	Mx	-.016	2.5

Member Point Loads (BLC 3 : Antenna Wo (0 Deg)) (Continued)

	Member Label	Direction	Magnitude[lb,k-ft]	Location[ft,%]
16	MP1A	X	0	4.5
17	MP1A	Z	-90.645	4.5
18	MP1A	Mx	-.016	4.5
19	MP3A	X	0	4
20	MP3A	Z	-76.813	4
21	MP3A	Mx	.013	4
22	MP2A	X	0	4
23	MP2A	Z	-92.794	4
24	MP2A	Mx	.016	4
25	MP4A	X	0	1
26	MP4A	Z	-200.198	1
27	MP4A	Mx	-.034	1
28	MP4A	X	0	6
29	MP4A	Z	-200.198	6
30	MP4A	Mx	-.034	6
31	M21A	X	0	.5
32	M21A	Z	-158.802	.5
33	M21A	Mx	0	.5

Member Point Loads (BLC 4 : Antenna Wo (30 Deg))

	Member Label	Direction	Magnitude[lb,k-ft]	Location[ft,%]
1	MP3A	X	46.526	1
2	MP3A	Z	-80.586	1
3	MP3A	Mx	-.071	1
4	MP3A	X	46.526	6
5	MP3A	Z	-80.586	6
6	MP3A	Mx	-.071	6
7	MP3A	X	46.526	1
8	MP3A	Z	-80.586	1
9	MP3A	Mx	-.00075	1
10	MP3A	X	46.526	6
11	MP3A	Z	-80.586	6
12	MP3A	Mx	-.00075	6
13	MP1A	X	31.215	2.5
14	MP1A	Z	-54.066	2.5
15	MP1A	Mx	-.024	2.5
16	MP1A	X	31.215	4.5
17	MP1A	Z	-54.066	4.5
18	MP1A	Mx	-.024	4.5
19	MP3A	X	32.232	4
20	MP3A	Z	-55.827	4
21	MP3A	Mx	.025	4
22	MP2A	X	39.193	4
23	MP2A	Z	-67.884	4
24	MP2A	Mx	.03	4
25	MP4A	X	83.46	1
26	MP4A	Z	-144.557	1
27	MP4A	Mx	-.064	1
28	MP4A	X	83.46	6
29	MP4A	Z	-144.557	6
30	MP4A	Mx	-.064	6

Member Point Loads (BLC 4 : Antenna Wo (30 Deg)) (Continued)

	Member Label	Direction	Magnitude[lb,k-ft]	Location[ft,%]
31	M21A	X	70.199	.5
32	M21A	Z	-121.588	.5
33	M21A	Mx	0	.5

Member Point Loads (BLC 5 : Antenna Wo (60 Deg))

	Member Label	Direction	Magnitude[lb,k-ft]	Location[ft,%]
1	MP3A	X	54.087	1
2	MP3A	Z	-31.227	1
3	MP3A	Mx	-.037	1
4	MP3A	X	54.087	6
5	MP3A	Z	-31.227	6
6	MP3A	Mx	-.037	6
7	MP3A	X	54.087	1
8	MP3A	Z	-31.227	1
9	MP3A	Mx	-.024	1
10	MP3A	X	54.087	6
11	MP3A	Z	-31.227	6
12	MP3A	Mx	-.024	6
13	MP1A	X	34.146	2.5
14	MP1A	Z	-19.714	2.5
15	MP1A	Mx	-.019	2.5
16	MP1A	X	34.146	4.5
17	MP1A	Z	-19.714	4.5
18	MP1A	Mx	-.019	4.5
19	MP3A	X	47.108	4
20	MP3A	Z	-27.198	4
21	MP3A	Mx	.027	4
22	MP2A	X	57.711	4
23	MP2A	Z	-33.32	4
24	MP2A	Mx	.033	4
25	MP4A	X	121.064	1
26	MP4A	Z	-69.896	1
27	MP4A	Mx	-.069	1
28	MP4A	X	121.064	6
29	MP4A	Z	-69.896	6
30	MP4A	Mx	-.069	6
31	M21A	X	108.595	.5
32	M21A	Z	-62.697	.5
33	M21A	Mx	0	.5

Member Point Loads (BLC 6 : Antenna Wo (90 Deg))

	Member Label	Direction	Magnitude[lb,k-ft]	Location[ft,%]
1	MP3A	X	69.39	1
2	MP3A	Z	0	1
3	MP3A	Mx	-.019	1
4	MP3A	X	69.39	6
5	MP3A	Z	0	6
6	MP3A	Mx	-.019	6
7	MP3A	X	69.39	1
8	MP3A	Z	0	1
9	MP3A	Mx	-.046	1

Member Point Loads (BLC 6 : Antenna Wo (90 Deg)) (Continued)

	Member Label	Direction	Magnitude[lb,k-ft]	Location[ft,%]
10	MP3A	X	69.39	6
11	MP3A	Z	0	6
12	MP3A	Mx	-.046	6
13	MP1A	X	44.642	2.5
14	MP1A	Z	0	2.5
15	MP1A	Mx	-.021	2.5
16	MP1A	X	44.642	4.5
17	MP1A	Z	0	4.5
18	MP1A	Mx	-.021	4.5
19	MP3A	X	56.677	4
20	MP3A	Z	0	4
21	MP3A	Mx	.027	4
22	MP2A	X	69.302	4
23	MP2A	Z	0	4
24	MP2A	Mx	.033	4
25	MP4A	X	145.942	1
26	MP4A	Z	0	1
27	MP4A	Mx	-.069	1
28	MP4A	X	145.942	6
29	MP4A	Z	0	6
30	MP4A	Mx	-.069	6
31	M21A	X	128.796	.5
32	M21A	Z	0	.5
33	M21A	Mx	0	.5

Member Point Loads (BLC 7 : Antenna Wo (120 Deg))

	Member Label	Direction	Magnitude[lb,k-ft]	Location[ft,%]
1	MP3A	X	92.6	1
2	MP3A	Z	53.463	1
3	MP3A	Mx	.013	1
4	MP3A	X	92.6	6
5	MP3A	Z	53.463	6
6	MP3A	Mx	.013	6
7	MP3A	X	92.6	1
8	MP3A	Z	53.463	1
9	MP3A	Mx	-.082	1
10	MP3A	X	92.6	6
11	MP3A	Z	53.463	6
12	MP3A	Mx	-.082	6
13	MP1A	X	63.097	2.5
14	MP1A	Z	36.429	2.5
15	MP1A	Mx	-.023	2.5
16	MP1A	X	63.097	4.5
17	MP1A	Z	36.429	4.5
18	MP1A	Mx	-.023	4.5
19	MP3A	X	59.78	4
20	MP3A	Z	34.514	4
21	MP3A	Mx	.022	4
22	MP2A	X	72.495	4
23	MP2A	Z	41.855	4
24	MP2A	Mx	.027	4

Member Point Loads (BLC 7 : Antenna Wo (120 Deg)) (Continued)

	Member Label	Direction	Magnitude[lb,k-ft]	Location[ft,%]
25	MP4A	X	155.208	1
26	MP4A	Z	89.61	1
27	MP4A	Mx	-.058	1
28	MP4A	X	155.208	6
29	MP4A	Z	89.61	6
30	MP4A	Mx	-.058	6
31	M21A	X	127.479	.5
32	M21A	Z	73.6	.5
33	M21A	Mx	0	.5

Member Point Loads (BLC 8 : Antenna Wo (150 Deg))

	Member Label	Direction	Magnitude[lb,k-ft]	Location[ft,%]
1	MP3A	X	68.762	1
2	MP3A	Z	119.1	1
3	MP3A	Mx	.067	1
4	MP3A	X	68.762	6
5	MP3A	Z	119.1	6
6	MP3A	Mx	.067	6
7	MP3A	X	68.762	1
8	MP3A	Z	119.1	1
9	MP3A	Mx	-.091	1
10	MP3A	X	68.762	6
11	MP3A	Z	119.1	6
12	MP3A	Mx	-.091	6
13	MP1A	X	47.93	2.5
14	MP1A	Z	83.016	2.5
15	MP1A	Mx	-.008	2.5
16	MP1A	X	47.93	4.5
17	MP1A	Z	83.016	4.5
18	MP1A	Mx	-.008	4.5
19	MP3A	X	39.548	4
20	MP3A	Z	68.499	4
21	MP3A	Mx	.007	4
22	MP2A	X	47.728	4
23	MP2A	Z	82.668	4
24	MP2A	Mx	.008	4
25	MP4A	X	103.173	1
26	MP4A	Z	178.702	1
27	MP4A	Mx	-.018	1
28	MP4A	X	103.173	6
29	MP4A	Z	178.702	6
30	MP4A	Mx	-.018	6
31	M21A	X	81.102	.5
32	M21A	Z	140.472	.5
33	M21A	Mx	0	.5

Member Point Loads (BLC 9 : Antenna Wo (180 Deg))

	Member Label	Direction	Magnitude[lb,k-ft]	Location[ft,%]
1	MP3A	X	0	1
2	MP3A	Z	130.588	1
3	MP3A	Mx	.094	1

Member Point Loads (BLC 9 : Antenna Wo (180 Deg)) (Continued)

	Member Label	Direction	Magnitude[lb,k-ft]	Location[ft,%]
4	MP3A	X	0	6
5	MP3A	Z	130.588	6
6	MP3A	Mx	.094	6
7	MP3A	X	0	1
8	MP3A	Z	130.588	1
9	MP3A	Mx	-.049	1
10	MP3A	X	0	6
11	MP3A	Z	130.588	6
12	MP3A	Mx	-.049	6
13	MP1A	X	0	2.5
14	MP1A	Z	90.645	2.5
15	MP1A	Mx	.016	2.5
16	MP1A	X	0	4.5
17	MP1A	Z	90.645	4.5
18	MP1A	Mx	.016	4.5
19	MP3A	X	0	4
20	MP3A	Z	76.813	4
21	MP3A	Mx	-.013	4
22	MP2A	X	0	4
23	MP2A	Z	92.794	4
24	MP2A	Mx	-.016	4
25	MP4A	X	0	1
26	MP4A	Z	200.198	1
27	MP4A	Mx	.034	1
28	MP4A	X	0	6
29	MP4A	Z	200.198	6
30	MP4A	Mx	.034	6
31	M21A	X	0	.5
32	M21A	Z	158.802	.5
33	M21A	Mx	0	.5

Member Point Loads (BLC 10 : Antenna Wo (210 Deg))

	Member Label	Direction	Magnitude[lb,k-ft]	Location[ft,%]
1	MP3A	X	-46.526	1
2	MP3A	Z	80.586	1
3	MP3A	Mx	.071	1
4	MP3A	X	-46.526	6
5	MP3A	Z	80.586	6
6	MP3A	Mx	.071	6
7	MP3A	X	-46.526	1
8	MP3A	Z	80.586	1
9	MP3A	Mx	.00075	1
10	MP3A	X	-46.526	6
11	MP3A	Z	80.586	6
12	MP3A	Mx	.00075	6
13	MP1A	X	-31.215	2.5
14	MP1A	Z	54.066	2.5
15	MP1A	Mx	.024	2.5
16	MP1A	X	-31.215	4.5
17	MP1A	Z	54.066	4.5
18	MP1A	Mx	.024	4.5

Member Point Loads (BLC 10 : Antenna Wo (210 Deg)) (Continued)

	Member Label	Direction	Magnitude[lb,k-ft]	Location[ft,%]
19	MP3A	X	-32.232	4
20	MP3A	Z	55.827	4
21	MP3A	Mx	-.025	4
22	MP2A	X	-39.193	4
23	MP2A	Z	67.884	4
24	MP2A	Mx	-.03	4
25	MP4A	X	-83.46	1
26	MP4A	Z	144.557	1
27	MP4A	Mx	.064	1
28	MP4A	X	-83.46	6
29	MP4A	Z	144.557	6
30	MP4A	Mx	.064	6
31	M21A	X	-70.199	.5
32	M21A	Z	121.588	.5
33	M21A	Mx	0	.5

Member Point Loads (BLC 11 : Antenna Wo (240 Deg))

	Member Label	Direction	Magnitude[lb,k-ft]	Location[ft,%]
1	MP3A	X	-54.087	1
2	MP3A	Z	31.227	1
3	MP3A	Mx	.037	1
4	MP3A	X	-54.087	6
5	MP3A	Z	31.227	6
6	MP3A	Mx	.037	6
7	MP3A	X	-54.087	1
8	MP3A	Z	31.227	1
9	MP3A	Mx	.024	1
10	MP3A	X	-54.087	6
11	MP3A	Z	31.227	6
12	MP3A	Mx	.024	6
13	MP1A	X	-34.146	2.5
14	MP1A	Z	19.714	2.5
15	MP1A	Mx	.019	2.5
16	MP1A	X	-34.146	4.5
17	MP1A	Z	19.714	4.5
18	MP1A	Mx	.019	4.5
19	MP3A	X	-47.108	4
20	MP3A	Z	27.198	4
21	MP3A	Mx	-.027	4
22	MP2A	X	-57.711	4
23	MP2A	Z	33.32	4
24	MP2A	Mx	-.033	4
25	MP4A	X	-121.064	1
26	MP4A	Z	69.896	1
27	MP4A	Mx	.069	1
28	MP4A	X	-121.064	6
29	MP4A	Z	69.896	6
30	MP4A	Mx	.069	6
31	M21A	X	-108.595	.5
32	M21A	Z	62.697	.5
33	M21A	Mx	0	.5

Member Point Loads (BLC 12 : Antenna Wo (270 Deg))

	Member Label	Direction	Magnitude[lb,k-ft]	Location[ft,%]
1	MP3A	X	-69.39	1
2	MP3A	Z	0	1
3	MP3A	Mx	.019	1
4	MP3A	X	-69.39	6
5	MP3A	Z	0	6
6	MP3A	Mx	.019	6
7	MP3A	X	-69.39	1
8	MP3A	Z	0	1
9	MP3A	Mx	.046	1
10	MP3A	X	-69.39	6
11	MP3A	Z	0	6
12	MP3A	Mx	.046	6
13	MP1A	X	-44.642	2.5
14	MP1A	Z	0	2.5
15	MP1A	Mx	.021	2.5
16	MP1A	X	-44.642	4.5
17	MP1A	Z	0	4.5
18	MP1A	Mx	.021	4.5
19	MP3A	X	-56.677	4
20	MP3A	Z	0	4
21	MP3A	Mx	-.027	4
22	MP2A	X	-69.302	4
23	MP2A	Z	0	4
24	MP2A	Mx	-.033	4
25	MP4A	X	-145.942	1
26	MP4A	Z	0	1
27	MP4A	Mx	.069	1
28	MP4A	X	-145.942	6
29	MP4A	Z	0	6
30	MP4A	Mx	.069	6
31	M21A	X	-128.796	.5
32	M21A	Z	0	.5
33	M21A	Mx	0	.5

Member Point Loads (BLC 13 : Antenna Wo (300 Deg))

	Member Label	Direction	Magnitude[lb,k-ft]	Location[ft,%]
1	MP3A	X	-92.6	1
2	MP3A	Z	-53.463	1
3	MP3A	Mx	-.013	1
4	MP3A	X	-92.6	6
5	MP3A	Z	-53.463	6
6	MP3A	Mx	-.013	6
7	MP3A	X	-92.6	1
8	MP3A	Z	-53.463	1
9	MP3A	Mx	.082	1
10	MP3A	X	-92.6	6
11	MP3A	Z	-53.463	6
12	MP3A	Mx	.082	6
13	MP1A	X	-63.097	2.5
14	MP1A	Z	-36.429	2.5
15	MP1A	Mx	.023	2.5

Member Point Loads (BLC 13 : Antenna Wo (300 Deg)) (Continued)

	Member Label	Direction	Magnitude[lb,k-ft]	Location[ft,%]
16	MP1A	X	-63.097	4.5
17	MP1A	Z	-36.429	4.5
18	MP1A	Mx	.023	4.5
19	MP3A	X	-59.78	4
20	MP3A	Z	-34.514	4
21	MP3A	Mx	-.022	4
22	MP2A	X	-72.495	4
23	MP2A	Z	-41.855	4
24	MP2A	Mx	-.027	4
25	MP4A	X	-155.208	1
26	MP4A	Z	-89.61	1
27	MP4A	Mx	.058	1
28	MP4A	X	-155.208	6
29	MP4A	Z	-89.61	6
30	MP4A	Mx	.058	6
31	M21A	X	-127.479	.5
32	M21A	Z	-73.6	.5
33	M21A	Mx	0	.5

Member Point Loads (BLC 14 : Antenna Wo (330 Deg))

	Member Label	Direction	Magnitude[lb,k-ft]	Location[ft,%]
1	MP3A	X	-68.762	1
2	MP3A	Z	-119.1	1
3	MP3A	Mx	-.067	1
4	MP3A	X	-68.762	6
5	MP3A	Z	-119.1	6
6	MP3A	Mx	-.067	6
7	MP3A	X	-68.762	1
8	MP3A	Z	-119.1	1
9	MP3A	Mx	.091	1
10	MP3A	X	-68.762	6
11	MP3A	Z	-119.1	6
12	MP3A	Mx	.091	6
13	MP1A	X	-47.93	2.5
14	MP1A	Z	-83.016	2.5
15	MP1A	Mx	.008	2.5
16	MP1A	X	-47.93	4.5
17	MP1A	Z	-83.016	4.5
18	MP1A	Mx	.008	4.5
19	MP3A	X	-39.548	4
20	MP3A	Z	-68.499	4
21	MP3A	Mx	-.007	4
22	MP2A	X	-47.728	4
23	MP2A	Z	-82.668	4
24	MP2A	Mx	-.008	4
25	MP4A	X	-103.173	1
26	MP4A	Z	-178.702	1
27	MP4A	Mx	.018	1
28	MP4A	X	-103.173	6
29	MP4A	Z	-178.702	6
30	MP4A	Mx	.018	6

Member Point Loads (BLC 14 : Antenna Wo (330 Deg)) (Continued)

	Member Label	Direction	Magnitude[lb,k-ft]	Location[ft,%]
31	M21A	X	-81.102	.5
32	M21A	Z	-140.472	.5
33	M21A	Mx	0	.5

Member Point Loads (BLC 15 : Antenna Wi (0 Deg))

	Member Label	Direction	Magnitude[lb,k-ft]	Location[ft,%]
1	MP3A	X	0	1
2	MP3A	Z	-32.807	1
3	MP3A	Mx	-.024	1
4	MP3A	X	0	6
5	MP3A	Z	-32.807	6
6	MP3A	Mx	-.024	6
7	MP3A	X	0	1
8	MP3A	Z	-32.807	1
9	MP3A	Mx	.012	1
10	MP3A	X	0	6
11	MP3A	Z	-32.807	6
12	MP3A	Mx	.012	6
13	MP1A	X	0	2.5
14	MP1A	Z	-15.439	2.5
15	MP1A	Mx	-.003	2.5
16	MP1A	X	0	4.5
17	MP1A	Z	-15.439	4.5
18	MP1A	Mx	-.003	4.5
19	MP3A	X	0	4
20	MP3A	Z	-16.507	4
21	MP3A	Mx	.003	4
22	MP2A	X	0	4
23	MP2A	Z	-16.531	4
24	MP2A	Mx	.003	4
25	MP4A	X	0	1
26	MP4A	Z	-32.807	1
27	MP4A	Mx	-.006	1
28	MP4A	X	0	6
29	MP4A	Z	-32.807	6
30	MP4A	Mx	-.006	6
31	M21A	X	0	.5
32	M21A	Z	-34.245	.5
33	M21A	Mx	0	.5

Member Point Loads (BLC 16 : Antenna Wi (30 Deg))

	Member Label	Direction	Magnitude[lb,k-ft]	Location[ft,%]
1	MP3A	X	13.925	1
2	MP3A	Z	-24.119	1
3	MP3A	Mx	-.021	1
4	MP3A	X	13.925	6
5	MP3A	Z	-24.119	6
6	MP3A	Mx	-.021	6
7	MP3A	X	13.925	1
8	MP3A	Z	-24.119	1
9	MP3A	Mx	-.000224	1

Member Point Loads (BLC 16 : Antenna Wi (30 Deg)) (Continued)

	Member Label	Direction	Magnitude[lb,k-ft]	Location[ft,%]
10	MP3A	X	13.925	6
11	MP3A	Z	-24.119	6
12	MP3A	Mx	-.000224	6
13	MP1A	X	5.475	2.5
14	MP1A	Z	-9.483	2.5
15	MP1A	Mx	-.004	2.5
16	MP1A	X	5.475	4.5
17	MP1A	Z	-9.483	4.5
18	MP1A	Mx	-.004	4.5
19	MP3A	X	7.032	4
20	MP3A	Z	-12.179	4
21	MP3A	Mx	.005	4
22	MP2A	X	7.093	4
23	MP2A	Z	-12.285	4
24	MP2A	Mx	.005	4
25	MP4A	X	13.925	1
26	MP4A	Z	-24.119	1
27	MP4A	Mx	-.011	1
28	MP4A	X	13.925	6
29	MP4A	Z	-24.119	6
30	MP4A	Mx	-.011	6
31	M21A	X	15.326	.5
32	M21A	Z	-26.545	.5
33	M21A	Mx	0	.5

Member Point Loads (BLC 17 : Antenna Wi (60 Deg))

	Member Label	Direction	Magnitude[lb,k-ft]	Location[ft,%]
1	MP3A	X	20.62	1
2	MP3A	Z	-11.905	1
3	MP3A	Mx	-.014	1
4	MP3A	X	20.62	6
5	MP3A	Z	-11.905	6
6	MP3A	Mx	-.014	6
7	MP3A	X	20.62	1
8	MP3A	Z	-11.905	1
9	MP3A	Mx	-.009	1
10	MP3A	X	20.62	6
11	MP3A	Z	-11.905	6
12	MP3A	Mx	-.009	6
13	MP1A	X	6.314	2.5
14	MP1A	Z	-3.646	2.5
15	MP1A	Mx	-.004	2.5
16	MP1A	X	6.314	4.5
17	MP1A	Z	-3.646	4.5
18	MP1A	Mx	-.004	4.5
19	MP3A	X	10.454	4
20	MP3A	Z	-6.035	4
21	MP3A	Mx	.006	4
22	MP2A	X	10.628	4
23	MP2A	Z	-6.136	4
24	MP2A	Mx	.006	4

Member Point Loads (BLC 17 : Antenna Wi (60 Deg)) (Continued)

	Member Label	Direction	Magnitude[lb,k-ft]	Location[ft,%]
25	MP4A	X	20.62	1
26	MP4A	Z	-11.905	1
27	MP4A	Mx	-.012	1
28	MP4A	X	20.62	6
29	MP4A	Z	-11.905	6
30	MP4A	Mx	-.012	6
31	M21A	X	24.007	.5
32	M21A	Z	-13.861	.5
33	M21A	Mx	0	.5

Member Point Loads (BLC 18 : Antenna Wi (90 Deg))

	Member Label	Direction	Magnitude[lb,k-ft]	Location[ft,%]
1	MP3A	X	24.725	1
2	MP3A	Z	0	1
3	MP3A	Mx	-.007	1
4	MP3A	X	24.725	6
5	MP3A	Z	0	6
6	MP3A	Mx	-.007	6
7	MP3A	X	24.725	1
8	MP3A	Z	0	1
9	MP3A	Mx	-.017	1
10	MP3A	X	24.725	6
11	MP3A	Z	0	6
12	MP3A	Mx	-.017	6
13	MP1A	X	8.121	2.5
14	MP1A	Z	0	2.5
15	MP1A	Mx	-.004	2.5
16	MP1A	X	8.121	4.5
17	MP1A	Z	0	4.5
18	MP1A	Mx	-.004	4.5
19	MP3A	X	12.523	4
20	MP3A	Z	0	4
21	MP3A	Mx	.006	4
22	MP2A	X	12.706	4
23	MP2A	Z	0	4
24	MP2A	Mx	.006	4
25	MP4A	X	24.725	1
26	MP4A	Z	0	1
27	MP4A	Mx	-.012	1
28	MP4A	X	24.725	6
29	MP4A	Z	0	6
30	MP4A	Mx	-.012	6
31	M21A	X	28.385	.5
32	M21A	Z	0	.5
33	M21A	Mx	0	.5

Member Point Loads (BLC 19 : Antenna Wi (120 Deg))

	Member Label	Direction	Magnitude[lb,k-ft]	Location[ft,%]
1	MP3A	X	25.705	1
2	MP3A	Z	14.841	1
3	MP3A	Mx	.004	1

Member Point Loads (BLC 19 : Antenna Wi (120 Deg)) (Continued)

	Member Label	Direction	Magnitude[lb,k-ft]	Location[ft,%]
4	MP3A	X	25.705	6
5	MP3A	Z	14.841	6
6	MP3A	Mx	.004	6
7	MP3A	X	25.705	1
8	MP3A	Z	14.841	1
9	MP3A	Mx	-.023	1
10	MP3A	X	25.705	6
11	MP3A	Z	14.841	6
12	MP3A	Mx	-.023	6
13	MP1A	X	10.92	2.5
14	MP1A	Z	6.305	2.5
15	MP1A	Mx	-.004	2.5
16	MP1A	X	10.92	4.5
17	MP1A	Z	6.305	4.5
18	MP1A	Mx	-.004	4.5
19	MP3A	X	12.961	4
20	MP3A	Z	7.483	4
21	MP3A	Mx	.005	4
22	MP2A	X	13.036	4
23	MP2A	Z	7.526	4
24	MP2A	Mx	.005	4
25	MP4A	X	25.705	1
26	MP4A	Z	14.841	1
27	MP4A	Mx	-.01	1
28	MP4A	X	25.705	6
29	MP4A	Z	14.841	6
30	MP4A	Mx	-.01	6
31	M21A	X	27.695	.5
32	M21A	Z	15.99	.5
33	M21A	Mx	0	.5

Member Point Loads (BLC 20 : Antenna Wi (150 Deg))

	Member Label	Direction	Magnitude[lb,k-ft]	Location[ft,%]
1	MP3A	X	16.861	1
2	MP3A	Z	29.205	1
3	MP3A	Mx	.016	1
4	MP3A	X	16.861	6
5	MP3A	Z	29.205	6
6	MP3A	Mx	.016	6
7	MP3A	X	16.861	1
8	MP3A	Z	29.205	1
9	MP3A	Mx	-.022	1
10	MP3A	X	16.861	6
11	MP3A	Z	29.205	6
12	MP3A	Mx	-.022	6
13	MP1A	X	8.134	2.5
14	MP1A	Z	14.089	2.5
15	MP1A	Mx	-.001	2.5
16	MP1A	X	8.134	4.5
17	MP1A	Z	14.089	4.5
18	MP1A	Mx	-.001	4.5

Member Point Loads (BLC 20 : Antenna Wi (150 Deg)) (Continued)

	Member Label	Direction	Magnitude[lb,k-ft]	Location[ft,%]
19	MP3A	X	8.479	4
20	MP3A	Z	14.686	4
21	MP3A	Mx	.001	4
22	MP2A	X	8.482	4
23	MP2A	Z	14.692	4
24	MP2A	Mx	.001	4
25	MP4A	X	16.861	1
26	MP4A	Z	29.205	1
27	MP4A	Mx	-.003	1
28	MP4A	X	16.861	6
29	MP4A	Z	29.205	6
30	MP4A	Mx	-.003	6
31	M21A	X	17.455	.5
32	M21A	Z	30.232	.5
33	M21A	Mx	0	.5

Member Point Loads (BLC 21 : Antenna Wi (180 Deg))

	Member Label	Direction	Magnitude[lb,k-ft]	Location[ft,%]
1	MP3A	X	0	1
2	MP3A	Z	32.807	1
3	MP3A	Mx	.024	1
4	MP3A	X	0	6
5	MP3A	Z	32.807	6
6	MP3A	Mx	.024	6
7	MP3A	X	0	1
8	MP3A	Z	32.807	1
9	MP3A	Mx	-.012	1
10	MP3A	X	0	6
11	MP3A	Z	32.807	6
12	MP3A	Mx	-.012	6
13	MP1A	X	0	2.5
14	MP1A	Z	15.439	2.5
15	MP1A	Mx	.003	2.5
16	MP1A	X	0	4.5
17	MP1A	Z	15.439	4.5
18	MP1A	Mx	.003	4.5
19	MP3A	X	0	4
20	MP3A	Z	16.507	4
21	MP3A	Mx	-.003	4
22	MP2A	X	0	4
23	MP2A	Z	16.531	4
24	MP2A	Mx	-.003	4
25	MP4A	X	0	1
26	MP4A	Z	32.807	1
27	MP4A	Mx	.006	1
28	MP4A	X	0	6
29	MP4A	Z	32.807	6
30	MP4A	Mx	.006	6
31	M21A	X	0	.5
32	M21A	Z	34.245	.5
33	M21A	Mx	0	.5

Member Point Loads (BLC 22 : Antenna Wi (210 Deg))

	Member Label	Direction	Magnitude[lb,k-ft]	Location[ft,%]
1	MP3A	X	-13.925	1
2	MP3A	Z	24.119	1
3	MP3A	Mx	.021	1
4	MP3A	X	-13.925	6
5	MP3A	Z	24.119	6
6	MP3A	Mx	.021	6
7	MP3A	X	-13.925	1
8	MP3A	Z	24.119	1
9	MP3A	Mx	.000224	1
10	MP3A	X	-13.925	6
11	MP3A	Z	24.119	6
12	MP3A	Mx	.000224	6
13	MP1A	X	-5.475	2.5
14	MP1A	Z	9.483	2.5
15	MP1A	Mx	.004	2.5
16	MP1A	X	-5.475	4.5
17	MP1A	Z	9.483	4.5
18	MP1A	Mx	.004	4.5
19	MP3A	X	-7.032	4
20	MP3A	Z	12.179	4
21	MP3A	Mx	-.005	4
22	MP2A	X	-7.093	4
23	MP2A	Z	12.285	4
24	MP2A	Mx	-.005	4
25	MP4A	X	-13.925	1
26	MP4A	Z	24.119	1
27	MP4A	Mx	.011	1
28	MP4A	X	-13.925	6
29	MP4A	Z	24.119	6
30	MP4A	Mx	.011	6
31	M21A	X	-15.326	.5
32	M21A	Z	26.545	.5
33	M21A	Mx	0	.5

Member Point Loads (BLC 23 : Antenna Wi (240 Deg))

	Member Label	Direction	Magnitude[lb,k-ft]	Location[ft,%]
1	MP3A	X	-20.62	1
2	MP3A	Z	11.905	1
3	MP3A	Mx	.014	1
4	MP3A	X	-20.62	6
5	MP3A	Z	11.905	6
6	MP3A	Mx	.014	6
7	MP3A	X	-20.62	1
8	MP3A	Z	11.905	1
9	MP3A	Mx	.009	1
10	MP3A	X	-20.62	6
11	MP3A	Z	11.905	6
12	MP3A	Mx	.009	6
13	MP1A	X	-6.314	2.5
14	MP1A	Z	3.646	2.5
15	MP1A	Mx	.004	2.5

Member Point Loads (BLC 23 : Antenna Wi (240 Deg)) (Continued)

	Member Label	Direction	Magnitude[lb,k-ft]	Location[ft,%]
16	MP1A	X	-6.314	4.5
17	MP1A	Z	3.646	4.5
18	MP1A	Mx	.004	4.5
19	MP3A	X	-10.454	4
20	MP3A	Z	6.035	4
21	MP3A	Mx	-.006	4
22	MP2A	X	-10.628	4
23	MP2A	Z	6.136	4
24	MP2A	Mx	-.006	4
25	MP4A	X	-20.62	1
26	MP4A	Z	11.905	1
27	MP4A	Mx	.012	1
28	MP4A	X	-20.62	6
29	MP4A	Z	11.905	6
30	MP4A	Mx	.012	6
31	M21A	X	-24.007	.5
32	M21A	Z	13.861	.5
33	M21A	Mx	0	.5

Member Point Loads (BLC 24 : Antenna Wi (270 Deg))

	Member Label	Direction	Magnitude[lb,k-ft]	Location[ft,%]
1	MP3A	X	-24.725	1
2	MP3A	Z	0	1
3	MP3A	Mx	.007	1
4	MP3A	X	-24.725	6
5	MP3A	Z	0	6
6	MP3A	Mx	.007	6
7	MP3A	X	-24.725	1
8	MP3A	Z	0	1
9	MP3A	Mx	.017	1
10	MP3A	X	-24.725	6
11	MP3A	Z	0	6
12	MP3A	Mx	.017	6
13	MP1A	X	-8.121	2.5
14	MP1A	Z	0	2.5
15	MP1A	Mx	.004	2.5
16	MP1A	X	-8.121	4.5
17	MP1A	Z	0	4.5
18	MP1A	Mx	.004	4.5
19	MP3A	X	-12.523	4
20	MP3A	Z	0	4
21	MP3A	Mx	-.006	4
22	MP2A	X	-12.706	4
23	MP2A	Z	0	4
24	MP2A	Mx	-.006	4
25	MP4A	X	-24.725	1
26	MP4A	Z	0	1
27	MP4A	Mx	.012	1
28	MP4A	X	-24.725	6
29	MP4A	Z	0	6
30	MP4A	Mx	.012	6

Member Point Loads (BLC 24 : Antenna Wi (270 Deg)) (Continued)

	Member Label	Direction	Magnitude[lb,k-ft]	Location[ft,%]
31	M21A	X	-28.385	.5
32	M21A	Z	0	.5
33	M21A	Mx	0	.5

Member Point Loads (BLC 25 : Antenna Wi (300 Deg))

	Member Label	Direction	Magnitude[lb,k-ft]	Location[ft,%]
1	MP3A	X	-25.705	1
2	MP3A	Z	-14.841	1
3	MP3A	Mx	-.004	1
4	MP3A	X	-25.705	6
5	MP3A	Z	-14.841	6
6	MP3A	Mx	-.004	6
7	MP3A	X	-25.705	1
8	MP3A	Z	-14.841	1
9	MP3A	Mx	.023	1
10	MP3A	X	-25.705	6
11	MP3A	Z	-14.841	6
12	MP3A	Mx	.023	6
13	MP1A	X	-10.92	2.5
14	MP1A	Z	-6.305	2.5
15	MP1A	Mx	.004	2.5
16	MP1A	X	-10.92	4.5
17	MP1A	Z	-6.305	4.5
18	MP1A	Mx	.004	4.5
19	MP3A	X	-12.961	4
20	MP3A	Z	-7.483	4
21	MP3A	Mx	-.005	4
22	MP2A	X	-13.036	4
23	MP2A	Z	-7.526	4
24	MP2A	Mx	-.005	4
25	MP4A	X	-25.705	1
26	MP4A	Z	-14.841	1
27	MP4A	Mx	.01	1
28	MP4A	X	-25.705	6
29	MP4A	Z	-14.841	6
30	MP4A	Mx	.01	6
31	M21A	X	-27.695	.5
32	M21A	Z	-15.99	.5
33	M21A	Mx	0	.5

Member Point Loads (BLC 26 : Antenna Wi (330 Deg))

	Member Label	Direction	Magnitude[lb,k-ft]	Location[ft,%]
1	MP3A	X	-16.861	1
2	MP3A	Z	-29.205	1
3	MP3A	Mx	-.016	1
4	MP3A	X	-16.861	6
5	MP3A	Z	-29.205	6
6	MP3A	Mx	-.016	6
7	MP3A	X	-16.861	1
8	MP3A	Z	-29.205	1
9	MP3A	Mx	.022	1

Member Point Loads (BLC 26 : Antenna Wi (330 Deg)) (Continued)

	Member Label	Direction	Magnitude[lb,k-ft]	Location[ft,%]
10	MP3A	X	-16.861	6
11	MP3A	Z	-29.205	6
12	MP3A	Mx	.022	6
13	MP1A	X	-8.134	2.5
14	MP1A	Z	-14.089	2.5
15	MP1A	Mx	.001	2.5
16	MP1A	X	-8.134	4.5
17	MP1A	Z	-14.089	4.5
18	MP1A	Mx	.001	4.5
19	MP3A	X	-8.479	4
20	MP3A	Z	-14.686	4
21	MP3A	Mx	-.001	4
22	MP2A	X	-8.482	4
23	MP2A	Z	-14.692	4
24	MP2A	Mx	-.001	4
25	MP4A	X	-16.861	1
26	MP4A	Z	-29.205	1
27	MP4A	Mx	.003	1
28	MP4A	X	-16.861	6
29	MP4A	Z	-29.205	6
30	MP4A	Mx	.003	6
31	M21A	X	-17.455	.5
32	M21A	Z	-30.232	.5
33	M21A	Mx	0	.5

Member Point Loads (BLC 27 : Antenna Wm (0 Deg))

	Member Label	Direction	Magnitude[lb,k-ft]	Location[ft,%]
1	MP3A	X	0	1
2	MP3A	Z	-6.954	1
3	MP3A	Mx	-.005	1
4	MP3A	X	0	6
5	MP3A	Z	-6.954	6
6	MP3A	Mx	-.005	6
7	MP3A	X	0	1
8	MP3A	Z	-6.954	1
9	MP3A	Mx	.003	1
10	MP3A	X	0	6
11	MP3A	Z	-6.954	6
12	MP3A	Mx	.003	6
13	MP1A	X	0	2.5
14	MP1A	Z	-4.827	2.5
15	MP1A	Mx	-.000825	2.5
16	MP1A	X	0	4.5
17	MP1A	Z	-4.827	4.5
18	MP1A	Mx	-.000825	4.5
19	MP3A	X	0	4
20	MP3A	Z	-4.091	4
21	MP3A	Mx	.0007	4
22	MP2A	X	0	4
23	MP2A	Z	-4.942	4
24	MP2A	Mx	.000845	4

Member Point Loads (BLC 27 : Antenna Wm (0 Deg)) (Continued)

	Member Label	Direction	Magnitude[lb,k-ft]	Location[ft,%]
25	MP4A	X	0	1
26	MP4A	Z	-10.661	1
27	MP4A	Mx	-.002	1
28	MP4A	X	0	6
29	MP4A	Z	-10.661	6
30	MP4A	Mx	-.002	6
31	M21A	X	0	.5
32	M21A	Z	-8.457	.5
33	M21A	Mx	0	.5

Member Point Loads (BLC 28 : Antenna Wm (30 Deg))

	Member Label	Direction	Magnitude[lb,k-ft]	Location[ft,%]
1	MP3A	X	2.478	1
2	MP3A	Z	-4.292	1
3	MP3A	Mx	-.004	1
4	MP3A	X	2.478	6
5	MP3A	Z	-4.292	6
6	MP3A	Mx	-.004	6
7	MP3A	X	2.478	1
8	MP3A	Z	-4.292	1
9	MP3A	Mx	-4e-5	1
10	MP3A	X	2.478	6
11	MP3A	Z	-4.292	6
12	MP3A	Mx	-4e-5	6
13	MP1A	X	1.662	2.5
14	MP1A	Z	-2.879	2.5
15	MP1A	Mx	-.001	2.5
16	MP1A	X	1.662	4.5
17	MP1A	Z	-2.879	4.5
18	MP1A	Mx	-.001	4.5
19	MP3A	X	1.716	4
20	MP3A	Z	-2.973	4
21	MP3A	Mx	.001	4
22	MP2A	X	2.087	4
23	MP2A	Z	-3.615	4
24	MP2A	Mx	.002	4
25	MP4A	X	4.445	1
26	MP4A	Z	-7.698	1
27	MP4A	Mx	-.003	1
28	MP4A	X	4.445	6
29	MP4A	Z	-7.698	6
30	MP4A	Mx	-.003	6
31	M21A	X	3.738	.5
32	M21A	Z	-6.475	.5
33	M21A	Mx	0	.5

Member Point Loads (BLC 29 : Antenna Wm (60 Deg))

	Member Label	Direction	Magnitude[lb,k-ft]	Location[ft,%]
1	MP3A	X	2.88	1
2	MP3A	Z	-1.663	1
3	MP3A	Mx	-.002	1

Member Point Loads (BLC 29 : Antenna Wm (60 Deg)) (Continued)

	Member Label	Direction	Magnitude[lb,k-ft]	Location[ft,%]
4	MP3A	X	2.88	6
5	MP3A	Z	-1.663	6
6	MP3A	Mx	-.002	6
7	MP3A	X	2.88	1
8	MP3A	Z	-1.663	1
9	MP3A	Mx	-.001	1
10	MP3A	X	2.88	6
11	MP3A	Z	-1.663	6
12	MP3A	Mx	-.001	6
13	MP1A	X	1.818	2.5
14	MP1A	Z	-1.05	2.5
15	MP1A	Mx	-.001	2.5
16	MP1A	X	1.818	4.5
17	MP1A	Z	-1.05	4.5
18	MP1A	Mx	-.001	4.5
19	MP3A	X	2.509	4
20	MP3A	Z	-1.448	4
21	MP3A	Mx	.001	4
22	MP2A	X	3.073	4
23	MP2A	Z	-1.774	4
24	MP2A	Mx	.002	4
25	MP4A	X	6.447	1
26	MP4A	Z	-3.722	1
27	MP4A	Mx	-.004	1
28	MP4A	X	6.447	6
29	MP4A	Z	-3.722	6
30	MP4A	Mx	-.004	6
31	M21A	X	5.783	.5
32	M21A	Z	-3.339	.5
33	M21A	Mx	0	.5

Member Point Loads (BLC 30 : Antenna Wm (90 Deg))

	Member Label	Direction	Magnitude[lb,k-ft]	Location[ft,%]
1	MP3A	X	3.695	1
2	MP3A	Z	0	1
3	MP3A	Mx	-.000999	1
4	MP3A	X	3.695	6
5	MP3A	Z	0	6
6	MP3A	Mx	-.000999	6
7	MP3A	X	3.695	1
8	MP3A	Z	0	1
9	MP3A	Mx	-.002	1
10	MP3A	X	3.695	6
11	MP3A	Z	0	6
12	MP3A	Mx	-.002	6
13	MP1A	X	2.377	2.5
14	MP1A	Z	0	2.5
15	MP1A	Mx	-.001	2.5
16	MP1A	X	2.377	4.5
17	MP1A	Z	0	4.5
18	MP1A	Mx	-.001	4.5

Member Point Loads (BLC 30 : Antenna Wm (90 Deg)) (Continued)

	Member Label	Direction	Magnitude[lb,k-ft]	Location[ft,%]
19	MP3A	X	3.018	4
20	MP3A	Z	0	4
21	MP3A	Mx	.001	4
22	MP2A	X	3.691	4
23	MP2A	Z	0	4
24	MP2A	Mx	.002	4
25	MP4A	X	7.772	1
26	MP4A	Z	0	1
27	MP4A	Mx	-.004	1
28	MP4A	X	7.772	6
29	MP4A	Z	0	6
30	MP4A	Mx	-.004	6
31	M21A	X	6.859	.5
32	M21A	Z	0	.5
33	M21A	Mx	0	.5

Member Point Loads (BLC 31 : Antenna Wm (120 Deg))

	Member Label	Direction	Magnitude[lb,k-ft]	Location[ft,%]
1	MP3A	X	4.931	1
2	MP3A	Z	2.847	1
3	MP3A	Mx	.000714	1
4	MP3A	X	4.931	6
5	MP3A	Z	2.847	6
6	MP3A	Mx	.000714	6
7	MP3A	X	4.931	1
8	MP3A	Z	2.847	1
9	MP3A	Mx	-.004	1
10	MP3A	X	4.931	6
11	MP3A	Z	2.847	6
12	MP3A	Mx	-.004	6
13	MP1A	X	3.36	2.5
14	MP1A	Z	1.94	2.5
15	MP1A	Mx	-.001	2.5
16	MP1A	X	3.36	4.5
17	MP1A	Z	1.94	4.5
18	MP1A	Mx	-.001	4.5
19	MP3A	X	3.184	4
20	MP3A	Z	1.838	4
21	MP3A	Mx	.001	4
22	MP2A	X	3.861	4
23	MP2A	Z	2.229	4
24	MP2A	Mx	.001	4
25	MP4A	X	8.266	1
26	MP4A	Z	4.772	1
27	MP4A	Mx	-.003	1
28	MP4A	X	8.266	6
29	MP4A	Z	4.772	6
30	MP4A	Mx	-.003	6
31	M21A	X	6.789	.5
32	M21A	Z	3.92	.5
33	M21A	Mx	0	.5

Member Point Loads (BLC 32 : Antenna Wm (150 Deg))

	Member Label	Direction	Magnitude[lb,k-ft]	Location[ft,%]
1	MP3A	X	3.662	1
2	MP3A	Z	6.343	1
3	MP3A	Mx	.004	1
4	MP3A	X	3.662	6
5	MP3A	Z	6.343	6
6	MP3A	Mx	.004	6
7	MP3A	X	3.662	1
8	MP3A	Z	6.343	1
9	MP3A	Mx	-.005	1
10	MP3A	X	3.662	6
11	MP3A	Z	6.343	6
12	MP3A	Mx	-.005	6
13	MP1A	X	2.552	2.5
14	MP1A	Z	4.421	2.5
15	MP1A	Mx	-.000443	2.5
16	MP1A	X	2.552	4.5
17	MP1A	Z	4.421	4.5
18	MP1A	Mx	-.000443	4.5
19	MP3A	X	2.106	4
20	MP3A	Z	3.648	4
21	MP3A	Mx	.000366	4
22	MP2A	X	2.542	4
23	MP2A	Z	4.402	4
24	MP2A	Mx	.000442	4
25	MP4A	X	5.494	1
26	MP4A	Z	9.517	1
27	MP4A	Mx	-.000954	1
28	MP4A	X	5.494	6
29	MP4A	Z	9.517	6
30	MP4A	Mx	-.000954	6
31	M21A	X	4.319	.5
32	M21A	Z	7.481	.5
33	M21A	Mx	0	.5

Member Point Loads (BLC 33 : Antenna Wm (180 Deg))

	Member Label	Direction	Magnitude[lb,k-ft]	Location[ft,%]
1	MP3A	X	0	1
2	MP3A	Z	6.954	1
3	MP3A	Mx	.005	1
4	MP3A	X	0	6
5	MP3A	Z	6.954	6
6	MP3A	Mx	.005	6
7	MP3A	X	0	1
8	MP3A	Z	6.954	1
9	MP3A	Mx	-.003	1
10	MP3A	X	0	6
11	MP3A	Z	6.954	6
12	MP3A	Mx	-.003	6
13	MP1A	X	0	2.5
14	MP1A	Z	4.827	2.5
15	MP1A	Mx	.000825	2.5

Member Point Loads (BLC 33 : Antenna Wm (180 Deg)) (Continued)

	Member Label	Direction	Magnitude[lb,k-ft]	Location[ft,%]
16	MP1A	X	0	4.5
17	MP1A	Z	4.827	4.5
18	MP1A	Mx	.000825	4.5
19	MP3A	X	0	4
20	MP3A	Z	4.091	4
21	MP3A	Mx	-.0007	4
22	MP2A	X	0	4
23	MP2A	Z	4.942	4
24	MP2A	Mx	-.000845	4
25	MP4A	X	0	1
26	MP4A	Z	10.661	1
27	MP4A	Mx	.002	1
28	MP4A	X	0	6
29	MP4A	Z	10.661	6
30	MP4A	Mx	.002	6
31	M21A	X	0	.5
32	M21A	Z	8.457	.5
33	M21A	Mx	0	.5

Member Point Loads (BLC 34 : Antenna Wm (210 Deg))

	Member Label	Direction	Magnitude[lb,k-ft]	Location[ft,%]
1	MP3A	X	-2.478	1
2	MP3A	Z	4.292	1
3	MP3A	Mx	.004	1
4	MP3A	X	-2.478	6
5	MP3A	Z	4.292	6
6	MP3A	Mx	.004	6
7	MP3A	X	-2.478	1
8	MP3A	Z	4.292	1
9	MP3A	Mx	4e-5	1
10	MP3A	X	-2.478	6
11	MP3A	Z	4.292	6
12	MP3A	Mx	4e-5	6
13	MP1A	X	-1.662	2.5
14	MP1A	Z	2.879	2.5
15	MP1A	Mx	.001	2.5
16	MP1A	X	-1.662	4.5
17	MP1A	Z	2.879	4.5
18	MP1A	Mx	.001	4.5
19	MP3A	X	-1.716	4
20	MP3A	Z	2.973	4
21	MP3A	Mx	-.001	4
22	MP2A	X	-2.087	4
23	MP2A	Z	3.615	4
24	MP2A	Mx	-.002	4
25	MP4A	X	-4.445	1
26	MP4A	Z	7.698	1
27	MP4A	Mx	.003	1
28	MP4A	X	-4.445	6
29	MP4A	Z	7.698	6
30	MP4A	Mx	.003	6

Member Point Loads (BLC 34 : Antenna Wm (210 Deg)) (Continued)

	Member Label	Direction	Magnitude[lb,k-ft]	Location[ft,%]
31	M21A	X	-3.738	.5
32	M21A	Z	6.475	.5
33	M21A	Mx	0	.5

Member Point Loads (BLC 35 : Antenna Wm (240 Deg))

	Member Label	Direction	Magnitude[lb,k-ft]	Location[ft,%]
1	MP3A	X	-2.88	1
2	MP3A	Z	1.663	1
3	MP3A	Mx	.002	1
4	MP3A	X	-2.88	6
5	MP3A	Z	1.663	6
6	MP3A	Mx	.002	6
7	MP3A	X	-2.88	1
8	MP3A	Z	1.663	1
9	MP3A	Mx	.001	1
10	MP3A	X	-2.88	6
11	MP3A	Z	1.663	6
12	MP3A	Mx	.001	6
13	MP1A	X	-1.818	2.5
14	MP1A	Z	1.05	2.5
15	MP1A	Mx	.001	2.5
16	MP1A	X	-1.818	4.5
17	MP1A	Z	1.05	4.5
18	MP1A	Mx	.001	4.5
19	MP3A	X	-2.509	4
20	MP3A	Z	1.448	4
21	MP3A	Mx	-.001	4
22	MP2A	X	-3.073	4
23	MP2A	Z	1.774	4
24	MP2A	Mx	-.002	4
25	MP4A	X	-6.447	1
26	MP4A	Z	3.722	1
27	MP4A	Mx	.004	1
28	MP4A	X	-6.447	6
29	MP4A	Z	3.722	6
30	MP4A	Mx	.004	6
31	M21A	X	-5.783	.5
32	M21A	Z	3.339	.5
33	M21A	Mx	0	.5

Member Point Loads (BLC 36 : Antenna Wm (270 Deg))

	Member Label	Direction	Magnitude[lb,k-ft]	Location[ft,%]
1	MP3A	X	-3.695	1
2	MP3A	Z	0	1
3	MP3A	Mx	.000999	1
4	MP3A	X	-3.695	6
5	MP3A	Z	0	6
6	MP3A	Mx	.000999	6
7	MP3A	X	-3.695	1
8	MP3A	Z	0	1
9	MP3A	Mx	.002	1

Member Point Loads (BLC 36 : Antenna Wm (270 Deg)) (Continued)

	Member Label	Direction	Magnitude[lb,k-ft]	Location[ft,%]
10	MP3A	X	-3.695	6
11	MP3A	Z	0	6
12	MP3A	Mx	.002	6
13	MP1A	X	-2.377	2.5
14	MP1A	Z	0	2.5
15	MP1A	Mx	.001	2.5
16	MP1A	X	-2.377	4.5
17	MP1A	Z	0	4.5
18	MP1A	Mx	.001	4.5
19	MP3A	X	-3.018	4
20	MP3A	Z	0	4
21	MP3A	Mx	-.001	4
22	MP2A	X	-3.691	4
23	MP2A	Z	0	4
24	MP2A	Mx	-.002	4
25	MP4A	X	-7.772	1
26	MP4A	Z	0	1
27	MP4A	Mx	.004	1
28	MP4A	X	-7.772	6
29	MP4A	Z	0	6
30	MP4A	Mx	.004	6
31	M21A	X	-6.859	.5
32	M21A	Z	0	.5
33	M21A	Mx	0	.5

Member Point Loads (BLC 37 : Antenna Wm (300 Deg))

	Member Label	Direction	Magnitude[lb,k-ft]	Location[ft,%]
1	MP3A	X	-4.931	1
2	MP3A	Z	-2.847	1
3	MP3A	Mx	-.000714	1
4	MP3A	X	-4.931	6
5	MP3A	Z	-2.847	6
6	MP3A	Mx	-.000714	6
7	MP3A	X	-4.931	1
8	MP3A	Z	-2.847	1
9	MP3A	Mx	.004	1
10	MP3A	X	-4.931	6
11	MP3A	Z	-2.847	6
12	MP3A	Mx	.004	6
13	MP1A	X	-3.36	2.5
14	MP1A	Z	-1.94	2.5
15	MP1A	Mx	.001	2.5
16	MP1A	X	-3.36	4.5
17	MP1A	Z	-1.94	4.5
18	MP1A	Mx	.001	4.5
19	MP3A	X	-3.184	4
20	MP3A	Z	-1.838	4
21	MP3A	Mx	-.001	4
22	MP2A	X	-3.861	4
23	MP2A	Z	-2.229	4
24	MP2A	Mx	-.001	4

Member Point Loads (BLC 37 : Antenna Wm (300 Deg)) (Continued)

	Member Label	Direction	Magnitude[lb,k-ft]	Location[ft,%]
25	MP4A	X	-8.266	1
26	MP4A	Z	-4.772	1
27	MP4A	Mx	.003	1
28	MP4A	X	-8.266	6
29	MP4A	Z	-4.772	6
30	MP4A	Mx	.003	6
31	M21A	X	-6.789	.5
32	M21A	Z	-3.92	.5
33	M21A	Mx	0	.5

Member Point Loads (BLC 38 : Antenna Wm (330 Deg))

	Member Label	Direction	Magnitude[lb,k-ft]	Location[ft,%]
1	MP3A	X	-3.662	1
2	MP3A	Z	-6.343	1
3	MP3A	Mx	-.004	1
4	MP3A	X	-3.662	6
5	MP3A	Z	-6.343	6
6	MP3A	Mx	-.004	6
7	MP3A	X	-3.662	1
8	MP3A	Z	-6.343	1
9	MP3A	Mx	.005	1
10	MP3A	X	-3.662	6
11	MP3A	Z	-6.343	6
12	MP3A	Mx	.005	6
13	MP1A	X	-2.552	2.5
14	MP1A	Z	-4.421	2.5
15	MP1A	Mx	.000443	2.5
16	MP1A	X	-2.552	4.5
17	MP1A	Z	-4.421	4.5
18	MP1A	Mx	.000443	4.5
19	MP3A	X	-2.106	4
20	MP3A	Z	-3.648	4
21	MP3A	Mx	-.000366	4
22	MP2A	X	-2.542	4
23	MP2A	Z	-4.402	4
24	MP2A	Mx	-.000442	4
25	MP4A	X	-5.494	1
26	MP4A	Z	-9.517	1
27	MP4A	Mx	.000954	1
28	MP4A	X	-5.494	6
29	MP4A	Z	-9.517	6
30	MP4A	Mx	.000954	6
31	M21A	X	-4.319	.5
32	M21A	Z	-7.481	.5
33	M21A	Mx	0	.5

Member Point Loads (BLC 77 : Lm1)

	Member Label	Direction	Magnitude[lb,k-ft]	Location[ft,%]
1	LM1	Y	-500	0

Member Point Loads (BLC 78 : Lm2)

	Member Label	Direction	Magnitude[lb,k-ft]	Location[ft,%]
1	LM2	Y	-500	0

Member Point Loads (BLC 79 : Lv1)

	Member Label	Direction	Magnitude[lb,k-ft]	Location[ft,%]
1	LV	Y	-250	0

Member Point Loads (BLC 80 : Lv2)

	Member Label	Direction	Magnitude[lb,k-ft]	Location[ft,%]
1	LV	Y	-250	%50

Member Point Loads (BLC 81 : Antenna Ev)

	Member Label	Direction	Magnitude[lb,k-ft]	Location[ft,%]
1	MP3A	Y	-.886	1
2	MP3A	My	-.000239	1
3	MP3A	Mz	.000637	1
4	MP3A	Y	-.886	6
5	MP3A	My	-.000239	6
6	MP3A	Mz	.000637	6
7	MP3A	Y	-.886	1
8	MP3A	My	-.000593	1
9	MP3A	Mz	-.000334	1
10	MP3A	Y	-.886	6
11	MP3A	My	-.000593	6
12	MP3A	Mz	-.000334	6
13	MP1A	Y	-1.161	2.5
14	MP1A	My	-.000546	2.5
15	MP1A	Mz	.000199	2.5
16	MP1A	Y	-1.161	4.5
17	MP1A	My	-.000546	4.5
18	MP1A	Mz	.000199	4.5
19	MP3A	Y	-3.028	4
20	MP3A	My	.001	4
21	MP3A	Mz	-.000518	4
22	MP2A	Y	-3.206	4
23	MP2A	My	.002	4
24	MP2A	Mz	-.000548	4
25	MP4A	Y	-.671	1
26	MP4A	My	-.000315	1
27	MP4A	Mz	.000115	1
28	MP4A	Y	-.671	6
29	MP4A	My	-.000315	6
30	MP4A	Mz	.000115	6
31	M21A	Y	-1.297	.5
32	M21A	My	0	.5
33	M21A	Mz	0	.5

Member Point Loads (BLC 82 : Antenna Eh (0 Deg))

	Member Label	Direction	Magnitude[lb,k-ft]	Location[ft,%]
1	MP3A	Z	-2.214	1
2	MP3A	Mx	-.002	1

Member Point Loads (BLC 82 : Antenna Eh (0 Deg)) (Continued)

	Member Label	Direction	Magnitude[lb,k-ft]	Location[ft,%]
3	MP3A	Z	-2.214	6
4	MP3A	Mx	-.002	6
5	MP3A	Z	-2.214	1
6	MP3A	Mx	.000835	1
7	MP3A	Z	-2.214	6
8	MP3A	Mx	.000835	6
9	MP1A	Z	-2.903	2.5
10	MP1A	Mx	-.000496	2.5
11	MP1A	Z	-2.903	4.5
12	MP1A	Mx	-.000496	4.5
13	MP3A	Z	-7.57	4
14	MP3A	Mx	.001	4
15	MP2A	Z	-8.015	4
16	MP2A	Mx	.001	4
17	MP4A	Z	-1.677	1
18	MP4A	Mx	-.000287	1
19	MP4A	Z	-1.677	6
20	MP4A	Mx	-.000287	6
21	M21A	Z	-3.243	.5
22	M21A	Mx	0	.5

Member Point Loads (BLC 83 : Antenna Eh (90 Deg))

	Member Label	Direction	Magnitude[lb,k-ft]	Location[ft,%]
1	MP3A	X	2.214	1
2	MP3A	Mx	-.000599	1
3	MP3A	X	2.214	6
4	MP3A	Mx	-.000599	6
5	MP3A	X	2.214	1
6	MP3A	Mx	-.001	1
7	MP3A	X	2.214	6
8	MP3A	Mx	-.001	6
9	MP1A	X	2.903	2.5
10	MP1A	Mx	-.001	2.5
11	MP1A	X	2.903	4.5
12	MP1A	Mx	-.001	4.5
13	MP3A	X	7.57	4
14	MP3A	Mx	.004	4
15	MP2A	X	8.015	4
16	MP2A	Mx	.004	4
17	MP4A	X	1.677	1
18	MP4A	Mx	-.000788	1
19	MP4A	X	1.677	6
20	MP4A	Mx	-.000788	6
21	M21A	X	3.243	.5
22	M21A	Mx	0	.5

Member Distributed Loads (BLC 40 : Structure Di)

	Member Label	Direction	Start Magnitude[lb/ft,...	End Magnitude[lb/ft,F...	Start Location[ft,%]	End Location[ft,%]
1	LV	Y	-7.783	-7.783	0	%100
2	M110	Y	-7.783	-7.783	0	%100

Member Distributed Loads (BLC 40 : Structure Di) (Continued)

	Member Label	Direction	Start Magnitude[lb/ft,...	End Magnitude[lb/ft,F...	Start Location[ft,%]	End Location[ft,%]
3	M111	Y	-5.1	-5.1	0	%100
4	M112	Y	-5.1	-5.1	0	%100
5	M113	Y	-5.1	-5.1	0	%100
6	M114	Y	-5.1	-5.1	0	%100
7	M115	Y	-5.1	-5.1	0	%100
8	M116	Y	-6.868	-6.868	0	%100
9	M117	Y	-6.868	-6.868	0	%100
10	M118	Y	-6.868	-6.868	0	%100
11	M119	Y	-6.868	-6.868	0	%100
12	M120	Y	-6.868	-6.868	0	%100
13	M121	Y	-6.868	-6.868	0	%100
14	M127	Y	-5.751	-5.751	0	%100
15	M128	Y	-5.751	-5.751	0	%100
16	M18	Y	-5.818	-5.818	0	%100
17	M21	Y	-11.758	-11.758	0	%100
18	M22	Y	-11.758	-11.758	0	%100
19	M21A	Y	-7.783	-7.783	0	%100
20	M22A	Y	-7.783	-7.783	0	%100
21	MP1A	Y	-5.1	-5.1	0	%100
22	MP4A	Y	-5.1	-5.1	0	%100
23	MP2A	Y	-5.1	-5.1	0	%100
24	MP3A	Y	-5.1	-5.1	0	%100
25	M35	Y	-4.418	-4.418	0	%100
26	M41	Y	-5.818	-5.818	0	%100
27	M42	Y	-6.767	-6.767	0	%100
28	M43	Y	-6.767	-6.767	0	%100
29	M44	Y	-6.767	-6.767	0	%100
30	M45	Y	-6.767	-6.767	0	%100

Member Distributed Loads (BLC 41 : Structure Wo (0 Deg))

	Member Label	Direction	Start Magnitude[lb/ft,...	End Magnitude[lb/ft,F...	Start Location[ft,%]	End Location[ft,%]
1	LV	X	0	0	0	%100
2	LV	Z	-25.77	-25.77	0	%100
3	M110	X	0	0	0	%100
4	M110	Z	-25.77	-25.77	0	%100
5	M111	X	0	0	0	%100
6	M111	Z	-9.652	-9.652	0	%100
7	M112	X	0	0	0	%100
8	M112	Z	-9.652	-9.652	0	%100
9	M113	X	0	0	0	%100
10	M113	Z	-9.652	-9.652	0	%100
11	M114	X	0	0	0	%100
12	M114	Z	-9.652	-9.652	0	%100
13	M115	X	0	0	0	%100
14	M115	Z	-9.652	-9.652	0	%100
15	M116	X	0	0	0	%100
16	M116	Z	-4.003	-4.003	0	%100
17	M117	X	0	0	0	%100
18	M117	Z	-17.753	-17.753	0	%100
19	M118	X	0	0	0	%100
20	M118	Z	-4.003	-4.003	0	%100

Member Distributed Loads (BLC 41 : Structure Wo (0 Deg)) (Continued)

	Member Label	Direction	Start Magnitude[lb/ft,...	End Magnitude[lb/ft,F...	Start Location[ft,%]	End Location[ft,%]
21	M119	X	0	0	0	%100
22	M119	Z	-4.003	-4.003	0	%100
23	M120	X	0	0	0	%100
24	M120	Z	-17.753	-17.753	0	%100
25	M121	X	0	0	0	%100
26	M121	Z	-4.003	-4.003	0	%100
27	M127	X	0	0	0	%100
28	M127	Z	-14.639	-14.639	0	%100
29	M128	X	0	0	0	%100
30	M128	Z	-14.639	-14.639	0	%100
31	M18	X	0	0	0	%100
32	M18	Z	-11.776	-11.776	0	%100
33	M21	X	0	0	0	%100
34	M21	Z	-1.45	-1.45	0	%100
35	M22	X	0	0	0	%100
36	M22	Z	-1.45	-1.45	0	%100
37	M21A	X	0	0	0	%100
38	M21A	Z	-8.375	-8.375	0	%100
39	M22A	X	0	0	0	%100
40	M22A	Z	-8.375	-8.375	0	%100
41	MP1A	X	0	0	0	%100
42	MP1A	Z	-12.241	-12.241	0	%100
43	MP4A	X	0	0	0	%100
44	MP4A	Z	-12.241	-12.241	0	%100
45	MP2A	X	0	0	0	%100
46	MP2A	Z	-12.241	-12.241	0	%100
47	MP3A	X	0	0	0	%100
48	MP3A	Z	-12.241	-12.241	0	%100
49	M35	X	0	0	0	%100
50	M35	Z	-.554	-.554	0	%100
51	M41	X	0	0	0	%100
52	M41	Z	-14.818	-14.818	0	%100
53	M42	X	0	0	0	%100
54	M42	Z	-14.73	-14.73	0	%100
55	M43	X	0	0	0	%100
56	M43	Z	-19.291	-19.291	0	%100
57	M44	X	0	0	0	%100
58	M44	Z	-20.045	-20.045	0	%100
59	M45	X	0	0	0	%100
60	M45	Z	-20.503	-20.503	0	%100

Member Distributed Loads (BLC 42 : Structure Wo (30 Deg))

	Member Label	Direction	Start Magnitude[lb/ft,...	End Magnitude[lb/ft,F...	Start Location[ft,%]	End Location[ft,%]
1	LV	X	9.664	9.664	0	%100
2	LV	Z	-16.738	-16.738	0	%100
3	M110	X	9.664	9.664	0	%100
4	M110	Z	-16.738	-16.738	0	%100
5	M111	X	4.826	4.826	0	%100
6	M111	Z	-8.359	-8.359	0	%100
7	M112	X	4.826	4.826	0	%100
8	M112	Z	-8.359	-8.359	0	%100

Member Distributed Loads (BLC 42 : Structure Wo (30 Deg)) (Continued)

	Member Label	Direction	Start Magnitude[lb/ft,...	End Magnitude[lb/ft,F...	Start Location[ft,%]	End Location[ft,%]
9	M113	X	4.826	4.826	0	%100
10	M113	Z	-8.359	-8.359	0	%100
11	M114	X	4.826	4.826	0	%100
12	M114	Z	-8.359	-8.359	0	%100
13	M115	X	4.826	4.826	0	%100
14	M115	Z	-8.359	-8.359	0	%100
15	M116	X	.002	.002	0	%100
16	M116	Z	-.003	-.003	0	%100
17	M117	X	6.657	6.657	0	%100
18	M117	Z	-11.531	-11.531	0	%100
19	M118	X	6.217	6.217	0	%100
20	M118	Z	-10.769	-10.769	0	%100
21	M119	X	.002	.002	0	%100
22	M119	Z	-.003	-.003	0	%100
23	M120	X	6.657	6.657	0	%100
24	M120	Z	-11.531	-11.531	0	%100
25	M121	X	6.217	6.217	0	%100
26	M121	Z	-10.769	-10.769	0	%100
27	M127	X	7.32	7.32	0	%100
28	M127	Z	-12.678	-12.678	0	%100
29	M128	X	7.32	7.32	0	%100
30	M128	Z	-12.678	-12.678	0	%100
31	M18	X	5.888	5.888	0	%100
32	M18	Z	-10.198	-10.198	0	%100
33	M21	X	.966	.966	0	%100
34	M21	Z	-1.674	-1.674	0	%100
35	M22	X	.966	.966	0	%100
36	M22	Z	-1.674	-1.674	0	%100
37	M21A	X	5.584	5.584	0	%100
38	M21A	Z	-9.671	-9.671	0	%100
39	M22A	X	5.584	5.584	0	%100
40	M22A	Z	-9.671	-9.671	0	%100
41	MP1A	X	6.12	6.12	0	%100
42	MP1A	Z	-10.601	-10.601	0	%100
43	MP4A	X	6.12	6.12	0	%100
44	MP4A	Z	-10.601	-10.601	0	%100
45	MP2A	X	6.12	6.12	0	%100
46	MP2A	Z	-10.601	-10.601	0	%100
47	MP3A	X	6.12	6.12	0	%100
48	MP3A	Z	-10.601	-10.601	0	%100
49	M35	X	1.923	1.923	0	%100
50	M35	Z	-3.331	-3.331	0	%100
51	M41	X	5.557	5.557	0	%100
52	M41	Z	-9.625	-9.625	0	%100
53	M42	X	4.749	4.749	0	%100
54	M42	Z	-8.226	-8.226	0	%100
55	M43	X	10.523	10.523	0	%100
56	M43	Z	-18.227	-18.227	0	%100
57	M44	X	8.102	8.102	0	%100
58	M44	Z	-14.033	-14.033	0	%100
59	M45	X	10.402	10.402	0	%100
60	M45	Z	-18.017	-18.017	0	%100

Member Distributed Loads (BLC 43 : Structure Wo (60 Deg))

	Member Label	Direction	Start Magnitude[lb/ft,...	End Magnitude[lb/ft,F...	Start Location[ft,%]	End Location[ft,%]
1	LV	X	5.579	5.579	0	%100
2	LV	Z	-3.221	-3.221	0	%100
3	M110	X	5.579	5.579	0	%100
4	M110	Z	-3.221	-3.221	0	%100
5	M111	X	8.359	8.359	0	%100
6	M111	Z	-4.826	-4.826	0	%100
7	M112	X	8.359	8.359	0	%100
8	M112	Z	-4.826	-4.826	0	%100
9	M113	X	8.359	8.359	0	%100
10	M113	Z	-4.826	-4.826	0	%100
11	M114	X	8.359	8.359	0	%100
12	M114	Z	-4.826	-4.826	0	%100
13	M115	X	8.359	8.359	0	%100
14	M115	Z	-4.826	-4.826	0	%100
15	M116	X	3.843	3.843	0	%100
16	M116	Z	-2.219	-2.219	0	%100
17	M117	X	3.844	3.844	0	%100
18	M117	Z	-2.219	-2.219	0	%100
19	M118	X	14.608	14.608	0	%100
20	M118	Z	-8.434	-8.434	0	%100
21	M119	X	3.843	3.843	0	%100
22	M119	Z	-2.219	-2.219	0	%100
23	M120	X	3.844	3.844	0	%100
24	M120	Z	-2.219	-2.219	0	%100
25	M121	X	14.608	14.608	0	%100
26	M121	Z	-8.434	-8.434	0	%100
27	M127	X	12.678	12.678	0	%100
28	M127	Z	-7.32	-7.32	0	%100
29	M128	X	12.678	12.678	0	%100
30	M128	Z	-7.32	-7.32	0	%100
31	M18	X	10.198	10.198	0	%100
32	M18	Z	-5.888	-5.888	0	%100
33	M21	X	1.255	1.255	0	%100
34	M21	Z	-.725	-.725	0	%100
35	M22	X	1.255	1.255	0	%100
36	M22	Z	-.725	-.725	0	%100
37	M21A	X	7.253	7.253	0	%100
38	M21A	Z	-4.188	-4.188	0	%100
39	M22A	X	7.253	7.253	0	%100
40	M22A	Z	-4.188	-4.188	0	%100
41	MP1A	X	10.601	10.601	0	%100
42	MP1A	Z	-6.12	-6.12	0	%100
43	MP4A	X	10.601	10.601	0	%100
44	MP4A	Z	-6.12	-6.12	0	%100
45	MP2A	X	10.601	10.601	0	%100
46	MP2A	Z	-6.12	-6.12	0	%100
47	MP3A	X	10.601	10.601	0	%100
48	MP3A	Z	-6.12	-6.12	0	%100
49	M35	X	6.095	6.095	0	%100
50	M35	Z	-3.519	-3.519	0	%100
51	M41	X	3.208	3.208	0	%100
52	M41	Z	-1.852	-1.852	0	%100

Member Distributed Loads (BLC 43 : Structure Wo (60 Deg)) (Continued)

	Member Label	Direction	Start Magnitude[lb/ft,...	End Magnitude[lb/ft,F...	Start Location[ft,%]	End Location[ft,%]
53	M42	X	7	7	0	%100
54	M42	Z	-4.041	-4.041	0	%100
55	M43	X	12.691	12.691	0	%100
56	M43	Z	-7.327	-7.327	0	%100
57	M44	X	11.902	11.902	0	%100
58	M44	Z	-6.871	-6.871	0	%100
59	M45	X	13.591	13.591	0	%100
60	M45	Z	-7.847	-7.847	0	%100

Member Distributed Loads (BLC 44 : Structure Wo (90 Deg))

	Member Label	Direction	Start Magnitude[lb/ft,...	End Magnitude[lb/ft,F...	Start Location[ft,%]	End Location[ft,%]
1	LV	X	0	0	0	%100
2	LV	Z	0	0	0	%100
3	M110	X	0	0	0	%100
4	M110	Z	0	0	0	%100
5	M111	X	9.652	9.652	0	%100
6	M111	Z	0	0	0	%100
7	M112	X	9.652	9.652	0	%100
8	M112	Z	0	0	0	%100
9	M113	X	9.652	9.652	0	%100
10	M113	Z	0	0	0	%100
11	M114	X	9.652	9.652	0	%100
12	M114	Z	0	0	0	%100
13	M115	X	9.652	9.652	0	%100
14	M115	Z	0	0	0	%100
15	M116	X	12.869	12.869	0	%100
16	M116	Z	0	0	0	%100
17	M117	X	0	0	0	%100
18	M117	Z	0	0	0	%100
19	M118	X	12.869	12.869	0	%100
20	M118	Z	0	0	0	%100
21	M119	X	12.869	12.869	0	%100
22	M119	Z	0	0	0	%100
23	M120	X	0	0	0	%100
24	M120	Z	0	0	0	%100
25	M121	X	12.869	12.869	0	%100
26	M121	Z	0	0	0	%100
27	M127	X	14.639	14.639	0	%100
28	M127	Z	0	0	0	%100
29	M128	X	14.639	14.639	0	%100
30	M128	Z	0	0	0	%100
31	M18	X	11.776	11.776	0	%100
32	M18	Z	0	0	0	%100
33	M21	X	.483	.483	0	%100
34	M21	Z	0	0	0	%100
35	M22	X	.483	.483	0	%100
36	M22	Z	0	0	0	%100
37	M21A	X	2.792	2.792	0	%100
38	M21A	Z	0	0	0	%100
39	M22A	X	2.792	2.792	0	%100
40	M22A	Z	0	0	0	%100

Member Distributed Loads (BLC 44 : Structure Wo (90 Deg)) (Continued)

	Member Label	Direction	Start Magnitude[lb/ft,...	End Magnitude[lb/ft,F...	Start Location[ft,%]	End Location[ft,%]
41	MP1A	X	12.241	12.241	0	%100
42	MP1A	Z	0	0	0	%100
43	MP4A	X	12.241	12.241	0	%100
44	MP4A	Z	0	0	0	%100
45	MP2A	X	12.241	12.241	0	%100
46	MP2A	Z	0	0	0	%100
47	MP3A	X	12.241	12.241	0	%100
48	MP3A	Z	0	0	0	%100
49	M35	X	6.937	6.937	0	%100
50	M35	Z	0	0	0	%100
51	M41	X	0	0	0	%100
52	M41	Z	0	0	0	%100
53	M42	X	11.898	11.898	0	%100
54	M42	Z	0	0	0	%100
55	M43	X	6.505	6.505	0	%100
56	M43	Z	0	0	0	%100
57	M44	X	15.123	15.123	0	%100
58	M44	Z	0	0	0	%100
59	M45	X	10.281	10.281	0	%100
60	M45	Z	0	0	0	%100

Member Distributed Loads (BLC 45 : Structure Wo (120 Deg))

	Member Label	Direction	Start Magnitude[lb/ft,...	End Magnitude[lb/ft,F...	Start Location[ft,%]	End Location[ft,%]
1	LV	X	5.579	5.579	0	%100
2	LV	Z	3.221	3.221	0	%100
3	M110	X	5.579	5.579	0	%100
4	M110	Z	3.221	3.221	0	%100
5	M111	X	8.359	8.359	0	%100
6	M111	Z	4.826	4.826	0	%100
7	M112	X	8.359	8.359	0	%100
8	M112	Z	4.826	4.826	0	%100
9	M113	X	8.359	8.359	0	%100
10	M113	Z	4.826	4.826	0	%100
11	M114	X	8.359	8.359	0	%100
12	M114	Z	4.826	4.826	0	%100
13	M115	X	8.359	8.359	0	%100
14	M115	Z	4.826	4.826	0	%100
15	M116	X	14.608	14.608	0	%100
16	M116	Z	8.434	8.434	0	%100
17	M117	X	3.844	3.844	0	%100
18	M117	Z	2.219	2.219	0	%100
19	M118	X	3.843	3.843	0	%100
20	M118	Z	2.219	2.219	0	%100
21	M119	X	14.608	14.608	0	%100
22	M119	Z	8.434	8.434	0	%100
23	M120	X	3.844	3.844	0	%100
24	M120	Z	2.219	2.219	0	%100
25	M121	X	3.843	3.843	0	%100
26	M121	Z	2.219	2.219	0	%100
27	M127	X	12.678	12.678	0	%100
28	M127	Z	7.32	7.32	0	%100

Member Distributed Loads (BLC 45 : Structure Wo (120 Deg)) (Continued)

	Member Label	Direction	Start Magnitude[lb/ft,...	End Magnitude[lb/ft,F...	Start Location[ft,%]	End Location[ft,%]
29	M128	X	12.678	12.678	0	%100
30	M128	Z	7.32	7.32	0	%100
31	M18	X	10.198	10.198	0	%100
32	M18	Z	5.888	5.888	0	%100
33	M21	X	0	0	0	%100
34	M21	Z	0	0	0	%100
35	M22	X	0	0	0	%100
36	M22	Z	0	0	0	%100
37	M21A	X	0	0	0	%100
38	M21A	Z	0	0	0	%100
39	M22A	X	0	0	0	%100
40	M22A	Z	0	0	0	%100
41	MP1A	X	10.601	10.601	0	%100
42	MP1A	Z	6.12	6.12	0	%100
43	MP4A	X	10.601	10.601	0	%100
44	MP4A	Z	6.12	6.12	0	%100
45	MP2A	X	10.601	10.601	0	%100
46	MP2A	Z	6.12	6.12	0	%100
47	MP3A	X	10.601	10.601	0	%100
48	MP3A	Z	6.12	6.12	0	%100
49	M35	X	3.156	3.156	0	%100
50	M35	Z	1.822	1.822	0	%100
51	M41	X	3.208	3.208	0	%100
52	M41	Z	1.852	1.852	0	%100
53	M42	X	14.835	14.835	0	%100
54	M42	Z	8.565	8.565	0	%100
55	M43	X	4.112	4.112	0	%100
56	M43	Z	2.374	2.374	0	%100
57	M44	X	16.424	16.424	0	%100
58	M44	Z	9.482	9.482	0	%100
59	M45	X	8.642	8.642	0	%100
60	M45	Z	4.989	4.989	0	%100

Member Distributed Loads (BLC 46 : Structure Wo (150 Deg))

	Member Label	Direction	Start Magnitude[lb/ft,...	End Magnitude[lb/ft,F...	Start Location[ft,%]	End Location[ft,%]
1	LV	X	9.664	9.664	0	%100
2	LV	Z	16.738	16.738	0	%100
3	M110	X	9.664	9.664	0	%100
4	M110	Z	16.738	16.738	0	%100
5	M111	X	4.826	4.826	0	%100
6	M111	Z	8.359	8.359	0	%100
7	M112	X	4.826	4.826	0	%100
8	M112	Z	8.359	8.359	0	%100
9	M113	X	4.826	4.826	0	%100
10	M113	Z	8.359	8.359	0	%100
11	M114	X	4.826	4.826	0	%100
12	M114	Z	8.359	8.359	0	%100
13	M115	X	4.826	4.826	0	%100
14	M115	Z	8.359	8.359	0	%100
15	M116	X	6.217	6.217	0	%100
16	M116	Z	10.769	10.769	0	%100

Member Distributed Loads (BLC 46 : Structure Wo (150 Deg)) (Continued)

	Member Label	Direction	Start Magnitude[lb/ft,...	End Magnitude[lb/ft,F...	Start Location[ft,%]	End Location[ft,%]
17	M117	X	6.657	6.657	0	%100
18	M117	Z	11.531	11.531	0	%100
19	M118	X	.002	.002	0	%100
20	M118	Z	.003	.003	0	%100
21	M119	X	6.217	6.217	0	%100
22	M119	Z	10.769	10.769	0	%100
23	M120	X	6.657	6.657	0	%100
24	M120	Z	11.531	11.531	0	%100
25	M121	X	.002	.002	0	%100
26	M121	Z	.003	.003	0	%100
27	M127	X	7.32	7.32	0	%100
28	M127	Z	12.678	12.678	0	%100
29	M128	X	7.32	7.32	0	%100
30	M128	Z	12.678	12.678	0	%100
31	M18	X	5.888	5.888	0	%100
32	M18	Z	10.198	10.198	0	%100
33	M21	X	.242	.242	0	%100
34	M21	Z	.418	.418	0	%100
35	M22	X	.242	.242	0	%100
36	M22	Z	.418	.418	0	%100
37	M21A	X	1.396	1.396	0	%100
38	M21A	Z	2.418	2.418	0	%100
39	M22A	X	1.396	1.396	0	%100
40	M22A	Z	2.418	2.418	0	%100
41	MP1A	X	6.12	6.12	0	%100
42	MP1A	Z	10.601	10.601	0	%100
43	MP4A	X	6.12	6.12	0	%100
44	MP4A	Z	10.601	10.601	0	%100
45	MP2A	X	6.12	6.12	0	%100
46	MP2A	Z	10.601	10.601	0	%100
47	MP3A	X	6.12	6.12	0	%100
48	MP3A	Z	10.601	10.601	0	%100
49	M35	X	.226	.226	0	%100
50	M35	Z	.392	.392	0	%100
51	M41	X	5.557	5.557	0	%100
52	M41	Z	9.625	9.625	0	%100
53	M42	X	9.273	9.273	0	%100
54	M42	Z	16.061	16.061	0	%100
55	M43	X	5.571	5.571	0	%100
56	M43	Z	9.649	9.649	0	%100
57	M44	X	10.713	10.713	0	%100
58	M44	Z	18.555	18.555	0	%100
59	M45	X	7.545	7.545	0	%100
60	M45	Z	13.068	13.068	0	%100

Member Distributed Loads (BLC 47 : Structure Wo (180 Deg))

	Member Label	Direction	Start Magnitude[lb/ft,...	End Magnitude[lb/ft,F...	Start Location[ft,%]	End Location[ft,%]
1	LV	X	0	0	0	%100
2	LV	Z	25.77	25.77	0	%100
3	M110	X	0	0	0	%100
4	M110	Z	25.77	25.77	0	%100

Member Distributed Loads (BLC 47 : Structure Wo (180 Deg)) (Continued)

	Member Label	Direction	Start Magnitude[lb/ft,...	End Magnitude[lb/ft,F...	Start Location[ft,%]	End Location[ft,%]
5	M111	X	0	0	0	%100
6	M111	Z	9.652	9.652	0	%100
7	M112	X	0	0	0	%100
8	M112	Z	9.652	9.652	0	%100
9	M113	X	0	0	0	%100
10	M113	Z	9.652	9.652	0	%100
11	M114	X	0	0	0	%100
12	M114	Z	9.652	9.652	0	%100
13	M115	X	0	0	0	%100
14	M115	Z	9.652	9.652	0	%100
15	M116	X	0	0	0	%100
16	M116	Z	4.003	4.003	0	%100
17	M117	X	0	0	0	%100
18	M117	Z	17.753	17.753	0	%100
19	M118	X	0	0	0	%100
20	M118	Z	4.003	4.003	0	%100
21	M119	X	0	0	0	%100
22	M119	Z	4.003	4.003	0	%100
23	M120	X	0	0	0	%100
24	M120	Z	17.753	17.753	0	%100
25	M121	X	0	0	0	%100
26	M121	Z	4.003	4.003	0	%100
27	M127	X	0	0	0	%100
28	M127	Z	14.639	14.639	0	%100
29	M128	X	0	0	0	%100
30	M128	Z	14.639	14.639	0	%100
31	M18	X	0	0	0	%100
32	M18	Z	11.776	11.776	0	%100
33	M21	X	0	0	0	%100
34	M21	Z	1.45	1.45	0	%100
35	M22	X	0	0	0	%100
36	M22	Z	1.45	1.45	0	%100
37	M21A	X	0	0	0	%100
38	M21A	Z	8.375	8.375	0	%100
39	M22A	X	0	0	0	%100
40	M22A	Z	8.375	8.375	0	%100
41	MP1A	X	0	0	0	%100
42	MP1A	Z	12.241	12.241	0	%100
43	MP4A	X	0	0	0	%100
44	MP4A	Z	12.241	12.241	0	%100
45	MP2A	X	0	0	0	%100
46	MP2A	Z	12.241	12.241	0	%100
47	MP3A	X	0	0	0	%100
48	MP3A	Z	12.241	12.241	0	%100
49	M35	X	0	0	0	%100
50	M35	Z	.554	.554	0	%100
51	M41	X	0	0	0	%100
52	M41	Z	14.818	14.818	0	%100
53	M42	X	0	0	0	%100
54	M42	Z	14.73	14.73	0	%100
55	M43	X	0	0	0	%100
56	M43	Z	19.291	19.291	0	%100

Member Distributed Loads (BLC 47 : Structure Wo (180 Deg)) (Continued)

	Member Label	Direction	Start Magnitude[lb/ft,...	End Magnitude[lb/ft,F...	Start Location[ft,%]	End Location[ft,%]
57	M44	X	0	0	0	%100
58	M44	Z	20.045	20.045	0	%100
59	M45	X	0	0	0	%100
60	M45	Z	20.503	20.503	0	%100

Member Distributed Loads (BLC 48 : Structure Wo (210 Deg))

	Member Label	Direction	Start Magnitude[lb/ft,...	End Magnitude[lb/ft,F...	Start Location[ft,%]	End Location[ft,%]
1	LV	X	-9.664	-9.664	0	%100
2	LV	Z	16.738	16.738	0	%100
3	M110	X	-9.664	-9.664	0	%100
4	M110	Z	16.738	16.738	0	%100
5	M111	X	-4.826	-4.826	0	%100
6	M111	Z	8.359	8.359	0	%100
7	M112	X	-4.826	-4.826	0	%100
8	M112	Z	8.359	8.359	0	%100
9	M113	X	-4.826	-4.826	0	%100
10	M113	Z	8.359	8.359	0	%100
11	M114	X	-4.826	-4.826	0	%100
12	M114	Z	8.359	8.359	0	%100
13	M115	X	-4.826	-4.826	0	%100
14	M115	Z	8.359	8.359	0	%100
15	M116	X	-.002	-.002	0	%100
16	M116	Z	.003	.003	0	%100
17	M117	X	-6.657	-6.657	0	%100
18	M117	Z	11.531	11.531	0	%100
19	M118	X	-6.217	-6.217	0	%100
20	M118	Z	10.769	10.769	0	%100
21	M119	X	-.002	-.002	0	%100
22	M119	Z	.003	.003	0	%100
23	M120	X	-6.657	-6.657	0	%100
24	M120	Z	11.531	11.531	0	%100
25	M121	X	-6.217	-6.217	0	%100
26	M121	Z	10.769	10.769	0	%100
27	M127	X	-7.32	-7.32	0	%100
28	M127	Z	12.678	12.678	0	%100
29	M128	X	-7.32	-7.32	0	%100
30	M128	Z	12.678	12.678	0	%100
31	M18	X	-5.888	-5.888	0	%100
32	M18	Z	10.198	10.198	0	%100
33	M21	X	-.966	-.966	0	%100
34	M21	Z	1.674	1.674	0	%100
35	M22	X	-.966	-.966	0	%100
36	M22	Z	1.674	1.674	0	%100
37	M21A	X	-5.584	-5.584	0	%100
38	M21A	Z	9.671	9.671	0	%100
39	M22A	X	-5.584	-5.584	0	%100
40	M22A	Z	9.671	9.671	0	%100
41	MP1A	X	-6.12	-6.12	0	%100
42	MP1A	Z	10.601	10.601	0	%100
43	MP4A	X	-6.12	-6.12	0	%100
44	MP4A	Z	10.601	10.601	0	%100

Member Distributed Loads (BLC 48 : Structure Wo (210 Deg)) (Continued)

	Member Label	Direction	Start Magnitude[lb/ft,...	End Magnitude[lb/ft,F...	Start Location[ft,%]	End Location[ft,%]
45	MP2A	X	-6.12	-6.12	0	%100
46	MP2A	Z	10.601	10.601	0	%100
47	MP3A	X	-6.12	-6.12	0	%100
48	MP3A	Z	10.601	10.601	0	%100
49	M35	X	-1.923	-1.923	0	%100
50	M35	Z	3.331	3.331	0	%100
51	M41	X	-5.557	-5.557	0	%100
52	M41	Z	9.625	9.625	0	%100
53	M42	X	-4.749	-4.749	0	%100
54	M42	Z	8.226	8.226	0	%100
55	M43	X	-10.523	-10.523	0	%100
56	M43	Z	18.227	18.227	0	%100
57	M44	X	-8.102	-8.102	0	%100
58	M44	Z	14.033	14.033	0	%100
59	M45	X	-10.402	-10.402	0	%100
60	M45	Z	18.017	18.017	0	%100

Member Distributed Loads (BLC 49 : Structure Wo (240 Deg))

	Member Label	Direction	Start Magnitude[lb/ft,...	End Magnitude[lb/ft,F...	Start Location[ft,%]	End Location[ft,%]
1	LV	X	-5.579	-5.579	0	%100
2	LV	Z	3.221	3.221	0	%100
3	M110	X	-5.579	-5.579	0	%100
4	M110	Z	3.221	3.221	0	%100
5	M111	X	-8.359	-8.359	0	%100
6	M111	Z	4.826	4.826	0	%100
7	M112	X	-8.359	-8.359	0	%100
8	M112	Z	4.826	4.826	0	%100
9	M113	X	-8.359	-8.359	0	%100
10	M113	Z	4.826	4.826	0	%100
11	M114	X	-8.359	-8.359	0	%100
12	M114	Z	4.826	4.826	0	%100
13	M115	X	-8.359	-8.359	0	%100
14	M115	Z	4.826	4.826	0	%100
15	M116	X	-3.843	-3.843	0	%100
16	M116	Z	2.219	2.219	0	%100
17	M117	X	-3.844	-3.844	0	%100
18	M117	Z	2.219	2.219	0	%100
19	M118	X	-14.608	-14.608	0	%100
20	M118	Z	8.434	8.434	0	%100
21	M119	X	-3.843	-3.843	0	%100
22	M119	Z	2.219	2.219	0	%100
23	M120	X	-3.844	-3.844	0	%100
24	M120	Z	2.219	2.219	0	%100
25	M121	X	-14.608	-14.608	0	%100
26	M121	Z	8.434	8.434	0	%100
27	M127	X	-12.678	-12.678	0	%100
28	M127	Z	7.32	7.32	0	%100
29	M128	X	-12.678	-12.678	0	%100
30	M128	Z	7.32	7.32	0	%100
31	M18	X	-10.198	-10.198	0	%100
32	M18	Z	5.888	5.888	0	%100

Member Distributed Loads (BLC 49 : Structure Wo (240 Deg)) (Continued)

	Member Label	Direction	Start Magnitude[lb/ft,...	End Magnitude[lb/ft,F...	Start Location[ft,%]	End Location[ft,%]
33	M21	X	-1.255	-1.255	0	%100
34	M21	Z	.725	.725	0	%100
35	M22	X	-1.255	-1.255	0	%100
36	M22	Z	.725	.725	0	%100
37	M21A	X	-7.253	-7.253	0	%100
38	M21A	Z	4.188	4.188	0	%100
39	M22A	X	-7.253	-7.253	0	%100
40	M22A	Z	4.188	4.188	0	%100
41	MP1A	X	-10.601	-10.601	0	%100
42	MP1A	Z	6.12	6.12	0	%100
43	MP4A	X	-10.601	-10.601	0	%100
44	MP4A	Z	6.12	6.12	0	%100
45	MP2A	X	-10.601	-10.601	0	%100
46	MP2A	Z	6.12	6.12	0	%100
47	MP3A	X	-10.601	-10.601	0	%100
48	MP3A	Z	6.12	6.12	0	%100
49	M35	X	-6.095	-6.095	0	%100
50	M35	Z	3.519	3.519	0	%100
51	M41	X	-3.208	-3.208	0	%100
52	M41	Z	1.852	1.852	0	%100
53	M42	X	-7	-7	0	%100
54	M42	Z	4.041	4.041	0	%100
55	M43	X	-12.691	-12.691	0	%100
56	M43	Z	7.327	7.327	0	%100
57	M44	X	-11.902	-11.902	0	%100
58	M44	Z	6.871	6.871	0	%100
59	M45	X	-13.591	-13.591	0	%100
60	M45	Z	7.847	7.847	0	%100

Member Distributed Loads (BLC 50 : Structure Wo (270 Deg))

	Member Label	Direction	Start Magnitude[lb/ft,...	End Magnitude[lb/ft,F...	Start Location[ft,%]	End Location[ft,%]
1	LV	X	0	0	0	%100
2	LV	Z	0	0	0	%100
3	M110	X	0	0	0	%100
4	M110	Z	0	0	0	%100
5	M111	X	-9.652	-9.652	0	%100
6	M111	Z	0	0	0	%100
7	M112	X	-9.652	-9.652	0	%100
8	M112	Z	0	0	0	%100
9	M113	X	-9.652	-9.652	0	%100
10	M113	Z	0	0	0	%100
11	M114	X	-9.652	-9.652	0	%100
12	M114	Z	0	0	0	%100
13	M115	X	-9.652	-9.652	0	%100
14	M115	Z	0	0	0	%100
15	M116	X	-12.869	-12.869	0	%100
16	M116	Z	0	0	0	%100
17	M117	X	0	0	0	%100
18	M117	Z	0	0	0	%100
19	M118	X	-12.869	-12.869	0	%100
20	M118	Z	0	0	0	%100

Member Distributed Loads (BLC 50 : Structure Wo (270 Deg)) (Continued)

	Member Label	Direction	Start Magnitude[lb/ft,...	End Magnitude[lb/ft,F...	Start Location[ft,%]	End Location[ft,%]
21	M119	X	-12.869	-12.869	0	%100
22	M119	Z	0	0	0	%100
23	M120	X	0	0	0	%100
24	M120	Z	0	0	0	%100
25	M121	X	-12.869	-12.869	0	%100
26	M121	Z	0	0	0	%100
27	M127	X	-14.639	-14.639	0	%100
28	M127	Z	0	0	0	%100
29	M128	X	-14.639	-14.639	0	%100
30	M128	Z	0	0	0	%100
31	M18	X	-11.776	-11.776	0	%100
32	M18	Z	0	0	0	%100
33	M21	X	-.483	-.483	0	%100
34	M21	Z	0	0	0	%100
35	M22	X	-.483	-.483	0	%100
36	M22	Z	0	0	0	%100
37	M21A	X	-2.792	-2.792	0	%100
38	M21A	Z	0	0	0	%100
39	M22A	X	-2.792	-2.792	0	%100
40	M22A	Z	0	0	0	%100
41	MP1A	X	-12.241	-12.241	0	%100
42	MP1A	Z	0	0	0	%100
43	MP4A	X	-12.241	-12.241	0	%100
44	MP4A	Z	0	0	0	%100
45	MP2A	X	-12.241	-12.241	0	%100
46	MP2A	Z	0	0	0	%100
47	MP3A	X	-12.241	-12.241	0	%100
48	MP3A	Z	0	0	0	%100
49	M35	X	-6.937	-6.937	0	%100
50	M35	Z	0	0	0	%100
51	M41	X	0	0	0	%100
52	M41	Z	0	0	0	%100
53	M42	X	-11.898	-11.898	0	%100
54	M42	Z	0	0	0	%100
55	M43	X	-6.505	-6.505	0	%100
56	M43	Z	0	0	0	%100
57	M44	X	-15.123	-15.123	0	%100
58	M44	Z	0	0	0	%100
59	M45	X	-10.281	-10.281	0	%100
60	M45	Z	0	0	0	%100

Member Distributed Loads (BLC 51 : Structure Wo (300 Deg))

	Member Label	Direction	Start Magnitude[lb/ft,...	End Magnitude[lb/ft,F...	Start Location[ft,%]	End Location[ft,%]
1	LV	X	-5.579	-5.579	0	%100
2	LV	Z	-3.221	-3.221	0	%100
3	M110	X	-5.579	-5.579	0	%100
4	M110	Z	-3.221	-3.221	0	%100
5	M111	X	-8.359	-8.359	0	%100
6	M111	Z	-4.826	-4.826	0	%100
7	M112	X	-8.359	-8.359	0	%100
8	M112	Z	-4.826	-4.826	0	%100

Member Distributed Loads (BLC 51 : Structure Wo (300 Deg)) (Continued)

	Member Label	Direction	Start Magnitude[lb/ft,...	End Magnitude[lb/ft,F...	Start Location[ft,%]	End Location[ft,%]
9	M113	X	-8.359	-8.359	0	%100
10	M113	Z	-4.826	-4.826	0	%100
11	M114	X	-8.359	-8.359	0	%100
12	M114	Z	-4.826	-4.826	0	%100
13	M115	X	-8.359	-8.359	0	%100
14	M115	Z	-4.826	-4.826	0	%100
15	M116	X	-14.608	-14.608	0	%100
16	M116	Z	-8.434	-8.434	0	%100
17	M117	X	-3.844	-3.844	0	%100
18	M117	Z	-2.219	-2.219	0	%100
19	M118	X	-3.843	-3.843	0	%100
20	M118	Z	-2.219	-2.219	0	%100
21	M119	X	-14.608	-14.608	0	%100
22	M119	Z	-8.434	-8.434	0	%100
23	M120	X	-3.844	-3.844	0	%100
24	M120	Z	-2.219	-2.219	0	%100
25	M121	X	-3.843	-3.843	0	%100
26	M121	Z	-2.219	-2.219	0	%100
27	M127	X	-12.678	-12.678	0	%100
28	M127	Z	-7.32	-7.32	0	%100
29	M128	X	-12.678	-12.678	0	%100
30	M128	Z	-7.32	-7.32	0	%100
31	M18	X	-10.198	-10.198	0	%100
32	M18	Z	-5.888	-5.888	0	%100
33	M21	X	0	0	0	%100
34	M21	Z	0	0	0	%100
35	M22	X	0	0	0	%100
36	M22	Z	0	0	0	%100
37	M21A	X	0	0	0	%100
38	M21A	Z	0	0	0	%100
39	M22A	X	0	0	0	%100
40	M22A	Z	0	0	0	%100
41	MP1A	X	-10.601	-10.601	0	%100
42	MP1A	Z	-6.12	-6.12	0	%100
43	MP4A	X	-10.601	-10.601	0	%100
44	MP4A	Z	-6.12	-6.12	0	%100
45	MP2A	X	-10.601	-10.601	0	%100
46	MP2A	Z	-6.12	-6.12	0	%100
47	MP3A	X	-10.601	-10.601	0	%100
48	MP3A	Z	-6.12	-6.12	0	%100
49	M35	X	-3.156	-3.156	0	%100
50	M35	Z	-1.822	-1.822	0	%100
51	M41	X	-3.208	-3.208	0	%100
52	M41	Z	-1.852	-1.852	0	%100
53	M42	X	-14.835	-14.835	0	%100
54	M42	Z	-8.565	-8.565	0	%100
55	M43	X	-4.112	-4.112	0	%100
56	M43	Z	-2.374	-2.374	0	%100
57	M44	X	-16.424	-16.424	0	%100
58	M44	Z	-9.482	-9.482	0	%100
59	M45	X	-8.642	-8.642	0	%100
60	M45	Z	-4.989	-4.989	0	%100

Member Distributed Loads (BLC 52 : Structure Wo (330 Deg))

	Member Label	Direction	Start Magnitude[lb/ft,...	End Magnitude[lb/ft,F...	Start Location[ft,%]	End Location[ft,%]
1	LV	X	-9.664	-9.664	0	%100
2	LV	Z	-16.738	-16.738	0	%100
3	M110	X	-9.664	-9.664	0	%100
4	M110	Z	-16.738	-16.738	0	%100
5	M111	X	-4.826	-4.826	0	%100
6	M111	Z	-8.359	-8.359	0	%100
7	M112	X	-4.826	-4.826	0	%100
8	M112	Z	-8.359	-8.359	0	%100
9	M113	X	-4.826	-4.826	0	%100
10	M113	Z	-8.359	-8.359	0	%100
11	M114	X	-4.826	-4.826	0	%100
12	M114	Z	-8.359	-8.359	0	%100
13	M115	X	-4.826	-4.826	0	%100
14	M115	Z	-8.359	-8.359	0	%100
15	M116	X	-6.217	-6.217	0	%100
16	M116	Z	-10.769	-10.769	0	%100
17	M117	X	-6.657	-6.657	0	%100
18	M117	Z	-11.531	-11.531	0	%100
19	M118	X	-.002	-.002	0	%100
20	M118	Z	-.003	-.003	0	%100
21	M119	X	-6.217	-6.217	0	%100
22	M119	Z	-10.769	-10.769	0	%100
23	M120	X	-6.657	-6.657	0	%100
24	M120	Z	-11.531	-11.531	0	%100
25	M121	X	-.002	-.002	0	%100
26	M121	Z	-.003	-.003	0	%100
27	M127	X	-7.32	-7.32	0	%100
28	M127	Z	-12.678	-12.678	0	%100
29	M128	X	-7.32	-7.32	0	%100
30	M128	Z	-12.678	-12.678	0	%100
31	M18	X	-5.888	-5.888	0	%100
32	M18	Z	-10.198	-10.198	0	%100
33	M21	X	-.242	-.242	0	%100
34	M21	Z	-.418	-.418	0	%100
35	M22	X	-.242	-.242	0	%100
36	M22	Z	-.418	-.418	0	%100
37	M21A	X	-1.396	-1.396	0	%100
38	M21A	Z	-2.418	-2.418	0	%100
39	M22A	X	-1.396	-1.396	0	%100
40	M22A	Z	-2.418	-2.418	0	%100
41	MP1A	X	-6.12	-6.12	0	%100
42	MP1A	Z	-10.601	-10.601	0	%100
43	MP4A	X	-6.12	-6.12	0	%100
44	MP4A	Z	-10.601	-10.601	0	%100
45	MP2A	X	-6.12	-6.12	0	%100
46	MP2A	Z	-10.601	-10.601	0	%100
47	MP3A	X	-6.12	-6.12	0	%100
48	MP3A	Z	-10.601	-10.601	0	%100
49	M35	X	-.226	-.226	0	%100
50	M35	Z	-.392	-.392	0	%100
51	M41	X	-5.557	-5.557	0	%100
52	M41	Z	-9.625	-9.625	0	%100

Member Distributed Loads (BLC 52 : Structure Wo (330 Deg)) (Continued)

	Member Label	Direction	Start Magnitude[lb/ft,...	End Magnitude[lb/ft,F...	Start Location[ft,%]	End Location[ft,%]
53	M42	X	-9.273	-9.273	0	%100
54	M42	Z	-16.061	-16.061	0	%100
55	M43	X	-5.571	-5.571	0	%100
56	M43	Z	-9.649	-9.649	0	%100
57	M44	X	-10.713	-10.713	0	%100
58	M44	Z	-18.555	-18.555	0	%100
59	M45	X	-7.545	-7.545	0	%100
60	M45	Z	-13.068	-13.068	0	%100

Member Distributed Loads (BLC 53 : Structure Wi (0 Deg))

	Member Label	Direction	Start Magnitude[lb/ft,...	End Magnitude[lb/ft,F...	Start Location[ft,%]	End Location[ft,%]
1	LV	X	0	0	0	%100
2	LV	Z	-5.605	-5.605	0	%100
3	M110	X	0	0	0	%100
4	M110	Z	-5.605	-5.605	0	%100
5	M111	X	0	0	0	%100
6	M111	Z	-2.846	-2.846	0	%100
7	M112	X	0	0	0	%100
8	M112	Z	-2.846	-2.846	0	%100
9	M113	X	0	0	0	%100
10	M113	Z	-2.846	-2.846	0	%100
11	M114	X	0	0	0	%100
12	M114	Z	-2.846	-2.846	0	%100
13	M115	X	0	0	0	%100
14	M115	Z	-2.846	-2.846	0	%100
15	M116	X	0	0	0	%100
16	M116	Z	-.87	-.87	0	%100
17	M117	X	0	0	0	%100
18	M117	Z	-3.864	-3.864	0	%100
19	M118	X	0	0	0	%100
20	M118	Z	-.87	-.87	0	%100
21	M119	X	0	0	0	%100
22	M119	Z	-.87	-.87	0	%100
23	M120	X	0	0	0	%100
24	M120	Z	-3.864	-3.864	0	%100
25	M121	X	0	0	0	%100
26	M121	Z	-.87	-.87	0	%100
27	M127	X	0	0	0	%100
28	M127	Z	-3.584	-3.584	0	%100
29	M128	X	0	0	0	%100
30	M128	Z	-3.584	-3.584	0	%100
31	M18	X	0	0	0	%100
32	M18	Z	-3.27	-3.27	0	%100
33	M21	X	0	0	0	%100
34	M21	Z	-.999	-.999	0	%100
35	M22	X	0	0	0	%100
36	M22	Z	-.999	-.999	0	%100
37	M21A	X	0	0	0	%100
38	M21A	Z	-2.088	-2.088	0	%100
39	M22A	X	0	0	0	%100
40	M22A	Z	-2.088	-2.088	0	%100

Member Distributed Loads (BLC 53 : Structure Wi (0 Deg)) (Continued)

	Member Label	Direction	Start Magnitude[lb/ft,...	End Magnitude[lb/ft,F...	Start Location[ft,%]	End Location[ft,%]
41	MP1A	X	0	0	0	%100
42	MP1A	Z	-3.604	-3.604	0	%100
43	MP4A	X	0	0	0	%100
44	MP4A	Z	-3.604	-3.604	0	%100
45	MP2A	X	0	0	0	%100
46	MP2A	Z	-3.604	-3.604	0	%100
47	MP3A	X	0	0	0	%100
48	MP3A	Z	-3.604	-3.604	0	%100
49	M35	X	0	0	0	%100
50	M35	Z	-.177	-.177	0	%100
51	M41	X	0	0	0	%100
52	M41	Z	-3.985	-3.985	0	%100
53	M42	X	0	0	0	%100
54	M42	Z	-3.417	-3.417	0	%100
55	M43	X	0	0	0	%100
56	M43	Z	-4.464	-4.464	0	%100
57	M44	X	0	0	0	%100
58	M44	Z	-4.639	-4.639	0	%100
59	M45	X	0	0	0	%100
60	M45	Z	-4.745	-4.745	0	%100

Member Distributed Loads (BLC 54 : Structure Wi (30 Deg))

	Member Label	Direction	Start Magnitude[lb/ft,...	End Magnitude[lb/ft,F...	Start Location[ft,%]	End Location[ft,%]
1	LV	X	2.102	2.102	0	%100
2	LV	Z	-3.641	-3.641	0	%100
3	M110	X	2.102	2.102	0	%100
4	M110	Z	-3.641	-3.641	0	%100
5	M111	X	1.423	1.423	0	%100
6	M111	Z	-2.465	-2.465	0	%100
7	M112	X	1.423	1.423	0	%100
8	M112	Z	-2.465	-2.465	0	%100
9	M113	X	1.423	1.423	0	%100
10	M113	Z	-2.465	-2.465	0	%100
11	M114	X	1.423	1.423	0	%100
12	M114	Z	-2.465	-2.465	0	%100
13	M115	X	1.423	1.423	0	%100
14	M115	Z	-2.465	-2.465	0	%100
15	M116	X	.000406	.000406	0	%100
16	M116	Z	-.000702	-.000702	0	%100
17	M117	X	1.449	1.449	0	%100
18	M117	Z	-2.51	-2.51	0	%100
19	M118	X	1.352	1.352	0	%100
20	M118	Z	-2.342	-2.342	0	%100
21	M119	X	.000406	.000406	0	%100
22	M119	Z	-.000702	-.000702	0	%100
23	M120	X	1.449	1.449	0	%100
24	M120	Z	-2.51	-2.51	0	%100
25	M121	X	1.352	1.352	0	%100
26	M121	Z	-2.342	-2.342	0	%100
27	M127	X	1.792	1.792	0	%100
28	M127	Z	-3.104	-3.104	0	%100

Member Distributed Loads (BLC 54 : Structure Wi (30 Deg)) (Continued)

	Member Label	Direction	Start Magnitude[lb/ft,...	End Magnitude[lb/ft,F...	Start Location[ft,%]	End Location[ft,%]
29	M128	X	1.792	1.792	0	%100
30	M128	Z	-3.104	-3.104	0	%100
31	M18	X	1.635	1.635	0	%100
32	M18	Z	-2.831	-2.831	0	%100
33	M21	X	.666	.666	0	%100
34	M21	Z	-1.153	-1.153	0	%100
35	M22	X	.666	.666	0	%100
36	M22	Z	-1.153	-1.153	0	%100
37	M21A	X	1.392	1.392	0	%100
38	M21A	Z	-2.411	-2.411	0	%100
39	M22A	X	1.392	1.392	0	%100
40	M22A	Z	-2.411	-2.411	0	%100
41	MP1A	X	1.802	1.802	0	%100
42	MP1A	Z	-3.121	-3.121	0	%100
43	MP4A	X	1.802	1.802	0	%100
44	MP4A	Z	-3.121	-3.121	0	%100
45	MP2A	X	1.802	1.802	0	%100
46	MP2A	Z	-3.121	-3.121	0	%100
47	MP3A	X	1.802	1.802	0	%100
48	MP3A	Z	-3.121	-3.121	0	%100
49	M35	X	.616	.616	0	%100
50	M35	Z	-1.068	-1.068	0	%100
51	M41	X	1.494	1.494	0	%100
52	M41	Z	-2.588	-2.588	0	%100
53	M42	X	1.102	1.102	0	%100
54	M42	Z	-1.908	-1.908	0	%100
55	M43	X	2.435	2.435	0	%100
56	M43	Z	-4.218	-4.218	0	%100
57	M44	X	1.875	1.875	0	%100
58	M44	Z	-3.247	-3.247	0	%100
59	M45	X	2.407	2.407	0	%100
60	M45	Z	-4.169	-4.169	0	%100

Member Distributed Loads (BLC 55 : Structure Wi (60 Deg))

	Member Label	Direction	Start Magnitude[lb/ft,...	End Magnitude[lb/ft,F...	Start Location[ft,%]	End Location[ft,%]
1	LV	X	1.214	1.214	0	%100
2	LV	Z	-.701	-.701	0	%100
3	M110	X	1.214	1.214	0	%100
4	M110	Z	-.701	-.701	0	%100
5	M111	X	2.465	2.465	0	%100
6	M111	Z	-1.423	-1.423	0	%100
7	M112	X	2.465	2.465	0	%100
8	M112	Z	-1.423	-1.423	0	%100
9	M113	X	2.465	2.465	0	%100
10	M113	Z	-1.423	-1.423	0	%100
11	M114	X	2.465	2.465	0	%100
12	M114	Z	-1.423	-1.423	0	%100
13	M115	X	2.465	2.465	0	%100
14	M115	Z	-1.423	-1.423	0	%100
15	M116	X	.836	.836	0	%100
16	M116	Z	-.482	-.482	0	%100

Member Distributed Loads (BLC 55 : Structure Wi (60 Deg)) (Continued)

	Member Label	Direction	Start Magnitude[lb/ft,...	End Magnitude[lb/ft,F...	Start Location[ft,%]	End Location[ft,%]
17	M117	X	.837	.837	0	%100
18	M117	Z	-.483	-.483	0	%100
19	M118	X	3.177	3.177	0	%100
20	M118	Z	-1.834	-1.834	0	%100
21	M119	X	.836	.836	0	%100
22	M119	Z	-.482	-.482	0	%100
23	M120	X	.837	.837	0	%100
24	M120	Z	-.483	-.483	0	%100
25	M121	X	3.177	3.177	0	%100
26	M121	Z	-1.834	-1.834	0	%100
27	M127	X	3.104	3.104	0	%100
28	M127	Z	-1.792	-1.792	0	%100
29	M128	X	3.104	3.104	0	%100
30	M128	Z	-1.792	-1.792	0	%100
31	M18	X	2.831	2.831	0	%100
32	M18	Z	-1.635	-1.635	0	%100
33	M21	X	.865	.865	0	%100
34	M21	Z	-.499	-.499	0	%100
35	M22	X	.865	.865	0	%100
36	M22	Z	-.499	-.499	0	%100
37	M21A	X	1.808	1.808	0	%100
38	M21A	Z	-1.044	-1.044	0	%100
39	M22A	X	1.808	1.808	0	%100
40	M22A	Z	-1.044	-1.044	0	%100
41	MP1A	X	3.121	3.121	0	%100
42	MP1A	Z	-1.802	-1.802	0	%100
43	MP4A	X	3.121	3.121	0	%100
44	MP4A	Z	-1.802	-1.802	0	%100
45	MP2A	X	3.121	3.121	0	%100
46	MP2A	Z	-1.802	-1.802	0	%100
47	MP3A	X	3.121	3.121	0	%100
48	MP3A	Z	-1.802	-1.802	0	%100
49	M35	X	1.954	1.954	0	%100
50	M35	Z	-1.128	-1.128	0	%100
51	M41	X	.863	.863	0	%100
52	M41	Z	-.498	-.498	0	%100
53	M42	X	1.624	1.624	0	%100
54	M42	Z	-.938	-.938	0	%100
55	M43	X	2.937	2.937	0	%100
56	M43	Z	-1.696	-1.696	0	%100
57	M44	X	2.754	2.754	0	%100
58	M44	Z	-1.59	-1.59	0	%100
59	M45	X	3.145	3.145	0	%100
60	M45	Z	-1.816	-1.816	0	%100

Member Distributed Loads (BLC 56 : Structure Wi (90 Deg))

	Member Label	Direction	Start Magnitude[lb/ft,...	End Magnitude[lb/ft,F...	Start Location[ft,%]	End Location[ft,%]
1	LV	X	0	0	0	%100
2	LV	Z	0	0	0	%100
3	M110	X	0	0	0	%100
4	M110	Z	0	0	0	%100

Member Distributed Loads (BLC 56 : Structure Wi (90 Deg)) (Continued)

	Member Label	Direction	Start Magnitude[lb/ft,...	End Magnitude[lb/ft,F...	Start Location[ft,%]	End Location[ft,%]
5	M111	X	2.846	2.846	0	%100
6	M111	Z	0	0	0	%100
7	M112	X	2.846	2.846	0	%100
8	M112	Z	0	0	0	%100
9	M113	X	2.846	2.846	0	%100
10	M113	Z	0	0	0	%100
11	M114	X	2.846	2.846	0	%100
12	M114	Z	0	0	0	%100
13	M115	X	2.846	2.846	0	%100
14	M115	Z	0	0	0	%100
15	M116	X	2.798	2.798	0	%100
16	M116	Z	0	0	0	%100
17	M117	X	0	0	0	%100
18	M117	Z	0	0	0	%100
19	M118	X	2.798	2.798	0	%100
20	M118	Z	0	0	0	%100
21	M119	X	2.798	2.798	0	%100
22	M119	Z	0	0	0	%100
23	M120	X	0	0	0	%100
24	M120	Z	0	0	0	%100
25	M121	X	2.798	2.798	0	%100
26	M121	Z	0	0	0	%100
27	M127	X	3.584	3.584	0	%100
28	M127	Z	0	0	0	%100
29	M128	X	3.584	3.584	0	%100
30	M128	Z	0	0	0	%100
31	M18	X	3.27	3.27	0	%100
32	M18	Z	0	0	0	%100
33	M21	X	.333	.333	0	%100
34	M21	Z	0	0	0	%100
35	M22	X	.333	.333	0	%100
36	M22	Z	0	0	0	%100
37	M21A	X	.696	.696	0	%100
38	M21A	Z	0	0	0	%100
39	M22A	X	.696	.696	0	%100
40	M22A	Z	0	0	0	%100
41	MP1A	X	3.604	3.604	0	%100
42	MP1A	Z	0	0	0	%100
43	MP4A	X	3.604	3.604	0	%100
44	MP4A	Z	0	0	0	%100
45	MP2A	X	3.604	3.604	0	%100
46	MP2A	Z	0	0	0	%100
47	MP3A	X	3.604	3.604	0	%100
48	MP3A	Z	0	0	0	%100
49	M35	X	2.224	2.224	0	%100
50	M35	Z	0	0	0	%100
51	M41	X	0	0	0	%100
52	M41	Z	0	0	0	%100
53	M42	X	2.76	2.76	0	%100
54	M42	Z	0	0	0	%100
55	M43	X	1.505	1.505	0	%100
56	M43	Z	0	0	0	%100

Member Distributed Loads (BLC 56 : Structure Wi (90 Deg)) (Continued)

	Member Label	Direction	Start Magnitude[lb/ft,...	End Magnitude[lb/ft,F...	Start Location[ft,%]	End Location[ft,%]
57	M44	X	3.5	3.5	0	%100
58	M44	Z	0	0	0	%100
59	M45	X	2.379	2.379	0	%100
60	M45	Z	0	0	0	%100

Member Distributed Loads (BLC 57 : Structure Wi (120 Deg))

	Member Label	Direction	Start Magnitude[lb/ft,...	End Magnitude[lb/ft,F...	Start Location[ft,%]	End Location[ft,%]
1	LV	X	1.214	1.214	0	%100
2	LV	Z	.701	.701	0	%100
3	M110	X	1.214	1.214	0	%100
4	M110	Z	.701	.701	0	%100
5	M111	X	2.465	2.465	0	%100
6	M111	Z	1.423	1.423	0	%100
7	M112	X	2.465	2.465	0	%100
8	M112	Z	1.423	1.423	0	%100
9	M113	X	2.465	2.465	0	%100
10	M113	Z	1.423	1.423	0	%100
11	M114	X	2.465	2.465	0	%100
12	M114	Z	1.423	1.423	0	%100
13	M115	X	2.465	2.465	0	%100
14	M115	Z	1.423	1.423	0	%100
15	M116	X	3.177	3.177	0	%100
16	M116	Z	1.834	1.834	0	%100
17	M117	X	.837	.837	0	%100
18	M117	Z	.483	.483	0	%100
19	M118	X	.836	.836	0	%100
20	M118	Z	.482	.482	0	%100
21	M119	X	3.177	3.177	0	%100
22	M119	Z	1.834	1.834	0	%100
23	M120	X	.837	.837	0	%100
24	M120	Z	.483	.483	0	%100
25	M121	X	.836	.836	0	%100
26	M121	Z	.482	.482	0	%100
27	M127	X	3.104	3.104	0	%100
28	M127	Z	1.792	1.792	0	%100
29	M128	X	3.104	3.104	0	%100
30	M128	Z	1.792	1.792	0	%100
31	M18	X	2.831	2.831	0	%100
32	M18	Z	1.635	1.635	0	%100
33	M21	X	0	0	0	%100
34	M21	Z	0	0	0	%100
35	M22	X	0	0	0	%100
36	M22	Z	0	0	0	%100
37	M21A	X	0	0	0	%100
38	M21A	Z	0	0	0	%100
39	M22A	X	0	0	0	%100
40	M22A	Z	0	0	0	%100
41	MP1A	X	3.121	3.121	0	%100
42	MP1A	Z	1.802	1.802	0	%100
43	MP4A	X	3.121	3.121	0	%100
44	MP4A	Z	1.802	1.802	0	%100

Member Distributed Loads (BLC 57 : Structure Wi (120 Deg)) (Continued)

	Member Label	Direction	Start Magnitude[lb/ft,...	End Magnitude[lb/ft,F...	Start Location[ft,%]	End Location[ft,%]
45	MP2A	X	3.121	3.121	0	%100
46	MP2A	Z	1.802	1.802	0	%100
47	MP3A	X	3.121	3.121	0	%100
48	MP3A	Z	1.802	1.802	0	%100
49	M35	X	1.012	1.012	0	%100
50	M35	Z	.584	.584	0	%100
51	M41	X	.863	.863	0	%100
52	M41	Z	.498	.498	0	%100
53	M42	X	3.441	3.441	0	%100
54	M42	Z	1.987	1.987	0	%100
55	M43	X	.952	.952	0	%100
56	M43	Z	.549	.549	0	%100
57	M44	X	3.801	3.801	0	%100
58	M44	Z	2.194	2.194	0	%100
59	M45	X	2	2	0	%100
60	M45	Z	1.155	1.155	0	%100

Member Distributed Loads (BLC 58 : Structure Wi (150 Deg))

	Member Label	Direction	Start Magnitude[lb/ft,...	End Magnitude[lb/ft,F...	Start Location[ft,%]	End Location[ft,%]
1	LV	X	2.102	2.102	0	%100
2	LV	Z	3.641	3.641	0	%100
3	M110	X	2.102	2.102	0	%100
4	M110	Z	3.641	3.641	0	%100
5	M111	X	1.423	1.423	0	%100
6	M111	Z	2.465	2.465	0	%100
7	M112	X	1.423	1.423	0	%100
8	M112	Z	2.465	2.465	0	%100
9	M113	X	1.423	1.423	0	%100
10	M113	Z	2.465	2.465	0	%100
11	M114	X	1.423	1.423	0	%100
12	M114	Z	2.465	2.465	0	%100
13	M115	X	1.423	1.423	0	%100
14	M115	Z	2.465	2.465	0	%100
15	M116	X	1.352	1.352	0	%100
16	M116	Z	2.342	2.342	0	%100
17	M117	X	1.449	1.449	0	%100
18	M117	Z	2.51	2.51	0	%100
19	M118	X	.000406	.000406	0	%100
20	M118	Z	.000702	.000702	0	%100
21	M119	X	1.352	1.352	0	%100
22	M119	Z	2.342	2.342	0	%100
23	M120	X	1.449	1.449	0	%100
24	M120	Z	2.51	2.51	0	%100
25	M121	X	.000406	.000406	0	%100
26	M121	Z	.000702	.000702	0	%100
27	M127	X	1.792	1.792	0	%100
28	M127	Z	3.104	3.104	0	%100
29	M128	X	1.792	1.792	0	%100
30	M128	Z	3.104	3.104	0	%100
31	M18	X	1.635	1.635	0	%100
32	M18	Z	2.831	2.831	0	%100

Member Distributed Loads (BLC 58 : Structure Wi (150 Deg)) (Continued)

	Member Label	Direction	Start Magnitude[lb/ft,...	End Magnitude[lb/ft,F...	Start Location[ft,%]	End Location[ft,%]
33	M21	X	.166	.166	0	%100
34	M21	Z	.288	.288	0	%100
35	M22	X	.166	.166	0	%100
36	M22	Z	.288	.288	0	%100
37	M21A	X	.348	.348	0	%100
38	M21A	Z	.603	.603	0	%100
39	M22A	X	.348	.348	0	%100
40	M22A	Z	.603	.603	0	%100
41	MP1A	X	1.802	1.802	0	%100
42	MP1A	Z	3.121	3.121	0	%100
43	MP4A	X	1.802	1.802	0	%100
44	MP4A	Z	3.121	3.121	0	%100
45	MP2A	X	1.802	1.802	0	%100
46	MP2A	Z	3.121	3.121	0	%100
47	MP3A	X	1.802	1.802	0	%100
48	MP3A	Z	3.121	3.121	0	%100
49	M35	X	.072	.072	0	%100
50	M35	Z	.126	.126	0	%100
51	M41	X	1.494	1.494	0	%100
52	M41	Z	2.588	2.588	0	%100
53	M42	X	2.151	2.151	0	%100
54	M42	Z	3.726	3.726	0	%100
55	M43	X	1.289	1.289	0	%100
56	M43	Z	2.233	2.233	0	%100
57	M44	X	2.479	2.479	0	%100
58	M44	Z	4.294	4.294	0	%100
59	M45	X	1.746	1.746	0	%100
60	M45	Z	3.024	3.024	0	%100

Member Distributed Loads (BLC 59 : Structure Wi (180 Deg))

	Member Label	Direction	Start Magnitude[lb/ft,...	End Magnitude[lb/ft,F...	Start Location[ft,%]	End Location[ft,%]
1	LV	X	0	0	0	%100
2	LV	Z	5.605	5.605	0	%100
3	M110	X	0	0	0	%100
4	M110	Z	5.605	5.605	0	%100
5	M111	X	0	0	0	%100
6	M111	Z	2.846	2.846	0	%100
7	M112	X	0	0	0	%100
8	M112	Z	2.846	2.846	0	%100
9	M113	X	0	0	0	%100
10	M113	Z	2.846	2.846	0	%100
11	M114	X	0	0	0	%100
12	M114	Z	2.846	2.846	0	%100
13	M115	X	0	0	0	%100
14	M115	Z	2.846	2.846	0	%100
15	M116	X	0	0	0	%100
16	M116	Z	.87	.87	0	%100
17	M117	X	0	0	0	%100
18	M117	Z	3.864	3.864	0	%100
19	M118	X	0	0	0	%100
20	M118	Z	.87	.87	0	%100

Member Distributed Loads (BLC 59 : Structure Wi (180 Deg)) (Continued)

	Member Label	Direction	Start Magnitude[lb/ft,...	End Magnitude[lb/ft,F...	Start Location[ft,%]	End Location[ft,%]
21	M119	X	0	0	0	%100
22	M119	Z	.87	.87	0	%100
23	M120	X	0	0	0	%100
24	M120	Z	3.864	3.864	0	%100
25	M121	X	0	0	0	%100
26	M121	Z	.87	.87	0	%100
27	M127	X	0	0	0	%100
28	M127	Z	3.584	3.584	0	%100
29	M128	X	0	0	0	%100
30	M128	Z	3.584	3.584	0	%100
31	M18	X	0	0	0	%100
32	M18	Z	3.27	3.27	0	%100
33	M21	X	0	0	0	%100
34	M21	Z	.999	.999	0	%100
35	M22	X	0	0	0	%100
36	M22	Z	.999	.999	0	%100
37	M21A	X	0	0	0	%100
38	M21A	Z	2.088	2.088	0	%100
39	M22A	X	0	0	0	%100
40	M22A	Z	2.088	2.088	0	%100
41	MP1A	X	0	0	0	%100
42	MP1A	Z	3.604	3.604	0	%100
43	MP4A	X	0	0	0	%100
44	MP4A	Z	3.604	3.604	0	%100
45	MP2A	X	0	0	0	%100
46	MP2A	Z	3.604	3.604	0	%100
47	MP3A	X	0	0	0	%100
48	MP3A	Z	3.604	3.604	0	%100
49	M35	X	0	0	0	%100
50	M35	Z	.177	.177	0	%100
51	M41	X	0	0	0	%100
52	M41	Z	3.985	3.985	0	%100
53	M42	X	0	0	0	%100
54	M42	Z	3.417	3.417	0	%100
55	M43	X	0	0	0	%100
56	M43	Z	4.464	4.464	0	%100
57	M44	X	0	0	0	%100
58	M44	Z	4.639	4.639	0	%100
59	M45	X	0	0	0	%100
60	M45	Z	4.745	4.745	0	%100

Member Distributed Loads (BLC 60 : Structure Wi (210 Deg))

	Member Label	Direction	Start Magnitude[lb/ft,...	End Magnitude[lb/ft,F...	Start Location[ft,%]	End Location[ft,%]
1	LV	X	-2.102	-2.102	0	%100
2	LV	Z	3.641	3.641	0	%100
3	M110	X	-2.102	-2.102	0	%100
4	M110	Z	3.641	3.641	0	%100
5	M111	X	-1.423	-1.423	0	%100
6	M111	Z	2.465	2.465	0	%100
7	M112	X	-1.423	-1.423	0	%100
8	M112	Z	2.465	2.465	0	%100

Member Distributed Loads (BLC 60 : Structure Wi (210 Deg)) (Continued)

	Member Label	Direction	Start Magnitude[lb/ft,...	End Magnitude[lb/ft,F...	Start Location[ft,%]	End Location[ft,%]
9	M113	X	-1.423	-1.423	0	%100
10	M113	Z	2.465	2.465	0	%100
11	M114	X	-1.423	-1.423	0	%100
12	M114	Z	2.465	2.465	0	%100
13	M115	X	-1.423	-1.423	0	%100
14	M115	Z	2.465	2.465	0	%100
15	M116	X	-.000406	-.000406	0	%100
16	M116	Z	.000702	.000702	0	%100
17	M117	X	-1.449	-1.449	0	%100
18	M117	Z	2.51	2.51	0	%100
19	M118	X	-1.352	-1.352	0	%100
20	M118	Z	2.342	2.342	0	%100
21	M119	X	-.000406	-.000406	0	%100
22	M119	Z	.000702	.000702	0	%100
23	M120	X	-1.449	-1.449	0	%100
24	M120	Z	2.51	2.51	0	%100
25	M121	X	-1.352	-1.352	0	%100
26	M121	Z	2.342	2.342	0	%100
27	M127	X	-1.792	-1.792	0	%100
28	M127	Z	3.104	3.104	0	%100
29	M128	X	-1.792	-1.792	0	%100
30	M128	Z	3.104	3.104	0	%100
31	M18	X	-1.635	-1.635	0	%100
32	M18	Z	2.831	2.831	0	%100
33	M21	X	-.666	-.666	0	%100
34	M21	Z	1.153	1.153	0	%100
35	M22	X	-.666	-.666	0	%100
36	M22	Z	1.153	1.153	0	%100
37	M21A	X	-1.392	-1.392	0	%100
38	M21A	Z	2.411	2.411	0	%100
39	M22A	X	-1.392	-1.392	0	%100
40	M22A	Z	2.411	2.411	0	%100
41	MP1A	X	-1.802	-1.802	0	%100
42	MP1A	Z	3.121	3.121	0	%100
43	MP4A	X	-1.802	-1.802	0	%100
44	MP4A	Z	3.121	3.121	0	%100
45	MP2A	X	-1.802	-1.802	0	%100
46	MP2A	Z	3.121	3.121	0	%100
47	MP3A	X	-1.802	-1.802	0	%100
48	MP3A	Z	3.121	3.121	0	%100
49	M35	X	-.616	-.616	0	%100
50	M35	Z	1.068	1.068	0	%100
51	M41	X	-1.494	-1.494	0	%100
52	M41	Z	2.588	2.588	0	%100
53	M42	X	-1.102	-1.102	0	%100
54	M42	Z	1.908	1.908	0	%100
55	M43	X	-2.435	-2.435	0	%100
56	M43	Z	4.218	4.218	0	%100
57	M44	X	-1.875	-1.875	0	%100
58	M44	Z	3.247	3.247	0	%100
59	M45	X	-2.407	-2.407	0	%100
60	M45	Z	4.169	4.169	0	%100

Member Distributed Loads (BLC 61 : Structure Wi (240 Deg))

	Member Label	Direction	Start Magnitude[lb/ft,...	End Magnitude[lb/ft,F...	Start Location[ft,%]	End Location[ft,%]
1	LV	X	-1.214	-1.214	0	%100
2	LV	Z	.701	.701	0	%100
3	M110	X	-1.214	-1.214	0	%100
4	M110	Z	.701	.701	0	%100
5	M111	X	-2.465	-2.465	0	%100
6	M111	Z	1.423	1.423	0	%100
7	M112	X	-2.465	-2.465	0	%100
8	M112	Z	1.423	1.423	0	%100
9	M113	X	-2.465	-2.465	0	%100
10	M113	Z	1.423	1.423	0	%100
11	M114	X	-2.465	-2.465	0	%100
12	M114	Z	1.423	1.423	0	%100
13	M115	X	-2.465	-2.465	0	%100
14	M115	Z	1.423	1.423	0	%100
15	M116	X	-.836	-.836	0	%100
16	M116	Z	.482	.482	0	%100
17	M117	X	-.837	-.837	0	%100
18	M117	Z	.483	.483	0	%100
19	M118	X	-3.177	-3.177	0	%100
20	M118	Z	1.834	1.834	0	%100
21	M119	X	-.836	-.836	0	%100
22	M119	Z	.482	.482	0	%100
23	M120	X	-.837	-.837	0	%100
24	M120	Z	.483	.483	0	%100
25	M121	X	-3.177	-3.177	0	%100
26	M121	Z	1.834	1.834	0	%100
27	M127	X	-3.104	-3.104	0	%100
28	M127	Z	1.792	1.792	0	%100
29	M128	X	-3.104	-3.104	0	%100
30	M128	Z	1.792	1.792	0	%100
31	M18	X	-2.831	-2.831	0	%100
32	M18	Z	1.635	1.635	0	%100
33	M21	X	-.865	-.865	0	%100
34	M21	Z	.499	.499	0	%100
35	M22	X	-.865	-.865	0	%100
36	M22	Z	.499	.499	0	%100
37	M21A	X	-1.808	-1.808	0	%100
38	M21A	Z	1.044	1.044	0	%100
39	M22A	X	-1.808	-1.808	0	%100
40	M22A	Z	1.044	1.044	0	%100
41	MP1A	X	-3.121	-3.121	0	%100
42	MP1A	Z	1.802	1.802	0	%100
43	MP4A	X	-3.121	-3.121	0	%100
44	MP4A	Z	1.802	1.802	0	%100
45	MP2A	X	-3.121	-3.121	0	%100
46	MP2A	Z	1.802	1.802	0	%100
47	MP3A	X	-3.121	-3.121	0	%100
48	MP3A	Z	1.802	1.802	0	%100
49	M35	X	-1.954	-1.954	0	%100
50	M35	Z	1.128	1.128	0	%100
51	M41	X	-.863	-.863	0	%100
52	M41	Z	.498	.498	0	%100

Member Distributed Loads (BLC 61 : Structure Wi (240 Deg)) (Continued)

	Member Label	Direction	Start Magnitude[lb/ft,...	End Magnitude[lb/ft,F...	Start Location[ft,%]	End Location[ft,%]
53	M42	X	-1.624	-1.624	0	%100
54	M42	Z	.938	.938	0	%100
55	M43	X	-2.937	-2.937	0	%100
56	M43	Z	1.696	1.696	0	%100
57	M44	X	-2.754	-2.754	0	%100
58	M44	Z	1.59	1.59	0	%100
59	M45	X	-3.145	-3.145	0	%100
60	M45	Z	1.816	1.816	0	%100

Member Distributed Loads (BLC 62 : Structure Wi (270 Deg))

	Member Label	Direction	Start Magnitude[lb/ft,...	End Magnitude[lb/ft,F...	Start Location[ft,%]	End Location[ft,%]
1	LV	X	0	0	0	%100
2	LV	Z	0	0	0	%100
3	M110	X	0	0	0	%100
4	M110	Z	0	0	0	%100
5	M111	X	-2.846	-2.846	0	%100
6	M111	Z	0	0	0	%100
7	M112	X	-2.846	-2.846	0	%100
8	M112	Z	0	0	0	%100
9	M113	X	-2.846	-2.846	0	%100
10	M113	Z	0	0	0	%100
11	M114	X	-2.846	-2.846	0	%100
12	M114	Z	0	0	0	%100
13	M115	X	-2.846	-2.846	0	%100
14	M115	Z	0	0	0	%100
15	M116	X	-2.798	-2.798	0	%100
16	M116	Z	0	0	0	%100
17	M117	X	0	0	0	%100
18	M117	Z	0	0	0	%100
19	M118	X	-2.798	-2.798	0	%100
20	M118	Z	0	0	0	%100
21	M119	X	-2.798	-2.798	0	%100
22	M119	Z	0	0	0	%100
23	M120	X	0	0	0	%100
24	M120	Z	0	0	0	%100
25	M121	X	-2.798	-2.798	0	%100
26	M121	Z	0	0	0	%100
27	M127	X	-3.584	-3.584	0	%100
28	M127	Z	0	0	0	%100
29	M128	X	-3.584	-3.584	0	%100
30	M128	Z	0	0	0	%100
31	M18	X	-3.27	-3.27	0	%100
32	M18	Z	0	0	0	%100
33	M21	X	-.333	-.333	0	%100
34	M21	Z	0	0	0	%100
35	M22	X	-.333	-.333	0	%100
36	M22	Z	0	0	0	%100
37	M21A	X	-.696	-.696	0	%100
38	M21A	Z	0	0	0	%100
39	M22A	X	-.696	-.696	0	%100
40	M22A	Z	0	0	0	%100

Member Distributed Loads (BLC 62 : Structure Wi (270 Deg)) (Continued)

	Member Label	Direction	Start Magnitude[lb/ft,...	End Magnitude[lb/ft,F...	Start Location[ft,%]	End Location[ft,%]
41	MP1A	X	-3.604	-3.604	0	%100
42	MP1A	Z	0	0	0	%100
43	MP4A	X	-3.604	-3.604	0	%100
44	MP4A	Z	0	0	0	%100
45	MP2A	X	-3.604	-3.604	0	%100
46	MP2A	Z	0	0	0	%100
47	MP3A	X	-3.604	-3.604	0	%100
48	MP3A	Z	0	0	0	%100
49	M35	X	-2.224	-2.224	0	%100
50	M35	Z	0	0	0	%100
51	M41	X	0	0	0	%100
52	M41	Z	0	0	0	%100
53	M42	X	-2.76	-2.76	0	%100
54	M42	Z	0	0	0	%100
55	M43	X	-1.505	-1.505	0	%100
56	M43	Z	0	0	0	%100
57	M44	X	-3.5	-3.5	0	%100
58	M44	Z	0	0	0	%100
59	M45	X	-2.379	-2.379	0	%100
60	M45	Z	0	0	0	%100

Member Distributed Loads (BLC 63 : Structure Wi (300 Deg))

	Member Label	Direction	Start Magnitude[lb/ft,...	End Magnitude[lb/ft,F...	Start Location[ft,%]	End Location[ft,%]
1	LV	X	-1.214	-1.214	0	%100
2	LV	Z	-.701	-.701	0	%100
3	M110	X	-1.214	-1.214	0	%100
4	M110	Z	-.701	-.701	0	%100
5	M111	X	-2.465	-2.465	0	%100
6	M111	Z	-1.423	-1.423	0	%100
7	M112	X	-2.465	-2.465	0	%100
8	M112	Z	-1.423	-1.423	0	%100
9	M113	X	-2.465	-2.465	0	%100
10	M113	Z	-1.423	-1.423	0	%100
11	M114	X	-2.465	-2.465	0	%100
12	M114	Z	-1.423	-1.423	0	%100
13	M115	X	-2.465	-2.465	0	%100
14	M115	Z	-1.423	-1.423	0	%100
15	M116	X	-3.177	-3.177	0	%100
16	M116	Z	-1.834	-1.834	0	%100
17	M117	X	-.837	-.837	0	%100
18	M117	Z	-.483	-.483	0	%100
19	M118	X	-.836	-.836	0	%100
20	M118	Z	-.482	-.482	0	%100
21	M119	X	-3.177	-3.177	0	%100
22	M119	Z	-1.834	-1.834	0	%100
23	M120	X	-.837	-.837	0	%100
24	M120	Z	-.483	-.483	0	%100
25	M121	X	-.836	-.836	0	%100
26	M121	Z	-.482	-.482	0	%100
27	M127	X	-3.104	-3.104	0	%100
28	M127	Z	-1.792	-1.792	0	%100

Member Distributed Loads (BLC 63 : Structure Wi (300 Deg)) (Continued)

	Member Label	Direction	Start Magnitude[lb/ft,...	End Magnitude[lb/ft,F...	Start Location[ft,%]	End Location[ft,%]
29	M128	X	-3.104	-3.104	0	%100
30	M128	Z	-1.792	-1.792	0	%100
31	M18	X	-2.831	-2.831	0	%100
32	M18	Z	-1.635	-1.635	0	%100
33	M21	X	0	0	0	%100
34	M21	Z	0	0	0	%100
35	M22	X	0	0	0	%100
36	M22	Z	0	0	0	%100
37	M21A	X	0	0	0	%100
38	M21A	Z	0	0	0	%100
39	M22A	X	0	0	0	%100
40	M22A	Z	0	0	0	%100
41	MP1A	X	-3.121	-3.121	0	%100
42	MP1A	Z	-1.802	-1.802	0	%100
43	MP4A	X	-3.121	-3.121	0	%100
44	MP4A	Z	-1.802	-1.802	0	%100
45	MP2A	X	-3.121	-3.121	0	%100
46	MP2A	Z	-1.802	-1.802	0	%100
47	MP3A	X	-3.121	-3.121	0	%100
48	MP3A	Z	-1.802	-1.802	0	%100
49	M35	X	-1.012	-1.012	0	%100
50	M35	Z	-.584	-.584	0	%100
51	M41	X	-.863	-.863	0	%100
52	M41	Z	-.498	-.498	0	%100
53	M42	X	-3.441	-3.441	0	%100
54	M42	Z	-1.987	-1.987	0	%100
55	M43	X	-.952	-.952	0	%100
56	M43	Z	-.549	-.549	0	%100
57	M44	X	-3.801	-3.801	0	%100
58	M44	Z	-2.194	-2.194	0	%100
59	M45	X	-2	-2	0	%100
60	M45	Z	-1.155	-1.155	0	%100

Member Distributed Loads (BLC 64 : Structure Wi (330 Deg))

	Member Label	Direction	Start Magnitude[lb/ft,...	End Magnitude[lb/ft,F...	Start Location[ft,%]	End Location[ft,%]
1	LV	X	-2.102	-2.102	0	%100
2	LV	Z	-3.641	-3.641	0	%100
3	M110	X	-2.102	-2.102	0	%100
4	M110	Z	-3.641	-3.641	0	%100
5	M111	X	-1.423	-1.423	0	%100
6	M111	Z	-2.465	-2.465	0	%100
7	M112	X	-1.423	-1.423	0	%100
8	M112	Z	-2.465	-2.465	0	%100
9	M113	X	-1.423	-1.423	0	%100
10	M113	Z	-2.465	-2.465	0	%100
11	M114	X	-1.423	-1.423	0	%100
12	M114	Z	-2.465	-2.465	0	%100
13	M115	X	-1.423	-1.423	0	%100
14	M115	Z	-2.465	-2.465	0	%100
15	M116	X	-1.352	-1.352	0	%100
16	M116	Z	-2.342	-2.342	0	%100

Member Distributed Loads (BLC 64 : Structure Wi (330 Deg)) (Continued)

	Member Label	Direction	Start Magnitude[lb/ft,...	End Magnitude[lb/ft,F...	Start Location[ft,%]	End Location[ft,%]
17	M117	X	-1.449	-1.449	0	%100
18	M117	Z	-2.51	-2.51	0	%100
19	M118	X	-.000406	-.000406	0	%100
20	M118	Z	-.000702	-.000702	0	%100
21	M119	X	-1.352	-1.352	0	%100
22	M119	Z	-2.342	-2.342	0	%100
23	M120	X	-1.449	-1.449	0	%100
24	M120	Z	-2.51	-2.51	0	%100
25	M121	X	-.000406	-.000406	0	%100
26	M121	Z	-.000702	-.000702	0	%100
27	M127	X	-1.792	-1.792	0	%100
28	M127	Z	-3.104	-3.104	0	%100
29	M128	X	-1.792	-1.792	0	%100
30	M128	Z	-3.104	-3.104	0	%100
31	M18	X	-1.635	-1.635	0	%100
32	M18	Z	-2.831	-2.831	0	%100
33	M21	X	-.166	-.166	0	%100
34	M21	Z	-.288	-.288	0	%100
35	M22	X	-.166	-.166	0	%100
36	M22	Z	-.288	-.288	0	%100
37	M21A	X	-.348	-.348	0	%100
38	M21A	Z	-.603	-.603	0	%100
39	M22A	X	-.348	-.348	0	%100
40	M22A	Z	-.603	-.603	0	%100
41	MP1A	X	-1.802	-1.802	0	%100
42	MP1A	Z	-3.121	-3.121	0	%100
43	MP4A	X	-1.802	-1.802	0	%100
44	MP4A	Z	-3.121	-3.121	0	%100
45	MP2A	X	-1.802	-1.802	0	%100
46	MP2A	Z	-3.121	-3.121	0	%100
47	MP3A	X	-1.802	-1.802	0	%100
48	MP3A	Z	-3.121	-3.121	0	%100
49	M35	X	-.072	-.072	0	%100
50	M35	Z	-.126	-.126	0	%100
51	M41	X	-1.494	-1.494	0	%100
52	M41	Z	-2.588	-2.588	0	%100
53	M42	X	-2.151	-2.151	0	%100
54	M42	Z	-3.726	-3.726	0	%100
55	M43	X	-1.289	-1.289	0	%100
56	M43	Z	-2.233	-2.233	0	%100
57	M44	X	-2.479	-2.479	0	%100
58	M44	Z	-4.294	-4.294	0	%100
59	M45	X	-1.746	-1.746	0	%100
60	M45	Z	-3.024	-3.024	0	%100

Member Distributed Loads (BLC 65 : Structure Wm (0 Deg))

	Member Label	Direction	Start Magnitude[lb/ft,...	End Magnitude[lb/ft,F...	Start Location[ft,%]	End Location[ft,%]
1	LV	X	0	0	0	%100
2	LV	Z	-1.372	-1.372	0	%100
3	M110	X	0	0	0	%100
4	M110	Z	-1.372	-1.372	0	%100

Member Distributed Loads (BLC 65 : Structure Wm (0 Deg)) (Continued)

	Member Label	Direction	Start Magnitude[lb/ft,...	End Magnitude[lb/ft,F...	Start Location[ft,%]	End Location[ft,%]
5	M111	X	0	0	0	%100
6	M111	Z	-.514	-.514	0	%100
7	M112	X	0	0	0	%100
8	M112	Z	-.514	-.514	0	%100
9	M113	X	0	0	0	%100
10	M113	Z	-.514	-.514	0	%100
11	M114	X	0	0	0	%100
12	M114	Z	-.514	-.514	0	%100
13	M115	X	0	0	0	%100
14	M115	Z	-.514	-.514	0	%100
15	M116	X	0	0	0	%100
16	M116	Z	-.213	-.213	0	%100
17	M117	X	0	0	0	%100
18	M117	Z	-.945	-.945	0	%100
19	M118	X	0	0	0	%100
20	M118	Z	-.213	-.213	0	%100
21	M119	X	0	0	0	%100
22	M119	Z	-.213	-.213	0	%100
23	M120	X	0	0	0	%100
24	M120	Z	-.945	-.945	0	%100
25	M121	X	0	0	0	%100
26	M121	Z	-.213	-.213	0	%100
27	M127	X	0	0	0	%100
28	M127	Z	-.78	-.78	0	%100
29	M128	X	0	0	0	%100
30	M128	Z	-.78	-.78	0	%100
31	M18	X	0	0	0	%100
32	M18	Z	-.627	-.627	0	%100
33	M21	X	0	0	0	%100
34	M21	Z	-.077	-.077	0	%100
35	M22	X	0	0	0	%100
36	M22	Z	-.077	-.077	0	%100
37	M21A	X	0	0	0	%100
38	M21A	Z	-.446	-.446	0	%100
39	M22A	X	0	0	0	%100
40	M22A	Z	-.446	-.446	0	%100
41	MP1A	X	0	0	0	%100
42	MP1A	Z	-.652	-.652	0	%100
43	MP4A	X	0	0	0	%100
44	MP4A	Z	-.652	-.652	0	%100
45	MP2A	X	0	0	0	%100
46	MP2A	Z	-.652	-.652	0	%100
47	MP3A	X	0	0	0	%100
48	MP3A	Z	-.652	-.652	0	%100
49	M35	X	0	0	0	%100
50	M35	Z	-.029	-.029	0	%100
51	M41	X	0	0	0	%100
52	M41	Z	-.789	-.789	0	%100
53	M42	X	0	0	0	%100
54	M42	Z	-.784	-.784	0	%100
55	M43	X	0	0	0	%100
56	M43	Z	-1.027	-1.027	0	%100

Member Distributed Loads (BLC 65 : Structure Wm (0 Deg)) (Continued)

	Member Label	Direction	Start Magnitude[lb/ft,...	End Magnitude[lb/ft,F...	Start Location[ft,%]	End Location[ft,%]
57	M44	X	0	0	0	%100
58	M44	Z	-1.067	-1.067	0	%100
59	M45	X	0	0	0	%100
60	M45	Z	-1.092	-1.092	0	%100

Member Distributed Loads (BLC 66 : Structure Wm (30 Deg))

	Member Label	Direction	Start Magnitude[lb/ft,...	End Magnitude[lb/ft,F...	Start Location[ft,%]	End Location[ft,%]
1	LV	X	.515	.515	0	%100
2	LV	Z	-.891	-.891	0	%100
3	M110	X	.515	.515	0	%100
4	M110	Z	-.891	-.891	0	%100
5	M111	X	.257	.257	0	%100
6	M111	Z	-.445	-.445	0	%100
7	M112	X	.257	.257	0	%100
8	M112	Z	-.445	-.445	0	%100
9	M113	X	.257	.257	0	%100
10	M113	Z	-.445	-.445	0	%100
11	M114	X	.257	.257	0	%100
12	M114	Z	-.445	-.445	0	%100
13	M115	X	.257	.257	0	%100
14	M115	Z	-.445	-.445	0	%100
15	M116	X	9.9e-5	9.9e-5	0	%100
16	M116	Z	-.000172	-.000172	0	%100
17	M117	X	.355	.355	0	%100
18	M117	Z	-.614	-.614	0	%100
19	M118	X	.331	.331	0	%100
20	M118	Z	-.573	-.573	0	%100
21	M119	X	9.9e-5	9.9e-5	0	%100
22	M119	Z	-.000172	-.000172	0	%100
23	M120	X	.355	.355	0	%100
24	M120	Z	-.614	-.614	0	%100
25	M121	X	.331	.331	0	%100
26	M121	Z	-.573	-.573	0	%100
27	M127	X	.39	.39	0	%100
28	M127	Z	-.675	-.675	0	%100
29	M128	X	.39	.39	0	%100
30	M128	Z	-.675	-.675	0	%100
31	M18	X	.314	.314	0	%100
32	M18	Z	-.543	-.543	0	%100
33	M21	X	.051	.051	0	%100
34	M21	Z	-.089	-.089	0	%100
35	M22	X	.051	.051	0	%100
36	M22	Z	-.089	-.089	0	%100
37	M21A	X	.297	.297	0	%100
38	M21A	Z	-.515	-.515	0	%100
39	M22A	X	.297	.297	0	%100
40	M22A	Z	-.515	-.515	0	%100
41	MP1A	X	.326	.326	0	%100
42	MP1A	Z	-.565	-.565	0	%100
43	MP4A	X	.326	.326	0	%100
44	MP4A	Z	-.565	-.565	0	%100

Member Distributed Loads (BLC 66 : Structure Wm (30 Deg)) (Continued)

	Member Label	Direction	Start Magnitude[lb/ft,...	End Magnitude[lb/ft,F...	Start Location[ft,%]	End Location[ft,%]
45	MP2A	X	.326	.326	0	%100
46	MP2A	Z	-.565	-.565	0	%100
47	MP3A	X	.326	.326	0	%100
48	MP3A	Z	-.565	-.565	0	%100
49	M35	X	.102	.102	0	%100
50	M35	Z	-.177	-.177	0	%100
51	M41	X	.296	.296	0	%100
52	M41	Z	-.513	-.513	0	%100
53	M42	X	.253	.253	0	%100
54	M42	Z	-.438	-.438	0	%100
55	M43	X	.56	.56	0	%100
56	M43	Z	-.971	-.971	0	%100
57	M44	X	.431	.431	0	%100
58	M44	Z	-.747	-.747	0	%100
59	M45	X	.554	.554	0	%100
60	M45	Z	-.96	-.96	0	%100

Member Distributed Loads (BLC 67 : Structure Wm (60 Deg))

	Member Label	Direction	Start Magnitude[lb/ft,...	End Magnitude[lb/ft,F...	Start Location[ft,%]	End Location[ft,%]
1	LV	X	.297	.297	0	%100
2	LV	Z	-.172	-.172	0	%100
3	M110	X	.297	.297	0	%100
4	M110	Z	-.172	-.172	0	%100
5	M111	X	.445	.445	0	%100
6	M111	Z	-.257	-.257	0	%100
7	M112	X	.445	.445	0	%100
8	M112	Z	-.257	-.257	0	%100
9	M113	X	.445	.445	0	%100
10	M113	Z	-.257	-.257	0	%100
11	M114	X	.445	.445	0	%100
12	M114	Z	-.257	-.257	0	%100
13	M115	X	.445	.445	0	%100
14	M115	Z	-.257	-.257	0	%100
15	M116	X	.205	.205	0	%100
16	M116	Z	-.118	-.118	0	%100
17	M117	X	.205	.205	0	%100
18	M117	Z	-.118	-.118	0	%100
19	M118	X	.778	.778	0	%100
20	M118	Z	-.449	-.449	0	%100
21	M119	X	.205	.205	0	%100
22	M119	Z	-.118	-.118	0	%100
23	M120	X	.205	.205	0	%100
24	M120	Z	-.118	-.118	0	%100
25	M121	X	.778	.778	0	%100
26	M121	Z	-.449	-.449	0	%100
27	M127	X	.675	.675	0	%100
28	M127	Z	-.39	-.39	0	%100
29	M128	X	.675	.675	0	%100
30	M128	Z	-.39	-.39	0	%100
31	M18	X	.543	.543	0	%100
32	M18	Z	-.314	-.314	0	%100

Member Distributed Loads (BLC 67 : Structure Wm (60 Deg)) (Continued)

	Member Label	Direction	Start Magnitude[lb/ft,...	End Magnitude[lb/ft,F...	Start Location[ft,%]	End Location[ft,%]
33	M21	X	.067	.067	0	%100
34	M21	Z	-.039	-.039	0	%100
35	M22	X	.067	.067	0	%100
36	M22	Z	-.039	-.039	0	%100
37	M21A	X	.386	.386	0	%100
38	M21A	Z	-.223	-.223	0	%100
39	M22A	X	.386	.386	0	%100
40	M22A	Z	-.223	-.223	0	%100
41	MP1A	X	.565	.565	0	%100
42	MP1A	Z	-.326	-.326	0	%100
43	MP4A	X	.565	.565	0	%100
44	MP4A	Z	-.326	-.326	0	%100
45	MP2A	X	.565	.565	0	%100
46	MP2A	Z	-.326	-.326	0	%100
47	MP3A	X	.565	.565	0	%100
48	MP3A	Z	-.326	-.326	0	%100
49	M35	X	.325	.325	0	%100
50	M35	Z	-.187	-.187	0	%100
51	M41	X	.171	.171	0	%100
52	M41	Z	-.099	-.099	0	%100
53	M42	X	.373	.373	0	%100
54	M42	Z	-.215	-.215	0	%100
55	M43	X	.676	.676	0	%100
56	M43	Z	-.39	-.39	0	%100
57	M44	X	.634	.634	0	%100
58	M44	Z	-.366	-.366	0	%100
59	M45	X	.724	.724	0	%100
60	M45	Z	-.418	-.418	0	%100

Member Distributed Loads (BLC 68 : Structure Wm (90 Deg))

	Member Label	Direction	Start Magnitude[lb/ft,...	End Magnitude[lb/ft,F...	Start Location[ft,%]	End Location[ft,%]
1	LV	X	0	0	0	%100
2	LV	Z	0	0	0	%100
3	M110	X	0	0	0	%100
4	M110	Z	0	0	0	%100
5	M111	X	.514	.514	0	%100
6	M111	Z	0	0	0	%100
7	M112	X	.514	.514	0	%100
8	M112	Z	0	0	0	%100
9	M113	X	.514	.514	0	%100
10	M113	Z	0	0	0	%100
11	M114	X	.514	.514	0	%100
12	M114	Z	0	0	0	%100
13	M115	X	.514	.514	0	%100
14	M115	Z	0	0	0	%100
15	M116	X	.685	.685	0	%100
16	M116	Z	0	0	0	%100
17	M117	X	0	0	0	%100
18	M117	Z	0	0	0	%100
19	M118	X	.685	.685	0	%100
20	M118	Z	0	0	0	%100

Member Distributed Loads (BLC 68 : Structure Wm (90 Deg)) (Continued)

	Member Label	Direction	Start Magnitude[lb/ft,...	End Magnitude[lb/ft,F...	Start Location[ft,%]	End Location[ft,%]
21	M119	X	.685	.685	0	%100
22	M119	Z	0	0	0	%100
23	M120	X	0	0	0	%100
24	M120	Z	0	0	0	%100
25	M121	X	.685	.685	0	%100
26	M121	Z	0	0	0	%100
27	M127	X	.78	.78	0	%100
28	M127	Z	0	0	0	%100
29	M128	X	.78	.78	0	%100
30	M128	Z	0	0	0	%100
31	M18	X	.627	.627	0	%100
32	M18	Z	0	0	0	%100
33	M21	X	.026	.026	0	%100
34	M21	Z	0	0	0	%100
35	M22	X	.026	.026	0	%100
36	M22	Z	0	0	0	%100
37	M21A	X	.149	.149	0	%100
38	M21A	Z	0	0	0	%100
39	M22A	X	.149	.149	0	%100
40	M22A	Z	0	0	0	%100
41	MP1A	X	.652	.652	0	%100
42	MP1A	Z	0	0	0	%100
43	MP4A	X	.652	.652	0	%100
44	MP4A	Z	0	0	0	%100
45	MP2A	X	.652	.652	0	%100
46	MP2A	Z	0	0	0	%100
47	MP3A	X	.652	.652	0	%100
48	MP3A	Z	0	0	0	%100
49	M35	X	.369	.369	0	%100
50	M35	Z	0	0	0	%100
51	M41	X	0	0	0	%100
52	M41	Z	0	0	0	%100
53	M42	X	.634	.634	0	%100
54	M42	Z	0	0	0	%100
55	M43	X	.346	.346	0	%100
56	M43	Z	0	0	0	%100
57	M44	X	.805	.805	0	%100
58	M44	Z	0	0	0	%100
59	M45	X	.547	.547	0	%100
60	M45	Z	0	0	0	%100

Member Distributed Loads (BLC 69 : Structure Wm (120 Deg))

	Member Label	Direction	Start Magnitude[lb/ft,...	End Magnitude[lb/ft,F...	Start Location[ft,%]	End Location[ft,%]
1	LV	X	.297	.297	0	%100
2	LV	Z	.172	.172	0	%100
3	M110	X	.297	.297	0	%100
4	M110	Z	.172	.172	0	%100
5	M111	X	.445	.445	0	%100
6	M111	Z	.257	.257	0	%100
7	M112	X	.445	.445	0	%100
8	M112	Z	.257	.257	0	%100

Member Distributed Loads (BLC 69 : Structure Wm (120 Deg)) (Continued)

	Member Label	Direction	Start Magnitude[lb/ft,...	End Magnitude[lb/ft,F...	Start Location[ft,%]	End Location[ft,%]
9	M113	X	.445	.445	0	%100
10	M113	Z	.257	.257	0	%100
11	M114	X	.445	.445	0	%100
12	M114	Z	.257	.257	0	%100
13	M115	X	.445	.445	0	%100
14	M115	Z	.257	.257	0	%100
15	M116	X	.778	.778	0	%100
16	M116	Z	.449	.449	0	%100
17	M117	X	.205	.205	0	%100
18	M117	Z	.118	.118	0	%100
19	M118	X	.205	.205	0	%100
20	M118	Z	.118	.118	0	%100
21	M119	X	.778	.778	0	%100
22	M119	Z	.449	.449	0	%100
23	M120	X	.205	.205	0	%100
24	M120	Z	.118	.118	0	%100
25	M121	X	.205	.205	0	%100
26	M121	Z	.118	.118	0	%100
27	M127	X	.675	.675	0	%100
28	M127	Z	.39	.39	0	%100
29	M128	X	.675	.675	0	%100
30	M128	Z	.39	.39	0	%100
31	M18	X	.543	.543	0	%100
32	M18	Z	.314	.314	0	%100
33	M21	X	0	0	0	%100
34	M21	Z	0	0	0	%100
35	M22	X	0	0	0	%100
36	M22	Z	0	0	0	%100
37	M21A	X	0	0	0	%100
38	M21A	Z	0	0	0	%100
39	M22A	X	0	0	0	%100
40	M22A	Z	0	0	0	%100
41	MP1A	X	.565	.565	0	%100
42	MP1A	Z	.326	.326	0	%100
43	MP4A	X	.565	.565	0	%100
44	MP4A	Z	.326	.326	0	%100
45	MP2A	X	.565	.565	0	%100
46	MP2A	Z	.326	.326	0	%100
47	MP3A	X	.565	.565	0	%100
48	MP3A	Z	.326	.326	0	%100
49	M35	X	.168	.168	0	%100
50	M35	Z	.097	.097	0	%100
51	M41	X	.171	.171	0	%100
52	M41	Z	.099	.099	0	%100
53	M42	X	.79	.79	0	%100
54	M42	Z	.456	.456	0	%100
55	M43	X	.219	.219	0	%100
56	M43	Z	.126	.126	0	%100
57	M44	X	.875	.875	0	%100
58	M44	Z	.505	.505	0	%100
59	M45	X	.46	.46	0	%100
60	M45	Z	.266	.266	0	%100

Member Distributed Loads (BLC 70 : Structure Wm (150 Deg))

	Member Label	Direction	Start Magnitude[lb/ft,...	End Magnitude[lb/ft,F...	Start Location[ft,%]	End Location[ft,%]
1	LV	X	.515	.515	0	%100
2	LV	Z	.891	.891	0	%100
3	M110	X	.515	.515	0	%100
4	M110	Z	.891	.891	0	%100
5	M111	X	.257	.257	0	%100
6	M111	Z	.445	.445	0	%100
7	M112	X	.257	.257	0	%100
8	M112	Z	.445	.445	0	%100
9	M113	X	.257	.257	0	%100
10	M113	Z	.445	.445	0	%100
11	M114	X	.257	.257	0	%100
12	M114	Z	.445	.445	0	%100
13	M115	X	.257	.257	0	%100
14	M115	Z	.445	.445	0	%100
15	M116	X	.331	.331	0	%100
16	M116	Z	.573	.573	0	%100
17	M117	X	.355	.355	0	%100
18	M117	Z	.614	.614	0	%100
19	M118	X	9.9e-5	9.9e-5	0	%100
20	M118	Z	.000172	.000172	0	%100
21	M119	X	.331	.331	0	%100
22	M119	Z	.573	.573	0	%100
23	M120	X	.355	.355	0	%100
24	M120	Z	.614	.614	0	%100
25	M121	X	9.9e-5	9.9e-5	0	%100
26	M121	Z	.000172	.000172	0	%100
27	M127	X	.39	.39	0	%100
28	M127	Z	.675	.675	0	%100
29	M128	X	.39	.39	0	%100
30	M128	Z	.675	.675	0	%100
31	M18	X	.314	.314	0	%100
32	M18	Z	.543	.543	0	%100
33	M21	X	.013	.013	0	%100
34	M21	Z	.022	.022	0	%100
35	M22	X	.013	.013	0	%100
36	M22	Z	.022	.022	0	%100
37	M21A	X	.074	.074	0	%100
38	M21A	Z	.129	.129	0	%100
39	M22A	X	.074	.074	0	%100
40	M22A	Z	.129	.129	0	%100
41	MP1A	X	.326	.326	0	%100
42	MP1A	Z	.565	.565	0	%100
43	MP4A	X	.326	.326	0	%100
44	MP4A	Z	.565	.565	0	%100
45	MP2A	X	.326	.326	0	%100
46	MP2A	Z	.565	.565	0	%100
47	MP3A	X	.326	.326	0	%100
48	MP3A	Z	.565	.565	0	%100
49	M35	X	.012	.012	0	%100
50	M35	Z	.021	.021	0	%100
51	M41	X	.296	.296	0	%100
52	M41	Z	.513	.513	0	%100

Member Distributed Loads (BLC 70 : Structure Wm (150 Deg)) (Continued)

	Member Label	Direction	Start Magnitude[lb/ft,...	End Magnitude[lb/ft,F...	Start Location[ft,%]	End Location[ft,%]
53	M42	X	.494	.494	0	%100
54	M42	Z	.855	.855	0	%100
55	M43	X	.297	.297	0	%100
56	M43	Z	.514	.514	0	%100
57	M44	X	.57	.57	0	%100
58	M44	Z	.988	.988	0	%100
59	M45	X	.402	.402	0	%100
60	M45	Z	.696	.696	0	%100

Member Distributed Loads (BLC 71 : Structure Wm (180 Deg))

	Member Label	Direction	Start Magnitude[lb/ft,...	End Magnitude[lb/ft,F...	Start Location[ft,%]	End Location[ft,%]
1	LV	X	0	0	0	%100
2	LV	Z	1.372	1.372	0	%100
3	M110	X	0	0	0	%100
4	M110	Z	1.372	1.372	0	%100
5	M111	X	0	0	0	%100
6	M111	Z	.514	.514	0	%100
7	M112	X	0	0	0	%100
8	M112	Z	.514	.514	0	%100
9	M113	X	0	0	0	%100
10	M113	Z	.514	.514	0	%100
11	M114	X	0	0	0	%100
12	M114	Z	.514	.514	0	%100
13	M115	X	0	0	0	%100
14	M115	Z	.514	.514	0	%100
15	M116	X	0	0	0	%100
16	M116	Z	.213	.213	0	%100
17	M117	X	0	0	0	%100
18	M117	Z	.945	.945	0	%100
19	M118	X	0	0	0	%100
20	M118	Z	.213	.213	0	%100
21	M119	X	0	0	0	%100
22	M119	Z	.213	.213	0	%100
23	M120	X	0	0	0	%100
24	M120	Z	.945	.945	0	%100
25	M121	X	0	0	0	%100
26	M121	Z	.213	.213	0	%100
27	M127	X	0	0	0	%100
28	M127	Z	.78	.78	0	%100
29	M128	X	0	0	0	%100
30	M128	Z	.78	.78	0	%100
31	M18	X	0	0	0	%100
32	M18	Z	.627	.627	0	%100
33	M21	X	0	0	0	%100
34	M21	Z	.077	.077	0	%100
35	M22	X	0	0	0	%100
36	M22	Z	.077	.077	0	%100
37	M21A	X	0	0	0	%100
38	M21A	Z	.446	.446	0	%100
39	M22A	X	0	0	0	%100
40	M22A	Z	.446	.446	0	%100

Member Distributed Loads (BLC 71 : Structure Wm (180 Deg)) (Continued)

	Member Label	Direction	Start Magnitude[lb/ft,...	End Magnitude[lb/ft,F...	Start Location[ft,%]	End Location[ft,%]
41	MP1A	X	0	0	0	%100
42	MP1A	Z	.652	.652	0	%100
43	MP4A	X	0	0	0	%100
44	MP4A	Z	.652	.652	0	%100
45	MP2A	X	0	0	0	%100
46	MP2A	Z	.652	.652	0	%100
47	MP3A	X	0	0	0	%100
48	MP3A	Z	.652	.652	0	%100
49	M35	X	0	0	0	%100
50	M35	Z	.029	.029	0	%100
51	M41	X	0	0	0	%100
52	M41	Z	.789	.789	0	%100
53	M42	X	0	0	0	%100
54	M42	Z	.784	.784	0	%100
55	M43	X	0	0	0	%100
56	M43	Z	1.027	1.027	0	%100
57	M44	X	0	0	0	%100
58	M44	Z	1.067	1.067	0	%100
59	M45	X	0	0	0	%100
60	M45	Z	1.092	1.092	0	%100

Member Distributed Loads (BLC 72 : Structure Wm (210 Deg))

	Member Label	Direction	Start Magnitude[lb/ft,...	End Magnitude[lb/ft,F...	Start Location[ft,%]	End Location[ft,%]
1	LV	X	-.515	-.515	0	%100
2	LV	Z	.891	.891	0	%100
3	M110	X	-.515	-.515	0	%100
4	M110	Z	.891	.891	0	%100
5	M111	X	-.257	-.257	0	%100
6	M111	Z	.445	.445	0	%100
7	M112	X	-.257	-.257	0	%100
8	M112	Z	.445	.445	0	%100
9	M113	X	-.257	-.257	0	%100
10	M113	Z	.445	.445	0	%100
11	M114	X	-.257	-.257	0	%100
12	M114	Z	.445	.445	0	%100
13	M115	X	-.257	-.257	0	%100
14	M115	Z	.445	.445	0	%100
15	M116	X	-9.9e-5	-9.9e-5	0	%100
16	M116	Z	.000172	.000172	0	%100
17	M117	X	-.355	-.355	0	%100
18	M117	Z	.614	.614	0	%100
19	M118	X	-.331	-.331	0	%100
20	M118	Z	.573	.573	0	%100
21	M119	X	-9.9e-5	-9.9e-5	0	%100
22	M119	Z	.000172	.000172	0	%100
23	M120	X	-.355	-.355	0	%100
24	M120	Z	.614	.614	0	%100
25	M121	X	-.331	-.331	0	%100
26	M121	Z	.573	.573	0	%100
27	M127	X	-.39	-.39	0	%100
28	M127	Z	.675	.675	0	%100

Member Distributed Loads (BLC 72 : Structure Wm (210 Deg)) (Continued)

	Member Label	Direction	Start Magnitude[lb/ft,...	End Magnitude[lb/ft,F...	Start Location[ft,%]	End Location[ft,%]
29	M128	X	-.39	-.39	0	%100
30	M128	Z	.675	.675	0	%100
31	M18	X	-.314	-.314	0	%100
32	M18	Z	.543	.543	0	%100
33	M21	X	-.051	-.051	0	%100
34	M21	Z	.089	.089	0	%100
35	M22	X	-.051	-.051	0	%100
36	M22	Z	.089	.089	0	%100
37	M21A	X	-.297	-.297	0	%100
38	M21A	Z	.515	.515	0	%100
39	M22A	X	-.297	-.297	0	%100
40	M22A	Z	.515	.515	0	%100
41	MP1A	X	-.326	-.326	0	%100
42	MP1A	Z	.565	.565	0	%100
43	MP4A	X	-.326	-.326	0	%100
44	MP4A	Z	.565	.565	0	%100
45	MP2A	X	-.326	-.326	0	%100
46	MP2A	Z	.565	.565	0	%100
47	MP3A	X	-.326	-.326	0	%100
48	MP3A	Z	.565	.565	0	%100
49	M35	X	-.102	-.102	0	%100
50	M35	Z	.177	.177	0	%100
51	M41	X	-.296	-.296	0	%100
52	M41	Z	.513	.513	0	%100
53	M42	X	-.253	-.253	0	%100
54	M42	Z	.438	.438	0	%100
55	M43	X	-.56	-.56	0	%100
56	M43	Z	.971	.971	0	%100
57	M44	X	-.431	-.431	0	%100
58	M44	Z	.747	.747	0	%100
59	M45	X	-.554	-.554	0	%100
60	M45	Z	.96	.96	0	%100

Member Distributed Loads (BLC 73 : Structure Wm (240 Deg))

	Member Label	Direction	Start Magnitude[lb/ft,...	End Magnitude[lb/ft,F...	Start Location[ft,%]	End Location[ft,%]
1	LV	X	-.297	-.297	0	%100
2	LV	Z	.172	.172	0	%100
3	M110	X	-.297	-.297	0	%100
4	M110	Z	.172	.172	0	%100
5	M111	X	-.445	-.445	0	%100
6	M111	Z	.257	.257	0	%100
7	M112	X	-.445	-.445	0	%100
8	M112	Z	.257	.257	0	%100
9	M113	X	-.445	-.445	0	%100
10	M113	Z	.257	.257	0	%100
11	M114	X	-.445	-.445	0	%100
12	M114	Z	.257	.257	0	%100
13	M115	X	-.445	-.445	0	%100
14	M115	Z	.257	.257	0	%100
15	M116	X	-.205	-.205	0	%100
16	M116	Z	.118	.118	0	%100

Member Distributed Loads (BLC 73 : Structure Wm (240 Deg)) (Continued)

	Member Label	Direction	Start Magnitude[lb/ft,...	End Magnitude[lb/ft,F...	Start Location[ft,%]	End Location[ft,%]
17	M117	X	-.205	-.205	0	%100
18	M117	Z	.118	.118	0	%100
19	M118	X	-.778	-.778	0	%100
20	M118	Z	.449	.449	0	%100
21	M119	X	-.205	-.205	0	%100
22	M119	Z	.118	.118	0	%100
23	M120	X	-.205	-.205	0	%100
24	M120	Z	.118	.118	0	%100
25	M121	X	-.778	-.778	0	%100
26	M121	Z	.449	.449	0	%100
27	M127	X	-.675	-.675	0	%100
28	M127	Z	.39	.39	0	%100
29	M128	X	-.675	-.675	0	%100
30	M128	Z	.39	.39	0	%100
31	M18	X	-.543	-.543	0	%100
32	M18	Z	.314	.314	0	%100
33	M21	X	-.067	-.067	0	%100
34	M21	Z	.039	.039	0	%100
35	M22	X	-.067	-.067	0	%100
36	M22	Z	.039	.039	0	%100
37	M21A	X	-.386	-.386	0	%100
38	M21A	Z	.223	.223	0	%100
39	M22A	X	-.386	-.386	0	%100
40	M22A	Z	.223	.223	0	%100
41	MP1A	X	-.565	-.565	0	%100
42	MP1A	Z	.326	.326	0	%100
43	MP4A	X	-.565	-.565	0	%100
44	MP4A	Z	.326	.326	0	%100
45	MP2A	X	-.565	-.565	0	%100
46	MP2A	Z	.326	.326	0	%100
47	MP3A	X	-.565	-.565	0	%100
48	MP3A	Z	.326	.326	0	%100
49	M35	X	-.325	-.325	0	%100
50	M35	Z	.187	.187	0	%100
51	M41	X	-.171	-.171	0	%100
52	M41	Z	.099	.099	0	%100
53	M42	X	-.373	-.373	0	%100
54	M42	Z	.215	.215	0	%100
55	M43	X	-.676	-.676	0	%100
56	M43	Z	.39	.39	0	%100
57	M44	X	-.634	-.634	0	%100
58	M44	Z	.366	.366	0	%100
59	M45	X	-.724	-.724	0	%100
60	M45	Z	.418	.418	0	%100

Member Distributed Loads (BLC 74 : Structure Wm (270 Deg))

	Member Label	Direction	Start Magnitude[lb/ft,...	End Magnitude[lb/ft,F...	Start Location[ft,%]	End Location[ft,%]
1	LV	X	0	0	0	%100
2	LV	Z	0	0	0	%100
3	M110	X	0	0	0	%100
4	M110	Z	0	0	0	%100

Member Distributed Loads (BLC 74 : Structure Wm (270 Deg)) (Continued)

	Member Label	Direction	Start Magnitude[lb/ft,...	End Magnitude[lb/ft,F...	Start Location[ft,%]	End Location[ft,%]
5	M111	X	-.514	-.514	0	%100
6	M111	Z	0	0	0	%100
7	M112	X	-.514	-.514	0	%100
8	M112	Z	0	0	0	%100
9	M113	X	-.514	-.514	0	%100
10	M113	Z	0	0	0	%100
11	M114	X	-.514	-.514	0	%100
12	M114	Z	0	0	0	%100
13	M115	X	-.514	-.514	0	%100
14	M115	Z	0	0	0	%100
15	M116	X	-.685	-.685	0	%100
16	M116	Z	0	0	0	%100
17	M117	X	0	0	0	%100
18	M117	Z	0	0	0	%100
19	M118	X	-.685	-.685	0	%100
20	M118	Z	0	0	0	%100
21	M119	X	-.685	-.685	0	%100
22	M119	Z	0	0	0	%100
23	M120	X	0	0	0	%100
24	M120	Z	0	0	0	%100
25	M121	X	-.685	-.685	0	%100
26	M121	Z	0	0	0	%100
27	M127	X	-.78	-.78	0	%100
28	M127	Z	0	0	0	%100
29	M128	X	-.78	-.78	0	%100
30	M128	Z	0	0	0	%100
31	M18	X	-.627	-.627	0	%100
32	M18	Z	0	0	0	%100
33	M21	X	-.026	-.026	0	%100
34	M21	Z	0	0	0	%100
35	M22	X	-.026	-.026	0	%100
36	M22	Z	0	0	0	%100
37	M21A	X	-.149	-.149	0	%100
38	M21A	Z	0	0	0	%100
39	M22A	X	-.149	-.149	0	%100
40	M22A	Z	0	0	0	%100
41	MP1A	X	-.652	-.652	0	%100
42	MP1A	Z	0	0	0	%100
43	MP4A	X	-.652	-.652	0	%100
44	MP4A	Z	0	0	0	%100
45	MP2A	X	-.652	-.652	0	%100
46	MP2A	Z	0	0	0	%100
47	MP3A	X	-.652	-.652	0	%100
48	MP3A	Z	0	0	0	%100
49	M35	X	-.369	-.369	0	%100
50	M35	Z	0	0	0	%100
51	M41	X	0	0	0	%100
52	M41	Z	0	0	0	%100
53	M42	X	-.634	-.634	0	%100
54	M42	Z	0	0	0	%100
55	M43	X	-.346	-.346	0	%100
56	M43	Z	0	0	0	%100

Member Distributed Loads (BLC 74 : Structure Wm (270 Deg)) (Continued)

	Member Label	Direction	Start Magnitude[lb/ft,...	End Magnitude[lb/ft,F...	Start Location[ft,%]	End Location[ft,%]
57	M44	X	-.805	-.805	0	%100
58	M44	Z	0	0	0	%100
59	M45	X	-.547	-.547	0	%100
60	M45	Z	0	0	0	%100

Member Distributed Loads (BLC 75 : Structure Wm (300 Deg))

	Member Label	Direction	Start Magnitude[lb/ft,...	End Magnitude[lb/ft,F...	Start Location[ft,%]	End Location[ft,%]
1	LV	X	-.297	-.297	0	%100
2	LV	Z	-.172	-.172	0	%100
3	M110	X	-.297	-.297	0	%100
4	M110	Z	-.172	-.172	0	%100
5	M111	X	-.445	-.445	0	%100
6	M111	Z	-.257	-.257	0	%100
7	M112	X	-.445	-.445	0	%100
8	M112	Z	-.257	-.257	0	%100
9	M113	X	-.445	-.445	0	%100
10	M113	Z	-.257	-.257	0	%100
11	M114	X	-.445	-.445	0	%100
12	M114	Z	-.257	-.257	0	%100
13	M115	X	-.445	-.445	0	%100
14	M115	Z	-.257	-.257	0	%100
15	M116	X	-.778	-.778	0	%100
16	M116	Z	-.449	-.449	0	%100
17	M117	X	-.205	-.205	0	%100
18	M117	Z	-.118	-.118	0	%100
19	M118	X	-.205	-.205	0	%100
20	M118	Z	-.118	-.118	0	%100
21	M119	X	-.778	-.778	0	%100
22	M119	Z	-.449	-.449	0	%100
23	M120	X	-.205	-.205	0	%100
24	M120	Z	-.118	-.118	0	%100
25	M121	X	-.205	-.205	0	%100
26	M121	Z	-.118	-.118	0	%100
27	M127	X	-.675	-.675	0	%100
28	M127	Z	-.39	-.39	0	%100
29	M128	X	-.675	-.675	0	%100
30	M128	Z	-.39	-.39	0	%100
31	M18	X	-.543	-.543	0	%100
32	M18	Z	-.314	-.314	0	%100
33	M21	X	0	0	0	%100
34	M21	Z	0	0	0	%100
35	M22	X	0	0	0	%100
36	M22	Z	0	0	0	%100
37	M21A	X	0	0	0	%100
38	M21A	Z	0	0	0	%100
39	M22A	X	0	0	0	%100
40	M22A	Z	0	0	0	%100
41	MP1A	X	-.565	-.565	0	%100
42	MP1A	Z	-.326	-.326	0	%100
43	MP4A	X	-.565	-.565	0	%100
44	MP4A	Z	-.326	-.326	0	%100

Member Distributed Loads (BLC 75 : Structure Wm (300 Deg)) (Continued)

	Member Label	Direction	Start Magnitude[lb/ft,...	End Magnitude[lb/ft,F...	Start Location[ft,%]	End Location[ft,%]
45	MP2A	X	-.565	-.565	0	%100
46	MP2A	Z	-.326	-.326	0	%100
47	MP3A	X	-.565	-.565	0	%100
48	MP3A	Z	-.326	-.326	0	%100
49	M35	X	-.168	-.168	0	%100
50	M35	Z	-.097	-.097	0	%100
51	M41	X	-.171	-.171	0	%100
52	M41	Z	-.099	-.099	0	%100
53	M42	X	-.79	-.79	0	%100
54	M42	Z	-.456	-.456	0	%100
55	M43	X	-.219	-.219	0	%100
56	M43	Z	-.126	-.126	0	%100
57	M44	X	-.875	-.875	0	%100
58	M44	Z	-.505	-.505	0	%100
59	M45	X	-.46	-.46	0	%100
60	M45	Z	-.266	-.266	0	%100

Member Distributed Loads (BLC 76 : Structure Wm (330 Deg))

	Member Label	Direction	Start Magnitude[lb/ft,...	End Magnitude[lb/ft,F...	Start Location[ft,%]	End Location[ft,%]
1	LV	X	-.515	-.515	0	%100
2	LV	Z	-.891	-.891	0	%100
3	M110	X	-.515	-.515	0	%100
4	M110	Z	-.891	-.891	0	%100
5	M111	X	-.257	-.257	0	%100
6	M111	Z	-.445	-.445	0	%100
7	M112	X	-.257	-.257	0	%100
8	M112	Z	-.445	-.445	0	%100
9	M113	X	-.257	-.257	0	%100
10	M113	Z	-.445	-.445	0	%100
11	M114	X	-.257	-.257	0	%100
12	M114	Z	-.445	-.445	0	%100
13	M115	X	-.257	-.257	0	%100
14	M115	Z	-.445	-.445	0	%100
15	M116	X	-.331	-.331	0	%100
16	M116	Z	-.573	-.573	0	%100
17	M117	X	-.355	-.355	0	%100
18	M117	Z	-.614	-.614	0	%100
19	M118	X	-9.9e-5	-9.9e-5	0	%100
20	M118	Z	-.000172	-.000172	0	%100
21	M119	X	-.331	-.331	0	%100
22	M119	Z	-.573	-.573	0	%100
23	M120	X	-.355	-.355	0	%100
24	M120	Z	-.614	-.614	0	%100
25	M121	X	-9.9e-5	-9.9e-5	0	%100
26	M121	Z	-.000172	-.000172	0	%100
27	M127	X	-.39	-.39	0	%100
28	M127	Z	-.675	-.675	0	%100
29	M128	X	-.39	-.39	0	%100
30	M128	Z	-.675	-.675	0	%100
31	M18	X	-.314	-.314	0	%100
32	M18	Z	-.543	-.543	0	%100

Member Distributed Loads (BLC 76 : Structure Wm (330 Deg)) (Continued)

	Member Label	Direction	Start Magnitude[lb/ft,...	End Magnitude[lb/ft,F...	Start Location[ft,%]	End Location[ft,%]
33	M21	X	-.013	-.013	0	%100
34	M21	Z	-.022	-.022	0	%100
35	M22	X	-.013	-.013	0	%100
36	M22	Z	-.022	-.022	0	%100
37	M21A	X	-.074	-.074	0	%100
38	M21A	Z	-.129	-.129	0	%100
39	M22A	X	-.074	-.074	0	%100
40	M22A	Z	-.129	-.129	0	%100
41	MP1A	X	-.326	-.326	0	%100
42	MP1A	Z	-.565	-.565	0	%100
43	MP4A	X	-.326	-.326	0	%100
44	MP4A	Z	-.565	-.565	0	%100
45	MP2A	X	-.326	-.326	0	%100
46	MP2A	Z	-.565	-.565	0	%100
47	MP3A	X	-.326	-.326	0	%100
48	MP3A	Z	-.565	-.565	0	%100
49	M35	X	-.012	-.012	0	%100
50	M35	Z	-.021	-.021	0	%100
51	M41	X	-.296	-.296	0	%100
52	M41	Z	-.513	-.513	0	%100
53	M42	X	-.494	-.494	0	%100
54	M42	Z	-.855	-.855	0	%100
55	M43	X	-.297	-.297	0	%100
56	M43	Z	-.514	-.514	0	%100
57	M44	X	-.57	-.57	0	%100
58	M44	Z	-.988	-.988	0	%100
59	M45	X	-.402	-.402	0	%100
60	M45	Z	-.696	-.696	0	%100

Member Area Loads

Joint A	Joint B	Joint C	Joint D	Direction	Distribution	Magnitude[ksf]
No Data to Print ...						

Envelope Joint Reactions

	Joint		X [lb]	LC	Y [lb]	LC	Z [lb]	LC	MX [k-ft]	LC	MY [k-ft]	LC	MZ [k-ft]	LC
1	N31	max	757.236	12	222.704	27	932.664	1	.054	1	0	75	.073	2
2		min	-1023.865	6	54.917	9	-1228.407	7	-.101	7	0	1	-.028	8
3	N32	max	290.051	12	190.263	25	504.333	8	.049	1	0	75	.083	1
4		min	-282.327	6	8.052	7	-381.66	2	-.092	7	0	1	-.051	7
5	N56	max	225.786	11	7.747	17	794.187	11	0	75	0	75	0	75
6		min	-227.457	5	2.119	73	-793.33	5	0	1	0	1	0	1
7	N71	max	1058.872	8	2684.098	1	1967.135	1	.003	1	.004	7	.003	7
8		min	-826.041	2	-1925.269	7	-1462.88	7	-.004	7	-.003	1	-.002	1
9	N74	max	864.293	8	2864.38	7	759.358	1	.003	1	0	2	0	8
10		min	-834.088	2	-1868.268	1	-1061.739	7	-.003	7	0	8	0	2
11	Totals:	max	2028.819	11	2422.527	18	3345.671	1						
12		min	-2028.819	5	754.411	74	-3345.663	7						

Envelope AISC 15th(360-16): LRFD Steel Code Checks

	Member	Shape	Code Check	Loc[ft]	LC	Shear ...	Loc[ft]	Dir	LC	phi*Pnc ...	phi*Pnt [...	phi*Mn y...	phi*Mn z...	Cb	Eqn
1	LV	L3X3X4	.299	0	8	.081	4.211	z	7	5152.042	46656	1.688	3.272	2...	H2-1
2	M110	L3X3X4	.561	6.125	7	.125	4.594	y	7	5152.042	46656	1.688	2.98	1...	H2-1
3	M111	PIPE_2.0	.399	.7	2	.288	.224		7	29464.6...	32130	1.872	1.872	1...	H1-1b
4	M112	PIPE_2.0	.271	.672	1	.254	.7		7	30975.6...	32130	1.872	1.872	2...	H1-1b
5	M113	PIPE_2.0	.115	0	7	.104	2.688		7	30975.6...	32130	1.872	1.872	2...	H1-1b
6	M114	PIPE_2.0	.126	.672	31	.090	0		30	30975.6...	32130	1.872	1.872	1...	H1-1b
7	M115	PIPE_2.0	.170	.7	1	.121	.224		7	29464.6...	32130	1.872	1.872	1...	H1-1b
8	M116	L3X2X4	.381	1.24	8	.044	0	z	8	36513.77	38880	.826	2.489	1...	H2-1
9	M117	L3X2X4	.546	.813	7	.101	.813	z	7	34908.0...	38880	.826	2.489	1...	H2-1
10	M118	L3X2X4	.579	0	7	.069	0	z	7	36513.77	38880	.826	2.489	2...	H2-1
11	M119	L3X2X4	.386	1.24	7	.034	1.24	z	7	36513.77	38880	.826	2.489	1...	H2-1
12	M120	L3X2X4	.314	.813	8	.053	0	z	8	34908.0...	38880	.826	2.489	1...	H2-1
13	M121	L3X2X4	.165	0	7	.017	0	y	31	36513.77	38880	.826	2.489	1...	H2-1
14	M127	L2x2x4	.242	2.688	7	.041	2.688	z	7	21219.9...	30585.6	.691	1.577	2...	H2-1
15	M128	L2x2x4	.212	0	7	.030	0	y	7	21219.9...	30585.6	.691	1.577	2...	H2-1
16	M18	PIPE_2.5	.094	.347	7	.304	.174		7	46307.0...	50715	3.596	3.596	1...	H1-1b
17	M21	PL3/8x7	.113	.333	29	.206	.333	y	7	79151.3...	85050	.664	12.403	1...	H1-1b
18	M22	PL3/8x7	.096	.333	25	.219	0	y	7	79151.3...	85050	.664	12.403	1...	H1-1b
19	M21A	HSS3X3X4	.093	0	7	.034	1	z	7	100228....	101016	8.556	8.556	1...	H1-1b
20	M22A	HSS3X3X4	.079	0	1	.033	0	z	7	100228....	101016	8.556	8.556	1...	H1-1b
21	MP1A	PIPE_2.0	.073	3.063	6	.059	3.063		7	20866.7...	32130	1.872	1.872	1...	H1-1b
22	MP4A	PIPE_2.0	.293	3.063	6	.095	3.063		7	20866.7...	32130	1.872	1.872	1...	H1-1b
23	MP2A	PIPE_2.0	.083	2.563	7	.066	5.25		7	20866.7...	32130	1.872	1.872	1...	H1-1b
24	MP3A	PIPE_2.0	.312	2.563	7	.198	5.25		7	20866.7...	32130	1.872	1.872	1...	H1-1b
25	M35	PIPE_1.5	.038	0	11	.001	1.948		21	21964.9...	23593.5	1.105	1.105	1...	H1-1b*
26	M41	PIPE_2.5	.433	3.375	2	.275	2.109		7	12481.8...	50715	3.596	3.596	1...	H1-1b
27	M42	L2.5x2.5x4	.135	1.842	1	.033	3.608	z	7	25212.7...	38556	1.114	2.4	1...	H2-1
28	M43	L2.5x2.5x4	.162	2.667	1	.008	0	y	2	15816.8...	38556	1.114	2.227	1...	H2-1
29	M44	L2.5x2.5x4	.285	3.229	1	.018	0	z	7	10401.5...	38556	1.114	2.113	1...	H2-1
30	M45	L2.5x2.5x4	.256	3.916	1	.019	7.832	y	7	7070.861	38556	1.114	1.998	1...	H2-1

VzW SMART Tool© Vendor			
	Client:	Verizon Wireless	Date: 11/30/2023
	Site Name:	Ledyard CT	
	MDG #:	5000247301	
	Fuze ID #:	16271967	Page: 1

Version 2.00

I. Mount-to-Tower Connection Check

Custom Orientation Required — Yes

Nodes (labeled per Risa)	Orientation (per graphic of typical platform)
N31	60
N32	60

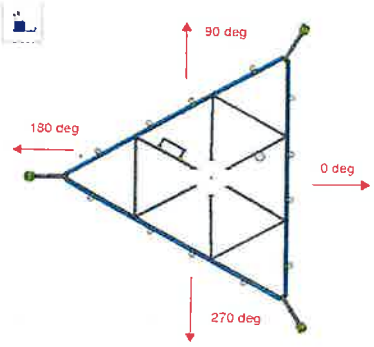

Tower Connection Bolt Checks — Yes

Bolt Orientation — Parallel

Bolt Quantity per Reaction:	4
d_x (in) *(Delta X of typ. bolt config. sketch)* :	3.375
d_y (in) *(Delta Y of typ. bolt config. sketch)* :	4
Bolt Type:	A36
Bolt Diameter (in):	0.625
Required Tensile Strength / bolt (kips):	0.3
Required Shear Strength / bolt (kips):	0.8
Tensile Capacity / bolt (kips):	10.0
Shear Capacity / bolt (kips):	6.0
Bolt Overall Utilization:	12.9%

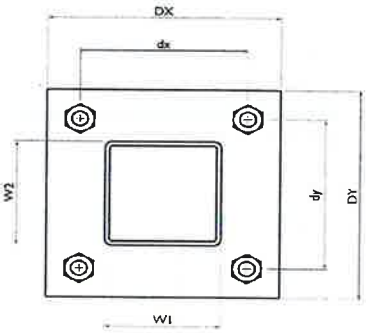

Tower Connection Baseplate Checks — No

verizon

MOUNT MODIFICATION DRAWINGS
EXISTING 12.50' SECTOR FRAME

TOWER OWNER: N/A
TOWER OWNER SITE NUMBER: N/A

CARRIER SITE NAME: LEDYARD CT
CARRIER SITE NUMBER: 5000247301
FUZE ID: 16271967

889A COLONEL LEDYARD HWY
LEDYARD, CT 06339
NEW LONDON COUNTY

LATITUDE: 41.46198600° N
LONGITUDE: 72.02360800° W

DESIGN CRITERIA

WIND LOADS

BASIC WIND SPEED (3 SECOND GUST), V = 130 MPH
EXPOSURE CATEGORY C
TOPOGRAPHIC CATEGORY: 1
TOPOGRAPHY CONSIDERED: N/A
TOPOGRAPHIC METHOD: N/A
MEAN BASE ELEVATION (AMSL) = 309'

ICE LOADS

ICE WIND SPEED (3 SECOND GUST), V = 50 MPH
ICE THICKNESS = 1.00 IN

SEISMIC LOADS

SEISMIC DESIGN CATEGORY B
SHORT TERM MCER GROUND MOTION, S_S = .190
LONG TERM MCER GROUND MOTION, S_1 = .053

PROJECT INFORMATION

APPLICANT/LESSEE

COMPANY: VERIZON WIRELESS

CLIENT REPRESENTATIVE

COMPANY: VERIZON WIRELESS

PROJECT MANAGER

COMPANY: COLLIERS ENGINEERING & DESIGN
CONTACT: PETER ALBANO
PHONE: 856.797.0412
E-MAIL: PETER.ALBANO@COLLIERSENG.COM

CONTRACTOR PMI REQUIREMENTS

PMI LOCATION: HTTPS://PMI.VZWSMART.COM
SMART TOOL PROJECT #: 10214241
VZW MDG #: 5000247301
ANALYSIS DATE: 12/05/2023

PMI REQUIREMENTS EMBEDDED WITHIN MOUNT MODIFICATION REPORT

SHEET INDEX

SHEET	DESCRIPTION
ST-1	TITLE SHEET
SBOM-1	BILL OF MATERIALS
SGN-1	GENERAL NOTES
SCF-1	CLIMBING FACILITY DETAIL
SS-1	MODIFICATION DETAILS
SS-2	MOUNT PHOTOS
	SPECIFICATION SHEETS

Colliers Engineering & Design
www.colliersengineering.com

verizon

811 Know what's below. Call before you dig.

FOR STATE SPECIFIC DIGSAFE PHONE NUMBER VISIT WWW.CALL811.COM

SCALE	DRAWN BY
AS SHOWN	21.77.011

REV	DATE	DESCRIPTION	DRAWN BY	CHECKED BY
	12/05/2023	FOR PERMIT CONSTRUCTION	GA	DA
A	11/13/2023	FOR PERMIT CONSTRUCTION	EA	DA

STATE OF CONNECTICUT
DEJIAN XU
No. 33733
LICENSED
PROFESSIONAL ENGINEER
12/08/2023

IT IS A VIOLATION OF LAW FOR ANY PERSON, UNLESS THEY ARE ACTING UNDER THE DIRECTION OF THE RESPONSIBLE LICENSED PROFESSIONAL ENGINEER, TO ALTER THIS DOCUMENT.

SITE NAME:
LEDYARD CT
5000247301
889A COLONEL LEDYARD HWY
LEDYARD, CT 06339
NEW LONDON COUNTY

STAMFORD
1055 Washington Boulevard
Stamford, CT 06901
Phone: 203.324.0800
COLLIERS ENGINEERING & DESIGN CT, P.C.
CT ENGINEERING LICENSE NUMBER: PC-0746

TITLE SHEET

ST-1

NOTE: DO NOT SCALE DRAWINGS FOR CONSTRUCTION.

BILL OF MATERIALS

SECTION 1 - VZWSMART KITS

QUANTITY	MANUFACTURER	PART NUMBER	DESCRIPTION	NOTES	UNIT WEIGHT (LBS.)	WEIGHT (LBS.)
15	VZWSMART	VZWSMART-MSK1	CROSSOVER PLATE		14	210
6		VZWSMART-SFK3	V-BRACING KIT	CONTRACTOR TO VERIFY THE LENGTH REQUIRED AND TRIM AS NECESSARY IN ACCORDANCE WITH THE 'STRUCTURAL STEEL' NOTES ON SHEET SGN-1.	122	732
6		VZWSMART-AL333	CLIP ANGLE		3	18

SECTION 2 - OTHER REQUIRED PARTS

QUANTITY	MANUFACTURER	PART NUMBER	DESCRIPTION	NOTES	UNIT WEIGHT (LBS.)	WEIGHT (LBS.)
3	-	-	162" LONG, PIPE 2.5 SCH40	GALVANIZED	78	234

SECTION 3 - REQUIRED SAFETY CLIMB PARTS

QUANTITY	MANUFACTURER	PART NUMBER	DESCRIPTION	NOTES	UNIT WEIGHT (LBS.)	WEIGHT (LBS.)
					TOTAL:	1194

NOTES:

1. THE MANUFACTURERS LISTED ARE THE APPROVED VENDORS FOR THE VZW MOUNT KITS. EACH MANUFACTURER WILL BE AWARE OF WHICH KITS HAVE BEEN THROUGH THE VZW APPROVAL PROCESS AND THEY ARE IN TURN APPROVED TO SELL. PLEASE NOTE THAT THE MATERIAL UTILIZED ON THE MOUNT MODIFICATIONS WILL BE REVIEWED AS A PART OF THE DESKTOP PMI COMPLETED BY THE SMART TOOL VENDOR. IT WILL BE REQUIRED THAT THE VZW KITS SPECIFIED ARE UTILIZED IN THE MODIFICATIONS.
2. ALL MATERIALS REQUIRED FOR THE DESIGNED MODIFICATIONS BUT NOT LISTED IN THIS SHEET ARE ASSUMED TO BE PROVIDED BY THE CONTRACTOR.

VZWSMART KITS - APPROVED VENDORS

COMMSCOPE

CONTACT	SALVADOR ANGUIANO
PHONE	(817) 304-7492
EMAIL	SALVADOR.ANGUIANO@COMMSCOPE.COM
WEBSITE	WWW.COMMSCOPE.COM

METROSITE FABRICATORS, LLC

CONTACT	KENT RAMEY
PHONE	(706) 335-7045 (O), (706) 982-9788 (M)
EMAIL	KENT@METROSITELLC.COM
WEBSITE	METROSITEFABRICATORS.COM

PERFECTVISION

CONTACT	WIRELESS SALES
PHONE	(844) 887-6723
EMAIL	WWW.PERFECT-VISION.COM
WEBSITE	WIRELESSSALES@PERFECT-VISION.COM

SABRE INDUSTRIES, INC.

CONTACT	ANGIE WELCH
PHONE	(866) 428-6937
EMAIL	AKWELCH@SABREINDUSTRIES.COM
WEBSITE	WWW.SABRESITESOLUTIONS.COM

SITE PRO 1

CONTACT	PAULA BOSWELL
PHONE	(972) 236-9843
EMAIL	PAULA.BOSWELL@VALMONT.COM
WEBSITE	WWW.SITEPRO1.COM

NEWAVE

CONTACT	NEWAVE SALES TEAM
PHONE	(971) 219-4762
EMAIL	SALES@NEWAVETC.COM
WEBSITE	WWW.NEWAVETC.COM

BETTER METAL, LLC

CONTACT	DAVID STANSBERRY
PHONE	(615) 535-0990 (O), (615) 631-2520 (M)
EMAIL	DLS@BETTERMETAL.COM
WEBSITE	WWW.BETTERMETAL.COM

Colliers Engineering & Design
www.collersengineering.com

verizon

811 Know what's below. Call before you dig.
PROTECT YOURSELF
FOR STATE SPECIFIC DIGGER PHONE NUMBERS VISIT WWW.CALL811.COM

SCALE: AS SHOWN
DATE: 2/17/2023

REV	DATE	DESCRIPTION	DRAWN BY	CHECKED BY
1	12/05/2023	PER LANDLORD COMMENTS	GA	DG
0	8/14/2023	FOR PERMIT CONSTRUCTION	SH	DG

STATE OF CONNECTICUT
DEJIAN XU
No. 33733
LICENSED PROFESSIONAL ENGINEER
12/06/2023

IT IS A VIOLATION OF LAW FOR ANY PERSON, UNLESS THEY ARE ACTING UNDER THE DIRECTION OF THE RESPONSIBLE LICENSED PROFESSIONAL ENGINEER, TO ALTER THIS DOCUMENT.

SITE NAME:
LEDYARD CT
5000247301
889A COLONEL LEDYARD HWY
LEDYARD, CT 06339
NEW LONDON COUNTY

Colliers Engineering & Design
STAMFORD
Stamford CT 06901
Phone: 203 324 6800
COLLIERS ENGINEERING & DESIGN CT, P.C.
COLLIERS ENGINEERING & DESIGN CONSULTING

SHEET TITLE: BILL OF MATERIALS

SHEET NUMBER: SBOM-1

GENERAL NOTES

1. THESE MODIFICATIONS HAVE BEEN DESIGNED IN ACCORDANCE WITH THE GOVERNING PROVISIONS OF THE TELECOMMUNICATIONS INDUSTRY STANDARD TIA-222-H. MATERIALS AND SERVICES PROVIDED BY THE CONTRACTOR SHALL CONFORM TO THE ABOVE MENTIONED CODES.
2. CONTRACTOR SHALL TAKE ALL PRECAUTIONS NECESSARY TO PREVENT DAMAGE TO EXISTING STRUCTURES. ANY DAMAGE TO EXISTING STRUCTURES AS A RESULT OF THE CONTRACTOR'S WORK OR FROM DAMAGE DUE TO OTHER CAUSES SHALL BE REPAIRED AT THE CONTRACTOR'S EXPENSE TO THE SATISFACTION OF THE OWNER.
3. CONTRACTOR SHALL VERIFY ALL DIMENSIONS AND EXISTING CONDITIONS BEFORE BEGINNING WORK, ORDERING MATERIAL, AND PREPARING OF SHOP DRAWINGS. ANY DISCREPANCIES BETWEEN FIELD CONDITIONS AND THE CONTRACT DOCUMENTS SHALL BE BROUGHT TO THE IMMEDIATE ATTENTION OF THE ENGINEER. IF THE CONTRACTOR DISCOVERS ANY EXISTING CONDITIONS THAT ARE NOT REPRESENTED ON THESE DRAWINGS, OR ANY CONDITIONS THAT WOULD INTERFERE WITH THE INSTALLATION OF THE MODIFICATIONS, NOTIFY THE ENGINEER IMMEDIATELY.
4. IT IS ASSUMED THAT ANY STRUCTURAL MODIFICATION WORK SPECIFIED ON THESE PLANS WILL BE ACCOMPLISHED BY KNOWLEDGEABLE WORKMEN WITH TOWER CONSTRUCTION EXPERIENCE.
5. THE CONTRACTOR SHALL SUPERVISE AND DIRECT THE WORK AND SHALL BE SOLELY RESPONSIBLE FOR ALL CONSTRUCTION METHODS, MEANS, TECHNIQUES, SEQUENCES, AND PROCEDURES.
6. ALL CONSTRUCTION MEANS AND METHODS; INCLUDING BUT NOT LIMITED TO, ERECTION PLANS, RIGGING PLANS, CLIMBING PLANS, AND RESCUE PLANS SHALL BE THE RESPONSIBILITY OF THE GENERAL CONTRACTOR RESPONSIBLE FOR THE EXECUTION OF THE WORK CONTAINED HEREIN AND SHALL MEET ANSI/TIA-322 (LATEST EDITION), OSHA, AND GENERAL INDUSTRY STANDARDS. ALL RIGGING PLANS SHALL ADHERE TO ANSI/TIA-322 (LATEST EDITION) INCLUDING THE REQUIRED INVOLVEMENT OF A QUALIFIED ENGINEER FOR CLASS IV CONSTRUCTION.
7. THE CONTRACTOR IS SOLELY RESPONSIBLE FOR INITIATING, MAINTAINING, AND SUPERVISING ALL SAFETY PROGRAMS IN ACCORDANCE WITH APPLICABLE SAFETY CODES.
8. WORK SHALL ONLY BE PERFORMED DURING CALM DRY DAYS (WINDS LESS THAN 30-MPH). THE STRUCTURE SHOWN ON THE DRAWINGS IS STRUCTURALLY SOUND ONLY IN THE COMPLETED FORM. THE CONTRACTOR SHALL BE RESPONSIBLE FOR THE STRENGTH AND STABILITY OF THE STRUCTURE DURING ERECTION. CONTRACTOR SHALL PROVIDE TEMPORARY SUPPORT, SHORING, BRACING AND ANY OTHER STRUCTURAL SYSTEMS AS REQUIRED TO RESIST ALL FORCES THAT MAY OCCUR DURING HANDLING AND ERECTION UNTIL THE STRUCTURE IS FULLY COMPLETED. TEMPORARY SUPPORTS, BRACING AND OTHER STRUCTURAL SYSTEMS REQUIRED DURING CONSTRUCTION SHALL REMAIN THE CONTRACTOR'S PROPERTY AFTER THEIR USE.
9. ALL INSTALLATIONS PERFORMED ON THIS STRUCTURE SHALL BE COMPLETED IN ACCORDANCE WITH THE GOVERNING PROVISIONS OF THE STANDARD FOR INSTALLATION, ALTERATION AND MAINTENANCE OF ANTENNA SUPPORTING STRUCTURES AND ANTENNAS, ANSI/TIA-322.
10. CONTRACTOR SHALL SECURE SITE BACK TO EXISTING CONDITION UNDER SUPERVISION OF OWNER. ALL FENCE, STONE, GEOFABRIC, GROUNDING, AND SURROUNDING GRADE SHALL BE REPLACED AND REPAIRED AS REQUIRED TO ACHIEVE OWNER APPROVAL. POSITIVE DRAINAGE AWAY FROM TOWER SITE SHALL BE MAINTAINED.
11. CONNECTIONS BETWEEN ITEMS SUPPORTED BY THE STRUCTURE AND THE STRUCTURE NOT SPECIFICALLY DETAILED IN THE CONTRACT DOCUMENTS ARE THE RESPONSIBILITY OF THE CONTRACTOR. SUCH CONNECTIONS SHALL BE DESIGNED, COORDINATED AND INSPECTED BY A PROFESSIONAL STRUCTURAL ENGINEER LICENSED IN THE STATE OF THE PROJECT. SUBMIT SIGNED AND SEALED CALCULATIONS DURING SHOP DRAWING REVIEW.
12. DO NOT SCALE DRAWINGS.
13. DO NOT USE THESE DRAWINGS FOR ANY OTHER SITE.
14. ALL MATERIAL UTILIZED FOR THIS PROJECT MUST BE NEW AND FREE OF ANY DEFECTS. ANY MATERIAL SUBSTITUTIONS, INCLUDING BUT NOT LIMITED TO ALTERED SIZE AND/OR STRENGTHS, MUST BE APPROVED BY THE OWNER AND ENGINEER IN WRITING.
15. THE MOUNT UNDER NO CIRCUMSTANCES SHOULD BE USED AS A TIE OFF POINT.

STRUCTURAL STEEL

1. DESIGN, DETAILING, FABRICATION AND ERECTION OF STRUCTURAL STEEL SHALL CONFORM TO THE FOLLOWING PUBLICATIONS EXCEPT AS SPECIFICALLY INDICATED IN THE CONTRACT DOCUMENTS.
   a. AMERICAN INSTITUTE OF STEEL CONSTRUCTION (AISC) MANUAL OF STEEL CONSTRUCTION (15TH EDITION)
   b. SPECIFICATION FOR STRUCTURAL JOINTS USING ASTM A325 OR A490 BOLTS
   c. AISC CODE OF STANDARD PRACTICE
2. STRUCTURAL STEEL SHALL CONFORM TO THE FOLLOWING UNLESS OTHERWISE SHOWN:

CHANNELS, ANGLES, PLATES, ETC.	ASTM A36 (GR 36)
STEEL PIPE	ASTM A53 (GR 35)
BOLTS	ASTM A325
NUTS	ASTM A563
LOCK WASHERS	LOCKING STRUCTURAL GRADE

3. ALL SUBSTITUTIONS PROPOSED BY THE CONTRACTOR SHALL BE APPROVED IN WRITING BY THE ENGINEER. CONTRACTOR SHALL PROVIDE DOCUMENTATION TO ENGINEER FOR VERIFYING THE SUBSTITUTE IS SUITABLE FOR USE AND MEETS ORIGINAL DESIGN CRITERIA. DIFFERENCES FROM THE ORIGINAL DESIGN, INCLUDING MAINTENANCE, REPAIR AND REPLACEMENT, SHALL BE NOTED. ESTIMATES OF COSTS/CREDITS ASSOCIATED WITH THE SUBSTITUTION (INCLUDING RE-DESIGN COSTS AND COSTS TO SUB-CONTRACTORS) SHALL BE PROVIDED TO THE ENGINEER. CONTRACTOR SHALL PROVIDE ADDITIONAL DOCUMENTATION AND/OR SPECIFICATIONS TO THE ENGINEER AS REQUESTED.
4. PROVIDE STRUCTURAL STEEL SHOP DRAWINGS TO ENGINEER FOR APPROVAL PRIOR TO FABRICATION.
   a. SUBMIT SHOP DRAWINGS TO

      PETER.ALBANO@COLLIERSENG.COM

   b. PROVIDE COLLIERS ENGINEERING & DESIGN PROJECT # AND COLLIERS ENGINEERING & DESIGN PROJECT ENGINEER CONTACT IN THE BODY OF THE EMAIL.
5. DRILL NO HOLES IN ANY NEW OR EXISTING STRUCTURAL STEEL MEMBERS OTHER THAN THOSE SHOWN ON STRUCTURAL DRAWINGS WITHOUT THE APPROVAL OF THE ENGINEER OF RECORD.
6. GALVANIZED ASTM A325 BOLTS SHALL NOT BE REUSED.
7. ALL NEW STEEL SHALL BE HOT BE DIPPED GALVANIZED FOR FULL WEATHER PROTECTION. IN ADDITION ALL NEW STEEL SHALL BE PAINTED TO MATCH EXISTING STEEL. CONTRACTOR SHALL OBTAIN WRITTEN PERMISSION TO PROTECT STEEL BY ANY OTHER MEANS.
8. ALL BOLT ASSEMBLIES FOR STRUCTURAL MEMBERS REPRESENTED IN THIS DRAWING REQUIRE LOCKING DEVICES TO BE INSTALLED IN ACCORDANCE WITH TIA-222-H SECTION 4.9.2 REQUIREMENTS.
9. WHERE CONNECTIONS ARE NOT FULLY DETAILED ON THESE DRAWINGS, FABRICATOR SHALL DESIGN CONNECTIONS TO RESIST LOADS AND FORCES WHERE SHOWN ON DRAWINGS AND AS OUTLINED IN SPECIFICATIONS.
10. FOR MEMBERS BEING REPLACED, PROVIDE NEW BOLTS AND MATCH EXISTING SIZE AND GRADE. MAINTAIN AISC REQUIREMENTS FOR MINIMUM BOLT DISTANCE AND SPACING.
11. ALL PROPOSED AND/OR REPLACED BOLTS SHALL BE OF SUFFICIENT LENGTH SUCH THAT THE END OF THE BOLT IS AT LEAST FLUSH WITH THE FACE OF THE NUT. IT IS NOT PERMITTED FOR THE BOLT END TO BE BELOW THE FACE OF THE NUT AFTER TIGHTENING IS COMPLETED.
12. GALVANIZED ASTM A325 BOLTS SHALL NOT BE REUSED.
13. ALL NEW STEEL SHALL BE HOT BE DIPPED GALVANIZED FOR FULL WEATHER PROTECTION. CONTRACTOR SHALL OBTAIN WRITTEN PERMISSION TO PROTECT STEEL BY ANY OTHER MEANS.
14. ALL EXISTING PAINTED/GALVANIZED SURFACES DAMAGED DURING REHAB INCLUDING AREAS UNDER STIFFENER PLATES SHALL BE WIRE BRUSHED CLEAN, REPAIRED BY COLD GALVANIZING (ZINC COTE, OR EOR APPROVED EQUAL), AND REPAINTED TO MATCH THE EXISTING FINISH (IF APPLICABLE).
15. ALL HOLES IN STEEL MEMBERS SHALL BE SIZED 1/16" LARGER THAN THE BOLT DIAMETER. STANDARD HOLES SHALL BE USED UNLESS NOTED OTHERWISE.

BOLT SCHEDULE (IN.)

BOLT DIAMETER	STANDARD HOLE	SHORT SLOT	MIN. EDGE DISTANCE	SPACING
1/2	9/16	9/16 x 11/16	7/8	1 1/2
5/8	11/16	11/16 x 7/8	1 1/8	1 7/8
3/4	13/16	13/16 x 1	1 1/4	2 1/4
7/8	15/16	15/16 x 1 1/8	1 1/2	2 5/8
1	1 1/16	1 1/16 x 1 5/16	1 3/4	3

WORKABLE GAGES (IN.)

LEG	GAGE
4	2 1/2
3 1/2	2
3	1 3/4
2 1/2	1 3/8
2	1 1/8

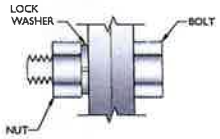

TYP. BOLT ASSEMBLY

NOTES:

1. ALL DIMENSIONS REPRESENTED IN THE ABOVE TABLES ARE AISC MINIMUM REQUIREMENTS. CONTRACTOR SHALL VERIFY EXISTING CONDITIONS IN FIELD AND NOTIFY ENGINEER IF DISTANCES ARE LESS THAN THOSE PROVIDED.
2. THE DIMENSIONS PROVIDED ARE MINIMUM REQUIREMENTS. ACTUAL DIMENSIONS OF PROPOSED MEMBERS WITHIN THESE DRAWINGS MAY VARY FROM THE AISC MINIMUM REQUIREMENTS.
3. SHORT SLOT HOLES SHALL ONLY BE USED WHEN DEPICTED IN THE DRAWINGS.
4. MATCH EXISTING GAGES WHEN APPLICABLE. UNLESS MINIMUM EDGE DISTANCES ARE COMPROMISED.

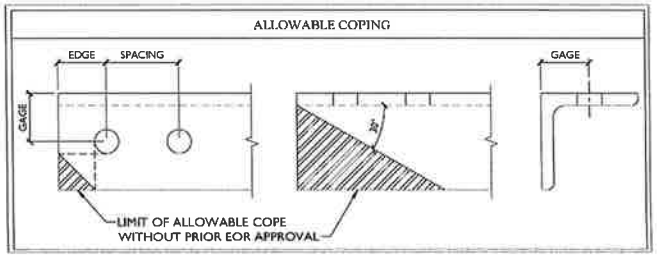

Colliers Engineering & Design

www.collierseng.com

verizon

811 PROTECT YOURSELF
ALL STATES REQUIRE NOTIFICATION OF EXCAVATORS, DESIGNERS, OR ANYONE PREPARING TO DIG, BEFORE YOU DIG
Know what's below. Call before you dig.
FOR STATE SPECIFIC DIGCHECK PHONE NUMBERS VISIT WWW.CALL811.COM

AS SHOWN	2/17/2023

REV	DATE	DESCRIPTION	DRAWN BY	CHECKED BY
1	12/06/2023	REVISED FOR CONSTRUCTION	GA	GA
C	8/16/2021	ISSUED FOR CONSTRUCTION	SA	DA

STATE OF CONNECTICUT
DEJIAN XU
No. 33733
LICENSED PROFESSIONAL ENGINEER
12/08/2023
COLLIERS ENGINEERING & DESIGN CT, P.C.

IT IS A VIOLATION OF LAW FOR ANY PERSON, UNLESS THEY ARE ACTING UNDER THE DIRECTION OF THE RESPONSIBLE LICENSED PROFESSIONAL ENGINEER, TO ALTER THIS DOCUMENT.

SITE NAME:

LEDYARD CT
5000247301

889A COLONEL LEDYARD HWY
LEDYARD, CT 06339
NEW LONDON COUNTY

Colliers Engineering & Design
STAMFORD
Stamford, CT 06901
Phone: 203.324.0800
COLLIERS ENGINEERING & DESIGN CT, P.C.
SUITE 1100, 1055 WASHINGTON BOULEVARD

GENERAL NOTES

SGN-1

NOTE: DO NOT SCALE DRAWINGS FOR CONSTRUCTION.

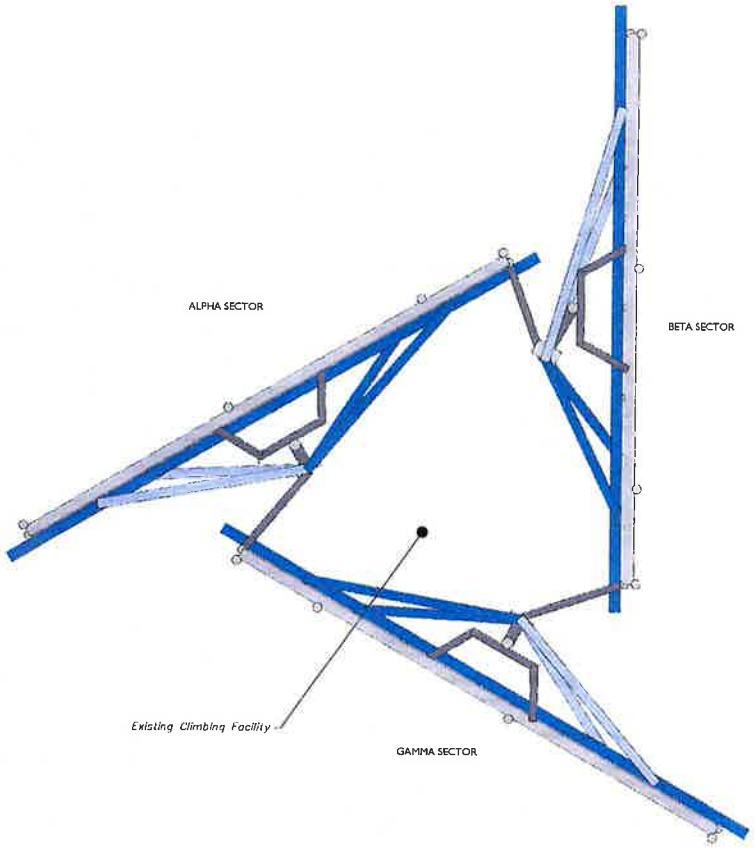

1 CLIMBING FACILITY LOCATION

SCALE : N.T.S.

STRUCTURAL NOTES:

1. PER THE MOUNT MAPPING COMPLETED BY HUDSON DESIGN GROUP LLC ON 2/9/2021, THE SAFETY CLIMB AND CLIMBING FACILITIES UP TO THE VERIZON MOUNT ELEVATION (166'-06") ARE IN GOOD CONDITION. COLLIERS ENGINEERING & DESIGN DOES NOT WARRANT THIS INFORMATION.

2. INSTALL SHALL NOT CAUSE HARM TO THE STRUCTURE, CLIMBING FACILITY, SAFETY CLIMB, OR ANY SYSTEM INSTALLED ON THE STRUCTURE. TIMELY NOTICE AND DOCUMENTATION SHALL BE PROVIDED BY CONTRACTORS TO THE EOR (OF STRUCTURAL DESIGN) IF AN OBSTRUCTION WAS REQUIRED TO MEET THE RF SYSTEM DESIGN REQUIREMENTS AND PERFORMANCES.

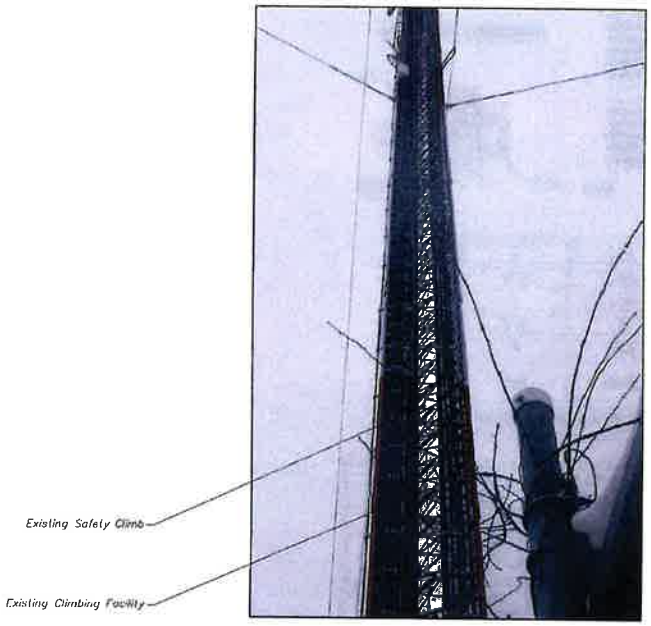

CLIMBING FACILITY PHOTO

Colliers Engineering & Design

www.colliersengineering.com

verizon

811 Know what's below. Call before you dig.

PROTECT YOURSELF

ALL STATES REQUIRE NOTIFICATION OF ENGINEERS, DESIGNERS OR ANY PERSON PREPARING TO DIG OR EXCAVATE SURFACE OWNERS IN MANY STATE

FOR STATE LAWS & STATE PHONE NUMBERS VISIT WWW.CALL811.COM

SCALE: AS SHOWN | JOB NUMBER: 31777011

REV	DATE	DESCRIPTION	DRAWN BY	CHECKED BY
1	10/19/2023	ISSUED FOR CONSTRUCTION	GK	DX
0	01/12/2023	ISSUED FOR CONSTRUCTION	SA	DX

STATE OF CONNECTICUT
DEJIAN XU
No. 33733
LICENSED
PROFESSIONAL ENGINEER
12/06/2023

IT IS A VIOLATION OF LAW FOR ANY PERSON, UNLESS THEY ARE ACTING UNDER THE DIRECTION OF THE RESPONSIBLE LICENSED PROFESSIONAL ENGINEER, TO ALTER THIS DOCUMENT.

SITE NAME:

LEDYARD CT
5000247301

889A COLONEL LEDYARD HWY
LEDYARD, CT 06339
NEW LONDON COUNTY

Colliers Engineering & Design

STAMFORD
1055 Washington Blvd Floor 4
Stamford CT 06901
Phone: 203.324.0800
COLLIERS ENGINEERING & DESIGN P.C. DBA COLLIERS ENGINEERING & DESIGN CONSULTANTS

SHEET TITLE: CLIMBING FACILITY DETAIL

SHEET NUMBER: SCF-1

LEGEND:

- PROPOSED
- RELOCATED
- EXISTING

MOUNT MODIFICATION SCHEDULE

NO.	ELEVATION	QUANTITY	DESCRIPTION	NOTES
1	166'-06"	6	PROPOSED V-BRACING KIT (PART #: VZWSMART-SFK3)	CONTRACTOR SHALL INSTALL ONE PROPOSED CLIP ANGLE (PART #VZWSMART-AL333) AT EITHER END OF EACH LONG ANGLE IN THE SFK3 KIT. CONTRACTOR TO VERIFY THE LENGTH REQUIRED AND TRIM AS NECESSARY IN ACCORDANCE WITH THE 'STRUCTURAL STEEL' NOTES ON SHEET SGN-1. SEE GENERAL NOTE B.
2		3	162" LONG, PIPE 2.5 SCH40	CONNECT NEW HORIZONTAL TO ALL EXISTING VERTICAL MOUNT PIPES WITH CROSSOVER PLATES (PART #: VZWSMART-MSK1). RADIO AND/OR TME POSITIONS SHALL BE ADJUSTED VERTICALLY AS NEEDED IN ORDER TO ACHIEVE INSTALLATION OF HORIZONTAL AS SHOWN. EOR SHALL BE NOTIFIED IF EQUIPMENT NEEDS TO BE RELOCATED TO ANOTHER MOUNT PIPE.

GENERAL NOTES:

A. CONTRACTOR SHALL VERIFY THAT NEW & EXISTING STEEL IS FREE OF CORROSION. VISIBLE MINOR CORROSION SHALL BE WIRE BRUSHED CLEAN AND TREATED WITH COLD GALVANIZATION. REPORT ANY SIGNIFICANT CORROSION TO EOR.
B. THREADED ROD FROM PROPOSED KITS SHALL BE TRIMMED TO EXTEND NO MORE THAN 3" BEYOND THE LOCK NUT. TREAT ALL CUT ENDS WITH (2) COATS OF COLD GALVANIZATION (ZINC KOTE, OR EOR APPROVED EQUAL).
C. MOUNT MEMBERS NOT SHOWN FOR CLARITY U.N.O.

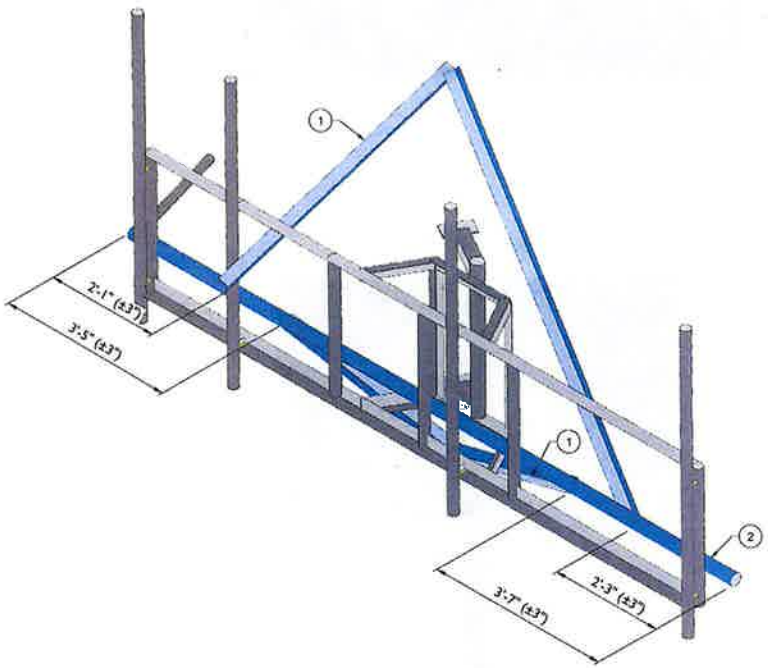

1 PROPOSED ISOMETRIC VIEW (TYP. ALL SECTORS)

SCALE : N.T.S.

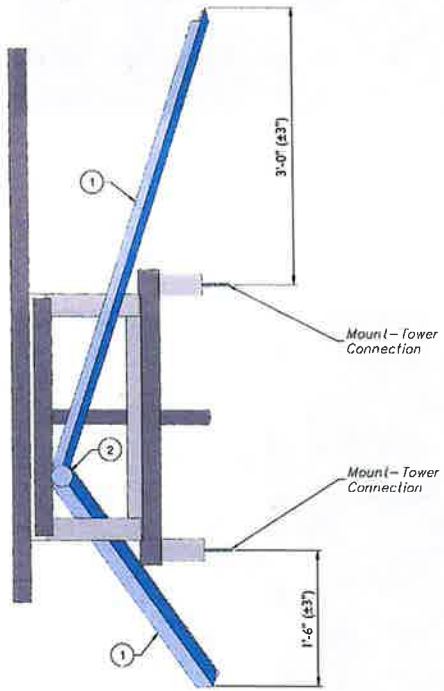

2 PROPOSED SIDE ELEVATION VIEW (TYP. ALL SECTORS)

SCALE : N.T.S.

Colliers Engineering & Design

www.colliersengineering.com

verizon

811 Know what's below. Call before you dig.

PROTECT YOURSELF
ALL STATES REQUIRE NOTIFICATION OF EXCAVATION, DEMOLITION OR ANY OPERATION PREPARING TO DIG, PLACE AN EXCAVATION SUPPORT MACHINERY ON, MOVE OVER

FOR STATE IN EFFECT DIRECT PHONE NUMBERS VISIT WWW.CALL811.COM

SCALE:	JOB NUMBER:
AS SHOWN	21777611

REV	DATE	DESCRIPTION	DRAWN BY	CHECKED BY
1	12/06/2023	ISSUED FOR CONSTRUCTION	GA	DN
0	8/14/2023	ISSUED FOR REVIEW	SA	GA

STATE OF CONNECTICUT
DEJIAN XU
No. 33733
LICENSED PROFESSIONAL ENGINEER
12/06/2023

IT IS A VIOLATION OF LAW FOR ANY PERSON, UNLESS THEY ARE ACTING UNDER THE DIRECTION OF THE RESPONSIBLE LICENSED PROFESSIONAL ENGINEER, TO ALTER THIS DOCUMENT.

SITE NAME:

LEDYARD CT
5000247301

889A COLONEL LEDYARD HWY
LEDYARD, CT 06339
NEW LONDON COUNTY

Colliers Engineering & Design
STAMFORD
3200 Washington Blvd Suite
Stamford, CT 06901
Phone: 203.204.1827
COLLIERS ENGINEERING & DESIGN CT P.C.
DPW CERTIFICATE # PC.0746.ENG

MODIFICATION DETAILS

SS-1

MOUNT PHOTO 1

MOUNT PHOTO 2

MOUNT PHOTO 3

MOUNT PHOTO 4

Colliers Engineering & Design

www.colliersengineering.com

verizon

811 Know what's below. Call before you dig.

PROTECT YOURSELF
ALL STATES REQUIRE NOTIFICATION OF EXCAVATORS, DESIGNERS, OR ANY PERSON PREPARING TO DIG PRIOR TO EXCAVATION, SURVEYING, ENGINEERING, OR ANY OTHER

FOR STATE SPECIFIC DIGSAFE PROTOCOL REQUIREMENTS VISIT WWW.CALL811.COM

SCALE	DRAWN BY
AS SHOWN	21/7/2021

REV	DATE	DESCRIPTION	DRAWN BY	CHECKED BY
F	12/06/2023	PROJECT FOR CONSTRUCTION	GA	DH
G	01/19/2024	PROJECT FOR CONSTRUCTION	TP	DH

STATE OF CONNECTICUT
DEJIAN XU
No. 33733
LICENSED PROFESSIONAL ENGINEER
12/06/2023

SITE NAME:

LEDYARD CT
5000247301

889A COLONEL LEDYARD HWY
LEDYARD, CT 06339
NEW LONDON COUNTY

Colliers Engineering & Design

STAMFORD
1055 Washington Boulevard
Stamford CT 06901
Phone: 203 324 6800
COLLIERSENGINEERING.COM
CT P.E. LICENSE NO. 0033733 MEP CONSULTING

SHEET TITLE
MOUNT PHOTOS

SHEET NUMBER
SS-2

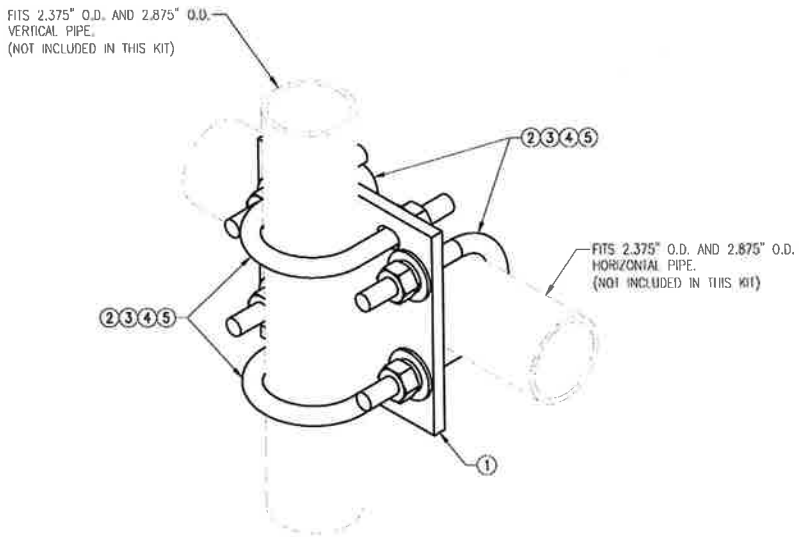

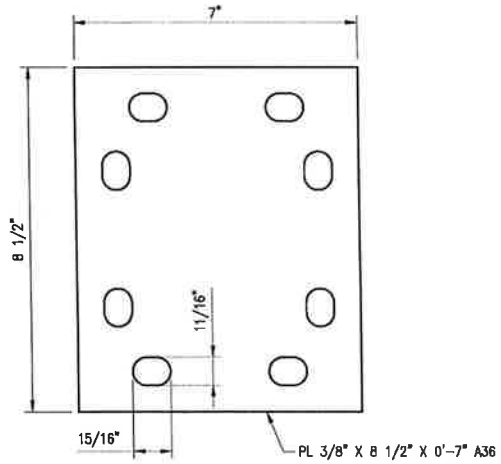

PL375-857

NOTES:
1. HOT-DIPPED GALVANIZED PER ASTM A123.

VZWSMART-MSK1 (CROSSOVER PLATE)

ITEM NO.	QTY.	PART NO.	DESCRIPTION	SHEET #	WT
1	1	PL375-857	PL 3/8" X 8 1/2" X 0'-7" A36	MSK1-F1	6
2	4	MS02-625-300-500	RU-BOLT 5/8" X 3" I.W. X 5" L.L. A36 (OR EQUIV.)	RBC-1	5
3	8	FW-625	5/8" HDG USS FLAT WASHER	---	1
4	8	LW-625	5/8" HDG LOCK WASHER	---	0
5	8	NUT-625	5/8" HDG HEX NUT	---	1
				GALVANIZED WT	14

VzW
SMART Tool©
Vendor

verizon

FOR REFERENCE ONLY

DRAWN BY: H.R | CHECKED BY: HMA

REV	DESCRIPTION	BY	DATE
0	FIRST ISSUE	H.R.	05/08/20

SHEET TITLE:
VZWSMART-MSK1
CROSSOVER PLATE

SHEET NUMBER: VZWSMART-MSK1
REV #: 0

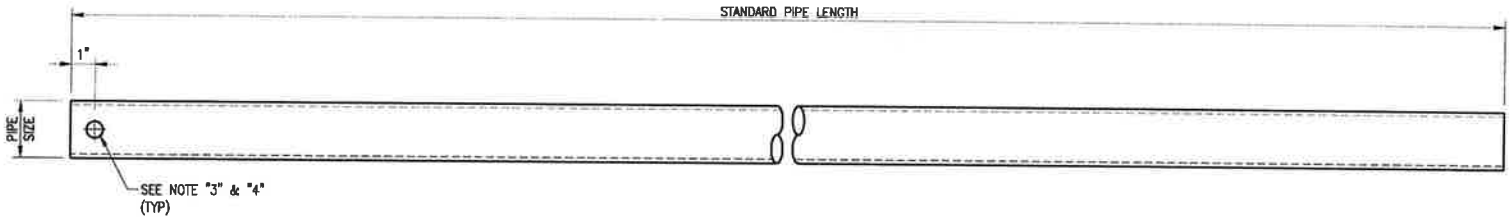

VZWSMART Standard Pipe		
VZWSMART Number	Size	Length
P40-238X048	PIPE 2 SCH40 (2.375" OD x 0.154" THK)	48"
P40-238X072	PIPE 2 SCH40 (2.375" OD x 0.154" THK)	72"
P40-238X096	PIPE 2 SCH40 (2.375" OD x 0.154" THK)	96"
P40-238X120	PIPE 2 SCH40 (2.375" OD x 0.154" THK)	120"
P40-238X126	PIPE 2 SCH40 (2.375" OD x 0.154" THK)	126"
P40-238X150	PIPE 2 SCH40 (2.375" OD x 0.154" THK)	150"
P40-238X174	PIPE 2 SCH40 (2.375" OD x 0.154" THK)	174"
P40-278X048	PIPE 2.5 SCH40 (2.875" OD x 0.203" THK)	48"
P40-278X072	PIPE 2.5 SCH40 (2.875" OD x 0.203" THK)	72"
P40-278X096	PIPE 2.5 SCH40 (2.875" OD x 0.203" THK)	96"
P40-278X120	PIPE 2.5 SCH40 (2.875" OD x 0.203" THK)	120"
P40-278X126	PIPE 2.5 SCH40 (2.875" OD x 0.203" THK)	126"
P40-278X150	PIPE 2.5 SCH40 (2.875" OD x 0.203" THK)	150"
P40-278X174	PIPE 2.5 SCH40 (2.875" OD x 0.203" THK)	174"
P40-312X048	PIPE 3 SCH40 (3.5" OD x 0.216" THK)	48"
P40-312X072	PIPE 3 SCH40 (3.5" OD x 0.216" THK)	72"
P40-312X126	PIPE 3 SCH40 (3.5" OD x 0.216" THK)	126"
P40-312X150	PIPE 3 SCH40 (3.5" OD x 0.216" THK)	150"
P40-312X174	PIPE 3 SCH40 (3.5" OD x 0.216" THK)	174"

NOTE:
APPROVED SMART KIT VENDORS ARE ALLOWED TO SUBSTITUTE AT THEIR DISCRETION PIPES LISTED ON THIS PAGE FOR CUSTOM LENGTH COMPONENTS OF MATCHING SIZE. SUBSTITUTIONS SHALL MEET THE ORIGINAL STRUCTURAL INTENT.

NOTES:
1. ALL PIPE GRADE A53-B OR BETTER.
2. HOT-DIPPED GALVANIZED PER ASTM A123.
3. ALL HOLES ARE 11/16" DIA. U.N.O
4. HOLES MAY OR MAY NOT BE PRESENT, DEPEND UPON MANUFACTURE DISCRETION.
5. ALL FIELD CUT AND DRILLED SURFACES SHALL BE REPAIRED WITH A MINIMUM OF TWO COATS OF ZINGA OR ZINC COTE PER ASTM A780 AND MANUFACTURER'S RECOMMENDATIONS.

VzW SMART Tool© Vendor

verizon

FOR REFERENCE ONLY

DRAWN BY: BT | CHECKED BY: HMA/KW

REV	DESCRIPTION	BY	DATE
1	FIRST ISSUE	BT	08/04/21

SHEET TITLE:
VZWSMART STANDARD PIPE

SHEET NUMBER: VZWSMART-PIPE | REV #: 0

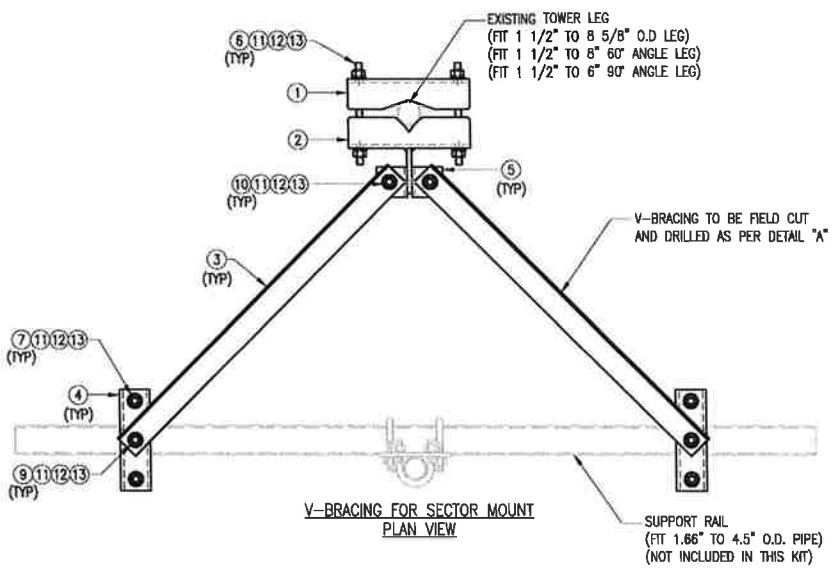

V-BRACING FOR SECTOR MOUNT
PLAN VIEW

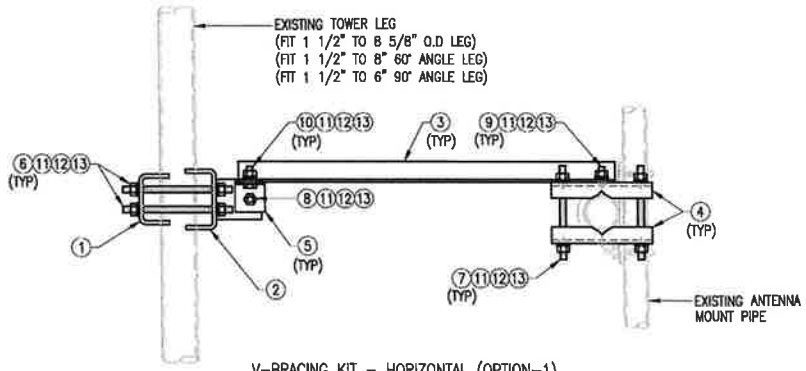

V-BRACING KIT – HORIZONTAL (OPTION-1)
SIDE VIEW

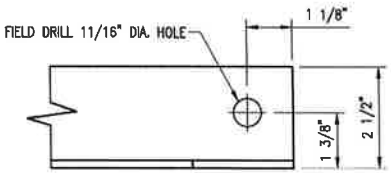

PLAN VIEW

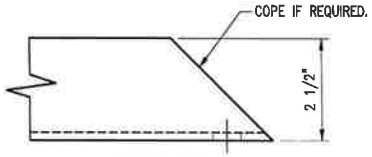

FRONT VIEW
DETAIL "A"

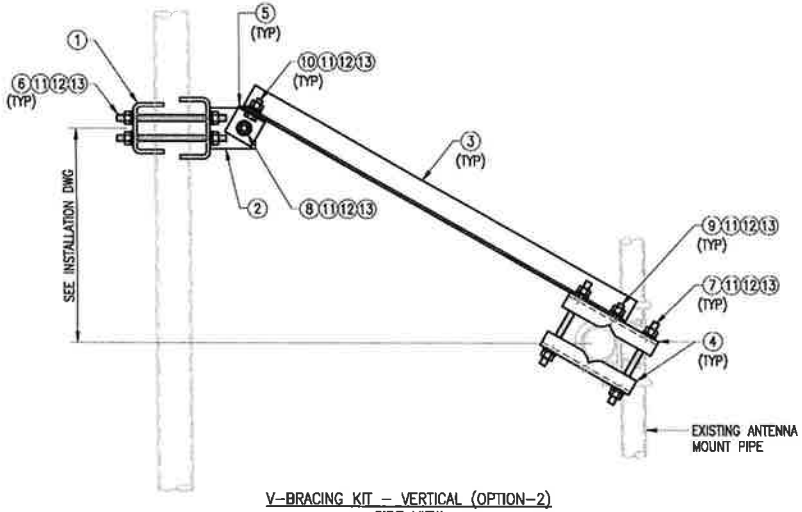

V-BRACING KIT – VERTICAL (OPTION-2)
SIDE VIEW

VZWSMART-SFK3 (V-BRACING KIT)

ITEM NO.	QTY.	PART NO.	DESCRIPTION	SHEET #	WT
1	1	BP9625-12	PL 3/8" X 9 5/8" X 1'-0" A36 BENT PLATE	VBSM-F1	12
2	1	BRKW-VBSM	WELDMENT BRACKET	VBSM-F3	16
3	2	L252525-8	L 2 1/2" X 2 1/2" X 1/4" X 8'-0" A36	VBSM-F5	67
4	4	BP6875-10	PL 3/8" X 6 7/8" X 10" A36 BENT PLATE	VBSM-F2	20
5	2	AL-333	L 3" X 3" X 1/4" X 3" A36	VBSM-F2	3
6	4	---	THREADED ROD 5/8" DIA. X 1'-6" F1554-36 HDG	---	--
7	4	---	THREADED ROD 5/8" DIA. X 10" F1554-36 HDG	---	--
8	1	---	BOLT 5/8" X 2 1/4" A325	---	--
9	2	---	BOLT 5/8" X 2" A325	---	--
10	2	---	BOLT 5/8" X 1 3/4" A325	---	--
11	21	FW-625	5/8" HDG USS FLAT WASHER	---	2
12	21	LW-625	5/8" HDG LOCK WASHER	---	0
13	21	NUT-625	5/8" HDG HEX NUT	---	2
				GALVANIZED WT	122

NOTES:
1. HOT-DIPPED GALVANIZED PER ASTM A123.

VzW SMART Tool© Vendor

verizon

FOR REFERENCE ONLY

DRAWN BY: H.R. | CHECKED BY: HMA

REV	DESCRIPTION	BY	DATE
0	FIRST ISSUE	H.R.	05/08/20

SHEET TITLE:
VZWSMART-SFK3
V-BRACING KIT

SHEET NUMBER: VZWSMART-SFK3 | REV #: 0

ATTACHMENT 5

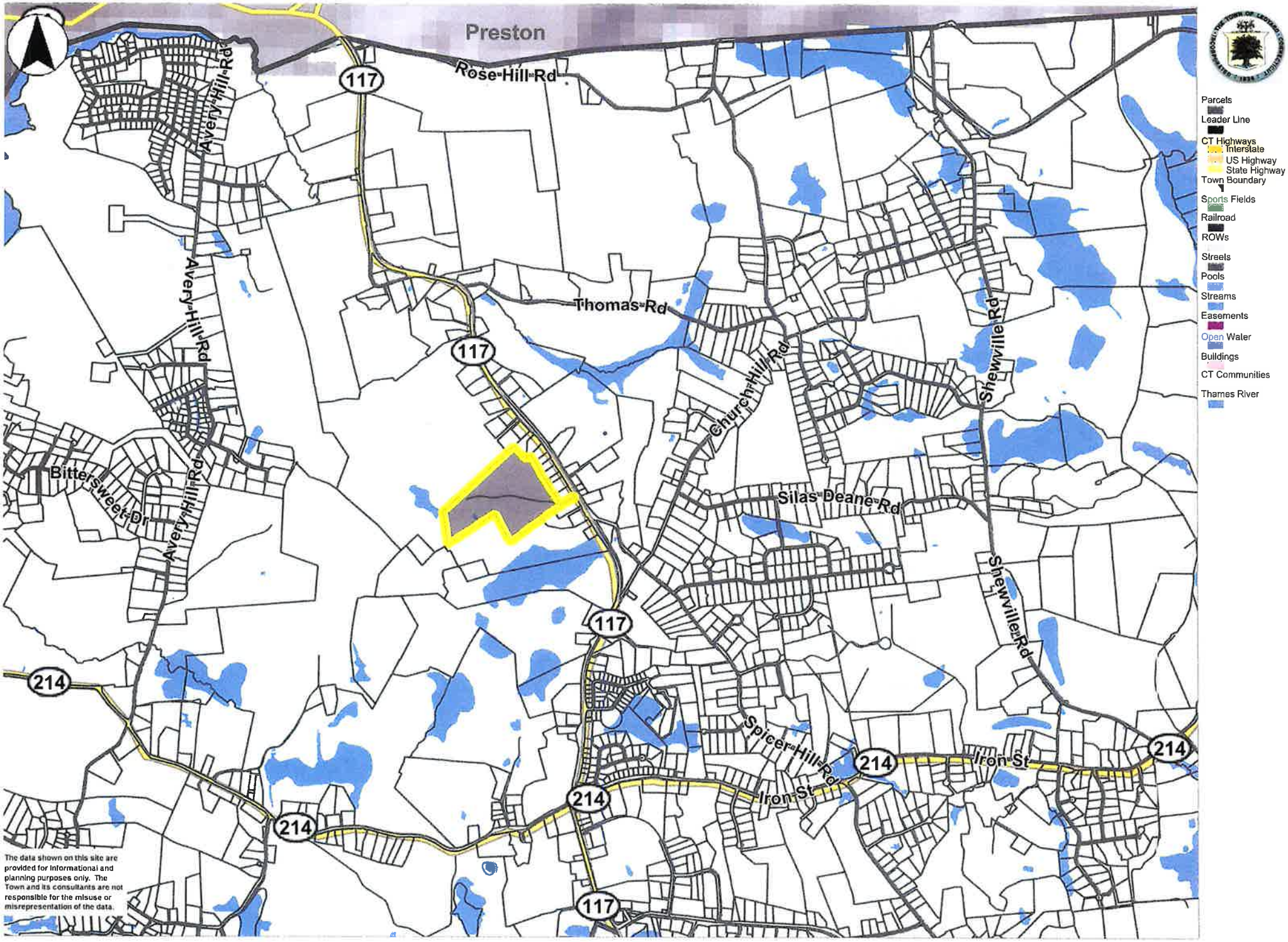

3200 6400 ft

Printed on 02/06/2024 at 11:04 AM

Ledyard, CT MapsOnline

Town of Ledyard Property Summary Report

889R COLONEL LEDYARD HWY

PARCEL ID:	40-530-889R
LOCATION:	889R COLONEL LEDYARD HWY
OWNER NAME:	I TOWN OF LEDYARD / HIGHWAY GARAGE/DUMP SITE

OWNER OF RECORD
I TOWN OF LEDYARD
HIGHWAY GARAGE/DUMP SITE
741 COLONEL LEDYARD HWY
LEDYARD, CT 06339

LIVING AREA:	9440	**ZONING:**	R60	**ACREAGE:**	49.61

SALES HISTORY

OWNER	**BOOK / PAGE**	**SALE DATE**	**SALE PRICE**
I TOWN OF LEDYARD HIGHWAY GARAGE/DUMP SITE	00094/0547	16-Aug-1974	$0.00
			$0.00

CURRENT ASSESSED VALUE

TOTAL:	$775,320.00	**IMPROVEMENTS:**	$434,000.00	**LAND:**	$341,320.00

ASSESSING HISTORY

FISCAL YEAR	**TOTAL VALUE**	**IMPROVEMENT VALUE**	**LAND VALUE**
2022	$775,320.00	$434,000.00	$341,320.00
2021	$775,320.00	$434,000.00	$341,320.00
2020	$775,320.00	$434,000.00	$341,320.00
2019	$619,220.00	$295,050.00	$324,170.00
2018	$619,220.00	$295,050.00	$324,170.00

Town of Ledyard Property Summary Report

889R COLONEL LEDYARD HWY

PARCEL ID:	40-530-889R
LOCATION:	889R COLONEL LEDYARD HWY
OWNER NAME:	I TOWN OF LEDYARD / HIGHWAY GARAGE/DUMP SITE

BUILDING # 1

YEAR BUILT	1985	**ROOF STRUCTURE**	Gable/Hip
STYLE	Pre-Eng Gar	**ROOF COVER**	Metal/Tin
MODEL	Ind or Comm	**FLOOR COVER 1**	Concr-Finished
GRADE	Average +	**FLOOR COVER 2**	NULL
STORIES	1	**HEAT FUEL**	Oil
OCCUPANCY	Municipal M96	**HEAT TYPE**	Hot Air-no Duc
EXT WALL 1	Pre-finsh Metl	**AC TYPE**	None
EXT WALL 2	NULL	**BEDROOMS**	NULL
INT WALLS 1	Minim/Masonry	**FULL BATHS**	NULL
INT WALLS 2	NULL	**HALF BATHS**	NULL
		TOT ROOMS	NULL

EXTRA FEATURES

DESCRIPTION	CODE	UNITS
Shed	SHD1	NULLxNULL (4960.00 S.F.)
Pole barn	BRN8	7200xNULL (7200.00 S.F.)
Shed-Metal	SHD3	NULLxNULL (120.00 S.F.)
Kennel Good	KEN2	NULLxNULL (1824.00 S.F.)
Fence- 8ft Chn	FN4	NULLxNULL (280.00 L.F.)
Shed	SHD1	NULLxNULL (77.00 S.F.)
Workshop w/imp	SHP4	NULLxNULL (4360.00 S.F.)
Garage	FGR1	NULLxNULL (336.00 S.F.)
Shed	SHD1	NULLxNULL (120.00 S.F.)
Pole barn	BRN8	3600xNULL (3600.00 S.F.)
CELL ANTENNA	MSC4	1xNULL (1.00 UNIT)
Garage- Good	FGR2	42x50 (2100.00 S.F.)

Town of Ledyard Property Summary Report

889A COLONEL LEDYARD HWY

PARCEL ID:	40-530-889-A
LOCATION:	889A COLONEL LEDYARD HWY
OWNER NAME:	RED WOLF BROADCASTING

OWNER OF RECORD
RED WOLF BROADCASTING P O BOX 357 LEDYARD, CT 06339

LIVING AREA:	null	**ZONING:**	R60	**ACREAGE:**	0.00

SALES HISTORY

OWNER	**BOOK / PAGE**	**SALE DATE**	**SALE PRICE**
RED WOLF BROADCASTING			$0.00

CURRENT ASSESSED VALUE

TOTAL:	$113,820.00	**IMPROVEMENTS:**	$113,820.00	**LAND:**	$0.00

ASSESSING HISTORY

FISCAL YEAR	**TOTAL VALUE**	**IMPROVEMENT VALUE**	**LAND VALUE**
2018	$113,820.00	$113,820.00	$0.00
2017	$113,820.00	$113,820.00	$0.00
2016	$113,820.00	$113,820.00	$0.00
2015	$113,820.00	$113,820.00	$0.00
2014	$113,820.00	$113,820.00	$0.00

ATTACHMENT 6

Verizon/Ledyard

Certificate of Mailing — Firm

UNITED STATES POSTAL SERVICE®

Name and Address of Sender	TOTAL NO. of Pieces Listed by Sender	TOTAL NO. of Pieces Received at Post Office™	Affix Stamp Here *Postmark with Date of Receipt.*
Kenneth C. Baldwin, Esq. Robinson & Cole LLP 280 Trumbull Street Hartford, CT 06103	3	3	quadient CORRECTION IMI $003.34 02/21/2024 ZIP 06101 043M32206819 US POSTAGE
	Postmaster, per *(name of receiving employee)*		

USPS® Tracking Number / Firm-specific Identifier	Address (Name, Street, City, State, and ZIP Code™)	Postage	Fee	Special Handling	Parcel Airlift
1.	Fred Allyn III, Mayor Town of Ledyard 741 Colonel Ledyard Highway Ledyard, CT 06339				
2.	Juliet Hodge, Director of Planning and Acting Zoning and Wetlands Enforcement Agent Town of Ledyard 741 Colonel Ledyard Highway Ledyard, CT 06339				
3.	Red Wolf Broadcasting PO Box 357 Ledyard, CT 06339				
4.					
5.					
6.					

OLD STATE HOUSE POST OFFICE FEB 21 2024 HARTFORD, CT 06103

See Reverse for Instructions