October 20, 2020

Melanie A. Bachman Executive
Director Connecticut Siting Council
10 Franklin Square
New Britain, CT 06051

Re: **Notice of Exempt Modification – Antenna and RRU Add**
Property Address: **244 Gates Road, Lebanon, CT 06249**
Applicant: **AT&T Mobility, LLC**

Dear Ms. Bachman:

On behalf of AT&T, please accept this application as notification pursuant to R.C.S.A. §16-50j-73, for construction that constitutes an exempt modification pursuant to R.C.S.A. §16- 50j-72(b) (2).

AT&T currently maintains a wireless telecommunications facility consisting of nine (9) wireless telecommunication antennas at an antenna center line height of 124-feet on an existing 121'-foot Self-Support Tower, owned by New Cingular Wireless PCS LLC at 909 Chestnut Street 36-M-01, St. Louis, MO 63101. AT&T now intends to remove three (3) 8' CCI TPA-65R-LCUUUU-H8 Panel Antennas, each currently installed in position [3], and install three (3) 8' CCI TPA-65R-BU8DA-K CCI Panel Antennas and three (3) 8' CCI DMP65R-BU8DA Panel Antennas all currently installed in positions [3+4] all sectors. In addition, AT&T intends to remove six (9) Remote Radio Units add one (1) RRUS-4478 B14, one (1) RRUS-8843 B2/B66A and (1) RRUS-4449 B5/B12 in positions [3+4], all sectors, for a total of nine (9) new RRUs. AT&T is also proposing to replace (3) existing Raycap Squids with (3) new Raycap Squids, as well as three (3) fiber lines and (9) DC Power Cables to their equipment configuration. All of the changes will take place on the existing antenna mount.

Attached is a summary of the planned modifications including power density calculations reflecting the change in AT&T's operations at the site. Also included is documentation of the structural sufficiency of the tower to accommodate the revised antenna configuration.

Please accept this letter pursuant to Regulation of Connecticut State Agencies §16-50j-73, for construction that constitutes an exempt modification pursuant to R.C.S.A. § 16-5I0j-72(b) (2). In accordance with R.C.S.A., a copy of this letter is being sent to Jason Nowosad – Town Building Official, Town of Lebanon, CT at 579 Exeter Road, Lebanon, CT 06249 and Kevin Cwikla – First Selectman, Town of Lebanon, CT at 579 Exeter Road, Lebanon, CT 06237. A copy of this letter is being sent to the property owner New Cingular Wireless PCS LLC at 909 Chestnut Street 36-M-01, St. Louis, MO 63101.

The following is a list of subsequent decisions by the Connecticut Siting Council:

- **EM-CING-071-081124-** New Cingular Wireless PCS, LLC notice of intent to modify an existing telecommunications facility located at 244 Gates Road, Lebanon, Connecticut.
- **EM-CING-071-130124** – New Cingular Wireless PCS, LLC notice of intent to modify an existing telecommunications facility located at 244 Gates Road, Lebanon, Connecticut.
- **EM-CING-071-140519** – New Cingular Wireless PCS, LLC notice of intent to modify an existing telecommunications facility located at 244 Gates Road, Lebanon, Connecticut.
- **EM-AT&T-071-160817** - AT&T notice of intent to modify an existing telecommunications facility located at 244 Gates Road, Lebanon, Connecticut.
- **EM-AT&T-071-170510** – AT&T notice of intent to modify an existing telecommunications facility located at 244 Gates Road, Lebanon, Connecticut.

The planned modifications to AT&T's facility fall squarely within those activities explicitly provided for in R.C.S.A. §16-50j-72(b) (2).

1. The proposed modifications will not result in an increase in the height of the existing tower. AT&T's replacement antennas will be installed at the 124-foot level of the 121'-foot Self-Support Tower.
2. The proposed modifications will not involve any changes to ground-mounted equipment and, therefore, will not require and extension of the site boundary.
3. The proposed modifications will not increase the noise levels at the facility by six decibels or more, or to levels that exceed state and local criteria.
4. The operation of the modified facility will not increase radio frequency (RF) emissions at the facility to a level at or above the Federal Communications Commission (FCC) safety standard. A cumulative worst-case RF emissions calculation for AT&T's modified facility is provided in the RF Emissions Compliance Report, included in Tab 2.
5. The proposed modifications will not cause a change or alteration in the physical or environmental characteristics of the site.
6. The tower and its foundation can support AT&T's proposed modifications. (See Structural Analysis Report included in Tab 3).

For the foregoing reasons, AT&T respectfully submits that the proposed modifications to the above referenced telecommunications facility constitutes an exempt modification under
R.C.S.A. §16-50j-72(b) (2).

Sincerely,

Kristina Cottone

CC w/enclosures:
Jason Nowosad – Town Building Official, Town of Lebanon, CT
Kevin Cwikla – First Selectman, Town of Lebanon, CT
New Cingular Wireless PCS LLC - Property Owner & Landowner

STATE OF CONNECTICUT

CONNECTICUT SITING COUNCIL

136 Main Street, Suite 401
New Britain, Connecticut 06051
Phone: 827-7682

[illegible] Dibble Pond
Chairperson

COMMISSIONERS

Energy/Telecommunications

Peter G. Boucher
Leslie Carothers

Hazardous Waste/Low-level Radioactive Waste

F[illegible]rick G. Adams
B[illegible]ard R. Sullivan

COUNCIL MEMBERS

Harry E. Covey
Mortimer A. Gelston
Daniel P. Lynch, Jr.
Paulann H. Sheets
William H. Smith
Colin C. Tait

Joel M. Rinebold
Executive Director

Stanley J. Modzelesky
Executive Assistant

April 10, 1990

Peter J. Tyrrell
Senior Attorney
SNET Cellular, Inc
227 Church Street
New Haven, CT 06506

RE: SNET Cellular Inc., (SCI) Notice of Intent to Modify an Exempt Tower and Associated Equipment owned by the Southern New England Telephone Company (SNET) in Lebanon, Connecticut.

Dear Attorney Tyrrell:

At a meeting on April 9, 1990, the Connecticut Siting Council acknowledged your notice of intent to modify an exempt telecommunications tower and associated equipment located on Gates Road in Lebanon, Connecticut, pursuant to Section 16-50j-73 of the Regulations of State Agencies (RSA).

The proposed modifications are to be implemented as specified in your notice dated March 1, 1990, "Option Two", the replacement of both of the existing 80-foot and 120-foot guyed SNET towers with one self-supporting 120-foot tower. As proposed, the modifications are in compliance with the exception criteria specified in RSA Section 16-50j-72(b)(3) as a replacement of an existing CATV tower or telecommunications tower and associated equipment with a tower that is no taller than the tower to be replaced and that will not support public service company or state antennas, or antennas to be used for public cellular radio communications emitting total radio frequency electromagnetic radiation power density measured at the tower site boundary to or above the standard adopted by the State Department of Environmental Protection pursuant to Section 22a-162 of the Connecticut General Statutes.

The Council is pleased to note that the shared use of an existing tower meets the Council's long-term goal and the public interest to avoid the proliferation of additional tower structures.

Enclosed for your reference is a copy of the Staff Report on this Exempt Modification, dated April 9, 1990. Please notify the Council upon completion of construction.

Very truly yours,

Gloria Dibble Pond/rc

Gloria Dibble Pond
Chairperson

Enclosure

cc: Donald Chapman

4313E-4

STATE OF CONNECTICUT

CONNECTICUT SITING COUNCIL

136 Main Street, Suite 401
New Britain, Connecticut 06051
Phone: 827-7682

Notice of Intent of Modify an Existing Tower
SNET Cellular, Inc.
Lebanon, Connecticut
April 9, 1990

On March 1, 1990, SNET Cellular Inc. (SCI) submitted to the Siting Council a Notice of Intent to Modify a tower and associated equipment in the Town of Lebanon. On March 7, 1990, Robert A. Pulito of the Siting Council and Joel M. Rinebold and Robert K. Erling of the Council staff visited the Lebanon site on which the proposed modifications would take place. On March 30, 1990, Council members Mortimer A. Gelston and Colin C. Tait visited the site with Council staff members Joel M. Rinebold and Robert K. Erling.

SCI has proposed two options to replace an existing 120-foot guyed telecommunications tower on Gates Road in Lebanon. This tower site would be leased from its current owner, the Southern New England Telephone Company (SNET), and would be used to provide cellular telephone service in New London County, overlapping with coverage from an adjacent cell site in Colchester, and a planned cell site in Ashford.

There are currently four existing guyed towers on two adjacent properties on this hilltop site. Two of these towers are owned by SNET on SNET property containing 1.7 acres. These towers are 80 feet and 120 feet in height. Two towers on an adjacent property of 1.2 acres owned by Colin K. and Loretta L. Rice are 120 feet and 290 feet in height. The 120-foot tower on the Rice property is owned by Tele-Media Company of Northeastern Connecticut, and was certificated by the Council as part of Docket 43 in 1984. The 290-foot tower is owned by radio station WILI.

The 120-foot SNET tower is painted and lighted because it was constructed before the nearby WILI tower, which is also obstruction marked and lighted.

The following guying information was supplied by SCI.

Tower Owner	Height	No. of sets of 3-guy wires	Tower Distance to Farthest guy wires
SNET	80 feet	1	65 feet
SNET	120 feet	3	100 feet
Tele-Media	120 feet	3	80 feet
WILI	290 feet	6	150 feet

Both SNET towers were constructed in 1960. The WILI tower was constructed in 1980, and the Tele-Media tower was built in 1984. All four of these towers were erected prior to the construction of any of the nearby homes on Gates Hill Road. These homes were built between 1987 and 1988.

Option One of SCI involves the replacement of the existing 120-foot SNET tower with another 120-foot guyed tower which has the capacity to support both the existing antennas and new cellular transmit and receive antennas. The existing 120-foot tower cannot accommodate the proposed cellular antennas. The existing 80-foot SNET tower would remain in place.

Option Two of SCI would replace both of the existing SNET towers with a single 120-foot self-supporting tower. The replacement of the two existing towers would mean the removal of 1808 feet of guy wires. The proposed 120-foot tower would measure approximately 10 feet across at its base and taper to six feet at its top. Each of the two existing towers has a width of three feet The two existing SNET towers would be removed within six months after the installation of the new tower.

Neither Option One nor Option Two would increase the height of a tower on the SNET property, extend the boundaries of the SNET property, increase noise levels at the site boundary, or increase the total radio frequency electromagnetic radiation power density at the tower site boundary to or above the State Standard of 2.933 mW/cm^2.

SNET does not propose to paint or light the replacement tower or associated dish antennas. SNET has requested the elimination of this painting and lighting requirement for this tower from the Federal Aviation Administration, but has not yet received a response.

A meeting between SCI and the Lebanon Building Inspector indicates that the construction of the new equipment building on the SNET site is a permitted use at this location, requiring a building permit.

Pursuant to Section 16-50j-72(b) of the Connecticut Regulations of State Agencies, "None of the following shall constitute a modification to an existing community antenna television or telecommunications tower that may have substantial adverse environmental effect:

(1) Routine general maintenance and one-for-one replacement of facility components that is necessary for reliable operation;

(2) Changes on an existing tower site that do not increase the tower height, extend the boundaries of the tower site, increase noise levels at the tower site boundary by 6 decibels, and add radio frequency sending or receiving capability which increases the total radio frequency electromagnetic radiation power density measured at the tower site boundary to or above the standard adopted by the State Department of Environmental Protection pursuant to Section 22a-162 of the Connecticut General Statutes; or

(3) Replacement of an existing CATV tower or telecommunications tower and associated equipment with a tower that is no taller than the tower to be replaced and that will not support public service company or State antennas, or antennas to be used for public cellular radio communications emitting total radio frequency electromagnetic radiation power density measured at the tower site boundary to or above the standard adopted by the State Department of Environmental Protection pursuant to Section 22a-162 of the Connecticut General Statutes.

Robert K. Erling
Senior Siting Analyst

RKE/cp

4237E

Permit No. 0822

Zone: RA

TOWN OF LEBANON

Building Permit Record Date: 5-15-90

VALID FOR ONE YEAR

Owner: Southern New England Telephone, ATTN: Mr. R. Archacki

Address: 195 Church Street, New Haven, CT 06510 Phone 771-5926

DESCRIPTION

New: ✓ Addition: Accessory: Remodel: Alteration: Other: Seasonal: Year Round:

New Precast Telephone Equipment Bldg. and new Tower. Bldg unoccupied No water!

The applicant agrees to conform to all requirements of the laws of the State of Conn. and all ordinances and zoning regulations of the Town of Lebanon, and to notify the Building Official of any changes in specifications for which this permit is issued, and to obtain a certificate of occupancy before using this structure.

INSPECTION REQUIRED

Class: S - B	Flooring: Concrete		Lot No.:
Type: 3C		Tile Bath:	Lot Size:
	Int. Walls: Concrete	Walls:	Set Back: per plan
No. of Rms: 1		Shower:	Side Yard:
No. of Stories: 1	Electrical:	Floors:	Back Yard:
		Heating:	Sub-Div.:
Floor Area: 312 ft		Wa. Htg:	
	No. of Bathrooms:	Stm. Htg:	Hot Water Supply
Foundation: Concrete		H. W. Htg:	
	No. of Toilet Rms.:	Space Htg:	Fireplace:
Construction: Concrete			
	Plumbing Fixtures:		City Water:
Ext. Walls: Concrete	Sink:		Well Water:
	Toilets:	Fuel:	
	Basins:	Oil:	Septic:
Roofing: Concrete	Bathtubs:	Gas:	Sewer:
	Shrstalls:	Elec.:	
Basement: 1			
		Air Cond.:	

Separate Permits Required: Elect, Heat, Plumb, Septic, Well, Stove, All Masonry

Architect: Bayer & Associates, Engineers	Est Cost: 71,000.00
Address: 109 Montgomery Ave, Scarsdale, N.Y.	
Builder: Thomas Corp. License #:	$5 per 1,000 Est Cost. 355.00 $10 Minimum Charge
Address: P.O. Box 2159 Vernon, Ct. 06066	
Applicant's and/or Owner: Signature: Edward M. Rogers	Total: 355.00
Issued by Building Inspector: Donald C. Johnson	
Zoning Officer: Guy Chesebro	

244 GATES RD

Location	244 GATES RD	**Mblu**	208/ / 55/ /
Acct#	S0154300	**Owner**	NEW CINGULAR WIRELESS PCS LLC
Assessment	$179,780	**PID**	1091
Building Count	1		

Current Value

Assessment			
Valuation Year	**Improvements**	**Land**	**Total**
2018	$21,500	$158,280	$179,780

Owner of Record

Owner	NEW CINGULAR WIRELESS PCS LLC	**Sale Price**	$1
Co-Owner		**Certificate**	
Address	909 CHESTNUT ST 36-M-01 ST LOUIS , MO 63101	**Book & Page**	0294/0582
		Sale Date	06/23/2015
		Instrument	25

Ownership History

Ownership History					
Owner	**Sale Price**	**Certificate**	**Book & Page**	**Instrument**	**Sale Date**
NEW CINGULAR WIRELESS PCS LLC	$1		0294/0582	25	06/23/2015
AT&T CAPITAL SERVIES INC	$0		0291/1006	31	10/28/2014
SOUTHERN NEW ENGLAND TELEPHONE	$0		0072/0507	29	

Building Information

Building 1 : Section 1

Year Built:	1961
Living Area:	900
Replacement Cost:	$29,433
Building Percent Good:	70
Replacement Cost Less Depreciation:	$20,600

Building Attributes

Field	Description
Style	Support Shed
Model	Industrial
Grade	Average +10
Stories:	1
Occupancy	
Exterior Wall 1	Concr/Cinder
Exterior Wall 2	
Roof Structure	Shed
Roof Cover	Tar + Gravel
Interior Wall 1	Minim/Masonry
Interior Wall 2	
Interior Floor 1	Concr-Finished
Interior Floor 2	
Heating Fuel	None
Heating Type	None
AC Type	None
Struct Class	
Use:	CELL TOWR MDL-96
Total Rooms	
Total Bedrms	00
Total Baths	0
Usrfld 218	
Usrfld 219	
1st Floor Use:	4310
Heat/AC	NONE
Frame Type	MASONRY
Baths/Plumbing	NONE
Ceiling/Wall	NONE
Rooms/Prtns	LIGHT
Wall Height	10.00
% Comn Wall	0.00
Usrfld 100	
Usrfld 302	
Usrfld 301	
Usrfld 303	
Usrfld 103	
Usrfld 107	
Usrfld 304	
Usrfld 104	
Usrfld 105	

Building Photo

(http://images.vgsi.com/photos/LebanonCTPhotos//\00\01\22\56.jpg)

Building Layout

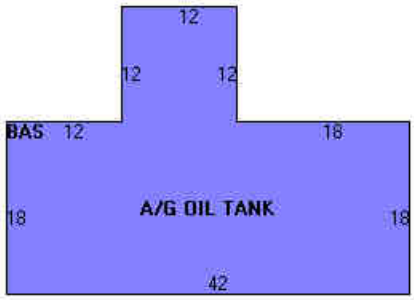

(http://images.vgsi.com/photos/LebanonCTPhotos//Sketches/1091_1091.jp

Building Sub-Areas (sq ft)			Legend
Code	Description	Gross Area	Living Area
BAS	First Floor	900	900
		900	900

Usrfld 101	
Usrfld 225	
Usrfld 300	
Usrfld 220	
Usrfld 221	
Usrfld 102	
Usrfld 701	
Usrfld 106	
Usrfld 305	
Usrfld 900	No
Usrfld 901	No

Extra Features

Extra Features	Legend
No Data for Extra Features	

Land

Land Use

Use Code	4310
Description	CELL TOWR MDL-96
Zone	
Neighborhood	12
Alt Land Appr	No
Category	

Land Line Valuation

Size (Acres)	1.74
Frontage	0
Depth	0
Assessed Value	$158,280

Outbuildings

Outbuildings						Legend
Code	**Description**	**Sub Code**	**Sub Description**	**Size**	**Value**	**Bldg #**
TW2	CELL TOWER			120.00 HEIGHT	$0	1
FN3	FENCE-6' CHAIN			340.00 L.F.	$1,530	1
SHDC	Shed - Cell tower			300.00 S.F.	$8,580	1

Valuation History

Assessment			
Valuation Year	**Improvements**	**Land**	**Total**
2019	$21,500	$158,280	$179,780
2018	$21,500	$158,280	$179,780
2017	$21,500	$158,280	$179,780

8618 Westwood Center Drive, Suite 315, Vienna, VA 22182
703.276.1100 ● 703.276.1169 fax
info@sitesafe.com ● www.sitesafe.com

Smartlink on behalf of AT&T Mobility, LLC
Site FA – 10035007
Site ID – CTL01065
USID – 65054
Site Name – LEBANON
MRCTB047092-MRCTB047118-MRCTB047141

244 GATES ROAD
LEBANON, CT 06249

Latitude: N41-40-58.57
Longitude: W72-12-58.29
Structure Type: Self-Support

Report generated date: October 26, 2020
Report by: Sophie Thein
Customer Contact: Kristina Cottone

AT&T Mobility, LLC will be compliant when the remediation recommended in Section 5.2 or other appropriate remediation is implemented.

Sitesafe logo is a registered trademark of Site Safe, LLC. All rights reserved.

AT&T Proprietary (Internal use only). Not for use or disclosure outside the AT&T companies, except under written agreement. ©2019 AT&T Intellectual property. All rights reserved.

Table of Contents

1 GENERAL SITE SUMMARY 3
1.1 REPORT SUMMARY 3
1.2 FALL ARREST ANCHOR POINT SUMMARY 3
1.3 SIGNAGE SUMMARY 4
2 SCALE MAPS OF SITE 5
3 ANTENNA INVENTORY 7
4 EMISSION PREDICTIONS 9
5 SITE COMPLIANCE 12
5.1 SITE COMPLIANCE STATEMENT 12
5.2 ACTIONS FOR SITE COMPLIANCE 12
6 REVIEWER CERTIFICATION 13
APPENDIX A – STATEMENT OF LIMITING CONDITIONS 14
APPENDIX B – REGULATORY BACKGROUND INFORMATION 15
FCC RULES AND REGULATIONS 15
OSHA STATEMENT 16
APPENDIX C – SAFETY PLAN AND PROCEDURES 17
APPENDIX D – RF EMISSIONS 18
APPENDIX E – ASSUMPTIONS AND DEFINITIONS 19
GENERAL MODEL ASSUMPTIONS 19
USE OF GENERIC ANTENNAS 19
APPENDIX F – DEFINITIONS 20
APPENDIX G – REFERENCES 22

AT&T Proprietary (Internal use only). Not for use or disclosure outside the AT&T companies, except under written agreement. ©2019 AT&T Intellectual property. All rights reserved.

1 General Site Summary

1.1 Report Summary

AT&T Mobility, LLC	Summary
Max Cumulative Simulated RFE Level on the Ground	<1% General Public Limit
Max Cumulative Simulated RFE Level on the Building Level	<1% General Public Limit
Max Cumulative Simulated RFE Level on the Ground	<1% General Public Limit
Compliant per FCC Rules and Regulations?	Will Be Compliant
Compliant per AT&T Mobility, LLC's Policy?	No

The following documents were provided by the client and were utilized to create this report:

RFDS: NEW-ENGLAND_CONNECTICUT_CTL01065_2021-LTE-Next-Carrier_LTE_MM093Q_2051A0V86J_10035007_65054_03-09-2020_Final-Approved_v1.00

CD's: 10035007_AE201_200823_CTL01065_REV1

RF Powers Used: Max RRH Powers

1.2 Fall Arrest Anchor Point Summary

Fall Arrest Anchor & Parapet Info	Parapet Available (Y/N)	Parapet Height (inches)	Fall Arrest Anchor Available (Y/N)
Roof Safety Info	N	N/A	N

AT&T Proprietary (Internal use only). Not for use or disclosure outside the AT&T companies, except under written agreement. ©2019 AT&T Intellectual property. All rights reserved.

1.3 Signage Summary

a. Pre-Site Visit AT&T Signage (Existing Signage)

AT&T Signage Locations		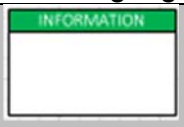							
	Information 1	Information 2	Notice	Notice 2	Caution	Caution 2	Warning	Warning 2	Barriers
Tower Base									
Alpha									
Beta									
Gamma									
Delta									
Epsilon									

b. Proposed AT&T Signage

AT&T Signage Locations		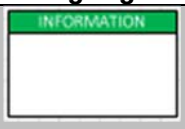							
	Information 1	Information 2	Notice	Notice 2	Caution	Caution 2	Warning	Warning 2	Barriers
Tower Base						**1**			
Alpha									
Beta									
Gamma									
Delta									
Epsilon									

Note: 1 Caution 2B required at the tower access

AT&T Proprietary (Internal use only). Not for use or disclosure outside the AT&T companies, except under written agreement. ©2019 AT&T Intellectual property. All rights reserved.

2 Scale Maps of Site

The following diagrams are included:

- Site Scale Map
- RF Exposure Diagram
- RF Exposure Diagram – Elevation View

AT&T Proprietary (Internal use only). Not for use or disclosure outside the AT&T companies, except under written agreement. ©2019 AT&T Intellectual property. All rights reserved.

Site Scale Map For: LEBANON

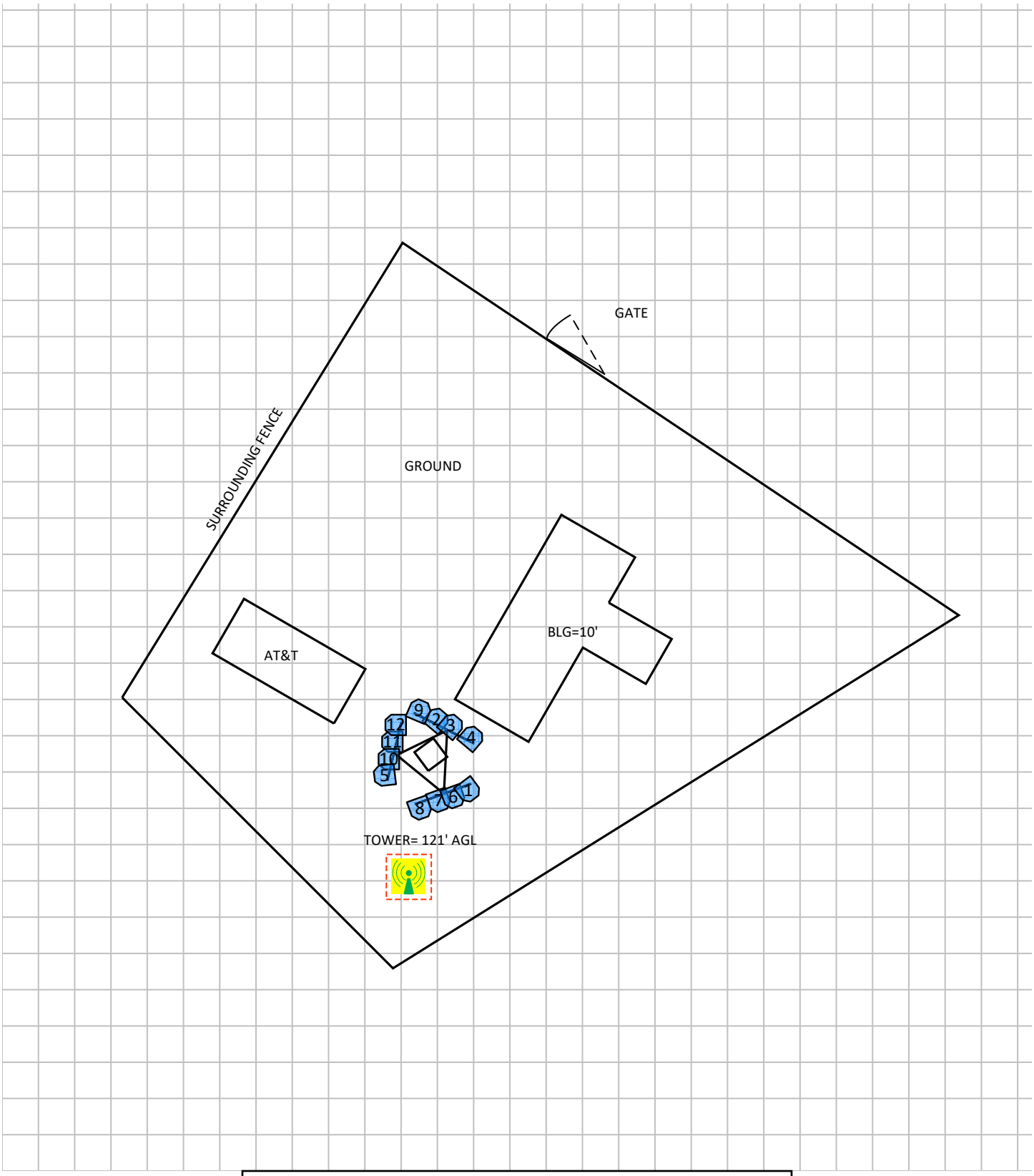

(Feet)

0 14.2 28.4

www.sitesafe.com
10/26/2020 4:15:42 PM

Carrier Identification

AT&T MOBILITY LLC | VERIZON WIRELESS | T-MOBILE | SPRINT | UNKNOWN CARRIER

Sign Legend

Notice | Notice 2 | Caution | Caution 2 | Warning | Warning 2 | Info | Info 2 | RF Emissions Diagram | Locked Ladder

Existing Barrier | **Proposed Barrier/Sign** | **Remove Sign** X

3 Antenna Inventory

The following antenna inventory was obtained by the customer and was utilized to create the site model diagrams:

Ant ID	Operator	Antenna Make & Model	Type	TX Freq (MHz)	Technology	Az (Deg)	Hor BW (Deg)	Ant Len (ft)	Power	Power Type	Power Unit	Misc Loss	TX Count	Total ERP (Watts)	Ant Gain (dBd)	Z	MDT	EDT
1	AT&T MOBILITY LLC	Powerwave 7770	Panel	850	UMTS	143	82.0	4.6	40	TPO	Watt	0	1	566.3	11.51	121.7'	2°	0°
2	AT&T MOBILITY LLC	CCI Antennas HPA-65R-BUU-H8	Panel	2300	LTE	40	63.3	7.7	100	TPO	Watt	0	1	3357.4	15.26	120.2'	0°	0°
3	AT&T MOBILITY LLC (Proposed)	CCI Antennas TPA65R-BU8D	Panel	2110	LTE	40	66.0	8	80	TPO	Watt	0	1	3304.4	16.16	120'	0°	7°
3	AT&T MOBILITY LLC (Proposed)	CCI Antennas TPA65R-BU8D	Panel	763	LTE	40	73.0	8	160	TPO	Watt	0	1	3549.1	13.46	120'	0°	8°
3	AT&T MOBILITY LLC (Proposed)	CCI Antennas TPA65R-BU8D	Panel	1900	LTE	40	66.0	8	80	TPO	Watt	0	1	3155.7	15.96	120'	0°	7°
3	AT&T MOBILITY LLC (Proposed)	CCI Antennas TPA65R-BU8D	Panel	2160	LTE	40	66.0	8	80	TPO	Watt	0	1	3304.4	16.16	120'	0°	7°
3	AT&T MOBILITY LLC (Proposed)	CCI Antennas TPA65R-BU8D	Panel	1900	LTE	40	66.0	8	160	TPO	Watt	0	1	6311.3	15.96	120'	0°	7°
4	AT&T MOBILITY LLC (Proposed)	Cci DMP65R-BU8D	Panel	737	LTE	40	70.6	8	160	TPO	Watt	0	1	2692.3	12.26	120'	0°	8°
4	AT&T MOBILITY LLC (Proposed)	Cci DMP65R-BU8D	Panel	850	LTE	40	71.4	8	80	TPO	Watt	0	1	1442.4	12.56	120'	0°	8°
4	AT&T MOBILITY LLC (Proposed)	Cci DMP65R-BU8D	Panel	850	LTE	40	71.4	8	80	TPO	Watt	0	1	1442.4	12.56	120'	0°	8°
4	AT&T MOBILITY LLC (Proposed)	Cci DMP65R-BU8D	Panel	1900	LTE	40	67.0	8	80	TPO	Watt	0	1	2084.9	14.16	120'	0°	7°
5	AT&T MOBILITY LLC	Powerwave 7770	Panel	850	UMTS	263	82.0	4.6	40	TPO	Watt	0	1	566.3	11.51	121.7'	1°	0°
6	AT&T MOBILITY LLC	CCI Antennas HPA-65R-BUU-H8	Panel	2300	LTE	160	63.3	7.7	100	TPO	Watt	0	1	3357.4	15.26	120.2'	0°	3°
7	AT&T MOBILITY LLC (Proposed)	CCI Antennas TPA65R-BU8D	Panel	2110	LTE	160	66.0	8	80	TPO	Watt	0	1	3304.4	16.16	120'	0°	3°
7	AT&T MOBILITY LLC (Proposed)	CCI Antennas TPA65R-BU8D	Panel	1900	LTE	160	66.0	8	80	TPO	Watt	0	1	3155.7	15.96	120'	0°	3°
7	AT&T MOBILITY LLC (Proposed)	CCI Antennas TPA65R-BU8D	Panel	763	LTE	160	73.0	8	160	TPO	Watt	0	1	3549.1	13.46	120'	0°	2°
7	AT&T MOBILITY LLC (Proposed)	CCI Antennas TPA65R-BU8D	Panel	2160	LTE	160	66.0	8	80	TPO	Watt	0	1	3304.4	16.16	120'	0°	3°
7	AT&T MOBILITY LLC (Proposed)	CCI Antennas TPA65R-BU8D	Panel	1900	LTE	160	66.0	8	160	TPO	Watt	0	1	6311.3	15.96	120'	0°	3°
8	AT&T MOBILITY LLC (Proposed)	Cci DMP65R-BU8D	Panel	737	LTE	160	70.6	8	160	TPO	Watt	0	1	2692.3	12.26	120'	0°	0°
8	AT&T MOBILITY LLC (Proposed)	Cci DMP65R-BU8D	Panel	850	LTE	160	71.4	8	80	TPO	Watt	0	1	1442.4	12.56	120'	0°	2°
8	AT&T MOBILITY LLC (Proposed)	Cci DMP65R-BU8D	Panel	850	LTE	160	71.4	8	80	TPO	Watt	0	1	1442.4	12.56	120'	0°	2°
8	AT&T MOBILITY LLC (Proposed)	Cci DMP65R-BU8D	Panel	1900	LTE	160	67.0	8	80	TPO	Watt	0	1	2084.9	14.16	120'	0°	3°
9	AT&T MOBILITY LLC	Powerwave 7770	Panel	850	UMTS	23	82.0	4.6	40	TPO	Watt	0	1	566.3	11.51	121.7'	1°	0°
10	AT&T MOBILITY LLC	CCI Antennas HPA-65R-BUU-H8	Panel	2300	LTE	270	63.3	7.7	100	TPO	Watt	0	1	3357.4	15.26	120.2'	1°	7°
11	AT&T MOBILITY LLC (Proposed)	CCI Antennas TPA65R-BU8D	Panel	763	LTE	270	73.0	8	160	TPO	Watt	0	1	3549.1	13.46	120'	0°	2°
11	AT&T MOBILITY LLC (Proposed)	CCI Antennas TPA65R-BU8D	Panel	2110	LTE	270	66.0	8	80	TPO	Watt	0	1	3304.4	16.16	120'	0°	2°
11	AT&T MOBILITY LLC (Proposed)	CCI Antennas TPA65R-BU8D	Panel	1900	LTE	270	66.0	8	80	TPO	Watt	0	1	3155.7	15.96	120'	0°	2°
11	AT&T MOBILITY LLC (Proposed)	CCI Antennas TPA65R-BU8D	Panel	2160	LTE	270	66.0	8	80	TPO	Watt	0	1	3304.4	16.16	120'	0°	2°
11	AT&T MOBILITY LLC (Proposed)	CCI Antennas TPA65R-BU8D	Panel	1900	LTE	270	66.0	8	160	TPO	Watt	0	1	6311.3	15.96	120'	0°	2°
12	AT&T MOBILITY LLC (Proposed)	Cci DMP65R-BU8D	Panel	737	LTE	270	70.6	8	160	TPO	Watt	0	1	2692.3	12.26	120'	0°	0°
12	AT&T MOBILITY LLC (Proposed)	Cci DMP65R-BU8D	Panel	850	LTE	270	71.4	8	80	TPO	Watt	0	1	1442.4	12.56	120'	0°	2°
12	AT&T MOBILITY LLC (Proposed)	Cci DMP65R-BU8D	Panel	850	LTE	270	71.4	8	80	TPO	Watt	0	1	1442.4	12.56	120'	0°	2°

AT&T Proprietary (Internal use only). Not for use or disclosure outside the AT&T companies, except under written agreement. ©2019 AT&T Intellectual property. All rights reserved.

Ant ID	Operator	Antenna Make & Model	Type	TX Freq (MHz)	Technology	Az (Deg)	Hor BW (Deg)	Ant Len (ft)	Power	Power Type	Power Unit	Misc Loss	TX Count	Total ERP (Watts)	Ant Gain (dBd)	Z	MDT	EDT
12	AT&T MOBILITY LLC (Proposed)	Cci DMP65R-BU8D	Panel	1900	LTE	270	67.0	8	80	TPO	Watt	0	1	2084.9	14.16	120'	0°	2°

Note: The Z reference indicates the bottom of the antenna height above the main site level unless otherwise indicated. Effective Radiated Power (ERP) is provided by the operator or based on Sitesafe experience. The values used in the modeling may be greater than are currently deployed. For other operators at this site the use of "Generic" as an antenna model or "Unknown" for a wireless operator means the information with regard to operator, their FCC license and/or antenna information was not available nor could it be secured while on site. Other operator's equipment, antenna models and powers used for modeling are based on obtained information or Sitesafe experience.

AT&T Proprietary (Internal use only). Not for use or disclosure outside the AT&T companies, except under written agreement. ©2019 AT&T Intellectual property. All rights reserved.

4 Emission Predictions

In the RF Exposure Simulations below all heights are reflected with respect to main site level. In most rooftop cases this is the height of the main rooftop and in other cases this can be ground level. Each different height area, rooftop, or platform level is labeled with its height relative to the main site level. Emissions are calculated appropriately based on the relative height and location of that area to all antennas. The total analyzed elevations in the below RF Exposure Simulations are listed below.

- GROUND LEVEL = 0'
- BUILDING = 10'
- SELF - SUPPORT = 121'

The Antenna Inventory heights are referenced to the same level.

AT&T Proprietary (Internal use only). Not for use or disclosure outside the AT&T companies, except under written agreement. ©2019 AT&T Intellectual property. All rights reserved.

RF Exposure Simulation For: LEBANON
Composite View

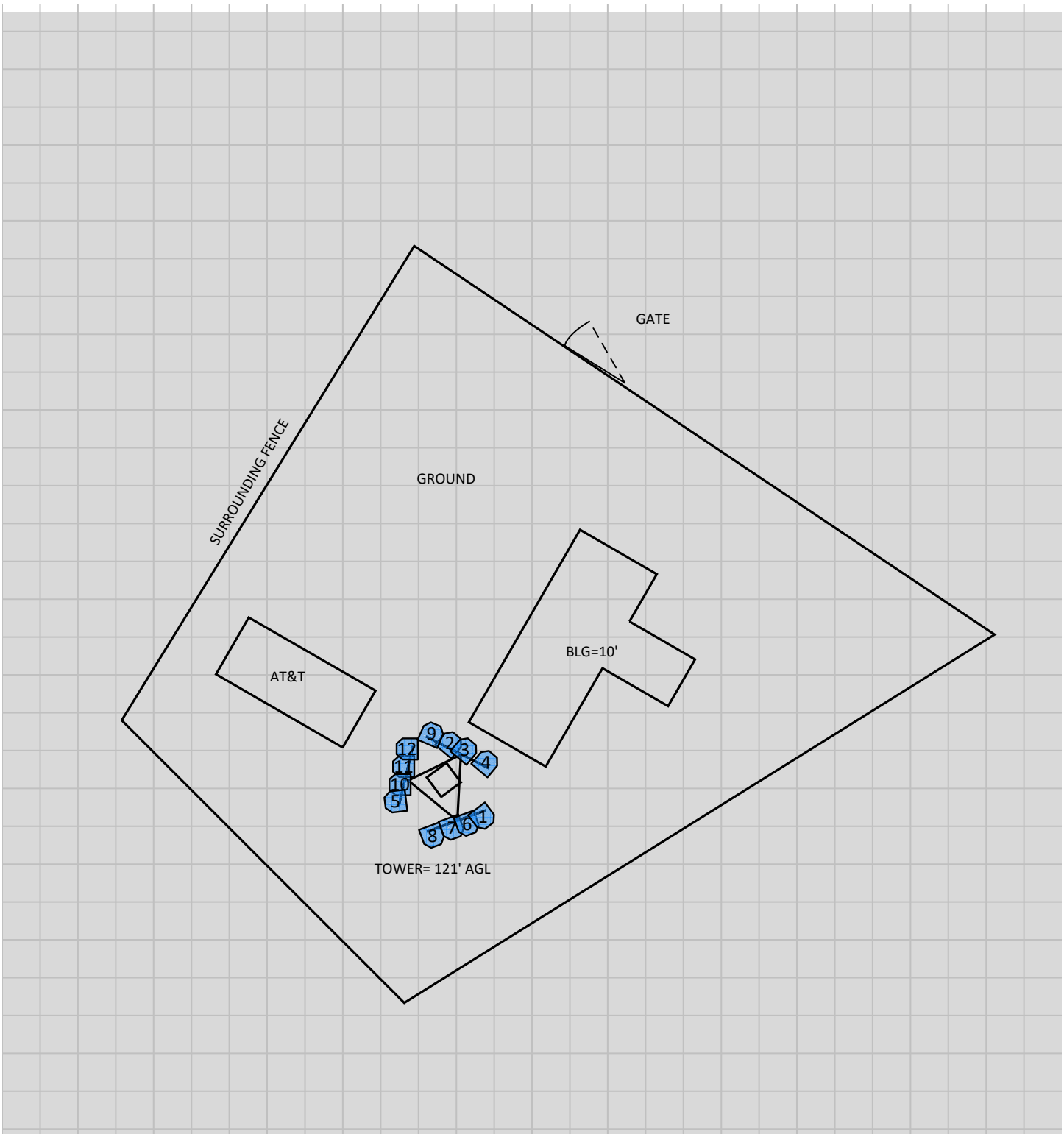

% of FCC Public Exposure Limit
Spatially Averaged

% of FCC Public Exposure Limit

0-5	5-100	100-500	500-5000	5000+

Carrier Identification

AT&T MOBILITY LLC · VERIZON WIRELESS · T-MOBILE · SPRINT · UNKNOWN CARRIER

Existing Barrier · **Proposed Barrier/Sign** · **Remove Sign** X · Locked Ladder

(Feet)
0 14.9 29.8

www.sitesafe.com
10/26/2020 4:15:03 PM

Sitesafe OET-65 Model
Near Field Boundary:
1.5 * Aperture
Reflection Factor: 1
Spatially Averaged

RF Exposure Simulation For: LEBANON
Elevation View

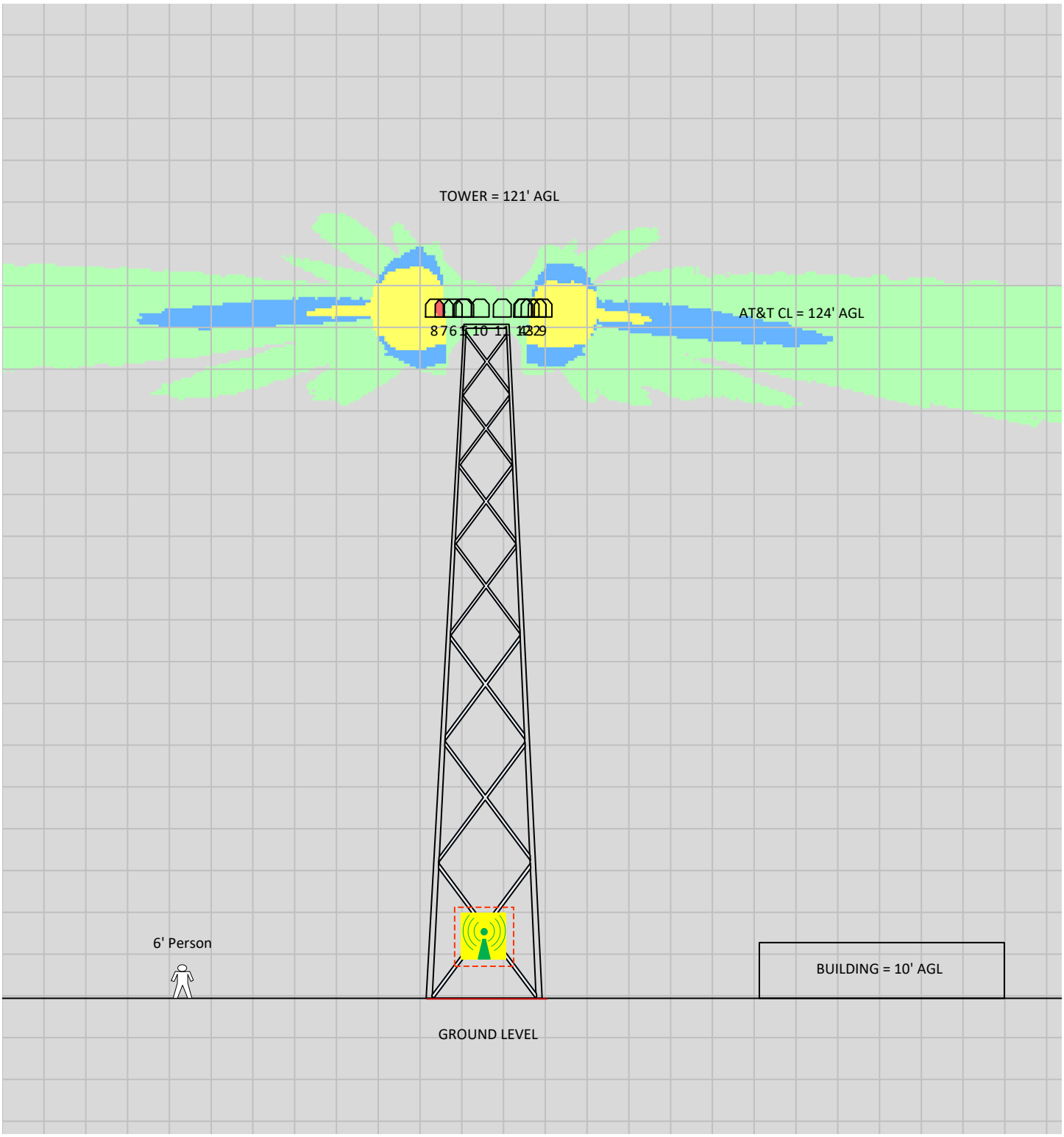

% of FCC Public Exposure Limit
Single Level (0)

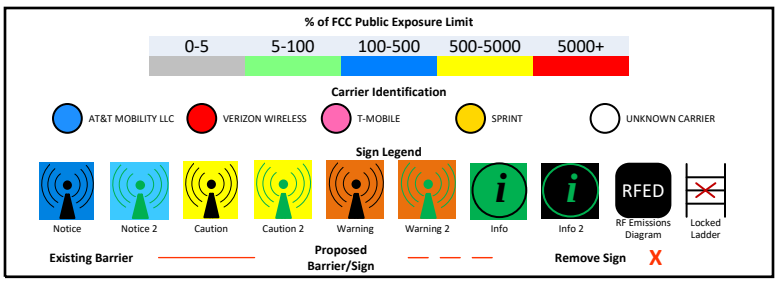

(Feet)
0 13.5 26.9

www.sitesafe.com
10/26/2020 4:19:40 PM

Sitesafe OET-65 Model
Near Field Boundary:
1.5 * Aperture
Reflection Factor: 1
Single Level (0)

5 Site Compliance

5.1 Site Compliance Statement

Upon evaluation of the cumulative RF emission levels from all operators at this site, RF hazard signage and antenna locations, Sitesafe has determined that:

AT&T Mobility, LLC will be compliant when the remediation recommended in Section 5.2 or other appropriate remediation is implemented.

The compliance determination is based on General Public RFE levels derived from theoretical modeling, RF signage placement, and the level of restricted access to the antennas at the site.

Modeling is used for determining compliance and the percentage of MPE contribution.

5.2 Actions for Site Compliance

Based on FCC regulations, common industry practice, and our understanding of AT&T Mobility, LLC RF Safety Policy requirements, this section provides a statement of recommendations for site compliance. Recommendations have been proposed based on our understanding of existing access restrictions, signage, and an analysis of predicted RFE levels.

AT&T Mobility, LLC will be made compliant if the following changes are implemented:

Tower Base Location

(1) Caution 2B sign(s) required at the base of the tower structure.

Notes:

- Areas where the predicted RF emission level is above 5000% General Public MPE level are located within the near field of the antennas and are restricted by the antenna mounts. Thus, Caution 2 signs are sufficient.
- Since the red area only extends a few feet from the front of the antennas, AT&T policy states that Caution 2 signs are adequate.

AT&T Proprietary (Internal use only). Not for use or disclosure outside the AT&T companies, except under written agreement. ©2019 AT&T Intellectual property. All rights reserved.

6 Reviewer Certification

The reviewer whose signature appears below hereby certifies and affirms:

That I am an employee of Site Safe, LLC, in Vienna, Virginia, at which place the staff and I provide RF compliance services to clients in the wireless communications industry; and

That I am thoroughly familiar with the Rules and Regulations of the Federal Communications Commission (FCC) as well as the regulations of the Occupational Safety and Health Administration (OSHA), both in general and specifically as they apply to the FCC Guidelines for Human Exposure to Radio Frequency Electromagnetic Fields; and

That I have thoroughly reviewed this Site Compliance Report and believe it to be true and accurate to the best of my knowledge as assembled by and attested to by Sophie Thein.

October 26, 2020

AT&T Proprietary (Internal use only). Not for use or disclosure outside the AT&T companies, except under written agreement. ©2019 AT&T Intellectual property. All rights reserved.

Appendix A – Statement of Limiting Conditions

Sitesafe has provided computer generated model(s) in this Site Compliance Report to show approximate dimensions of the site, and the model is included to assist the reader of the compliance report to visualize the site area, and to provide supporting documentation for Sitesafe's recommendations.

Sitesafe may note in the Site Compliance Report any adverse physical conditions, such as needed repairs, that Sitesafe became aware of during the normal research involved in creating this report. Sitesafe will not be responsible for any such conditions that do exist or for any engineering or testing that might be required to discover whether such conditions exist. Because Sitesafe is not an expert in the field of mechanical engineering or building maintenance, the Site Compliance Report must not be considered a structural or physical engineering report.

Sitesafe obtained information used in this Site Compliance Report from sources that Sitesafe considers reliable and believes them to be true and correct. Sitesafe does not assume any responsibility for the accuracy of such items that were furnished by other parties. When conflicts in information occur between data collected by Sitesafe provided by a second party and data collected by Sitesafe, the data will be used.

AT&T Proprietary (Internal use only). Not for use or disclosure outside the AT&T companies, except under written agreement. ©2019 AT&T Intellectual property. All rights reserved.

Appendix B – Regulatory Background Information

FCC Rules and Regulations

In 1996, the Federal Communications Commission (FCC) adopted regulations for the evaluating of the effects of RF emissions in 47 CFR § 1.1307 and 1.1310. The guideline from the FCC Office of Engineering and Technology is Bulletin 65 ("OET Bulletin 65"), *Evaluating Compliance with FCC Guidelines for Human Exposure to Radio Frequency Electromagnetic Fields*, Edition 97-01, published August 1997. Since 1996 the FCC periodically reviews these rules and regulations as per their congressional mandate.

FCC regulations define two separate tiers of exposure limits: Occupational or "Controlled environment" and General Public or "Uncontrolled environment". The General Public limits are generally five times more conservative or restrictive than the Occupational limit. These limits apply to *accessible* areas where workers or the general public may be exposed to Radio Frequency (RF) electromagnetic fields.

Occupational or Controlled limits apply in situations in which persons are exposed as a consequence of their employment and where those persons exposed have been made fully aware of the potential for exposure and can exercise control over their exposure.

An area is considered a Controlled environment when access is limited to these aware personnel. Typical criteria are restricted access (i.e. locked or alarmed doors, barriers, etc.) to the areas where antennas are located coupled with proper RF warning signage. A site with Controlled environments is evaluated with Occupational limits.

All other areas are considered Uncontrolled environments. If a site has no access controls or no RF warning signage it is evaluated with General Public limits.

The theoretical modeling of the RF electromagnetic fields has been performed in accordance with OET Bulletin 65. The Maximum Permissible Exposure (MPE) limits utilized in this analysis are outlined in the following diagram:

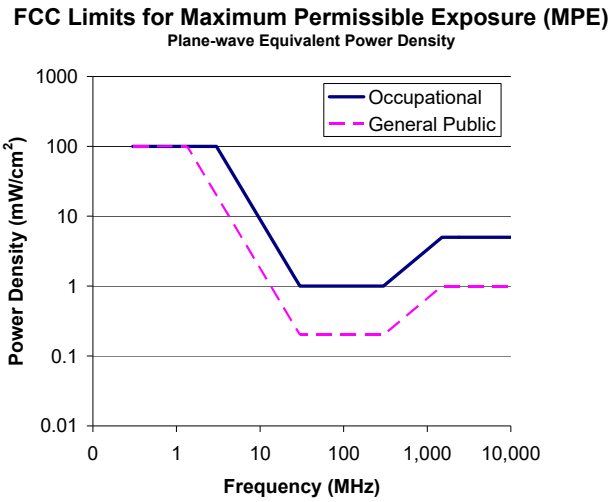

AT&T Proprietary (Internal use only). Not for use or disclosure outside the AT&T companies, except under written agreement. ©2019 AT&T Intellectual property. All rights reserved.

Limits for Occupational/Controlled Exposure (MPE)

Frequency Range (MHz)	Electric Field Strength (E) (V/m)	Magnetic Field Strength (H) (A/m)	Power Density (S) (mW/cm^2)	Averaging Time $\|E\|^2$, $\|H\|^2$ or S (minutes)
0.3-3.0	614	1.63	(100)*	6
3.0-30	1842/f	4.89/f	($900/f^2$)*	6
30-300	61.4	0.163	1.0	6
300-1500	--	--	f/300	6
1500-100,000	--	--	5	6

Limits for General Population/Uncontrolled Exposure (MPE)

Frequency Range (MHz)	Electric Field Strength (E) (V/m)	Magnetic Field Strength (H) (A/m)	Power Density (S) (mW/cm^2)	Averaging Time $\|E\|^2$, $\|H\|^2$ or S (minutes)
0.3-1.34	614	1.63	(100)*	30
1.34-30	824/f	2.19/f	($180/f^2$)*	30
30-300	27.5	0.073	0.2	30
300-1500	--	--	f/1500	30
1500-100,000	--	--	1.0	30

f = frequency in MHz *Plane-wave equivalent power density

OSHA Statement

The General Duty clause of the OSHA Act (Section 5) outlines the occupational safety and health responsibilities of the employer and employee. The General Duty clause in Section 5 states:

(a) Each employer –

(1) shall furnish to each of his employees employment and a place of employment which are free from recognized hazards that are causing or are likely to cause death or serious physical harm to his employees;
(2) shall comply with occupational safety and health standards promulgated under this Act.

(b) Each employee shall comply with occupational safety and health standards and all rules, regulations, and orders issued pursuant to this Act which are applicable to his own actions and conduct.

OSHA has defined Radiofrequency and Microwave Radiation safety standards for workers who may enter hazardous RF areas. Regulation Standards 29 CFR § 1910.147 identify a generic Lockout/Tagout procedure aimed to control the unexpected energization or startup of machines when maintenance or service is being performed.

AT&T Proprietary (Internal use only). Not for use or disclosure outside the AT&T companies, except under written agreement. ©2019 AT&T Intellectual property. All rights reserved.

Appendix C – Safety Plan and Procedures

The following items are general safety recommendations that should be administered on a site by site basis as needed by the carrier.

General Maintenance Work: Any maintenance personnel required to work immediately in front of antennas and / or in areas indicated as above 100% of the Occupational MPE limits should coordinate with the wireless operators to disable transmitters during their work activities.

Training and Qualification Verification: All personnel accessing areas indicated as exceeding the General Population MPE limits should have a basic understanding of EME awareness and RF Safety procedures when working around transmitting antennas. Awareness training increases a worker's understanding to potential RF exposure scenarios. Awareness can be achieved in a number of ways (e.g. videos, formal classroom lecture or internet-based courses).

Physical Access Control: Access restrictions to transmitting antennas locations is the primary element in a site safety plan. Examples of access restrictions are as follows:

- Locked door or gate
- Alarmed door
- Locked ladder access
- Restrictive Barrier at antenna (e.g. Chain link with posted RF Sign)

RF Signage: Everyone should obey all posted signs at all times. RF signs play an important role in properly warning a worker prior to entering into a potential RF Exposure area.

Assume all antennas are active: Due to the nature of telecommunications transmissions, an antenna transmits intermittently. Always assume an antenna is transmitting. Never stop in front of an antenna. If you have to pass by an antenna, move through as quickly and safely as possible thereby reducing any exposure to a minimum.

Maintain a 3 foot clearance from all antennas: There is a direct correlation between the strength of an EME field and the distance from the transmitting antenna. The further away from an antenna, the lower the corresponding EME field is.

Site RF Emissions Diagram: Section 4 of this report contains an RF Diagram that outlines various theoretical Maximum Permissible Exposure (MPE) areas at the site. The modeling is a worst-case scenario assuming a duty cycle of 100% for each transmitting antenna at full power. This analysis is based on one of two access control criteria: General Public criteria means the access to the site is uncontrolled and anyone can gain access. Occupational criteria means the access is restricted and only properly trained individuals can gain access to the antenna locations.

AT&T Proprietary (Internal use only). Not for use or disclosure outside the AT&T companies, except under written agreement. ©2019 AT&T Intellectual property. All rights reserved.

Appendix D – RF Emissions

The RF Emissions Simulation(s) in this report display theoretical spatially averaged percentage of the Maximum Permissible Exposure for all systems at the site unless otherwise noted. These diagrams use modeling as prescribed in OET Bulletin 65 and assumptions detailed in Appendix E.

The key at the bottom of each RF Emissions Simulation indicates percentages displayed referenced to FCC General Public Maximum Permissible Exposure (MPE) limits. Color coding on the diagram is as follows:

- Areas indicated as Gray are predicted to be below 5% of the MPE limits. Gray represents areas more than 20 times below the most conservative exposure limit. **Gray areas are accessible to anyone**.
- Green represents areas are predicted to be between 5% and 100% of the MPE limits. **Green areas are accessible to anyone.**
- Blue represents areas predicted to exceed the General Public MPE limits but are less than Occupational limits. **Blue areas should be accessible only to RF trained workers**.
- Yellow represents areas predicted to exceed Occupational MPE limits. **Yellow areas should be accessible only to RF trained workers able to assess current exposure levels.**
- Red represents areas predicted to have exposure more than 10 times the Occupational MPE limits. **Red indicates that the RF levels must be reduced prior to access.** An RF Safety Plan is required which outlines how to reduce the RF energy in these areas prior to access.

If trained occupational personnel require access to areas that are delineated as above 100% of the limit, Sitesafe recommends that they utilize the proper personal protection equipment (RF monitors), coordinate with the carriers to reduce or shutdown power, or make real-time power density measurements with the appropriate power density meter to determine real-time MPE levels. This will allow the personnel to ensure that their work area is within exposure limits.

AT&T Proprietary (Internal use only). Not for use or disclosure outside the AT&T companies, except under written agreement. ©2019 AT&T Intellectual property. All rights reserved.

Appendix E – Assumptions and Definitions

General Model Assumptions

In this site compliance report, it is assumed that all antennas are operating at **full power at all times**. Software modeling was performed for all transmitting antennas located on the site. Sitesafe has further assumed a 100% duty cycle and maximum radiated power.

The modeling is based on recommendations from the FCC's OET-65 bulletin with the following variances per AT&T guidance. Reflection has not been considered in the modeling, i.e. the reflection factor is 1.0. The near / far field boundary has been set to 1.5 times the aperture height of the antenna and modeling beyond that point is the lesser of the near field cylindrical model and the far field model taking into account the gain of the antenna.

The site has been modeled with these assumptions to show the maximum RF energy density. Areas modeled with exposure greater than 100% of the General Public MPE level may not actually occur but are shown as a prediction that could be realized. Sitesafe believes these areas to be safe for entry by occupationally trained personnel utilizing appropriate personal protective equipment (in most cases, a personal monitor).

Use of Generic Antennas

For the purposes of this report, the use of "Generic" as an antenna model, or "Unknown" for an operator means the information about a carrier, their FCC license and/or antenna information was not provided and could not be obtained while on site. In the event of unknown information, Sitesafe will use our industry specific knowledge of equipment, antenna models, and transmit power to model the site. If more specific information can be obtained for the unknown measurement criteria, Sitesafe recommends remodeling of the site utilizing the more complete and accurate data. Information about similar facilities is used when the service is identified and associated with a particular antenna. If no information is available regarding the transmitting service associated with an unidentified antenna, using the antenna manufacturer's published data regarding the antenna's physical characteristics makes more conservative assumptions.

Where the frequency is unknown, Sitesafe uses the closest frequency in the antenna's range that corresponds to the highest Maximum Permissible Exposure (MPE), resulting in a conservative analysis.

AT&T Proprietary (Internal use only). Not for use or disclosure outside the AT&T companies, except under written agreement. ©2019 AT&T Intellectual property. All rights reserved.

Appendix F – Definitions

5% Rule – The rules adopted by the FCC specify that, in general, at multiple transmitter sites actions necessary to bring the area into compliance with the guidelines are the shared responsibility of all licensees whose transmitters produce field strengths or power density levels at the area in question in excess of 5% of the exposure limits. In other words, any wireless operator that contributes 5% or greater of the MPE limit in an area that is identified to be greater than 100% of the MPE limit is responsible for taking corrective actions to bring the site into compliance.

Compliance – The determination of whether a site complies with FCC standards with regards to Human Exposure to Radio Frequency Electromagnetic Fields from transmitting antennas.

Decibel (dB) – A unit for measuring power or strength of a signal.

Duty Cycle – The percent of pulse duration to the pulse period of a periodic pulse train. Also, may be a measure of the temporal transmission characteristic of an intermittently transmitting RF source such as a paging antenna by dividing average transmission duration by the average period for transmission. A duty cycle of 100% corresponds to continuous operation.

Effective (or Equivalent) Isotropic Radiated Power (EIRP) – The product of the power supplied to the antenna and the antenna gain in a given direction relative to an isotropic antenna.

Effective Radiated Power (ERP) – The product of the power supplied to the antenna and the antenna gain in a given direction relative to a half-wave dipole antenna.

Gain (of an antenna) – The ratio of the maximum power in a given direction to the maximum power in the same direction from an isotropic radiator. Gain is a measure of the relative efficiency of a directional antenna as compared to an omnidirectional antenna.

General Population/Uncontrolled Environment – Defined by the FCC as an area where RF exposure may occur to persons who are **unaware** of the potential for exposure and who have no control over their exposure. General Population is also referenced as General Public.

Generic Antenna – For the purposes of this report, the use of "Generic" as an antenna model means the antenna information was not provided and could not be obtained while on site. In the event of unknown information, Sitesafe will use its industry specific knowledge of antenna models to select a worst-case scenario antenna to model the site.

Isotropic Antenna – An antenna that is completely non-directional. In other words, an antenna that radiates energy equally in all directions.

Maximum Measurement – This measurement represents the single largest measurement recorded when performing a spatial average measurement.

Maximum Permissible Exposure (MPE) – The rms and peak electric and magnetic field strength, their squares, or the plane-wave equivalent power densities associated with these fields to which a person may be exposed without harmful effect and with acceptable safety factor.

AT&T Proprietary (Internal use only). Not for use or disclosure outside the AT&T companies, except under written agreement. ©2019 AT&T Intellectual property. All rights reserved.

Occupational/Controlled Environment – Defined by the FCC as an area where RF exposure may occur to persons who are **aware** of the potential for exposure as a condition of employment or specific activity and can exercise control over their exposure.

OET Bulletin 65 – Technical guideline developed by the FCC's Office of Engineering and Technology to determine the impact of RF exposure on humans. The guideline was published in August 1997.

OSHA (Occupational Safety and Health Administration) – Under the Occupational Safety and Health Act of 1970, employers are responsible for providing a safe and healthy workplace for their employees. OSHA's role is to promote the safety and health of America's working men and women by setting and enforcing standards; providing training, outreach and education; establishing partnerships; and encouraging continual process improvement in workplace safety and health. For more information, visit www.osha.gov.

Radio Frequency Exposure or Electromagnetic Fields – Electromagnetic waves that are propagated from antennas through space.

Spatial Average Measurement – A technique used to average a minimum of ten (10) measurements taken in a ten (10) second interval from zero (0) to six (6) feet. This measurement is intended to model the average energy a 6-foot tall human body will absorb while present in an electromagnetic field of energy.

Transmitter Power Output (TPO) – The radio frequency output power of a transmitter's final radio frequency stage as measured at the output terminal while connected to a load.

AT&T Proprietary (Internal use only). Not for use or disclosure outside the AT&T companies, except under written agreement. ©2019 AT&T Intellectual property. All rights reserved.

Appendix G – References

The following references can be followed for further information about RF Health and Safety.

Site Safe, LLC
http://www.sitesafe.com
FCC Radio Frequency Safety
http://www.fcc.gov/encyclopedia/radio-frequency-safety
National Council on Radiation Protection and Measurements (NCRP)
http://www.ncrponline.org
Institute of Electrical and Electronics Engineers, Inc., (IEEE)
http://www.ieee.org
American National Standards Institute (ANSI)
http://www.ansi.org
Environmental Protection Agency (EPA)
http://www.epa.gov/radtown/wireless-tech.html
National Institutes of Health (NIH)
http://www.niehs.nih.gov/health/topics/agents/emf/
Occupational Safety and Health Agency (OSHA)
http://www.osha.gov/SLTC/radiofrequencyradiation/
International Commission on Non-Ionizing Radiation Protection (ICNIRP)
http://www.icnirp.org
World Health Organization (WHO)
http://www.who.int/peh-emf/en/
National Cancer Institute
http://www.cancer.gov/cancertopics/factsheet/Risk/cellphones
American Cancer Society (ACS)
http://www.cancer.org/docroot/PED/content/PED_1_3X_Cellular_Phone_Towers.asp?siteearea=PED
European Commission Scientific Committee on Emerging and Newly Identified Health Risks
http://ec.europa.eu/health/ph_risk/committees/04_scenihr/docs/scenihr_o_022.pdf
Fairfax County, Virginia Public School Survey
http://www.fcps.edu/fts/safety-security/RFEESurvey/
UK Health Protection Agency Advisory Group on Non-Ionizing Radiation
http://www.hpa.org.uk/webw/HPAweb&HPAwebStandard/HPAweb_C/1317133826368
Norwegian Institute of Public Health
http://www.fhi.no/dokumenter/545eea7147.pdf

AT&T Proprietary (Internal use only). Not for use or disclosure outside the AT&T companies, except under written agreement. ©2019 AT&T Intellectual property. All rights reserved.

Smartlink Group
85 Rangeway Road, Bldg. 3, Suite 102
Billerica, MA 01862
(781) 392-4040

GPD Engineering and Architecture
Professional Corporation
Chad Burton
520 South Main Street, Suite 2531
Akron, OH 44311
(614) 859-1623
cburton@gpdgroup.com

GPD# 2020723.21.65054.05
September 16, 2020

RIGOROUS STRUCTURAL ANALYSIS REPORT

AT&T DESIGNATION:	**USID #:**	**65054**
	Site FA #:	**10035007**
	Client #:	**CT1065**
	Site Name:	**Lebanon**
ANALYSIS CRITERIA:	**Codes:**	**TIA-222-G, 2015 IBC, & 2018 Connecticut State Building Code** **130 mph (ultimate 3-second gust) w/ 0" ice** **101 mph (nominal 3-second gust) w/ 0" ice** **50 mph (3-second gust) w/ 0.75" ice**
SITE DATA:		**244 Gates Road, Lebanon, CT 6249, New London County** **Latitude 41° 40' 58.56" N, Longitude 72° 12' 58.29" W** **Market: NEW ENGLAND** **121' Self-Support Tower**

Dear Kristina Cottone,

GPD is pleased to submit this Rigorous Structural Analysis Report to determine the structural integrity of the aforementioned tower. The purpose of the analysis is to determine the suitability of the tower with the existing and proposed loading configuration detailed in the analysis report.

Analysis Results

Tower Stress Level with Proposed Equipment:	93.3%	Pass
Foundation Ratio with Proposed Equipment:	91.8%	Pass

We at GPD appreciate the opportunity of providing our continuing professional services to you and Smartlink Group. If you have any questions or need further assistance on this or any other projects please do not hesitate to call.

Respectfully submitted,

Christopher J. Scheks, P.E.
Connecticut #: 0030026

9/16/2020

SUMMARY & RESULTS

The purpose of this analysis was to verify whether the existing structure is capable of carrying the proposed loading configuration as specified by AT&T Mobility and commissioned by Smartlink Group.

This analysis has been performed in accordance with the 2018 Connecticut State Building Code based upon an ultimate 3-second gust wind speed of 130 mph converted to a nominal 3-second gust wind speed of 101 mph per Section 1609.3 and Appendix N as required for use in the TIA-222-G Standard per Exception #5 of Section 1609.1.1. Exposure Category C with a maximum topographic factor, Kzt, of 1.242 and Risk Category II were used in this analysis.

Seismic loads were determined from spreadsheet calculations. It was concluded from these calculations that the wind loads control the maximum loading on the structure. The seismic loading case will not control.

The proposed coax shall be installed as shown in Appendices A & B for the analysis results to be valid.

TOWER SUMMARY AND RESULTS

Member	Capacity	Results
Legs	69.9%	Pass
Bracing	93.3%	Pass
Bolt Checks	71.5%	Pass
Anchor Rods	58.6%	Pass
Foundation	91.8%	Pass

RECOMMENDATIONS

The tower and its foundation(s) have sufficient capacity to carry the proposed loading configuration. No modifications are required at this time.

ANALYSIS METHOD

tnxTower (Version 8.0.5.0), a commercially available software program, was used to create a three-dimensional model of the tower and calculate primary member stresses for various load cases. Selected output from the analysis is included the report appendices. The following table details the information provided to complete this structural analysis. This analysis is solely based on this information.

DOCUMENTS PROVIDED

Document	Remarks	Source
RF Data Sheet	AT&T RFDS Name: CTL01065 v1.00, updated 3/18/2020	Smartlink Group
Construction Drawings	AT&T Site #: CTL01065 Rev. 1, dated 8/23/2020	Smartlink Group
Tower Design	Not Provided	N/A
Foundation Design	Not Provided	N/A
Geotechnical Report	GPD Project #: 2012832.03, dated 12/10/2012	AT&T
Previous Tower Analysis	GPD Project #: 2017723.21.65054.03, dated 4/20/2017	AT&T
Tower Mapping	GPD Project #: 2012832.03, dated 12/19/2012	AT&T
Foundation Mapping	GPD Project #: 2012832.03, dated 12/19/2012	AT&T

ASSUMPTIONS

This structural analysis is based on the theoretical capacity of the members and is not a condition assessment of the tower. This analysis is from information supplied, and therefore, its results are based on and are as accurate as that supplied data. GPD has made no independent determination, nor is it required to, of its accuracy. The following assumptions were made for this structural analysis.

1. The tower member sizes and shapes are considered accurate as supplied. The material grade is as per data supplied and/or as assumed and as stated in the materials section.
2. The appurtenance configuration is as supplied, determined from available photos, and/or as modeled in the analysis. It is assumed to be complete and accurate. All antennas, mounts, coax and waveguides are assumed to be properly installed and supported as per manufacturer requirements.
3. All mounts, if applicable, are considered adequate to support the loading. No actual analysis of the mount(s) is performed. This analysis is limited to analyzing the tower only.
4. The soil parameters are as per data supplied or as assumed and stated in the calculations.
5. Foundations are properly designed and constructed to resist the original design loads indicated in the documents provided.
6. The tower and structures have been properly maintained in accordance with TIA Standards and/or with manufacturer's specifications.
7. All welds and connections are assumed to develop at least the member capacity unless determined otherwise and explicitly stated in this report.
8. All prior structural modifications, if applicable, are assumed to be as per data supplied/available and to have been properly installed.
9. Loading interpreted from photos is accurate to ±5' AGL, antenna size accurate to ±3.3 sf, and coax equal to the number of existing antennas without reserve.
10. All existing and proposed loading has been taken from the available site photos as well as documents supplied to GPD at the time of generating this report. All such documents are listed in the Documents Provided Table and are assumed to be accurate. GPD is not responsible for loading scenarios outside those conveyed in the supplied documentation.

If any of these assumptions are not valid or have been made in error, this analysis may be affected, and GPD should be allowed to review any new information to determine its effect on the structural integrity of the tower.

DISCLAIMER OF WARRANTIES

GPD has not performed a site visit to the tower to verify the member sizes or antenna/coax loading. If the existing conditions are not as represented on the tower elevation contained in this report, we should be contacted immediately to evaluate the significance of the discrepancy. This is not a condition assessment of the tower or foundation. This report does not replace a full tower inspection. The tower and foundations are assumed to have been properly fabricated, erected, maintained, in good condition, twist free, and plumb.

The engineering services rendered by GPD in connection with this Rigorous Structural Analysis are limited to a computer analysis of the tower structure and theoretical capacity of its main structural members. No allowance was made for any damaged, bent, missing, loose, or rusted members (above and below ground). No allowance was made for loose bolts or cracked welds.

This analysis is limited to the designated maximum wind and seismic conditions per the governing tower standards and code. Wind forces resulting in tower vibrations near the structure's resonant frequencies were not considered in this analysis and are outside the scope of this analysis. Lateral loading from any dynamic response was not evaluated under a time-domain based fatigue analysis.

GPD does not analyze the fabrication of the structure (including welding). It is not possible to have all the very detailed information needed to perform a thorough analysis of every structural sub-component and connection of an existing tower. GPD provides a limited scope of service in that we cannot verify the adequacy of every weld, plate connection detail, etc. The purpose of this report is to assess the capability of adding appurtenances usually accompanied by transmission lines to the structure.

It is the owner's responsibility to determine the amount of ice accumulation in excess of the code specified amount, if any, that should be considered in the structural analysis.

The attached sketches are a schematic representation of the analyzed tower. If any material is fabricated from these sketches, the contractor shall be responsible for field verifying the existing conditions, proper fit, and clearance in the field. Any mentions of structural modifications are reasonable estimates and should not be used as a precise construction document. Precise modification drawings are obtainable from GPD, but are beyond the scope of this report.

Miscellaneous items such as antenna mounts, etc., have not been designed or detailed as a part of our work. We recommend that material of adequate size and strength be purchased from a reputable tower manufacturer.

Towers are designed to carry gravity, wind, and ice loads. All members, legs, diagonals, struts, and redundant members provide structural stability to the tower with little redundancy. Absence or removal of a member can trigger catastrophic failure unless a substitute is provided before any removal. Legs carry axial loads and derive their strength from shorter unbraced lengths by the presence of redundant members and their connection to the diagonals with bolts or welds. If the bolts or welds are removed without providing any substitute to the frame, the leg is subjected to a higher unbraced length that immediately reduces its load carrying capacity. If a diagonal is also removed in addition to the connection, the unbraced length of the leg is greatly increased, jeopardizing its load carrying capacity. Failure of one leg can result in a tower collapse because there is no redundancy. Redundant members and diagonals are critical to the stability of the tower.

GPD makes no warranties, expressed and/or implied, in connection with this report and disclaims any liability arising from material, fabrication, and erection of this tower. GPD will not be responsible whatsoever for, or on account of, consequential or incidental damages sustained by any person, firm, or organization as a result of any data or conclusions contained in this report. The maximum liability of GPD pursuant to this report will be limited to the total fee received for preparation of this report.

APPENDIX A

Tower Analysis Summary Form

Tower Analysis Summary Form

General Info

Site Name	Lebanon (CT1065)
Site Number	65054
FA Number	10035007
Date of Analysis	9/16/2020
Company Performing Analysis	GPD

The information contained in this summary report is not to be used independently from the PE stamped tower analysis.

Tower Info	Description	Date
Tower Type (G, SST, MP)	SST	
Tower Height (top of steel AGL)	121'	
Tower Manufacturer	n/a	
Tower Model	n/a	
Tower Design	n/a	
Foundation Design	n/a	
Geotechnical Report	GPD Project #: 2012832.03	12/10/2012
Previous Tower Analysis	GPD Project #: 2017723.21.65054.03	4/20/2017
Tower Mapping	GPD Project #: 2012832.03	12/19/2012
Foundation Mapping	GPD Project #: 2012832.03	12/19/2012

Design Parameters

Design Code Used	TIA-222-G, 2015 IBC, & 2018 Connecticut State Building Code
Location of Tower (County, State)	New London, CT
Wind Speed (mph)	101 (nominal 3-second gust)
Ice Thickness (in)	0.75
Risk Category (I, II, III)	II
Exposure Category (B, C, D)	C
Topographic Category (1 to 5)	5

Analysis Results (% Maximum Usage)

Existing/Reserved + Future + Proposed Condition	
Tower (%)	93.3%
Anchor Rods (%)	58.6%
Foundation (%)	91.8%
Foundation Adequate?	Yes

Steel Yield Strength (ksi)

Legs	50
Bracing	36
Bolts	A325N
Anchor Rods	36

Note: Steel strengths have been assumed based on previous experience with similar towers.

Existing / Reserved Loading

Antenna								Mount			Transmission Line			
Antenna Owner	Mount Height (ft)	Antenna CL (ft)	Quantity	Type	Manufacturer	Model	Azimuth	Quantity	Manufacturer	Type	Quantity	Model	Size	Attachment Face/Leg
AT&T Mobility	121	129	1	Dipole	Unknown	16' Dipole		4	Unknown	Star Mount	9	Unknown	1 5/8"	Face A
AT&T Mobility	121	124	3	Panel	Powerwave	7770	23/143/263			on the same mounts	3	Unknown	1 5/8"	Face B
AT&T Mobility	121	124	3	Panel	CCI	HPA-65R-BUU-H8	40/160/270			on the same mounts	1	Unknown	1/2"	Face A
AT&T Mobility	121	124	3	Panel	CCI	TPA-65R-LCUUUU-H8	40/160/270			on the same mounts	1	Unknown	1/2"	Face B
AT&T Mobility	121	124	6	TMA	Powerwave	LGP21401				on the same mounts	4	DC Power	3/4"	Face B
AT&T Mobility	121	124	3	RRU	Ericsson	RRUS-32 B30				on the same mounts	2	Fiber	1/2"	Face B
AT&T Mobility	121	124	3	RRU	Ericsson	RRUS-11 B12				on the same mounts				
AT&T Mobility	121	124	3	RRU	Ericsson	RRUS-32 B2				on the same mounts				
AT&T Mobility	121	124	3	RRU	Ericsson	RRUS-11 B4 + RRUS-A2 B4				on the same mounts				
AT&T Mobility	121	124	2	Squid	Raycap	DC6-48-60-18-8F								

Note: (3) TPA-65R-LCUUUU-H8 antennas, (3) RRUS-11 B12s & (3) RRUS-11 B4s + RRUS-A2 B4s at 124' shall be removed prior to the installation of the proposed loading. All remaining equipment shall be reused.

Proposed Loading

Antenna								Mount			Transmission Line			
Antenna Owner	Mount Height (ft)	Antenna CL (ft)	Quantity	Type	Manufacturer	Model	Azimuth	Quantity	Manufacturer	Type	Quantity	Model	Size	Attachment Face/Leg
AT&T Mobility	121	124	3	Panel	CCI	TPA-65R-BU8DA-K	40/160/270	3	Unknown	Mount Frames	3	DC Power	3/4"	Face B
AT&T Mobility	121	124	3	Panel	CCI	DMP65R-BU8DA	40/160/270			on the same mounts	1	Fiber	1/2"	Face B
AT&T Mobility	121	124	3	RRU	Ericsson	4478 B14				on the same mounts				
AT&T Mobility	121	124	3	RRU	Ericsson	8843 B2/B66A				on the same mounts				
AT&T Mobility	121	124	3	RRU	Ericsson	4449 B5/B12				on the same mounts				
AT&T Mobility	121	124	1	Squid	Raycap	DC9-48-60-24-8C-EV				on the same mounts				

Note: The proposed loading shall be in addition to the remaining existing equipment at the same elevation.

Note: The proposed coax shall be installed in a single row on Face B in order for this analysis to be valid.

Future Loading

Antenna								Mount			Transmission Line			
Antenna Owner	Mount Height (ft)	Antenna CL (ft)	Quantity	Type	Manufacturer	Model	Azimuth	Quantity	Manufacturer	Type	Quantity	Model	Size	Attachment Face/Leg

APPENDIX B

Tower Analysis Output File

Section	T1	T2	T3	T4	T5	T6	T7	T8	T9	T10	T11	T12
Legs	L5x5x1/2					L6x6x3/4						
Leg Grade	A572-50											
Diagonals	L2 1/2x2 1/2x3/16	L2x3x1/4	L3x3x16	L3x3x1/4	2L2x2x3/16	L3x3x1/4						
Diagonal Grade	A36											
Top Girts	2L2x2x3/16					2L2 1/2x2 1/2x3/16	L3x3x1/4				2L2x2x3/16	
Sec. Horizontals	L2x2x3/16											L2x2x1/4
Face Width (ft)	11.25	6.25			6.81	7.36	7.92	8.47	9.03	9.58	10.14	10.69
# Panels @ (ft)	20.0	1 @ 11	1 @ 9.58333			8 @ 10					2 @ 10.2083	
Weight (K)		1.2	1.2	1.2	1.3	1.3	1.9	1.9	1.9	2.0	2.0	2.0	2.1

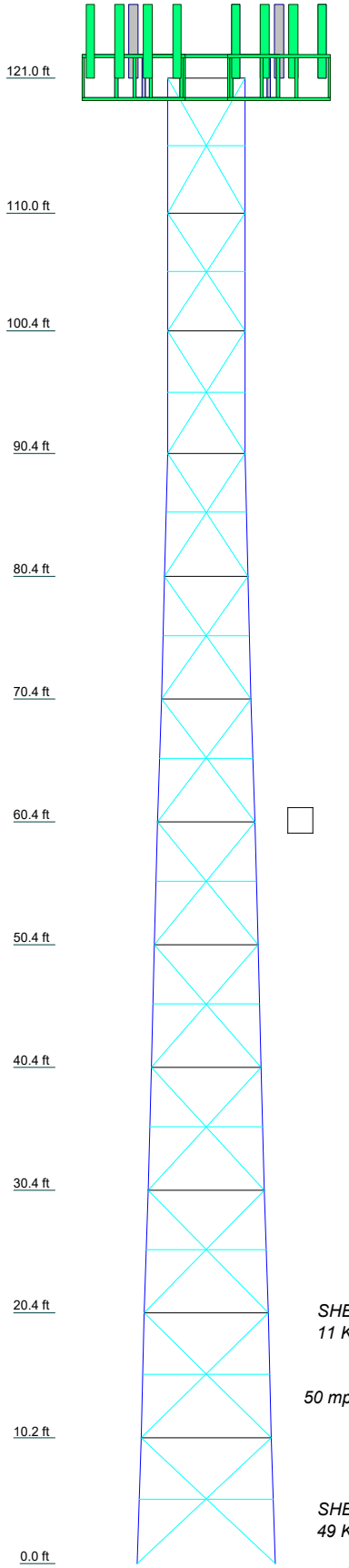

DESIGNED APPURTENANCE LOADING

TYPE	ELEVATION	TYPE	ELEVATION
(2) Sabre 6' Sidearm C10-151-006	121	(2) LGP21401	121
(2) Sabre 6' Sidearm C10-151-006	121	(2) LGP21401	121
(2) Sabre 6' Sidearm C10-151-006	121	(2) LGP21401	121
(2) Sabre 6' Sidearm C10-151-006	121	RRUS 32 B30	121
Mounting Frame	121	RRUS 32 B30	121
Mounting Frame	121	RRUS 32 B30	121
Mounting Frame	121	RRUS 32 B2	121
Andrew Double Pipe Mount MC-DA14-B	121	RRUS 32 B2	121
		RRUS 32 B2	121
Andrew Double Pipe Mount MC-DA14-B	121	RRUS 4478 B14	121
		RRUS 4478 B14	121
MTS 60" Standoff	121	RRUS 4478 B14	121
7770.00 w/Mount Pipe	121	RRUS 8843 B2/B66A	121
7770.00 w/Mount Pipe	121	RRUS 8843 B2/B66A	121
7770.00 w/Mount Pipe	121	RRUS 8843 B2/B66A	121
HPA-65R-BUU-H8 w/ Mount Pipe	121	RRUS 4449 B5/B12	121
HPA-65R-BUU-H8 w/ Mount Pipe	121	RRUS 4449 B5/B12	121
HPA-65R-BUU-H8 w/ Mount Pipe	121	RRUS 4449 B5/B12	121
TPA-65R-BU8DA-K w/ Mount Pipe	121	16' Dipole	121
TPA-65R-BU8DA-K w/ Mount Pipe	121	DC6-48-60-18-8F Surge Suppression Unit	121
TPA-65R-BU8DA-K w/ Mount Pipe	121		
DMP65R-BU8D w/ Mount Pipe	121	DC6-48-60-18-8F Surge Suppression Unit	121
DMP65R-BU8D w/ Mount Pipe	121		
DMP65R-BU8D w/ Mount Pipe	121	DC9-48-60-24-8C-EV	121

MATERIAL STRENGTH

GRADE	Fy	Fu	GRADE	Fy	Fu
A572-50	50 ksi	65 ksi	A36	36 ksi	58 ksi

TOWER DESIGN NOTES

1. Tower is located in New London County, Connecticut.
2. Tower designed for Exposure C to the TIA-222-G Standard.
3. Tower designed for a 101 mph basic wind in accordance with the TIA-222-G Standard.
4. Tower is also designed for a 50 mph basic wind with 0.75 in ice. Ice is considered to increase in thickness with height.
5. Deflections are based upon a 60 mph wind.
6. Tower Structure Class II.
7. Topographic Category 5 with Crest Height of 200.00 ft
8. TOWER RATING: 93.3%

ALL REACTIONS ARE FACTORED

MAX. CORNER REACTIONS AT BASE:
DOWN: 234 K
SHEAR: 23 K

UPLIFT: -230 K
SHEAR: 23 K

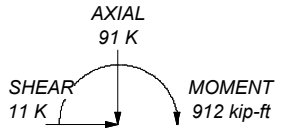

TORQUE 7 kip-ft
50 mph WIND - 0.7500 in ICE

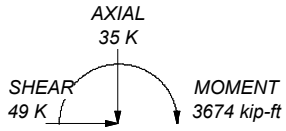

TORQUE 17 kip-ft
REACTIONS - 101 mph WIND

GPD
520 South Main Street Suite 2531
Akron, Ohio 44311
Phone: (330) 572-2100
FAX: (330) 572-2101

Job: **65054 (CT1065) LEBANON**		
Project: **2020723.21.65054.05**		
Client: Smartlink Group	Drawn by: mrisley	App'd:
Code: TIA-222-G	Date: 09/16/20	Scale: NTS
Path: T:\ATandT\65054\06 2020723.21.65054.05- Smartlink SA Re-run\5_Structural\00_Structure\00_Rev 0\03_Modeling\65054.eri		Dwg No. E-1

Feed Line Plan

Round Flat App In Face App Out Face

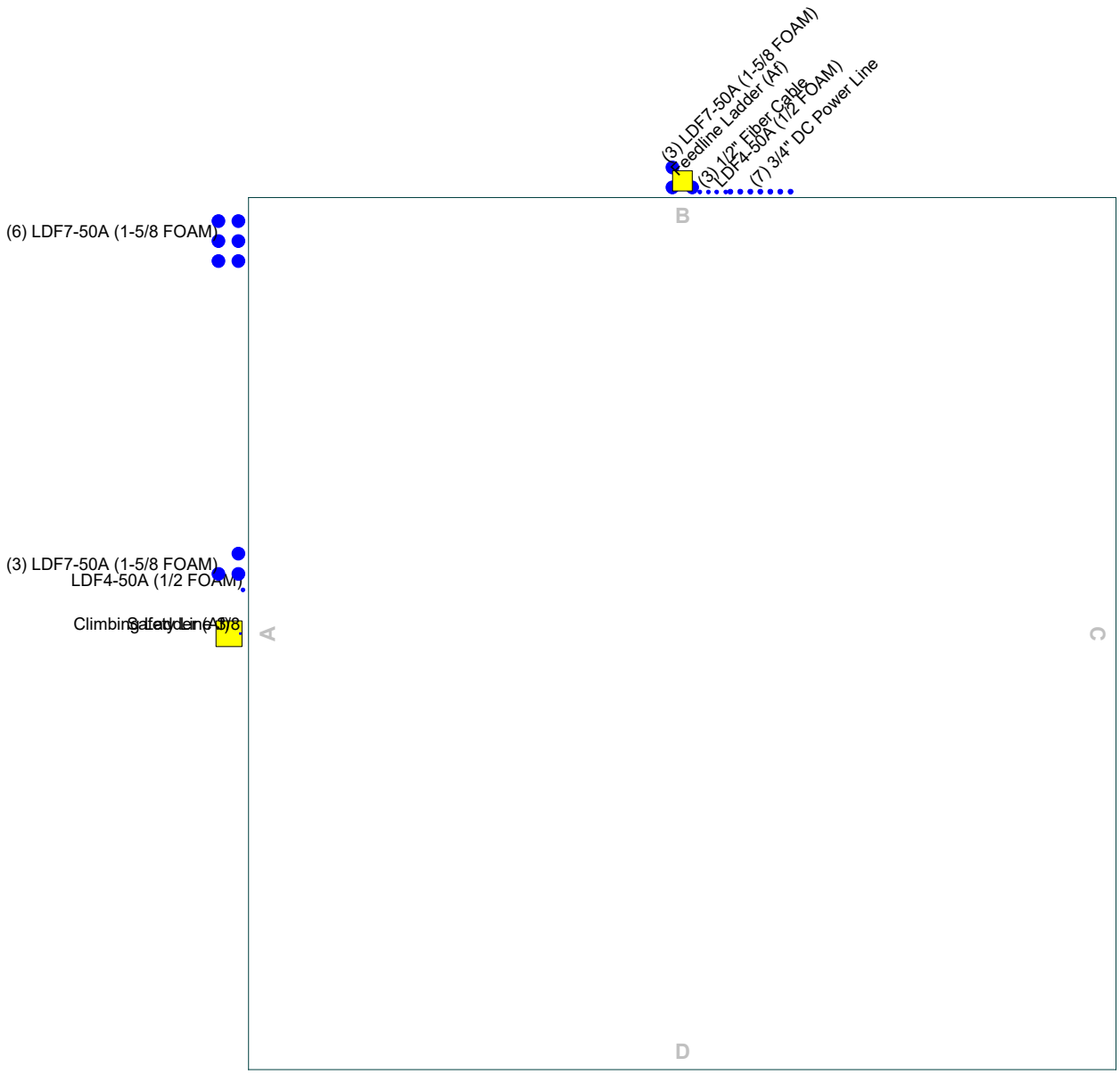

GPD 520 South Main Street Suite 2531 Akron, Ohio 44311 Phone: (330) 572-2100 FAX: (330) 572-2101	Job: ***65054 (CT1065) LEBANON***		
	Project: ***2020723.21.65054.05***		
	Client: Smartlink Group	Drawn by: mrisley	App'd:
	Code: TIA-222-G	Date: 09/16/20	Scale: NTS
	Path: T:\ATandT\65054\06 2020723.21.65054.05- Smartlink SA Re-run\5. Structural\00_Structure\00_Rev 0\03_Modeling\65054.eri		Dwg No. E-7

Tower Input Data

The main tower is a 4x free standing tower with an overall height of 121.00 ft above the ground line.
The base of the tower is set at an elevation of 0.00 ft above the ground line.
The face width of the tower is 6.25 ft at the top and 11.25 ft at the base.
This tower is designed using the TIA-222-G standard.
The following design criteria apply:

Tower is located in New London County, Connecticut.
Basic wind speed of 101 mph.
Structure Class II.
Exposure Category C.
Topographic Category 5.
Crest Height 200.00 ft.
SEAW RSM-03 procedures for wind speed-up calculations are used.
- Topographic Feature: Flat Topped Ridge.
- Slope Distance L: 1050.00 ft.
- Distance from Crest x: 600.00 ft.

Nominal ice thickness of 0.7500 in.
Ice thickness is considered to increase with height.
Ice density of 56 pcf.
A wind speed of 50 mph is used in combination with ice.
Temperature drop of 50 °F.
Deflections calculated using a wind speed of 60 mph.
A non-linear (P-delta) analysis was used.
Pressures are calculated at each section.
Stress ratio used in tower member design is 1.
Local bending stresses due to climbing loads, feed line supports, and appurtenance mounts are not considered.

Tower Section Geometry

Tower Section	*Tower Elevation* *ft*	*Assembly Database*	*Description*	*Section Width* *ft*	*Number of Sections*	*Section Length* *ft*
T1	121.00-110.00			6.25	1	11.00
T2	110.00-100.42			6.25	1	9.58
T3	100.42-90.42			6.25	1	10.00
T4	90.42-80.42			6.25	1	10.00
T5	80.42-70.42			6.81	1	10.00
T6	70.42-60.42			7.36	1	10.00
T7	60.42-50.42			7.92	1	10.00
T8	50.42-40.42			8.47	1	10.00
T9	40.42-30.42			9.03	1	10.00
T10	30.42-20.42			9.58	1	10.00
T11	20.42-10.21			10.14	1	10.21
T12	10.21-0.00			10.69	1	10.21

Tower Section Geometry *(cont'd)*

Tower Section	Tower Elevation ft	Diagonal Spacing ft	Bracing Type	Has K Brace End Panels	Has Horizontals	Top Girt Offset in	Bottom Girt Offset in
T1	121.00-110.00	11.00	X Brace	No	Yes	0.0000	0.0000
T2	110.00-100.42	9.58	X Brace	No	Yes	0.0000	0.0000
T3	100.42-90.42	10.00	X Brace	No	Yes	0.0000	0.0000
T4	90.42-80.42	10.00	X Brace	No	Yes	0.0000	0.0000
T5	80.42-70.42	10.00	X Brace	No	Yes	0.0000	0.0000
T6	70.42-60.42	10.00	X Brace	No	Yes	0.0000	0.0000
T7	60.42-50.42	10.00	X Brace	No	Yes	0.0000	0.0000
T8	50.42-40.42	10.00	X Brace	No	Yes	0.0000	0.0000
T9	40.42-30.42	10.00	X Brace	No	Yes	0.0000	0.0000
T10	30.42-20.42	10.00	X Brace	No	Yes	0.0000	0.0000
T11	20.42-10.21	10.21	X Brace	No	Yes	0.0000	0.0000
T12	10.21-0.00	10.21	X Brace	No	Yes	0.0000	0.0000

Tower Section Geometry *(cont'd)*

Tower Elevation ft	Leg Type	Leg Size	Leg Grade	Diagonal Type	Diagonal Size	Diagonal Grade
T1 121.00-110.00	Equal Angle	L5x5x1/2	A572-50 (50 ksi)	Single Angle	L2 1/2x2 1/2x3/16	A36 (36 ksi)
T2 110.00-100.42	Equal Angle	L5x5x1/2	A572-50 (50 ksi)	Single Angle	L2x3x1/4	A36 (36 ksi)
T3 100.42-90.42	Equal Angle	L5x5x1/2	A572-50 (50 ksi)	Single Angle	L3x3x3/16	A36 (36 ksi)
T4 90.42-80.42	Equal Angle	L5x5x1/2	A572-50 (50 ksi)	Single Angle	L3x3x1/4	A36 (36 ksi)
T5 80.42-70.42	Equal Angle	L5x5x1/2	A572-50 (50 ksi)	Double Equal Angle	2L2x2x3/16	A36 (36 ksi)
T6 70.42-60.42	Equal Angle	L6x6x3/4	A572-50 (50 ksi)	Single Angle	L3x3x1/4	A36 (36 ksi)
T7 60.42-50.42	Equal Angle	L6x6x3/4	A572-50 (50 ksi)	Single Angle	L3x3x1/4	A36 (36 ksi)
T8 50.42-40.42	Equal Angle	L6x6x3/4	A572-50 (50 ksi)	Single Angle	L3x3x1/4	A36 (36 ksi)
T9 40.42-30.42	Equal Angle	L6x6x3/4	A572-50 (50 ksi)	Single Angle	L3x3x1/4	A36 (36 ksi)
T10 30.42-20.42	Equal Angle	L6x6x3/4	A572-50 (50 ksi)	Single Angle	L3x3x1/4	A36 (36 ksi)
T11 20.42-10.21	Equal Angle	L6x6x3/4	A572-50 (50 ksi)	Single Angle	L3x3x1/4	A36 (36 ksi)
T12 10.21-0.00	Equal Angle	L6x6x3/4	A572-50 (50 ksi)	Single Angle	L3x3x1/4	A36 (36 ksi)

Tower Section Geometry *(cont'd)*

Tower Elevation ft	Top Girt Type	Top Girt Size	Top Girt Grade	Bottom Girt Type	Bottom Girt Size	Bottom Girt Grade
T1 121.00-110.00	Double Equal	2L2x2x3/16	A36	Solid Round		A36

Tower Elevation ft	Top Girt Type	Top Girt Size	Top Girt Grade	Bottom Girt Type	Bottom Girt Size	Bottom Girt Grade
T2 110.00-100.42	Angle Double Equal Angle	2L2x2x3/16	(36 ksi) A36 (36 ksi)	Solid Round		(36 ksi) A36 (36 ksi)
T3 100.42-90.42	Angle Double Equal Angle	2L2x2x3/16	(36 ksi) A36 (36 ksi)	Solid Round		(36 ksi) A36 (36 ksi)
T4 90.42-80.42	Angle Double Equal Angle	2L2x2x3/16	(36 ksi) A36 (36 ksi)	Solid Round		(36 ksi) A36 (36 ksi)
T5 80.42-70.42	Angle Double Equal Angle	2L2x2x3/16	(36 ksi) A36 (36 ksi)	Solid Round		(36 ksi) A36 (36 ksi)
T6 70.42-60.42	Angle Double Equal Angle	2L2x2x3/16	(36 ksi) A36 (36 ksi)	Solid Round		(36 ksi) A36 (36 ksi)
T7 60.42-50.42	Angle Double Equal Angle	2L2 1/2x2 1/2x3/16	(36 ksi) A36 (36 ksi)	Solid Round		(36 ksi) A36 (36 ksi)
T8 50.42-40.42	Single Angle	L3x3x1/4	(36 ksi) A36 (36 ksi)	Solid Round		(36 ksi) A36 (36 ksi)
T9 40.42-30.42	Single Angle	L3x3x1/4	(36 ksi) A36 (36 ksi)	Solid Round		(36 ksi) A36 (36 ksi)
T10 30.42-20.42	Single Angle	L3x3x1/4	(36 ksi) A36 (36 ksi)	Solid Round		(36 ksi) A36 (36 ksi)
T11 20.42-10.21	Double Equal Angle	2L2x2x3/16	(36 ksi) A36 (36 ksi)	Solid Round		(36 ksi) A36 (36 ksi)
T12 10.21-0.00	Double Equal Angle	2L2x2x3/16	(36 ksi) A36 (36 ksi)	Solid Round		(36 ksi) A36 (36 ksi)

Tower Section Geometry *(cont'd)*

Tower Elevation ft	Secondary Horizontal Type	Secondary Horizontal Size	Secondary Horizontal Grade	Inner Bracing Type	Inner Bracing Size	Inner Bracing Grade
T1 121.00-110.00	Single Angle	L2x2x3/16	A572-50 (50 ksi)	Solid Round		A572-50 (50 ksi)
T2 110.00-100.42	Single Angle	L2x2x3/16	A572-50 (50 ksi)	Solid Round		A572-50 (50 ksi)
T3 100.42-90.42	Single Angle	L2x2x3/16	A572-50 (50 ksi)	Solid Round		A572-50 (50 ksi)
T4 90.42-80.42	Single Angle	L2x2x3/16	A572-50 (50 ksi)	Solid Round		A572-50 (50 ksi)
T5 80.42-70.42	Single Angle	L2x2x3/16	A572-50 (50 ksi)	Solid Round		A572-50 (50 ksi)
T6 70.42-60.42	Single Angle	L2x2x3/16	A572-50 (50 ksi)	Solid Round		A572-50 (50 ksi)
T7 60.42-50.42	Single Angle	L2x2x3/16	A572-50 (50 ksi)	Solid Round		A572-50 (50 ksi)
T8 50.42-40.42	Single Angle	L2x2x3/16	A572-50 (50 ksi)	Solid Round		A572-50 (50 ksi)
T9 40.42-30.42	Single Angle	L2x2x3/16	A572-50 (50 ksi)	Solid Round		A572-50 (50 ksi)
T10 30.42-20.42	Single Angle	L2x2x3/16	A572-50 (50 ksi)	Solid Round		A572-50 (50 ksi)
T11 20.42-10.21	Single Angle	L2x2x3/16	A572-50 (50 ksi)	Solid Round		A572-50 (50 ksi)
T12 10.21-0.00	Single Angle	L2x2x1/4	A572-50 (50 ksi)	Solid Round		A572-50 (50 ksi)

Tower Section Geometry *(cont'd)*

Tower Elevation ft	Gusset Area (per face) ft^2	Gusset Thickness in	Gusset Grade	Adjust. Factor A_f	Adjust. Factor A_r	Weight Mult.	Double Angle Stitch Bolt Spacing Diagonals in	Double Angle Stitch Bolt Spacing Horizontals in	Double Angle Stitch Bolt Spacing Redundants in
T1 121.00-110.00	0.00	0.5000	A36 (36 ksi)	1	1	1	Third-Pt	Third-Pt	36.0000
T2 110.00-100.42	0.00	0.5000	A36 (36 ksi)	1	1	1	36.0000	Third-Pt	36.0000
T3 100.42-90.42	0.00	0.5000	A36 (36 ksi)	1	1	1	36.0000	Third-Pt	36.0000
T4 90.42-80.42	0.00	0.5000	A36 (36 ksi)	1	1	1	36.0000	Third-Pt	36.0000
T5 80.42-70.42	0.00	0.5000	A36 (36 ksi)	1	1	1	Third-Pt	Third-Pt	36.0000
T6 70.42-60.42	0.00	0.7500	A36 (36 ksi)	1	1	1	36.0000	Third-Pt	36.0000
T7 60.42-50.42	0.00	0.7500	A36 (36 ksi)	1	1	1	36.0000	Third-Pt	36.0000
T8 50.42-40.42	0.00	0.7500	A36 (36 ksi)	1	1	1	36.0000	0.0000	36.0000
T9 40.42-30.42	0.00	0.7500	A36 (36 ksi)	1	1	1	36.0000	0.0000	36.0000
T10 30.42-20.42	0.00	0.7500	A36 (36 ksi)	1	1	1	36.0000	0.0000	36.0000
T11 20.42-10.21	0.00	0.7500	A36 (36 ksi)	1	1	1	36.0000	24.0000	36.0000
T12 10.21-0.00	0.00	0.7500	A36 (36 ksi)	1	1	1	36.0000	24.0000	36.0000

Tower Section Geometry *(cont'd)*

Tower Elevation ft	Calc K Single Angles	Calc K Solid Rounds	K Factors[1] Legs	X Brace Diags X Y	K Brace Diags X Y	Single Diags X Y	Girts X Y	Horiz. X Y	Sec. Horiz. X Y	Inner Brace X Y
T1	Yes	No	1	1	1	1	1	1	1	1
121.00-110.00				1	1	1	1	1	0.5	1
T2	Yes	No	1	1	1	1	1	1	1	1
110.00-100.42				1	1	1	1	1	0.5	1
T3	Yes	No	1	1	1	1	1	1	1	1
100.42-90.42				1	1	1	1	1	0.5	1
T4	Yes	No	1	1	1	1	1	1	1	1
90.42-80.42				1	1	1	1	1	0.5	1
T5	Yes	No	1	1	1	1	1	1	1	1
80.42-70.42				1	1	1	1	1	0.5	1
T6	Yes	No	1	1	1	1	1	1	1	1
70.42-60.42				1	1	1	1	1	0.5	1
T7	Yes	No	1	1	1	1	1	1	1	1
60.42-50.42				1	1	1	1	1	0.5	1
T8	Yes	No	1	1	1	1	1	1	1	1
50.42-40.42				1	1	1	1	1	0.5	1

Tower Elevation ft	Calc K Single Angles	Calc K Solid Rounds	K Factors[1] Legs	X Brace Diags X Y	K Brace Diags X Y	Single Diags X Y	Girts X Y	Horiz. X Y	Sec. Horiz. X Y	Inner Brace X Y
T9	Yes	No	1	1	1	1	1	1	1	1
40.42-30.42				1	1	1	1	1	0.5	1
T10	Yes	No	1	1	1	1	1	1	1	1
30.42-20.42				1	1	1	1	1	0.5	1
T11	Yes	No	1	1	1	1	1	1	1	1
20.42-10.21				1	1	1	1	1	0.5	1
T12	Yes	No	1	1	1	1	1	1	1	1
10.21-0.00				1	1	1	1	1	0.5	1

[1]*Note: K factors are applied to member segment lengths. K-braces without inner supporting members will have the K factor in the out-of-plane direction applied to the overall length.*

Tower Section Geometry *(cont'd)*

Tower Elevation ft	Leg Net Width Deduct in	Leg U	Diagonal Net Width Deduct in	Diagonal U	Top Girt Net Width Deduct in	Top Girt U	Bottom Girt Net Width Deduct in	Bottom Girt U	Mid Girt Net Width Deduct in	Mid Girt U	Long Horizontal Net Width Deduct in	Long Horizontal U	Short Horizontal Net Width Deduct in	Short Horizontal U
T1 121.00-110.00	0.0000	1	0.0000	0.75	0.0000	0.75	0.0000	0.75	0.0000	0.75	0.0000	0.75	0.0000	0.75
T2 110.00-100.42	0.0000	1	0.0000	0.75	0.0000	0.75	0.0000	0.75	0.0000	0.75	0.0000	0.75	0.0000	0.75
T3 100.42-90.42	0.0000	1	0.0000	0.75	0.0000	0.75	0.0000	0.75	0.0000	0.75	0.0000	0.75	0.0000	0.75
T4 90.42-80.42	0.0000	1	0.0000	0.75	0.0000	0.75	0.0000	0.75	0.0000	0.75	0.0000	0.75	0.0000	0.75
T5 80.42-70.42	0.0000	1	0.0000	0.75	0.0000	0.75	0.0000	0.75	0.0000	0.75	0.0000	0.75	0.0000	0.75
T6 70.42-60.42	0.0000	1	0.0000	0.75	0.0000	0.75	0.0000	0.75	0.0000	0.75	0.0000	0.75	0.0000	0.75
T7 60.42-50.42	0.0000	1	0.0000	0.75	0.0000	0.75	0.0000	0.75	0.0000	0.75	0.0000	0.75	0.0000	0.75
T8 50.42-40.42	0.0000	1	0.0000	0.75	0.0000	0.75	0.0000	0.75	0.0000	0.75	0.0000	0.75	0.0000	0.75
T9 40.42-30.42	0.0000	1	0.0000	0.75	0.0000	0.75	0.0000	0.75	0.0000	0.75	0.0000	0.75	0.0000	0.75
T10 30.42-20.42	0.0000	1	0.0000	0.75	0.0000	0.75	0.0000	0.75	0.0000	0.75	0.0000	0.75	0.0000	0.75
T11 20.42-10.21	0.0000	1	0.0000	0.75	0.0000	0.75	0.0000	0.75	0.0000	0.75	0.0000	0.75	0.0000	0.75
T12 10.21-0.00	0.0000	1	0.0000	0.75	0.0000	0.75	0.0000	0.75	0.0000	0.75	0.0000	0.75	0.0000	0.75

Tower Section Geometry *(cont'd)*

Tower Elevation ft	Leg Connection Type	Leg Bolt Size in	Leg No.	Diagonal Bolt Size in	Diagonal No.	Top Girt Bolt Size in	Top Girt No.	Bottom Girt Bolt Size in	Bottom Girt No.	Mid Girt Bolt Size in	Mid Girt No.	Long Horizontal Bolt Size in	Long Horizontal No.	Short Horizontal Bolt Size in	Short Horizontal No.
T1 121.00-110.00	Sleeve DS	0.6250 A325N	8	0.6250 A325N	2	0.6250 A325N	1	0.6250 A325N	0	0.6250 A325N	0	0.6250 A325N	0	0.6250 A325N	1
T2 110.00-100.42	Sleeve DS	0.6250 A325N	8	0.6250 A325N	2	0.6250 A325N	1	0.6250 A325N	0	0.6250 A325N	0	0.6250 A325N	0	0.6250 A325N	1

Tower Elevation ft	Leg Connection Type	Leg Bolt Size in	Leg No.	Diagonal Bolt Size in	Diagonal No.	Top Girt Bolt Size in	Top Girt No.	Bottom Girt Bolt Size in	Bottom Girt No.	Mid Girt Bolt Size in	Mid Girt No.	Long Horizontal Bolt Size in	Long Horizontal No.	Short Horizontal Bolt Size in	Short Horizontal No.
T3 100.42-90.42	Sleeve DS	0.6250 A325N	16	0.6250 A325N	2	0.6250 A325N	1	0.6250 A325N	0	0.6250 A325N	0	0.6250 A325N	0	0.6250 A325N	1
T4 90.42-80.42	Sleeve DS	0.6250 A325N	16	0.6250 A325N	2	0.6250 A325N	1	0.6250 A325N	0	0.6250 A325N	0	0.6250 A325N	0	0.6250 A325N	1
T5 80.42-70.42	Sleeve DS	0.6250 A325N	24	0.6250 A325N	2	0.6250 A325N	2	0.6250 A325N	0	0.6250 A325N	0	0.6250 A325N	0	0.6250 A325N	1
T6 70.42-60.42	Sleeve DS	0.7500 A325N	24	0.6250 A325N	2	0.6250 A325N	2	0.6250 A325N	0	0.6250 A325N	0	0.6250 A325N	0	0.6250 A325N	1
T7 60.42-50.42	Sleeve DS	0.7500 A325N	24	0.6250 A325N	2	0.6250 A325N	2	0.6250 A325N	0	0.6250 A325N	0	0.6250 A325N	0	0.6250 A325N	1
T8 50.42-40.42	Sleeve DS	0.7500 A325N	28	0.6250 A325N	2	0.6250 A325N	2	0.6250 A325N	0	0.6250 A325N	0	0.6250 A325N	0	0.6250 A325N	1
T9 40.42-30.42	Sleeve DS	0.7500 A325N	32	0.6250 A325N	2	0.6250 A325N	2	0.6250 A325N	0	0.6250 A325N	0	0.6250 A325N	0	0.6250 A325N	1
T10 30.42-20.42	Sleeve DS	0.7500 A325N	36	0.6250 A325N	2	0.6250 A325N	2	0.6250 A325N	0	0.6250 A325N	0	0.6250 A325N	0	0.6250 A325N	1
T11 20.42-10.21	Sleeve DS	0.7500 A325N	40	0.6250 A325N	2	0.6250 A325N	2	0.6250 A325N	0	0.6250 A325N	0	0.6250 A325N	0	0.6250 A325N	1
T12 10.21-0.00	Sleeve DS	0.7500 A325N	40	0.6250 A325N	2	0.6250 A325N	2	0.6250 A325N	0	0.6250 A325N	0	0.6250 A325N	0	0.6250 A325N	1

Feed Line/Linear Appurtenances - Entered As Round Or Flat

Description	Face or Leg	Allow Shield	Exclude From Torque Calculation	Component Type	Placement ft	Face Offset in	Lateral Offset (Frac FW)	#	# Per Row	Clear Spacing in	Width or Diameter in	Perimeter in	Weight plf
Climbing Ladder (Af)	A	No	No	Af (CaAa)	121.00 - 8.00	1.0000	0	1	1	3.8400	3.8400		4.81
LDF4-50A (1/2 FOAM)	A	No	No	Ar (CaAa)	121.00 - 8.00	0.5000	0.05	1	1	0.6300	0.6300		0.15
LDF7-50A (1-5/8 FOAM)	A	No	No	Ar (CaAa)	121.00 - 8.00	0.5000	0.08	3	2	1.0000	1.9800		0.82
LDF7-50A (1-5/8 FOAM)	A	No	No	Ar (CaAa)	121.00 - 8.00	0.5000	0.45	6	3	1.0000	1.9800		0.82
LDF7-50A (1-5/8 FOAM)	B	No	No	Ar (CaAa)	121.00 - 8.00	0.5000	0	3	2	1.0000	1.9800		0.82
LDF4-50A (1/2 FOAM)	B	No	No	Ar (CaAa)	121.00 - 8.00	0.5000	0.05	1	1	0.6300	0.6300		0.15
1/2" Fiber Cable	B	No	No	Ar (CaAa)	121.00 - 8.00	0.5000	0.03	3	3	0.6300	0.6300		0.15
3/4" DC Power Line	B	No	No	Ar (CaAa)	121.00 - 8.00	0.5000	0.09	7	7	0.7500	0.7500		0.33
Safety Line 3/8	A	No	No	Ar (CaAa)	121.00 - 8.00	1.0000	0	1	1	0.3750	0.3750		0.22
Feedline Ladder (Af)	B	No	No	Af (CaAa)	121.00 - 8.00	1.0000	0	1	1	3.0000	3.0000		8.40

Feed Line/Linear Appurtenances Section Areas

Tower Section	Tower Elevation ft	Face	A_R ft^2	A_F ft^2	C_AA_A In Face ft^2	C_AA_A Out Face ft^2	Weight K
T1	121.00-110.00	A	0.000	0.000	27.747	0.000	0.14
		B	0.000	0.000	20.581	0.000	0.15
		C	0.000	0.000	0.000	0.000	0.00
		D	0.000	0.000	0.000	0.000	0.00
T2	110.00-100.42	A	0.000	0.000	24.174	0.000	0.12
		B	0.000	0.000	17.930	0.000	0.13
		C	0.000	0.000	0.000	0.000	0.00
		D	0.000	0.000	0.000	0.000	0.00
T3	100.42-90.42	A	0.000	0.000	25.225	0.000	0.13
		B	0.000	0.000	18.710	0.000	0.14
		C	0.000	0.000	0.000	0.000	0.00
		D	0.000	0.000	0.000	0.000	0.00
T4	90.42-80.42	A	0.000	0.000	25.225	0.000	0.13
		B	0.000	0.000	18.710	0.000	0.14
		C	0.000	0.000	0.000	0.000	0.00
		D	0.000	0.000	0.000	0.000	0.00
T5	80.42-70.42	A	0.000	0.000	25.225	0.000	0.13
		B	0.000	0.000	18.710	0.000	0.14
		C	0.000	0.000	0.000	0.000	0.00
		D	0.000	0.000	0.000	0.000	0.00
T6	70.42-60.42	A	0.000	0.000	25.225	0.000	0.13
		B	0.000	0.000	18.710	0.000	0.14
		C	0.000	0.000	0.000	0.000	0.00
		D	0.000	0.000	0.000	0.000	0.00
T7	60.42-50.42	A	0.000	0.000	25.225	0.000	0.13
		B	0.000	0.000	18.710	0.000	0.14
		C	0.000	0.000	0.000	0.000	0.00
		D	0.000	0.000	0.000	0.000	0.00
T8	50.42-40.42	A	0.000	0.000	25.225	0.000	0.13
		B	0.000	0.000	18.710	0.000	0.14
		C	0.000	0.000	0.000	0.000	0.00
		D	0.000	0.000	0.000	0.000	0.00
T9	40.42-30.42	A	0.000	0.000	25.225	0.000	0.13
		B	0.000	0.000	18.710	0.000	0.14
		C	0.000	0.000	0.000	0.000	0.00
		D	0.000	0.000	0.000	0.000	0.00
T10	30.42-20.42	A	0.000	0.000	25.225	0.000	0.13
		B	0.000	0.000	18.710	0.000	0.14
		C	0.000	0.000	0.000	0.000	0.00
		D	0.000	0.000	0.000	0.000	0.00
T11	20.42-10.21	A	0.000	0.000	25.751	0.000	0.13
		B	0.000	0.000	19.100	0.000	0.14
		C	0.000	0.000	0.000	0.000	0.00
		D	0.000	0.000	0.000	0.000	0.00
T12	10.21-0.00	A	0.000	0.000	5.571	0.000	0.03
		B	0.000	0.000	4.132	0.000	0.03
		C	0.000	0.000	0.000	0.000	0.00
		D	0.000	0.000	0.000	0.000	0.00

Feed Line/Linear Appurtenances Section Areas - With Ice

Tower Section	Tower Elevation ft	Face or Leg	Ice Thickness in	A_R ft^2	A_F ft^2	C_AA_A In Face ft^2	C_AA_A Out Face ft^2	Weight K
T1	121.00-110.00	A	1.770	0.000	0.000	55.995	0.000	0.92
		B		0.000	0.000	60.549	0.000	0.86
		C		0.000	0.000	0.000	0.000	0.00
		D		0.000	0.000	0.000	0.000	0.00

Tower Section	Tower Elevation ft	Face or Leg	Ice Thickness in	A_R ft^2	A_F ft^2	C_AA_A In Face ft^2	C_AA_A Out Face ft^2	Weight K
T2	110.00-100.42	A	1.758	0.000	0.000	48.630	0.000	0.80
		B		0.000	0.000	52.585	0.000	0.74
		C		0.000	0.000	0.000	0.000	0.00
		D		0.000	0.000	0.000	0.000	0.00
T3	100.42-90.42	A	1.745	0.000	0.000	50.576	0.000	0.83
		B		0.000	0.000	54.688	0.000	0.77
		C		0.000	0.000	0.000	0.000	0.00
		D		0.000	0.000	0.000	0.000	0.00
T4	90.42-80.42	A	1.730	0.000	0.000	50.383	0.000	0.82
		B		0.000	0.000	54.479	0.000	0.76
		C		0.000	0.000	0.000	0.000	0.00
		D		0.000	0.000	0.000	0.000	0.00
T5	80.42-70.42	A	1.713	0.000	0.000	50.164	0.000	0.81
		B		0.000	0.000	54.242	0.000	0.76
		C		0.000	0.000	0.000	0.000	0.00
		D		0.000	0.000	0.000	0.000	0.00
T6	70.42-60.42	A	1.694	0.000	0.000	49.911	0.000	0.80
		B		0.000	0.000	53.969	0.000	0.75
		C		0.000	0.000	0.000	0.000	0.00
		D		0.000	0.000	0.000	0.000	0.00
T7	60.42-50.42	A	1.671	0.000	0.000	49.613	0.000	0.79
		B		0.000	0.000	53.646	0.000	0.74
		C		0.000	0.000	0.000	0.000	0.00
		D		0.000	0.000	0.000	0.000	0.00
T8	50.42-40.42	A	1.643	0.000	0.000	49.252	0.000	0.78
		B		0.000	0.000	53.255	0.000	0.73
		C		0.000	0.000	0.000	0.000	0.00
		D		0.000	0.000	0.000	0.000	0.00
T9	40.42-30.42	A	1.608	0.000	0.000	48.796	0.000	0.76
		B		0.000	0.000	52.761	0.000	0.71
		C		0.000	0.000	0.000	0.000	0.00
		D		0.000	0.000	0.000	0.000	0.00
T10	30.42-20.42	A	1.561	0.000	0.000	48.183	0.000	0.74
		B		0.000	0.000	52.099	0.000	0.69
		C		0.000	0.000	0.000	0.000	0.00
		D		0.000	0.000	0.000	0.000	0.00
T11	20.42-10.21	A	1.489	0.000	0.000	48.235	0.000	0.73
		B		0.000	0.000	52.156	0.000	0.67
		C		0.000	0.000	0.000	0.000	0.00
		D		0.000	0.000	0.000	0.000	0.00
T12	10.21-0.00	A	1.340	0.000	0.000	10.004	0.000	0.14
		B		0.000	0.000	10.819	0.000	0.13
		C		0.000	0.000	0.000	0.000	0.00
		D		0.000	0.000	0.000	0.000	0.00

Feed Line Center of Pressure

Section	Elevation ft	CP_X in	CP_Z in	CP_X Ice in	CP_Z Ice in
T1	121.00-110.00	-6.4784	-8.2414	-7.6618	-10.9814
T2	110.00-100.42	-6.5810	-8.3740	-7.6568	-10.9764
T3	100.42-90.42	-6.2518	-7.9485	-7.3182	-10.4647
T4	90.42-80.42	-6.4225	-8.1782	-7.6438	-10.9521
T5	80.42-70.42	-7.1528	-9.1410	-8.6472	-12.4642
T6	70.42-60.42	-6.7325	-8.6099	-8.4531	-12.1486
T7	60.42-50.42	-6.9547	-8.9106	-8.8984	-12.8097

Section	Elevation ft	CP_X in	CP_Z in	CP_X Ice in	CP_Z Ice in
T8	50.42-40.42	-7.1558	-9.1829	-9.2259	-13.2926
T9	40.42-30.42	-7.4023	-9.5135	-9.5249	-13.7344
T10	30.42-20.42	-7.6403	-9.8322	-9.7886	-14.1261
T11	20.42-10.21	-8.0669	-10.3965	-10.1368	-14.6543
T12	10.21-0.00	-2.1999	-2.8116	-3.0761	-4.2879

Shielding Factor Ka

Tower Section	Feed Line Record No.	Description	Feed Line Segment Elev.	K_a No Ice	K_a Ice
T1	1	Climbing Ladder (Af)	110.00 - 121.00	0.6000	0.5587
T1	2	LDF4-50A (1/2 FOAM)	110.00 - 121.00	0.6000	0.5587
T1	3	LDF7-50A (1-5/8 FOAM)	110.00 - 121.00	0.6000	0.5587
T1	4	LDF7-50A (1-5/8 FOAM)	110.00 - 121.00	0.6000	0.5587
T1	5	LDF7-50A (1-5/8 FOAM)	110.00 - 121.00	0.6000	0.5587
T1	6	LDF4-50A (1/2 FOAM)	110.00 - 121.00	0.6000	0.5587
T1	7	1/2" Fiber Cable	110.00 - 121.00	0.6000	0.5587
T1	8	3/4" DC Power Line	110.00 - 121.00	0.6000	0.5587
T1	9	Safety Line 3/8	110.00 - 121.00	0.6000	0.5587
T1	10	Feedline Ladder (Af)	110.00 - 121.00	0.6000	0.5587
T2	1	Climbing Ladder (Af)	100.42 - 110.00	0.6000	0.5572
T2	2	LDF4-50A (1/2 FOAM)	100.42 - 110.00	0.6000	0.5572
T2	3	LDF7-50A (1-5/8 FOAM)	100.42 - 110.00	0.6000	0.5572
T2	4	LDF7-50A (1-5/8 FOAM)	100.42 - 110.00	0.6000	0.5572
T2	5	LDF7-50A (1-5/8 FOAM)	100.42 - 110.00	0.6000	0.5572
T2	6	LDF4-50A (1/2 FOAM)	100.42 - 110.00	0.6000	0.5572
T2	7	1/2" Fiber Cable	100.42 - 110.00	0.6000	0.5572
T2	8	3/4" DC Power Line	100.42 - 110.00	0.6000	0.5572
T2	9	Safety Line 3/8	100.42 - 110.00	0.6000	0.5572
T2	10	Feedline Ladder (Af)	100.42 - 110.00	0.6000	0.5572
T3	1	Climbing Ladder (Af)	90.42 - 100.42	0.6000	0.5370
T3	2	LDF4-50A (1/2 FOAM)	90.42 - 100.42	0.6000	0.5370
T3	3	LDF7-50A (1-5/8 FOAM)	90.42 - 100.42	0.6000	0.5370
T3	4	LDF7-50A (1-5/8 FOAM)	90.42 - 100.42	0.6000	0.5370
T3	5	LDF7-50A (1-5/8 FOAM)	90.42 - 100.42	0.6000	0.5370

Tower Section	Feed Line Record No.	Description	Feed Line Segment Elev.	K_a No Ice	K_a Ice
T3	6	LDF4-50A (1/2 FOAM)	90.42 - 100.42	0.6000	0.5370
T3	7	1/2" Fiber Cable	90.42 - 100.42	0.6000	0.5370
T3	8	3/4" DC Power Line	90.42 - 100.42	0.6000	0.5370
T3	9	Safety Line 3/8	90.42 - 100.42	0.6000	0.5370
T3	10	Feedline Ladder (Af)	90.42 - 100.42	0.6000	0.5370
T4	1	Climbing Ladder (Af)	80.42 - 90.42	0.6000	0.5525
T4	2	LDF4-50A (1/2 FOAM)	80.42 - 90.42	0.6000	0.5525
T4	3	LDF7-50A (1-5/8 FOAM)	80.42 - 90.42	0.6000	0.5525
T4	4	LDF7-50A (1-5/8 FOAM)	80.42 - 90.42	0.6000	0.5525
T4	5	LDF7-50A (1-5/8 FOAM)	80.42 - 90.42	0.6000	0.5525
T4	6	LDF4-50A (1/2 FOAM)	80.42 - 90.42	0.6000	0.5525
T4	7	1/2" Fiber Cable	80.42 - 90.42	0.6000	0.5525
T4	8	3/4" DC Power Line	80.42 - 90.42	0.6000	0.5525
T4	9	Safety Line 3/8	80.42 - 90.42	0.6000	0.5525
T4	10	Feedline Ladder (Af)	80.42 - 90.42	0.6000	0.5525
T5	1	Climbing Ladder (Af)	70.42 - 80.42	0.6000	0.6000
T5	2	LDF4-50A (1/2 FOAM)	70.42 - 80.42	0.6000	0.6000
T5	3	LDF7-50A (1-5/8 FOAM)	70.42 - 80.42	0.6000	0.6000
T5	4	LDF7-50A (1-5/8 FOAM)	70.42 - 80.42	0.6000	0.6000
T5	5	LDF7-50A (1-5/8 FOAM)	70.42 - 80.42	0.6000	0.6000
T5	6	LDF4-50A (1/2 FOAM)	70.42 - 80.42	0.6000	0.6000
T5	7	1/2" Fiber Cable	70.42 - 80.42	0.6000	0.6000
T5	8	3/4" DC Power Line	70.42 - 80.42	0.6000	0.6000
T5	9	Safety Line 3/8	70.42 - 80.42	0.6000	0.6000
T5	10	Feedline Ladder (Af)	70.42 - 80.42	0.6000	0.6000
T6	1	Climbing Ladder (Af)	60.42 - 70.42	0.6000	0.5807
T6	2	LDF4-50A (1/2 FOAM)	60.42 - 70.42	0.6000	0.5807
T6	3	LDF7-50A (1-5/8 FOAM)	60.42 - 70.42	0.6000	0.5807
T6	4	LDF7-50A (1-5/8 FOAM)	60.42 - 70.42	0.6000	0.5807
T6	5	LDF7-50A (1-5/8 FOAM)	60.42 - 70.42	0.6000	0.5807
T6	6	LDF4-50A (1/2 FOAM)	60.42 - 70.42	0.6000	0.5807
T6	7	1/2" Fiber Cable	60.42 - 70.42	0.6000	0.5807
T6	8	3/4" DC Power Line	60.42 - 70.42	0.6000	0.5807
T6	9	Safety Line 3/8	60.42 - 70.42	0.6000	0.5807
T6	10	Feedline Ladder (Af)	60.42 - 70.42	0.6000	0.5807
T7	1	Climbing Ladder (Af)	50.42 - 60.42	0.6000	0.5958
T7	2	LDF4-50A (1/2 FOAM)	50.42 - 60.42	0.6000	0.5958
T7	3	LDF7-50A (1-5/8 FOAM)	50.42 - 60.42	0.6000	0.5958
T7	4	LDF7-50A (1-5/8 FOAM)	50.42 - 60.42	0.6000	0.5958
T7	5	LDF7-50A (1-5/8 FOAM)	50.42 - 60.42	0.6000	0.5958
T7	6	LDF4-50A (1/2 FOAM)	50.42 - 60.42	0.6000	0.5958
T7	7	1/2" Fiber Cable	50.42 - 60.42	0.6000	0.5958
T7	8	3/4" DC Power Line	50.42 - 60.42	0.6000	0.5958
T7	9	Safety Line 3/8	50.42 - 60.42	0.6000	0.5958
T7	10	Feedline Ladder (Af)	50.42 - 60.42	0.6000	0.5958
T8	1	Climbing Ladder (Af)	40.42 - 50.42	0.6000	0.6000
T8	2	LDF4-50A (1/2 FOAM)	40.42 - 50.42	0.6000	0.6000
T8	3	LDF7-50A (1-5/8 FOAM)	40.42 - 50.42	0.6000	0.6000
T8	4	LDF7-50A (1-5/8 FOAM)	40.42 - 50.42	0.6000	0.6000
T8	5	LDF7-50A (1-5/8 FOAM)	40.42 - 50.42	0.6000	0.6000
T8	6	LDF4-50A (1/2 FOAM)	40.42 - 50.42	0.6000	0.6000
T8	7	1/2" Fiber Cable	40.42 - 50.42	0.6000	0.6000
T8	8	3/4" DC Power Line	40.42 - 50.42	0.6000	0.6000
T8	9	Safety Line 3/8	40.42 - 50.42	0.6000	0.6000
T8	10	Feedline Ladder (Af)	40.42 - 50.42	0.6000	0.6000
T9	1	Climbing Ladder (Af)	30.42 - 40.42	0.6000	0.6000
T9	2	LDF4-50A (1/2 FOAM)	30.42 - 40.42	0.6000	0.6000
T9	3	LDF7-50A (1-5/8 FOAM)	30.42 - 40.42	0.6000	0.6000
T9	4	LDF7-50A (1-5/8 FOAM)	30.42 - 40.42	0.6000	0.6000
T9	5	LDF7-50A (1-5/8 FOAM)	30.42 - 40.42	0.6000	0.6000
T9	6	LDF4-50A (1/2 FOAM)	30.42 - 40.42	0.6000	0.6000
T9	7	1/2" Fiber Cable	30.42 - 40.42	0.6000	0.6000

Tower Section	Feed Line Record No.	Description	Feed Line Segment Elev.	K_a No Ice	K_a Ice
T9	8	3/4" DC Power Line	30.42 - 40.42	0.6000	0.6000
T9	9	Safety Line 3/8	30.42 - 40.42	0.6000	0.6000
T9	10	Feedline Ladder (Af)	30.42 - 40.42	0.6000	0.6000
T10	1	Climbing Ladder (Af)	20.42 - 30.42	0.6000	0.6000
T10	2	LDF4-50A (1/2 FOAM)	20.42 - 30.42	0.6000	0.6000
T10	3	LDF7-50A (1-5/8 FOAM)	20.42 - 30.42	0.6000	0.6000
T10	4	LDF7-50A (1-5/8 FOAM)	20.42 - 30.42	0.6000	0.6000
T10	5	LDF7-50A (1-5/8 FOAM)	20.42 - 30.42	0.6000	0.6000
T10	6	LDF4-50A (1/2 FOAM)	20.42 - 30.42	0.6000	0.6000
T10	7	1/2" Fiber Cable	20.42 - 30.42	0.6000	0.6000
T10	8	3/4" DC Power Line	20.42 - 30.42	0.6000	0.6000
T10	9	Safety Line 3/8	20.42 - 30.42	0.6000	0.6000
T10	10	Feedline Ladder (Af)	20.42 - 30.42	0.6000	0.6000
T11	1	Climbing Ladder (Af)	10.21 - 20.42	0.6000	0.6000
T11	2	LDF4-50A (1/2 FOAM)	10.21 - 20.42	0.6000	0.6000
T11	3	LDF7-50A (1-5/8 FOAM)	10.21 - 20.42	0.6000	0.6000
T11	4	LDF7-50A (1-5/8 FOAM)	10.21 - 20.42	0.6000	0.6000
T11	5	LDF7-50A (1-5/8 FOAM)	10.21 - 20.42	0.6000	0.6000
T11	6	LDF4-50A (1/2 FOAM)	10.21 - 20.42	0.6000	0.6000
T11	7	1/2" Fiber Cable	10.21 - 20.42	0.6000	0.6000
T11	8	3/4" DC Power Line	10.21 - 20.42	0.6000	0.6000
T11	9	Safety Line 3/8	10.21 - 20.42	0.6000	0.6000
T11	10	Feedline Ladder (Af)	10.21 - 20.42	0.6000	0.6000
T12	1	Climbing Ladder (Af)	8.00 - 10.21	0.6000	0.6000
T12	2	LDF4-50A (1/2 FOAM)	8.00 - 10.21	0.6000	0.6000
T12	3	LDF7-50A (1-5/8 FOAM)	8.00 - 10.21	0.6000	0.6000
T12	4	LDF7-50A (1-5/8 FOAM)	8.00 - 10.21	0.6000	0.6000
T12	5	LDF7-50A (1-5/8 FOAM)	8.00 - 10.21	0.6000	0.6000
T12	6	LDF4-50A (1/2 FOAM)	8.00 - 10.21	0.6000	0.6000
T12	7	1/2" Fiber Cable	8.00 - 10.21	0.6000	0.6000
T12	8	3/4" DC Power Line	8.00 - 10.21	0.6000	0.6000
T12	9	Safety Line 3/8	8.00 - 10.21	0.6000	0.6000
T12	10	Feedline Ladder (Af)	8.00 - 10.21	0.6000	0.6000

Discrete Tower Loads

Description	Face or Leg	Offset Type	Offsets: Horz Lateral Vert ft ft ft	Azimuth Adjustment °	Placement ft		C_AA_A Front ft^2	C_AA_A Side ft^2	Weight K
(2) Sabre 6' Sidearm C10-151-006	A	From Face	2.00 0.00 0.00	0.0000	121.00	No Ice 1/2" Ice 1" Ice	2.72 4.11 5.50	12.93 17.82 22.71	0.15 0.22 0.30
(2) Sabre 6' Sidearm C10-151-006	B	From Face	2.00 0.00 0.00	0.0000	121.00	No Ice 1/2" Ice 1" Ice	2.72 4.11 5.50	12.93 17.82 22.71	0.15 0.22 0.30
(2) Sabre 6' Sidearm C10-151-006	C	From Face	2.00 0.00 0.00	0.0000	121.00	No Ice 1/2" Ice 1" Ice	2.72 4.11 5.50	12.93 17.82 22.71	0.15 0.22 0.30
(2) Sabre 6' Sidearm C10-151-006	D	From Face	2.00 0.00 0.00	0.0000	121.00	No Ice 1/2" Ice 1" Ice	2.72 4.11 5.50	12.93 17.82 22.71	0.15 0.22 0.30

Description	Face or Leg	Offset Type	Offsets: Horz Lateral Vert ft ft ft	Azimuth Adjustment °	Placement ft		C_AA_A Front ft^2	C_AA_A Side ft^2	Weight K
Mounting Frame	A	From Leg	4.00	0.0000	121.00	No Ice	9.95	2.47	0.69
			0.00			1/2" Ice	12.85	3.21	0.82
			0.00			1" Ice	15.75	3.95	0.96
Mounting Frame	C	From Leg	4.00	0.0000	121.00	No Ice	9.95	2.47	0.69
			0.00			1/2" Ice	12.85	3.21	0.82
			0.00			1" Ice	15.75	3.95	0.96
Mounting Frame	D	From Leg	4.00	0.0000	121.00	No Ice	9.95	2.47	0.69
			0.00			1/2" Ice	12.85	3.21	0.82
			0.00			1" Ice	15.75	3.95	0.96
Andrew Double Pipe Mount MC-DA14-B	A	From Leg	4.00	0.0000	121.00	No Ice	3.75	1.28	0.08
			0.00			1/2" Ice	4.45	1.39	0.11
			3.00			1" Ice	5.15	1.50	0.14
Andrew Double Pipe Mount MC-DA14-B	B	From Leg	4.00	0.0000	121.00	No Ice	3.75	1.28	0.08
			0.00			1/2" Ice	4.45	1.39	0.11
			3.00			1" Ice	5.15	1.50	0.14
MTS 60" Standoff	C	From Leg	6.00	0.0000	121.00	No Ice	0.98	2.60	0.05
			0.00			1/2" Ice	1.70	4.50	0.07
			3.00			1" Ice	2.42	6.40	0.09
7770.00 w/Mount Pipe	A	From Leg	4.00	18.0000	121.00	No Ice	5.51	4.10	0.06
			0.00			1/2" Ice	5.87	4.73	0.11
			3.00			1" Ice	6.23	5.37	0.16
7770.00 w/Mount Pipe	C	From Leg	4.00	-42.0000	121.00	No Ice	5.51	4.10	0.06
			0.00			1/2" Ice	5.87	4.73	0.11
			3.00			1" Ice	6.23	5.37	0.16
7770.00 w/Mount Pipe	D	From Leg	4.00	-12.0000	121.00	No Ice	5.51	4.10	0.06
			0.00			1/2" Ice	5.87	4.73	0.11
			3.00			1" Ice	6.23	5.37	0.16
HPA-65R-BUU-H8 w/ Mount Pipe	B	From Leg	4.00	-45.0000	121.00	No Ice	13.05	9.42	0.09
			0.00			1/2" Ice	13.66	10.82	0.19
			3.00			1" Ice	14.27	12.07	0.29
HPA-65R-BUU-H8 w/ Mount Pipe	C	From Leg	4.00	-25.0000	121.00	No Ice	13.05	9.42	0.09
			0.00			1/2" Ice	13.66	10.82	0.19
			3.00			1" Ice	14.27	12.07	0.29
HPA-65R-BUU-H8 w/ Mount Pipe	D	From Leg	4.00	-5.0000	121.00	No Ice	13.05	9.42	0.09
			0.00			1/2" Ice	13.66	10.82	0.19
			3.00			1" Ice	14.27	12.07	0.29
TPA-65R-BU8DA-K w/ Mount Pipe	B	From Leg	4.00	-45.0000	121.00	No Ice	17.87	10.02	0.12
			0.00			1/2" Ice	18.50	11.44	0.23
			3.00			1" Ice	19.14	12.72	0.36
TPA-65R-BU8DA-K w/ Mount Pipe	C	From Leg	4.00	-25.0000	121.00	No Ice	17.87	10.02	0.12
			0.00			1/2" Ice	18.50	11.44	0.23
			3.00			1" Ice	19.14	12.72	0.36
TPA-65R-BU8DA-K w/ Mount Pipe	D	From Leg	4.00	-5.0000	121.00	No Ice	17.87	10.02	0.12
			0.00			1/2" Ice	18.50	11.44	0.23
			3.00			1" Ice	19.14	12.72	0.36
DMP65R-BU8D w/ Mount Pipe	B	From Leg	4.00	-45.0000	121.00	No Ice	18.11	10.26	0.13
			0.00			1/2" Ice	18.84	11.78	0.25
			3.00			1" Ice	19.59	13.33	0.38
DMP65R-BU8D w/ Mount Pipe	C	From Leg	4.00	-25.0000	121.00	No Ice	18.11	10.26	0.13
			0.00			1/2" Ice	18.84	11.78	0.25
			3.00			1" Ice	19.59	13.33	0.38
DMP65R-BU8D w/ Mount Pipe	D	From Leg	4.00	-5.0000	121.00	No Ice	18.11	10.26	0.13
			0.00			1/2" Ice	18.84	11.78	0.25
			3.00			1" Ice	19.59	13.33	0.38
(2) LGP21401	A	From Leg	4.00	0.0000	121.00	No Ice	1.10	0.21	0.01
			0.00			1/2" Ice	1.24	0.27	0.02
			3.00			1" Ice	1.38	0.35	0.03

Description	Face or Leg	Offset Type	Offsets: Horz Lateral Vert ft ft ft	Azimuth Adjustment °	Placement ft		C_AA_A Front ft^2	C_AA_A Side ft^2	Weight K
(2) LGP21401	C	From Leg	4.00	0.0000	121.00	No Ice	1.10	0.21	0.01
			0.00			1/2" Ice	1.24	0.27	0.02
			3.00			1" Ice	1.38	0.35	0.03
(2) LGP21401	D	From Leg	4.00	0.0000	121.00	No Ice	1.10	0.21	0.01
			0.00			1/2" Ice	1.24	0.27	0.02
			3.00			1" Ice	1.38	0.35	0.03
RRUS 32 B30	B	From Leg	4.00	0.0000	121.00	No Ice	2.69	1.57	0.06
			0.00			1/2" Ice	2.91	1.76	0.08
			3.00			1" Ice	3.14	1.95	0.10
RRUS 32 B30	C	From Leg	4.00	0.0000	121.00	No Ice	2.69	1.57	0.06
			0.00			1/2" Ice	2.91	1.76	0.08
			3.00			1" Ice	3.14	1.95	0.10
RRUS 32 B30	D	From Leg	4.00	0.0000	121.00	No Ice	2.69	1.57	0.06
			0.00			1/2" Ice	2.91	1.76	0.08
			3.00			1" Ice	3.14	1.95	0.10
RRUS 32 B2	B	From Leg	4.00	0.0000	121.00	No Ice	2.73	1.67	0.05
			0.00			1/2" Ice	2.95	1.86	0.07
			3.00			1" Ice	3.18	2.05	0.10
RRUS 32 B2	C	From Leg	4.00	0.0000	121.00	No Ice	2.73	1.67	0.05
			0.00			1/2" Ice	2.95	1.86	0.07
			3.00			1" Ice	3.18	2.05	0.10
RRUS 32 B2	D	From Leg	4.00	0.0000	121.00	No Ice	2.73	1.67	0.05
			0.00			1/2" Ice	2.95	1.86	0.07
			3.00			1" Ice	3.18	2.05	0.10
RRUS 4478 B14	B	From Leg	4.00	0.0000	121.00	No Ice	1.84	1.06	0.06
			0.00			1/2" Ice	2.01	1.20	0.08
			0.00			1" Ice	2.19	1.34	0.09
RRUS 4478 B14	C	From Leg	4.00	0.0000	121.00	No Ice	1.84	1.06	0.06
			0.00			1/2" Ice	2.01	1.20	0.08
			0.00			1" Ice	2.19	1.34	0.09
RRUS 4478 B14	D	From Leg	4.00	0.0000	121.00	No Ice	1.84	1.06	0.06
			0.00			1/2" Ice	2.01	1.20	0.08
			0.00			1" Ice	2.19	1.34	0.09
RRUS 8843 B2/B66A	B	From Leg	4.00	0.0000	121.00	No Ice	1.64	1.35	0.07
			0.00			1/2" Ice	1.80	1.50	0.09
			3.00			1" Ice	1.97	1.65	0.11
RRUS 8843 B2/B66A	C	From Leg	4.00	0.0000	121.00	No Ice	1.64	1.35	0.07
			0.00			1/2" Ice	1.80	1.50	0.09
			3.00			1" Ice	1.97	1.65	0.11
RRUS 8843 B2/B66A	D	From Leg	4.00	0.0000	121.00	No Ice	1.64	1.35	0.07
			0.00			1/2" Ice	1.80	1.50	0.09
			3.00			1" Ice	1.97	1.65	0.11
RRUS 4449 B5/B12	B	From Leg	4.00	0.0000	121.00	No Ice	1.97	1.41	0.07
			0.00			1/2" Ice	2.14	1.56	0.09
			3.00			1" Ice	2.33	1.73	0.11
RRUS 4449 B5/B12	C	From Leg	4.00	0.0000	121.00	No Ice	1.97	1.41	0.07
			0.00			1/2" Ice	2.14	1.56	0.09
			3.00			1" Ice	2.33	1.73	0.11
RRUS 4449 B5/B12	D	From Leg	4.00	0.0000	121.00	No Ice	1.97	1.41	0.07
			0.00			1/2" Ice	2.14	1.56	0.09
			3.00			1" Ice	2.33	1.73	0.11
16' Dipole	A	From Leg	4.00	0.0000	121.00	No Ice	5.01	5.01	0.06
			0.00			1/2" Ice	6.84	6.84	0.10
			8.00			1" Ice	8.49	8.49	0.14
DC6-48-60-18-8F Surge Suppression Unit	B	From Leg	4.00	0.0000	121.00	No Ice	0.92	0.92	0.02
			0.00			1/2" Ice	1.46	1.46	0.04
			3.00			1" Ice	1.64	1.64	0.06

Description	Face or Leg	Offset Type	Offsets: Horz Lateral Vert ft ft ft	Azimuth Adjustment °	Placement ft		C_AA_A Front ft^2	C_AA_A Side ft^2	Weight K
DC6-48-60-18-8F Surge Suppression Unit	C	From Leg	4.00 0.00 3.00	0.0000	121.00	No Ice 1/2" Ice 1" Ice	0.92 1.46 1.64	0.92 1.46 1.64	0.02 0.04 0.06
DC9-48-60-24-8C-EV	D	From Leg	4.00 0.00 3.00	0.0000	121.00	No Ice 1/2" Ice 1" Ice	2.74 2.96 3.20	4.78 5.06 5.35	0.03 0.06 0.10

Load Combinations

Comb. No.	Description
1	Dead Only
2	1.2 Dead+1.6 Wind 0 deg - No Ice
3	0.9 Dead+1.6 Wind 0 deg - No Ice
4	1.2 Dead+1.6 Wind 45 deg - No Ice
5	0.9 Dead+1.6 Wind 45 deg - No Ice
6	1.2 Dead+1.6 Wind 90 deg - No Ice
7	0.9 Dead+1.6 Wind 90 deg - No Ice
8	1.2 Dead+1.6 Wind 135 deg - No Ice
9	0.9 Dead+1.6 Wind 135 deg - No Ice
10	1.2 Dead+1.6 Wind 180 deg - No Ice
11	0.9 Dead+1.6 Wind 180 deg - No Ice
12	1.2 Dead+1.6 Wind 225 deg - No Ice
13	0.9 Dead+1.6 Wind 225 deg - No Ice
14	1.2 Dead+1.6 Wind 270 deg - No Ice
15	0.9 Dead+1.6 Wind 270 deg - No Ice
16	1.2 Dead+1.6 Wind 315 deg - No Ice
17	0.9 Dead+1.6 Wind 315 deg - No Ice
18	1.2 Dead+1.0 Ice+1.0 Temp
19	1.2 Dead+1.0 Wind 0 deg+1.0 Ice+1.0 Temp
20	1.2 Dead+1.0 Wind 45 deg+1.0 Ice+1.0 Temp
21	1.2 Dead+1.0 Wind 90 deg+1.0 Ice+1.0 Temp
22	1.2 Dead+1.0 Wind 135 deg+1.0 Ice+1.0 Temp
23	1.2 Dead+1.0 Wind 180 deg+1.0 Ice+1.0 Temp
24	1.2 Dead+1.0 Wind 225 deg+1.0 Ice+1.0 Temp
25	1.2 Dead+1.0 Wind 270 deg+1.0 Ice+1.0 Temp
26	1.2 Dead+1.0 Wind 315 deg+1.0 Ice+1.0 Temp
27	Dead+Wind 0 deg - Service
28	Dead+Wind 45 deg - Service
29	Dead+Wind 90 deg - Service
30	Dead+Wind 135 deg - Service
31	Dead+Wind 180 deg - Service
32	Dead+Wind 225 deg - Service
33	Dead+Wind 270 deg - Service
34	Dead+Wind 315 deg - Service

Maximum Tower Deflections - Service Wind

Section No.	Elevation ft	Horz. Deflection in	Gov. Load Comb.	Tilt °	Twist °
T1	121 - 110	1.964	32	0.1248	0.0096
T2	110 - 100.417	1.663	32	0.1221	0.0053
T3	100.417 - 90.4167	1.412	32	0.1168	0.0032
T4	90.4167 - 80.4167	1.160	32	0.1077	0.0012
T5	80.4167 - 70.4167	0.936	32	0.0962	0.0018
T6	70.4167 - 60.4167	0.739	32	0.0825	0.0023
T7	60.4167 - 50.4167	0.565	32	0.0734	0.0025
T8	50.4167 - 40.4167	0.411	32	0.0633	0.0024
T9	40.4167 - 30.4167	0.278	32	0.0523	0.0021
T10	30.4167 - 20.4167	0.170	32	0.0404	0.0017
T11	20.4167 - 10.2083	0.086	32	0.0277	0.0012
T12	10.2083 - 0	0.028	32	0.0141	0.0006

Critical Deflections and Radius of Curvature - Service Wind

Elevation ft	Appurtenance	Gov. Load Comb.	Deflection in	Tilt °	Twist °	Radius of Curvature ft
121.00	(2) Sabre 6' Sidearm C10-151-006	32	1.964	0.1248	0.0096	165939

Maximum Tower Deflections - Design Wind

Section No.	Elevation ft	Horz. Deflection in	Gov. Load Comb.	Tilt °	Twist °
T1	121 - 110	8.834	12	0.5562	0.0435
T2	110 - 100.417	7.490	12	0.5457	0.0242
T3	100.417 - 90.4167	6.364	12	0.5234	0.0147
T4	90.4167 - 80.4167	5.234	12	0.4838	0.0058
T5	80.4167 - 70.4167	4.227	12	0.4328	0.0080
T6	70.4167 - 60.4167	3.337	12	0.3717	0.0104
T7	60.4167 - 50.4167	2.553	12	0.3310	0.0111
T8	50.4167 - 40.4167	1.857	12	0.2857	0.0107
T9	40.4167 - 30.4167	1.259	12	0.2360	0.0094
T10	30.4167 - 20.4167	0.767	12	0.1824	0.0076
T11	20.4167 - 10.2083	0.389	12	0.1253	0.0053
T12	10.2083 - 0	0.128	12	0.0636	0.0027

Critical Deflections and Radius of Curvature - Design Wind

Elevation ft	Appurtenance	Gov. Load Comb.	Deflection in	Tilt °	Twist °	Radius of Curvature ft
121.00	(2) Sabre 6' Sidearm C10-151-006	12	8.834	0.5562	0.0435	40025

Bolt Design Data

Section No.	Elevation ft	Component Type	Bolt Grade	Bolt Size in	Number Of Bolts	Maximum Load per Bolt K	Allowable Load per Bolt K	Ratio Load / Allowable	Allowable Ratio	Criteria
T1	121	Leg	A325N	0.6250	8	2.96	24.85	0.119 ✔	1	Bolt DS
		Diagonal	A325N	0.6250	2	3.55	7.19	0.493 ✔	1	Member Block Shear
		Secondary Horizontal	A325N	0.6250	1	0.23	7.66	0.031 ✔	1	Member Block Shear
		Top Girt	A325N	0.6250	1	0.53	13.66	0.038 ✔	1	Member Block Shear
T2	110	Leg	A325N	0.6250	8	6.71	24.85	0.270 ✔	1	Bolt DS
		Diagonal	A325N	0.6250	2	3.85	8.22	0.468 ✔	1	Member Block Shear
		Secondary Horizontal	A325N	0.6250	1	0.40	7.66	0.053 ✔	1	Member Block Shear
		Top Girt	A325N	0.6250	1	1.97	13.66	0.144 ✔	1	Member Block Shear
T3	100.417	Leg	A325N	0.6250	16	5.56	24.85	0.224 ✔	1	Bolt DS
		Diagonal	A325N	0.6250	2	4.92	7.70	0.639 ✔	1	Member Block Shear
		Secondary Horizontal	A325N	0.6250	1	0.67	7.66	0.087 ✔	1	Member Block Shear
		Top Girt	A325N	0.6250	1	3.74	13.66	0.274 ✔	1	Member Block Shear
T4	90.4167	Leg	A325N	0.6250	16	7.65	24.85	0.308 ✔	1	Bolt DS
		Diagonal	A325N	0.6250	2	5.33	10.26	0.519 ✔	1	Member Block Shear
		Secondary Horizontal	A325N	0.6250	1	0.92	7.66	0.120 ✔	1	Member Block Shear
		Top Girt	A325N	0.6250	1	5.05	13.66	0.369 ✔	1	Member Block Shear
T5	80.4167	Leg	A325N	0.6250	24	6.55	24.85	0.263 ✔	1	Bolt DS
		Diagonal	A325N	0.6250	2	5.79	12.34	0.470 ✔	1	Member Block Shear
		Secondary Horizontal	A325N	0.6250	1	1.18	7.66	0.154 ✔	1	Member Block Shear
		Top Girt	A325N	0.6250	2	4.29	12.34	0.348 ✔	1	Member Block Shear
T6	70.4167	Leg	A325N	0.7500	24	8.43	35.78	0.236 ✔	1	Bolt DS
		Diagonal	A325N	0.6250	2	4.87	10.26	0.474 ✔	1	Member Block Shear
		Secondary Horizontal	A325N	0.6250	1	1.52	7.66	0.198 ✔	1	Member Block Shear
		Top Girt	A325N	0.6250	2	3.83	12.34	0.310 ✔	1	Member Block Shear
T7	60.4167	Leg	A325N	0.7500	24	9.97	35.78	0.279 ✔	1	Bolt DS
		Diagonal	A325N	0.6250	2	5.33	10.26	0.519 ✔	1	Member Block Shear
		Secondary Horizontal	A325N	0.6250	1	1.79	7.66	0.234 ✔	1	Member Block Shear
		Top Girt	A325N	0.6250	2	3.36	14.38	0.233 ✔	1	Member Block Shear
T8	50.4167	Leg	A325N	0.7500	28	9.93	35.78	0.278 ✔	1	Bolt DS
		Diagonal	A325N	0.6250	2	5.57	10.26	0.542 ✔	1	Member Block Shear

Section No.	Elevation ft	Component Type	Bolt Grade	Bolt Size in	Number Of Bolts	Maximum Load per Bolt K	Allowable Load per Bolt K	Ratio Load / Allowable	Allowable Ratio	Criteria
		Secondary Horizontal	A325N	0.6250	1	2.09	7.66	0.273 ✔	1	Member Block Shear
		Top Girt	A325N	0.6250	2	3.66	10.26	0.357 ✔	1	Member Block Shear
T9	40.4167	Leg	A325N	0.7500	32	9.90	35.78	0.277 ✔	1	Bolt DS
		Diagonal	A325N	0.6250	2	5.90	10.26	0.575 ✔	1	Member Block Shear
		Secondary Horizontal	A325N	0.6250	1	2.38	7.66	0.311 ✔	1	Member Block Shear
		Top Girt	A325N	0.6250	2	3.94	10.26	0.384 ✔	1	Member Block Shear
T10	30.4167	Leg	A325N	0.7500	36	9.89	35.78	0.276 ✔	1	Bolt DS
		Diagonal	A325N	0.6250	2	6.13	10.26	0.597 ✔	1	Member Block Shear
		Secondary Horizontal	A325N	0.6250	1	2.67	7.66	0.349 ✔	1	Member Block Shear
		Top Girt	A325N	0.6250	2	4.13	10.26	0.403 ✔	1	Member Block Shear
T11	20.4167	Leg	A325N	0.7500	40	9.90	35.78	0.277 ✔	1	Bolt DS
		Diagonal	A325N	0.6250	2	6.41	10.26	0.625 ✔	1	Member Block Shear
		Secondary Horizontal	A325N	0.6250	1	2.97	7.66	0.388 ✔	1	Member Block Shear
		Top Girt	A325N	0.6250	2	4.37	12.34	0.354 ✔	1	Member Block Shear
T12	10.2083	Leg	A325N	0.7500	40	10.76	35.78	0.301 ✔	1	Bolt DS
		Diagonal	A325N	0.6250	2	7.34	10.26	0.715 ✔	1	Member Block Shear
		Secondary Horizontal	A325N	0.6250	1	3.23	10.21	0.316 ✔	1	Member Block Shear
		Top Girt	A325N	0.6250	2	5.32	12.34	0.431 ✔	1	Member Block Shear

Section Capacity Table

Section No.	Elevation ft	Component Type	Size	Critical Element	P K	ϕP_{allow} K	% Capacity	Pass Fail
T1	121 - 110	Leg	L5x5x1/2	1	-11.85	153.72	7.7	Pass
T2	110 - 100.417	Leg	L5x5x1/2	21	-26.82	166.43	16.1	Pass
T3	100.417 - 90.4167	Leg	L5x5x1/2	41	-44.45	162.77	27.3	Pass
T4	90.4167 - 80.4167	Leg	L5x5x1/2	61	-61.20	158.86	38.5	Pass
T5	80.4167 - 70.4167	Leg	L5x5x1/2	81	-78.56	159.23	49.3	Pass
T6	70.4167 - 60.4167	Leg	L6x6x3/4	101	-101.22	309.07	32.7	Pass
T7	60.4167 - 50.4167	Leg	L6x6x3/4	121	-119.62	309.46	38.7	Pass
T8	50.4167 - 40.4167	Leg	L6x6x3/4	141	-139.07	309.64	44.9	Pass
T9	40.4167 -	Leg	L6x6x3/4	161	-158.47	309.95	51.1	Pass

Section No.	Elevation ft	Component Type	Size	Critical Element	P K	ϕP_{allow} K	% Capacity	Pass Fail
	30.4167							
T10	30.4167 - 20.4167	Leg	L6x6x3/4	181	-178.05	310.08	57.4	Pass
T11	20.4167 - 10.2083	Leg	L6x6x3/4	201	-197.91	307.71	64.3	Pass
T12	10.2083 - 0	Leg	L6x6x3/4	221	-215.19	307.82	69.9	Pass
T1	121 - 110	Diagonal	L2 1/2x2 1/2x3/16	9	-7.64	10.13	75.4	Pass
T2	110 - 100.417	Diagonal	L2x3x1/4	29	-8.30	12.81	64.8	Pass
T3	100.417 - 90.4167	Diagonal	L3x3x3/16	49	-10.41	17.20	60.5	Pass
T4	90.4167 - 80.4167	Diagonal	L3x3x1/4	69	-11.44	21.38	53.5	Pass
T5	80.4167 - 70.4167	Diagonal	2L2x2x3/16	89	-12.31	21.71	56.7	Pass
T6	70.4167 - 60.4167	Diagonal	L3x3x1/4	109	-10.05	20.14	49.9	Pass
T7	60.4167 - 50.4167	Diagonal	L3x3x1/4	133	-10.92	19.49	56.1	Pass
T8	50.4167 - 40.4167	Diagonal	L3x3x1/4	153	-11.32	18.78	60.3	Pass
T9	40.4167 - 30.4167	Diagonal	L3x3x1/4	173	-11.91	18.07	65.9	Pass
T10	30.4167 - 20.4167	Diagonal	L3x3x1/4	193	-12.25	17.31	70.8	Pass
T11	20.4167 - 10.2083	Diagonal	L3x3x1/4	213	-12.64	16.32	77.4	Pass
T12	10.2083 - 0	Diagonal	L3x3x1/4	233	-14.58	15.63	93.3	Pass
T1	121 - 110	Secondary Horizontal	L2x2x3/16	19	-0.23	14.20	1.6	Pass
T2	110 - 100.417	Secondary Horizontal	L2x2x3/16	37	-0.40	14.20	2.8	Pass
T3	100.417 - 90.4167	Secondary Horizontal	L2x2x3/16	57	-0.67	14.20	4.7	Pass
T4	90.4167 - 80.4167	Secondary Horizontal	L2x2x3/16	77	-0.92	13.76	6.7	Pass
T5	80.4167 - 70.4167	Secondary Horizontal	L2x2x3/16	97	-1.18	12.85	9.2	Pass
T6	70.4167 - 60.4167	Secondary Horizontal	L2x2x3/16	120	-1.52	11.95	12.7	Pass
T7	60.4167 - 50.4167	Secondary Horizontal	L2x2x3/16	137	-1.79	11.03	16.3	Pass
T8	50.4167 - 40.4167	Secondary Horizontal	L2x2x3/16	160	-2.09	9.64	21.7	Pass
T9	40.4167 - 30.4167	Secondary Horizontal	L2x2x3/16	177	-2.38	8.49	28.0	Pass
T10	30.4167 - 20.4167	Secondary Horizontal	L2x2x3/16	197	-2.67	7.54	35.4	Pass
T11	20.4167 - 10.2083	Secondary Horizontal	L2x2x3/16	217	-2.97	6.74	44.1	Pass
T12	10.2083 - 0	Secondary Horizontal	L2x2x1/4	237	-3.23	7.83	41.3	Pass
T1	121 - 110	Top Girt	2L2x2x3/16	7	-0.36	22.57	1.6	Pass
T2	110 - 100.417	Top Girt	2L2x2x3/16	27	-1.52	22.57	6.8	Pass
T3	100.417 - 90.4167	Top Girt	2L2x2x3/16	47	-3.17	22.57	14.0	Pass
T4	90.4167 - 80.4167	Top Girt	2L2x2x3/16	67	-4.46	22.57	19.8	Pass
T5	80.4167 - 70.4167	Top Girt	2L2x2x3/16	87	-7.69	20.91	36.8	Pass
T6	70.4167 - 60.4167	Top Girt	2L2x2x3/16	107	-6.89	19.16	36.0	Pass
T7	60.4167 - 50.4167	Top Girt	2L2 1/2x2 1/2x3/16	127	-6.07	28.70	21.1	Pass
T8	50.4167 -	Top Girt	L3x3x1/4	147	-6.62	15.08	43.9	Pass

Section No.	Elevation ft	Component Type	Size	Critical Element	P K	ϕP_{allow} K	% Capacity	Pass Fail
	40.4167							
T9	40.4167 - 30.4167	Top Girt	L3x3x1/4	167	-7.11	13.75	51.8	Pass
T10	30.4167 - 20.4167	Top Girt	L3x3x1/4	187	-7.47	12.60	59.3	Pass
T11	20.4167 - 10.2083	Top Girt	2L2x2x3/16	207	-7.90	12.20	64.7	Pass
T12	10.2083 - 0	Top Girt	2L2x2x3/16	225	-9.59	11.27	85.1	Pass

Summary	ELC:	Existing + Proposed
Leg (T12)	69.9	Pass
Diagonal (T12)	93.3	Pass
Secondary Horizontal (T11)	44.1	Pass
Top Girt (T12)	85.1	Pass
Bolt Checks	71.5	Pass
Rating =	93.3	Pass

APPENDIX C

Additional Calculations

Self-Support Anchor Rod Analysis
65054 (CT1065) LEBANON
2020723.21.65054.04

General Info	
Code	TIA-222-G
Modified Anchor Rods	No
Clear Distance > d_b	No
Leg Eccentricity	No
Max Capacity	1.05

Tower Reactions		
Detail Type =	c	
Eta Factor, η =	0.55	
Uplift, P_u =	229.58	kips
Uplift Shear, V_u =	23.31	kips

Anchor Rods		
Number of Anchor Rods, N =	4	
Anchor Rod Grade =	A36	
Anchor Rod Diameter, d_b =	2	in
Bolt Circle, BC =	8	in
Yield, F_y =	36	ksi
Tensile, F_{ub} =	58	ksi

Anchor Rod Results		
$(P_u + V_u/\eta)$ =	68.0	kips
$\phi * R_{nt} = \phi * F_{ub} * A_n$ =	116.0	kips
Anchor Rod Stress Ratio =	58.6%	OK

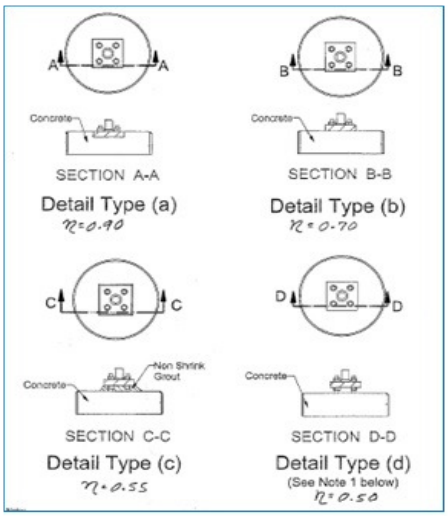

Figure 4-4 of TIA-222-G

GPD Self-Support Anchor Rod Analysis - V1.1

SST Unit Base Foundation

BU # :	65054 (CT1065)
Site Name:	LEBANON
App. Number:	2020723.21.65054
TIA-222 Revision:	G

Top & Bot. Pad Rein. Different?:	☐
Tower Centroid Offset?:	☐
Block Foundation?:	☐

Superstructure Analysis Reactions		
Global Moment, **M**:	3674.25	ft-kips
Global Axial, **P**:	34.51	kips
Global Shear, **V**:	48.63	kips
Leg Compression, $\mathbf{P_{comp}}$:	234.18	kips
Leg Comp. Shear, $\mathbf{V_{u\_comp}}$:	23.11	kips
Leg Uplift, $\mathbf{P_{uplift}}$:	229.58	kips
Leg Uplift. Shear, $\mathbf{V_{u\_uplift}}$:	23.31	kips
Tower Height, **H**:	121	ft
Base Face Width, **BW**:	11.25	ft
BP Dist. Above Fdn, $\mathbf{bp_{dist}}$:	3	in

Foundation Analysis Checks	Capacity	Demand	Rating	Check
Lateral (Sliding) (kips)	468.11	48.63	**10.4%**	**Pass**
Bearing Pressure (ksf)	38.00	9.24	**24.3%**	**Pass**
*Overturning (kip*ft)*	4360.90	4002.50	**91.8%**	**Pass**
*Pier Flexure (Comp.) (kip*ft)*	873.39	80.89	**9.3%**	**Pass**
*Pier Flexure (Tension) (kip*ft)*	536.07	81.59	**15.2%**	**Pass**
Pier Compression (kip)	4296.24	239.85	**5.6%**	**Pass**
*Pad Flexure (kip*ft)*	3565.06	1804.49	**50.6%**	**Pass**
Pad Shear - 1-way (kips)	714.28	324.35	**45.4%**	**Pass**
Pad Shear - Comp 2-way (ksi)	0.164	0.035	**21.5%**	**Pass**

Pier Properties		
Pier Shape:	Square	
Pier Diameter, **dpier**:	3.0	ft
Ext. Above Grade, **E**:	1.00	ft
Pier Rebar Size, **Sc**:	8	
Pier Rebar Quantity, **mc**:	16	
Pier Tie/Spiral Size, **St**:	4	
Pier Tie/Spiral Quantity, **mt**:	6	
Pier Reinforcement Type:	Tie	
Pier Clear Cover, $\mathbf{cc_{pier}}$:	3	in

Soil Rating:	**91.8%**
Structural Rating:	**50.6%**

Pad Properties		
Depth, **D**:	5.50	ft
Pad Width, **W**:	23.00	ft
Pad Thickness, **T**:	3.00	ft
Pad Rebar Size (Bottom), **Sp**:	8	
Pad Rebar Quantity (Bottom), **mp**:	33	
Pad Clear Cover, $\mathbf{cc_{pad}}$:	3	in

Material Properties		
Rebar Grade, **Fy**:	60	ksi
Concrete Compressive Strength, **F'c**:	3	ksi
Dry Concrete Density, δ**c**:	150	pcf

Soil Properties		
Total Soil Unit Weight, γ:	120	pcf
Ultimate Net Bearing, Qnet:	50.000	ksf
Cohesion, **Cu**:	15.000	ksf
Friction Angle, φ:		degrees
SPT Blow Count, $\mathbf{N_{blows}}$:		
Base Friction, μ:	0.7	
Neglected Depth, **N**:	5.0	ft
Foundation Bearing on Rock?	Yes	
Groundwater Depth, **gw**:	99	ft

<-- Toggle between Gross and Net

Version 3.2.1

MOUNT ANALYSIS REPORT

Prepared for: Smartlink / AT&T

Site No.:	CTL01065
FA#:	10084914
Site Location:	244 Gates Road Lebanon, CT 06249
Rad Center:	124ft
Proposed Stress Ratio:	99.9%
Result:	Pass

August 6, 2020

Henry M. Bellagamba, P.E.

FULLERTON
ENGINEERING · DESIGN

Fullerton Engineering, P.C.
1100 E. Woodfield Road, Suite 500
Schaumburg, IL 60173
Tel: 847.908.8400
www.fullertonengineering.com

Project Number: 2020.0032.0027

REPORT INDEX

Project Summary	.....	3-4
RISA Model Rendering	.....	5-20
Loading Information	.....	21
Calculations	.....	22-35
RFDS	.....	36-41
Mount Analysis Checklist	.....	42

Summary

This structural assessment is in regards to the adequacy of the proposed antenna mounting fames for the AT&T LTE BWE/5G NR/4TX4RX Retrofit/5C project. The purpose was to determine conformance of the proposed antenna mounting structure under the 2018 Connecticut State Building Code and the industry standard ANSI/TIA-222-H (Structural Standard for Antenna Supporting Structures, Antennas and Small Wind Turbine Support Structures).

Based on collected information via site visit photos dated 11/21/2016, Mount Analysis by Fullerton Engineering dated 02/01/2017, existing and proposed loading presented in the RFDS provided by AT&T dated 03/18/2020 Ver. 1.00, technical data of the proposed equipment, structural calculations and engineering judgment, the proposed antenna mounting frames are **adequate** to support the proposed installation for the above-referenced program, **with a maximum stress ratio of 99.9%.**

Final Configuration Loading:

CARRIER	RAD CENTER (FT)	QTY.	MANUFACTURER	MODEL	AZMIMUTH	POSITION
AT&T	124’-0”	3	CCI	DMP65R-BU8DA	40°/160°/270°	A4, B4, C4
		3	CCI	TPA-65R-BU8DA-K	40°/160°/270°	A3, B3, C3
		3	CCI	HPA-65R-BUU-H8	40°/160°/270°	A2, B2, C2
		3	Powerwave	7770	143°/263°/23°	A1, B1, C1
		3	Ericsson	RRUS-4449 B5/B12	N/A	A4, B4, C4
		3	Ericsson	RRUS-32 B2	N/A	A3, B3, C3
		3	Ericsson	RRUS-8843 B2/B66A	N/A	A3, B3, C3
		3	Ericsson	RRUS-4478 B14	N/A	A3, B3, C3
		3	Ericsson	RRUS-32 B30	N/A	A2, B2, C2
		6	Powerwave	LGP21401	N/A	A1, B1, C1
		3	Raycap	DC9-48-60-24-8C-EV	N/A	

Member Component Capacity Table:

Component	% Capacity	Pass / Fail
Face Horizontals	40.8%	Pass
Standoff Members	99.9%	Pass
Mounting Pipes	56.7%	Pass
Tie Backs	11.2%	Pass
Mount-to-Tower Connection, U-Bolts	45.53%	Pass
Mount-to-Tower Connection, Threaded Rods	31.65%	Pass

Structural Rating (max from all components) =	**99.9%**

Summary

This PE certification completed by Fullerton Engineering, P.C. is inclusive of the proposed antenna mounting structure that will support the existing and proposed loading provided by the client.

This certification assumes that all the structural members of the proposed antenna mounting structure are in good condition and have not been altered from the manufacturer's original design. Prior to installation of new equipment, contractor shall inspect the condition of all relevant members and connectors. The contractor shall be responsible for the means and methods of construction.

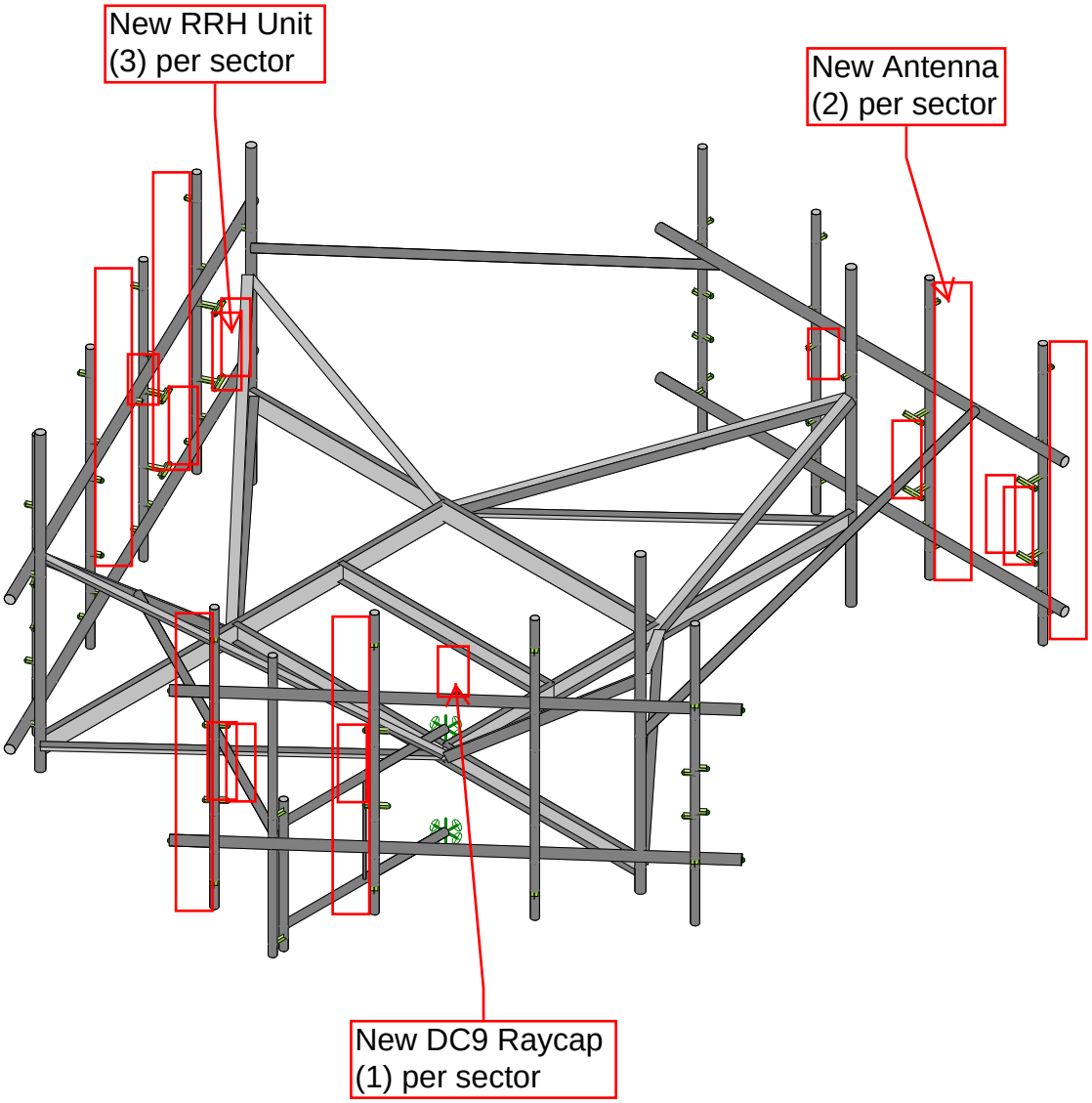

Envelope Only Solution

Fullerton Engineering, P.C.		SK - 1
GO	Mount Analysis	Aug 6, 2020 at 2:38 PM
CTL01065	3D Render	CTL01065-Mount Analysis.r3d

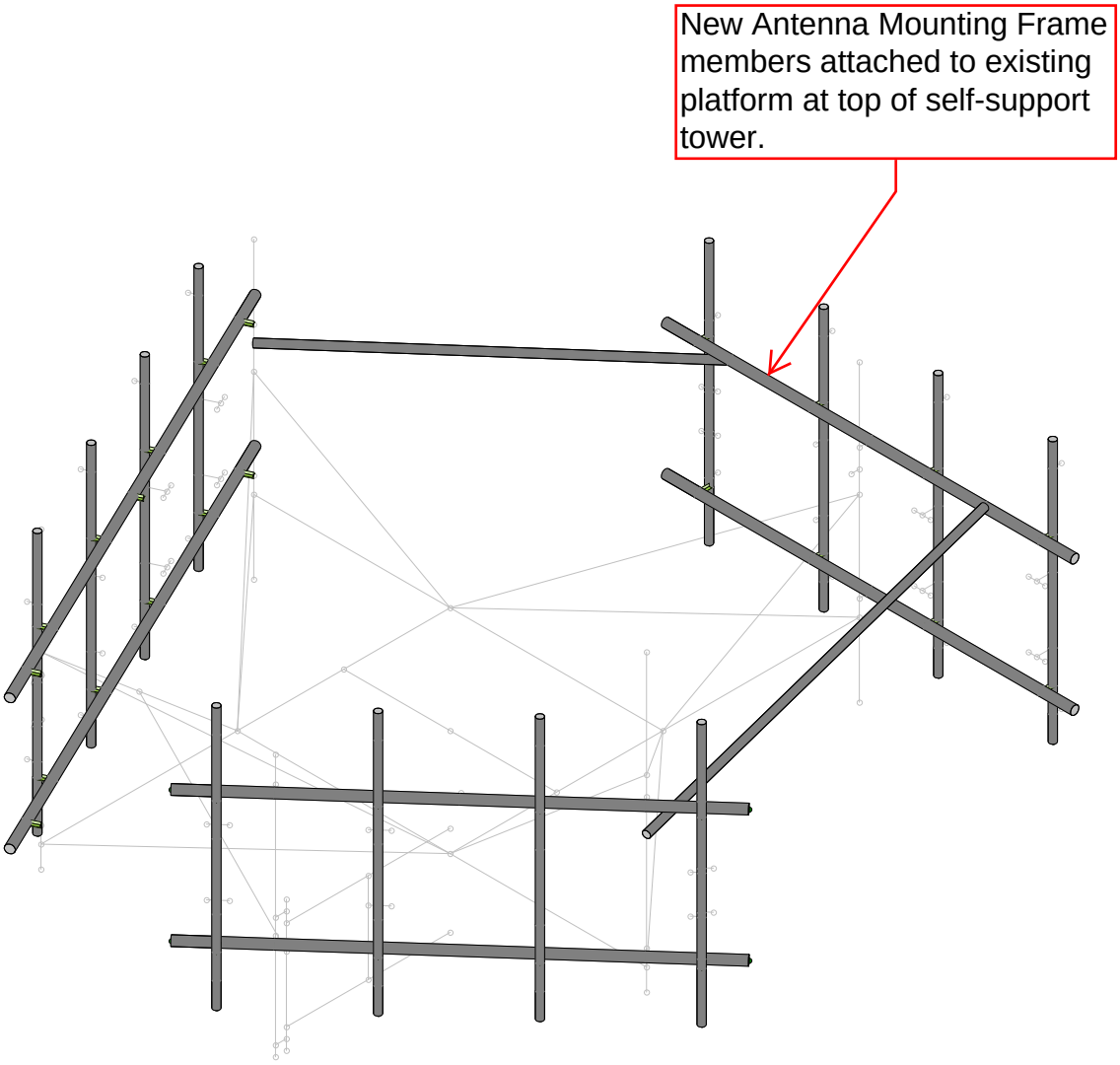

Envelope Only Solution

Fullerton Engineering, P.C.		SK - 2
GO	Mount Analysis	Aug 6, 2020 at 2:41 PM
CTL01065	New Mounting Frames	CTL01065-Mount Analysis.r3d

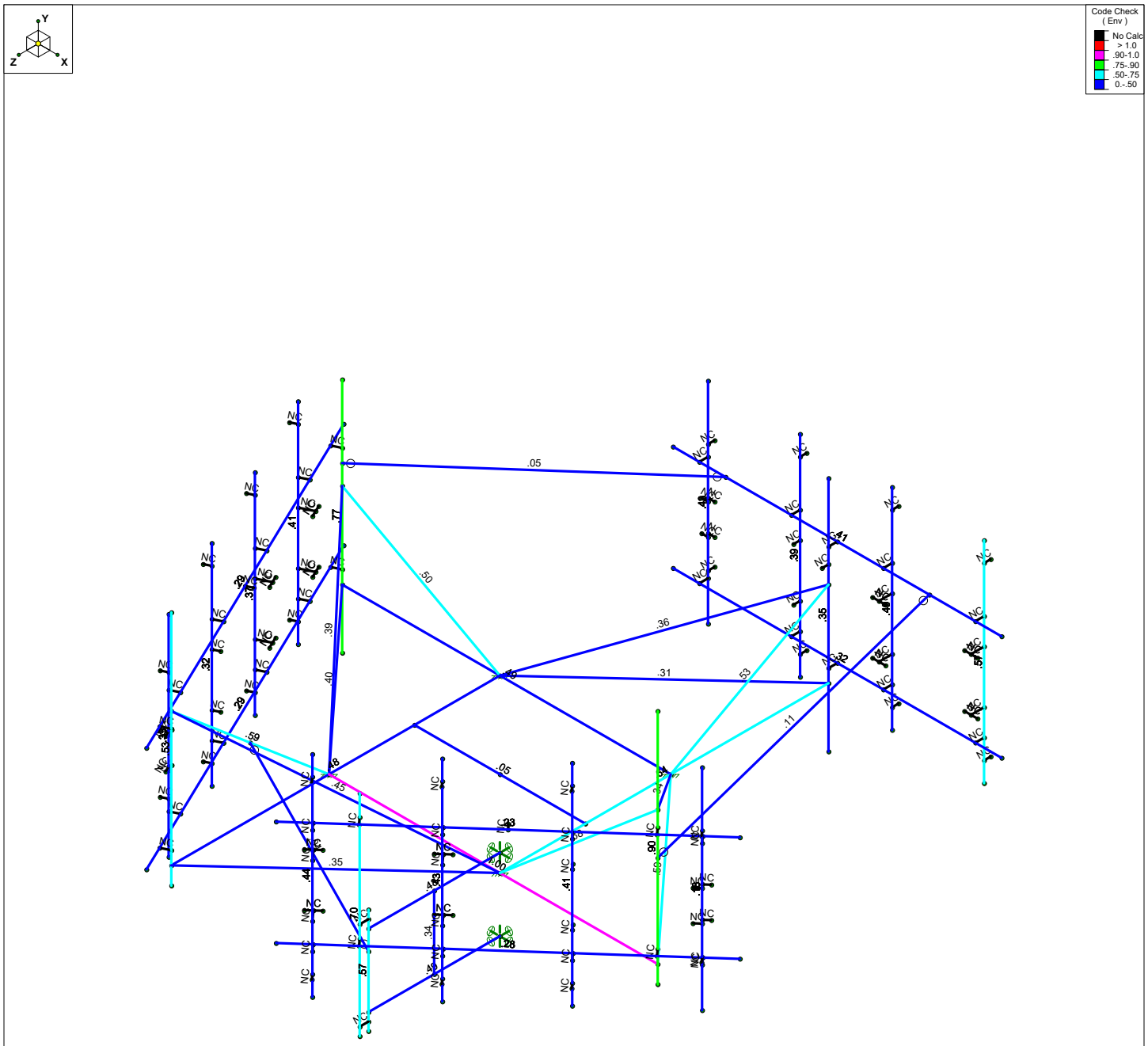

Member Code Checks Displayed (Enveloped)
Envelope Only Solution

Fullerton Engineering, P.C.		SK - 3
GO	Mount Analysis	Aug 6, 2020 at 2:41 PM
CTL01065	Unity Graphic	CTL01065-Mount Analysis.r3d

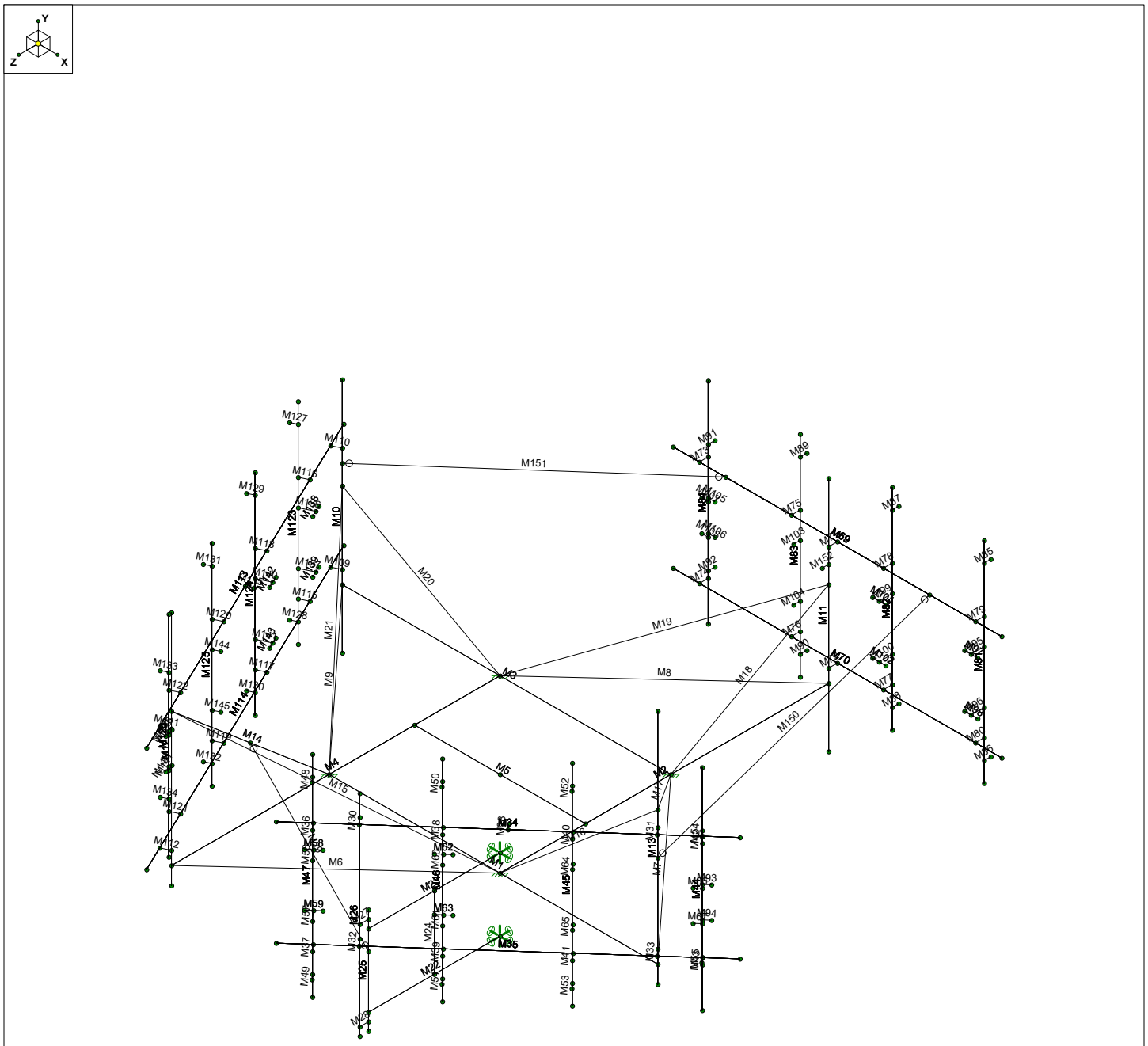

Envelope Only Solution

Fullerton Engineering, P.C.		SK - 4
GO	Mount Analysis	Aug 6, 2020 at 2:42 PM
CTL01065	Member Label	CTL01065-Mount Analysis.r3d

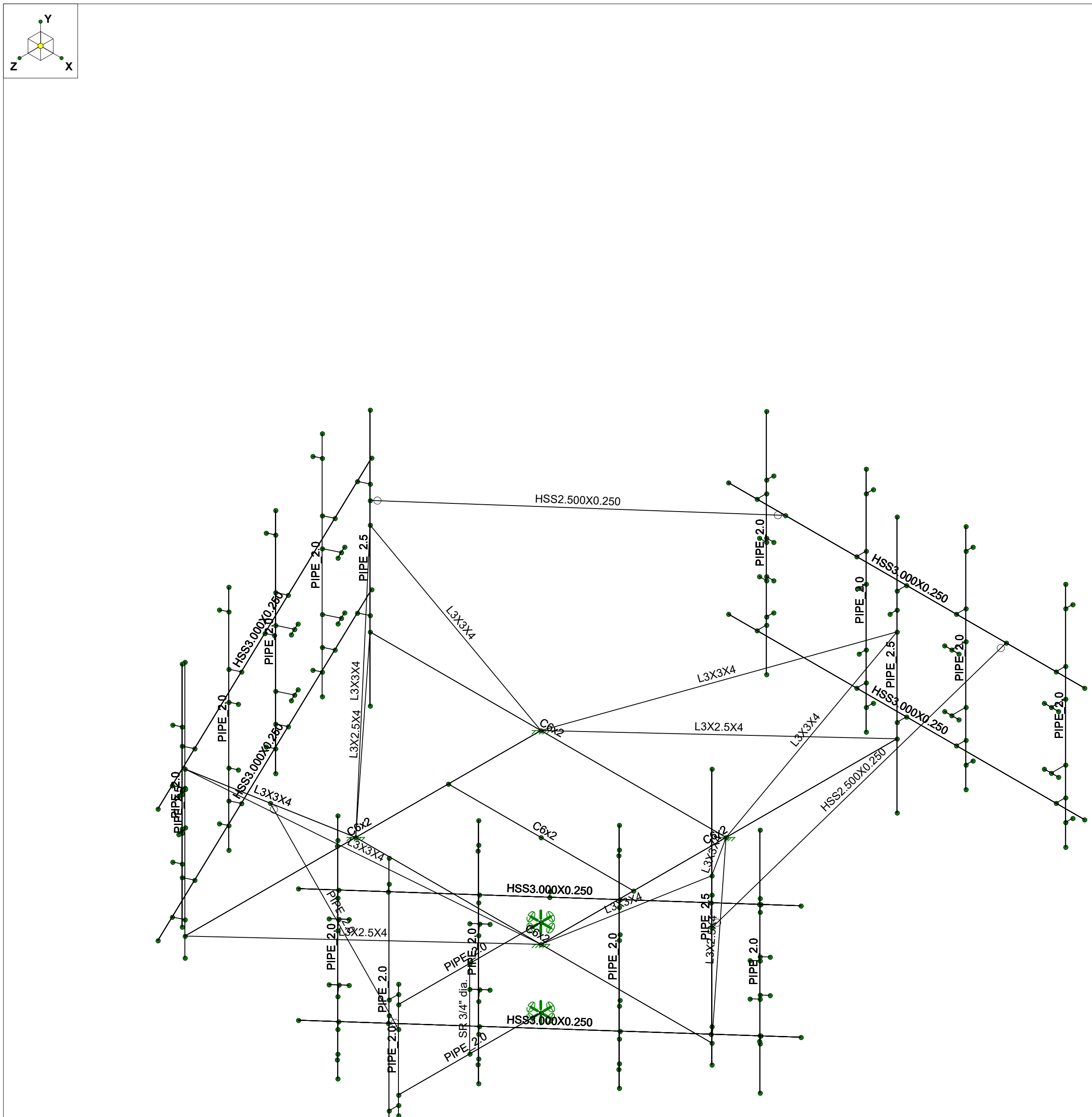

Envelope Only Solution

Fullerton Engineering, P.C.		SK - 5
GO	Mount Analysis	Aug 6, 2020 at 2:42 PM
CTL01065	Shape	CTL01065-Mount Analysis.r3d

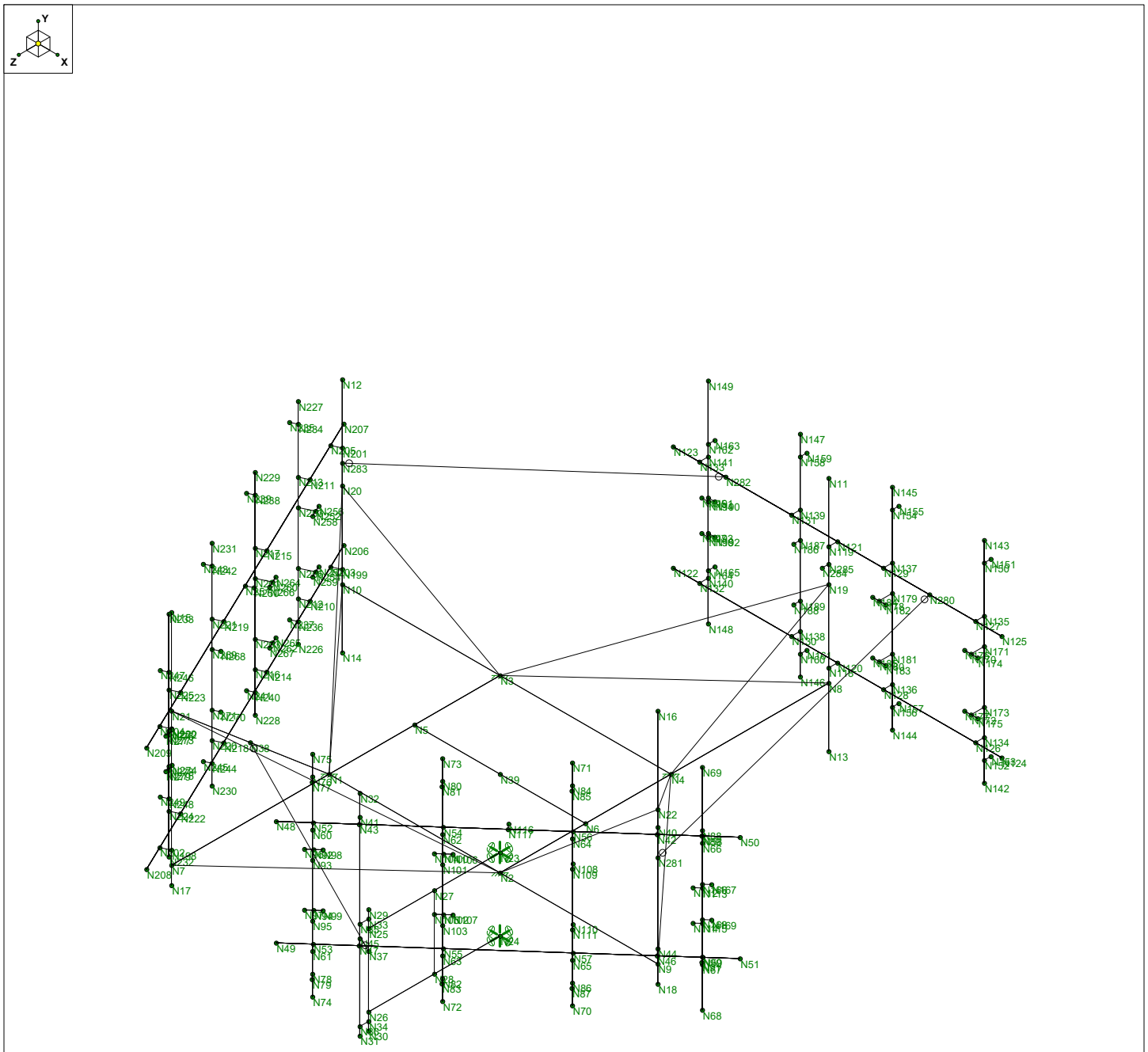

Envelope Only Solution

Fullerton Engineering, P.C.		SK - 6
GO	Mount Analysis	Aug 6, 2020 at 2:42 PM
CTL01065	Nodes	CTL01065-Mount Analysis.r3d

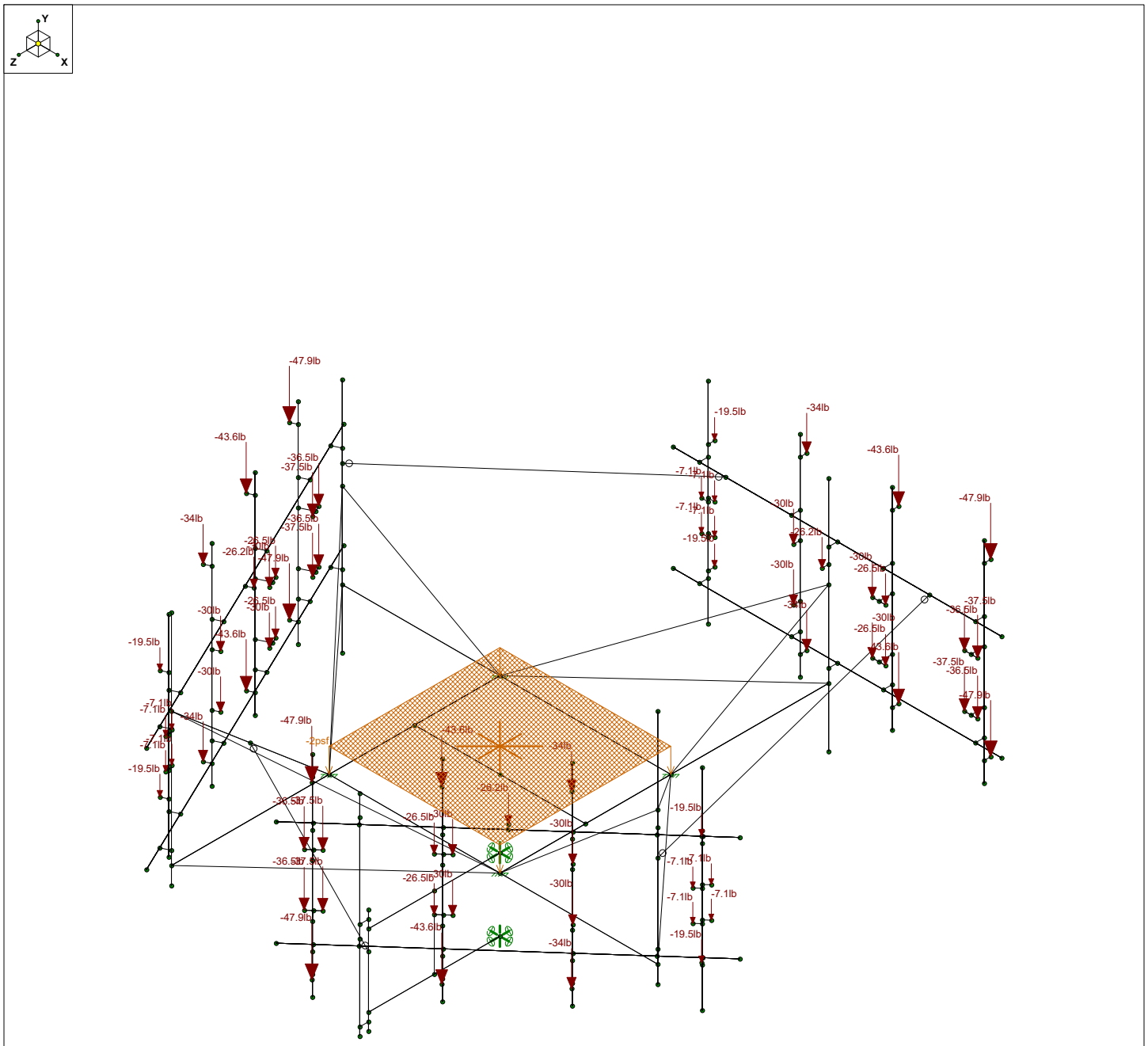

Loads: BLC 1, DL
Envelope Only Solution

Fullerton Engineering, P.C.		SK - 7
GO	Mount Analysis	Aug 6, 2020 at 2:42 PM
CTL01065	Dead Load	CTL01065-Mount Analysis.r3d

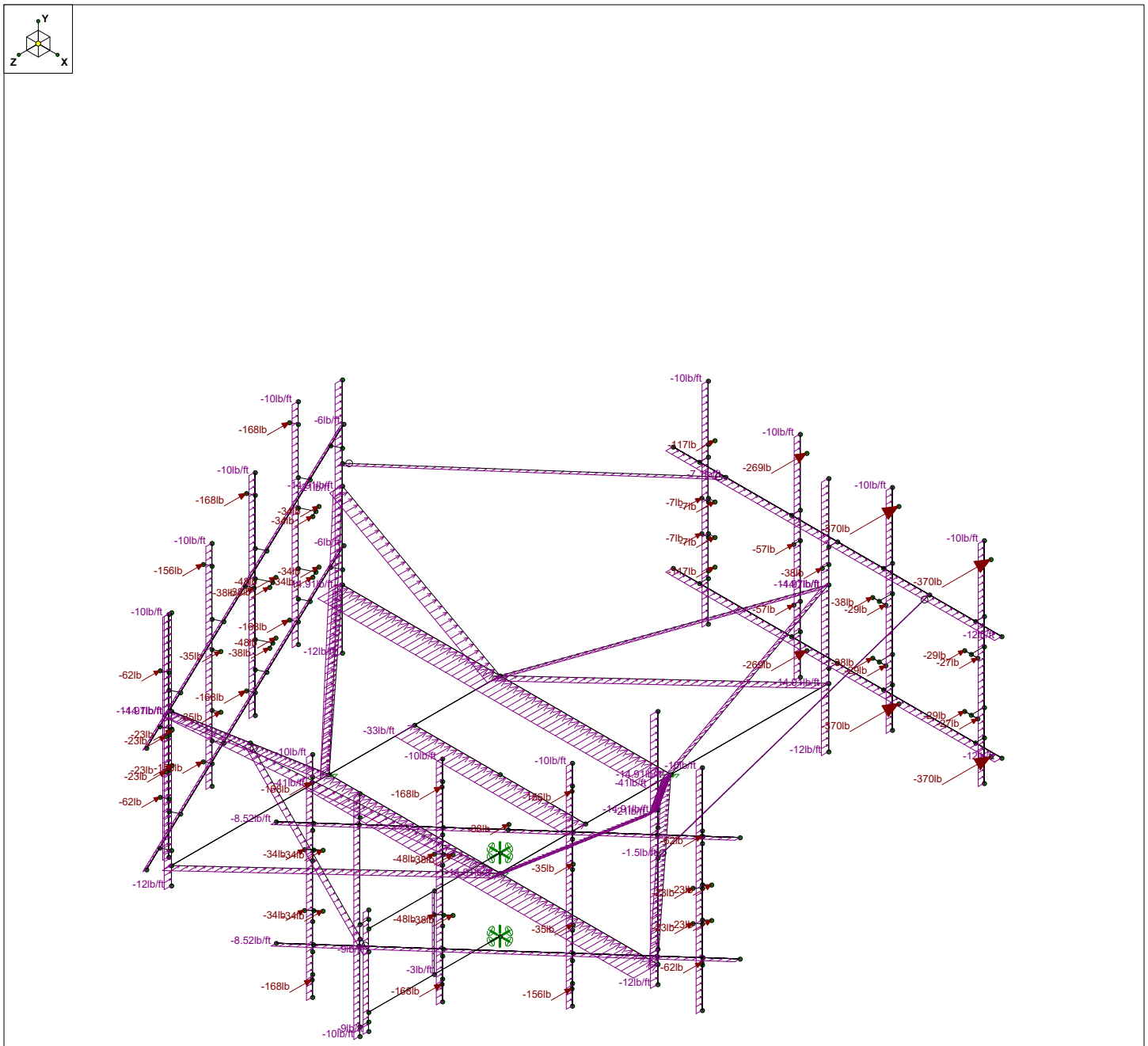

Loads: BLC 3, WL(0)
Envelope Only Solution

Fullerton Engineering, P.C.		SK - 8
GO	Mount Analysis	Aug 6, 2020 at 2:43 PM
CTL01065	Wind Load (Z-Direction)	CTL01065-Mount Analysis.r3d

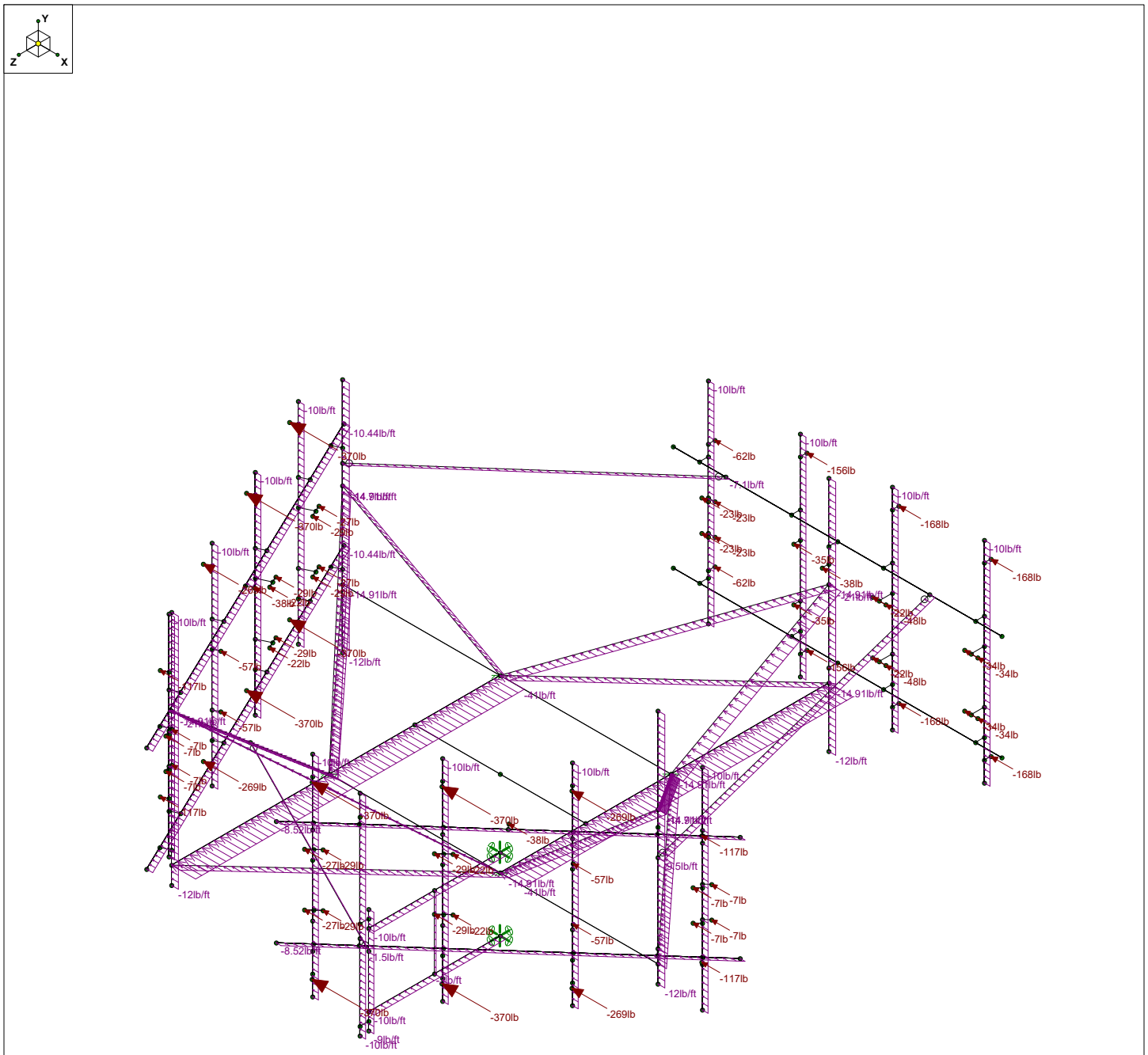

Loads: BLC 4, WL(90)
Envelope Only Solution

Fullerton Engineering, P.C.		SK - 9
GO	Mount Analysis	Aug 6, 2020 at 2:43 PM
CTL01065	Wind Load (X-Direction)	CTL01065-Mount Analysis.r3d

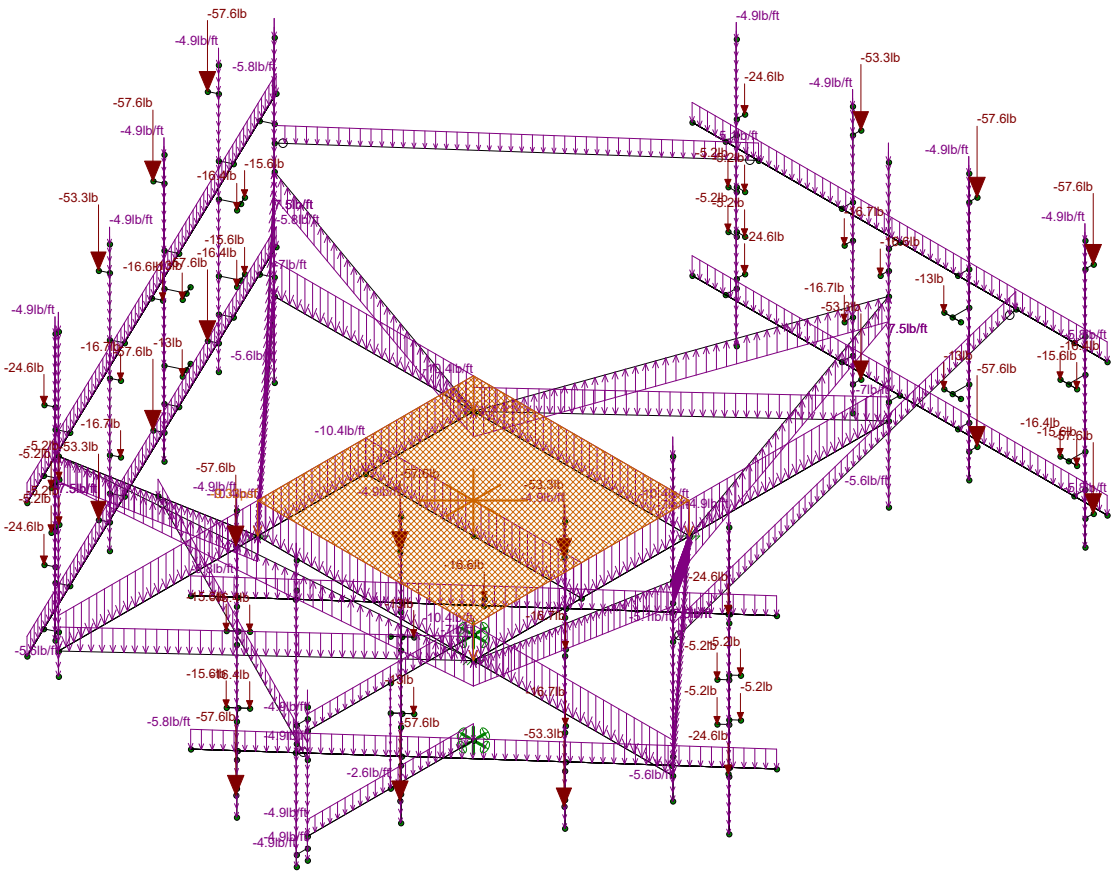

Loads: BLC 2, DLi
Envelope Only Solution

Fullerton Engineering, P.C.		SK - 10
GO	Mount Analysis	Aug 6, 2020 at 2:43 PM
CTL01065	Ice Load	CTL01065-Mount Analysis.r3d

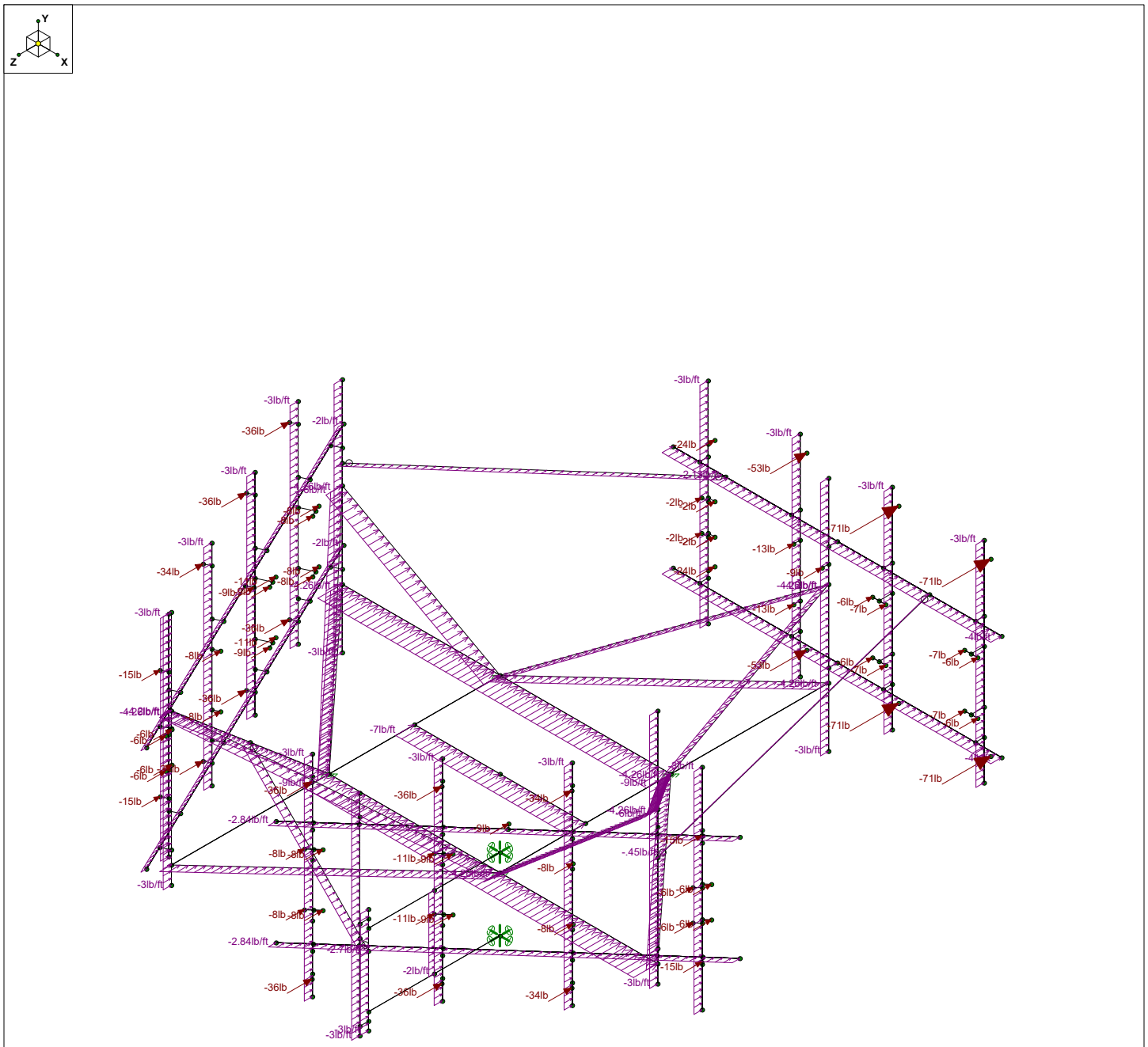

Loads: BLC 5, WL.i(0)
Envelope Only Solution

Fullerton Engineering, P.C.		SK - 11
GO	Mount Analysis	Aug 6, 2020 at 2:44 PM
CTL01065	Wind Load with Ice (Z-Direction)	CTL01065-Mount Analysis.r3d

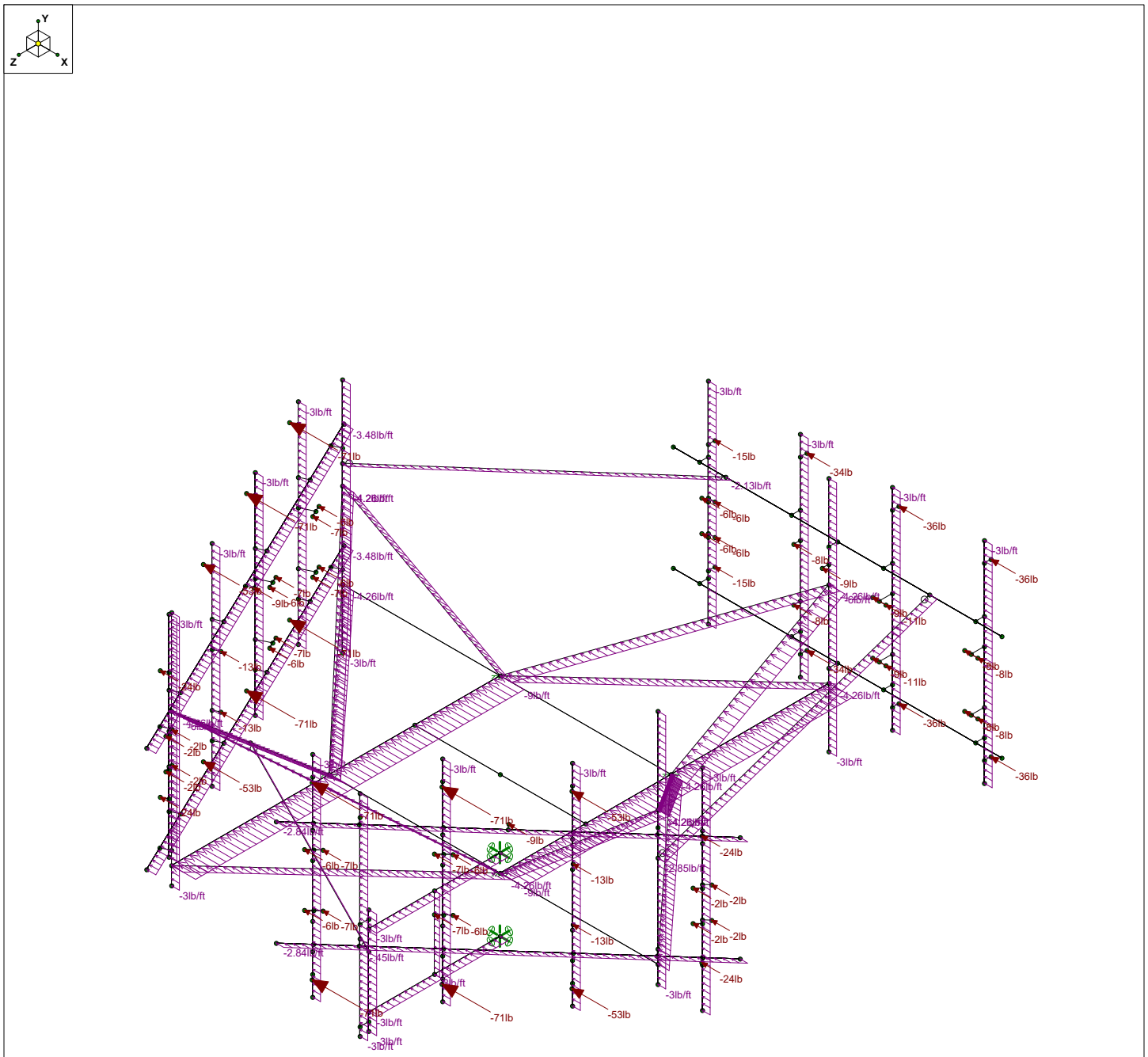

Loads: BLC 6, WL.i(90)
Envelope Only Solution

Fullerton Engineering, P.C.		SK - 12
GO	Mount Analysis	Aug 6, 2020 at 2:44 PM
CTL01065	Wind Load with Ice (X-Direction)	CTL01065-Mount Analysis.r3d

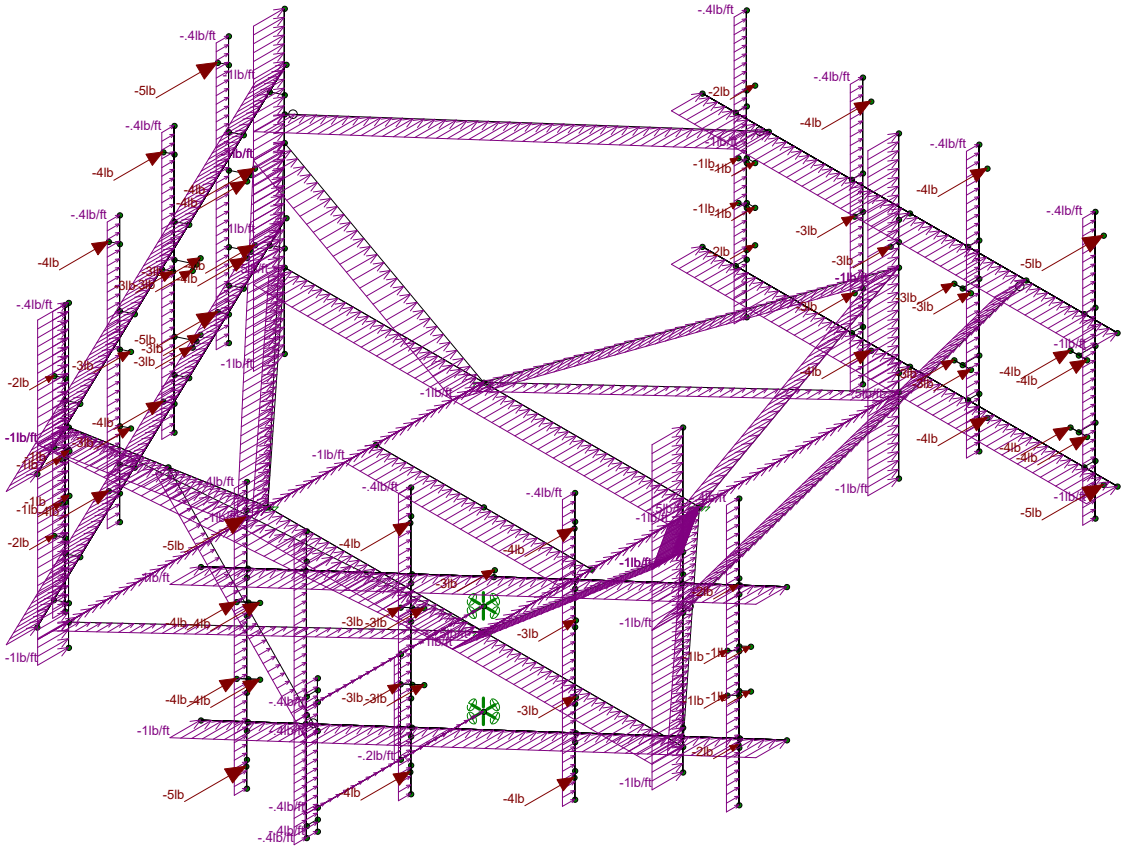

Loads: BLC 8, EH(0)
Envelope Only Solution

Fullerton Engineering, P.C.		SK - 13
GO	Mount Analysis	Aug 6, 2020 at 2:44 PM
CTL01065	Horizontal Seismic Load	CTL01065-Mount Analysis.r3d

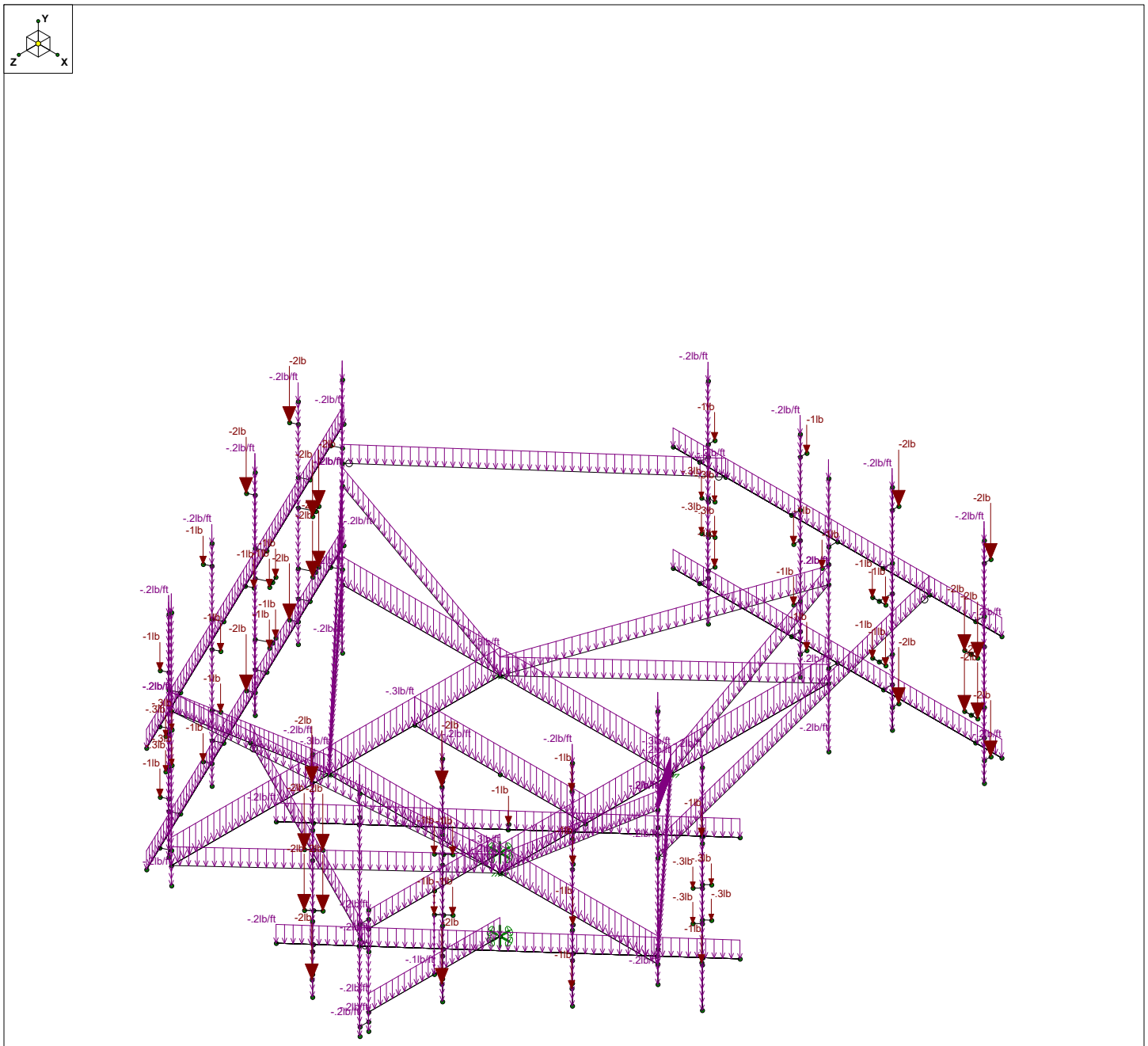

Loads: BLC 10, EV
Envelope Only Solution

Fullerton Engineering, P.C.		SK - 14
GO	Mount Analysis	Aug 6, 2020 at 2:45 PM
CTL01065	Vertical Seismic Load	CTL01065-Mount Analysis.r3d

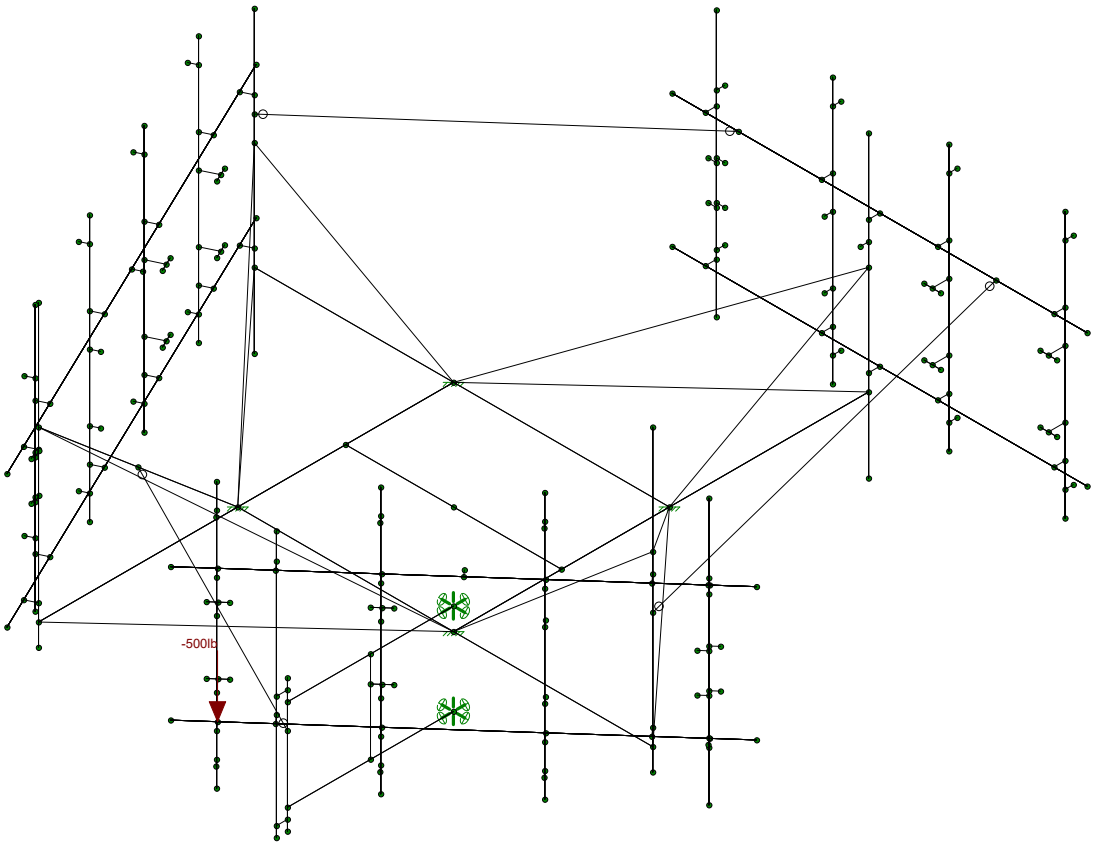

500lb Live Loads are applied at the mounting pipes at each sector.
Only one is shown for clarification purposes, but all are considered in the calculations.

Loads: BLC 13, LM1
Envelope Only Solution

Fullerton Engineering, P.C.		SK - 15
GO	Mount Analysis	Aug 6, 2020 at 2:45 PM
CTL01065	500lb Live Load	CTL01065-Mount Analysis.r3d

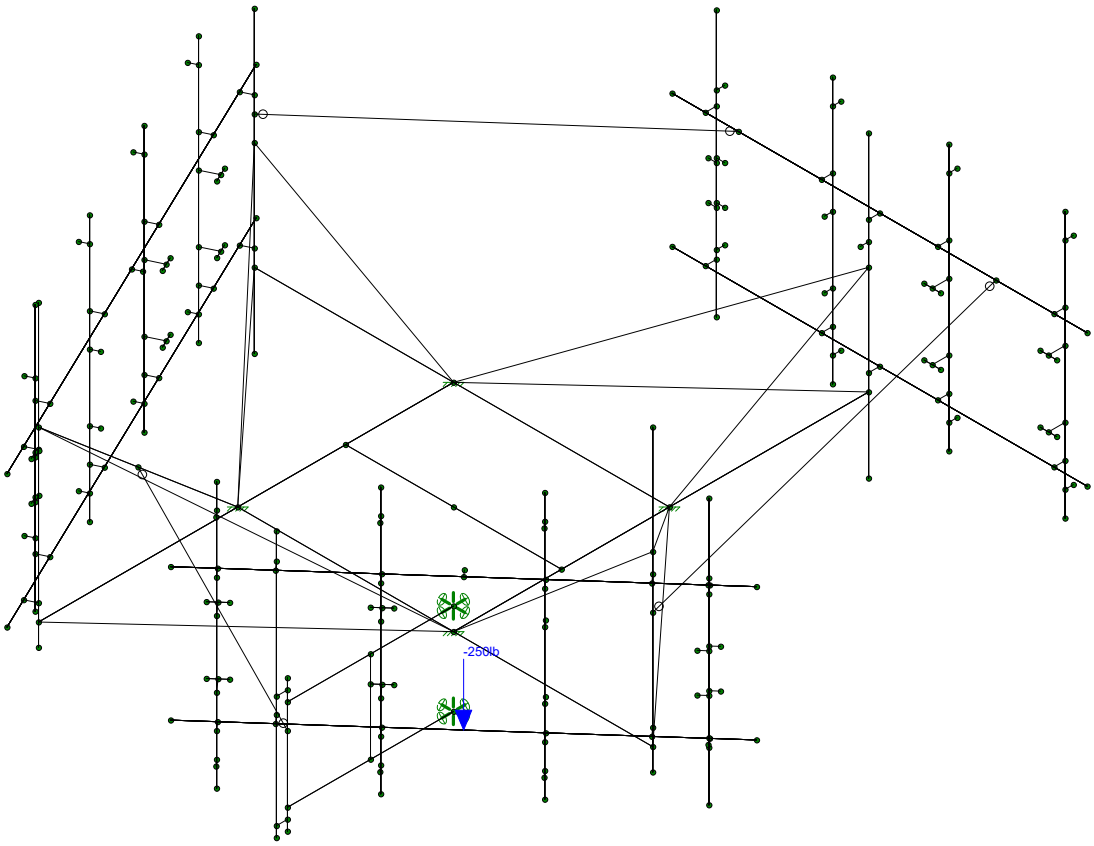

250lb Live Loads are applied on each face horizontal and standoff member at each sector. Only one is shown for clarification purposes, but all are considered in the calculations.

Loads: BLC 29, LV5
Envelope Only Solution

Fullerton Engineering, P.C.		SK - 16
GO	Mount Analysis	Aug 6, 2020 at 2:46 PM
CTL01065	250lb Live Load	CTL01065-Mount Analysis.r3d

FULLERTON
ENGINEERING · DESIGN

Fullerton Engineering Consultants, P.C.
1100 E. Woodfield Road, Suite 500
Schaumburg, IL 60173
Tel: 847.908.8400
www.fullertonengineering.com

Site Number:	**CTL01065**
Site Name:	LEBANON
Created By:	GO
Checked By:	BTK
Date:	8/6/2020
Code:	ANSI/TIA-222-H

Base Structure Type	**Type**	Self Support Tower	
Structure Height Above Grade (ft)	**Ht**	121.00	
RAD Center (ft)	**z**	124.00	
Windspeed no ice (mph, 3-sec gust)	**V**	121.00	see wind maps
Windspeed with ice (mph, 3-sec gust)	**Vi**	50.00	see ice maps
Windspeed for maintenance (mph, 3-sec gust)	**Vm**	30.00	Section 16.6
Ice Thickness	**ti**	1.00	see ice maps
Exposure Category (B/C/D)	**Exposure**	C	Section 2.6.5.1.2
Topographic Category (1,2,3,4)	**Topo**	1.00	Section 2.6.6.1
Risk Category (I,II,III, IV)	**Cat**	II	Table 2-1
Crest Height	**H**	0.00	Section 2.6.6.2.1
Height above sea level	**Zs**	660.00	
Exposure Category Coefficient	**zg**	900.00	Table 2-4
Mid-Point of Structure	**Ht.mid**	60.50	
Min Velocity Pressure Coefficient	**Kzmin**	0.85	Table 2-4
Exposure Category Coefficient	**α'**	9.50	Table 2-4
Velocity Pressure Coefficient	**Kz**	1.32	Section 2.6.5.2
Topographic Coefficient	**Kt**	1.00	Table 2-5
Terrain Constant	**Kc**	1.00	Table 2-4
Ground Elevation Factor	**Ke**	0.98	Section 2.6.8
Topographic Category Coefficient	**f**	0.00	Table 2-5
Height Reduction Factor	**Kh**	1.00	Section 2.6.6.2.1
Topographic Factor	**Kzt**	1.00	Section 2.6.6.2.1
Ice Load Importance Factor	**Iti**	1.00	Table 2-3
Wind Direction Probability Factor	**Kd**	0.95	Table 2-2
Height Escalation Factor	**Kiz**	1.14	Section 2.6.10
Gust Effect Factor	**Gh**	1.00	Section 16.6
Design Ice Thickness	**tiz**	1.14	Section 2.6.10
Ice Density	**ρ.ice**	56.00	lbf/ft^3
Velocity Pressure for Maintenance	**qzm**	2.83	Section 2.6.11.6
Velocity Pressure With Ice	**qzi**	7.86	Section 2.6.11.6
Velocity Pressure No Ice	**qz**	46.04	Section 2.6.11.6

Ka=	0.9

Importance Factor (Earthquake)	I_e	1.00	Table 2-3
Site Class	**Class**	D - Stiff Soil	
Seismic Design Category	**Cat**	B	
MCE_R Ground Motion (period=0.2s)	S_S	0.193	
MCE_R Ground Motion (period=1.0s)	S_1	0.055	
Seismic Design Value at 0.2s	S_{DS}	0.21	
Long-Period Site Coefficient Fv	**Fv**	2.40	Table 2-12
Seismic Design Value at 1.0s	S_{D1}	0.088	Sec. 2.7.5
Long-period Transition Period (s)	T_L	6	

Sesimic Shear		
R	2.000	See 16.7
$C_{S\text{-}calc}$	0.103	See 2.7.7.1.1
$C_{S\text{-}min}$	0.009	See 2.7.7.1.1
C_S	0.103	See 2.7.7.1.1
A_S	1.000	See 16.7

Appurtenance Properties								Loads (force per connection)										
Manufacturer	**Model**	**R/F**	**L**	**W**	**D**	**Weight**	**# Conn**	**Wt**	**Ice Wt**	**F no ice**	**S no ice**	**F ice**	**S ice**	**Fm**	**Sm**	**Eh**	**Ev**	**EPA.F**
CCIAntennas	DMP65R-BU8DA	Flat	96	20.7	7.7	95.7	2	47.9	57.6	370	168	71	36	23	10	5	2	18
CCIAntennas	TPA-65R-BU8DA-K	Flat	96	20.7	7.7	87.1	2	43.6	57.6	370	168	71	36	23	10	4	2	18
CCIAntennas	HPA-65R-BUU-H8	Flat	92.4	14.8	7.4	68	2	34.0	53.3	269	156	53	34	17	10	4	1	13
Powerwave	7770	Flat	56	11	5	39	2	19.5	24.6	117	62	24	15	7	4	2	1	6
Ericsson	RRUS-4449 B5/B12	Flat	14.96	13.19	10.43	73	2	36.5	15.6	34	27	8	6	2	2	4	2	2
Ericsson	RRUS-8843 B2/B66A	Flat	14.96	13.19	11.1	75	2	37.5	16.4	34	29	8	7	2	2	4	2	2
Ericsson	RRUS-32 B2	Flat	23.1	12	7	53	2	26.5	14.7	48	29	11	7	3	2	3	1	2
Ericsson	RRUS-4478 B14	Flat	16.5	13.4	7.7	59.9	2	30.0	13.0	38	22	9	6	2	1	3	1	2
Ericsson	RRUS-32 B30	Flat	27.2	12.1	7	60	2	30.0	16.7	57	35	13	8	3	2	3	1	3
Powerwave	LGP-21401	Flat	14.4	9.2	2.6	14.1	2	7.1	5.2	23	7	6	2	1	0.4	1	0.3	1
Raycap	DC9-48-60-24-8C-EV	Round	26.02	10.24	10.24	26.2	1	26.2	16.6	38	38	9	9	2	2	3	1	1

Shape Properties								Loads (force per connection)										
Shape Type	**Shape**	**R/F**	**L**	**W**	**D**	**Wt (plf)**	**# Conn**	**Wt**	**Ice Wt**	**F no ice**	**S no ice**	**F ice**	**S ice**	**Fm**	**Sm**	**Eh**	**Ev**	**EPA.F**
Channel	C6x2	Flat	150	6	2	8.10	12.5	101.25	10.4	41	14	9	5	3	1	1	0.3	13
Channel	C6x2	Flat	78	6	2	8.10	6.5	52.65	10.4	33	14	7	5	2	1	1	0.3	5
Angle	L3x2½x¼	Flat	108	3	2.5	4.50	9	40.50	7.0	21	17	6	6	1	1	0.5	0.2	5
Pipe	Pipe 2½ Std.	Round	108	2.88	2.88	5.80	9	52.20	5.6	12	12	3	3	1	1	1	0.2	3
Angle	L3x3x¼	Flat	123	3	3	4.90	10.25	50.23	7.5	21	21	6	6	1	1	1	0.2	5
Angle	L3x3x¼	Flat	113	3	3	4.90	9.41667	46.14	7.5	21	21	6	6	1	1	1	0.2	5
Angle	L3x3x¼	Flat	95	3	3	4.90	7.91667	38.79	7.5	21	21	6	6	1	1	1	0.2	4
Angle	L3x3x¼	Flat	86	3	3	4.90	7.16667	35.12	7.5	21	21	6	6	1	1	1	0.2	4
Pipe	Pipe 2 Std.	Round	96	2.38	2.38	3.66	8	29.28	4.9	10	10	3	3	1	1	0.4	0.2	2
Pipe	Pipe 2 Std.	Round	60	2.38	2.38	3.66	5	18.30	4.9	10	10	3	3	1	1	0.4	0.2	1
Pipe	Pipe 2 Std.	Round	48	2.38	2.38	3.66	4	14.64	4.9	9	9	3	3	1	1	0.4	0.2	1
Solid_Rod	SR ¾" Dia.	Round	33	0.75	0.75	1.50	2.75	4.13	2.6	3	3	2	2	0.2	0.2	0.2	0.1	0.2
HSS	HSS3.000x0.250	Round	192	3	3	7.35	16	117.60	5.8	12	12	4	4	1	1	1	0.3	5
HSS	HSS3.000x0.250	Round	150	3	3	7.35	12.5	91.88	5.8	12	12	4	4	1	1	1	0.3	4
Pipe	Pipe 2 Std.	Round	96	2.38	2.38	3.66	8	29.28	4.9	10	10	3	3	1	1	0.4	0.2	2
HSS	HSS2.500x0.250	Round	168	2.5	2.5	6.01	14	84.14	5.1	10	10	3	3	1	1	1	0.2	4
HSS	HSS2.500x0.250	Round	132	2.5	2.5	6.01	11	66.11	5.1	10	10	3	3	1	1	1	0.2	3

(Global) Model Settings

Display Sections for Member Calcs	5
Max Internal Sections for Member Calcs	97
Include Shear Deformation?	Yes
Increase Nailing Capacity for Wind?	Yes
Include Warping?	Yes
Trans Load Btwn Intersecting Wood Wall?	Yes
Area Load Mesh (in^2)	144
Merge Tolerance (in)	.12
P-Delta Analysis Tolerance	0.50%
Include P-Delta for Walls?	Yes
Automatically Iterate Stiffness for Walls?	Yes
Max Iterations for Wall Stiffness	3
Gravity Acceleration (in/sec^2)	386.4
Wall Mesh Size (in)	12
Eigensolution Convergence Tol. (1.E-)	4
Vertical Axis	Y
Global Member Orientation Plane	XZ
Static Solver	Sparse Accelerated
Dynamic Solver	Accelerated Solver

Hot Rolled Steel Code	AISC 15th(360-16): LRFD
Adjust Stiffness?	Yes(Iterative)
RISAConnection Code	AISC 15th(360-16): LRFD
Cold Formed Steel Code	None
Wood Code	None
Wood Temperature	< 100F
Concrete Code	None
Masonry Code	None
Aluminum Code	None - Building
Stainless Steel Code	AISC 14th(360-10): ASD
Adjust Stiffness?	Yes(Iterative)

Number of Shear Regions	4
Region Spacing Increment (in)	4
Biaxial Column Method	Exact Integration
Parme Beta Factor (PCA)	.65
Concrete Stress Block	Rectangular
Use Cracked Sections?	Yes
Use Cracked Sections Slab?	Yes
Bad Framing Warnings?	No
Unused Force Warnings?	Yes
Min 1 Bar Diam. Spacing?	No
Concrete Rebar Set	REBAR_SET_ASTMA615
Min % Steel for Column	1
Max % Steel for Column	8

(Global) Model Settings, Continued

Seismic Code	ASCE 7-10
Seismic Base Elevation (in)	Not Entered
Add Base Weight?	Yes
Ct X	.02
Ct Z	.02
T X (sec)	Not Entered
T Z (sec)	Not Entered
R X	3
R Z	3
Ct Exp. X	.75
Ct Exp. Z	.75
SD1	1
SDS	1
S1	1
TL (sec)	5
Risk Cat	I or II
Drift Cat	Other
Om Z	1
Om X	1
Cd Z	4
Cd X	4
Rho Z	1
Rho X	1

Hot Rolled Steel Design Parameters

	Label	Shape	Length[...	Lbyy[in]	Lbzz[in]	Lcomp top[...	Lcomp bot[...	L-torq...	Kyy	Kzz	Cb	Functi...
1	M1	C6x2	150			Lbyy			.65	.65		Lateral
2	M2	C6x2	150			Lbyy			.65	.65		Lateral
3	M3	C6x2	150			Lbyy			.65	.65		Lateral
4	M4	C6x2	150			Lbyy			.65	.65		Lateral
5	M5	C6x2	78			Lbyy			.65	.65		Lateral
6	M6	L3X2.5X4	106.151			Lbyy			.65	.65		Lateral
7	M7	L3X2.5X4	106.151			Lbyy			.65	.65		Lateral
8	M8	L3X2.5X4	106.151			Lbyy			.65	.65		Lateral
9	M9	L3X2.5X4	106.151			Lbyy			.65	.65		Lateral
10	M10	PIPE_2.5	108	61	61	61	61	61	2.1	2.1		Lateral
11	M11	PIPE_2.5	108	39	39	39	39	39	2.1	2.1		Lateral
12	M12	PIPE_2.5	108	61	61	61	61	61	2.1	2.1		Lateral
13	M13	PIPE_2.5	108	61	61	61	61	61	2.1	2.1		Lateral
14	M14	L3X3X4	94.366			Lbyy			.65	.65		Lateral
15	M15	L3X3X4	122.43			Lbyy			.65	.65		Lateral
16	M16	L3X3X4	94.366			Lbyy			.65	.65		Lateral
17	M17	L3X3X4	122.43			Lbyy			.65	.65		Lateral
18	M18	L3X3X4	81.884			Lbyy			.65	.65		Lateral
19	M19	L3X3X4	113.088			Lbyy			.65	.65		Lateral
20	M20	L3X3X4	81.884			Lbyy			.65	.65		Lateral
21	M21	L3X3X4	113.088			Lbyy			.65	.65		Lateral
22	M22	PIPE_2.0	60			Lbyy			.65	.65		Lateral
23	M23	PIPE_2.0	60			Lbyy			.65	.65		Lateral
24	M24	SR 3/4" dia.	33			Lbyy			.65	.65		Lateral
25	M25	PIPE_2.0	48	33	33	33	33	33	2.1	2.1		Lateral
26	M26	PIPE_2.0	96	40.5	40.5	40.5	40.5	40.5	2.1	2.1		Lateral
27	M29	PIPE_2.0	87.477			Lbyy			1	1		Lateral
28	M34	HSS3.000X0.250	150	42	42	42	42	42	2.1	2.1		Lateral
29	M35	HSS3.000X0.250	150	42	42	42	42	42	2.1	2.1		Lateral
30	M44	PIPE_2.0	96	48	48	48	48	48	2.1	2.1		Lateral

Hot Rolled Steel Design Parameters (Continued)

	Label	Shape	Length[...	Lbyy[in]	Lbzz[in]	Lcomp top[...	Lcomp bot[...	L-torq...	Kyy	Kzz	Cb	Functi...
31	M45	PIPE_2.0	96	48	48	48	48	48	2.1	2.1		Lateral
32	M46	PIPE_2.0	96	48	48	48	48	48	2.1	2.1		Lateral
33	M47	PIPE_2.0	96	48	48	48	48	48	2.1	2.1		Lateral
34	M69	HSS3.000X0.250	150	42	42	42	42	42	2.1	2.1		Lateral
35	M70	HSS3.000X0.250	150	42	42	42	42	42	2.1	2.1		Lateral
36	M81	PIPE_2.0	96	48	48	48	48	48	2.1	2.1		Lateral
37	M82	PIPE_2.0	96	48	48	48	48	48	2.1	2.1		Lateral
38	M83	PIPE_2.0	96	48	48	48	48	48	2.1	2.1		Lateral
39	M84	PIPE_2.0	96	48	48	48	48	48	2.1	2.1		Lateral
40	M113	HSS3.000X0.250	192	42	42	42	42	42	2.1	2.1		Lateral
41	M114	HSS3.000X0.250	192	42	42	42	42	42	2.1	2.1		Lateral
42	M123	PIPE_2.0	96	48	48	48	48	48	2.1	2.1		Lateral
43	M124	PIPE_2.0	96	48	48	48	48	48	2.1	2.1		Lateral
44	M125	PIPE_2.0	96	48	48	48	48	48	2.1	2.1		Lateral
45	M126	PIPE_2.0	96	48	48	48	48	48	2.1	2.1		Lateral
46	M150	HSS2.500X0.250	157.353			Lbyy			1	1		Lateral
47	M151	HSS2.500X0.250	124.952			Lbyy			1	1		Lateral

Material Takeoff

	Material	Size	Pieces	Length[in]	Weight[K]
1	General				
2	RIGID		105	423	0
3	Total General		105	423	0
4					
5	Hot Rolled Steel				
6	A36 Gr.36	C6x2	5	678	.457
7	A36 Gr.36	L3X2.5X4	4	424.6	.159
8	A36 Gr.36	L3X3X4	8	823.5	.336
9	A36 Gr.36	SR 3/4" dia.	1	33	.004
10	A500 Gr.C	HSS2.500X0.250	2	282.3	.133
11	A500 Gr.C	HSS3.000X0.250	6	984	.566
12	A53 Gr. B	PIPE_2.0	17	1503.5	.435
13	A53 Gr. B	PIPE_2.5	4	432	.197
14	Total HR Steel		47	5160.9	2.287

Basic Load Cases

	BLC Description	Category	X Gravity	Y Gravity	Z Gravity	Joint	Point	Distribut...	Area(M...	Surface...
1	DL	None		-1		69			1	
2	DLi	None				63		47	1	
3	WL(0)	None				69		43		
4	WL(90)	None				69		42		
5	WL.i(0)	None				69		43		
6	WL.i(90)	None				69		42		
7	T	None								
8	EH(0)	None				69		47		
9	EH(90)	None				69		47		
10	EV	None				69		47		
11	WM(0)	None				69		43		
12	WM(90)	None				69		42		
13	LM1	None				1				
14	LM2	None				1				
15	LM3	None				1				
16	LM4	None				1				
17	LM5	None				1				

Basic Load Cases (Continued)

	BLC Description	Category	X Gravity	Y Gravity	Z Gravity	Joint	Point	Distribut...	Area(M...	Surface...
18	LM6	None				1				
19	LM7	None				1				
20	LM8	None				1				
21	LM9	None				1				
22	LM10	None				1				
23	LM11	None				1				
24	LM12	None				1				
25	LV1	None					1			
26	LV2	None					1			
27	LV3	None					1			
28	LV4	None					1			
29	LV5	None					1			
30	LV6	None					1			
31	LV7	None					1			
32	LV8	None					1			
33	LV9	None					1			
34	LV10	None					1			
35	LV11	None								
36	LV12	None								
37	BLC 1 Transient Area Loads	None						20		
38	BLC 2 Transient Area Loads	None						20		

Load Combinations

	Description	S...	P...	SR...	B...	Fa...	B...	Fa...	B...	Fa...	B...	Fa...	B...	Fa...	B...	Fa...	B...	Fa...	B...	Fa...	B...	Fa...	B...	Fa...
1	1.4*DL	Yes	Y		1	1.4																		
2	1.2*DL + 1.0* WL(0)	Yes	Y		1	1.2	3	1																
3	1.2*DL + 1.0* WL(30)	Yes	Y		1	1.2	3	.869	4	.5														
4	1.2*DL + 1.0* WL(60)	Yes	Y		1	1.2	3	.5	4	.869														
5	1.2*DL + 1.0*WL(90)	Yes	Y		1	1.2	4	1																
6	1.2*DL + 1.0*WL(120)	Yes	Y		1	1.2	3	-.5	4	.869														
7	1.2*DL +1.0*WL(150)	Yes	Y		1	1.2	3	-.869	4	.5														
8	1.2*DL + 1.0 * WL(180)	Yes	Y		1	1.2	3	-1																
9	1.2*DL + 1.0* WL(210)	Yes	Y		1	1.2	3	-.869	4	-.5														
10	1.2*DL + 1.0* WL(240)	Yes	Y		1	1.2	3	-.5	4	-.869														
11	1.2*DL + 1.0*WL(270)	Yes	Y		1	1.2	4	-1																
12	1.2*DL + 1.0*WL(300)	Yes	Y		1	1.2	3	.5	4	-.869														
13	1.2*DL +1.0*WL(330)	Yes	Y		1	1.2	3	.869	4	-.5														
14	1.2*DL+1.0*DLi+1.0*WL.i(...	Yes	Y		1	1.2	2	1	5	1	7	1												
15	1.2*DL+1.0*DLi+1.0*WL.i(...	Yes	Y		1	1.2	2	1	5	.866	6	.5	7	1										
16	1.2*DL+1.0*DLi+1.0*WL.i(...	Yes	Y		1	1.2	2	1	5	.5	6	.866	7	1										
17	1.2*DL+1.0*DLi+1.0*WL.i(...	Yes	Y		1	1.2	2	1	6	1	7	1												
18	1.2*DL+1.0*DLi+1.0*WL.i(...	Yes	Y		1	1.2	2	1	5	-.5	6	.866	7	1										
19	1.2*DL+1.0*DLi+1.0*WL.i(...	Yes	Y		1	1.2	2	1	5	-.866	6	.5	7	1										
20	1.2*DL+1.0*DLi+1.0*WL.i(...	Yes	Y		1	1.2	2	1	5	-1	7	1												
21	1.2*DL+1.0*DLi+1.0*WL.i(...	Yes	Y		1	1.2	2	1	5	-.866	6	-.5	7	1										
22	1.2*DL+1.0*DLi+1.0*WL.i(...	Yes	Y		1	1.2	2	1	5	-.5	6	-.866	7	1										
23	1.2*DL+1.0*DLi+1.0*WL.i(...	Yes	Y		1	1.2	2	1	6	-1	7	1												
24	1.2*DL+1.0*DLi+1.0*WL.i(...	Yes	Y		1	1.2	2	1	5	.5	6	-.866	7	1										
25	1.2*DL+1.0*DLi+1.0*WL.i(...	Yes	Y		1	1.2	2	1	5	.866	6	-.5	7	1										
26	1.2*DL+1.0*EH(0)+1.0*E...	Yes	Y		1	1.2	8	1	10	1														
27	1.2*DL+1.0*EH(0)+1.0*E...	Yes	Y		1	1.2	8	1	10	-1														
28	1.2*DL+1.0*EH(90)+1.0*E...	Yes	Y		1	1.2	9	1	10	1														
29	1.2*DL+1.0*EH(90)+1.0*E...	Yes	Y		1	1.2	9	1	10	-1														
30	1.2*DL+1.0*EH(180)+1.0*...	Yes	Y		1	1.2	8	-1	10	1														
31	1.2*DL+1.0*EH(180)+1.0*...	Yes	Y		1	1.2	8	-1	10	-1														

Load Combinations (Continued)

	Description	S...	P...	SR...	B...	Fa...	B...	Fa...	B...	Fa...	B...	Fa...	B...	Fa...	B...	Fa...	B...	Fa...	B...	Fa...	B...	Fa...	B...	Fa...
32	1.2*DL+1.0*EH(270)+1.0*..	Yes	Y		1	1.2	9	-1	10	1														
33	1.2*DL+1.0*EH(270)+1.0*..	Yes	Y		1	1.2	9	-1	10	-1														
34	0.9*DL+1.0*EH(0)-1.0*EV...	Yes	Y		1	.9	8	1	10	-1														
35	0.9*DL+1.0*EH(0)-1.0*EV...	Yes	Y		1	.9	8	1	10	1														
36	0.9*DL+1.0*EH(90)-1.0*E...	Yes	Y		1	.9	9	1	10	-1														
37	0.9*DL+1.0*EH(90)-1.0*E...	Yes	Y		1	.9	9	1	10	1														
38	0.9*DL+1.0*EH(180)-1.0*...	Yes	Y		1	.9	8	-1	10	-1														
39	0.9*DL+1.0*EH(180)-1.0*...	Yes	Y		1	.9	8	-1	10	1														
40	0.9*DL+1.0*EH(270)-1.0*...	Yes	Y		1	.9	9	-1	10	-1														
41	0.9*DL+1.0*EH(270)-1.0*...	Yes	Y		1	.9	9	-1	10	1														
42	1.2*DL+1.5*LM1+1.0*WM...	Yes	Y		1	1.2	13	1.5	11	1														
43	1.2*DL+1.5*LM1+1.0*WM...	Yes	Y		1	1.2	13	1.5	11	.866	12	.5												
44	1.2*DL+1.5*LM1+1.0*WM...	Yes	Y		1	1.2	13	1.5	11	.5	12	.866												
45	1.2*DL+1.5*LM1+1.0*WM...	Yes	Y		1	1.2	13	1.5	12	1														
46	1.2*DL+1.5*LM1+1.0*WM...	Yes	Y		1	1.2	13	1.5	11	-.5	12	.866												
47	1.2*DL+1.5*LM1+1.0*WM...	Yes	Y		1	1.2	13	1.5	11	-.866	12	.5												
48	1.2*DL+1.5*LM1+1.0*WM...	Yes	Y		1	1.2	13	1.5	11	-1														
49	1.2*DL+1.5*LM1+1.0*WM...	Yes	Y		1	1.2	13	1.5	11	-.866	12	-.5												
50	1.2*DL+1.5*LM1+1.0*WM...	Yes	Y		1	1.2	13	1.5	11	-.5	12	-.866												
51	1.2*DL+1.5*LM1+1.0*WM...	Yes	Y		1	1.2	13	1.5	12	-1														
52	1.2*DL+1.5*LM1+1.0*WM...	Yes	Y		1	1.2	13	1.5	11	.5	12	-.866												
53	1.2*DL+1.5*LM1+1.0*WM...	Yes	Y		1	1.2	13	1.5	11	.866	12	-.5												
54	1.2*DL+1.5*LM2+1.0*WM...	Yes	Y		1	1.2	14	1.5	11	1														
55	1.2*DL+1.5*LM2+1.0*WM...	Yes	Y		1	1.2	14	1.5	11	.866	12	.5												
56	1.2*DL+1.5*LM2+1.0*WM...	Yes	Y		1	1.2	14	1.5	11	.5	12	.866												
57	1.2*DL+1.5*LM2+1.0*WM...	Yes	Y		1	1.2	14	1.5	12	1														
58	1.2*DL+1.5*LM2+1.0*WM...	Yes	Y		1	1.2	14	1.5	11	-.5	12	.866												
59	1.2*DL+1.5*LM2+1.0*WM...	Yes	Y		1	1.2	14	1.5	11	-.866	12	.5												
60	1.2*DL+1.5*LM2+1.0*WM...	Yes	Y		1	1.2	14	1.5	11	-1														
61	1.2*DL+1.5*LM2+1.0*WM...	Yes	Y		1	1.2	14	1.5	11	-.866	12	-.5												
62	1.2*DL+1.5*LM2+1.0*WM...	Yes	Y		1	1.2	14	1.5	11	-.5	12	-.866												
63	1.2*DL+1.5*LM2+1.0*WM...	Yes	Y		1	1.2	14	1.5	12	-1														
64	1.2*DL+1.5*LM2+1.0*WM...	Yes	Y		1	1.2	14	1.5	11	.5	12	-.866												
65	1.2*DL+1.5*LM2+1.0*WM...	Yes	Y		1	1.2	14	1.5	11	.866	12	-.5												
66	1.2*DL+1.5*LM3+1.0*WM...	Yes	Y		1	1.2	15	1.5	11	1														
67	1.2*DL+1.5*LM3+1.0*WM...	Yes	Y		1	1.2	15	1.5	11	.866	12	.5												
68	1.2*DL+1.5*LM3+1.0*WM...	Yes	Y		1	1.2	15	1.5	11	.5	12	.866												
69	1.2*DL+1.5*LM3+1.0*WM...	Yes	Y		1	1.2	15	1.5	12	1														
70	1.2*DL+1.5*LM3+1.0*WM...	Yes	Y		1	1.2	15	1.5	11	-.5	12	.866												
71	1.2*DL+1.5*LM3+1.0*WM...	Yes	Y		1	1.2	15	1.5	11	-.866	12	.5												
72	1.2*DL+1.5*LM3+1.0*WM...	Yes	Y		1	1.2	15	1.5	11	-1														
73	1.2*DL+1.5*LM3+1.0*WM...	Yes	Y		1	1.2	15	1.5	11	-.866	12	-.5												
74	1.2*DL+1.5*LM3+1.0*WM...	Yes	Y		1	1.2	15	1.5	11	-.5	12	-.866												
75	1.2*DL+1.5*LM3+1.0*WM...	Yes	Y		1	1.2	15	1.5	12	-1														
76	1.2*DL+1.5*LM3+1.0*WM...	Yes	Y		1	1.2	15	1.5	11	.5	12	-.866												
77	1.2*DL+1.5*LM3+1.0*WM...	Yes	Y		1	1.2	15	1.5	11	.866	12	-.5												
78	1.2*DL+1.5*LM4+1.0*WM...	Yes	Y		1	1.2	16	1.5	11	1														
79	1.2*DL+1.5*LM4+1.0*WM...	Yes	Y		1	1.2	16	1.5	11	.866	12	.5												
80	1.2*DL+1.5*LM4+1.0*WM...	Yes	Y		1	1.2	16	1.5	11	.5	12	.866												
81	1.2*DL+1.5*LM4+1.0*WM...	Yes	Y		1	1.2	16	1.5	12	1														
82	1.2*DL+1.5*LM4+1.0*WM...	Yes	Y		1	1.2	16	1.5	11	-.5	12	.866												
83	1.2*DL+1.5*LM4+1.0*WM...	Yes	Y		1	1.2	16	1.5	11	-.866	12	.5												
84	1.2*DL+1.5*LM4+1.0*WM...	Yes	Y		1	1.2	16	1.5	11	-1														
85	1.2*DL+1.5*LM4+1.0*WM...	Yes	Y		1	1.2	16	1.5	11	-.866	12	-.5												
86	1.2*DL+1.5*LM4+1.0*WM...	Yes	Y		1	1.2	16	1.5	11	-.5	12	-.866												
87	1.2*DL+1.5*LM4+1.0*WM...	Yes	Y		1	1.2	16	1.5	12	-1														
88	1.2*DL+1.5*LM4+1.0*WM...	Yes	Y		1	1.2	16	1.5	11	.5	12	-.866												

Load Combinations (Continued)

	Description	S...	P...	SR...	B...	Fa...	B...	Fa...	B...	Fa...	B...	Fa...	B...	Fa...	B...	Fa...	B...	Fa...	B...	Fa...	B...	Fa...	B...	Fa...
89	1.2*DL+1.5*LM4+1.0*WM...	Yes	Y		1	1.2	16	1.5	11	.866	12	-.5												
90	1.2*DL+1.5*LM5+1.0*WM...	Yes	Y		1	1.2	17	1.5	11	1														
91	1.2*DL+1.5*LM5+1.0*WM...	Yes	Y		1	1.2	17	1.5	11	.866	12	.5												
92	1.2*DL+1.5*LM5+1.0*WM...	Yes	Y		1	1.2	17	1.5	11	.5	12	.866												
93	1.2*DL+1.5*LM5+1.0*WM...	Yes	Y		1	1.2	17	1.5	12	1														
94	1.2*DL+1.5*LM5+1.0*WM...	Yes	Y		1	1.2	17	1.5	11	-.5	12	.866												
95	1.2*DL+1.5*LM5+1.0*WM...	Yes	Y		1	1.2	17	1.5	11	-.866	12	.5												
96	1.2*DL+1.5*LM5+1.0*WM...	Yes	Y		1	1.2	17	1.5	11	-1														
97	1.2*DL+1.5*LM5+1.0*WM...	Yes	Y		1	1.2	17	1.5	11	-.866	12	-.5												
98	1.2*DL+1.5*LM5+1.0*WM...	Yes	Y		1	1.2	17	1.5	11	-.5	12	-.866												
99	1.2*DL+1.5*LM5+1.0*WM...	Yes	Y		1	1.2	17	1.5	12	-1														
100	1.2*DL+1.5*LM5+1.0*WM...	Yes	Y		1	1.2	17	1.5	11	.5	12	-.866												
101	1.2*DL+1.5*LM5+1.0*WM...	Yes	Y		1	1.2	17	1.5	11	.866	12	-.5												
102	1.2*DL+1.5*LM6+1.0*WM...	Yes	Y		1	1.2	18	1.5	11	1														
103	1.2*DL+1.5*LM6+1.0*WM...	Yes	Y		1	1.2	18	1.5	11	.866	12	.5												
104	1.2*DL+1.5*LM6+1.0*WM...	Yes	Y		1	1.2	18	1.5	11	.5	12	.866												
105	1.2*DL+1.5*LM6+1.0*WM...	Yes	Y		1	1.2	18	1.5	12	1														
106	1.2*DL+1.5*LM6+1.0*WM...	Yes	Y		1	1.2	18	1.5	11	-.5	12	.866												
107	1.2*DL+1.5*LM6+1.0*WM...	Yes	Y		1	1.2	18	1.5	11	-.866	12	.5												
108	1.2*DL+1.5*LM6+1.0*WM...	Yes	Y		1	1.2	18	1.5	11	-1														
109	1.2*DL+1.5*LM6+1.0*WM...	Yes	Y		1	1.2	18	1.5	11	-.866	12	-.5												
110	1.2*DL+1.5*LM6+1.0*WM...	Yes	Y		1	1.2	18	1.5	11	-.5	12	-.866												
111	1.2*DL+1.5*LM6+1.0*WM...	Yes	Y		1	1.2	18	1.5	12	-1														
112	1.2*DL+1.5*LM6+1.0*WM...	Yes	Y		1	1.2	18	1.5	11	.5	12	-.866												
113	1.2*DL+1.5*LM6+1.0*WM...	Yes	Y		1	1.2	18	1.5	11	.866	12	-.5												
114	1.2*DL+1.5*LM7+1.0*WM...	Yes	Y		1	1.2	19	1.5	11	1														
115	1.2*DL+1.5*LM7+1.0*WM...	Yes	Y		1	1.2	19	1.5	11	.866	12	.5												
116	1.2*DL+1.5*LM7+1.0*WM...	Yes	Y		1	1.2	19	1.5	11	.5	12	.866												
117	1.2*DL+1.5*LM7+1.0*WM...	Yes	Y		1	1.2	19	1.5	12	1														
118	1.2*DL+1.5*LM7+1.0*WM...	Yes	Y		1	1.2	19	1.5	11	-.5	12	.866												
119	1.2*DL+1.5*LM7+1.0*WM...	Yes	Y		1	1.2	19	1.5	11	-.866	12	.5												
120	1.2*DL+1.5*LM7+1.0*WM...	Yes	Y		1	1.2	19	1.5	11	-1														
121	1.2*DL+1.5*LM7+1.0*WM...	Yes	Y		1	1.2	19	1.5	11	-.866	12	-.5												
122	1.2*DL+1.5*LM7+1.0*WM...	Yes	Y		1	1.2	19	1.5	11	-.5	12	-.866												
123	1.2*DL+1.5*LM7+1.0*WM...	Yes	Y		1	1.2	19	1.5	12	-1														
124	1.2*DL+1.5*LM7+1.0*WM...	Yes	Y		1	1.2	19	1.5	11	.5	12	-.866												
125	1.2*DL+1.5*LM7+1.0*WM...	Yes	Y		1	1.2	19	1.5	11	.866	12	-.5												
126	1.2*DL+1.5*LM8+1.0*WM...	Yes	Y		1	1.2	20	1.5	11	1														
127	1.2*DL+1.5*LM8+1.0*WM...	Yes	Y		1	1.2	20	1.5	11	.866	12	.5												
128	1.2*DL+1.5*LM8+1.0*WM...	Yes	Y		1	1.2	20	1.5	11	.5	12	.866												
129	1.2*DL+1.5*LM8+1.0*WM...	Yes	Y		1	1.2	20	1.5	12	1														
130	1.2*DL+1.5*LM8+1.0*WM...	Yes	Y		1	1.2	20	1.5	11	-.5	12	.866												
131	1.2*DL+1.5*LM8+1.0*WM...	Yes	Y		1	1.2	20	1.5	11	-.866	12	.5												
132	1.2*DL+1.5*LM8+1.0*WM...	Yes	Y		1	1.2	20	1.5	11	-1														
133	1.2*DL+1.5*LM8+1.0*WM...	Yes	Y		1	1.2	20	1.5	11	-.866	12	-.5												
134	1.2*DL+1.5*LM8+1.0*WM...	Yes	Y		1	1.2	20	1.5	11	-.5	12	-.866												
135	1.2*DL+1.5*LM8+1.0*WM...	Yes	Y		1	1.2	20	1.5	12	-1														
136	1.2*DL+1.5*LM8+1.0*WM...	Yes	Y		1	1.2	20	1.5	11	.5	12	-.866												
137	1.2*DL+1.5*LM8+1.0*WM...	Yes	Y		1	1.2	20	1.5	11	.866	12	-.5												
138	1.2*DL+1.5*LM9+1.0*WM...	Yes	Y		1	1.2	21	1.5	11	1														
139	1.2*DL+1.5*LM9+1.0*WM...	Yes	Y		1	1.2	21	1.5	11	.866	12	.5												
140	1.2*DL+1.5*LM9+1.0*WM...	Yes	Y		1	1.2	21	1.5	11	.5	12	.866												
141	1.2*DL+1.5*LM9+1.0*WM...	Yes	Y		1	1.2	21	1.5	12	1														
142	1.2*DL+1.5*LM9+1.0*WM...	Yes	Y		1	1.2	21	1.5	11	-.5	12	.866												
143	1.2*DL+1.5*LM9+1.0*WM...	Yes	Y		1	1.2	21	1.5	11	-.866	12	.5												
144	1.2*DL+1.5*LM9+1.0*WM...	Yes	Y		1	1.2	21	1.5	11	-1														
145	1.2*DL+1.5*LM9+1.0*WM...	Yes	Y		1	1.2	21	1.5	11	-.866	12	-.5												

Load Combinations (Continued)

	Description	S...	P...	SR...	B...	Fa...	B...	Fa...	B...	Fa...	B...	Fa...	B...	Fa...	B...	Fa...	B...	Fa...	B...	Fa...	B...	Fa...	B...	Fa...
146	1.2*DL+1.5*LM9+1.0*WM...	Yes	Y		1	1.2	21	1.5	11	-.5	12	-.866												
147	1.2*DL+1.5*LM9+1.0*WM...	Yes	Y		1	1.2	21	1.5	12	-1														
148	1.2*DL+1.5*LM9+1.0*WM...	Yes	Y		1	1.2	21	1.5	11	.5	12	-.866												
149	1.2*DL+1.5*LM9+1.0*WM...	Yes	Y		1	1.2	21	1.5	11	.866	12	-.5												
150	1.2*DL+1.5*LM10+1.0*W...	Yes	Y		1	1.2	22	1.5	11	1														
151	1.2*DL+1.5*LM10+1.0*W...	Yes	Y		1	1.2	22	1.5	11	.866	12	.5												
152	1.2*DL+1.5*LM10+1.0*W...	Yes	Y		1	1.2	22	1.5	11	.5	12	.866												
153	1.2*DL+1.5*LM10+1.0*W...	Yes	Y		1	1.2	22	1.5	12	1														
154	1.2*DL+1.5*LM10+1.0*W...	Yes	Y		1	1.2	22	1.5	11	-.5	12	.866												
155	1.2*DL+1.5*LM10+1.0*W...	Yes	Y		1	1.2	22	1.5	11	-.866	12	.5												
156	1.2*DL+1.5*LM10+1.0*W...	Yes	Y		1	1.2	22	1.5	11	-1														
157	1.2*DL+1.5*LM10+1.0*W...	Yes	Y		1	1.2	22	1.5	11	-.866	12	-.5												
158	1.2*DL+1.5*LM10+1.0*W...	Yes	Y		1	1.2	22	1.5	11	-.5	12	-.866												
159	1.2*DL+1.5*LM10+1.0*W...	Yes	Y		1	1.2	22	1.5	12	-1														
160	1.2*DL+1.5*LM10+1.0*W...	Yes	Y		1	1.2	22	1.5	11	.5	12	-.866												
161	1.2*DL+1.5*LM10+1.0*W...	Yes	Y		1	1.2	22	1.5	11	.866	12	-.5												
162	1.2*DL+1.5*LM11+1.0*W...	Yes	Y		1	1.2	23	1.5	11	1														
163	1.2*DL+1.5*LM11+1.0*W...	Yes	Y		1	1.2	23	1.5	11	.866	12	.5												
164	1.2*DL+1.5*LM11+1.0*W...	Yes	Y		1	1.2	23	1.5	11	.5	12	.866												
165	1.2*DL+1.5*LM11+1.0*W...	Yes	Y		1	1.2	23	1.5	12	1														
166	1.2*DL+1.5*LM11+1.0*W...	Yes	Y		1	1.2	23	1.5	11	-.5	12	.866												
167	1.2*DL+1.5*LM11+1.0*W...	Yes	Y		1	1.2	23	1.5	11	-.866	12	.5												
168	1.2*DL+1.5*LM11+1.0*W...	Yes	Y		1	1.2	23	1.5	11	-1														
169	1.2*DL+1.5*LM11+1.0*W...	Yes	Y		1	1.2	23	1.5	11	-.866	12	-.5												
170	1.2*DL+1.5*LM11+1.0*W...	Yes	Y		1	1.2	23	1.5	11	-.5	12	-.866												
171	1.2*DL+1.5*LM11+1.0*W...	Yes	Y		1	1.2	23	1.5	12	-1														
172	1.2*DL+1.5*LM11+1.0*W...	Yes	Y		1	1.2	23	1.5	11	.5	12	-.866												
173	1.2*DL+1.5*LM11+1.0*W...	Yes	Y		1	1.2	23	1.5	11	.866	12	-.5												
174	1.2*DL+1.5*LM12+1.0*W...	Yes	Y		1	1.2	24	1.5	11	1														
175	1.2*DL+1.5*LM12+1.0*W...	Yes	Y		1	1.2	24	1.5	11	.866	12	.5												
176	1.2*DL+1.5*LM12+1.0*W...	Yes	Y		1	1.2	24	1.5	11	.5	12	.866												
177	1.2*DL+1.5*LM12+1.0*W...	Yes	Y		1	1.2	24	1.5	12	1														
178	1.2*DL+1.5*LM12+1.0*W...	Yes	Y		1	1.2	24	1.5	11	-.5	12	.866												
179	1.2*DL+1.5*LM12+1.0*W...	Yes	Y		1	1.2	24	1.5	11	-.866	12	.5												
180	1.2*DL+1.5*LM12+1.0*W...	Yes	Y		1	1.2	24	1.5	11	-1														
181	1.2*DL+1.5*LM12+1.0*W...	Yes	Y		1	1.2	24	1.5	11	-.866	12	-.5												
182	1.2*DL+1.5*LM12+1.0*W...	Yes	Y		1	1.2	24	1.5	11	-.5	12	-.866												
183	1.2*DL+1.5*LM12+1.0*W...	Yes	Y		1	1.2	24	1.5	12	-1														
184	1.2*DL+1.5*LM12+1.0*W...	Yes	Y		1	1.2	24	1.5	11	.5	12	-.866												
185	1.2*DL+1.5*LM12+1.0*W...	Yes	Y		1	1.2	24	1.5	11	.866	12	-.5												
186	1.2*DL+1.5*LV1	Yes	Y		1	1.2	25	1.5																
187	1.2*DL+1.5*LV2	Yes	Y		1	1.2	26	1.5																
188	1.2*DL+1.5*LV3	Yes	Y		1	1.2	27	1.5																
189	1.2*DL+1.5*LV4	Yes	Y		1	1.2	28	1.5																
190	1.2*DL+1.5*LV5	Yes	Y		1	1.2	29	1.5																
191	1.2*DL+1.5*LV6	Yes	Y		1	1.2	30	1.5																
192	1.2*DL+1.5*LV7	Yes	Y		1	1.2	31	1.5																
193	1.2*DL+1.5*LV8	Yes	Y		1	1.2	32	1.5																
194	1.2*DL+1.5*LV9	Yes	Y		1	1.2	33	1.5																
195	1.2*DL+1.5*LV10	Yes	Y		1	1.2	34	1.5																

Envelope Joint Reactions

	Joint		X [lb]	LC	Y [lb]	LC	Z [lb]	LC	MX [k-ft]	LC	MY [k-ft]	LC	MZ [k-ft]	LC
1	N1	max	3305.977	13	3939.093	6	4774.871	3	2.256	5	.253	11	.362	12
2		min	-3782.984	7	-754.823	12	-3754.161	9	-3.581	11	-.474	5	-.391	6

Envelope Joint Reactions (Continued)

	Joint		X [lb]	LC	Y [lb]	LC	Z [lb]	LC	MX [k-ft]	LC	MY [k-ft]	LC	MZ [k-ft]	LC
3	N2	max	9753.314	6	2792.026	9	2415.836	12	.579	4	.52	10	12.856	11
4		min	-9677.445	12	-735.629	3	-2814.988	6	-.748	10	-.392	4	-6.63	5
5	N3	max	6331.462	6	2517.332	3	2224.833	11	.531	137	.42	11	2.638	12
6		min	-6601.554	12	-788.186	9	-2973.518	5	.088	7	-.254	5	-4.399	6
7	N4	max	3470.712	13	3406.008	13	5257.986	2	8.701	14	.6	22	.91	11
8		min	-2900.58	7	-664.904	7	-5374.228	8	2.58	8	.066	4	-.318	5
9	N23	max	58.473	5	358.43	45	3004.929	4	-.316	40	0	195	.287	10
10		min	-79.665	11	128.994	40	-3449.778	10	-.895	45	0	1	-.188	4
11	N24	max	27.649	5	349.054	44	1029.047	10	-.292	11	0	195	.218	10
12		min	-17.484	11	85.166	10	-273.685	4	-.894	44	0	1	-.147	4
13	Totals:	max	11910.868	5	9016.417	25	11167.198	2						
14		min	-11910.84	11	3755.797	38	-11167.154	8						

Stress ratio <1.0, members are adequate

Envelope AISC 15th(360-16): LRFD Steel Code Checks

	Member	Shape	Code Check	Loc[in]	LC	Shear Check	Loc[in]	Dir	LC	phi*Pnc...	phi*Pnt...	phi*Mn ...	phi*Mn ...	Cb	Eqn
1	M1	C6x2	.999	78.125	11	.074	78.125	y	11	18625....	76950	2.247	12.867	3...	H1-1b
2	M13	PIPE_2.5	.900	13.5	11	.444	9		11	19958....	50715	3.596	3.596	1	H3-6
3	M10	PIPE_2.5	.769	66.375	12	.490	66.375		11	19958....	50715	3.596	3.596	1	H3-6
4	M26	PIPE_2.0	.704	45	4	.420	44		10	17593....	32130	1.872	1.872	1	H1-1b
5	M16	L3X3X4	.676	94.366	11	.029	94.366	z	11	26154....	46656	1.688	3.488	2...	H2-1
6	M2	C6x2	.638	78.125	25	.056	78.125	y	25	18625....	76950	2.247	12.867	3...	H1-1b
7	M14	L3X3X4	.587	0	5	.027	47.183	y	5	26154....	46656	1.688	3.269	1...	H2-1
8	M7	L3X2.5X4	.585	0	11	.025	106.151	z	11	16927....	42768	1.251	2.638	2...	H2-1
9	M81	PIPE_2.0	.567	30	2	.134	30		2	13787....	32130	1.872	1.872	1	H1-1b
10	M25	PIPE_2.0	.566	40.5	4	.391	40.5		4	21540....	32130	1.872	1.872	1	H1-1b
11	M12	PIPE_2.5	.530	13.5	11	.426	9		12	19958....	50715	3.596	3.596	1	H3-6
12	M18	L3X3X4	.530	81.884	100	.019	81.884	z	127	30175....	46656	1.688	3.566	2...	H2-1
13	M20	L3X3X4	.503	0	12	.024	81.884	y	12	30175....	46656	1.688	3.517	2...	H2-1
14	M22	PIPE_2.0	.491	60	45	.149	30		10	28308....	32130	1.872	1.872	2...	H1-1b
15	M82	PIPE_2.0	.489	30	99	.209	78		2	13787....	32130	1.872	1.872	1	H1-1b
16	M3	C6x2	.486	78.125	6	.036	78.125	y	6	18625....	76950	2.247	12.867	3...	H1-1b
17	M23	PIPE_2.0	.483	60	46	.188	60		10	28308....	32130	1.872	1.872	2...	H1-1b
18	M4	C6x2	.481	78.125	11	.024	78.125	y	11	18625....	76950	2.247	12.867	2...	H1-1b
19	M15	L3X3X4	.455	0	12	.018	122.43	y	11	17579....	46656	1.688	3.229	2...	H2-1
20	M47	PIPE_2.0	.437	30	5	.116	30		11	13787....	32130	1.872	1.872	1	H1-1b
21	M46	PIPE_2.0	.432	30	11	.159	30		10	13787....	32130	1.872	1.872	1	H1-1b
22	M84	PIPE_2.0	.432	78	127	.112	30		127	13787....	32130	1.872	1.872	1	H1-1b
23	M45	PIPE_2.0	.415	78	23	.137	30		10	13787....	32130	1.872	1.872	1	H1-1b
24	M123	PIPE_2.0	.412	30	5	.093	30		11	13787....	32130	1.872	1.872	1	H1-1b
25	M69	HSS3.000X0.2...	.408	75	17	.090	84.375		2	50529....	91350	6.712	6.712	1	H1-1b
26	M9	L3X2.5X4	.399	106.151	6	.019	106.151	z	6	16927....	42768	1.251	2.639	2...	H2-1
27	M21	L3X3X4	.390	113.088	6	.020	113.088	y	12	20319....	46656	1.688	3.092	1...	H2-1
28	M83	PIPE_2.0	.386	30	129	.097	30		127	13787....	32130	1.872	1.872	1	H1-1b
29	M124	PIPE_2.0	.372	30	5	.070	30		10	13787....	32130	1.872	1.872	1	H1-1b
30	M19	L3X3X4	.361	113.088	128	.013	113.088	z	126	20319....	46656	1.688	3.39	2...	H2-1
31	M11	PIPE_2.5	.352	66.375	5	.228	74.25		5	34640....	50715	3.596	3.596	1	H1-1b
32	M6	L3X2.5X4	.348	106.151	12	.013	0	z	11	16927....	42768	1.251	2.534	1...	H2-1
33	M17	L3X3X4	.344	122.43	10	.013	122.43	z	9	17579....	46656	1.688	3.36	2...	H2-1
34	M24	SR 3/4" dia.	.342	0	44	.053	33		10	7186.8...	14313....	.179	.179	1...	H1-1b
35	M126	PIPE_2.0	.328	30	166	.091	73		11	13787....	32130	1.872	1.872	1	H1-1b
36	M125	PIPE_2.0	.324	78	155	.087	78		11	13787....	32130	1.872	1.872	1	H1-1b
37	M70	HSS3.000X0.2...	.323	75	8	.184	75		2	50529....	91350	6.712	6.712	1	H1-1b
38	M8	L3X2.5X4	.312	106.151	92	.016	106.151	y	15	16927....	42768	1.251	2.444	1...	H2-1
39	M114	HSS3.000X0.2...	.288	14	12	.067	14		141	50529....	91350	6.712	6.712	1	H1-1b
40	M113	HSS3.000X0.2...	.287	178	6	.116	178		5	50529....	91350	6.712	6.712	1	H1-1b

Envelope AISC 15th(360-16): LRFD Steel Code Checks (Continued)

	Member	Shape	Code Check	Loc[in]	LC	Shear Check	Loc[in]	Dir	LC	phi*Pnc...	phi*Pnt...	phi*Mn ...	phi*Mn ...	Cb	Eqn
41	M35	HSS3.000X0.2...	.285	121.875	12	.188	26.563		10	50529....	91350	6.712	6.712	1	H1-1b
42	M34	HSS3.000X0.2...	.226	121.875	8	.156	121.875		3	50529....	91350	6.712	6.712	1	H1-1b
43	M44	PIPE_2.0	.184	30	11	.051	78		5	13787....	32130	1.872	1.872	1	H1-1b
44	M150	HSS2.500X0.2...	.112	0	8	.027	157.353		4	9854.0...	74700	4.5	4.5	1...	H1-1b*
45	M5	C6x2	.046	0	8	.006	0	y	25	51064....	76950	2.247	11.301	1...	H1-1b
46	M151	HSS2.500X0.2...	.045	62.476	14	.039	124.952		135	15627....	74700	4.5	4.5	1...	H1-1b
47	M29	PIPE_2.0	.038	43.739	2	.052	0		11	16990....	32130	1.872	1.872	1...	H1-1b

Stress ratio <1.0, members are adequate

Mount-to-Tower Connection Calculations

New antenna mounting frame will be connected to tower platform via U-Bolts 1/2" Ø (tensile strength Fu=74 ksi according to manufacturer specification) and Threaded Rods 1/2" Ø (tensile strength Fu=58 ksi conservatively assumed)

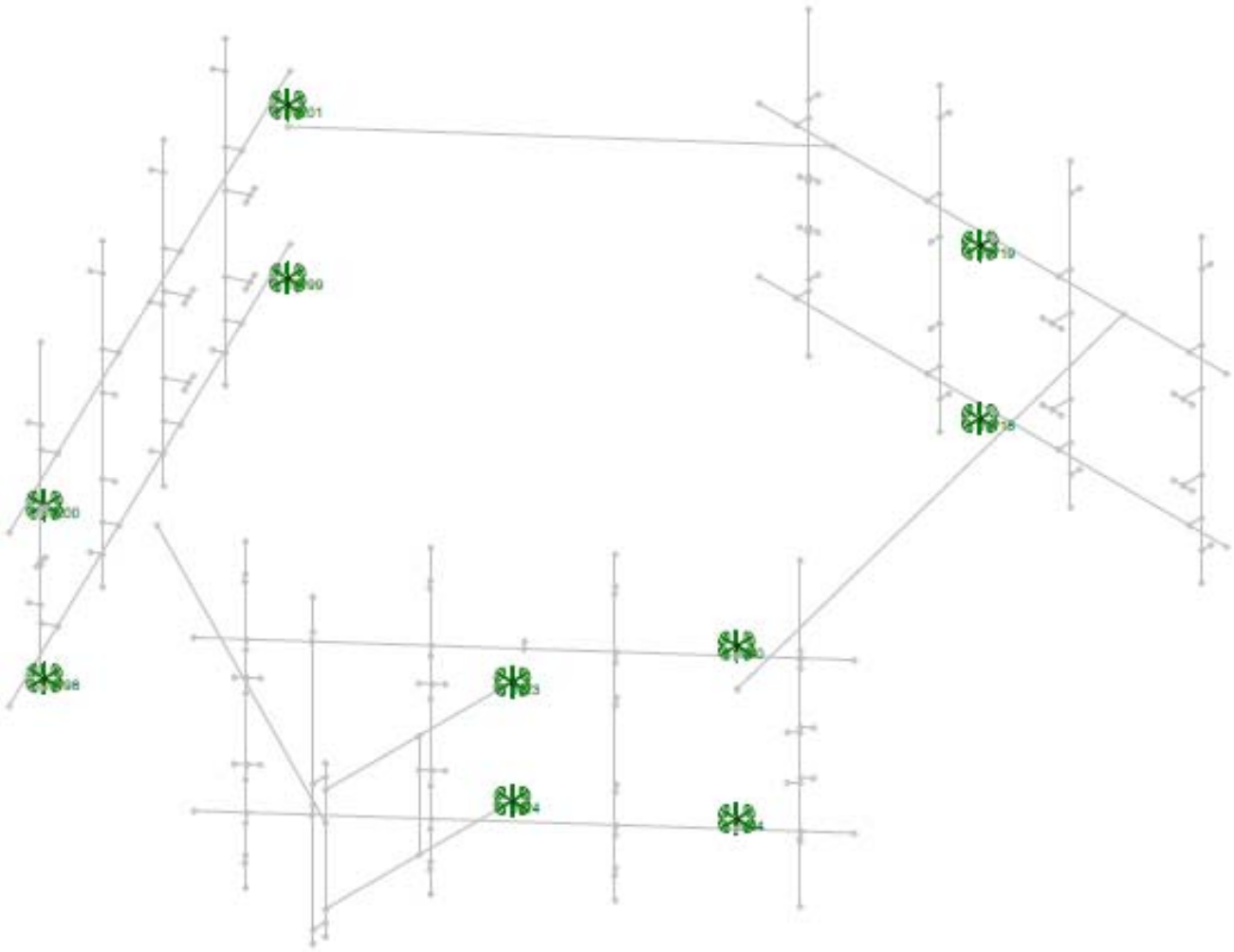

Maximum Reactions from Risa Mount Analysis per one U-Bolt:

Envelope Joint Reactions

	Joint		X [lb]	LC	Y [lb]	LC	Z [lb]	LC	MX [k-ft]	LC	MY [k-ft]	LC	MZ [k-ft]	LC
1	N40	max	1669.701	5	711.315	23	807.264	13	.061	4	0	195	.315	10
2		min	-1182.162	11	263.565	5	-1365.57	7	-1.074	10	0	1	-.848	4
3	N44	max	2113.437	5	846.997	85	1274.432	11	-.195	3	0	195	.14	87
4		min	-1417.887	11	258.024	3	-1761.252	5	-.987	21	0	1	-.626	69
5	N118	max	948.633	5	1133.145	14	1156.426	2	.988	8	0	195	1.326	90
6		min	-647.176	11	168.423	8	-1198.175	8	-.445	2	0	1	-.664	132
7	N119	max	859.425	4	1076.829	20	124.438	10	.48	25	0	195	1.25	91
8		min	-1191.662	10	326.549	2	-18.705	4	.041	8	0	1	-.59	133
9	N198	max	2588.653	5	664.429	179	4050.508	5	.828	166	0	195	-.197	34
10		min	-2928.261	11	172.778	34	-4674.78	11	.245	36	0	1	-.554	168
11	N199	max	1531.992	12	781.925	142	5005.92	12	-.411	40	0	195	.32	153
12		min	-1230.538	6	190.418	12	-4330.246	6	-1.098	154	0	1	-.085	11
13	N200	max	3152.148	5	547.316	183	4802.674	5	.78	171	0	195	-.111	11
14		min	-3445.273	11	175.697	40	-5507.851	11	.13	5	0	1	-.604	166
15	N201	max	1811.068	12	663.843	149	5935.251	12	-.412	40	0	195	.692	11
16		min	-1451.15	6	195.861	7	-5231.776	6	-1.089	150	0	1	-.458	5

$X := 3445.273 lbf$ *Maximum Factored Reaction - X direction*

$Y := 1133.145 lbf$ *Maximum Factored Reaction - Y direction*

$Z := 5507.851 lbf$ *Maximum Factored Reaction - Z direction*

$M_x := 1.089\ kip \cdot ft$ *Maximum Factored Moment - X direction*

$M_z := 1.326\ kip \cdot ft$ *Maximum Factored Moment - Z direction*

$d := 6in$ *Vertical spacing between the U-Bolts*

$P_t := \frac{Z}{4} + \frac{M_x}{2.d}$ $P_t = 2465.96 \cdot lbf$ *Factored Tensile Force*

$P_v := \frac{\sqrt{X^2 + Y^2}}{4} + \frac{M_z}{2 \cdot d}$ $P_v = 2232.71 \cdot lbf$ *Factored Shear Force*

$d_b := 0.5in$ *Diameter of U-Bolt*

$A_b := 0.25\pi \cdot d_b^2$ $A_b = 0.2 \cdot in^2$ *Area of U-Bolt*

$P_{t\_u\text{-}bolt} := P_t$ $P_{t\_u\text{-}bolt} = 2465.96 \cdot lbf$ *Tension at U-Bolt*

$P_{v\_u\text{-}bolt} := P_v$ $P_{v\_u\text{-}bolt} = 2232.71 \cdot lbf$ *Shear at U-Bolt*

Tensile and Shear Strength of Bolts and Threaded Parts

$F_u := 74ksi$ — *Ultimate Tensile Strength*

$F_{nt} := 0.75 \cdot F_u$ $\quad F_{nt} = 55.5 \cdot ksi$ — *Nominal tensile strength per AISC 360, Table J3.2*

$F_{nv} := 0.45 \cdot F_u$ $\quad F_{nv} = 33.3 \cdot ksi$ — *Nominal shear strength per AISC 360, Table J3.2*

$\phi_{u\text{-}bolt} := 0.75$ — *Resistance Factor (LRFD - AISC 360, Section J3-6)*

$R_{nt} := \phi_{u\text{-}bolt} \cdot F_{nt} \cdot A_b$ $\quad R_{nt} = 8.17 \cdot kip$ — *Design Nominal Tensile Strength (AISC 360, Section J3-1)*

$R_{nv} := \phi_{u\text{-}bolt} \cdot F_{nv} \cdot A_b$ $\quad R_{nv} = 4.9 \cdot kip$ — *Design Nominal Shear Strength (AISC 360, Section J3-1)*

$\frac{P_{t\_u\text{-}bolt}}{R_{nt}} = 30.17 \cdot \%$ **>30%** $\quad \frac{P_{v\_u\text{-}bolt}}{R_{nv}} = 45.53 \cdot \%$ **> 30%**

Check = "U-Bolts need to be investigated for effects of combined tension and shear stress"

Combined Tension and Shear in Bearing-Type Connections

$f_v := \frac{P_v}{A_b}$ $\quad f_v = 11.37 \cdot ksi$ — *Shear stress*

$f_t := \frac{P_t}{A_b}$ $\quad f_t = 12.56 \cdot ksi$ — *Tensile/Compressive stress*

$F_v := \phi_{u\text{-}bolt} \cdot F_{nv}$ $\quad F_v = 24.98 \cdot ksi$ — *Design shear stress*

$F_t := \phi_{u\text{-}bolt} \cdot F_{nt}$ $\quad F_t = 41.63 \cdot ksi$ — *Design tensile/compressive stress*

$F'_{nt} := 1.3 \cdot F_{nt} - \frac{F_{nt}}{\phi_{u\text{-}bolt} \cdot F_{nv}} \cdot f_v$ $\quad F'_{nt} = 46.88 \cdot ksi$ — *AISC 360 - J3 - 3a*

$F'_{nt} := if\left(F'_{nt} > F_{nt}, F_{nt}, F'_{nt}\right)$

$\frac{P_t}{\phi_{u\text{-}bolt} \cdot F'_{nt} \cdot A_b} = 35.72 \cdot \%$ $\quad \frac{P_v}{\phi_{u\text{-}bolt} \cdot F_{nv} \cdot A_b} = 45.53 \cdot \%$ — *AISC 360 - J3.7 Available Combined Tension and Shear strength in Bearing-Type Connection*

Check = "U-Bolts are sufficient"

Maximum Reactions from Risa Mount Analysis per one Threaded Rod:

Envelope Joint Reactions

	Joint		X [lb]	LC	Y [lb]	LC	Z [lb]	LC	MX [k-ft]	LC	MY [k-ft]	LC	MZ [k-ft]	LC
1	N23	max	72.584	5	230.449	45	3533.828	4	-.042	11	0	195	.193	10
2		min	-41.235	10	23.216	11	-2868.165	10	-.58	45	0	1	-.108	4
3	N24	max	51.867	5	265.589	4	1098.918	10	.004	10	0	195	.132	10
4		min	-11.79	11	-37.19	10	-341.874	4	-.572	44	0	1	-.087	4

$X := 72.584 lbf$ *Maximum Factored Reaction - X direction*

$Y := 265.589 lbf$ *Maximum Factored Reaction - Y direction*

$Z := 3533.828 lbf$ *Maximum Factored Reaction - Z direction*

$M_x := 0.572\, kip \cdot ft$ *Maximum Factored Moment - X direction*

$M_z := 0.193\, kip \cdot ft$ *Maximum Factored Moment - Z direction*

$d := 3in$ *Vertical spacing between the Threaded Rods*

$P_t := \frac{Z}{4} + \frac{M_x}{2.d}$ $P_t = 2027.46 \cdot lbf$ *Factored Tensile Force*

$P_v := \frac{\sqrt{X^2 + Y^2}}{4} + \frac{M_z}{2 \cdot d}$ $P_v = 454.83 \cdot lbf$ *Factored Shear Force*

$d_b := 0.5in$ *Diameter of Threaded Rod*

$A_b := 0.25\pi \cdot d_b^2$ $A_b = 0.2 \cdot in^2$ *Area of Threaded Rod*

$P_{t\_rod} := P_t$ $P_{t\_rod} = 2027.46 \cdot lbf$ *Tension at Threaded Rod*

$P_{v\_rod} := P_v$ $P_{v\_rod} = 454.83 \cdot lbf$ *Shear at Threaded Rod*

Tensile and Shear Strength of Rods and Threaded Parts

$F_u := 58ksi$ — *Ultimate Tensile Strength*

$F_{nt} := 0.75 \cdot F_u$ $\quad F_{nt} = 43.5 \cdot ksi$ — *Nominal tensile strength per AISC 360, Table J3.2*

$F_{nv} := 0.45 \cdot F_u$ $\quad F_{nv} = 26.1 \cdot ksi$ — *Nominal shear strength per AISC 360, Table J3.2*

$\phi_{rod} := 0.75$ — *Resistance Factor (LRFD - AISC 360, Section J3-6)*

$R_{nt} := \phi_{rod} \cdot F_{nt} \cdot A_b$ $\quad R_{nt} = 6.41 \cdot kip$ — *Design Nominal Tensile Strength (AISC 360, Section J3-1)*

$R_{nv} := \phi_{rod} \cdot F_{nv} \cdot A_b$ $\quad R_{nv} = 3.84 \cdot kip$ — *Design Nominal Shear Strength (AISC 360, Section J3-1)*

$\frac{P_{t\_rod}}{R_{nt}} = 31.65 \cdot \%$ **> 30%** $\quad \frac{P_{v\_rod}}{R_{nv}} = 11.83 \cdot \%$ **< 30%**

Check = "Threaded Rods need to be investigated for effects of combined tension and shear stress"

Combined Tension and Shear in Bearing-Type Connections

$f_v := \frac{P_v}{A_b}$ $\quad f_v = 2.32 \cdot ksi$ — *Shear stress*

$f_t := \frac{P_t}{A_b}$ $\quad f_t = 10.33 \cdot ksi$ — *Tensile/Compressive stress*

$F_v := \phi_{rod} \cdot F_{nv}$ $\quad F_v = 19.57 \cdot ksi$ — *Design shear stress*

$F_t := \phi_{rod} \cdot F_{nt}$ $\quad F_t = 32.63 \cdot ksi$ — *Design tensile/compressive stress*

$F'_{nt} := 1.3 \cdot F_{nt} - \frac{F_{nt}}{\phi_{rod} \cdot F_{nv}} \cdot f_v$ $\quad F'_{nt} = 51.4 \cdot ksi$ — *AISC 360 - J3 - 3a*

$F'_{nt} := if\left(F'_{nt} > F_{nt}, F_{nt}, F'_{nt}\right)$

$\frac{P_t}{\phi_{rod} \cdot F'_{nt} \cdot A_b} = 31.65 \cdot \%$ $\quad \frac{P_v}{\phi_{rod} \cdot F_{nv} \cdot A_b} = 11.83 \cdot \%$ — *AISC 360 - J3.7 Available Combined Tension and Shear strength in Bearing-Type Connection*

Check = "Threaded Rods are sufficient"

Section 17A - FINAL TOWER CONFIGURATION - SECTOR A (OR OMNI)

ANTENNA POSITION is LEFT to RIGHT from BACK OF ANTENNA (unless otherwise specified)	ANTENNA POSITION 1		ANTENNA POSITION 2		ANTENNA POSITION 3		ANTENNA POSITION 4		ANTENNA POSITION 5		ANTENNA POSITION 6		ANTENNA POSITION 7	
ANTENNA MAKE - MODEL	7770		HPA-65R-BUU-H8		TPA-65R-BU8DA-K		DMP65R-BU8DA							
ANTENNA VENDOR	Powerwave		CCI Products		CCI		CCI							
ANTENNA SIZE (H x W x D)	55X11X5		92.4X14.8X7.4		96X20.7X7.7		96X20.7X7.7							
ANTENNA WEIGHT	35		68		87.1		95.7							
AZIMUTH	143		40		40		40							
MAGNETIC DECLINATION														
RADIATION CENTER (feet)	124		124		124		124							
ANTENNA TIP HEIGHT	126		126		128		128							
MECHANICAL DOWNTILT	2		0		0		0							
FEEDER AMOUNT	2		Fiber + 2 Coax											
VERTICAL SEPARATION from ANTENNA ABOVE (TIP to TIP)														
VERTICAL SEPARATION from ANTENNA BELOW (TIP to TIP)														
HORIZONTAL SEPARATION from CLOSEST ANTENNA to LEFT (CENTERLINE to CENTERLINE)														
HORIZONTAL SEPARATION from CLOSEST ANTENNA to RIGHT (CENTERLINE to CENTERLINE)														
HORIZONTAL SEPARATION from ANOTHER ANTENNA (which antenna # / # of inches)														
Antenna RET Motor (QTY/MODEL)	2	Powerwave 7020		Internal		Built in		Built in						
SURGE ARRESTOR (QTY/MODEL)							1	DC/Fiber Squid(9/24)						
DIPLEXER (QTY/MODEL)	2	Powerwave / LGP 13519												
DUPLEXER (QTY/MODEL)														
Antenna RET CONTROL UNIT (QTY/MODEL)				LTE RRH		LTE RRH		LTE RRH						
DC BLOCK (QTY/MODEL)														
TMA/LNA (QTY/MODEL)	2	Pwav LGP21401 Single 1900 w/ 850BP (850)												
CURRENT INJECTORS FOR TMA (QTY/MODEL)	2	Polyphaser/ 1000860												
PDU FOR TMAS (QTY/MODEL)	1	Powerwave LGP12104												
FILTER (QTY/MODEL)														
SQUID (QTY/MODEL)														
FIBER TRUNK (QTY/MODEL)														
DC TRUNK (QTY/MODEL)														
REPEATER (QTY/MODEL)														
RRH - 700 band (QTY/MODEL)					1	4478 B14	1	4449 B5/B12						
RRH - 850 band (QTY/MODEL)								RRH is shared with another band						
RRH - 1900 band (QTY/MODEL)					1	RRUS-32 B2		RRH is shared with another band						
RRH - AWS band (QTY/MODEL)					1	8843 B2/B66A								
RRH - WCS band (QTY/MODEL)			1	RRUS-32 B30										
Additional RRH #1 - any band (QTY/MODEL)														
Additional RRH #2 - any band (QTY/MODEL)														
Additional Component 1 (QTY/MODEL)														
Additional Component 2 (QTY/MODEL)														
Additional Component 3 (QTY/MODEL)														
Local Market Note 1	// 4TX4RX Software Retrofit-700 B-C // 4TX4RX Software Retrofit-AWS F & J // 5G NR 1DR-1-850 B(U)// BWE Tower Top RRH Swap-1900 A3-A4 & E & C5 // LTE 5C-700 UPPER D // 4TX4RX Software Retrofit-700 B-C // Move Antenna position as per PD, and Rotate the Mounts to Match LTE Azimuth. // Add LTE Octoport Antenna. // Swap 12 port Antenna with a B14 4T4R capable 12 port Antenna, // Swap AWS Radios with Dual band radio shared with LTE 1900. // Swap 700 Radio with Dual band Radio shared with LTE 850/5G. // Swap DC/Fiber squid with DC/Fiber(9/24). // Add 6630 5G RBS with IDLe.													
Local Market Note 2	LTE alpha is with UMTS Gamma Face // LTE Beta is with UMTS Alpha Face // LTE Gamma is with UMTS Beta Face													
Local Market Note 3	1x6601 / 2x6630 / 1xXMU03 + IDLe (shared)													

PORT SPECIFIC FIELDS	PORT NUMBER	USEID (CSSng)	USEID (Atoll)	ATOLL TXID	ATOLL CELL ID	TX/RX ?	TECHNOLOGY/FREQUENCY	ANTENNA ATOLL	ANTENNA GAIN	ELECTRICAL AZIMUTH	ELECTRICAL TILT	RRH LOCATION (Top/Bottom/Integrated/None)	FEEDERS TYPE	FEEDER LENGTH (feet)	RXAIT KIT MODULE?	TRIPLEXER or LLC (QTY)	TRIPLEXER or LLC (MODEL)	SCPA/MCPA MODULE?	HATCHPLATE POWER (Watts)	ERP (Watts)	Antenna RET Name	CABLE NUMBER	CABLE ID (CSSNG)
ANTENNA POSITION 1	PORT 1	65054.A.850.3G.1	65054.A.850.3G.1	CTV10651	CTV10651		UMTS 850	7770.00.850.00	13.5	143	0	None	RFS 1-5/8 (850)	145.04						269.15			

ANTENNA POSITION 2	**PORT 3**	65054.A.WCS.4G.1	65054.A.WCS.4G.1	CTL01065_3A_1	CTL01065_3A_1		LTE WCS	HPA-65R-BUU-H8_2350MHz_00DT	17.4	40	0	Top	FIBER	0						1285.2866		4	
ANTENNA POSITION 3	**PORT 1**	65054.A.700.4G.tmp5	65054.A.700.4G.5	CTL01065_7A_3_F	CTL01065_7A_3_F		LTE 700	TPA-65R-BU8DA_719MHz_08DT	14.6	40	8	Top	FIBER	0						2951.413		5	
	PORT 3	65054.A.1900.4G.1	65054.A.1900.4G.1	CTL01065_9A_1	CTL01065_9A_1		LTE 1900	TPA-65R-BU8DA_1930MHz_07DT	17.4	40	7	Top	FIBER	0						4842.058		6	
	PORT 4	65054.A.AWS.4G.1	65054.A.AWS.4G.1	CTL01065_2A_1	CTL01065_2A_1		LTE AWS	TPA-65R-BU8DA_2133MHz_07DT	16.9	40	7	Top	FIBER	0						5070.2572		6	
	PORT 7	65054.A.1900.4G.1,65054.A.1900.4G.3	65054.A.1900.4G.1	CTL01065_9A_2	CTL01065_9A_2		LTE 1900	TPA-65R-BU8DA_1930MHz_07DT	17.4	40	7	Top	FIBER	0						4842.058		6	
	PORT 8	65054.A.AWS.4G.1,65054.A.AWS.4G.tmp4	65054.A.AWS.4G.1	CTL01065_2A_2	CTL01065_2A_2		LTE AWS	TPA-65R-BU8DA_2133MHz_07DT	16.9	40	7	Top	FIBER	0						5070.2572		6	
ANTENNA POSITION 4	**PORT 1**	65054.A.700.4G.1	65054.A.700.4G.1	CTL01065_7A_1	CTL01065_7A_1		LTE 700	DMP65R-BU8D_725MHz_08DT	13.7	40	8	Top	FIBER	0						1475.7065		7	
	PORT 2	65054.A.850.4G.tmp1	65054.A.850.4G.1	CTL01065_8A_1	CTL01065_8A_1		LTE 850	DMP65R-BU8D_850MHz_08DT	14.9	40	8	Top	FIBER	0						1000		7	
	PORT 5	65054.A.850.5G.tmp1	65054.A.850.5G.1	CTCN001065_N005A_1	CTCN001065_N005A_1		5G 850	DMP65R-BU8D_850MHz_08DT	14.9	40	8	Top	FIBER	0						1000		7	
	PORT 7	65054.A.1900.4G.1,65054.A.1900.4G.tmp5	65054.A.1900.4G.1	CTL01065_9A_3	CTL01065_9A_3		LTE 1900	DMP65R-BU8D_1930MHz_07DT	17.2	40	7	Top	FIBER	0						4842.058		8	

Section 17B - FINAL TOWER CONFIGURATION - SECTOR B

ANTENNA POSITION is LEFT to RIGHT from BACK OF ANTENNA (unless otherwise specified)	ANTENNA POSITION 1		ANTENNA POSITION 2		ANTENNA POSITION 3		ANTENNA POSITION 4		ANTENNA POSITION 5		ANTENNA POSITION 6		ANTENNA POSITION 7	
ANTENNA MAKE - MODEL	7770		HPA-65R-BUU-H8		TPA-65R-BU8DA-K		DMP65R-BU8DA							
ANTENNA VENDOR	Powerwave		CCI Products		CCI		CCI							
ANTENNA SIZE (H x W x D)	55X11X5		92.4X14.8X7.4		96X20.7X7.7		96X20.7X7.7							
ANTENNA WEIGHT	35		68		87.1		95.7							
AZIMUTH	263		160		160		160							
MAGNETIC DECLINATION														
RADIATION CENTER (feet)	124		124		124		124							
ANTENNA TIP HEIGHT	126		126		128		128							
MECHANICAL DOWNTILT	1		0		0		0							
FEEDER AMOUNT	2		Fiber + 2 Coax											
VERTICAL SEPARATION from ANTENNA ABOVE (TIP to TIP)														
VERTICAL SEPARATION from ANTENNA BELOW (TIP to TIP)														
HORIZONTAL SEPARATION from CLOSEST ANTENNA to LEFT (CENTERLINE to CENTERLINE)														
HORIZONTAL SEPARATION from CLOSEST ANTENNA to RIGHT (CENTERLINE to CENTERLINE)														
HORIZONTAL SEPARATION from ANOTHER ANTENNA (which antenna # / # of inches)														
Antenna RET Motor (QTY/MODEL)	2	Powerwave 7020		Internal		Built in		Built in						
SURGE ARRESTOR (QTY/MODEL)							1	DC/Fiber Squid(9/24)						
DIPLEXER (QTY/MODEL)	2	Powerwave / LGP 13519												
DUPLEXER (QTY/MODEL)														
Antenna RET CONTROL UNIT (QTY/MODEL)				LTE RRH		LTE RRH		LTE RRH						
DC BLOCK (QTY/MODEL)														
TMA/LNA (QTY/MODEL)	2	Pwav LGP21401 Single 1900 w/ 850BP (850)												
CURRENT INJECTORS FOR TMA (QTY/MODEL)	2	Polyphaser/ 1000860												
PDU FOR TMAS (QTY/MODEL)														
FILTER (QTY/MODEL)														
SQUID (QTY/MODEL)														
FIBER TRUNK (QTY/MODEL)														
DC TRUNK (QTY/MODEL)														
REPEATER (QTY/MODEL)														
RRH - 700 band (QTY/MODEL)					1	4478 B14	1	4449 B5/B12						
RRH - 850 band (QTY/MODEL)								RRH is shared with another band						
RRH - 1900 band (QTY/MODEL)					1	RRUS-32 B2		RRH is shared with another band						
RRH - AWS band (QTY/MODEL)					1	8843 B2/B66A								
RRH - WCS band (QTY/MODEL)			1	RRUS-32 B30										
Additional RRH #1 - any band (QTY/MODEL)														
Additional RRH #2 - any band (QTY/MODEL)														
Additional Component 1 (QTY/MODEL)														
Additional Component 2 (QTY/MODEL)														
Additional Component 3 (QTY/MODEL)														
Local Market Note 1	// 4TX4RX Software Retrofit-700 B-C // 4TX4RX Software Retrofit-AWS F & J // 5G NR 1DR-1-850 B(U)// BWE Tower Top RRH Swap-1900 A3-A4 & E & C5 // LTE 5C-700 UPPER D // 4TX4RX Software Retrofit-700 B-C // Move Antenna position as per PD, and Rotate the Mounts to Match LTE Azimuth. // Add LTE Octoport Antenna. // Swap 12 port Antenna with a B14 4T4R capable 12 port Antenna, // Swap AWS Radios with Dual band radio shared with LTE 1900. // Swap 700 Radio with Dual band Radio shared with LTE 850/5G. // Swap DC/Fiber squid with DC/Fiber(9/24). // Add 6630 5G RBS with IDLe.													
Local Market Note 2	LTE alpha is with UMTS Gamma Face // LTE Beta is with UMTS Alpha Face // LTE Gamma is with UMTS Beta Face													
Local Market Note 3	1x6601 / 2x6630 / 1xXMU03 + IDLe (shared)													

PORT SPECIFIC FIELDS	PORT NUMBER	USEID (CSSng)	USEID (Atoll)	ATOLL TXID	ATOLL CELL ID	TX/RX ?	TECHNOLOGY/FREQUENCY	ANTENNA ATOLL	ANTENNA GAIN	ELECTRICAL AZIMUTH	ELECTRICAL TILT	RRH LOCATION (Top/Bottom/Integrated/None)	FEEDERS TYPE	FEEDER LENGTH (feet)	RXAIT KIT MODULE?	TRIPLEXER or LLC (QTY)	TRIPLEXER or LLC (MODEL)	SCPA/MCPA MODULE?	HATCHPLATE POWER (Watts)	ERP (Watts)	Antenna RET Name	CABLE NUMBER	CABLE ID (CSSNG)
ANTENNA POSITION 1	**PORT 1**	65054.B.850.3G.1	65054.B.850.3G.1	CTV10652	CTV10652		UMTS 850	7770.00.850.00	13.5	263	0	None	RFS 1-5/8 (850)	145.04						269.15			

ANTENNA POSITION 2	**PORT 3**	65054.B.WCS.4G.1	65054.B.WCS.4G.1	CTL01065_3B_1	CTL01065_3B_1		LTE WCS	HPA-65R-BUU-H8_2350MHz_03DT	17.7	160	3	Top	FIBER	0						1285.2866		12	
ANTENNA POSITION 3	**PORT 1**	65054.B.700.4G.tmp5	65054.B.700.4G.5	CTL01065_7B_3_F	CTL01065_7B_3_F		LTE 700	TPA-65R-BU8DA_719MHz_08DT	14.6	160	2	Top	FIBER	0						2951.413		13	
	PORT 3	65054.B.1900.4G.1	65054.B.1900.4G.1	CTL01065_9B_1	CTL01065_9B_1		LTE 1900	TPA-65R-BU8DA_1930MHz_07DT	17.4	160	3	Top	FIBER	0						4842.058		14	
	PORT 4	65054.B.AWS.4G.1	65054.B.AWS.4G.1	CTL01065_2B_1	CTL01065_2B_1		LTE AWS	TPA-65R-BU8DA_2133MHz_07DT	16.9	160	3	Top	FIBER	0						5070.2572		14	
	PORT 7	65054.B.1900.4G.1,65054.B.1900.4G.4	65054.B.1900.4G.1	CTL01065_9B_2	CTL01065_9B_2		LTE 1900	TPA-65R-BU8DA_1930MHz_07DT	17.4	160	3	Top	FIBER	0						4842.058		14	
	PORT 8	65054.B.AWS.4G.1,65054.B.AWS.4G.tmp4	65054.B.AWS.4G.1	CTL01065_2B_2	CTL01065_2B_2		LTE AWS	TPA-65R-BU8DA_2133MHz_07DT	16.9	160	3	Top	FIBER	0						5070.2572		14	
ANTENNA POSITION 4	**PORT 1**	65054.B.700.4G.1	65054.B.700.4G.1	CTL01065_7B_1	CTL01065_7B_1		LTE 700	DMP65R-BU8D_725MHz_08DT	13.7	160	0	Top	FIBER	0						1475.7065		15	
	PORT 2	65054.B.850.4G.tmp1	65054.B.850.4G.1	CTL01065_8B_1	CTL01065_8B_1		LTE 850	DMP65R-BU8D_850MHz_02DT	14.7	160	2	Top	FIBER	0						1000		15	
	PORT 5	65054.B.850.5G.tmp1	65054.B.850.5G.1	CTCN001065_N005B_1	CTCN001065_N005B_1		5G 850	DMP65R-BU8D_850MHz_02DT	14.7	160	2	Top	FIBER	0						1000		15	
	PORT 7	65054.B.1900.4G.1,65054.B.1900.4G.tmp5	65054.B.1900.4G.1	CTL01065_9B_3	CTL01065_9B_3		LTE 1900	DMP65R-BU8D_1930MHz_03DT	16.9	160	3	Top	FIBER	0						4842.058		16	

Section 17C - FINAL TOWER CONFIGURATION - SECTOR C

ANTENNA POSITION is LEFT to RIGHT from BACK OF ANTENNA (unless otherwise specified)	ANTENNA POSITION 1		ANTENNA POSITION 2		ANTENNA POSITION 3		ANTENNA POSITION 4		ANTENNA POSITION 5		ANTENNA POSITION 6		ANTENNA POSITION 7	
ANTENNA MAKE - MODEL	7770		HPA-65R-BUU-H8		TPA-65R-BU8DA-K		DMP65R-BU8DA							
ANTENNA VENDOR	Powerwave		CCI Products		CCI		CCI							
ANTENNA SIZE (H x W x D)	55X11X5		92.4X14.8X7.4		96X20.7X7.7		96X20.7X7.7							
ANTENNA WEIGHT	35		68		87.1		95.7							
AZIMUTH	23		270		270		270							
MAGNETIC DECLINATION														
RADIATION CENTER (feet)	124		124		124		124							
ANTENNA TIP HEIGHT	126		126		128		128							
MECHANICAL DOWNTILT	1		1		0		0							
FEEDER AMOUNT	2		Fiber + 2 Coax											
VERTICAL SEPARATION from ANTENNA ABOVE (TIP to TIP)														
VERTICAL SEPARATION from ANTENNA BELOW (TIP to TIP)														
HORIZONTAL SEPARATION from CLOSEST ANTENNA to LEFT (CENTERLINE to CENTERLINE)														
HORIZONTAL SEPARATION from CLOSEST ANTENNA to RIGHT (CENTERLINE to CENTERLINE)														
HORIZONTAL SEPARATION from ANOTHER ANTENNA (which antenna # / # of inches)														
Antenna RET Motor (QTY/MODEL)	2	Powerwave 7020		Internal		Built in		Built in						
SURGE ARRESTOR (QTY/MODEL)							1	DC/Fiber Squid(9/24)						
DIPLEXER (QTY/MODEL)	2	Powerwave / LGP 13519												
DUPLEXER (QTY/MODEL)														
Antenna RET CONTROL UNIT (QTY/MODEL)				LTE RRH		LTE RRH		LTE RRH						
DC BLOCK (QTY/MODEL)														
TMA/LNA (QTY/MODEL)	2	Pwav LGP21401 Single 1900 w/ 850BP (850)												
CURRENT INJECTORS FOR TMA (QTY/MODEL)	2	Polyphaser/ 1000860												
PDU FOR TMAS (QTY/MODEL)														
FILTER (QTY/MODEL)														
SQUID (QTY/MODEL)														
FIBER TRUNK (QTY/MODEL)														
DC TRUNK (QTY/MODEL)														
REPEATER (QTY/MODEL)														
RRH - 700 band (QTY/MODEL)					1	4478 B14	1	4449 B5/B12						
RRH - 850 band (QTY/MODEL)								RRH is shared with another band						
RRH - 1900 band (QTY/MODEL)					1	RRUS-32 B2		RRH is shared with another band						
RRH - AWS band (QTY/MODEL)					1	8843 B2/B66A								
RRH - WCS band (QTY/MODEL)			1	RRUS-32 B30										
Additional RRH #1 - any band (QTY/MODEL)														
Additional RRH #2 - any band (QTY/MODEL)														
Additional Component 1 (QTY/MODEL)														
Additional Component 2 (QTY/MODEL)														
Additional Component 3 (QTY/MODEL)														
Local Market Note 1	// 4TX4RX Software Retrofit-700 B-C // 4TX4RX Software Retrofit-AWS F & J // 5G NR 1DR-1-850 B(U)// BWE Tower Top RRH Swap-1900 A3-A4 & E & C5 // LTE 5C-700 UPPER D // 4TX4RX Software Retrofit-700 B-C // Move Antenna position as per PD, and Rotate the Mounts to Match LTE Azimuth. // Add LTE Octoport Antenna. // Swap 12 port Antenna with a B14 4T4R capable 12 port Antenna, // Swap AWS Radios with Dual band radio shared with LTE 1900. // Swap 700 Radio with Dual band Radio shared with LTE 850/5G. // Swap DC/Fiber squid with DC/Fiber(9/24). // Add 6630 5G RBS with IDLe.													
Local Market Note 2	LTE alpha is with UMTS Gamma Face // LTE Beta is with UMTS Alpha Face // LTE Gamma is with UMTS Beta Face													
Local Market Note 3	1x6601 / 2x6630 / 1xXMU03 + IDLe (shared)													

PORT SPECIFIC FIELDS	PORT NUMBER	USEID (CSSng)	USEID (Atoll)	ATOLL TXID	ATOLL CELL ID	TX/RX ?	TECHNOLOGY/FREQUENCY	ANTENNA ATOLL	ANTENNA GAIN	ELECTRICAL AZIMUTH	ELECTRICAL TILT	RRH LOCATION (Top/Bottom/Integrated/None)	FEEDERS TYPE	FEEDER LENGTH (feet)	RXAIT KIT MODULE?	TRIPLEXER or LLC (QTY)	TRIPLEXER or LLC (MODEL)	SCPA/MCPA MODULE?	HATCHPLATE POWER (Watts)	ERP (Watts)	Antenna RET Name	CABLE NUMBER	CABLE ID (CSSNG)
ANTENNA POSITION 1	**PORT 1**	65054.C.850.3G.1	65054.C.850.3G.1	CTV10653	CTV10653		UMTS 850	7770.00.850.00	13.5	23	0	None	RFS 1-5/8 (850)	145.04						269.15			

ANTENNA POSITION 2	**PORT 3**	65054.C.WCS.4G.1	65054.C.WCS.4G.1	CTL01065_3C_1	CTL01065_3C_1		LTE WCS	HPA-65R-BUU-H8_2350MHz_07DT	17.9	270	7	Top	FIBER	0						1285.2866		20	
ANTENNA POSITION 3	**PORT 1**	65054.C.700.4G.tmp5	65054.C.700.4G.5	CTL01065_7C_3_F	CTL01065_7C_3_F		LTE 700	TPA-65R-BU8DA_719MHz_08DT	14.6	270	2	Top	FIBER	0						2951.413		21	
	PORT 3	65054.C.1900.4G.1	65054.C.1900.4G.1	CTL01065_9C_1	CTL01065_9C_1		LTE 1900	TPA-65R-BU8DA_1930MHz_07DT	17.4	270	2	Top	FIBER	0						4842.058		22	
	PORT 4	65054.C.AWS.4G.1	65054.C.AWS.4G.1	CTL01065_2C_1	CTL01065_2C_1		LTE AWS	TPA-65R-BU8DA_2133MHz_07DT	16.9	270	2	Top	FIBER	0						5070.2572		22	
	PORT 7	65054.C.1900.4G.1,65054.C.1900.4G.5	65054.C.1900.4G.1	CTL01065_9C_2	CTL01065_9C_2		LTE 1900	TPA-65R-BU8DA_1930MHz_07DT	17.4	270	2	Top	FIBER	0						4842.058		22	
	PORT 8	65054.C.AWS.4G.1,65054.C.AWS.4G.tmp4	65054.C.AWS.4G.1	CTL01065_2C_2	CTL01065_2C_2		LTE AWS	TPA-65R-BU8DA_2133MHz_07DT	16.9	270	2	Top	FIBER	0						5070.2572		22	
ANTENNA POSITION 4	**PORT 1**	65054.C.700.4G.1	65054.C.700.4G.1	CTL01065_7C_1	CTL01065_7C_1		LTE 700	DMP65R-BU8D_725MHz_08DT	13.7	270	0	Top	FIBER	0						1475.7065		23	
	PORT 2	65054.C.850.4G.tmp1	65054.C.850.4G.1	CTL01065_8C_1	CTL01065_8C_1		LTE 850	DMP65R-BU8D_850MHz_02DT	14.7	270	2	Top	FIBER	0						1000		23	
	PORT 5	65054.C.850.5G.tmp1	65054.C.850.5G.1	CTCN001065_N005C_1	CTCN001065_N005C_1		5G 850	DMP65R-BU8D_850MHz_02DT	14.7	270	2	Top	FIBER	0						1000		23	
	PORT 7	65054.C.1900.4G.1,65054.C.1900.4G.tmp5	65054.C.1900.4G.1	CTL01065_9C_3	CTL01065_9C_3		LTE 1900	DMP65R-BU8D_1930MHz_02DT	16.7	270	2	Top	FIBER	0						4842.058		24	

ANTENNA MOUNT ANALYSIS CHECKLIST

Mount Detail	
Mount Type	Other
Mount Model Number	N/A
If RT, then how is it attached	
If WT, then how is it attached	

Mount Mapping Detail	
Material condition (discoloration, cracks, pitting)	
Mfg. drawing, cutsheet, spec. available?	
Date of mount mapping	
Searched prior OOM for material?	
Photos of installation available?	
Original tower drawings show mounts?	
Searched for previous mapping?	
Is latest mod design (dwgs) available?	
Is the latest structural analysis available?	

Project Detail	
Market	Connecticut
PACE Project ID	MRCTB0347141, MRCTB047118, MRCTB047102, MRCTB047101, MRCTB047092
Site Name	LEBANON
City, State	LEBANON, CT
RFDS Version Number	1
Initiative (list mult., if applicable)	
Tower Owner	
SA Vendor	
A&E firm (for structural analysis)	
A&E firm (for mapping, if different)	
Last amendment date or last site visit	

Site Information	
Original Lease Date	
FA Code	10035007
Tower Type	Self Support Tower
Tower Height (Ft)	121
AT&T Rad Center # 1	124
AT&T Rad Center # 2	
AT&T Rad Center # 3	

Measurements and Deliverables on sketches	
Pipe / Angle dimenions and lengths	
bolt diameters and lengths	
U-Bolt diameters and lengths	
Steel Grade if indicated	
welds :length and sizes	
appurtenance relative locations	
Grounding Condition	

Equipment Detail Alpha Sector	Model Number for Ant, MW, RRU, TMA, Squid / Size of Coax, DC-Fiber Trunks & Jumpers	Height / COAX-DC-Fiber Trunk & Jumper Lengths in feet	Approz Az	mount position location
Antennas	(1) CCI DMP65R-DU8DA			
Antennas	(1) CCI TPA-65R-BU8DA			
Antennas	(1) CCI HPA-65R-BUU-H8			
Antennas	(1) Powerwave 7770			
RRU	(1) Ericsson RRUS-4449 B5/B12			
RRU	(1) Ericsson RRUS-32 B2			
RRU	(1) Ericsson RRUS-8843 B2/B66A			
RRU	(1) Ericsson RRUS-4478 B14			
RRU	(1) Ericsson RRUS-32 B30			
TMA	(1) Powerweave LGP21401			
Coax				
RET (not imbedded in antenna)				
DC Cable				
Fiber Cable				
Squid	(1) DC9-48-60-24-8C-EV			

Equipment Detail Beta Sector	Model Number for Ant, MW, RRU, TMA, Squid / Size of Coax, DC-Fiber Trunks & Jumpers	Height / COAX-DC-Fiber Trunk & Jumper Lengths in feet	Approz Az	mount position location
Antennas	(1) CCI DMP65R-DU8DA			
Antennas	(1) CCI TPA-65R-BU8DA			
Antennas	(1) CCI HPA-65R-BUU-H8			
Antennas	(1) Powerwave 7770			
RRU	(1) Ericsson RRUS-4449 B5/B12			
RRU	(1) Ericsson RRUS-32 B2			
RRU	(1) Ericsson RRUS-8843 B2/B66A			
RRU	(1) Ericsson RRUS-4478 B14			
RRU	(1) Ericsson RRUS-32 B30			
TMA	(1) Powerweave LGP21401			
Coax				
RET (not imbedded in antenna)				
DC Cable				
Fiber Cable				
Squid	(1) DC9-48-60-24-8C-EV			

Equipment Detail Gamma Sector		Height / COAX-DC-Fiber Trunk & Jumper Lengths in feet	Approz Az	mount position location
Antennas	(1) CCI DMP65R-DU8DA			
Antennas	(1) CCI TPA-65R-BU8DA			
Antennas	(1) CCI HPA-65R-BUU-H8			
Antennas	(1) Powerwave 7770			
RRU	(1) Ericsson RRUS-4449 B5/B12			
RRU	(1) Ericsson RRUS-32 B2			
RRU	(1) Ericsson RRUS-8843 B2/B66A			
RRU	(1) Ericsson RRUS-4478 B14			
RRU	(1) Ericsson RRUS-32 B30			
TMA	(1) Powerweave LGP21401			
Coax				
RET (not imbedded in antenna)				
DC Cable				
Fiber Cable				
Squid	(1) DC9-48-60-24-8C-EV			

Comments

Kristina Cottone

From: TrackingUpdates@fedex.com
Sent: Tuesday, October 13, 2020 1:04 PM
To: Kristina Cottone
Subject: FedEx Shipment 771742746086: Your package has been delivered

Hi. Your package was delivered Tue, 10/13/2020 at 1:03pm.

Delivered to
Received by Signature on File

OBTAIN PROOF OF DELIVERY

TRACKING NUMBER	771742746086
FROM	Smartlink LLC 85 Rangeway Road Building 3 Suite 102 NORTH BILLERICA, MA, US, 01862
TO	Town of Lebanon ATTN: First Selectman Kevin C 579 Exeter Road

	Main Floor Lebanon, CT, US, 06237
REFERENCE	CTL01065 - Lebanon
SHIP DATE	Mon 10/12/2020 12:00 AM
PACKAGING TYPE	Package
ORIGIN	NORTH BILLERICA, MA, US, 01862
DESTINATION	Lebanon, CT, US, 06237
NUMBER OF PIECES	1
TOTAL SHIPMENT WEIGHT	1.30 LB
SERVICE TYPE	FedEx Ground

To help protect your privacy, Microsoft Office prevented automatic download of this picture from the Internet.
For more details, click here to download the picture.

Download the FedEx® Mobile app

Get the flexibility you need to create shipments and request to customize your deliveries through the app.

LEARN MORE

FOLLOW FEDEX

Please do not respond to this message. This email was sent from an unattended mailbox. This report was generated at approximately 12:04 PM CDT 10/13/2020.

All weights are estimated.

Kristina Cottone

From: TrackingUpdates@fedex.com
Sent: Tuesday, October 13, 2020 1:04 PM
To: Kristina Cottone
Subject: FedEx Shipment 771742720281: Your package has been delivered

Hi. Your package was delivered Tue, 10/13/2020 at 1:03pm.

Delivered to
Received by Signature on File

OBTAIN PROOF OF DELIVERY

TRACKING NUMBER	771742720281
FROM	Smartlink LLC 85 Rangeway Road Building 3 Suite 102 NORTH BILLERICA, MA, US, 01862
TO	Town of Lebanon ATTN: Building Department 579 Exeter Road

	Lower Level LEBANON, CT, US, 06249
REFERENCE	CTL01065 - Lebanon
SHIP DATE	Mon 10/12/2020 12:00 AM
PACKAGING TYPE	Package
ORIGIN	NORTH BILLERICA, MA, US, 01862
DESTINATION	LEBANON, CT, US, 06249
NUMBER OF PIECES	1
TOTAL SHIPMENT WEIGHT	1.30 LB
SERVICE TYPE	FedEx Ground

To help protect your privacy, Microsoft Office prevented automatic download of this picture from the Internet.
For more details, click here to download the picture.

Download the FedEx® Mobile app

Get the flexibility you need to create shipments and request to customize your deliveries through the app.

LEARN MORE

FOLLOW FEDEX

Please do not respond to this message. This email was sent from an unattended mailbox. This report was generated at approximately 12:04 PM CDT 10/13/2020.

All weights are estimated.

Kristina Cottone

From: TrackingUpdates@fedex.com
Sent: Thursday, October 15, 2020 11:47 AM
To: Kristina Cottone
Subject: FedEx Shipment 771742780520: Your package has been delivered

Hi. Your package was delivered Thu, 10/15/2020 at 10:44am.

Delivered to 1010 PINE ST, Saint Louis, MO 63101
Received by SSPRATTLIG

OBTAIN PROOF OF DELIVERY

TRACKING NUMBER	771742780520
FROM	Smartlink LLC 85 Rangeway Road Building 3 Suite 102 NORTH BILLERICA, MA, US, 01862
TO	New Congular Wireless PCS LLC ATTN:New Congular Wireless PCS LLC 909 Chestnut St

	36-M-01 ST LOUIS, MO, US, 63101
REFERENCE	CTL01065 - Lebanon
SHIP DATE	Mon 10/12/2020 12:00 AM
PACKAGING TYPE	Package
ORIGIN	NORTH BILLERICA, MA, US, 01862
DESTINATION	ST LOUIS, MO, US, 63101
NUMBER OF PIECES	1
TOTAL SHIPMENT WEIGHT	1.00 LB
SERVICE TYPE	FedEx Ground

To help protect your privacy, Microsoft Office prevented automatic download of this picture from the Internet.
Details

Download the FedEx® Mobile app

Get the flexibility you need to create shipments and request to customize your deliveries through the app.

LEARN MORE

FOLLOW FEDEX

Please do not respond to this message. This email was sent from an unattended mailbox. This report was generated at approximately 10:46 AM CDT 10/15/2020.

All weights are estimated.

PROJECT:	LTE BWE/5G NR/4TX4RX /5C
SITE NUMBER:	CTL01065
FA NUMBER:	10035007
PTN NUMBER:	2051A0V86J/2051A0V963/2051A0V7MJ/2051A0V8CZ/2051A0V912
PACE NUMBER:	MRCTB047141/MRCTB047118/MRCTB047102/MRCTB047101/MRCTB047092
SITE NAME:	LEBANON
SITE ADDRESS:	244 GATES ROAD LEBANON, CT 06249

at&t
550 COCHITUATE ROAD
SUITE 550 13 AND 14
FRAMINGHAM, MA 01701

smartlink
1362 MELLON ROAD
SUITE 140
HANOVER, MD 21076

FULLERTON
ENGINEERING · DESIGN
1100 E. WOODFIELD ROAD, SUITE 500
SCHAUMBURG, ILLINOIS 60173
TEL: 847-908-8400
COA# PEC.0001899
www.FullertonEngineering.com

PROJECT INFORMATION

SITE NAME:	LEBANON
SITE NUMBER:	CTL01065
SITE ADDRESS:	244 GATES ROAD LEBANON, CT 06249
FA NUMBER:	10035007
PTN NUMBER:	2051A0V86J/2051A0V963/2051A0V7MJ/2051A0V8CZ/2051A0V912
PACE NUMBER:	MRCTB047141/MRCTB047118/MRCTB047102/MRCTB047101/MRCTB047092
USID NUMBER:	65054
APPLICANT:	AT&T WIRELESS 550 COCHITUATE ROAD SUITE 550 13 AND 14 FRAMINGHAM, MA 01701
OWNER:	AT&T CORP 1950 CENTURY BLVD., SUITE 25 ATLANTA, GA 30345
JURISDICTION:	CONNECTICUT SITING COUNCIL
COUNTY:	NEW LONDON
SITE COORDINATES FROM	(RFDS)
LATITUDE:	41.682936° / 41° 40' 58.56996"
LONGITUDE:	-72.216193° / -72° 12' 58.29516"
GROUND ELEV.:	668'
PROPOSED USE:	TELECOMMUNICATIONS FACILITY
AT&T RF MANAGER:	DEEPAK RATHORE
PHONE:	(860) 965-3068
EMAIL:	dr701e@att.com

PROJECT CONSULTANTS

PROJECT MANAGER:	SMARTLINK
ADDRESS:	85 RANGEWAY ROAD, SUITE 102 NORTH BILLERICA, MA 01862
CONTACT:	SHARON KEEFE (978) 930-3918
EMAIL:	Sharon.Keefe@smartlinkllc.com
SITE AQUISITION:	SMARTLINK
ADDRESS:	85 RANGEWAY ROAD, SUITE 102 NORTH BILLERICA, MA 01862
CONTACT:	KRISTINA COTTONE (978) 551-8627
EMAIL:	kristina.cottone@smartlinkgroup.com
ENGINEER/ARCHITECT:	FULLERTON ENGINEERING, P.C.
ADDRESS:	1100 E. WOODFIELD ROAD, SUITE 500 SCHAUMBURG, IL 60173
CONTACT:	MILEN DIMITROV (847) 908-8439
EMAIL:	MDimitrov@FullertonEngineering.com
CONSTRUCTION:	SMARTLINK
ADDRESS:	85 RANGEWAY ROAD, SUITE 102 NORTH BILLERICA, MA 01862
CONTACT:	MARK DONNELLY (617) 515-2080
EMAIL:	mark.donnelly@smartlinkllc.com

SCOPE OF WORK

LTE 700/AWS/850/BWE/700 WILL BE LTE 4TX4RX/4TX4RX/5G NR/BWE/5C AT THE SITE WITH BRONZE CONFIGURATION. PROPOSED PROJECT SCOPE HEREIN BASED ON RFDS ID # 3719997, VERSION 1.00 LAST UPDATED 03/18/20.

- (3) EXISTING ANTENNAS TO BE REMOVED
- (6) EXISTING RRU UNITS TO BE REMOVED
- (3) NEW MOUNTING FRAMES
- (2) EXISTING DC6 RAYCAP UNITS TO BE REMOVED
- (3) NEW ANTENNAS CCI TPA-65R-BU8DA-K, (3) NEW ANTENNAS CCI DMP65R-BU8DA
- (3) NEW RRUS-4478 B14, (3) NEW RRUS-8843 B2/B66A, (3) NEW RRUS-4449 B5/B12
- (2) EXISTING FIBER CABLES TO BE REMOVED
- (3) NEW DC9 RAYCAP UNITS, (3) NEW FIBER CABLES, (5) NEW DC POWER CABLES
- (1) NEW RBS 6630 FOR 5G WITH IDLe CABLES
- (6) EXISTING TRIPLEXERS TO BE REMOVED
- CONTRACTOR SHALL FURNISH ALL MATERIAL WITH THE EXCEPTION OF AT&T SUPPLIED MATERIAL.
- ALL MATERIAL SHALL BE INSTALLED BY THE CONTRACTOR, UNLESS STATED OTHERWISE.

SITE LOCATION MAP

NO SCALE

DIRECTIONS

SCAN QR CODE FOR LINK
TO SITE LOCATION MAP

APPLICABLE BUILDING CODES AND STANDARDS

ALL WORK AND MATERIALS SHALL BE PERFORMED AND INSTALLED IN ACCORDANCE WITH THE CURRENT EDITIONS OF THE FOLLOWING CODES AS ADOPTED BY THE LOCAL GOVERNING AUTHORITIES.

BUILDING CODE: 2015 INTERNATIONAL BUILDING CODE
2018 CONNECTICUT STATE BUILDING CODE SUPPLEMENT

ELECTRICAL CODE: 2017 NATIONAL ELECTRIC CODE

- FACILITY IS UNMANNED AND NOT FOR HUMAN HABITATION.
- ADA ACCESS REQUIREMENTS ARE NOT REQUIRED.
- THIS FACILITY DOES NOT REQUIRE POTABLE WATER AND WILL NOT PRODUCE ANY SEWAGE

DRAWING INDEX

T1	TITLE SHEET
SP1	NOTES AND SPECIFICATIONS
SP2	NOTES AND SPECIFICATIONS
A1	COMPOUND PLAN
A2	EQUIPMENT PLAN
A3	ELEVATIONS
A4	ANTENNA PLANS
A5	EQUIPMENT DETAILS
A6	ANTENNA & CABLE CONFIGURATION
A7	CABLE NOTES AND COLOR CODING
A8	GROUNDING DETAILS
A9	PLUMBING DIAGRAMS

NOTE: DRAWING SCALES ARE FOR 11"x17" SHEETS UNLESS OTHERWISE NOTED

REV	DATE	DESCRIPTION	BY
0	08/11/20	90% REVIEW	KC
1	08/23/20	FOR PERMIT	KC

I HEREBY CERTIFY THAT THESE DRAWINGS WERE PREPARED BY ME OR UNDER MY DIRECT SUPERVISION AND CONTROL, AND TO THE BEST OF MY KNOWLEDGE AND BELIEF COMPLY WITH THE REQUIREMENTS OF ALL APPLICABLE CODES.

SITE NAME
LEBANON

SITE NUMBER:
CTL01065

SITE ADDRESS
244 GATES ROAD
LEBANON, CT 06249

SHEET NAME
TITLE SHEET

SHEET NUMBER
T1

PROJECT# 2020.0032.0027

GENERAL CONSTRUCTION

1. FOR THE PURPOSE OF CONSTRUCTION DRAWINGS, THE FOLLOWING DEFINITIONS SHALL APPLY:
   CONTRACTOR/CM – SMARTLINK
   OWNER – AT&T WIRELESS
2. ALL SITE WORK SHALL BE COMPLETED AS INDICATED ON THE DRAWINGS AND AT&T PROJECT SPECIFICATIONS.
3. GENERAL CONTRACTOR SHALL VISIT THE SITE AND SHALL FAMILIARIZE HIMSELF WITH ALL CONDITIONS AFFECTING THE PROPOSED WORK AND SHALL MAKE PROVISIONS. GENERAL CONTRACTOR SHALL BE RESPONSIBLE FOR FAMILIARIZING HIMSELF WITH ALL CONTRACT DOCUMENTS, FIELD CONDITIONS, DIMENSIONS, AND CONFIRMING THAT THE WORK MAY BE ACCOMPLISHED AS SHOWN PRIOR TO PROCEEDING WITH CONSTRUCTION. ANY DISCREPANCIES SHALL BE BROUGHT TO THE ATTENTION OF THE ENGINEER PRIOR TO THE COMMENCEMENT OF WORK.
4. ALL MATERIALS FURNISHED AND INSTALLED SHALL BE IN STRICT ACCORDANCE WITH ALL APPLICABLE CODES, REGULATIONS, AND ORDINANCES. GENERAL CONTRACTOR SHALL ISSUE ALL APPROPRIATE NOTICES AND COMPLY WITH ALL LAWS, ORDINANCES, RULES, REGULATIONS, AND LAWFUL ORDERS OF ANY PUBLIC AUTHORITY REGARDING THE PERFORMANCE OF WORK.
5. ALL WORK CARRIED OUT SHALL COMPLY WITH ALL APPLICABLE MUNICIPAL AND UTILITY COMPANY SPECIFICATIONS AND LOCAL JURISDICTIONAL CODES, ORDINANCES, AND APPLICABLE REGULATIONS.
6. UNLESS NOTED OTHERWISE, THE WORK SHALL INCLUDE FURNISHING MATERIALS, EQUIPMENT, APPURTENANCES, AND LABOR NECESSARY TO COMPLETE ALL INSTALLATIONS AS INDICATED ON THE DRAWINGS.
7. PLANS ARE NOT TO BE SCALED. THESE PLANS ARE INTENDED TO BE A DIAGRAMMATIC OUTLINE ONLY UNLESS OTHERWISE NOTED. DIMENSIONS SHOWN ARE TO FINISH SURFACES UNLESS OTHERWISE NOTED. SPACING BETWEEN EQUIPMENT IS THE MINIMUM REQUIRED CLEARANCE. THEREFORE, IT IS CRITICAL TO FIELD VERIFY DIMENSIONS, SHOULD THERE BE ANY QUESTIONS REGARDING THE CONTRACT DOCUMENTS, THE CONTRACTOR SHALL BE RESPONSIBLE FOR OBTAINING A CLARIFICATION FROM THE ENGINEER PRIOR TO PROCEEDING WITH THE WORK. DETAILS ARE INTENDED TO SHOW DESIGN INTENT. MODIFICATIONS MAY BE REQUIRED TO SUIT JOB DIMENSIONS OR CONDITIONS AND SUCH MODIFICATIONS SHALL BE INCLUDED AS PART OF WORK AND PREPARED BY THE ENGINEER PRIOR TO PROCEEDING WITH WORK.
8. THE CONTRACTOR SHALL INSTALL ALL EQUIPMENT AND MATERIALS IN ACCORDANCE WITH MANUFACTURER'S RECOMMENDATIONS UNLESS SPECIFICALLY STATED OTHERWISE.
9. IF THE SPECIFIED EQUIPMENT CANNOT BE INSTALLED AS SHOWN ON THESE DRAWINGS, THE CONTRACTOR SHALL PROPOSE AN ALTERNATIVE INSTALLATION SPACE FOR APPROVAL BY THE ENGINEER PRIOR TO PROCEEDING.
10. GENERAL CONTRACTOR SHALL BE RESPONSIBLE FOR THE SAFETY OF WORK AREA, ADJACENT AREAS AND BUILDING OCCUPANTS THAT ARE LIKELY TO BE AFFECTED BY THE WORK UNDER THIS CONTRACT. WORK SHALL CONFIRM TO ALL OSHA REQUIREMENTS AND THE LOCAL JURISDICTION.
11. GENERAL CONTRACTOR SHALL COORDINATE WORK AND SCHEDULE WORK ACTIVITIES WITH OTHER DISCIPLINES.
12. ERECTION SHALL BE DONE IN A WORKMANLIKE MANNER BY COMPETENT EXPERIENCED WORKMAN IN ACCORDANCE WITH APPLICABLE CODES AND THE BEST ACCEPTED PRACTICE. ALL MEMBERS SHALL BE LAID PLUMB AND TRUE AS INDICATED ON THE DRAWINGS.
13. SEAL PENETRATIONS THROUGH FIRE RATED AREAS WITH UL LISTED MATERIALS APPROVED BY LOCAL JURISDICTION. CONTRACTOR SHALL KEEP AREA CLEAN, HAZARD FREE, AND DISPOSE OF ALL DEBRIS.
14. WORK PREVIOUSLY COMPLETED IS REPRESENTED BY LIGHT SHADED LINES AND NOTES. THE SCOPE OF WORK FOR THIS PROJECT IS REPRESENTED BY DARK SHADED LINES AND NOTES. CONTRACTOR SHALL NOTIFY THE GENERAL CONTRACTOR OF ANY EXISTING CONDITIONS THAT DEVIATE FROM THE DRAWINGS PRIOR TO BEGINNING CONSTRUCTION.
15. CONTRACTOR SHALL PROVIDE WRITTEN NOTICE TO THE CONSTRUCTION MANAGER 48 HOURS PRIOR TO COMMENCEMENT OF WORK.
16. THE CONTRACTOR SHALL PROTECT EXISTING IMPROVEMENTS, PAVEMENTS, CURBS, LANDSCAPING AND STRUCTURES. ANY DAMAGED PART SHALL BE REPAIRED AT CONTRACTOR'S EXPENSE TO THE SATISFACTION OF THE OWNER.
17. THE CONTRACTOR SHALL CONTACT UTILITY LOCATING SERVICES PRIOR TO THE START OF CONSTRUCTION.
18. GENERAL CONTRACTOR SHALL COORDINATE AND MAINTAIN ACCESS FOR ALL TRADES AND CONTRACTORS TO THE SITE AND/OR BUILDING.
19. THE GENERAL CONTRACTOR SHALL BE RESPONSIBLE FOR SECURITY OF THE SITE FOR THE DURATION OF CONSTRUCTION UNTIL JOB COMPLETION.
20. THE GENERAL CONTRACTOR SHALL MAINTAIN IN GOOD CONDITION ONE COMPLETE SET OF PLANS WITH ALL REVISIONS, ADDENDA, AND CHANGE ORDERS ON THE PREMISES AT ALL TIMES.
21. THE GENERAL CONTRACTOR SHALL PROVIDE PORTABLE FIRE EXTINGUISHERS WITH A RATING OF NOT LESS THAN 2–A OT 2–A:10–B:C AND SHALL BE WITHIN 25 FEET OF TRAVEL DISTANCE TO ALL PORTIONS OF WHERE THE WORK IS BEING COMPLETED DURING CONSTRUCTION.
22. ALL EXISTING ACTIVE SEWER, WATER, GAS, ELECTRIC, AND OTHER UTILITIES SHALL BE PROTECTED AT ALL TIMES, AND WHERE REQUIRED FOR THE PROPER EXECUTION OF THE WORK, SHALL BE RELOCATED AS DIRECTED BY THE ENGINEER. EXTREME CAUTION SHOULD BE USED BY THE CONTRACTOR WHEN EXCAVATING OR DRILLING PIERS AROUND OR NEAR UTILITIES. CONTRACTOR SHALL PROVIDE SAFETY TRAINING FOR THE WORKING CREW. THIS SHALL INCLUDE BUT NOT BE LIMITED TO A) FALL PROTECTION, B) CONFINED SPACE, C) ELECTRICAL SAFETY, AND D) TRENCHING & EXCAVATION.
23. ALL EXISTING INACTIVE SEWER, WATER, GAS, ELECTRIC, AND OTHER UTILITIES, WHICH INTERFERE WITH THE EXECUTION OF THE WORK, SHALL BE REMOVED, CAPPED, PLUGGED OR OTHERWISE DISCONNECTED AT POINTS WHICH WILL NOT INTERFERE WITH THE EXECUTION OF THE WORK, AS DIRECTED BY THE RESPONSIBLE ENGINEER, AND SUBJECT TO THE APPROVAL OF THE OWNER AND/OR LOCAL UTILITIES.
24. THE AREAS OF THE OWNER'S PROPERTY DISTURBED BY THE WORK AND NOT COVERED BY THE TOWER, EQUIPMENT OR DRIVEWAY, SHALL BE GRADED TO A UNIFORM SLOPE, AND STABILIZED TO PREVENT EROSION.
25. CONTRACTOR SHALL MINIMIZE DISTURBANCE TO THE EXISTING SITE DURING CONSTRUCTION. EROSION CONTROL MEASURES, IF REQUIRED DURING CONSTRUCTION, SHALL BE IN CONFORMANCE WITH THE FEDERAL AND LOCAL JURISDICTION FOR EROSION AND SEDIMENT CONTROL.
26. NO FILL OR EMBANKMENT MATERIAL SHALL BE PLACED ON FROZEN GROUNDING. FROZEN MATERIALS, SNOW OR ICE SHALL NOT BE PLACED IN ANY FILL OR EMBANKMENT.
27. THE SUBGRADE SHALL BE BROUGHT TO A SMOOTH UNIFORM GRADE AND COMPACTED TO 95 PERCENT STANDARD PROCTOR DENSITY UNDER PAVEMENT AND STRUCTURES AND 80 PERCENT STANDARD PROCTOR DENSITY IN OPEN SPACE. ALL TRENCHES IN PUBLIC RIGHT OF WAY SHALL BE BACKFILLED WITH FLOWABLE FILL OR OTHER MATERIAL PRE–APPROVED BY THE LOCAL JURISDICTION.
28. ALL NECESSARY RUBBISH, STUMPS, DEBRIS, STICKS, STONES, AND OTHER REFUSE SHALL BE REMOVED FROM THE SITE AND DISPOSED OF IN A LAWFUL MANNER.
29. ALL BROCHURES, OPERATING AND MAINTENANCE MANUALS, CATALOGS, SHOP DRAWINGS, AND OTHER DOCUMENTS SHALL BE TURNED OVER TO THE GENERAL CONTRACTOR AT COMPLETION OF CONSTRUCTION AND PRIOR TO PAYMENT.
30. CONTRACTOR SHALL SUBMIT A COMPLETE SET OF AS–BUILT REDLINES TO THE GENERAL CONTRACTOR UPON COMPLETION OF PROJECT AND PRIOR TO FINAL PAYMENT.
31. CONTRACTOR SHALL LEAVE PREMISES IN A CLEAN CONDITION.
32. THE PROPOSED FACILITY WILL BE UNMANNED AND DOES NOT REQUIRE POTABLE WATER OR SEWER SERVICE, AND IS NOT FOR HUMAN HABITAT (NO HANDICAP ACCESS REQUIRED).
33. OCCUPANCY IS LIMITED TO PERIODIC MAINTENANCE AND INSPECTION, APPROXIMATELY 2 TIMES PER MONTH, BY AT&T TECHNICIANS.
34. NO OUTDOOR STORAGE OR SOLID WASTE CONTAINERS ARE PROPOSED.
35. ALL MATERIAL SHALL BE FURNISHED AND WORK SHALL BE PERFORMED IN ACCORDANCE WITH THE LATEST REVISION AT&T MOBILITY GROUNDING STANDARD "TECHNICAL SPECIFICATION FOR CONSTRUCTION OF GSM/GPRS WIRELESS SITES" AND "TECHNICAL SPECIFICATION FOR FACILITY GROUNDING". IN CASE OF A CONFLICT BETWEEN THE CONSTRUCTION SPECIFICATION AND THE DRAWINGS, THE DRAWINGS SHALL GOVERN.
36. CONTRACTORS SHALL BE RESPONSIBLE FOR OBTAINING ALL PERMITS AND INSPECTIONS REQUIRED FOR CONSTRUCTION. IF CONTRACTOR CANNOT OBTAIN A PERMIT, THEY MUST NOTIFY THE GENERAL CONTRACTOR IMMEDIATELY.
37. CONTRACTOR SHALL REMOVE ALL TRASH AND DEBRIS FROM THE SITE ON A DAILY BASIS.
38. INFORMATION SHOWN ON THESE DRAWINGS WAS OBTAINED FROM SITE VISITS AND/OR DRAWINGS PROVIDED BY THE SITE OWNER. CONTRACTORS SHALL NOTIFY THE ENGINEER OF ANY DISCREPANCIES PRIOR TO ORDERING MATERIAL OR PROCEEDING WITH CONSTRUCTION.
39. NO WHITE STROBE LIGHTS ARE PERMITTED. LIGHTING IF REQUIRED, WILL MEET FAA STANDARDS AND REQUIREMENTS.

ANTENNA MOUNTING

40. DESIGN AND CONSTRUCTION OF ANTENNA SUPPORTS SHALL CONFORM TO CURRENT ANSI/TIA–222 OR APPLICABLE LOCAL CODES.
41. ALL STEEL MATERIALS SHALL BE GALVANIZED AFTER FABRICATION IN ACCORDANCE WITH ASTM A123 "ZINC (HOT–DIP GALVANIZED) COATINGS ON IRON AND STEEL PRODUCTS", UNLESS NOTED OTHERWISE.
42. ALL BOLTS, ANCHORS AND MISCELLANEOUS HARDWARE SHALL BE GALVANIZED IN ACCORDANCE WITH ASTM A153 "ZINC–COATING (HOT–DIP) ON IRON AND STEEL HARDWARE", UNLESS NOTED OTHERWISE.
43. DAMAGED GALVANIZED SURFACES SHALL BE REPAIRED BY COLD GALVANIZING IN ACCORDANCE WITH ASTM A780.
44. ALL ANTENNA MOUNTS SHALL BE INSTALLED WITH LOCK NUTS, DOUBLE NUTS AND SHALL BE TORQUED TO MANUFACTURER'S RECOMMENDATIONS.
45. CONTRACTOR SHALL INSTALL ANTENNA PER MANUFACTURER'S RECOMMENDATION FOR INSTALLATION AND GROUNDING.
46. ALL UNUSED PORTS ON ANY ANTENNAS SHALL BE TERMINATED WITH A 50–OHM LOAD TO ENSURE ANTENNAS PERFORM AS DESIGNED.
47. PRIOR TO SETTING ANTENNA AZIMUTHS AND DOWNTILTS, ANTENNA CONTRACTOR SHALL CHECK THE ANTENNA MOUNT FOR TIGHTNESS AND ENSURE THAT THEY ARE PLUMB. ANTENNA AZIMUTHS SHALL BE SET FROM TRUE NORTH AND BE ORIENTED WITHIN +/– 5% AS DEFINED BY THE RFDS. ANTENNA DOWNTILTS SHALL BE WITHIN +/– 0.5% AS DEFINED BY THE RFDS. REFER TO ND–00246.
48. JUMPERS FROM THE TMA'S MUST TERMINATE TO OPPOSITE POLARIZATION'S IN EACH SECTOR.
49. CONTRACTOR SHALL RECORD THE SERIAL #, SECTOR, AND POSITION OF EACH ACTUATOR INSTALLED AT THE ANTENNAS AND PROVIDE THE INFORMATION TO AT&T.
50. TMA'S SHALL BE MOUNTED ON PIPE DIRECTLY BEHIND ANTENNAS AS CLOSE TO ANTENNA AS FEASIBLE IN A VERTICAL POSITION.

TORQUE REQUIREMENTS

51. ALL RF CONNECTIONS SHALL BE TIGHTENED BY A TORQUE WRENCH.
52. ALL RF CONNECTIONS, GROUNDING HARDWARE AND ANTENNA HARDWARE SHALL HAVE A TORQUE MARK INSTALLED IN A CONTINUOUS STRAIGHT LINE FROM BOTH SIDES OF THE CONNECTION.
    A. RF CONNECTION BOTH SIDES OF THE CONNECTOR.
    B. GROUNDING AND ANTENNA HARDWARE ON THE NUT SIDE STARTING FROM THE THREADS TO THE SOLID SURFACE. EXAMPLE OF SOLID SURFACE: GROUND BAR, ANTENNA BRACKET METAL.

FIBER & POWER CABLE MOUNTING

53. THE FIBER OPTIC TRUNK CABLES SHALL BE INSTALLED INTO CONDUITS, CHANNEL CABLE TRAYS, OR CABLE TRAY. WHEN INSTALLING FIBER OPTIC TRUNK CABLES INTO A CABLE TRAY SYSTEM, THEY SHALL BE INSTALLED INTO AN INTER DUCT AND A PARTITION BARRIER SHALL BE INSTALLED BETWEEN THE 600 VOLT CABLES AND THE INTER DUCT IN ORDER TO SEGREGATE CABLE TYPES. OPTIC FIBER TRUNK CABLES SHALL HAVE APPROVED CABLE RESTRAINTS EVERY (60) SIXTY FEET AND SECURELY FASTENED TO THE CABLE TRAY SYSTEM. NFPA 70 (NEC) ARTICLE 770 RULES SHALL APPLY.
54. THE TYPE TC–ER CABLES SHALL BE INSTALLED INTO CONDUITS, CHANNEL CABLE TRAYS, OR CABLE TRAY AND SHALL BE SECURED AT INTERVALS NOT EXCEEDING (6) SIX FEET. AN EXCEPTION; WHERE TYPE TC–ER CABLES ARE NOT SUBJECT TO PHYSICAL DAMAGE, CABLES SHALL BE PERMITTED TO MAKE A TRANSITION BETWEEN CONDUITS, CHANNEL CABLE TRAYS, OR CABLE TRAY WHICH ARE SERVING UTILIZATION EQUIPMENT OR DEVICES, A DISTANCE (6) SIX FEET SHALL NOT BE EXCEEDED WITHOUT CONTINUOUS SUPPORTING. NFPA 70 (NEC) ARTICLES 336 AND 392 RULES SHALL APPLY.
55. WHEN INSTALLING OPTIC FIBER TRUNK CABLES OR TYPE TC–ER CABLES INTO CONDUITS, NFPA 70 (NEC) ARTICLE 300 RULES SHALL APPLY.

COAXIAL CABLE NOTES

62. TYPES AND SIZES OF THE ANTENNA CABLE ARE BASED ON ESTIMATED LENGTHS. PRIOR TO

    ORDERING CABLE, CONTRACTOR SHALL VERIFY ACTUAL LENGTH BASED ON CONSTRUCTION LAYOUT AND NOTIFY THE PROJECT MANAGER IF ACTUAL LENGTHS EXCEED ESTIMATED LENGTHS.
63. CONTRACTOR SHALL VERIFY THE DOWN–TILT OF EACH ANTENNA WITH A DIGITAL LEVEL.
64. CONTRACTOR SHALL CONFIRM COAX COLOR CODING PRIOR TO CONSTRUCTION.
65. ALL JUMPERS TO THE ANTENNAS FROM THE MAIN TRANSMISSION LINE SHALL BE 1/2" DIA. LDF AND SHALL NOT EXCEED 6'–0".
66. ALL COAXIAL CABLE SHALL BE SECURED TO THE DESIGNED SUPPORT STRUCTURE, IN AN APPROVED MANNER, AT DISTANCES NOT TO EXCEED 4'–0" OC.
67. CONTRACTOR SHALL FOLLOW ALL MANUFACTURER'S RECOMMENDATIONS REGARDING BOTH THE INSTALLATION AND GROUNDING OF ALL COAXIAL CABLES, CONNECTORS, ANTENNAS, AND ALL OTHER EQUIPMENT.
68. CONTRACTOR SHALL GROUND ALL EQUIPMENT. INCLUDING ANTENNAS, RET MOTORS, TMA'S, COAX CABLES, AND RET CONTROL CABLES AS A COMPLETE SYSTEM. GROUNDING SHALL BE EXECUTED BY QUALIFIED WIREMEN IN COMPLIANCE WITH MANUFACTURER'S SPECIFICATION AND RECOMMENDATION.
69. CONTRACTOR SHALL PROVIDE STRAIN–RELIEF AND CABLE SUPPORTS FOR ALL CABLE ASSEMBLIES, COAX CABLES, AND RET CONTROL CABLES. CABLE STRAIN–RELIEFS AND CABLE SUPPORTS SHALL BE APPROVED FOR THE PURPOSE. INSTALLATION SHALL BE IN ACCORDANCE WITH MANUFACTURER'S SPECIFICATIONS AND RECOMMENDATIONS.
70. CONTRACTOR TO VERIFY THAT EXISTING COAX HANGERS ARE STACKABLE SNAP IN HANGERS. IF EXISTING HANGERS ARE NOT STACKABLE SNAP IN HANGERS THE CONTRACTOR SHALL REPLACE EXISTING HANGERS WITH NEW SNAP IN HANGERS IF APPLICABLE.

GENERAL CABLE AND EQUIPMENT NOTES

71. CONTRACTOR SHALL BE RESPONSIBLE TO VERIFY ANTENNA, TMAS, DIPLEXERS, AND COAX CONFIGURATION, MAKE AND MODELS PRIOR TO INSTALLATION.
72. ALL CONNECTIONS FOR HANGERS, SUPPORTS, BRACING, ETC. SHALL BE INSTALLED PER TOWER MANUFACTURER'S RECOMMENDATIONS.
73. CONTRACTOR SHALL REFERENCE THE TOWER STRUCTURAL ANALYSIS/DESIGN DRAWINGS FOR DIRECTIONS ON CABLE DISTRIBUTION/ROUTING.
74. ALL OUTDOOR RF CONNECTORS/CONNECTIONS SHALL BE WEATHERPROOFED, EXCEPT THE RET CONNECTORS, USING BUTYL TAPE AFTER INSTALLATION AND FINAL CONNECTIONS ARE MADE. BUTYL TAPE SHALL HAVE A MINIMUM OF ONE–HALF TAPE WIDTH OVERLAP ON EACH TURN AND EACH LAYER SHALL BE WRAPPED THREE TIMES. WEATHERPROOFING SHALL BE SMOOTH WITHOUT BUCKLING. BUTYL BLEEDING IS NOT ALLOWED.
75. IF REQUIRED TO PAINT ANTENNAS AND/OR COAX:
    A. TEMPERATURE SHALL BE ABOVE 50° F.
    B. PAINT COLOR MUST BE APPROVED BY BUILDING OWNER/LANDLORD.
    C. FOR REGULATED TOWERS, FAA/FCC APPROVED PAINT IS REQUIRED.
    D. DO NOT PAINT OVER COLOR CODING OR ON EQUIPMENT MODEL NUMBERS
76. ALL CABLES SHALL BE GROUNDED WITH COAXIAL CABLE GROUND KITS. FOLLOW THE MANUFACTURER'S RECOMMENDATIONS.
    A. GROUNDING AT THE ANTENNA LEVEL.
    B. GROUNDING AT MID LEVEL, TOWERS WHICH ARE OVER 200'–0", ADDITIONAL CABLE GROUNDING REQUIRED.
    C. GROUNDING AT BASE OF TOWER PRIOR TO TURNING HORIZONTAL.
    D. GROUNDING OUTSIDE THE EQUIPMENT SHELTER AT ENTRY PORT.
    E. GROUNDING INSIDE THE EQUIPMENT SHELTER AT THE ENTRY PORT.
77. ALL PROPOSED GROUND BAR DOWNLEADS ARE TO BE TERMINATED TO THE EXISTING ADJACENT GROUND BAR DOWNLEADS A MINIMUM DISTANCE OF 4'–0" BELOW GROUND BAR. TERMINATIONS MAY BE EXOTHERMIC OR COMPRESSION.

at&t
550 COCHITUATE ROAD
SUITE 550 13 AND 14
FRAMINGHAM, MA 01701

smartlink
1362 MELLON ROAD
SUITE 140
HANOVER, MD 21076

FULLERTON
ENGINEERING · DESIGN
1100 E. WOODFIELD ROAD, SUITE 500
SCHAUMBURG, ILLINOIS 60173
TEL: 847-908-8400
COA# PEC.0001899
www.FullertonEngineering.com

REV	DATE	DESCRIPTION	BY
0	08/11/20	90% REVIEW	KC
1	08/23/20	FOR PERMIT	KC

I HEREBY CERTIFY THAT THESE DRAWINGS WERE PREPARED BY ME OR UNDER MY DIRECT SUPERVISION AND CONTROL, AND TO THE BEST OF MY KNOWLEDGE AND BELIEF COMPLY WITH THE REQUIREMENTS OF ALL APPLICABLE CODES.

STATE OF CONNECTICUT · HENRY M. BELLAGAMBA · 25358 · LICENSED PROFESSIONAL ENGINEER

SITE NAME
LEBANON

SITE NUMBER:
CTL01065

SITE ADDRESS
244 GATES ROAD
LEBANON, CT 06249

SHEET NAME
NOTES AND SPECIFICATIONS

SHEET NUMBER
SP1

PROJECT# 2020.0032.0027

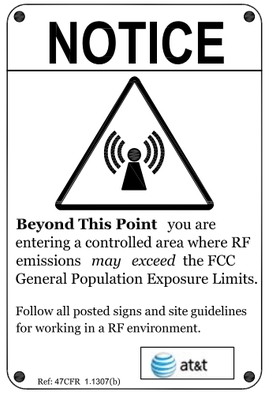

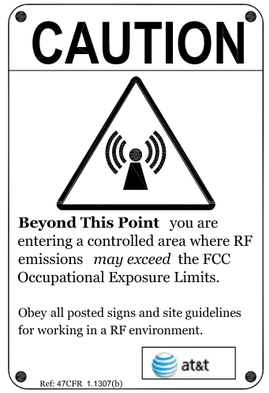

ALERTING SIGNS

ALERTING SIGN
(FOR CELL SITE BATTERIES)

ALERTING SIGN
(FOR DIESEL FUEL)

ALERTING SIGN
(FOR PROPANE)

ALERTING SIGN

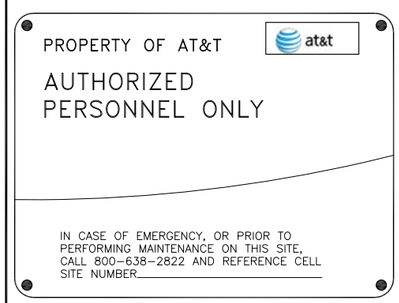

INFO SIGN #4

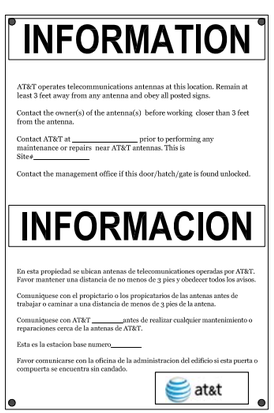

INFO SIGN #1

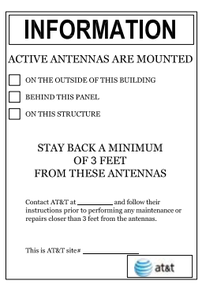

INFO SIGN #2

INFO SIGN #3

GENERAL SIGNAGE GUIDELINES

STRUCTURE TYPE	INFO SIGN #1	INFO SIGN #2	INFO SIGN #3	INFO SIGN #4	STRIPING	NOTICE SIGN	CAUTION SIGN
TOWERS							
MONOPOLE/MONOPINE/MONOPALM	ENTRANCE GATES, SHELTER DOORS OR ON THE OUTDOOR CABINETS	CLIMBING SIDE OF THE TOWER	ON BACKSIDE OF ANTENNAS	ENTRANCE GATES, SHELTER DOORS OR ON THE OUTDOOR CABINETS			AT THE HEIGHT OF THE FIRST CLIMBING STEP, MIN 9 FT ABOVE GROUND
SEC TOWERS/TOWERS WITH HIGH VOLTAGE	ENTRANCE GATES, SHELTER DOORS OR ON THE OUTDOOR CABINETS	CLIMBING SIDE OF THE TOWER	ON BACKSIDE OF ANTENNAS	ENTRANCE GATES, SHELTER DOORS OR ON THE OUTDOOR CABINETS			
LIGHT POLES/FLAG POLES	ENTRANCE GATES, SHELTER DOORS OR ON THE OUTDOOR CABINETS	ON THE POLE, NO LESS THAN 3FT BELOW THE ANTENNA AND LESS THAN 9FT ABOVE GROUND	ON BACKSIDE OF ANTENNAS	ENTRANCE GATES, SHELTER DOORS OR ON THE OUTDOOR CABINETS			
UTILITY WOOD POLES (JPA)	ENTRANCE GATES, SHELTER DOORS OR ON THE OUTDOOR CABINETS	ON THE POLE, NO LESS THAN 3FT BELOW THE ANTENNA AND LESS THAN 9FT ABOVE GROUND	ON BACKSIDE OF ANTENNAS	ENTRANCE GATES, SHELTER DOORS OR ON THE OUTDOOR CABINETS		IF GP MAX VALUE OF MPE AT ANTENNA LEVEL IS: 0-99%; NOTICE SIGN; OVER 99%: CAUTION SIGN AT NO LESS THAN 3FT BELOW ANTENNA AND 9FT ABOVE GROUND	
MICROCELLS MOUNTED ON NON-JPA POLES	ENTRANCE GATES, SHELTER DOORS OR ON THE OUTDOOR CABINETS	ON THE POLE, NO LESS THAN 3FT BELOW THE ANTENNA AND LESS THAN 9FT ABOVE GROUND	ON BACKSIDE OF ANTENNAS	ENTRANCE GATES, SHELTER DOORS OR ON THE OUTDOOR CABINETS		NOTICE OR CAUTION SIGN AT NO LESS THAN 9FT ABOVE GROUND: ONLY IF THE EXPOSURE EXCEEDS 90% OF THE GENERAL PUBLIC EXPOSURE AT EXPOSURE AT 6FT ABOVE GROUND OR AT OUTSIDE OF SURFACE OF ADJACENT BUILDING	
TOWERS							
AT ALL ACCESS POINTS TO THE ROOF	X			X			
ON ANTENNAS	X		X	X			
CONCEALED ANTENNAS	X	X		X			
ANTENNAS MOUNTED FACING OUTSIDE THE BUILDING	X	X		X			
ANTENNAS ON SUPPORT STRUCTURE	X	X		X			
ROOFVIEW GRAPH						EITHER NOTICE OR CAUTION SIGN (BASED ON ROOFVIEW RESULTS) AT ANTENNA /BARRIER	
RADIATION AREA IS WITHIN 3FT FROM ANTENNA	X	ADJACENT TO EACH ANTENNA		X			
RADIATION AREA IS BEYOND 3FT FROM ANTENNA	X	ADJACENT TO EACH ANTENNA		X	DIAGONAL, YELLOW STRIPING AS TO ROOFVIEW GRAPH		
CHURCH STEEPLES	ACCESS TO STEEPLE	ADJACENT TO ANTENNAS IF ANTENNAS ARE CONCEALED	ON BACKSIDE OF ANTENNAS	ACCESS TO STEEPLE			CAUTION SIGN AT THE ANTENNAS
WATER STATIONS	ACCESS TO LADDER	ADJACENT TO ANTENNAS IF ANTENNAS ARE CONCEALED	ON BACKSIDE OF ANTENNAS	ACCESS TO LADDER			CAUTION SIGN BESIDE INFO SIGN #1, MIN. 9FT ABOVE GROUND

NOTES FOR ROOFTOP SITES:

1. EITHER NOTICE OR CAUTION SIGNS NEED TO BE POSTED AT EACH SECTOR AS CLOSE AS POSSIBLE TO: THE OUTER EDGE OF THE STRIPED OFF AREA OR THE OUTER ANTENNAS OF THE SECTOR
2. IF ROOFVIEWS SHOWS: ONLY BLUE = NOTICE SIGN, BLUE AND YELLOW = CAUTION SIGN, ONLY YELLOW = CAUTION SIGN TO BE INSTALLED
3. SHOULD THE REQUIRED STRIPING AREAS INTERFERE WITH ANY STRUCTURE OR EQUIPMENT (A/C, VENTS, ROOF HATCH, DOORS, OTHER ANTENNAS, DISHES, ETC.). PLEASE NOTIFY AT&T TO MODIFY THE STRIPING AREA, PRIOR TO STARTING THE WORK.

SIGNAGE GUIDELINES CHART

at&t
550 COCHITUATE ROAD
SUITE 550 13 AND 14
FRAMINGHAM, MA 01701

smartlink
1362 MELLON ROAD
SUITE 140
HANOVER, MD 21076

FULLERTON
ENGINEERING · DESIGN
1100 E. WOODFIELD ROAD, SUITE 500
SCHAUMBURG, ILLINOIS 60173
TEL: 847-908-8400
COA# PEC.0001899
www.FullertonEngineering.com

REV	DATE	DESCRIPTION	BY
0	08/11/20	90% REVIEW	KC
1	08/23/20	FOR PERMIT	KC

I HEREBY CERTIFY THAT THESE DRAWINGS WERE PREPARED BY ME OR UNDER MY DIRECT SUPERVISION AND CONTROL, AND TO THE BEST OF MY KNOWLEDGE AND BELIEF COMPLY WITH THE REQUIREMENTS OF ALL APPLICABLE CODES.

SITE NAME
LEBANON

SITE NUMBER:
CTL01065

SITE ADDRESS
244 GATES ROAD
LEBANON, CT 06249

SHEET NAME
NOTES AND SPECIFICATIONS

SHEET NUMBER
SP2

PROJECT# 2020.0032.0027

ABBREVIATIONS

AFF	ABOVE FINISHED FLOOR
AGL	ABOVE GRADE LEVEL
AMSL	ABOVE MEAN SEA LEVEL
APPROX	APPROXIMATE
ATS	AUTOMATIC TRANSFER SWITCH
AWG	AMERICAN WIRE GAUGE
BLDG	BUILDING
BTS	BASE TRANSMISSION STATION
℄	CENTERLINE
CLR	CLEAR
COL	COLUMN
CONC	CONCRETE
CND	CONDUIT
DWG	DRAWING
FT	FOOT(FEET)
EGB	EQUIPMENT GROUND BAR
ELEC	ELECTRICAL
EMT	ELECTRICAL METALLIC TUBING
ELEV	ELEVATION
EQUIP	EQUIPMENT
(E)	EXISTING
EXT	EXTERIOR
FND	FOUNDATION
F	FIBER
FIF	FACILITY INTERFACE FRAME
GA	GAUGE
GALV	GALVANIZED
GPS	GLOBAL POSITIONING SYSTEM
GND	GROUND
GSM	GLOBAL SYSTEM FOR MOBILE COMMUNICATION
LTE	LONG TERM EVOLUTION
MAX	MAXIMUM
MCPA	MULTI-CARRIER POWER AMPLIFIER
MFR	MANUFACTURER
MGB	MASTER GROUND BAR
MIN	MINIMUM
MTS	MANUAL TRANSFER SWITCH
N.T.S.	NOT TO SCALE
O.C.	ON CENTER
OE/OT	OVERHEAD ELECTRIC/TELCO
PPC	POWER PROTECTION CABINET
PL	PROPERY LINE
RBS	RADIO BASED STATION
RET	REMOTE ELECTRIC TILT
RRU	REMOTE RADIO UNIT
RGS	RIGID GALVANIZED STEEL
IN	INCH(ES)
INT	INTERIOR
LB(S), #	POUND(S)
SF	SQUARE FOOT
STL	STEEL
TMA	TOWER MOUNTED AMPLIFIER
TYP	TYPICAL
UE/UT	UNDERGROUND ELECTRIC/TELCO
UNO	UNLESS NOTED OTHERWISE
UMTS	UNIVERSAL MOBILE TELE-COMMUNICATION SYSTEM
VIF	VERIFY IN FIELD
W/	WITH
XFMR	TRANSFORMER

SYMBOLS

- REVISION
- WORK POINT
- UTILITY POLE
- COMPRESSED STONE
- BRICK
- CONCRETE
- EARTH
- GRAVEL
- MASONRY
- STEEL
- CENTERLINE
- PROPERTY LINE
- LEASE LINE
- EASEMENT LINE
- CHAIN LINK FENCE
- WOOD FENCE
- UE — BELOW GRADE ELECTRIC
- UT — BELOW GRADE TELEPHONE
- OE/OT — OVERHEAD ELECTRIC/TELEPHONE
- SECTION REFERENCE

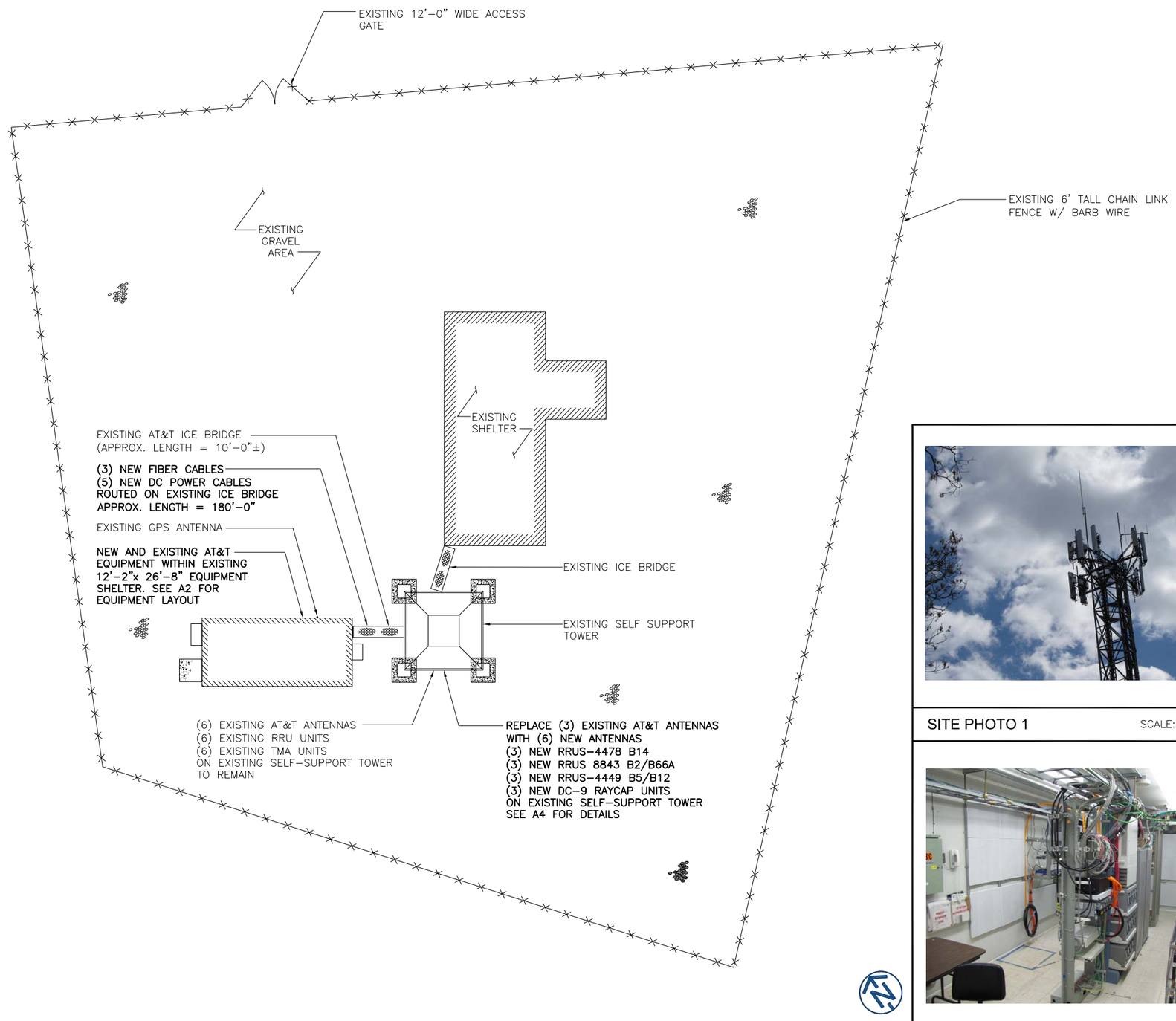

COMPOUND PLAN — 0 10 20 30 — SCALE: 1" = 20'-0" — 1

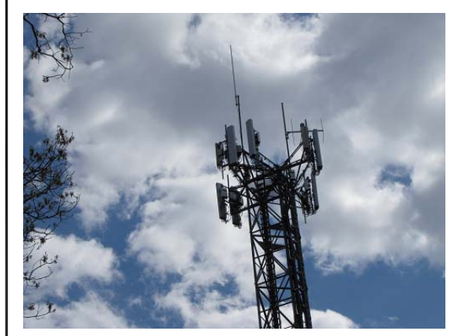

SITE PHOTO 1 — SCALE: N.T.S. — 2

SITE PHOTO 2 — SCALE: N.T.S. — 3

at&t
550 COCHITUATE ROAD
SUITE 550 13 AND 14
FRAMINGHAM, MA 01701

smartlink
1362 MELLON ROAD
SUITE 140
HANOVER, MD 21076

FULLERTON ENGINEERING · DESIGN
1100 E. WOODFIELD ROAD, SUITE 500
SCHAUMBURG, ILLINOIS 60173
TEL: 847-908-8400
COA# PEC.0001899
www.FullertonEngineering.com

REV	DATE	DESCRIPTION	BY
0	08/11/20	90% REVIEW	KC
1	08/23/20	FOR PERMIT	KC

I HEREBY CERTIFY THAT THESE DRAWINGS WERE PREPARED BY ME OR UNDER MY DIRECT SUPERVISION AND CONTROL, AND TO THE BEST OF MY KNOWLEDGE AND BELIEF COMPLY WITH THE REQUIREMENTS OF ALL APPLICABLE CODES.

STATE OF CONNECTICUT · HENRY M. BELLAGAMBA · 25358 · LICENSED PROFESSIONAL ENGINEER

SITE NAME
LEBANON

SITE NUMBER:
CTL01065

SITE ADDRESS
244 GATES ROAD
LEBANON, CT 06249

SHEET NAME
COMPOUND PLAN

SHEET NUMBER
A1

PROJECT# 2020.0032.0027

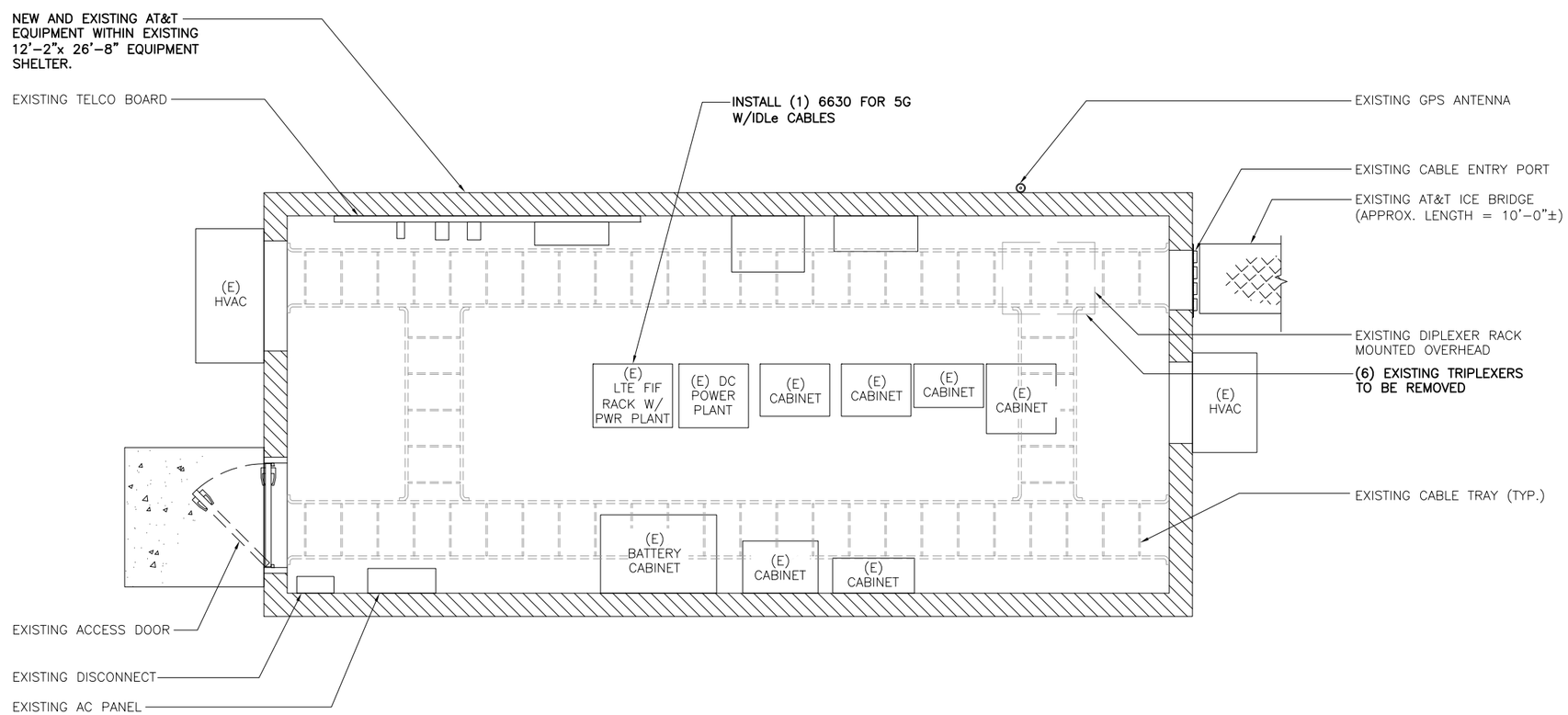

EQUIPMENT PLAN

0 1' 2' 4' 6'

SCALE: 1/4" = 1'-0"

1

at&t
550 COCHITUATE ROAD
SUITE 550 13 AND 14
FRAMINGHAM, MA 01701

smartlink
1362 MELLON ROAD
SUITE 140
HANOVER, MD 21076

FULLERTON
ENGINEERING · DESIGN
1100 E. WOODFIELD ROAD, SUITE 500
SCHAUMBURG, ILLINOIS 60173
TEL: 847-908-8400
COA# PEC.0001899
www.FullertonEngineering.com

REV	DATE	DESCRIPTION	BY
0	08/11/20	90% REVIEW	KC
1	08/23/20	FOR PERMIT	KC

I HEREBY CERTIFY THAT THESE DRAWINGS WERE PREPARED BY ME OR UNDER MY DIRECT SUPERVISION AND CONTROL, AND TO THE BEST OF MY KNOWLEDGE AND BELIEF COMPLY WITH THE REQUIREMENTS OF ALL APPLICABLE CODES.

STATE OF CONNECTICUT · HENRY M. BELLAGAMBA · 25358 · LICENSED PROFESSIONAL ENGINEER

SITE NAME

LEBANON

SITE NUMBER:

CTL01065

SITE ADDRESS

244 GATES ROAD
LEBANON, CT 06249

SHEET NAME

EQUIPMENT PLAN

SHEET NUMBER

A2

PROJECT# 2020.0032.0027

NOTES:

1. FULLERTON CERTIFIES THE CAPACITY OF THE STRUCTURE TO SUPPORT THE NEW EQUIPMENT
2. CALCULATIONS FOR THE ANTENNA MOUNTS WERE PREPARED BY FULLERTON AND THOSE CALCULATIONS CERTIFY THE CAPACITY OF THE STRUCTURE TO SUPPORT THE NEW EQUIPMENT
3. CABLES NOT SHOWN FOR CLARITY

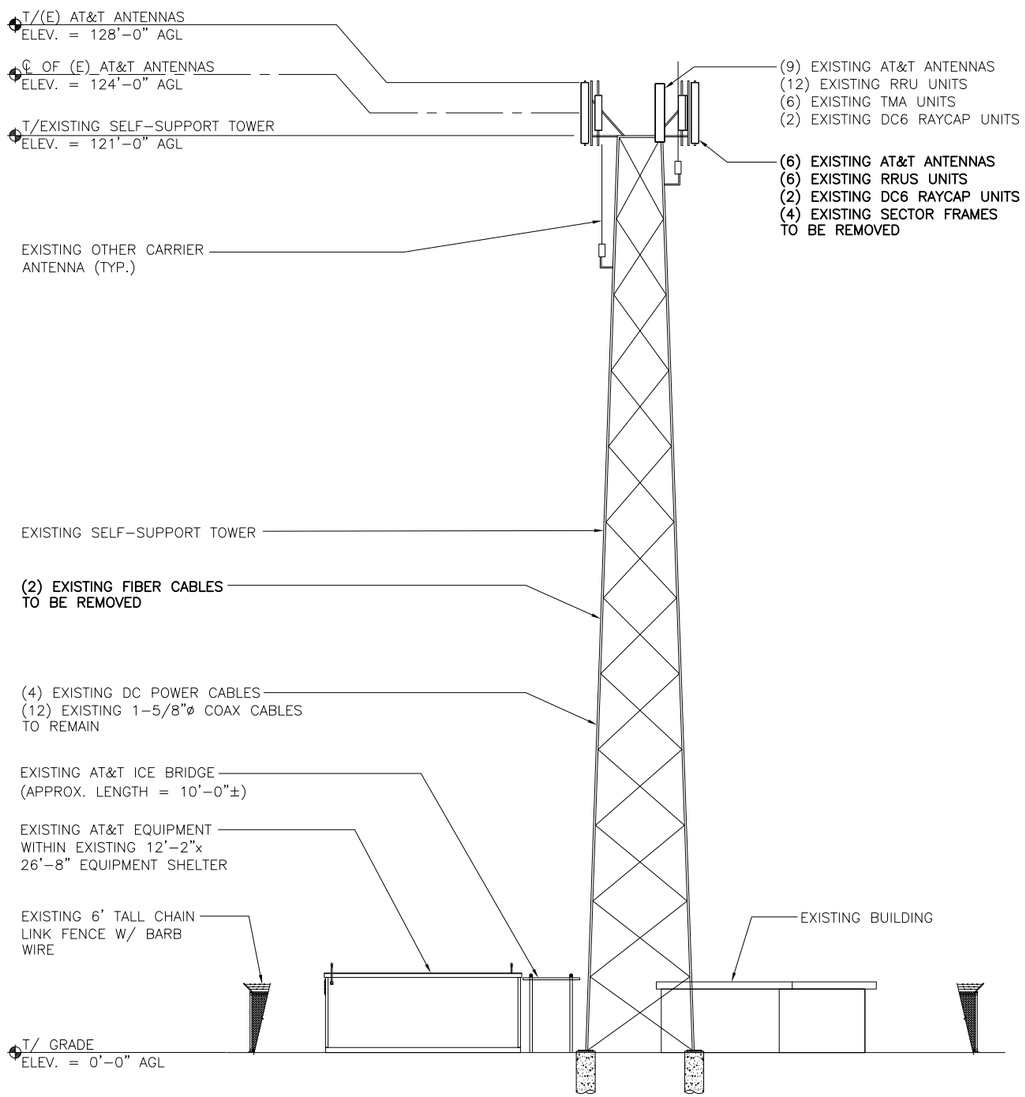

EXISTING ELEVATION

0 10 20 30

SCALE: 1" = 20'-0"

1

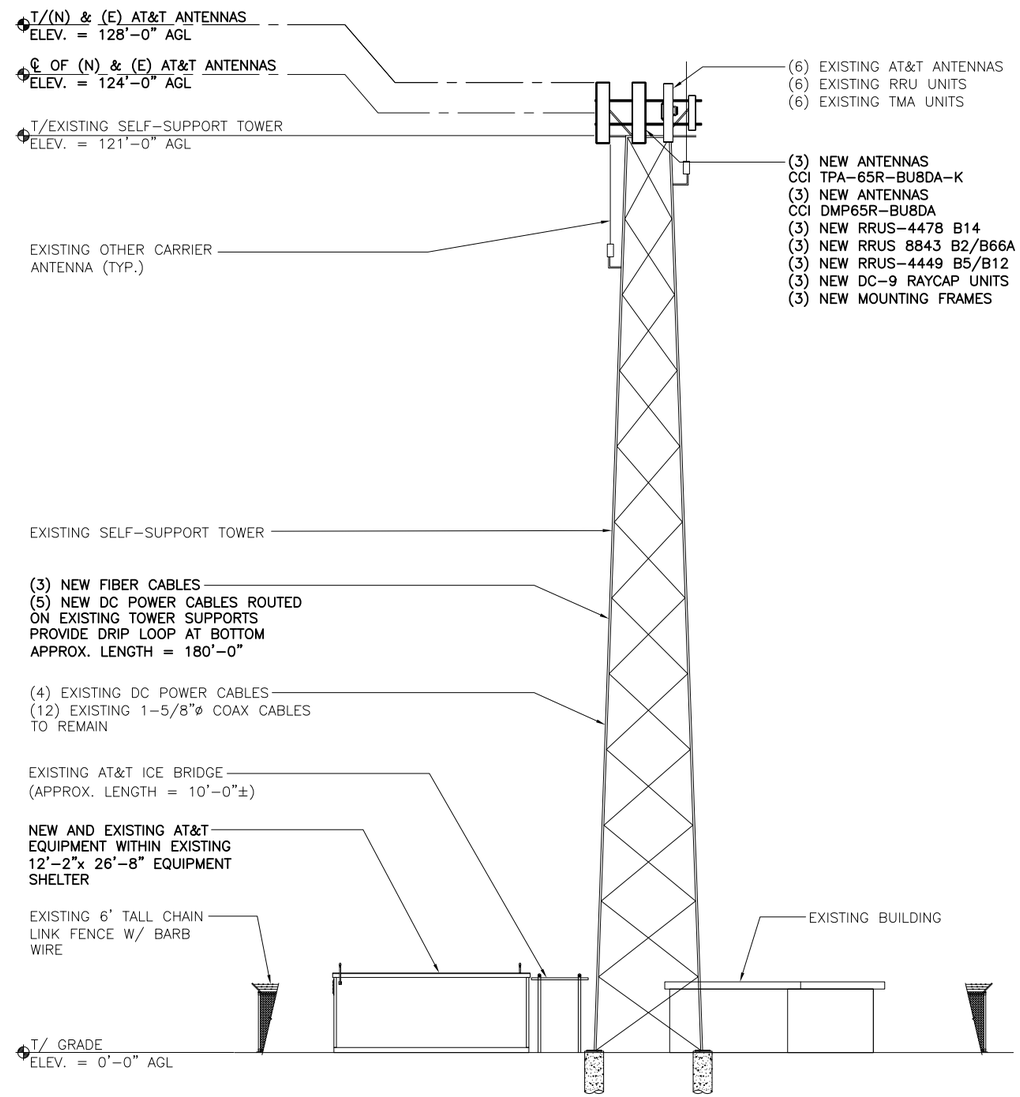

NEW ELEVATION

0 10 20 30

SCALE: 1" = 20'-0"

2

at&t
550 COCHITUATE ROAD
SUITE 550 13 AND 14
FRAMINGHAM, MA 01701

smartlink
1362 MELLON ROAD
SUITE 140
HANOVER, MD 21076

FULLERTON
ENGINEERING · DESIGN
1100 E. WOODFIELD ROAD, SUITE 500
SCHAUMBURG, ILLINOIS 60173
TEL: 847-908-8400
COA# PEC.0001899
www.FullertonEngineering.com

REV	DATE	DESCRIPTION	BY
0	08/11/20	90% REVIEW	KC
1	08/23/20	FOR PERMIT	KC

I HEREBY CERTIFY THAT THESE DRAWINGS WERE PREPARED BY ME OR UNDER MY DIRECT SUPERVISION AND CONTROL, AND TO THE BEST OF MY KNOWLEDGE AND BELIEF COMPLY WITH THE REQUIREMENTS OF ALL APPLICABLE CODES.

STATE OF CONNECTICUT
HENRY M. BELLAGAMBA
25358
LICENSED
PROFESSIONAL ENGINEER

SITE NAME

LEBANON

SITE NUMBER:

CTL01065

SITE ADDRESS

244 GATES ROAD
LEBANON, CT 06249

SHEET NAME

ELEVATIONS

SHEET NUMBER

A3

PROJECT# 2020.0032.0027

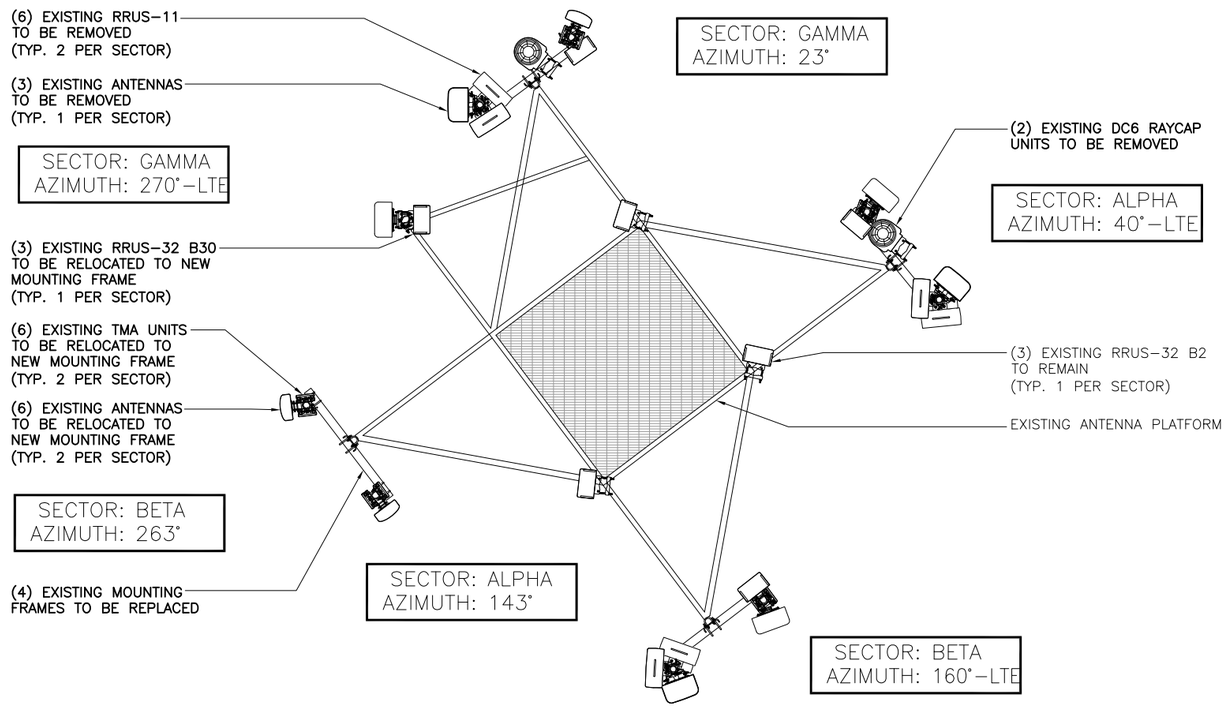

EXISTING ANTENNA PLAN

0 1' 2' 4' 8'

SCALE: 3/16" = 1'-0"

1

NOTES:
1. EXISTING ANTENNA MOUNTING PIPE TO BE REUSED, RELOCATED OR REPLACED AS REQUIRED
2. IF REQUIRED INSTALL NEW GALV. MOUNTING PIPE(S) 2.5 STD. (2-7/8" O.D.)

NOTES:
1. 3 FEET MINIMUM SEPARATION BETWEEN LTE ANTENNAS
2. 6 FEET MINIMUM SEPARATION BETWEEN 700DE & 700BC

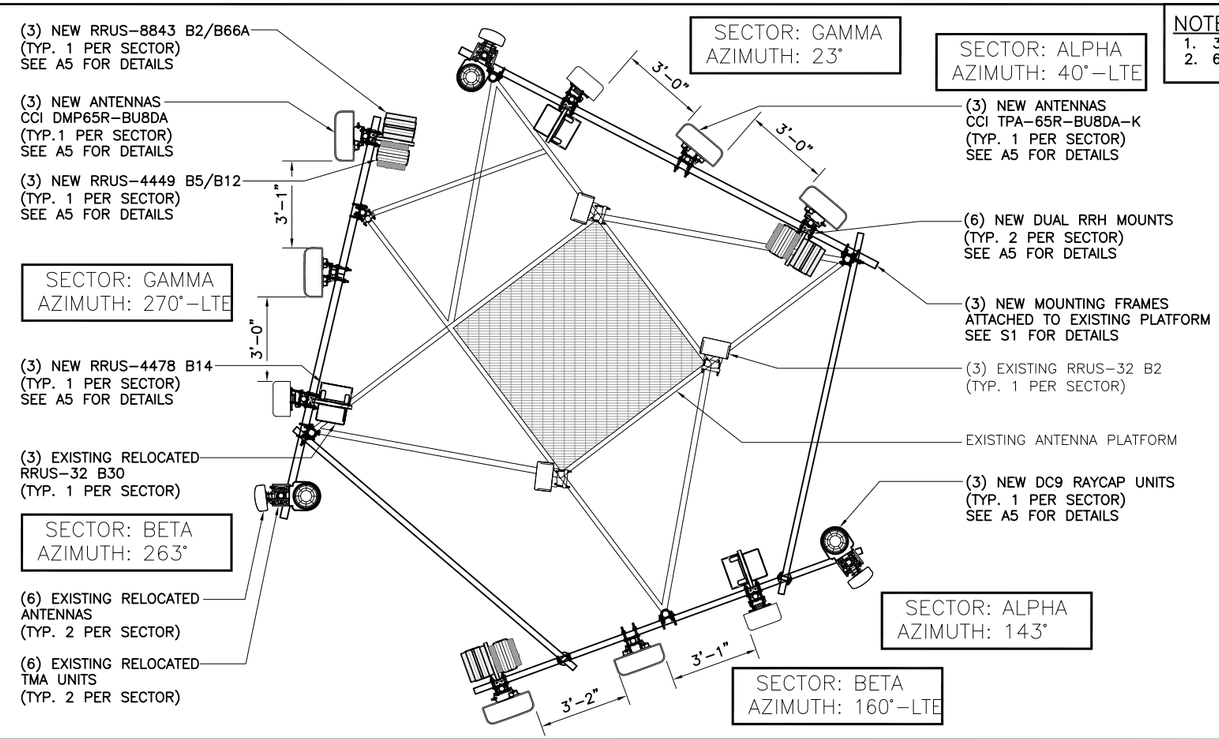

FINAL ANTENNA PLAN

0 1' 2' 4' 8'

SCALE: 3/16" = 1'-0"

2

at&t
550 COCHITUATE ROAD
SUITE 550 13 AND 14
FRAMINGHAM, MA 01701

smartlink
1362 MELLON ROAD
SUITE 140
HANOVER, MD 21076

FULLERTON
ENGINEERING · DESIGN
1100 E. WOODFIELD ROAD, SUITE 500
SCHAUMBURG, ILLINOIS 60173
TEL: 847-908-8400
COA# PEC.0001899
www.FullertonEngineering.com

REV	DATE	DESCRIPTION	BY
0	08/11/20	90% REVIEW	KC
1	08/23/20	FOR PERMIT	KC

I HEREBY CERTIFY THAT THESE DRAWINGS WERE PREPARED BY ME OR UNDER MY DIRECT SUPERVISION AND CONTROL, AND TO THE BEST OF MY KNOWLEDGE AND BELIEF COMPLY WITH THE REQUIREMENTS OF ALL APPLICABLE CODES.

SITE NAME

LEBANON

SITE NUMBER:

CTL01065

SITE ADDRESS

244 GATES ROAD
LEBANON, CT 06249

SHEET NAME

ANTENNA PLANS

SHEET NUMBER

A4

PROJECT# 2020.0032.0027

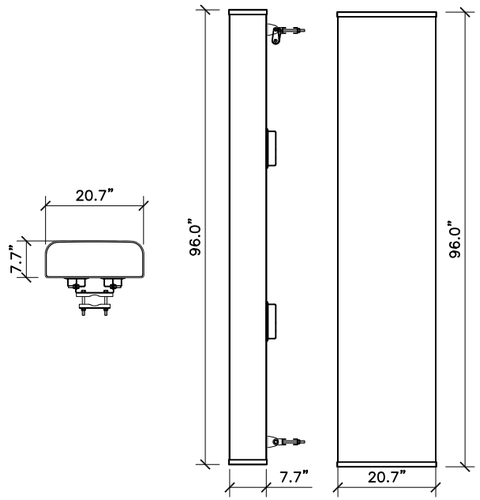

PLAN VIEW SIDE VIEW FRONT VIEW

CCI – TPA65R–BU8DA

MULTI–BAND TWELVE PORT ANTENNA

FREQUENCY RANGE	4 LOW x 698–896 MHz 8 HIGH x 1695–2400 MHz
ANTENNA	87.1 Lbs

ANTENNA SPEC SCALE: N.T.S. 1

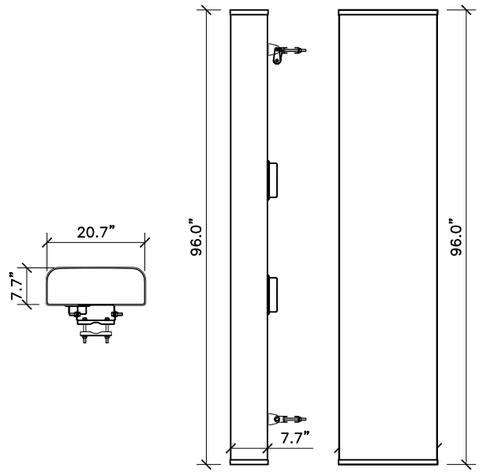

PLAN VIEW SIDE VIEW FRONT VIEW

CCI – DMP65R–BU8DA

DIPLEXED MULTI–BAND ANTENNA

FREQUENCY RANGE	4 LOW x 698–896 MHz 4 HIGH 1695–2400 MHz
ANTENNA	95.7 Lbs
(3) RETS	15 Lbs
BRACKET	16.1 Lbs
TOTAL WEIGHT	126.8 Lbs

ANTENNA SPEC SCALE: N.T.S. 2

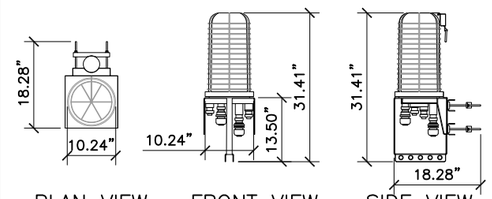

PLAN VIEW FRONT VIEW SIDE VIEW

RAYCAP – DC9–48–60–24–8C–EV

SYSTEM WEIGHT	16.0 Lbs
MOUNT WEIGHT	10.2 Lbs
TOTAL WEIGHT	26.2 Lbs
DIMENSIONS (LxWxH)	18.28"x10.24"x31.4"

RAYCAP SPEC SCALE: N.T.S. 3

NOTE:
ALL MOUNTING HARDWARE AND BRACKETS ARE INCLUDED IN COMMSCOPE MOUNTING KIT PART #MTC3326DHD OR APPROVED EQUAL

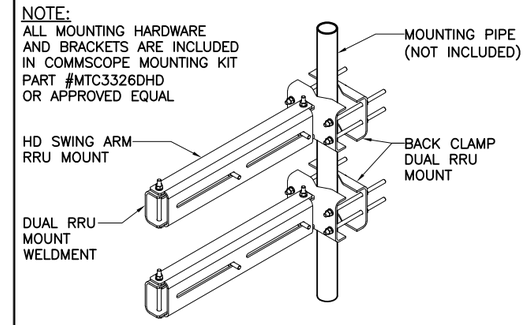

RRU MOUNT DETAIL SCALE: N.T.S. 4

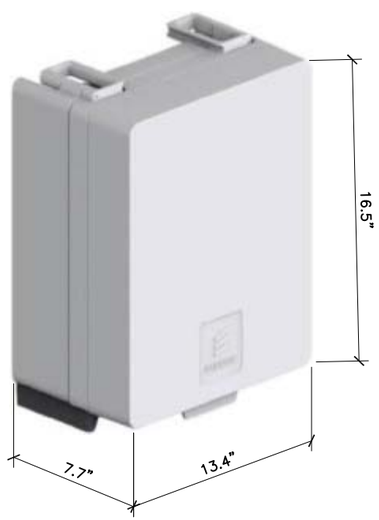

ERICSSON – RRUS 4478 B14

FREQUENCY RANGE	TX 758–768 MHz RX 788–798 MHz
TOTAL WEIGHT	59.9 Lbs

RRU SPEC SCALE: N.T.S. 5

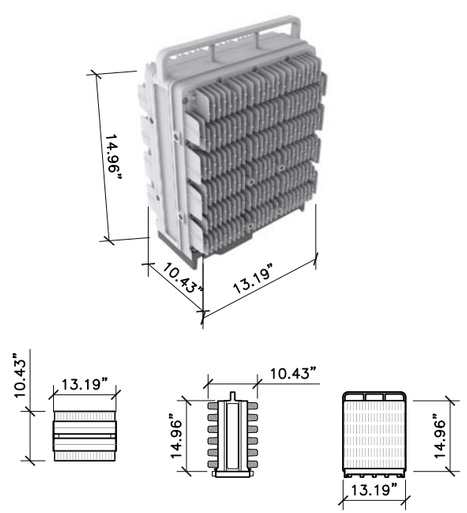

PLAN VIEW SIDE VIEW FRONT VIEW

ERICSSON
RADIO 4449 DUAL B5 & B12

AISG TMA & RET SUPPORT
4TX/4RX PER BAND (B5 & B12)

WEIGHT	~73 Lbs

RRU SPEC SCALE: N.T.S. 6

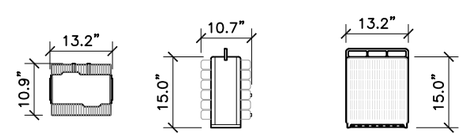

PLAN VIEW SIDE VIEW FRONT VIEW

ERICSSON – RADIO 8843 B2 & B66

DUAL BAND REMOTE RADIO

FREQUENCY B2	UPLINK 1850–1910 MHz DOWNLINK 1930–1990 MHz
FREQUENCY B66	UPLINK 1710–1780 MHz DOWN LINK 2110–2180 MHz
TOTAL WEIGHT	71.9 Lbs

RRU SPEC SCALE: N.T.S. 7

NOT USED SCALE: N.T.S. 8

at&t
550 COCHITUATE ROAD
SUITE 550 13 AND 14
FRAMINGHAM, MA 01701

smartlink
1362 MELLON ROAD
SUITE 140
HANOVER, MD 21076

FULLERTON
ENGINEERING · DESIGN
1100 E. WOODFIELD ROAD, SUITE 500
SCHAUMBURG, ILLINOIS 60173
TEL: 847-908-8400
COA# PEC.0001899
www.FullertonEngineering.com

REV	DATE	DESCRIPTION	BY
0	08/11/20	90% REVIEW	KC
1	08/23/20	FOR PERMIT	KC

I HEREBY CERTIFY THAT THESE DRAWINGS WERE PREPARED BY ME OR UNDER MY DIRECT SUPERVISION AND CONTROL, AND TO THE BEST OF MY KNOWLEDGE AND BELIEF COMPLY WITH THE REQUIREMENTS OF ALL APPLICABLE CODES.

SITE NAME
LEBANON

SITE NUMBER:
CTL01065

SITE ADDRESS
244 GATES ROAD
LEBANON, CT 06249

SHEET NAME
EQUIPMENT DETAILS

SHEET NUMBER
A5

PROJECT# 2020.0032.0027

FINAL ANTENNA CONFIGURATION AND CABLE SCHEDULE
SUPPLIED BY AT&T WIRELESS, FROM RF CONFIG. DATED (03/18/20)

SECTOR	ANTENNA NUMBER	ANTENNA STATUS & TYPE	ANTENNA MODEL NUMBER	ANTENNA VENDOR	TMA/RRU UNIT	AZIMUTH	ANTENNA CL FROM GROUND	CABLE FEEDER TYPE	CABLE FEEDER LENGTH	RAYCAP UNIT
ALPHA	A-1	(E) UMTS 850 ANTENNA	7770	POWERWAVE	(2) EXISTING POWERWAVE LGP21401	143°	124'-0"	1-5/8"ø LDF7-50A	180'-0"	(1) (N) DC9-48-60-24-8C-EV UNIT
								1-5/8"ø LDF7-50A	180'-0"	
	A-2	(E) LTE WCS ANTENNA	HPA-65R-BUUH8	CCI	(1) EXISTING RRUS-32 B30	40°	124'-0"	(2) 1-5/8"ø LDF7-50A	180'-0"	
								SEE ANTENNA A-3 FOR CABLE TYPE AND LENGTH		
	A-3	**(N) LTE 700/1900/AWS ANTENNA**	**TPA-65R-BU8DA-K**	**CCI**	(1) EXISTING RRUS-32 B2 **(1) NEW RRUS-4478 B14** **(1) NEW RRUS-8843 B2/B66A**	40°	124'-0"	**(1) NEW FIBER CABLE**	**180'-0"**	
								(2) EXISTING DC POWER CABLES **(1) NEW DC POWER CABLES**	**180'-0"**	
	A-4	**(N) LTE 700/1900/AWS ANTENNA**	**DMP65R-BU8DA**	**CCI**	**(1) NEW RRUS-4449 B5/B12**	40°	124'-0"	SEE ANTENNA A-3 FOR CABLE TYPE AND LENGTH		
BETA	B-1	(E) UMTS 850 ANTENNA	7770	POWERWAVE	(2) EXISTING POWERWAVE LGP21401	263°	124'-0"	1-5/8"ø LDF7-50A	180'-0"	(1) (N) DC9-48-60-24-8C-EV UNIT
								1-5/8"ø LDF7-50A	180'-0"	
	B-2	(E) LTE WCS ANTENNA	HPA-65R-BUUH8	CCI	(1) EXISTING RRUS-32 B30	160°	124'-0"	(2) 1-5/8"ø LDF7-50A	180'-0"	
								SEE ANTENNA B-3 FOR CABLE TYPE AND LENGTH		
	B-3	**(N) LTE 700/1900/AWS ANTENNA**	**TPA-65R-BU8DA-K**	**CCI**	(1) EXISTING RRUS-32 B2 **(1) NEW RRUS-4478 B14** **(1) NEW RRUS-8843 B2/B66A**	160°	124'-0"	**(1) NEW FIBER CABLE**	**180'-0"**	
								(2) EXISTING DC POWER CABLES **(1) NEW DC POWER CABLES**	**180'-0"**	
	B-4	**(N) LTE 700/1900/AWS ANTENNA**	**DMP65R-BU8DA**	**CCI**	**(1) NEW RRUS-4449 B5/B12**	160°	124'-0"	SEE ANTENNA B-3 FOR CABLE TYPE AND LENGTH		
GAMMA	C-1	(E) UMTS 850 ANTENNA	7770	POWERWAVE	(2) EXISTING POWERWAVE LGP21401	23°	124'-0"	1-5/8"ø LDF7-50A	180'-0"	(1) (N) DC9-48-60-24-8C-EV UNIT
								1-5/8"ø LDF7-50A	180'-0"	
	C-2	(E) LTE WCS ANTENNA	HPA-65R-BUUH8	CCI	(1) EXISTING RRUS-32 B30	270°	124'-0"	(2) 1-5/8"ø LDF7-50A	180'-0"	
								SEE ANTENNA C-3 FOR CABLE TYPE AND LENGTH		
	C-3	**(N) LTE 700/1900/AWS ANTENNA**	**TPA-65R-BU8DA-K**	**CCI**	(1) EXISTING RRUS-32 B2 **(1) NEW RRUS-4478 B14** **(1) NEW RRUS-8843 B2/B66A**	270°	124'-0"	**(1) NEW FIBER CABLE**	**180'-0"**	
								(3) NEW DC POWER CABLES	**180'-0"**	
	C-4	**(N) LTE 700/1900/AWS ANTENNA**	**DMP65R-BU8DA**	**CCI**	**(1) NEW RRUS-4449 B5/B12**	270°	124'-0"	SEE ANTENNA C-3 FOR CABLE TYPE AND LENGTH		

at&t
550 COCHITUATE ROAD
SUITE 550 13 AND 14
FRAMINGHAM, MA 01701

smartlink
1362 MELLON ROAD
SUITE 140
HANOVER, MD 21076

FULLERTON
ENGINEERING · DESIGN
1100 E. WOODFIELD ROAD, SUITE 500
SCHAUMBURG, ILLINOIS 60173
TEL: 847-908-8400
COA# PEC.0001899
www.FullertonEngineering.com

REV	DATE	DESCRIPTION	BY
0	08/11/20	90% REVIEW	KC
1	08/23/20	FOR PERMIT	KC

I HEREBY CERTIFY THAT THESE DRAWINGS WERE PREPARED BY ME OR UNDER MY DIRECT SUPERVISION AND CONTROL, AND TO THE BEST OF MY KNOWLEDGE AND BELIEF COMPLY WITH THE REQUIREMENTS OF ALL APPLICABLE CODES.

STATE OF CONNECTICUT · HENRY M. BELLAGAMBA · 25358 · LICENSED PROFESSIONAL ENGINEER

SITE NAME
LEBANON

SITE NUMBER:
CTL01065

SITE ADDRESS
244 GATES ROAD
LEBANON, CT 06249

SHEET NAME
ANTENNA & CABLE CONFIGURATION

SHEET NUMBER
A6

1. CONTRACTOR IS TO REFER TO AT&T'S MOST CURRENT RADIO FREQUENCY DATA SHEET (RFDS) PRIOR TO CONSTRUCTION.
2. THE SIZE, HEIGHT, AND DIRECTION OF THE ANTENNAS SHALL BE ADJUSTED TO ACHIEVE THE AZIMUTHS SPECIFIED AND LIMIT SHADOWING AND TO MEET THE SYSTEM REQUIREMENTS.
3. CONTRACTOR SHALL VERIFY THE HEIGHT OF THE ANTENNA WITH THE AT&T WIRELESS PROJECT MANAGER.
4. VERIFY TYPE AND SIZE OF TOWER LEG PRIOR TO ORDERING ANY ANTENNA MOUNT.
5. UNLESS NOTED OTHERWISE THE CONTRACTOR MUST PROVIDE ALL MATERIAL NECESSARY.
6. ANTENNA AZIMUTHS ARE DEGREES OFF OF TRUE NORTH, BEARING CLOCKWISE, IN WHICH ANTENNA FACE IS DIRECTED. ALL ANTENNAS (AND SUPPORTING STRUCTURES AS PRACTICAL) SHALL BE ACCURATELY ORIENTED IN THE SPECIFIED DIRECTION.
7. CONTRACTOR SHALL VERIFY ALL RF INFORMATION PRIOR TO CONSTRUCTION.
8. SWEEP TEST SHALL BE PERFORMED BY GENERAL CONTRACTOR AND SUBMITTED TO AT&T WIRELESS CONSTRUCTION SPECIALIST. TEST SHALL BE PERFORMED PER AT&T WIRELESS STANDARDS.
9. CABLE LENGTHS WERE DETERMINED BASED ON THE DESIGN DRAWING. CONTRACTOR TO VERIFY ACTUAL LENGTH DURING PRE–CONSTRUCTION WALK.
10. CONTRACTOR TO USE ROSENBERGER FIBER LINE HANGER COMPONENTS (OR ENGINEER APPROVED EQUAL).

ANTENNA AND CABLING NOTES

SCALE: N.T.S. | 1

RF, DC, & COAX CABLE MARKING LOCATIONS TABLE

NO	LOCATIONS
1	EACH TOP–JUMPER SHALL BE COLOR CODED WITH (1) SET OF 3" WIDE BANDS.
2	EACH MAIN COAX SHALL BE COLOR CODED WITH (1) SET OF 3" WIDE BANDS NEAR THE TOP–JUMPER CONNECTION AND WITH (1) SET OF 3/4" WIDE COLOR BANDS JUST PRIOR TO ENTERING THE BTS OR TRANSMITTER BUILDING.
3	CABLE ENTRY PORT ON THE INTERIOR OF THE SHELTER.
4	ALL BOTTOM JUMPERS SHALL BE COLOR CODED WITH (1) SET OF 3/4" WIDE BANDS ON EACH END OF THE BOTTOM JUMPER.
5	ALL BOTTOM JUMPERS SHALL BE COLOR CODED WITH (1) SET OF 3/4" WIDE BANDS ON EACH END OF THE BOTTOM JUMPER.

CABLE MARKING DIAGRAM

SCALE: N.T.S. | 2

1. THE ANTENNA SYSTEM COAX SHALL BE LABELED WITH VINYL TAPE.
2. THE STANDARD IS BASED ON EIGHT COLORED TAPES–RED, BLUE, GREEN, YELLOW, ORANGE, BROWN, WHITE, AND VIOLET. THESE TAPES MUST BE 3/4" WIDE & UV RESISTANT SUCH AS SCOTCH 35 VINYL ELECTRICAL COLOR CODING TAPE AND SHOULD BE READILY AVAILABLE TO THE ELECTRICIAN OR CONTRACTOR ON SITE.
3. USING COLOR BANDS ON THE CABLES, MARK ALL RF CABLE BY SECTOR AND CABLE NUMBER AS SHOWN ON "CABLE COLOR CHART".
4. WHEN AN EXISTING COAXIAL LINE THAT IS INTENDED TO BE A SHARED LINE BETWEEN TECHNOLOGIES IS ENCOUNTERED, THE CONTRACTOR SHALL REMOVE THE EXISTING COLOR CODING SCHEME AND REPLACE IT WITH THE COLOR CODING STANDARD. IN THE ABSENCE OF AN EXISTING COLOR CODING AND TAGGING SCHEME, OR WHEN INSTALLING PROPOSED COAXIAL CABLES, THIS GUIDELINE SHALL BE IMPLEMENTED AT THAT SITE REGARDLESS OF TECHNOLOGY.
5. ALL COLOR CODE TAPE SHALL BE 3M–35 AND SHALL BE INSTALLED USING A MINIMUM OF (3) THREE WRAPS OF TAPE AND SHALL BE NEATLY TRIMMED AND SMOOTHED OUT SO AS TO AVOID UNRAVELING.
6. ALL COLOR BANDS INSTALLED AT THE TOP OF THE TOWER SHALL BE A MINIMUM OF 3" WIDE, AND SHALL HAVE A MINIMUM OF 3/4" OF SPACE BETWEEN EACH COLOR.
7. ALL COLOR CODES SHALL BE INSTALLED SO AS TO ALIGN NEATLY WITH ONE ANOTHER FROM SIDE–TO–SIDE.
8. IF EXISTING CABLES AT THE SITE ALREADY HAVE A COLOR CODING SCHEME AND THEY ARE NOT INTENDED TO BE REUSED OR SHARED WITH THE NEW TECHNOLOGY, THE EXISTING COLOR CODING SCHEME SHALL REMAIN UNTOUCHED.

CABLE MARKING NOTES

SCALE: N.T.S. | 3

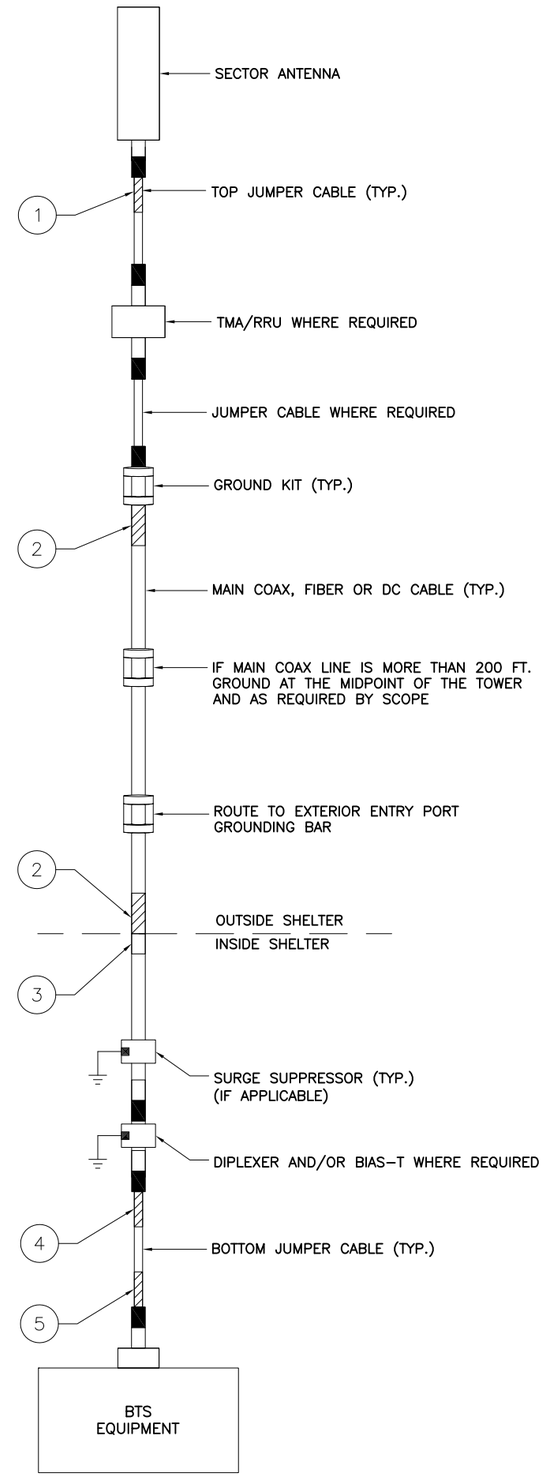

CABLE COLOR CODING DIAGRAM

SCALE: N.T.S. | 4

at&t
550 COCHITUATE ROAD
SUITE 550 13 AND 14
FRAMINGHAM, MA 01701

smartlink
1362 MELLON ROAD
SUITE 140
HANOVER, MD 21076

FULLERTON ENGINEERING·DESIGN
1100 E. WOODFIELD ROAD, SUITE 500
SCHAUMBURG, ILLINOIS 60173
TEL: 847-908-8400
COA# PEC.0001899
www.FullertonEngineering.com

REV	DATE	DESCRIPTION	BY
0	08/11/20	90% REVIEW	KC
1	08/23/20	FOR PERMIT	KC

I HEREBY CERTIFY THAT THESE DRAWINGS WERE PREPARED BY ME OR UNDER MY DIRECT SUPERVISION AND CONTROL, AND TO THE BEST OF MY KNOWLEDGE AND BELIEF COMPLY WITH THE REQUIREMENTS OF ALL APPLICABLE CODES.

STATE OF CONNECTICUT · HENRY M. BELLAGAMBA · 25358 · LICENSED PROFESSIONAL ENGINEER

SITE NAME
LEBANON

SITE NUMBER:
CTL01065

SITE ADDRESS
244 GATES ROAD
LEBANON, CT 06249

SHEET NAME
CABLE NOTES AND COLOR CODING

SHEET NUMBER
A7

PROJECT# 2020.0032.0027

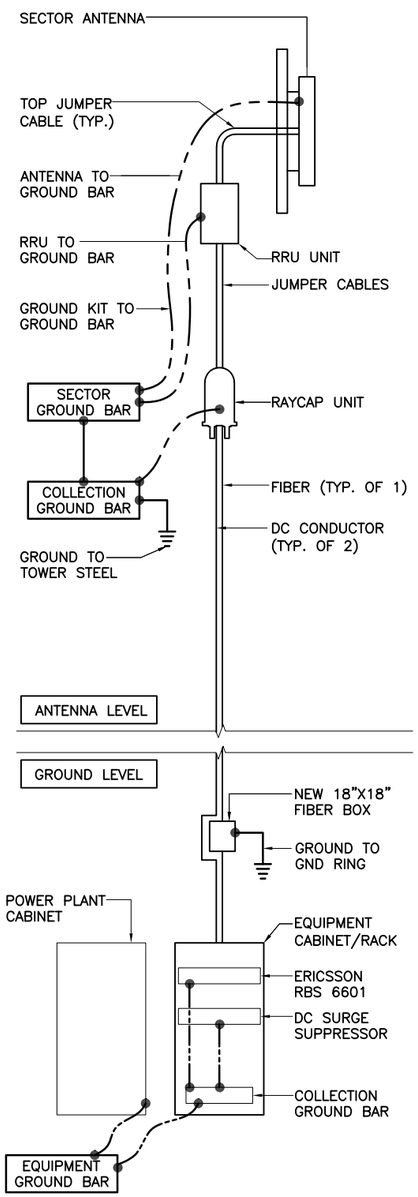

GROUNDING SCHEMATIC SCALE: N.T.S. 1

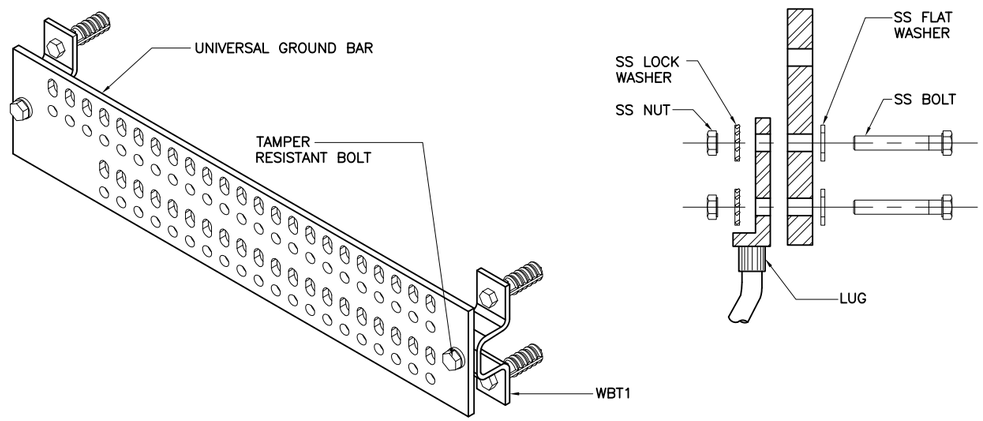

GROUND BAR DETAIL SCALE: N.T.S. 2

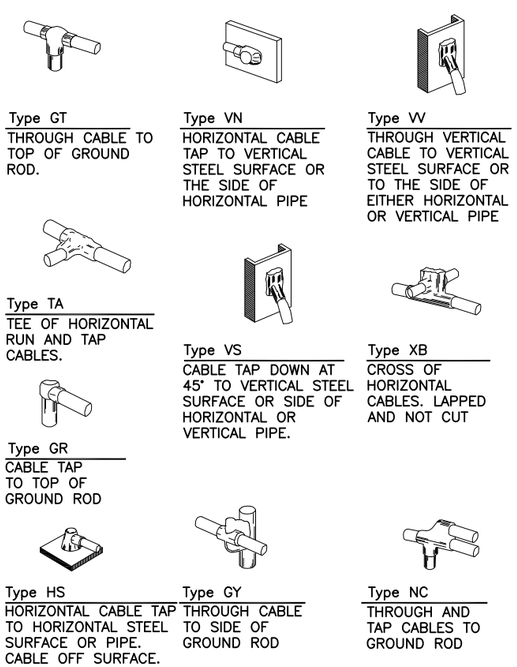

EXOTHERMIC WELD DETAILS SCALE: N.T.S. 3

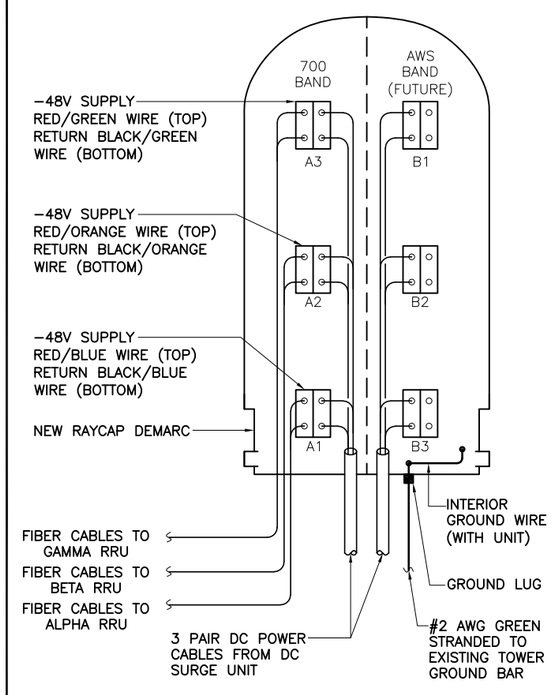

RAYCAP DC POWER DETAIL SCALE: N.T.S. 4

NOT USED SCALE: N.T.S. 5

at&t
550 COCHITUATE ROAD
SUITE 550 13 AND 14
FRAMINGHAM, MA 01701

smartlink
1362 MELLON ROAD
SUITE 140
HANOVER, MD 21076

FULLERTON ENGINEERING·DESIGN
1100 E. WOODFIELD ROAD, SUITE 500
SCHAUMBURG, ILLINOIS 60173
TEL: 847-908-8400
COA# PEC.0001899
www.FullertonEngineering.com

REV	DATE	DESCRIPTION	BY
0	08/11/20	90% REVIEW	KC
1	08/23/20	FOR PERMIT	KC

I HEREBY CERTIFY THAT THESE DRAWINGS WERE PREPARED BY ME OR UNDER MY DIRECT SUPERVISION AND CONTROL, AND TO THE BEST OF MY KNOWLEDGE AND BELIEF COMPLY WITH THE REQUIREMENTS OF ALL APPLICABLE CODES.

SITE NAME
LEBANON

SITE NUMBER:
CTL01065

SITE ADDRESS
244 GATES ROAD
LEBANON, CT 06249

SHEET NAME
GROUNDING DETAILS

SHEET NUMBER
A8

PROJECT# 2020.0032.0027

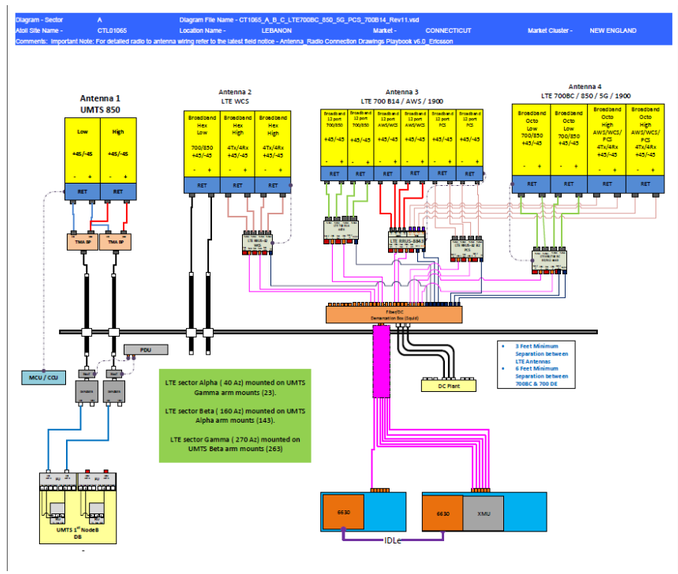

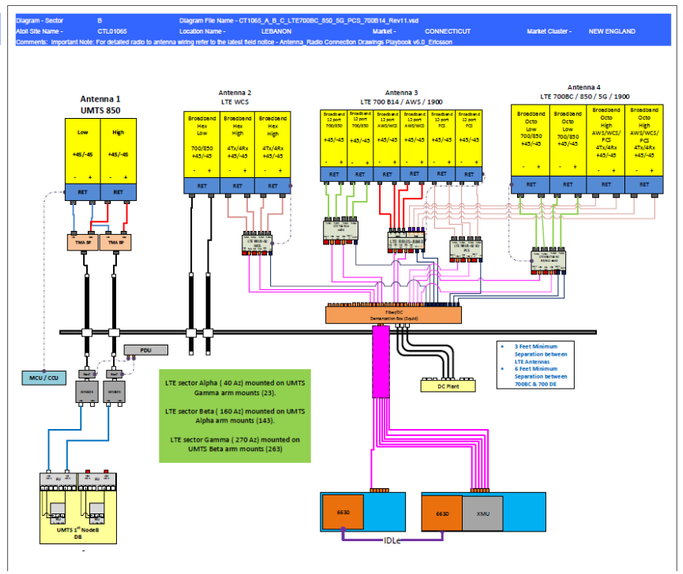

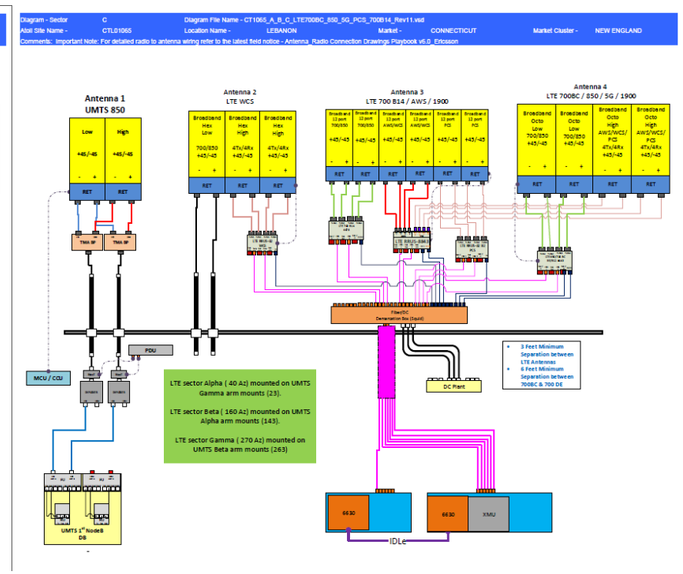

*BASED ON RFDS V1.0, DATED (03/18/20)

PLUMBING DIAGRAMS

SCALE: N.T.S. | 1

at&t
550 COCHITUATE ROAD
SUITE 550 13 AND 14
FRAMINGHAM, MA 01701

smartlink
1362 MELLON ROAD
SUITE 140
HANOVER, MD 21076

FULLERTON
ENGINEERING · DESIGN
1100 E. WOODFIELD ROAD, SUITE 500
SCHAUMBURG, ILLINOIS 60173
TEL: 847-908-8400
COA# PEC.0001899
www.FullertonEngineering.com

REV	DATE	DESCRIPTION	BY
0	08/11/20	90% REVIEW	KC
1	08/23/20	FOR PERMIT	KC

I HEREBY CERTIFY THAT THESE DRAWINGS WERE PREPARED BY ME OR UNDER MY DIRECT SUPERVISION AND CONTROL, AND TO THE BEST OF MY KNOWLEDGE AND BELIEF COMPLY WITH THE REQUIREMENTS OF ALL APPLICABLE CODES.

SITE NAME

LEBANON

SITE NUMBER:

CTL01065

SITE ADDRESS

244 GATES ROAD
LEBANON, CT 06249

SHEET NAME

PLUMBING DIAGRAMS

SHEET NUMBER

A9

PROJECT# 2020.0032.0027

STRUCTURAL NOTES:

APPLICABLE CODES

1. DESIGN & CONSTRUCTION OF ALL WORK SHALL CONFORM TO THE FOLLOWING CODES:

   2018 CONNECTICUT STATE BUILDING CODE
   2015 INTERNATIONAL BUILDING CODE W/AMMENDMENTS
   TIA-222-H

DESIGN LOADS:

WIND LOAD:

121 MPH BASIC WIND SPEED PER TIA-222-H

GENERAL NOTES

1. THE CONTRACTOR SHALL BE RESPONSIBLE FOR FOLLOWING ALL LAWS, REGULATIONS, AND RULES SET FORTH BY FEDERAL, STATE, AND LOCAL AUTHORITIES WITH JURISDICTION OVER THE PROJECT. THIS RESPONSIBILITY IS IN EFFECT REGARDLESS OF WHETHER THE LAW, ORDINANCE, REGULATION OR RULE IS MENTIONED IN THESE SPECIFICATIONS.
2. ALL WORK SHALL BE COMPLETED AS INDICATED ON THE DRAWINGS, PROJECT SPECIFICATIONS, AND THE CONSTRUCTION CONTRACT DOCUMENTS.
3. THE CONTRACTOR SHALL HAVE AND MAINTAIN A VALID CONTRACTOR'S LICENSE FOR THE LOCATION IN WHICH THE WORK IS TO BE PERFORMED. FOR JURISDICTIONS THAT LICENSE INDIVIDUAL TRADES, THE TRADESMAN OR SUBCONTRACTOR PERFORMING THOSE TRADES SHALL BE LICENSED.
4. FOLLOW ALL APPLICABLE RULES AND REGULATIONS OF THE OCCUPATIONAL SAFETY AND HEALTH ADMINISTRATION (OSHA) AND STATE LAW AS DEFINED IN THE FEDERAL OCCUPATIONAL SAFETY AND HEALTH ACT.
5. PRIOR TO THE SUBMISSION OF THE BID, THE CONTRACTOR SHALL VISIT THE JOB SITE, VERIFY ALL DIMENSIONS AND BECOME FAMILIAR WITH THE FIELD CONDITIONS. ANY DISCREPANCIES SHALL BE BROUGHT TO THE ATTENTION OF THE PROJECT MANAGER.
6. DRAWING PLANS SHALL NOT BE SCALED.
7. THE CONTRACTOR SHALL NOT PROCEED WITH ANY WORK NOT CLEARLY IDENTIFIED ON THE DRAWINGS WITHOUT THE PRIOR WRITTEN APPROVAL OF THE PROJECT MANAGER.
8. THE CONTRACTOR SHALL INSTALL ALL EQUIPMENT AND MATERIALS IN ACCORDANCE WITH MANUFACTURER RECOMMENDATIONS UNLESS SPECIFICALLY OTHERWISE NOTED.
9. ALL MEANS AND METHODS OF CONSTRUCTION DEALING WITH TOWER CONSTRUCTION AND SAFETY, STEEL ERECTION, EXCAVATIONS, TRENCHING, SCAFFOLDING, FORMWORK, ELECTRICAL, AND WORK IN CONFINED SPACES ARE THE SOLE RESPONSIBILITY OF THE CONTRACTOR.
10. THE CONTRACTOR SHALL BE RESPONSIBLE FOR INITIATING, MAINTAINING, AND SUPERVISING ALL SAFETY PRECAUTIONS AND PROGRAMS IN CONNECTION WITH THE WORK.
11. THE CONTRACTOR SHALL BE EXPERIENCED IN THE PERFORMANCE OF WORK SIMILAR TO THAT DESCRIBED HEREIN. BY ACCEPTANCE OF THIS ASSIGNMENT, THE CONTRACTOR IS ATTESTING THAT HE DOES HAVE SUFFICIENT EXPERIENCE AND ABILITY AND THAT HE IS KNOWLEDGEABLE OF THE WORK TO BE PERFORMED.
12. THE CONTRACTOR SHALL PROVIDE SUFFICIENT TEMPORARY BRACING AND/OR SHORING OF ALL STRUCTURAL AND NON-STRUCTURAL ELEMENTS DURING CONSTRUCTION UNTIL ALL STRUCTURAL ELEMENTS HAVE BEEN PROPERLY INSTALLED.
13. INCORRECTLY FABRICATED, DAMAGED, OR OTHERWISE MISFITTING OR NONCONFORMING MATERIALS SHALL BE REPORTED TO THE PROJECT MANAGER AND ENGINEER, AND SHALL REQUIRE APPROVAL PRIOR TO PERFORMING ANY REMEDIAL OR CORRECTIVE ACTION.

STRUCTURAL STEEL NOTES:

1. STRUCTURAL STEEL MATERIALS CONFORM TO THE LATEST EDITION OF APPLICABLE STANDARDS AND TO ALL APPLICABLE CODES AND REQUIREMENTS OF LOCAL AUTHORITIES HAVING JURISDICTION, WHICHEVER IS MORE STRINGENT. ALL STRUCTURAL STEEL SHALL BE IN ACCORDANCE WITH THE LATEST APPLICABLE REQUIREMENTS OF AISC, ASTM, ACI, CRSI, AWS AND ALL OTHER APPLICABLE STANDARDS
2. ALL NEW STRUCTURAL STEEL SHALL CONFORM TO THE FOLLOWING, UNLESS NOTED OTHERWISE ON THE DRAWINGS:
   ASTM A36 (Fy = 36 KSI) M-SHAPES, S-SHAPES, ANGLES, PLATES (U.N.O.)
   ASTM A992 (Fy = 50 KSI) W-SHAPES, CHANNELS (U.N.O.)
   ASTM A500 Gr C (Fy = 50 KSI) ROUND AND SQUARE HSS
3. STEEL PIPE SHALL COMPLY WITH ASTM A53 GRADE B. MAY BE SUBSTITUTED WITH ASTM 500 GRADE C (ROUND HSS)
4. ALL STRUCTURAL STEEL SHALL BE HOT DIPPED GALVANIZED IN ACCORDANCE WITH ASTM A153 AND A123, INCLUDING CONNECTION HARDWARE (BOLTS, WASHERS, NUTS, AND PINS), PLATES, SPACERS, AND FILLERS.
5. CONNECTIONS:
   A. CONTRACTOR SHALL PROVIDE ALL HARDWARE REQUIRED TO COMPLETE FIELD ERECTION OF STRUCTURE AS INDICATED BY CONTRACT DOCUMENTS OR THESE SPECIFICATIONS.
   B. HIGH STRENGTH THREADED FASTENERS SHALL BE INSTALLED IN ACCORDANCE WITH AISC SPECIFICATIONS FOR STRUCTURAL JOINTS USING ASTM A-325 BOLTS. USE A-325N BEARING-TYPE CONNECTION BOLTS UNLESS NOTED OTHERWISE.
   C. GRATING AND PLATES SHALL BE FASTENED WITH SADDLE CLIPS. THE NECESSARY HOLES TO COMPLETE ALL PHASES OF CONSTRUCTION SHALL BE PROVIDED AND CALLED OUT ON THE APPROVED SHOP DRAWINGS. ALL HOLES SHALL BE DRILLED OR PUNCHED PERPENDICULAR TO METAL SURFACES, FLAME CUT OR BURNED HOLES WILL NOT BE PERMITTED.
   D. ALL UNFINISHED THREADED FASTENERS SHALL COMPLY WITH ASTM A-307, GRADE A, REGULAR LOW-CARBON STEEL BOLTS AND NUTS WITH HEXAGONAL HEADS.
   E. ALL HIGH STRENGTH THREADED FASTENERS SHALL BE HEAVY HEXAGONAL BOLTS AND NUTS WITH HARDENED WASHERS, ALL FROM QUENCHED AND TEMPERED MEDIUM CARBON STEEL COMPLYING WITH ASTM A-325.

NOT USED

SCALE: N.T.S. | 1

at&t
550 COCHITUATE ROAD
SUITE 550 13 AND 14
FRAMINGHAM, MA 01701

smartlink
1362 MELLON ROAD
SUITE 140
HANOVER, MD 21076

FULLERTON
ENGINEERING · DESIGN
1100 E. WOODFIELD ROAD, SUITE 500
SCHAUMBURG, ILLINOIS 60173
TEL: 847-908-8400
COA# PEC.0001899
www.FullertonEngineering.com

REV	DATE	DESCRIPTION	BY
0	08/11/20	90% REVIEW	KC
1	08/23/20	FOR PERMIT	KC

I HEREBY CERTIFY THAT THESE DRAWINGS WERE PREPARED BY ME OR UNDER MY DIRECT SUPERVISION AND CONTROL, AND TO THE BEST OF MY KNOWLEDGE AND BELIEF COMPLY WITH THE REQUIREMENTS OF ALL APPLICABLE CODES.

STATE OF CONNECTICUT
HENRY M. BELLAGAMBA
25358
LICENSED
PROFESSIONAL ENGINEER

SITE NAME
LEBANON

SITE NUMBER:
CTL01065

SITE ADDRESS
244 GATES ROAD
LEBANON, CT 06249

SHEET NAME
STRUCTURAL NOTES

SHEET NUMBER
S1

PROJECT# 2020.0032.0027

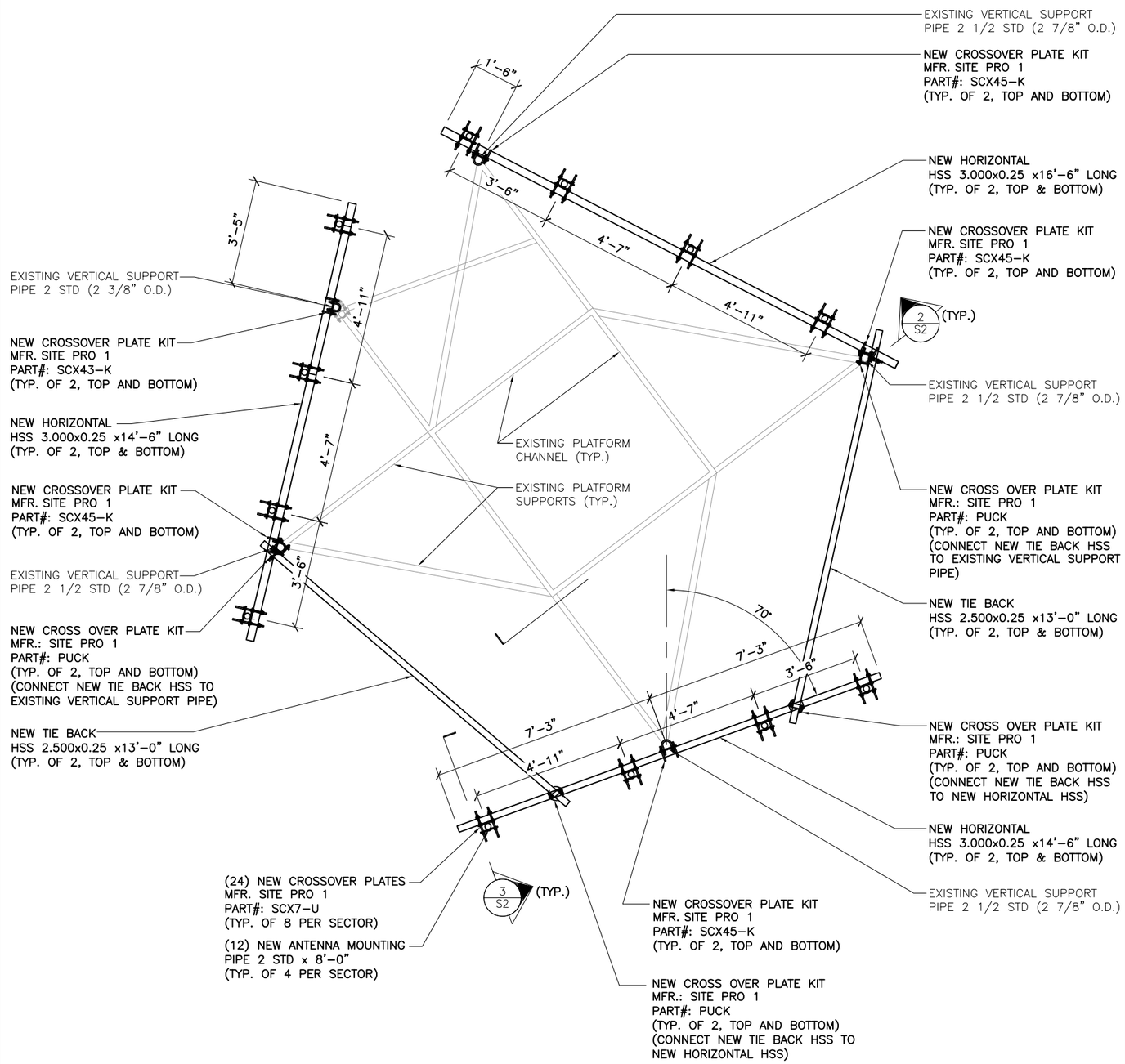

FRAMING PLAN — SCALE: 1/4" = 1'-0" — 1

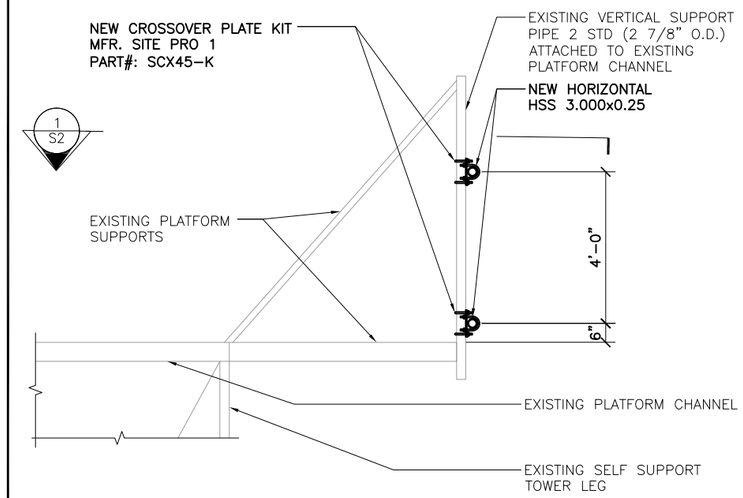

FRAMING SECTION — SCALE: 1/4" = 1'-0" — 2

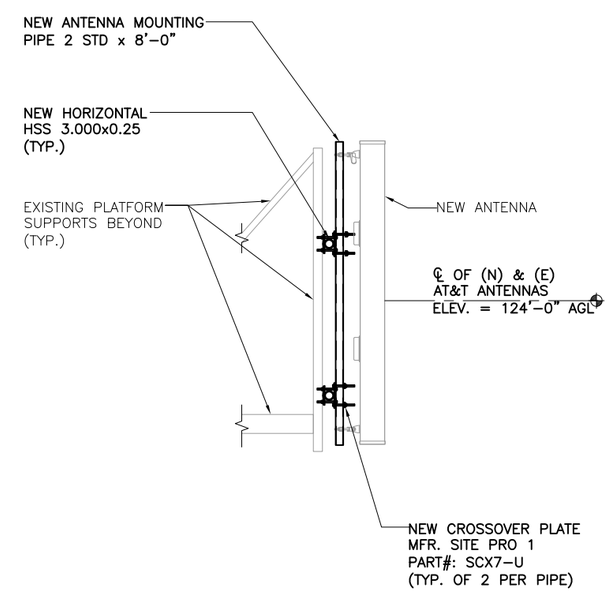

MOUNTING SECTION — SCALE: 1/4" = 1'-0" — 3

at&t
550 COCHITUATE ROAD
SUITE 550 13 AND 14
FRAMINGHAM, MA 01701

smartlink
1362 MELLON ROAD
SUITE 140
HANOVER, MD 21076

FULLERTON ENGINEERING · DESIGN
1100 E. WOODFIELD ROAD, SUITE 500
SCHAUMBURG, ILLINOIS 60173
TEL: 847-908-8400
COA# PEC.0001899
www.FullertonEngineering.com

REV	DATE	DESCRIPTION	BY
0	08/11/20	90% REVIEW	KC
1	08/23/20	FOR PERMIT	KC

I HEREBY CERTIFY THAT THESE DRAWINGS WERE PREPARED BY ME OR UNDER MY DIRECT SUPERVISION AND CONTROL, AND TO THE BEST OF MY KNOWLEDGE AND BELIEF COMPLY WITH THE REQUIREMENTS OF ALL APPLICABLE CODES.

STATE OF CONNECTICUT · HENRY M. BELLAGAMBA · 25358 · LICENSED PROFESSIONAL ENGINEER

SITE NAME
LEBANON

SITE NUMBER:
CTL01065

SITE ADDRESS
244 GATES ROAD
LEBANON, CT 06249

SHEET NAME
FRAMING PLAN AND SECTIONS

SHEET NUMBER
S2

PROJECT# 2020.0032.0027

PARTS LIST						
ITEM	QTY	PART NO.	PART DESCRIPTION	LENGTH	UNIT WT.	NET WT.
1	1	SCX4	CROSSOVER PLATE	6 1/2 in	6.02	6.02
2	2	X-UB1212	1/2" X 2-1/2" X 4-1/2" X 2" U-BOLT (HDG.)		0.63	1.25
3	8	G12FW	1/2" HDG USS FLATWASHER		0.03	0.27
4	8	G12LW	1/2" HDG LOCKWASHER		0.01	0.11
5	2	X-UB1358	1/2" X 3-5/8" X 5-1/2" X 3" U-BOLT (HDG.)		0.66	1.31
6	8	G12NUT	1/2" HDG HEAVY 2H HEX NUT		0.07	0.57
					TOTAL WT. #	9.77

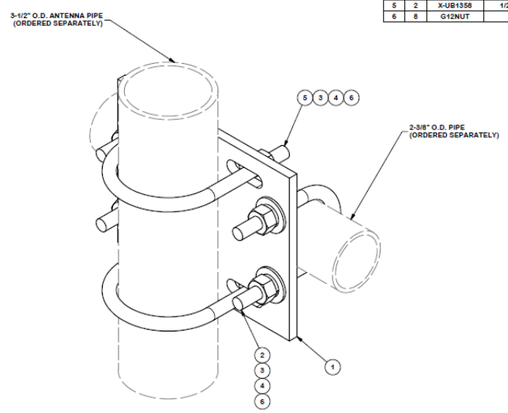

TOLERANCE NOTES

TOLERANCES ON DIMENSIONS, UNLESS OTHERWISE NOTED ARE:
SAWED, SHEARED AND GAS CUT EDGES *(± 0.030")*
DRILLED AND GAS CUT HOLES *(± 0.030")* - NO CONING OF HOLES
LASER CUT EDGES AND HOLES *(± 0.010")* - NO CONING OF HOLES
BENDS ARE ± 1/2 DEGREE
ALL OTHER MACHINING *(± 0.030")*
ALL OTHER ASSEMBLY *(± 0.060")*

PROPRIETARY NOTE:
THE DATA AND TECHNIQUES CONTAINED IN THIS DRAWING ARE PROPRIETARY INFORMATION OF VALMONT INDUSTRIES AND CONSIDERED A TRADE SECRET. ANY USE OR DISCLOSURE WITHOUT THE CONSENT OF VALMONT INDUSTRIES IS STRICTLY PROHIBITED.

DESCRIPTION: CROSSOVER PLATE KIT

SITE PRO 1 — A valmont company

Engineering Support Team: 1-888-763-7446

Locations: New York, NY; Atlanta, GA; Los Angeles, CA; Plymouth, IN; Salem, OR; Dallas, TX

CFD NO.	DRAWN BY	ENG. APPROVAL	PART NO.	PAGE
	CEK 7/1/2011		SCX43-K	1 OF 1

CLASS	SUB	DRAWING USAGE	CHECKED BY	DWG. NO.
81	01	CUSTOMER	BMC 7/1/2011	SCX43-K

PARTS LIST						
ITEM	QTY	PART NO.	PART DESCRIPTION	LENGTH	UNIT WT.	NET WT.
1	1	SCX4	CROSSOVER PLATE	6 1/2 in	6.02	6.02
3	2	X-UB1358	1/2" X 3-5/8" X 5-1/2" X 3" U-BOLT (HDG.)		0.73	1.46
8	2	X-UB1300	1/2" X 3" X 5" X 2" U-BOLT (HDG.)		0.73	1.46
4	8	G12FW	1/2" HDG USS FLATWASHER		0.03	0.27
5	8	G12LW	1/2" HDG LOCKWASHER		0.01	0.11
6	8	G12NUT	1/2" HDG HEAVY 2H HEX NUT		0.07	0.57
					TOTAL WT. #	9.92

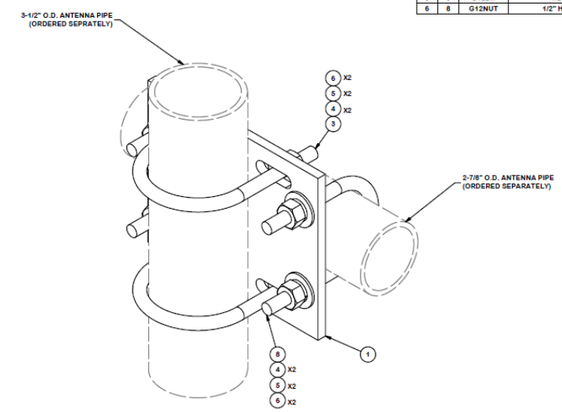

TOLERANCE NOTES

TOLERANCES ON DIMENSIONS, UNLESS OTHERWISE NOTED ARE:
SAWED, SHEARED AND GAS CUT EDGES *(± 0.030")*
DRILLED AND GAS CUT HOLES *(± 0.030")* - NO CONING OF HOLES
LASER CUT EDGES AND HOLES *(± 0.010")* - NO CONING OF HOLES
BENDS ARE ± 1/2 DEGREE
ALL OTHER MACHINING *(± 0.030")*
ALL OTHER ASSEMBLY *(± 0.060")*

PROPRIETARY NOTE:
THE DATA AND TECHNIQUES CONTAINED IN THIS DRAWING ARE PROPRIETARY INFORMATION OF VALMONT INDUSTRIES AND CONSIDERED A TRADE SECRET. ANY USE OR DISCLOSURE WITHOUT THE CONSENT OF VALMONT INDUSTRIES IS STRICTLY PROHIBITED.

DESCRIPTION: CROSSOVER PLATE KIT

SITE PRO 1 — A valmont company

Engineering Support Team: 1-888-763-7446

Locations: New York, NY; Atlanta, GA; Los Angeles, CA; Plymouth, IN; Salem, OR; Dallas, TX

CFD NO.	DRAWN BY	ENG. APPROVAL	PART NO.	PAGE
	CEK 2/19/2015		SCX45-K	1 OF 1

CLASS	SUB	DRAWING USAGE	CHECKED BY	DWG. NO.
81	01	CUSTOMER	BMC 2/19/2015	SCX45-K

PARTS LIST						
ITEM	QTY	PART NO.	PART DESCRIPTION	LENGTH	UNIT WT.	NET WT.
1	1	X-127594	FLAT DISK CLAMP PLATE 4" CENTERS (GALVANIZED)		2.48	2.48
2	2	X-100064	CLAMP (S) (4" V-CLAMP) GALVANIZED		0.91	1.83
3	2	G12065	1/2" x 6-1/2" HDG HEX BOLT GR5 FULL THREAD	6 1/2 in	0.41	0.82
4	2	G1204	1/2" x 4" HDG HEX BOLT GR5 FULL THREAD	4 in	0.27	0.54
5	4	G12FW	1/2" HDG USS FLATWASHER		0.03	0.14
6	4	G12LW	1/2" HDG LOCKWASHER		0.01	0.06
7	4	G12NUT	1/2" HDG HEAVY 2H HEX NUT		0.07	0.29
					TOTAL WT. #	6.16

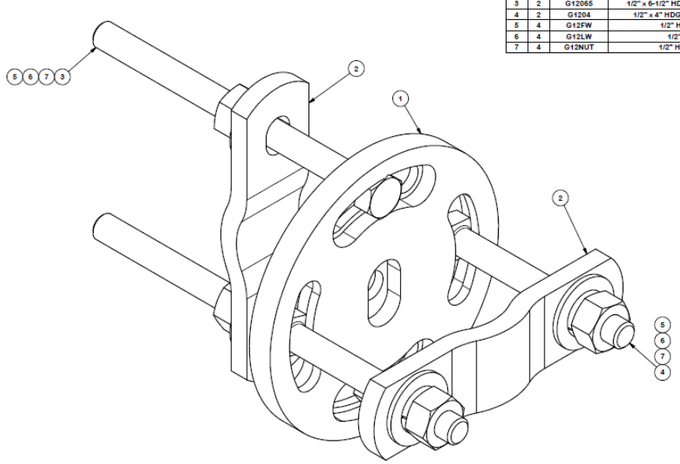

TOLERANCE NOTES

TOLERANCES ON DIMENSIONS, UNLESS OTHERWISE NOTED ARE:
SAWED, SHEARED AND GAS CUT EDGES *(± 0.030")*
DRILLED AND GAS CUT HOLES *(± 0.030")* - NO CONING OF HOLES
LASER CUT EDGES AND HOLES *(± 0.010")* - NO CONING OF HOLES
BENDS ARE ± 1/2 DEGREE
ALL OTHER MACHINING *(± 0.030")*
ALL OTHER ASSEMBLY *(± 0.060")*

PROPRIETARY NOTE:
THE DATA AND TECHNIQUES CONTAINED IN THIS DRAWING ARE PROPRIETARY INFORMATION OF VALMONT INDUSTRIES AND CONSIDERED A TRADE SECRET. ANY USE OR DISCLOSURE WITHOUT THE CONSENT OF VALMONT INDUSTRIES IS STRICTLY PROHIBITED.

DESCRIPTION: ADJUSTABLE CLAMP PLATE TIE-BACK ASSEMBLY

SITE PRO 1 — A valmont company

Engineering Support Team: 1-888-763-7446

Locations: New York, NY; Atlanta, GA; Los Angeles, CA; Plymouth, IN; Salem, OR; Dallas, TX

CFD NO.	DRAWN BY	ENG. APPROVAL	PART NO.	PAGE
	CEK 8/30/2010		PUCK	1 OF 1

CLASS	SUB	DRAWING USAGE	CHECKED BY	DWG. NO.
81	01	CUSTOMER	BMC 9/1/2010	PUCK

PARTS LIST						
ITEM	QTY	PART NO.	PART DESCRIPTION	LENGTH	UNIT WT.	NET WT.
1	1	SCX7	CROSSOVER PLATE	8 in	7.55	7.55
2	2	X-115765	5" V-CLAMP		1.02	2.04
3	2	X-100064	CLAMP (S) (4" V-CLAMP) GALVANIZED		0.91	1.83
4	8	G12065	1/2" x 6-1/2" HDG HEX BOLT GR5 FULL THREAD	6 1/2 in	0.41	3.28
5	4	G12045	1/2" x 4.5" HDG HEX BOLT GR5 FULL THREAD	4 1/2 in	0.30	1.19
6	16	G12FW	1/2" HDG USS FLATWASHER		0.03	0.54
7	8	G12LW	1/2" HDG LOCKWASHER		0.01	0.11
8	8	G12NUT	1/2" HDG HEAVY 2H HEX NUT		0.07	0.57
					TOTAL WT. #	16.98

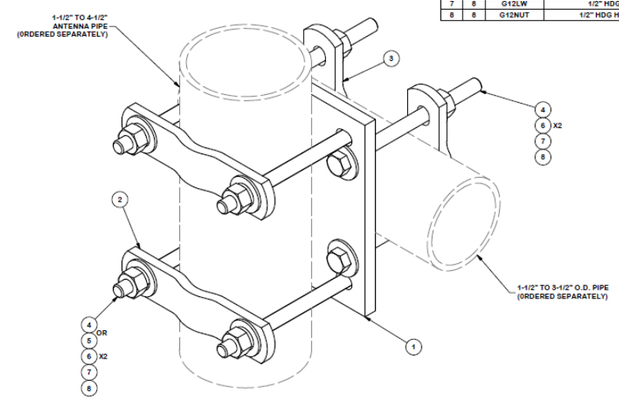

TOLERANCE NOTES

TOLERANCES ON DIMENSIONS, UNLESS OTHERWISE NOTED ARE:
SAWED, SHEARED AND GAS CUT EDGES *(± 0.030")*
DRILLED AND GAS CUT HOLES *(± 0.030")* - NO CONING OF HOLES
LASER CUT EDGES AND HOLES *(± 0.010")* - NO CONING OF HOLES
BENDS ARE ± 1/2 DEGREE
ALL OTHER MACHINING *(± 0.030")*
ALL OTHER ASSEMBLY *(± 0.060")*

PROPRIETARY NOTE:
THE DATA AND TECHNIQUES CONTAINED IN THIS DRAWING ARE PROPRIETARY INFORMATION OF VALMONT INDUSTRIES AND CONSIDERED A TRADE SECRET. ANY USE OR DISCLOSURE WITHOUT THE CONSENT OF VALMONT INDUSTRIES IS STRICTLY PROHIBITED.

DESCRIPTION: CROSSOVER PLATE (V-CLAMP STYLE)

SITE PRO 1 — A valmont company

Engineering Support Team: 1-888-763-7446

Locations: New York, NY; Atlanta, GA; Los Angeles, CA; Plymouth, IN; Salem, OR; Dallas, TX

CFD NO.	DRAWN BY	ENG. APPROVAL	PART NO.	PAGE
	CEK 10/7/2010		SCX7-U	1 OF 1

CLASS	SUB	DRAWING USAGE	CHECKED BY	DWG. NO.
81	01	CUSTOMER	BMC 10/8/2010	SCX7-U

at&t
550 COCHITUATE ROAD
SUITE 550 13 AND 14
FRAMINGHAM, MA 01701

smartlink
1362 MELLON ROAD
SUITE 140
HANOVER, MD 21076

FULLERTON ENGINEERING · DESIGN
1100 E. WOODFIELD ROAD, SUITE 500
SCHAUMBURG, ILLINOIS 60173
TEL: 847-908-8400
COA# PEC.0001899
www.FullertonEngineering.com

REV	DATE	DESCRIPTION	BY
0	08/11/20	90% REVIEW	KC
1	08/23/20	FOR PERMIT	KC

I HEREBY CERTIFY THAT THESE DRAWINGS WERE PREPARED BY ME OR UNDER MY DIRECT SUPERVISION AND CONTROL, AND TO THE BEST OF MY KNOWLEDGE AND BELIEF COMPLY WITH THE REQUIREMENTS OF ALL APPLICABLE CODES.

STATE OF CONNECTICUT · HENRY M. BELLAGAMBA · 25358 · LICENSED PROFESSIONAL ENGINEER

SITE NAME
LEBANON

SITE NUMBER:
CTL01065

SITE ADDRESS
244 GATES ROAD
LEBANON, CT 06249

SHEET NAME
MOUNTING SPECIFICATIONS

SHEET NUMBER
S3

PROJECT# 2020.0032.0027