STATE OF CONNECTICUT
CONNECTICUT SITING COUNCIL
Ten Franklin Square, New Britain, CT 06051
Phone: (860) 827-2935 Fax: (860) 827-2950
E-Mail: siting.council@ct.gov
Web Site: portal.ct.gov/csc

VIA ELECTRONIC MAIL

August 10, 2021

Richard Zajac
Site Acquisition Specialist
Crown Castle USA
4545 East River Road, Suite 320
West Henrietta, NY 14586

RE: **TS-DISH-083-210621** - DISH Wireless LLC request for an order to approve tower sharing at an existing telecommunications facility located at 7 Sherwood Forest Lane, Killingworth, Connecticut.

Dear Mr. Zajac:

The Connecticut Siting Council (Council) is in receipt of your correspondence of August 4, 2021 submitted in response to the Council's July 2, 2021 notification of an incomplete request for tower sharing with regard to the above-referenced matter.

The submission renders the request for tower sharing complete and the Council will process the request in accordance with the Federal Communications Commission 60-day timeframe.

Thank you for your attention and cooperation.

Sincerely,

Melanie A. Bachman
Executive Director

MAB/IN/laf

From: Zajac, Richard <Richard.Zajac@crowncastle.com>
Sent: Wednesday, August 4, 2021 10:22 AM
To: Robidoux, Evan <Evan.Robidoux@ct.gov>
Cc: CSC-DL Siting Council <Siting.Council@ct.gov>
Subject: RE: Council Incomplete Letter for TS-DISH-070-210621 (7 Sherwood Forest Lane, Killingworth)

Good morning,
Pursuant to the incomplete letter issued for TS-DISH-070-210621, please see the attached mount analysis report. A hard copy of this report will be sent via FedEx to arrive to you tomorrow, 8/5.

If you have any questions/comments/concerns or require additional information in order to resume the review process/issue an approval, please do not hesitate to contact me.

Thank you,
RICH ZAJAC
Site Acquisition Specialist
T: (585) 445-5896 M: (607) 346-7212
F: (724) 416-4461
CROWN CASTLE
4545 East River Road, Suite 320
West Henrietta, NY 14586

Date: **July 21, 2021**

Darcy Tarr
Crown Castle
3530 Toringdon Way, Suite 300
Charlotte, NC 28277
704-405-6589

Trylon
1825 W. Walnut Hill Lane,
Suite 302
Irving, TX 75038
214-930-1730

Subject:	**Mount Replacement Analysis Report**	
Carrier Designation:	**Dish Network Equipment Change Out**	
	Carrier Site Number:	BOBDL00096A
	Carrier Site Name:	CT-CCI-T-876383
Crown Castle Designation:	**Crown Castle BU Number:**	876383
	Crown Castle Site Name:	CLINTON / ANDERSON'S PROPERTY
	Crown Castle JDE Job Number:	645195
	Crown Castle Order Number:	553295 Rev. 1
Engineering Firm Designation:	**Trylon Report Designation:**	188194
Site Data:	**7 Sherwood Forest Lane, Killingworth, Middlesex County, CT, 06419**	
	Latitude 41°20'17.24" Longitude -72°33'23.44"	
Structure Information:	**Tower Height & Type:**	**150.0 ft Monopole**
	Mount Elevation:	**118.0 ft**
	Mount Type:	**7.0 ft T-Arms**

Dear Darcy Tarr,

Trylon is pleased to submit this **"Mount Replacement Analysis Report"** to determine the structural integrity of Dish Network's antenna mounting system with the proposed appurtenance and equipment addition on the abovementioned supporting tower structure. Analysis of the existing supporting tower structure is to be completed by others and therefore is not part of this analysis. Analysis of the antenna mounting system as a tie-off point for fall protection or rigging is not part of this document.

The purpose of the analysis is to determine acceptability of the mount stress level. Based on our analysis we have determined the mount stress level to be:

T-Arms **Sufficient***
***Sufficient upon completion of the changes listed in the 'Recommendations' section of this report.**

This analysis utilizes an ultimate 3-second gust wind speed of 130 mph as required by the 2018 Connecticut State Building Code. Applicable Standard references and design criteria are listed in Section 2 - Analysis Criteria.

Mount analysis prepared by: Steve Mustaro, P.E.

Respectfully Submitted by:
Cliff Abernathy, P.E.

TABLE OF CONTENTS

1) INTRODUCTION

2) ANALYSIS CRITERIA
Table 1 - Proposed Equipment Configuration

3) ANALYSIS PROCEDURE
Table 2 - Documents Provided
3.1) Analysis Method
3.2) Assumptions

4) ANALYSIS RESULTS
Table 3 - Mount Component Stresses vs. Capacity
4.1) Recommendations

5) APPENDIX A
Wire Frame and Rendered Models

6) APPENDIX B
Software Input Calculations

7) APPENDIX C
Software Analysis Output

8) APPENDIX D
Additional Calculations

9) APPENDIX E
Supplemental Drawings

1) INTRODUCTION

This is a proposed three sector 7.0 ft T-Arms, designed by Commscope.

2) ANALYSIS CRITERIA

Building Code:	2015 IBC
TIA-222 Revision:	TIA-222-H
Risk Category:	II
Ultimate Wind Speed:	130 mph
Exposure Category:	B
Topographic Factor at Base:	1.0
Topographic Factor at Mount:	1.0
Ice Thickness:	1.5 in
Wind Speed with Ice:	50 mph
Seismic S_s:	0.173
Seismic S_1:	0.061
Live Loading Wind Speed:	30 mph
Man Live Load at Mid/End-Points:	250 lb
Man Live Load at Mount Pipes:	500 lb

Table 1 - Proposed Equipment Configuration

Mount Centerline (ft)	Antenna Centerline (ft)	Number of Antennas	Antenna Manufacturer	Antenna Model	Mount / Modification Details
118.0	118.0	3	JMA WIRELESS	MX08FRO665-20	7.0 ft T-Arms [Commscope MC-K6MHDX-9-96]
		3	FUJITSU	TA08025-B604	
		3	FUJITSU	TA08025-B605	
		1	RAYCAP	RDIDC-9181-PF-48	

3) ANALYSIS PROCEDURE

Table 2 - Documents Provided

Document	Remarks	Reference	Source
Crown Application	Dish Network Application	553295 Rev. 1	CCI Sites
Construction Drawings	Infinigy	BOBDL00096A	TSA
Mount Manufacturer Drawings	Commscope	MC-K6MHDX-9-96	TSA

3.1) Analysis Method

RISA-3D (Version 17.0.4), a commercially available analysis software package, was used to create a three-dimensional model of the antenna mounting system and calculate member stresses for various loading cases.

A tool internally developed, using Microsoft Excel, by Trylon was used to calculate wind loading on all appurtenances, dishes, and mount members for various load cases. Selected output from the analysis is included in Appendix B.

This analysis was performed in accordance with Crown Castle's ENG-SOW-10208 *Tower Mount Analysis* (Revision B).

3.2) Assumptions

1) The antenna mounting system was properly fabricated, installed and maintained in good condition in accordance with its original design and manufacturer's specifications.
2) The configuration of antennas, mounts, and other appurtenances are as specified in Table 1 and the referenced drawings.
3) All member connections are assumed to have been designed to meet or exceed the load carrying capacity of the connected member unless otherwise specified in this report.
4) The analysis will be required to be revised if the existing conditions in the field differ from those shown in the above-referenced documents or assumed in this analysis. No allowance was made for any damaged, missing, or rusted members.
5) Prior structural modifications to the tower mounting system are assumed to be installed as shown per available data.
6) Steel grades have been assumed as follows, unless noted otherwise:

Channel, Solid Round, Angle, Plate	ASTM A36 (GR 36)
HSS (Rectangular)	ASTM A500 (GR B-46)
Pipe	ASTM A53 (GR 35)
Connection Bolts	ASTM A325

This analysis may be affected if any assumptions are not valid or have been made in error. Trylon should be notified to determine the effect on the structural integrity of the antenna mounting system.

4) ANALYSIS RESULTS

Table 3 - Mount Component Stresses vs. Capacity (T-Arms, Worst Case Sector)

Notes	Component	Critical Member	Centerline (ft)	% Capacity	Pass / Fail
1, 2	Mount Pipe(s)	MP1	118.0	20.2	Pass
	Horizontal(s)	H1		54.3	Pass
	Standoff(s)	M1		33.4	Pass
	Mount Connection(s)	-		47.6	Pass

Structure Rating (max from all components) =	**54.3%**

Notes:
1) See additional documentation in "Appendix C - Software Analysis Output" for calculations supporting the % capacity consumed.
2) Rating per TIA-222-H, Section 15.5

4.1) Recommendations

The mount has sufficient capacity to carry the proposed loading configuration. In order for the results of the analysis to be considered valid, the proposed mount listed below must be installed.

1. Commscope MC-K6MHDX-9-96.

No structural modifications are required at this time, provided that the above-listed changes are implemented.

APPENDIX A

WIRE FRAME AND RENDERED MODELS

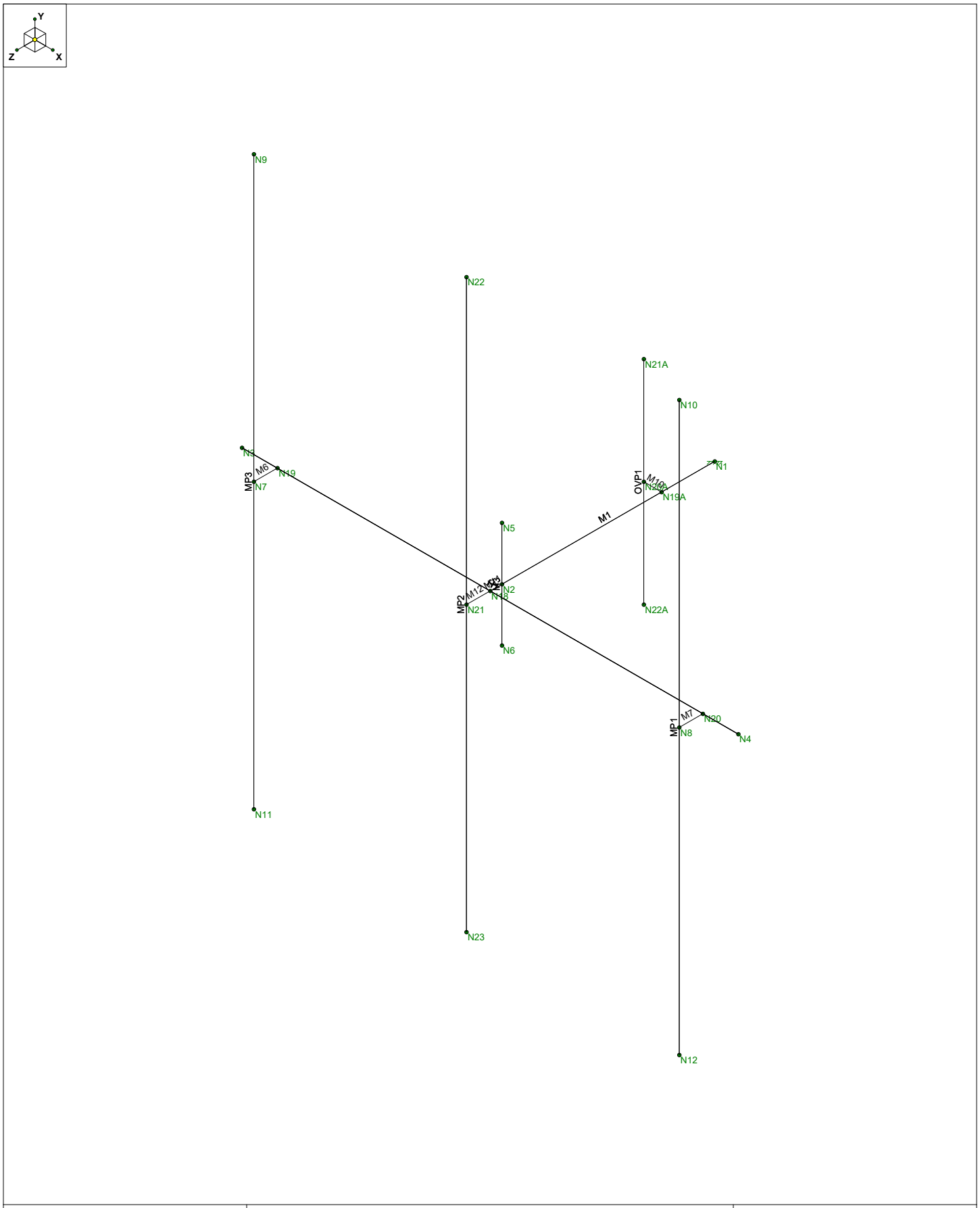

Trylon	876383	Wireframe
SMM		July 21, 2021 at 11:06 AM
188194		876383_loaded.r3d

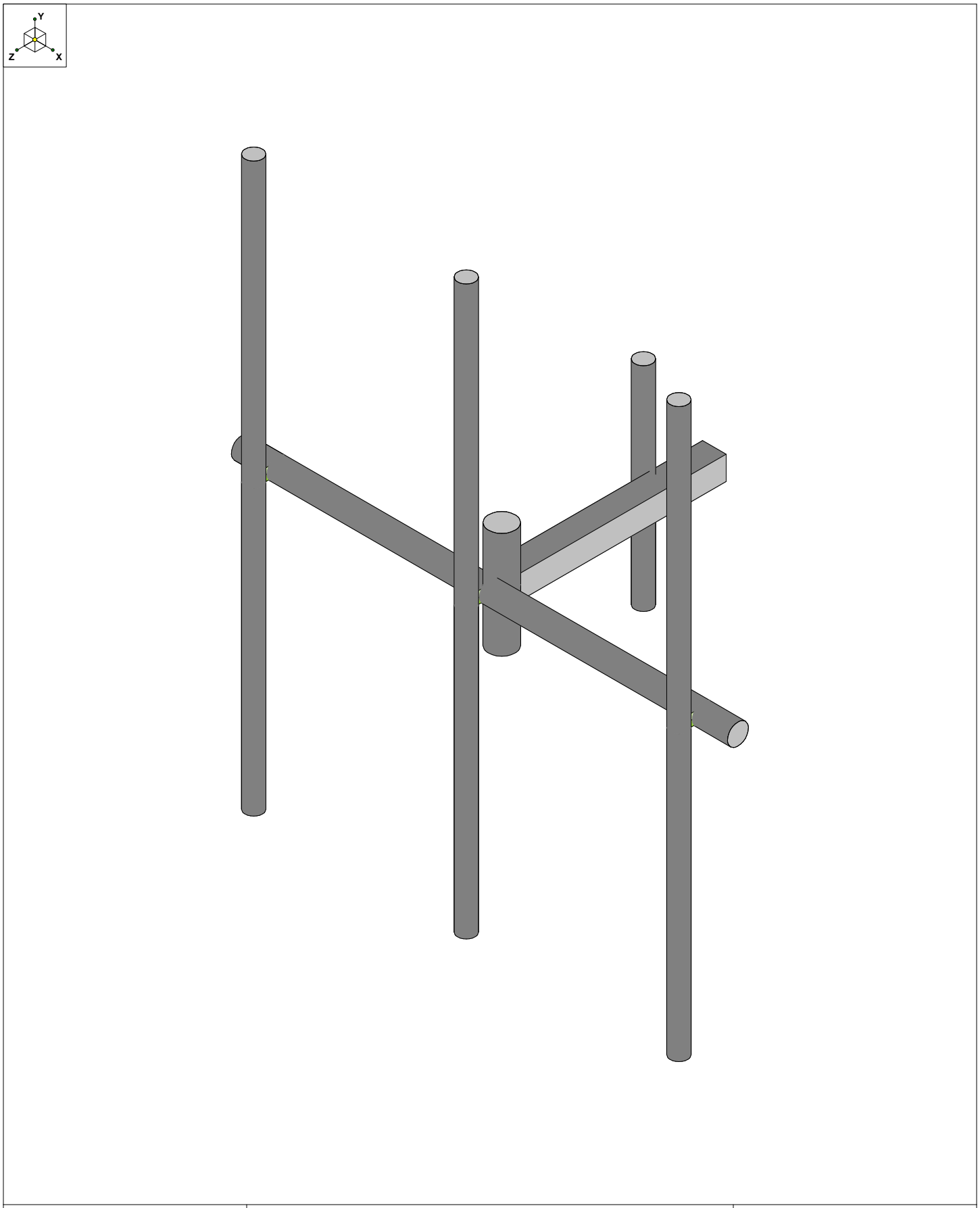

Trylon	876383	Render
SMM		July 21, 2021 at 11:06 AM
188194		876383_loaded.r3d

APPENDIX B

SOFTWARE INPUT CALCULATIONS

ASCE 7 Hazards Report

Address:
No Address at This Location

Standard: ASCE/SEI 7-10
Risk Category: II
Soil Class: D - Stiff Soil

Elevation: 288.38 ft (NAVD 88)
Latitude: 41.338122
Longitude: -72.556511

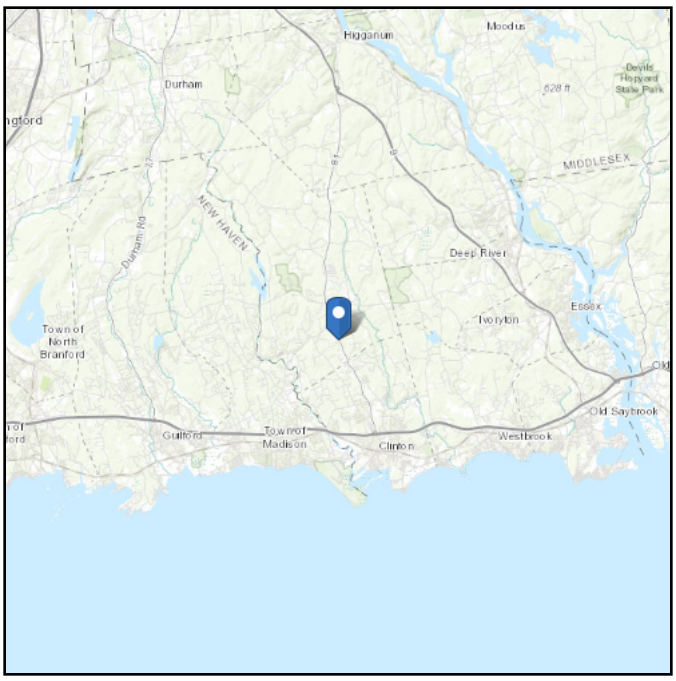

Ice

Results:

Ice Thickness:	0.75 in.
Concurrent Temperature:	15 F
Gust Speed:	50 mph

Data Source: Standard ASCE/SEI 7-10, Figs. 10-2 through 10-8

Date Accessed: Wed Jul 21 2021

Ice thicknesses on structures in exposed locations at elevations higher than the surrounding terrain and in valleys and gorges may exceed the mapped values.

Values provided are equivalent radial ice thicknesses due to freezing rain with concurrent 3-second gust speeds, for a 50-year mean recurrence interval, and temperatures concurrent with ice thicknesses due to freezing rain. Thicknesses for ice accretions caused by other sources shall be obtained from local meteorological studies. Ice thicknesses in exposed locations at elevations higher than the surrounding terrain and in valleys and gorges may exceed the mapped values.

The ASCE 7 Hazard Tool is provided for your convenience, for informational purposes only, and is provided “as is” and without warranties of any kind. The location data included herein has been obtained from information developed, produced, and maintained by third party providers; or has been extrapolated from maps incorporated in the ASCE 7 standard. While ASCE has made every effort to use data obtained from reliable sources or methodologies, ASCE does not make any representations or warranties as to the accuracy, completeness, reliability, currency, or quality of any data provided herein. Any third-party links provided by this Tool should not be construed as an endorsement, affiliation, relationship, or sponsorship of such third-party content by or from ASCE.

ASCE does not intend, nor should anyone interpret, the results provided by this Tool to replace the sound judgment of a competent professional, having knowledge and experience in the appropriate field(s) of practice, nor to substitute for the standard of care required of such professionals in interpreting and applying the contents of this Tool or the ASCE 7 standard.

In using this Tool, you expressly assume all risks associated with your use. Under no circumstances shall ASCE or its officers, directors, employees, members, affiliates, or agents be liable to you or any other person for any direct, indirect, special, incidental, or consequential damages arising from or related to your use of, or reliance on, the Tool or any information obtained therein. To the fullest extent permitted by law, you agree to release and hold harmless ASCE from any and all liability of any nature arising out of or resulting from any use of data provided by the ASCE 7 Hazard Tool.

CONNECTICUT DESIGN CRITERIA - STATE

Revison: R-397 7/2/2021

CT is NOT a Home Rule State; Tab added only for Design Criteria

(APPENDIX N) MUNICIPALITY - SPECIFIC STRUCTURAL DESIGN PARAMETERS												
				Wind Design Parameters								
Municipality	**Ground Snow Load**	**MCE Spectral Accelerations** (%g)		**Ultimate Design Wind Speeds,** V_{ult} (mph)			**Nominal Design Wind Speeds,** V_{asd} (mph)			**Wind-Borne Debris Regions**[1]		**Hurricane-Prone Regions**
		S_s	S_1	Risk Cat.I	Risk Cat.II	Risk Cat III-IV	Risk Cat. I	Risk Cat. II	Risk Cat. III-IV	Risk Cat. II & III except Occup I-2	Risk Cat III Occup I-2 & Risk Cat. IV	
Killingworth	30	0.173	0.061	120	130	140	93	101	108			Yes

1. Wind-Borne Debris Regions:

Type A: Full Municipality.

Type B: Areas south of Interstate 95.

Exception: Areas that are more than one mile from the coastal mean high-water line as certified by a registered design professional may be classified as being outside a wind-borne debris region.

Type C: Areas south of Metro North/Amtrak Railroad to the west of the Quinnipiac River and areas south of Interstate 95 to the east of the Quinnipiac River.

Exception: Areas that are more than one mile from the coastal mean high-water line as certified by a registered design professional may be classified as being outside a wind-borne debris region.

Trylon
1825 W. Walnut Hill Lane Suite 120
Irving, TX 75038

TIA LOAD CALCULATOR 2.0

PROJECT DATA	
Job Code:	188194
Carrier Site ID:	BU# 876383
Carrier Site Name:	TON / ANDERSON'S PROP

CODES AND STANDARDS	
Building Code:	2015 IBC
Local Building Code:	2018 CSBC
Design Standard:	TIA-222-H

STRUCTURE DETAILS		
Mount Type:	T-Arm	--
Mount Elevation:	118.0	ft.
Number of Sectors:	3	--
Structure Type:	Monopole	--
Structure Height:	150.0	ft.

ANALYSIS CRITERIA		
Structure Risk Category:	II	--
Exposure Category:	B	--
Site Class:	D - Default	--
Ground Elevation:	288.38	ft.

TOPOGRAPHIC DATA		
Topographic Category:	1.00	--
Topographic Feature:	N/A	--
Crest Point Elevation:	0.00	ft.
Base Point Elevation:	0.00	ft.
Crest to Mid-Height (L/2):	0.00	ft.
Distance from Crest (x):	0.00	ft.
Base Topo Factor (K_{zt}):	1.00	--
Mount Topo Factor (K_{zt}):	1.00	--

WIND PARAMETERS		
Design Wind Speed:	130	mph
Wind Escalation Factor (K_s):	1.00	--
Velocity Coefficient (K_z):	1.04	--
Directionality Factor (K_d):	0.95	--
Gust Effect Factor (Gh):	1.00	--
Shielding Factor (K_a):	0.90	--
Velocity Pressure (q_z):	42.14	psf

ICE PARAMETERS		
Design Ice Wind Speed:	50	mph
Design Ice Thickness (t_i):	1.50	in
Importance Factor (I_i):	1.00	--
Ice Velocity Pressure (q_{zi}):	42.14	psf
Mount Ice Thickness (t_{iz}):	1.70	in

WIND STRUCTURE CALCULATIONS		
Flat Member Pressure:	75.86	psf
Round Member Pressure:	45.51	psf
Ice Wind Pressure:	7.38	psf

SEISMIC PARAMETERS		
Importance Factor (I_e):	1.00	--
Short Period Accel .(S_s):	0.17	g
1 Second Accel (S_1):	0.06	g
Short Period Des. (S_{DS}):	0.18	g
1 Second Des. (S_{D1}):	0.10	g
Short Period Coeff. (F_a):	1.60	--
1 Second Coeff. (F_v):	2.40	--
Response Coefficient (Cs):	0.09	--
Amplification Factor (A_S):	1.20	--

LOAD COMBINATIONS [LRFD]

#	Description
1	1.4DL
2	1.2DL + 1WL 0 AZI
3	1.2DL + 1WL 30 AZI
4	1.2DL + 1WL 45 AZI
5	1.2DL + 1WL 60 AZI
6	1.2DL + 1WL 90 AZI
7	1.2DL + 1WL 120 AZI
8	1.2DL + 1WL 135 AZI
9	1.2DL + 1WL 150 AZI
10	1.2DL + 1WL 180 AZI
11	1.2DL + 1WL 210 AZI
12	1.2DL + 1WL 225 AZI
13	1.2DL + 1WL 240 AZI
14	1.2DL + 1WL 270 AZI
15	1.2DL + 1WL 300 AZI
16	1.2DL + 1WL 315 AZI
17	1.2DL + 1WL 330 AZI
18	0.9DL + 1WL 0 AZI
19	0.9DL + 1WL 30 AZI
20	0.9DL + 1WL 45 AZI
21	0.9DL + 1WL 60 AZI
22	0.9DL + 1WL 90 AZI
23	0.9DL + 1WL 120 AZI
24	0.9DL + 1WL 135 AZI
25	0.9DL + 1WL 150 AZI
26	0.9DL + 1WL 180 AZI
27	0.9DL + 1WL 210 AZI
28	0.9DL + 1WL 225 AZI
29	0.9DL + 1WL 240 AZI
30	0.9DL + 1WL 270 AZI
31	0.9DL + 1WL 300 AZI
32	0.9DL + 1WL 315 AZI
33	0.9DL + 1WL 330 AZI
34	1.2DL + 1DLi + 1WLi 0 AZI
35	1.2DL + 1DLi + 1WLi 30 AZI
36	1.2DL + 1DLi + 1WLi 45 AZI
37	1.2DL + 1DLi + 1WLi 60 AZI
38	1.2DL + 1DLi + 1WLi 90 AZI
39	1.2DL + 1DLi + 1WLi 120 AZI
40	1.2DL + 1DLi + 1WLi 135 AZI
41	1.2DL + 1DLi + 1WLi 150 AZI

#	Description
42	1.2DL + 1DLi + 1WLi 180 AZI
43	1.2DL + 1DLi + 1WLi 210 AZI
44	1.2DL + 1DLi + 1WLi 225 AZI
45	1.2DL + 1DLi + 1WLi 240 AZI
46	1.2DL + 1DLi + 1WLi 270 AZI
47	1.2DL + 1DLi + 1WLi 300 AZI
48	1.2DL + 1DLi + 1WLi 315 AZI
49	1.2DL + 1DLi + 1WLi 330 AZI
50	(1.2+0.2Sds) + 1.0E 0 AZI
51	(1.2+0.2Sds) + 1.0E 30 AZI
52	(1.2+0.2Sds) + 1.0E 45 AZI
53	(1.2+0.2Sds) + 1.0E 60 AZI
54	(1.2+0.2Sds) + 1.0E 90 AZI
55	(1.2+0.2Sds) + 1.0E 120 AZI
56	(1.2+0.2Sds) + 1.0E 135 AZI
57	(1.2+0.2Sds) + 1.0E 150 AZI
58	(1.2+0.2Sds) + 1.0E 180 AZI
59	(1.2+0.2Sds) + 1.0E 210 AZI
60	(1.2+0.2Sds) + 1.0E 225 AZI
61	(1.2+0.2Sds) + 1.0E 240 AZI
62	(1.2+0.2Sds) + 1.0E 270 AZI
63	(1.2+0.2Sds) + 1.0E 300 AZI
64	(1.2+0.2Sds) + 1.0E 315 AZI
65	(1.2+0.2Sds) + 1.0E 330 AZI
66	(0.9-0.2Sds) + 1.0E 0 AZI
67	(0.9-0.2Sds) + 1.0E 30 AZI
68	(0.9-0.2Sds) + 1.0E 45 AZI
69	(0.9-0.2Sds) + 1.0E 60 AZI
70	(0.9-0.2Sds) + 1.0E 90 AZI
71	(0.9-0.2Sds) + 1.0E 120 AZI
72	(0.9-0.2Sds) + 1.0E 135 AZI
73	(0.9-0.2Sds) + 1.0E 150 AZI
74	(0.9-0.2Sds) + 1.0E 180 AZI
75	(0.9-0.2Sds) + 1.0E 210 AZI
76	(0.9-0.2Sds) + 1.0E 225 AZI
77	(0.9-0.2Sds) + 1.0E 240 AZI
78	(0.9-0.2Sds) + 1.0E 270 AZI
79	(0.9-0.2Sds) + 1.0E 300 AZI
80	(0.9-0.2Sds) + 1.0E 315 AZI
81	(0.9-0.2Sds) + 1.0E 330 AZI
82-88	1.2D + 1.5 Lv1

#	Description
89	1.2D + 1.5Lm + 1.0Wm 0 AZI - MP1
90	1.2D + 1.5Lm + 1.0Wm 30 AZI - MP1
91	1.2D + 1.5Lm + 1.0Wm 45 AZI - MP1
92	1.2D + 1.5Lm + 1.0Wm 60 AZI - MP1
93	1.2D + 1.5Lm + 1.0Wm 90 AZI - MP1
94	1.2D + 1.5Lm + 1.0Wm 120 AZI - MP1
95	1.2D + 1.5Lm + 1.0Wm 135 AZI - MP1
96	1.2D + 1.5Lm + 1.0Wm 150 AZI - MP1
97	1.2D + 1.5Lm + 1.0Wm 180 AZI - MP1
98	1.2D + 1.5Lm + 1.0Wm 210 AZI - MP1
99	1.2D + 1.5Lm + 1.0Wm 225 AZI - MP1
100	1.2D + 1.5Lm + 1.0Wm 240 AZI - MP1
101	1.2D + 1.5Lm + 1.0Wm 270 AZI - MP1
102	1.2D + 1.5Lm + 1.0Wm 300 AZI - MP1
103	1.2D + 1.5Lm + 1.0Wm 315 AZI - MP1
104	1.2D + 1.5Lm + 1.0Wm 330 AZI - MP1
105	1.2D + 1.5Lm + 1.0Wm 0 AZI - MP2
106	1.2D + 1.5Lm + 1.0Wm 30 AZI - MP2
107	1.2D + 1.5Lm + 1.0Wm 45 AZI - MP2
108	1.2D + 1.5Lm + 1.0Wm 60 AZI - MP2
109	1.2D + 1.5Lm + 1.0Wm 90 AZI - MP2
110	1.2D + 1.5Lm + 1.0Wm 120 AZI - MP2
111	1.2D + 1.5Lm + 1.0Wm 135 AZI - MP2
112	1.2D + 1.5Lm + 1.0Wm 150 AZI - MP2
113	1.2D + 1.5Lm + 1.0Wm 180 AZI - MP2
114	1.2D + 1.5Lm + 1.0Wm 210 AZI - MP2
115	1.2D + 1.5Lm + 1.0Wm 225 AZI - MP2
116	1.2D + 1.5Lm + 1.0Wm 240 AZI - MP2
117	1.2D + 1.5Lm + 1.0Wm 270 AZI - MP2
118	1.2D + 1.5Lm + 1.0Wm 300 AZI - MP2
119	1.2D + 1.5Lm + 1.0Wm 315 AZI - MP2
120	1.2D + 1.5Lm + 1.0Wm 330 AZI - MP2

#	Description
121	1.2D + 1.5Lm + 1.0Wm 0 AZI - MP3
122	1.2D + 1.5Lm + 1.0Wm 30 AZI - MP3
123	1.2D + 1.5Lm + 1.0Wm 45 AZI - MP3
124	1.2D + 1.5Lm + 1.0Wm 60 AZI - MP3
125	1.2D + 1.5Lm + 1.0Wm 90 AZI - MP3
126	1.2D + 1.5Lm + 1.0Wm 120 AZI - MP3
127	1.2D + 1.5Lm + 1.0Wm 135 AZI - MP3
128	1.2D + 1.5Lm + 1.0Wm 150 AZI - MP3
129	1.2D + 1.5Lm + 1.0Wm 180 AZI - MP3
130	1.2D + 1.5Lm + 1.0Wm 210 AZI - MP3
131	1.2D + 1.5Lm + 1.0Wm 225 AZI - MP3
132	1.2D + 1.5Lm + 1.0Wm 240 AZI - MP3
133	1.2D + 1.5Lm + 1.0Wm 270 AZI - MP3
134	1.2D + 1.5Lm + 1.0Wm 300 AZI - MP3
135	1.2D + 1.5Lm + 1.0Wm 315 AZI - MP3
136	1.2D + 1.5Lm + 1.0Wm 330 AZI - MP3
137	1.2D + 1.5Lm + 1.0Wm 0 AZI - MP4
138	1.2D + 1.5Lm + 1.0Wm 30 AZI - MP4
139	1.2D + 1.5Lm + 1.0Wm 45 AZI - MP4
140	1.2D + 1.5Lm + 1.0Wm 60 AZI - MP4
141	1.2D + 1.5Lm + 1.0Wm 90 AZI - MP4
142	1.2D + 1.5Lm + 1.0Wm 120 AZI - MP4
143	1.2D + 1.5Lm + 1.0Wm 135 AZI - MP4
144	1.2D + 1.5Lm + 1.0Wm 150 AZI - MP4
145	1.2D + 1.5Lm + 1.0Wm 180 AZI - MP4
146	1.2D + 1.5Lm + 1.0Wm 210 AZI - MP4
147	1.2D + 1.5Lm + 1.0Wm 225 AZI - MP4
148	1.2D + 1.5Lm + 1.0Wm 240 AZI - MP4
149	1.2D + 1.5Lm + 1.0Wm 270 AZI - MP4
150	1.2D + 1.5Lm + 1.0Wm 300 AZI - MP4
151	1.2D + 1.5Lm + 1.0Wm 315 AZI - MP4
152	1.2D + 1.5Lm + 1.0Wm 330 AZI - MP4

*This page shows an example of maintenance loads for (4) pipes, the number of mount pipe LCs may vary per site

EQUIPMENT LOADING

Appurtenance Name/Location	Qty.	Elevation [ft]	--	EPA_N (ft2)	EPA_T (ft2)	Weight (lbs)
MX08FRO665-20	1	118	No Ice	8.01	3.21	82.50
MP1, 0	--	--	w/ Ice	9.63	4.63	281.99
TA08025-B604	1	118	No Ice	1.96	0.98	63.90
MP1, 90	--	--	w/ Ice	2.38	1.31	68.51
TA08025-B605	1	118	No Ice	1.96	1.13	75.00
MP1, 90	--	--	w/ Ice	2.38	1.47	73.00
RDIDC-9181-PF-48	1	118	No Ice	2.01	1.17	21.85
OVP1, 90	--	--	w/ Ice	2.43	1.52	71.94
			No Ice			
--	--	--	w/ Ice			
			No Ice			
--	--	--	w/ Ice			
			No Ice			
--	--	--	w/ Ice			
			No Ice			
--	--	--	w/ Ice			
			No Ice			
--	--	--	w/ Ice			
			No Ice			
--	--	--	w/ Ice			
			No Ice			
--	--	--	w/ Ice			
			No Ice			
--	--	--	w/ Ice			
			No Ice			
--	--	--	w/ Ice			
			No Ice			
--	--	--	w/ Ice			
			No Ice			
--	--	--	w/ Ice			
			No Ice			
--	--	--	w/ Ice			
			No Ice			
--	--	--	w/ Ice			
			No Ice			
--	--	--	w/ Ice			
			No Ice			
--	--	--	w/ Ice			
			No Ice			
--	--	--	w/ Ice			
			No Ice			
--	--	--	w/ Ice			
			No Ice			
--	--	--	w/ Ice			
			No Ice			
--	--	--	w/ Ice			
			No Ice			
--	--	--	w/ Ice			
			No Ice			
--	--	--	w/ Ice			
			No Ice			
--	--	--	w/ Ice			
			No Ice			
--	--	--	w/ Ice			
			No Ice			
--	--	--	w/ Ice			

EQUIPMENT WIND CALCULATIONS

Appurtenance Name	Qty.	Elevation [ft]	K_{zt}	K_z	K_d	t_d	q_z [psf]	q_{zi} [psf]
MX08FRO665-20	1	118	1.00	1.04	0.95	1.70	42.14	6.23
TA08025-B604	1	118	1.00	1.04	0.95	1.70	42.14	6.23
TA08025-B605	1	118	1.00	1.04	0.95	1.70	42.14	6.23
RDIDC-9181-PF-48	1	118	1.00	1.04	0.95	1.70	42.14	6.23

EQUIPMENT LATERAL WIND FORCE CALCULATIONS

Appurtenance Name	Qty.	--	0° 180°	30° 210°	60° 240°	90° 270°	120° 300°	150° 330°
MX08FRO665-20	1	No Ice	303.80	167.26	258.29	121.75	258.29	167.26
MP1, 0	--	w/ Ice	54.05	33.01	47.03	25.99	47.03	33.01
TA08025-B604	1	No Ice	74.47	46.53	65.16	37.21	65.16	46.53
MP1, 90	--	w/ Ice	13.36	8.83	11.85	7.32	11.85	8.83
TA08025-B605	1	No Ice	74.47	50.75	66.56	42.84	66.56	50.75
MP1, 90	--	w/ Ice	13.36	9.51	12.07	8.23	12.07	9.51
RDIDC-9181-PF-48	1	No Ice	76.31	52.31	68.31	44.31	68.31	52.31
OVP1, 90	--	w/ Ice	13.66	9.81	12.38	8.53	12.38	9.81
		No Ice						
--	--	w/ Ice						
		No Ice						
--	--	w/ Ice						
		No Ice						
--	--	w/ Ice						
		No Ice						
--	--	w/ Ice						
		No Ice						
--	--	w/ Ice						
		No Ice						
--	--	w/ Ice						
		No Ice						
--	--	w/ Ice						
		No Ice						
--	--	w/ Ice						
		No Ice						
--	--	w/ Ice						
		No Ice						
--	--	w/ Ice						
		No Ice						
--	--	w/ Ice						
		No Ice						
--	--	w/ Ice						
		No Ice						
--	--	w/ Ice						
		No Ice						
--	--	w/ Ice						
		No Ice						
--	--	w/ Ice						
		No Ice						
--	--	w/ Ice						
		No Ice						
--	--	w/ Ice						
		No Ice						
--	--	w/ Ice						
		No Ice						
--	--	w/ Ice						

EQUIPMENT SEISMIC FORCE CALCULATIONS

Appurtenance Name	***Qty.***	***Elevation [ft]***	***Weight [lbs]***	F_p [lbs]
MX08FRO665-20	1	118	82.5	9.13
TA08025-B604	1	118	63.9	7.08
TA08025-B605	1	118	75	8.30
RDIDC-9181-PF-48	1	118	21.85	2.42

APPENDIX C

SOFTWARE ANALYSIS OUTPUT

(Global) Model Settings

Display Sections for Member Calcs	5
Max Internal Sections for Member Calcs	97
Include Shear Deformation?	Yes
Increase Nailing Capacity for Wind?	Yes
Include Warping?	Yes
Trans Load Btwn Intersecting Wood Wall?	Yes
Area Load Mesh (in^2)	144
Merge Tolerance (in)	.12
P-Delta Analysis Tolerance	0.50%
Include P-Delta for Walls?	Yes
Automatically Iterate Stiffness for Walls?	Yes
Max Iterations for Wall Stiffness	3
Gravity Acceleration (in/sec^2)	386.4
Wall Mesh Size (in)	24
Eigensolution Convergence Tol. (1.E-)	4
Vertical Axis	Y
Global Member Orientation Plane	XZ
Static Solver	Sparse Accelerated
Dynamic Solver	Accelerated Solver

Hot Rolled Steel Code	AISC 15th(360-16): LRFD
Adjust Stiffness?	Yes(Iterative)
RISAConnection Code	AISC 15th(360-16): LRFD
Cold Formed Steel Code	AISI S100-16: LRFD
Wood Code	AWC NDS-15: ASD
Wood Temperature	< 100F
Concrete Code	ACI 318-14
Masonry Code	ACI 530-13: Strength
Aluminum Code	AA ADM1-10: LRFD - Building
Stainless Steel Code	AISC 14th(360-10): ASD
Adjust Stiffness?	Yes(Iterative)

Number of Shear Regions	4
Region Spacing Increment (in)	4
Biaxial Column Method	Exact Integration
Parme Beta Factor (PCA)	.65
Concrete Stress Block	Rectangular
Use Cracked Sections?	Yes
Use Cracked Sections Slab?	Yes
Bad Framing Warnings?	No
Unused Force Warnings?	Yes
Min 1 Bar Diam. Spacing?	No
Concrete Rebar Set	REBAR_SET_ASTMA615
Min % Steel for Column	1
Max % Steel for Column	8

(Global) Model Settings, Continued

Seismic Code	ASCE 7-10
Seismic Base Elevation (in)	Not Entered
Add Base Weight?	Yes
Ct X	.02
Ct Z	.02
T X (sec)	Not Entered
T Z (sec)	Not Entered
R X	3
R Z	3
Ct Exp. X	.75
Ct Exp. Z	.75
SD1	1
SDS	1
S1	1
TL (sec)	5
Risk Cat	I or II
Drift Cat	Other
Om Z	1
Om X	1
Cd Z	1
Cd X	1
Rho Z	1
Rho X	1

Hot Rolled Steel Properties

	Label	E [ksi]	G [ksi]	Nu	Therm (/1E5 F)	Density[k...	Yield[psi]	Ry	Fu[psi]	Rt
1	A992	29000	11154	.3	.65	.49	50000	1.1	65000	1.1
2	A36 Gr.36	29000	11154	.3	.65	.49	36000	1.5	58000	1.2
3	A572 Gr.50	29000	11154	.3	.65	.49	50000	1.1	65000	1.1
4	A500 Gr.B RND	29000	11154	.3	.65	.527	42000	1.4	58000	1.3
5	A500 Gr.B Rect	29000	11154	.3	.65	.527	46000	1.4	58000	1.3
6	A53 Gr.B	29000	11154	.3	.65	.49	35000	1.6	60000	1.2
7	A1085	29000	11154	.3	.65	.49	50000	1.4	65000	1.3

Cold Formed Steel Properties

	Label	E [ksi]	G [ksi]	Nu	Therm (/1E5 F)	Density[k/ft^3]	Yield[psi]	Fu[psi]
1	A653 SS Gr33	29500	11346	.3	.65	.49	33000	45000
2	A653 SS Gr50/1	29500	11346	.3	.65	.49	50000	65000

Hot Rolled Steel Section Sets

	Label	Shape	Type	Design List	Material	Design R...	A [in2]	Iyy [in4]	Izz [in4]	J [in4]
1	Standoffs	HSS4X4X4	Beam	Tube	A500 Gr.B Rect	Typical	3.37	7.8	7.8	12.8
2	Horizontals	PIPE_3.0	Beam	Pipe	A53 Gr.B	Typical	2.07	2.85	2.85	5.69
3	Vertical Standoff	PIPE_4.0	Beam	Pipe	A53 Gr.B	Typical	2.96	6.82	6.82	13.6
4	Pipe Mounts	PIPE_2.5	Beam	Pipe	A53 Gr.B	Typical	1.61	1.45	1.45	2.89

Cold Formed Steel Section Sets

	Label	Shape	Type	Design List	Material	Design Rules	A [in2]	Iyy [in4]	Izz [in4]	J [in4]
1	CF1A	8CU1.25X0...	Beam	None	A653 SS Gr33	Typical	.581	.057	4.41	.00063

Joint Boundary Conditions

	Joint Label	X [k/in]	Y [k/in]	Z [k/in]	X Rot.[k-ft/rad]	Y Rot.[k-ft/rad]	Z Rot.[k-ft/rad]
1	N1	Reaction	Reaction	Reaction	Reaction	Reaction	Reaction

Basic Load Cases

	BLC Description	Category	X Gravity	Y Gravity	Z Gravity	Joint	Point	Distributed	Area(Me...	Surface(P...
1	Self Weight	DL		-1			5			
2	Structure Wind Z	WLZ						10		
3	Structure Wind X	WLX						10		
4	Wind Load 0 AZI	WLZ					10			
5	Wind Load 30 AZI	None					10			
6	Wind Load 45 AZI	None					10			
7	Wind Load 60 AZI	None					10			
8	Wind Load 90 AZI	WLX					10			
9	Wind Load 120 AZI	None					10			
10	Wind Load 135 AZI	None					10			
11	Wind Load 150 AZI	None					10			
12	Ice Weight	OL1					5	10		
13	Ice Structure Wind Z	OL2						10		
14	Ice Structure Wind X	OL3						10		
15	Ice Wind Load 0 AZI	OL2					10			
16	Ice Wind Load 30 AZI	None					10			
17	Ice Wind Load 45 AZI	None					10			
18	Ice Wind Load 60 AZI	None					10			
19	Ice Wind Load 90 AZI	OL3					10			
20	Ice Wind Load 120 AZI	None					10			
21	Ice Wind Load 135 AZI	None					10			
22	Ice Wind Load 150 AZI	None					10			
23	Seismic Load Z	ELZ			-.111		5			
24	Seismic Load X	ELX	-.111				5			
25	Live Load 1 (Lv)	None					1			
26	Live Load 2 (Lv)	None					1			
27	Live Load 3 (Lv)	None					1			
28	Maintenance Load 1 (...	None					1			
29	Maintenance Load 2 (...	None					1			
30	Maintenance Load 3 (...	None					1			

Load Combinations

	Description	So..	P...	S...	BLC	Fac...	BLC	Fac...	BLC	Fac...	BLC	Fac...	BLC	Fac...	BLC	Fac...	BLC	Fac...	BLC	Fac...	BLC	Fac...	BLC	Fac...
1	1.4DL	Yes	Y		DL	1.4																		
2	1.2DL + 1WL 0 AZI	Yes	Y		DL	1.2	2	1	3		4	1												
3	1.2DL + 1WL 30 AZI	Yes	Y		DL	1.2	2	.866	3	.5	5	1												
4	1.2DL + 1WL 45 AZI	Yes	Y		DL	1.2	2	.707	3	.707	6	1												
5	1.2DL + 1WL 60 AZI	Yes	Y		DL	1.2	2	.5	3	.866	7	1												

Load Combinations (Continued)

	Description	So..	P...	S...	BLC	Fac..	BLC	Fac..	BLC	Fac..	BLC	Fac..	BLC	Fac..	BLC	Fac..	BLC	Fac..	BLC	Fac..	BLC	Fac..	BLC	Fac...
6	1.2DL + 1WL 90 AZI	Yes	Y		DL	1.2	2		3	1	8	1												
7	1.2DL + 1WL 120 AZI	Yes	Y		DL	1.2	2	-.5	3	.866	9	1												
8	1.2DL + 1WL 135 AZI	Yes	Y		DL	1.2	2	-.707	3	.707	10	1												
9	1.2DL + 1WL 150 AZI	Yes	Y		DL	1.2	2	-.866	3	.5	11	1												
10	1.2DL + 1WL 180 AZI	Yes	Y		DL	1.2	2	-1	3		4	-1												
11	1.2DL + 1WL 210 AZI	Yes	Y		DL	1.2	2	-.866	3	-.5	5	-1												
12	1.2DL + 1WL 225 AZI	Yes	Y		DL	1.2	2	-.707	3	-.707	6	-1												
13	1.2DL + 1WL 240 AZI	Yes	Y		DL	1.2	2	-.5	3	-.866	7	-1												
14	1.2DL + 1WL 270 AZI	Yes	Y		DL	1.2	2		3	-1	8	-1												
15	1.2DL + 1WL 300 AZI	Yes	Y		DL	1.2	2	.5	3	-.866	9	-1												
16	1.2DL + 1WL 315 AZI	Yes	Y		DL	1.2	2	.707	3	-.707	10	-1												
17	1.2DL + 1WL 330 AZI	Yes	Y		DL	1.2	2	.866	3	-.5	11	-1												
18	0.9DL + 1WL 0 AZI	Yes	Y		DL	.9	2	1	3		4	1												
19	0.9DL + 1WL 30 AZI	Yes	Y		DL	.9	2	.866	3	.5	5	1												
20	0.9DL + 1WL 45 AZI	Yes	Y		DL	.9	2	.707	3	.707	6	1												
21	0.9DL + 1WL 60 AZI	Yes	Y		DL	.9	2	.5	3	.866	7	1												
22	0.9DL + 1WL 90 AZI	Yes	Y		DL	.9	2		3	1	8	1												
23	0.9DL + 1WL 120 AZI	Yes	Y		DL	.9	2	-.5	3	.866	9	1												
24	0.9DL + 1WL 135 AZI	Yes	Y		DL	.9	2	-.707	3	.707	10	1												
25	0.9DL + 1WL 150 AZI	Yes	Y		DL	.9	2	-.866	3	.5	11	1												
26	0.9DL + 1WL 180 AZI	Yes	Y		DL	.9	2	-1	3		4	-1												
27	0.9DL + 1WL 210 AZI	Yes	Y		DL	.9	2	-.866	3	-.5	5	-1												
28	0.9DL + 1WL 225 AZI	Yes	Y		DL	.9	2	-.707	3	-.707	6	-1												
29	0.9DL + 1WL 240 AZI	Yes	Y		DL	.9	2	-.5	3	-.866	7	-1												
30	0.9DL + 1WL 270 AZI	Yes	Y		DL	.9	2		3	-1	8	-1												
31	0.9DL + 1WL 300 AZI	Yes	Y		DL	.9	2	.5	3	-.866	9	-1												
32	0.9DL + 1WL 315 AZI	Yes	Y		DL	.9	2	.707	3	-.707	10	-1												
33	0.9DL + 1WL 330 AZI	Yes	Y		DL	.9	2	.866	3	-.5	11	-1												
34	1.2DL + 1DLi + 1WL..	Yes	Y		DL	1.2	OL1	1	13	1	14		15	1										
35	1.2DL + 1DLi + 1WL..	Yes	Y		DL	1.2	OL1	1	13	.866	14	.5	16	1										
36	1.2DL + 1DLi + 1WL..	Yes	Y		DL	1.2	OL1	1	13	.707	14	.707	17	1										
37	1.2DL + 1DLi + 1WL..	Yes	Y		DL	1.2	OL1	1	13	.5	14	.866	18	1										
38	1.2DL + 1DLi + 1WL..	Yes	Y		DL	1.2	OL1	1	13		14	1	19	1										
39	1.2DL + 1DLi + 1WL..	Yes	Y		DL	1.2	OL1	1	13	-.5	14	.866	20	1										
40	1.2DL + 1DLi + 1WL..	Yes	Y		DL	1.2	OL1	1	13	-.707	14	.707	21	1										
41	1.2DL + 1DLi + 1WL..	Yes	Y		DL	1.2	OL1	1	13	-.866	14	.5	22	1										
42	1.2DL + 1DLi + 1WL..	Yes	Y		DL	1.2	OL1	1	13	-1	14		15	-1										
43	1.2DL + 1DLi + 1WL..	Yes	Y		DL	1.2	OL1	1	13	-.866	14	-.5	16	-1										
44	1.2DL + 1DLi + 1WL..	Yes	Y		DL	1.2	OL1	1	13	-.707	14	-.707	17	-1										
45	1.2DL + 1DLi + 1WL..	Yes	Y		DL	1.2	OL1	1	13	-.5	14	-.866	18	-1										
46	1.2DL + 1DLi + 1WL..	Yes	Y		DL	1.2	OL1	1	13		14	-1	19	-1										
47	1.2DL + 1DLi + 1WL..	Yes	Y		DL	1.2	OL1	1	13	.5	14	-.866	20	-1										
48	1.2DL + 1DLi + 1WL..	Yes	Y		DL	1.2	OL1	1	13	.707	14	-.707	21	-1										
49	1.2DL + 1DLi + 1WL..	Yes	Y		DL	1.2	OL1	1	13	.866	14	-.5	22	-1										
50	(1.2+0.2Sds)DL + 1...	Yes	Y		DL	1.2...	23	1	24															
51	(1.2+0.2Sds)DL + 1...	Yes	Y		DL	1.2...	23	.866	24	.5														
52	(1.2+0.2Sds)DL + 1...	Yes	Y		DL	1.2...	23	.707	24	.707														
53	(1.2+0.2Sds)DL + 1...	Yes	Y		DL	1.2...	23	.5	24	.866														
54	(1.2+0.2Sds)DL + 1...	Yes	Y		DL	1.2...	23		24	1														
55	(1.2+0.2Sds)DL + 1...	Yes	Y		DL	1.2...	23	-.5	24	.866														
56	(1.2+0.2Sds)DL + 1...	Yes	Y		DL	1.2...	23	-.707	24	.707														
57	(1.2+0.2Sds)DL + 1...	Yes	Y		DL	1.2...	23	-.866	24	.5														

Load Combinations (Continued)

	Description	So..	P...	S...	BLC	Fac..	BLC	Fac..	BLC	Fac..	BLC	Fac..	BLC	Fac..	BLC	Fac..	BLC	Fac..	BLC	Fac..	BLC	Fac..	BLC	Fac...
58	(1.2+0.2Sds)DL + 1...	Yes	Y		DL	1.2...	23	-1	24															
59	(1.2+0.2Sds)DL + 1...	Yes	Y		DL	1.2...	23	-.866	24	-.5														
60	(1.2+0.2Sds)DL + 1...	Yes	Y		DL	1.2...	23	-.707	24	-.707														
61	(1.2+0.2Sds)DL + 1...	Yes	Y		DL	1.2...	23	-.5	24	-.866														
62	(1.2+0.2Sds)DL + 1...	Yes	Y		DL	1.2...	23		24	-1														
63	(1.2+0.2Sds)DL + 1...	Yes	Y		DL	1.2...	23	.5	24	-.866														
64	(1.2+0.2Sds)DL + 1...	Yes	Y		DL	1.2...	23	.707	24	-.707														
65	(1.2+0.2Sds)DL + 1...	Yes	Y		DL	1.2...	23	.866	24	-.5														
66	(0.9-0.2Sds)DL + 1E...	Yes	Y		DL	.863	23	1	24															
67	(0.9-0.2Sds)DL + 1E...	Yes	Y		DL	.863	23	.866	24	.5														
68	(0.9-0.2Sds)DL + 1E...	Yes	Y		DL	.863	23	.707	24	.707														
69	(0.9-0.2Sds)DL + 1E...	Yes	Y		DL	.863	23	.5	24	.866														
70	(0.9-0.2Sds)DL + 1E...	Yes	Y		DL	.863	23		24	1														
71	(0.9-0.2Sds)DL + 1E...	Yes	Y		DL	.863	23	-.5	24	.866														
72	(0.9-0.2Sds)DL + 1E...	Yes	Y		DL	.863	23	-.707	24	.707														
73	(0.9-0.2Sds)DL + 1E...	Yes	Y		DL	.863	23	-.866	24	.5														
74	(0.9-0.2Sds)DL + 1E...	Yes	Y		DL	.863	23	-1	24															
75	(0.9-0.2Sds)DL + 1E...	Yes	Y		DL	.863	23	-.866	24	-.5														
76	(0.9-0.2Sds)DL + 1E...	Yes	Y		DL	.863	23	-.707	24	-.707														
77	(0.9-0.2Sds)DL + 1E...	Yes	Y		DL	.863	23	-.5	24	-.866														
78	(0.9-0.2Sds)DL + 1E...	Yes	Y		DL	.863	23		24	-1														
79	(0.9-0.2Sds)DL + 1E...	Yes	Y		DL	.863	23	.5	24	-.866														
80	(0.9-0.2Sds)DL + 1E...	Yes	Y		DL	.863	23	.707	24	-.707														
81	(0.9-0.2Sds)DL + 1E...	Yes	Y		DL	.863	23	.866	24	-.5														
82	1.2DL + 1Lv1	Yes	Y		DL	1.2	25	1.5																
83	1.2DL + 1Lv2	Yes	Y		DL	1.2	26	1.5																
84	1.2DL + 1Lv3	Yes	Y		DL	1.2	27	1.5																
85	1.2DL + 1.5Lm + 1...	Yes	Y		DL	1.2	28	1.5	2	.053	3		4	.053										
86	1.2DL + 1.5Lm + 1...	Yes	Y		DL	1.2	28	1.5	2	.046	3	.027	5	.053										
87	1.2DL + 1.5Lm + 1...	Yes	Y		DL	1.2	28	1.5	2	.038	3	.038	6	.053										
88	1.2DL + 1.5Lm + 1...	Yes	Y		DL	1.2	28	1.5	2	.027	3	.046	7	.053										
89	1.2DL + 1.5Lm + 1...	Yes	Y		DL	1.2	28	1.5	2		3	.053	8	.053										
90	1.2DL + 1.5Lm + 1...	Yes	Y		DL	1.2	28	1.5	2	-.027	3	.046	9	.053										
91	1.2DL + 1.5Lm + 1...	Yes	Y		DL	1.2	28	1.5	2	-.038	3	.038	10	.053										
92	1.2DL + 1.5Lm + 1...	Yes	Y		DL	1.2	28	1.5	2	-.046	3	.027	11	.053										
93	1.2DL + 1.5Lm + 1...	Yes	Y		DL	1.2	28	1.5	2	-.053	3		4	-.053										
94	1.2DL + 1.5Lm + 1...	Yes	Y		DL	1.2	28	1.5	2	-.046	3	-.027	5	-.053										
95	1.2DL + 1.5Lm + 1...	Yes	Y		DL	1.2	28	1.5	2	-.038	3	-.038	6	-.053										
96	1.2DL + 1.5Lm + 1...	Yes	Y		DL	1.2	28	1.5	2	-.027	3	-.046	7	-.053										
97	1.2DL + 1.5Lm + 1...	Yes	Y		DL	1.2	28	1.5	2		3	-.053	8	-.053										
98	1.2DL + 1.5Lm + 1...	Yes	Y		DL	1.2	28	1.5	2	.027	3	-.046	9	-.053										
99	1.2DL + 1.5Lm + 1...	Yes	Y		DL	1.2	28	1.5	2	.038	3	-.038	10	-.053										
100	1.2DL + 1.5Lm + 1...	Yes	Y		DL	1.2	28	1.5	2	.046	3	-.027	11	-.053										
101	1.2DL + 1.5Lm + 1...	Yes	Y		DL	1.2	29	1.5	2	.053	3		4	.053										
102	1.2DL + 1.5Lm + 1...	Yes	Y		DL	1.2	29	1.5	2	.046	3	.027	5	.053										
103	1.2DL + 1.5Lm + 1...	Yes	Y		DL	1.2	29	1.5	2	.038	3	.038	6	.053										
104	1.2DL + 1.5Lm + 1...	Yes	Y		DL	1.2	29	1.5	2	.027	3	.046	7	.053										
105	1.2DL + 1.5Lm + 1...	Yes	Y		DL	1.2	29	1.5	2		3	.053	8	.053										
106	1.2DL + 1.5Lm + 1...	Yes	Y		DL	1.2	29	1.5	2	-.027	3	.046	9	.053										
107	1.2DL + 1.5Lm + 1...	Yes	Y		DL	1.2	29	1.5	2	-.038	3	.038	10	.053										
108	1.2DL + 1.5Lm + 1...	Yes	Y		DL	1.2	29	1.5	2	-.046	3	.027	11	.053										
109	1.2DL + 1.5Lm + 1...	Yes	Y		DL	1.2	29	1.5	2	-.053	3		4	-.053										

Load Combinations (Continued)

	Description	So..	P...	S...	BLC	Fac..	BLC	Fac..	BLC	Fac..	BLC	Fac..	BLC	Fac..	BLC	Fac..	BLC	Fac..	BLC	Fac..	BLC	Fac..	BLC	Fac...
110	1.2DL + 1.5Lm + 1...	Yes	Y		DL	1.2	29	1.5	2	-.046	3	-.027	5	-.053										
111	1.2DL + 1.5Lm + 1...	Yes	Y		DL	1.2	29	1.5	2	-.038	3	-.038	6	-.053										
112	1.2DL + 1.5Lm + 1...	Yes	Y		DL	1.2	29	1.5	2	-.027	3	-.046	7	-.053										
113	1.2DL + 1.5Lm + 1...	Yes	Y		DL	1.2	29	1.5	2		3	-.053	8	-.053										
114	1.2DL + 1.5Lm + 1...	Yes	Y		DL	1.2	29	1.5	2	.027	3	-.046	9	-.053										
115	1.2DL + 1.5Lm + 1...	Yes	Y		DL	1.2	29	1.5	2	.038	3	-.038	10	-.053										
116	1.2DL + 1.5Lm + 1...	Yes	Y		DL	1.2	29	1.5	2	.046	3	-.027	11	-.053										
117	1.2DL + 1.5Lm + 1...	Yes	Y		DL	1.2	30	1.5	2	.053	3		4	.053										
118	1.2DL + 1.5Lm + 1...	Yes	Y		DL	1.2	30	1.5	2	.046	3	.027	5	.053										
119	1.2DL + 1.5Lm + 1...	Yes	Y		DL	1.2	30	1.5	2	.038	3	.038	6	.053										
120	1.2DL + 1.5Lm + 1...	Yes	Y		DL	1.2	30	1.5	2	.027	3	.046	7	.053										
121	1.2DL + 1.5Lm + 1...	Yes	Y		DL	1.2	30	1.5	2		3	.053	8	.053										
122	1.2DL + 1.5Lm + 1...	Yes	Y		DL	1.2	30	1.5	2	-.027	3	.046	9	.053										
123	1.2DL + 1.5Lm + 1...	Yes	Y		DL	1.2	30	1.5	2	-.038	3	.038	10	.053										
124	1.2DL + 1.5Lm + 1...	Yes	Y		DL	1.2	30	1.5	2	-.046	3	.027	11	.053										
125	1.2DL + 1.5Lm + 1...	Yes	Y		DL	1.2	30	1.5	2	-.053	3		4	-.053										
126	1.2DL + 1.5Lm + 1...	Yes	Y		DL	1.2	30	1.5	2	-.046	3	-.027	5	-.053										
127	1.2DL + 1.5Lm + 1...	Yes	Y		DL	1.2	30	1.5	2	-.038	3	-.038	6	-.053										
128	1.2DL + 1.5Lm + 1...	Yes	Y		DL	1.2	30	1.5	2	-.027	3	-.046	7	-.053										
129	1.2DL + 1.5Lm + 1...	Yes	Y		DL	1.2	30	1.5	2		3	-.053	8	-.053										
130	1.2DL + 1.5Lm + 1...	Yes	Y		DL	1.2	30	1.5	2	.027	3	-.046	9	-.053										
131	1.2DL + 1.5Lm + 1...	Yes	Y		DL	1.2	30	1.5	2	.038	3	-.038	10	-.053										
132	1.2DL + 1.5Lm + 1...	Yes	Y		DL	1.2	30	1.5	2	.046	3	-.027	11	-.053										

Envelope Joint Reactions

	Joint		X [lb]	LC	Y [lb]	LC	Z [lb]	LC	MX [lb-ft]	LC	MY [lb-ft]	LC	MZ [lb-ft]	LC
1	N1	max	742.867	22	1485.043	36	841.096	18	-1167.059	33	2367.608	23	3060.47	97
2		min	-742.867	14	425.142	75	-841.096	10	-4592.204	41	-2364.368	31	-1483.895	105
3	Totals:	max	742.867	22	1485.043	36	841.096	18						
4		min	-742.867	14	425.142	75	-841.096	10						

Envelope AISC 15th(360-16): LRFD Steel Code Checks

	Member	Shape	Code Check	Loc[in]	LC	Shea...	Loc.....		L...	phi*Pn...	phi*Pn...	phi*Mn...	phi*Mn...	...	Eqn
1	H1	PIPE_3.0	.570	42	97	.128	42		92	21765...	65205	5748.75	5748.75	1	H1-1b
2	M1	HSS4X4X4	.351	0	91	.259	9	y	97	13436...	139518	16180.5	16180.5	1...	H3-6
3	MP1	PIPE_2.5	.212	48	10	.018	48		10	7310.5...	50715	3596.25	3596.25	1	H1-1b
4	MP2	PIPE_2.5	.026	48	13	.003	48		12	7310.5...	50715	3596.25	3596.25	1	H1-1b
5	MP3	PIPE_2.5	.026	48	12	.003	48		12	7310.5...	50715	3596.25	3596.25	1	H1-1b
6	OVP1	PIPE_2.5	.025	18	14	.006	18		14	47114...	50715	3596.25	3596.25	1...	H1-1b
7	M3	PIPE_4.0	.001	9	13	.000	9		13	90033...	93240	10631...	10631...	1	H1-1b

Envelope AISI S100-16: LRFD Cold Formed Steel Code Checks

Mem...	Shape	Code Check	Loc[in]	LC	She...	Lo...	...	...	phi*...	phi*T...	phi*...	phi*...	phi...	phi...	Cb	Eqn
No Data to Print ...																

APPENDIX D

ADDITIONAL CALCUATIONS

Trylon

Analysis date: 7/21/2021

BOLT TOOL 1.5.2

Project Data	
Job Code:	188194
Carrier Site ID:	BU# 876383
Carrier Site Name:	ON / ANDERSON'S PROF

Code	
Design Standard:	TIA-222-H
Slip Check:	Yes
Pretension Standard:	TIA-222-H

Bolt Properties		
Connection Type:	U-Bolt	
Diameter:	0.625	in
Grade:	A307	--
Yield Strength (Fy):	36	ksi
Ultimate Strength (Fu):	60	ksi
Number of Bolts:	2	--
Threads Included:	Yes	--
Double Shear:	No	--
Connection Pipe Size:	4	in

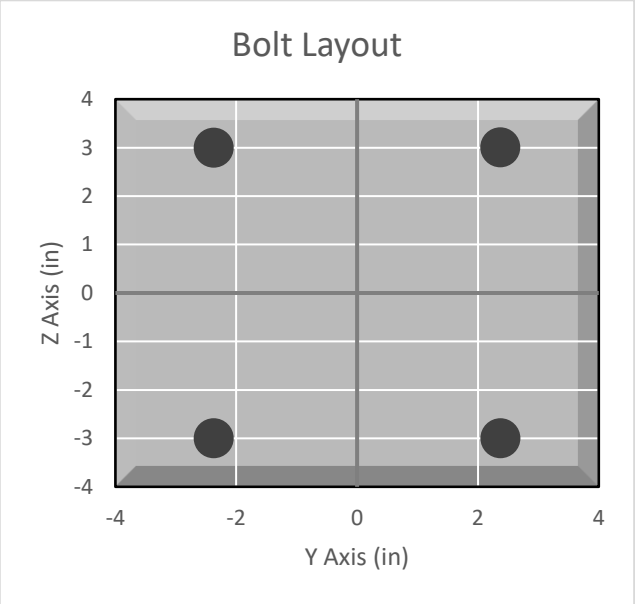

Connection Description
Mount Horizontal to Standoff

Bolt Check*		
Tensile Capacity (ϕT_n):	10170.1	lbs
Shear Capacity (ϕV_n):	6902.9	lbs
Tension Force (T_u):	581.5	lbs
Shear Force (V_u):	2602.7	lbs
Tension Usage:	5.4%	--
Shear Usage:	35.9%	--
Interaction:	35.9%	Pass
Controlling Member:	M11	--
Controlling LC:	97	--

**Rating per TIA-222-H Section 15.5*

Slip Check*		
Sliding Capacity (ϕR_{ns}):	14283.1	lbs
Torsion Capacity (ϕR_{nr}):	2380.5	lb-ft
Sliding Force (V_{us}):	480.6	lbs
Torsional Force (T_{ur}):	1149.9	lb-ft
Sliding Usage:	3.2%	--
Torsion Usage:	47.5%	--
Interaction:	47.6%	Pass
Controlling Member:	M11	--
Controlling LC:	10	--

**Rating per TIA-222-H Section 15.5*

Analysis date: 7/21/2021

BOLT TOOL 1.5.2

Project Data	
Job Code:	188194
Carrier Site ID:	BU# 876383
Carrier Site Name:	ON / ANDERSON'S PROF

Code	
Design Standard:	TIA-222-H
Slip Check:	No
Pretension Standard:	TIA-222-H

Bolt Properties		
Connection Type:	Bolt	
Diameter:	0.625	in
Grade:	A325	--
Yield Strength (Fy):	92	ksi
Ultimate Strength (Fu):	120	ksi
Number of Bolts:	4	--
Threads Included:	Yes	--
Double Shear:	No	--
Connection Pipe Size:	-	in

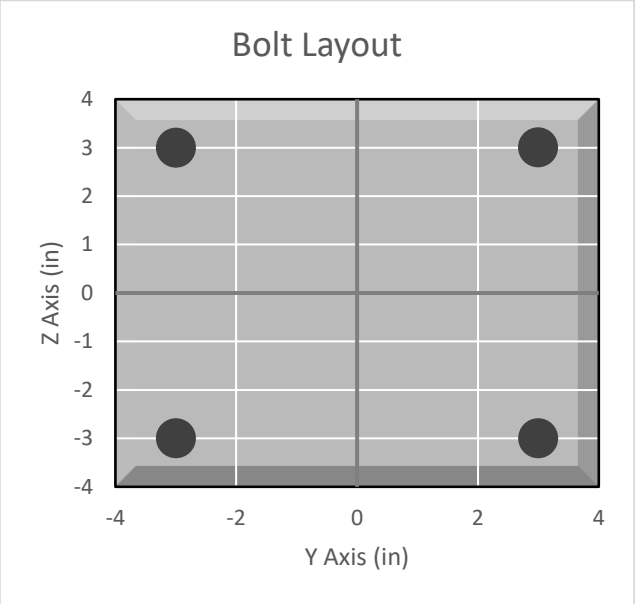

Connection Description
Mount Standoff to Collar

Bolt Check*		
Tensile Capacity (ϕT_n):	20340.1	lbs
Shear Capacity (ϕV_n):	13805.8	lbs
Tension Force (T_u):	5195.6	lbs
Shear Force (V_u):	1716.4	lbs
Tension Usage:	24.3%	--
Shear Usage:	11.8%	--
Interaction:	24.3%	Pass
Controlling Member:	M1	--
Controlling LC:	39	--

**Rating per TIA-222-H Section 15.5*

APPENDIX E

SUPPLEMENTAL DRAWINGS

REVISIONS				
REV.	IPS	DESCRIPTION	BY	DATE
A	10539PC	NEW RELEASED.	XZ1054	3/11/2021

NOTES:

1.0 GENERAL NOTES
  1.1 ALL METRIC DIMENSIONS ARE IN BRACKETS.
2.0 DESIGN NOTES
  2.1 FOR PATENT INFORMATION: HTTPS://WWW.CS-PAT.COM
  2.2 USE STANDARD TORQUE VALUES FOR 5/8" BOLTS
  2.3 TORQUE U-BOLTS TO 44 FT-LBS
3.0 MANUFACTURING/SPECIAL REQUIREMENTS
4.0 TEST
5.0 PACKAGING
  5.1 PACKAGING SHALL MEET COMMSCOPE REQUIREMENTS PER DOCUMENT IS-PL-3005

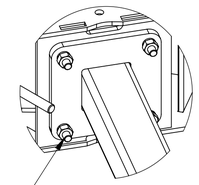

DETAIL C
SCALE 1 : 6

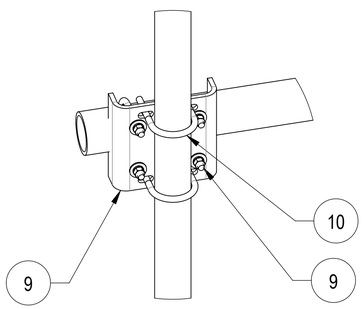

DETAIL A
SCALE 1 : 6

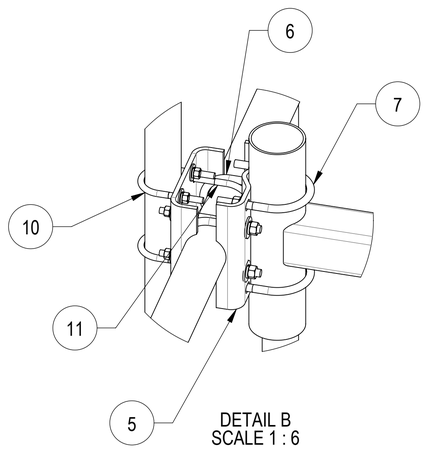

DETAIL B
SCALE 1 : 6

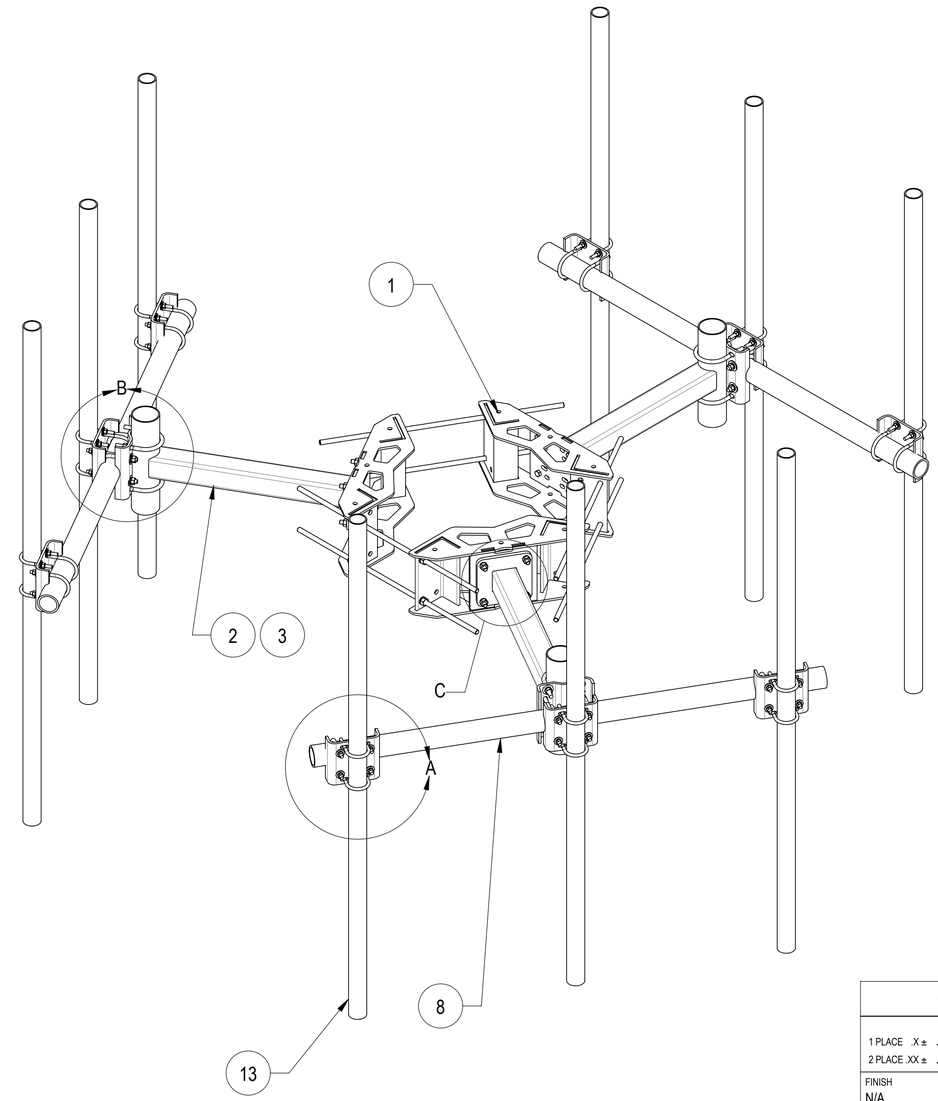

ITEM NO.	PART NUMBER	DESCRIPTION	QTY.
1	MC-RM1550-3	12" - 50" OD RINGMOUNT	1
2	MT197.01	36" SINGLE SUPPORT ARM	3
3	MT197H	HARDWARE KIT (NEXT ITEM)	3
4	GB-0524A	5/8" X 2-1/2" GALV BOLT KIT (A325)	12
5	MT216.13	CENTER BRACKET	3
6	GUB-53560	5/8" X 3-5/8" X 6" GALV U-BOLT	6
7	GUB-5456	5/8" X 4-5/8" X 6½" GALV U-BOLT	6
8	MTC333912	84" X 3-1/2" OD PIPE	3
9	MT219H3501	3.5"OD Clamp Bracket	9
10	GUB-4352	1/2" X 3" X 5-1/4" GALV U-BOLT	18
11	GUB-4356	1/2" X 3-5/8" X 6" GALV U-BOLT	18
13	MT54696	∅2.875" O.D. X 96 PIPE	9

DENSITY	0.28	lbs/in³
MASS	1203.02	lbs
VOLUME	4265.23	in³
SURFACE AREA	35860.22	in²
HEIGHT	96"	
LENGTH	131.5"	
WIDTH	151.9"	

© 2021 CommScope, Inc. Confidential

COMMSCOPE, INC. OF NORTH CAROLINA

TOLERANCES: 1 PLACE .X ± .12; 2 PLACE .XX ± .06; 3 PLACE .XXX ± .03; ANGLES ± 2°; FRACTIONS ± 1/32

SAP MATERIAL MASTER: MC-K6MHDX-9-96

FINISH: N/A

MATERIAL: A36, A53

UNLESS OTHERWISE SPECIFIED DIMENSIONS ARE IN INCHES INTERPRET PER ANSI Y 14.5M-1994

	NAME	DATE
CE	XZ1054	03/08/2021
RW	ROGHANSON	03/16/2021
AD	BCAMPBELLCON	03/19/2021
RE		

ECN 10539PC

TITLE: T-ARM, MCK6, 3, 4" x 84" , 9, 2-7/8"x96

SCALE: 1:32

DOCUMENT NO.: MC-K6MHDX-9-96

SIZE: D

Auth Group: INSL

MODEL VERSION	MODEL STATUS	MODEL REVISION	DRAWING VERSION	DRAWING STATUS	DRAWING REVISION
00	AD	A	00	AD	A

SHEET 1 OF 2

NOTES:

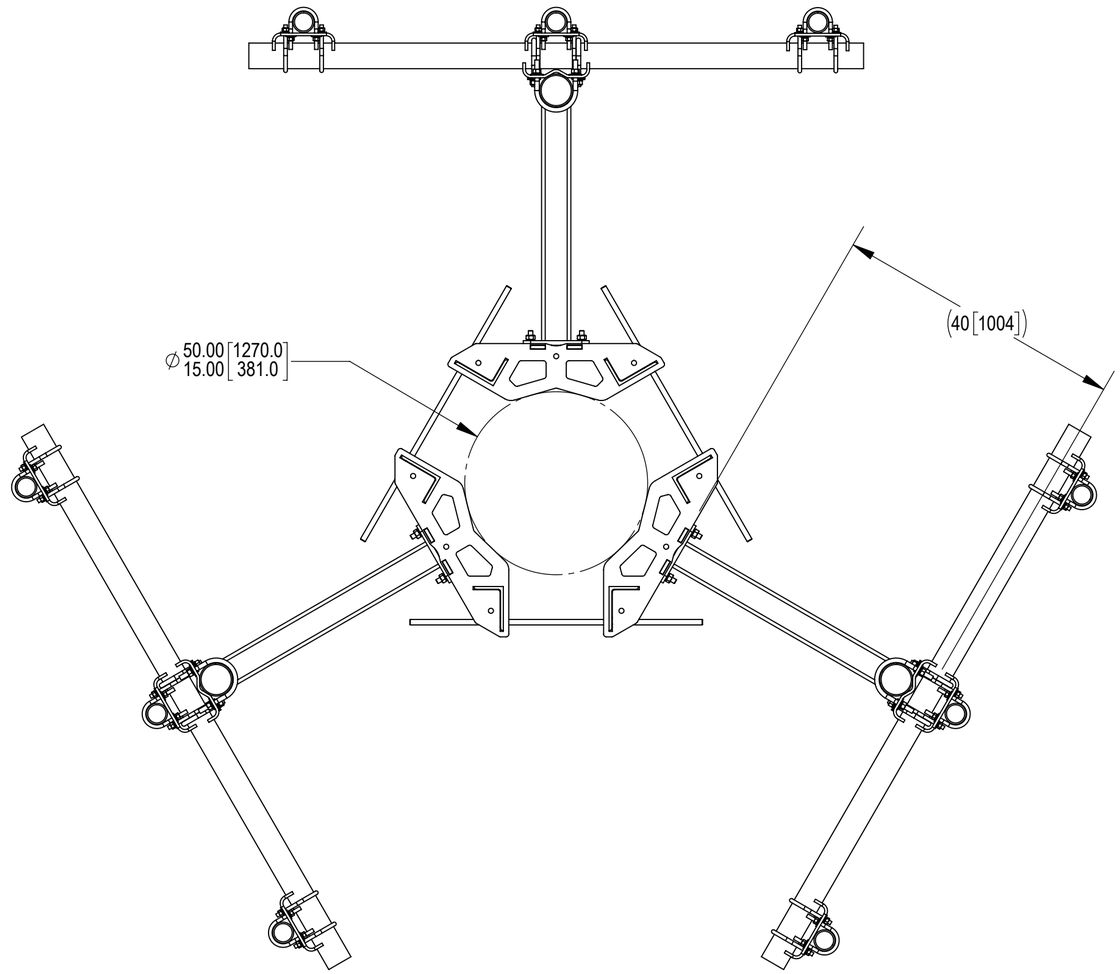

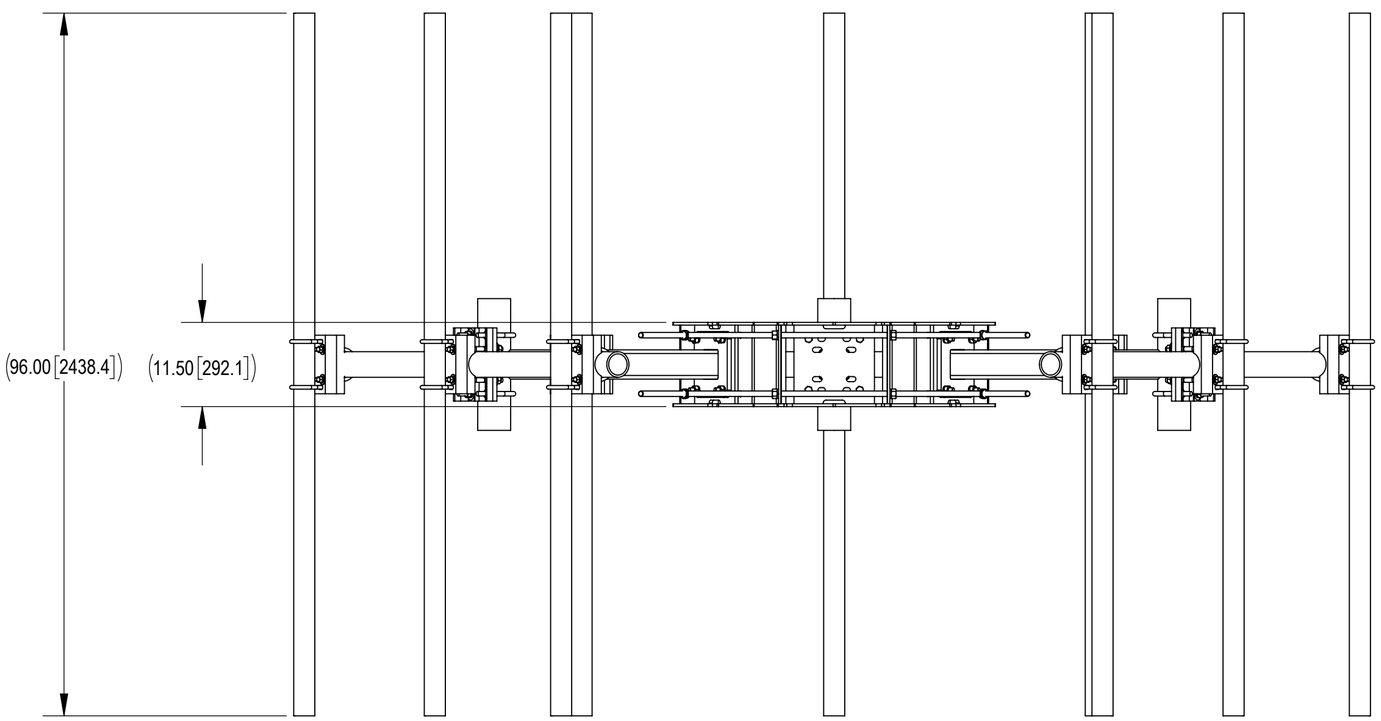

© 2021 CommScope, Inc. Confidential

COMMSCOPE, INC. OF NORTH CAROLINA			
TITLE T-ARM, MCK6, 3, 4” x 84” , 9, 2-7/8"x96			
SIZE C	SCALE 1:32	DOCUMENT NO. MC-K6MHDX-9-96	
		DRAWING	SHEET
		VERSION: 00 / STATUS: AD / REVISION: A	2 OF 2