NORTHEAST SITE SOLUTIONS
Turnkey Wireless Development

Northeast Site Solutions
Denise Sabo
4 Angela's Way, Burlington CT 06013
203-435-3640
denise@northeastsitesolutions.com

August 27, 2021

Members of the Siting Council
Connecticut Siting Council
Ten Franklin Square
New Britain, CT 06051

RE: Exempt Modification Application
197 North Chestnut Hill Road, Killingworth CT 06419
Latitude: 41.386139
Longitude: -72.604056
Site#: 807134_ Crown_DISH

Dear Ms. Bachman:

Based on the 2020 merger between T-Mobile and Sprint, and as part of the agreement, the DOJ required T-Mobile to divest some sites to Dish in order to create an additional wireless provider. This site is part of the agreement.

Dish Wireless LLC is requesting to file an exempt modification for an existing tower located at 197 North Chestnut Hill Road, Killingworth CT 06419. Dish Wireless LLC proposes to install three (3) antennas at the 148-foot level of the existing 170-foot tower. The property and the tower are both owned by Crown Castle. This modification includes hardware that is 5G capable.

Dish Wireless LLC Planned Modifications:
Remove: (At 146-147' level)
Antenna mount
(12) DB844H90 Antenna
(12) Coax Lines

Remove and Replace: NONE

Install New:
Commscope MC3975083 Mount
(3) JMA MX08FRO665-20 Antenna
(3) TA08025-B604 RRU
(3) TA08025-B605 RRU
(1) Raycap
(1) 1-1/2" Hybrid

Existing to Remain:
NONE

NORTHEAST SITE SOLUTIONS
Turnkey Wireless Development

Ground Work: (within existing compound)
New H-Frame
Equipment Cabinet
Power/Telco Cabinet
Ice Bridge
7'x5' Steel Platform

The facility was approved by the CT Siting Council Docket No. 164 on December 5, 1994. Please see attached.

Please accept this letter as notification pursuant to Regulations of Connecticut State Agencies§ 16- SOj-73, for construction that constitutes an exempt modification pursuant to R.C.S.A. § 16-50j-72(b)(2). In accordance with R.C.SA. § 16-SOj-73, a copy of this letter is being sent to The Honorable Catherine Iino, First Selectwoman, and Cathie S. Jefferson, Zoning Enforcement Officer, for the Town of Killingworth. A copy is also being sent to the tower owner, and property owner.

The planned modifications to the facility fall squarely within those activities explicitly provided for in R.C.S.A. § 16-50j-72(b)(2).

1. The proposed modifications will not result in an increase in the height of the existing structure.

2. The proposed modifications will not require the extension of the site boundary.

3. The proposed modifications will not increase noise levels at the facility by six decibels or more, or to levels that exceed state and local criteria.

4. The operation of the replacement antennas will not increase radio frequency emissions at the facility to a level at or above the Federal Communications Commission safety standard.

5. The proposed modifications will not cause a change or alteration in the physical or environmental characteristics of the site.

6. The existing structure and its foundation can support the proposed loading.

For the foregoing reasons, DISH Wireless LLC respectfully submits that the proposed modifications to the above referenced telecommunications facility constitute an exempt modification under R.C.S.A. § 16-50j-72(b)(2).

Sincerely,
Denise Sabo

Denise Sabo
Mobile: 203-435-3640
Fax: 413-521-0558
Office: 4 Angela's Way, Burlington CT 06013
Email: denise@northeastsitesolutions.com

NORTHEAST SITE SOLUTIONS
Turnkey Wireless Development

Attachments
cc: The Honorable Catherine Iino, First Selectwoman
Town of Killingworth 323 Route 81 Killingworth, CT 06419

Cathie S. Jefferson, Zoning Enforcement Officer
Town of Killingworth 323 Route 81 Killingworth, CT 06419

Crown Castle, Property and Tower Owner

Exhibit A

Original Facility Approval

DOCKET NO. 164 - An Application of Metro Mobile CTS of Hartford, Inc. and Metro Mobile CTS of New Haven, Inc., for a Certificate of Environmental Compatibility and Public Need for the construction, maintenance, and operation of a cellular telecommunications facility. The proposed prime site is located approximately 700 feet northeast from the end of the North Chestnut Hill Road cul-de-sac (Lot No. 7), Killingworth. The proposed alternate site is located approximately 350 feet east of 828 Summer hill Road, Madison, Connecticut.

Connecticut Siting Council

December 5, 1994

DECISION AND ORDER

Pursuant to the foregoing Findings of Fact, and Opinion, the Connecticut Siting Council (Council) finds that the effects associated with the construction, operation, and maintenance of a cellular telecommunications tower and equipment building at the proposed prime site in Killingworth, Connecticut, including effects on the natural environment; ecological integrity and balance; public health and safety; scenic, historic, and recreational values; forests and parks; air and water purity; and fish and wildlife are not disproportionate either alone or cumulatively with other effects when compared to need, are not in conflict with the policies of the State concerning such effects, and are not sufficient reason to deny the application and therefore directs that a Certificate of Environmental Compatibility and Public Need, as provided by section 16-50k of the Connecticut General Statutes (CGS) , be issued to Metro Mobile CTS of Hartford, Inc., (Metro Mobile), for the construction, operation, and maintenance of a cellular telecommunications tower, associated equipment, and building at the proposed prime site located off of North Chestnut Hill Road, Killingworth, Connecticut. We find the effects on scenic resources and adjacent landuses of the alternative site to be significant, and therefore deny certification of this site.

The facility shall be constructed, operated, and maintained substantially as specified in the Council's record in this matter, and subject to the following conditions:

1. The self-supporting lattice tower shall be no taller than necessary to provide the proposed telecommunications service, and the tower shall not exceed a total height of 170 feet above ground level (AGL).

2. The Certificate Holder shall prepare a Development and Management (D&M) plan for this site in compliance with sections 16-50j-75 through 16-50j-77 of the Regulations of Connecticut State Agencies. The D&M plan shall include detailed plans for the tower location and tower foundation; the placement of all antennas to be attached to this tower; placement of the emergency generator, equipment building, fuel storage tank, access road, utility line, and security fence; site and accessway clearing and tree trimming; and water drainage and erosion and sedimentation controls consistent with the Connecticut Guidelines for Soil Erosion and Sedimentation Control (as amended.)

3. The Certificate Holder shall acquire all regulatory permits and approvals prior to the operation of the facility and submit copies upon receipt to the Council.

4. The Certificate Holder shall comply with any existing and future radio frequency (RF) standard promulgated by State or federal regulatory agencies. Upon the establishment of any new government RF standards, the facility granted herein shall be brought into compliance with such standards.

5. The Certificate Holder shall provide the Council a recalculated report of electromagnetic radio frequency power density if and when circumstances in operation cause a change in power density above the levels originally calculated and provided in the application.

6. The Certificate Holder shall permit public or private entities to share space on the proposed tower for fair consideration, or shall provide any requesting entity with specific legal, technical, environmental, or economic reasons precluding such tower sharing.

7. If the facility does not initially provide, or permanently ceases to provide cellular services following completion of construction, this Decision and Order shall be void, and the Certificate Holder shall dismantle the tower and remove all associated equipment or reapplication for any continued or new use shall be made to the Council before any such use is made.

8. Unless otherwise approved by the Council, this Decision and Order shall be void if all construction authorized herein is not completed within three years of the effective date of this Decision and Order or within three years after all appeals to this Decision and Order have been resolved.

9. The Certificate Holder shall notify the Council upon completion of construction.

Pursuant to CGS section 16-50p, we hereby direct that a copy of the Findings of Fact, Opinion, and Decision and Order be served on each person listed below, and notice of issuance shall be published in The Hartford Courant, The Middletown Press, and New Haven Register.

By this Decision and Order, the Council disposes of the legal rights, duties, and privileges of each party named or admitted to the proceeding in accordance with section 16-50j-17 of the Regulations of Connecticut State Agencies.

The parties and intervenors of this proceeding are:

APPLICANT	**ITS REPRESENTATIVE**
Metro Mobile CTS of Hartford, Inc.	Brian C.S. Freeman, Esq. Robinson & Cole One Commercial Plaza Hartford, CT 06103-3597
	David S. Malko, P.E.,General Manager - Engineering Sandy M. Ranciato, Manager Metro Mobile CTS of New Haven, Inc. 20 Alexander Drive Wallingford, CT 06492
INTERVENOR	**ITS REPRESENTATIVE**
Springwich Cellular Limited Partnership	Peter J. Tyrrell, Esq., Senior Attorney Springwich Cellular Limited Partnership 227 Church Street New Haven, CT 06506

Exhibit B

Property Card

The Assessor's office is responsible for the maintenance of records on the ownership of properties. Assessments are computed at 70% of the estimated market value of real property at the time of the last revaluation which was 2016.

Information on the Property Records for the Municipality of Killingworth was last updated on 7/31/2021.

Parcel Information

Location:	197 N CHESTNUT HILL ROAD	Property Use:	Industrial	Primary Use:	Utility Building
Unique ID:	00082800	Map Block Lot:	14-12G	Acres:	6.60
490 Acres:	0.00	Zone:	R-2	Volume / Page:	0154/0542
Developers Map / Lot:	TC 1179/LOT 7	Census:	6401		

Value Information

	Appraised Value	Assessed Value
Land	246,240	172,360
Buildings	42,152	29,510
Detached Outbuildings	222,525	155,770
Total	510,917	357,640

Owner's Information

Owner's Data
CROWN ATLANTIC COMPANY LLC C/O PMB 353 4017 WASHINGTON ROAD MCMURRAY PA 15317-2520

Building 1

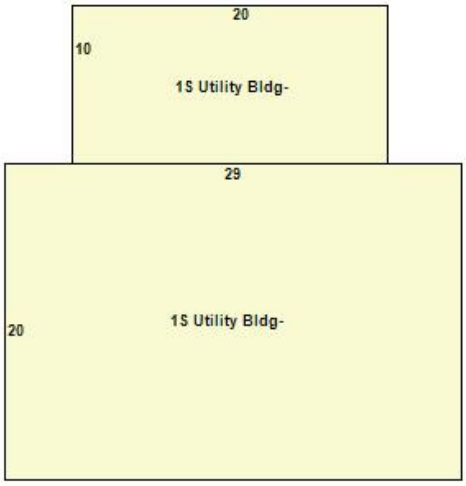

Category:	Industrial	Use:	Utility Building	GLA:	780
Stories:	1.00	Construction:	Average	Year Built:	1995
Heating:		Fuel:		Cooling Percent:	100%
Siding:	Pre-Cast Concrete	Roof Material:		Beds/Units:	0

Special Features

Attached Components

Detached Outbuildings

Type:	Year Built:	Length:	Width:	Area:
Fencing	1995	280	8	2,240
Concrete/Masonry Patio	1995	34	34	1,156
Paving	1995			2,000
Cell Tower	1995			1

Owner History - Sales

Owner Name	Volume	Page	Sale Date	Deed Type	Sale Price
CROWN ATLANTIC COMPANY LLC	0154	0542	04/19/1999	Warranty Deed	$83,000

Building Permits

Permit Number	Permit Type	Date Opened	Reason
12-411	Commercial	12/27/2012	CELL TOWER MAINTENANCE

Permit Number	Permit Type	Date Opened	Reason
12-066	Commercial	03/03/2012	REPLACE 6 ANTENNAS ON EXISTING TOWER

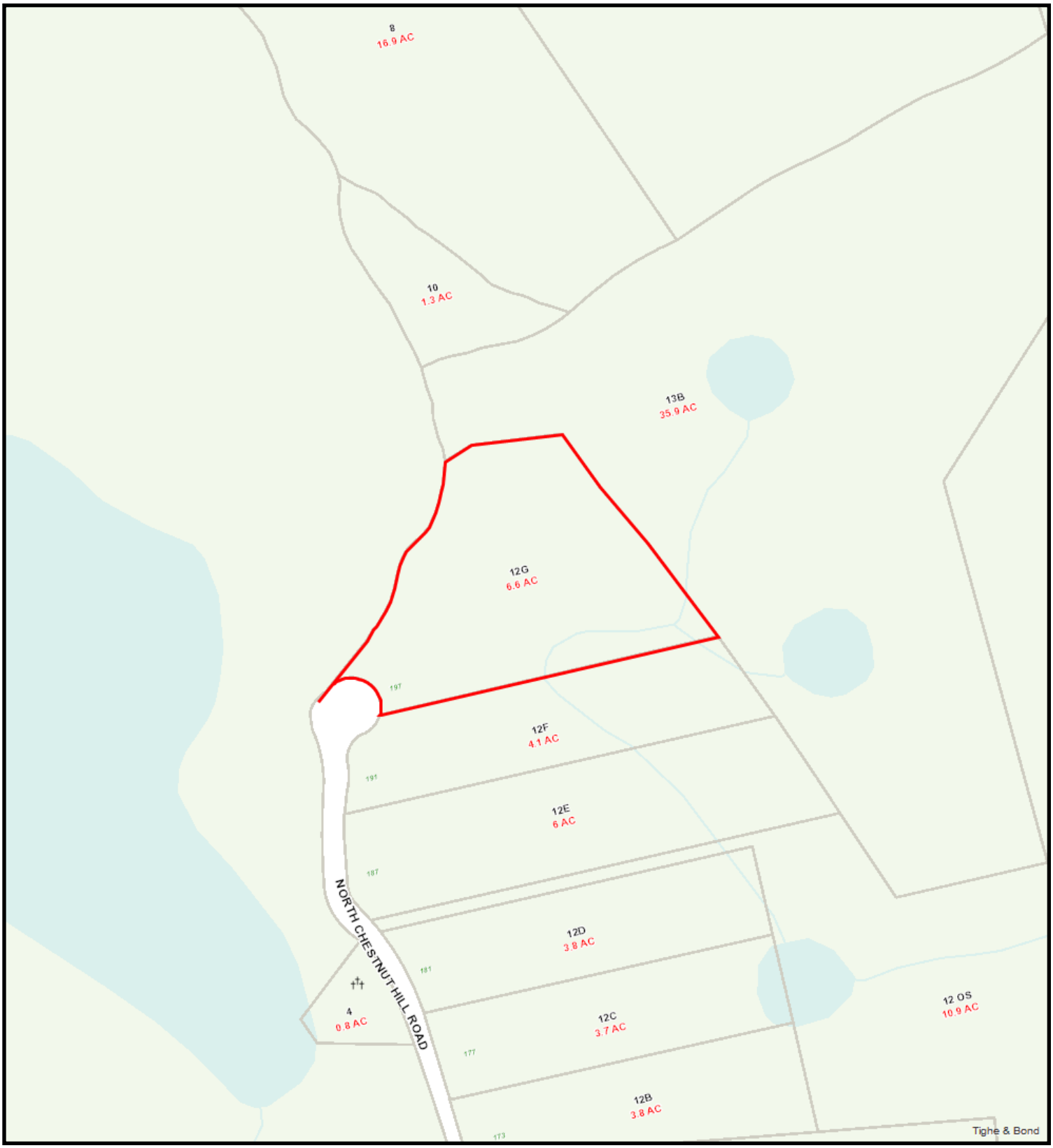

8/6/2021 9:54:37 PM

Scale: 1"=300'

Scale is approximate

The information depicted on this map is for planning purposes only. It is not adequate for legal boundary definition, regulatory interpretation, or parcel-level analyses.

Exhibit C

Construction Drawings

DISH WIRELESS, LLC. SITE ID:

BOBDL00054A

DISH WIRELESS, LLC. SITE ADDRESS:

197 NORTH CHESTNUT HILL ROAD
KILLINGWORTH, CT 06419

SCOPE OF WORK

THIS IS NOT AN ALL INCLUSIVE LIST. CONTRACTOR SHALL UTILIZE SPECIFIED EQUIPMENT PART OR ENGINEER APPROVED EQUIVALENT. CONTRACTOR SHALL VERIFY ALL NEEDED EQUIPMENT TO PROVIDE A FUNCTIONAL SITE. THE PROJECT GENERALLY CONSISTS OF THE FOLLOWING:

TOWER SCOPE OF WORK:
- ABANDONED EQUIPMENT AT 146' AGL TBR
- INSTALL (3) PROPOSED PANEL ANTENNAS (1 PER SECTOR)
- INSTALL (3) PROPOSED ANTENNA MOUNTS (1 PER SECTOR)
- INSTALL PROPOSED JUMPERS
- INSTALL (6) PROPOSED RRUS (2 PER SECTOR)
- INSTALL (1) PROPOSED OVER VOLTAGE PROTECTION DEVICE (OVP)
- INSTALL (1) PROPOSED HYBRID CABLE

GROUND SCOPE OF WORK:
- INSTALL (1) PROPOSED METAL PLATFORM
- INSTALL (1) PROPOSED ICE BRIDGE
- INSTALL (1) PROPOSED PPC CABINET
- INSTALL (1) PROPOSED EQUIPMENT CABINET
- INSTALL (1) PROPOSED POWER CONDUIT
- INSTALL (1) PROPOSED TELCO CONDUIT
- INSTALL (1) PROPOSED TELCO-FIBER BOX
- INSTALL (1) PROPOSED GPS UNIT
- INSTALL (1) PROPOSED SAFETY SWITCH (IF REQUIRED)
- INSTALL (1) PROPOSED CIENA BOX (IF REQUIRED)
- EXISTING METER SOCKET ON EXISTING H-FRAME TO BE UTILIZED

SITE INFORMATION

PROPERTY OWNER:	CROWN CASTLE USA INC
ADDRESS:	POST OFFICE BOX 203112 HOUSTON, TX 77216-3112
TOWER TYPE:	SELF SUPPORT TOWER
TOWER CO SITE ID:	807134
TOWER APP NUMBER:	553397
COUNTY:	MIDDLESEX
LATITUDE (NAD 83):	41° 23' 9.93" N 41.386083 N
LONGITUDE (NAD 83):	-72° 36' 14.39" W -72.604000 W
ZONING JURISDICTION:	CT – CONNECTICUT SITING COUNCIL
ZONING DISTRICT:	TBD
PARCEL NUMBER:	KILL-000008-002800
OCCUPANCY GROUP:	U
CONSTRUCTION TYPE:	V-B
POWER COMPANY:	CONNECTICUT LIGHT & POWER CO
TELEPHONE COMPANY:	CROWN CASTLE

PROJECT DIRECTORY

APPLICANT:	DISH WIRELESS, LLC. 5701 SOUTH SANTA FE DRIVE LITTLETON, CO 80120
TOWER OWNER:	CROWN CASTLE 2000 CORPORATE DRIVE CANONSBURG, PA 15317 (877) 486-9377
SITE DESIGNER:	INFINIGY 2500 W. HIGGINS RD. STE. 500 HOFFMAN ESTATES, IL 60169 (847) 648-4068
SITE ACQUISITION:	NICHOLAS CURRY TBD
CONSTRUCTION MANAGER:	JAVIER SOTO TBD
RF ENGINEER:	BOSSENER CHARLES TBD

CONNECTICUT CODE COMPLIANCE

ALL WORK SHALL BE PERFORMED AND MATERIALS INSTALLED IN ACCORDANCE WITH THE CURRENT EDITIONS OF THE FOLLOWING CODES AS ADOPTED BY THE LOCAL GOVERNING AUTHORITIES. NOTHING IN THESE PLANS IS TO BE CONSTRUED TO PERMIT WORK NOT CONFORMING TO THESE CODES:

CODE TYPE	CODE
BUILDING	2018 CT STATE BUILDING CODE/2015 IBC W/ CT AMENDMENTS
MECHANICAL	2018 CT STATE BUILDING CODE/2015 IMC W/ CT AMENDMENTS
ELECTRICAL	2018 CT STATE BUILDING CODE/2017 NEC W/ CT AMENDMENTS

SITE PHOTO

UNDERGROUND SERVICE ALERT CBYD 811
UTILITY NOTIFICATION CENTER OF CONNECTICUT
(800) 922-4455
WWW.CBYD.COM

CALL 2 WORKING DAYS UTILITY NOTIFICATION PRIOR TO CONSTRUCTION

811

DIRECTIONS

DIRECTIONS FROM CHESTER CHARTER, INC.:

HEAD NORTHWEST ON CHESTER AIRPORT TOWARD CROSS RD, TURN RIGHT ONTO CT-145 / WINTHROP RD, TURN LEFT ONTO CT-148 / W MAIN ST, TURN LEFT ONTO BECKWITH RD, KEEP RIGHT TO GET ONTO ABNER LN, TURN RIGHT ONTO N CHESTNUT HILL RD, ARRIVE AT 197 NORTH CHESTNUT HILL ROAD, KILLINGWORTH, CT 06419.

SHEET INDEX

GENERAL NOTES

THE FACILITY IS UNMANNED AND NOT FOR HUMAN HABITATION. A TECHNICIAN WILL VISIT THE SITE AS REQUIRED FOR ROUTINE MAINTENANCE. THE PROJECT WILL NOT RESULT IN ANY SIGNIFICANT DISTURBANCE OR EFFECT ON DRAINAGE. NO SANITARY SEWER SERVICE, POTABLE WATER, OR TRASH DISPOSAL IS REQUIRED AND NO COMMERCIAL SIGNAGE IS PROPOSED.

11"x17" PLOT WILL BE HALF SCALE UNLESS OTHERWISE NOTED

CONTRACTOR SHALL VERIFY ALL PLANS, EXISTING DIMENSIONS, AND CONDITIONS ON THE JOB SITE, AND SHALL IMMEDIATELY NOTIFY THE ENGINEER IN WRITING OF ANY DISCREPANCIES BEFORE PROCEEDING WITH THE WORK.

VICINITY MAP

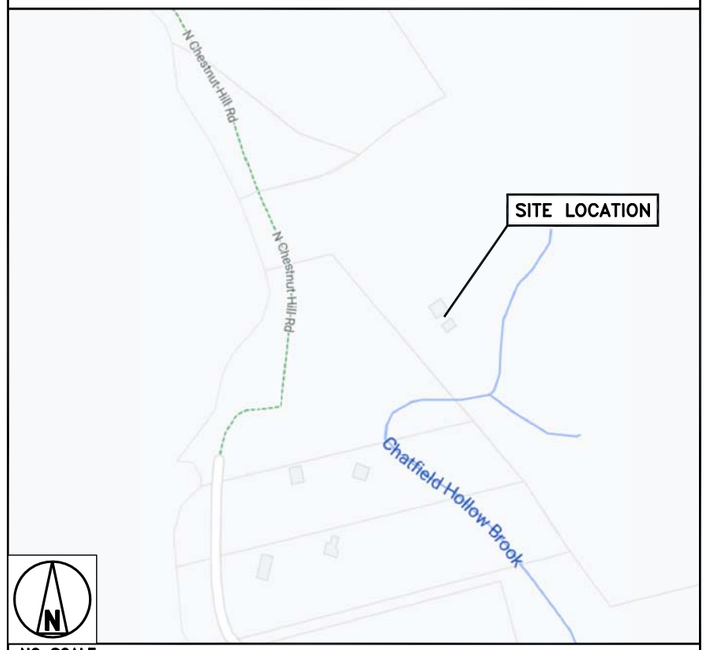

NO SCALE

dish wireless.
5701 SOUTH SANTA FE DRIVE
LITTLETON, CO 80120

CROWN CASTLE
2000 CORPORATE DRIVE
CANONSBURG, PA 15317

INFINIGY
FROM ZERO TO INFINIGY
the solutions are endless
2500 W. HIGGINS RD. SUITE 500 | HOFFMAN ESTATES, IL 60169
PHONE: 847-648-4068 | FAX: 518-690-0793
WWW.INFINIGY.COM

STATE OF CONNECTICUT
SHUHEI SAKANOUE
34916
LICENSED PROFESSIONAL ENGINEER
8/19/2021

DRAWN BY:	CHECKED BY:	APPROVED BY:
RCD	SS	CJW

RFDS REV #: N/A

CONSTRUCTION DOCUMENTS

SUBMITTALS

REV	DATE	DESCRIPTION
0	05/11/2021	FINAL
1	06/24/2021	FINAL
2	8/19/2021	TOWER ELEV UPDATED

A&E PROJECT NUMBER
2039-Z5555C

DISH WIRELESS, LLC.
PROJECT INFORMATION
BOBDL00054A
NHV 031B 943108
197 NORTH CHESTNUT HILL ROAD
KILLINGWORTH, CT 06419

SHEET TITLE
TITLE SHEET

SHEET NUMBER
T-1

NOTES

1. CONTRACTOR SHALL FIELD VERIFY ALL DIMENSIONS.
2. ANTENNAS AND MOUNTS OMITTED FOR CLARITY.

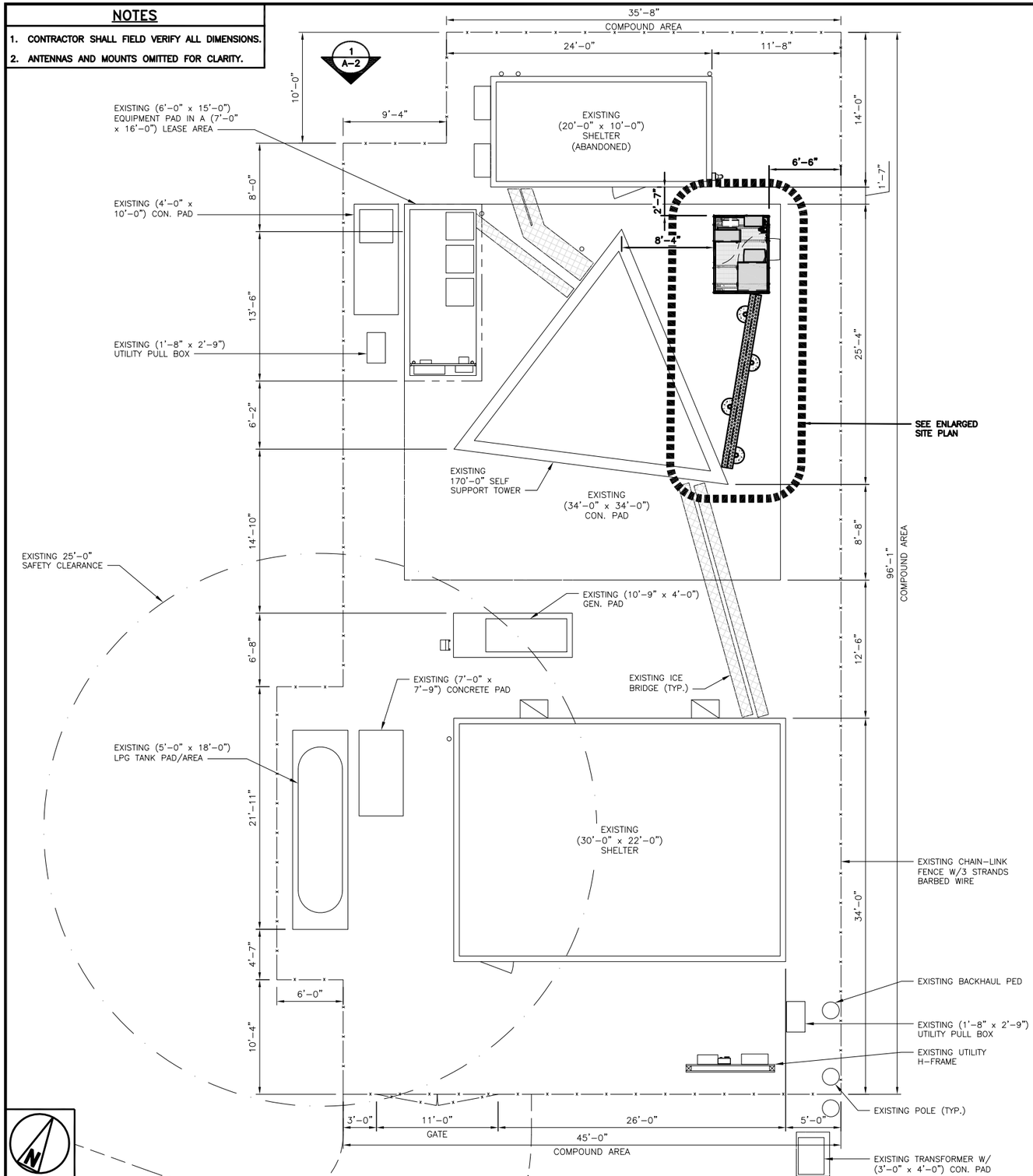

COMPOUND PLAN

6' 4' 2' 0 5' 10'
3/16"=1'-0"

1

NOTES

1. CONTRACTOR SHALL FIELD VERIFY ALL DIMENSIONS.
2. CONTRACTOR SHALL MAINTAIN A 10'-0" MINIMUM SEPARATION BETWEEN THE PROPOSED GPS UNIT, TRANSMITTING ANTENNAS AND EXISTING GPS UNITS.
3. ANTENNAS AND MOUNTS OMITTED FOR CLARITY.

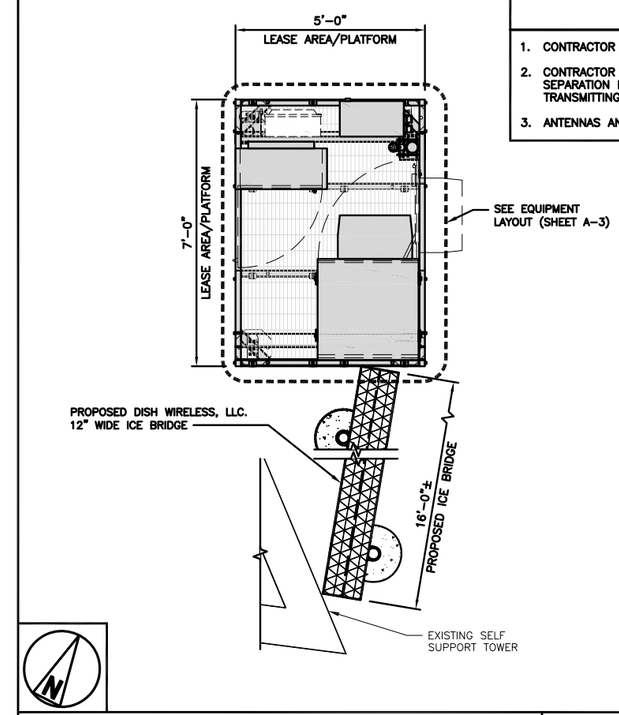

ENLARGED SITE PLAN

12" 6" 0 1' 2' 3' 4' 5'
1/2"=1'-0"

2

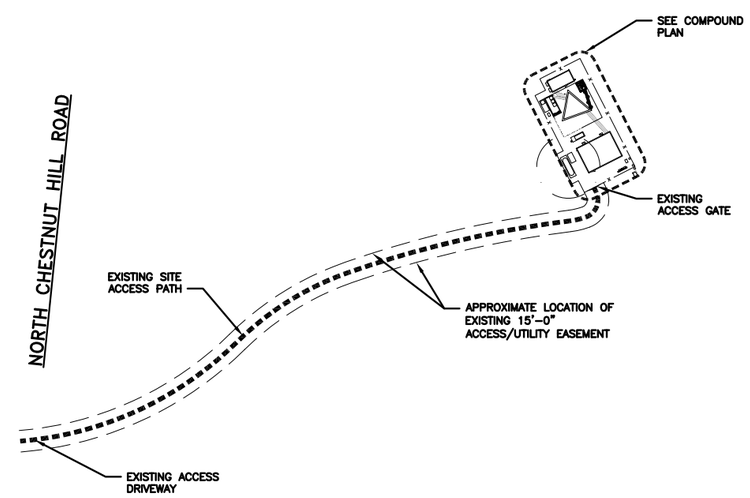

SITE PLAN

60' 30' 0 60' 120'
1"=60'

3

dish wireless.

5701 SOUTH SANTA FE DRIVE
LITTLETON, CO 80120

CROWN CASTLE

2000 CORPORATE DRIVE
CANONSBURG, PA 15317

INFINIGY
FROM ZERO TO INFINIGY
the solutions are endless
2500 W. HIGGINS RD. SUITE 500 | HOFFMAN ESTATES, IL 60169
PHONE: 847-648-4068 | FAX: 518-690-0793
WWW.INFINIGY.COM

STATE OF CONNECTICUT
SHUHEI SAKANOUE
34916
LICENSED
PROFESSIONAL ENGINEER
8/19/2021

IT IS A VIOLATION OF LAW FOR ANY PERSON, UNLESS THEY ARE ACTING UNDER THE DIRECTION OF A LICENSED PROFESSIONAL ENGINEER, TO ALTER THIS DOCUMENT.

DRAWN BY:	CHECKED BY:	APPROVED BY:
RCD	SS	CJW

RFDS REV #: N/A

CONSTRUCTION DOCUMENTS

SUBMITTALS

REV	DATE	DESCRIPTION
0	05/11/2021	FINAL
1	06/24/2021	FINAL
2	8/19/2021	TOWER ELEV UPDATED

A&E PROJECT NUMBER
2039-Z5555C

DISH WIRELESS, LLC.
PROJECT INFORMATION
BOBDL00054A
NHV 031B 943108
197 NORTH CHESTNUT HILL ROAD
KILLINGWORTH, CT 06419

SHEET TITLE
OVERALL AND ENLARGED SITE PLAN

SHEET NUMBER
A-1

NOTES

1. CONTRACTOR SHALL FIELD VERIFY ALL DIMENSIONS.
2. ANTENNA AND MW DISH SPECIFICATIONS REFER TO ANTENNA SCHEDULE AND TO FINAL CONSTRUCTION RFDS FOR ALL RF DETAILS
3. EXISTING EQUIPMENT AND FENCE OMITTED FOR CLARITY.
4. INFINIGY HAS NOT EVALUATED THE TOWER OR MOUNT STRUCTURE AND ASSUMES NO RESPONSIBILITY FOR THEIR STRUCTURAL INTEGRITY REGARDING PROPOSED LOADINGS. FINAL INSTALLATION SHALL COMPLY WITH RESULTS OF PASSING STRUCTURAL ANALYSES PERFORMED BY OTHERS.

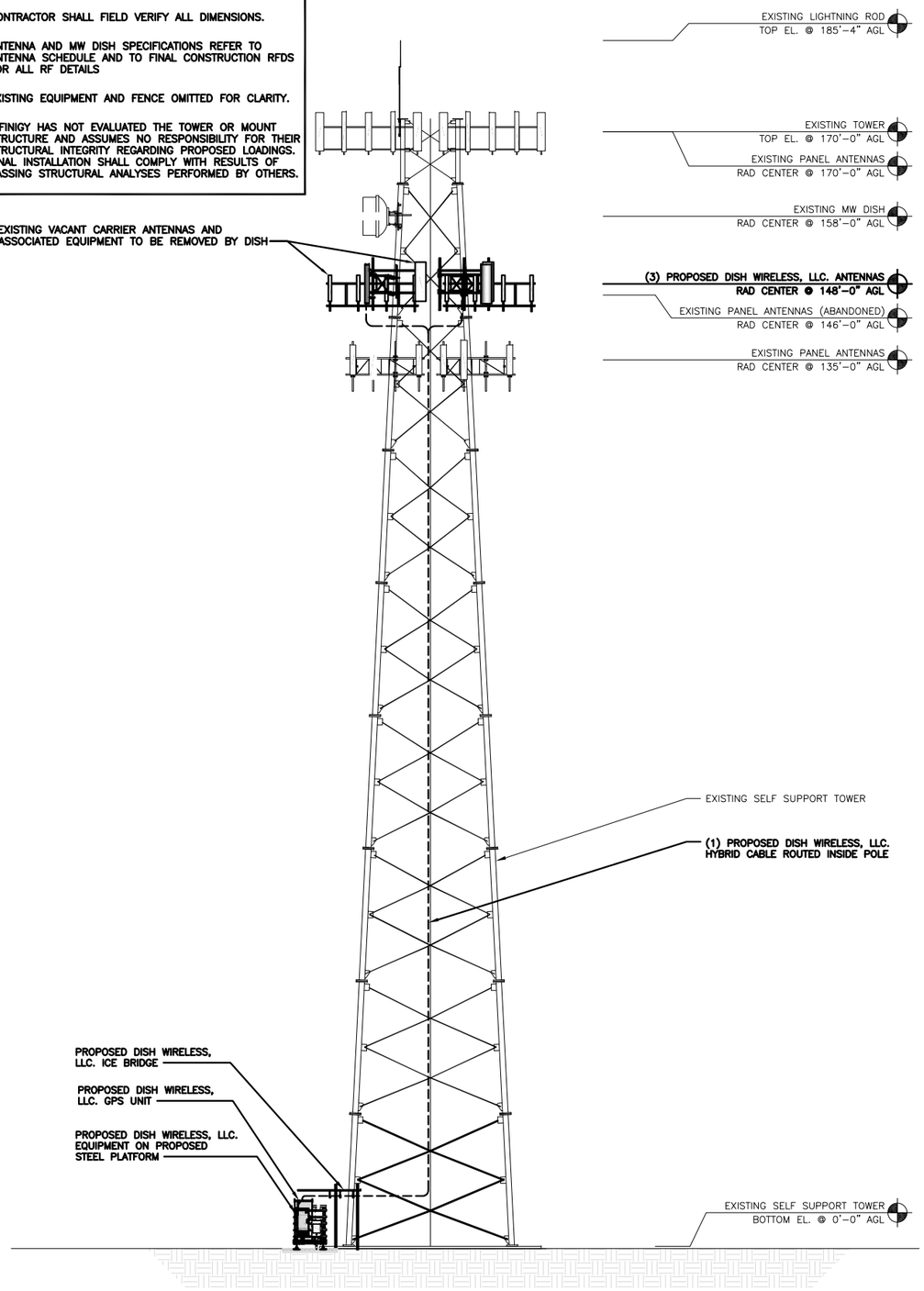

PROPOSED EAST ELEVATION

12' 8' 4' 0 10' 20'
3/32"=1'-0"

1

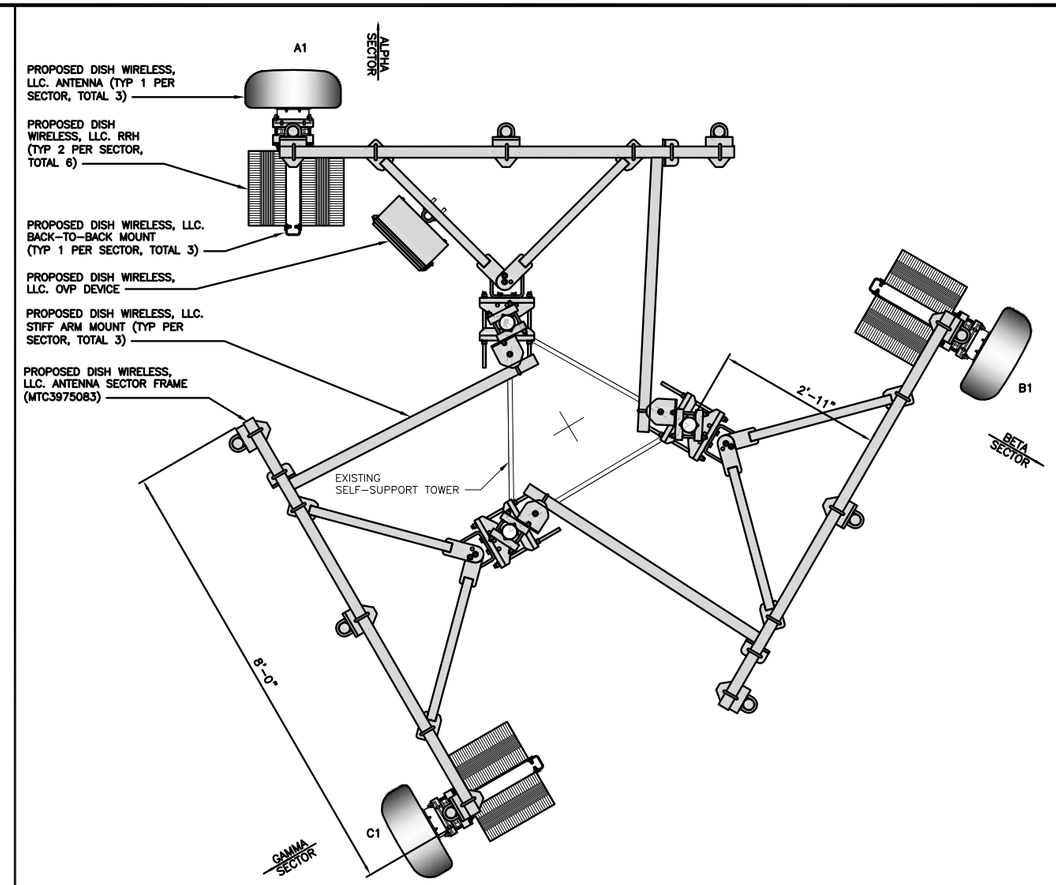

ANTENNA LAYOUT

12" 6" 0 1' 2' 3'
3/4"=1'-0"

2

SECTOR	POSITION	ANTENNA						TRANSMISSION CABLE
		EXISTING OR PROPOSED	MANUFACTURER – MODEL NUMBER	TECHNOLOGY	SIZE (HxW)	AZMUITH	RAD CENTER	FEED LINE TYPE AND LENGTH
ALPHA	A1	PROPOSED	JMA WIRELESS – MX08FRO665-20	5G	72.0" x 20.0"	0°	148'-0"	(1) HIGH-CAPACITY HYBRID CABLE
BETA	B1	PROPOSED	JMA WIRELESS – MX08FRO665-20	5G	72.0" x 20.0"	120°	148'-0"	
GAMMA	C1	PROPOSED	JMA WIRELESS – MX08FRO665-20	5G	72.0" x 20.0"	240°	148'-0"	

NOTES

1. CONTRACTOR TO REFER TO FINAL CONSTRUCTION RFDS FOR ALL RF DETAILS.
2. ANTENNA OR RRH MODELS MAY CHANGE DUE TO EQUIPMENT AVAILABILITY. ALL EQUIPMENT CHANGES MUST BE APPROVED AND REMAIN IN COMPLIANCE WITH THE PROPOSED DESIGN AND STRUCTURAL ANALYSES.

SECTOR	POSITION	RRH	
		MANUFACTURER – MODEL NUMBER	TECHNOLOGY
ALPHA	A1	FUJITSU – TA08025-B604	5G
	A1	FUJITSU – TA08025-B605	5G
BETA	B1	FUJITSU – TA08025-B604	5G
	B1	FUJITSU – TA08025-B605	5G
GAMMA	C1	FUJITSU – TA08025-B604	5G
	C1	FUJITSU – TA08025-B605	5G

NOTES

1. CONTRACTOR TO REFER TO FINAL CONSTRUCTION RFDS FOR ALL RF DETAILS.
2. ANTENNA AND RRH MODELS MAY CHANGE DUE TO EQUIPMENT AVAILABILITY. ALL EQUIPMENT CHANGES MUST BE APPROVED AND REMAIN IN COMPLIANCE WITH THE PROPOSED DESIGN AND STRUCTURAL ANALYSES.

ANTENNA SCHEDULE

NO SCALE

3

dish wireless.
5701 SOUTH SANTA FE DRIVE
LITTLETON, CO 80120

CROWN CASTLE
2000 CORPORATE DRIVE
CANONSBURG, PA 15317

INFINIGY
FROM ZERO TO INFINIGY
the solutions are endless
2500 W. HIGGINS RD. SUITE 500 | HOFFMAN ESTATES, IL 60169
PHONE: 847-648-4068 | FAX: 518-690-0793
WWW.INFINIGY.COM

STATE OF CONNECTICUT
SHUHEI SAKANOUE
34916
LICENSED PROFESSIONAL ENGINEER
8/19/2021

DRAWN BY:	CHECKED BY:	APPROVED BY:
RCD	SS	CJW

RFDS REV #: N/A

CONSTRUCTION DOCUMENTS

SUBMITTALS

REV	DATE	DESCRIPTION
0	05/11/2021	FINAL
1	06/24/2021	FINAL
2	8/19/2021	TOWER ELEV UPDATED

A&E PROJECT NUMBER
2039-Z5555C

DISH WIRELESS, LLC.
PROJECT INFORMATION
BOBDL00054A
NHV 031B 943108
197 NORTH CHESTNUT HILL ROAD
KILLINGWORTH, CT 06419

SHEET TITLE
ELEVATION, ANTENNA LAYOUT AND SCHEDULE

SHEET NUMBER
A-2

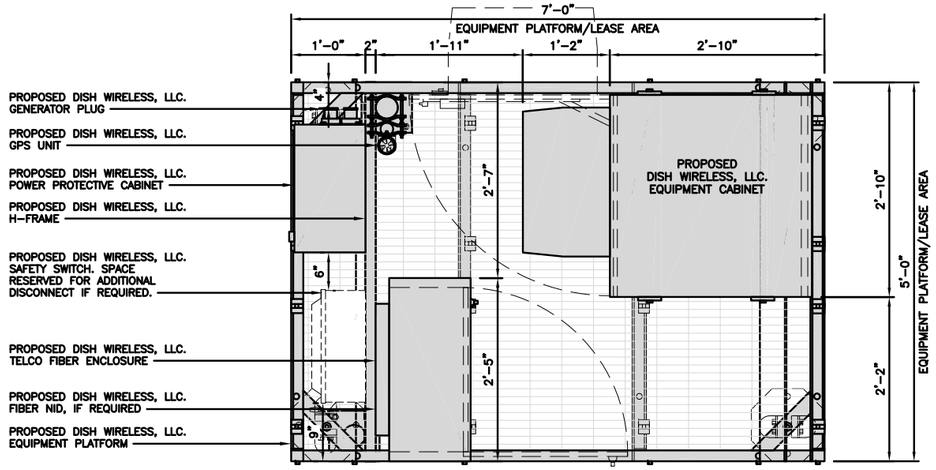

PLATFORM EQUIPMENT PLAN

12" 9" 6" 3" 0 1' 2'
1"=1'-0"

1

COMMSCOPE MTC4045LP 5X7 PLATFORM	
DIMENSIONS (HxWxD)	16"x84"x60"
TOTAL WEIGHT	423 LBS

NOTE:
GC TO PROVIDE EXTENDED THREAD FOR PLATFORM IF REQUIRED HEIGHT EXCEEDS 17"

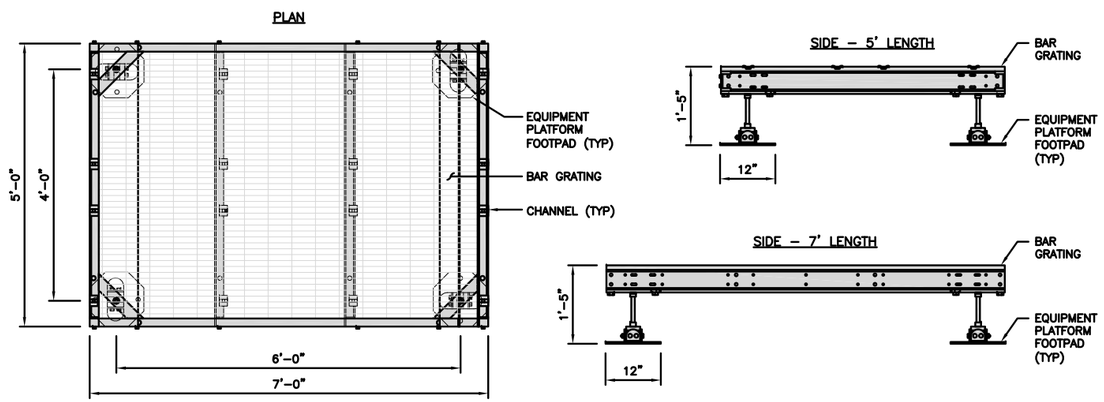

PLATFORM DETAIL

NO SCALE

2

KENWOOD T1701KT5-5S H-FRAME	
UNISTRUT/SUPPORT RAIL	5
WEIGHT/ VOLUME	173.6 LBS

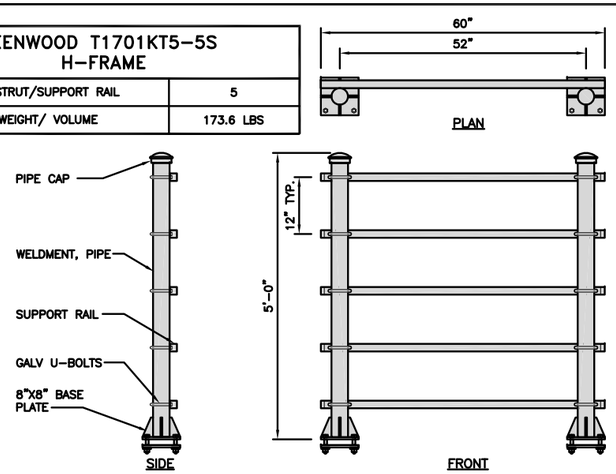

H-FRAME DETAIL

NO SCALE

3

NOT USED

NO SCALE

4

NOTES

1. CONTRACTOR TO BURY PLATFORM FEET WITH A MINIMUM OF 2" OF FILL PER EXISTING SITE SURFACE
2. WEED BARRIER FABRIC TO BE ADDED AT DISCRETION OF DISH WIRELESS, LLC. CONSTRUCTION MANAGER AT TIME OF CONSTRUCTION. ONE SHEET 8'x8' INSTALLED UNDER ALL FOUR FEET OF THE PLATFORM (4 MIL BLACK PLASTIC)
3. EQUIPMENT CABINET OMITTED FOR CLARITY

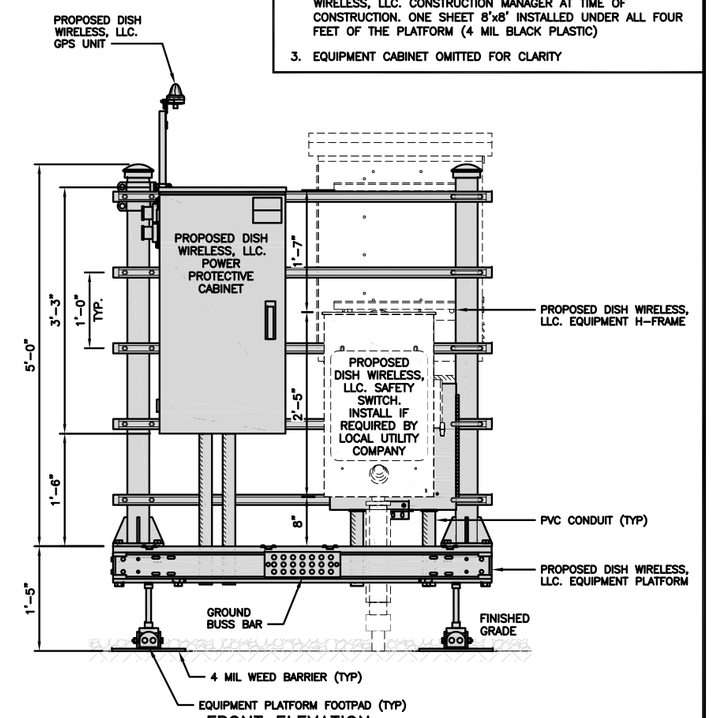

FRONT ELEVATION

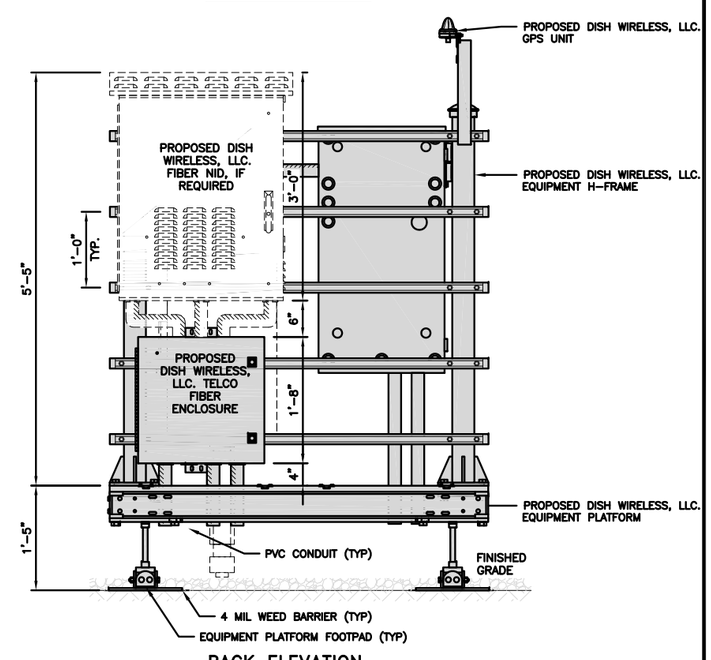

BACK ELEVATION

H-FRAME EQUIPMENT ELEVATION

12" 9" 6" 3" 0 1' 2'
1"=1'-0"

5

dish wireless.

5701 SOUTH SANTA FE DRIVE
LITTLETON, CO 80120

CROWN CASTLE

2000 CORPORATE DRIVE
CANONSBURG, PA 15317

INFINIGY
FROM ZERO TO INFINIGY
the solutions are endless
2500 W. HIGGINS RD. SUITE 500 | HOFFMAN ESTATES, IL 60169
PHONE: 847-648-4068 | FAX: 518-690-0793
WWW.INFINIGY.COM

STATE OF CONNECTICUT
SHUHEI SAKANOUE
34916
LICENSED PROFESSIONAL ENGINEER
8/19/2021

IT IS A VIOLATION OF LAW FOR ANY PERSON, UNLESS THEY ARE ACTING UNDER THE DIRECTION OF A LICENSED PROFESSIONAL ENGINEER, TO ALTER THIS DOCUMENT.

DRAWN BY:	CHECKED BY:	APPROVED BY:
RCD	SS	CJW

RFDS REV #: N/A

CONSTRUCTION DOCUMENTS

SUBMITTALS

REV	DATE	DESCRIPTION
0	05/11/2021	FINAL
1	06/24/2021	FINAL
2	8/19/2021	TOWER ELEV UPDATED

A&E PROJECT NUMBER
2039-Z5555C

DISH WIRELESS, LLC.
PROJECT INFORMATION
BOBDL00054A
NHV 031B 943108
197 NORTH CHESTNUT HILL ROAD
KILLINGWORTH, CT 06419

SHEET TITLE
EQUIPMENT PLATFORM AND H-FRAME DETAILS

SHEET NUMBER
A-3

CHARLES INDUSTRY HEX CUBE-PM639155N4	
DIMENSIONS (HxWxD):	74"x32"x32"
POWER PLANT:	-48VDC ABB/600W
TOTAL WEIGHT (EMPTY)	408 LBS

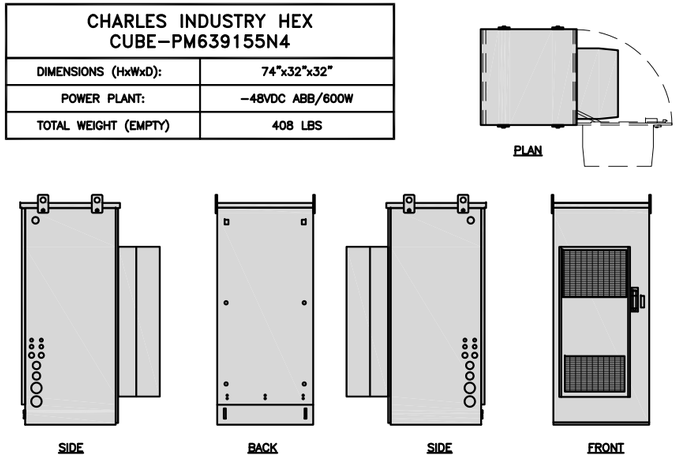

CABINET DETAIL — NO SCALE — 1

RAYCAP PPC RDIAC-2465-P-240-MTS	
ENCLOSURE DIMENSIONS (HxWxD):	39"x22.855"x12.593
WEIGHT:	80 lbs
OPERATING AC VOLTAGE	240/120 1 PHASE 3W+G

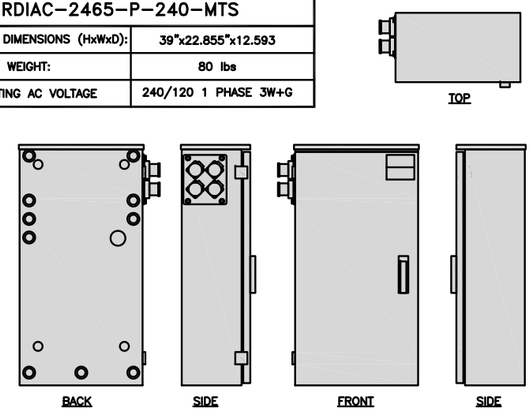

POWER PROTECTION CABINET (PPC) DETAIL — NO SCALE — 2

SQUARE D SAFETY SWITCHES D224NRB	
ENCLOSURE DIM (HxWxD)	29.25"x19.00"x8.50"
ENCLOSURE TYPE	NEMA 3R RAINPROOF
UL LISTED	FILE E-2875

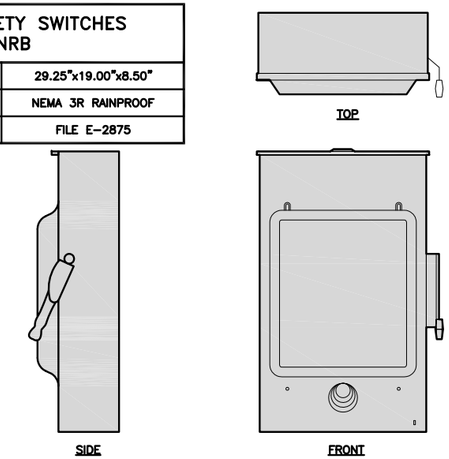

SAFETY SWITCH DETAIL — NO SCALE — 3

COMMSCOPE SS-TB2550 SUPPORT TEE BRACKET	
DIMENSIONS (HxWxL)	--"x10.75"x2.26"
WEIGHT/ VOLUME	8.46 LBS

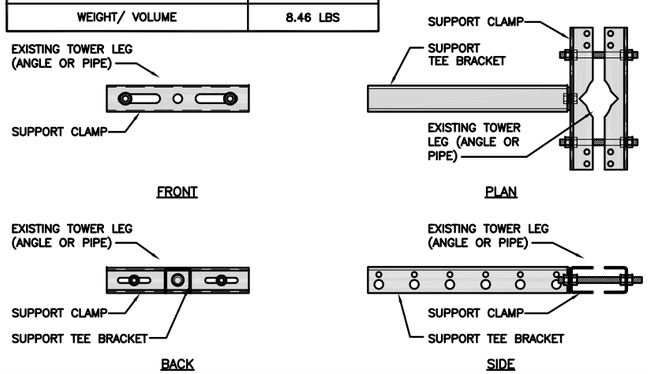

VERTICAL CABLE SUPPORT DETAIL — NO SCALE — 4

ZAYO 5RU CABINET ("LIT" SITES)	
DIMENSIONS (HxWxD)	36.115"x29"x12.9"
WEIGHT	85 LBS
POWER INPUT	20A, -48VDC

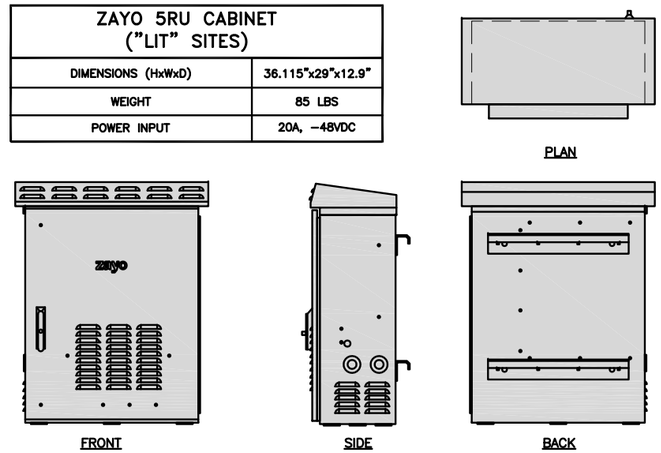

NETWORK INTERFACE UNIT DETAIL — NO SCALE — 5

CHARLES CFIT-PF2020DSH1 FIBER TELCO ENCLOSURE	
ENCLOSURE DIMS (HxWxD)	20"x20"x9"
ENCLOSURE WEIGHT	20 lbs
MOUNTING	WALL
COMPLIANCE	TYPE 4

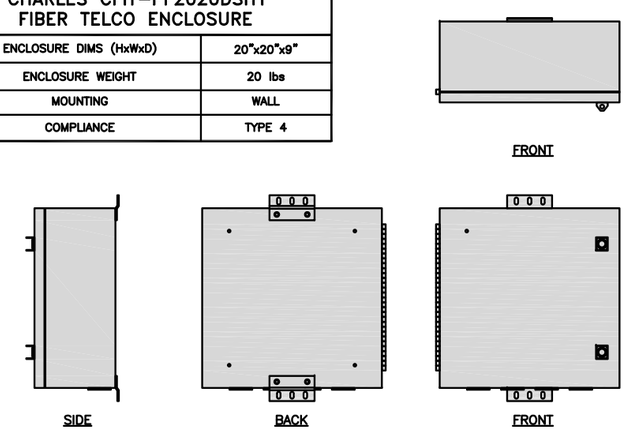

FIBER TELCO ENCLOSURE DETAIL — NO SCALE — 6

COMMSCOPE WB-K110-B WAVEGUIDE BRIDGE KIT	
DIMENSIONS (HxL)	160"x10'
WEIGHT/ VOLUME	325.0 LBS
CABLE RUN (QTY)	12

INCLUDED PRODUCTS:	
	WB-T12-3 TRAPEZE KIT, 3 RUNGS
	WB-LB12-3 SUPPORT BRACKET
	MF-130 DIRECT BURIAL PIPE COLUMN, 13'-4"

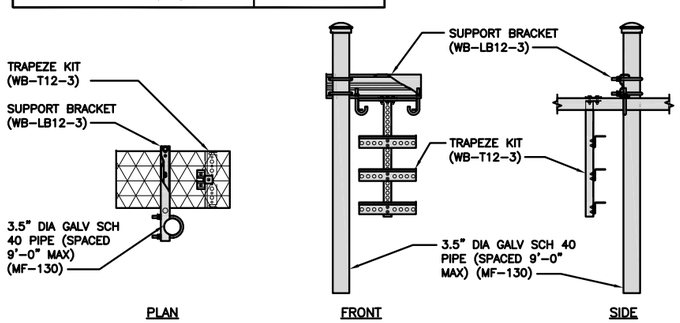

ICE BRIDGE DETAIL — NO SCALE — 7

SITEPRO1 BSF35 BASE SHOE FEET	
DIMENSIONS (HxWxL)	8"x8"x1/2"
WEIGHT	15.0 LBS
POST SIZE:	2-7/8" OR 3-1/2"

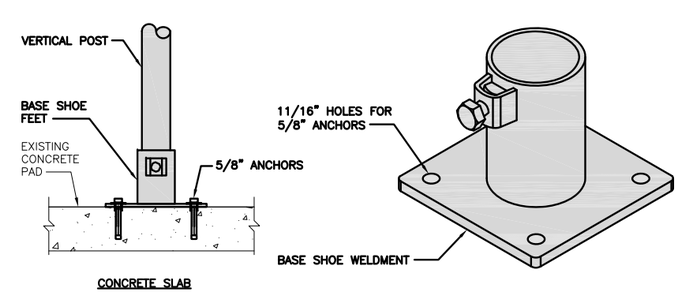

ICE BRIDGE PIPE MOUNT DETAIL — NO SCALE — 8

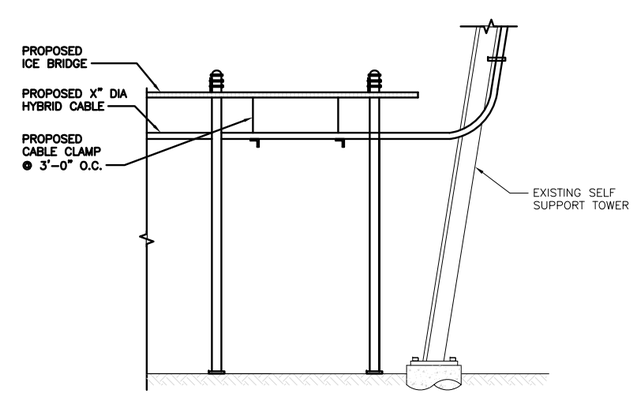

HYBRID CABLE RUN — NO SCALE — 9

dish wireless.
5701 SOUTH SANTA FE DRIVE
LITTLETON, CO 80120

CROWN CASTLE
2000 CORPORATE DRIVE
CANONSBURG, PA 15317

INFINIGY
FROM ZERO TO INFINIGY
the solutions are endless
2500 W. HIGGINS RD. SUITE 500 | HOFFMAN ESTATES, IL 60169
PHONE: 847-648-4068 | FAX: 518-690-0793
WWW.INFINIGY.COM

STATE OF CONNECTICUT
SHUHEI SAKANOUE
34916
LICENSED PROFESSIONAL ENGINEER
8/19/2021

DRAWN BY:	CHECKED BY:	APPROVED BY:
RCD	SS	CJW

RFDS REV #: N/A

CONSTRUCTION DOCUMENTS

SUBMITTALS

REV	DATE	DESCRIPTION
0	05/11/2021	FINAL
1	06/24/2021	FINAL
2	8/19/2021	TOWER ELEV UPDATED

A&E PROJECT NUMBER
2039-Z5555C

DISH WIRELESS, LLC.
PROJECT INFORMATION
BOBDL00054A
NHV 031B 943108
197 NORTH CHESTNUT HILL ROAD
KILLINGWORTH, CT 06419

SHEET TITLE
EQUIPMENT DETAILS

SHEET NUMBER
A-4

ROSENBERGER GPSGLONASS-36-N-S	
DIMENSION (DIA x H)	69mm x 98.5mm
WEIGHT (WITH ACCESSORIES)	515.74g
CONNECTOR	N-FEMALE
FREQUENCY RANGE	1559 MHz ~ 1610.5MHz

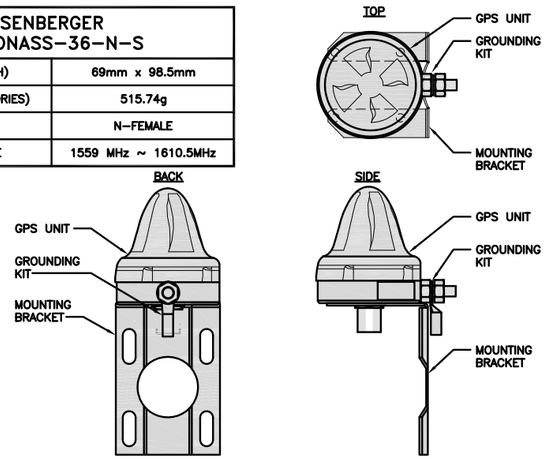

GPS ANTENNA DETAIL | NO SCALE | 1

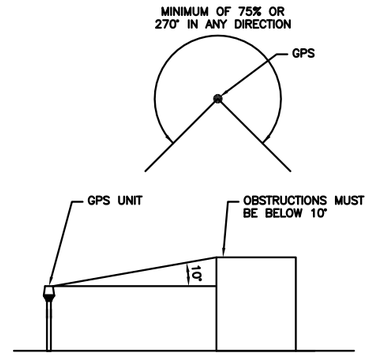

GPS MINIMUM SKY VIEW REQUIREMENTS | NO SCALE | 2

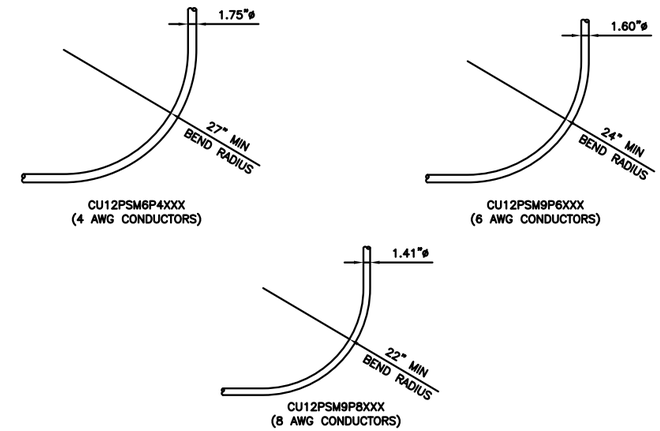

CABLES UNLIMITED HYBRID CABLE MINIMUM BEND RADIUSES | NO SCALE | 3

NOT USED | NO SCALE | 4

NOT USED | NO SCALE | 5

NOT USED | NO SCALE | 6

NOT USED | NO SCALE | 7

NOT USED | NO SCALE | 8

NOT USED | NO SCALE | 9

dish wireless.
5701 SOUTH SANTA FE DRIVE
LITTLETON, CO 80120

CROWN CASTLE
2000 CORPORATE DRIVE
CANONSBURG, PA 15317

INFINIGY
FROM ZERO TO INFINIGY
the solutions are endless
2500 W. HIGGINS RD. SUITE 500 | HOFFMAN ESTATES, IL 60169
PHONE: 847-648-4068 | FAX: 518-690-0793
WWW.INFINIGY.COM

STATE OF CONNECTICUT
SHUHEI SAKANOUE
34916
LICENSED PROFESSIONAL ENGINEER
8/19/2021

DRAWN BY:	CHECKED BY:	APPROVED BY:
RCD	SS	CJW

RFDS REV #: N/A

CONSTRUCTION DOCUMENTS

SUBMITTALS

REV	DATE	DESCRIPTION
0	05/11/2021	FINAL
1	06/24/2021	FINAL
2	8/19/2021	TOWER ELEV UPDATED

A&E PROJECT NUMBER
2039-Z5555C

DISH WIRELESS, LLC.
PROJECT INFORMATION
BOBDL00054A
NHV 031B 943108
197 NORTH CHESTNUT HILL ROAD
KILLINGWORTH, CT 06419

SHEET TITLE
EQUIPMENT DETAILS

SHEET NUMBER
A-5

FUJITSU TA08025-B604 RRH	
DIMENSIONS (HxWxD) (KG/IN)	380x400x200/14.9"x15.7"x7.8"
WEIGHT(KG,LB)/ VOLUME	29kg,63.9lb/ 30L
POWER SUPPLY	DC-58~-36V

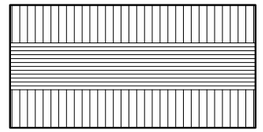

PLAN

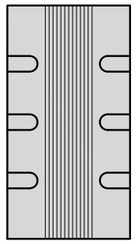

SIDE

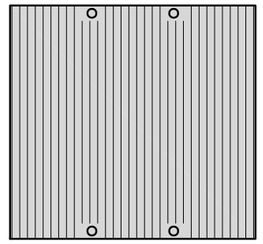

FRONT

REMOTE RADIO HEAD DETAIL | NO SCALE | 1

FUJITSU TA08025-B605 RRH	
DIMENSIONS (HxWxD) (KG/IN)	380x400x230/14.9"x15.7"x9.0"
WEIGHT(KG,LB)/ VOLUME	34kg,74.9lb/ 35L
POWER SUPPLY	DC-58~-36V

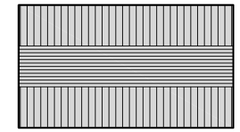

PLAN

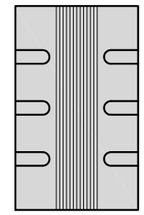

SIDE

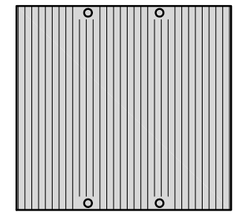

FRONT

REMOTE RADIO HEAD DETAIL | NO SCALE | 2

SABRE INDUSTRIES RRU BRACKET MOUNT C10123155	
DIMENSIONS (HxWxD) (1 BRACKET)	5"x20"x1-13/16"
WEIGHT (FULL ASSEMBLY)	35.79 lbs
PACKAGE QUANTITY	4

ITEM#	DESCRIPTION
1	PLATE, CHANNEL BRACKET
2	RRH Z BRACKET, 3/16"
3	THREADED ROD ASSEMBLY 1/2"x12"

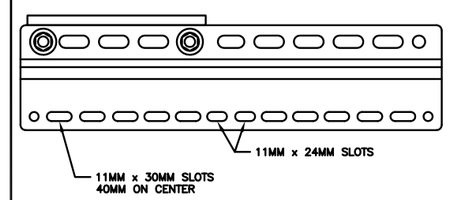

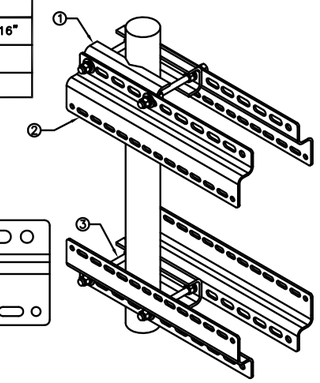

REMOTE RADIO MOUNT DETAIL | NO SCALE | 3

RAYCAP RDIDC-9181-PF-48 DC SURGE PROTECTION	
DIMENSIONS (HxWxD)	18.98"x14.39"x8.15"
WEIGHT	21.82 LBS

PLAN

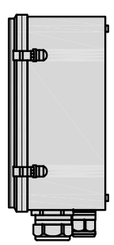

SIDE

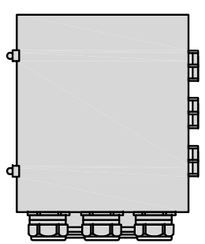

BACK

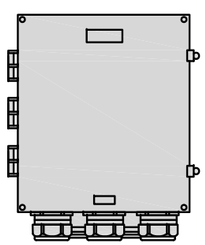

FRONT

SURGE SUPPRESSION DETAIL | NO SCALE | 4

JMA WIRELESS MX08FRO665-20 ANTENNA	
DIMENSIONS (HxWxD)	72.0"x20.0"x8.0"
TOTAL WEIGHT	54 LB
RF PORTS, CONNECTOR TYPE	8 x 4.3-10 FEMALE

PLAN

NOTES

FINAL ANTENNA SPECIFICATIONS TO BE CONFIRMED BY GC

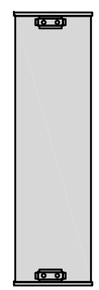

BACK

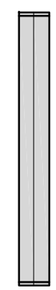

SIDE

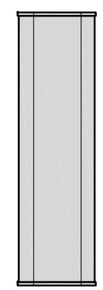

FRONT

ANTENNA DETAIL | NO SCALE | 5

JMA 91900318 MOUNTING BRACKET	
WIDTH	8.3" (211mm)
DEPTH	7.5" (191mm)
HEIGHT	11.2" (284mm)
TOTAL WEIGHT (WITH BRACKETS)	18.5 LBS (8.4 Kg)
HOUSING MATERIAL	GALV. HIGH STRENGTH STEEL

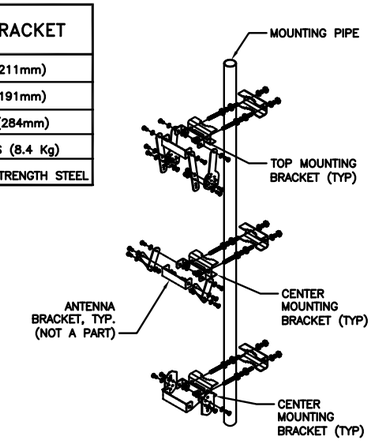

ANTENNA MOUNTING DETAIL | NO SCALE | 6

COMMSCOPE V-FRAME MTC3975083	
FACE SIZE	8'-0"
WEIGHT	352.136 lbs

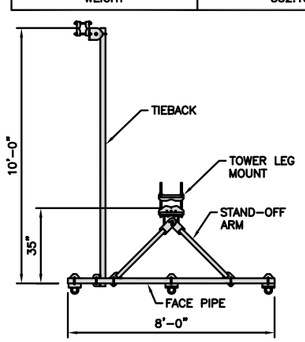

PLAN

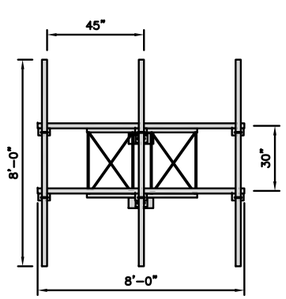

FRONT

ANTENNA FRAME DETAIL | NO SCALE | 7

NOT USED | NO SCALE | 8

NOT USED | NO SCALE | 9

dish wireless.
5701 SOUTH SANTA FE DRIVE
LITTLETON, CO 80120

CROWN CASTLE
2000 CORPORATE DRIVE
CANONSBURG, PA 15317

INFINIGY
FROM ZERO TO INFINIGY
the solutions are endless
2500 W. HIGGINS RD. SUITE 500 | HOFFMAN ESTATES, IL 60169
PHONE: 847-648-4068 | FAX: 518-690-0793
WWW.INFINIGY.COM

STATE OF CONNECTICUT
SHUHEI SAKANOUE
34916
LICENSED PROFESSIONAL ENGINEER
8/19/2021

DRAWN BY:	CHECKED BY:	APPROVED BY:
RCD	SS	CJW

RFDS REV #: N/A

CONSTRUCTION DOCUMENTS

SUBMITTALS

REV	DATE	DESCRIPTION
0	05/11/2021	FINAL
1	06/24/2021	FINAL
2	8/19/2021	TOWER ELEV UPDATED

A&E PROJECT NUMBER
2039-Z5555C

DISH WIRELESS, LLC.
PROJECT INFORMATION
BOBDL00054A
NHV 031B 943108
197 NORTH CHESTNUT HILL ROAD
KILLINGWORTH, CT 06419

SHEET TITLE
EQUIPMENT DETAILS

SHEET NUMBER
A-6

NOTES

1. CONTRACTOR SHALL FIELD VERIFY ALL PROPOSED UNDERGROUND UTILITY CONDUIT ROUTE.
2. ANTENNAS AND MOUNTS OMITTED FOR CLARITY.

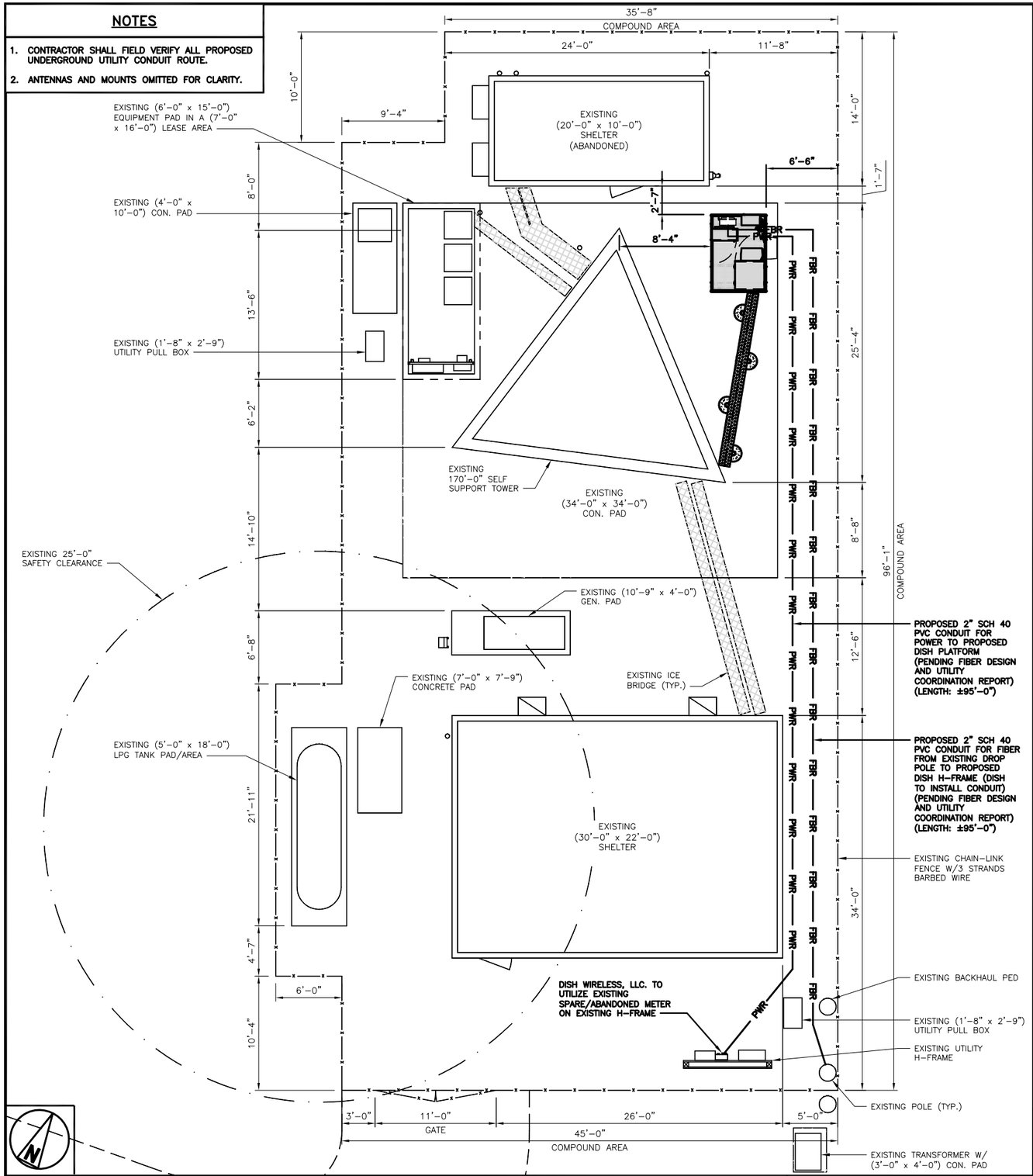

UTILITY ROUTE PLAN

6' 4' 2' 0 5' 10'
3/16"=1'-0"

1

DC POWER WIRING SHALL BE COLOR CODED AT EACH END FOR IDENTIFYING +24V AND −48V CONDUCTORS. RED MARKINGS SHALL IDENTIFY +24V AND BLUE MARKINGS SHALL IDENTIFY −48V.

1. CONTRACTOR SHALL INSPECT THE EXISTING CONDITIONS PRIOR TO SUBMITTING A BID. ANY QUESTIONS ARISING DURING THE BID PERIOD IN REGARDS TO THE CONTRACTOR'S FUNCTIONS, THE SCOPE OF WORK, OR ANY OTHER ISSUE RELATED TO THIS PROJECT SHALL BE BROUGHT UP DURING THE BID PERIOD WITH THE PROJECT MANAGER FOR CLARIFICATION, NOT AFTER THE CONTRACT HAS BEEN AWARDED.
2. ALL ELECTRICAL WORK SHALL BE DONE IN ACCORDANCE WITH CURRENT NATIONAL ELECTRICAL CODES AND ALL STATE AND LOCAL CODES, LAWS, AND ORDINANCES. PROVIDE ALL COMPONENTS AND WIRING SIZES AS REQUIRED TO MEET NEC STANDARDS.
3. LOCATION OF EQUIPMENT, CONDUIT AND DEVICES SHOWN ON THE DRAWINGS ARE APPROXIMATE AND SHALL BE COORDINATED WITH FIELD CONDITIONS PRIOR TO CONSTRUCTION.
4. CONDUIT ROUGH-IN SHALL BE COORDINATED WITH THE MECHANICAL EQUIPMENT TO AVOID LOCATION CONFLICTS. VERIFY WITH THE MECHANICAL EQUIPMENT CONTRACTOR AND COMPLY AS REQUIRED.
5. CONTRACTOR SHALL PROVIDE ALL BREAKERS, CONDUITS AND CIRCUITS AS REQUIRED FOR A COMPLETE SYSTEM.
6. CONTRACTOR SHALL PROVIDE PULL BOXES AND JUNCTION BOXES AS REQUIRED BY THE NEC ARTICLE 314.
7. CONTRACTOR SHALL PROVIDE ALL STRAIN RELIEF AND CABLE SUPPORTS FOR ALL CABLE ASSEMBLIES. INSTALLATION SHALL BE IN ACCORDANCE WITH MANUFACTURER'S SPECIFICATIONS AND RECOMMENDATIONS.
8. ALL DISCONNECTS AND CONTROLLING DEVICES SHALL BE PROVIDED WITH ENGRAVED PHENOLIC NAMEPLATES INDICATING EQUIPMENT CONTROLLED, BRANCH CIRCUITS INSTALLED ON, AND PANEL FIELD LOCATIONS FED FROM.
9. INSTALL AN EQUIPMENT GROUNDING CONDUCTOR IN ALL CONDUITS PER THE SPECIFICATIONS AND NEC 250. THE EQUIPMENT GROUNDING CONDUCTORS SHALL BE BONDED AT ALL JUNCTION BOXES, PULL BOXES, AND ALL DISCONNECT SWITCHES, AND EQUIPMENT CABINETS.
10. ALL NEW MATERIAL SHALL HAVE A U.L. LABEL.
11. PANEL SCHEDULE LOADING AND CIRCUIT ARRANGEMENTS REFLECT POST-CONSTRUCTION EQUIPMENT.
12. CONTRACTOR SHALL BE RESPONSIBLE FOR AS-BUILT PANEL SCHEDULE AND SITE DRAWINGS.
13. FIBER ROUTE IS PRELIMINARY, FINAL FIBER ROUTE TO BE DETERMINED ONCE UCR (UTILITY COORDINATION REPORT) HAS BEEN FINALIZED.

ELECTRICAL NOTES

2

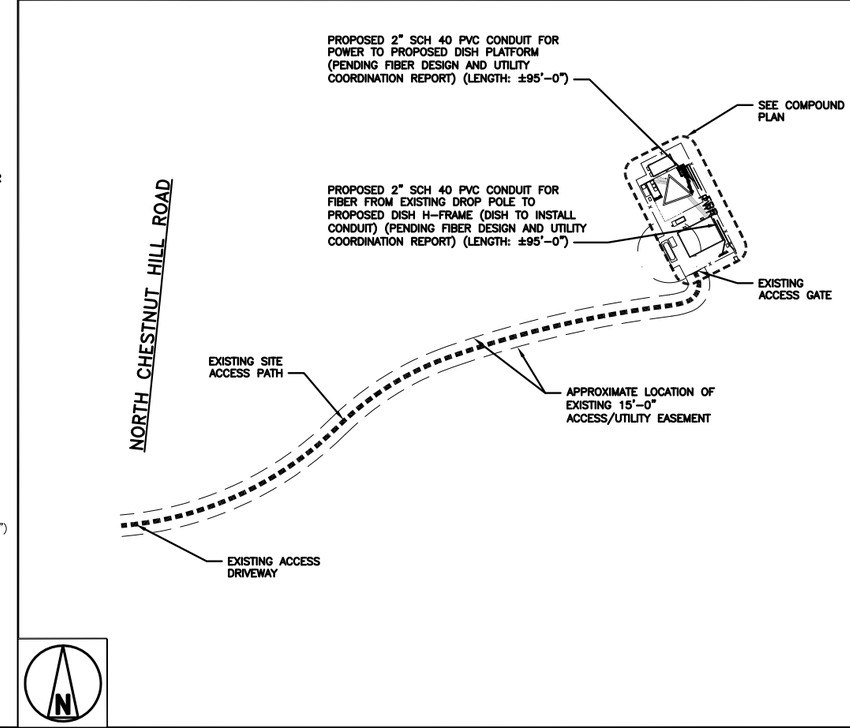

OVERALL UTILITY ROUTE PLAN

60' 30' 0 60' 120'
1"=60'

3

dish wireless.
5701 SOUTH SANTA FE DRIVE
LITTLETON, CO 80120

CROWN CASTLE
2000 CORPORATE DRIVE
CANONSBURG, PA 15317

INFINIGY
FROM ZERO TO INFINIGY
the solutions are endless
2500 W. HIGGINS RD. SUITE 500 | HOFFMAN ESTATES, IL 60169
PHONE: 847-648-4068 | FAX: 518-690-0793
WWW.INFINIGY.COM

STATE OF CONNECTICUT
SHUHEI SAKANOUE
34916
LICENSED PROFESSIONAL ENGINEER
8/19/2021

IT IS A VIOLATION OF LAW FOR ANY PERSON, UNLESS THEY ARE ACTING UNDER THE DIRECTION OF A LICENSED PROFESSIONAL ENGINEER, TO ALTER THIS DOCUMENT.

DRAWN BY:	CHECKED BY:	APPROVED BY:
RCD	SS	CJW

RFDS REV #: N/A

CONSTRUCTION DOCUMENTS

SUBMITTALS

REV	DATE	DESCRIPTION
0	05/11/2021	FINAL
1	06/24/2021	FINAL
2	8/19/2021	TOWER ELEV UPDATED

A&E PROJECT NUMBER
2039-Z5555C

DISH WIRELESS, LLC.
PROJECT INFORMATION
BOBDL00054A
NHV 031B 943108
197 NORTH CHESTNUT HILL ROAD
KILLINGWORTH, CT 06419

SHEET TITLE
ELECTRICAL/FIBER ROUTE PLAN AND NOTES

SHEET NUMBER
E-1

CARLON EXPANSION FITTINGS

COUPLING END PART#	MALE TERMINAL ADAPTER END PART#	SIZE	STD CTN QTY.	TRAVEL LENGTH
E945D	E945DX	1/2"	20	4"
E945E	E945EX	3/4"	15	4"
E945F	E945FX	1"	10	4"
E945G	E945GX	1 1/4"	5	4"
E945H	E945HX	1 1/2"	5	4"
E945J	E945JX	2"	15	8"
E945K	E945KX	2 1/2"	10	8"
E945L	E945LX	3"	10	8"
E945M	E945MX	3 1/2"	5	8"
E945N	E945NX	4"	5	8"
E945P	E945PX	5"	1	8"
E945R	E945RX	6"	1	8"

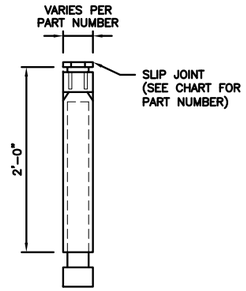

NOTE:
CONTRACTOR TO INSTALL EXPANSION FITTING SLIP JOINT AT METER CENTER CONDUIT TERMINATION, AS PER LOCAL UTILITY POLICY, ORDINANCE AND/OR SPECIFIED REQUIREMENT.

EXPANSION JOINT DETAIL | NO SCALE | 1

TRENCHING NOTES

1. CONTRACTOR SHALL RESTORE THE TRENCH TO ITS ORIGINAL CONDITIONS BY EITHER SEEDING OR SODDING GRASS AREAS, OR REPLACING ASPHALT OR CONCRETE AREAS TO ITS ORIGINAL CROSS SECTION.
2. TRENCHING SAFETY; INCLUDING, BUT NOT LIMITED TO SOIL CLASSIFICATION, SLOPING, AND SHORING, SHALL BE GOVERNED BY THE CURRENT OSHA TRENCHING AND EXCAVATION SAFETY STANDARDS.
3. ALL CONDUITS SHALL BE INSTALLED IN COMPLIANCE WITH THE CURRENT NATIONAL ELECTRIC CODE (NEC) OR AS REQUIRED BY THE LOCAL JURISDICTION, WHICHEVER IS THE MOST STRINGENT.

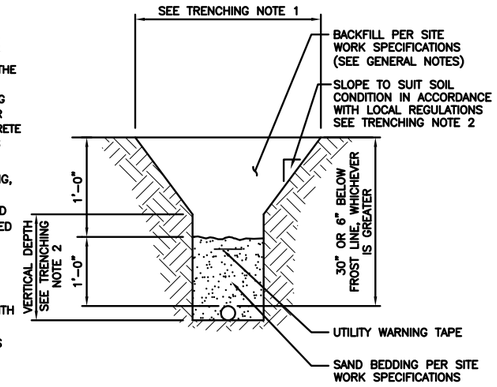

TYPICAL UNDERGROUND TRENCH DETAIL | NO SCALE | 2

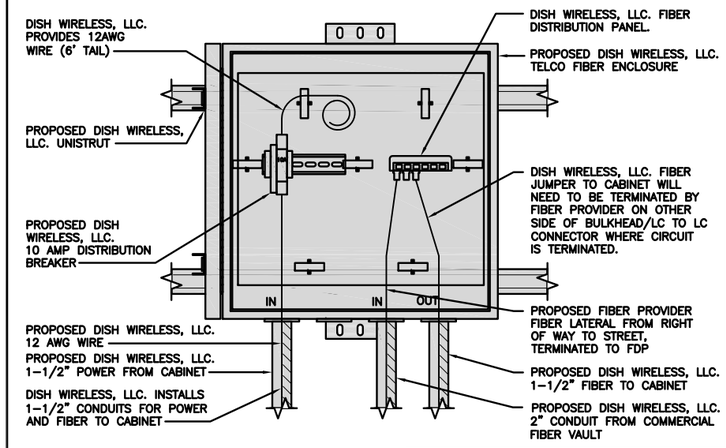

DARK TELCO BOX – INTERIOR WIRING LAYOUT | NO SCALE | 3

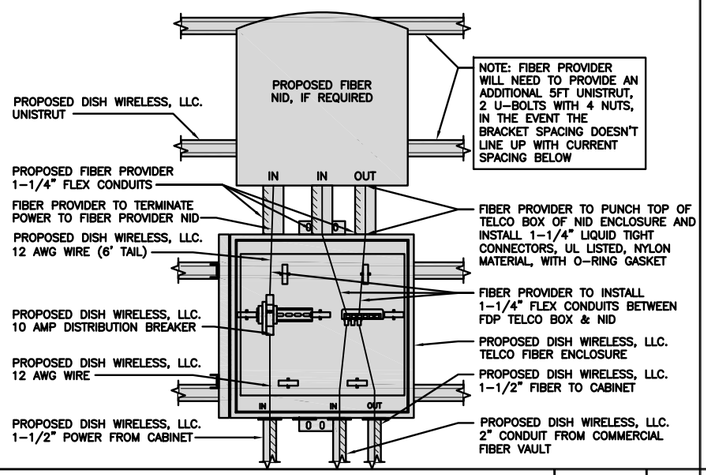

LIT TELCO BOX – INTERIOR WIRING LAYOUT (OPTIONAL) | NO SCALE | 4

NO SCALE | 5

NOT USED | NO SCALE | 6

NOT USED | NO SCALE | 7

NOT USED | NO SCALE | 8

NOT USED | NO SCALE | 9

dish wireless.
5701 SOUTH SANTA FE DRIVE
LITTLETON, CO 80120

CROWN CASTLE
2000 CORPORATE DRIVE
CANONSBURG, PA 15317

INFINIGY
FROM ZERO TO INFINIGY
the solutions are endless
2500 W. HIGGINS RD. SUITE 500 | HOFFMAN ESTATES, IL 60169
PHONE: 847-648-4068 | FAX: 518-690-0793
WWW.INFINIGY.COM

STATE OF CONNECTICUT
SHUHEI SAKANOUE
34916
LICENSED PROFESSIONAL ENGINEER
8/19/2021

DRAWN BY:	CHECKED BY:	APPROVED BY:
RCD	SS	CJW

RFDS REV #: N/A

CONSTRUCTION DOCUMENTS

SUBMITTALS

REV	DATE	DESCRIPTION
0	05/11/2021	FINAL
1	06/24/2021	FINAL
2	8/19/2021	TOWER ELEV UPDATED

A&E PROJECT NUMBER
2039-Z5555C

DISH WIRELESS, LLC.
PROJECT INFORMATION
BOBDL00054A
NHV 031B 943108
197 NORTH CHESTNUT HILL ROAD
KILLINGWORTH, CT 06419

SHEET TITLE
ELECTRICAL DETAILS

SHEET NUMBER
E-2

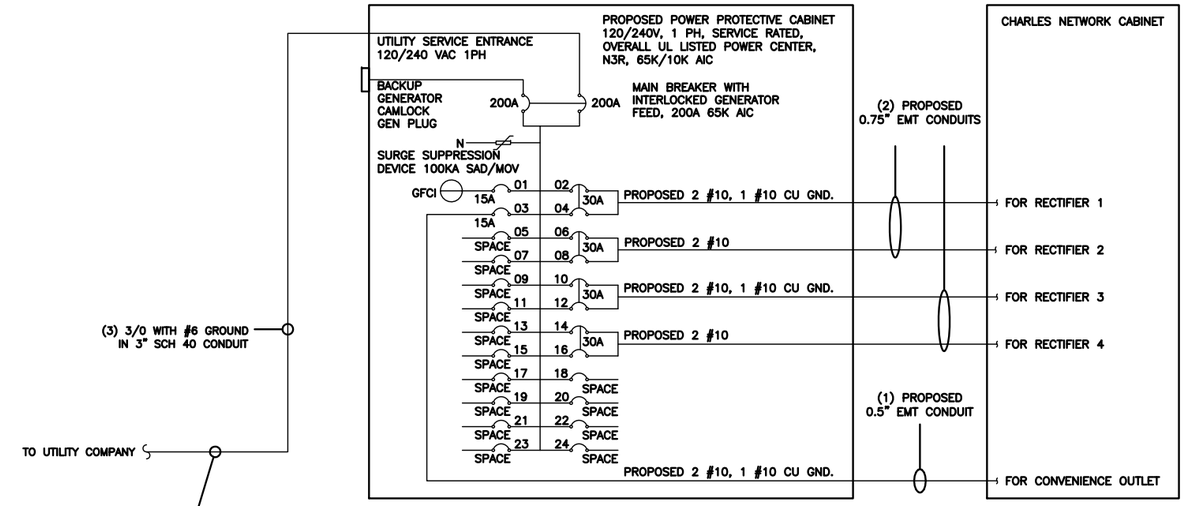

NOTE:
BRANCH CIRCUIT WIRING SUPPLYING RECTIFIERS ARE TO BE RATED UL1015, 105°C, 600V, AND PVC INSULATED, IN THE SIZES SHOWN IN THE ONE-LINE DIAGRAM. CONTRACTOR MAY SUBSTITUTE UL1015 WIRE FOR THWN-2 FOR CONVENIENCE OUTLET BRANCH CIRCUIT.

BREAKERS REQUIRED:
(4) 30A, 2P BREAKER – SQUARE D P/N:QO230
(1) 15A, 1P BREAKER – SQUARE D P/N:QO115

NOTES

THE (2) CONDUITS WITH (4) CURRENT CARRYING CONDUCTORS EACH, SHALL APPLY THE ADJUSTMENT FACTOR OF 80% PER 2014/17 NEC TABLE 310.15(B)(3)(a) OR 2020 NEC TABLE 310.15(C)(1) FOR UL1015 WIRE.

#12 FOR 15A–20A/1P BREAKER: 0.8 x 30A = 24.0A
#10 FOR 25A–30A/2P BREAKER: 0.8 x 40A = 32.0A
#8 FOR 35A–40A/2P BREAKER: 0.8 x 55A = 44.0A
#6 FOR 45A–60A/2P BREAKER: 0.8 x 75A = 60.0A

CONDUIT SIZING: AT 40% FILL PER NEC CHAPTER 9, TABLE 4, ARTICLE 358.
0.5" CONDUIT – 0.122 SQ. IN AREA
0.75" CONDUIT – 0.213 SQ. IN AREA
2.0" CONDUIT – 1.316 SQ. IN AREA
3.0" CONDUIT – 2.907 SQ. IN AREA

CABINET CONVENIENCE OUTLET CONDUCTORS (1 CONDUIT): USING THWN–2, CU.

#10 – 0.0211 SQ. IN X 2 = 0.0422 SQ. IN
#10 – 0.0211 SQ. IN X 1 = 0.0211 SQ. IN <GROUND
TOTAL = 0.0633 SQ. IN

0.5" EMT CONDUIT IS ADEQUATE TO HANDLE THE TOTAL OF (3) WIRES, INCLUDING GROUND WIRE, AS INDICATED ABOVE.

RECTIFIER CONDUCTORS (2 CONDUITS): USING UL1015, CU.

#10 – 0.0266 SQ. IN X 4 = 0.1064 SQ. IN
#10 – 0.0082 SQ. IN X 1 = 0.0082 SQ. IN <BARE GROUND
TOTAL = 0.1146 SQ. IN

0.75" EMT CONDUIT IS ADEQUATE TO HANDLE THE TOTAL OF (5) WIRES, INCLUDING GROUND WIRE, AS INDICATED ABOVE.

PPC FEED CONDUCTORS (1 CONDUIT): USING THWN, CU.

3/0 – 0.2679 SQ. IN X 3 = 0.8037 SQ. IN
#6 – 0.0507 SQ. IN X 1 = 0.0507 SQ. IN <GROUND
TOTAL = 0.8544 SQ. IN

3.0" SCH 40 PVC CONDUIT IS ADEQUATE TO HANDLE THE TOTAL OF (4) WIRES, INCLUDING GROUND WIRE, AS INDICATED ABOVE.

PPC ONE-LINE DIAGRAM

NO SCALE | 1

PROPOSED CHARLES PANEL SCHEDULE

LOAD SERVED	VOLT AMPS (WATTS) L1	VOLT AMPS (WATTS) L2	TRIP	CKT #	PHASE		CKT #	TRIP	VOLT AMPS (WATTS) L1	VOLT AMPS (WATTS) L2	LOAD SERVED
PPC GFCI OUTLET	180		15A	1	A		2	30A	2880		ABB/GE INFINITY RECTIFIER 1
CHARLES GFCI OUTLET		180	15A	3	B		4			2880	
–SPACE–				5	A		6	30A	2880		ABB/GE INFINITY RECTIFIER 2
–SPACE–				7	B		8			2880	
–SPACE–				9	A		10	30A	2880		ABB/GE INFINITY RECTIFIER 3
–SPACE–				11	B		12			2880	
–SPACE–				13	A		14	30A	2880		ABB/GE INFINITY RECTIFIER 4
–SPACE–				15	B		16			2880	
–SPACE–				17	A		18				–SPACE–
–SPACE–				19	B		20				–SPACE–
–SPACE–				21	A		22				–SPACE–
–SPACE–				23	B		24				–SPACE–
VOLTAGE AMPS	180	180							11520	11520	
200A MCB, 1ϕ, 24 SPACE, 120/240V				L1		L2					
MB RATING: 65,000 AIC				11700		11700		VOLTAGE AMPS			
				98		98		AMPS			
				98				MAX AMPS			
				123				MAX 125%			

PANEL SCHEDULE

NO SCALE | 2

NOT USED

NO SCALE | 3

dish wireless.
5701 SOUTH SANTA FE DRIVE
LITTLETON, CO 80120

CROWN CASTLE
2000 CORPORATE DRIVE
CANONSBURG, PA 15317

INFINIGY
FROM ZERO TO INFINIGY
the solutions are endless
2500 W. HIGGINS RD. SUITE 500 |
HOFFMAN ESTATES, IL 60169
PHONE: 847-648-4068 | FAX: 518-690-0793
WWW.INFINIGY.COM

STATE OF CONNECTICUT
SHUHEI SAKANOUE
34916
LICENSED
PROFESSIONAL ENGINEER
8/19/2021

IT IS A VIOLATION OF LAW FOR ANY PERSON, UNLESS THEY ARE ACTING UNDER THE DIRECTION OF A LICENSED PROFESSIONAL ENGINEER, TO ALTER THIS DOCUMENT.

DRAWN BY:	CHECKED BY:	APPROVED BY:
RCD	SS	CJW

RFDS REV #: N/A

CONSTRUCTION DOCUMENTS

SUBMITTALS

REV	DATE	DESCRIPTION
0	05/11/2021	FINAL
1	06/24/2021	FINAL
2	8/19/2021	TOWER ELEV UPDATED

A&E PROJECT NUMBER
2039–Z5555C

DISH WIRELESS, LLC.
PROJECT INFORMATION
BOBDL00054A
NHV 031B 943108
197 NORTH CHESTNUT HILL ROAD
KILLINGWORTH, CT 06419

SHEET TITLE
ELECTRICAL ONE–LINE, FAULT CALCS & PANEL SCHEDULE

SHEET NUMBER
E-3

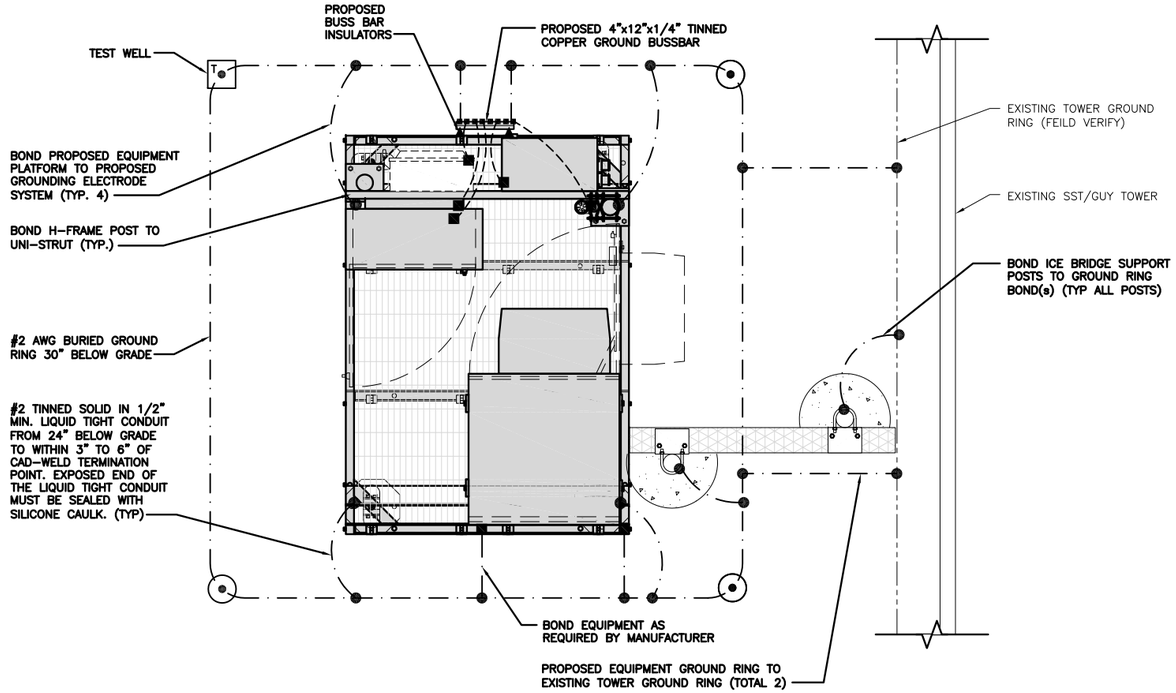

TYPICAL EQUIPMENT GROUNDING PLAN | NO SCALE | 1

NOTES

1. ANTENNAS AND OVP SHOWN ARE GENERIC AND NOT REFERENCING TO A SPECIFIC MANUFACTURER. THIS LAYOUT IS FOR REFERENCE ONLY

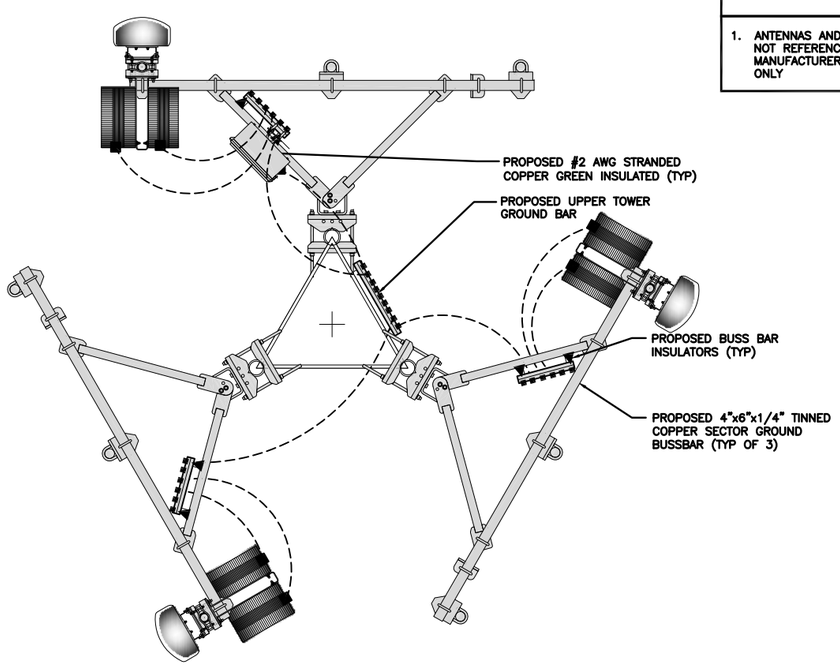

TYPICAL ANTENNA GROUNDING PLAN | NO SCALE | 2

EXOTHERMIC CONNECTION
MECHANICAL CONNECTION
GROUND BUS BAR
GROUND ROD
TEST GROUND ROD WITH INSPECTION SLEEVE
#2 AWG STRANDED & INSULATED
#2 AWG SOLID COPPER TINNED

GROUNDING LEGEND

1. GROUNDING IS SHOWN DIAGRAMMATICALLY ONLY.
2. CONTRACTOR SHALL GROUND ALL EQUIPMENT AS A COMPLETE SYSTEM. GROUNDING SHALL BE IN COMPLIANCE WITH NEC SECTION 250 AND DISH WIRELESS, LLC. GROUNDING AND BONDING REQUIREMENTS AND MANUFACTURER'S SPECIFICATIONS.
3. ALL GROUND CONDUCTORS SHALL BE COPPER; NO ALUMINUM CONDUCTORS SHALL BE USED.

GROUNDING KEY NOTES

(A) EXTERIOR GROUND RING: #2 AWG SOLID COPPER, BURIED AT A DEPTH OF AT LEAST 30 INCHES BELOW GRADE, OR 6 INCHES BELOW THE FROST LINE AND APPROXIMATELY 24 INCHES FROM THE EXTERIOR WALL OR FOOTING.

(B) TOWER GROUND RING: THE GROUND RING SYSTEM SHALL BE INSTALLED AROUND AN ANTENNA TOWER'S LEGS, AND/OR GUY ANCHORS. WHERE SEPARATE SYSTEMS HAVE BEEN PROVIDED FOR THE TOWER AND THE BUILDING, AT LEAST TWO BONDS SHALL BE MADE BETWEEN THE TOWER RING GROUND SYSTEM AND THE BUILDING RING GROUND SYSTEM USING MINIMUM #2 AWG SOLID COPPER CONDUCTORS.

(C) INTERIOR GROUND RING: #2 AWG STRANDED GREEN INSULATED COPPER CONDUCTOR EXTENDED AROUND THE PERIMETER OF THE EQUIPMENT AREA. ALL NON-TELECOMMUNICATIONS RELATED METALLIC OBJECTS FOUND WITHIN A SITE SHALL BE GROUNDED TO THE INTERIOR GROUND RING WITH #6 AWG STRANDED GREEN INSULATED CONDUCTOR.

(D) BOND TO INTERIOR GROUND RING: #2 AWG SOLID TINNED COPPER WIRE PRIMARY BONDS SHALL BE PROVIDED AT LEAST AT FOUR POINTS ON THE INTERIOR GROUND RING, LOCATED AT THE CORNERS OF THE BUILDING.

(E) GROUND ROD: UL LISTED COPPER CLAD STEEL. MINIMUM 1/2" DIAMETER BY EIGHT FEET LONG. GROUND RODS SHALL BE INSTALLED WITH INSPECTION SLEEVES. GROUND RODS SHALL BE DRIVEN TO THE DEPTH OF GROUND RING CONDUCTOR.

(F) CELL REFERENCE GROUND BAR: POINT OF GROUND REFERENCE FOR ALL COMMUNICATIONS EQUIPMENT FRAMES. ALL BONDS ARE MADE WITH #2 AWG UNLESS NOTED OTHERWISE STRANDED GREEN INSULATED COPPER CONDUCTORS. BOND TO GROUND RING WITH (2) #2 SOLID TINNED COPPER CONDUCTORS.

(G) HATCH PLATE GROUND BAR: BOND TO THE INTERIOR GROUND RING WITH TWO #2 AWG STRANDED GREEN INSULATED COPPER CONDUCTORS. WHEN A HATCH-PLATE AND A CELL REFERENCE GROUND BAR ARE BOTH PRESENT, THE CRGB MUST BE CONNECTED TO THE HATCH-PLATE AND TO THE INTERIOR GROUND RING USING (2) TWO #2 AWG STRANDED GREEN INSULATED COPPER CONDUCTORS EACH.

(H) EXTERIOR CABLE ENTRY PORT GROUND BARS: LOCATED AT THE ENTRANCE TO THE CELL SITE BUILDING. BOND TO GROUND RING WITH A #2 AWG SOLID TINNED COPPER CONDUCTORS WITH AN EXOTHERMIC WELD AND INSPECTION SLEEVE.

(J) TELCO GROUND BAR: BOND TO BOTH CELL REFERENCE GROUND BAR OR EXTERIOR GROUND RING.

(K) FRAME BONDING: THE BONDING POINT FOR TELECOM EQUIPMENT FRAMES SHALL BE THE GROUND BUS THAT IS NOT ISOLATED FROM THE EQUIPMENTS METAL FRAMEWORK.

(L) INTERIOR UNIT BONDS: METAL FRAMES, CABINETS AND INDIVIDUAL METALLIC UNITS LOCATED WITH THE AREA OF THE INTERIOR GROUND RING REQUIRE A #6 AWG STRANDED GREEN INSULATED COPPER BOND TO THE INTERIOR GROUND RING.

(M) FENCE AND GATE GROUNDING: METAL FENCES WITHIN 7 FEET OF THE EXTERIOR GROUND RING OR OBJECTS BONDED TO THE EXTERIOR GROUND RING SHALL BE BONDED TO THE GROUND RING WITH A #2 AWG SOLID TINNED COPPER CONDUCTOR AT AN INTERVAL NOT EXCEEDING 25 FEET. BONDS SHALL BE MADE AT EACH GATE POST AND ACROSS GATE OPENINGS.

(N) EXTERIOR UNIT BONDS: METALLIC OBJECTS, EXTERNAL TO OR MOUNTED TO THE BUILDING, SHALL BE BONDED TO THE EXTERIOR GROUND RING. USING #2 TINNED SOLID COPPER WIRE

(P) ICE BRIDGE SUPPORTS: EACH ICE BRIDGE LEG SHALL BE BONDED TO THE GROUND RING WITH #2 AWG BARE TINNED COPPER CONDUCTOR. PROVIDE EXOTHERMIC WELDS AT BOTH THE ICE BRIDGE LEG AND BURIED GROUND RING.

(Q) DURING ALL DC POWER SYSTEM CHANGES INCLUDING DC SYSTEM CHANGE OUTS, RECTIFIER REPLACEMENTS OR ADDITIONS, BREAKER DISTRIBUTION CHANGES, BATTERY ADDITIONS, BATTERY REPLACEMENTS AND INSTALLATIONS OR CHANGES TO DC CONVERTER SYSTEMS IT SHALL BE REQUIRED THAT SERVICE CONTRACTORS VERIFY ALL DC POWER SYSTEMS ARE EQUIPPED WITH A MASTER DC SYSTEM RETURN GROUND CONDUCTOR FROM THE DC POWER SYSTEM COMMON RETURN BUS DIRECTLY CONNECTED TO THE CELL SITE REFERENCE GROUND BAR

(R) TOWER TOP COLLECTOR BUSS BAR IS TO BE MECHANICALLY BONDED TO PROPOSED ANTENNA MOUNT COLLAR.

REFER TO DISH WIRELESS, LLC. GROUNDING NOTES.

GROUNDING KEY NOTES | NO SCALE | 3

dish wireless.
5701 SOUTH SANTA FE DRIVE
LITTLETON, CO 80120

CROWN CASTLE
2000 CORPORATE DRIVE
CANONSBURG, PA 15317

INFINIGY
FROM ZERO TO INFINIGY
the solutions are endless
2500 W. HIGGINS RD. SUITE 500 | HOFFMAN ESTATES, IL 60169
PHONE: 847-648-4068 | FAX: 518-690-0793
WWW.INFINIGY.COM

STATE OF CONNECTICUT
SHUHEI SAKANOUE
34916
LICENSED PROFESSIONAL ENGINEER
8/19/2021

IT IS A VIOLATION OF LAW FOR ANY PERSON, UNLESS THEY ARE ACTING UNDER THE DIRECTION OF A LICENSED PROFESSIONAL ENGINEER, TO ALTER THIS DOCUMENT.

DRAWN BY:	CHECKED BY:	APPROVED BY:
RCD	SS	CJW

RFDS REV #: N/A

CONSTRUCTION DOCUMENTS

SUBMITTALS

REV	DATE	DESCRIPTION
0	05/11/2021	FINAL
1	06/24/2021	FINAL
2	8/19/2021	TOWER ELEV UPDATED

A&E PROJECT NUMBER
2039-Z5555C

DISH WIRELESS, LLC.
PROJECT INFORMATION
BOBDL00054A
NHV 031B 943108
197 NORTH CHESTNUT HILL ROAD
KILLINGWORTH, CT 06419

SHEET TITLE
GROUNDING PLANS AND NOTES

SHEET NUMBER
G-1

NOTES

EQUIPMENT CABINET OMITTED FOR CLARITY

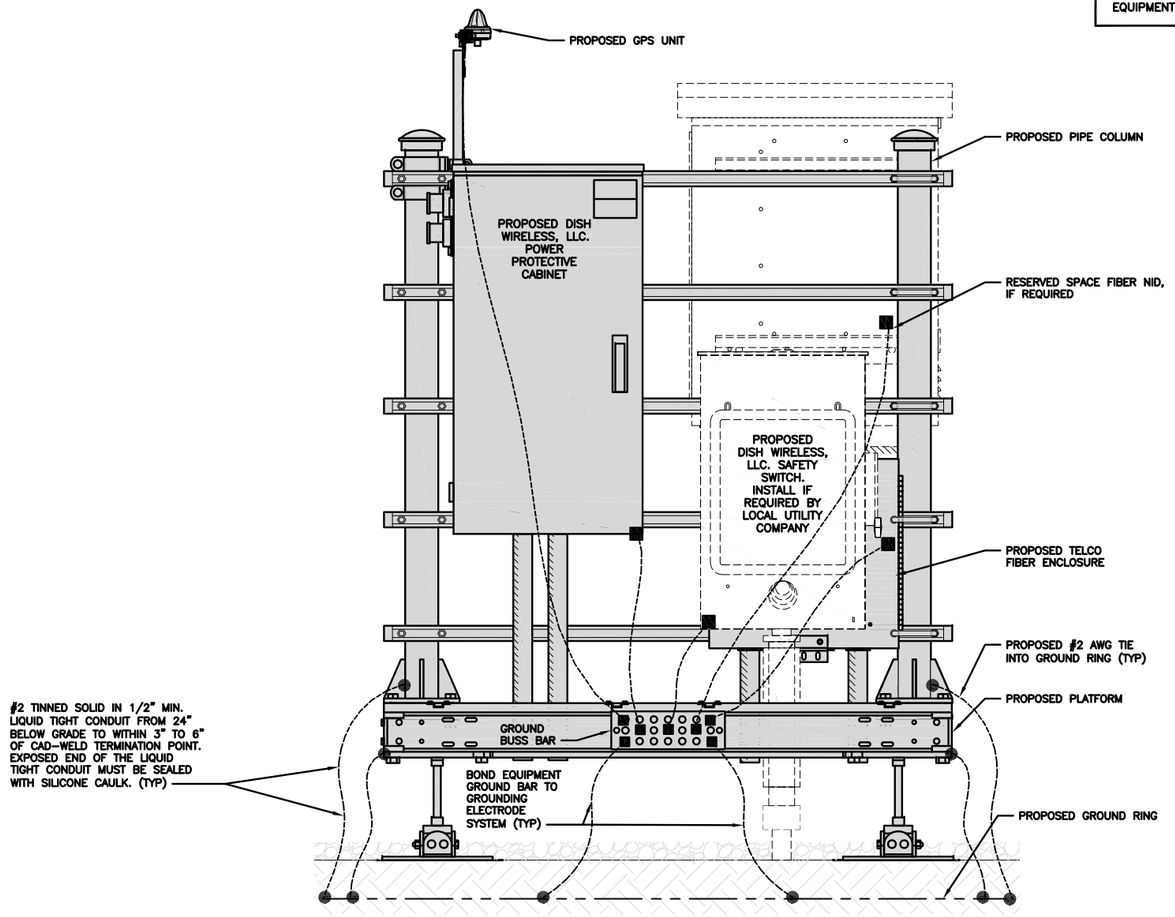

H-FRAME GROUNDING DETAIL | NO SCALE | 1

NOTES

CABLE GROUNDING NOT REQUIRED WHEN ANTENNA IS LESS THAN 10' FROM CABINET

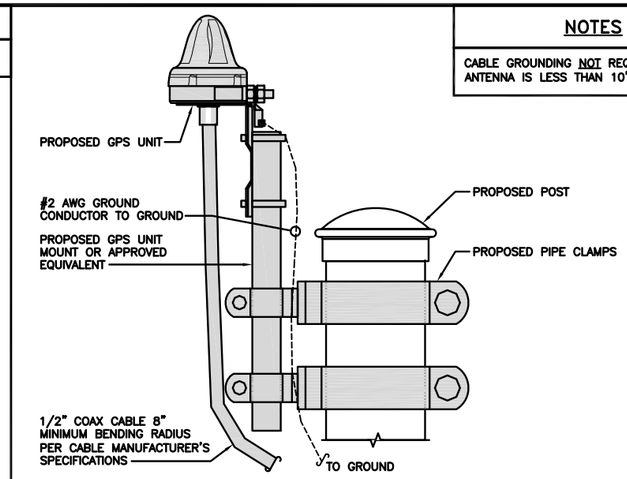

TYPICAL GPS UNIT GROUNDING | NO SCALE | 2

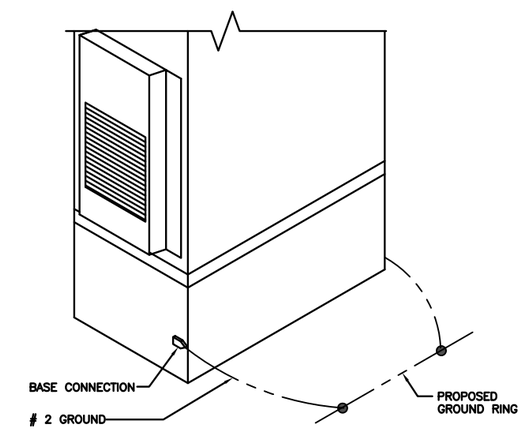

OUTDOOR CABINET GROUNDING | NO SCALE | 3

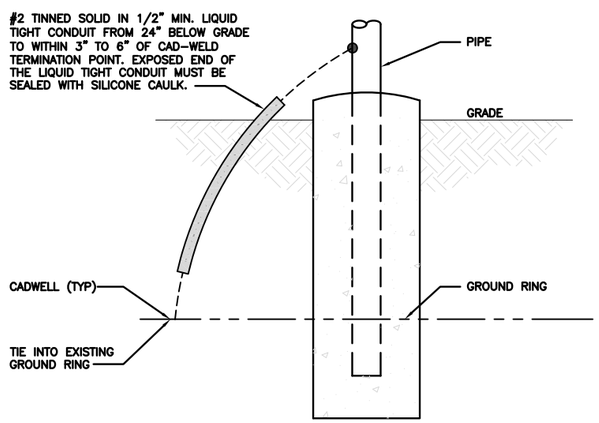

TRANSITIONING GROUND DETAIL | NO SCALE | 4

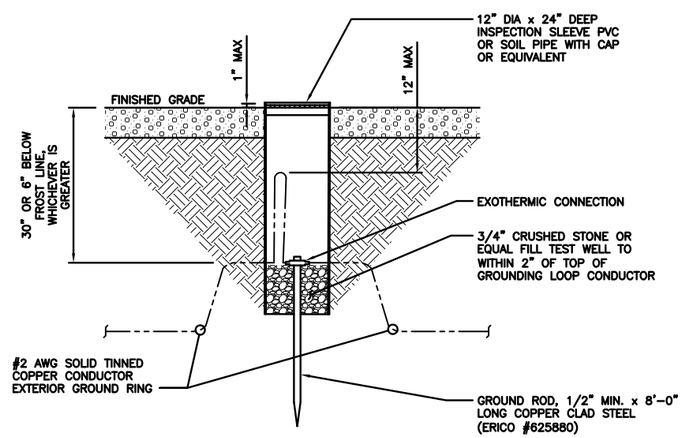

TYPICAL TEST GROUND ROD WITH INSPECTION SLEEVE | NO SCALE | 5

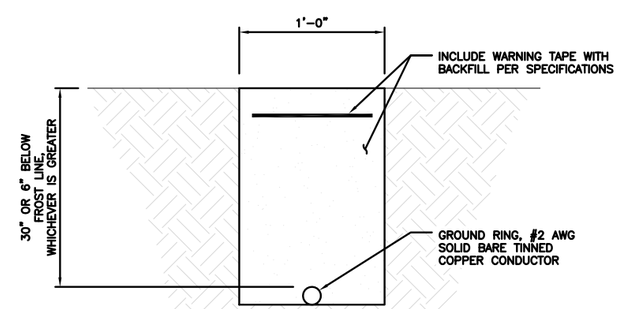

TYPICAL GROUND RING TRENCH | NO SCALE | 6

dish wireless.
5701 SOUTH SANTA FE DRIVE
LITTLETON, CO 80120

CROWN CASTLE
2000 CORPORATE DRIVE
CANONSBURG, PA 15317

INFINIGY
FROM ZERO TO INFINIGY
the solutions are endless
2500 W. HIGGINS RD. SUITE 500 | HOFFMAN ESTATES, IL 60169
PHONE: 847-648-4068 | FAX: 518-690-0793
WWW.INFINIGY.COM

STATE OF CONNECTICUT
SHUHEI SAKANOUE
34916
LICENSED PROFESSIONAL ENGINEER
8/19/2021

DRAWN BY:	CHECKED BY:	APPROVED BY:
RCD	SS	CJW

RFDS REV #: N/A

CONSTRUCTION DOCUMENTS

SUBMITTALS

REV	DATE	DESCRIPTION
0	05/11/2021	FINAL
1	06/24/2021	FINAL
2	8/19/2021	TOWER ELEV UPDATED

A&E PROJECT NUMBER
2039-Z5555C

DISH WIRELESS, LLC.
PROJECT INFORMATION
BOBDL00054A
NHV 031B 943108
197 NORTH CHESTNUT HILL ROAD
KILLINGWORTH, CT 06419

SHEET TITLE
GROUNDING DETAILS

SHEET NUMBER
G-2

1. EXOTHERMIC WELD (2) TWO, #2 AWG BARE TINNED SOLID COPPER CONDUCTORS TO GROUND BAR. ROUTE CONDUCTORS TO BURIED GROUND RING AND PROVIDE PARALLEL EXOTHERMIC WELD.
2. ALL EXTERIOR GROUNDING HARDWARE SHALL BE STAINLESS STEEL 3/8" DIAMETER OR LARGER. ALL HARDWARE 18-8 STAINLESS STEEL INCLUDING LOCK WASHERS, COAT ALL SURFACES WITH AN ANTI-OXIDANT COMPOUND BEFORE MATING.
3. FOR GROUND BOND TO STEEL ONLY: COAT ALL SURFACES WITH AN ANTI-OXIDANT COMPOUND BEFORE MATING.
4. DO NOT INSTALL CABLE GROUNDING KIT AT A BEND AND ALWAYS DIRECT GROUND CONDUCTOR DOWN TO GROUNDING BUS.
5. NUT & WASHER SHALL BE PLACED ON THE FRONT SIDE OF THE GROUND BAR AND BOLTED ON THE BACK SIDE.
6. ALL GROUNDING PARTS AND EQUIPMENT TO BE SUPPLIED AND INSTALLED BY CONTRACTOR.
7. THE CONTRACTOR SHALL BE RESPONSIBLE FOR INSTALLING ADDITIONAL GROUND BAR AS REQUIRED.
8. ENSURE THE WIRE INSULATION TERMINATION IS WITHIN 1/8" OF THE BARREL (NO SHINERS).

TYPICAL GROUNDING NOTES | NO SCALE | 1

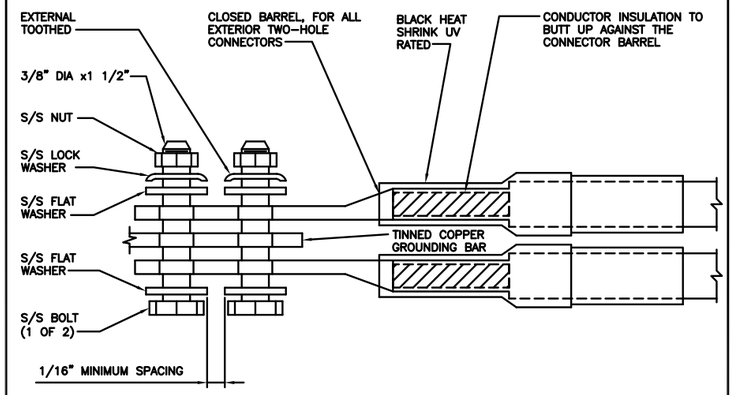

TYPICAL EXTERIOR TWO HOLE LUG | NO SCALE | 2

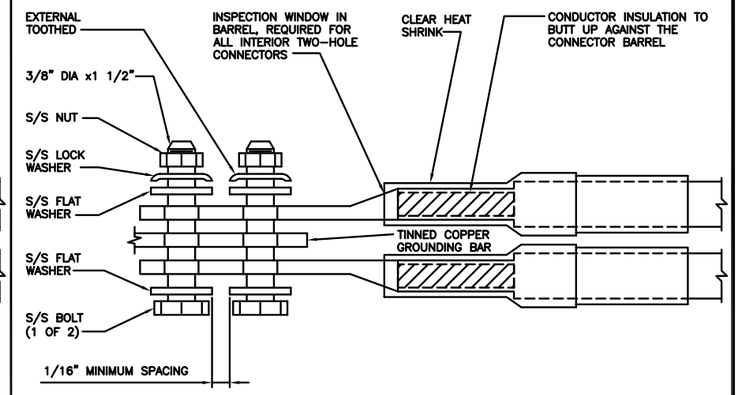

TYPICAL INTERIOR TWO HOLE LUG | NO SCALE | 3

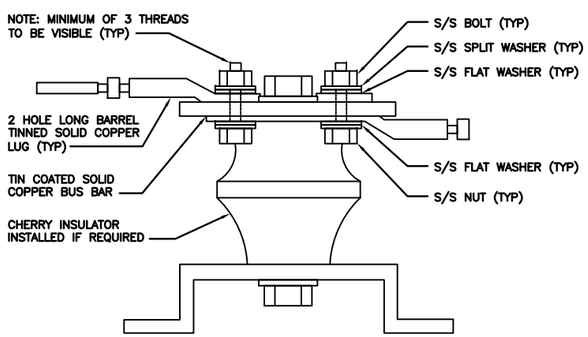

LUG DETAIL | NO SCALE | 4

NOT USED | NO SCALE | 5

NOT USED | NO SCALE | 6

NOT USED | NO SCALE | 7

NOT USED | NO SCALE | 8

NOT USED | NO SCALE | 9

dish wireless.
5701 SOUTH SANTA FE DRIVE
LITTLETON, CO 80120

CROWN CASTLE
2000 CORPORATE DRIVE
CANONSBURG, PA 15317

INFINIGY
FROM ZERO TO INFINIGY
the solutions are endless
2500 W. HIGGINS RD. SUITE 500 | HOFFMAN ESTATES, IL 60169
PHONE: 847-648-4068 | FAX: 518-690-0793
WWW.INFINIGY.COM

STATE OF CONNECTICUT
SHUHEI SAKANOUE
34916
LICENSED PROFESSIONAL ENGINEER
8/19/2021

DRAWN BY:	CHECKED BY:	APPROVED BY:
RCD	SS	CJW

RFDS REV #: N/A

CONSTRUCTION DOCUMENTS

SUBMITTALS

REV	DATE	DESCRIPTION
0	05/11/2021	FINAL
1	06/24/2021	FINAL
2	8/19/2021	TOWER ELEV UPDATED

A&E PROJECT NUMBER
2039-Z5555C

DISH WIRELESS, LLC.
PROJECT INFORMATION
BOBDL00054A
NHV 031B 943108
197 NORTH CHESTNUT HILL ROAD
KILLINGWORTH, CT 06419

SHEET TITLE
GROUNDING DETAILS

SHEET NUMBER
G-3

RF JUMPER COLOR CODING

3/4" TAPE WIDTHS WITH 3/4" SPACING

LOW-BAND RRH –
(600MHz N71 BASEBAND) +
(850MHz N26 BAND) +
(700MHz N29 BAND) – OPTIONAL PER MARKET

ADD FREQUENCY COLOR TO SECTOR BAND
(CBRS WILL USE YELLOW BANDS)

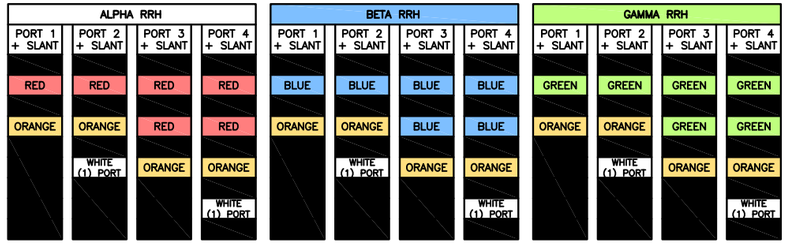

MID-BAND RRH –
(AWS BANDS N66+N70)

ADD FREQUENCY COLOR TO SECTOR BAND
(CBRS WILL USE YELLOW BANDS)

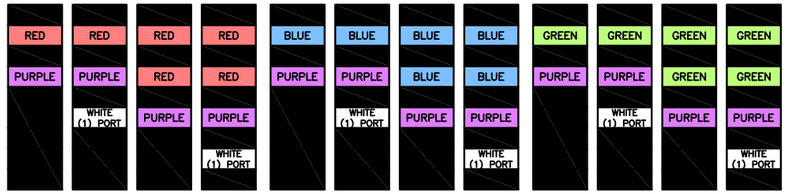

HYBRID/DISCREET CABLES

INCLUDE SECTOR BANDS BEING SUPPORTED AM LONG WITH FREQUENCY BANDS

EXAMPLE 1 – HYBRID, OR DISCREET, SUPPORTS ALL SECTORS, BOTH LOW-BANDS AND MID-BANDS

EXAMPLE 2 – HYBRID, OR DISCREET, SUPPORTS CBRS ONLY, ALL SECTORS

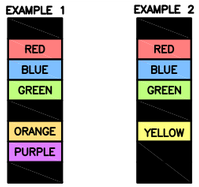

HYBRID/DISCREET CABLES

LOW-BAND RRH FIBER CABLES HAVE SECTOR STRIPE ONLY

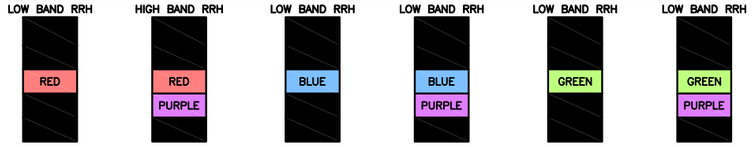

POWER CABLES TO RRHs

LOW-BAND RRH POWER CABLES HAVE SECTOR STRIPE ONLY

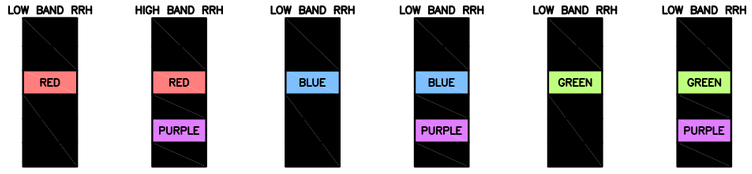

RET MOTORS AT ANTENNAS

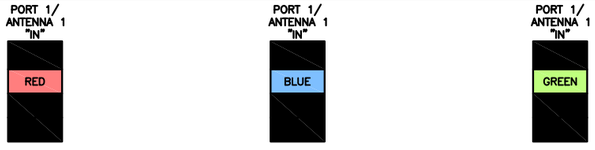

MICROWAVE RADIO LINKS

LINKS WILL HAVE A 1.5–2 INCH WHITE WRAP WITH THE AZIMUTH COLOR OVERLAPPING IN THE MIDDLE. ADD ADDITIONAL SECTOR COLOR BANDS FOR EACH ADDITIONAL MW RADIO.

MICROWAVE CABINETS WILL REQUIRE P-TOUCH LABELS INSIDE THE CABINET TO IDENTIFY THE LOCAL AND REMOTE SITE ID'S.

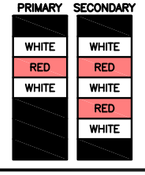

RF CABLE COLOR CODES | NO SCALE | 1

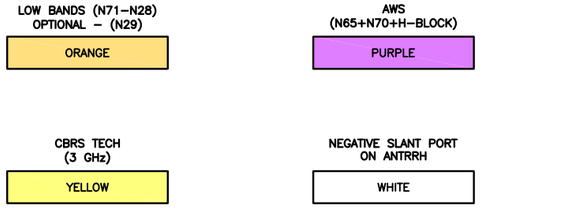

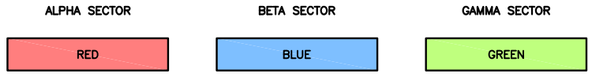

COLOR IDENTIFIER | NO SCALE | 2

NOT USED | NO SCALE | 3

NOT USED | NO SCALE | 4

dish wireless.
5701 SOUTH SANTA FE DRIVE
LITTLETON, CO 80120

CROWN CASTLE
2000 CORPORATE DRIVE
CANONSBURG, PA 15317

INFINIGY
FROM ZERO TO INFINIGY
the solutions are endless
2500 W. HIGGINS RD. SUITE 500 | HOFFMAN ESTATES, IL 60169
PHONE: 847-648-4068 | FAX: 518-690-0793
WWW.INFINIGY.COM

STATE OF CONNECTICUT
SHUHEI SAKANOUE
34916
LICENSED PROFESSIONAL ENGINEER
8/19/2021

DRAWN BY:	CHECKED BY:	APPROVED BY:
RCD	SS	CJW

RFDS REV #: N/A

CONSTRUCTION DOCUMENTS

SUBMITTALS

REV	DATE	DESCRIPTION
0	05/11/2021	FINAL
1	06/24/2021	FINAL
2	8/19/2021	TOWER ELEV UPDATED

A&E PROJECT NUMBER
2039-Z5555C

DISH WIRELESS, LLC.
PROJECT INFORMATION
BOBDL00054A
NHV 031B 943108
197 NORTH CHESTNUT HILL ROAD
KILLINGWORTH, CT 06419

SHEET TITLE
RF
CABLE COLOR CODE

SHEET NUMBER
RF-1

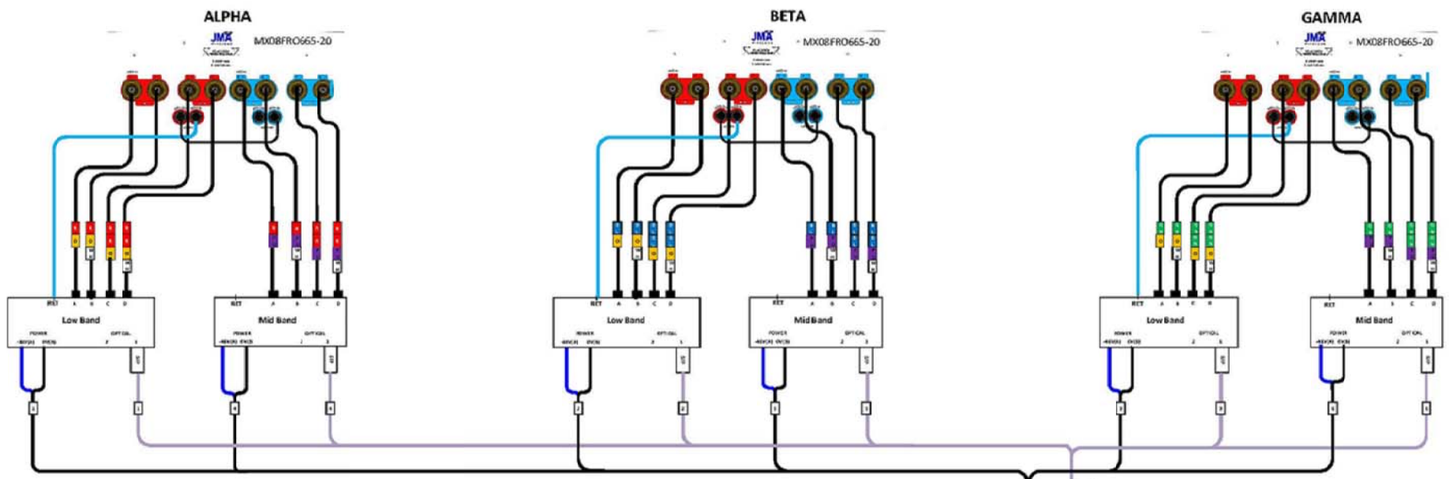

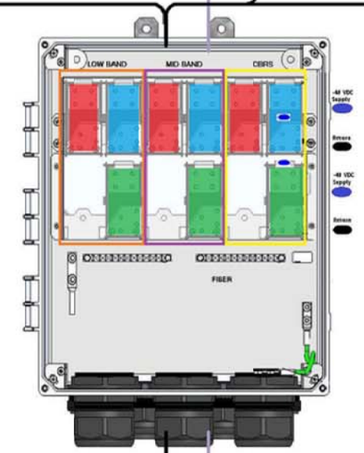

Fiber Patch Panel

Bottom Row	Pair 1	Pair 2	Pair 3	Pair 10	Open	Open
Middle Row	Pair 4	Pair 5	Pair 6	Pair 11	Open	Open
Top Row	Pair 7	Pair 8	Pair 9	Pair 12	Open	Open

CSR NCS540

Port	Interface	Description
0	Gi0/0/0/0	SiteBoss
1	Gi0/0/0/1	CBRS - Alpha
2	Gi0/0/0/2	CBRS - Beta
3	Gi0/0/0/3	CBRS - Gamma
4	Te0/0/0/4	Fujitsu Low-Band RU - Alpha
5	Te0/0/0/5	Fujitsu Mid-Band RU - Alpha
6	Te0/0/0/6	Fujitsu Low-Band RU - Beta
7	Te0/0/0/7	Fujitsu Mid-Band RU - Beta
8	Te0/0/0/8	Fujitsu Low-Band RU - Gamma
9	Te0/0/0/9	Fujitsu Mid-Band RU - Gamma
10	Te0/0/0/10	Fixed Wifi
11	Te0/0/0/11	Fixed Wifi
12	Te0/0/0/12	Fixed Wifi
13	Te0/0/0/13	Fixed Wifi
14	Te0/0/0/14	CBRS1
15	Te0/0/0/15	CBRS2
16	Te0/0/0/16	CBRS3
17	Gi0/0/0/17	SM1 - BMC
18	Gi0/0/0/18	SM2 - BMC
19	Te0/0/0/19	SM1 - Data 1
20	Te0/0/0/20	SM1 - Data 2
21	Te0/0/0/21	SM2 - Data 1
22	Te0/0/0/22	SM2 - Data 2
23	Te0/0/0/23	Reserved Uplink (EDC, LDC)
24	Te0/0/0/24	Blank/Future
25	Te0/0/0/25	Blank/Future
26	Te0/0/0/26	Fiber NIU
27	Te0/0/0/27	Fiber NIU
28	Te0/0/0/28	Blank/Future
29	Te0/0/0/29	Blank/Future

top

bottom

Bottom OVP Layout

Circuit 1	Alpha Low Band
Circuit 2	Beta Low Band
Circuit 3	Gamma Low Band
Circuit 4	Alpha Mid Band
Circuit 5	Beta Mid Band
Circuit 6	Gamma Mid Band
Circuit 7	Alpha CBRS
Circuit 8	Beta CBRS
Circuit 9	Gamma CBRS
Circuit 10	Open
Circuit 11	Open
Circuit 12	Open

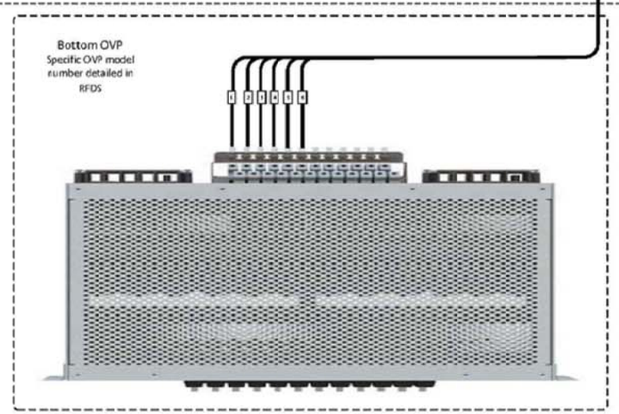

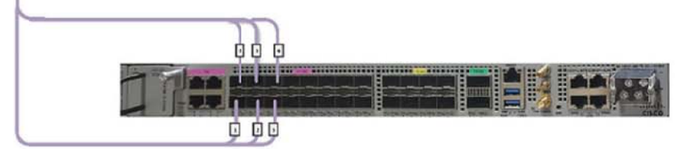

5G plumbing diagram JMA MX08FR0665-20
2-2-2(LB+MB)

Quan Lu
9-Jan-2023

PLUMBING DIAGRAM

NO SCALE | 1

dish wireless.
5701 SOUTH SANTA FE DRIVE
LITTLETON, CO 80120

CROWN CASTLE
2000 CORPORATE DRIVE
CANONSBURG, PA 15317

INFINIGY
FROM ZERO TO INFINIGY
the solutions are endless
2500 W. HIGGINS RD. SUITE 500 |
HOFFMAN ESTATES, IL 60169
PHONE: 847-648-4068 | FAX: 518-690-0793
WWW.INFINIGY.COM

STATE OF CONNECTICUT
SHUHEI SAKANOUE
34916
LICENSED
PROFESSIONAL ENGINEER
8/19/2021

DRAWN BY:	CHECKED BY:	APPROVED BY:
RCD	SS	CJW

RFDS REV #: N/A

CONSTRUCTION DOCUMENTS

SUBMITTALS

REV	DATE	DESCRIPTION
0	05/11/2021	FINAL
1	06/24/2021	FINAL
2	8/19/2021	TOWER ELEV UPDATED

A&E PROJECT NUMBER
2039-Z5555C

DISH WIRELESS, LLC.
PROJECT INFORMATION
BOBDL00054A
NHV 031B 943108
197 NORTH CHESTNUT HILL ROAD
KILLINGWORTH, CT 06419

SHEET TITLE
RF
PLUMBING DIAGRAM

SHEET NUMBER
RF-2

EXOTHERMIC CONNECTION

MECHANICAL CONNECTION

CHEMICAL ELECTROLYTIC GROUNDING SYSTEM

TEST CHEMICAL ELECTROLYTIC GROUNDING SYSTEM — T

EXOTHERMIC WITH INSPECTION SLEEVE

GROUNDING BAR

GROUND ROD

TEST GROUND ROD WITH INSPECTION SLEEVE — T

SINGLE POLE SWITCH — $

DUPLEX RECEPTACLE

DUPLEX GFCI RECEPTACLE — GFCI

FLUORESCENT LIGHTING FIXTURE (2) TWO LAMPS 48–T8 — F

SMOKE DETECTION (DC) — SD

EMERGENCY LIGHTING (DC)

SECURITY LIGHT W/PHOTOCELL LITHONIA ALXW LED–1–25A400/51K–SR4–120–PE–DDBTXD

CHAIN LINK FENCE — X — X — X — X

WOOD/WROUGHT IRON FENCE

WALL STRUCTURE

LEASE AREA

PROPERTY LINE (PL)

SETBACKS

ICE BRIDGE

CABLE TRAY

WATER LINE — W — W — W — W — W

UNDERGROUND POWER — UGP — UGP — UGP — UGP — UGP

UNDERGROUND TELCO — UGT — UGT — UGT — UGT — UGT

OVERHEAD POWER — OHP — OHP — OHP — OHP

OVERHEAD TELCO — OHT — OHT — OHT — OHT

UNDERGROUND TELCO/POWER — UGT/P — UGT/P — UGT/P — UGT/P

ABOVE GROUND POWER — AGP — AGP — AGP — AGP — AGP

ABOVE GROUND TELCO — AGT — AGT — AGT — AGT — AGT

ABOVE GROUND TELCO/POWER — AGT/P — AGT/P — AGT/P — AGT/P

WORKPOINT — W.P.

SECTION REFERENCE — XX / X–X

DETAIL REFERENCE — XX / X–X

LEGEND

AB	ANCHOR BOLT
ABV	ABOVE
AC	ALTERNATING CURRENT
ADDL	ADDITIONAL
AFF	ABOVE FINISHED FLOOR
AFG	ABOVE FINISHED GRADE
AGL	ABOVE GROUND LEVEL
AIC	AMPERAGE INTERRUPTION CAPACITY
ALUM	ALUMINUM
ALT	ALTERNATE
ANT	ANTENNA
APPROX	APPROXIMATE
ARCH	ARCHITECTURAL
ATS	AUTOMATIC TRANSFER SWITCH
AWG	AMERICAN WIRE GAUGE
BATT	BATTERY
BLDG	BUILDING
BLK	BLOCK
BLKG	BLOCKING
BM	BEAM
BTC	BARE TINNED COPPER CONDUCTOR
BOF	BOTTOM OF FOOTING
CAB	CABINET
CANT	CANTILEVERED
CHG	CHARGING
CLG	CEILING
CLR	CLEAR
COL	COLUMN
COMM	COMMON
CONC	CONCRETE
CONSTR	CONSTRUCTION
DBL	DOUBLE
DC	DIRECT CURRENT
DEPT	DEPARTMENT
DF	DOUGLAS FIR
DIA	DIAMETER
DIAG	DIAGONAL
DIM	DIMENSION
DWG	DRAWING
DWL	DOWEL
EA	EACH
EC	ELECTRICAL CONDUCTOR
EL.	ELEVATION
ELEC	ELECTRICAL
EMT	ELECTRICAL METALLIC TUBING
ENG	ENGINEER
EQ	EQUAL
EXP	EXPANSION
EXT	EXTERIOR
EW	EACH WAY
FAB	FABRICATION
FF	FINISH FLOOR
FG	FINISH GRADE
FIF	FACILITY INTERFACE FRAME
FIN	FINISH(ED)
FLR	FLOOR
FDN	FOUNDATION
FOC	FACE OF CONCRETE
FOM	FACE OF MASONRY
FOS	FACE OF STUD
FOW	FACE OF WALL
FS	FINISH SURFACE
FT	FOOT
FTG	FOOTING
GA	GAUGE
GEN	GENERATOR
GFCI	GROUND FAULT CIRCUIT INTERRUPTER
GLB	GLUE LAMINATED BEAM
GLV	GALVANIZED
GPS	GLOBAL POSITIONING SYSTEM
GND	GROUND
GSM	GLOBAL SYSTEM FOR MOBILE
HDG	HOT DIPPED GALVANIZED
HDR	HEADER
HGR	HANGER
HVAC	HEAT/VENTILATION/AIR CONDITIONING
HT	HEIGHT
IGR	INTERIOR GROUND RING
IN	INCH
INT	INTERIOR
LB(S)	POUND(S)
LF	LINEAR FEET
LTE	LONG TERM EVOLUTION
MAS	MASONRY
MAX	MAXIMUM
MB	MACHINE BOLT
MECH	MECHANICAL
MFR	MANUFACTURER
MGB	MASTER GROUND BAR
MIN	MINIMUM
MISC	MISCELLANEOUS
MTL	METAL
MTS	MANUAL TRANSFER SWITCH
MW	MICROWAVE
NEC	NATIONAL ELECTRIC CODE
NM	NEWTON METERS
NO.	NUMBER
#	NUMBER
NTS	NOT TO SCALE
OC	ON–CENTER
OSHA	OCCUPATIONAL SAFETY AND HEALTH ADMINISTRATION
OPNG	OPENING
P/C	PRECAST CONCRETE
PCS	PERSONAL COMMUNICATION SERVICES
PCU	PRIMARY CONTROL UNIT
PRC	PRIMARY RADIO CABINET
PP	POLARIZING PRESERVING
PSF	POUNDS PER SQUARE FOOT
PSI	POUNDS PER SQUARE INCH
PT	PRESSURE TREATED
PWR	POWER CABINET
QTY	QUANTITY
RAD	RADIUS
RECT	RECTIFIER
REF	REFERENCE
REINF	REINFORCEMENT
REQ'D	REQUIRED
RET	REMOTE ELECTRIC TILT
RF	RADIO FREQUENCY
RMC	RIGID METALLIC CONDUIT
RRH	REMOTE RADIO HEAD
RRU	REMOTE RADIO UNIT
RWY	RACEWAY
SCH	SCHEDULE
SHT	SHEET
SIAD	SMART INTEGRATED ACCESS DEVICE
SIM	SIMILAR
SPEC	SPECIFICATION
SQ	SQUARE
SS	STAINLESS STEEL
STD	STANDARD
STL	STEEL
TEMP	TEMPORARY
THK	THICKNESS
TMA	TOWER MOUNTED AMPLIFIER
TN	TOE NAIL
TOA	TOP OF ANTENNA
TOC	TOP OF CURB
TOF	TOP OF FOUNDATION
TOP	TOP OF PLATE (PARAPET)
TOS	TOP OF STEEL
TOW	TOP OF WALL
TVSS	TRANSIENT VOLTAGE SURGE SUPPRESSION
TYP	TYPICAL
UG	UNDERGROUND
UL	UNDERWRITERS LABORATORY
UNO	UNLESS NOTED OTHERWISE
UMTS	UNIVERSAL MOBILE TELECOMMUNICATIONS SYSTEM
UPS	UNITERRUPTIBLE POWER SYSTEM (DC POWER PLANT)
VIF	VERIFIED IN FIELD
W	WIDE
W/	WITH
WD	WOOD
WP	WEATHERPROOF
WT	WEIGHT

ABBREVIATIONS

dish wireless.
5701 SOUTH SANTA FE DRIVE
LITTLETON, CO 80120

CROWN CASTLE
2000 CORPORATE DRIVE
CANONSBURG, PA 15317

INFINIGY
FROM ZERO TO INFINIGY
the solutions are endless
2500 W. HIGGINS RD. SUITE 500 | HOFFMAN ESTATES, IL 60169
PHONE: 847-648-4068 | FAX: 518-690-0793
WWW.INFINIGY.COM

STATE OF CONNECTICUT
SHUHEI SAKANOUE
34916
LICENSED PROFESSIONAL ENGINEER
8/19/2021

DRAWN BY:	CHECKED BY:	APPROVED BY:
RCD	SS	CJW

RFDS REV #: N/A

CONSTRUCTION DOCUMENTS

SUBMITTALS

REV	DATE	DESCRIPTION
0	05/11/2021	FINAL
1	06/24/2021	FINAL
2	8/19/2021	TOWER ELEV UPDATED

A&E PROJECT NUMBER
2039–Z5555C

DISH WIRELESS, LLC.
PROJECT INFORMATION
BOBDL00054A
NHV 031B 943108
197 NORTH CHESTNUT HILL ROAD
KILLINGWORTH, CT 06419

SHEET TITLE
LEGEND AND ABBREVIATIONS

SHEET NUMBER
GN-1

SITE ACTIVITY REQUIREMENTS:

1. NOTICE TO PROCEED – NO WORK SHALL COMMENCE PRIOR TO CONTRACTOR RECEIVING A WRITTEN NOTICE TO PROCEED (NTP) AND THE ISSUANCE OF A PURCHASE ORDER. PRIOR TO ACCESSING/ENTERING THE SITE YOU MUST CONTACT THE DISH WIRELESS, LLC. AND TOWER OWNER NOC & THE DISH WIRELESS, LLC. AND TOWER OWNER CONSTRUCTION MANAGER.

2. "LOOK UP" – DISH WIRELESS, LLC. AND TOWER OWNER SAFETY CLIMB REQUIREMENT:

THE INTEGRITY OF THE SAFETY CLIMB AND ALL COMPONENTS OF THE CLIMBING FACILITY SHALL BE CONSIDERED DURING ALL STAGES OF DESIGN, INSTALLATION, AND INSPECTION. TOWER MODIFICATION, MOUNT REINFORCEMENTS, AND/OR EQUIPMENT INSTALLATIONS SHALL NOT COMPROMISE THE INTEGRITY OR FUNCTIONAL USE OF THE SAFETY CLIMB OR ANY COMPONENTS OF THE CLIMBING FACILITY ON THE STRUCTURE. THIS SHALL INCLUDE, BUT NOT BE LIMITED TO: PINCHING OF THE WIRE ROPE, BENDING OF THE WIRE ROPE FROM ITS SUPPORTS, DIRECT CONTACT OR CLOSE PROXIMITY TO THE WIRE ROPE WHICH MAY CAUSE FRICTIONAL WEAR, IMPACT TO THE ANCHORAGE POINTS IN ANY WAY, OR TO IMPEDE/BLOCK ITS INTENDED USE. ANY COMPROMISED SAFETY CLIMB, INCLUDING EXISTING CONDITIONS MUST BE TAGGED OUT AND REPORTED TO YOUR DISH WIRELESS, LLC. AND DISH WIRELESS, LLC. AND TOWER OWNER POC OR CALL THE NOC TO GENERATE A SAFETY CLIMB MAINTENANCE AND CONTRACTOR NOTICE TICKET.

3. PRIOR TO THE START OF CONSTRUCTION, ALL REQUIRED JURISDICTIONAL PERMITS SHALL BE OBTAINED. THIS INCLUDES, BUT IS NOT LIMITED TO, BUILDING, ELECTRICAL, MECHANICAL, FIRE, FLOOD ZONE, ENVIRONMENTAL, AND ZONING. AFTER ONSITE ACTIVITIES AND CONSTRUCTION ARE COMPLETED, ALL REQUIRED PERMITS SHALL BE SATISFIED AND CLOSED OUT ACCORDING TO LOCAL JURISDICTIONAL REQUIREMENTS.

4. ALL CONSTRUCTION MEANS AND METHODS; INCLUDING BUT NOT LIMITED TO, ERECTION PLANS, RIGGING PLANS, CLIMBING PLANS, AND RESCUE PLANS SHALL BE THE RESPONSIBILITY OF THE GENERAL CONTRACTOR RESPONSIBLE FOR THE EXECUTION OF THE WORK CONTAINED HEREIN, AND SHALL MEET ANSI/ASSE A10.48 (LATEST EDITION); FEDERAL, STATE, AND LOCAL REGULATIONS; AND ANY APPLICABLE INDUSTRY CONSENSUS STANDARDS RELATED TO THE CONSTRUCTION ACTIVITIES BEING PERFORMED. ALL RIGGING PLANS SHALL ADHERE TO ANSI/ASSE A10.48 (LATEST EDITION) AND DISH WIRELESS, LLC. AND TOWER OWNER STANDARDS, INCLUDING THE REQUIRED INVOLVEMENT OF A QUALIFIED ENGINEER FOR CLASS IV CONSTRUCTION, TO CERTIFY THE SUPPORTING STRUCTURE(S) IN ACCORDANCE WITH ANSI/TIA–322 (LATEST EDITION).

5. ALL SITE WORK TO COMPLY WITH DISH WIRELESS, LLC. AND TOWER OWNER INSTALLATION STANDARDS FOR CONSTRUCTION ACTIVITIES ON DISH WIRELESS, LLC. AND TOWER OWNER TOWER SITE AND LATEST VERSION OF ANSI/TIA–1019–A–2012 "STANDARD FOR INSTALLATION, ALTERATION, AND MAINTENANCE OF ANTENNA SUPPORTING STRUCTURES AND ANTENNAS."

6. IF THE SPECIFIED EQUIPMENT CAN NOT BE INSTALLED AS SHOWN ON THESE DRAWINGS, THE CONTRACTOR SHALL PROPOSE AN ALTERNATIVE INSTALLATION FOR APPROVAL BY DISH WIRELESS, LLC. AND TOWER OWNER PRIOR TO PROCEEDING WITH ANY SUCH CHANGE OF INSTALLATION.

7. ALL MATERIALS FURNISHED AND INSTALLED SHALL BE IN STRICT ACCORDANCE WITH ALL APPLICABLE CODES, REGULATIONS AND ORDINANCES. CONTRACTOR SHALL ISSUE ALL APPROPRIATE NOTICES AND COMPLY WITH ALL LAWS, ORDINANCES, RULES, REGULATIONS AND LAWFUL ORDERS OF ANY PUBLIC AUTHORITY REGARDING THE PERFORMANCE OF THE WORK. ALL WORK CARRIED OUT SHALL COMPLY WITH ALL APPLICABLE MUNICIPAL AND UTILITY COMPANY SPECIFICATIONS AND LOCAL JURISDICTIONAL CODES, ORDINANCES AND APPLICABLE REGULATIONS.

8. THE CONTRACTOR SHALL INSTALL ALL EQUIPMENT AND MATERIALS IN ACCORDANCE WITH MANUFACTURER'S RECOMMENDATIONS UNLESS SPECIFICALLY STATED OTHERWISE.

9. THE CONTRACTOR SHALL CONTACT UTILITY LOCATING SERVICES INCLUDING PRIVATE LOCATES SERVICES PRIOR TO THE START OF CONSTRUCTION.

10. ALL EXISTING ACTIVE SEWER, WATER, GAS, ELECTRIC AND OTHER UTILITIES WHERE ENCOUNTERED IN THE WORK, SHALL BE PROTECTED AT ALL TIMES AND WHERE REQUIRED FOR THE PROPER EXECUTION OF THE WORK, SHALL BE RELOCATED AS DIRECTED BY CONTRACTOR. EXTREME CAUTION SHOULD BE USED BY THE CONTRACTOR WHEN EXCAVATING OR DRILLING PIERS AROUND OR NEAR UTILITIES. CONTRACTOR SHALL PROVIDE SAFETY TRAINING FOR THE WORKING CREW. THIS WILL INCLUDE BUT NOT BE LIMITED TO A) FALL PROTECTION B) CONFINED SPACE C) ELECTRICAL SAFETY D) TRENCHING AND EXCAVATION E) CONSTRUCTION SAFETY PROCEDURES.

11. ALL SITE WORK SHALL BE AS INDICATED ON THE STAMPED CONSTRUCTION DRAWINGS AND DISH PROJECT SPECIFICATIONS, LATEST APPROVED REVISION.

12. CONTRACTOR SHALL KEEP THE SITE FREE FROM ACCUMULATING WASTE MATERIAL, DEBRIS, AND TRASH AT THE COMPLETION OF THE WORK. IF NECESSARY, RUBBISH, STUMPS, DEBRIS, STICKS, STONES AND OTHER REFUSE SHALL BE REMOVED FROM THE SITE AND DISPOSED OF LEGALLY.

13. ALL EXISTING INACTIVE SEWER, WATER, GAS, ELECTRIC AND OTHER UTILITIES, WHICH INTERFERE WITH THE EXECUTION OF THE WORK, SHALL BE REMOVED AND/OR CAPPED, PLUGGED OR OTHERWISE DISCONTINUED AT POINTS WHICH WILL NOT INTERFERE WITH THE EXECUTION OF THE WORK, SUBJECT TO THE APPROVAL OF DISH WIRELESS, LLC. AND TOWER OWNER, AND/OR LOCAL UTILITIES.

14. THE CONTRACTOR SHALL PROVIDE SITE SIGNAGE IN ACCORDANCE WITH THE TECHNICAL SPECIFICATION FOR SITE SIGNAGE REQUIRED BY LOCAL JURISDICTION AND SIGNAGE REQUIRED ON INDIVIDUAL PIECES OF EQUIPMENT, ROOMS, AND SHELTERS.

15. THE SITE SHALL BE GRADED TO CAUSE SURFACE WATER TO FLOW AWAY FROM THE CARRIER'S EQUIPMENT AND TOWER AREAS.

16. THE SUB GRADE SHALL BE COMPACTED AND BROUGHT TO A SMOOTH UNIFORM GRADE PRIOR TO FINISHED SURFACE APPLICATION.

17. THE AREAS OF THE OWNERS PROPERTY DISTURBED BY THE WORK AND NOT COVERED BY THE TOWER, EQUIPMENT OR DRIVEWAY, SHALL BE GRADED TO A UNIFORM SLOPE, AND STABILIZED TO PREVENT EROSION AS SPECIFIED ON THE CONSTRUCTION DRAWINGS AND/OR PROJECT SPECIFICATIONS.

18. CONTRACTOR SHALL MINIMIZE DISTURBANCE TO EXISTING SITE DURING CONSTRUCTION. EROSION CONTROL MEASURES, IF REQUIRED DURING CONSTRUCTION, SHALL BE IN CONFORMANCE WITH THE LOCAL GUIDELINES FOR EROSION AND SEDIMENT CONTROL.

19. THE CONTRACTOR SHALL PROTECT EXISTING IMPROVEMENTS, PAVEMENTS, CURBS, LANDSCAPING AND STRUCTURES. ANY DAMAGED PART SHALL BE REPAIRED AT CONTRACTOR'S EXPENSE TO THE SATISFACTION OF OWNER.

20. CONTRACTOR SHALL LEGALLY AND PROPERLY DISPOSE OF ALL SCRAP MATERIALS SUCH AS COAXIAL CABLES AND OTHER ITEMS REMOVED FROM THE EXISTING FACILITY. ANTENNAS AND RADIOS REMOVED SHALL BE RETURNED TO THE OWNER'S DESIGNATED LOCATION.

21. CONTRACTOR SHALL LEAVE PREMISES IN CLEAN CONDITION. TRASH AND DEBRIS SHOULD BE REMOVED FROM SITE ON A DAILY BASIS.

22. NO FILL OR EMBANKMENT MATERIAL SHALL BE PLACED ON FROZEN GROUND. FROZEN MATERIALS, SNOW OR ICE SHALL NOT BE PLACED IN ANY FILL OR EMBANKMENT.

GENERAL NOTES:

1.FOR THE PURPOSE OF CONSTRUCTION DRAWING, THE FOLLOWING DEFINITIONS SHALL APPLY:

CONTRACTOR:GENERAL CONTRACTOR RESPONSIBLE FOR CONSTRUCTION

CARRIER:DISH WIRELESS, LLC.

TOWER OWNER:TOWER OWNER

2. THESE DRAWINGS HAVE BEEN PREPARED USING STANDARDS OF PROFESSIONAL CARE AND COMPLETENESS NORMALLY EXERCISED UNDER SIMILAR CIRCUMSTANCES BY REPUTABLE ENGINEERS IN THIS OR SIMILAR LOCALITIES. IT IS ASSUMED THAT THE WORK DEPICTED WILL BE PERFORMED BY AN EXPERIENCED CONTRACTOR AND/OR WORKPEOPLE WHO HAVE A WORKING KNOWLEDGE OF THE APPLICABLE CODE STANDARDS AND REQUIREMENTS AND OF INDUSTRY ACCEPTED STANDARD GOOD PRACTICE. AS NOT EVERY CONDITION OR ELEMENT IS (OR CAN BE) EXPLICITLY SHOWN ON THESE DRAWINGS, THE CONTRACTOR SHALL USE INDUSTRY ACCEPTED STANDARD GOOD PRACTICE FOR MISCELLANEOUS WORK NOT EXPLICITLY SHOWN.

3. THESE DRAWINGS REPRESENT THE FINISHED STRUCTURE. THEY DO NOT INDICATE THE MEANS OR METHODS OF CONSTRUCTION. THE CONTRACTOR SHALL BE SOLELY RESPONSIBLE FOR THE CONSTRUCTION MEANS, METHODS, TECHNIQUES, SEQUENCES, AND PROCEDURES. THE CONTRACTOR SHALL PROVIDE ALL MEASURES NECESSARY FOR PROTECTION OF LIFE AND PROPERTY DURING CONSTRUCTION. SUCH MEASURES SHALL INCLUDE, BUT NOT BE LIMITED TO, BRACING, FORMWORK, SHORING, ETC. SITE VISITS BY THE ENGINEER OR HIS REPRESENTATIVE WILL NOT INCLUDE INSPECTION OF THESE ITEMS AND IS FOR STRUCTURAL OBSERVATION OF THE FINISHED STRUCTURE ONLY.

4. NOTES AND DETAILS IN THE CONSTRUCTION DRAWINGS SHALL TAKE PRECEDENCE OVER GENERAL NOTES AND TYPICAL DETAILS. WHERE NO DETAILS ARE SHOWN, CONSTRUCTION SHALL CONFORM TO SIMILAR WORK ON THE PROJECT, AND/OR AS PROVIDED FOR IN THE CONTRACT DOCUMENTS. WHERE DISCREPANCIES OCCUR BETWEEN PLANS, DETAILS, GENERAL NOTES, AND SPECIFICATIONS, THE GREATER, MORE STRICT REQUIREMENTS, SHALL GOVERN. IF FURTHER CLARIFICATION IS REQUIRED CONTACT THE ENGINEER OF RECORD.

5. SUBSTANTIAL EFFORT HAS BEEN MADE TO PROVIDE ACCURATE DIMENSIONS AND MEASUREMENTS ON THE DRAWINGS TO ASSIST IN THE FABRICATION AND/OR PLACEMENT OF CONSTRUCTION ELEMENTS BUT IT IS THE SOLE RESPONSIBILITY OF THE CONTRACTOR TO FIELD VERIFY THE DIMENSIONS, MEASUREMENTS, AND/OR CLEARANCES SHOWN IN THE CONSTRUCTION DRAWINGS PRIOR TO FABRICATION OR CUTTING OF ANY NEW OR EXISTING CONSTRUCTION ELEMENTS. IF IT IS DETERMINED THAT THERE ARE DISCREPANCIES AND/OR CONFLICTS WITH THE CONSTRUCTION DRAWINGS THE ENGINEER OF RECORD IS TO BE NOTIFIED AS SOON AS POSSIBLE.

6. PRIOR TO THE SUBMISSION OF BIDS, THE BIDDING CONTRACTOR SHALL VISIT THE CELL SITE TO FAMILIARIZE WITH THE EXISTING CONDITIONS AND TO CONFIRM THAT THE WORK CAN BE ACCOMPLISHED AS SHOWN ON THE CONSTRUCTION DRAWINGS. ANY DISCREPANCY FOUND SHALL BE BROUGHT TO THE ATTENTION OF CARRIER POC AND TOWER OWNER.

7. ALL MATERIALS FURNISHED AND INSTALLED SHALL BE IN STRICT ACCORDANCE WITH ALL APPLICABLE CODES, REGULATIONS AND ORDINANCES. CONTRACTOR SHALL ISSUE ALL APPROPRIATE NOTICES AND COMPLY WITH ALL LAWS, ORDINANCES, RULES, REGULATIONS AND LAWFUL ORDERS OF ANY PUBLIC AUTHORITY REGARDING THE PERFORMANCE OF THE WORK. ALL WORK CARRIED OUT SHALL COMPLY WITH ALL APPLICABLE MUNICIPAL AND UTILITY COMPANY SPECIFICATIONS AND LOCAL JURISDICTIONAL CODES, ORDINANCES AND APPLICABLE REGULATIONS.

8. UNLESS NOTED OTHERWISE, THE WORK SHALL INCLUDE FURNISHING MATERIALS, EQUIPMENT, APPURTENANCES AND LABOR NECESSARY TO COMPLETE ALL INSTALLATIONS AS INDICATED ON THE DRAWINGS.

9. THE CONTRACTOR SHALL INSTALL ALL EQUIPMENT AND MATERIALS IN ACCORDANCE WITH MANUFACTURER'S RECOMMENDATIONS UNLESS SPECIFICALLY STATED OTHERWISE.

10. IF THE SPECIFIED EQUIPMENT CAN NOT BE INSTALLED AS SHOWN ON THESE DRAWINGS, THE CONTRACTOR SHALL PROPOSE AN ALTERNATIVE INSTALLATION FOR APPROVAL BY THE CARRIER AND TOWER OWNER PRIOR TO PROCEEDING WITH ANY SUCH CHANGE OF INSTALLATION.

11. CONTRACTOR IS TO PERFORM A SITE INVESTIGATION, BEFORE SUBMITTING BIDS, TO DETERMINE THE BEST ROUTING OF ALL CONDUITS FOR POWER, AND TELCO AND FOR GROUNDING CABLES AS SHOWN IN THE POWER, TELCO, AND GROUNDING PLAN DRAWINGS.

12. THE CONTRACTOR SHALL PROTECT EXISTING IMPROVEMENTS, PAVEMENTS, CURBS, LANDSCAPING AND STRUCTURES. ANY DAMAGED PART SHALL BE REPAIRED AT CONTRACTOR'S EXPENSE TO THE SATISFACTION OF DISH WIRELESS, LLC. AND TOWER OWNER

13. CONTRACTOR SHALL LEGALLY AND PROPERLY DISPOSE OF ALL SCRAP MATERIALS SUCH AS COAXIAL CABLES AND OTHER ITEMS REMOVED FROM THE EXISTING FACILITY. ANTENNAS REMOVED SHALL BE RETURNED TO THE OWNER'S DESIGNATED LOCATION.

14. CONTRACTOR SHALL LEAVE PREMISES IN CLEAN CONDITION. TRASH AND DEBRIS SHOULD BE REMOVED FROM SITE ON A DAILY BASIS.

dish wireless.

5701 SOUTH SANTA FE DRIVE
LITTLETON, CO 80120

CROWN CASTLE

2000 CORPORATE DRIVE
CANONSBURG, PA 15317

INFINIGY
FROM ZERO TO INFINIGY
the solutions are endless
2500 W. HIGGINS RD. SUITE 500 |
HOFFMAN ESTATES, IL 60169
PHONE: 847-648-4068 | FAX: 518-690-0793
WWW.INFINIGY.COM

STATE OF CONNECTICUT
SHUHEI SAKANOUE
34916
LICENSED
PROFESSIONAL ENGINEER
8/19/2021

DRAWN BY:	CHECKED BY:	APPROVED BY:
RCD	SS	CJW

RFDS REV #: N/A

CONSTRUCTION DOCUMENTS

SUBMITTALS

REV	DATE	DESCRIPTION
0	05/11/2021	FINAL
1	06/24/2021	FINAL
2	8/19/2021	TOWER ELEV UPDATED

A&E PROJECT NUMBER
2039–Z5555C

DISH WIRELESS, LLC.
PROJECT INFORMATION
BOBDL00054A
NHV 031B 943108
197 NORTH CHESTNUT HILL ROAD
KILLINGWORTH, CT 06419

SHEET TITLE
GENERAL NOTES

SHEET NUMBER
GN-2

CONCRETE, FOUNDATIONS, AND REINFORCING STEEL:

1. ALL CONCRETE WORK SHALL BE IN ACCORDANCE WITH THE ACI 301, ACI 318, ACI 336, ASTM A184, ASTM A185 AND THE DESIGN AND CONSTRUCTION SPECIFICATION FOR CAST-IN-PLACE CONCRETE.

2. UNLESS NOTED OTHERWISE, SOIL BEARING PRESSURE USED FOR DESIGN OF SLABS AND FOUNDATIONS IS ASSUMED TO BE 1000 psf.

3. ALL CONCRETE SHALL HAVE A MINIMUM COMPRESSIVE STRENGTH (f'c) OF 3000 psi AT 28 DAYS, UNLESS NOTED OTHERWISE. NO MORE THAN 90 MINUTES SHALL ELAPSE FROM BATCH TIME TO TIME OF PLACEMENT UNLESS APPROVED BY THE ENGINEER OF RECORD. TEMPERATURE OF CONCRETE SHALL NOT EXCEED 90°f AT TIME OF PLACEMENT.

4. CONCRETE EXPOSED TO FREEZE-THAW CYCLES SHALL CONTAIN AIR ENTRAINING ADMIXTURES. AMOUNT OF AIR ENTRAINMENT TO BE BASED ON SIZE OF AGGREGATE AND F3 CLASS EXPOSURE (VERY SEVERE). CEMENT USED TO BE TYPE II PORTLAND CEMENT WITH A MAXIMUM WATER-TO-CEMENT RATIO (W/C) OF 0.45.

5. ALL STEEL REINFORCING SHALL CONFORM TO ASTM A615. ALL WELDED WIRE FABRIC (WWF) SHALL CONFORM TO ASTM A185. ALL SPLICES SHALL BE CLASS "B" TENSION SPLICES, UNLESS NOTED OTHERWISE. ALL HOOKS SHALL BE STANDARD 90 DEGREE HOOKS, UNLESS NOTED OTHERWISE. YIELD STRENGTH (Fy) OF STANDARD DEFORMED BARS ARE AS FOLLOWS:

#4 BARS AND SMALLER 40 ksi

#5 BARS AND LARGER 60 ksi

6. THE FOLLOWING MINIMUM CONCRETE COVER SHALL BE PROVIDED FOR REINFORCING STEEL UNLESS SHOWN OTHERWISE ON DRAWINGS:

- CONCRETE CAST AGAINST AND PERMANENTLY EXPOSED TO EARTH 3"
- CONCRETE EXPOSED TO EARTH OR WEATHER:
- #6 BARS AND LARGER 2"
- #5 BARS AND SMALLER 1-1/2"
- CONCRETE NOT EXPOSED TO EARTH OR WEATHER:
- SLAB AND WALLS 3/4"
- BEAMS AND COLUMNS 1-1/2"

7. A TOOLED EDGE OR A 3/4" CHAMFER SHALL BE PROVIDED AT ALL EXPOSED EDGES OF CONCRETE, UNLESS NOTED OTHERWISE, IN ACCORDANCE WITH ACI 301 SECTION 4.2.4.

ELECTRICAL INSTALLATION NOTES:

1. ALL ELECTRICAL WORK SHALL BE PERFORMED IN ACCORDANCE WITH THE PROJECT SPECIFICATIONS, NEC AND ALL APPLICABLE FEDERAL, STATE, AND LOCAL CODES/ORDINANCES.

2. CONDUIT ROUTINGS ARE SCHEMATIC. CONTRACTOR SHALL INSTALL CONDUITS SO THAT ACCESS TO EQUIPMENT IS NOT BLOCKED AND TRIP HAZARDS ARE ELIMINATED.

3. WIRING, RACEWAY AND SUPPORT METHODS AND MATERIALS SHALL COMPLY WITH THE REQUIREMENTS OF THE NEC.

4. ALL CIRCUITS SHALL BE SEGREGATED AND MAINTAIN MINIMUM CABLE SEPARATION AS REQUIRED BY THE NEC.

4.1. ALL EQUIPMENT SHALL BEAR THE UNDERWRITERS LABORATORIES LABEL OF APPROVAL, AND SHALL CONFORM TO REQUIREMENT OF THE NATIONAL ELECTRICAL CODE.

4.2. ALL OVERCURRENT DEVICES SHALL HAVE AN INTERRUPTING CURRENT RATING THAT SHALL BE GREATER THAN THE SHORT CIRCUIT CURRENT TO WHICH THEY ARE SUBJECTED, 22,000 AIC MINIMUM. VERIFY AVAILABLE SHORT CIRCUIT CURRENT DOES NOT EXCEED THE RATING OF ELECTRICAL EQUIPMENT IN ACCORDANCE WITH ARTICLE 110.24 NEC OR THE MOST CURRENT ADOPTED CODE PRE THE GOVERNING JURISDICTION.

5. EACH END OF EVERY POWER PHASE CONDUCTOR, GROUNDING CONDUCTOR, AND TELCO CONDUCTOR OR CABLE SHALL BE LABELED WITH COLOR-CODED INSULATION OR ELECTRICAL TAPE (3M BRAND, 1/2" PLASTIC ELECTRICAL TAPE WITH UV PROTECTION, OR EQUAL). THE IDENTIFICATION METHOD SHALL CONFORM WITH NEC AND OSHA.

6. ALL ELECTRICAL COMPONENTS SHALL BE CLEARLY LABELED WITH LAMICOID TAGS SHOWING THEIR RATED VOLTAGE, PHASE CONFIGURATION, WIRE CONFIGURATION, POWER OR AMPACITY RATING AND BRANCH CIRCUIT ID NUMBERS (i.e. PANEL BOARD AND CIRCUIT ID'S).

7. PANEL BOARDS (ID NUMBERS) SHALL BE CLEARLY LABELED WITH PLASTIC LABELS.

8. TIE WRAPS ARE NOT ALLOWED.

9. ALL POWER AND EQUIPMENT GROUND WIRING IN TUBING OR CONDUIT SHALL BE SINGLE COPPER CONDUCTOR (#14 OR LARGER) WITH TYPE THHW, THWN, THWN-2, XHHW, XHHW-2, THW, THW-2, RHW, OR RHW-2 INSULATION UNLESS OTHERWISE SPECIFIED.

10. SUPPLEMENTAL EQUIPMENT GROUND WIRING LOCATED INDOORS SHALL BE SINGLE COPPER CONDUCTOR (#6 OR LARGER) WITH TYPE THHW, THWN, THWN-2, XHHW, XHHW-2, THW, THW-2, RHW, OR RHW-2 INSULATION UNLESS OTHERWISE SPECIFIED.

11. POWER AND CONTROL WIRING IN FLEXIBLE CORD SHALL BE MULTI-CONDUCTOR, TYPE SOOW CORD (#14 OR LARGER) UNLESS OTHERWISE SPECIFIED.

12. POWER AND CONTROL WIRING FOR USE IN CABLE TRAY SHALL BE MULTI-CONDUCTOR, TYPE TC CABLE (#14 OR LARGER), WITH TYPE THHW, THWN, THWN-2, XHHW, XHHW-2, THW, THW-2, RHW, OR RHW-2 INSULATION UNLESS OTHERWISE SPECIFIED.

13. ALL POWER AND GROUNDING CONNECTIONS SHALL BE CRIMP-STYLE, COMPRESSION WIRE LUGS AND WIRE NUTS BY THOMAS AND BETTS (OR EQUAL). LUGS AND WIRE NUTS SHALL BE RATED FOR OPERATION NOT LESS THAN 75° C (90° C IF AVAILABLE).

14. RACEWAY AND CABLE TRAY SHALL BE LISTED OR LABELED FOR ELECTRICAL USE IN ACCORDANCE WITH NEMA, UL, ANSI/IEEE AND NEC.

15. ELECTRICAL METALLIC TUBING (EMT), INTERMEDIATE METAL CONDUIT (IMC), OR RIGID METAL CONDUIT (RMC) SHALL BE USED FOR EXPOSED INDOOR LOCATIONS.

16. ELECTRICAL METALLIC TUBING (EMT) OR METAL-CLAD CABLE (MC) SHALL BE USED FOR CONCEALED INDOOR LOCATIONS.

17. SCHEDULE 40 PVC UNDERGROUND ON STRAIGHTS AND SCHEDULE 80 PVC FOR ALL ELBOWS/90s AND ALL APPROVED ABOVE GRADE PVC CONDUIT.

18. LIQUID-TIGHT FLEXIBLE METALLIC CONDUIT (LIQUID-TITE FLEX) SHALL BE USED INDOORS AND OUTDOORS, WHERE VIBRATION OCCURS OR FLEXIBILITY IS NEEDED.

19. CONDUIT AND TUBING FITTINGS SHALL BE THREADED OR COMPRESSION-TYPE AND APPROVED FOR THE LOCATION USED. SET SCREW FITTINGS ARE NOT ACCEPTABLE.

20. CABINETS, BOXES AND WIRE WAYS SHALL BE LABELED FOR ELECTRICAL USE IN ACCORDANCE WITH NEMA, UL, ANSI/IEEE AND THE NEC.

21. WIREWAYS SHALL BE METAL WITH AN ENAMEL FINISH AND INCLUDE A HINGED COVER, DESIGNED TO SWING OPEN DOWNWARDS (WIREMOLD SPECMATE WIREWAY).

22. SLOTTED WIRING DUCT SHALL BE PVC AND INCLUDE COVER (PANDUIT TYPE E OR EQUAL).

23. CONDUITS SHALL BE FASTENED SECURELY IN PLACE WITH APPROVED NON-PERFORATED STRAPS AND HANGERS. EXPLOSIVE DEVICES (i.e. POWDER-ACTUATED) FOR ATTACHING HANGERS TO STRUCTURE WILL NOT BE PERMITTED. CLOSELY FOLLOW THE LINES OF THE STRUCTURE, MAINTAIN CLOSE PROXIMITY TO THE STRUCTURE AND KEEP CONDUITS IN TIGHT ENVELOPES. CHANGES IN DIRECTION TO ROUTE AROUND OBSTACLES SHALL BE MADE WITH CONDUIT OUTLET BODIES. CONDUIT SHALL BE INSTALLED IN A NEAT AND WORKMANLIKE MANNER. PARALLEL AND PERPENDICULAR TO STRUCTURE WALL AND CEILING LINES. ALL CONDUIT SHALL BE FISHED TO CLEAR OBSTRUCTIONS. ENDS OF CONDUITS SHALL BE TEMPORARILY CAPPED FLUSH TO FINISH GRADE TO PREVENT CONCRETE, PLASTER OR DIRT FROM ENTERING. CONDUITS SHALL BE RIGIDLY CLAMPED TO BOXES BY GALVANIZED MALLEABLE IRON BUSHING ON INSIDE AND GALVANIZED MALLEABLE IRON LOCKNUT ON OUTSIDE AND INSIDE.

24. EQUIPMENT CABINETS, TERMINAL BOXES, JUNCTION BOXES AND PULL BOXES SHALL BE GALVANIZED OR EPOXY-COATED SHEET STEEL. SHALL MEET OR EXCEED UL 50 AND BE RATED NEMA 1 (OR BETTER) FOR INTERIOR LOCATIONS AND NEMA 3 (OR BETTER) FOR EXTERIOR LOCATIONS.

25. METAL RECEPTACLE, SWITCH AND DEVICE BOXES SHALL BE GALVANIZED, EPOXY-COATED OR NON-CORRODING; SHALL MEET OR EXCEED UL 514A AND NEMA OS 1 AND BE RATED NEMA 1 (OR BETTER) FOR INTERIOR LOCATIONS AND WEATHER PROTECTED (WP OR BETTER) FOR EXTERIOR LOCATIONS.

26. NONMETALLIC RECEPTACLE, SWITCH AND DEVICE BOXES SHALL MEET OR EXCEED NEMA OS 2 (NEWEST REVISION) AND BE RATED NEMA 1 (OR BETTER) FOR INTERIOR LOCATIONS AND WEATHER PROTECTED (WP OR BETTER) FOR EXTERIOR LOCATIONS.

27. THE CONTRACTOR SHALL NOTIFY AND OBTAIN NECESSARY AUTHORIZATION FROM THE CARRIER AND/OR DISH WIRELESS, LLC. AND TOWER OWNER BEFORE COMMENCING WORK ON THE AC POWER DISTRIBUTION PANELS.

28. THE CONTRACTOR SHALL PROVIDE NECESSARY TAGGING ON THE BREAKERS, CABLES AND DISTRIBUTION PANELS IN ACCORDANCE WITH THE APPLICABLE CODES AND STANDARDS TO SAFEGUARD LIFE AND PROPERTY.

29. INSTALL LAMICOID LABEL ON THE METER CENTER TO SHOW "DISH WIRELESS, LLC.".

30. ALL EMPTY/SPARE CONDUITS THAT ARE INSTALLED ARE TO HAVE A METERED MULE TAPE PULL CORD INSTALLED.

dish wireless.

5701 SOUTH SANTA FE DRIVE
LITTLETON, CO 80120

CROWN CASTLE
2000 CORPORATE DRIVE
CANONSBURG, PA 15317

INFINIGY
FROM ZERO TO INFINIGY
the solutions are endless
2500 W. HIGGINS RD. SUITE 500 | HOFFMAN ESTATES, IL 60169
PHONE: 847-648-4068 | FAX: 518-690-0793
WWW.INFINIGY.COM

STATE OF CONNECTICUT
SHUHEI SAKANOUE
34916
LICENSED
PROFESSIONAL ENGINEER
8/19/2021

DRAWN BY:	CHECKED BY:	APPROVED BY:
RCD	SS	CJW

RFDS REV #: N/A

CONSTRUCTION DOCUMENTS

SUBMITTALS

REV	DATE	DESCRIPTION
0	05/11/2021	FINAL
1	06/24/2021	FINAL
2	8/19/2021	TOWER ELEV UPDATED

A&E PROJECT NUMBER
2039-Z5555C

DISH WIRELESS, LLC.
PROJECT INFORMATION
BOBDL00054A
NHV 031B 943108
197 NORTH CHESTNUT HILL ROAD
KILLINGWORTH, CT 06419

SHEET TITLE
GENERAL NOTES

SHEET NUMBER
GN-3

GROUNDING NOTES:

1. ALL GROUND ELECTRODE SYSTEMS (INCLUDING TELECOMMUNICATION, RADIO, LIGHTNING PROTECTION AND AC POWER GES'S) SHALL BE BONDED TOGETHER AT OR BELOW GRADE, BY TWO OR MORE COPPER BONDING CONDUCTORS IN ACCORDANCE WITH THE NEC.

2. THE CONTRACTOR SHALL PERFORM IEEE FALL-OF-POTENTIAL RESISTANCE TO EARTH TESTING (PER IEEE 1100 AND 81) FOR GROUND ELECTRODE SYSTEMS, THE CONTRACTOR SHALL FURNISH AND INSTALL SUPPLEMENTAL GROUND ELECTRODES AS NEEDED TO ACHIEVE A TEST RESULT OF 5 OHMS OR LESS.

3. THE CONTRACTOR IS RESPONSIBLE FOR PROPERLY SEQUENCING GROUNDING AND UNDERGROUND CONDUIT INSTALLATION AS TO PREVENT ANY LOSS OF CONTINUITY IN THE GROUNDING SYSTEM OR DAMAGE TO THE CONDUIT AND PROVIDE TESTING RESULTS.

4. METAL CONDUIT AND TRAY SHALL BE GROUNDED AND MADE ELECTRICALLY CONTINUOUS WITH LISTED BONDING FITTINGS OR BY BONDING ACROSS THE DISCONTINUITY WITH #6 COPPER WIRE UL APPROVED GROUNDING TYPE CONDUIT CLAMPS.

5. METAL RACEWAY SHALL NOT BE USED AS THE NEC REQUIRED EQUIPMENT GROUND CONDUCTOR. STRANDED COPPER CONDUCTORS WITH GREEN INSULATION, SIZED IN ACCORDANCE WITH THE NEC, SHALL BE FURNISHED AND INSTALLED WITH THE POWER CIRCUITS TO BTS EQUIPMENT.

6. EACH CABINET FRAME SHALL BE DIRECTLY CONNECTED TO THE MASTER GROUND BAR WITH GREEN INSULATED SUPPLEMENTAL EQUIPMENT GROUND WIRES, #6 STRANDED COPPER OR LARGER FOR INDOOR BTS; #2 BARE SOLID TINNED COPPER FOR OUTDOOR BTS.

7. CONNECTIONS TO THE GROUND BUS SHALL NOT BE DOUBLED UP OR STACKED BACK TO BACK CONNECTIONS ON OPPOSITE SIDE OF THE GROUND BUS ARE PERMITTED.

8. ALL EXTERIOR GROUND CONDUCTORS BETWEEN EQUIPMENT/GROUND BARS AND THE GROUND RING SHALL BE #2 SOLID TINNED COPPER UNLESS OTHERWISE INDICATED.

9. ALUMINUM CONDUCTOR OR COPPER CLAD STEEL CONDUCTOR SHALL NOT BE USED FOR GROUNDING CONNECTIONS.

10. USE OF 90° BENDS IN THE PROTECTION GROUNDING CONDUCTORS SHALL BE AVOIDED WHEN 45° BENDS CAN BE ADEQUATELY SUPPORTED.

11. EXOTHERMIC WELDS SHALL BE USED FOR ALL GROUNDING CONNECTIONS BELOW GRADE.

12. ALL GROUND CONNECTIONS ABOVE GRADE (INTERIOR AND EXTERIOR) SHALL BE FORMED USING HIGH PRESS CRIMPS.

13. COMPRESSION GROUND CONNECTIONS MAY BE REPLACED BY EXOTHERMIC WELD CONNECTIONS.

14. ICE BRIDGE BONDING CONDUCTORS SHALL BE EXOTHERMICALLY BONDED OR BOLTED TO THE BRIDGE AND THE TOWER GROUND BAR.

15. APPROVED ANTIOXIDANT COATINGS (i.e. CONDUCTIVE GEL OR PASTE) SHALL BE USED ON ALL COMPRESSION AND BOLTED GROUND CONNECTIONS.

16. ALL EXTERIOR GROUND CONNECTIONS SHALL BE COATED WITH A CORROSION RESISTANT MATERIAL.

17. MISCELLANEOUS ELECTRICAL AND NON-ELECTRICAL METAL BOXES, FRAMES AND SUPPORTS SHALL BE BONDED TO THE GROUND RING, IN ACCORDANCE WITH THE NEC.

18. BOND ALL METALLIC OBJECTS WITHIN 6 ft OF MAIN GROUND RING WITH (1) #2 BARE SOLID TINNED COPPER GROUND CONDUCTOR.

19. GROUND CONDUCTORS USED FOR THE FACILITY GROUNDING AND LIGHTNING PROTECTION SYSTEMS SHALL NOT BE ROUTED THROUGH METALLIC OBJECTS THAT FORM A RING AROUND THE CONDUCTOR, SUCH AS METALLIC CONDUITS, METAL SUPPORT CLIPS OR SLEEVES THROUGH WALLS OR FLOORS. WHEN IT IS REQUIRED TO BE HOUSED IN CONDUIT TO MEET CODE REQUIREMENTS OR LOCAL CONDITIONS, NON-METALLIC MATERIAL SUCH AS PVC CONDUIT SHALL BE USED. WHERE USE OF METAL CONDUIT IS UNAVOIDABLE (i.e., NONMETALLIC CONDUIT PROHIBITED BY LOCAL CODE) THE GROUND CONDUCTOR SHALL BE BONDED TO EACH END OF THE METAL CONDUIT.

20. ALL GROUNDS THAT TRANSITION FROM BELOW GRADE TO ABOVE GRADE MUST BE #2 BARE SOLID TINNED COPPER IN 3/4" NON-METALLIC, FLEXIBLE CONDUIT FROM 24" BELOW GRADE TO WITHIN 3" TO 6" OF CAD-WELD TERMINATION POINT. THE EXPOSED END OF THE CONDUIT MUST BE SEALED WITH SILICONE CAULK. (ADD TRANSITIONING GROUND STANDARD DETAIL AS WELL).

21. BUILDINGS WHERE THE MAIN GROUNDING CONDUCTORS ARE REQUIRED TO BE ROUTED TO GRADE, THE CONTRACTOR SHALL ROUTE TWO GROUNDING CONDUCTORS FROM THE ROOFTOP, TOWERS, AND WATER TOWERS GROUNDING RING, TO THE EXISTING GROUNDING SYSTEM, THE GROUNDING CONDUCTORS SHALL NOT BE SMALLER THAN 2/0 COPPER. ROOFTOP GROUNDING RING SHALL BE BONDED TO THE EXISTING GROUNDING SYSTEM, THE BUILDING STEEL COLUMNS, LIGHTNING PROTECTION SYSTEM, AND BUILDING MAIN WATER LINE (FERROUS OR NONFERROUS METAL PIPING ONLY). DO NOT ATTACH GROUNDING TO FIRE SPRINKLER SYSTEM PIPES.

dish wireless.

5701 SOUTH SANTA FE DRIVE
LITTLETON, CO 80120

CROWN CASTLE

2000 CORPORATE DRIVE
CANONSBURG, PA 15317

INFINIGY
FROM ZERO TO INFINIGY
the solutions are endless
2500 W. HIGGINS RD. SUITE 500 | HOFFMAN ESTATES, IL 60169
PHONE: 847-648-4068 | FAX: 518-690-0793
WWW.INFINIGY.COM

STATE OF CONNECTICUT
SHUHEI SAKANOUE
34916
LICENSED PROFESSIONAL ENGINEER
8/19/2021

DRAWN BY:	CHECKED BY:	APPROVED BY:
RCD	SS	CJW

RFDS REV #: N/A

CONSTRUCTION DOCUMENTS

SUBMITTALS

REV	DATE	DESCRIPTION
0	05/11/2021	FINAL
1	06/24/2021	FINAL
2	8/19/2021	TOWER ELEV UPDATED

A&E PROJECT NUMBER
2039-Z5555C

DISH WIRELESS, LLC.
PROJECT INFORMATION
BOBDL00054A
NHV 031B 943108
197 NORTH CHESTNUT HILL ROAD
KILLINGWORTH, CT 06419

SHEET TITLE
GENERAL NOTES

SHEET NUMBER
GN-4

Exhibit D

Structural Analysis Report

Date: **April 08, 2021**

Crown Castle
2000 Corporate Drive
Canonsburg, PA 15317
(724) 416-2000

Subject:	**Structural Analysis Report**	
Carrier Designation:	***DISH Network* Co-Locate**	
	Site Number:	BOBDL00054A
	Site Name:	CT-CCI-T-807134
Crown Castle Designation:	**BU Number:**	807134
	Site Name:	NHV 031B 943108
	JDE Job Number:	645664
	Work Order Number:	1945874
	Order Number:	553397 Rev. 0
Engineering Firm Designation:	**Crown Castle Project Number:**	1945874
Site Data:	**197 North Chestnut Hill Road, KILLINGWORTH, Middlesex County, CT**	
	Latitude *41° 23' 9.93"*, Longitude *-72° 36' 14.39"*	
	170 Foot - Self Support Tower	

Crown Castle is pleased to submit this **"Structural Analysis Report"** to determine the structural integrity of the above-mentioned tower.

The purpose of the analysis is to determine acceptability of the tower stress level. Based on our analysis we have determined the tower stress level for the structure and foundation, under the following load case, to be:

LC5: Proposed Equipment Configuration **Sufficient Capacity – 58.4%**

This analysis utilizes an ultimate 3-second gust wind speed of 130 mph as required by the 2018 Connecticut State Building Code and Appendix N. Applicable Standard references and design criteria are listed in Section 2 - "Analysis Criteria".

Structural analysis prepared by: Jared Koski

Respectfully submitted by:

Jamal A. Huwel, P.E.
Director Engineering

STATE OF CONNECTICUT
JAMAL A. HUWEL
28803
LICENSED
PROFESSIONAL ENGINEER

Date Signed: 04/12/2021

TABLE OF CONTENTS

1) INTRODUCTION

This tower is a 170 ft Self Support tower designed by Rohn.

The tower has been modified per reinforcement drawings prepared by GPD. Reinforcement consists of replacing diagonal bolts between elevations 0' and 20' with higher grade bolts.

2) ANALYSIS CRITERIA

TIA-222 Revision:	TIA-222-H
Risk Category:	II
Wind Speed:	130 mph
Exposure Category:	B
Topographic Factor:	1
Ice Thickness:	1.5 in
Wind Speed with Ice:	50 mph
Service Wind Speed:	60 mph

Table 1 - Proposed Equipment Configuration

Mounting Level (ft)	Center Line Elevation (ft)	Number of Antennas	Antenna Manufacturer	Antenna Model	Number of Feed Lines	Feed Line Size (in)
148.0	148.0	3	jma wireless	MX08FRO665-20 w/ Mount Pipe	1	1-1/2
		3	fujitsu	TA08025-B604		
		3	fujitsu	TA08025-B605		
		1	raycap	RDIDC-9181-PF-48		
		1	tower mounts	Commscope MTC3975083 (3)		

Table 2 - Non-Carrier Equipment To Be Removed

Mounting Level (ft)	Center Line Elevation (ft)	Number of Antennas	Antenna Manufacturer	Antenna Model	Number of Feed Lines	Feed Line Size (in)
146.0	147.0	12	decibel	DB844H90E-SX w/Mount Pipe	12	1-5/8
	146.0	1	tower mounts	Sector Mount [SM 602-3]		

Table 3 - Other Considered Equipment

Mounting Level (ft)	Center Line Elevation (ft)	Number of Antennas	Antenna Manufacturer	Antenna Model	Number of Feed Lines	Feed Line Size (in)
170.0	171.0	3	antel	BXA-70063-6CF-EDIN-0 w/ Mount Pipe	18	1-5/8
		6	antel	LPA-171063-12CF-EDIN-2 w/ Mount Pipe		
		6	antel	LPA-80063/6CF w/ Mount Pipe		
	170.0	1	tower mounts	Sector Mount [SM 514-3]		
135.0	136.0	1	kmw communications	AM-X-CD-16-65-00T-RET w/ Mount Pipe	1 2 12 1	3/8 7/16 1-1/4 Conduit
		6	powerwave technologies	7770.00		

Mounting Level (ft)	Center Line Elevation (ft)	Number of Antennas	Antenna Manufacturer	Antenna Model	Number of Feed Lines	Feed Line Size (in)
		1	powerwave technologies	P65-16-XLH-RR w/ Mount Pipe		
		1	powerwave technologies	P65-17-XLH-RR w/ Mount Pipe		
	135.0	3	ericsson	RRUS-11		
		6	powerwave technologies	LGP21401		
		6	powerwave technologies	LGP21901		
		1	raycap	DC6-48-60-18-8F		
		1	tower mounts	Sector Mount [SM 402-3]		

3) ANALYSIS PROCEDURE

Table 4 - Documents Provided

Document	Reference	Source
4-GEOTECHNICAL REPORTS	258466	CCISITES
4-TOWER FOUNDATION DRAWINGS/DESIGN/SPECS	301178	CCISITES
4-TOWER MANUFACTURER DRAWINGS	258477	CCISITES
4-TOWER REINFORCEMENT DESIGN/DRAWINGS/DATA	2303423	CCISITES
4-POST-MODIFICATION INSPECTION	2354059	CCISITES

3.1) Analysis Method

tnxTower (version 8.0.7.5), a commercially available analysis software package, was used to create a three-dimensional model of the tower and calculate member stresses for various loading cases. Selected output from the analysis is included in Appendix A. When applicable, Crown Castle has calculated and provided the effective area for panel antennas using approved methods following the intent of the TIA-222 standard.

3.2) Assumptions

1) Tower and structures were maintained in accordance with the TIA-222 Standard.
2) The configuration of antennas, transmission cables, mounts and other appurtenances are as specified in Tables 1 and 2 and the referenced drawings.

This analysis may be affected if any assumptions are not valid or have been made in error. Crown Castle should be notified to determine the effect on the structural integrity of the tower.

4) ANALYSIS RESULTS

Table 5 - Section Capacity (Summary)

Section No.	Elevation (ft)	Component Type	Size	Critical Element	P (K)	SF*P_allow (K)	% Capacity	Pass / Fail
T1	170 - 160	Leg	ROHN 2.5 STD	2	-8.57	60.05	14.3	Pass
T2	160 - 140	Leg	ROHN 2.5 EH	21	-29.67	61.44	48.3	Pass
T3	140 - 120	Leg	ROHN 3 EH	45	-57.86	99.05	58.4	Pass

Section No.	Elevation (ft)	Component Type	Size	Critical Element	P (K)	SF*P_allow (K)	% Capacity	Pass / Fail
T4	120 - 100	Leg	ROHN 4 EH	66	-86.73	167.91	51.7	Pass
T5	100 - 80	Leg	ROHN 5 EH	87	-113.21	211.29	53.6	Pass
T6	80 - 60	Leg	ROHN 6 EHS	102	-142.54	256.27	55.6	Pass
T7	60 - 40	Leg	ROHN 6 EH	117	-171.64	318.90	53.8	Pass
T8	40 - 20	Leg	ROHN 8 EHS	132	-200.74	405.72	49.5	Pass
T9	20 - 0	Leg	ROHN 8 EHS	147	-230.01	405.72	56.7	Pass
T1	170 - 160	Diagonal	L 2 x 2 x 3/16	10	-2.95	10.33	28.6 40.9 (b)	Pass
T2	160 - 140	Diagonal	L2 1/2x2 1/2x1/4	28	-4.50	16.20	27.8 35.0 (b)	Pass
T3	140 - 120	Diagonal	L2 1/2x2 1/2x1/4	49	-5.90	12.43	47.5	Pass
T4	120 - 100	Diagonal	L3x3x1/4	70	-6.92	17.34	39.9 46.1 (b)	Pass
T5	100 - 80	Diagonal	L3 1/2x3 1/2x1/4	91	-8.33	18.92	44.0 55.1 (b)	Pass
T6	80 - 60	Diagonal	L4x4x5/16	106	-9.38	29.62	31.7 49.7 (b)	Pass
T7	60 - 40	Diagonal	L4x4x5/16	121	-9.77	24.78	39.4 51.9 (b)	Pass
T8	40 - 20	Diagonal	L4x4x5/16	136	-10.86	21.56	50.4 57.1 (b)	Pass
T9	20 - 0	Diagonal	L4x4x3/8	151	-11.75	22.00	53.4	Pass
T1	170 - 160	Top Girt	L2 1/2x2 1/2x3/16	4	-1.15	6.92	16.7	Pass
T2	160 - 140	Top Girt	L2 1/2x2 1/2x3/16	22	-0.23	6.92	3.3	Pass
							Summary	
						Leg (T3)	58.4	Pass
						Diagonal (T8)	57.1	Pass
						Top Girt (T1)	16.7	Pass
						Bolt Checks	57.1	Pass
						Rating =	58.4	Pass

Table 6 - Tower Component Stresses vs. Capacity - LC5

Notes	Component	Elevation (ft)	% Capacity	Pass / Fail
1	Anchor Rods	0	18.3	Pass
1	Base Foundation (Structure)	0	19.7	Pass
1	Base Foundation (Soil Interaction)	0	44.9	Pass

Structure Rating (max from all components) =	58.4%

Notes:
1) See additional documentation in “Appendix C – Additional Calculations” for calculations supporting the % capacity consumed.

4.1) Recommendations

The tower and its foundation have sufficient capacity to carry the proposed load configuration. No modifications are required at this time.

APPENDIX A

TNXTOWER OUTPUT

Section	T1	T2	T3	T4	T5	T6	T7	T8	T9
Legs	A	ROHN 2.5 EH	ROHN 3 EH	ROHN 4 EH	ROHN 5 EH	ROHN 6 EHS	ROHN 6 EH	ROHN 8 EHS	
Leg Grade	A572-50								
Diagonals	L 2 x 2 x 3/16	L2 1/2x2 1/2x1/4		L3x3x1/4	L3 1/2x3 1/2x1/4	L4x4x5/16		L4x4x3/8	
Diagonal Grade	A36				A572-50				
Top Girts	L2 1/2x2 1/2x3/16		N.A.						
Face Width (ft)	8.64583	10.6875		12.7604	14.7708	16.8542	18.8542	21	23
# Panels @ (ft)	2 @ 5	9 @ 6.66667			10 @ 10				
Weight (K)	0.6	1.5	1.7	2.4	2.7	3.5	4.1	4.8	5.3

Total Weight (K): 26.2

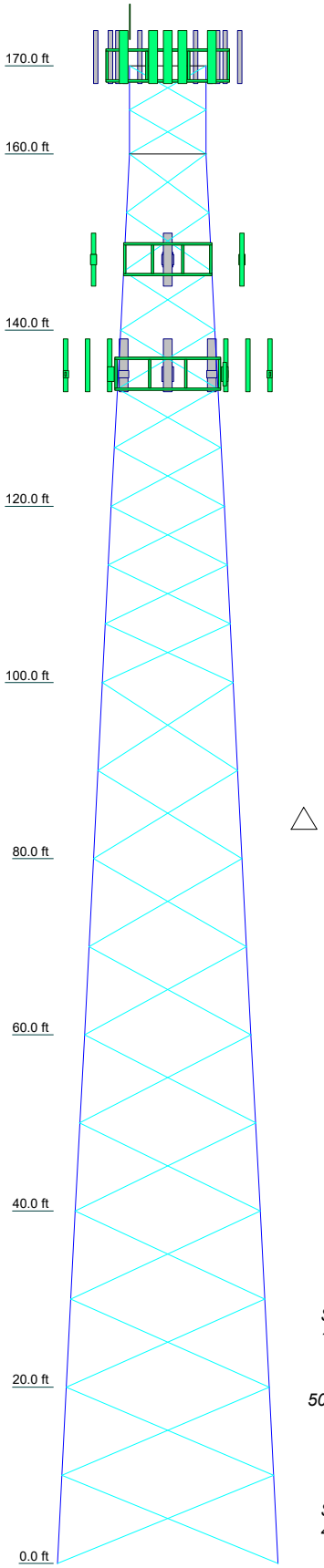

SYMBOL LIST

MARK	SIZE	MARK	SIZE
A	ROHN 2.5 STD		

MATERIAL STRENGTH

GRADE	Fy	Fu	GRADE	Fy	Fu
A572-50	50 ksi	65 ksi	A36	36 ksi	58 ksi

TOWER DESIGN NOTES

1. Tower is located in Middlesex County, Connecticut.
2. Tower designed for Exposure B to the TIA-222-H Standard.
3. Tower designed for a 130 mph basic wind in accordance with the TIA-222-H Standard.
4. Tower is also designed for a 50 mph basic wind with 1.50 in ice. Ice is considered to increase in thickness with height.
5. Deflections are based upon a 60 mph wind.
6. Tower Risk Category II.
7. Topographic Category 1 with Crest Height of 0.00 ft
8. TOWER RATING: 58.4%

ALL REACTIONS ARE FACTORED

MAX. CORNER REACTIONS AT BASE:
DOWN: 237 K
SHEAR: 29 K

UPLIFT: -195 K
SHEAR: 25 K

AXIAL 125 K
SHEAR 12 K
MOMENT 1241 kip-ft
TORQUE 21 kip-ft
50 mph WIND - 1.5000 in ICE

AXIAL 50 K
SHEAR 48 K
MOMENT 4778 kip-ft
TORQUE 67 kip-ft
REACTIONS - 130 mph WIND

CROWN CASTLE
The Pathway to Possible

Crown Castle
2000 Corporate Drive
Canonsburg, PA 15317
Phone: (724) 416-2000
FAX:

Job: **BU# 807134**			
Project:			
Client: Crown Castle	Drawn by: JKoski	App'd:	
Code: TIA-222-H	Date: 04/08/21	Scale: NTS	
Path: C:\Users\jkoski\Desktop\Work Area\807134\WO 1945874 - SA\Prod\807134.eri		Dwg No. E-1	

Tower Input Data

The main tower is a 3x free standing tower with an overall height of 170.00 ft above the ground line.
The base of the tower is set at an elevation of 0.00 ft above the ground line.
The face width of the tower is 8.65 ft at the top and 25.00 ft at the base.
This tower is designed using the TIA-222-H standard.
The following design criteria apply:

3) Tower is located in Middlesex County, Connecticut.
4) Tower base elevation above sea level: 382.00 ft.
5) Basic wind speed of 130 mph.
6) Risk Category II.
7) Exposure Category B.
8) Simplified Topographic Factor Procedure for wind speed-up calculations is used.
9) Topographic Category: 1.
10) Crest Height: 0.00 ft.
11) Nominal ice thickness of 1.5000 in.
12) Ice thickness is considered to increase with height.
13) Ice density of 56 pcf.
14) A wind speed of 50 mph is used in combination with ice.
15) Temperature drop of 50 °F.
16) Deflections calculated using a wind speed of 60 mph.
17) A non-linear (P-delta) analysis was used.
18) Pressures are calculated at each section.
19) Tower analysis based on target reliabilities in accordance with Annex S.
20) Load Modification Factors used: $K_{es}(F_w) = 0.95$, $K_{es}(t_i) = 0.85$.
21) Stress ratio used in tower member design is 1.05.
22) Local bending stresses due to climbing loads, feed line supports, and appurtenance mounts are not considered.

Options

	Consider Moments - Legs		Distribute Leg Loads As Uniform		Use ASCE 10 X-Brace Ly Rules
	Consider Moments - Horizontals		Assume Legs Pinned	√	Calculate Redundant Bracing Forces
	Consider Moments - Diagonals	√	Assume Rigid Index Plate		Ignore Redundant Members in FEA
	Use Moment Magnification	√	Use Clear Spans For Wind Area	√	SR Leg Bolts Resist Compression
	Use Code Stress Ratios	√	Use Clear Spans For KL/r		All Leg Panels Have Same Allowable
√	Use Code Safety Factors - Guys		Retension Guys To Initial Tension		Offset Girt At Foundation
	Escalate Ice	√	Bypass Mast Stability Checks	√	Consider Feed Line Torque
	Always Use Max Kz	√	Use Azimuth Dish Coefficients	√	Include Angle Block Shear Check
	Use Special Wind Profile	√	Project Wind Area of Appurt.		Use TIA-222-H Bracing Resist. Exemption
√	Include Bolts In Member Capacity		Autocalc Torque Arm Areas		Use TIA-222-H Tension Splice Exemption
	Leg Bolts Are At Top Of Section		Add IBC .6D+W Combination		Poles
√	Secondary Horizontal Braces Leg	√	Sort Capacity Reports By Component		Include Shear-Torsion Interaction
	Use Diamond Inner Bracing (4 Sided)		Triangulate Diamond Inner Bracing		Always Use Sub-Critical Flow
	SR Members Have Cut Ends		Treat Feed Line Bundles As Cylinder		Use Top Mounted Sockets
	SR Members Are Concentric		Ignore KL/ry For 60 Deg. Angle Legs		Pole Without Linear Attachments
					Pole With Shroud Or No Appurtenances
					Outside and Inside Corner Radii Are Known

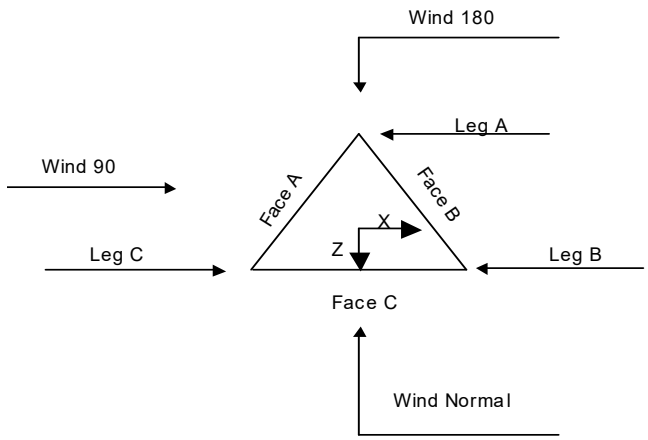

Triangular Tower

Tower Section Geometry

Tower Section	Tower Elevation ft	Assembly Database	Description	Section Width ft	Number of Sections	Section Length ft
T1	170.00-160.00			8.65	1	10.00
T2	160.00-140.00			8.65	1	20.00
T3	140.00-120.00			10.69	1	20.00
T4	120.00-100.00			12.76	1	20.00
T5	100.00-80.00			14.77	1	20.00
T6	80.00-60.00			16.85	1	20.00
T7	60.00-40.00			18.85	1	20.00
T8	40.00-20.00			21.00	1	20.00
T9	20.00-0.00			23.00	1	20.00

Tower Section Geometry *(cont'd)*

Tower Section	Tower Elevation ft	Diagonal Spacing ft	Bracing Type	Has K Brace End Panels	Has Horizontals	Top Girt Offset in	Bottom Girt Offset in
T1	170.00-160.00	5.00	X Brace	No	Yes	0.0000	0.0000
T2	160.00-140.00	6.67	X Brace	No	Yes	0.0000	0.0000
T3	140.00-120.00	6.67	X Brace	No	No	0.0000	0.0000
T4	120.00-100.00	6.67	X Brace	No	No	0.0000	0.0000
T5	100.00-80.00	10.00	X Brace	No	No	0.0000	0.0000
T6	80.00-60.00	10.00	X Brace	No	No	0.0000	0.0000
T7	60.00-40.00	10.00	X Brace	No	No	0.0000	0.0000
T8	40.00-20.00	10.00	X Brace	No	No	0.0000	0.0000
T9	20.00-0.00	10.00	X Brace	No	No	0.0000	0.0000

Tower Section Geometry *(cont'd)*

Tower Elevation ft	Leg Type	Leg Size	Leg Grade	Diagonal Type	Diagonal Size	Diagonal Grade
T1 170.00-	Pipe	ROHN 2.5 STD	A572-50	Single Angle	L 2 x 2 x 3/16	A36

Tower Elevation ft	Leg Type	Leg Size	Leg Grade	Diagonal Type	Diagonal Size	Diagonal Grade
160.00			(50 ksi)			(36 ksi)
T2 160.00-140.00	Pipe	ROHN 2.5 EH	A572-50 (50 ksi)	Single Angle	L2 1/2x2 1/2x1/4	A36 (36 ksi)
T3 140.00-120.00	Pipe	ROHN 3 EH	A572-50 (50 ksi)	Single Angle	L2 1/2x2 1/2x1/4	A36 (36 ksi)
T4 120.00-100.00	Pipe	ROHN 4 EH	A572-50 (50 ksi)	Single Angle	L3x3x1/4	A572-50 (50 ksi)
T5 100.00-80.00	Pipe	ROHN 5 EH	A572-50 (50 ksi)	Single Angle	L3 1/2x3 1/2x1/4	A572-50 (50 ksi)
T6 80.00-60.00	Pipe	ROHN 6 EHS	A572-50 (50 ksi)	Single Angle	L4x4x5/16	A572-50 (50 ksi)
T7 60.00-40.00	Pipe	ROHN 6 EH	A572-50 (50 ksi)	Single Angle	L4x4x5/16	A572-50 (50 ksi)
T8 40.00-20.00	Pipe	ROHN 8 EHS	A572-50 (50 ksi)	Single Angle	L4x4x5/16	A572-50 (50 ksi)
T9 20.00-0.00	Pipe	ROHN 8 EHS	A572-50 (50 ksi)	Single Angle	L4x4x3/8	A572-50 (50 ksi)

Tower Section Geometry *(cont'd)*

Tower Elevation ft	Top Girt Type	Top Girt Size	Top Girt Grade	Bottom Girt Type	Bottom Girt Size	Bottom Girt Grade
T1 170.00-160.00	Single Angle	L2 1/2x2 1/2x3/16	A36 (36 ksi)	Solid Round		A36 (36 ksi)
T2 160.00-140.00	Single Angle	L2 1/2x2 1/2x3/16	A36 (36 ksi)	Solid Round		A36 (36 ksi)

Tower Section Geometry *(cont'd)*

Tower Elevation ft	Gusset Area (per face) ft^2	Gusset Thickness in	Gusset Grade	Adjust. Factor A_f	Adjust. Factor A_r	Weight Mult.	Double Angle Stitch Bolt Spacing Diagonals in	Double Angle Stitch Bolt Spacing Horizontals in	Double Angle Stitch Bolt Spacing Redundants in
T1 170.00-160.00	0.00	0.0000	A36 (36 ksi)	1.05	1	1.05	36.0000	36.0000	36.0000
T2 160.00-140.00	0.00	0.0000	A36 (36 ksi)	1.05	1	1.05	36.0000	36.0000	36.0000
T3 140.00-120.00	0.00	0.0000	A36 (36 ksi)	1.05	1	1.05	36.0000	36.0000	36.0000
T4 120.00-100.00	0.00	0.0000	A36 (36 ksi)	1.05	1	1.05	36.0000	36.0000	36.0000
T5 100.00-80.00	0.00	0.0000	A36 (36 ksi)	1.05	1	1.05	36.0000	36.0000	36.0000
T6 80.00-60.00	0.00	0.0000	A36 (36 ksi)	1.05	1	1.05	36.0000	36.0000	36.0000
T7 60.00-40.00	0.00	0.0000	A36 (36 ksi)	1.05	1	1.05	36.0000	36.0000	36.0000
T8 40.00-20.00	0.00	0.0000	A36 (36 ksi)	1.05	1	1.05	36.0000	36.0000	36.0000
T9 20.00-0.00	0.00	0.0000	A36 (36 ksi)	1.05	1	1.05	36.0000	36.0000	36.0000

Tower Section Geometry *(cont'd)*

Tower Elevation ft	Calc K Single Angles	Calc K Solid Rounds	K Factors[1] Legs	X Brace Diags X Y	K Brace Diags X Y	Single Diags X Y	Girts X Y	Horiz. X Y	Sec. Horiz. X Y	Inner Brace X Y
T1 170.00-160.00	Yes	No	1	1 1	1 1	1 1	1 1	1 1	1 1	1 1
T2 160.00-140.00	Yes	No	1	1 1	1 1	1 1	1 1	1 1	1 1	1 1
T3 140.00-120.00	Yes	No	1	1 1	1 1	1 1	1 1	1 1	1 1	1 1
T4 120.00-100.00	Yes	No	1	1 1	1 1	1 1	1 1	1 1	1 1	1 1
T5 100.00-80.00	Yes	No	1	1 1	1 1	1 1	1 1	1 1	1 1	1 1
T6 80.00-60.00	Yes	No	1	1 1	1 1	1 1	1 1	1 1	1 1	1 1
T7 60.00-40.00	Yes	No	1	1 1	1 1	1 1	1 1	1 1	1 1	1 1
T8 40.00-20.00	Yes	No	1	1 1	1 1	1 1	1 1	1 1	1 1	1 1
T9 20.00-0.00	Yes	No	1	1 1	1 1	1 1	1 1	1 1	1 1	1 1

[1]*Note: K factors are applied to member segment lengths. K-braces without inner supporting members will have the K factor in the out-of-plane direction applied to the overall length.*

Tower Section Geometry *(cont'd)*

Tower Elevation ft	Leg Net Width Deduct in	Leg U	Diagonal Net Width Deduct in	Diagonal U	Top Girt Net Width Deduct in	Top Girt U	Bottom Girt Net Width Deduct in	Bottom Girt U	Mid Girt Net Width Deduct in	Mid Girt U	Long Horizontal Net Width Deduct in	Long Horizontal U	Short Horizontal Net Width Deduct in	Short Horizontal U
T1 170.00-160.00	0.0000	1	0.0000	0.75	0.0000	0.75	0.0000	0.75	0.0000	0.75	0.0000	0.75	0.0000	0.75
T2 160.00-140.00	0.0000	1	0.0000	0.75	0.0000	0.75	0.0000	0.75	0.0000	0.75	0.0000	0.75	0.0000	0.75
T3 140.00-120.00	0.0000	1	0.0000	0.75	0.0000	0.75	0.0000	0.75	0.0000	0.75	0.0000	0.75	0.0000	0.75
T4 120.00-100.00	0.0000	1	0.0000	0.75	0.0000	0.75	0.0000	0.75	0.0000	0.75	0.0000	0.75	0.0000	0.75
T5 100.00-80.00	0.0000	1	0.0000	0.75	0.0000	0.75	0.0000	0.75	0.0000	0.75	0.0000	0.75	0.0000	0.75
T6 80.00-60.00	0.0000	1	0.0000	0.75	0.0000	0.75	0.0000	0.75	0.0000	0.75	0.0000	0.75	0.0000	0.75
T7 60.00-40.00	0.0000	1	0.0000	0.75	0.0000	0.75	0.0000	0.75	0.0000	0.75	0.0000	0.75	0.0000	0.75
T8 40.00-20.00	0.0000	1	0.0000	0.75	0.0000	0.75	0.0000	0.75	0.0000	0.75	0.0000	0.75	0.0000	0.75
T9 20.00-0.00	0.0000	1	0.0000	0.75	0.0000	0.75	0.0000	0.75	0.0000	0.75	0.0000	0.75	0.0000	0.75

Tower Section Geometry *(cont'd)*

Tower Elevation ft	Leg Connection Type	Leg Bolt Size in	Leg No.	Diagonal Bolt Size in	Diagonal No.	Top Girt Bolt Size in	Top Girt No.	Bottom Girt Bolt Size in	Bottom Girt No.	Mid Girt Bolt Size in	Mid Girt No.	Long Horizontal Bolt Size in	Long Horizontal No.	Short Horizontal Bolt Size in	Short Horizontal No.
T1 170.00-160.00	Flange	0.6250 A325N	4	0.6250 A325N	1	0.6250 A325N	1	0.6250 A325N	0	0.6250 A325N	0	0.6250 A325N	0	0.6250 A325N	0

Tower Elevation ft	Leg Connection Type	Leg		Diagonal		Top Girt		Bottom Girt		Mid Girt		Long Horizontal		Short Horizontal	
		Bolt Size in	No.	Bolt Size in	No.	Bolt Size in	No.	Bolt Size in	No.	Bolt Size in	No.	Bolt Size in	No.	Bolt Size in	No.
T2 160.00-140.00	Flange	0.7500 A325N	4	0.7500 A325N	1	0.6250 A325N	1	0.6250 A325N	0	0.6250 A325N	0	0.6250 A325N	0	0.6250 A325N	0
T3 140.00-120.00	Flange	0.8750 A325N	4	0.7500 A325N	1	0.6250 A325N	0	0.6250 A325N	0	0.6250 A325N	0	0.6250 A325N	0	0.6250 A325N	0
T4 120.00-100.00	Flange	1.0000 A325N	4	0.7500 A325N	1	0.6250 A325N	0	0.6250 A325N	0	0.6250 A325N	0	0.6250 A325N	0	0.6250 A325N	0
T5 100.00-80.00	Flange	1.0000 A325N	6	0.7500 A325N	1	0.6250 A325N	0	0.6250 A325N	0	0.6250 A325N	0	0.6250 A325N	0	0.6250 A325N	0
T6 80.00-60.00	Flange	1.0000 A325N	6	0.7500 A325N	1	0.6250 A325N	0	0.6250 A325N	0	0.6250 A325N	0	0.6250 A325N	0	0.6250 A325N	0
T7 60.00-40.00	Flange	1.0000 A325N	8	0.7500 A325N	1	0.6250 A325N	0	0.6250 A325N	0	0.6250 A325N	0	0.6250 A325N	0	0.6250 A325N	0
T8 40.00-20.00	Flange	1.0000 A325N	8	0.7500 A325N	1	0.6250 A325N	0	0.6250 A325N	0	0.6250 A325N	0	0.6250 A325N	0	0.6250 A325N	0
T9 20.00-0.00	Flange	1.0000 A354-BC	0	0.7500 A490N	1	0.6250 A325N	0	0.6250 A325N	0	0.6250 A325N	0	0.6250 A325N	0	0.6250 A325N	0

Feed Line/Linear Appurtenances - Entered As Round Or Flat

Description	Face or Leg	Allow Shield	Exclude From Torque Calculation	Component Type	Placement ft	Face Offset in	Lateral Offset (Frac FW)	#	# Per Row	Clear Spacing in	Width or Diameter in	Perimeter in	Weight plf
Face A													
Feedline Ladder (Af)	A	No	No	Af (CaAa)	170.00 - 0.00	0.0000	0.4	1	1	3.0000	3.0000		8.40
Leg A													
2" Rigid Conduit	A	No	No	Ar (CaAa)	135.00 - 0.00	- 5.0000	0.42	1	1	2.0000	2.0000		2.80
FB-L98B-002-75000(3/8")	A	No	No	Ar (CaAa)	135.00 - 0.00	- 5.0000	0.42	1	1	0.3937	0.0000		0.06
WR-VG122ST-BRDA(7/16)	A	No	No	Ar (CaAa)	135.00 - 0.00	- 5.0000	0.42	2	2	0.4600	0.0000		0.14
LDF6-50A(1-1/4")	A	No	No	Ar (CaAa)	135.00 - 0.00	- 5.0000	0.45	8	5	1.5500	1.5500		0.66
LDF6-50A(1-1/4")	B	No	No	Ar (CaAa)	135.00 - 0.00	- 3.0000	-0.43	4	3	1.5500	1.5500		0.66
T-Brackets (Af)	A	No	No	Af (CaAa)	135.00 - 0.00	- 3.0000	0.48	1	1	1.0000	1.0000		8.40
Face C													
HJ7-50A(1-5/8")	C	No	No	Ar (CaAa)	170.00 - 0.00	0.0000	-0.36	18	15	1.9800	1.9800		1.04
Feedline Ladder (Af)	C	No	No	Af (CaAa)	170.00 - 0.00	0.0000	-0.36	1	1	3.0000	3.0000		8.40
Leg B													
Thin Flat Bar Climbing Ladder	B	No	No	Af (CaAa)	170.00 - 0.00	- 12.0000	0.4	1	1	2.0000	2.0000		4.00
***													
CU12PSM9P6XXX(1-1/2)	B	No	No	Ar (CaAa)	148.00 - 0.00	0.0000	0.48	1	1	1.6000	1.6000		2.35
***													

Feed Line/Linear Appurtenances - Entered As Area

Description	Face or Leg	Allow Shield	Exclude From Torque Calculation	Component Type	Placement ft	Total Number	C_AA_A ft^2/ft	Weight plf
***								

Feed Line/Linear Appurtenances Section Areas

Tower Section	Tower Elevation ft	Face	A_R ft^2	A_F ft^2	C_AA_A In Face ft^2	C_AA_A Out Face ft^2	Weight K
T1	170.00-160.00	A	0.000	0.000	5.000	0.000	0.08
		B	0.000	0.000	3.333	0.000	0.04
		C	0.000	0.000	40.640	0.000	0.27
T2	160.00-140.00	A	0.000	0.000	10.000	0.000	0.17
		B	0.000	0.000	7.947	0.000	0.10
		C	0.000	0.000	81.280	0.000	0.54
T3	140.00-120.00	A	0.000	0.000	34.100	0.000	0.42
		B	0.000	0.000	19.167	0.000	0.17
		C	0.000	0.000	81.280	0.000	0.54
T4	120.00-100.00	A	0.000	0.000	42.133	0.000	0.50
		B	0.000	0.000	22.267	0.000	0.18
		C	0.000	0.000	81.280	0.000	0.54
T5	100.00-80.00	A	0.000	0.000	42.133	0.000	0.50
		B	0.000	0.000	22.267	0.000	0.18
		C	0.000	0.000	81.280	0.000	0.54
T6	80.00-60.00	A	0.000	0.000	42.133	0.000	0.50
		B	0.000	0.000	22.267	0.000	0.18
		C	0.000	0.000	81.280	0.000	0.54
T7	60.00-40.00	A	0.000	0.000	42.133	0.000	0.50
		B	0.000	0.000	22.267	0.000	0.18
		C	0.000	0.000	81.280	0.000	0.54
T8	40.00-20.00	A	0.000	0.000	42.133	0.000	0.50
		B	0.000	0.000	22.267	0.000	0.18
		C	0.000	0.000	81.280	0.000	0.54
T9	20.00-0.00	A	0.000	0.000	42.133	0.000	0.50
		B	0.000	0.000	22.267	0.000	0.18
		C	0.000	0.000	81.280	0.000	0.54

Feed Line/Linear Appurtenances Section Areas - With Ice

Tower Section	Tower Elevation ft	Face or Leg	Ice Thickness in	A_R ft^2	A_F ft^2	C_AA_A In Face ft^2	C_AA_A Out Face ft^2	Weight K
T1	170.00-160.00	A	1.498	0.000	0.000	7.995	0.000	0.19
		B		0.000	0.000	6.329	0.000	0.12
		C		0.000	0.000	84.336	0.000	1.50
T2	160.00-140.00	A	1.483	0.000	0.000	15.934	0.000	0.37
		B		0.000	0.000	16.254	0.000	0.30
		C		0.000	0.000	168.534	0.000	2.98
T3	140.00-120.00	A	1.462	0.000	0.000	77.580	0.000	1.39
		B		0.000	0.000	46.108	0.000	0.71
		C		0.000	0.000	168.330	0.000	2.96
T4	120.00-100.00	A	1.438	0.000	0.000	97.438	0.000	1.71
		B		0.000	0.000	53.926	0.000	0.81
		C		0.000	0.000	168.096	0.000	2.93
T5	100.00-80.00	A	1.410	0.000	0.000	96.590	0.000	1.69
		B		0.000	0.000	53.498	0.000	0.80
		C		0.000	0.000	167.820	0.000	2.89
T6	80.00-60.00	A	1.375	0.000	0.000	95.553	0.000	1.66
		B		0.000	0.000	52.974	0.000	0.78
		C		0.000	0.000	167.482	0.000	2.85
T7	60.00-40.00	A	1.329	0.000	0.000	94.205	0.000	1.62
		B		0.000	0.000	52.294	0.000	0.76
		C		0.000	0.000	167.042	0.000	2.80
T8	40.00-20.00	A	1.263	0.000	0.000	92.244	0.000	1.56
		B		0.000	0.000	51.303	0.000	0.72
		C		0.000	0.000	166.403	0.000	2.72
T9	20.00-0.00	A	1.132	0.000	0.000	88.352	0.000	1.45
		B		0.000	0.000	49.338	0.000	0.66
		C		0.000	0.000	165.136	0.000	2.56

Feed Line Center of Pressure

Section	Elevation ft	CP_X in	CP_Z in	CP_X Ice in	CP_Z Ice in
T1	170.00-160.00	15.6650	3.7176	18.4673	3.5863
T2	160.00-140.00	17.7855	4.3490	21.3604	4.4945
T3	140.00-120.00	18.7852	-9.7782	22.0948	-13.5765
T4	120.00-100.00	18.7745	-13.5410	22.8999	-18.8509
T5	100.00-80.00	21.4346	-15.5018	26.2382	-21.6368
T6	80.00-60.00	21.9468	-15.7638	27.7002	-22.5294
T7	60.00-40.00	23.3490	-16.7592	29.9462	-24.1429
T8	40.00-20.00	24.4938	-17.4990	31.4571	-24.8497
T9	20.00-0.00	25.7004	-18.3595	33.5395	-25.8649

Shielding Factor Ka

Tower Section	Feed Line Record No.	Description	Feed Line Segment Elev.	K_a No Ice	K_a Ice
T1	3	Feedline Ladder (Af)	160.00 - 170.00	0.6000	0.6000
T1	12	HJ7-50A(1-5/8")	160.00 - 170.00	0.6000	0.6000
T1	14	Feedline Ladder (Af)	160.00 - 170.00	0.6000	0.6000
T1	16	Thin Flat Bar Climbing Ladder	160.00 - 170.00	0.6000	0.6000
T2	3	Feedline Ladder (Af)	140.00 - 160.00	0.6000	0.6000
T2	12	HJ7-50A(1-5/8")	140.00 - 160.00	0.6000	0.6000
T2	14	Feedline Ladder (Af)	140.00 - 160.00	0.6000	0.6000
T2	16	Thin Flat Bar Climbing Ladder	140.00 - 160.00	0.6000	0.6000
T2	18	CU12PSM9P6XXX(1-1/2)	140.00 - 148.00	0.6000	0.6000
T3	3	Feedline Ladder (Af)	120.00 - 140.00	0.6000	0.6000
T3	5	2" Rigid Conduit	120.00 - 135.00	0.6000	0.6000
T3	6	FB-L98B-002-75000(3/8")	120.00 - 135.00	0.6000	0.6000
T3	7	WR-VG122ST-BRDA(7/16)	120.00 - 135.00	1.0000	1.0000
T3	8	LDF6-50A(1-1/4")	120.00 - 135.00	0.6000	0.6000
T3	9	LDF6-50A(1-1/4")	120.00 - 135.00	0.6000	0.6000
T3	10	T-Brackets (Af)	120.00 - 135.00	0.6000	0.6000
T3	12	HJ7-50A(1-5/8")	120.00 - 140.00	0.6000	0.6000
T3	14	Feedline Ladder (Af)	120.00 - 140.00	0.6000	0.6000
T3	16	Thin Flat Bar Climbing Ladder	120.00 - 140.00	0.6000	0.6000
T3	18	CU12PSM9P6XXX(1-1/2)	120.00 - 140.00	0.6000	0.6000
T4	3	Feedline Ladder (Af)	100.00 - 120.00	0.6000	0.6000
T4	5	2" Rigid Conduit	100.00 - 120.00	0.6000	0.6000
T4	6	FB-L98B-002-75000(3/8")	100.00 - 120.00	0.6000	0.6000
T4	7	WR-VG122ST-BRDA(7/16)	100.00 - 120.00	1.0000	1.0000

Tower Section	Feed Line Record No.	Description	Feed Line Segment Elev.	K_a No Ice	K_a Ice
T4	8	LDF6-50A(1-1/4")	100.00 - 120.00	0.6000	0.6000
T4	9	LDF6-50A(1-1/4")	100.00 - 120.00	0.6000	0.6000
T4	10	T-Brackets (Af)	100.00 - 120.00	0.6000	0.6000
T4	12	HJ7-50A(1-5/8")	100.00 - 120.00	0.6000	0.6000
T4	14	Feedline Ladder (Af)	100.00 - 120.00	0.6000	0.6000
T4	16	Thin Flat Bar Climbing Ladder	100.00 - 120.00	0.6000	0.6000
T4	18	CU12PSM9P6XXX(1-1/2)	100.00 - 120.00	0.6000	0.6000
T5	3	Feedline Ladder (Af)	80.00 - 100.00	0.6000	0.6000
T5	5	2" Rigid Conduit	80.00 - 100.00	0.6000	0.6000
T5	6	FB-L98B-002-75000(3/8")	80.00 - 100.00	0.6000	0.6000
T5	7	WR-VG122ST-BRDA(7/16)	80.00 - 100.00	1.0000	1.0000
T5	8	LDF6-50A(1-1/4")	80.00 - 100.00	0.6000	0.6000
T5	9	LDF6-50A(1-1/4")	80.00 - 100.00	0.6000	0.6000
T5	10	T-Brackets (Af)	80.00 - 100.00	0.6000	0.6000
T5	12	HJ7-50A(1-5/8")	80.00 - 100.00	0.6000	0.6000
T5	14	Feedline Ladder (Af)	80.00 - 100.00	0.6000	0.6000
T5	16	Thin Flat Bar Climbing Ladder	80.00 - 100.00	0.6000	0.6000
T5	18	CU12PSM9P6XXX(1-1/2)	80.00 - 100.00	0.6000	0.6000
T6	3	Feedline Ladder (Af)	60.00 - 80.00	0.6000	0.6000
T6	5	2" Rigid Conduit	60.00 - 80.00	0.6000	0.6000
T6	6	FB-L98B-002-75000(3/8")	60.00 - 80.00	0.6000	0.6000
T6	7	WR-VG122ST-BRDA(7/16)	60.00 - 80.00	1.0000	1.0000
T6	8	LDF6-50A(1-1/4")	60.00 - 80.00	0.6000	0.6000
T6	9	LDF6-50A(1-1/4")	60.00 - 80.00	0.6000	0.6000
T6	10	T-Brackets (Af)	60.00 - 80.00	0.6000	0.6000
T6	12	HJ7-50A(1-5/8")	60.00 - 80.00	0.6000	0.6000
T6	14	Feedline Ladder (Af)	60.00 - 80.00	0.6000	0.6000
T6	16	Thin Flat Bar Climbing Ladder	60.00 - 80.00	0.6000	0.6000
T6	18	CU12PSM9P6XXX(1-1/2)	60.00 - 80.00	0.6000	0.6000
T7	3	Feedline Ladder (Af)	40.00 - 60.00	0.6000	0.6000
T7	5	2" Rigid Conduit	40.00 - 60.00	0.6000	0.6000
T7	6	FB-L98B-002-75000(3/8")	40.00 - 60.00	0.6000	0.6000
T7	7	WR-VG122ST-BRDA(7/16)	40.00 - 60.00	1.0000	1.0000
T7	8	LDF6-50A(1-1/4")	40.00 - 60.00	0.6000	0.6000
T7	9	LDF6-50A(1-1/4")	40.00 -	0.6000	0.6000

Tower Section	Feed Line Record No.	Description	Feed Line Segment Elev.	K_a No Ice	K_a Ice
			60.00		
T7	10	T-Brackets (Af)	40.00 - 60.00	0.6000	0.6000
T7	12	HJ7-50A(1-5/8")	40.00 - 60.00	0.6000	0.6000
T7	14	Feedline Ladder (Af)	40.00 - 60.00	0.6000	0.6000
T7	16	Thin Flat Bar Climbing Ladder	40.00 - 60.00	0.6000	0.6000
T7	18	CU12PSM9P6XXX(1-1/2)	40.00 - 60.00	0.6000	0.6000
T8	3	Feedline Ladder (Af)	20.00 - 40.00	0.6000	0.6000
T8	5	2" Rigid Conduit	20.00 - 40.00	0.6000	0.6000
T8	6	FB-L98B-002-75000(3/8")	20.00 - 40.00	0.6000	0.6000
T8	7	WR-VG122ST-BRDA(7/16)	20.00 - 40.00	1.0000	1.0000
T8	8	LDF6-50A(1-1/4")	20.00 - 40.00	0.6000	0.6000
T8	9	LDF6-50A(1-1/4")	20.00 - 40.00	0.6000	0.6000
T8	10	T-Brackets (Af)	20.00 - 40.00	0.6000	0.6000
T8	12	HJ7-50A(1-5/8")	20.00 - 40.00	0.6000	0.6000
T8	14	Feedline Ladder (Af)	20.00 - 40.00	0.6000	0.6000
T8	16	Thin Flat Bar Climbing Ladder	20.00 - 40.00	0.6000	0.6000
T8	18	CU12PSM9P6XXX(1-1/2)	20.00 - 40.00	0.6000	0.6000
T9	3	Feedline Ladder (Af)	0.00 - 20.00	0.6000	0.6000
T9	5	2" Rigid Conduit	0.00 - 20.00	0.6000	0.6000
T9	6	FB-L98B-002-75000(3/8")	0.00 - 20.00	0.6000	0.6000
T9	7	WR-VG122ST-BRDA(7/16)	0.00 - 20.00	1.0000	1.0000
T9	8	LDF6-50A(1-1/4")	0.00 - 20.00	0.6000	0.6000
T9	9	LDF6-50A(1-1/4")	0.00 - 20.00	0.6000	0.6000
T9	10	T-Brackets (Af)	0.00 - 20.00	0.6000	0.6000
T9	12	HJ7-50A(1-5/8")	0.00 - 20.00	0.6000	0.6000
T9	14	Feedline Ladder (Af)	0.00 - 20.00	0.6000	0.6000
T9	16	Thin Flat Bar Climbing Ladder	0.00 - 20.00	0.6000	0.6000
T9	18	CU12PSM9P6XXX(1-1/2)	0.00 - 20.00	0.6000	0.6000

Discrete Tower Loads

Description	Face or Leg	Offset Type	Offsets: Horz Lateral Vert ft ft ft	Azimuth Adjustment °	Placement ft		C_AA_A Front ft^2	C_AA_A Side ft^2	Weight K
Lightning Rod 1" x 5' on 5' Pole	C	From Leg	0.00 0.00 5.00	0.0000	170.00	No Ice 1/2" Ice 1" Ice 2" Ice	1.94 2.96 3.68 4.99	1.94 2.96 3.68 4.99	0.08 0.10 0.13 0.21
***									
(2) LPA-80063/6CF w/ Mount Pipe	A	From Face	4.00 0.00 1.00	0.0000	170.00	No Ice 1/2" Ice 1" Ice 2" Ice	9.83 10.40 10.93 12.03	10.22 11.38 12.27 14.09	0.05 0.14 0.25 0.48

Description	Face or Leg	Offset Type	Offsets: Horz Lateral Vert ft ft ft	Azimuth Adjustment °	Placement ft		C_AA_A Front ft^2	C_AA_A Side ft^2	Weight K
(2) LPA-80063/6CF w/ Mount Pipe	B	From Face	4.00 0.00 1.00	0.0000	170.00	No Ice 1/2" Ice 1" Ice 2" Ice	9.83 10.40 10.93 12.03	10.22 11.38 12.27 14.09	0.05 0.14 0.25 0.48
(2) LPA-80063/6CF w/ Mount Pipe	C	From Face	4.00 0.00 1.00	0.0000	170.00	No Ice 1/2" Ice 1" Ice 2" Ice	9.83 10.40 10.93 12.03	10.22 11.38 12.27 14.09	0.05 0.14 0.25 0.48
(2) LPA-171063-12CF-EDIN-2 w/ Mount Pipe	A	From Face	4.00 0.00 1.00	0.0000	170.00	No Ice 1/2" Ice 1" Ice 2" Ice	6.23 6.80 7.35 8.44	7.75 8.97 9.91 11.79	0.04 0.10 0.17 0.34
(2) LPA-171063-12CF-EDIN-2 w/ Mount Pipe	B	From Face	4.00 0.00 1.00	0.0000	170.00	No Ice 1/2" Ice 1" Ice 2" Ice	6.23 6.80 7.35 8.44	7.75 8.97 9.91 11.79	0.04 0.10 0.17 0.34
(2) LPA-171063-12CF-EDIN-2 w/ Mount Pipe	C	From Face	4.00 0.00 1.00	0.0000	170.00	No Ice 1/2" Ice 1" Ice 2" Ice	6.23 6.80 7.35 8.44	7.75 8.97 9.91 11.79	0.04 0.10 0.17 0.34
BXA-70063-6CF-EDIN-0 w/ Mount Pipe	A	From Face	4.00 0.00 1.00	0.0000	170.00	No Ice 1/2" Ice 1" Ice 2" Ice	7.40 8.14 8.90 10.46	5.39 6.10 6.83 8.34	0.04 0.10 0.16 0.33
BXA-70063-6CF-EDIN-0 w/ Mount Pipe	B	From Face	4.00 0.00 1.00	0.0000	170.00	No Ice 1/2" Ice 1" Ice 2" Ice	7.40 8.14 8.90 10.46	5.39 6.10 6.83 8.34	0.04 0.10 0.16 0.33
BXA-70063-6CF-EDIN-0 w/ Mount Pipe	C	From Face	4.00 0.00 1.00	0.0000	170.00	No Ice 1/2" Ice 1" Ice 2" Ice	7.40 8.14 8.90 10.46	5.39 6.10 6.83 8.34	0.04 0.10 0.16 0.33
Sector Mount [SM 514-3]	C	None		0.0000	170.00	No Ice 1/2" Ice 1" Ice 2" Ice	55.50 80.55 105.00 152.52	55.50 80.55 105.00 152.52	1.34 2.26 3.50 6.87
*** ***									
MX08FRO665-20 w/ Mount Pipe	A	From Leg	4.00 0.00 0.00	0.0000	148.00	No Ice 1/2" Ice 1" Ice 2" Ice	8.01 8.52 9.04 10.11	4.23 4.69 5.16 6.12	0.10 0.18 0.28 0.51
MX08FRO665-20 w/ Mount Pipe	B	From Leg	4.00 0.00 0.00	0.0000	148.00	No Ice 1/2" Ice 1" Ice 2" Ice	8.01 8.52 9.04 10.11	4.23 4.69 5.16 6.12	0.10 0.18 0.28 0.51
MX08FRO665-20 w/ Mount Pipe	C	From Leg	4.00 0.00 0.00	0.0000	148.00	No Ice 1/2" Ice 1" Ice 2" Ice	8.01 8.52 9.04 10.11	4.23 4.69 5.16 6.12	0.10 0.18 0.28 0.51
RDIDC-9181-PF-48	A	From Leg	4.00 0.00 0.00	0.0000	148.00	No Ice 1/2" Ice	2.31 2.50 2.70	1.29 1.45 1.61	0.02 0.04 0.06

Description	Face or Leg	Offset Type	Offsets: Horz Lateral Vert ft ft ft	Azimuth Adjustment °	Placement ft		C_AA_A Front ft^2	C_AA_A Side ft^2	Weight K
						1" Ice	3.12	1.96	0.12
						2" Ice			
TA08025-B604	A	From Leg	4.00	0.0000	148.00	No Ice	1.96	0.98	0.06
			0.00			1/2"	2.14	1.11	0.08
			0.00			Ice	2.32	1.25	0.10
						1" Ice	2.71	1.55	0.15
						2" Ice			
TA08025-B604	B	From Leg	4.00	0.0000	148.00	No Ice	1.96	0.98	0.06
			0.00			1/2"	2.14	1.11	0.08
			0.00			Ice	2.32	1.25	0.10
						1" Ice	2.71	1.55	0.15
						2" Ice			
TA08025-B604	C	From Leg	4.00	0.0000	148.00	No Ice	1.96	0.98	0.06
			0.00			1/2"	2.14	1.11	0.08
			0.00			Ice	2.32	1.25	0.10
						1" Ice	2.71	1.55	0.15
						2" Ice			
TA08025-B605	A	From Leg	4.00	0.0000	148.00	No Ice	1.96	1.13	0.08
			0.00			1/2"	2.14	1.27	0.09
			0.00			Ice	2.32	1.41	0.11
						1" Ice	2.71	1.72	0.16
						2" Ice			
TA08025-B605	B	From Leg	4.00	0.0000	148.00	No Ice	1.96	1.13	0.08
			0.00			1/2"	2.14	1.27	0.09
			0.00			Ice	2.32	1.41	0.11
						1" Ice	2.71	1.72	0.16
						2" Ice			
TA08025-B605	C	From Leg	4.00	0.0000	148.00	No Ice	1.96	1.13	0.08
			0.00			1/2"	2.14	1.27	0.09
			0.00			Ice	2.32	1.41	0.11
						1" Ice	2.71	1.72	0.16
						2" Ice			
Commscope MTC3975083 (3)	C	None		0.0000	148.00	No Ice	23.85	23.85	1.26
						1/2"	34.12	34.12	1.80
						Ice	44.39	44.39	2.35
						1" Ice	64.93	64.93	3.43
						2" Ice			
(2) 8' x 2" Mount Pipe	A	From Leg	4.00	0.0000	148.00	No Ice	1.90	1.90	0.03
			0.00			1/2"	2.73	2.73	0.04
			0.00			Ice	3.40	3.40	0.06
						1" Ice	4.40	4.40	0.12
						2" Ice			
(2) 8' x 2" Mount Pipe	B	From Leg	4.00	0.0000	148.00	No Ice	1.90	1.90	0.03
			0.00			1/2"	2.73	2.73	0.04
			0.00			Ice	3.40	3.40	0.06
						1" Ice	4.40	4.40	0.12
						2" Ice			
(2) 8' x 2" Mount Pipe	C	From Leg	4.00	0.0000	148.00	No Ice	1.90	1.90	0.03
			0.00			1/2"	2.73	2.73	0.04
			0.00			Ice	3.40	3.40	0.06
						1" Ice	4.40	4.40	0.12
						2" Ice			
***									
***									
(2) 7770.00	A	From Leg	4.00	0.0000	135.00	No Ice	5.51	2.93	0.04
			0.00			1/2"	5.87	3.27	0.07
			1.00			Ice	6.23	3.63	0.11
						1" Ice	6.99	4.35	0.20
						2" Ice			
(2) 7770.00	B	From Leg	4.00	0.0000	135.00	No Ice	5.51	2.93	0.04
			0.00			1/2"	5.87	3.27	0.07
			1.00			Ice	6.23	3.63	0.11
						1" Ice	6.99	4.35	0.20
						2" Ice			
(2) 7770.00	C	From Leg	4.00	0.0000	135.00	No Ice	5.51	2.93	0.04

Description	Face or Leg	Offset Type	Offsets: Horz Lateral Vert ft ft ft	Azimuth Adjustment °	Placement ft		C_AA_A Front ft^2	C_AA_A Side ft^2	Weight K
			0.00			1/2"	5.87	3.27	0.07
			1.00			Ice	6.23	3.63	0.11
						1" Ice	6.99	4.35	0.20
						2" Ice			
P65-17-XLH-RR w/ Mount Pipe	A	From Leg	4.00	0.0000	135.00	No Ice	7.48	5.29	0.09
			0.00			1/2"	8.17	5.96	0.17
			1.00			Ice	8.88	6.64	0.26
						1" Ice	10.33	8.05	0.49
						2" Ice			
AM-X-CD-16-65-00T-RET w/ Mount Pipe	B	From Leg	4.00	0.0000	135.00	No Ice	4.63	3.27	0.07
			0.00			1/2"	5.06	3.69	0.13
			1.00			Ice	5.51	4.12	0.20
						1" Ice	6.43	5.00	0.38
						2" Ice			
P65-16-XLH-RR w/ Mount Pipe	C	From Leg	4.00	0.0000	135.00	No Ice	5.66	4.01	0.08
			0.00			1/2"	6.21	4.53	0.14
			1.00			Ice	6.76	5.06	0.21
						1" Ice	7.90	6.15	0.38
						2" Ice			
(2) LGP21401	A	From Leg	4.00	0.0000	135.00	No Ice	1.10	0.21	0.01
			0.00			1/2"	1.24	0.27	0.02
			0.00			Ice	1.38	0.35	0.03
						1" Ice	1.69	0.52	0.05
						2" Ice			
(2) LGP21401	B	From Leg	4.00	0.0000	135.00	No Ice	1.10	0.21	0.01
			0.00			1/2"	1.24	0.27	0.02
			0.00			Ice	1.38	0.35	0.03
						1" Ice	1.69	0.52	0.05
						2" Ice			
(2) LGP21401	C	From Leg	4.00	0.0000	135.00	No Ice	1.10	0.21	0.01
			0.00			1/2"	1.24	0.27	0.02
			0.00			Ice	1.38	0.35	0.03
						1" Ice	1.69	0.52	0.05
						2" Ice			
(2) LGP21901	A	From Leg	4.00	0.0000	135.00	No Ice	0.23	0.16	0.01
			0.00			1/2"	0.29	0.21	0.01
			0.00			Ice	0.36	0.28	0.01
						1" Ice	0.53	0.42	0.02
						2" Ice			
(2) LGP21901	B	From Leg	4.00	0.0000	135.00	No Ice	0.23	0.16	0.01
			0.00			1/2"	0.29	0.21	0.01
			0.00			Ice	0.36	0.28	0.01
						1" Ice	0.53	0.42	0.02
						2" Ice			
(2) LGP21901	C	From Leg	4.00	0.0000	135.00	No Ice	0.23	0.16	0.01
			0.00			1/2"	0.29	0.21	0.01
			0.00			Ice	0.36	0.28	0.01
						1" Ice	0.53	0.42	0.02
						2" Ice			
RRUS-11	A	From Leg	1.00	0.0000	135.00	No Ice	2.78	1.19	0.05
			0.00			1/2"	2.99	1.33	0.07
			0.00			Ice	3.21	1.49	0.09
						1" Ice	3.66	1.83	0.15
						2" Ice			
RRUS-11	B	From Leg	1.00	0.0000	135.00	No Ice	2.78	1.19	0.05
			0.00			1/2"	2.99	1.33	0.07
			0.00			Ice	3.21	1.49	0.09
						1" Ice	3.66	1.83	0.15
						2" Ice			
RRUS-11	C	From Leg	1.00	0.0000	135.00	No Ice	2.78	1.19	0.05
			0.00			1/2"	2.99	1.33	0.07
			0.00			Ice	3.21	1.49	0.09
						1" Ice	3.66	1.83	0.15
						2" Ice			
DC6-48-60-18-8F	B	From Leg	1.00	0.0000	135.00	No Ice	1.21	1.21	0.02

Description	Face or Leg	Offset Type	Offsets: Horz Lateral Vert ft ft ft	Azimuth Adjustment °	Placement ft		C_AA_A Front ft^2	C_AA_A Side ft^2	Weight K
			0.00			1/2"	1.89	1.89	0.04
			0.00			Ice	2.11	2.11	0.07
						1" Ice	2.57	2.57	0.13
						2" Ice			
Sector Mount [SM 402-3]	C	None		0.0000	135.00	No Ice	18.87	18.87	0.85
						1/2"	26.47	26.47	1.21
						Ice	33.99	33.99	1.70
						1" Ice	48.84	48.84	3.04
						2" Ice			
***									

Dishes

Description	Face or Leg	Dish Type	Offset Type	Offsets: Horz Lateral Vert ft	Azimuth Adjustment °	3 dB Beam Width °	Elevation ft	Outside Diameter ft	Aperture Area ft^2	Weight K
***										

Load Combinations

Comb. No.	Description
1	Dead Only
2	1.2 Dead+1.0 Wind 0 deg - No Ice
3	0.9 Dead+1.0 Wind 0 deg - No Ice
4	1.2 Dead+1.0 Wind 30 deg - No Ice
5	0.9 Dead+1.0 Wind 30 deg - No Ice
6	1.2 Dead+1.0 Wind 60 deg - No Ice
7	0.9 Dead+1.0 Wind 60 deg - No Ice
8	1.2 Dead+1.0 Wind 90 deg - No Ice
9	0.9 Dead+1.0 Wind 90 deg - No Ice
10	1.2 Dead+1.0 Wind 120 deg - No Ice
11	0.9 Dead+1.0 Wind 120 deg - No Ice
12	1.2 Dead+1.0 Wind 150 deg - No Ice
13	0.9 Dead+1.0 Wind 150 deg - No Ice
14	1.2 Dead+1.0 Wind 180 deg - No Ice
15	0.9 Dead+1.0 Wind 180 deg - No Ice
16	1.2 Dead+1.0 Wind 210 deg - No Ice
17	0.9 Dead+1.0 Wind 210 deg - No Ice
18	1.2 Dead+1.0 Wind 240 deg - No Ice
19	0.9 Dead+1.0 Wind 240 deg - No Ice
20	1.2 Dead+1.0 Wind 270 deg - No Ice
21	0.9 Dead+1.0 Wind 270 deg - No Ice
22	1.2 Dead+1.0 Wind 300 deg - No Ice
23	0.9 Dead+1.0 Wind 300 deg - No Ice
24	1.2 Dead+1.0 Wind 330 deg - No Ice
25	0.9 Dead+1.0 Wind 330 deg - No Ice
26	1.2 Dead+1.0 Ice+1.0 Temp
27	1.2 Dead+1.0 Wind 0 deg+1.0 Ice+1.0 Temp
28	1.2 Dead+1.0 Wind 30 deg+1.0 Ice+1.0 Temp
29	1.2 Dead+1.0 Wind 60 deg+1.0 Ice+1.0 Temp
30	1.2 Dead+1.0 Wind 90 deg+1.0 Ice+1.0 Temp
31	1.2 Dead+1.0 Wind 120 deg+1.0 Ice+1.0 Temp
32	1.2 Dead+1.0 Wind 150 deg+1.0 Ice+1.0 Temp
33	1.2 Dead+1.0 Wind 180 deg+1.0 Ice+1.0 Temp
34	1.2 Dead+1.0 Wind 210 deg+1.0 Ice+1.0 Temp
35	1.2 Dead+1.0 Wind 240 deg+1.0 Ice+1.0 Temp

Comb. No.	Description
36	1.2 Dead+1.0 Wind 270 deg+1.0 Ice+1.0 Temp
37	1.2 Dead+1.0 Wind 300 deg+1.0 Ice+1.0 Temp
38	1.2 Dead+1.0 Wind 330 deg+1.0 Ice+1.0 Temp
39	Dead+Wind 0 deg - Service
40	Dead+Wind 30 deg - Service
41	Dead+Wind 60 deg - Service
42	Dead+Wind 90 deg - Service
43	Dead+Wind 120 deg - Service
44	Dead+Wind 150 deg - Service
45	Dead+Wind 180 deg - Service
46	Dead+Wind 210 deg - Service
47	Dead+Wind 240 deg - Service
48	Dead+Wind 270 deg - Service
49	Dead+Wind 300 deg - Service
50	Dead+Wind 330 deg - Service

Maximum Member Forces

Section No.	Elevation ft	Component Type	Condition	Gov. Load Comb.	Axial K	Major Axis Moment kip-ft	Minor Axis Moment kip-ft
T1	170 - 160	Leg	Max Tension	15	6.59	-0.06	-0.03
			Max. Compression	10	-8.57	-0.04	-0.02
			Max. Mx	4	-7.38	0.08	0.04
			Max. My	4	-1.14	-0.05	0.10
			Max. Vy	20	2.05	0.00	0.00
			Max. Vx	14	-2.05	0.00	0.00
		Diagonal	Max Tension	12	2.93	0.00	0.00
			Max. Compression	24	-2.95	0.00	0.00
			Max. Mx	32	0.34	0.03	-0.00
			Max. My	8	-2.47	0.01	-0.00
			Max. Vy	31	-0.03	0.03	-0.00
			Max. Vx	8	-0.00	0.00	0.00
		Top Girt	Max Tension	3	1.11	0.00	0.00
			Max. Compression	14	-1.15	0.00	0.00
			Max. Mx	31	0.20	-0.12	0.00
			Max. My	4	-0.01	0.00	0.00
			Max. Vy	31	0.06	0.00	0.00
			Max. Vx	4	-0.00	0.00	0.00
T2	160 - 140	Leg	Max Tension	15	24.47	-0.34	0.06
			Max. Compression	2	-29.67	0.06	-0.06
			Max. Mx	14	16.84	0.44	0.06
			Max. My	20	-1.49	-0.02	0.47
			Max. Vy	14	0.60	-0.35	0.06
			Max. Vx	4	0.59	-0.02	-0.32
		Diagonal	Max Tension	24	4.40	0.00	0.00
			Max. Compression	24	-4.50	0.00	0.00
			Max. Mx	32	0.32	0.06	0.01
			Max. My	14	-3.98	0.01	0.01
			Max. Vy	33	0.05	0.06	0.01
			Max. Vx	33	-0.00	0.00	0.00
		Top Girt	Max Tension	3	0.17	0.00	0.00
			Max. Compression	14	-0.23	0.00	0.00
			Max. Mx	31	-0.03	-0.12	0.00
			Max. My	27	-0.11	0.00	0.00
			Max. Vy	31	0.06	0.00	0.00
			Max. Vx	27	-0.00	0.00	0.00
T3	140 - 120	Leg	Max Tension	15	48.45	0.04	0.06
			Max. Compression	2	-57.86	0.24	-0.06
			Max. Mx	14	38.77	-0.52	0.06
			Max. My	20	-3.70	-0.01	0.60
			Max. Vy	14	0.62	-0.52	0.06
			Max. Vx	4	0.60	-0.01	-0.37
		Diagonal	Max Tension	24	5.89	0.00	0.00
			Max. Compression	24	-5.90	0.00	0.00
			Max. Mx	32	0.62	0.09	0.01
			Max. My	14	-5.03	0.02	0.01

Section No.	Elevation ft	Component Type	Condition	Gov. Load Comb.	Axial K	Major Axis Moment kip-ft	Minor Axis Moment kip-ft
			Max. Vy	32	0.06	0.08	-0.01
			Max. Vx	33	-0.00	0.00	0.00
T4	120 - 100	Leg	Max Tension	15	73.46	-0.17	0.05
			Max. Compression	2	-86.73	0.34	-0.10
			Max. Mx	3	-85.11	0.34	-0.10
			Max. My	4	-6.72	-0.01	-0.42
			Max. Vy	19	-0.08	0.33	0.03
			Max. Vx	4	0.15	-0.01	-0.42
		Diagonal	Max Tension	24	6.84	0.00	0.00
			Max. Compression	24	-6.92	0.00	0.00
			Max. Mx	31	1.09	0.12	0.01
			Max. My	33	-1.43	0.10	0.02
			Max. Vy	33	0.07	0.12	0.02
			Max. Vx	27	0.00	0.00	0.00
T5	100 - 80	Leg	Max Tension	15	95.97	-0.34	0.12
			Max. Compression	2	-113.21	0.61	-0.14
			Max. Mx	2	-113.21	0.61	-0.14
			Max. My	4	-7.51	-0.04	-0.57
			Max. Vy	18	-0.12	0.59	0.04
			Max. Vx	4	0.18	-0.04	-0.57
		Diagonal	Max Tension	24	8.19	0.00	0.00
			Max. Compression	24	-8.33	0.00	0.00
			Max. Mx	33	1.83	0.19	-0.02
			Max. My	27	0.00	0.16	-0.03
			Max. Vy	33	0.10	0.19	-0.02
			Max. Vx	27	-0.01	0.00	0.00
T6	80 - 60	Leg	Max Tension	15	120.27	-0.52	0.11
			Max. Compression	2	-142.54	0.65	-0.11
			Max. Mx	2	-142.54	0.65	-0.11
			Max. My	4	-9.26	-0.06	-0.80
			Max. Vy	18	-0.12	0.63	0.03
			Max. Vx	4	0.19	-0.06	-0.80
		Diagonal	Max Tension	24	9.23	0.00	0.00
			Max. Compression	24	-9.38	0.00	0.00
			Max. Mx	31	2.00	0.28	-0.03
			Max. My	27	0.19	0.24	-0.04
			Max. Vy	33	0.13	0.27	-0.03
			Max. Vx	27	-0.01	0.00	0.00
T7	60 - 40	Leg	Max Tension	15	143.78	-0.54	0.10
			Max. Compression	2	-171.64	0.70	-0.09
			Max. Mx	33	9.40	-1.48	0.05
			Max. My	4	-12.49	0.02	-0.69
			Max. Vy	37	0.25	-1.47	-0.03
			Max. Vx	4	0.16	-0.06	-0.66
		Diagonal	Max Tension	24	9.63	0.00	0.00
			Max. Compression	24	-9.77	0.00	0.00
			Max. Mx	33	1.50	0.32	-0.04
			Max. My	33	-1.44	0.27	0.05
			Max. Vy	33	0.14	0.31	0.04
			Max. Vx	27	-0.01	0.00	0.00
T8	40 - 20	Leg	Max Tension	15	166.94	-0.93	0.07
			Max. Compression	2	-200.74	1.38	-0.13
			Max. Mx	33	10.24	-4.12	0.05
			Max. My	4	-13.72	-0.11	-1.20
			Max. Vy	37	0.70	-4.08	-0.03
			Max. Vx	4	-0.21	-0.11	-1.20
		Diagonal	Max Tension	24	10.59	0.00	0.00
			Max. Compression	24	-10.86	0.00	0.00
			Max. Mx	33	1.20	0.39	-0.04
			Max. My	27	-0.83	0.35	-0.05
			Max. Vy	33	0.15	0.39	-0.04
			Max. Vx	27	-0.01	0.00	0.00
T9	20 - 0	Leg	Max Tension	15	189.69	-0.96	0.10
			Max. Compression	2	-230.01	-0.00	0.00
			Max. Mx	27	-97.20	4.27	0.05
			Max. My	4	-16.21	-0.16	-2.09
			Max. Vy	37	-0.84	-4.08	-0.03
			Max. Vx	4	-0.35	-0.16	-2.09
		Diagonal	Max Tension	24	11.42	0.00	0.00

Section No.	Elevation ft	Component Type	Condition	Gov. Load Comb.	Axial K	Major Axis Moment kip-ft	Minor Axis Moment kip-ft
			Max. Compression	24	-11.75	0.00	0.00
			Max. Mx	33	-1.08	0.52	0.06
			Max. My	33	-5.19	0.49	0.07
			Max. Vy	33	0.17	0.52	0.06
			Max. Vx	33	-0.01	0.00	0.00

Maximum Reactions

Location	Condition	Gov. Load Comb.	Vertical K	Horizontal, X K	Horizontal, Z K
Leg C	Max. Vert	18	220.41	23.99	-13.27
	Max. H_x	18	220.41	23.99	-13.27
	Max. H_z	7	-182.52	-20.25	11.12
	Min. Vert	7	-182.52	-20.25	11.12
	Min. H_x	7	-182.52	-20.25	11.12
	Min. H_z	18	220.41	23.99	-13.27
Leg B	Max. Vert	10	226.14	-23.77	-14.62
	Max. H_x	23	-182.70	19.96	12.38
	Max. H_z	25	-171.21	17.66	13.84
	Min. Vert	23	-182.70	19.96	12.38
	Min. H_x	10	226.14	-23.77	-14.62
	Min. H_z	12	202.90	-19.93	-15.14
Leg A	Max. Vert	2	237.39	1.56	29.40
	Max. H_x	20	17.25	3.83	1.52
	Max. H_z	2	237.39	1.56	29.40
	Min. Vert	15	-195.27	-1.54	-25.02
	Min. H_x	11	-91.12	-3.96	-12.08
	Min. H_z	15	-195.27	-1.54	-25.02

Tower Mast Reaction Summary

Load Combination	Vertical K	$Shear_x$ K	$Shear_z$ K	Overturning Moment, M_x kip-ft	Overturning Moment, M_z kip-ft	Torque kip-ft
Dead Only	41.80	0.00	0.00	-9.92	-32.98	0.00
1.2 Dead+1.0 Wind 0 deg - No Ice	50.16	0.00	-47.75	-4777.68	-40.25	67.04
0.9 Dead+1.0 Wind 0 deg - No Ice	37.62	0.00	-47.75	-4771.30	-30.31	67.03
1.2 Dead+1.0 Wind 30 deg - No Ice	50.16	22.38	-38.79	-3935.83	-2302.41	67.31
0.9 Dead+1.0 Wind 30 deg - No Ice	37.62	22.38	-38.79	-3930.02	-2290.84	67.28
1.2 Dead+1.0 Wind 60 deg - No Ice	50.16	35.71	-20.64	-2112.44	-3672.11	21.62
0.9 Dead+1.0 Wind 60 deg - No Ice	37.62	35.71	-20.64	-2107.94	-3659.55	21.61
1.2 Dead+1.0 Wind 90 deg - No Ice	50.16	38.35	-0.00	-12.38	-3940.76	-30.90
0.9 Dead+1.0 Wind 90 deg - No Ice	37.62	38.35	-0.00	-9.40	-3928.00	-30.88
1.2 Dead+1.0 Wind 120 deg - No Ice	50.16	39.09	22.59	2243.05	-3940.48	-32.75
0.9 Dead+1.0 Wind 120 deg - No Ice	37.62	39.09	22.59	2244.42	-3927.77	-32.74
1.2 Dead+1.0 Wind 150 deg - No Ice	50.16	23.01	39.90	3993.43	-2348.90	-54.66
0.9 Dead+1.0 Wind 150 deg - No Ice	37.62	23.01	39.90	3993.55	-2337.31	-54.63
1.2 Dead+1.0 Wind 180 deg	50.16	-0.00	44.61	4499.59	-39.39	-67.05

Load Combination	Vertical K	$Shear_x$ K	$Shear_z$ K	Overturning Moment, M_x kip-ft	Overturning Moment, M_z kip-ft	Torque kip-ft
- No Ice						
0.9 Dead+1.0 Wind 180 deg - No Ice	37.62	-0.00	44.61	4499.33	-29.45	-67.01
1.2 Dead+1.0 Wind 210 deg - No Ice	50.16	-22.38	38.79	3912.13	2222.79	-67.31
0.9 Dead+1.0 Wind 210 deg - No Ice	37.62	-22.38	38.79	3912.29	2231.11	-67.28
1.2 Dead+1.0 Wind 240 deg - No Ice	50.16	-38.43	22.21	2215.81	3812.87	-21.62
0.9 Dead+1.0 Wind 240 deg - No Ice	37.62	-38.43	22.21	2217.21	3820.07	-21.62
1.2 Dead+1.0 Wind 270 deg - No Ice	50.16	-38.35	0.00	-11.54	3861.38	30.90
0.9 Dead+1.0 Wind 270 deg - No Ice	37.62	-38.35	0.00	-8.56	3868.51	30.88
1.2 Dead+1.0 Wind 300 deg - No Ice	50.16	-36.36	-21.01	-2139.84	3640.87	32.76
0.9 Dead+1.0 Wind 300 deg - No Ice	37.62	-36.36	-21.01	-2135.33	3648.16	32.73
1.2 Dead+1.0 Wind 330 deg - No Ice	50.16	-23.01	-39.90	-4017.37	2269.35	54.66
0.9 Dead+1.0 Wind 330 deg - No Ice	37.62	-23.01	-39.90	-4011.52	2277.64	54.63
1.2 Dead+1.0 Ice+1.0 Temp	124.90	-0.00	0.00	-2.25	-166.59	0.00
1.2 Dead+1.0 Wind 0 deg+1.0 Ice+1.0 Temp	124.90	0.00	-12.07	-1227.79	-166.67	21.20
1.2 Dead+1.0 Wind 30 deg+1.0 Ice+1.0 Temp	124.90	5.53	-9.58	-986.80	-734.47	15.91
1.2 Dead+1.0 Wind 60 deg+1.0 Ice+1.0 Temp	124.90	8.46	-4.89	-509.92	-1044.78	-0.03
1.2 Dead+1.0 Wind 90 deg+1.0 Ice+1.0 Temp	124.90	9.38	-0.00	-2.33	-1139.53	-10.53
1.2 Dead+1.0 Wind 120 deg+1.0 Ice+1.0 Temp	124.90	8.99	5.20	529.09	-1085.99	-11.82
1.2 Dead+1.0 Wind 150 deg+1.0 Ice+1.0 Temp	124.90	5.63	9.75	994.99	-741.74	-15.37
1.2 Dead+1.0 Wind 180 deg+1.0 Ice+1.0 Temp	124.90	-0.00	11.65	1190.39	-166.53	-21.20
1.2 Dead+1.0 Wind 210 deg+1.0 Ice+1.0 Temp	124.90	-5.53	9.58	982.26	401.27	-15.91
1.2 Dead+1.0 Wind 240 deg+1.0 Ice+1.0 Temp	124.90	-8.82	5.10	521.82	740.12	0.03
1.2 Dead+1.0 Wind 270 deg+1.0 Ice+1.0 Temp	124.90	-9.38	0.00	-2.22	806.34	10.53
1.2 Dead+1.0 Wind 300 deg+1.0 Ice+1.0 Temp	124.90	-8.63	-4.99	-517.21	724.33	11.82
1.2 Dead+1.0 Wind 330 deg+1.0 Ice+1.0 Temp	124.90	-5.63	-9.75	-999.55	408.54	15.37
Dead+Wind 0 deg - Service	41.80	0.00	-10.71	-1078.06	-33.17	15.03
Dead+Wind 30 deg - Service	41.80	5.02	-8.70	-889.38	-540.17	15.09
Dead+Wind 60 deg - Service	41.80	8.01	-4.63	-480.69	-847.15	4.85
Dead+Wind 90 deg - Service	41.80	8.60	-0.00	-10.03	-907.39	-6.93
Dead+Wind 120 deg - Service	41.80	8.76	5.06	495.47	-907.33	-7.34
Dead+Wind 150 deg - Service	41.80	5.16	8.95	887.77	-550.59	-12.25
Dead+Wind 180 deg - Service	41.80	-0.00	10.00	1001.18	-32.99	-15.03
Dead+Wind 210 deg - Service	41.80	-5.02	8.70	869.53	474.03	-15.09
Dead+Wind 240 deg - Service	41.80	-8.62	4.98	489.36	830.41	-4.85
Dead+Wind 270 deg - Service	41.80	-8.60	0.00	-9.84	841.26	6.93
Dead+Wind 300 deg - Service	41.80	-8.15	-4.71	-486.84	791.81	7.34
Dead+Wind 330 deg - Service	41.80	-5.16	-8.95	-907.63	484.46	12.25

Solution Summary

Load Comb.	Sum of Applied Forces PX K	PY K	PZ K	Sum of Reactions PX K	PY K	PZ K	% Error
1	0.00	-41.80	0.00	0.00	41.80	0.00	0.000%
2	0.00	-50.16	-47.75	-0.00	50.16	47.75	0.000%
3	0.00	-37.62	-47.75	-0.00	37.62	47.75	0.000%
4	22.38	-50.16	-38.79	-22.38	50.16	38.79	0.000%
5	22.38	-37.62	-38.79	-22.38	37.62	38.79	0.000%
6	35.71	-50.16	-20.64	-35.71	50.16	20.64	0.000%
7	35.71	-37.62	-20.64	-35.71	37.62	20.64	0.000%
8	38.35	-50.16	-0.00	-38.35	50.16	0.00	0.000%
9	38.35	-37.62	-0.00	-38.35	37.62	0.00	0.000%
10	39.09	-50.16	22.59	-39.09	50.16	-22.59	0.001%
11	39.09	-37.62	22.59	-39.09	37.62	-22.59	0.000%
12	23.01	-50.16	39.90	-23.01	50.16	-39.90	0.000%
13	23.01	-37.62	39.90	-23.01	37.62	-39.90	0.000%
14	-0.00	-50.16	44.61	0.00	50.16	-44.61	0.000%
15	-0.00	-37.62	44.61	0.00	37.62	-44.61	0.000%
16	-22.38	-50.16	38.79	22.38	50.16	-38.79	0.000%
17	-22.38	-37.62	38.79	22.38	37.62	-38.79	0.000%
18	-38.43	-50.16	22.21	38.43	50.16	-22.21	0.000%
19	-38.43	-37.62	22.21	38.43	37.62	-22.21	0.000%
20	-38.35	-50.16	0.00	38.35	50.16	-0.00	0.000%
21	-38.35	-37.62	0.00	38.35	37.62	-0.00	0.000%
22	-36.36	-50.16	-21.01	36.36	50.16	21.01	0.000%
23	-36.36	-37.62	-21.01	36.36	37.62	21.01	0.000%
24	-23.01	-50.16	-39.90	23.01	50.16	39.90	0.000%
25	-23.01	-37.62	-39.90	23.01	37.62	39.90	0.000%
26	0.00	-124.90	0.00	0.00	124.90	0.00	0.000%
27	0.00	-124.90	-12.07	-0.00	124.90	12.07	0.000%
28	5.53	-124.90	-9.58	-5.53	124.90	9.58	0.000%
29	8.46	-124.90	-4.89	-8.46	124.90	4.89	0.000%
30	9.38	-124.90	-0.00	-9.38	124.90	0.00	0.000%
31	8.99	-124.90	5.20	-8.99	124.90	-5.20	0.000%
32	5.63	-124.90	9.75	-5.63	124.90	-9.75	0.000%
33	-0.00	-124.90	11.65	0.00	124.90	-11.65	0.000%
34	-5.53	-124.90	9.58	5.53	124.90	-9.58	0.000%
35	-8.82	-124.90	5.10	8.82	124.90	-5.10	0.000%
36	-9.38	-124.90	0.00	9.38	124.90	-0.00	0.000%
37	-8.63	-124.90	-4.99	8.63	124.90	4.99	0.000%
38	-5.63	-124.90	-9.75	5.63	124.90	9.75	0.000%
39	0.00	-41.80	-10.71	-0.00	41.80	10.71	0.000%
40	5.02	-41.80	-8.70	-5.02	41.80	8.70	0.000%
41	8.01	-41.80	-4.63	-8.01	41.80	4.63	0.000%
42	8.60	-41.80	-0.00	-8.60	41.80	0.00	0.000%
43	8.76	-41.80	5.06	-8.76	41.80	-5.06	0.000%
44	5.16	-41.80	8.95	-5.16	41.80	-8.95	0.000%
45	-0.00	-41.80	10.00	0.00	41.80	-10.00	0.000%
46	-5.02	-41.80	8.70	5.02	41.80	-8.70	0.000%
47	-8.62	-41.80	4.98	8.62	41.80	-4.98	0.000%
48	-8.60	-41.80	0.00	8.60	41.80	-0.00	0.000%
49	-8.15	-41.80	-4.71	8.15	41.80	4.71	0.000%
50	-5.16	-41.80	-8.95	5.16	41.80	8.95	0.000%

Non-Linear Convergence Results

Load Combination	Converged?	Number of Cycles	Displacement Tolerance	Force Tolerance
1	Yes	4	0.00000001	0.00000001
2	Yes	4	0.00000001	0.00000001
3	Yes	4	0.00000001	0.00000001
4	Yes	4	0.00000001	0.00000001
5	Yes	4	0.00000001	0.00000001
6	Yes	4	0.00000001	0.00000001
7	Yes	4	0.00000001	0.00000001
8	Yes	4	0.00000001	0.00000001

9	Yes	4	0.00000001	0.00000001
10	Yes	4	0.00000001	0.00000001
11	Yes	4	0.00000001	0.00000001
12	Yes	4	0.00000001	0.00000001
13	Yes	4	0.00000001	0.00000001
14	Yes	4	0.00000001	0.00000001
15	Yes	4	0.00000001	0.00000001
16	Yes	4	0.00000001	0.00000247
17	Yes	4	0.00000001	0.00000001
18	Yes	4	0.00000001	0.00000001
19	Yes	4	0.00000001	0.00000001
20	Yes	4	0.00000001	0.00000001
21	Yes	4	0.00000001	0.00000001
22	Yes	4	0.00000001	0.00000001
23	Yes	4	0.00000001	0.00000001
24	Yes	4	0.00000001	0.00000001
25	Yes	4	0.00000001	0.00000001
26	Yes	4	0.00000001	0.00000001
27	Yes	4	0.00000001	0.00000001
28	Yes	4	0.00000001	0.00000001
29	Yes	4	0.00000001	0.00000001
30	Yes	4	0.00000001	0.00000324
31	Yes	4	0.00000001	0.00000001
32	Yes	4	0.00000001	0.00000001
33	Yes	4	0.00000001	0.00000001
34	Yes	4	0.00000001	0.00000001
35	Yes	4	0.00000001	0.00000001
36	Yes	4	0.00000001	0.00000001
37	Yes	4	0.00000001	0.00000001
38	Yes	4	0.00000001	0.00000001
39	Yes	4	0.00000001	0.00000001
40	Yes	4	0.00000001	0.00000001
41	Yes	4	0.00000001	0.00000001
42	Yes	4	0.00000001	0.00000001
43	Yes	4	0.00000001	0.00000001
44	Yes	4	0.00000001	0.00000001
45	Yes	4	0.00000001	0.00000001
46	Yes	4	0.00000001	0.00000001
47	Yes	4	0.00000001	0.00000001
48	Yes	4	0.00000001	0.00000001
49	Yes	4	0.00000001	0.00000001
50	Yes	4	0.00000001	0.00000001

Maximum Tower Deflections - Service Wind

Section No.	Elevation ft	Horz. Deflection in	Gov. Load Comb.	Tilt °	Twist °
T1	170 - 160	2.335	39	0.1219	0.0231
T2	160 - 140	2.074	39	0.1194	0.0225
T3	140 - 120	1.584	39	0.1065	0.0199
T4	120 - 100	1.155	39	0.0884	0.0161
T5	100 - 80	0.800	39	0.0710	0.0123
T6	80 - 60	0.516	39	0.0557	0.0092
T7	60 - 40	0.301	39	0.0398	0.0068
T8	40 - 20	0.147	39	0.0260	0.0045
T9	20 - 0	0.045	39	0.0134	0.0021

Critical Deflections and Radius of Curvature - Service Wind

Elevation ft	Appurtenance	Gov. Load Comb.	Deflection in	Tilt °	Twist °	Radius of Curvature ft
170.00	Lightning Rod 1" x 5' on 5' Pole	39	2.335	0.1219	0.0231	189505
148.00	MX08FRO665-20 w/ Mount Pipe	39	1.773	0.1127	0.0212	80772

Elevation ft	Appurtenance	Gov. Load Comb.	Deflection in	Tilt °	Twist °	Radius of Curvature ft
135.00	(2) 7770.00	39	1.470	0.1021	0.0190	70419

Maximum Tower Deflections - Design Wind

Section No.	Elevation ft	Horz. Deflection in	Gov. Load Comb.	Tilt °	Twist °
T1	170 - 160	10.385	2	0.5447	0.1032
T2	160 - 140	9.217	2	0.5331	0.1006
T3	140 - 120	7.033	2	0.4740	0.0890
T4	120 - 100	5.127	2	0.3926	0.0718
T5	100 - 80	3.549	2	0.3149	0.0549
T6	80 - 60	2.290	2	0.2471	0.0409
T7	60 - 40	1.337	2	0.1765	0.0306
T8	40 - 20	0.653	2	0.1154	0.0200
T9	20 - 0	0.202	2	0.0593	0.0092

Critical Deflections and Radius of Curvature - Design Wind

Elevation ft	Appurtenance	Gov. Load Comb.	Deflection in	Tilt °	Twist °	Radius of Curvature ft
170.00	Lightning Rod 1" x 5' on 5' Pole	2	10.385	0.5447	0.1032	43919
148.00	MX08FRO665-20 w/ Mount Pipe	2	7.876	0.5025	0.0946	18770
135.00	(2) 7770.00	2	6.528	0.4545	0.0850	16297

Bolt Design Data

Section No.	Elevation ft	Component Type	Bolt Grade	Bolt Size in	Number Of Bolts	Maximum Load per Bolt K	Allowable Load per Bolt K	Ratio Load / Allowable	Allowable Ratio	Criteria
T1	170	Leg	A325N	0.6250	4	1.65	20.34	0.081	1.05	Bolt Tension
		Diagonal	A325N	0.6250	1	2.93	6.83	0.429	1.05	Member Block Shear
		Top Girt	A325N	0.6250	1	1.11	7.83	0.141	1.05	Member Bearing
T2	160	Leg	A325N	0.7500	4	6.12	30.10	0.203	1.05	Bolt Tension
		Diagonal	A325N	0.7500	1	4.40	11.96	0.368	1.05	Member Block Shear
		Top Girt	A325N	0.6250	1	0.17	7.83	0.021	1.05	Member Bearing
T3	140	Leg	A325N	0.8750	4	12.11	41.56	0.291	1.05	Bolt Tension
		Diagonal	A325N	0.7500	1	5.89	11.96	0.493	1.05	Member Block Shear
T4	120	Leg	A325N	1.0000	4	18.36	54.52	0.337	1.05	Bolt Tension
		Diagonal	A325N	0.7500	1	6.84	14.14	0.484	1.05	Member Bearing
T5	100	Leg	A325N	1.0000	6	15.99	54.52	0.293	1.05	Bolt Tension
		Diagonal	A325N	0.7500	1	8.19	14.14	0.579	1.05	Member Bearing
T6	80	Leg	A325N	1.0000	6	20.04	54.52	0.368	1.05	Bolt Tension
		Diagonal	A325N	0.7500	1	9.23	17.67	0.522	1.05	Member Bearing
T7	60	Leg	A325N	1.0000	8	17.97	54.52	0.330	1.05	Bolt Tension
		Diagonal	A325N	0.7500	1	9.63	17.67	0.545	1.05	Member Bearing
T8	40	Leg	A325N	1.0000	8	20.87	54.52	0.383	1.05	Bolt Tension
		Diagonal	A325N	0.7500	1	10.59	17.67	0.600	1.05	Member

Section No.	Elevation ft	Component Type	Bolt Grade	Bolt Size in	Number Of Bolts	Maximum Load per Bolt K	Allowable Load per Bolt K	Ratio Load / Allowable	Allowable Ratio	Criteria
T9	20	Diagonal	A490N	0.7500	1	11.42	21.21	0.538	1.05	Bearing Member Bearing

Compression Checks

Leg Design Data (Compression)

Section No.	Elevation ft	Size	L ft	L_u ft	Kl/r	A in^2	P_u K	ϕP_n K	Ratio $\frac{P_u}{\phi P_n}$
T1	170 - 160	ROHN 2.5 STD	10.00	5.00	63.3 K=1.00	1.7040	-8.57	57.19	0.150 [1]
T2	160 - 140	ROHN 2.5 EH	20.03	6.68	86.7 K=1.00	2.2535	-29.67	58.51	0.507 [1]
T3	140 - 120	ROHN 3 EH	20.04	6.68	70.5 K=1.00	3.0159	-57.86	94.34	0.613 [1]
T4	120 - 100	ROHN 4 EH	20.03	6.68	54.3 K=1.00	4.4074	-86.73	159.91	0.542 [1]
T5	100 - 80	ROHN 5 EH	20.04	10.02	65.4 K=1.00	6.1120	-113.21	201.23	0.563 [1]
T6	80 - 60	ROHN 6 EHS	20.03	10.02	54.0 K=1.00	6.7133	-142.54	244.06	0.584 [1]
T7	60 - 40	ROHN 6 EH	20.04	10.02	54.8 K=1.00	8.4049	-171.64	303.71	0.565 [1]
T8	40 - 20	ROHN 8 EHS	20.03	10.02	41.2 K=1.00	9.7193	-200.74	386.40	0.520 [1]
T9	20 - 0	ROHN 8 EHS	20.03	10.02	41.2 K=1.00	9.7193	-230.01	386.40	0.595 [1]

[1] P_u / ϕP_n controls

Diagonal Design Data (Compression)

Section No.	Elevation ft	Size	L ft	L_u ft	Kl/r	A in^2	P_u K	ϕP_n K	Ratio $\frac{P_u}{\phi P_n}$
T1	170 - 160	L 2 x 2 x 3/16	9.99	4.74	144.2 K=1.00	0.7150	-2.95	9.84	0.300 [1]
T2	160 - 140	L2 1/2x2 1/2x1/4	12.31	6.08	148.6 K=1.00	1.1900	-4.50	15.43	0.291 [1]
T3	140 - 120	L2 1/2x2 1/2x1/4	14.09	6.94	169.7 K=1.00	1.1900	-5.90	11.83	0.499 [1]
T4	120 - 100	L3x3x1/4	15.90	7.79	158.0 K=1.00	1.4400	-6.92	16.51	0.419 [1]
T5	100 - 80	L3 1/2x3 1/2x1/4	19.15	9.48	163.8 K=1.00	1.6900	-8.33	18.02	0.462 [1]
T6	80 - 60	L4x4x5/16	20.90	10.29	156.1 K=1.00	2.4000	-9.38	28.21	0.332 [1]
T7	60 - 40	L4x4x5/16	22.78	11.25	170.6 K=1.00	2.4000	-9.77	23.60	0.414 [1]
T8	40 - 20	L4x4x5/16	24.62	12.06	182.9 K=1.00	2.4000	-10.86	20.53	0.529 [1]
T9	20 - 0	L4x4x3/8	26.46	12.98	197.6 K=1.00	2.8600	-11.75	20.96	0.561 [1]

[1] P_u / ϕP_n controls

Top Girt Design Data (Compression)

Section No.	Elevation ft	Size	L ft	L_u ft	Kl/r	A in^2	P_u K	ϕP_n K	Ratio $\frac{P_u}{\phi P_n}$
T1	170 - 160	L2 1/2x2 1/2x3/16	8.65	8.17	198.0 K=1.00	0.9020	-1.15	6.59	0.175 [1]
T2	160 - 140	L2 1/2x2 1/2x3/16	8.65	8.17	198.0 K=1.00	0.9020	-0.23	6.59	0.035 [1]

[1] P_u / ϕP_n controls

Tension Checks

Leg Design Data (Tension)

Section No.	Elevation ft	Size	L ft	L_u ft	Kl/r	A in^2	P_u K	ϕP_n K	Ratio $\frac{P_u}{\phi P_n}$
T1	170 - 160	ROHN 2.5 STD	10.00	5.00	63.3	1.7040	6.59	76.68	0.086 [1]
T2	160 - 140	ROHN 2.5 EH	20.03	6.68	86.7	2.2535	24.47	101.41	0.241 [1]
T3	140 - 120	ROHN 3 EH	20.04	6.68	70.5	3.0159	48.45	135.72	0.357 [1]
T4	120 - 100	ROHN 4 EH	20.03	6.68	54.3	4.4074	73.46	198.34	0.370 [1]
T5	100 - 80	ROHN 5 EH	20.04	10.02	65.4	6.1120	95.97	275.04	0.349 [1]
T6	80 - 60	ROHN 6 EHS	20.03	10.02	54.0	6.7133	120.27	302.10	0.398 [1]
T7	60 - 40	ROHN 6 EH	20.04	10.02	54.8	8.4049	143.78	378.22	0.380 [1]
T8	40 - 20	ROHN 8 EHS	20.03	10.02	41.2	9.7193	166.94	437.37	0.382 [1]
T9	20 - 0	ROHN 8 EHS	20.03	10.02	41.2	9.7193	189.69	437.37	0.434 [1]

[1] P_u / ϕP_n controls

Diagonal Design Data (Tension)

Section No.	Elevation ft	Size	L ft	L_u ft	Kl/r	A in^2	P_u K	ϕP_n K	Ratio $\frac{P_u}{\phi P_n}$
T1	170 - 160	L 2 x 2 x 3/16	9.99	4.74	94.4	0.4308	2.93	18.74	0.156 [1]
T2	160 - 140	L2 1/2x2 1/2x1/4	12.31	6.08	97.0	0.7284	4.40	31.69	0.139 [1]
T3	140 - 120	L2 1/2x2 1/2x1/4	14.09	6.94	110.4	0.7284	5.89	31.69	0.186 [1]
T4	120 - 100	L3x3x1/4	15.90	7.79	102.3	0.9159	6.84	44.65	0.153 [1]
T5	100 - 80	L3 1/2x3 1/2x1/4	19.15	9.48	105.8	1.1034	8.19	53.79	0.152 [1]
T6	80 - 60	L4x4x5/16	20.90	10.29	100.9	1.5949	9.23	77.75	0.119 [1]
T7	60 - 40	L4x4x5/16	22.78	11.25	110.1	1.5949	9.63	77.75	0.124 [1]
T8	40 - 20	L4x4x5/16	24.62	12.06	118.0	1.5949	10.59	77.75	0.136 [1]
T9	20 - 0	L4x4x3/8	26.46	12.98	127.9	1.8989	11.42	92.57	0.123 [1]

[1] P_u / ϕP_n controls

Top Girt Design Data (Tension)

Section No.	Elevation ft	Size	L ft	L_u ft	Kl/r	A in^2	P_u K	ϕP_n K	Ratio $\frac{P_u}{\phi P_n}$
T1	170 - 160	L2 1/2x2 1/2x3/16	8.65	8.17	129.7	0.5710	1.11	24.84	0.045 [1]
T2	160 - 140	L2 1/2x2 1/2x3/16	8.65	8.17	129.7	0.5710	0.17	24.84	0.007 [1]

[1] P_u / ϕP_n controls

Section Capacity Table

Section No.	Elevation ft	Component Type	Size	Critical Element	P K	ϕP_{allow} K	% Capacity	Pass Fail
T1	170 - 160	Leg	ROHN 2.5 STD	2	-8.57	60.05	14.3	Pass
T2	160 - 140	Leg	ROHN 2.5 EH	21	-29.67	61.44	48.3	Pass
T3	140 - 120	Leg	ROHN 3 EH	45	-57.86	99.05	58.4	Pass
T4	120 - 100	Leg	ROHN 4 EH	66	-86.73	167.91	51.7	Pass
T5	100 - 80	Leg	ROHN 5 EH	87	-113.21	211.29	53.6	Pass
T6	80 - 60	Leg	ROHN 6 EHS	102	-142.54	256.27	55.6	Pass
T7	60 - 40	Leg	ROHN 6 EH	117	-171.64	318.90	53.8	Pass
T8	40 - 20	Leg	ROHN 8 EHS	132	-200.74	405.72	49.5	Pass
T9	20 - 0	Leg	ROHN 8 EHS	147	-230.01	405.72	56.7	Pass
T1	170 - 160	Diagonal	L 2 x 2 x 3/16	10	-2.95	10.33	28.6 40.9 (b)	Pass
T2	160 - 140	Diagonal	L2 1/2x2 1/2x1/4	28	-4.50	16.20	27.8 35.0 (b)	Pass
T3	140 - 120	Diagonal	L2 1/2x2 1/2x1/4	49	-5.90	12.43	47.5	Pass
T4	120 - 100	Diagonal	L3x3x1/4	70	-6.92	17.34	39.9 46.1 (b)	Pass
T5	100 - 80	Diagonal	L3 1/2x3 1/2x1/4	91	-8.33	18.92	44.0 55.1 (b)	Pass
T6	80 - 60	Diagonal	L4x4x5/16	106	-9.38	29.62	31.7 49.7 (b)	Pass
T7	60 - 40	Diagonal	L4x4x5/16	121	-9.77	24.78	39.4 51.9 (b)	Pass
T8	40 - 20	Diagonal	L4x4x5/16	136	-10.86	21.56	50.4 57.1 (b)	Pass
T9	20 - 0	Diagonal	L4x4x3/8	151	-11.75	22.00	53.4	Pass
T1	170 - 160	Top Girt	L2 1/2x2 1/2x3/16	4	-1.15	6.92	16.7	Pass
T2	160 - 140	Top Girt	L2 1/2x2 1/2x3/16	22	-0.23	6.92	3.3	Pass
							Summary	
						Leg (T3)	58.4	Pass
						Diagonal (T8)	57.1	Pass
						Top Girt (T1)	16.7	Pass
						Bolt Checks	57.1	Pass
						RATING =	**58.4**	**Pass**

APPENDIX B

BASE LEVEL DRAWING

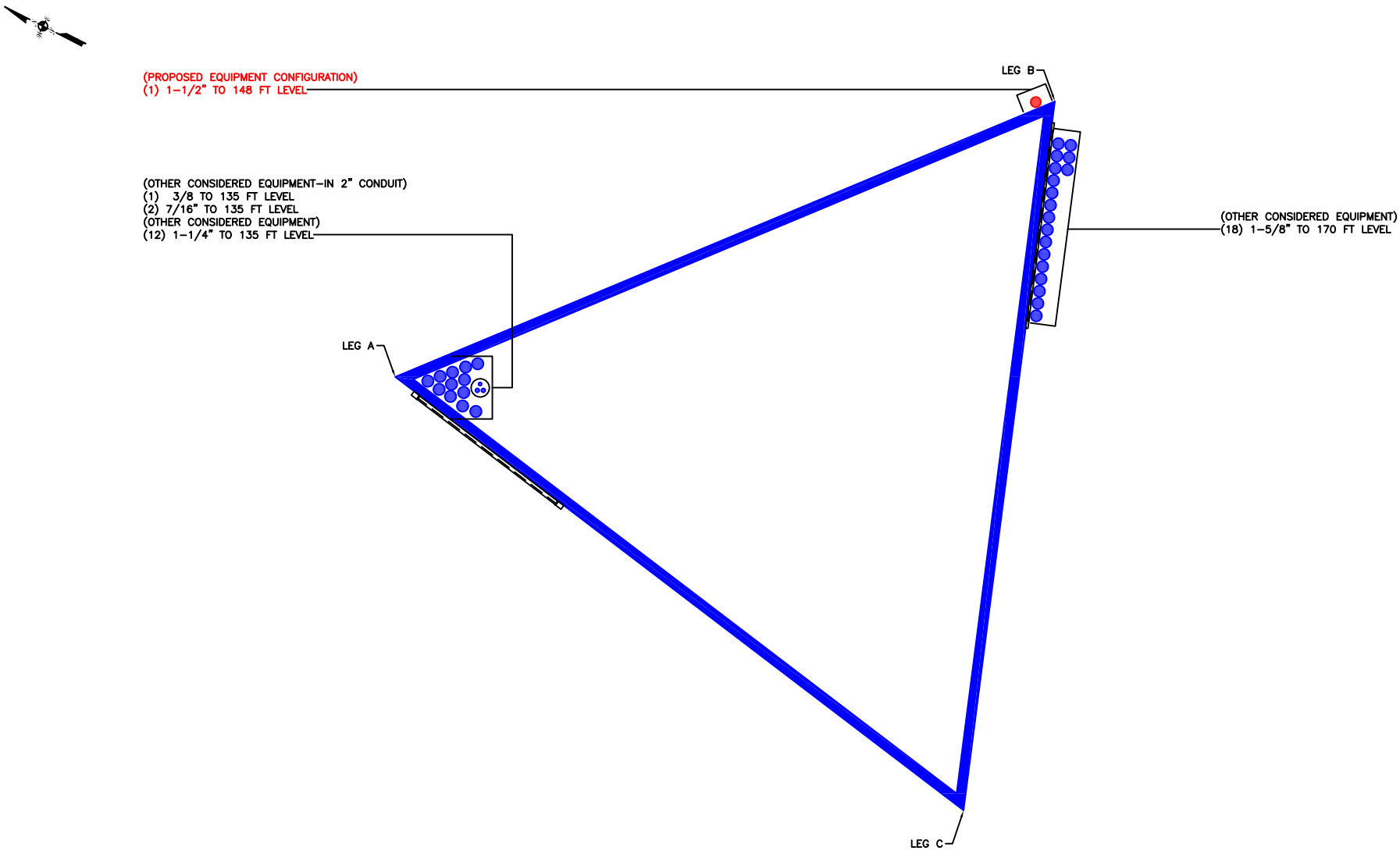
(PROPOSED EQUIPMENT CONFIGURATION)
(1) 1-1/2" TO 148 FT LEVEL
LEG B
(OTHER CONSIDERED EQUIPMENT-IN 2" CONDUIT)
(1) 3/8 TO 135 FT LEVEL
(2) 7/16" TO 135 FT LEVEL
(OTHER CONSIDERED EQUIPMENT)
(12) 1-1/4" TO 135 FT LEVEL
(OTHER CONSIDERED EQUIPMENT)
(18) 1-5/8" TO 170 FT LEVEL
LEG A
LEG C

APPENDIX C

ADDITIONAL CALCULATIONS

Self Support Anchor Rod Capacity

Site Info	
BU #	807134
Site Name	NHV 031B 943108
Order #	553397 Rev 0

Analysis Considerations	
TIA-222 Revision	H
Grout Considered:	Yes
l_{ar} (in)	3

Applied Loads		
	Comp.	Uplift
Axial Force (kips)	237.39	195.27
Shear Force (kips)	29.44	25.07

**TIA-222-H Section 15.5 Applied*

Considered Eccentricity	
Leg Mod Eccentricity (in)	0.000
Anchor Rod N.A Shift (in)	0.000
Total Eccentricity (in)	0.000

**Anchor Rod Eccentricity Applied*

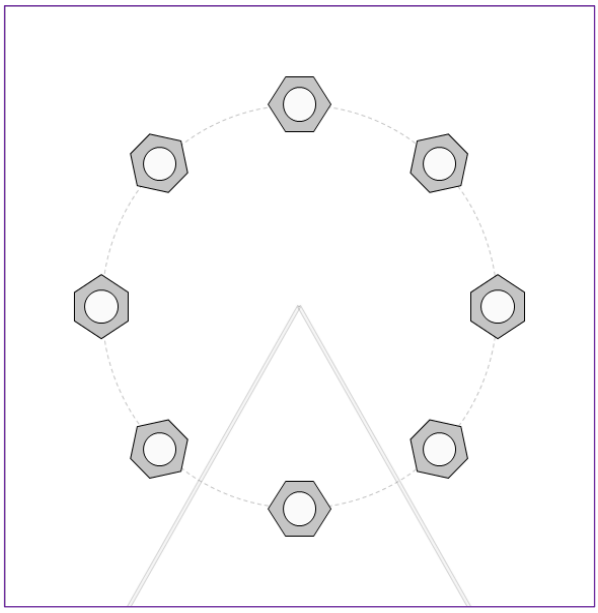

Connection Properties

Anchor Rod Data

(8) 1" ø bolts (A354-BC N; Fy=109 ksi, Fu=125 ksi)

l_{ar} (in): 3

Analysis Results

Anchor Rod Summary *(units of kips, kip-in)*

Pu_t = 24.41	ϕPn_t = 56.81	**Stress Rating**
Vu = 3.13	ϕVn = 36.82	**18.3%**
Mu = n/a	ϕMn = n/a	**Pass**

SST Unit Base Foundation

BU # :	807134
Site Name:	NHV 031B
App. Number:	553397 Rev 0
TIA-222 Revision:	H

Top & Bot. Pad Rein. Different?:	☐
Tower Centroid Offset?:	☐
Block Foundation?:	☑
Rectangular Pad?:	☐

Superstructure Analysis Reactions		
Global Moment, **M**:	4777.85	ft-kips
Global Axial, **P**:	50.16	kips
Global Shear, **V**:	47.75	kips
Leg Compression, $\mathbf{P_{comp}}$:	237.39	kips
Leg Comp. Shear, $\mathbf{V_{u\_comp}}$:	29.44	kips
Leg Uplift, $\mathbf{P_{uplift}}$:	195.27	kips
Leg Uplift. Shear, $\mathbf{V_{u\_uplift}}$:	25.07	kips
Tower Height, **H**:	170	ft
Base Face Width, **BW**:	25	ft
BP Dist. Above Fdn, $\mathbf{bp_{dist}}$:	4	in
Anchor Bolt Circle, **BC**:	14	in

Foundation Analysis Checks				
	Capacity	**Demand**	**Rating***	**Check**
Lateral (Sliding) (kips)	325.60	47.75	**14.0%**	**Pass**
Bearing Pressure (ksf)	60.00	1.83	**2.9%**	**Pass**
*Overturning (kip*ft)*	11108.76	4984.77	**44.9%**	**Pass**
*Pad Flexure (kip*ft)*	4757.68	981.66	**19.7%**	**Pass**
Pad Shear - 1-way (kips)	1464.43	131.64	**8.6%**	**Pass**
Pad Shear - Comp 2-way (ksi)	0.164	0.029	**17.1%**	**Pass**
*Flexural 2-way (Comp) (kip*ft)*	2499.77	0.00	**0.0%**	**Pass**
Pad Shear - Tension 2-way (ksi)	0.164	0.024	**14.0%**	**Pass**
*Flexural 2-way (Tension) (kip*ft)*	2499.77	0.00	**0.0%**	**Pass**

**Rating per TIA-222-H Section 15.5*

Soil Rating*:	**44.9%**
Structural Rating*:	**19.7%**

Pad Properties		
Depth, **D**:	3.50	ft
Pad Width, $\mathbf{W_1}$:	34.00	ft
Pad Thickness, **T**:	4.00	ft
Pad Rebar Size (Bottom dir. 2), $\mathbf{Sp_2}$:	7	
Pad Rebar Quantity (Bottom dir. 2), $\mathbf{mp_2}$:	41	
Pad Clear Cover, $\mathbf{cc_{pad}}$:	3	in

Material Properties		
Rebar Grade, **Fy**:	60	ksi
Concrete Compressive Strength, **F'c**:	3	ksi
Dry Concrete Density, δ**c**:	150	pcf

Soil Properties		
Total Soil Unit Weight, γ:	170	pcf
Ultimate Gross Bearing, Qult:	80.000	ksf
Cohesion, **Cu**:		ksf
Friction Angle, φ:		degrees
SPT Blow Count, $\mathbf{N_{blows}}$:		
Base Friction, μ:	0.65	
Neglected Depth, **N**:	3.3	ft
Foundation Bearing on Rock?	Yes	
Groundwater Depth, **gw**:	N/A	ft

<-- Toggle between Gross and Net

ASCE 7 Hazards Report

Address:
No Address at This Location

Standard: ASCE/SEI 7-10
Risk Category: II
Soil Class: D - Stiff Soil

Elevation: 381.75 ft (NAVD 88)
Latitude: 41.386092
Longitude: -72.603997

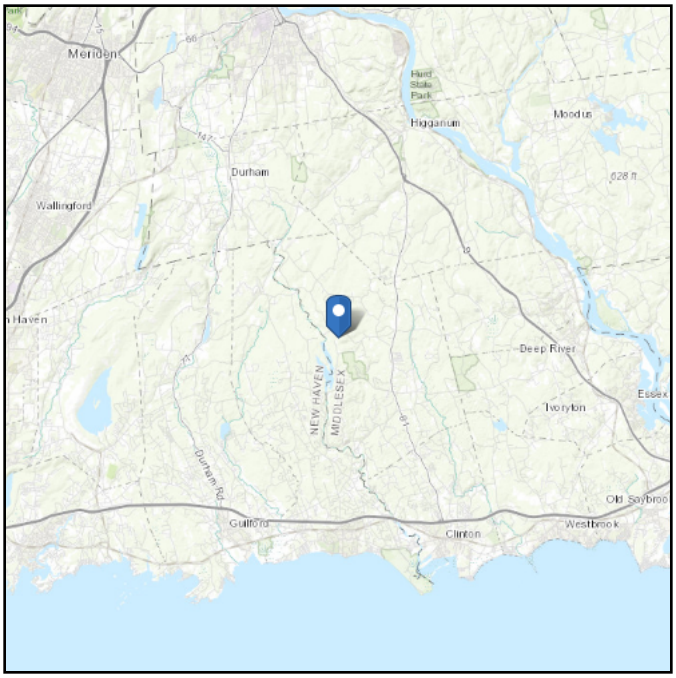

Wind

Results:

Wind Speed:	~~128 Vmph~~	130 Vmph per Appendix N of 2018 Connecticut State Building Code
10-year MRI	78 Vmph	
25-year MRI	88 Vmph	
50-year MRI	95 Vmph	
100-year MRI	105 Vmph	

Data Source: ASCE/SEI 7-10, Fig. 26.5-1A and Figs. CC-1–CC-4, and Section 26.5.2, incorporating errata of March 12, 2014

Date Accessed: Wed Mar 31 2021

Value provided is 3-second gust wind speeds at 33 ft above ground for Exposure C Category, based on linear interpolation between contours. Wind speeds are interpolated in accordance with the 7-10 Standard. Wind speeds correspond to approximately a 7% probability of exceedance in 50 years (annual exceedance probability = 0.00143, MRI = 700 years).

Site is in a hurricane-prone region as defined in ASCE/SEI 7-10 Section 26.2. Glazed openings need not be protected against wind-borne debris.

Seismic

Site Soil Class: D - Stiff Soil

Results:

S_S :	0.175	S_{DS} :	0.186
S_1 :	0.061	S_{D1} :	0.097
F_a :	1.6	T_L :	6
F_v :	2.4	PGA :	0.089
S_{MS} :	0.28	PGA_M :	0.142
S_{M1} :	0.146	F_{PGA} :	1.6
		I_e :	1

Seismic Design Category B

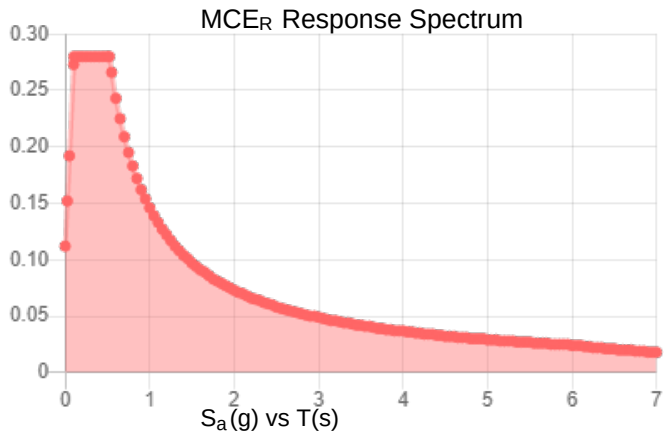

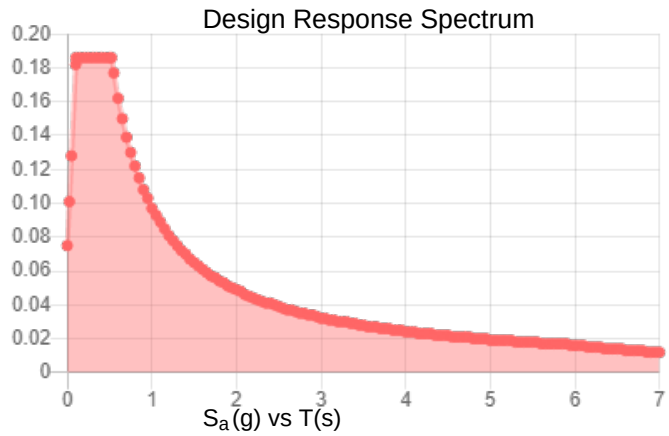

Data Accessed: Wed Mar 31 2021

Date Source: USGS Seismic Design Maps based on ASCE/SEI 7-10, incorporating Supplement 1 and errata of March 31, 2013, and ASCE/SEI 7-10 Table 1.5-2. Additional data for site-specific ground motion procedures in accordance with ASCE/SEI 7-10 Ch. 21 are available from USGS.

Ice

Results:

Ice Thickness:	0.75 in.
Concurrent Temperature:	15 F
Gust Speed:	50 mph
Data Source:	Standard ASCE/SEI 7-10, Figs. 10-2 through 10-8
Date Accessed:	Wed Mar 31 2021

Ice thicknesses on structures in exposed locations at elevations higher than the surrounding terrain and in valleys and gorges may exceed the mapped values.

Values provided are equivalent radial ice thicknesses due to freezing rain with concurrent 3-second gust speeds, for a 50-year mean recurrence interval, and temperatures concurrent with ice thicknesses due to freezing rain. Thicknesses for ice accretions caused by other sources shall be obtained from local meteorological studies. Ice thicknesses in exposed locations at elevations higher than the surrounding terrain and in valleys and gorges may exceed the mapped values.

Exhibit E

Mount Analysis

Date: **August 3, 2021**

Darcy Tarr
Crown Castle
3530 Toringdon Way, Suite 300
Charlotte, NC 28277
(704) 405-6589

Trylon
1825 W. Walnut Hill Lane,
Suite 302
Irving, TX 75038
214-930-1730

Subject:	**Mount Replacement Analysis Report**	
Carrier Designation:	**DISH Network Equipment Change-Out**	
	Carrier Site Number:	BOBDL00054A
	Carrier Site Name:	CT-CCI-T-807134
Crown Castle Designation:	**Crown Castle BU Number:**	807134
	Crown Castle Site Name:	NHV 031B 943108
	Crown Castle JDE Job Number:	645664
	Crown Castle Order Number:	553397 Rev. *2*
Engineering Firm Designation:	**Trylon Report Designation:**	189059
Site Data:	**197 North Chestnut Hill Road, Killingworth, Middlesex County, CT, 06419**	
	Latitude 41°23'9.93" Longitude -72°36'14.39"	
Structure Information:	**Tower Height & Type:**	**170.0 ft Self-Support**
	Mount Elevation:	**148.0 ft**
	Mount Type:	**8.0 ft Sector Frame**

Dear Darcy Tarr,

Trylon is pleased to submit this **"Mount Replacement Analysis Report"** to determine the structural integrity of DISH Network's antenna mounting system with the proposed appurtenance and equipment addition on the abovementioned supporting tower structure. Analysis of the existing supporting tower structure is to be completed by others and therefore is not part of this analysis. Analysis of the antenna mounting system as a tie-off point for fall protection or rigging is not part of this document.

The purpose of the analysis is to determine acceptability of the mount stress level. Based on our analysis we have determined the mount stress level to be:

Sector Frame	**Sufficient**

***Sufficient upon completion of the changes listed in the 'Recommendations' section of this report.**

This analysis utilizes an ultimate 3-second gust wind speed of 130 mph as required by the 2018 Connecticut State Building Code. Applicable Standard references and design criteria are listed in Section 2 - Analysis Criteria.

Mount analysis prepared by: Trevor Leahy, E.I.T.

Respectfully Submitted by:
Jinshan Wang, P.E.

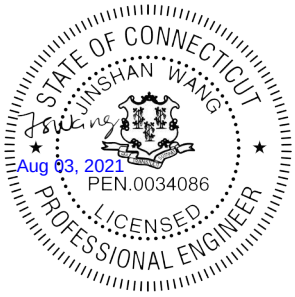

TABLE OF CONTENTS

1) INTRODUCTION

This is a proposed 3 sector 8.0 ft Sector Frame Mount, designed by Commscope.

2) ANALYSIS CRITERIA

Building Code: 2015 IBC / 2018 CTSBC
TIA-222 Revision: TIA-222-H
Risk Category: II
Ultimate Wind Speed: 130 mph
Exposure Category: B
Topographic Factor at Base: 1.0
Topographic Factor at Mount: 1.0
Ice Thickness: 1.50 in
Wind Speed with Ice: 50 mph
Seismic S_s: 0.173
Seismic S_1: 0.061
Live Loading Wind Speed: 30 mph
Man Live Load at Mid/End-Points: 250 lb
Man Live Load at Mount Pipes: 500 lb

Table 1 - Proposed Equipment Configuration

Mount Centerline (ft)	Antenna Centerline (ft)	Number of Antennas	Antenna Manufacturer	Antenna Model	Mount / Modification Details
148.0	148.0	3	JMA Wireless	MX08FRO665-20	8.0 ft Sector Frame [Commscope MTC3975083]
		3	Fujitsu	TA08025-B604	
		3	Fujitsu	TA08025-B605	
		1	Raycap	RDIDC-9181-PF-48	

3) ANALYSIS PROCEDURE

Table 2 - Documents Provided

Document	Remarks	Reference	Source
Crown Application	DISH Network Application	553397 Rev. 2	CCI Sites
Mount Manufacturer Drawings	Commscope	MTC3975083	Trylon
Tower Analysis	Crown Castle	9742351	CCI Sites

3.1) Analysis Method

RISA-3D (Version 17.0.4), a commercially available analysis software package, was used to create a three-dimensional model of the antenna mounting system and calculate member stresses for various loading cases.

A tool internally developed, using Microsoft Excel, by Trylon was used to calculate wind loading on all appurtenances, dishes, and mount members for various load cases. Selected output from the analysis is included in Appendix B.

This analysis was performed in accordance with Crown Castle's ENG-SOW-10208 *Tower Mount Analysis* (Revision B).

3.2) Assumptions

1) The antenna mounting system was properly fabricated, installed and maintained in good condition in accordance with its original design and manufacturer's specifications.
2) The configuration of antennas, mounts, and other appurtenances are as specified in Table 1 and the referenced drawings.
3) All member connections are assumed to have been designed to meet or exceed the load carrying capacity of the connected member unless otherwise specified in this report.
4) The analysis will be required to be revised if the existing conditions in the field differ from those shown in the above-referenced documents or assumed in this analysis. No allowance was made for any damaged, missing, or rusted members.
5) Prior structural modifications to the tower mounting system are assumed to be installed as shown per available data.
6) Steel grades have been assumed as follows, unless noted otherwise:

Channel, Solid Round, Angle, Plate	ASTM A36 (GR 36)
HSS (Rectangular)	ASTM A500 (GR B-46)
Pipe	ASTM A53 (GR 35)
Connection Bolts	ASTM A325

This analysis may be affected if any assumptions are not valid or have been made in error. Trylon should be notified to determine the effect on the structural integrity of the antenna mounting system.

4) ANALYSIS RESULTS

Table 3 - Mount Component Stresses vs. Capacity (Sector Frame, All Sectors)

Notes	Component	Critical Member	Centerline (ft)	% Capacity	Pass / Fail
1, 2	Mount Pipe(s)	MP1	148.0	29.4	Pass
	Horizontal(s)	M5		20.4	Pass
	Standoff(s)	M4		20.3	Pass
	Bracing(s)	M24		37.2	Pass
	Tieback(s)	M31A		10.3	Pass
	Mount Connection(s)	-		18.2	Pass

Structure Rating (max from all components) =	29.4%

Notes:
1) See additional documentation in "Appendix C - Software Analysis Output" for calculations supporting the % capacity consumed.
2) Rating per TIA-222-H, Section 15.5

Table 4 - Tieback Connection Data Table

Tower Connection Node No.	Existing / Proposed	Resultant End Reaction (lb)	Connected Member Type	Connected Member Size	Member Compressive Capacity (lb)[3]	Notes
N52A	Proposed	1,016.5	Leg	Rohn 2.5 EH	2,925.6	1

Notes:
1) Tieback connection point is within 25% of either end of the connected tower member
2) Tieback connection point is NOT within 25% of either end of the connected tower member
3) Reduced member compressive capacity according to CED-STD-10294 *Standard for Installation of Mounts and Appurtenances*

4.1) Recommendations

The mount has sufficient capacity to carry the proposed loading configuration. In order for the results of the analysis to be considered valid, the proposed mount listed below must be installed.

1. Commscope MTC3975083. Install tieback connection point within 25% of either end of tower leg.

No structural modifications are required at this time, provided that the above-listed changes are implemented.

APPENDIX A

WIRE FRAME AND RENDERED MODELS

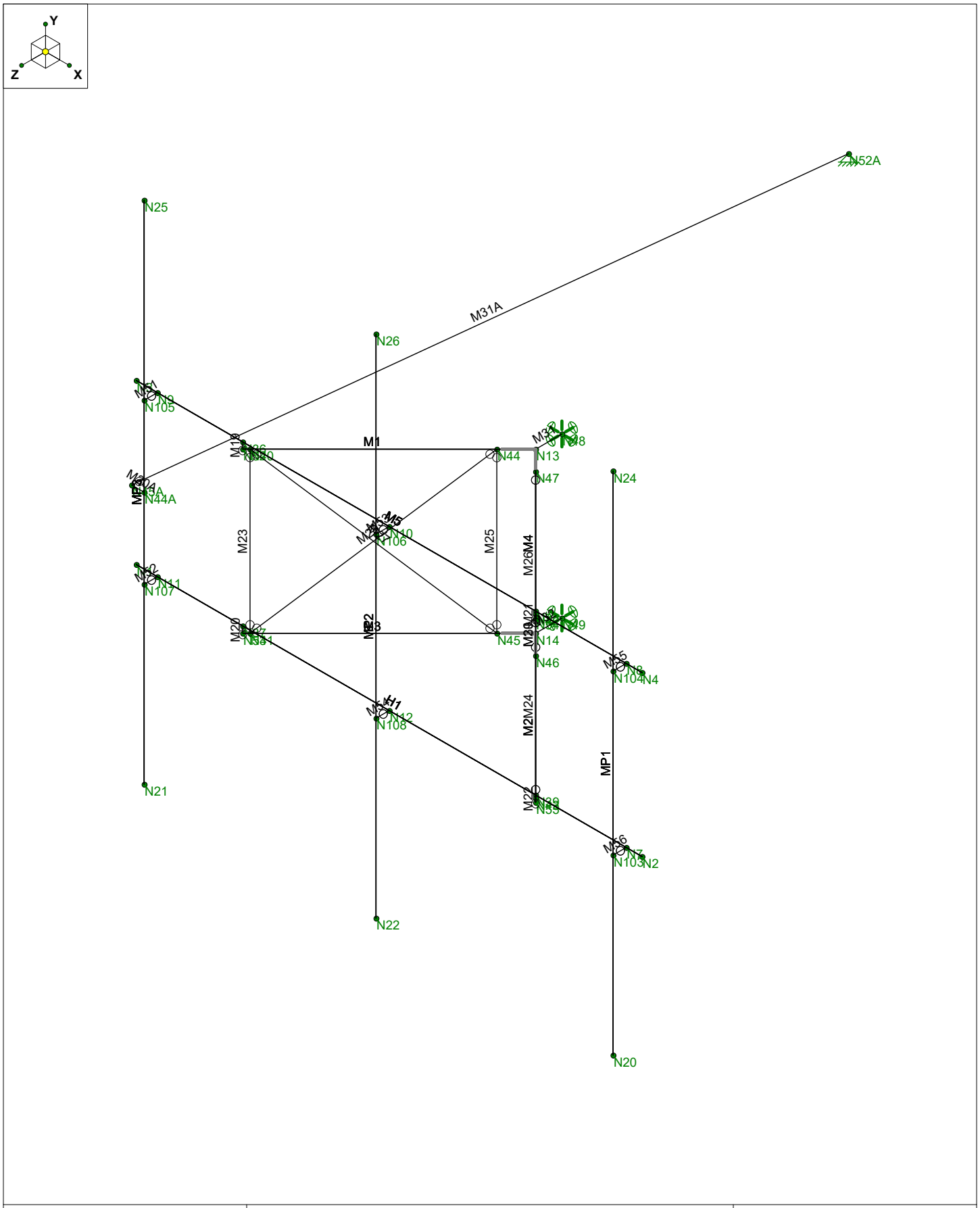

Trylon	NHV 031B 943108 (BU 807134 Order 553397)	SK - 1
TL		Aug 3, 2021 at 9:24 AM
189059		MTC3975083_loaded.r3d

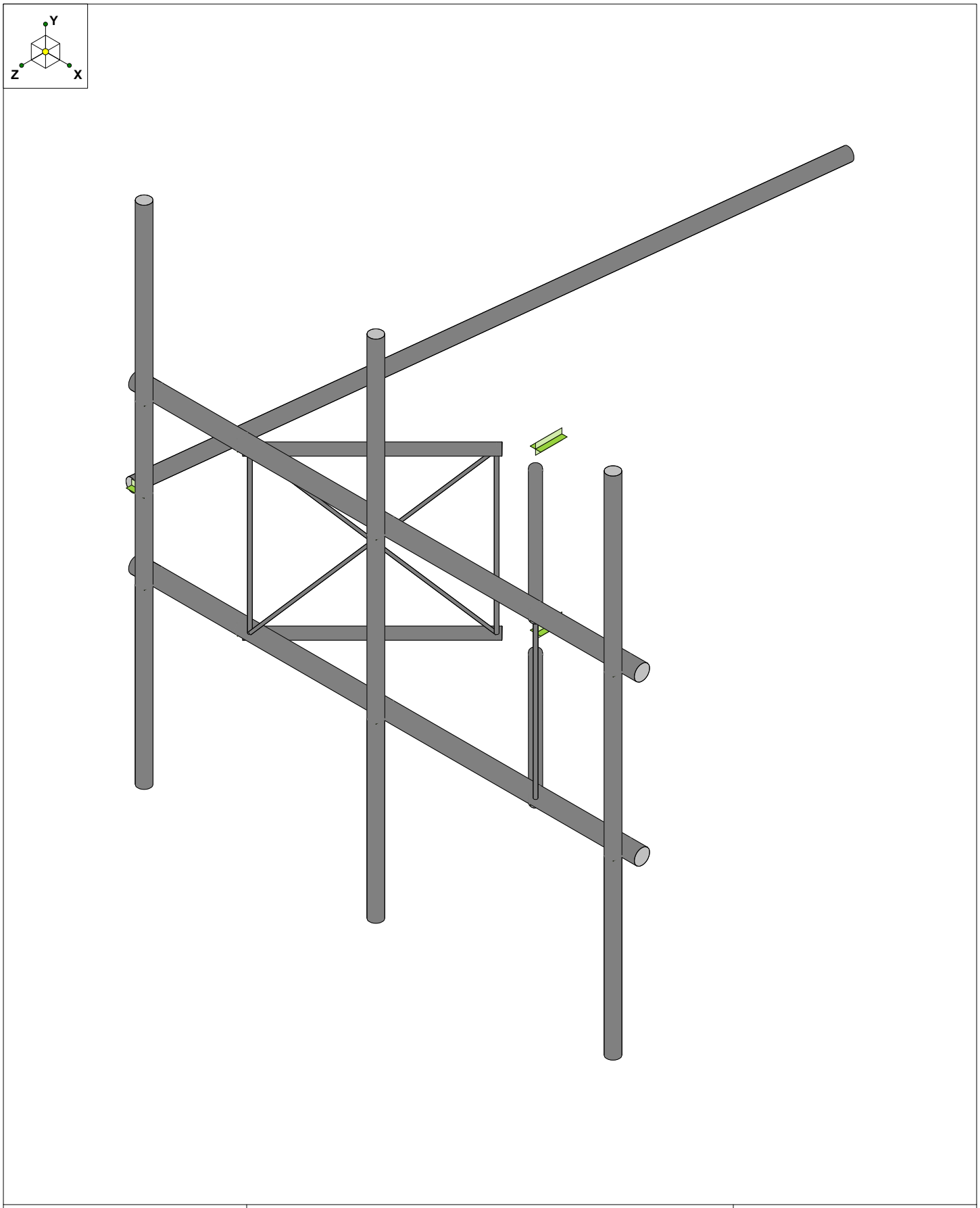

Trylon	NHV 031B 943108 (BU 807134 Order 553397)	SK - 2
TL		Aug 3, 2021 at 9:25 AM
189059		MTC3975083_loaded.r3d

APPENDIX B

SOFTWARE INPUT CALCULATIONS

ASCE 7 Hazards Report

Address:
No Address at This Location

Standard: ASCE/SEI 7-10
Risk Category: II
Soil Class: D - Stiff Soil

Elevation: 381.75 ft (NAVD 88)
Latitude: 41.386092
Longitude: -72.603997

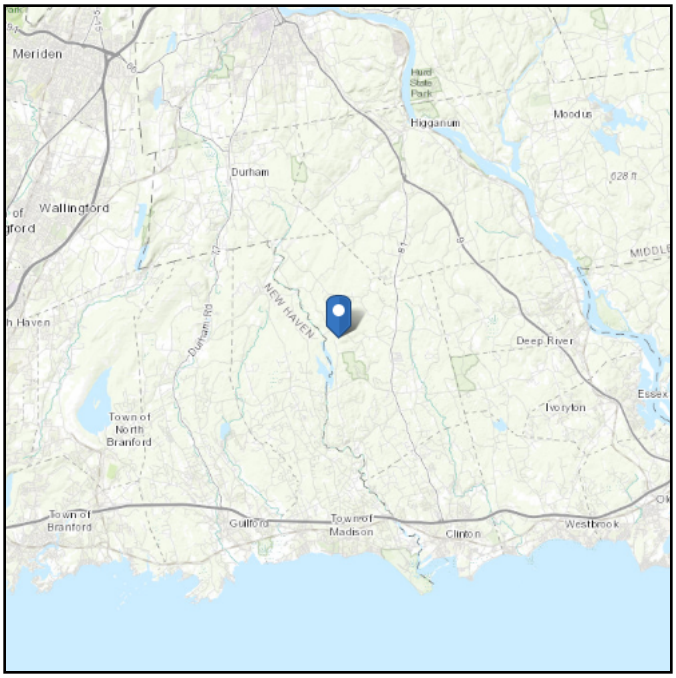

Ice

Results:

Ice Thickness:	0.75 in.
Concurrent Temperature:	15 F
Gust Speed:	50 mph

Data Source: Standard ASCE/SEI 7-10, Figs. 10-2 through 10-8

Date Accessed: Tue Aug 03 2021

Ice thicknesses on structures in exposed locations at elevations higher than the surrounding terrain and in valleys and gorges may exceed the mapped values.

Values provided are equivalent radial ice thicknesses due to freezing rain with concurrent 3-second gust speeds, for a 50-year mean recurrence interval, and temperatures concurrent with ice thicknesses due to freezing rain. Thicknesses for ice accretions caused by other sources shall be obtained from local meteorological studies. Ice thicknesses in exposed locations at elevations higher than the surrounding terrain and in valleys and gorges may exceed the mapped values.

Trylon
1825 W. Walnut Hill Lane Suite 120
Irving, TX 75038

TIA LOAD CALCULATOR 2.0

PROJECT DATA	
Job Code:	189059
Carrier Site ID:	BOBDL00054A
Carrier Site Name:	CT-CCI-T-807134

CODES AND STANDARDS	
Building Code:	2015 IBC
Local Building Code:	2018 CTSBC
Design Standard:	TIA-222-H

STRUCTURE DETAILS		
Mount Type:	Sector Frame	--
Mount Elevation:	148.0	ft.
Number of Sectors:	3	--
Structure Type:	Self Support Tower	--
Structure Height:	170.0	ft.

ANALYSIS CRITERIA		
Structure Risk Category:	II	--
Exposure Category:	B	--
Site Class:	D - Stiff Soil	--
Ground Elevation:	381.75	ft.

TOPOGRAPHIC DATA		
Topographic Category:	1.00	--
Topographic Feature:	N/A	--
Crest Point Elevation:	0.00	ft.
Base Point Elevation:	0.00	ft.
Crest to Mid-Height (L/2):	0.00	ft.
Distance from Crest (x):	0.00	ft.
Base Topo Factor (K_{zt}):	1.00	--
Mount Topo Factor (K_{zt}):	1.00	--

WIND PARAMETERS		
Design Wind Speed:	130	mph
Wind Escalation Factor (K_s):	1.00	--
Velocity Coefficient (K_z):	1.11	--
Directionality Factor (K_d):	0.95	--
Gust Effect Factor (Gh):	1.00	--
Shielding Factor (K_a):	0.90	--
Velocity Pressure (q_z):	44.81	psf

ICE PARAMETERS		
Design Ice Wind Speed:	50	mph
Design Ice Thickness (t_i):	1.50	in
Importance Factor (I_i):	1.00	--
Ice Velocity Pressure (q_{zi}):	44.81	psf
Mount Ice Thickness (t_{iz}):	1.74	in

WIND STRUCTURE CALCULATIONS		
Flat Member Pressure:	80.65	psf
Round Member Pressure:	48.39	psf
Ice Wind Pressure:	7.52	psf

SEISMIC PARAMETERS		
Importance Factor (I_e):	1.00	--
Short Period Accel .(S_s):	0.17	g
1 Second Accel (S_1):	0.06	g
Short Period Des. (S_{DS}):	0.18	g
1 Second Des. (S_{D1}):	0.10	g
Short Period Coeff. (F_a):	1.60	--
1 Second Coeff. (F_v):	2.40	--
Response Coefficient (Cs):	0.09	--
Amplification Factor (A_S):	1.20	--

LOAD COMBINATIONS [LRFD]

#	Description
1	1.4DL
2	1.2DL + 1WL 0 AZI
3	1.2DL + 1WL 30 AZI
4	1.2DL + 1WL 45 AZI
5	1.2DL + 1WL 60 AZI
6	1.2DL + 1WL 90 AZI
7	1.2DL + 1WL 120 AZI
8	1.2DL + 1WL 135 AZI
9	1.2DL + 1WL 150 AZI
10	1.2DL + 1WL 180 AZI
11	1.2DL + 1WL 210 AZI
12	1.2DL + 1WL 225 AZI
13	1.2DL + 1WL 240 AZI
14	1.2DL + 1WL 270 AZI
15	1.2DL + 1WL 300 AZI
16	1.2DL + 1WL 315 AZI
17	1.2DL + 1WL 330 AZI
18	0.9DL + 1WL 0 AZI
19	0.9DL + 1WL 30 AZI
20	0.9DL + 1WL 45 AZI
21	0.9DL + 1WL 60 AZI
22	0.9DL + 1WL 90 AZI
23	0.9DL + 1WL 120 AZI
24	0.9DL + 1WL 135 AZI
25	0.9DL + 1WL 150 AZI
26	0.9DL + 1WL 180 AZI
27	0.9DL + 1WL 210 AZI
28	0.9DL + 1WL 225 AZI
29	0.9DL + 1WL 240 AZI
30	0.9DL + 1WL 270 AZI
31	0.9DL + 1WL 300 AZI
32	0.9DL + 1WL 315 AZI
33	0.9DL + 1WL 330 AZI
34	1.2DL + 1DLi + 1WLi 0 AZI
35	1.2DL + 1DLi + 1WLi 30 AZI
36	1.2DL + 1DLi + 1WLi 45 AZI
37	1.2DL + 1DLi + 1WLi 60 AZI
38	1.2DL + 1DLi + 1WLi 90 AZI
39	1.2DL + 1DLi + 1WLi 120 AZI
40	1.2DL + 1DLi + 1WLi 135 AZI
41	1.2DL + 1DLi + 1WLi 150 AZI

#	Description
42	1.2DL + 1DLi + 1WLi 180 AZI
43	1.2DL + 1DLi + 1WLi 210 AZI
44	1.2DL + 1DLi + 1WLi 225 AZI
45	1.2DL + 1DLi + 1WLi 240 AZI
46	1.2DL + 1DLi + 1WLi 270 AZI
47	1.2DL + 1DLi + 1WLi 300 AZI
48	1.2DL + 1DLi + 1WLi 315 AZI
49	1.2DL + 1DLi + 1WLi 330 AZI
50	(1.2+0.2Sds) + 1.0E 0 AZI
51	(1.2+0.2Sds) + 1.0E 30 AZI
52	(1.2+0.2Sds) + 1.0E 45 AZI
53	(1.2+0.2Sds) + 1.0E 60 AZI
54	(1.2+0.2Sds) + 1.0E 90 AZI
55	(1.2+0.2Sds) + 1.0E 120 AZI
56	(1.2+0.2Sds) + 1.0E 135 AZI
57	(1.2+0.2Sds) + 1.0E 150 AZI
58	(1.2+0.2Sds) + 1.0E 180 AZI
59	(1.2+0.2Sds) + 1.0E 210 AZI
60	(1.2+0.2Sds) + 1.0E 225 AZI
61	(1.2+0.2Sds) + 1.0E 240 AZI
62	(1.2+0.2Sds) + 1.0E 270 AZI
63	(1.2+0.2Sds) + 1.0E 300 AZI
64	(1.2+0.2Sds) + 1.0E 315 AZI
65	(1.2+0.2Sds) + 1.0E 330 AZI
66	(0.9-0.2Sds) + 1.0E 0 AZI
67	(0.9-0.2Sds) + 1.0E 30 AZI
68	(0.9-0.2Sds) + 1.0E 45 AZI
69	(0.9-0.2Sds) + 1.0E 60 AZI
70	(0.9-0.2Sds) + 1.0E 90 AZI
71	(0.9-0.2Sds) + 1.0E 120 AZI
72	(0.9-0.2Sds) + 1.0E 135 AZI
73	(0.9-0.2Sds) + 1.0E 150 AZI
74	(0.9-0.2Sds) + 1.0E 180 AZI
75	(0.9-0.2Sds) + 1.0E 210 AZI
76	(0.9-0.2Sds) + 1.0E 225 AZI
77	(0.9-0.2Sds) + 1.0E 240 AZI
78	(0.9-0.2Sds) + 1.0E 270 AZI
79	(0.9-0.2Sds) + 1.0E 300 AZI
80	(0.9-0.2Sds) + 1.0E 315 AZI
81	(0.9-0.2Sds) + 1.0E 330 AZI
82-88	1.2D + 1.5 Lv1

#	Description
89	1.2D + 1.5Lm + 1.0Wm 0 AZI - MP1
90	1.2D + 1.5Lm + 1.0Wm 30 AZI - MP1
91	1.2D + 1.5Lm + 1.0Wm 45 AZI - MP1
92	1.2D + 1.5Lm + 1.0Wm 60 AZI - MP1
93	1.2D + 1.5Lm + 1.0Wm 90 AZI - MP1
94	1.2D + 1.5Lm + 1.0Wm 120 AZI - MP1
95	1.2D + 1.5Lm + 1.0Wm 135 AZI - MP1
96	1.2D + 1.5Lm + 1.0Wm 150 AZI - MP1
97	1.2D + 1.5Lm + 1.0Wm 180 AZI - MP1
98	1.2D + 1.5Lm + 1.0Wm 210 AZI - MP1
99	1.2D + 1.5Lm + 1.0Wm 225 AZI - MP1
100	1.2D + 1.5Lm + 1.0Wm 240 AZI - MP1
101	1.2D + 1.5Lm + 1.0Wm 270 AZI - MP1
102	1.2D + 1.5Lm + 1.0Wm 300 AZI - MP1
103	1.2D + 1.5Lm + 1.0Wm 315 AZI - MP1
104	1.2D + 1.5Lm + 1.0Wm 330 AZI - MP1
105	1.2D + 1.5Lm + 1.0Wm 0 AZI - MP2
106	1.2D + 1.5Lm + 1.0Wm 30 AZI - MP2
107	1.2D + 1.5Lm + 1.0Wm 45 AZI - MP2
108	1.2D + 1.5Lm + 1.0Wm 60 AZI - MP2
109	1.2D + 1.5Lm + 1.0Wm 90 AZI - MP2
110	1.2D + 1.5Lm + 1.0Wm 120 AZI - MP2
111	1.2D + 1.5Lm + 1.0Wm 135 AZI - MP2
112	1.2D + 1.5Lm + 1.0Wm 150 AZI - MP2
113	1.2D + 1.5Lm + 1.0Wm 180 AZI - MP2
114	1.2D + 1.5Lm + 1.0Wm 210 AZI - MP2
115	1.2D + 1.5Lm + 1.0Wm 225 AZI - MP2
116	1.2D + 1.5Lm + 1.0Wm 240 AZI - MP2
117	1.2D + 1.5Lm + 1.0Wm 270 AZI - MP2
118	1.2D + 1.5Lm + 1.0Wm 300 AZI - MP2
119	1.2D + 1.5Lm + 1.0Wm 315 AZI - MP2
120	1.2D + 1.5Lm + 1.0Wm 330 AZI - MP2

#	Description
121	1.2D + 1.5Lm + 1.0Wm 0 AZI - MP3
122	1.2D + 1.5Lm + 1.0Wm 30 AZI - MP3
123	1.2D + 1.5Lm + 1.0Wm 45 AZI - MP3
124	1.2D + 1.5Lm + 1.0Wm 60 AZI - MP3
125	1.2D + 1.5Lm + 1.0Wm 90 AZI - MP3
126	1.2D + 1.5Lm + 1.0Wm 120 AZI - MP3
127	1.2D + 1.5Lm + 1.0Wm 135 AZI - MP3
128	1.2D + 1.5Lm + 1.0Wm 150 AZI - MP3
129	1.2D + 1.5Lm + 1.0Wm 180 AZI - MP3
130	1.2D + 1.5Lm + 1.0Wm 210 AZI - MP3
131	1.2D + 1.5Lm + 1.0Wm 225 AZI - MP3
132	1.2D + 1.5Lm + 1.0Wm 240 AZI - MP3
133	1.2D + 1.5Lm + 1.0Wm 270 AZI - MP3
134	1.2D + 1.5Lm + 1.0Wm 300 AZI - MP3
135	1.2D + 1.5Lm + 1.0Wm 315 AZI - MP3
136	1.2D + 1.5Lm + 1.0Wm 330 AZI - MP3
137	1.2D + 1.5Lm + 1.0Wm 0 AZI - MP4
138	1.2D + 1.5Lm + 1.0Wm 30 AZI - MP4
139	1.2D + 1.5Lm + 1.0Wm 45 AZI - MP4
140	1.2D + 1.5Lm + 1.0Wm 60 AZI - MP4
141	1.2D + 1.5Lm + 1.0Wm 90 AZI - MP4
142	1.2D + 1.5Lm + 1.0Wm 120 AZI - MP4
143	1.2D + 1.5Lm + 1.0Wm 135 AZI - MP4
144	1.2D + 1.5Lm + 1.0Wm 150 AZI - MP4
145	1.2D + 1.5Lm + 1.0Wm 180 AZI - MP4
146	1.2D + 1.5Lm + 1.0Wm 210 AZI - MP4
147	1.2D + 1.5Lm + 1.0Wm 225 AZI - MP4
148	1.2D + 1.5Lm + 1.0Wm 240 AZI - MP4
149	1.2D + 1.5Lm + 1.0Wm 270 AZI - MP4
150	1.2D + 1.5Lm + 1.0Wm 300 AZI - MP4
151	1.2D + 1.5Lm + 1.0Wm 315 AZI - MP4
152	1.2D + 1.5Lm + 1.0Wm 330 AZI - MP4

*This page shows an example of maintenance loads for (4) pipes, the number of mount pipe LCs may vary per site

EQUIPMENT LOADING

Appurtenance Name/Location	Qty.	Elevation [ft]	--	EPA $_N$ (ft2)	EPA $_T$ (ft2)	Weight (lbs)
MX08FRO665-20	1	148	No Ice	12.49	5.87	72.00
MP1/5/8, 0/140	--	--	w/ Ice	13.72	7.00	286.56
TA08025-B604	1	148	No Ice	1.96	0.98	63.90
MP1/5/8, 0/140	--	--	w/ Ice	2.39	1.31	70.48
TA08025-B605	1	148	No Ice	1.96	1.13	75.00
MP1/5/8, 0/140	--	--	w/ Ice	2.39	1.48	75.08
RDIDC-9181-PF-48	1	148	No Ice	2.01	1.17	21.85
MP1, 0	--	--	w/ Ice	2.45	1.53	74.00
			No Ice			
--	--	--	w/ Ice			
			No Ice			
--	--	--	w/ Ice			
			No Ice			
--	--	--	w/ Ice			
			No Ice			
--	--	--	w/ Ice			
			No Ice			
--	--	--	w/ Ice			
			No Ice			
--	--	--	w/ Ice			
			No Ice			
--	--	--	w/ Ice			
			No Ice			
--	--	--	w/ Ice			
			No Ice			
--	--	--	w/ Ice			
			No Ice			
--	--	--	w/ Ice			
			No Ice			
--	--	--	w/ Ice			
			No Ice			
--	--	--	w/ Ice			
			No Ice			
--	--	--	w/ Ice			
			No Ice			
--	--	--	w/ Ice			
			No Ice			
--	--	--	w/ Ice			
			No Ice			
--	--	--	w/ Ice			
			No Ice			
--	--	--	w/ Ice			
			No Ice			
--	--	--	w/ Ice			

EQUIPMENT LOADING [CONT.]

Appurtenance Name/Location	***Qty.***	***Elevation [ft]***	**--**	***EPA*** $_N$ *(ft2)*	***EPA*** $_T$ *(ft2)*	***Weight (lbs)***
			No Ice			
--	--	--	w/ Ice			
			No Ice			
--	--	--	w/ Ice			
			No Ice			
--	--	--	w/ Ice			
			No Ice			
--	--	--	w/ Ice			
			No Ice			
--	--	--	w/ Ice			
			No Ice			
--	--	--	w/ Ice			
			No Ice			
--	--	--	w/ Ice			
			No Ice			
--	--	--	w/ Ice			
			No Ice			
--	--	--	w/ Ice			
			No Ice			
--	--	--	w/ Ice			
			No Ice			
--	--	--	w/ Ice			
			No Ice			
--	--	--	w/ Ice			

EQUIPMENT WIND CALCULATIONS

Appurtenance Name	Qty.	Elevation [ft]	K_{zt}	K_z	K_d	t_d	q_z [psf]	q_{zi} [psf]
MX08FRO665-20	1	148	1.00	1.11	0.95	1.74	44.81	6.63
TA08025-B604	1	148	1.00	1.11	0.95	1.74	44.81	6.63
TA08025-B605	1	148	1.00	1.11	0.95	1.74	44.81	6.63
RDIDC-9181-PF-48	1	148	1.00	1.11	0.95	1.74	44.81	6.63

EQUIPMENT LATERAL WIND FORCE CALCULATIONS

Appurtenance Name	Qty.	--	0° 180°	30° 210°	60° 240°	90° 270°	120° 300°	150° 330°
MX08FRO665-20	1	No Ice	503.64	303.35	436.88	236.59	436.88	303.35
MP1/5/8, 0/140	--	w/ Ice	81.87	51.79	71.84	41.76	71.84	51.79
TA08025-B604	1	No Ice	79.18	49.47	69.28	39.57	69.28	49.47
MP1/5/8, 0/140	--	w/ Ice	14.26	9.44	12.66	7.84	12.66	9.44
TA08025-B605	1	No Ice	79.18	53.96	70.77	45.55	70.77	53.96
MP1/5/8, 0/140	--	w/ Ice	14.26	10.17	12.90	8.80	12.90	10.17
RDIDC-9181-PF-48	1	No Ice	81.13	55.62	72.63	47.11	72.63	55.62
MP1, 0	--	w/ Ice	14.59	10.49	13.22	9.12	13.22	10.49
		No Ice						
--	--	w/ Ice						
		No Ice						
--	--	w/ Ice						
		No Ice						
--	--	w/ Ice						
		No Ice						
--	--	w/ Ice						
		No Ice						
--	--	w/ Ice						
		No Ice						
--	--	w/ Ice						
		No Ice						
--	--	w/ Ice						
		No Ice						
--	--	w/ Ice						
		No Ice						
--	--	w/ Ice						
		No Ice						
--	--	w/ Ice						
		No Ice						
--	--	w/ Ice						
		No Ice						
--	--	w/ Ice						
		No Ice						
--	--	w/ Ice						
		No Ice						
--	--	w/ Ice						
		No Ice						
--	--	w/ Ice						
		No Ice						
--	--	w/ Ice						
		No Ice						
--	--	w/ Ice						
		No Ice						
--	--	w/ Ice						

EQUIPMENT LATERAL WIND FORCE CALCULATIONS [CONT.]

Appurtenance Name	*Qty.*	*--*	*0° 180°*	*30° 210°*	*60° 240°*	*90° 270°*	*120° 300°*	*150° 330°*
		No Ice						
--	--	w/ Ice						
		No Ice						
--	--	w/ Ice						
		No Ice						
--	--	w/ Ice						
		No Ice						
--	--	w/ Ice						
		No Ice						
--	--	w/ Ice						
		No Ice						
--	--	w/ Ice						
		No Ice						
--	--	w/ Ice						
		No Ice						
--	--	w/ Ice						
		No Ice						
--	--	w/ Ice						
		No Ice						
--	--	w/ Ice						
		No Ice						
--	--	w/ Ice						
		No Ice						
--	--	w/ Ice						

EQUIPMENT SEISMIC FORCE CALCULATIONS

Appurtenance Name	*Qty.*	*Elevation [ft]*	*Weight [lbs]*	F_p [lbs]
MX08FRO665-20	1	148	72	7.97
TA08025-B604	1	148	63.9	7.08
TA08025-B605	1	148	75	8.30
RDIDC-9181-PF-48	1	148	21.85	2.42

APPENDIX C

SOFTWARE ANALYSIS OUTPUT

(Global) Model Settings

Display Sections for Member Calcs	5
Max Internal Sections for Member Calcs	97
Include Shear Deformation?	Yes
Increase Nailing Capacity for Wind?	Yes
Include Warping?	Yes
Trans Load Btwn Intersecting Wood Wall?	Yes
Area Load Mesh (in^2)	144
Merge Tolerance (in)	.12
P-Delta Analysis Tolerance	0.50%
Include P-Delta for Walls?	Yes
Automatically Iterate Stiffness for Walls?	Yes
Max Iterations for Wall Stiffness	3
Gravity Acceleration (in/sec^2)	386.4
Wall Mesh Size (in)	24
Eigensolution Convergence Tol. (1.E-)	4
Vertical Axis	Y
Global Member Orientation Plane	XZ
Static Solver	Sparse Accelerated
Dynamic Solver	Accelerated Solver

Hot Rolled Steel Code	AISC 15th(360-16): LRFD
Adjust Stiffness?	Yes(Iterative)
RISAConnection Code	AISC 15th(360-16): LRFD
Cold Formed Steel Code	AISI S100-16: LRFD
Wood Code	AWC NDS-18: ASD
Wood Temperature	< 100F
Concrete Code	ACI 318-14
Masonry Code	TMS 402-16: Strength
Aluminum Code	AA ADM1-15: LRFD - Building
Stainless Steel Code	AISC 14th(360-10): LRFD
Adjust Stiffness?	Yes(Iterative)

Number of Shear Regions	4
Region Spacing Increment (in)	4
Biaxial Column Method	Exact Integration
Parme Beta Factor (PCA)	.65
Concrete Stress Block	Rectangular
Use Cracked Sections?	Yes
Use Cracked Sections Slab?	Yes
Bad Framing Warnings?	No
Unused Force Warnings?	Yes
Min 1 Bar Diam. Spacing?	No
Concrete Rebar Set	REBAR_SET_ASTMA615
Min % Steel for Column	1
Max % Steel for Column	8

(Global) Model Settings, Continued

Seismic Code	ASCE 7-10
Seismic Base Elevation (in)	Not Entered
Add Base Weight?	Yes
Ct X	.02
Ct Z	.02
T X (sec)	Not Entered
T Z (sec)	Not Entered
R X	3
R Z	3
Ct Exp. X	.75
Ct Exp. Z	.75
SD1	1
SDS	1
S1	1
TL (sec)	5
Risk Cat	I or II
Drift Cat	Other
Om Z	1
Om X	1
Cd Z	1
Cd X	1
Rho Z	1
Rho X	1

Hot Rolled Steel Properties

	Label	E [ksi]	G [ksi]	Nu	Therm (/1E...	Density[k/ft...	Yield[ksi]	Ry	Fu[ksi]	Rt
1	A992	29000	11154	.3	.65	.49	50	1.1	65	1.1
2	A36 Gr.36	29000	11154	.3	.65	.49	36	1.5	58	1.2
3	A572 Gr.50	29000	11154	.3	.65	.49	50	1.1	65	1.1
4	A500 Gr.B RND	29000	11154	.3	.65	.527	42	1.4	58	1.3
5	A500 Gr.B Rect	29000	11154	.3	.65	.527	46	1.4	58	1.3
6	A53 Gr.B	29000	11154	.3	.65	.49	35	1.6	60	1.2
7	A1085	29000	11154	.3	.65	.49	50	1.4	65	1.3
8	A500 Gr. C - 46	29000	11154	.3	.65	.49	46	1.3	62	1.4
9	A529 Gr. 50	29000	11154	.3	.65	.49	50	1.3	65	1.4

Cold Formed Steel Properties

	Label	E [ksi]	G [ksi]	Nu	Therm (/1E5 F)	Density[k/ft^3]	Yield[ksi]	Fu[ksi]
1	A653 SS Gr33	29500	11346	.3	.65	.49	33	45
2	A653 SS Gr50/1	29500	11346	.3	.65	.49	50	65

Hot Rolled Steel Section Sets

	Label	Shape	Type	Design List	Material	Design ...	A [in2]	Iyy [in4]	Izz [in4]	J [in4]
1	Horizontals	PIPE_2.5	Beam	None	A500 Gr. C - 46	Typical	1.61	1.45	1.45	2.89
2	Standoffs	PIPE_1.5	Beam	None	A500 Gr. C - 46	Typical	.749	.293	.293	.586
3	Tie Backs	PIPE_2.0	Beam	None	A500 Gr. C - 46	Typical	1.02	.627	.627	1.25
4	Mount Pipes	PIPE_2.0	Beam	None	A500 Gr. C - 46	Typical	1.02	.627	.627	1.25
5	Standoff Bracing (V...	SR 5/8_HRA_...	Beam	None	A529 Gr. 50	Typical	.307	.007	.007	.015
6	Vertical pipes	PIPE_3.0	Beam	None	A500 Gr. C - 46	Typical	2.07	2.85	2.85	5.69
7	Standoff Bracing (D...	SR 1/2"	Beam	None	A529 Gr. 50	Typical	.196	.003	.003	.006

Cold Formed Steel Section Sets

	Label	Shape	Type	Design List	Material	Design Rul...	A [in2]	Iyy [in4]	Izz [in4]	J [in4]
1	CF1A	8CU1.25X057	Beam	None	A653 SS Gr33	Typical	.581	.057	4.41	.00063

Joint Boundary Conditions

	Joint Label	X [k/in]	Y [k/in]	Z [k/in]	X Rot.[k-ft/rad]	Y Rot.[k-ft/rad]	Z Rot.[k-ft/rad]
1	N13						
2	N14						
3	N48	Reaction	Reaction	Reaction	Reaction		Reaction
4	N49	Reaction	Reaction	Reaction	Reaction		Reaction
5	N52A	Reaction	Reaction	Reaction			

Basic Load Cases

	BLC Description	Category	X Gravity	Y Gravity	Z Gravity	Joint	Point	Distributed	Area(Me...	Surface(...
1	Self Weight	DL		-1			7			
2	Structure Wind Z	WLZ						31		
3	Structure Wind X	WLX						31		
4	Wind Load 0 AZI	WLZ					14			
5	Wind Load 30 AZI	None					14			
6	Wind Load 45 AZI	None					14			
7	Wind Load 60 AZI	None					14			
8	Wind Load 90 AZI	WLX					14			
9	Wind Load 120 AZI	None					14			
10	Wind Load 135 AZI	None					14			
11	Wind Load 150 AZI	None					14			
12	Ice Weight	OL1					7	31		
13	Ice Structure Wind Z	OL2						31		
14	Ice Structure Wind X	OL3						31		
15	Ice Wind Load 0 AZI	OL2					14			
16	Ice Wind Load 30 AZI	None					14			
17	Ice Wind Load 45 AZI	None					14			
18	Ice Wind Load 60 AZI	None					14			
19	Ice Wind Load 90 AZI	OL3					14			
20	Ice Wind Load 120 AZI	None					14			
21	Ice Wind Load 135 AZI	None					14			
22	Ice Wind Load 150 AZI	None					14			
23	Seismic Load Z	ELZ			-.111		7			
24	Seismic Load X	ELX	-.111				7			
25	Live Load 1 (Lv)	None					1			
26	Live Load 2 (Lv)	None					1			
27	Live Load 3 (Lv)	None					1			
28	Maintenance Load 1 (Lm)	None					1			
29	Maintenance Load 2 (Lm)	None					1			
30	Maintenance Load 3 (Lm)	None					1			

Load Combinations

	Description	S...	P...	S...	B...	Fa...	B...	Fa...	B...	Fa...	B...	Fa...	B...	Fa...	B...	Fa...	B...	Fa...	B...	Fa...	B...	Fa...	B...	Fa...
1	1.4DL	Yes	Y		DL	1.4																		
2	1.2DL + 1WL 0 AZI	Yes	Y		DL	1.2	2	1	3		4	1												
3	1.2DL + 1WL 30 AZI	Yes	Y		DL	1.2	2	.866	3	.5	5	1												
4	1.2DL + 1WL 45 AZI	Yes	Y		DL	1.2	2	.707	3	.707	6	1												
5	1.2DL + 1WL 60 AZI	Yes	Y		DL	1.2	2	.5	3	.866	7	1												
6	1.2DL + 1WL 90 AZI	Yes	Y		DL	1.2	2		3	1	8	1												

Load Combinations (Continued)

	Description	S...	P...	S...	B...	Fa...	B...	Fa...	B...	Fa...	B...	Fa...	B...	Fa...	B...	Fa...	B...	Fa...	B...	Fa...	B...	Fa...	B...	Fa...
7	1.2DL + 1WL 120 AZI	Yes	Y		DL	1.2	2	-.5	3	.866	9	1												
8	1.2DL + 1WL 135 AZI	Yes	Y		DL	1.2	2	-.7...	3	.707	10	1												
9	1.2DL + 1WL 150 AZI	Yes	Y		DL	1.2	2	-.8...	3	.5	11	1												
10	1.2DL + 1WL 180 AZI	Yes	Y		DL	1.2	2	-1	3		4	-1												
11	1.2DL + 1WL 210 AZI	Yes	Y		DL	1.2	2	-.8...	3	-.5	5	-1												
12	1.2DL + 1WL 225 AZI	Yes	Y		DL	1.2	2	-.7...	3	-.7...	6	-1												
13	1.2DL + 1WL 240 AZI	Yes	Y		DL	1.2	2	-.5	3	-.8...	7	-1												
14	1.2DL + 1WL 270 AZI	Yes	Y		DL	1.2	2		3	-1	8	-1												
15	1.2DL + 1WL 300 AZI	Yes	Y		DL	1.2	2	.5	3	-.8...	9	-1												
16	1.2DL + 1WL 315 AZI	Yes	Y		DL	1.2	2	.707	3	-.7...	10	-1												
17	1.2DL + 1WL 330 AZI	Yes	Y		DL	1.2	2	.866	3	-.5	11	-1												
18	0.9DL + 1WL 0 AZI	Yes	Y		DL	.9	2	1	3		4	1												
19	0.9DL + 1WL 30 AZI	Yes	Y		DL	.9	2	.866	3	.5	5	1												
20	0.9DL + 1WL 45 AZI	Yes	Y		DL	.9	2	.707	3	.707	6	1												
21	0.9DL + 1WL 60 AZI	Yes	Y		DL	.9	2	.5	3	.866	7	1												
22	0.9DL + 1WL 90 AZI	Yes	Y		DL	.9	2		3	1	8	1												
23	0.9DL + 1WL 120 AZI	Yes	Y		DL	.9	2	-.5	3	.866	9	1												
24	0.9DL + 1WL 135 AZI	Yes	Y		DL	.9	2	-.7...	3	.707	10	1												
25	0.9DL + 1WL 150 AZI	Yes	Y		DL	.9	2	-.8...	3	.5	11	1												
26	0.9DL + 1WL 180 AZI	Yes	Y		DL	.9	2	-1	3		4	-1												
27	0.9DL + 1WL 210 AZI	Yes	Y		DL	.9	2	-.8...	3	-.5	5	-1												
28	0.9DL + 1WL 225 AZI	Yes	Y		DL	.9	2	-.7...	3	-.7...	6	-1												
29	0.9DL + 1WL 240 AZI	Yes	Y		DL	.9	2	-.5	3	-.8...	7	-1												
30	0.9DL + 1WL 270 AZI	Yes	Y		DL	.9	2		3	-1	8	-1												
31	0.9DL + 1WL 300 AZI	Yes	Y		DL	.9	2	.5	3	-.8...	9	-1												
32	0.9DL + 1WL 315 AZI	Yes	Y		DL	.9	2	.707	3	-.7...	10	-1												
33	0.9DL + 1WL 330 AZI	Yes	Y		DL	.9	2	.866	3	-.5	11	-1												
34	1.2DL + 1DLi + 1WLi 0 AZI	Yes	Y		DL	1.2	O...	1	13	1	14		15	1										
35	1.2DL + 1DLi + 1WLi 30 AZI	Yes	Y		DL	1.2	O...	1	13	.866	14	.5	16	1										
36	1.2DL + 1DLi + 1WLi 45 AZI	Yes	Y		DL	1.2	O...	1	13	.707	14	.707	17	1										
37	1.2DL + 1DLi + 1WLi 60 AZI	Yes	Y		DL	1.2	O...	1	13	.5	14	.866	18	1										
38	1.2DL + 1DLi + 1WLi 90 AZI	Yes	Y		DL	1.2	O...	1	13		14	1	19	1										
39	1.2DL + 1DLi + 1WLi 120 AZI	Yes	Y		DL	1.2	O...	1	13	-.5	14	.866	20	1										
40	1.2DL + 1DLi + 1WLi 135 AZI	Yes	Y		DL	1.2	O...	1	13	-.7...	14	.707	21	1										
41	1.2DL + 1DLi + 1WLi 150 AZI	Yes	Y		DL	1.2	O...	1	13	-.8...	14	.5	22	1										
42	1.2DL + 1DLi + 1WLi 180 AZI	Yes	Y		DL	1.2	O...	1	13	-1	14		15	-1										
43	1.2DL + 1DLi + 1WLi 210 AZI	Yes	Y		DL	1.2	O...	1	13	-.8...	14	-.5	16	-1										
44	1.2DL + 1DLi + 1WLi 225 AZI	Yes	Y		DL	1.2	O...	1	13	-.7...	14	-.7...	17	-1										
45	1.2DL + 1DLi + 1WLi 240 AZI	Yes	Y		DL	1.2	O...	1	13	-.5	14	-.8...	18	-1										
46	1.2DL + 1DLi + 1WLi 270 AZI	Yes	Y		DL	1.2	O...	1	13		14	-1	19	-1										
47	1.2DL + 1DLi + 1WLi 300 AZI	Yes	Y		DL	1.2	O...	1	13	.5	14	-.8...	20	-1										
48	1.2DL + 1DLi + 1WLi 315 AZI	Yes	Y		DL	1.2	O...	1	13	.707	14	-.7...	21	-1										
49	1.2DL + 1DLi + 1WLi 330 AZI	Yes	Y		DL	1.2	O...	1	13	.866	14	-.5	22	-1										
50	(1.2+0.2Sds)DL + 1E 0 AZI	Yes	Y		DL	1.2...	23	1	24															
51	(1.2+0.2Sds)DL + 1E 30 AZI	Yes	Y		DL	1.2...	23	.866	24	.5														
52	(1.2+0.2Sds)DL + 1E 45 AZI	Yes	Y		DL	1.2...	23	.707	24	.707														
53	(1.2+0.2Sds)DL + 1E 60 AZI	Yes	Y		DL	1.2...	23	.5	24	.866														
54	(1.2+0.2Sds)DL + 1E 90 AZI	Yes	Y		DL	1.2...	23		24	1														
55	(1.2+0.2Sds)DL + 1E 120 AZI	Yes	Y		DL	1.2...	23	-.5	24	.866														
56	(1.2+0.2Sds)DL + 1E 135 AZI	Yes	Y		DL	1.2...	23	-.7...	24	.707														
57	(1.2+0.2Sds)DL + 1E 150 AZI	Yes	Y		DL	1.2...	23	-.8...	24	.5														
58	(1.2+0.2Sds)DL + 1E 180 AZI	Yes	Y		DL	1.2...	23	-1	24															
59	(1.2+0.2Sds)DL + 1E 210 AZI	Yes	Y		DL	1.2...	23	-.8...	24	-.5														
60	(1.2+0.2Sds)DL + 1E 225 AZI	Yes	Y		DL	1.2...	23	-.7...	24	-.7...														
61	(1.2+0.2Sds)DL + 1E 240 AZI	Yes	Y		DL	1.2...	23	-.5	24	-.8...														
62	(1.2+0.2Sds)DL + 1E 270 AZI	Yes	Y		DL	1.2...	23		24	-1														
63	(1.2+0.2Sds)DL + 1E 300 AZI	Yes	Y		DL	1.2...	23	.5	24	-.8...														

Load Combinations (Continued)

	Description	S...	P...	S...	B...	Fa...	B...	Fa...	B...	Fa...	B...	Fa...	B...	Fa...	B...	Fa...	B...	Fa...	B...	Fa...	B...	Fa...	B...	Fa...
64	(1.2+0.2Sds)DL + 1E 315 AZI	Yes	Y		DL	1.2...	23	.707	24	-.7...														
65	(1.2+0.2Sds)DL + 1E 330 AZI	Yes	Y		DL	1.2...	23	.866	24	-.5														
66	(0.9-0.2Sds)DL + 1E 0 AZI	Yes	Y		DL	.863	23	1	24															
67	(0.9-0.2Sds)DL + 1E 30 AZI	Yes	Y		DL	.863	23	.866	24	.5														
68	(0.9-0.2Sds)DL + 1E 45 AZI	Yes	Y		DL	.863	23	.707	24	.707														
69	(0.9-0.2Sds)DL + 1E 60 AZI	Yes	Y		DL	.863	23	.5	24	.866														
70	(0.9-0.2Sds)DL + 1E 90 AZI	Yes	Y		DL	.863	23		24	1														
71	(0.9-0.2Sds)DL + 1E 120 AZI	Yes	Y		DL	.863	23	-.5	24	.866														
72	(0.9-0.2Sds)DL + 1E 135 AZI	Yes	Y		DL	.863	23	-.7...	24	.707														
73	(0.9-0.2Sds)DL + 1E 150 AZI	Yes	Y		DL	.863	23	-.8...	24	.5														
74	(0.9-0.2Sds)DL + 1E 180 AZI	Yes	Y		DL	.863	23	-1	24															
75	(0.9-0.2Sds)DL + 1E 210 AZI	Yes	Y		DL	.863	23	-.8...	24	-.5														
76	(0.9-0.2Sds)DL + 1E 225 AZI	Yes	Y		DL	.863	23	-.7...	24	-.7...														
77	(0.9-0.2Sds)DL + 1E 240 AZI	Yes	Y		DL	.863	23	-.5	24	-.8...														
78	(0.9-0.2Sds)DL + 1E 270 AZI	Yes	Y		DL	.863	23		24	-1														
79	(0.9-0.2Sds)DL + 1E 300 AZI	Yes	Y		DL	.863	23	.5	24	-.8...														
80	(0.9-0.2Sds)DL + 1E 315 AZI	Yes	Y		DL	.863	23	.707	24	-.7...														
81	(0.9-0.2Sds)DL + 1E 330 AZI	Yes	Y		DL	.863	23	.866	24	-.5														
82	1.2DL + 1Lv1	Yes	Y		DL	1.2	25	1.5																
83	1.2DL + 1Lv2	Yes	Y		DL	1.2	26	1.5																
84	1.2DL + 1Lv3	Yes	Y		DL	1.2	27	1.5																
85	1.2DL + 1.5Lm + 1Wm 0 AZI -...	Yes	Y		DL	1.2	28	1.5	2	.053	3		4	.053										
86	1.2DL + 1.5Lm + 1Wm 30 AZI...	Yes	Y		DL	1.2	28	1.5	2	.046	3	.027	5	.053										
87	1.2DL + 1.5Lm + 1Wm 45 AZI...	Yes	Y		DL	1.2	28	1.5	2	.038	3	.038	6	.053										
88	1.2DL + 1.5Lm + 1Wm 60 AZI...	Yes	Y		DL	1.2	28	1.5	2	.027	3	.046	7	.053										
89	1.2DL + 1.5Lm + 1Wm 90 AZI...	Yes	Y		DL	1.2	28	1.5	2		3	.053	8	.053										
90	1.2DL + 1.5Lm + 1Wm 120 A...	Yes	Y		DL	1.2	28	1.5	2	-.0...	3	.046	9	.053										
91	1.2DL + 1.5Lm + 1Wm 135 A...	Yes	Y		DL	1.2	28	1.5	2	-.0...	3	.038	10	.053										
92	1.2DL + 1.5Lm + 1Wm 150 A...	Yes	Y		DL	1.2	28	1.5	2	-.0...	3	.027	11	.053										
93	1.2DL + 1.5Lm + 1Wm 180 A...	Yes	Y		DL	1.2	28	1.5	2	-.0...	3		4	-.0...										
94	1.2DL + 1.5Lm + 1Wm 210 A...	Yes	Y		DL	1.2	28	1.5	2	-.0...	3	-.0...	5	-.0...										
95	1.2DL + 1.5Lm + 1Wm 225 A...	Yes	Y		DL	1.2	28	1.5	2	-.0...	3	-.0...	6	-.0...										
96	1.2DL + 1.5Lm + 1Wm 240 A...	Yes	Y		DL	1.2	28	1.5	2	-.0...	3	-.0...	7	-.0...										
97	1.2DL + 1.5Lm + 1Wm 270 A...	Yes	Y		DL	1.2	28	1.5	2		3	-.0...	8	-.0...										
98	1.2DL + 1.5Lm + 1Wm 300 A...	Yes	Y		DL	1.2	28	1.5	2	.027	3	-.0...	9	-.0...										
99	1.2DL + 1.5Lm + 1Wm 315 A...	Yes	Y		DL	1.2	28	1.5	2	.038	3	-.0...	10	-.0...										
100	1.2DL + 1.5Lm + 1Wm 330 A...	Yes	Y		DL	1.2	28	1.5	2	.046	3	-.0...	11	-.0...										
101	1.2DL + 1.5Lm + 1Wm 0 AZI -...	Yes	Y		DL	1.2	29	1.5	2	.053	3		4	.053										
102	1.2DL + 1.5Lm + 1Wm 30 AZI...	Yes	Y		DL	1.2	29	1.5	2	.046	3	.027	5	.053										
103	1.2DL + 1.5Lm + 1Wm 45 AZI...	Yes	Y		DL	1.2	29	1.5	2	.038	3	.038	6	.053										
104	1.2DL + 1.5Lm + 1Wm 60 AZI...	Yes	Y		DL	1.2	29	1.5	2	.027	3	.046	7	.053										
105	1.2DL + 1.5Lm + 1Wm 90 AZI...	Yes	Y		DL	1.2	29	1.5	2		3	.053	8	.053										
106	1.2DL + 1.5Lm + 1Wm 120 A...	Yes	Y		DL	1.2	29	1.5	2	-.0...	3	.046	9	.053										
107	1.2DL + 1.5Lm + 1Wm 135 A...	Yes	Y		DL	1.2	29	1.5	2	-.0...	3	.038	10	.053										
108	1.2DL + 1.5Lm + 1Wm 150 A...	Yes	Y		DL	1.2	29	1.5	2	-.0...	3	.027	11	.053										
109	1.2DL + 1.5Lm + 1Wm 180 A...	Yes	Y		DL	1.2	29	1.5	2	-.0...	3		4	-.0...										
110	1.2DL + 1.5Lm + 1Wm 210 A...	Yes	Y		DL	1.2	29	1.5	2	-.0...	3	-.0...	5	-.0...										
111	1.2DL + 1.5Lm + 1Wm 225 A...	Yes	Y		DL	1.2	29	1.5	2	-.0...	3	-.0...	6	-.0...										
112	1.2DL + 1.5Lm + 1Wm 240 A...	Yes	Y		DL	1.2	29	1.5	2	-.0...	3	-.0...	7	-.0...										
113	1.2DL + 1.5Lm + 1Wm 270 A...	Yes	Y		DL	1.2	29	1.5	2		3	-.0...	8	-.0...										
114	1.2DL + 1.5Lm + 1Wm 300 A...	Yes	Y		DL	1.2	29	1.5	2	.027	3	-.0...	9	-.0...										
115	1.2DL + 1.5Lm + 1Wm 315 A...	Yes	Y		DL	1.2	29	1.5	2	.038	3	-.0...	10	-.0...										
116	1.2DL + 1.5Lm + 1Wm 330 A...	Yes	Y		DL	1.2	29	1.5	2	.046	3	-.0...	11	-.0...										
117	1.2DL + 1.5Lm + 1Wm 0 AZI -...	Yes	Y		DL	1.2	30	1.5	2	.053	3		4	.053										
118	1.2DL + 1.5Lm + 1Wm 30 AZI...	Yes	Y		DL	1.2	30	1.5	2	.046	3	.027	5	.053										
119	1.2DL + 1.5Lm + 1Wm 45 AZI...	Yes	Y		DL	1.2	30	1.5	2	.038	3	.038	6	.053										
120	1.2DL + 1.5Lm + 1Wm 60 AZI...	Yes	Y		DL	1.2	30	1.5	2	.027	3	.046	7	.053										

Load Combinations (Continued)

	Description	S...	P...	S...	B...	Fa...	B...	Fa...	B...	Fa...	B...	Fa...	B...	Fa...	B...	Fa...	B...	Fa...	B...	Fa...	B...	Fa...	B...	Fa...
121	1.2DL + 1.5Lm + 1Wm 90 AZI...	Yes	Y		DL	1.2	30	1.5	2		3	.053	8	.053										
122	1.2DL + 1.5Lm + 1Wm 120 A...	Yes	Y		DL	1.2	30	1.5	2	-.0...	3	.046	9	.053										
123	1.2DL + 1.5Lm + 1Wm 135 A...	Yes	Y		DL	1.2	30	1.5	2	-.0...	3	.038	10	.053										
124	1.2DL + 1.5Lm + 1Wm 150 A...	Yes	Y		DL	1.2	30	1.5	2	-.0...	3	.027	11	.053										
125	1.2DL + 1.5Lm + 1Wm 180 A...	Yes	Y		DL	1.2	30	1.5	2	-.0...	3		4	-.0...										
126	1.2DL + 1.5Lm + 1Wm 210 A...	Yes	Y		DL	1.2	30	1.5	2	-.0...	3	-.0...	5	-.0...										
127	1.2DL + 1.5Lm + 1Wm 225 A...	Yes	Y		DL	1.2	30	1.5	2	-.0...	3	-.0...	6	-.0...										
128	1.2DL + 1.5Lm + 1Wm 240 A...	Yes	Y		DL	1.2	30	1.5	2	-.0...	3	-.0...	7	-.0...										
129	1.2DL + 1.5Lm + 1Wm 270 A...	Yes	Y		DL	1.2	30	1.5	2		3	-.0...	8	-.0...										
130	1.2DL + 1.5Lm + 1Wm 300 A...	Yes	Y		DL	1.2	30	1.5	2	.027	3	-.0...	9	-.0...										
131	1.2DL + 1.5Lm + 1Wm 315 A...	Yes	Y		DL	1.2	30	1.5	2	.038	3	-.0...	10	-.0...										
132	1.2DL + 1.5Lm + 1Wm 330 A...	Yes	Y		DL	1.2	30	1.5	2	.046	3	-.0...	11	-.0...										

Envelope Joint Reactions

	Joint		X [lb]	LC	Y [lb]	LC	Z [lb]	LC	MX [lb-ft]	LC	MY [lb-ft]	LC	MZ [lb-ft]	LC
1	N48	max	582.946	89	1536.374	41	923.737	18	-79.262	18	0	132	645.717	132
2		min	-1183.74	129	110.033	18	-1758.52	10	-1062.458	41	0	1	-192.158	92
3	N49	max	1176.59	122	662.814	101	1586.144	49	112.981	124	0	132	277.301	84
4		min	-575.301	98	-53.404	124	-437.516	25	-519.317	101	0	1	-193.703	92
5	N52A	max	86.755	2	66.47	39	989.455	9	0	132	0	132	0	132
6		min	-87.047	9	15.358	33	-998.509	17	0	1	0	1	0	1
7	Totals:	max	780.625	22	1763.519	41	1278.891	2						
8		min	-780.634	14	422.438	71	-1278.887	26						

Envelope AISC 15th(360-16): LRFD Steel Code Checks

	Member	Shape	Code ...	Loc[in]	LC	Shear ..	Loc[in]	Dir	LC	phi*Pnc ...	phi*Pnt ...	phi*Mn ...	phi*Mn ...	Cb	Eqn
1	M24	SR 5/8_HRA_H...	.391	24.8...	125	.029	0		17	1849.145	13805.82	143.808	143.808	1	H1-1a
2	M29	SR 1/2"	.350	22.4...	37	.013	44.8...		17	1432.022	8835.75	73.632	73.632	1	H1-1a
3	MP1	PIPE_2.0	.309	33	2	.141	33		2	15369.6...	42228	2459.85	2459.85	1.363	H1-1b
4	MP3	PIPE_2.0	.250	48	17	.170	33		17	15369.6...	42228	2459.85	2459.85	1.712	H1-1b
5	M5	PIPE_2.5	.214	21	17	.052	76		1...	45255.2...	66654	4726.5	4726.5	1	H1-1b
6	M4	PIPE_1.5	.213	34.81	130	.196	34.81		1...	23485.28	31008.6	1452.45	1452.45	1	H1-1b
7	M2	PIPE_1.5	.191	34.81	120	.122	.725		1...	23485.28	31008.6	1452.45	1452.45	1.334	H1-1b
8	M3	PIPE_1.5	.181	34.81	122	.084	34.81		1...	23485.28	31008.6	1452.45	1452.45	1	H1-1b
9	H1	PIPE_2.5	.170	76	117	.056	76		1...	45255.2...	66654	4726.5	4726.5	1.975	H1-1b
10	M1	PIPE_1.5	.170	34.81	131	.083	34.81		91	23485.28	31008.6	1452.45	1452.45	1	H1-1b
11	M28	SR 1/2"	.139	22.4...	48	.017	44.8...		17	1432.022	8835.75	73.632	73.632	1	H1-1b
12	M31A	PIPE_2.0	.108	0	9	.005	123....		46	9324.69	42228	2459.85	2459.85	1.136	H1-1b*
13	M26	SR 5/8_HRA_H...	.035	30.25	41	.056	0		1...	1849.145	13805.82	143.808	143.808	1	H1-1b*
14	M23	SR 5/8_HRA_H...	.034	30.25	9	.029	0		17	1849.145	13805.82	143.808	143.808	1	H1-1b*
15	MP2	PIPE_2.0	.025	63	109	.137	33		17	15369.6...	42228	2459.85	2459.85	1.149	H1-1b*
16	M25	SR 5/8_HRA_H...	.015	15.44	10	.056	0		1...	1849.145	13805.82	143.808	143.808	1	H1-1b
17	M27	SR 1/2"	.003	44.8...	25	.013	44.8...		2	1432.022	8835.75	73.632	73.632	1	H1-1b*
18	M30	SR 1/2"	.000	0	132	.009	0		2	1432.022	8835.75	73.632	73.632	1	H1-1a

Envelope AISI S100-16: LRFD Cold Formed Steel Code Checks

Member	Shape	Code Check	Loc[in]	LC	Shea...	Loc[i...	Dir	LC	phi*Pn[...	phi*Tn[...	phi*Mn...	phi*Mn...	phi*...	phi*...	Cb	Eqn
No Data to Print ...																

APPENDIX D

ADDITIONAL CALCULATIONS

Trylon

Analysis date: 8/3/2021

BOLT TOOL 1.5.2

Project Data	
Job Code:	189059
Carrier Site ID:	BOBDL00054A
Carrier Site Name:	CT-CCI-T-807134

Code	
Design Standard:	TIA-222-H
Slip Check:	Yes
Pretension Standard:	TIA-222-H

Bolt Properties		
Connection Type:	Threaded Rod	
Diameter:	0.75	in
Grade:	A529	--
Yield Strength (Fy):	50	ksi
Ultimate Strength (Fu):	65	ksi
Number of Bolts:	2	--
Threads Included:	Yes	--
Double Shear:	No	--
Distance Between Rods:	6	in

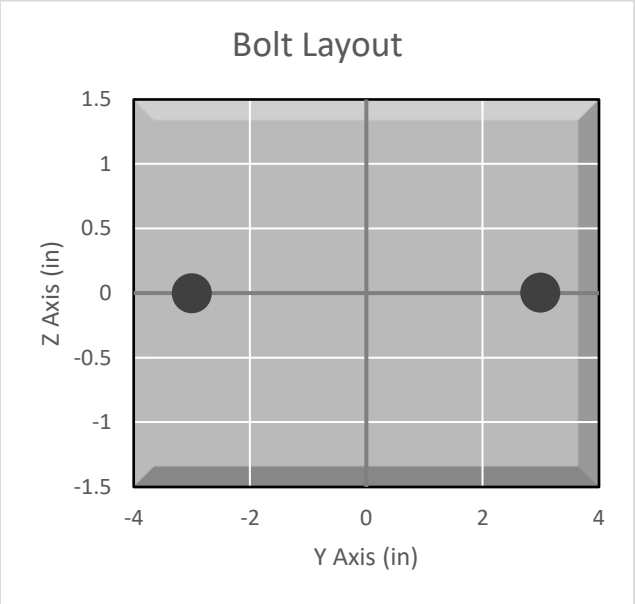

Connection Description
Mount Standoff to Tower Leg

Bolt Check*		
Tensile Capacity (ϕT_n):	16304.9	lbs
Shear Capacity (ϕV_n):	10768.5	lbs
Tension Force (T_u):	555.7	lbs
Shear Force (V_u):	2055.3	lbs
Tension Usage:	3.2%	--
Shear Usage:	18.2%	--
Interaction:	18.2%	Pass
Controlling Member:	M31	--
Controlling LC:	132	--

**Rating per TIA-222-H Section 15.5*

Slip Check*		
Sliding Capacity (ϕR_{ns}):	9602.6	lbs
Torsion Capacity (ϕR_{nr}):	2400.6	lb-ft
Sliding Force (V_{us}):	1536.4	lbs
Torsional Force (T_{ur}):	0.0	lb-ft
Sliding Usage:	15.2%	--
Torsion Usage:	0.0%	--
Interaction:	15.2%	Pass
Controlling Member:	M31	--
Controlling LC:	41	--

**Rating per TIA-222-H Section 15.5*

APPENDIX E

SUPPLEMENTAL DRAWINGS

NOTES:
1.0 ALL METRIC DIMENSIONS ARE IN BRACKETS.

REVISIONS				
REV.	ECN	DESCRIPTION	BY	DATE
PRE		REVIEW	DRH	01/28/21

www.Talleycom.com | Sales@Talleycom.com | 800.949.7079

TALLEY®

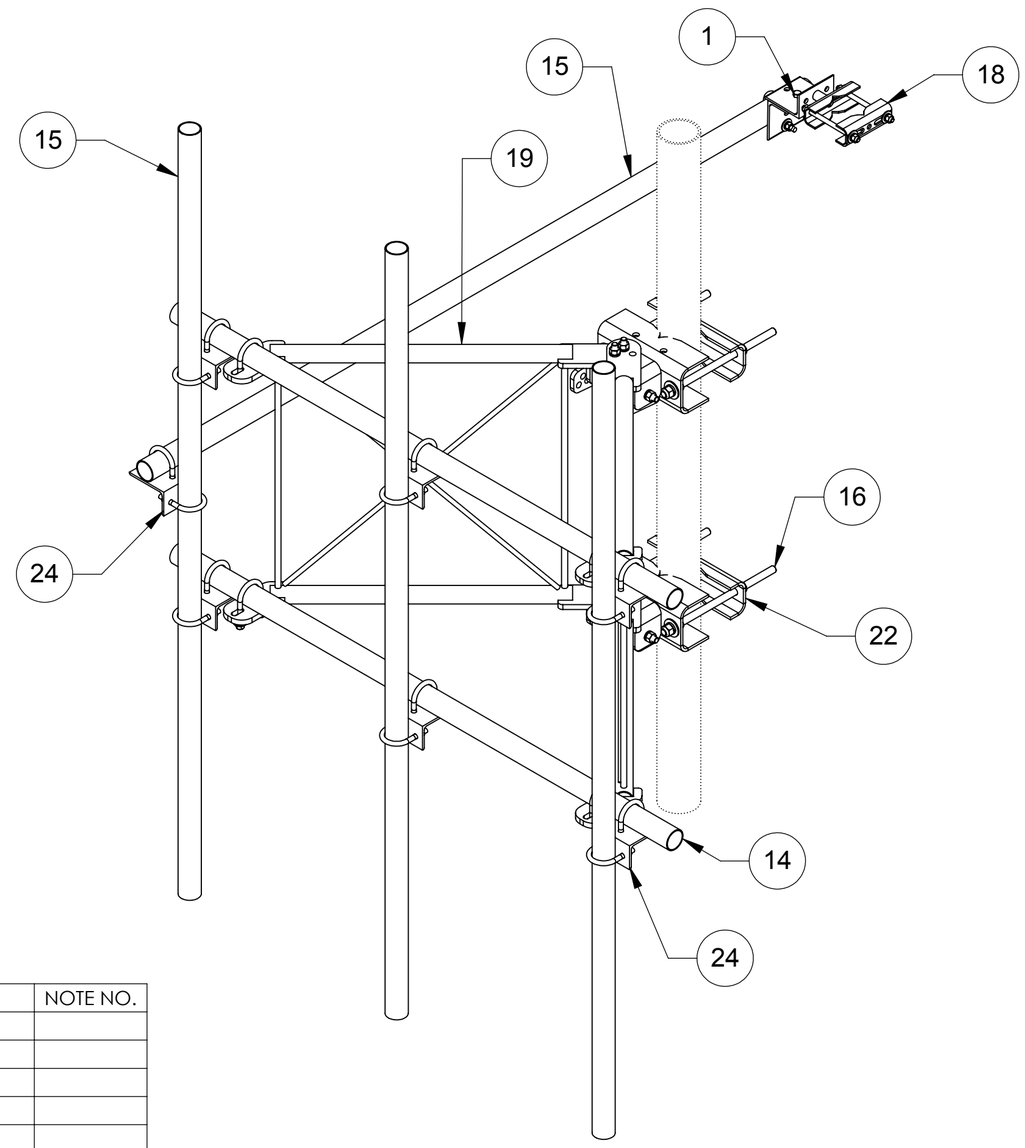

ITEM	PART NO.	DESCRIPTION	QTY.	WEIGHT	NOTE NO.
1	GB-04125	1/2" X 1-1/4" GALV BOLT KIT	1	0.12 LBS	
2	GB-04265	1/2" X 2-3/4" GALV BOLT KIT	1	0.20 LBS	
3	GB-05225	5/8" X 2-1/4" GALV BOLT KIT	8	0.28 LBS	
4	GB-05305	5/8" X 3" GALV BOLT KIT	4	0.35 LBS	
5	GN-04	1/2" GALV HEX NUT	4	0.04 LBS	
6	GN-06	3/4" GALV HEX NUT	12	0.15 LBS	
7	GUB-4240	1/2" X 2-1/2" X 4" GALV U-BOLT	19	0.56 LBS	
8	GWF-04	1/2" GALV FLAT WASHER	4	0.03 LBS	
9	GWF-05	5/8" GALV FLAT WASHER	4	0.06 LBS	
10	GWF-06	3/4" GALV FLAT WASHER	8	0.10 LBS	
11	GWL-04	1/2" GALV LOCK WASHER	4	0.01 LBS	
12	GWL-06	3/4" GALV LOCK WASHER	8	0.04 LBS	
13	MT-379-8	1/2" X 8" GALV THREADED ROD	2	0.44 LBS	
14	MT-651-96	2.375" OD x 96" PIPE	2	17.29 LBS	
15	MT-651-96	∅2.375" OD X 96" PIPE	4	23.05 LBS	
16	MT38416	Threaded Rod Galv 3/4" x 16"	4	1.99 LBS	
17	OS15034	3/4" X 1-1/2" OFFSET COLLAR	1	0.14 LBS	
18	SAB01	FORMED CLAMP	2	1.35 LBS	
19	SFV01	WELDMENT, SF-V STANDOFF ARM	2	36.81 LBS	
20	SFV02	SFV AZIMUTH BRACKET	3	6.70 LBS	
21	SFV03	SFV TAPER BRACKET	1	7.49 LBS	
22	SMU2080.06	CLAMP PLATE	2	6.96 LBS	
23	SMU208004	MOUNT	2	12.15 LBS	
24	XA2020.01	ANTENNA MOUNT ANGLE	9	2.65 LBS	

DENSITY	0.28	lbs/in³
MASS	400.61	lbs
VOLUME	1421.66	in³
SURFACE AREA		in²
HEIGHT		
LENGTH		
WIDTH		

COMMSCOPE, INC. OF NORTH CAROLINA

TOLERANCES
0 PLACE X ± .25 | 2 PLACE .XX ± .06
1 PLACE .X ± .12 | ANGLES ± 2°

SAP MATERIAL MASTER: **MTC3975083**

FINISH: GALV A123

MATERIAL: A1011/A1018, A500, A529

UNLESS OTHERWISE SPECIFIED DIMENSIONS ARE IN MILLIMETERS INTERPRET PER ISO STANDARDS HANDBOOK, TECHNICAL DRAWINGS, VOLUMES 1 & 2, THIRD EDITION (2002)

	NAME	DATE
CE	RDLS	7/14/17
RW		
RV		
AD		
RE	TP	7/14/17
ECN		

TITLE: **SECTOR FRAME, 8' FACE, (3) 96" PIPES**

SCALE: 1:12

DOCUMENT NO.: **MTC3975083**

SIZE	WORK AREA	MODEL VERSION	MODEL STATUS	MODEL REVISION	DRAWING VERSION	DRAWING STATUS	DRAWING REVISION	SHEET
C							PRE	1 OF 2

NOTES:

1.0 ALL METRIC DIMENSIONS ARE IN BRACKETS.

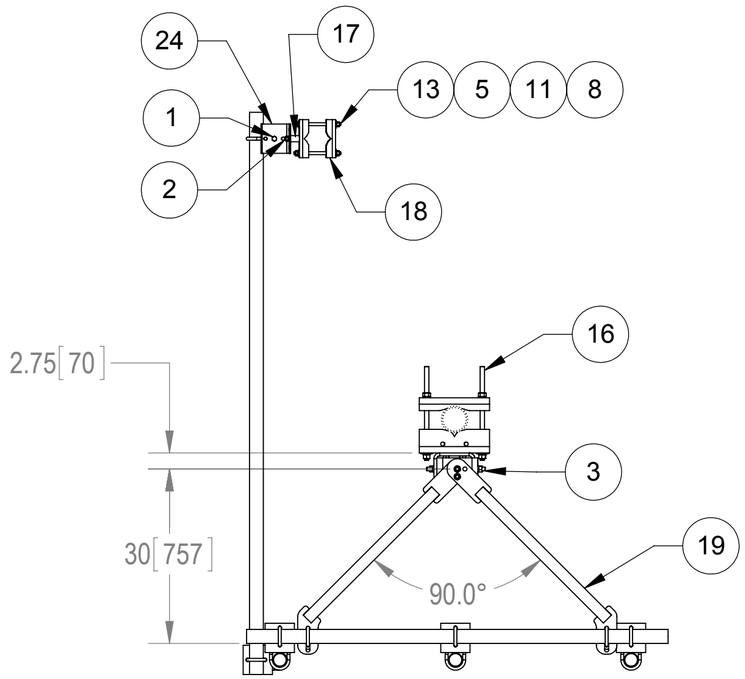

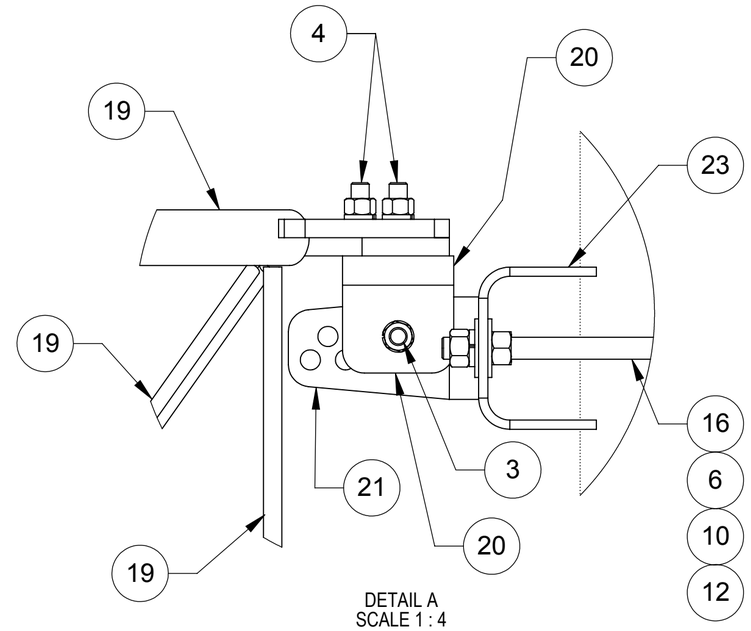

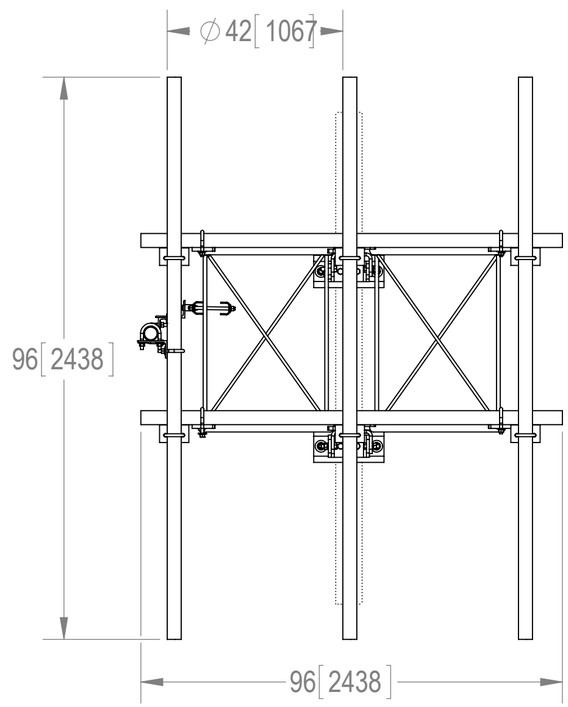

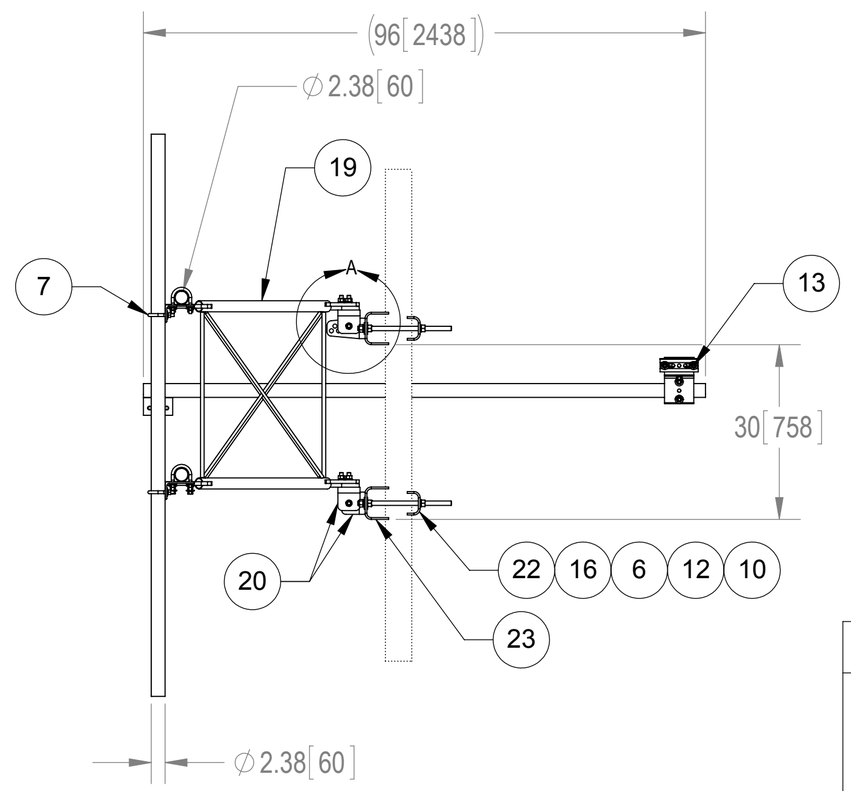

COMMSCOPE, INC. OF NORTH CAROLINA

TITLE

SECTOR FRAME, 8' FACE, (3) 96" PIPES

SIZE	SCALE	DOCUMENT NO.			
C	1:20	**MTC3975083**			
		DRAWING			SHEET
		VERSION	STATUS	REVISION	
				PRE	2 OF 2

Exhibit F

Power Density/RF Emissions Report

RF EMISSIONS COMPLIANCE REPORT

Crown Castle on behalf of Dish Wireless

Crown Castle Site Name: NHV 031B 943108
Crown Castle Site BU Number: 807134
Dish Wireless Site Name: CT-CCI-T-807134
Dish Wireless Site ID: BOBDL00054A
Application ID: 553397
197 N. Chestnut Hill Road
Killingworth, CT
5/27/2021

Report Status:

Dish Wireless is Compliant

Signed 27 May 2021

Prepared By:

Site Safe, LLC

8618 Westwood Center Drive
Suite 315

Vienna, VA 22182

Voice: 703-276-1100
Fax: 703-276-1169

Engineering Statement in Re:
Electromagnetic Energy Analysis
Crown Castle
Killingworth, CT

My signature on the cover of this document indicates:

That I am registered as a Professional Engineer in the jurisdiction indicated; and

That I have extensive professional experience in the wireless communications engineering industry; and

That I am an employee of Site Safe, LLC in Vienna, Virginia; and

That I am thoroughly familiar with the Rules and Regulations of the Federal Communications Commission ("the FCC" and "the FCC Rules") both in general and specifically as they apply to the FCC's Guidelines for Human Exposure to Radio Frequency Electromagnetic Fields; and

That the technical information serving as the basis for this report was supplied by Crown Castle on behalf of Dish Wireless (see attached Site Summary and Carrier documents) and that Dish Wireless' installation involves communications equipment, antennas and associated technical equipment at a location referred to as "NHV 031B 943108" ("the site"); and

That Dish Wireless proposes to operate at the site with transmit antennas listed in the carrier summary and with a maximum effective radiated power as specified by Dish Wireless and shown on the worksheet and that worst-case 100% duty cycle has been assumed; and

That this analysis has been performed with the assumption that the ground immediately surrounding the tower is primarily flat or falling; and

That at this time, the FCC requires that certain licensees address specific levels of radio frequency energy to which workers or members of the public might possibly be exposed (at §1.1307(b) of the FCC Rules); and

That such consideration of possible exposure of humans to radio frequency energy must utilize the standards set by the FCC, which is the federal agency having jurisdiction over communications facilities; and

That the FCC rules define two tiers of permissible exposure guidelines: 1) "uncontrolled environments," which defines situations in which persons may not be aware of (the "general public"), or may not be able to control their exposure to a transmission facility; and 2) "controlled environments," which defines situations in which persons are aware of their potential for exposure (industry personnel); and

That this statement specifically addresses the uncontrolled environment (which is more conservative than the controlled environment) and the limit set forth in the FCC rules for licensees of Dish Wireless' operating frequencies as shown on the attached antenna worksheet; and

That when applying the uncontrolled environment standards, the predicted Maximum Power Density at two meters above ground level from the proposed T-Mobile operation is no more than 0.881% of the maximum permissible exposure limits in any accessible area on the ground; and

That it is understood per FCC Guidelines and OET 65 Appendix A, that regardless of the existent radio frequency environment, only those licensees whose contributions exceed 5% of the exposure limit pertinent to their operation(s) bear any responsibility for bringing any non-compliant area(s) into compliance; and

That when applying the uncontrolled environment standards, the cumulative predicted energy density from the proposed operation is no more than 4.972% of the maximum in any accessible area up to two meters above the ground per OET 65; and

That the calculations provided in this report are based on data provided by the client and antenna pattern data supplied by the antenna manufacturer, in accordance with FCC guidelines listed in OET 65. Horizontal and vertical antenna patterns are combined for modeling purposes to accurately reflect the energy two meters above ground level where on-axis energy refers to maximum energy two meters above the ground along the azimuth of the antenna and where area energy refers to the maximum energy anywhere two meters above the ground regardless of the antenna azimuth, accounting for cumulative energy from multiple antennas for the carrier(s) and frequency range(s) indicated; and

That the Occupational Safety and Health Administration has policies in place which address worker safety in and around communications sites, thus individual companies will be responsible for their employees' training regarding radio frequency safety; and

In summary, it is stated here that the proposed operation at the site will not result in exposure of the public to excessive levels of radio frequency energy as defined in the FCC Rules and Regulations, specifically 47 CFR 1.1307(b), and that Dish Wireless' proposed operation is completely compliant.

Finally, it is stated that access to the tower should be restricted to communication industry professionals and approved contractor personnel trained in radio frequency safety and that this instant analysis addresses exposure levels at two meters above ground level and does not address exposure levels on the tower or in the immediate proximity of the antennas.

Note: Sprint currently has (4) 850 MHz panel antennas (Decibel DB844H90E-SX) on each of three sectors ((12) total antennas) spaced with azimuths of 50/170/290 degrees at a centerline of 147' above ground level. These antennas have an "abandoned" status in the CCI database and are currently inactive and were therefore not included in this analysis.

Crown Castle
NHV 031B 943108
Site Summary

Carrier	Area Maximum Percentage MPE
AT&T Mobility, LLC	0.395 %
AT&T Mobility, LLC	0.463 %
AT&T Mobility, LLC	0.107 %
AT&T Mobility, LLC (Not in service)	0.000 %
Dish Wireless (Proposed)	0.236 %
Dish Wireless (Proposed)	0.236 %
Dish Wireless (Proposed)	0.409 %
Verizon Wireless	1.671 %
Verizon Wireless	0.352 %
Verizon Wireless	0.390 %
Verizon Wireless	0.297 %
Verizon Wireless	0.416 %
Composite Site MPE:	4.972 %

AT&T Mobility, LLC
NHV 031B 943108
Carrier Summary

Frequency:	1900	MHz
Maximum Permissible Exposure (MPE):	1000	μW/cm^2
Maximum power density at ground level:	3.95292	μW/cm^2
Highest percentage of Maximum Permissible Exposure:	0.39529	%

					On Axis		Area	
Antenna Make	**Model**	**Height (feet)**	**Orientation (degrees true)**	**ERP (Watts)**	**Max Power Density (μW/cm^2)**	**Percent of MPE**	**Max Power Density (μW/cm^2)**	**Percent of MPE**
KMW	AM-X-CD-16-65-00T	136	115	3666	0.913067	0.091307	1.522591	0.152259
Powerwave	P65-16-XLH-RR	136	235	5130	2.147790	0.214779	3.906048	0.390605
KMW	AM-X-CD-16-65-00T	136	345	3666	0.913067	0.091307	1.522591	0.152259

AT&T Mobility, LLC
NHV 031B 943108
Carrier Summary

Frequency:	737	MHz
Maximum Permissible Exposure (MPE):	491.33	μW/cm^2
Maximum power density at ground level:	2.27557	μW/cm^2
Highest percentage of Maximum Permissible Exposure:	0.46314	%

					On Axis		Area	
Antenna Make	**Model**	**Height (feet)**	**Orientation (degrees true)**	**ERP (Watts)**	**Max Power Density (μW/cm^2)**	**Percent of MPE**	**Max Power Density (μW/cm^2)**	**Percent of MPE**
KMW	AM-X-CD-16-65-00T	136	115	1239	0.704321	0.143349	0.738210	0.150246
Powerwave	P65-16-XLH-RR	136	235	2952	1.235923	0.251545	2.247694	0.457468
KMW	AM-X-CD-16-65-00T	136	345	1239	0.704321	0.143349	0.738210	0.150246

AT&T Mobility, LLC
NHV 031B 943108
Carrier Summary

Frequency:	850	MHz
Maximum Permissible Exposure (MPE):	566.67	μW/cm^2
Maximum power density at ground level:	0.60697	μW/cm^2
Highest percentage of Maximum Permissible Exposure:	0.10711	%

					On Axis		Area	
Antenna Make	**Model**	**Height (feet)**	**Orientation (degrees true)**	**ERP (Watts)**	**Max Power Density (μW/cm^2)**	**Percent of MPE**	**Max Power Density (μW/cm^2)**	**Percent of MPE**
Powerwave	7770	136	115	547	0.283263	0.049988	0.443577	0.078278
Powerwave	7770	136	235	547	0.283263	0.049988	0.443577	0.078278
Powerwave	7770	136	345	547	0.283263	0.049988	0.443577	0.078278

AT&T Mobility, LLC (Not in service)
NHV 031B 943108
Carrier Summary

Frequency:	850	MHz
Maximum Permissible Exposure (MPE):	566.67	μW/cm^2
Maximum power density at ground level:	0.00000	μW/cm^2
Highest percentage of Maximum Permissible Exposure:	0.00000	%

					On Axis		Area	
Antenna Make	**Model**	**Height (feet)**	**Orientation (degrees true)**	**ERP (Watts)**	**Max Power Density (μW/cm^2)**	**Percent of MPE**	**Max Power Density (μW/cm^2)**	**Percent of MPE**
Powerwave	7770	136	115	0	0.000000	0.000000	0.000000	0.000000
Powerwave	7770	136	235	0	0.000000	0.000000	0.000000	0.000000
Powerwave	7770	136	345	0	0.000000	0.000000	0.000000	0.000000

Dish Wireless (Proposed)
NHV 031B 943108
Carrier Summary

Frequency:	2100	MHz
Maximum Permissible Exposure (MPE):	1000	μW/cm^2
Maximum power density at ground level:	2.35554	μW/cm^2
Highest percentage of Maximum Permissible Exposure:	0.23555	%

					On Axis		Area	
Antenna Make	**Model**	**Height (feet)**	**Orientation (degrees true)**	**ERP (Watts)**	**Max Power Density (μW/cm^2)**	**Percent of MPE**	**Max Power Density (μW/cm^2)**	**Percent of MPE**
JMA Wireless	MX08FRO665-20	148	0	6904	1.300512	0.130051	2.325472	0.232547
JMA Wireless	MX08FRO665-20	148	120	6904	1.300512	0.130051	2.325472	0.232547
JMA Wireless	MX08FRO665-20	148	240	6904	1.300512	0.130051	2.325472	0.232547

Dish Wireless (Proposed)
NHV 031B 943108
Carrier Summary

Frequency:	1900	MHz
Maximum Permissible Exposure (MPE):	1000	μW/cm^2
Maximum power density at ground level:	2.35554	μW/cm^2
Highest percentage of Maximum Permissible Exposure:	0.23555	%

					On Axis		Area	
Antenna Make	**Model**	**Height (feet)**	**Orientation (degrees true)**	**ERP (Watts)**	**Max Power Density (μW/cm^2)**	**Percent of MPE**	**Max Power Density (μW/cm^2)**	**Percent of MPE**
JMA Wireless	MX08FRO665-20	148	0	6904	1.300512	0.130051	2.325472	0.232547
JMA Wireless	MX08FRO665-20	148	120	6904	1.300512	0.130051	2.325472	0.232547
JMA Wireless	MX08FRO665-20	148	240	6904	1.300512	0.130051	2.325472	0.232547

Dish Wireless (Proposed)
NHV 031B 943108
Carrier Summary

Frequency:	600	MHz
Maximum Permissible Exposure (MPE):	400	μW/cm^2
Maximum power density at ground level:	1.63545	μW/cm^2
Highest percentage of Maximum Permissible Exposure:	0.40886	%

					On Axis		Area	
Antenna Make	**Model**	**Height (feet)**	**Orientation (degrees true)**	**ERP (Watts)**	**Max Power Density (μW/cm^2)**	**Percent of MPE**	**Max Power Density (μW/cm^2)**	**Percent of MPE**
JMA Wireless	MX08FRO665-20	148	0	3229	0.964082	0.241021	1.559502	0.389876
JMA Wireless	MX08FRO665-20	148	120	3229	0.964082	0.241021	1.559502	0.389876
JMA Wireless	MX08FRO665-20	148	240	3229	0.964082	0.241021	1.559502	0.389876

Verizon Wireless
NHV 031B 943108
Carrier Summary

Frequency:	3700	MHz
Maximum Permissible Exposure (MPE):	1000	μW/cm^2
Maximum power density at ground level:	16.71235	μW/cm^2
Highest percentage of Maximum Permissible Exposure:	1.67123	%

					On Axis		Area	
Antenna Make	**Model**	**Height (feet)**	**Orientation (degrees true)**	**ERP (Watts)**	**Max Power Density (μW/cm^2)**	**Percent of MPE**	**Max Power Density (μW/cm^2)**	**Percent of MPE**
Samsung	MT6407-77A	170	0	43155	6.188689	0.618869	13.543024	1.354302
Samsung	MT6407-77A	170	120	43155	6.188689	0.618869	13.543024	1.354302
Samsung	MT6407-77A	170	210	43155	6.188689	0.618869	13.543024	1.354302

Verizon Wireless
NHV 031B 943108
Carrier Summary

Frequency:	2100	MHz
Maximum Permissible Exposure (MPE):	1000	μW/cm^2
Maximum power density at ground level:	3.52013	μW/cm^2
Highest percentage of Maximum Permissible Exposure:	0.35201	%

					On Axis		Area	
Antenna Make	**Model**	**Height (feet)**	**Orientation (degrees true)**	**ERP (Watts)**	**Max Power Density (μW/cm^2)**	**Percent of MPE**	**Max Power Density (μW/cm^2)**	**Percent of MPE**
Commscope	JAHH-65B-R3B	170	0	6069	1.519253	0.151925	2.678591	0.267859
Commscope	JAHH-65B-R3B	170	120	6069	1.519253	0.151925	2.678591	0.267859
Commscope	JAHH-65B-R3B	170	210	6069	1.519253	0.151925	2.678591	0.267859

Verizon Wireless
NHV 031B 943108
Carrier Summary

Frequency:	1900	MHz
Maximum Permissible Exposure (MPE):	1000	μW/cm^2
Maximum power density at ground level:	3.90102	μW/cm^2
Highest percentage of Maximum Permissible Exposure:	0.39010	%

					On Axis		Area	
Antenna Make	**Model**	**Height (feet)**	**Orientation (degrees true)**	**ERP (Watts)**	**Max Power Density (μW/cm^2)**	**Percent of MPE**	**Max Power Density (μW/cm^2)**	**Percent of MPE**
Commscope	JAHH-65B-R3B	170	0	5890	1.762965	0.176297	2.776985	0.277698
Commscope	JAHH-65B-R3B	170	120	5890	1.762965	0.176297	2.776985	0.277698
Commscope	JAHH-65B-R3B	170	210	5890	1.762965	0.176297	2.776985	0.277698

Verizon Wireless
NHV 031B 943108
Carrier Summary

Frequency:	751	MHz
Maximum Permissible Exposure (MPE):	500.67	μW/cm^2
Maximum power density at ground level:	1.48460	μW/cm^2
Highest percentage of Maximum Permissible Exposure:	0.29652	%

					On Axis		Area	
Antenna Make	**Model**	**Height (feet)**	**Orientation (degrees true)**	**ERP (Watts)**	**Max Power Density (μW/cm^2)**	**Percent of MPE**	**Max Power Density (μW/cm^2)**	**Percent of MPE**
Commscope	JAHH-65B-R3B	170	0	3120	0.640968	0.128023	1.033496	0.206424
Commscope	JAHH-65B-R3B	170	120	3120	0.640968	0.128023	1.033496	0.206424
Commscope	JAHH-65B-R3B	170	210	3120	0.640968	0.128023	1.033496	0.206424

Verizon Wireless
NHV 031B 943108
Carrier Summary

Frequency:	850	MHz
Maximum Permissible Exposure (MPE):	566.67	μW/cm^2
Maximum power density at ground level:	2.35791	μW/cm^2
Highest percentage of Maximum Permissible Exposure:	0.41610	%

					On Axis		Area	
Antenna Make	**Model**	**Height (feet)**	**Orientation (degrees true)**	**ERP (Watts)**	**Max Power Density (μW/cm^2)**	**Percent of MPE**	**Max Power Density (μW/cm^2)**	**Percent of MPE**
Antel	LPA-80063-6CF	170	0	1127	0.265397	0.046835	0.272691	0.048122
Antel	LPA-80063-6CF	170	0	1127	0.265397	0.046835	0.272691	0.048122
Commscope	JAHH-65B-R3B	170	0	2661	0.640685	0.113062	0.911780	0.160902
Antel	LPA-80063-6CF	170	120	1127	0.265397	0.046835	0.272691	0.048122
Antel	LPA-80063-6CF	170	120	1127	0.265397	0.046835	0.272691	0.048122
Commscope	JAHH-65B-R3B	170	120	2661	0.640685	0.113062	0.911780	0.160902
Antel	LPA-80063-6CF	170	210	1127	0.265397	0.046835	0.272691	0.048122
Antel	LPA-80063-6CF	170	210	1127	0.265397	0.046835	0.272691	0.048122
Commscope	JAHH-65B-R3B	170	210	2661	0.640685	0.113062	0.911780	0.160902

Exhibit G

Pcagngc l r K_gjg l eq

UNITED STATES POSTAL SERVICE®

Click-N-Ship®

usps.com
$7.95
US POSTAGE
Flat Rate Env

9405 5036 9930 0005 4386 92 0079 5000 0010 6419

U.S. POSTAGE PAID
Click-N-Ship®

09/15/2021

Mailed from 01566

P

PRIORITY MAIL 2-DAY™

DEBORAH CHASE
NORTHEAST SITE SOLUTIONS
420 MAIN ST
STE 1
STURBRIDGE MA 01566-1359

Expected Delivery Date: 09/20/21
Ref#: DS-807134
0006

R005

SHIP
TO: CATHERINE IINO
FIRST SELECTWOMAN
323 ROUTE 81
KILLINGWORTH CT 06419-1218

USPS TRACKING #

9405 5036 9930 0005 4386 92

Electronic Rate Approved #038555749

Cut on dotted line.

Instructions

1. **Each Click-N-Ship® label is unique. Labels are to be used as printed and used only once. DO NOT PHOTO COPY OR ALTER LABEL.**
2. **Place your label so it does not wrap around the edge of the package.**
3. **Adhere your label to the package. A self-adhesive label is recommended. If tape or glue is used, DO NOT TAPE OVER BARCODE. Be sure all edges are secure.**
4. **To mail your package with PC Postage®, you may schedule a Package Pickup online, hand to your letter carrier, take to a Post Office™, or drop in a USPS collection box.**
5. **Mail your package on the "Ship Date" you selected when creating this label.**

Click-N-Ship® Label Record

USPS TRACKING # :
9405 5036 9930 0005 4386 92

Trans. #:	543720552	Priority Mail® Postage:	**$7.95**
Print Date:	09/15/2021	Total:	**$7.95**
Ship Date:	09/15/2021		
Expected Delivery Date:	09/20/2021		

From: DEBORAH CHASE
NORTHEAST SITE SOLUTIONS
420 MAIN ST
STE 1
STURBRIDGE MA 01566-1359

Ref#: DS-807134

To: CATHERINE IINO
FIRST SELECTWOMAN
323 ROUTE 81
KILLINGWORTH CT 06419-1218

* Retail Pricing Priority Mail rates apply. There is no fee for USPS Tracking® service on Priority Mail service with use of this electronic rate shipping label. Refunds for unused postage paid labels can be requested online 30 days from the print date.

UNITED STATES POSTAL SERVICE® *Thank you for shipping with the United States Postal Service!*
Check the status of your shipment on the USPS Tracking® page at usps.com

UNITED STATES POSTAL SERVICE®

Click-N-Ship®

usps.com
$7.95
US POSTAGE
Flat Rate Env

9405 5036 9930 0005 4387 08 0079 5000 0010 6419

U.S. POSTAGE PAID
Click-N-Ship®

09/15/2021

Mailed from 01566

PRIORITY MAIL 2-DAY™

DEBORAH CHASE
NORTHEAST SITE SOLUTIONS
420 MAIN ST
STE 1
STURBRIDGE MA 01566-1359

Expected Delivery Date: 09/20/21
Ref#: DS-807134
0006

R005

SHIP
TO: CATHIE S JEFFERSON
ZONING ENFORCEMENT OFFICER
323 ROUTE 81
KILLINGWORTH CT 06419-1218

USPS TRACKING #

9405 5036 9930 0005 4387 08

Electronic Rate Approved #038555749

Cut on dotted line.

Instructions

1. **Each Click-N-Ship® label is unique. Labels are to be used as printed and used only once. DO NOT PHOTO COPY OR ALTER LABEL.**
2. **Place your label so it does not wrap around the edge of the package.**
3. **Adhere your label to the package. A self-adhesive label is recommended. If tape or glue is used, DO NOT TAPE OVER BARCODE. Be sure all edges are secure.**
4. **To mail your package with PC Postage®, you may schedule a Package Pickup online, hand to your letter carrier, take to a Post Office™, or drop in a USPS collection box.**
5. **Mail your package on the "Ship Date" you selected when creating this label.**

Click-N-Ship® Label Record

USPS TRACKING # :
9405 5036 9930 0005 4387 08

Trans. #:	543720552	Priority Mail® Postage:	**$7.95**
Print Date:	09/15/2021	Total:	**$7.95**
Ship Date:	09/15/2021		
Expected Delivery Date:	09/20/2021		

From: DEBORAH CHASE
NORTHEAST SITE SOLUTIONS
420 MAIN ST
STE 1
STURBRIDGE MA 01566-1359

Ref#: DS-807134

To: CATHIE S JEFFERSON
ZONING ENFORCEMENT OFFICER
323 ROUTE 81
KILLINGWORTH CT 06419-1218

* Retail Pricing Priority Mail rates apply. There is no fee for USPS Tracking® service on Priority Mail service with use of this electronic rate shipping label. Refunds for unused postage paid labels can be requested online 30 days from the print date.

UNITED STATES POSTAL SERVICE® *Thank you for shipping with the United States Postal Service!*
Check the status of your shipment on the USPS Tracking® page at usps.com

UNITED STATES POSTAL SERVICE®

Click-N-Ship®

usps.com
$7.95
US POSTAGE
Flat Rate Env

9405 5036 9930 0005 4387 15 0079 5000 0031 4586

U.S. POSTAGE PAID
Click-N-Ship®

09/15/2021

Mailed from 01566

PRIORITY MAIL 2-DAY™

DEBORAH CHASE
NORTHEAST SITE SOLUTIONS
420 MAIN ST
STE 1
STURBRIDGE MA 01566-1359

Expected Delivery Date: 09/20/21
Ref#: DS-807134

0006

R013

SHIP TO: RICH ZAJAC
CROWN CASTLE
4545 E RIVER RD
STE 320
W HENRIETTA NY 14586-9024

USPS TRACKING #

9405 5036 9930 0005 4387 15

Electronic Rate Approved #038555749

Cut on dotted line.

Instructions

1. **Each Click-N-Ship® label is unique. Labels are to be used as printed and used only once. DO NOT PHOTO COPY OR ALTER LABEL.**
2. **Place your label so it does not wrap around the edge of the package.**
3. **Adhere your label to the package. A self-adhesive label is recommended. If tape or glue is used, DO NOT TAPE OVER BARCODE. Be sure all edges are secure.**
4. **To mail your package with PC Postage®, you may schedule a Package Pickup online, hand to your letter carrier, take to a Post Office™, or drop in a USPS collection box.**
5. **Mail your package on the "Ship Date" you selected when creating this label.**

Click-N-Ship® Label Record

USPS TRACKING # :
9405 5036 9930 0005 4387 15

Trans. #:	543720552	Priority Mail® Postage:	**$7.95**
Print Date:	09/15/2021	Total:	**$7.95**
Ship Date:	09/15/2021		
Expected Delivery Date:	09/20/2021		

From: DEBORAH CHASE
NORTHEAST SITE SOLUTIONS
420 MAIN ST
STE 1
STURBRIDGE MA 01566-1359

Ref#: DS-807134

To: RICH ZAJAC
CROWN CASTLE
4545 E RIVER RD
STE 320
W HENRIETTA NY 14586-9024

* Retail Pricing Priority Mail rates apply. There is no fee for USPS Tracking® service on Priority Mail service with use of this electronic rate shipping label. Refunds for unused postage paid labels can be requested online 30 days from the print date.

UNITED STATES POSTAL SERVICE® *Thank you for shipping with the United States Postal Service!*
Check the status of your shipment on the USPS Tracking® page at usps.com

807134

UNITED STATES POSTAL SERVICE.

FISKDALE
458 MAIN ST
FISKDALE, MA 01518-9998
(800)275-8777

09/16/2021 03:16 PM

Product	Qty	Unit Price	Price
Prepaid Mail West Henrietta, NY 14586 Weight: 0 lb 2.10 oz Acceptance Date: Thu 09/16/2021 Tracking #: 9405 5036 9930 0005 4387 15	1		$0.00
Prepaid Mail Killingworth, CT 06419 Weight: 1 lb 6.10 oz Acceptance Date: Thu 09/16/2021 Tracking #: 9405 5036 9930 0005 4386 92	1		$0.00
Prepaid Mail Killingworth, CT 06419 Weight: 1 lb 5.70 oz Acceptance Date: Thu 09/16/2021 Tracking #: 9405 5036 9930 0005 4387 08	1		$0.00

Grand Total: $0.00

****
USPS is experiencing unprecedented volume
increases and limited employee