JENNILLE SMITH
774-409-5807
CENTERLINE COMMUNICATIONS, LLC
750 WEST CENTER STREET
WEST BRIDGEWATER MA 02379

1.0 LBS LTR **1 OF 1**

SHIP TO:
MELANIE BACHMAN
CONNECTICUT SITING COUNCIL
10 FRANKLIN SQUARE
NEW BRITAIN CT 06051-2655

CT 067 9-06

UPS 2ND DAY AIR
TRACKING #: 1Z 9Y4 503 02 1582 6579

2

BILLING: P/P

Reference # 1: ATC 88013

CS 22.0.18. WNTNV50 31.0A 07/2021*

23 Broadview Estates
Bristol, VT 05443
jsmith@clinellc.com
774.409.5807

July 30, 2021

Melanie A. Bachman
Executive Director
Connecticut Siting Council
10 Franklin Square
New Britain, CT 06051

Re: Notice of Exempt Modifications – AT&T Site CTL02016
Telecommunications ATC Site 88013
131 Little City Road, Killingworth CT 06419

Dear Ms. Bachman,

New Cingular Wireless, PCS, LLC ("AT&T") currently maintains antennas on a wireless telecommunications facility on an existing 277' American Tower Corporation (ATC) lattice telecommunications tower at the above referenced address, latitude 41.42877, longitude -72.6038.

AT&T desires to modify its existing equipment by removing three (3) TMAs, (6) RRHs, (6) 1 5/8 cable, (1) squid, (1) 3" conduit, and (4) .76 Control Cable; replaced by installing at a centerline of 272', (3) sector frames, (6) antennas, (9) RRHs, (1) squid, (2) DC Trunks, (1) 1.16 coax, (4) .92 control cables, and (3) Y Cables as more particularly detailed and described on the enclosed Construction Drawings prepared by Dewberry Engineers Inc. dated July 22, 2021.

Please accept this letter as notification pursuant to R.C.S.A §16-50j-73 for construction that constitutes an exempt modification pursuant to R.C.S.A §16-50j-72(b)(2). In accordance with R.C.S.A §16-50j-73, a copy of this letter was sent to Catherine Iino, First Selectwoman for the Town of Killingworth, Thomas Lentz, Planning & Zoning Commission Chair for the Town of Killingworth, and the Property Owner, American Tower Corporation.

The planned modifications to the facility fall within those activities explicitly provided for in R.C.S.A. §16-50j-72(b)(2). Specifically:

1. The proposed modifications will not result in an increase in the height of the existing structure.
2. The proposed modifications will not require an extension of the site boundary.
3. The proposed modifications will not increase noise levels at the facility by six decibels or more, or to levels that exceed state and local criteria.
4. The operation of the modified facility will not increase radio frequency emissions at the facility to a level at or above the Federal Communications Commissions safety standard. *Please see the RF emissions calculation for AT&T's modifications enclosed herewith.*
5. The proposed modifications will not cause an ineligible change or alternation in the physical or environmental characteristics of the site.
6. The existing structure and its foundation can support the proposed loading. Please see the structural analysis dated July 8, 2021 and prepared by Power of Design Group, LLC enclosed herewith.

For the foregoing reasons, AT&T respectfully submits that the proposed modifications to the above referenced telecommunications facility constitute an exempt modification under R.C.S.A §16-50j-72(b)(2).

Please let me know if anything further would be helpful in your review.

Kind Regards,

Jennille Smith

Jennille Smith
Site Acquisition Consultant – Agent for AT&T
Centerline Communications LLC
750 West Center St. Ste 301
West Bridgewater, MA 02379
774-409-5807

Enclosures:
Exhibit 1 – Construction Drawings
Exhibit 2 – Property Card and GIS
Exhibit 3 – Structural Analysis
Exhibit 4 – Mount Analysis
Exhibit 5 – RF Emissions Analysis Report Evaluation
Exhibit 6 – No Zoning Decision Memo
Exhibit 7 – Delivery Confirmations

Cc:
Town of Killingworth
Catherine Iino, First Selectwoman
323 Route 81
Killingworth, CT 06419

Town of Killingworth
Thomas Lentz, Planning & Zoning Commission Chair
323 Route 81
Killingworth, CT 06419

Property Owner:
American Tower Corporation
10 Presidential Way
Woburn, MA 01801

EXHIBIT 1

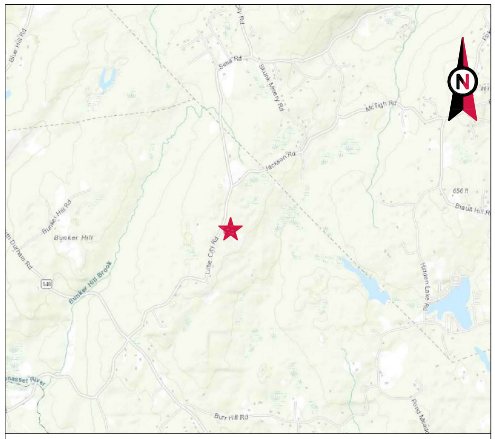

VICINITY MAP

AMERICAN TOWER®

ATC SITE NAME: KILLINGWORTH
ATC SITE NUMBER: 88013
AT&T PACE NUMBER: MRCTB048903/
MRCTB048928/MRCTB048844/MRCTB048906
AT&T SITE ID: KILLINGWORTH LITTLE CITY RD.
AT&T FA CODE: 10035445
AT&T SITE NAME: CTL02016
SITE ADDRESS: 131 LITTLE CITY ROAD
KILLINGWORTH, CT 06419

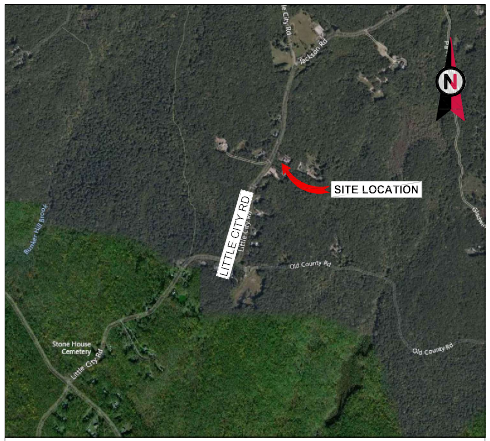

LOCATION MAP

AT&T MOBILITY
4C/5C/5G/RETROFIT AMENDMENT PLAN

COMPLIANCE CODE

ALL WORK SHALL BE PERFORMED AND MATERIALS INSTALLED IN ACCORDANCE WITH THE CURRENT EDITIONS OF THE FOLLOWING CODES AS ADOPTED BY THE LOCAL GOVERNMENT AUTHORITIES. NOTHING IN THESE PLANS IS TO BE CONSTRUED TO PERMIT WORK NOT CONFORMING TO THESE CODES.

1. 2018 CONNECTICUT STATE BUILDING CODE-AMENDMENTS TO IBC 2015
2. INTERNATIONAL BUILDING CODE 2015, INTERNATIONAL CODE COUNCIL
3. TIA-222-G-4, STRUCTURAL STANDARD FOR ANTENNA SUPPORTING STRUCTURES AND ANTENNAS
4. ASCE 7-10 MINIMUM DESIGN LOADS FOR BUILDINGS AND OTHER STRUCTURES, AMERICAN SOCIETY OF CIVIL ENGINEERS
5. STEEL CONSTRUCTION MANUAL 14TH EDITION, AMERICAN INSTITUTE OF STEEL CONSTRUCTION
6. CITY/COUNTY ORDINANCES

UTILITY COMPANIES

POWER COMPANY: EVERSOURCE
PHONE: (888) 783-6617

TELEPHONE COMPANY: UNKNOWN
PHONE: (XXX) XXX-XXXX

811
Know what's **below.**
Call before you dig.

PROJECT SUMMARY

SITE ADDRESS:

131 LITTLE CITY ROAD

KILLINGWORTH, CT 06419

COUNTY: MIDDLESEX

GEOGRAPHIC COORDINATES:

LATITUDE: 41.42877

LONGITUDE: -72.6038

GROUND ELEVATION: 615' AMSL

PROJECT TEAM

TOWER OWNER:

AMERICAN TOWER
10 PRESIDENTIAL WAY
WOBURN, MA 01801

APPLICANT:

AT&T MOBILITY
550 COCHITUATE ROAD
SUITES 13 & 14
FRAMINGHAM, MA 01701

ENGINEER:

DEWBERRY ENGINEERS INC.
99 SUMMER STREET
SUITE 700
BOSTON, MA 02110
PHONE: 617.695.3400
FAX: 617.695.3310

PROPERTY OWNER:

AMERICAN TOWERS INC
P.O. BOX 723597 SITE 88013
ATLANTA, GA 31139

PROJECT DESCRIPTION

THE PROPOSED PROJECT INCLUDES MODIFYING GROUND BASED AND TOWER MOUNTED EQUIPMENT AS INDICATED PER BELOW:

TOWER WORK:

REMOVE (3) ANTENNA(S), (6) RRH(S), (6) 1-5/8" COAX CABLE(S), (1) SQUID, (1) 3" CONDUIT, (2) 0.76" CONTROL CABLE AND (2) 0.78" CONTROL CABLE

INSTALL (3) SECTOR FRAMES, (6) ANTENNA(S), (9) RRH(S), (1) SQUID(S), (2) DC TRUNKS, (1) 1.16" COAX, (4) 0.92" CONTROL CABLES AND (3) Y-CABLES

EXISTING (6) ANTENNA(S), (3) RRH(S), (3) DIPLEXER(S), (6) TTA(S), (1) 1/2" COAX CABLE, (6) 1-5/8" COAX CABLE AND (2) 0.39" FIBER TRUNK(S) TO REMAIN

GROUND WORK:

INSTALL (1) 6630 AND (1) IDLE IN EXISTING SHELTER

PROJECT NOTES

1. THE FACILITY IS UNMANNED.
2. A TECHNICIAN WILL VISIT THE SITE APPROXIMATELY ONCE A MONTH FOR ROUTINE INSPECTION AND MAINTENANCE.
3. THE PROJECT WILL NOT RESULT IN ANY SIGNIFICANT LAND DISTURBANCE OR EFFECT OF STORM WATER DRAINAGE.
4. NO SANITARY SEWER, POTABLE WATER OR TRASH DISPOSAL IS REQUIRED.
5. HANDICAP ACCESS IS NOT REQUIRED.

PROJECT LOCATION DIRECTIONS

TAKE I-91 SOUTH TO 9 SOUTH TO EXIT 11 (ROUTE 148). FOLLOW ROUTE 148 UNTIL 2.3 MILES AFTER JUNCTION 79 TO LITTLE CITY ROAD. NOTE THE SIGN FOR LITTLE CITY ROAD IS NOT A NORMAL STREET SIGN, BUT A WOODEN ENGRAVED POLE. TURN LEFT ON LITTLE CITY AND FOLLOW 1.2 MILES.

SHEET INDEX

SHEET NO:	DESCRIPTION:	REV:	DATE:	BY:
G-001	TITLE SHEET	0	07/22/21	MR
G-002	GENERAL NOTES	0	07/22/21	MR
C-101	DETAILED SITE PLAN	0	07/22/21	MR
C-201	TOWER ELEVATION	0	07/22/21	MR
C-401	ANTENNA INFORMATION & SCHEDULE	0	07/22/21	MR
C-501	MOUNT DETAILS	0	07/22/21	MR
E-501	GROUNDING DETAILS	0	07/22/21	MR
R-601	SUPPLEMENTAL			
R-602	SUPPLEMENTAL			
R-603	SUPPLEMENTAL			
R-604	SUPPLEMENTAL			
R-605	MODIFICATION DRAWING			

AMERICAN TOWER®

Dewberry®
Dewberry Engineers Inc.
99 SUMMER STREET
SUITE 700
BOSTON, MA 02110
PHONE: 617.531.0801
FAX: 617.695.3310

REV.	DESCRIPTION	BY	DATE
A	PRELIM	MR	06/29/21
0	FINAL	MR	07/22/21

ATC SITE NUMBER:
88013
ATC SITE NAME:
KILLINGWORTH
AT&T PACE NUMBER:
MRCTB048903
AT&T SITE NAME:
CTL02016
SITE ADDRESS:
131 LITTLE CITY ROAD
KILLINGWORTH, CT 06419

SEAL:

at&t Mobility

DATE DRAWN:	06/29/21
ATC JOB NO:	13622645
CUSTOMER ID:	MRCTB048903
CUSTOMER #:	KILLINGWORTH LITTLE CITY RD.

TITLE SHEET

SHEET NUMBER:	REVISION:
G-001	0

Copyright © 2021 ATC IP LLC. All Rights Reserved.

GENERAL CONSTRUCTION NOTES:

1. OWNER FURNISHED MATERIALS,AT&T MOBILITY "THE COMPANY" WILL PROVIDE AND THE CONTRACTOR WILL INSTALL
   - A. BTS EQUIPMENT FRAME (PLATFORM) AND ICEBRIDGE SHELTER (GROUND BUILD/CO-LOCATE ONLY)
   - B. AC/TELCO INTERFACE BOX (PPC)
   - C. ICE BRIDGE (CABLE TRAY WITH COVER) (GROUND BUILD/CO-LOCATE ONLY. CC TO FURNISH AND INSTALL FOR ROOFTOP INSTALLATION)
   - D. TOWERS, MONOPOLES
   - E. TOWER LIGHTING
   - F. GENERATORS & LIQUID PROPANE TANK
   - G. ANTENNA STANDARD BRACKETS, FRAMES AND PIPES FOR MOUNTING
   - H. ANTENNAS (INSTALLED BY OTHERS)
   - I. TRANSMISSION LINE
   - J. TRANSMISSION LINE JUMPERS
   - K. TRANSMISSION LINE CONNECTORS WITH WEATHERPROOFING KITS
   - L. TRANSMISSION LINE GROUND KITS
   - M. HANGERS
   - N. HOISTING GRIPS
   - O. BTS EQUIPMENT
2. THE CONTRACTOR IS RESPONSIBLE TO PROVIDE ALL OTHER MATERIALS FOR THE COMPLETE INSTALLATION OF THE SITE INCLUDING, BUT NOT LIMITED TO, SUCH MATERIALS AS FENCING, STRUCTURAL STEEL SUPPORTING SUB-FRAME FOR PLATFORM, ROOFING LABOR AND MATERIALS, GROUNDING RINGS, GROUNDING WIRES, COPPER-CLAD OR XIT CHEMICAL GROUND ROD(S), BUSS BARS, TRANSFORMERS AND DISCONNECT SWITCHES WHERE APPLICABLE, TEMPORARY ELECTRICAL POWER, CONDUIT, LANDSCAPING COMPOUND STONE, CRANES, CORE DRILLING, SLEEPERS AND RUBBER MATTING, REBAR, CONCRETE CAISSONS, PADS AND/OR AUGER MOUNTS, MISCELLANEOUS FASTENERS, CABLE TRAYS, NON-STANDARD ANTENNA FRAMES AND ALL OTHER MATERIAL AND LABOR REQUIRED TO COMPLETE THE JOB ACCORDING TO THE DRAWINGS AND SPECIFICATIONS. IT IS THE POSITION OFAT&T MOBILITY TO APPLY FOR PERMITTING AND CONTRACTOR RESPONSIBLE FOR PICKUP AND PAYMENT OF REQUIRED PERMITS.
3. ALL WORK SHALL CONFORM TO ALL CURRENT APPLICABLE FEDERAL, STATE, AND LOCAL CODES, INCLUDING ANSI/EIA/TIA-222, AND COMPLY WITH ATC CONSTRUCTION SPECIFICATIONS.
4. CONTRACTOR SHALL CONTACT LOCAL 811 FOR IDENTIFICATION OF UNDERGROUND UTILITIES PRIOR TO START OF CONSTRUCTION.
5. CONTRACTOR SHALL BE RESPONSIBLE FOR COORDINATING ALL REQUIRED INSPECTIONS.
6. ALL DIMENSIONS TO, OF, AND ON EXISTING BUILDINGS, DRAINAGE STRUCTURES, AND SITE IMPROVEMENTS SHALL BE VERIFIED IN FIELD BY CONTRACTOR WITH ALL DISCREPANCIES REPORTED TO THE ENGINEER.
7. DO NOT CHANGE SIZE OR SPACING OF STRUCTURAL ELEMENTS.
8. DETAILS SHOWN ARE TYPICAL; SIMILAR DETAILS APPLY TO SIMILAR CONDITIONS UNLESS OTHERWISE NOTED.
9. THESE DRAWINGS DO NOT INCLUDE NECESSARY COMPONENTS FOR CONSTRUCTION SAFETY WHICH SHALL BE THE SOLE RESPONSIBILITY OF THE CONTRACTOR.
10. CONTRACTOR SHALL BRACE STRUCTURES UNTIL ALL STRUCTURAL ELEMENTS NEEDED FOR STABILITY ARE INSTALLED. THESE ELEMENTS ARE AS FOLLOWS: LATERAL BRACING, ANCHOR BOLTS, ETC.
11. CONTRACTOR SHALL DETERMINE EXACT LOCATION OF EXISTING UTILITIES, GROUNDS DRAINS, DRAIN PIPES, VENTS, ETC. BEFORE COMMENCING WORK.
12. INCORRECTLY FABRICATED, DAMAGED, OR OTHERWISE MISFITTING OR NONCONFORMING MATERIALS OR CONDITIONS SHALL BE REPORTED TO THE AT&T MOBILITY REP PRIOR TO REMEDIAL OR CORRECTIVE ACTION. ANY SUCH REMEDIAL ACTION SHALL REQUIRE WRITTEN APPROVAL BY THE AT&T MOBILITY REP PRIOR TO PROCEEDING.
13. EACH CONTRACTOR SHALL COOPERATE WITH THE AT&T MOBILITY REP, AND COORDINATE HIS WORK WITH THE WORK OF OTHERS.
14. CONTRACTOR SHALL REPAIR ANY DAMAGE CAUSED BY CONSTRUCTION OF THIS PROJECT TO MATCH EXISTING PRE-CONSTRUCTION CONDITIONS TO THE SATISFACTION OF THE AT&T MOBILITY CONSTRUCTION MANAGER.
15. ALL CABLE/CONDUIT ENTRY/EXIT PORTS SHALL BE WEATHERPROOFED DURING INSTALLATION USING A SILICONE SEALANT.
16. WHERE EXISTING CONDITIONS DO NOT MATCH THOSE SHOWN IN THIS PLAN SET, CONTRACTOR SHALL NOTIFY THE AT&T MOBILITY REP AND ENGINEER OF RECORD IMMEDIATELY.
17. CONTRACTOR SHALL ENSURE ALL SUBCONTRACTORS ARE PROVIDED WITH A COMPLETE AND CURRENT SET OF DRAWINGS AND SPECIFICATIONS FOR THIS PROJECT.
18. CONTRACTOR SHALL REMOVE ALL RUBBISH AND DEBRIS FROM THE SITE AT THE END OF EACH DAY.
19. CONTRACTOR SHALL COORDINATE WORK SCHEDULE WITH AMERICAN TOWER CORPORATION (ATC) AND TAKE PRECAUTIONS TO MINIMIZE IMPACT AND DISRUPTION OF OTHER OCCUPANTS OF THE FACILITY.
20. CONTRACTOR SHALL FURNISH AT&T MOBILITY AND AMERICAN TOWER CORPORATION (ATC) WITH A PDF MARKED UP AS-BUILT SET OF DRAWINGS UPON COMPLETION OF WORK.
21. PRIOR TO SUBMISSION OF B/D, CONTRACTOR SHALL COORDINATE WITH AT&T MOBILITY REP TO DETERMINE WHAT, IF ANY, ITEMS WILL BE PROVIDED. ALL ITEMS NOT PROVIDED SHALL BE PROVIDED AND INSTALLED BY THE CONTRACTOR. CONTRACTOR WILL INSTALL ALL ITEMS PROVIDED.
22. PRIOR TO SUBMISSION OF B/D, CONTRACTOR SHALL COORDINATE WITH AT&T MOBILITY REP TO DETERMINE IF ANY PERMITS WILL BE OBTAINED BY CONTRACTOR. ALL REQUIRED PERMITS NOT OBTAINED BY AT&T MOBILITY MUST BE OBTAINED, AND PAID FOR, BY THE CONTRACTOR.
23. CONTRACTOR SHALL INSTALL ALL SITE SIGNAGE IN ACCORDANCE WITH AT&T MOBILITY SPECIFICATIONS AND REQUIREMENTS.
24. CONTRACTOR SHALL SUBMIT ALL SHOP DRAWINGS TO AT&T MOBILITY FOR REVIEW AND APPROVAL PRIOR TO FABRICATION.
25. ALL EQUIPMENT SHALL BE INSTALLED ACCORDING TO MANUFACTURER'S SPECIFICATIONS AND LOCATED ACCORDING TO AT&T MOBILITY SPECIFICATIONS, AND AS SHOWN IN THESE PLANS.
26. THE CONTRACTOR SHALL SUPERVISE AND DIRECT THE PROJECT DESCRIBED HEREIN. THE CONTRACTOR SHALL BE SOLELY RESPONSIBLE FOR ALL THE CONSTRUCTION MEANS, METHODS, TECHNIQUES, SEQUENCES AND PROCEDURES AND FOR COORDINATING ALL PORTIONS OF THE WORK UNDER THE CONTRACT.
27. CONTRACTOR SHALL NOTIFY AT&T MOBILITY REP A MINIMUM OF 48 HOURS IN ADVANCE OF POURING CONCRETE OR BACKFILLING ANY UNDERGROUND UTILITIES, FOUNDATIONS OR SEALING ANY WALL, FLOOR OR ROOF PENETRATIONS FOR ENGINEERING REVIEW AND APPROVAL.
28. CONTRACTOR SHALL BE RESPONSIBLE FOR SITE SAFETY INCLUDING COMPLIANCE WITH ALL APPLICABLE OSHA STANDARDS AND RECOMMENDATIONS AND SHALL PROVIDE ALL NECESSARY SAFETY DEVICES INCLUDING PPE AND PPM AND CONSTRUCTION DEVICES SUCH AS WELDING AND FIRE PREVENTION, TEMPORARY SHORING, SCAFFOLDING, TRENCH BOXES/SLOPING, BARRIERS, ETC.
29. THE CONTRACTOR SHALL PROTECT AT HIS OWN EXPENSE, ALL EXISTING FACILITIES AND SUCH OF HIS NEW WORK LIABLE TO INJURY DURING THE CONSTRUCTION PERIOD. ANY DAMAGE CAUSED BY NEGLECT ON THE PART OF THIS CONTRACTOR OR HIS REPRESENTATIVES, OR BY THE ELEMENTS DUE TO NEGLECT ON THE PART OF THIS CONTRACTOR OR HIS REPRESENTATIVES, EITHER TO THE EXISTING WORK, OR TO HIS WORK OR THE WORK OF ANY OTHER CONTRACTOR, SHALL BE REPAIRED AT HIS EXPENSE TO THE OWNER'S SATISFACTION.
30. ALL WORK SHALL BE INSTALLED IN A FIRST CLASS, NEAT AND WORKMANLIKE MANNER BY MECHANICS SKILLED IN THE TRADE INVOLVED. THE QUALITY OF WORKMANSHIP SHALL BE SUBJECT TO THE APPROVAL OF THE AT&T MOBILITY REP. ANY WORK FOUND BY THE AT&T MOBILITY REP TO BE OF INFERIOR QUALITY AND/OR WORKMANSHIP SHALL BE REPLACED AND/OR REWORKED AT CONTRACTOR EXPENSE UNTIL APPROVAL IS OBTAINED.
31. IN ORDER TO ESTABLISH STANDARDS OF QUALITY AND PERFORMANCE, ALL TYPES OF MATERIALS LISTED HEREINAFTER BY MANUFACTURER'S NAMES AND/OR MANUFACTURER'S CATALOG NUMBER SHALL BE PROVIDED BY THESE MANUFACTURERS AS SPECIFIED.
32. AT&T MOBILITY FURNISHED EQUIPMENT SHALL BE PICKED-UP AT THE AT&T MOBILITY WAREHOUSE, NO LATER THAN 48HR AFTER BEING NOTIFIED INSURED, STORED, UNCRATE, PROTECTED AND INSTALLED BY THE CONTRACTOR WITH ALL APPURTENANCES REQUIRED TO PLACE THE EQUIPMENT IN OPERATION, READY FOR USE. THE CONTRACTOR SHALL BE RESPONSIBLE FOR THE EQUIPMENT AFTER PICKING IT UP.
33. AT&T MOBILITY OR HIS ARCHITECT/ENGINEER RESERVES THE RIGHT TO REJECT ANY EQUIPMENT OR MATERIALS WHICH, IN HIS OWN OPINION ARE NOT IN COMPLIANCE WITH THE CONTRACT DOCUMENTS. EITHER BEFORE OR AFTER INSTALLATION AND THE EQUIPMENT SHALL BE REPLACED WITH EQUIPMENT CONFORMING TO THE REQUIREMENTS OF THE CONTRACT DOCUMENTS BY THE CONTRACTOR AT NO COST TO AT&T MOBILITY OR THEIR ARCHITECT/ENGINEER.

SPECIAL CONSTRUCTION ANTENNA INSTALLATION NOTES:

1. WORK INCLUDED:
   - A. ANTENNA AND COAXIAL CABLES ARE FURNISHED BY AT&T MOBILITY UNDER A SEPARATE CONTRACT. THE CONTRACTOR SHALL ASSIST ANTENNA INSTALLATION CONTRACTOR IN TERMS OD COORDINATION AND SITE ACCESS. ERECTION SUBCONTRACTOR SHALL BE RESPONSIBLE FOR THE PROTECTION OF PERSONNEL AND
   - B. INSTALL ANTENNA AS INDICATE ON DRAWINGS AND AT&T MOBILITY SPECIFICATIONS.
   - C. INSTALL GALVANIZED STEEL ANTENNA MOUNTS AS INDICATED ON DRAWINGS
   - D. INSTALL FURNISHED GALVANIZED STEEL OR ALUMINUM WAVEGUIDE AND PROVIDE PRINTOUT OF THAT TEST.
   - E. CONTRACTOR SHALL PROVIDE FOUR (4) SETS OF SWEEP TESTS USING ANRITZU-PACKARD 8713B RF SCALAR NETWORK ANALYZER. SUBMIT FREQUENCY DOMAIN REFLECTOMETER(FDR) TESTS RESULTS TO THE PROJECT MANAGER. SWEEP TESTS SHALL BE AS PER ATTACHED RFS "MINIMUM FIELD TESTING RECOMMENDED FOR ANTENNA AND HELIAX COAXIAL CABLE SYSTEMS" DATED 10/5/93. TESTING SHALL BE PERFORMED BY AN INDEPENDENT TESTING SERVICE AND BE BOUND AND SUBMITTED WITHIN ONE WEEK OF WORK COMPLETION.
   - F. INSTALL COAXIAL CABLES AND TERMINATING BETWEEN ANTENNAS AND EQUIPMENT PER MANUFACTURER'S RECOMMENDATIONS. WEATHERPROOF ALL CONNECTIONS BETWEEN THE ANTENNA AND EQUIPMENT PER MANUFACTURER'S REQUIREMENTS. TERMINATE ALL COAXIAL CABLE THREE (3) FEET IN EXCESS OF ENTRY PORT LOCATION UNLESS OTHERWISE STATED.
   - G. ANTENNA AND COAXIAL CABLE GROUNDING:
2. ALL EXTERIOR #6 GREED GROUND WIRE "DAISY CHAIN" CONNECTIONS ARE TO BE WEATHER SEALED WITH RFS CONNECTORS/SPLICE WEATHERPROOFING KIT #221213 OR EQUAL.
3. ALL COAXIAL CABLE GROUNDING KITS ARE TO BE INSTALLED ON STRAIGHT RUNS OF COAXIAL CABLE (NOT WITHIN BENDS)

ALL DISCREPANCIES FROM WHAT IS SHOWN ON THESE CONSTRUCTION DRAWINGS SHALL BE COMMUNICATED TO ATC ENGINEERING IMMEDIATELY FOR CORRECTION OR RE-DESIGN. FAILURE TO COMMUNICATE DIRECTLY WITH ATC ENGINEERING OR ANY CHANGES FROM THE DESIGN CONDUCTED WITHOUT PRIOR APPROVAL FROM ATC ENGINEERING SHALL BE THE SOLE RESPONSIBILITY OF THE GENERAL CONTRACTOR.

AMERICAN TOWER®

Dewberry®
Dewberry Engineers Inc.
99 SUMMER STREET
SUITE 700
BOSTON, MA 02110
PHONE: 617.531.0801
FAX: 617.695.3310

Copyright © 2021 ATC IP LLC, All Rights Reserved.

REV.	DESCRIPTION	BY	DATE
A	PRELIM	MR	06/29/21
0	FINAL	MR	07/22/21

ATC SITE NUMBER:
88013
ATC SITE NAME:
KILLINGWORTH
AT&T PACE NUMBER:
MRCTB048903
AT&T SITE NAME:
CTL02016
SITE ADDRESS:
131 LITTLE CITY ROAD
KILLINGWORTH, CT 06419

SEAL:

at&t Mobility

DATE DRAWN:	06/29/21
ATC JOB NO:	13622645
CUSTOMER ID:	MRCTB048903
CUSTOMER #:	KILLINGWORTH LITTLE CITY RD.

GENERAL NOTES

SHEET NUMBER:	REVISION:
G-002	0

SITE PLAN NOTES:

1. THIS SITE PLAN REPRESENTS THE BEST PRESENT KNOWLEDGE AVAILABLE TO THE ENGINEER AT THE TIME OF THIS DESIGN. THE CONTRACTOR SHALL VISIT THE SITE PRIOR TO CONSTRUCTION AND VERIFY ALL EXISTING CONDITIONS RELATED TO THE SCOPE OF WORK FOR THIS PROJECT.

2. ICE BRIDGE, CABLE LADDER, COAX PORT, AND COAX CABLE ARE SHOWN FOR REFERENCE ONLY. CONTRACTOR SHALL CONFIRM THE EXACT LOCATION OF ALL PROPOSED AND EXISTING EQUIPMENT AND STRUCTURES DEPICTED ON THIS PLAN. BEFORE UTILIZING EXISTING CABLE SUPPORTS, COAX PORTS, INSTALLING NEW PORTS OR ANY OTHER EQUIPMENT, CONTRACTOR SHALL VERIFY ALL ASPECTS OF THE COMPONENTS MEET THE ATC SPECIFICATIONS.

3. THIS PROJECT INCLUDES NO INSTALL OR MODIFICATION AT GRADE

LEGEND

⊗	GROUNDING TEST WELL
ATS	AUTOMATIC TRANSFER SWITCH
B	BOLLARD
CSC	CELL SITE CABINET
D	DISCONNECT
E	ELECTRICAL
F	FIBER
GEN	GENERATOR
G	GENERATOR RECEPTACAL
HH, V	HAND HOLE, VAULT
IB	ICE BRIDGE
K	KENTROX BOX
LC	LIGHTING CONTROL
M	METER
PB	PULL BOX
PP	POWER POLE
T	TELCO
TRN	TRANSFORMER
—— x ——	CHAINLINK FENCE

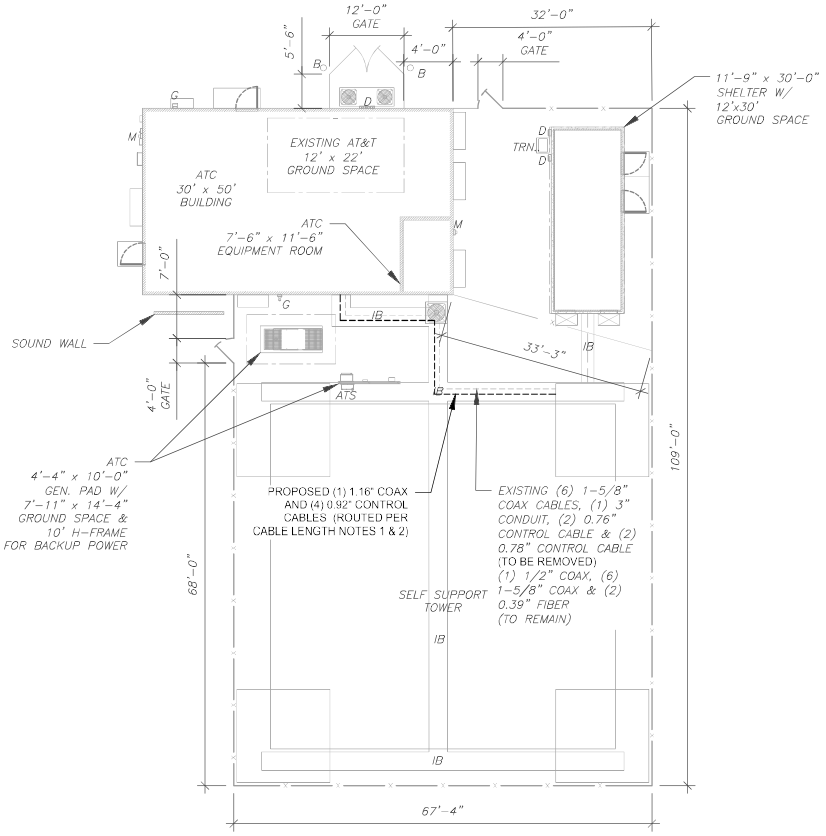

1 DETAILED SITE PLAN

GRAPHIC SCALE

20 0 10 20

(IN FEET)
1 UNIT = 20 FEET

PROPOSED CABLE LENGTH:

1. ESTIMATED LENGTH OF PROPOSED CABLE 376'. ESTIMATED LENGTH OF CABLE WAS PROVIDED BY CUSTOMER OR CALCULATED BY ADDING THE RAD CENTER AND THE DISTANCE FROM THE SHELTER ENTRY PLATE TO THE TOWER (ALONG THE ICE BRIDGE) AND A SAFETY FACTOR MEASUREMENT OF 15% (OF THE TWO PREVIOUS VALUES). CDS DEFER TO GREATEST CABLE LENGTH.
2. ROUTE PROPOSED CABLES ALONG SAME PATH AS EXISTING CABLES AND IN ACCORDANCE WITH STRUCTURAL ANALYSIS. IF ADEQUATE SPACE EXISTS, ROUTE CABLES THROUGH ENTRY PORT HOLE, UP INSIDE OF MONOPOLE, AND THROUGH EXIT PORT HOLE. IF ROUTING OUTSIDE THE MONOPOLE, ATTACH CABLES USING STAND-OFF ADAPTERS MOUNTED TO TOWER USING STAINLESS STEEL BANDING. ADEQUATELY SECURE CABLES USING EITHER APPROPRIATELY SIZED STAINLESS STEEL SNAP-INS OR MOUNTING HARDWARE AND BRACKETS AS SPECIFIED BY CABLE MANUFACTURER.

AMERICAN TOWER®

Dewberry®
Dewberry Engineers Inc.
99 SUMMER STREET
SUITE 700
BOSTON, MA 02110
PHONE: 617.531.0801
FAX: 617.695.3310

Copyright © 2021 ATC IP LLC, All Rights Reserved.

REV.	DESCRIPTION	BY	DATE
A	PRELIM	MR	06/29/21
0	FINAL	MR	07/22/21

ATC SITE NUMBER:
88013
ATC SITE NAME:
KILLINGWORTH
AT&T PACE NUMBER:
MRCTB048903
AT&T SITE NAME:
CTL02016
SITE ADDRESS:
131 LITTLE CITY ROAD
KILLINGWORTH, CT 06419

SEAL:

28971 LICENSED PROFESSIONAL ENGINEER

at&t Mobility

DATE DRAWN:	06/29/21
ATC JOB NO:	13622645
CUSTOMER ID:	MRCTB048903
CUSTOMER #:	KILLINGWORTH LITTLE CITY RD.

DETAILED SITE PLAN

SHEET NUMBER:	REVISION:
C-101	0

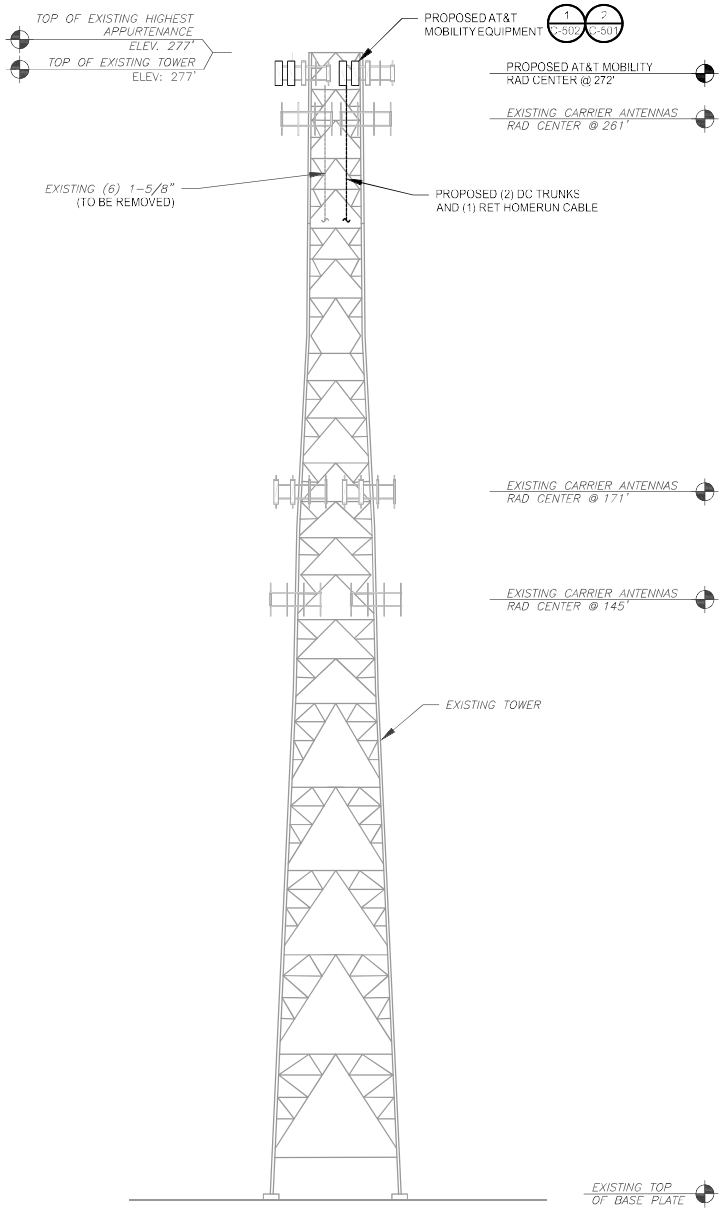

1 TOWER ELEVATION
SCALE: N.T.S.

PER MOUNT ANALYSIS COMPLETED BY POWER OF DESIGN GROUP, LLC., DATED 07/08/2021 THE PROPOSED MOUNT CAN ADEQUATELY SUPPORT THE PROPOSED LOADING.

TOWER NOTE:

1. IT IS THE CONTRACTOR'S RESPONSIBILITY TO CONFIRM WITH THE PROJECT MANAGER THAT THEY HAVE THE MOST RECENT VERSION OF THE STRUCTURAL ANALYSIS BEFORE COMMENCING WORK. EXISTING AND PROPOSED TOWER APPURTENANCES, MOUNTS, AND ANTENNAS ARE SHOWN BASED ON THE STRUCTURAL ANALYSIS.
2. WHERE APPLICABLE, ALL NEW ANTENNAS, EQUIPMENT, MOUNTS, CABLING, ETC. SHALL BE PAINTED/SOCKED TO MATCH EXISTING EQUIPMENT IN ACCORDANCE WITH FAA, JURISDICTION, AND/OR OTHER LOCAL REQUIREMENTS.
3. ROUTE PROPOSED CABLES ALONG SAME PATH AS EXISTING CABLES AND IN ACCORDANCE WITH STRUCTURAL ANALYSIS. WHERE POSSIBLE UTILIZE EXISTING CABLE SUPPORT STRUCTURES AS PROVIDED FOR CARRIER TO ADEQUATELY SECURE CABLES, USING EITHER APPROPRIATELY SIZED STAINLESS STEEL SNAP-INS OR MOUNTING HARDWARE AND BRACKETS AS SPECIFIED BY CABLE MANUFACTURER. OTHERWISE, ATTACH CABLES TO HORIZONTAL OR DIAGONAL TOWER MEMBERS USING PROPOSED STAINLESS STEEL ADAPTERS (DO NOT ATTACH TO TOWER LEG).
4. TOWER ELEVATIONS ARE MEASURED FROM TOP OF BASE PLATE TO MATCH STRUCTURAL ANALYSIS. ELEVATIONS DO NOT REFLECT TRUE ABOVE GROUND LEVEL (A.G.L.)

AMERICAN TOWER®

Dewberry®
Dewberry Engineers Inc.
99 SUMMER STREET
SUITE 700
BOSTON, MA 02110
PHONE: 617.531.0801
FAX: 617.695.3310

Copyright © 2021 ATC IP LLC. All Rights Reserved.

REV.	DESCRIPTION	BY	DATE
A	PRELIM	MR	06/29/21
0	FINAL	MR	07/22/21

ATC SITE NUMBER:
88013
ATC SITE NAME:
KILLINGWORTH
AT&T PACE NUMBER:
MRCTB048903
AT&T SITE NAME:
CTL02016
SITE ADDRESS:
131 LITTLE CITY ROAD
KILLINGWORTH, CT 06419

SEAL:

at&t Mobility

DATE DRAWN:	06/29/21
ATC JOB NO:	13622645
CUSTOMER ID:	MRCTB048903
CUSTOMER #:	KILLINGWORTH LITTLE CITY RD.

TOWER ELEVATION

SHEET NUMBER:	REVISION:
C-201	0

EXISTING CONFIGURATIONS ARE BASED ON RFDS. CONTRACTOR TO VERIFY EXISTING CONDITIONS.

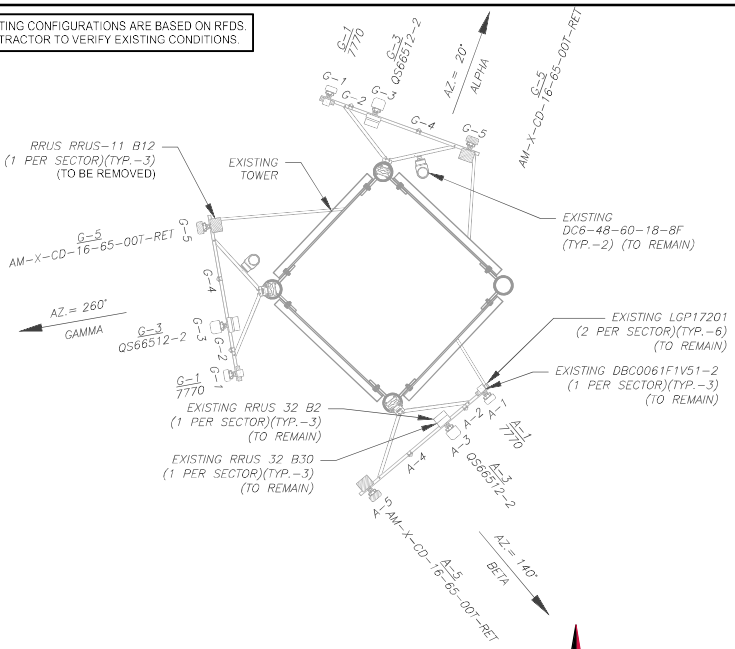

1 CURRENT ANTENNA PLAN

SCALE: N.T.S.

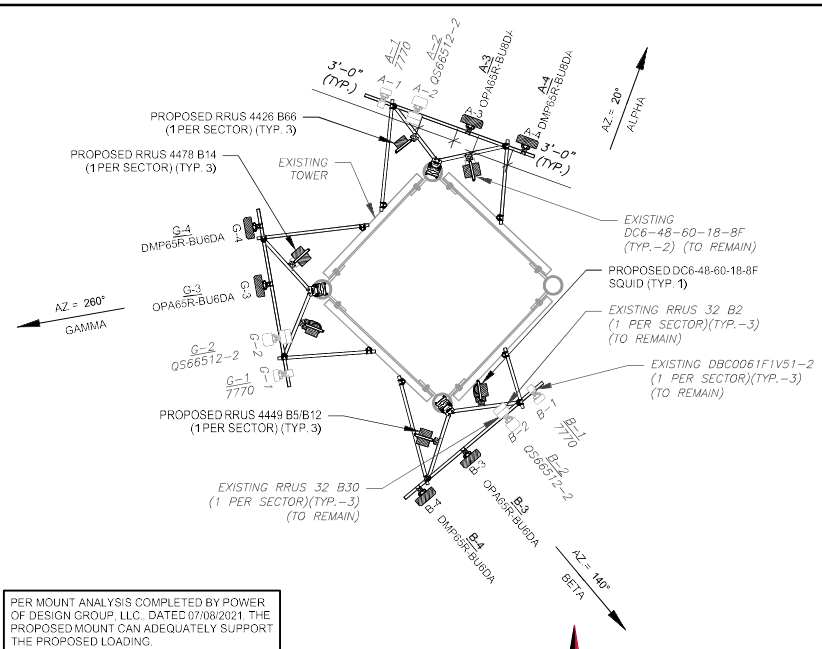

PER MOUNT ANALYSIS COMPLETED BY POWER OF DESIGN GROUP, LLC, DATED 07/08/2021. THE PROPOSED MOUNT CAN ADEQUATELY SUPPORT THE PROPOSED LOADING.

2 FINAL ANTENNA PLAN

SCALE: N.T.S.

EXISTING ANTENNA SCHEDULE

LOCATION			ANTENNA SUMMARY				NON ANTENNA SUMMARY	
SECTOR	RAD	AZ	POS	ANTENNA	BAND	STATUS	ADDITIONAL TOWER MOUNTED EQUIPMENT	STATUS
ALPHA	272'	140°	A1	7770	UMTS	RMN	DBC0061F1V51-2	RMN
							(2) LGP17201	RMV
			A3	QS66512-2	WCS/PCS	RMN	RRUS 32 B2	RMN
							RRUS 32 B30	RMN
			A5	AM-X-CD-16-65-00T-RET	700	RMV	RRUS-11 B12	RMV
BETA	272'	260°	B1	7770	UMTS	RMN	DBC0061F1V51-2	RMN
							(2) LGP17201	**RMV**
			B3	QS66512-2	WCS/PCS	RMN	RRUS 32 B2	RMN
							RRUS 32 B30	RMN
			B5	AM-X-CD-16-65-00T-RET	700	RMV	RRUS-11 B12	RMV
GAMMA	272'	40'	C1	7770	UMTS	RMN	DBC0061F1V51-2	RMN
							(2) LGP17201	**RMV**
			C3	QS66512-2	WCS/PCS	RMN	RRUS 32 B2	RMN
							RRUS 32 B30	RMN
			C5	AM-X-CD-16-65-00T-RET	700	RMV	RRUS-11 B12	RMV

NOTES

1. CONFIRM WITH AT&T MOBILITY REP FOR APPLICABLE UPDATES/REVISIONS AND MOST RECENT RFDS FOR NSN CONFIGURATION (CONFIG). CC TO CAP ALL UNUSED PORTS.
2. CONFIRM SPACING OF PROPOSED EQUIP DOES NOT CAUSE TOWER CONFLICTS NOR IMPEDE TOWER CLIMBING PEGS.
3. THE ANTENNA ORIENTATION PLAN IS A SCHEMATIC. ATC DID NOT CONFIRM EXISTING SITE CONDITIONS INCLUDING, BUT NOT LIMITED TO, ANTENNA AZIMUTHS, MOUNT CONFIGURATIONS AND TOWER ORIENTATION. SCALES SHOWN ARE FOR REFERENCE ONLY AND EXISTING DIMENSIONS ARE APPROXIMATE. THE CONTRACTOR SHALL VERIFY ALL EXISTING CONDITIONS PRIOR TO INSTALLATION AND NOTIFY ATC OF ANY DISCREPANCIES.
4. CONTRACTOR TO ENSURE PROPER SEPARATION IN ACCORDANCE WITH AT&T'S FIRSTNET REQUIREMENTS (SEE SHEET R-602)

FINAL ANTENNA SCHEDULE

LOCATION			ANTENNA SUMMARY				NON ANTENNA SUMMARY	
SECTOR	RAD	AZ	POS	ANTENNA	BAND	STATUS	ADDITIONAL TOWER MOUNTED EQUIPMENT	STATUS
ALPHA	272'	20°	A1	7770	UMTS	RMN	DBC0061F1V51-2	RMN
			A2	QS66512-2	WCS/PCS	RMN	RRUS 32 B2	RMN
							RRUS 32 B30	RMN
			A3	OPA65R-BU6DA	700/B14	ADD	RRUS 4478 B14	ADD
			A4	DMP65R-BU6DA	700BC/850/AWS	ADD	RRUS 4449 B5/B12	ADD
							RRUS 4426 B66	ADD
BETA	272'	140°	B1	7770	UMTS	RMN	DBC0061F1V51-2	RMN
			B2	QS66512-2	WCS/PCS	RMN	RRUS 32 B2	RMN
							RRUS 32 B30	RMN
			B3	OPA65R-BU6DA	700/B14	ADD	RRUS 4478 B14	ADD
			B4	DMP65R-BU6DA	700BC/850/AWS	ADD	RRUS 4449 B5/B12	ADD
							RRUS 4426 B66	ADD
GAMMA	272'	260°	C1	7770	UMTS	RMN	DBC0061F1V51-2	RMN
			C2	QS66512-2	WCS/PCS	RMN	RRUS 32 B2	RMN
							RRUS 32 B30	RMN
			C3	OPA65R-BU8DA	700/B14	ADD	RRUS 4478 B14	ADD
			C4	DMP65R-BU8DA	700BC/850/AWS	ADD	RRUS 4449 B5/B12	ADD
							RRUS 4426 B66	ADD

EXISTING FIBER DISTRIBUTION/SQUID

MODEL NUMBER	STATUS
(2) DC6-48-60-18-8F	RMN

EXISTING CABLING SUMMARY

COAX	CONTROL CABLE	FIBER	STATUS
(6) 1-5/8"	–	–	RMV
(1) 3" CONDUIT			RMV
	(2) 0/76" CONTROL CABBLE & (2) 0.78" CONTROL CABLE		RMV

STATUS ABBREVIATIONS

RMV: TO BE REMOVED
RMN: TO REMAIN
REL: TO BE RELOCATED
ADD: TO BE ADDED

CABLE LENGTHS FOR JUMPERS

FIBER DISTRIBUTION/OVP TO RRU: 15'
RRU TO ANTENNA: 10'

FINAL FIBER DISTRIBUTION/SQUID

MODEL NUMBER	STATUS
(1) DC6-48-60-18-8F	ADD
(2) DC6-48-60-18-8F	RMN

FINAL CABLING SUMMARY

COAX	CONTROL CABLE	FIBER	STATUS
(1) 1.16"	(4) 0.92"	-	ADD

3 EQUIPMENT SCHEDULES

AMERICAN TOWER®

Dewberry®

Dewberry Engineers Inc.
99 SUMMER STREET
SUITE 700
BOSTON, MA 02110
PHONE: 617.531.0801
FAX: 617.695.3310

Copyright © 2021 ATC IP LLC. All Rights Reserved.

REV.	DESCRIPTION	BY	DATE
A	PRELIM	MR	06/29/21
0	FINAL	MR	07/22/21

ATC SITE NUMBER:
88013

ATC SITE NAME:
KILLINGWORTH

AT&T PACE NUMBER:
MRCTB048903

AT&T SITE NAME:
CTL02016

SITE ADDRESS:
131 LITTLE CITY ROAD
KILLINGWORTH, CT 06419

SEAL:

at&t Mobility

DATE DRAWN:	06/29/21
ATC JOB NO:	13622645
CUSTOMER ID:	MRCTB048903
CUSTOMER #:	KILLINGWORTH LITTLE CITY RD.

ANTENNA INFORMATION & SCHEDULE

SHEET NUMBER: C-401

REVISION: 0

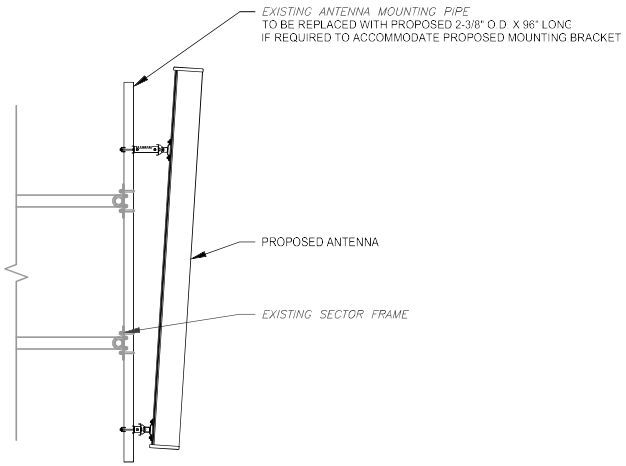

1 PROPOSED ANTENNA MOUNTING DETAIL - TYPICAL

SCALE: N.T.S.

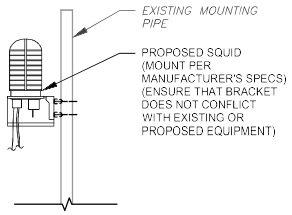

2 PROPOSED SQUID MOUNTING

SCALE: N.T.S.

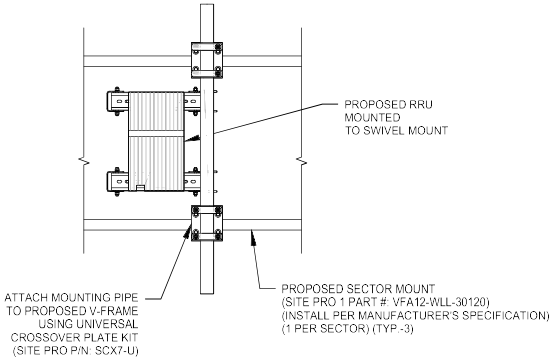

3 PROPOSED RRU/SQUID MOUNTING DETAIL

SCALE: NOT TO SCALE

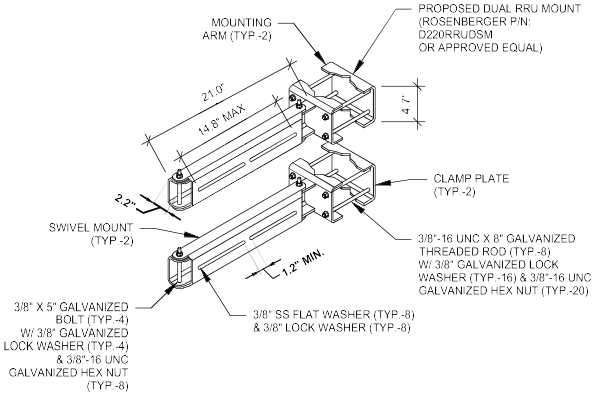

4 PROPOSED SWIVEL MOUNT DETAIL

SCALE: N.T.S.

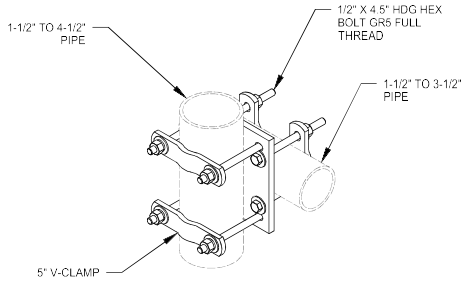

5 SITE PRO SCX7-U DETAIL

SCALE: N.T.S.

AMERICAN TOWER®

Dewberry®
Dewberry Engineers Inc.
99 SUMMER STREET
SUITE 700
BOSTON, MA 02110
PHONE: 617.531.0801
FAX: 617.695.3310

Copyright © 2021 ATC IP LLC, All Rights Reserved.

REV.	DESCRIPTION	BY	DATE
A	PRELIM	MR	06/29/21
0	FINAL	MR	07/22/21

ATC SITE NUMBER:
88013

ATC SITE NAME:
KILLINGWORTH

AT&T PACE NUMBER:
MRCTB048903

AT&T SITE NAME:
CTL02016

SITE ADDRESS:
131 LITTLE CITY ROAD
KILLINGWORTH, CT 06419

SEAL:

at&t Mobility

DATE DRAWN:	06/29/21
ATC JOB NO:	13622645
CUSTOMER ID:	MRCTB048903
CUSTOMER #:	KILLINGWORTH LITTLE CITY RD.

MOUNT DETAILS

SHEET NUMBER:	REVISION:
C-501	0

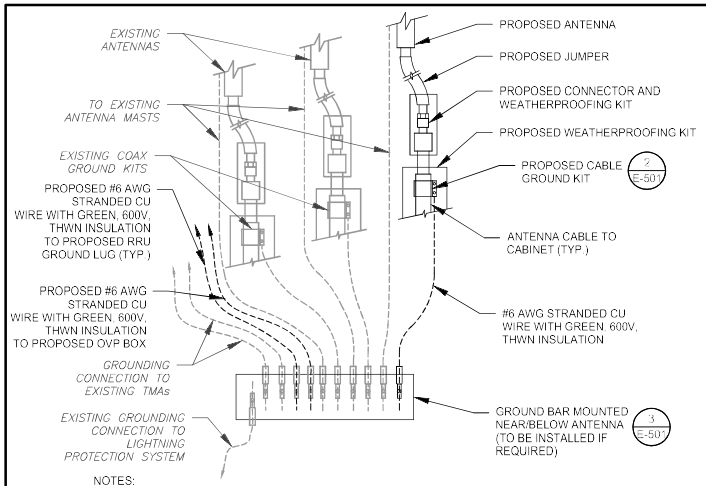

NOTES:

1. THIS DETAIL IS INTENDED TO SHOW THE GENERAL GROUNDING REQUIREMENTS. SLIGHT ADJUSTMENTS MAY BE REQUIRED BASED ON EXISTING SITE CONDITIONS. THE CONTRACTOR SHALL MAKE FIELD ADJUSTMENTS AS NEEDED AND INFORM THE CONSTRUCTION MANAGER OF ANY CONFLICTS.
2. SITE GROUNDING SHALL COMPLY WITH AT&T MOBILITY GROUNDING STANDARDS, LATEST EDITION, AND COMPLY WITH AT&T MOBILITY GROUNDING CHECKLIST, LATEST VERSION. WHEN NATIONAL AND LOCAL GROUNDING CODES ARE MORE STRINGENT THEY SHALL GOVERN.

1 TYPICAL ANTENNA GROUNDING DIAGRAM

SCALE: N.T.S.

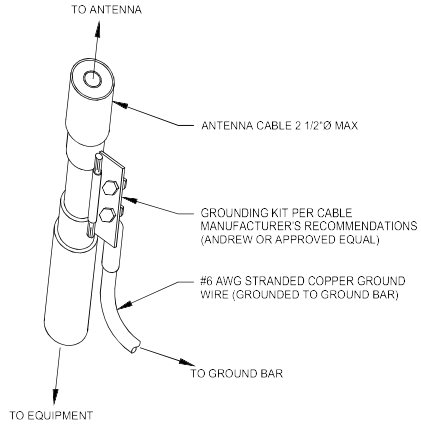

GROUND KIT NOTES:

1. DO NOT INSTALL CABLE GROUND KIT AT A BEND AND ALWAYS DIRECT GROUND WIRE DOWN TO GROUND BAR.
2. CONTRACTOR SHALL PROVIDE WEATHERPROOFING KIT (ANDREW PART NUMBER 221213) AND INSTALL/TAPE PER MANUFACTURER'S SPECIFICATIONS.

2 CABLE GROUND KIT CONNECTION DETAIL

SCALE: N.T.S.

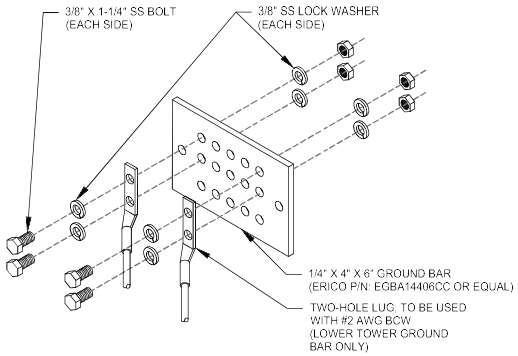

GROUND BAR NOTES:

1. GROUND BAR KITS COME WITH ALL HARDWARE, NUTS, BOLTS, WASHERS, ETC. EXCEPT THE STRUCTURAL MOUNTING MEMBER(S).
2. GROUND BAR TO BE BONDED DIRECTLY TO TOWER.

3 TOWER GROUND BAR DETAIL

SCALE: N.T.S.

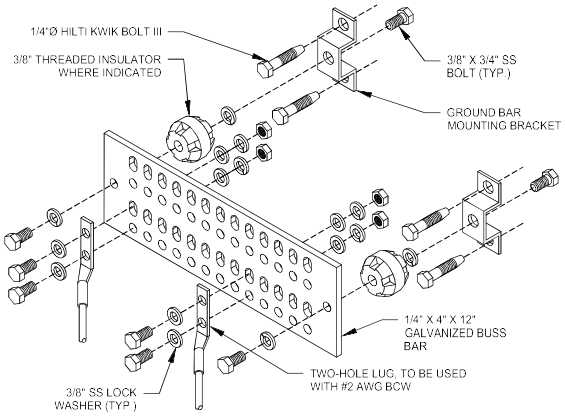

GROUND BAR NOTES

1. GROUND KITS COME WITH ALL HARDWARE, NUTS, BOLTS, WASHERS, ETC. EXCEPT THE STRUCTURAL MOUNTING MEMBER(S).
2. GROUND BAR SHALL BE BOLTED TO STRUCTURAL MEMBER OR ANCHORED TO CONCRETE SLAB W/ HILTI KWIK BOLT III.

4 MAIN GROUND BAR DETAIL

SCALE: N.T.S.

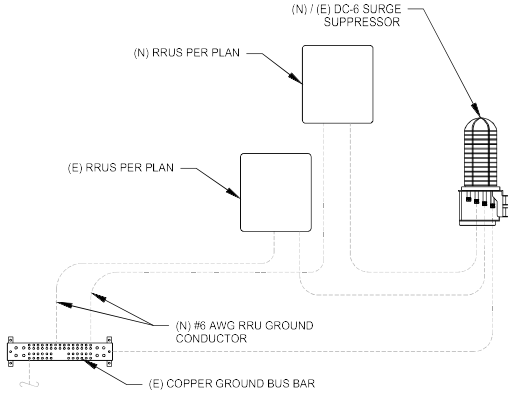

5 RRU GROUNDING

SCALE: N.T.S.

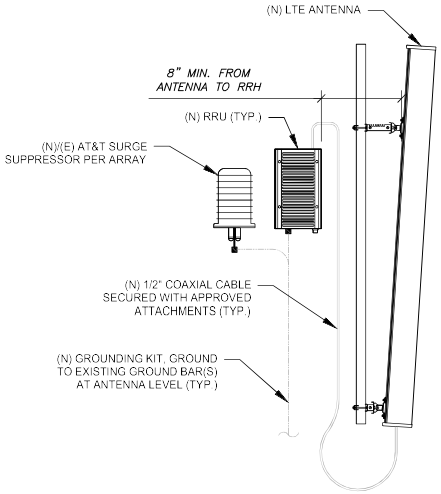

6 ANTENNA/RRU GROUNDING

SCALE: N.T.S.

AMERICAN TOWER®

Dewberry®
Dewberry Engineers Inc.
99 SUMMER STREET
SUITE 700
BOSTON, MA 02110
PHONE: 617.531.0801
FAX: 617.695.3310

Copyright © 2021 ATC IP LLC. All Rights Reserved.

REV.	DESCRIPTION	BY	DATE
A	PRELIM	MR	06/29/21
0	FINAL	MR	07/22/21

ATC SITE NUMBER:
88013

ATC SITE NAME:
KILLINGWORTH

AT&T PACE NUMBER:
MRCTB048903

AT&T SITE NAME:
CTL02016

SITE ADDRESS:
131 LITTLE CITY ROAD
KILLINGWORTH, CT 06419

SEAL:

at&t Mobility

DATE DRAWN:	06/29/21
ATC JOB NO:	13622645
CUSTOMER ID:	MRCTB048903
CUSTOMER #:	KILLINGWORTH LITTLE CITY RD.

GROUNDING DETAILS

SHEET NUMBER:	REVISION:
E-501	0

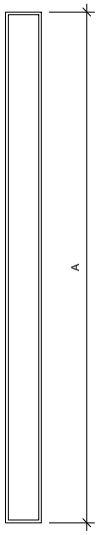

FRONT VIEW

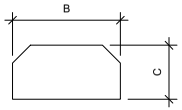

TOP VIEW

1 ANTENNA SPECIFICATIONS

FOR ILLUSTRATIVE PURPOSES ONLY - NOT TO SCALE

ANTENNA SPECIFICATIONS				
ANTENNA MODEL	A	B	C	WEIGHT (LBS)
OPA65R-BU6DA	71.2"	21.0"	7.8"	63.2
OPA65R-BU8DA	96.0"	21.0"	7.8"	76.5
DMP65R-BU6DA	71.2"	20.7"	7.7"	79.4
DMP65R-BU8DA	96.0"	20.7"	7.7"	95.7

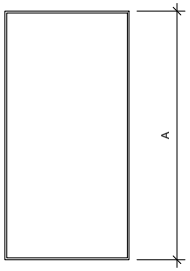

FRONT VIEW

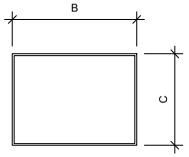

TOP VIEW

2 RRU SPECIFICATIONS

FOR ILLUSTRATIVE PURPOSES ONLY - NOT TO SCALE

RRU SPECIFICATIONS				
RRU MODEL	A	B	C	WEIGHT (LBS)
RRUS 4449 B5/B12	17.9"	19.2"	9.4"	71
RRUS 4478 B14	16.5"	13.4"	7.7"	59.9
RRUS 4426 B66	15.0"	13.2"	5.8"	48.4

NOTE: THIS SHEET CREATED BY OTHERS AND PROVIDED BY REQUEST OF CUSTOMER WITHOUT EDIT.

AMERICAN TOWER®

Dewberry®
Dewberry Engineers Inc.
99 SUMMER STREET
SUITE 700
BOSTON, MA 02110
PHONE: 617.531.0801
FAX: 617.695.3310

REV.	DESCRIPTION	BY	DATE
A	PRELIM	MR	06/29/21
0	FINAL	MR	07/22/21

ATC SITE NUMBER:
88013
ATC SITE NAME:
KILLINGWORTH
AT&T PACE NUMBER:
MRCTB048903
AT&T SITE NAME:
CTL02016
SITE ADDRESS:
131 LITTLE CITY ROAD
KILLINGWORTH, CT 06419

at&t Mobility

DATE DRAWN:	06/29/21
ATC JOB NO:	13622645
CUSTOMER ID:	MRCTB048903
CUSTOMER #:	KILLINGWORTH LITTLE CITY RD.

SUPPLEMENTAL

SHEET NUMBER: R-601

REVISION: 0

Copyright © 2021 ATC IP LLC, All Rights Reserved.

RF REQUIREMENTS FOR 700 B14 FIRSTNET, 700 B12, 700D B29 ANTENNA SEPARATION

- Horizontal separation (side to side of antenna): >= 3’
- Vertical separation (between the tips of the antennas): > 3’
- Inter-sector separation: > 3’ between the center of the antenna backplanes.

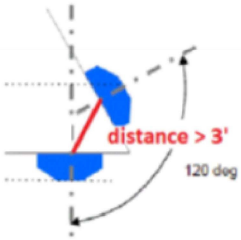

- Please note additional horizontal separation may be required if B14 antennas azimuth are different from others or antennas are severely angled with respect to the mount.
- Typical 3' horizontal separation can tolerate skew angle up to 6°.

NOTE: THIS SHEET CREATED BY OTHERS AND PROVIDED BY REQUEST OF CUSTOMER WITHOUT EDIT.

AMERICAN TOWER®

Dewberry®

Dewberry Engineers Inc.
99 SUMMER STREET
SUITE 700
BOSTON, MA 02110
PHONE: 617.531.0801
FAX: 617.695.3310

Copyright © 2021 ATC IP LLC, All Rights Reserved.

REV.	DESCRIPTION	BY	DATE
A	PRELIM	MR	06/29/21
0	FINAL	MR	07/22/21

ATC SITE NUMBER:
88013

ATC SITE NAME:
KILLINGWORTH

AT&T PACE NUMBER:
MRCTB048903

AT&T SITE NAME:
CTL02016

SITE ADDRESS:
131 LITTLE CITY ROAD
KILLINGWORTH, CT 06419

at&t Mobility

DATE DRAWN:	06/29/21
ATC JOB NO:	13622645
CUSTOMER ID:	MRCTB048903
CUSTOMER #:	KILLINGWORTH LITTLE CITY RD.

SUPPLEMENTAL

SHEET NUMBER:	REVISION:
R-602	0

Diagram - Sector	A	Diagram File Name - CT2016_A_B_C_LTEAWS_700B14_8505G_700BC4T4R_Rev3.vsd					
Atoll Site Name -	CTL02016	Location Name -	KILLINGWORTH LITTLE CITY ROAD	Market -	CONNECTICUT	Market Cluster -	NEW ENGLAND

Comments: Important Note: For detailed radio to antenna wiring refer to the latest field notice - Antenna_Radio Connection Drawings Playbook v8.0_Ericsson

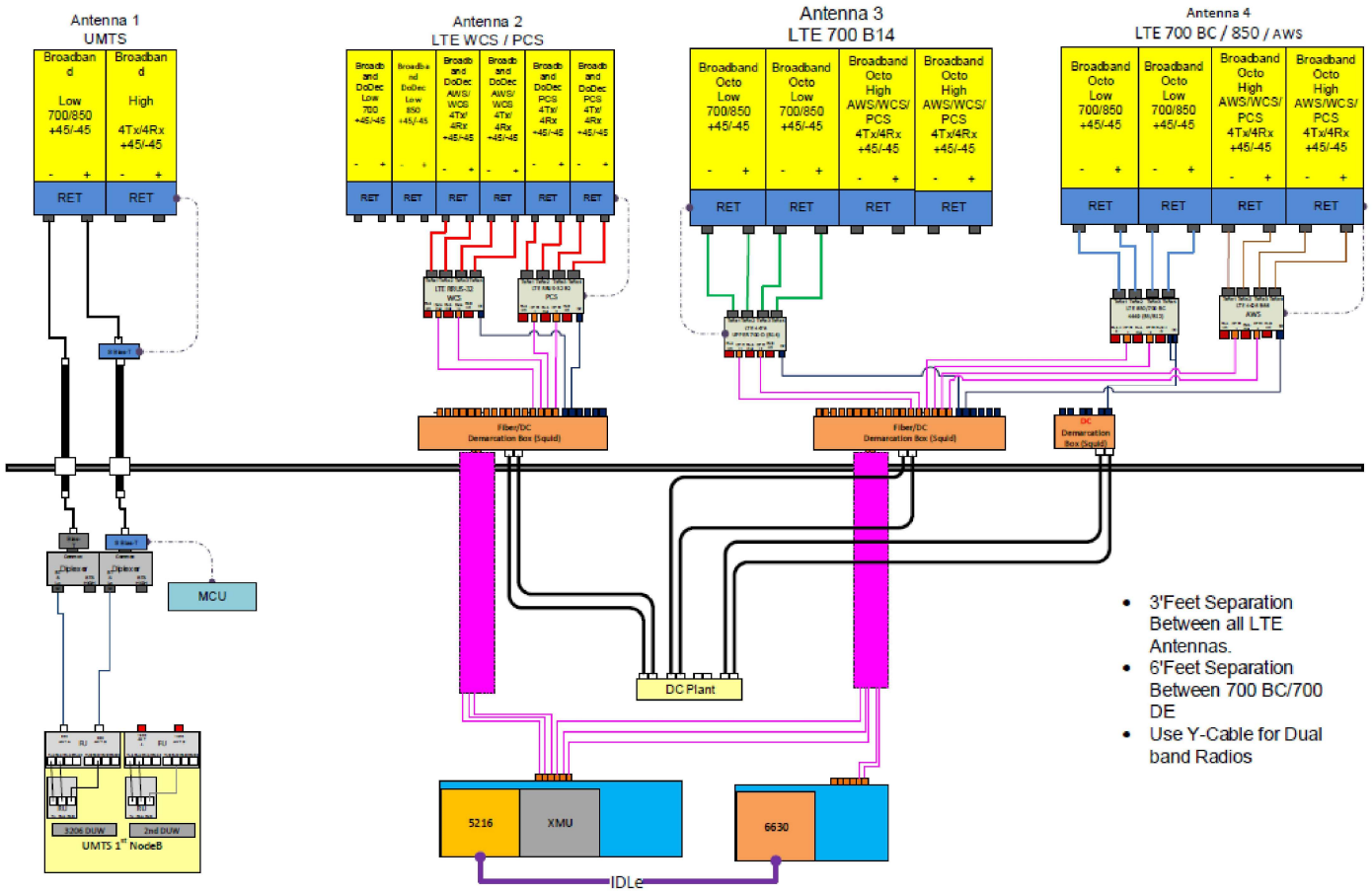

- 3'Feet Separation Between all LTE Antennas.
- 6'Feet Separation Between 700 BC/700 DE
- Use Y-Cable for Dual band Radios

1 PLUMBING DIAGRAM

NOTE: THIS SHEET CREATED BY OTHERS AND PROVIDED BY REQUEST OF CUSTOMER WITHOUT EDIT.

AMERICAN TOWER®

Dewberry®

Dewberry Engineers Inc.
99 SUMMER STREET
SUITE 700
BOSTON, MA 02110
PHONE: 617.531.0801
FAX: 617.695.3310

Copyright © 2021 ATC IP LLC. All Rights Reserved.

REV.	DESCRIPTION	BY	DATE
A	PRELIM	MR	06/29/21
0	FINAL	MR	07/22/21

ATC SITE NUMBER:
88013

ATC SITE NAME:
KILLINGWORTH

AT&T PACE NUMBER:
MRCTB048903

AT&T SITE NAME:
CTL02016

SITE ADDRESS:
131 LITTLE CITY ROAD
KILLINGWORTH, CT 06419

at&t Mobility

DATE DRAWN:	06/29/21
ATC JOB NO:	13622645
CUSTOMER ID:	MRCTB048903
CUSTOMER #:	KILLINGWORTH LITTLE CITY RD.

SUPPLEMENTAL

SHEET NUMBER:	REVISION:
R-603	0

AMERICAN TOWER®
CORPORATION

This report was prepared for American Tower Corporation by

POD
POWER OF DESIGN

Antenna Mount Analysis Report

ATC Site Name	:	**KILLINGWORTH**
ATC Site Number	:	**88013**
Engineering Number	:	**13626645_C8_07**
Mount Elevation	:	**272 ft**
Carrier	:	**AT&T Mobility**
Carrier Site Name	:	**MRCTB048903**
Carrier Site Number	:	**CTL02016**
Site Location	:	**131 Little City Road** **Killingworth, CT 06419** **41.42877778, -72.60380556**
County	:	**Middlesex**
Date	:	**July 8, 2021**
Max Usage	:	**55 %**
Result	:	**Replacement (Pass)**

Prepared By: Uma Toluganti
Jason Cheronis
Vice President of Structural Engineering

Jason Cheronis
Digitally signed by Jason Cheronis
Date: 2021.07.09 08:52:53 -04'00'

STATE OF CONNECTICUT
JASON CHERONIS
PEN.0032793
LICENSED PROFESSIONAL ENGINEER

Introduction

The purpose of this report is to summarize results of the antenna mount analysis performed for AT&T Mobility at 271 ft.

Supporting Documents

Spec Sheet	Commscope Part # SFG22HDX14-5-WLL dated January 11, 2019
Structural Analysis	ATC Engineering #13626645_C3_01, dated February 26, 2021
RFDS	RFDS dated March 4, 2021
Photos	Site photos from 2019

Analysis

This antenna mount was analyzed using RISA-3D v17 analysis software.

Basic Wind Speed:	121 mph, Vult (3-Second Gust)
Basic Wind Speed w/ Ice:	50 mph (3-Second Gust) w/ 1" Radial Ice (Escalating)
Codes:	TIA-222-H
Structure Class:	II
Exposure Category:	B
Topographic Factor Procedure:	Method 2
Topographic Feature:	Flat
Crest Height:	0 ft
Spectral Response:	$S_S = 0.213$, $S_1 = 0.055$
Site Class:	D (assumed)

Conclusion

Due to customer antenna spacing/separation requirements, the existing mount cannot support the equipment as described in this report and must be replaced with the Commscope Part # SFG22HDX14-5-WLL. Based on the analysis results, the proposed mount meets the requirements, per the applicable codes listed above, and can support the equipment as described in this report

If you have any questions or require additional information, please contact POD Group via email at mhoudeshell@podgrp.com. Please include the American Tower site name, site number, and engineering number in the subject line for any questions.

1 MOUNT ANALYSIS

NOTE: THIS SHEET WAS CREATED BY OTHERS AND PROVIDED AT THE REQUEST OF THE CUSTOMER WITHOUT EDIT. PLEASE REFERENCE THE MOUNT ANALYSIS REPORT FOR COMPLETE MOUNT ANALYSIS CALCULATIONS AND DETAILS. SUPPLEMENTAL PAGES INCLUDED IN THE CONSTRUCTION DRAWINGS ARE FOR REFERENCE ONLY. GENERAL CONTRACTOR IS TO VERYIFY THEY HAVE THE MOST RECENT MOUNT ANALYSIS PRIOR TO CONTRUCTION.

AMERICAN TOWER®

Dewberry®
Dewberry Engineers Inc.
99 SUMMER STREET
SUITE 700
BOSTON, MA 02110
PHONE: 617.531.0801
FAX: 617.695.3310

Copyright © 2021 ATC IP LLC, All Rights Reserved.

REV.	DESCRIPTION	BY	DATE
A	PRELIM	MR	06/29/21
0	FINAL	MR	07/22/21

ATC SITE NUMBER:
88013
ATC SITE NAME:
KILLINGWORTH
AT&T PACE NUMBER:
MRCTB048903
AT&T SITE NAME:
CTL02016
SITE ADDRESS:
131 LITTLE CITY ROAD
KILLINGWORTH, CT 06419

at&t Mobility

DATE DRAWN:	06/29/21
ATC JOB NO:	13622645
CUSTOMER ID:	MRCTB048903
CUSTOMER #:	KILLINGWORTH LITTLE CITY RD.

SUPPLEMENTAL

SHEET NUMBER:	REVISION:
R-604	0

EXHIBIT 2

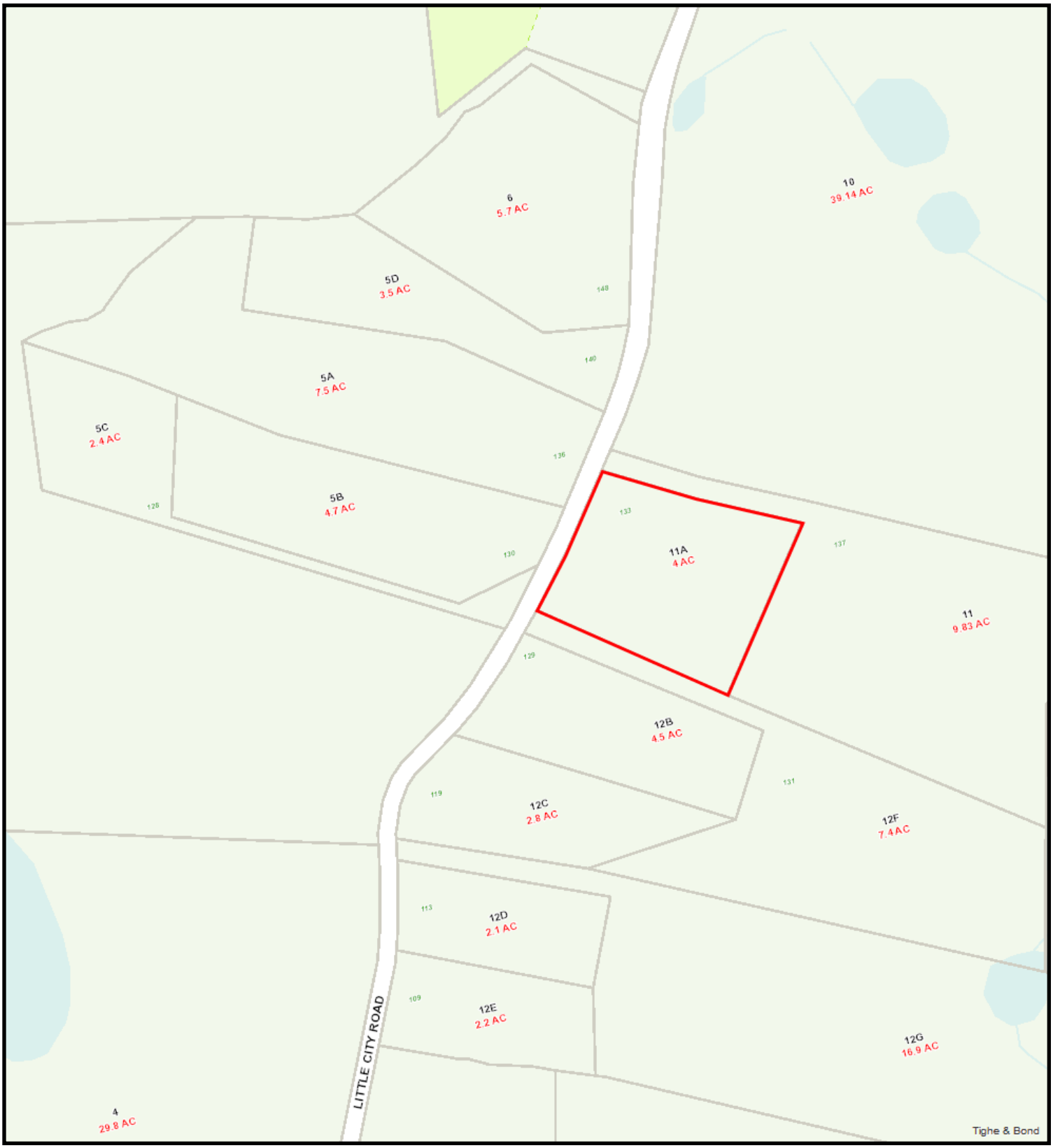

133 Little City Road

6/18/2021 12:46:31 PM

Scale: 1"=300'

Scale is approximate

The information depicted on this map is for planning purposes only. It is not adequate for legal boundary definition, regulatory interpretation, or parcel-level analyses.

The Assessor's office is responsible for the maintenance of records on the ownership of properties. Assessments are computed at 70% of the estimated market value of real property at the time of the last revaluation which was 2016.

Information on the Property Records for the Municipality of Killingworth was last updated on 6/12/2021.

Parcel Information

Location:	133 LITTLE CITY ROAD	Property Use:	Industrial	Primary Use:	Utility Building
Unique ID:	00042100	Map Block Lot:	06-11A	Acres:	4.00
490 Acres:	0.00	Zone:	R-2	Volume / Page:	0159/0722
Developers Map / Lot:		Census:	6401		

Value Information

	Appraised Value	Assessed Value
Land	479,400	335,580
Buildings	99,711	69,800
Detached Outbuildings	227,557	159,290
Total	806,668	564,670

Owner's Information

Owner's Data
AMERICAN TOWERS INC AMERICAN TOWERS CORPORATION PO BOX 723597 SITE 88013 ATLANTA, GA 31139

Building 1

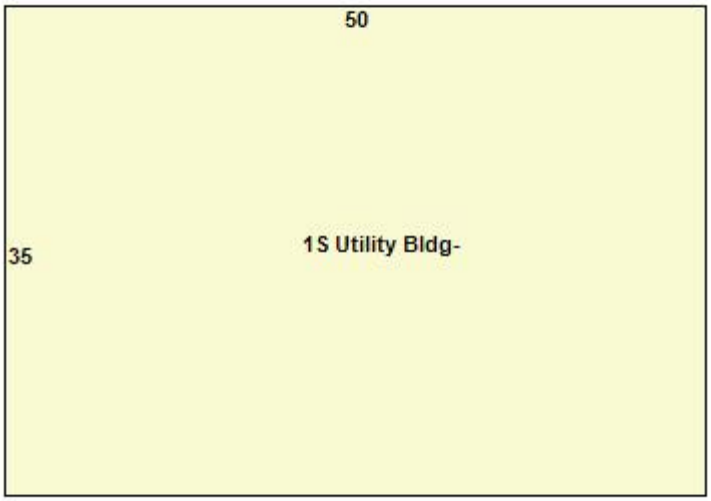

Category:	Industrial	Use:	Utility Building	GLA:	1,750
Stories:	1.00	Construction:	Good	Year Built:	1960
Heating:		Fuel:		Cooling Percent:	100%

Siding:	Pre-Cast Concrete	Roof Material:		Beds/Units:	0

Special Features

Attached Components

Detached Outbuildings

Type:	Year Built:	Length:	Width:	Area:
Fencing	1960	270	6	1,620
Paving	1960			2,000
Masonry Shed	1960	12	30	360
Radio Tower	1960			1

Owner History - Sales

Owner Name	Volume	Page	Sale Date	Deed Type	Valid Sale	Sale Price
AMERICAN TOWERS INC	0159	0722	02/16/2000	Warranty Deed	Yes	$243,058

Building Permits

Permit Number	Permit Type	Date Opened	Date Closed	Permit Status	Reason
13-169	Electrical	07/17/2013		Closed	STANDBY GENERATOR FOR CELL TOWER
13-086	Renovation	05/07/2013		Closed	CELL TOWER MODIFICATIONS
13-076	Renovation	04/11/2013		Closed	CELL TOWER MODIFICATIONS
12-117	Building	04/27/2012		Closed	REPLACE ALL 12 EXISTING ANTENNAS ON TOWER, REMOVE HORNS & REINSFORCE TOWER FOUNDATION

EXHIBIT 3

AMERICAN TOWER®
CORPORATION

Structural Analysis Report

Structure	:	**302.5 ft Self Supported Tower**
ATC Site Name	:	**KILLINGWORTH, CT**
ATC Asset Number	:	**88013**
Engineering Number	:	**13626645_C3_01**
Proposed Carrier	:	**AT&T MOBILITY**
Carrier Site Name	:	**MRCTB048903**
Carrier Site Number	:	**CTL02016**
Site Location	:	**131 LITTLE CITY ROAD** **Killingworth, CT 06419-1014** **41.428800,-72.603800**
County	:	**Middlesex**
Date	:	**February 26, 2021**
Max Usage	:	**69%**
Result	:	**Pass**

STATE OF CONNECTICUT
ESHA KAUSHAL MODI
32593
LICENSED
PROFESSIONAL ENGINEER

Prepared By:
Timothy Kassakatis
Structural Engineer II

Reviewed By:

COA: PEC.0001553

Table of Contents

Introduction 1

Supporting Documents 1

Analysis 1

Conclusion 1

Existing and Reserved Equipment 2

Equipment to be Removed 2

Proposed Equipment 2

Structure Usages 3

Foundations 3

Standard Conditions 4

Calculations ..... Attached

Introduction

The purpose of this report is to summarize results of a structural analysis performed on the 302.5 ft self supported tower to reflect the change in loading by AT&T MOBILITY.

Supporting Documents

Tower Drawings	Mapping by TEP Job #080167, dated February 1, 2008
Foundation Drawing	Mapping by Geotel Report #E08-150-F, dated February 20, 2008
Geotechnical Report	Geotel Report #E08-150-G, dated February 20, 2008
Modifications	ATC Project #50481632, dated November 12, 2012
Mount Analysis	ATC Engineering #13626645_C8_07, dated July 8, 2021

Analysis

The tower was analyzed using Power Line Systems, Inc tower analysis software. This program considers an elastic three-dimensional model and second-order effects per ANSI/TIA-222.

Basic Wind Speed:	121 mph (3-Second Gust)
Basic Wind Speed w/ Ice:	50 mph (3-Second Gust) w/ 1" radial ice concurrent
Code:	ANSI/TIA-222-H / 2015 IBC / 2018 Connecticut State Building Code
Structure Class:	II
Exposure Category:	B
Topographic Category:	1
Crest Height:	0 ft

Conclusion

Based on the analysis results, the structure does meet the requirements per the applicable codes listed above. The tower and foundation can support the equipment as described in this report.

If you have any questions or require additional information, please contact American Tower via email at Engineering@americantower.com. Please include the American Tower site name, site number, and engineering number in the subject line for any questions.

Existing and Reserved Equipment

Elev.[1] (ft)	Qty	Antenna	Mount Type	Lines	Carrier
272.0	3	Kaelus DBC0061F1V51-2	Sector Frame	(2) 0.39" (10mm) Fiber Trunk (6) 1 5/8" Coax	AT&T MOBILITY
	1	Raycap DC6-48-60-18-8F ("Squid")			
	6	Powerwave Allgon LGP17201			
	3	Ericsson RRUS 32 B2			
	3	Powerwave Allgon 7770.00			
	2	Quintel QS66512-2			
	1	CCI TPA-65R-LCUUUU-H8			
261.0	6	Swedcom ALP 9011-DIN	Sector Frame	(6) 1 5/8" Coax	SPRINT NEXTEL
171.0	6	RFS FD9R6004/2C-3L	Sector Frame	(10) 1 5/8" Coax (2) 1 5/8" Hybriflex	VERIZON WIRELESS
	6	Commscope JAHH-65B-R3B			
	3	Nokia B5 RRH4x40-850			
	3	Alcatel-Lucent RRH2X60-AWS			
	3	Alcatel-Lucent RRH2X60-1900			
	3	Alcatel-Lucent RRH2x60 700			
	2	Raycap RC3DC-3315-PF-48			
	6	Antel LPA-80080/6CF ___			
145.0	6	Generic TTA	Leg	(6) 1 5/8" Coax	OTHER
	3	Generic 36" x 6" Panel			

Equipment to be Removed

Elev.[1] (ft)	Qty	Antenna	Mount Type	Lines	Carrier
272.0	6	LGP Allgon LGP21903	-	(2) 0.76" (19.2mm) 8 AWG 6 (2) 0.78" (19.7mm) 8 AWG 6 (6) 1 5/8" Coax* (1) 3" conduit	AT&T MOBILITY
	1	Raycap DC6-48-60-18-8F.			
	3	Ericsson RRUS 32 (50.8 lbs)			
	1	Powerwave Allgon P65-17-XLH-RR			
	2	KMW AM-X-CD-16-65-00T-RET			
	1	KMW AM-X-CD-17-65-00T-RET (96" Height)			
	3	Ericsson RRUS-11			

*Remove coax for a final configuration of 3-on-3 for the remaining 1-5/8" coax.

Proposed Equipment

Elev.[1] (ft)	Qty	Antenna	Mount Type	Lines	Carrier
272.0	1	Raycap DC6-48-60-18-8F	Sector Frame	(4) 0.92" (23.4mm) Cable (1) 1.16" (29.5mm) SOOW	AT&T MOBILITY
	1	Raycap DC6-48-60-18-8F ("Squid")			
	3	Ericsson RRUS 4426 B66			
	3	Ericsson RRUS 4449 B5, B12			
	3	Ericsson RRUS 4478 B14			
	3	Ericsson RRUS-32 B30 (77 lbs)			
	2	CCI DMP65R-BU6DA			
	2	CCI OPA65R-BU6D			
	1	CCI DMP65R-BU8D			
	1	CCI OPA65R-BU8D			

[1] Contracted elevations are shown for appurtenances within contracted installation tolerances. Appurtenances outside of contract limits are shown at installed elevations.

Install proposed lines on top of the existing AT&T MOBILITY lines.

Structure Usages

Structural Component	Controlling Usage	Pass/Fail
Legs	67%	Pass
Diagonals	67%	Pass
Lower Diagonals	58%	Pass
Horizontals	69%	Pass
Lower Horizontals	29%	Pass
Anchor Bolts	53%	Pass

Foundations

Reaction Component	Analysis Reactions	% of Usage
Uplift (Kips)	239.5	57%
Axial (Kips)	380.3	19%

The structure foundation was found to be inadequate through analysis based on geotechnical and foundation information. Modification or reinforcement of the foundation will be required.

AMERICAN TOWER®
CORPORATION

Standard Conditions

All engineering services performed by A.T. Engineering Service, PLLC are prepared on the basis that the information used is current and correct. This information may consist of, but is not limited to the following:

- Information supplied by the client regarding antenna, mounts and feed line loading
- Information from drawings, design and analysis documents, and field notes in the possession of A.T. Engineering Service, PLLC

It is the responsibility of the client to ensure that the information provided to A.T. Engineering Service, PLLC and used in the performance of our engineering services is correct and complete.

All assets of American Tower Corporation, its affiliates and subsidiaries (collectively "American Tower") are inspected at regular intervals. Based upon these inspections and in the absence of information to the contrary, American Tower assumes that all structures were constructed in accordance with the drawings and specifications.

Unless explicitly agreed by both the client and A.T. Engineering Service, PLLC, all services will be performed in accordance with the current revision of ANSI/TIA-222.

All services are performed, results obtained, and recommendations made in accordance with generally accepted engineering principles and practices. A.T. Engineering Service, PLLC is not responsible for the conclusions, opinions and recommendations made by others based on the information supplied herein.

American Tower Corp., Project: "88013 - Killingworth, CT"
Tower Version 16.01, 11:35:48 PM Wednesday, March 3, 2021
Undeformed geometry displayed

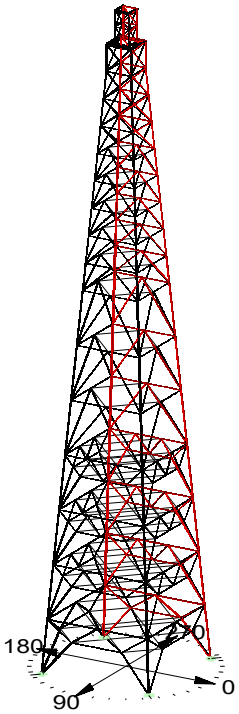

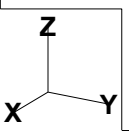

Project Name : 88013 - Killingworth, CT
Project Notes: OAA720121
Project File : X:\J-M\Killingworth, CT (88013)\Structural Info\88013 - Killingworth, CT.tow
Date run : 11:16:59 PM Wednesday, March 3, 2021
by : Tower Version 16.01
Licensed to : American Tower Corp.

Successfully performed nonlinear analysis

Member check option: ANSI/TIA 222-G-1
Connection rupture check: Not Checked
Crossing diagonal check: Fixed
Included angle check: None
Climbing load check: None
Redundant members checked with: Actual Force
Loads from file: X:\J-M\Killingworth, CT (88013)\Structural Info\88013 - Killingworth, CT.eia

*** Analysis Results:

Maximum element usage is 69.02% for Angle "H 3P" in load case "W -90"

Foundation Design Forces For All Load Cases:

Note: loads are factored.

Load Case Description	Foundation	Axial Force (kips)	Shear Force (kips)	Bending Moment (ft-k)	Foundation Usage %
W 0	0P	282.28	52.77	2.13	0.00
W 0	0X	272.80	50.86	2.11	0.00
W 0	0XY	-131.27	28.22	3.12	0.00
W 0	0Y	-134.37	29.54	3.20	0.00
W 180	0P	-129.80	29.35	3.25	0.00
W 180	0X	-126.36	28.00	3.18	0.00
W 180	0XY	267.88	50.59	2.16	0.00
W 180	0Y	277.71	52.54	2.19	0.00
W 45	0P	380.31	69.53	1.68	0.00
W 45	0X	75.08	20.53	2.78	0.00
W 45	0XY	-239.51	47.45	3.62	0.00
W 45	0Y	73.55	20.15	2.74	0.00
W -45	0P	79.91	21.58	2.88	0.00
W -45	0X	375.49	69.01	1.71	0.00
W -45	0XY	71.94	19.88	2.70	0.00
W -45	0Y	-237.90	47.51	3.65	0.00
W 90	0P	283.19	53.01	2.16	0.00
W 90	0X	-133.75	29.66	3.22	0.00
W 90	0XY	-130.37	28.04	3.11	0.00
W 90	0Y	270.37	50.56	2.09	0.00
W -90	0P	-130.72	29.54	3.26	0.00
W -90	0X	280.17	52.86	2.21	0.00
W -90	0XY	266.95	50.37	2.13	0.00
W -90	0Y	-126.96	27.88	3.15	0.00
W 0 Ice	0P	151.22	21.43	2.67	0.00
W 0 Ice	0X	145.53	20.67	2.77	0.00
W 0 Ice	0XY	49.15	3.64	3.41	0.00
W 0 Ice	0Y	51.55	3.51	3.41	0.00
W 180 Ice	0P	57.40	4.12	3.46	0.00
W 180 Ice	0X	55.31	4.26	3.47	0.00
W 180 Ice	0XY	139.37	20.29	2.72	0.00
W 180 Ice	0Y	145.36	21.07	2.63	0.00
W 45 Ice	0P	174.31	25.55	2.58	0.00
W 45 Ice	0X	100.99	12.69	3.06	0.00
W 45 Ice	0XY	23.10	2.05	3.58	0.00
W 45 Ice	0Y	99.05	12.53	3.04	0.00
W -45 Ice	0P	105.07	13.12	3.10	0.00
W -45 Ice	0X	170.22	25.26	2.55	0.00
W -45 Ice	0XY	95.00	12.30	3.01	0.00
W -45 Ice	0Y	27.15	1.76	3.61	0.00
W 90 Ice	0P	151.39	21.48	2.67	0.00
W 90 Ice	0X	53.32	3.64	3.42	0.00
W 90 Ice	0XY	49.31	3.70	3.41	0.00
W 90 Ice	0Y	143.43	20.51	2.75	0.00
W -90 Ice	0P	57.18	4.04	3.46	0.00
W -90 Ice	0X	147.53	21.26	2.65	0.00
W -90 Ice	0XY	139.15	20.23	2.71	0.00
W -90 Ice	0Y	53.59	4.14	3.45	0.00

Summary of Joint Support Reactions For All Load Cases:

Load Case	Joint Label	Long. Force (kips)	Tran. Force (kips)	Vert. Force (kips)	Shear Force (kips)	Tran. Moment (ft-k)	Long. Moment (ft-k)	Bending Moment (ft-k)	Vert. Moment (ft-k)	Found. Usage %
W 0	0P	-44.63	-28.17	-282.28	52.77	-0.53	-2.06	2.13	-2.66	0.00
W 0	0X	-42.59	27.79	-272.80	50.86	0.74	-1.97	2.11	2.69	0.00
W 0	0XY	-25.69	-11.67	131.27	28.22	0.59	-3.06	3.12	2.51	0.00
W 0	0Y	-26.97	12.05	134.37	29.54	-0.59	-3.14	3.20	-2.46	0.00
W 180	0P	26.97	11.59	129.80	29.35	-0.58	3.20	3.25	2.48	0.00
W 180	0X	25.66	-11.19	126.36	28.00	0.58	3.12	3.18	-2.52	0.00
W 180	0XY	42.60	27.29	-267.88	50.59	0.74	2.03	2.16	-2.70	0.00
W 180	0Y	44.65	-27.69	-277.71	52.54	-0.54	2.12	2.19	2.68	0.00
W 45	0P	-48.98	-49.36	-380.31	69.53	1.21	-1.17	1.68	0.00	0.00
W 45	0X	-20.43	-2.08	-75.08	20.53	2.38	-1.44	2.78	3.83	0.00
W 45	0XY	-33.65	-33.45	239.51	47.45	2.55	-2.57	3.62	-0.00	0.00
W 45	0Y	-1.89	-20.06	-73.55	20.15	1.42	-2.34	2.74	-3.83	0.00
W -45	0P	-21.45	2.30	-79.91	21.58	-2.47	-1.49	2.88	-3.85	0.00
W -45	0X	-47.95	49.62	-375.49	69.01	-1.29	-1.13	1.71	-0.01	0.00
W -45	0XY	-1.57	19.81	-71.94	19.88	-1.42	-2.30	2.70	3.84	0.00
W -45	0Y	-33.97	33.22	237.90	47.51	-2.55	-2.61	3.65	0.02	0.00
W 90	0P	-28.00	-45.01	-283.19	53.01	2.09	0.56	2.16	2.67	0.00
W 90	0X	11.87	-27.18	133.75	29.66	3.17	0.57	3.22	2.46	0.00
W 90	0XY	-11.70	-25.48	130.37	28.04	3.05	-0.60	3.11	-2.51	0.00
W 90	0Y	27.83	-42.21	-270.37	50.56	1.97	-0.71	2.09	-2.69	0.00
W -90	0P	11.56	27.18	130.72	29.54	-3.21	0.57	3.26	-2.47	0.00
W -90	0X	-27.68	45.03	-280.17	52.86	-2.13	0.57	2.21	-2.68	0.00
W -90	0XY	27.48	42.21	-266.95	50.37	-2.01	-0.71	2.13	2.70	0.00
W -90	0Y	-11.37	25.46	126.96	27.88	-3.09	-0.60	3.15	2.52	0.00
W 0 Ice	0P	-16.86	-13.23	-151.22	21.43	-2.10	1.64	2.67	-0.58	0.00
W 0 Ice	0X	-16.00	13.09	-145.53	20.67	2.21	1.67	2.77	0.58	0.00
W 0 Ice	0XY	0.57	3.60	-49.15	3.64	2.16	-2.64	3.41	0.57	0.00
W 0 Ice	0Y	0.57	-3.46	-51.55	3.51	-2.14	-2.65	3.41	-0.55	0.00
W 180 Ice	0P	-0.59	-4.07	-57.40	4.12	-2.13	2.73	3.46	0.57	0.00
W 180 Ice	0X	-0.59	4.22	-55.31	4.26	2.16	2.72	3.47	-0.60	0.00
W 180 Ice	0XY	16.01	12.46	-139.37	20.29	2.21	-1.59	2.72	-0.60	0.00
W 180 Ice	0Y	16.88	-12.61	-145.36	21.07	-2.12	-1.57	2.63	0.60	0.00
W 45 Ice	0P	-17.98	-18.15	-174.31	25.55	-1.82	1.84	2.58	0.00	0.00
W 45 Ice	0X	-11.02	6.29	-100.99	12.69	2.49	1.78	3.06	0.85	0.00
W 45 Ice	0XY	-1.43	-1.47	-23.10	2.05	2.53	-2.52	3.58	-0.00	0.00
W 45 Ice	0Y	6.25	-10.86	-99.05	12.53	-1.77	-2.47	3.04	-0.85	0.00
W -45 Ice	0P	-11.56	-6.21	-105.07	13.12	-2.55	1.76	3.10	-0.87	0.00
W -45 Ice	0X	-17.45	18.27	-170.22	25.26	1.76	1.85	2.55	-0.02	0.00
W -45 Ice	0XY	5.94	10.77	-95.00	12.30	1.73	-2.47	3.01	0.87	0.00
W -45 Ice	0Y	-1.12	1.36	-27.15	1.76	-2.58	-2.53	3.61	0.02	0.00
W 90 Ice	0P	-13.10	-17.03	-151.39	21.48	-1.63	2.12	2.67	0.58	0.00
W 90 Ice	0X	-3.59	0.62	-53.32	3.64	2.67	2.15	3.42	0.55	0.00
W 90 Ice	0XY	3.67	0.53	-49.31	3.70	2.65	-2.15	3.41	-0.58	0.00
W 90 Ice	0Y	13.03	-15.84	-143.43	20.51	-1.66	-2.19	2.75	-0.58	0.00
W -90 Ice	0P	-4.00	-0.61	-57.18	4.04	-2.72	2.14	3.46	-0.57	0.00
W -90 Ice	0X	-12.69	17.05	-147.53	21.26	1.58	2.13	2.65	-0.60	0.00
W -90 Ice	0XY	12.59	15.84	-139.15	20.23	1.61	-2.19	2.71	0.59	0.00
W -90 Ice	0Y	4.10	-0.56	-53.59	4.14	-2.70	-2.15	3.45	0.60	0.00

Summary of Joint Support Reactions For All Load Cases in Direction of Leg:

Load Case	Support Joint	Origin Joint	Leg Member	Force In Leg Dir. (kips)	Residual Shear Perpendicular To Leg (kips)	Residual Shear Horizontal To Leg - Res. (kips)	Residual Shear Horizontal To Leg - Long. (kips)	Residual Shear Horizontal To Leg - Tran. (kips)	Total Long. Force (kips)	Total Tran. Force (kips)	Total Vert. Force (kips)
W 0	0P	1P	L 1P	286.132	24.424	24.530	23.497	7.044	-44.63	-28.17	-282.28
W 0	0X	1X	L 1X	276.524	23.265	23.369	22.175	-7.374	-42.59	27.79	-272.80
W 0	0XY	1XY	L 1XY	-133.325	15.915	15.970	15.862	1.847	-25.69	-11.67	131.27
W 0	0Y	1Y	L 1Y	-136.527	16.975	17.033	16.916	-1.996	-26.97	12.05	134.37
W 180	0P	1P	L 1P	-131.944	17.297	17.356	-17.254	-1.874	26.97	11.59	129.80
W 180	0X	1X	L 1X	-128.397	16.243	16.298	-16.205	1.731	25.66	-11.19	126.36
W 180	0XY	1XY	L 1XY	271.593	23.578	23.682	-22.546	-7.244	42.60	27.29	-267.88
W 180	0Y	1Y	L 1Y	281.554	24.738	24.844	-23.864	6.908	44.65	-27.69	-277.71
W 45	0P	1P	L 1P	385.520	29.115	29.278	20.514	20.889	-48.98	-49.36	-380.31
W 45	0X	1X	L 1X	76.030	16.684	16.692	14.809	7.701	-20.43	-2.08	-75.08
W 45	0XY	1XY	L 1XY	-243.172	21.974	22.097	15.722	15.527	-33.65	-33.45	239.51
W 45	0Y	1Y	L 1Y	74.497	16.317	16.326	7.397	14.554	-1.89	-20.06	-73.55
W -45	0P	1P	L 1P	80.891	17.540	17.548	15.473	-8.277	-21.45	2.30	-79.91
W -45	0X	1X	L 1X	380.666	29.110	29.273	19.849	-21.516	-47.95	49.62	-375.49
W -45	0XY	1XY	L 1XY	72.897	16.009	16.019	6.957	-14.429	-1.57	19.81	-71.94
W -45	0Y	1Y	L 1Y	-241.577	22.210	22.334	16.163	-15.413	-33.97	33.22	237.90
W 90	0P	1P	L 1P	287.049	24.660	24.765	6.803	23.812	-28.00	-45.01	-283.19
W 90	0X	1X	L 1X	-135.909	17.210	17.268	-1.861	17.167	11.87	-27.18	133.75
W 90	0XY	1XY	L 1XY	-132.415	15.786	15.841	1.944	15.721	-11.70	-25.48	130.37
W 90	0Y	1Y	L 1Y	274.080	23.148	23.252	-7.593	21.977	27.83	-42.21	-270.37
W -90	0P	1P	L 1P	-132.879	17.430	17.489	-1.779	-17.398	11.56	27.18	130.72
W -90	0X	1X	L 1X	284.024	24.876	24.982	6.712	-24.063	-27.68	45.03	-280.17
W -90	0XY	1XY	L 1XY	270.658	23.356	23.460	-7.503	-22.228	27.48	42.21	-266.95

W -90	0Y	1Y	L 1Y	-128.995	16.006	16.061	1.864	-15.952	-11.37	25.46	126.96
W 0 Ice	0P	1P	L 1P	152.616	5.835	5.861	5.542	1.908	-16.86	-13.23	-151.22
W 0 Ice	0X	1X	L 1X	146.888	5.532	5.559	5.106	-2.197	-16.00	13.09	-145.53
W 0 Ice	0XY	1XY	L 1XY	49.184	3.103	3.112	3.111	0.083	0.57	3.60	-49.15
W 0 Ice	0Y	1Y	L 1Y	51.564	3.301	3.312	3.288	-0.400	0.57	-3.46	-51.55
W 180 Ice	0P	1P	L 1P	57.432	3.707	3.718	-3.711	-0.223	-0.59	-4.07	-57.40
W 180 Ice	0X	1X	L 1X	55.356	3.539	3.549	-3.548	-0.079	-0.59	4.22	-55.31
W 180 Ice	0XY	1XY	L 1XY	140.717	5.914	5.941	-5.583	-2.033	16.01	12.46	-139.37
W 180 Ice	0Y	1Y	L 1Y	146.751	6.221	6.247	-6.003	1.730	16.88	-12.61	-145.36
W 45 Ice	0P	1P	L 1P	176.029	7.060	7.100	4.934	5.105	-17.98	-18.15	-174.31
W 45 Ice	0X	1X	L 1X	101.716	3.684	3.688	3.464	1.265	-11.02	6.29	-100.99
W 45 Ice	0XY	1XY	L 1XY	22.753	4.472	4.497	3.162	3.197	-1.43	-1.47	-23.10
W 45 Ice	0Y	1Y	L 1Y	99.775	3.632	3.636	1.161	3.445	6.25	-10.86	-99.05
W -45 Ice	0P	1P	L 1P	105.813	4.043	4.045	3.693	-1.651	-11.56	-6.21	-105.07
W -45 Ice	0X	1X	L 1X	171.935	7.217	7.258	4.704	-5.526	-17.45	18.27	-170.22
W -45 Ice	0XY	1XY	L 1XY	95.714	3.838	3.842	1.173	-3.659	5.94	10.77	-95.00
W -45 Ice	0Y	1Y	L 1Y	26.814	4.605	4.631	3.151	-3.394	-1.12	1.36	-27.15
W 90 Ice	0P	1P	L 1P	152.787	5.937	5.963	1.769	5.694	-13.10	-17.03	-151.39
W 90 Ice	0X	1X	L 1X	53.336	3.388	3.399	-0.400	3.376	-3.59	0.62	-53.32
W 90 Ice	0XY	1XY	L 1XY	49.353	3.154	3.162	0.026	3.162	3.67	0.53	-49.31
W 90 Ice	0Y	1Y	L 1Y	144.777	5.568	5.595	-2.291	5.105	13.03	-15.84	-143.43
W -90 Ice	0P	1P	L 1P	57.203	3.664	3.676	-0.282	-3.665	-4.00	-0.61	-57.18
W -90 Ice	0X	1X	L 1X	148.922	6.206	6.232	1.651	-6.010	-12.69	17.05	-147.53
W -90 Ice	0XY	1XY	L 1XY	140.489	5.818	5.845	-2.177	-5.425	12.59	15.84	-139.15
W -90 Ice	0Y	1Y	L 1Y	53.643	3.448	3.457	-0.087	-3.456	4.10	-0.56	-53.59

Overturning Moment Summary For All Load Cases:

Load Case	Transverse Moment (ft-k)	Longitudinal Moment (ft-k)	Torsional Moment (ft-k)	Resultant Moment (ft-k)	Transverse Force (kips)	Longitudinal Force (kips)	Vertical Force (kips)
W 0	171.355	-22022.909	68.583	22023.575	0.000	139.880	289.440
W 180	171.564	21513.544	-68.680	21514.229	0.000	-139.880	289.440
W 45	16590.968	-16672.990	-30.305	23521.242	104.950	104.950	289.440
W -45	-16245.437	-16673.171	128.294	23278.935	-104.950	104.950	289.440
W 90	21941.042	-253.457	-111.468	21942.506	139.880	-0.000	289.440
W -90	-21595.650	-253.620	111.538	21597.139	-139.880	-0.000	289.440
W 0 Ice	217.054	-5260.702	15.689	5265.178	-0.000	31.721	397.445
W 180 Ice	217.096	4616.062	-15.697	4621.164	-0.000	-31.721	397.445
W 45 Ice	4005.527	-4109.470	-6.941	5738.640	24.185	24.185	397.445
W -45 Ice	-3568.781	-4109.496	29.303	5442.808	-24.185	24.185	397.445
W 90 Ice	5156.792	-321.029	-25.505	5166.775	31.721	-0.000	397.445
W -90 Ice	-4720.056	-321.059	25.510	4730.963	-31.721	-0.000	397.445

EIA Sections Information:

Section Label	Top Z (ft)	Bottom Z (ft)	Joint Count	Member Count	Top Width (ft)	Bottom Width (ft)	Gross Area (ft^2)	Face Af Adjust Factor	Face Ar Adjust Factor	Dead Load Factor
295.1-302.6	302.600	295.100	8	20	7.00	7.00	52.50	1.0000	1.0000	1.200
287.6-295.1	295.100	287.600	8	16	7.00	7.00	52.50	1.0000	1.0000	1.200
287.5-287.6	287.600	287.500	8	16	7.00	12.50	0.98	1.0000	1.0000	1.200
275.0-287.5	287.500	275.000	8	16	12.50	12.50	156.25	1.1150	1.1150	1.338
262.5-275.0	275.000	262.500	8	16	12.50	14.37	167.95	1.1840	1.1840	1.421
250.0-262.5	262.500	250.000	8	16	14.37	16.24	191.34	1.1970	1.1970	1.437
237.5-250.0	250.000	237.500	12	24	16.24	18.11	214.73	1.2060	1.2060	1.447
225.0-237.5	237.500	225.000	16	24	18.11	19.98	238.12	1.2650	1.2650	1.518
212.5-225.0	225.000	212.500	16	24	19.98	21.86	261.51	1.2790	1.2790	1.535
200.0-212.5	212.500	200.000	16	24	21.86	23.73	284.90	1.2850	1.2850	1.542
187.5-200.0	200.000	187.500	16	24	23.73	25.60	308.29	1.2900	1.2900	1.548
175.0-187.5	187.500	175.000	16	24	25.60	27.47	331.68	1.2780	1.2780	1.533
150.0-175.0	175.000	150.000	16	24	27.47	31.21	733.53	1.3590	1.3590	1.631
125.0-150.0	150.000	125.000	16	24	31.21	34.95	827.09	1.3640	1.3640	1.637
100.0-125.0	125.000	100.000	20	32	34.95	38.70	920.65	1.3320	1.3320	1.599
75.00-100.0	100.000	75.000	36	76	38.70	42.44	1014.21	1.3010	1.3010	1.561
50.00-75.00	75.000	50.000	36	76	42.44	46.18	1107.77	1.3640	1.3640	1.637
25.00-50.00	50.000	25.000	32	68	46.18	49.92	1201.33	1.1750	1.1750	1.410
0.000-25.00	25.000	0.000	20	40	49.92	53.67	1294.89	1.2340	1.2340	1.481

Printed capacities do not include the strength factor entered for each load case.
The Group Summary reports on the member and load case that resulted in maximum usage which may not necessarily be the same as that which produces maximum force.

Group Summary (Compression Portion):

Group Label	Group Desc.	Angle Type	Angle Size	Steel Strength (ksi)	Max Usage %	Usage Control	Max Use In Comp. %	Comp. Control Member	Comp. Force (kips)	Comp. Control Load Case	L/r Capacity (kips)	Comp. Connect. Shear Capacity (kips)	Comp. Connect. Bearing Capacity (kips)	RLX	RLY	RLZ	L/r	KL/r	Length Comp. Member (ft)	Curve No.	No. Of Bolts Comp.
Leg S1	L 8" x 8" x 1.125"	SAE	8X8X1.13	33.0	67.44	Comp	67.44	L 1P	-328.142	W 45	486.535	0.000	0.000	0.333	0.333	0.333	64.45	64.45	25.140	1	0
Leg S2	L 8" x 8" x 1.125"	SAE	8X8X1.13	33.0	63.69	Comp	63.69	L 2P	-309.868	W 45	486.535	0.000	0.000	0.333	0.333	0.333	64.45	64.45	25.140	1	0
Leg S3	L 8" x 8" x 1.125"	SAE	8X8X1.13	33.0	50.91	Comp	50.91	L 3P	-272.770	W 45	535.809	0.000	0.000	0.167	0.167	0.167	32.24	32.24	25.140	1	0
Leg S4	L 8" x 8" x 1.125"	SAE	8X8X1.13	33.0	45.11	Comp	45.11	L 4P	-235.949	W 45	523.034	0.000	0.000	0.222	0.222	0.222	42.97	42.97	25.140	1	0
Leg S5	L 8" x 8" x 1.125"	SAE	8X8X1.13	33.0	41.60	Comp	41.60	L 5P	-202.397	W 45	486.537	0.000	0.000	0.333	0.333	0.333	64.45	64.45	25.140	1	0
Leg S6	L 8" x 8" x 1"	SAE	8X8X1	33.0	38.70	Comp	38.70	L 6P	-168.887	W 45	436.384	0.000	0.000	0.333	0.333	0.333	64.45	64.45	25.140	1	0
Leg S7	L 8" x 8" x 0.875"	SAE	8X8X0.88	33.0	35.24	Comp	35.24	L 7P	-135.804	W 45	385.330	0.000	0.000	0.333	0.333	0.333	64.04	64.04	25.140	1	0
Leg S8	L 8" x 8" x 0.75"	SAE	8X8X0.75	33.0	33.37	Comp	33.37	L 8P	-117.683	W 45	352.634	0.000	0.000	0.500	0.500	0.500	47.73	47.73	12.570	1	0
Leg S9	L 6" x 6" x 0.875"	SAE	6X6X0.88	33.0	35.90	Comp	35.90	L 9P	-101.593	W 45	282.972	0.000	0.000	0.500	0.500	0.500	64.46	64.46	12.570	1	0
Leg S10	L 6" x 6" x 0.875"	SAE	6X6X0.88	33.0	30.99	Comp	30.99	L 10P	-87.691	W 45	282.972	0.000	0.000	0.500	0.500	0.500	64.46	64.46	12.570	1	0
Leg S11	L 6" x 6" x 0.75"	SAE	6X6X0.75	33.0	28.47	Comp	28.47	L 11P	-69.874	W 45	245.466	0.000	0.000	0.500	0.500	0.500	64.46	64.46	12.570	1	0
Leg S12	L 6" x 6" x 0.75"	SAE	6X6X0.75	33.0	22.97	Comp	22.97	L 12P	-56.396	W 45	245.466	0.000	0.000	0.500	0.500	0.500	64.46	64.46	12.570	1	0
Leg S13	L 6" x 6" x 0.625"	SAE	6X6X0.63	33.0	26.72	Comp	26.72	L 13X	-55.316	W -45	207.060	0.000	0.000	0.500	0.500	0.500	63.91	63.91	12.570	1	0
Leg S14	L 6" x 6" x 0.625"	SAE	6X6X0.63	33.0	20.87	Comp	20.87	L 14X	-43.207	W -45	207.060	0.000	0.000	0.500	0.500	0.500	63.91	63.91	12.570	1	0
Leg S15	L 6" x 6" x 0.5625"	SAE	6X6X0.56	33.0	16.06	Comp	16.06	L 15X	-30.110	W -45	187.505	0.000	0.000	0.500	0.500	0.500	63.91	63.91	12.570	1	0
Leg S16	L 6" x 6" x 0.5625"	SAE	6X6X0.56	33.0	8.27	Comp	8.27	L 16X	-15.519	W -45	187.643	0.000	0.000	0.500	0.500	0.500	63.56	63.56	12.500	1	0
Leg S17	**L 6" x 6" x 0.5625"**	**SAE**	**6X6X0.56**	**33.0**	**3.91**	**Comp**	**3.91**	**L 17P**	**-8.104**	**W 45**	**207.527**	**0.000**	**0.000**	**1.000**	**1.000**	**1.000**	**39.56**	**39.56**	**3.890**	**1**	**0**
Leg S18	**L 6" x 6" x 0.5"**	**SAE**	**6X6X0.5**	**33.0**	**4.53**	**Comp**	**4.53**	**L 18P**	**-7.172**	**W 45**	**158.188**	**0.000**	**0.000**	**1.000**	**1.000**	**1.000**	**76.27**	**76.27**	**7.500**	**1**	**0**
Leg S19	L 6" x 6" x 0.5"	SAE	6X6X0.5	33.0	3.00	Comp	3.00	L 19P	-4.746	W 45	158.188	0.000	0.000	1.000	1.000	1.000	76.27	76.27	7.500	1	0
Diag S1	B/B L3.5"x5"x0.4375"	DAS	5X3.5X0.44	33.0	31.74	Comp	31.74	D 2X	-39.954	W -90	125.862	0.000	0.000	0.500	1.000	0.500	130.87	126.69	22.030	6	0
Diag S2	B/B L3"x4"x0.3125"	DAS	4X3X0.31	33.0	45.12	Comp	45.12	D 4X	-29.179	W -90	64.665	0.000	0.000	0.500	1.000	0.500	137.27	130.62	20.294	6	0
Diag S3	B/B L3"x4"x0.3125"	DAS	4X3X0.31	33.0	42.79	Comp	42.79	D 6X	-28.561	W -90	66.745	0.000	0.000	0.250	1.000	0.250	123.32	122.04	19.834	6	0
Diag S4	B/B L3"x4"x0.3125"	DAS	4X3X0.31	33.0	41.14	Comp	41.14	D 8X	-28.306	W -90	68.806	0.000	0.000	0.333	1.000	0.333	120.61	120.38	19.399	6	0
Diag S5	B/B L3"x4"x0.25"	DAS	4X3X0.25	33.0	67.02	Comp	67.02	D 9X	-27.123	W -90	40.472	0.000	0.000	0.333	1.000	0.333	197.93	167.92	31.668	6	0
Diag S6	B/B L3"x4"x0.25"	DAS	4X3X0.25	33.0	63.04	Comp	63.04	D 11X	-26.916	W -90	42.698	0.000	0.000	0.333	1.000	0.333	191.00	163.67	30.561	6	0
Diag S7	B/B L3"x4"x0.25"	DAS	4X3X0.25	33.0	56.82	Comp	56.82	D 13X	-25.534	W -90	44.935	0.000	0.000	0.333	1.000	0.333	184.57	159.71	29.531	6	0
Diag S8	B/B L2.5"x3"x0.3125"	DAS	3X2.5X0.31	33.0	37.96	Comp	37.96	D 15X	-14.883	W -90	39.210	0.000	0.000	0.500	1.000	0.500	152.84	140.19	18.595	6	0
Diag S9	B/B L2.5"x2.5"x0.25"	DAE	2.5X2.5X0.25	33.0	54.45	Comp	54.45	D 18Y	-12.738	W 180	23.392	0.000	0.000	0.500	1.000	0.500	180.66	157.30	17.915	6	0
Diag S10	B/B L2.5"x2.5"x0.25"	DAE	2.5X2.5X0.25	33.0	47.62	Comp	47.62	D 19X	-11.779	W -90	24.735	0.000	0.000	0.500	1.000	0.500	174.04	153.23	17.259	6	0
Diag S11	B/B L2.5"x2.5"x0.25"	DAE	2.5X2.5X0.25	33.0	41.98	Comp	41.98	D 21X	-10.970	W -90	26.134	0.000	0.000	0.500	1.000	0.500	167.69	149.33	16.630	6	0
Diag S12	B/B L2.5"x2.5"x0.25"	DAE	2.5X2.5X0.25	33.0	40.04	Comp	40.04	D 23X	-11.043	W -90	27.579	0.000	0.000	0.500	1.000	0.500	161.65	145.62	16.030	6	0
Diag S13	L 3" x 4" x 0.25"	SAU	4X3X0.25	33.0	26.12	Tens	0.00	D 26Y	0.000		0.001	0.000	0.000	0.520	0.500	0.520	203.83	171.56	21.265	6	0
Diag S14	L 3" x 4" x 0.25"	SAU	4X3X0.25	33.0	25.64	Tens	0.00	D 28Y	0.000		0.001	0.000	0.000	0.520	0.500	0.520	189.64	162.83	19.784	6	0
Diag S15	L 3" x 3.5" x 0.25"	SAU	3.5X3X0.25	33.0	24.74	Tens	0.00	D 30Y	0.000		0.001	0.000	0.000	0.520	0.500	0.520	181.71	157.95	18.375	6	0
Diag S16	L 3.5" x 3.5" x 0.25"	SAE	3.5X3.5X0.25	33.0	14.61	Tens	0.00	D 32Y	0.000		0.001	0.000	0.000	0.520	0.500	0.520	158.95	143.95	17.678	6	0
Diag S17	L 3.5" x 3.5" x 0.25"	SAE	3.5X3.5X0.25	33.0	3.05	Tens	0.00	D 34Y	0.000		0.004	0.000	0.000	0.520	0.500	0.520	91.09	91.09	10.131	1	0
Diag S18	L 3" x 2" x 0.25"	SAU	3X2X0.25	33.0	4.81	Tens	0.00	D 36Y	0.000		0.001	0.000	0.000	0.520	0.500	0.520	147.17	136.71	10.259	6	0
Diag S19	L 3" x 2" x 0.25"	SAU	3X2X0.25	33.0	7.46	Tens	0.00	D 38Y	0.000		0.001	0.000	0.000	0.520	0.500	0.520	147.17	136.71	10.259	6	0
Horiz 1	B/B L4"x3.5"x0.375"	DAL	4X3.5X0.38	33.0	30.65	Comp	30.65	H 1P	-31.679	W -90	103.374	0.000	0.000	0.500	0.500	0.500	119.82	119.82	24.962	1	0
Horiz 2	B/B L4"x3"x0.375"	DAL	4X3X0.38	33.0	69.02	Comp	69.02	H 3P	-50.222	W -90	72.764	0.000	0.000	1.000	1.000	1.000	146.61	136.37	15.394	6	0
Horiz 3	B/B L4"x3"x0.3125"	DAL	4X3X0.31	33.0	67.94	Comp	67.94	H 5P	-46.207	W -90	68.007	0.000	0.000	1.000	1.000	1.000	133.67	128.41	14.147	6	0
Horiz 4	B/B L3.5"x3"x0.3125"	DAL	3.5X3X0.31	33.0	59.83	Comp	59.83	H 7P	-37.483	W -90	62.650	0.000	0.000	1.000	1.000	1.000	140.72	132.74	12.899	6	0
Horiz 5	B/B L3.5"x3"x0.25"	DAL	3.5X3X0.25	33.0	41.47	Comp	41.47	H 9P	-14.003	W -90	33.766	0.000	0.000	1.000	1.000	1.000	188.94	162.40	17.477	6	0
Horiz 6	B/B L3.5"x2.5"x0.25"	DAL	3.5X2.5X0.25	33.0	41.71	Comp	41.71	H 11P	-13.304	W -90	31.895	0.000	0.000	1.000	1.000	1.000	171.81	151.86	15.606	6	0
Horiz 7	B/B L3"x2.5"x0.25"	DAL	3X2.5X0.25	33.0	37.47	Comp	37.47	H 13P	-11.961	W -90	31.922	0.000	0.000	1.000	1.000	1.000	174.41	153.46	13.735	6	0
Horiz 8	B/B L3.5"x2.5"x0.3125"	DAL	3.5X2.5X0.31	33.0	18.56	Comp	18.56	H 15P	-9.793	W 180	52.770	0.000	0.000	1.000	1.000	1.000	139.63	132.07	12.799	6	0
Horiz 9	B/B L2.5"x2.5"x0.25"	DAE	2.5X2.5X0.25	33.0	29.93	Comp	29.93	H 18P	-7.948	W 180	26.560	0.000	0.000	1.000	1.000	1.000	185.13	160.05	11.864	6	0
Horiz 10	B/B L2.5"x2.5"x0.25"	DAE	2.5X2.5X0.25	33.0	25.06	Comp	25.06	H 19P	-7.471	W -90	29.810	0.000	0.000	1.000	1.000	1.000	170.53	151.08	10.928	6	0
Horiz 11	B/B L2.5"x2.5"x0.25"	DAE	2.5X2.5X0.25	33.0	18.58	Comp	18.58	H 21P	-6.259	W -90	33.695	0.000	0.000	1.000	1.000	1.000	155.93	142.10	9.992	6	0
Horiz 12	B/B L3"x2.5"x0.25"	DAL	3X2.5X0.25	33.0	21.33	Comp	21.33	H 23P	-11.439	W -90	53.628	0.000	0.000	1.000	1.000	1.000	115.01	115.01	9.057	1	0
Horiz 13	B/B L3"x2.5"x0.25"	DAL	3X2.5X0.25	33.0	27.72	Comp	27.72	H 25P	-10.325	W -90	37.252	0.000	0.000	0.500	0.800	0.500	137.99	131.06	16.242	6	0
Horiz 14	B/B L3"x2.5"x0.25"	DAL	3X2.5X0.25	33.0	14.17	Comp	14.17	H 27P	-9.334	W -90	65.855	0.000	0.000	0.500	0.500	0.500	91.25	91.25	14.371	1	0
Horiz 15	B/B L3.5"x3"x0.3125"	DAL	3.5X3X0.31	33.0	8.24	Comp	8.24	H 30P	-7.716	W 180	93.612	0.000	0.000	0.500	0.800	0.500	88.89	88.89	12.500	1	0
Horiz 16	**C15x33.9**	**CHN**	**C15x33.9**	**33.0**	**1.93**	**Comp**	**1.93**	**H 32X**	**-1.975**	**W 45**	**102.383**	**0.000**	**0.000**	**1.000**	**0.500**	**1.000**	**165.93**	**148.25**	**12.500**	**6**	**0**
Horiz 17	B/B L2.5"x2"x0.25"	DAL	2.5X2X0.25	33.0	15.97	Comp	15.97	H 34P	-3.620	W 45	22.662	0.000	0.000	1.000	1.000	1.000	107.14	107.14	7.000	1	0
Horiz 18	B/B L2.5"x2"x0.25"	DAL	2.5X2X0.25	33.0	10.61	Comp	10.61	H 35P	-2.405	W -45	22.662	0.000	0.000	1.000	1.000	1.000	107.14	107.14	7.000	1	0
Horiz 19	C15x33.9	CHN	C15x33.9	33.0	0.36	Comp	0.36	H 38X	-0.711	W 0	195.012	0.000	0.000	1.000	1.000	1.000	92.92	92.92	7.000	1	0
LD 1	B/B L3.5"x2.5"x0.25"	DAL	3.5X2.5X0.25	33.0	54.89	Comp	54.89	LD 1X	-17.736	W -45	32.314	0.000	0.000	1.000	1.000	1.000	165.36	147.90	15.020	6	0
LD 2	B/B L5"x3.5"x0.4375"	DAL	5X3.5X0.44	33.0	31.41	Comp	31.41	LD 3X	-38.255	W -90	121.805	0.000	0.000	1.000	1.000	1.000	121.61	121.61	15.020	6	0
LD 4	B/B L3"x2"x0.25"	DAL	3X2X0.25	33.0	46.43	Tens	0.26	LD 7XY	-0.071	W -90	27.358	0.000	0.000	0.930	0.930	0.930	159.78	144.47	12.757	6	0
LD 5	B/B L3"x2.5"x0.25"	DAL	3X2.5X0.25	33.0	49.96	Comp	49.96	LD 9X	-28.033	W -90	56.112	0.000	0.000	0.860	0.860	0.860	110.80	110.80	10.146	1	0
LD 6	B/B L3"x2.5"x0.25"	DAL	3X2.5X0.25	33.0	57.63	Comp	57.63	LD 11P	-27.436	W -90	47.695	0.000	0.000	0.890	0.890	0.890	128.40	125.16	11.361	6	0
LD 7	B/B L2.5"x2"x0.25"	DAL	2.5X2X0.25	33.0	49.86	Tens	0.40	LD 14Y	-0.201	W 180	50.187	0.000	0.000	0.500	0.500	0.500	92.91	92.91	12.141	1	0
LD 8	B/B L3"x2.5"x0.25"	DAL	3X2.5X0.25	33.0	48.24	Comp	48.24	LD 15X	-27.404	W -90	56.803	0.000	0.000	0.870	0.870	0.870	109.55	109.55	9.916	1	0
LD 9	B/B L3"x2.5"x0.25"	DAL	3X2.5X0.25	33.0	52.26	Comp	52.26	LD 17P	-26.697	W -90	51.081	0.000	0.000	0.860	0.860	0.860	119.56	119.56	10.948	1	0
LD 10	B/B L2.5"x2"x0.25"	DAL	2.5X2X0.25	33.0	47.86	Tens	0.67	LD 20Y	-0.349	W 180	52.080	0.000	0.000	0.500	0.500	0.500	88.41	88.41	11.552	1	0
LD 11	B/B L3"x2.5"x0.25"	DAL	3X2.5X0.25	33.0	47.25	Comp	47.25	LD 21X	-27.142	W -90	57.443	0.000	0.000	0.880	0.880	0.880	108.38	108.38	9.699	1	0
LD 12	B/B L3.5"x3.5"x0.25"	DAE	3.5X3.5X0.25	33.0	37.94	Comp	37.94	LD 23P	-25.903	W -90	68.280	0.000	0.000	1.000	1.000	1.000	116.21	116.21	10.556	1	0
LH 1	B/B L3"x3.5"x0.5"	DAS	3.5X3X0.5	33.0	28.57	Comp	28.57	LH 1P	-15.561	W 0	54.468	0.000	0.000	0.500	1.000	0.500	176.20	154.57	24.962	6	0
LH 2	B/B L3"x4"x0.25"	DAS	4X3X0.25	33.0	38.46	Tens	0.00	LH 4Y	0.000		0.008	0.000	0.000	1.000	2.000	1.000	180.16	157.00	13.452	6	0
LH 3	B/B L3"x3.5"x0.3125"	DAS	3.5X3X0.31	33.0	31.18	Tens	0.00	LH 6Y	0.000		0.011	0.000	0.000	1.000	2.000	1.000	179.46	156.56	12.412	6	0
LH 4	B/B L3"x3.5"x0.25"	DAS	3.5X3X0.25	33.0	35.41	Tens	0.00	LH 8Y	0.000		0.010	0.000	0.000	1.000	2.000	1.000	165.42	147.93	11.373	6	0
DUM 1	Dummy Bracing Member	DUM	0.1X0.1X1	36.0	0.00		0.00	BR 11XY	-1.141	W 45	0.324	0.000	0.000	1.000	1.000	1.000	2.65	2.65	22.070	1	0

Group Summary (Tension Portion):

Group Label	Group Desc.	Angle Type	Angle Size	Steel Strength (ksi)	Max Usage %	Usage Cont-rol	Max Use In Tens. %	Tension Control Member	Tension Force (kips)	Tension Control Load Case	Net Section Capacity (kips)	Tension Connect. Shear Capacity (kips)	Tension Connect. Bearing Capacity (kips)	Tension Connect. Rupture Capacity (kips)	Length Tens. Member (ft)	No. Of Bolts Tens.	No. Of Holes	Hole Diameter (in)
Leg S1	L 8" x 8" x 1.125"	SAE	8X8X1.13	33.0	67.44	Comp	41.15	L 1XY	204.482	W 45	496.880	0.000	0.000	0.000	25.140	0	0.000	0
Leg S2	L 8" x 8" x 1.125"	SAE	8X8X1.13	33.0	63.69	Comp	33.47	L 2XY	166.284	W 45	496.880	0.000	0.000	0.000	25.140	0	0.000	0
Leg S3	L 8" x 8" x 1.125"	SAE	8X8X1.13	33.0	50.91	Comp	28.88	L 3XY	143.502	W 45	496.880	0.000	0.000	0.000	25.140	0	0.000	0
Leg S4	L 8" x 8" x 1.125"	SAE	8X8X1.13	33.0	45.11	Comp	24.56	L 4XY	122.037	W 45	496.880	0.000	0.000	0.000	25.140	0	0.000	0
Leg S5	L 8" x 8" x 1.125"	SAE	8X8X1.13	33.0	41.60	Comp	26.14	L 5XY	129.905	W 45	496.880	0.000	0.000	0.000	25.140	0	0.000	0
Leg S6	L 8" x 8" x 1"	SAE	8X8X1	33.0	38.70	Comp	24.00	L 6XY	106.932	W 45	445.499	0.000	0.000	0.000	25.140	0	0.000	0
Leg S7	L 8" x 8" x 0.875"	SAE	8X8X0.88	33.0	35.24	Comp	21.36	L 7XY	83.943	W 45	392.930	0.000	0.000	0.000	25.140	0	0.000	0
Leg S8	L 8" x 8" x 0.75"	SAE	8X8X0.75	33.0	33.37	Comp	21.75	L 8XY	73.902	W 45	339.767	0.000	0.000	0.000	12.570	0	0.000	0
Leg S9	L 6" x 6" x 0.875"	SAE	6X6X0.88	33.0	35.90	Comp	22.11	L 9XY	63.888	W 45	288.981	0.000	0.000	0.000	12.570	0	0.000	0
Leg S10	L 6" x 6" x 0.875"	SAE	6X6X0.88	33.0	30.99	Comp	18.68	L 10XY	53.980	W 45	288.981	0.000	0.000	0.000	12.570	0	0.000	0
Leg S11	L 6" x 6" x 0.75"	SAE	6X6X0.75	33.0	28.47	Comp	17.56	L 11XY	44.013	W 45	250.668	0.000	0.000	0.000	12.570	0	0.000	0
Leg S12	L 6" x 6" x 0.75"	SAE	6X6X0.75	33.0	22.97	Comp	13.59	L 12XY	34.062	W 45	250.668	0.000	0.000	0.000	12.570	0	0.000	0
Leg S13	L 6" x 6" x 0.625"	SAE	6X6X0.63	33.0	26.72	Comp	11.49	L 13XY	24.253	W 45	211.167	0.000	0.000	0.000	12.570	0	0.000	0
Leg S14	L 6" x 6" x 0.625"	SAE	6X6X0.63	33.0	20.87	Comp	6.86	L 14XY	14.478	W 45	211.167	0.000	0.000	0.000	12.570	0	0.000	0
Leg S15	L 6" x 6" x 0.5625"	SAE	6X6X0.56	33.0	16.06	Comp	2.78	L 15XY	5.310	W 45	190.971	0.000	0.000	0.000	12.570	0	0.000	0
Leg S16	L 6" x 6" x 0.5625"	SAE	6X6X0.56	33.0	8.27	Comp	0.00	L 16Y	0.000		190.971	0.000	0.000	0.000	12.500	0	0.000	0
Leg S17	**L 6" x 6" x 0.5625"**	**SAE**	**6X6X0.56**	**33.0**	**3.91**	**Comp**	**0.17**	**L 17Y**	**0.319**	**W -45**	**190.971**	**0.000**	**0.000**	**0.000**	**3.890**	**0**	**0.000**	**0**
Leg S18	**L 6" x 6" x 0.5"**	**SAE**	**6X6X0.5**	**33.0**	**4.53**	**Comp**	**0.28**	**L 18Y**	**0.481**	**W -45**	**170.775**	**0.000**	**0.000**	**0.000**	**7.500**	**0**	**0.000**	**0**
Leg S19	L 6" x 6" x 0.5"	SAE	6X6X0.5	33.0	3.00	Comp	0.00	L 19Y	0.000		170.775	0.000	0.000	0.000	7.500	0	0.000	0
Diag S1	B/B L3.5"x5"x0.4375"	DAS	5X3.5X0.44	33.0	31.74	Comp	13.29	D 2P	27.828	W -90	209.385	0.000	0.000	0.000	22.030	0	0.000	0
Diag S2	B/B L3"x4"x0.3125"	DAS	4X3X0.31	33.0	45.12	Comp	38.36	D 4P	47.618	W -90	124.146	0.000	0.000	0.000	20.294	0	0.000	0
Diag S3	B/B L3"x4"x0.3125"	DAS	4X3X0.31	33.0	42.79	Comp	38.08	D 6P	47.276	W -90	124.146	0.000	0.000	0.000	19.834	0	0.000	0
Diag S4	B/B L3"x4"x0.3125"	DAS	4X3X0.31	33.0	41.14	Comp	37.36	D 8P	46.380	W -90	124.146	0.000	0.000	0.000	19.399	0	0.000	0
Diag S5	B/B L3"x4"x0.25"	DAS	4X3X0.25	33.0	67.02	Comp	24.02	D 9P	24.113	W -90	100.386	0.000	0.000	0.000	31.668	0	0.000	0
Diag S6	B/B L3"x4"x0.25"	DAS	4X3X0.25	33.0	63.04	Comp	23.91	D 11P	24.000	W -90	100.386	0.000	0.000	0.000	30.561	0	0.000	0
Diag S7	B/B L3"x4"x0.25"	DAS	4X3X0.25	33.0	56.82	Comp	23.45	D 13P	23.544	W -90	100.386	0.000	0.000	0.000	29.531	0	0.000	0
Diag S8	B/B L2.5"x3"x0.3125"	DAS	3X2.5X0.31	33.0	37.96	Comp	13.81	D 15P	13.290	W -90	96.228	0.000	0.000	0.000	18.595	0	0.000	0
Diag S9	B/B L2.5"x2.5"x0.25"	DAE	2.5X2.5X0.25	33.0	54.45	Comp	16.09	D 18P	11.375	W 180	70.686	0.000	0.000	0.000	17.915	0	0.000	0
Diag S10	B/B L2.5"x2.5"x0.25"	DAE	2.5X2.5X0.25	33.0	47.62	Comp	15.00	D 19P	10.606	W -90	70.686	0.000	0.000	0.000	17.259	0	0.000	0
Diag S11	B/B L2.5"x2.5"x0.25"	DAE	2.5X2.5X0.25	33.0	41.98	Comp	14.02	D 21P	9.909	W -90	70.686	0.000	0.000	0.000	16.630	0	0.000	0
Diag S12	B/B L2.5"x2.5"x0.25"	DAE	2.5X2.5X0.25	33.0	40.04	Comp	14.08	D 23P	9.950	W -90	70.686	0.000	0.000	0.000	16.030	0	0.000	0
Diag S13	L 3" x 4" x 0.25"	SAU	4X3X0.25	33.0	26.12	Tens	26.12	D 26P	13.109	W -90	50.193	0.000	0.000	0.000	21.265	0	0.000	0
Diag S14	L 3" x 4" x 0.25"	SAU	4X3X0.25	33.0	25.64	Tens	25.64	D 28P	12.869	W -90	50.193	0.000	0.000	0.000	19.784	0	0.000	0
Diag S15	L 3" x 3.5" x 0.25"	SAU	3.5X3X0.25	33.0	24.74	Tens	24.74	D 30P	11.465	W -90	46.332	0.000	0.000	0.000	18.375	0	0.000	0
Diag S16	L 3.5" x 3.5" x 0.25"	SAE	3.5X3.5X0.25	33.0	14.61	Tens	14.61	D 32XY	7.335	W 90	50.193	0.000	0.000	0.000	17.678	0	0.000	0
Diag S17	L 3.5" x 3.5" x 0.25"	SAE	3.5X3.5X0.25	33.0	3.05	Tens	3.05	D 33XY	1.528	W 90	50.193	0.000	0.000	0.000	10.131	0	0.000	0
Diag S18	L 3" x 2" x 0.25"	SAU	3X2X0.25	33.0	4.81	Tens	4.81	D 36XY	1.698	W 90	35.343	0.000	0.000	0.000	10.259	0	0.000	0
Diag S19	L 3" x 2" x 0.25"	SAU	3X2X0.25	33.0	7.46	Tens	7.46	D 38XY	2.636	W 90	35.343	0.000	0.000	0.000	10.259	0	0.000	0
Horiz 1	B/B L4"x3.5"x0.375"	DAL	4X3.5X0.38	33.0	30.65	Comp	17.02	H 1X	26.990	W -45	158.598	0.000	0.000	0.000	24.962	0	0.000	0
Horiz 2	B/B L4"x3"x0.375"	DAL	4X3X0.38	33.0	69.02	Comp	9.67	H 3P	14.269	W 90	147.609	0.000	0.000	0.000	15.394	0	0.000	0
Horiz 3	B/B L4"x3"x0.3125"	DAL	4X3X0.31	33.0	67.94	Comp	10.82	H 5X	13.434	W -90	124.146	0.000	0.000	0.000	14.147	0	0.000	0
Horiz 4	B/B L3.5"x3"x0.3125"	DAL	3.5X3X0.31	33.0	59.83	Comp	14.30	H 7X	16.439	W -90	114.939	0.000	0.000	0.000	12.899	0	0.000	0
Horiz 5	B/B L3.5"x3"x0.25"	DAL	3.5X3X0.25	33.0	41.47	Comp	16.18	H 9X	15.043	W -90	92.961	0.000	0.000	0.000	17.477	0	0.000	0
Horiz 6	B/B L3.5"x2.5"x0.25"	DAL	3.5X2.5X0.25	33.0	41.71	Comp	15.68	H 11P	13.409	W 90	85.536	0.000	0.000	0.000	15.606	0	0.000	0
Horiz 7	B/B L3"x2.5"x0.25"	DAL	3X2.5X0.25	33.0	37.47	Comp	15.69	H 13X	12.258	W -90	78.111	0.000	0.000	0.000	13.735	0	0.000	0
Horiz 8	B/B L3.5"x2.5"x0.3125"	DAL	3.5X2.5X0.31	33.0	18.56	Comp	9.58	H 15X	10.096	W -90	105.435	0.000	0.000	0.000	12.799	0	0.000	0
Horiz 9	B/B L2.5"x2.5"x0.25"	DAE	2.5X2.5X0.25	33.0	29.93	Comp	11.83	H 18Y	8.365	W 180	70.686	0.000	0.000	0.000	11.864	0	0.000	0
Horiz 10	B/B L2.5"x2.5"x0.25"	DAE	2.5X2.5X0.25	33.0	25.06	Comp	10.15	H 19P	7.172	W 90	70.686	0.000	0.000	0.000	10.928	0	0.000	0
Horiz 11	B/B L2.5"x2.5"x0.25"	DAE	2.5X2.5X0.25	33.0	18.58	Comp	9.49	H 21X	6.708	W -90	70.686	0.000	0.000	0.000	9.992	0	0.000	0
Horiz 12	B/B L3"x2.5"x0.25"	DAL	3X2.5X0.25	33.0	21.33	Comp	1.52	H 24P	1.185	W 0	78.111	0.000	0.000	0.000	9.057	0	0.000	0
Horiz 13	B/B L3"x2.5"x0.25"	DAL	3X2.5X0.25	33.0	27.72	Comp	0.00	H 26X	0.000		78.111	0.000	0.000	0.000	16.242	0	0.000	0
Horiz 14	B/B L3"x2.5"x0.25"	DAL	3X2.5X0.25	33.0	14.17	Comp	0.00	H 28X	0.000		78.111	0.000	0.000	0.000	14.371	0	0.000	0
Horiz 15	B/B L3.5"x3"x0.3125"	DAL	3.5X3X0.31	33.0	8.24	Comp	0.00	H 30X	0.000		114.939	0.000	0.000	0.000	12.500	0	0.000	0
Horiz 16	**C15x33.9**	**CHN**	**C15x33.9**	**33.0**	**1.93**	**Comp**	**1.31**	**H 31Y**	**3.863**	**W 180**	**295.812**	**0.000**	**0.000**	**0.000**	**12.500**	**0**	**0.000**	**0**
Horiz 17	B/B L2.5"x2"x0.25"	DAL	2.5X2X0.25	33.0	15.97	Comp	0.00	H 34X	0.000		63.261	0.000	0.000	0.000	7.000	0	0.000	0
Horiz 18	B/B L2.5"x2"x0.25"	DAL	2.5X2X0.25	33.0	10.61	Comp	0.00	H 36X	0.000		63.261	0.000	0.000	0.000	7.000	0	0.000	0
Horiz 19	C15x33.9	CHN	C15x33.9	33.0	0.36	Comp	0.11	H 38X	0.334	W -90	295.812	0.000	0.000	0.000	7.000	0	0.000	0
LD 1	B/B L3.5"x2.5"x0.25"	DAL	3.5X2.5X0.25	33.0	54.89	Comp	15.21	LD 2Y	13.009	W -45	85.536	0.000	0.000	0.000	15.020	0	0.000	0
LD 2	B/B L5"x3.5"x0.4375"	DAL	5X3.5X0.44	33.0	31.41	Comp	16.06	LD 3P	33.624	W -90	209.385	0.000	0.000	0.000	15.020	0	0.000	0
LD 4	B/B L3"x2"x0.25"	DAL	3X2X0.25	33.0	46.43	Tens	46.43	LD 7P	32.817	W -90	70.686	0.000	0.000	0.000	12.757	0	0.000	0
LD 5	B/B L3"x2.5"x0.25"	DAL	3X2.5X0.25	33.0	49.96	Comp	28.73	LD 9P	22.439	W -90	78.111	0.000	0.000	0.000	10.146	0	0.000	0
LD 6	B/B L3"x2.5"x0.25"	DAL	3X2.5X0.25	33.0	57.63	Comp	36.70	LD 11X	28.664	W -90	78.111	0.000	0.000	0.000	11.361	0	0.000	0
LD 7	B/B L2.5"x2"x0.25"	DAL	2.5X2X0.25	33.0	49.86	Tens	49.86	LD 13P	31.544	W -90	63.261	0.000	0.000	0.000	12.141	0	0.000	0
LD 8	B/B L3"x2.5"x0.25"	DAL	3X2.5X0.25	33.0	48.24	Comp	28.60	LD 15P	22.343	W -90	78.111	0.000	0.000	0.000	9.916	0	0.000	0
LD 9	B/B L3"x2.5"x0.25"	DAL	3X2.5X0.25	33.0	52.26	Comp	35.60	LD 17X	27.806	W -90	78.111	0.000	0.000	0.000	10.948	0	0.000	0
LD 10	B/B L2.5"x2"x0.25"	DAL	2.5X2X0.25	33.0	47.86	Tens	47.86	LD 19P	30.278	W -90	63.261	0.000	0.000	0.000	11.552	0	0.000	0
LD 11	B/B L3"x2.5"x0.25"	DAL	3X2.5X0.25	33.0	47.25	Comp	27.78	LD 21P	21.696	W -90	78.111	0.000	0.000	0.000	9.699	0	0.000	0
LD 12	B/B L3.5"x3.5"x0.25"	DAE	3.5X3.5X0.25	33.0	37.94	Comp	26.76	LD 23X	26.866	W -90	100.386	0.000	0.000	0.000	10.556	0	0.000	0
LH 1	B/B L3"x3.5"x0.5"	DAS	3.5X3X0.5	33.0	28.57	Comp	6.18	LH 1Y	11.016	W 0	178.200	0.000	0.000	0.000	24.962	0	0.000	0
LH 2	B/B L3"x4"x0.25"	DAS	4X3X0.25	33.0	38.46	Tens	38.46	LH 3P	38.610	W -90	100.386	0.000	0.000	0.000	13.452	0	0.000	0
LH 3	B/B L3"x3.5"x0.3125"	DAS	3.5X3X0.31	33.0	31.18	Tens	31.18	LH 5P	35.837	W -90	114.939	0.000	0.000	0.000	12.412	0	0.000	0
LH 4	B/B L3"x3.5"x0.25"	DAS	3.5X3X0.25	33.0	35.41	Tens	35.41	LH 7P	32.915	W -90	92.961	0.000	0.000	0.000	11.373	0	0.000	0
DUM 1	Dummy Bracing Member	DUM	0.1X0.1X1	36.0	0.00		0.00	BR 11X	0.788	W -45	0.324	0.000	0.000	0.000	22.070	0	0.000	0

*** Maximum Stress Summary for Each Load Case

Summary of Maximum Usages by Load Case:

Load Case	Maximum Usage %	Element Label	Element Type
W 0	66.47	H 4Y	Angle
W 180	68.31	H 4P	Angle
W 45	67.44	L 1P	Angle
W -45	66.46	L 1X	Angle
W 90	67.63	H 3X	Angle
W -90	69.02	H 3P	Angle
W 0 Ice	28.78	L 1P	Angle
W 180 Ice	27.50	L 1Y	Angle
W 45 Ice	32.89	L 1P	Angle
W -45 Ice	31.99	L 1X	Angle
W 90 Ice	28.81	L 1P	Angle
W -90 Ice	27.96	L 1X	Angle

*** Weight of structure (lbs):
Weight of Angles*Section DLF: 187722.3
Total: 187722.3

*** End of Report

Site #:	88013	Engineer:	T. Kassakatis	Windspeed: No Ice:	121 mph	Ice:	50 mph
Name:	Killingworth, CT	Date:	03/03/21	Carrier	AT&T		

Taper:	-0.149698	Taper Change:	275 ft
FW @ Base:	53.67 ft	FW @ Top:	12.5 ft

Spreadsheet Version Last Updated: 11/12/2014

Joint Label	Symmetry Code	X Coord. *(ft)*	Y Coord. *(ft)*	Z Coord. *(ft)*	X Disp. Rest.	Y Disp. Rest.	Z Disp. Rest.	X Rot. Rest.	Y Rot. Rest.	Z Rot. Rest.	Drop Sub-Brace *(Y or Blank)*	# Vert	Drop (ft)	Height (ft)	Type	Count	Z-Elev. (ft)	FW (ft)	# Sub-Brace
0	XY-Symmetry	26.8335	26.8335	0	Fixed	Fixed	Fixed	Fixed	Fixed	Fixed		3	8.333	25	1	1	0	53.667	2
1	XY-Symmetry	24.96227273	24.96227273	25	Free	Free	Free	Free	Free	Free		1	8.333	25	2	2	25	49.92454545	2
2	XY-Symmetry	23.09104545	23.09104545	50	Free	Free	Free	Free	Free	Free	Y	1	8.333	25	2	3	50	46.18209091	5
3	XY-Symmetry	21.21981818	21.21981818	75	Free	Free	Free	Free	Free	Free	Y	1	8.333	25	2	4	75	42.43963636	4
4	XY-Symmetry	19.34859091	19.34859091	100	Free	Free	Free	Free	Free	Free		1		25	A	5	100	38.69718182	2
5	XY-Symmetry	17.47736364	17.47736364	125	Free	Free	Free	Free	Free	Free		2		25	A	6	125	34.95472727	2
6	XY-Symmetry	15.60613636	15.60613636	150	Free	Free	Free	Free	Free	Free		2		25	A	7	150	31.21227273	2
7	XY-Symmetry	13.73490909	13.73490909	175	Free	Free	Free	Free	Free	Free		2		12.5	A	8	175	27.46981818	1
8	XY-Symmetry	12.79929545	12.79929545	187.5	Free	Free	Free	Free	Free	Free		1		12.5	A	9	187.5	25.59859091	1
9	XY-Symmetry	11.86368182	11.86368182	200	Free	Free	Free	Free	Free	Free		1		12.5	A	10	200	23.72736364	1
10	XY-Symmetry	10.92806818	10.92806818	212.5	Free	Free	Free	Free	Free	Free		1		12.5	A	11	212.5	21.85613636	1
11	XY-Symmetry	9.992454545	9.992454545	225	Free	Free	Free	Free	Free	Free		1		12.5	A	12	225	19.98490909	1
12	XY-Symmetry	9.056840909	9.056840909	237.5	Free	Free	Free	Free	Free	Free		1		12.5	X	13	237.5	18.11368182	1
13	XY-Symmetry	8.121227273	8.121227273	250	Free	Free	Free	Free	Free	Free		1		12.5	X	14	250	16.24245455	1
14	XY-Symmetry	7.185613636	7.185613636	262.5	Free	Free	Free	Free	Free	Free		1		12.5	X	15	262.5	14.37122727	1
15	XY-Symmetry	6.25	6.25	275	Free	Free	Free	Free	Free	Free		1		12.5	X	16	275	12.5	1
16	XY-Symmetry	6.25	6.25	287.5	Free	Free	Free	Free	Free	Free				0.1	X	17	287.5	12.5	
17	XY-Symmetry	3.5	3.5	287.6	Free	Free	Free	Free	Free	Free				7.5	X	18	287.6	7	
18	XY-Symmetry	3.5	3.5	295.1	Free	Free	Free	Free	Free	Free				7.5	X	19	295.1	7	
19	XY-Symmetry	3.5	3.5	302.6	Free	Free	Free	Free	Free	Free						20	302.6	7	
A1	Y-Symmetry	24.96227273	0	25	Free	Free	Free	Free	Free	Free									
A2	X-Symmetry	0	24.96227273	25	Free	Free	Free	Free	Free	Free									
A3	XY-Symmetry	23.09104545	7.697015152	50	Free	Free	Free	Free	Free	Free									
A4	XY-Symmetry	7.697015152	23.09104545	50	Free	Free	Free	Free	Free	Free									
A5	XY-Symmetry	21.21981818	7.073272727	75	Free	Free	Free	Free	Free	Free									
A6	XY-Symmetry	7.073272727	21.21981818	75	Free	Free	Free	Free	Free	Free									
A7	XY-Symmetry	19.34859091	6.449530303	100	Free	Free	Free	Free	Free	Free									
A8	XY-Symmetry	6.449530303	19.34859091	100	Free	Free	Free	Free	Free	Free									
A9	Y-Symmetry	17.47736364	0	125	Free	Free	Free	Free	Free	Free									
A10	X-Symmetry	0	17.47736364	125	Free	Free	Free	Free	Free	Free									
A11	Y-Symmetry	15.60613636	0	150	Free	Free	Free	Free	Free	Free									
A12	X-Symmetry	0	15.60613636	150	Free	Free	Free	Free	Free	Free									
A13	Y-Symmetry	13.73490909	0	175	Free	Free	Free	Free	Free	Free									
A14	X-Symmetry	0	13.73490909	175	Free	Free	Free	Free	Free	Free									
A15	Y-Symmetry	12.79929545	0	187.5	Free	Free	Free	Free	Free	Free									
A16	X-Symmetry	0	12.79929545	187.5	Free	Free	Free	Free	Free	Free									
A17	Y-Symmetry	11.86368182	0	200	Free	Free	Free	Free	Free	Free									
A18	X-Symmetry	0	11.86368182	200	Free	Free	Free	Free	Free	Free									
A19	Y-Symmetry	10.92806818	0	212.5	Free	Free	Free	Free	Free	Free									
A20	X-Symmetry	0	10.92806818	212.5	Free	Free	Free	Free	Free	Free									
A21	Y-Symmetry	9.992454545	0	225	Free	Free	Free	Free	Free	Free									
A22	X-Symmetry	0	9.992454545	225	Free	Free	Free	Free	Free	Free									
A23	Y-Symmetry	9.056840909	0	237.5	Free	Free	Free	Free	Free	Free									
A24	X-Symmetry	0	9.056840909	237.5	Free	Free	Free	Free	Free	Free									
H1	XY-Symmetry	25.5859902	12.48113636	16.667	Free	Free	Free	Free	Free	Free									
H2	XY-Symmetry	12.48113636	25.5859902	16.667	Free	Free	Free	Free	Free	Free									
H5	XY-Symmetry	23.71476293	13.45187081	41.667	Free	Free	Free	Free	Free	Free									
H6	XY-Symmetry	13.45187081	23.71476293	41.667	Free	Free	Free	Free	Free	Free									
H7	Y-Symmetry	23.71476293	0	41.667	Free	Free	Free	Free	Free	Free									
H8	X-Symmetry	0	23.71476293	41.667	Free	Free	Free	Free	Free	Free									
H9	XY-Symmetry	21.84353566	12.41231673	66.667	Free	Free	Free	Free	Free	Free									
H10	XY-Symmetry	12.41231673	21.84353566	66.667	Free	Free	Free	Free	Free	Free									
H11	Y-Symmetry	21.84353566	0	66.667	Free	Free	Free	Free	Free	Free									
H12	X-Symmetry	0	21.84353566	66.667	Free	Free	Free	Free	Free	Free									
H13	XY-Symmetry	19.97230838	11.37276266	91.667	Free	Free	Free	Free	Free	Free									
H14	XY-Symmetry	11.37276266	19.97230838	91.667	Free	Free	Free	Free	Free	Free									
H15	Y-Symmetry	19.97230838	0	91.667	Free	Free	Free	Free	Free	Free									
H16	X-Symmetry	0	19.97230838	91.667	Free	Free	Free	Free	Free	Free									

NOTES	
Types:	
1:	Built up Horizs. w/ A
2:	Built up Horizs. w/ M
A:	Typical A brace
X:	Typical X brace
Drop:	Use only for types 1 & 2
# Sections:	19

Legs

Site No.:	88013
Engineer:	T. Kassakatis
Date:	03/03/2021
Carrier:	AT&T

When inputting thickness values, include all decimal places.

Tower Section #	Section Elevations *(ft)*	Type of Shape [1]	Diameter or Length *(in)*	Thickness [2] *(in)*	F_Y *(ksi)*
1	0.000-25.00	L	8	1.125	33
2	25.00-50.00	L	8	1.125	33
3	50.00-75.00	L	8	1.125	33
4	75.00-100.0	L	8	1.125	33
5	100.0-125.0	L	8	1.125	33
6	125.0-150.0	L	8	1	33
7	150.0-175.0	L	8	0.875	33
8	175.0-187.5	L	8	0.75	33
9	187.5-200.0	L	6	0.875	33
10	200.0-212.5	L	6	0.875	33
11	212.5-225.0	L	6	0.75	33
12	225.0-237.5	L	6	0.75	33
13	237.5-250.0	L	6	0.625	33
14	250.0-262.5	L	6	0.625	33
15	262.5-275.0	L	6	0.5625	33
16	275.0-287.5	L	6	0.5625	33
17	287.5-287.6	L	6	0.5625	33
18	287.6-295.1	L	6	0.5	33
19	295.1-302.6	L	6	0.5	33

Notes:

[1] Type of Leg Shape: **R** = Round or **P** = Bent Plate or **S** = Schifflerized Angle. **L** = Even Leg

[2] For Solid Round Leg Shapes Thickness Equals Zero.

[3] Adjust for Bent Plate Leg Shapes.

Diagonals

Site No.:	88013
Engineer:	T. Kassakatis
Date:	03/03/2021
Carrier:	AT&T

When inputting thickness values, include all decimal places.

Tower Section #	Section Elevations *(ft)*	Type of Shape [1]	Diameter [2] *(in)*	Web Length [3] *(in)*	Flange Length [3] *(in)*	Thickness *(in)*	F_y *(ksi)*	Is Diag. Tension Only? *(Y/N)*
1	0.000-25.00	2L		3.5	5	0.4375	33	
2	25.00-50.00	2L		3	4	0.3125	33	
3	50.00-75.00	2L		3	4	0.3125	33	
4	75.00-100.0	2L		3	4	0.3125	33	
5	100.0-125.0	2L		3	4	0.25	33	
6	125.0-150.0	2L		3	4	0.25	33	
7	150.0-175.0	2L		3	4	0.25	33	
8	175.0-187.5	2L		2.5	3	0.3125	33	
9	187.5-200.0	2L		2.5	2.5	0.25	33	
10	200.0-212.5	2L		2.5	2.5	0.25	33	
11	212.5-225.0	2L		2.5	2.5	0.25	33	
12	225.0-237.5	2L		2.5	2.5	0.25	33	
13	237.5-250.0	L		3	4	0.25	33	Y
14	250.0-262.5	L		3	4	0.25	33	Y
15	262.5-275.0	L		3	3.5	0.25	33	Y
16	275.0-287.5	L		3.5	3.5	0.25	33	Y
17	287.5-287.6	L		3.5	3.5	0.25	33	Y
18	287.6-295.1	L		3	2	0.25	33	Y
19	295.1-302.6	L		3	2	0.25	33	Y

Notes:

[1] Type of Diagonal Shape: **R** = Round, **L** = Single-Angle or **2L** = Double-Angle.

[2] Applies to Pipes and Solid Round Shapes only. For Solid Round Shapes Thickness Equals Zero.

[3] Applies to Single-Angle and Double-Angle Shapes only.

[4] Applies to Double-Angle Shapes only.

[5] Applies to Single-Angle Shapes only.

Horizontals

Site No.:	88013
Engineer:	T. Kassakatis
Date:	03/03/2021
Carrier:	AT&T

When inputting thickness values, include all decimal places.

Tower Section #	Section Elevations *(ft)*	Type of Shape [1]	Diameter [2] *(in)*	Web Length [3] *(in)*	Flange Length [3] *(in)*	Thickness *(in)*	F_y *(ksi)*	B/B Spacing (in.)
1	0.000-25.00	2L		4	3.5	0.375	33	0.375
2	25.00-50.00	2L		4	3	0.375	33	0.375
3	50.00-75.00	2L		4	3	0.3125	33	0.375
4	75.00-100.0	2L		3.5	3	0.3125	33	0.375
5	100.0-125.0	2L		3.5	3	0.25	33	0.375
6	125.0-150.0	2L		3.5	2.5	0.25	33	0.375
7	150.0-175.0	2L		3	2.5	0.25	33	0.375
8	175.0-187.5	2L		3.5	2.5	0.3125	33	0.375
9	187.5-200.0	2L		2.5	2.5	0.25	33	0.375
10	200.0-212.5	2L		2.5	2.5	0.25	33	0.375
11	212.5-225.0	2L		2.5	2.5	0.25	33	0.375
12	225.0-237.5	2L		3	2.5	0.25	33	0.375
13	237.5-250.0	2L		3	2.5	0.25	33	0.375
14	250.0-262.5	2L		3	2.5	0.25	33	0.375
15	262.5-275.0	2L		3.5	3	0.3125	33	0.375
16	275.0-287.5	C		15	33.9		33	
17	287.5-287.6	2L		2.5	2	0.25	33	0.375
18	287.6-295.1	2L		2.5	2	0.25	33	0.375
19	295.1-302.6	C		15	33.9		33	

Notes:

[1] Type of Horizontal Shape: **R** = Round, **L** = Single-Angle, **2L** = Double-Angle, **C** = Channel, **W** = W Shape

[2] Applies to Pipes and Solid Round Shapes only. For Solid Round Shapes Thickness Equals Zero.

[3] Applies to Single-Angle and Double-Angle Shapes only.

[4] Applies to Double-Angle Shapes only.

[5] Applies to Single-Angle Shapes only.

Built-up Diagonals

Site No.:	88013
Engineer:	T. Kassakatis
Date:	03/03/2021
Carrier:	AT&T

When inputting thickness values, include all decimal places.
Input diags. from left to center & from base section upward.

Tower Built-up Diag. #	Section Elevations *(ft)*	Type of Shape [1]	Diameter [2] *(in)*	Web Length [3] *(in)*	Flange Length [3] *(in)*	Thickness *(in)*	F_y *(ksi)*
1	0.000-25.00	2L		3.5	2.5	0.25	33
2	0.000-25.00	2L		5	3.5	0.4375	33
3	25.00-50.00	2L		3	2	0.25	33
4	25.00-50.00	2L		3	2.5	0.25	33
5	25.00-50.00	2L		3	2.5	0.25	33
6	50.00-75.00	2L		2.5	2	0.25	33
7	50.00-75.00	2L		3	2.5	0.25	33
8	50.00-75.00	2L		3	2.5	0.25	33
9	75.00-100.0	2L		2.5	2	0.25	33
10	75.00-100.0	2L		3	2.5	0.25	33
11	75.00-100.0	2L		3.5	3.5	0.25	33

Notes:

[1] Type of Diagonal Shape: **R** = Round, **L** = Single-Angle or **2L** = Double-Angle.

[2] Applies to Pipes and Solid Round Shapes only. For Solid Round Shapes Thickness Equals Zero.

[3] Applies to Single-Angle and Double-Angle Shapes only.

[4] Applies to Double-Angle Shapes only.

[5] Applies to Single-Angle Shapes only.

Built-up Horizontals

Site No.:	88013
Engineer:	T. Kassakatis
Date:	03/03/2021
Carrier:	AT&T

When inputting thickness values, include all decimal places.

Tower Section #	Section Elevations *(ft)*	Type of Shape [1]	Diameter [2] *(in)*	Web Length [3] *(in)*	Flange Length [3] *(in)*	Thickness *(in)*	F_y *(ksi)*	Is Horiz. Tension Only? *(Y/N)*
1	0.000-25.00	2L		3	3.5	0.5	33	
2	25.00-50.00	2L		3	4	0.25	33	Y
3	50.00-75.00	2L		3	3.5	0.3125	33	Y
4	75.00-100.0	2L		3	3.5	0.25	33	Y

Notes:

[1] Type of Horizontal Shape: **R** = Round, **L** = Single-Angle or **2L** = Double-Angle.

[2] Applies to Pipes and Solid Round Shapes only. For Solid Round Shapes Thickness Equals Zero.

[3] Applies to Single-Angle and Double-Angle Shapes only.

[4] Applies to Double-Angle Shapes only.

[5] Applies to Single-Angle Shapes only.

Coax (p. 1 of 2)

Orig by MED, Improved by ABL. Last update 6/25/13 MED

Site No.:	88013
Engineer:	T. Kassakatis
Date:	03/03/21
Carrier:	AT&T

Description	From (ft)	To (ft)	Quantity	Shape	Width or Diameter** (in)	Perimeter (in)	Unit Weight (lb/ft)	In Face Zone? (Yes/No)	Include in Wind Load (Yes/No)
1 Ladder	0	271	1	Flat	2	8.0	6	No	Yes
2 COAX CAGE1	8.3333	33.3333	1	Round	12	37.7	25	Yes	Yes
3 COAX CAGE2	8.3333	33.3333	1	Round	12	37.7	25	Yes	Yes
4 COAX CAGE3	8.3333	33.3333	4	Round	12	37.7	25	Yes	Yes
6 WG-1	15	272	1	Flat	1.5	6.0	6	Yes	Yes
7 AT&T-1	15	272	2	Round	0.39	1.2	0.17	Yes	Yes
8 AT&T-2	15	272	1	Flat	2.85	15.2	3.56	Yes	No
9 AT&T-3	15	272	6	Round	1.98	6.2	0.82	Yes	Yes
10 AT&T-4	15	272	1	Round	1.16	3.6	0.96	Yes	No
12 Sprint	17.5	259	6	Round	1.98	6.2	0.82	Yes	Yes
14 WG-2	17.5	250	1	Flat	1.5	6.0	6	Yes	Yes
15 WG-3	15	171	1	Flat	1.5	6.0	6	Yes	Yes
16 VZW	15	171	2	Round	1.98	6.2	0.82	Yes	Yes
17 VZW	15	171	1	Flat	7.0725	37.7	8.2	Yes	Yes
19 Other	15	145	6	Round	1.98	6.2	0.82	Yes	Yes

**Note: *Actual block width multiplied by 0.75 (1.5 block drag factor actual divided by 2.0 flat*

Coax (p. 2 of 2)

Site No.:	880
Engineer:	T. Kass
Date:	03/0
Carrier:	AT

		Ke	0.977806		
Exposure	B	α	7	$k_{z\,max}$	2.01
Tia Code: TIA-222-H	Topo Cat: 1	z_g	1200	$k_{z\,min}$	0.7
f		K_c	0.9	K_t	

Description	From (ft)	To (ft)	Quantity	Face # (1-4, A-D)	Coax Width (in)	Coax Shape (Block / Flat / Ind)	% Exposed	Spacing (in)	Shape (Round/Flat)	Block Width (# coax)	Block Depth (# coax)	Perimeter (in)	Unit Weight (lb/ft)	In Face Zone (Yes/No)	Include in Wind Load (Yes/No)
Ladder	0	271	1	B	2.00	Flat	100	0	Flat	1	1	8.0	6	No	Yes
COAX CAGE1	8.3333	33.3333	1	1	12.00	Ind	100	0	Round	1	1	37.7	25	Yes	Yes
COAX CAGE2	8.3333	33.3333	1	2	12.00	Ind	100	0	Round	1	1	37.7	25	Yes	Yes
COAX CAGE3	8.3333	33.3333	4	3	12.00	Ind	100	0	Round	4	1	37.7	25	Yes	Yes
								1						No	No
WG-1	15	272	1	4	1.50	Flat	100	0	Flat	1	1	6.0	6	Yes	Yes
AT&T-1	15	272	2	4	0.39	Ind	100	0	Round	2	1	1.2	0.17	Yes	Yes
AT&T-2	15	272	4	4	0.92	Block	0	1	Flat	1	4	15.2	3.56	Yes	No
AT&T-3	15	272	6	4	1.98	Ind	100	0	Round	6	1	6.2	0.82	Yes	Yes
AT&T-4	15	272	1	4	1.16	Ind	0	0	Round	1	1	3.6	0.96	Yes	No
								1						No	No
Sprint	17.5	259	6	2	1.98	Ind	100	1	Round	6	1	6.2	0.82	Yes	Yes
														No	No
WG-2	17.5	250	1	2	1.50	Flat	100	0	Flat	1	1	6.0	6	Yes	Yes
WG-3	15	171	1	3	1.50	Flat	100	0	Flat	1	1	6.0	6	Yes	Yes
VZW	15	171	2	3	1.98	Ind	100	1	Round	2	1	6.2	0.82	Yes	Yes
VZW	15	171	10	3	1.98	Block	50	1	Flat	5	2	37.7	8.2	Yes	Yes
								1						No	No
Other	15	145	6	3	1.98	Ind	100	1	Round	6	1	6.2	0.82	Yes	Yes
								1						No	No
								1						No	No
								1						No	No

Task:	Determine Point Loads	
Tower Height:	303	ft
Gh:	0.85	
Wind Speed:	121	mph,Vult
Ice Wind Speed:	50	
Ice Density:	56	
Tower Type:	S	

Ice Thick:	1	in
Topographic Category (1-4):	1	
Exposure Category (B-D):	B	
Risk Category (1-4):	2	
Height of Crest (H) if Topo Cat. >1:	0	ft
Load Factor; Wind:	1	
Load Factor; Dead:	1.2	

Rooftop Speed Up Factor (Ks)	1	
Ground Elevation (AMSL)	620	ft
Topographic Factor Procedure	Method 1	

Site No.:	
Engineer:	
Date:	
Carrier:	

No.	Carrier	Elevation (ft)	Quantity	# of Azimuths	Proposed?	Manufacturer	Model	Height (in)	Width (in)	Depth (in)	Weight (lbs/ea)	Flat/Round (F/R)	Reduction	C_AA_C (ft^2)	Weight (k)	Ka
1	--	302.5	1	4			--	0.001	0.001	0.001	0.001	R	0.001			1
	--	302.5	1	4			Platform						1.000	60.00	4.00	1
2	--	287.5	1	4			--	0.001	0.001	0.001	0.001	R	0.001			1
	--	287.5	1	4			Platform						1.000	60.00	4.00	1
3	--	268.75	1	4			--	0.001	0.001	0.001	0.001	R	0.001			1
	--	268.75	1	4			Catwallk						1.000	45.00	2.50	1
4	--	237.5	1	1			--	0.001	0.001	0.001	0.001	R	0.001			1
	--	237.5	1	1			Rest Platform						1.000	15.00	0.50	1
5	--	212.5	1	1			--	0.001	0.001	0.001	0.001	R	0.001			1
	--	212.5	1	1			Platform						1.000	15.00	4.00	1
6	--	200	1	2			--	0.001	0.001	0.001	0.001	R	0.001			1
	--	200	1	3			Platform						1.000	45.00	2.50	1
7	--	187.5	1	2			--	0.001	0.001	0.001	0.001	R	0.001			1
	--	187.5	1	3			Platform						1.000	45.00	2.50	1
8	--	187.5	2	2			--	0.001	0.001	0.001	0.001	R	0.001			1
	--	187.5	2	2			Horn Platform						1.000	25.00	1.25	1
9	--	175	2	2			--	0.001	0.001	0.001	0.001	R	0.001			1
	--	175	2	2			Horn Platform						1.000	15.00	1.00	1
10	--	150	1	1			--	0.001	0.001	0.001	0.001	R	0.001			1
	--	150	1	1			Rest Platform						1.000	15.00	0.50	1
11	--	100	1	2			--	0.001	0.001	0.001	0.001	R	0.001			1
	--	100	1	3			Platform						1.000	45.00	4.00	1
12	--	50	1	1			--	0.001	0.001	0.001	0.001	R	0.001			1
	--	50	1	1			Rest Platform						1.000	15.00	0.50	1
13	AT&T MOBILITY	272	1	1	Proposed	Raycap	DC6-48-60-18-8F	23.5	9.7	9.7	20	R	1.000			0.8
	AT&T MOBILITY	272	3	3			Sector Frames						0.750	14.40	0.40	0.75
14	AT&T MOBILITY	272	2	2	Proposed	Raycap	DC6-48-60-18-8F ("Squid")	24	11	11	31.8	R	1.000			0.8
	AT&T MOBILITY	272	1	1			--						0.001	0.00	0.00	1
15	AT&T MOBILITY	272	6	3		Powerwave Allgon	LGP17201	13.9	14.4	3.7	31	F	0.500			0.8
	AT&T MOBILITY	272	1	1			--						0.001	0.00	0.00	1
16	AT&T MOBILITY	272	3	3	Proposed	Ericsson	RRUS 4426 B66	15	13.2	5.8	48.4	F	0.670			0.8
	AT&T MOBILITY	272	1	1			--						0.001	0.00	0.00	1
17	AT&T MOBILITY	272	3	3		Powerwave Allgon	7770	55	11	5	35	F	0.650			0.8
	AT&T MOBILITY	272	1	1			--						0.001	0.00	0.00	1
18	AT&T MOBILITY	272	3	3	Proposed	Ericsson	RRUS 4449 B5, B12	17.9	13.2	9.4	71	F	0.670			0.8
	AT&T MOBILITY	272	1	1			--						0.001	0.00	0.00	1
19	AT&T MOBILITY	272	3	3	Proposed	Ericsson	RRUS 4478 B14	18.1	13.4	8.3	59.4	F	0.670			0.8
	AT&T MOBILITY	272	1	1			--						0.001	0.00	0.00	1
20	AT&T MOBILITY	272	3	3		Kaelus	DBC0061F1V51-2	8	6.5	6.2	25.5	F	0.500			0.8
	AT&T MOBILITY	272	1	1			--						0.001	0.00	0.00	1
21	AT&T MOBILITY	272	3	3	Proposed	Ericsson	RRUS-32 B30 (77 lbs)	29.9	13.3	9.5	77	F	0.710			0.8
	AT&T MOBILITY	272	1	1			--						0.001	0.00	0.00	1
22	AT&T MOBILITY	272	3	3		Ericsson	RRUS 32 B2	27.2	12.1	7	53	F	0.670			0.8
	AT&T MOBILITY	272	1	1			--						0.001	0.00	0.00	1
23	AT&T MOBILITY	272	2	2	Proposed	CCI	DMP65R-BU6DA	71.2	20.7	7.7	79.4	F	0.720			0.8
	AT&T MOBILITY	272	2	2	Proposed	CCI	OAP65R-BU6D						0.720	12.87	0.06	0.8
24	AT&T MOBILITY	272	2	2		Quintel	QS66512-2	72	12	9.6	111	F	0.740			0.8
	AT&T MOBILITY	272	1	1			--						0.001	0.00	0.00	1
25	AT&T MOBILITY	272	1	1	Proposed	CCI	DMP65R-BU8D	96	20.7	7.7	95.7	F	0.720			0.8
	AT&T MOBILITY	272	1	1	Proposed	CCI	OAP65R-BU8D						0.720	18.09	0.08	0.8
26	AT&T MOBILITY	272	1	1		CCI	TPA-65R-LCUUUU-H8	96	14.4	8.6	81.6	F	0.690			0.8
	AT&T MOBILITY	272	1	1			--						0.001	0.00	0.00	1
27	SPRINT NEXTEL	259	6	3			Swedcom ALP 9011-DIN	43	6.5	8	10	F	0.740			0.8
	SPRINT NEXTEL	259	3	3			Sector Frames						0.750	14.40	0.40	0.75
28	VERIZON WIRELESS	171	6	3		RFS	FD9R6004/2C-3L	5.8	6.5	1.5	2.6	F	0.500			0.8
	VERIZON WIRELESS	171	1	1			Flat Sector Frames						0.750	14.40	0.40	0.75
29	VERIZON WIRELESS	171	3	3		Nokia	B5 RRH4x40-850	13	12.2	6.9	48.5	F	0.500			0.8
	VERIZON WIRELESS	171	1	1			--						0.001	0.00	0.00	1
30	VERIZON WIRELESS	171	3	3		Alcatel-Lucent	RRH2X60-AWS	20.1	11.2	7.6	44	F	0.500			0.8
	VERIZON WIRELESS	171	1	1			--						0.001	0.00	0.00	1
31	VERIZON WIRELESS	171	3	3		Alcatel-Lucent	RRH2X60-1900	20.1	11.2	7.2	43	F	0.500			0.8
	VERIZON WIRELESS	171	1	1			--						0.001	0.00	0.00	1
32	VERIZON WIRELESS	171	3	3		Alcatel-Lucent	RRH2x60 700	21.5	12	9	56.7	F	0.670			0.8
	VERIZON WIRELESS	171	1	1			--						0.001	0.00	0.00	1
33	VERIZON WIRELESS	171	2	2		Raycap	RC3DC-3315-PF-48	28.9	15.7	10.3	32	F	0.650			0.8
	VERIZON WIRELESS	171	1	1			--						0.001	0.00	0.00	1
34	VERIZON WIRELESS	171	6	3		Antel	LPA-80080/6CF ___	70.9	5.5	13.2	21	F	0.690			0.8
	VERIZON WIRELESS	171	1	1			--						0.001	0.00	0.00	1
35	VERIZON WIRELESS	171	6	3		Commscope	JAHH-65B-R3B	72	13.8	8.2	60.6	F	0.500			1
	VERIZON WIRELESS	171	1	1			--						0.001	0.00	0.00	1
36	OTHER	145	6	3		Generic	TTA	12	12	6	10	F	0.670			1
	OTHER	145	1	1			--						0.001	0.00	0.00	1
37	OTHER	145	3	3		Generic	36" x 6" Panel	36	6	3	20	F	0.789			1
	OTHER	145	1	1			--						0.001	0.00	0.00	1
38																1
																1
39																1
																1
40																1
																1
41																1
																1
42																1
																1
43																1
																1
44																1
																1
45																1
																1
46																1
																1
47																1
																1
48																1
																1
49																1
																1
50																1
																1

No.	Elevation	C_AA_C	C_AA_C (Ice)	Force	Force (Ice)	Weight	Weight (Ice)	60 Azi	Force	F (Ice)	Height	Sum of Forces (No I	
	(ft)	(ft^2)	(ft^2)	(lb)	(lb)	(lb)	(lb)	Mult.	mean	mean	Flag	60 Azi.	180 Azi.
1	302.5	0.00	0.00	0.000	0.000	0	0	1.00	0.00	0.00			
	302.5	60.00	81.00	2154.077	496.551	4800	6240	1.00	1184.74	273.10	1.5033058	2154.07673	
2	287.5	0.00	0.00	0.000	0.000	0	0	1.00	0.00	0.00	1.5033068		
	287.5	60.00	81.00	2123.002	489.388	4800	6240	1.00	1167.65	269.16	1.5034783	2123.002211	
3	268.75	0.00	0.00	0.000	0.000	0	0	1.00	0.00	0.00	1.5034793		
	268.75	45.00	60.75	1561.864	360.036	3000	3900	1.00	859.03	198.02	1.5037209	1561.864366	
4	237.5	0.00	0.00	0.000	0.000	0	0	1.00	0.00	0.00	1.5037219		
	237.5	15.00	20.25	502.555	115.847	600	780	1.00	276.41	63.72	1.5042105	502.5549219	
5	212.5	0.00	0.00	0.000	0.000	0	0	1.00	0.00	0.00	1.5042115		
	212.5	15.00	20.25	486.835	112.224	4800	6240	1.00	267.76	61.72	1.5047059	486.8354488	
6	200	0.00	0.00	0.000	0.000	0	0	1.00	0.00	0.00	1.5047069		
	200	45.00	60.75	1435.426	330.890	3000	3900	1.00	789.48	181.99	1.5050000	1435.426285	
7	187.5	0.00	0.00	0.000	0.000	0	0	1.00	0.00	0.00	1.5050010		
	187.5	45.00	60.75	1409.200	324.845	3000	3900	1.00	775.06	178.66	1.5050010	1409.200173	
8	187.5	0.00	0.00	0.000	0.000	0	0	1.00	0.00	0.00	1.5050020		
	187.5	50.00	67.50	1565.778	360.939	3000	3900	1.00	861.18	198.52	1.5053333	2974.978143	
9	175	0.00	0.00	0.000	0.000	0	0	1.00	0.00	0.00	1.5053343		
	175	30.00	40.50	921.129	212.336	2400	3120	1.00	506.62	116.78	1.5057143	921.129111	
10	150	0.00	0.00	0.000	0.000	0	0	1.00	0.00	0.00	1.5057153		
	150	15.00	20.25	440.720	101.593	600	780	1.00	242.40	55.88	1.5066667	440.7201	
11	100	0.00	0.00	0.000	0.000	0	0	1.00	0.00	0.00	1.5066677		
	100	45.00	60.75	1177.531	271.441	4800	6240	1.00	647.64	149.29	1.5100000	1177.530932	
12	50	0.00	0.00	0.000	0.000	0	0	1.00	0.00	0.00	1.5100010		
	50	15.00	20.25	321.990	74.224	600	780	1.00	177.09	40.82	1.5200000	321.9900855	
13	272	1.01	1.33	35.284	7.886	24	82	1.00	19.41	4.34	1.5200010		
	272	24.30	32.81	634.731	146.316	1440	1872	1.00	349.10	80.47	1.5200010	670.0153975	
14	272	2.35	3.00	81.729	17.867	76	152	1.00	44.95	9.83	1.5200020		
	272	0.00	0.00	0.000	0.000	1	2	1.00	0.00	0.00	1.5036765	751.7439758	
15	272	4.00	6.08	139.421	36.183	223	302	1.00	76.68	19.90	1.5036775		
	272	0.00	0.00	0.000	0.000	1	2	1.00	0.00	0.00	1.5036765	891.1654759	
16	272	2.65	4.04	92.404	24.023	174	245	1.00	50.82	13.21	1.5036775		
	272	0.00	0.00	0.000	0.000	1	2	1.00	0.00	0.00	1.5036765	983.5698451	
17	272	8.59	11.24	299.281	66.834	126	262	1.00	164.60	36.76	1.5036775		
	272	0.00	0.00	0.000	0.000	1	2	1.00	0.00	0.00	1.5036765	1282.851009	
18	272	3.17	4.73	110.269	28.122	256	354	1.00	60.65	15.47	1.5036775		
	272	0.00	0.00	0.000	0.000	1	2	1.00	0.00	0.00	1.5036765	1393.120216	
19	272	3.25	4.84	113.191	28.778	214	303	1.00	62.25	15.83	1.5036775		
	272	0.00	0.00	0.000	0.000	1	2	1.00	0.00	0.00	1.5036765	1506.310894	
20	272	0.58	0.99	20.154	5.897	92	122	1.00	11.08	3.24	1.5036775		
	272	0.00	0.00	0.000	0.000	1	2	1.00	0.00	0.00	1.5036765	1526.464444	
21	272	5.65	8.09	196.668	48.085	277	412	1.00	108.17	26.45	1.5036775		
	272	0.00	0.00	0.000	0.000	1	2	1.00	0.00	0.00	1.5036765	1723.132401	
22	272	4.41	6.44	153.597	38.278	191	291	1.00	84.48	21.05	1.5036775		
	272	0.00	0.00	0.000	0.000	1	2	1.00	0.00	0.00	1.5036765	1876.728974	
23	272	14.64	18.61	509.918	110.674	191	479	1.00	280.46	60.87	1.5036775		
	272	14.83	20.02	413.089	95.224	152	197	1.00	227.20	52.37	1.5036765	2799.735975	
24	272	9.63	11.93	335.384	70.920	266	500	1.00	184.46	39.01	1.5036775		
	272	0.00	0.00	0.000	0.000	1	2	1.00	0.00	0.00	1.5036765	3135.120233	
25	272	10.29	12.46	358.506	74.085	115	476	1.00	197.18	40.75	1.5036775		
	272	10.42	14.07	290.302	66.919	92	119	1.00	159.67	36.81	1.5036765	3783.927773	
26	272	7.34	8.63	255.647	51.294	98	378	1.00	140.61	28.21	1.5036775		
	272	0.00	0.00	0.000	0.000	1	2	1.00	0.00	0.00	1.5036765	4039.574692	
27	259	11.88	15.54	407.983	91.131	72	161	1.00	224.39	50.12	1.5036775		
	259	24.30	32.81	625.912	144.283	1440	1872	1.00	344.25	79.36	1.5038610	1033.894905	
28	171	0.75	1.55	22.999	8.057	19	29	1.00	12.65	4.43	1.5038620		
	171	8.10	10.94	185.300	42.715	480	624	1.00	101.92	23.49	1.5058480	208.2990266	
29	171	1.59	2.49	48.376	12.943	175	238	1.00	26.61	7.12	1.5058490		
	171	0.00	0.00	0.000	0.000	1	2	1.00	0.00	0.00	1.5058480	256.6754309	
30	171	2.25	3.40	68.666	17.726	158	233	1.00	37.77	9.75	1.5058490		
	171	0.00	0.00	0.000	0.000	1	2	1.00	0.00	0.00	1.5058480	325.3418501	
31	171	2.25	3.40	68.666	17.726	155	228	1.00	37.77	9.75	1.5058490		
	171	0.00	0.00	0.000	0.000	1	2	1.00	0.00	0.00	1.5058480	394.0082694	
32	171	3.46	5.14	105.452	26.788	204	295	1.00	58.00	14.73	1.5058490		
	171	0.00	0.00	0.000	0.000	1	2	1.00	0.00	0.00	1.5058480	499.460254	
33	171	3.93	5.53	119.944	28.802	77	175	1.00	65.97	15.84	1.5058490		
	171	0.00	0.00	0.000	0.000	1	2	1.00	0.00	0.00	1.5058480	619.4046127	
34	171	30.14	35.68	919.192	185.835	151	339	1.00	505.56	102.21	1.5058490		
	171	0.00	0.00	0.000	0.000	1	2	1.00	0.00	0.00	1.5058480	1538.596495	
35	171	27.34	34.10	833.928	177.613	436	702	1.00	458.66	97.69	1.5058490		
	171	0.00	0.00	0.000	0.000	1	2	1.00	0.00	0.00	1.5058480	2372.524683	
36	145	4.82	7.66	140.369	38.061	72	111	1.00	77.20	20.93	1.5058490		
	145	0.00	0.00	0.000	0.000	1	2	1.00	0.00	0.00	1.5068966	140.3693676	
37	145	4.81	7.00	140.035	34.756	72	127	1.00	77.02	19.12	1.5068976		
	145	0.00	0.00	0.000	0.000	1	2	1.00	0.00	0.00	1.5068966	280.4041067	
38					#VALUE!			1.00	#VALUE!	#VALUE!	1.5068976		
								1.00	#VALUE!	#VALUE!	1.5068976	#VALUE!	
39					#VALUE!			1.00	#VALUE!	#VALUE!	1.5068986		
								1.00	#VALUE!	#VALUE!	1.5068986	#VALUE!	
40					#VALUE!			1.00	#VALUE!	#VALUE!	1.5068996		
								1.00	#VALUE!	#VALUE!	1.5068996	#VALUE!	
41					#VALUE!			1.00	#VALUE!	#VALUE!	1.5069006		
								1.00	#VALUE!	#VALUE!	1.5069006	#VALUE!	
42					#VALUE!			1.00	#VALUE!	#VALUE!	1.5069016		
								1.00	#VALUE!	#VALUE!	1.5069016	#VALUE!	
43					#VALUE!			1.00	#VALUE!	#VALUE!	1.5069026		
								1.00	#VALUE!	#VALUE!	1.5069026	#VALUE!	
44					#VALUE!			1.00	#VALUE!	#VALUE!	1.5069036		
								1.00	#VALUE!	#VALUE!	1.5069036	#VALUE!	
45					#VALUE!			1.00	#VALUE!	#VALUE!	1.5069046		
								1.00	#VALUE!	#VALUE!	1.5069046	#VALUE!	
46					#VALUE!			1.00	#VALUE!	#VALUE!	1.5069056		
								1.00	#VALUE!	#VALUE!	1.5069056	#VALUE!	
47					#VALUE!			1.00	#VALUE!	#VALUE!	1.5069066		
								1.00	#VALUE!	#VALUE!	1.5069066	#VALUE!	
48					#VALUE!			1.00	#VALUE!	#VALUE!	1.5069076		
								1.00	#VALUE!	#VALUE!	1.5069076	#VALUE!	
49					#VALUE!			1.00	#VALUE!	#VALUE!	1.5069086		
								1.00	#VALUE!	#VALUE!	1.5069086	#VALUE!	
50					#VALUE!			1.00	#VALUE!	#VALUE!	1.5069096		
								1.00	#VALUE!	#VALUE!	1.5069096	#VALUE!	

Foundation

Site No.:	88013
Engineer:	T. Kassakatis
Date:	03/03/21
Carrier:	AT&T

Design Loads (Factored)

Compression/Leg:	380.31	k
Uplift/Leg:	239.51	k
Shear/Leg	69.53	k

Face Width @ Top of Pier (d_1):	4.00	ft
Face Width @ Bottom of Pier (d_2):	7.00	ft
Total Length of Pier (l):	9.00	ft
Height of Pedestal Above Ground (h):	0.67	ft
Width of Pad (W):	11.00	ft
Length of Pad (L):	11.00	ft
Thickness of Pad (t):	2.00	ft
Water Table Depth (w):	30.00	ft
Unit Weight of Concrete:	150.0	pcf
Unit Weight of Soil (Above Water Table):	120.0	pcf
Unit Weight of Soil (Below Water Table):	57.6	pcf
Friction Angle of Uplift (A):	35	°
Ultimate Compressive Bearing Pressure:	21534	psf
Ultimate Skin Friction:	886	psf

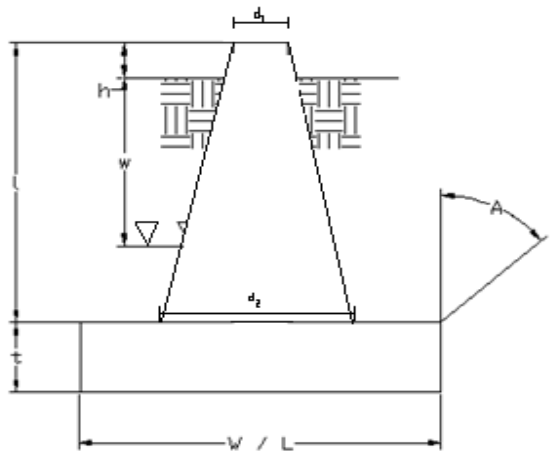

Volume Pier (Total):	279.00	ft³
Volume Pad (Total):	242.00	ft³
Volume Soil (Total):	2105.93	ft³
Volume Pier (Buoyant):	0.00	ft³
Volume Pad (Buoyant):	0.00	ft³
Volume Soil (Buoyant):	0.00	ft³
Weight Pier:	41.85	k
Weight Pad:	205.05	k
Weight Soil:	252.71	k
Uplift Skin Friction:	58.48	k

Berms/Leg:

Volume 1125 ft³

Uplift Check

ϕs Uplift Resistance (k)	Ratio	Result
418.57	0.57	**OK**

Axial Check

ϕs Axial Resistance (k)	Ratio	Result
1954.21	0.19	**OK**

Anchor Bolt Check

Bolt Diameter (in)	2
# of Bolts	6
Steel Grade	A36
Steel Fy	36
Steel Fu	58
Detail Type	C

Usage Ratio	Result
0.53	**OK**

EXHIBIT 4

AMERICAN TOWER®
CORPORATION

This report was prepared for American Tower Corporation by

POD
POWER OF DESIGN

Antenna Mount Analysis Report

ATC Site Name	:	**KILLINGWORTH**
ATC Site Number	:	**88013**
Engineering Number	:	**13626645_C8_07**
Mount Elevation	:	**272 ft**
Carrier	:	**AT&T Mobility**
Carrier Site Name	:	**MRCTB048903**
Carrier Site Number	:	**CTL02016**
Site Location	:	**131 Little City Road** **Killingworth, CT 06419** **41.42877778, -72.60380556**
County	:	**Middlesex**
Date	:	**July 8, 2021**
Max Usage	:	**55 %**
Result	:	**Replacement (Pass)**

Prepared By: Uma Toluganti
Jason Cheronis
Vice President of Structural Engineering

STATE OF CONNECTICUT
JASON CHERONIS
PEN.0032793
LICENSED
PROFESSIONAL ENGINEER

Table of Contents

Introduction 1

Supporting Documents 1

Analysis 1

Conclusion 1

Antenna Loading 2

Structure Usages 2

Mount Layout 3

Standard Conditions 5

Calculations ..... Attached

Introduction

The purpose of this report is to summarize results of the antenna mount analysis performed for AT&T Mobility at 271 ft.

Supporting Documents

Spec Sheet	Commscope Part # SFG22HDX14-5-WLL dated January 11, 2019
Structural Analysis	ATC Engineering #13626645_C3_01, dated February 26, 2021
RFDS	RFDS dated March 4, 2021
Photos	Site photos from 2019

Analysis

This antenna mount was analyzed using RISA-3D v17 analysis software.

Basic Wind Speed:	121 mph, Vult (3-Second Gust)
Basic Wind Speed w/ Ice:	50 mph (3-Second Gust) w/ 1" Radial Ice (Escalating)
Codes:	TIA-222-H
Structure Class:	II
Exposure Category:	B
Topographic Factor Procedure:	Method 2
Topographic Feature:	Flat
Crest Height:	0 ft
Spectral Response:	Ss = 0.213, S_1 = 0.055
Site Class:	D (assumed)

Conclusion

Due to customer antenna spacing/separation requirements, the existing mount cannot support the equipment as described in this report and must be replaced with the Commscope Part # SFG22HDX14-5-WLL. Based on the analysis results, the proposed mount meets the requirements, per the applicable codes listed above, and can support the equipment as described in this report

If you have any questions or require additional information, please contact POD Group via email at mhoudeshell@podgrp.com. Please include the American Tower site name, site number, and engineering number in the subject line for any questions.

Antenna Loading

Mount Centerline (ft)	Antenna Centerline (ft)	Qty	Antenna Model
272.0	272.0	1	CCI DMP65R-BU8D
		2	CCI DMP65R-BU6DA
		1	CCI OPA65R-BU8D
		2	CCI OPA65R-BU6D
		1	CCI TPA-65R-LCUUUU-H8
		2	Quintel QS66512-2
		3	Powerwave Allgon 7770.00
		6	Powerwave Allgon LGP17201
		3	Kaelus DBC0061F1V51-2
		1	Raycap DC6-48-60-18-8F *
		2	Raycap DC6-48-60-18-8F ("Squid") *
		3	Ericsson RRUS 4426 B66
		3	Ericsson RRUS 4449 B5, B12
		3	Ericsson RRUS 4478 B14 *
		3	Ericsson RRUS-32 B30 (77 lbs)
		3	Ericsson RRUS 32 B2
		1	PCTEL GPS-TMG-HR-26N *

***Equipment assumed to be mounted directly to tower.**

Structure Usages

Structural Component	Controlling Usage	Pass/Fail
Plate	55 %	Pass
Face	36 %	Pass
Diagonal	34 %	Pass
Kicker	34 %	Pass
Vertical	32 %	Pass
Channel	24 %	Pass
Mount Pipes	30 %	Pass
Tieback	8 %	Pass

Mount Layout

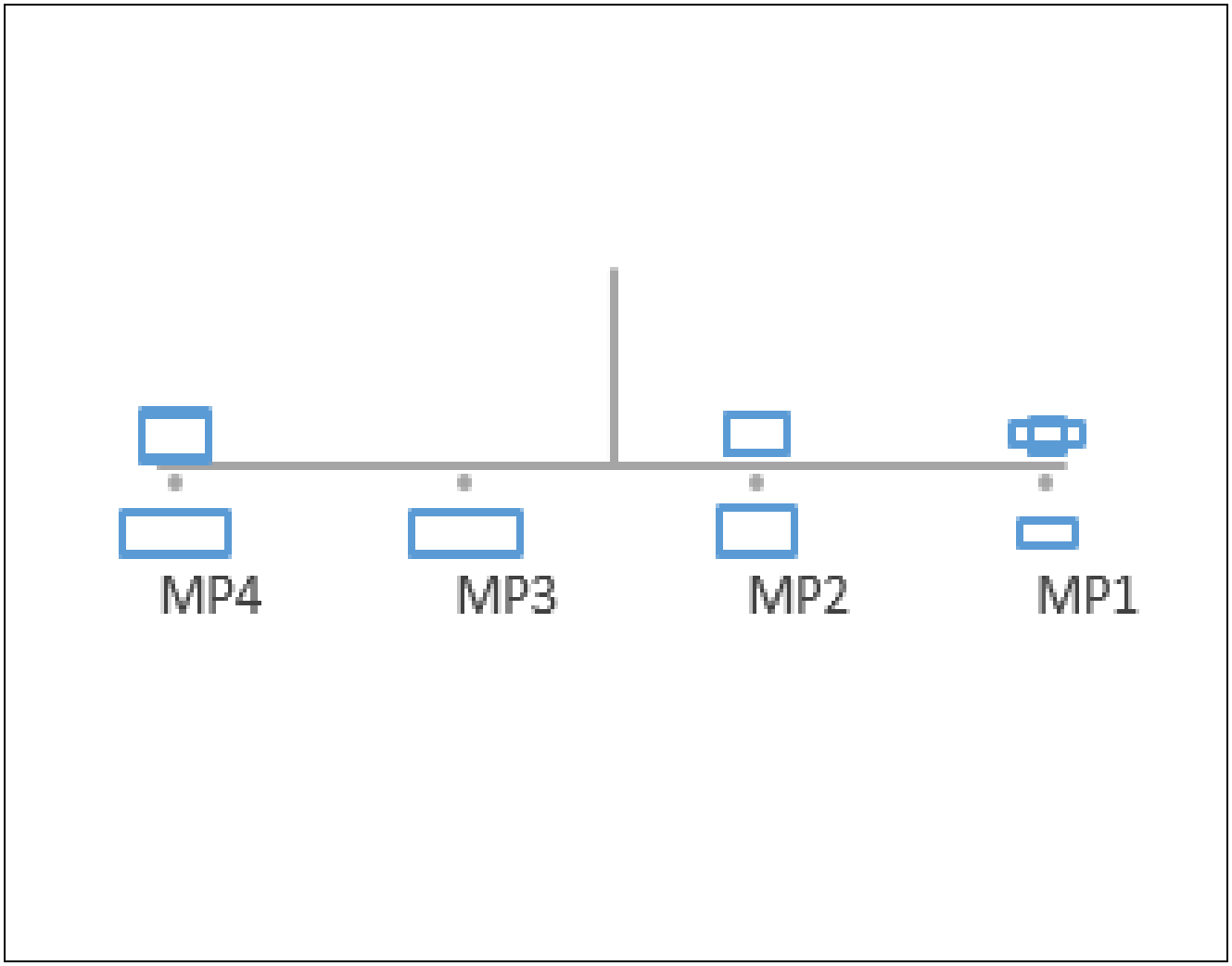

Equipment Model	Quantity	Height (in)	Width (in)	Depth (in)	Azimuth	Sector	Mount Pipe #
7770	5	55	11	5		A	1
TPA-65R-LCUUUU-H8	5	96	14.4	8.6		A	2
OPA65R-BU8D	5	96	21	7.8		A	3
DMP65R-BU8D	5	96	20.7	7.7		A	4
LGP17201	5	14.4	13.9	3.7		A	1
DBC0061F1V51-2	5	8	6.5	6.2		A	1
RRUS 32 B30	5	27.2	12.1	7		A	2
RRUS 32 B2	5	27.2	12.05	7		A	2
RRUS 4449 B5/B12	5	17.9	13.19	9.44		A	4
RRUS 4426 B66	5	16.5	13.4	7.7		A	4

Equipment Layout

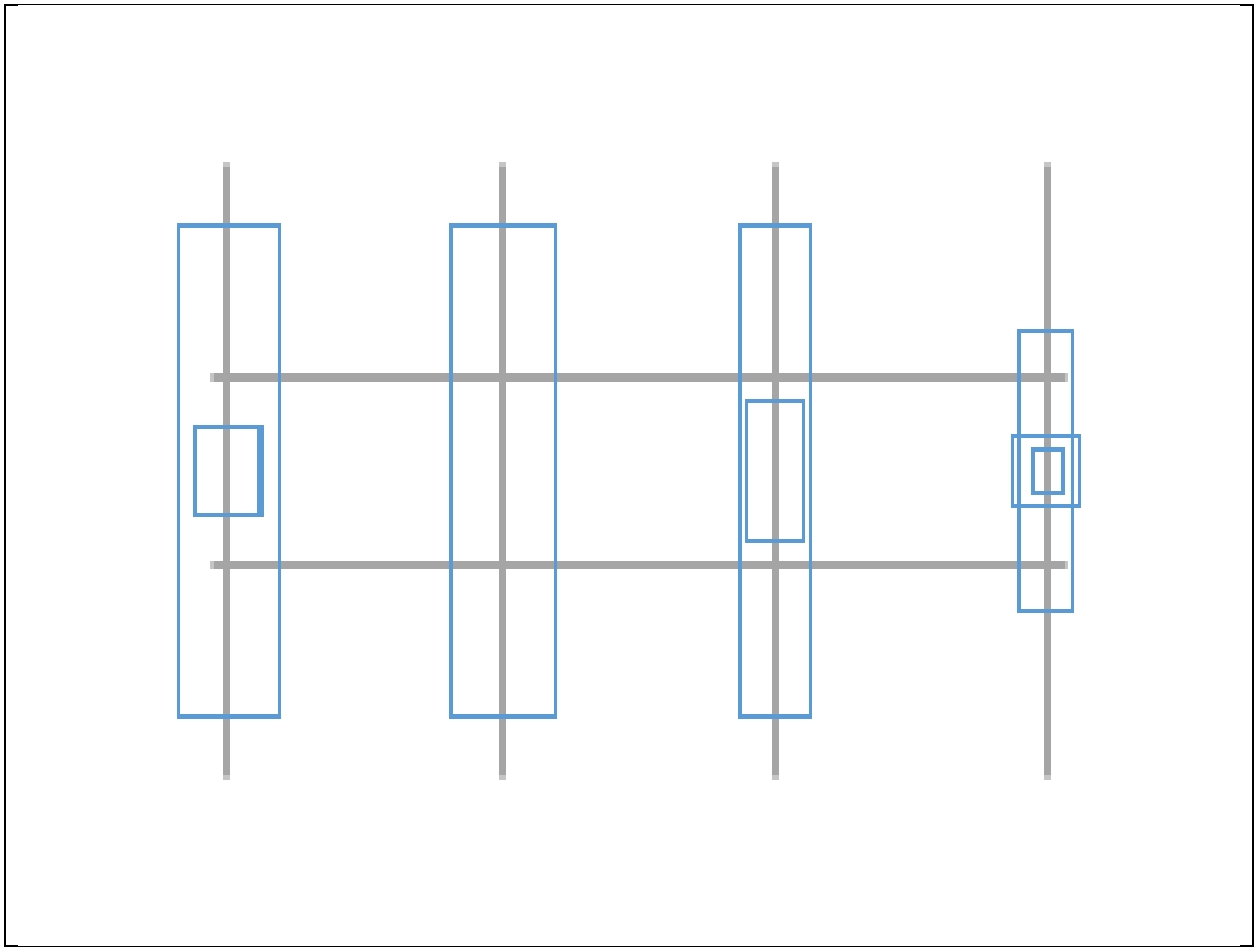

Equipment Model	Quantity	Height (in)	Width (in)	Depth (in)	Azimuth	Sector	Mount Pipe #
7770	5	55	11	5		A	1
TPA-65R-LCUUUU-H8	5	96	14.4	8.6		A	2
OPA65R-BU8D	5	96	21	7.8		A	3
DMP65R-BU8D	5	96	20.7	7.7		A	4
LGP17201	5	14.4	13.9	3.7		A	1
DBC0061F1V51-2	5	8	6.5	6.2		A	1
RRUS 32 B30	5	27.2	12.1	7		A	2
RRUS 32 B2	5	27.2	12.05	7		A	2
RRUS 4449 B5/B12	5	17.9	13.19	9.44		A	4
RRUS 4426 B66	5	16.5	13.4	7.7		A	4

Standard Conditions

All engineering services performed by POD Group are prepared on the basis that the information used is current and correct. This information may consist of, but is not limited to the following:

- Information supplied by the client regarding antenna, mounts and feed line loading
- Information from drawings, design and analysis documents, and field notes in the possession of POD Group

It is the responsibility of the client to ensure that the information provided to POD Group and used in the performance of our engineering services is correct and complete.

POD Group assumes that all structures were constructed in accordance with the drawings and specifications.

All connections are to be verified for condition and tightness by the installation contractor preceding any changes to the appurtenance mounting system and/or equipment attached to it.

Unless explicitly agreed by both the client and POD Group, all services will be performed in accordance with the current revision of ANSI/TIA-222.

All services are performed, results obtained, and recommendations made in accordance with generally accepted engineering principles and practices. POD Group is not responsible for the conclusions, opinions and recommendations made by others based on the information supplied herein.

POD Job #	**21-10126**
Site Number	**88013**
Site Name	**KILLINGWORTH**

General Site Information

Mount Type	MF	Risk Category	II	I (seismic)	1			
V (Wind Speed)	121	I(ice)	1	Sms	0.341			
Zs	620			Sm1	0.132		width (ft)	height (ft)
ti	1	Ss	0.213	Sds	0.227	Front Outer Dimensions	14.5	3.083
Vi	50	S1	0.055	Sd1	0.088	Side Outer Dimensions	3	3.083
Kzt	1	Soil Site Class	D (assumed)	Seismic Design Category				
Exposure	B	Fa	1.600	B		Number of Sectors	1	
zg	1200	Fv	2.400	Seismic Analysis Not Required				
α	7			R	2 TIA-222-H 16.7			
Kmin	0.7	Tower Type	Self Support	As	1 TIA-222-H 16.7			
G_H	1	Tower Height	302.5	Cs, Min	0.03 TIA-222-H 2.7.7.1.1			
Ke	0.98			Cs	0.1136 TIA-222-H 2.7.7.1.1			
K_D	0.95							
K_a	0.9							

Appurtenance Information

Model	Shielded	% Shielded	Centerline	Centerline on MP	Spacing (in)	Azimuth	Sector	Quantity	MP #
7770			272	5	50	0	A	1	1
TPA-65R-LCUUUU-H8			272	5	70	0	A	1	2
OPA65R-BU8D			272	5	70	0	A	1	3
DMP65R-BU8D			272	5	70	0	A	1	4
LGP17201			272	5	0	0	A	2	1
DBC0061F1V51-2			272	5	0	0	A	1	1
RRUS 32 B30			272	5	0	0	A	1	2
RRUS 32 B2			272	5	0	0	A	1	2
RRUS 4449 B5/B12			272	5	0	0	A	1	4
RRUS 4426 B66			272	5	0	0	A	1	4

Mount Information

Elevation (ft)	271	Grating Thickness (in)	0
K_z	1.31	Grating Ice Weight (k/ft^2)	0.012
Kiz	1.23		
tiz	1.23		

	Length (ft)	Width (in)	Centerline
Mount Pipes	10	2.875	271

Round Members

Member	Length (ft)	Width (in)	Frame Member	# of Members
Diagonal	4.347	0.75	Side	2
Face	14.5	2.875	Front	2
Kicker	3.613	2.375	Side	4
Support Pipe	4	3.5	No	1
Tieback	8.092	2.375	No	2
Vertical	2.803	0.75	Side	2

Flat Members

Member	Length (ft)	Width (in)	Shape	A	B	C	D	Frame Member	# of Members
Back Plate	0.319	0.625	Channel	0	8	0	0.625	No	4
Channel	1.16	3.5	Channel	3.5	4	0.1875	0.375	No	2
Plate	0.194	0.5	Channel	0	4	0	0.5	No	8

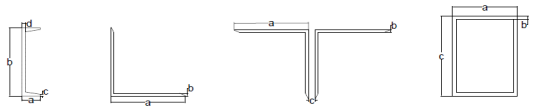

Version 3.54

Appurtenance Wind Calculations

Model	Height	Width	Depth	Weight (lbs)	Kz	qz (lb/ft$_2$)	$(EPA)_N$ (ft^2)	$(EPA)_T$(ft^2)	Wind Force (Kips) Front	Side	Alpha	Beta	Gamma
7770	55.0	11.0	5.0	35.0	1.32	45.79	4.96	2.64	0.227	0.121	0.200	0.200	0.121
TPA-65R-LCUUUU-H8	96.0	14.4	8.6	81.6	1.32	45.79	11.97	7.94	0.548	0.364	0.502	0.502	0.364
OPA65R-BU8D	96.0	21.0	7.8	76.5	1.32	45.79	16.28	7.38	0.746	0.338	0.644	0.644	0.338
DMP65R-BU8D	96.0	20.7	7.7	105.6	1.32	45.79	16.08	7.31	0.737	0.335	0.636	0.636	0.335
LGP17201	14.4	13.9	3.7	31.0	1.32	45.79	1.50	0.42	0.069	0.019	0.056	0.056	0.019
DBC0061F1V51-2	8.0	6.5	6.2	25.4	1.32	45.79	0.39	0.37	0.018	0.017	0.018	0.018	0.017
RRUS 32 B30	27.2	12.1	7.0	53.0	1.32	45.79	2.47	1.50	0.113	0.069	0.102	0.102	0.069
RRUS 32 B2	27.2	12.1	7.0	52.9	1.32	45.79	2.46	1.50	0.113	0.069	0.102	0.102	0.069
RRUS 4449 B5/B12	17.9	13.2	9.4	71.0	1.32	45.79	1.77	1.27	0.081	0.058	0.075	0.075	0.058
RRUS 4426 B66	16.5	13.4	7.7	59.9	1.32	45.79	1.66	0.95	0.076	0.044	0.068	0.068	0.044

Appurtenance Ice Calculations

Model	tiz (in)	Height	Width	Depth	Weight (lbs)	Kiz	qz (lb/ft$_2$)	$(EPA)_N$ (ft^2)	$(EPA)_T$(ft^2)	Wind Force (Kips) Front	Side	Alpha	Beta	Gamma
7770	1.23	57.47	13.47	7.47	89.35	1.23	7.82	6.19	3.82	0.048	0.030	0.044	0.044	0.030
TPA-65R-LCUUUU-H8	1.23	98.47	16.87	11.07	210.64	1.23	7.82	14.00	9.97	0.109	0.078	0.102	0.102	0.078
OPA65R-BU8D	1.23	98.47	23.47	10.27	259.55	1.23	7.82	18.42	9.39	0.144	0.073	0.126	0.126	0.073
DMP65R-BU8D	1.23	98.47	23.17	10.17	256.04	1.23	7.82	18.22	9.32	0.142	0.073	0.125	0.125	0.073
LGP17201	1.23	16.87	16.37	6.17	31.21	1.23	7.82	2.07	0.79	0.016	0.006	0.014	0.014	0.006
DBC0061F1V51-2	1.23	10.47	8.97	8.67	15.94	1.23	7.82	0.70	0.68	0.006	0.005	0.005	0.005	0.005
RRUS 32 B30	1.23	29.67	14.57	9.47	58.00	1.23	7.82	3.24	2.16	0.025	0.017	0.023	0.023	0.017
RRUS 32 B2	1.23	29.67	14.52	9.47	57.85	1.23	7.82	3.23	2.16	0.025	0.017	0.023	0.023	0.017
RRUS 4449 B5/B12	1.23	20.37	15.66	11.91	50.89	1.23	7.82	2.39	1.82	0.019	0.014	0.018	0.018	0.014
RRUS 4426 B66	1.23	18.97	15.87	10.17	44.04	1.23	7.82	2.26	1.45	0.018	0.011	0.016	0.016	0.011

Round Members

Member	Wind Calculations q_z (lb/ft^2)	Ar	C	Rrf	Cas	EPA (ft^2)	Load (k/ft)	Ice Calculations Width (in)	Weight (k/ft)	q_z (lb/ft^2)	Arice	Rrfice	Cas	EPA (ft^2)	Load (k/ft)
Diagonal	45.75	0.54	8.45	0.61	1.20	0.18	0.001	3.22	0.00	7.81	2.33	0.63	1.20	0.79	0.001
Face	45.75	6.95	32.39	0.61	1.20	2.29	0.007	5.34	0.01	7.81	12.91	0.63	1.20	4.38	0.002
Kicker	45.75	2.86	26.76	0.61	1.20	0.47	0.003	4.84	0.01	7.81	5.83	0.63	1.20	0.99	0.001
Support Pipe	45.75	1.17	39.43	0.61	1.20	0.77	0.004	5.97	0.01	7.81	1.99	0.63	1.20	1.35	0.001
Tieback	45.75	3.20	26.76	0.61	1.20	1.05	0.003	4.84	0.01	7.81	6.53	0.63	1.20	2.22	0.001
Vertical	45.75	0.35	8.45	0.61	1.20	0.12	0.001	3.22	0.00	7.81	1.50	0.63	1.20	0.51	0.001

Flat Members

Member	Wind Calculations q_z (lb/ft^2)	Af	Cas	EPA	Load (k/ft)	Ice Calculations Width (in)	Weight (k/ft)	q_z (lb/ft^2)	Arice	Rrfice	Cas	EPA	Load (k/ft)
Back Plate	45.75	0.07	2.00	0.03	0.002	3.09	0.01	7.81	0.33	0.63	2.00	0.09	0.001
Channel	45.75	0.68	2.00	0.61	0.012	5.97	0.01	7.81	1.15	0.63	2.00	0.65	0.002
Plate	45.75	0.06	2.00	0.01	0.002	2.97	0.01	7.81	0.38	0.63	2.00	0.05	0.001

Appurtenance Seismic Calculations

Model	Weight	Sds	ρ	Cs	As	Ev	Eh
7770	35.0	0.227	1.000	0.114	1.000	0.002	0.004
TPA-65R-LCUUUU-H8	81.6	0.227	1.000	0.114	1.000	0.004	0.009
OPA65R-BU8D	76.5	0.227	1.000	0.114	1.000	0.003	0.009
DMP65R-BU8D	105.6	0.227	1.000	0.114	1.000	0.005	0.012
LGP17201	31.0	0.227	1.000	0.114	1.000	0.001	0.004
DBC0061F1V51-2	25.4	0.227	1.000	0.114	1.000	0.001	0.003
RRUS 32 B30	53.0	0.227	1.000	0.114	1.000	0.002	0.006
RRUS 32 B2	52.9	0.227	1.000	0.114	1.000	0.002	0.006
RRUS 4449 B5/B12	71.0	0.227	1.000	0.114	1.000	0.003	0.008
RRUS 4426 B66	59.9	0.227	1.000	0.114	1.000	0.003	0.007

Version 3.54

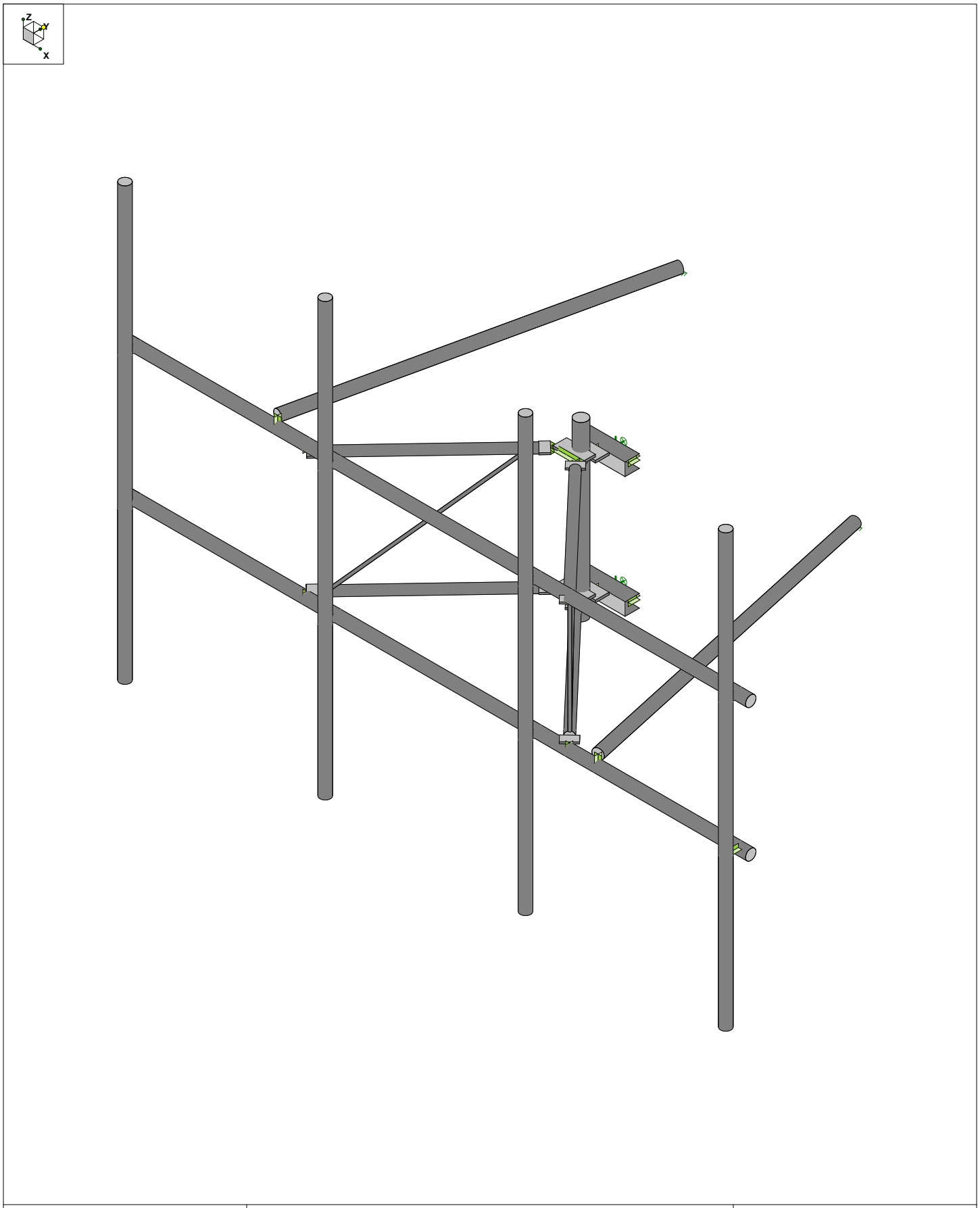

POD	88013	SK - 1
UT		July 8, 2021 at 2:29 PM
21-101296		(SF24) 14.5' Commscope Sector F...

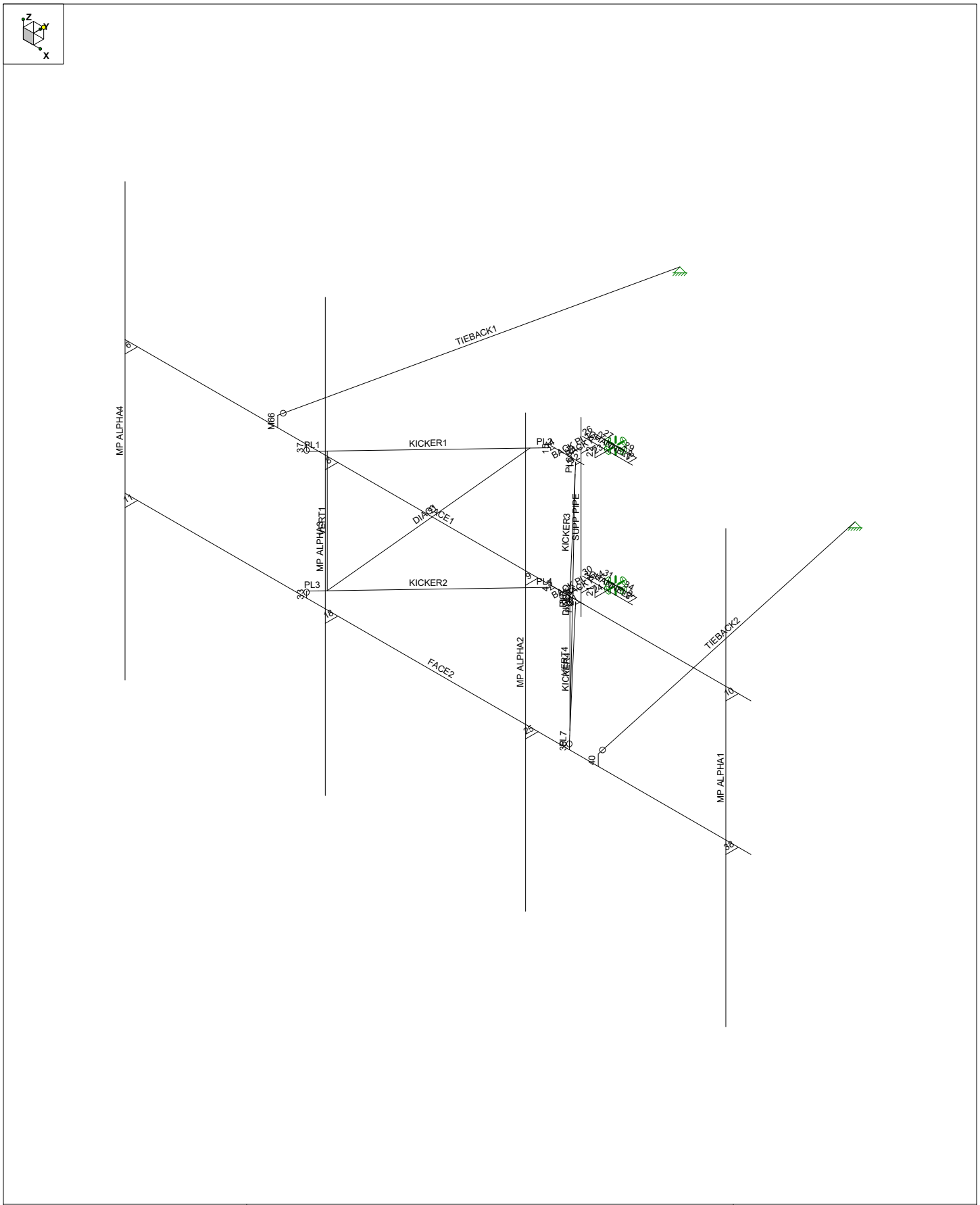

POD	88013	SK - 2
UT		July 8, 2021 at 2:30 PM
21-101296		(SF24) 14.5' Commscope Sector F...

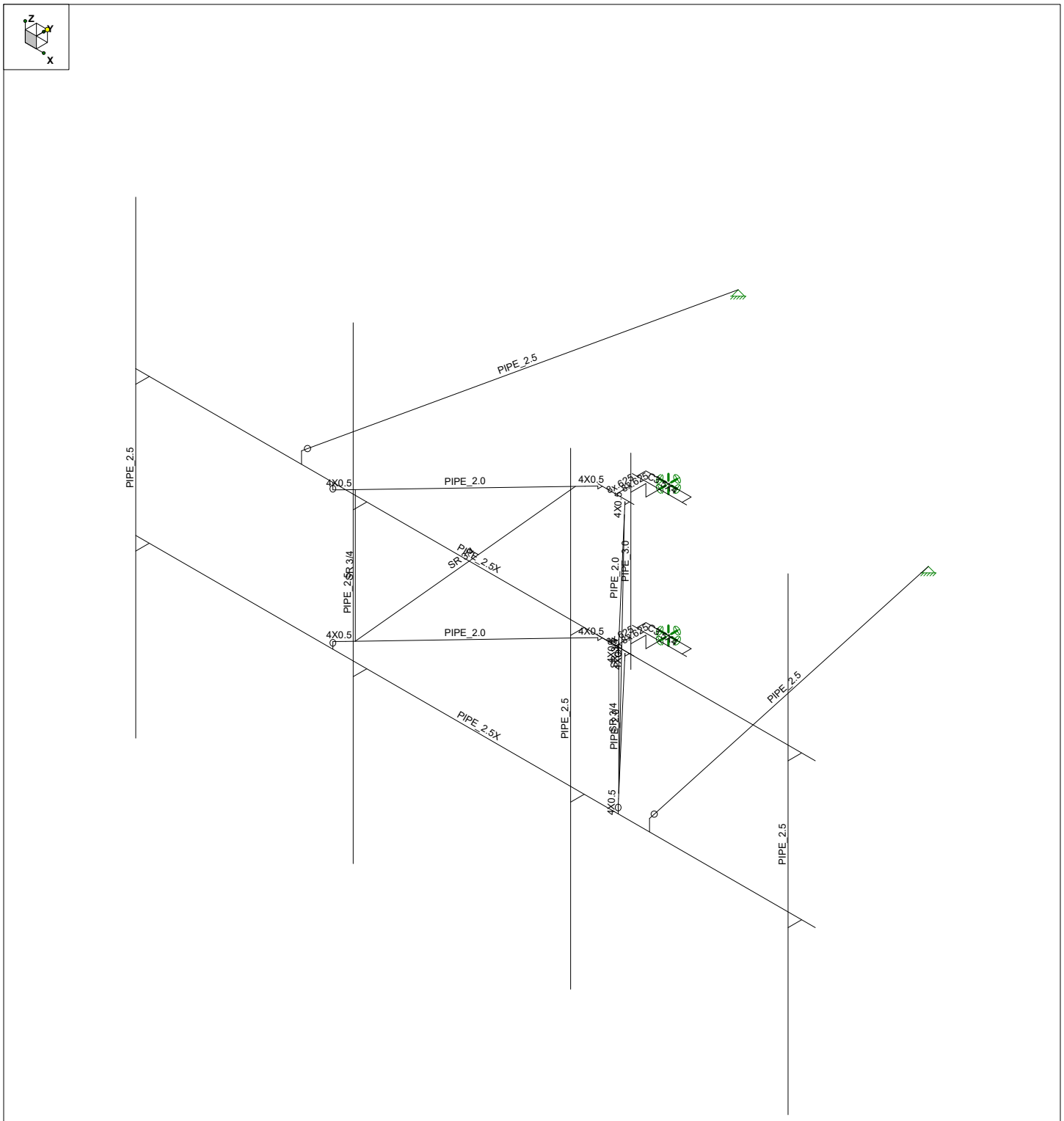

POD	88013	SK - 3
UT		July 8, 2021 at 2:30 PM
21-101296		(SF24) 14.5' Commscope Sector F...

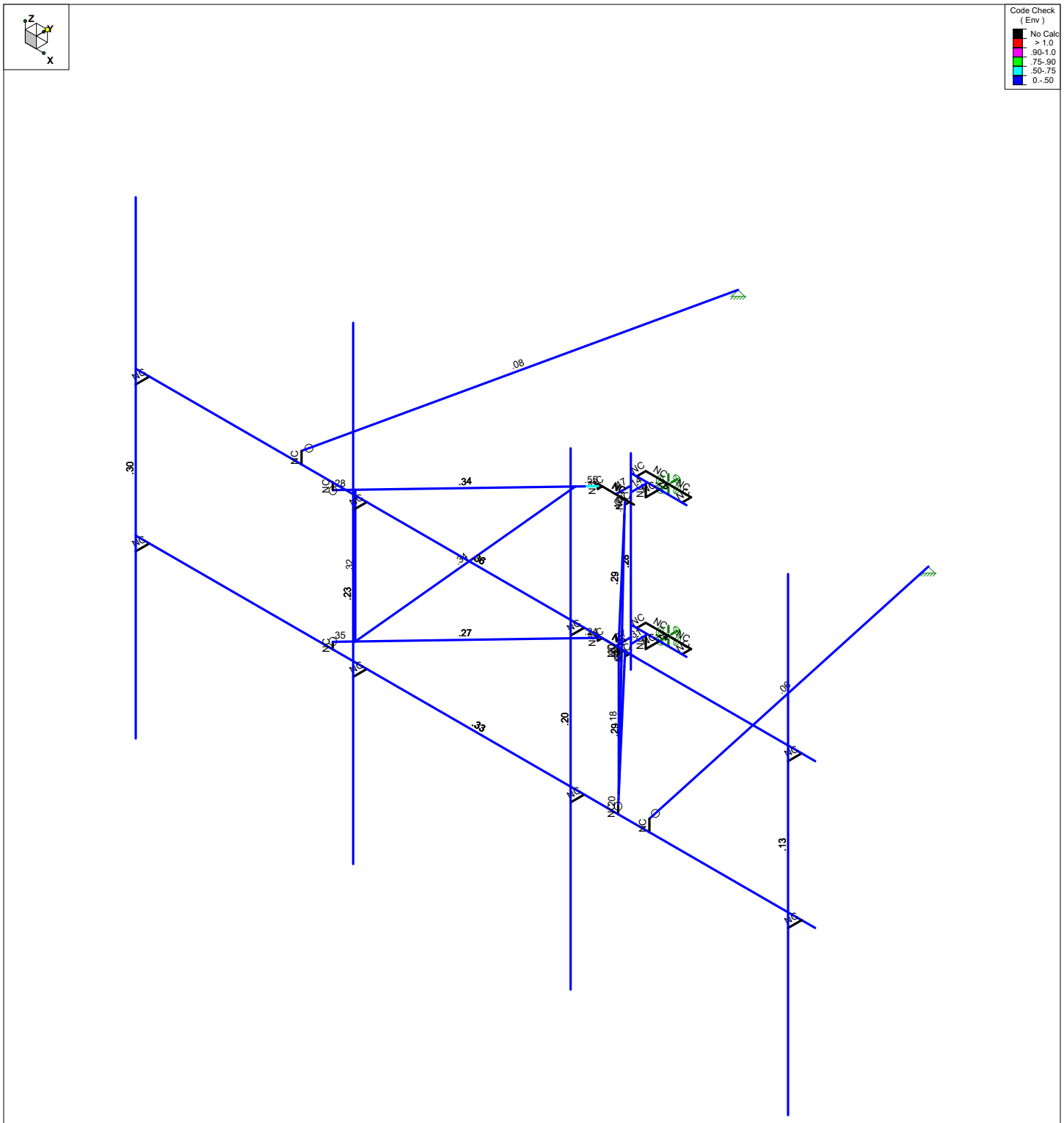

Member Code Checks Displayed (Enveloped)
Results for LC 1, 1.4D

POD	88013	SK - 4
UT		July 8, 2021 at 2:32 PM
21-101296		(SF24) 14.5' Commscope Sector F...

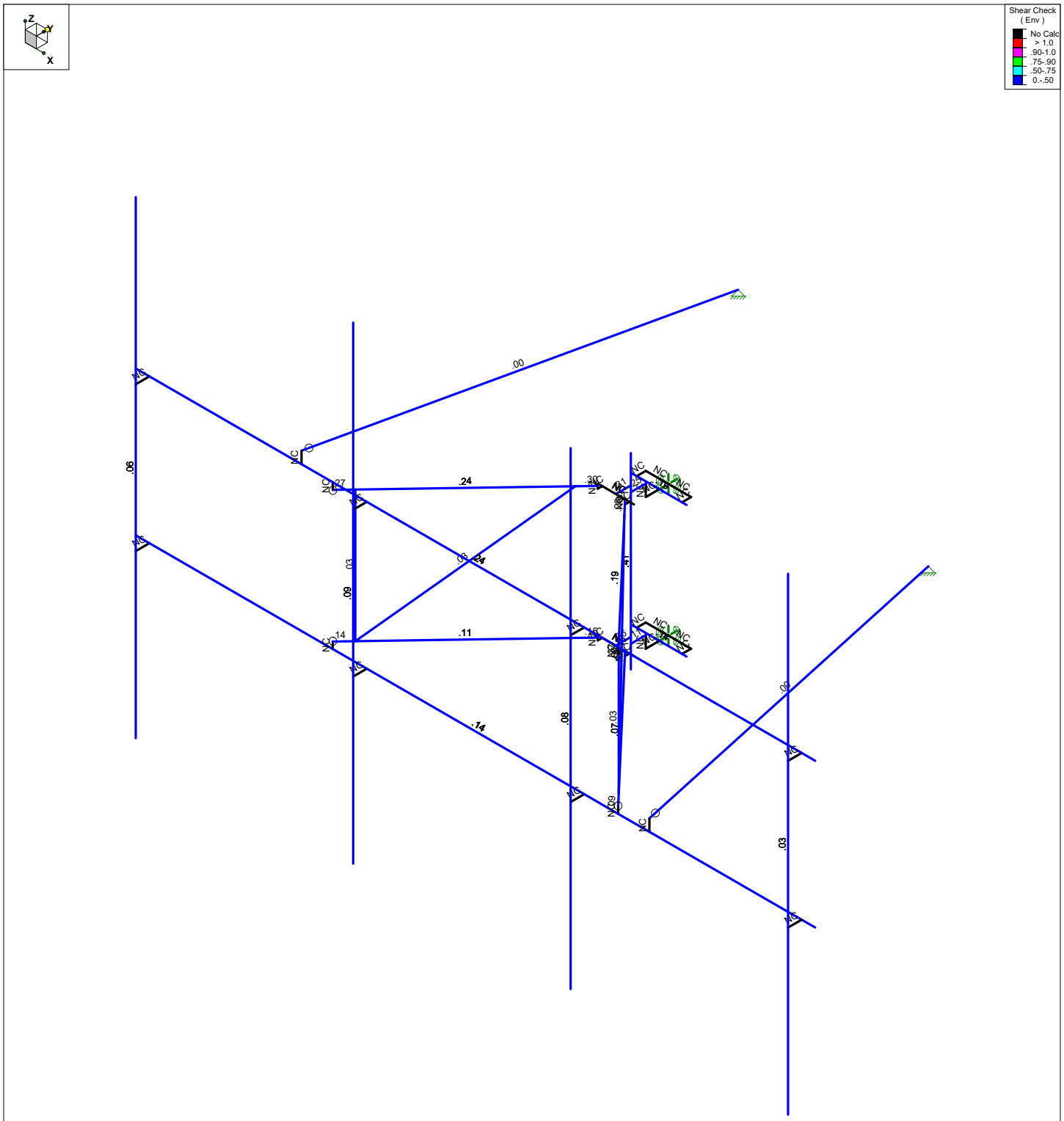

Member Shear Checks Displayed (Enveloped)
Results for LC 1, 1.4D

POD	88013	SK - 5
UT		July 8, 2021 at 2:32 PM
21-101296		(SF24) 14.5' Commscope Sector F...

Joint Boundary Conditions

	Joint Label	X [k/in]	Y [k/in]	Z [k/in]	X Rot.[k-ft/rad]	Y Rot.[k-ft/rad]	Z Rot.[k-ft/rad]
1	N93A	Reaction	Reaction	Reaction	Reaction	Reaction	
2	N92A	Reaction	Reaction	Reaction	Reaction	Reaction	
3	N110	Reaction	Reaction	Reaction			
4	N107A	Reaction	Reaction	Reaction			

Hot Rolled Steel Design Parameters

	Label	Shape	Length[ft]	Lbyy[ft]	Lbzz[ft]	Lcomp ...	Lcomp ...	L-to...	Kyy	Kzz	Cb	Function
1	BACK PL1	8x.625	.319			Lbyy						Lateral
2	BACK PL2	8x.625	.319			Lbyy						Lateral
3	BACK PL3	8x.625	.319			Lbyy						Lateral
4	BACK PL4	8x.625	.319			Lbyy						Lateral
5	CHANNEL1	C3.5X4	1.16			Lbyy						Lateral
6	CHANNEL2	C3.5X4	1.16			Lbyy						Lateral
7	DIAG1	SR 3/4	4.347			Lbyy			.7	.7		Lateral
8	DIAG2	SR 3/4	4.347			Lbyy			.7	.7		Lateral
9	FACE1	PIPE_...	14.5	5.25		Lbyy						Lateral
10	FACE2	PIPE_...	14.5	5.25		Lbyy						Lateral
11	KICKER1	PIPE_...	3.613			Lbyy						Lateral
12	KICKER2	PIPE_...	3.613			Lbyy						Lateral
13	KICKER3	PIPE_...	3.613			Lbyy						Lateral
14	KICKER4	PIPE_...	3.613			Lbyy						Lateral
15	MP ALPHA1	PIPE_...	10			Lbyy						Lateral
16	MP ALPHA2	PIPE_...	10			Lbyy						Lateral
17	MP ALPHA3	PIPE_...	10			Lbyy						Lateral
18	MP ALPHA4	PIPE_...	10			Lbyy						Lateral
19	PL1	4X0.5	.194			Lbyy						Lateral
20	PL2	4X0.5	.194			Lbyy						Lateral
21	PL3	4X0.5	.194			Lbyy						Lateral
22	PL4	4X0.5	.194			Lbyy						Lateral
23	PL5	4X0.5	.194			Lbyy						Lateral
24	PL6	4X0.5	.194			Lbyy						Lateral
25	PL7	4X0.5	.194			Lbyy						Lateral
26	PL8	4X0.5	.194			Lbyy						Lateral
27	SUPP PIPE	PIPE_...	4			Lbyy						Lateral
28	TIEBACK2	PIPE_...	7.817			Lbyy						Lateral
29	VERT1	SR 3/4	2.803			Lbyy			.7	.7		Lateral
30	VERT4	SR 3/4	2.803			Lbyy			.7	.7		Lateral
31	TIEBACK1	PIPE_...	7.817			Lbyy						Lateral

Member Primary Data

	Label	I Joint	J Joint	K Joint	Rotate(...	Section/Shape	Type	Design List	Material	Design R...
1	1	N20	N21			RIGID	None	None	RIGID	Typical
2	2	N20	N15			RIGID	None	None	RIGID	Typical
3	3	N28	N29			RIGID	None	None	RIGID	Typical
4	4	N28	N24			RIGID	None	None	RIGID	Typical
5	6	N33	N34			RIGID	None	None	RIGID	Typical
6	8	N37	N38			RIGID	None	None	RIGID	Typical
7	9	N39	N40			RIGID	None	None	RIGID	Typical
8	10	N41	N42			RIGID	None	None	RIGID	Typical
9	11	N3	N4			RIGID	None	None	RIGID	Typical
10	12	N49	N50			RIGID	None	None	RIGID	Typical
11	13	N49	N45			RIGID	None	None	RIGID	Typical
12	14	N57	N58			RIGID	None	None	RIGID	Typical

Member Primary Data (Continued)

	Label	I Joint	J Joint	K Joint	Rotate(...	Section/Shape	Type	Design List	Material	Design R...
13	15	N57	N53			RIGID	None	None	RIGID	Typical
14	18	N7	N8			RIGID	None	None	RIGID	Typical
15	21	N80A	N74A			RIGID	None	None	RIGID	Typical
16	22	N81	N78			RIGID	None	None	RIGID	Typical
17	23	N81	N83			RIGID	None	None	RIGID	Typical
18	24	N80A	N82			RIGID	None	None	RIGID	Typical
19	25	N9	N10			RIGID	None	None	RIGID	Typical
20	26	N91	N97			RIGID	None	None	RIGID	Typical
21	27	N97	N93A			RIGID	None	None	RIGID	Typical
22	28	N85	N95			RIGID	None	None	RIGID	Typical
23	29	N95	N93A			RIGID	None	None	RIGID	Typical
24	30	N90	N96			RIGID	None	None	RIGID	Typical
25	31	N96	N92A			RIGID	None	None	RIGID	Typical
26	32	N84	N94			RIGID	None	None	RIGID	Typical
27	33	N101	N25			RIGID	None	None	RIGID	Typical
28	34	N94	N92A			RIGID	None	None	RIGID	Typical
29	35	N100	N16			RIGID	None	None	RIGID	Typical
30	36	N46	N98			RIGID	None	None	RIGID	Typical
31	37	N54	N99			RIGID	None	None	RIGID	Typical
32	38	N11	N12			RIGID	None	None	RIGID	Typical
33	40	N109	N107			RIGID	None	None	RIGID	Typical
34	50	N52	N44			RIGID	None	None	RIGID	Typical
35	51	N23	N14			RIGID	None	None	RIGID	Typical
36	BACK PL1	N43	N120			8x.625	Beam	RECT	A572 Gr.50	Typical
37	BACK PL2	N78	N60			8x.625	Beam	RECT	A572 Gr.50	Typical
38	BACK PL3	N13	N119			8x.625	Beam	RECT	A572 Gr.50	Typical
39	BACK PL4	N74A	N30A			8x.625	Beam	RECT	A572 Gr.50	Typical
40	CHANNEL1	N93	N87		270	C3.5X4	Beam	Channel	A529 Gr.50	Typical
41	CHANNEL2	N92	N86		270	C3.5X4	Beam	Channel	A529 Gr.50	Typical
42	DIAG1	N102	N105			SR 3/4	Beam	BAR	A36 Gr.36	Typical
43	DIAG2	N98A	N101A			SR 3/4	Beam	BAR	A36 Gr.36	Typical
44	FACE1	N31	N32			PIPE_2.5X	Beam	Pipe	A500 Gr.B RND	Typical
45	FACE2	N1	N2			PIPE_2.5X	Beam	Pipe	A500 Gr.B RND	Typical
46	KICKER1	N55	N56			PIPE_2.0	Beam	Pipe	A500 Gr.B RND	Typical
47	KICKER2	N26	N27			PIPE_2.0	Beam	Pipe	A500 Gr.B RND	Typical
48	KICKER3	N47	N48			PIPE_2.0	Beam	Pipe	A500 Gr.B RND	Typical
49	KICKER4	N17	N18			PIPE_2.0	Beam	Pipe	A500 Gr.B RND	Typical
50	MP ALPHA1	N71	N70			PIPE_2.5	Beam	Pipe	A500 Gr.B RND	Typical
51	MP ALPHA2	N67	N66			PIPE_2.5	Beam	Pipe	A500 Gr.B RND	Typical
52	MP ALPHA3	N65	N64			PIPE_2.5	Beam	Pipe	A500 Gr.B RND	Typical
53	MP ALPHA4	N75	N74			PIPE_2.5	Beam	Pipe	A500 Gr.B RND	Typical
54	PL1	N54	N55			4X0.5	Beam	RECT	A36 Gr.36	Typical
55	PL2	N53	N56			4X0.5	Beam	RECT	A36 Gr.36	Typical
56	PL3	N25	N26			4X0.5	Beam	RECT	A36 Gr.36	Typical
57	PL4	N24	N27			4X0.5	Beam	RECT	A36 Gr.36	Typical
58	PL5	N46	N47			4X0.5	Beam	RECT	A36 Gr.36	Typical
59	PL6	N45	N48			4X0.5	Beam	RECT	A36 Gr.36	Typical
60	PL7	N16	N17			4X0.5	Beam	RECT	A36 Gr.36	Typical
61	PL8	N15	N18			4X0.5	Beam	RECT	A36 Gr.36	Typical
62	SUPP PIPE	N62	N61			PIPE_3.0	Beam	Pipe	A500 Gr.B RND	Typical
63	TIEBACK2	N109	N110			PIPE_2.5	Beam	Pipe	A500 Gr.B RND	Typical
64	VERT1	N105	N103			SR 3/4	Beam	BAR	A36 Gr.36	Typical
65	VERT4	N101A	N99A			SR 3/4	Beam	BAR	A36 Gr.36	Typical
66	M66	N106	N105A			RIGID	None	None	RIGID	Typical
67	TIEBACK1	N106	N107A			PIPE_2.5	Beam	Pipe	A500 Gr.B RND	Typical

Member Advanced Data

	Label	I Release	J Release	I Offset[in]	J Offset[in]	T/C Only	Physical	Defl Ratio Options	Analysis...	Inactive	Seismi...
1	1						Yes	** NA **			None
2	2						Yes	** NA **			None
3	3						Yes	** NA **			None
4	4						Yes	** NA **			None
5	6						Yes	** NA **			None
6	8						Yes	** NA **			None
7	9						Yes	** NA **			None
8	10						Yes	** NA **			None
9	11						Yes	** NA **			None
10	12						Yes	** NA **			None
11	13						Yes	** NA **			None
12	14						Yes	** NA **			None
13	15						Yes	** NA **			None
14	18						Yes	** NA **			None
15	21						Yes	** NA **			None
16	22						Yes	** NA **			None
17	23						Yes	** NA **			None
18	24						Yes	** NA **			None
19	25						Yes	** NA **			None
20	26						Yes	** NA **			None
21	27						Yes	** NA **			None
22	28						Yes	** NA **			None
23	29						Yes	** NA **			None
24	30						Yes	** NA **			None
25	31						Yes	** NA **			None
26	32						Yes	** NA **			None
27	33	OOOXOO					Yes	** NA **			None
28	34						Yes	** NA **			None
29	35	OOOXOO					Yes	** NA **			None
30	36		OOOXOO				Yes	** NA **			None
31	37		OOOXOO				Yes	** NA **			None
32	38						Yes	** NA **			None
33	40						Yes	** NA **			None
34	50						Yes	** NA **			None
35	51						Yes	** NA **			None
36	BACK PL1						Yes				None
37	BACK PL2						Yes	Default			None
38	BACK PL3						Yes				None
39	BACK PL4						Yes				None
40	CHANNE...						Yes				None
41	CHANNE...						Yes				None
42	DIAG1						Yes				None
43	DIAG2						Yes				None
44	FACE1						Yes	Default			None
45	FACE2						Yes	Default			None
46	KICKER1						Yes				None
47	KICKER2						Yes				None
48	KICKER3						Yes				None
49	KICKER4						Yes				None
50	MP ALP...						Yes				None
51	MP ALP...						Yes				None
52	MP ALP...						Yes				None
53	MP ALP...						Yes				None
54	PL1						Yes				None
55	PL2						Yes				None
56	PL3						Yes				None

Member Advanced Data (Continued)

	Label	I Release	J Release	I Offset[in]	J Offset[in]	T/C Only	Physical	Defl Ratio Options	Analysis...	Inactive	Seismi...
57	PL4						Yes				None
58	PL5						Yes				None
59	PL6						Yes				None
60	PL7						Yes				None
61	PL8						Yes				None
62	SUPP Pl...						Yes	Default			None
63	TIEBACK2	BenPIN					Yes	Default			None
64	VERT1						Yes				None
65	VERT4						Yes				None
66	M66						Yes	** NA **			None
67	TIEBACK1	BenPIN					Yes	Default			None

Hot Rolled Steel Properties

	Label	E [ksi]	G [ksi]	Nu	Therm (/1E...	Density[k...	Yield[ksi]	Ry	Fu[ksi]	Rt
1	A992	29000	11154	.3	.65	.49	50	1.1	65	1.1
2	A36 Gr.36	29000	11154	.3	.65	.49	36	1.5	58	1.2
3	A572 Gr.50	29000	11154	.3	.65	.49	50	1.1	65	1.1
4	A500 Gr.B RND	29000	11154	.3	.65	.527	42	1.4	58	1.3
5	A500 Gr.B Rect	29000	11154	.3	.65	.527	46	1.4	58	1.3
6	A53 Gr.B	29000	11154	.3	.65	.49	35	1.6	60	1.2
7	A1085	29000	11154	.3	.65	.49	50	1.4	65	1.3
8	A913 Gr.65	29000	11154	.3	.65	.49	65	1.1	80	1.1
9	A500 Gr.C RND	29000	11154	.3	.65	.527	46	1.4	62	1.3
10	A529 Gr.50	29000	11154	.3	.65	.49	50	1.1	65	1.1

Member Point Loads (BLC 1 : Live Load)

	Member Label	Direction	Magnitude[k,k-ft]	Location[ft,%]
1	FACE1	Z	-.5	0

Member Point Loads (BLC 2 : Wind Load (0))

	Member Label	Direction	Magnitude[k,k-ft]	Location[ft,%]
1	MP ALPHA1	Y	-.114	7.083
2	MP ALPHA1	Y	-.114	2.917
3	MP ALPHA2	Y	-.274	7.917
4	MP ALPHA2	Y	-.274	2.083
5	MP ALPHA3	Y	-.373	7.917
6	MP ALPHA3	Y	-.373	2.083
7	MP ALPHA4	Y	-.368	7.917
8	MP ALPHA4	Y	-.368	2.083
9	MP ALPHA1	Y	-.138	5
10	MP ALPHA1	Y	-.018	5
11	MP ALPHA2	Y	-.113	5
12	MP ALPHA2	Y	-.113	5
13	MP ALPHA4	Y	-.081	5
14	MP ALPHA4	Y	-.076	5

Member Point Loads (BLC 3 : Dead Load)

	Member Label	Direction	Magnitude[k,k-ft]	Location[ft,%]
1	MP ALPHA1	Z	-.018	7.083
2	MP ALPHA1	Z	-.018	2.917
3	MP ALPHA2	Z	-.041	7.917
4	MP ALPHA2	Z	-.041	2.083
5	MP ALPHA3	Z	-.038	7.917

Member Point Loads (BLC 3 : Dead Load) (Continued)

	Member Label	Direction	Magnitude[k,k-ft]	Location[ft,%]
6	MP ALPHA3	Z	-.038	2.083
7	MP ALPHA4	Z	-.053	7.917
8	MP ALPHA4	Z	-.053	2.083
9	MP ALPHA1	Z	-.062	5
10	MP ALPHA1	Z	-.025	5
11	MP ALPHA2	Z	-.053	5
12	MP ALPHA2	Z	-.053	5
13	MP ALPHA4	Z	-.071	5
14	MP ALPHA4	Z	-.06	5

Member Point Loads (BLC 4 : Wind Load (30))

	Member Label	Direction	Magnitude[k,k-ft]	Location[ft,%]
1	MP ALPHA1	Y	-.087	7.083
2	MP ALPHA1	Y	-.087	2.917
3	MP ALPHA1	X	-.05	7.083
4	MP ALPHA1	X	-.05	2.917
5	MP ALPHA2	Y	-.217	7.917
6	MP ALPHA2	Y	-.217	2.083
7	MP ALPHA2	X	-.125	7.917
8	MP ALPHA2	X	-.125	2.083
9	MP ALPHA3	Y	-.279	7.917
10	MP ALPHA3	Y	-.279	2.083
11	MP ALPHA3	X	-.161	7.917
12	MP ALPHA3	X	-.161	2.083
13	MP ALPHA4	Y	-.275	7.917
14	MP ALPHA4	Y	-.275	2.083
15	MP ALPHA4	X	-.159	7.917
16	MP ALPHA4	X	-.159	2.083
17	MP ALPHA1	Y	-.098	5
18	MP ALPHA1	X	-.056	5
19	MP ALPHA1	Y	-.015	5
20	MP ALPHA1	X	-.009	5
21	MP ALPHA2	Y	-.088	5
22	MP ALPHA2	X	-.051	5
23	MP ALPHA2	Y	-.088	5
24	MP ALPHA2	X	-.051	5
25	MP ALPHA4	Y	-.065	5
26	MP ALPHA4	X	-.038	5
27	MP ALPHA4	Y	-.059	5
28	MP ALPHA4	X	-.034	5

Member Point Loads (BLC 5 : Wind Load (60))

	Member Label	Direction	Magnitude[k,k-ft]	Location[ft,%]
1	MP ALPHA1	Y	-.037	7.083
2	MP ALPHA1	Y	-.037	2.917
3	MP ALPHA1	X	-.064	7.083
4	MP ALPHA1	X	-.064	2.917
5	MP ALPHA2	Y	-.102	7.917
6	MP ALPHA2	Y	-.102	2.083
7	MP ALPHA2	X	-.177	7.917
8	MP ALPHA2	X	-.177	2.083
9	MP ALPHA3	Y	-.11	7.917
10	MP ALPHA3	Y	-.11	2.083
11	MP ALPHA3	X	-.19	7.917
12	MP ALPHA3	X	-.19	2.083
13	MP ALPHA4	Y	-.109	7.917

Member Point Loads (BLC 5 : Wind Load (60)) (Continued)

	Member Label	Direction	Magnitude[k,k-ft]	Location[ft,%]
14	MP ALPHA4	Y	-.109	2.083
15	MP ALPHA4	X	-.188	7.917
16	MP ALPHA4	X	-.188	2.083
17	MP ALPHA1	Y	-.032	5
18	MP ALPHA1	X	-.055	5
19	MP ALPHA1	Y	-.009	5
20	MP ALPHA1	X	-.015	5
21	MP ALPHA2	Y	-.04	5
22	MP ALPHA2	X	-.069	5
23	MP ALPHA2	Y	-.04	5
24	MP ALPHA2	X	-.069	5
25	MP ALPHA4	Y	-.032	5
26	MP ALPHA4	X	-.055	5
27	MP ALPHA4	Y	-.026	5
28	MP ALPHA4	X	-.045	5

Member Point Loads (BLC 6 : Wind Load (90))

	Member Label	Direction	Magnitude[k,k-ft]	Location[ft,%]
1	MP ALPHA1	X	-.06	7.083
2	MP ALPHA1	X	-.06	2.917
3	MP ALPHA2	X	-.182	7.917
4	MP ALPHA2	X	-.182	2.083
5	MP ALPHA3	X	-.169	7.917
6	MP ALPHA3	X	-.169	2.083
7	MP ALPHA4	X	-.167	7.917
8	MP ALPHA4	X	-.167	2.083
9	MP ALPHA1	X	-.039	5
10	MP ALPHA1	X	-.017	5
11	MP ALPHA2	X	-.069	5
12	MP ALPHA2	X	-.069	5
13	MP ALPHA4	X	-.058	5
14	MP ALPHA4	X	-.044	5

Member Point Loads (BLC 7 : Wind Load (120))

	Member Label	Direction	Magnitude[k,k-ft]	Location[ft,%]
1	MP ALPHA1	Y	.037	7.083
2	MP ALPHA1	Y	.037	2.917
3	MP ALPHA1	X	-.064	7.083
4	MP ALPHA1	X	-.064	2.917
5	MP ALPHA2	Y	.102	7.917
6	MP ALPHA2	Y	.102	2.083
7	MP ALPHA2	X	-.177	7.917
8	MP ALPHA2	X	-.177	2.083
9	MP ALPHA3	Y	.11	7.917
10	MP ALPHA3	Y	.11	2.083
11	MP ALPHA3	X	-.19	7.917
12	MP ALPHA3	X	-.19	2.083
13	MP ALPHA4	Y	.109	7.917
14	MP ALPHA4	Y	.109	2.083
15	MP ALPHA4	X	-.188	7.917
16	MP ALPHA4	X	-.188	2.083
17	MP ALPHA1	Y	.032	5
18	MP ALPHA1	X	-.055	5
19	MP ALPHA1	Y	.009	5
20	MP ALPHA1	X	-.015	5
21	MP ALPHA2	Y	.04	5

Member Point Loads (BLC 7 : Wind Load (120)) (Continued)

	Member Label	Direction	Magnitude[k,k-ft]	Location[ft,%]
22	MP ALPHA2	X	-.069	5
23	MP ALPHA2	Y	.04	5
24	MP ALPHA2	X	-.069	5
25	MP ALPHA4	Y	.032	5
26	MP ALPHA4	X	-.055	5
27	MP ALPHA4	Y	.026	5
28	MP ALPHA4	X	-.045	5

Member Point Loads (BLC 8 : Wind Load (150))

	Member Label	Direction	Magnitude[k,k-ft]	Location[ft,%]
1	MP ALPHA1	Y	.087	7.083
2	MP ALPHA1	Y	.087	2.917
3	MP ALPHA1	X	-.05	7.083
4	MP ALPHA1	X	-.05	2.917
5	MP ALPHA2	Y	.217	7.917
6	MP ALPHA2	Y	.217	2.083
7	MP ALPHA2	X	-.125	7.917
8	MP ALPHA2	X	-.125	2.083
9	MP ALPHA3	Y	.279	7.917
10	MP ALPHA3	Y	.279	2.083
11	MP ALPHA3	X	-.161	7.917
12	MP ALPHA3	X	-.161	2.083
13	MP ALPHA4	Y	.275	7.917
14	MP ALPHA4	Y	.275	2.083
15	MP ALPHA4	X	-.159	7.917
16	MP ALPHA4	X	-.159	2.083
17	MP ALPHA1	Y	.098	5
18	MP ALPHA1	X	-.056	5
19	MP ALPHA1	Y	.015	5
20	MP ALPHA1	X	-.009	5
21	MP ALPHA2	Y	.088	5
22	MP ALPHA2	X	-.051	5
23	MP ALPHA2	Y	.088	5
24	MP ALPHA2	X	-.051	5
25	MP ALPHA4	Y	.065	5
26	MP ALPHA4	X	-.038	5
27	MP ALPHA4	Y	.059	5
28	MP ALPHA4	X	-.034	5

Member Point Loads (BLC 9 : Wind Load (180))

	Member Label	Direction	Magnitude[k,k-ft]	Location[ft,%]
1	MP ALPHA1	Y	.114	7.083
2	MP ALPHA1	Y	.114	2.917
3	MP ALPHA2	Y	.274	7.917
4	MP ALPHA2	Y	.274	2.083
5	MP ALPHA3	Y	.373	7.917
6	MP ALPHA3	Y	.373	2.083
7	MP ALPHA4	Y	.368	7.917
8	MP ALPHA4	Y	.368	2.083
9	MP ALPHA1	Y	.138	5
10	MP ALPHA1	Y	.018	5
11	MP ALPHA2	Y	.113	5
12	MP ALPHA2	Y	.113	5
13	MP ALPHA4	Y	.081	5
14	MP ALPHA4	Y	.076	5

Member Point Loads (BLC 10 : Wind Load (210))

	Member Label	Direction	Magnitude[k,k-ft]	Location[ft,%]
1	MP ALPHA1	Y	.087	7.083
2	MP ALPHA1	Y	.087	2.917
3	MP ALPHA1	X	.05	7.083
4	MP ALPHA1	X	.05	2.917
5	MP ALPHA2	Y	.217	7.917
6	MP ALPHA2	Y	.217	2.083
7	MP ALPHA2	X	.125	7.917
8	MP ALPHA2	X	.125	2.083
9	MP ALPHA3	Y	.279	7.917
10	MP ALPHA3	Y	.279	2.083
11	MP ALPHA3	X	.161	7.917
12	MP ALPHA3	X	.161	2.083
13	MP ALPHA4	Y	.275	7.917
14	MP ALPHA4	Y	.275	2.083
15	MP ALPHA4	X	.159	7.917
16	MP ALPHA4	X	.159	2.083
17	MP ALPHA1	Y	.098	5
18	MP ALPHA1	X	.056	5
19	MP ALPHA1	Y	.015	5
20	MP ALPHA1	X	.009	5
21	MP ALPHA2	Y	.088	5
22	MP ALPHA2	X	.051	5
23	MP ALPHA2	Y	.088	5
24	MP ALPHA2	X	.051	5
25	MP ALPHA4	Y	.065	5
26	MP ALPHA4	X	.038	5
27	MP ALPHA4	Y	.059	5
28	MP ALPHA4	X	.034	5

Member Point Loads (BLC 11 : Wind Load (240))

	Member Label	Direction	Magnitude[k,k-ft]	Location[ft,%]
1	MP ALPHA1	Y	.037	7.083
2	MP ALPHA1	Y	.037	2.917
3	MP ALPHA1	X	.064	7.083
4	MP ALPHA1	X	.064	2.917
5	MP ALPHA2	Y	.102	7.917
6	MP ALPHA2	Y	.102	2.083
7	MP ALPHA2	X	.177	7.917
8	MP ALPHA2	X	.177	2.083
9	MP ALPHA3	Y	.11	7.917
10	MP ALPHA3	Y	.11	2.083
11	MP ALPHA3	X	.19	7.917
12	MP ALPHA3	X	.19	2.083
13	MP ALPHA4	Y	.109	7.917
14	MP ALPHA4	Y	.109	2.083
15	MP ALPHA4	X	.188	7.917
16	MP ALPHA4	X	.188	2.083
17	MP ALPHA1	Y	.032	5
18	MP ALPHA1	X	.055	5
19	MP ALPHA1	Y	.009	5
20	MP ALPHA1	X	.015	5
21	MP ALPHA2	Y	.04	5
22	MP ALPHA2	X	.069	5
23	MP ALPHA2	Y	.04	5
24	MP ALPHA2	X	.069	5
25	MP ALPHA4	Y	.032	5

Member Point Loads (BLC 11 : Wind Load (240)) (Continued)

	Member Label	Direction	Magnitude[k,k-ft]	Location[ft,%]
26	MP ALPHA4	X	.055	5
27	MP ALPHA4	Y	.026	5
28	MP ALPHA4	X	.045	5

Member Point Loads (BLC 12 : Wind Load (270))

	Member Label	Direction	Magnitude[k,k-ft]	Location[ft,%]
1	MP ALPHA1	X	.06	7.083
2	MP ALPHA1	X	.06	2.917
3	MP ALPHA2	X	.182	7.917
4	MP ALPHA2	X	.182	2.083
5	MP ALPHA3	X	.169	7.917
6	MP ALPHA3	X	.169	2.083
7	MP ALPHA4	X	.167	7.917
8	MP ALPHA4	X	.167	2.083
9	MP ALPHA1	X	.039	5
10	MP ALPHA1	X	.017	5
11	MP ALPHA2	X	.069	5
12	MP ALPHA2	X	.069	5
13	MP ALPHA4	X	.058	5
14	MP ALPHA4	X	.044	5

Member Point Loads (BLC 13 : Wind Load (300))

	Member Label	Direction	Magnitude[k,k-ft]	Location[ft,%]
1	MP ALPHA1	Y	-.037	7.083
2	MP ALPHA1	Y	-.037	2.917
3	MP ALPHA1	X	.064	7.083
4	MP ALPHA1	X	.064	2.917
5	MP ALPHA2	Y	-.102	7.917
6	MP ALPHA2	Y	-.102	2.083
7	MP ALPHA2	X	.177	7.917
8	MP ALPHA2	X	.177	2.083
9	MP ALPHA3	Y	-.11	7.917
10	MP ALPHA3	Y	-.11	2.083
11	MP ALPHA3	X	.19	7.917
12	MP ALPHA3	X	.19	2.083
13	MP ALPHA4	Y	-.109	7.917
14	MP ALPHA4	Y	-.109	2.083
15	MP ALPHA4	X	.188	7.917
16	MP ALPHA4	X	.188	2.083
17	MP ALPHA1	Y	-.032	5
18	MP ALPHA1	X	.055	5
19	MP ALPHA1	Y	-.009	5
20	MP ALPHA1	X	.015	5
21	MP ALPHA2	Y	-.04	5
22	MP ALPHA2	X	.069	5
23	MP ALPHA2	Y	-.04	5
24	MP ALPHA2	X	.069	5
25	MP ALPHA4	Y	-.032	5
26	MP ALPHA4	X	.055	5
27	MP ALPHA4	Y	-.026	5
28	MP ALPHA4	X	.045	5

Member Point Loads (BLC 14 : Wind Load (330))

	Member Label	Direction	Magnitude[k,k-ft]	Location[ft,%]
1	MP ALPHA1	Y	-.087	7.083

Member Point Loads (BLC 14 : Wind Load (330)) (Continued)

	Member Label	Direction	Magnitude[k,k-ft]	Location[ft,%]
2	MP ALPHA1	Y	-.087	2.917
3	MP ALPHA1	X	.05	7.083
4	MP ALPHA1	X	.05	2.917
5	MP ALPHA2	Y	-.217	7.917
6	MP ALPHA2	Y	-.217	2.083
7	MP ALPHA2	X	.125	7.917
8	MP ALPHA2	X	.125	2.083
9	MP ALPHA3	Y	-.279	7.917
10	MP ALPHA3	Y	-.279	2.083
11	MP ALPHA3	X	.161	7.917
12	MP ALPHA3	X	.161	2.083
13	MP ALPHA4	Y	-.275	7.917
14	MP ALPHA4	Y	-.275	2.083
15	MP ALPHA4	X	.159	7.917
16	MP ALPHA4	X	.159	2.083
17	MP ALPHA1	Y	-.098	5
18	MP ALPHA1	X	.056	5
19	MP ALPHA1	Y	-.015	5
20	MP ALPHA1	X	.009	5
21	MP ALPHA2	Y	-.088	5
22	MP ALPHA2	X	.051	5
23	MP ALPHA2	Y	-.088	5
24	MP ALPHA2	X	.051	5
25	MP ALPHA4	Y	-.065	5
26	MP ALPHA4	X	.038	5
27	MP ALPHA4	Y	-.059	5
28	MP ALPHA4	X	.034	5

Member Point Loads (BLC 15 : Maintanence (0))

	Member Label	Direction	Magnitude[k,k-ft]	Location[ft,%]
1	MP ALPHA1	Y	-.007	7.083
2	MP ALPHA1	Y	-.007	2.917
3	MP ALPHA2	Y	-.017	7.917
4	MP ALPHA2	Y	-.017	2.083
5	MP ALPHA3	Y	-.023	7.917
6	MP ALPHA3	Y	-.023	2.083
7	MP ALPHA4	Y	-.023	7.917
8	MP ALPHA4	Y	-.023	2.083
9	MP ALPHA1	Y	-.008	5
10	MP ALPHA1	Y	-.001	5
11	MP ALPHA2	Y	-.007	5
12	MP ALPHA2	Y	-.007	5
13	MP ALPHA4	Y	-.005	5
14	MP ALPHA4	Y	-.005	5

Member Point Loads (BLC 16 : Maintanence (30))

	Member Label	Direction	Magnitude[k,k-ft]	Location[ft,%]
1	MP ALPHA1	Y	-.005	7.083
2	MP ALPHA1	Y	-.005	2.917
3	MP ALPHA1	X	-.003	7.083
4	MP ALPHA1	X	-.003	2.917
5	MP ALPHA2	Y	-.013	7.917
6	MP ALPHA2	Y	-.013	2.083
7	MP ALPHA2	X	-.008	7.917
8	MP ALPHA2	X	-.008	2.083
9	MP ALPHA3	Y	-.017	7.917

Member Point Loads (BLC 16 : Maintanence (30)) (Continued)

	Member Label	Direction	Magnitude[k,k-ft]	Location[ft,%]
10	MP ALPHA3	Y	-.017	2.083
11	MP ALPHA3	X	-.01	7.917
12	MP ALPHA3	X	-.01	2.083
13	MP ALPHA4	Y	-.017	7.917
14	MP ALPHA4	Y	-.017	2.083
15	MP ALPHA4	X	-.01	7.917
16	MP ALPHA4	X	-.01	2.083
17	MP ALPHA1	Y	-.006	5
18	MP ALPHA1	X	-.003	5
19	MP ALPHA1	Y	-.00094	5
20	MP ALPHA1	X	-.000543	5
21	MP ALPHA2	Y	-.005	5
22	MP ALPHA2	X	-.003	5
23	MP ALPHA2	Y	-.005	5
24	MP ALPHA2	X	-.003	5
25	MP ALPHA4	Y	-.004	5
26	MP ALPHA4	X	-.002	5
27	MP ALPHA4	Y	-.004	5
28	MP ALPHA4	X	-.002	5

Member Point Loads (BLC 17 : Maintanence (60))

	Member Label	Direction	Magnitude[k,k-ft]	Location[ft,%]
1	MP ALPHA1	Y	-.002	7.083
2	MP ALPHA1	Y	-.002	2.917
3	MP ALPHA1	X	-.004	7.083
4	MP ALPHA1	X	-.004	2.917
5	MP ALPHA2	Y	-.006	7.917
6	MP ALPHA2	Y	-.006	2.083
7	MP ALPHA2	X	-.011	7.917
8	MP ALPHA2	X	-.011	2.083
9	MP ALPHA3	Y	-.007	7.917
10	MP ALPHA3	Y	-.007	2.083
11	MP ALPHA3	X	-.012	7.917
12	MP ALPHA3	X	-.012	2.083
13	MP ALPHA4	Y	-.007	7.917
14	MP ALPHA4	Y	-.007	2.083
15	MP ALPHA4	X	-.012	7.917
16	MP ALPHA4	X	-.012	2.083
17	MP ALPHA1	Y	-.002	5
18	MP ALPHA1	X	-.003	5
19	MP ALPHA1	Y	-.00053	5
20	MP ALPHA1	X	-.000918	5
21	MP ALPHA2	Y	-.002	5
22	MP ALPHA2	X	-.004	5
23	MP ALPHA2	Y	-.002	5
24	MP ALPHA2	X	-.004	5
25	MP ALPHA4	Y	-.002	5
26	MP ALPHA4	X	-.003	5
27	MP ALPHA4	Y	-.002	5
28	MP ALPHA4	X	-.003	5

Member Point Loads (BLC 18 : Maintanence (90))

	Member Label	Direction	Magnitude[k,k-ft]	Location[ft,%]
1	MP ALPHA1	X	-.004	7.083
2	MP ALPHA1	X	-.004	2.917
3	MP ALPHA2	X	-.011	7.917

Member Point Loads (BLC 18 : Maintanence (90)) (Continued)

	Member Label	Direction	Magnitude[k,k-ft]	Location[ft,%]
4	MP ALPHA2	X	-.011	2.083
5	MP ALPHA3	X	-.01	7.917
6	MP ALPHA3	X	-.01	2.083
7	MP ALPHA4	X	-.01	7.917
8	MP ALPHA4	X	-.01	2.083
9	MP ALPHA1	X	-.002	5
10	MP ALPHA1	X	-.001	5
11	MP ALPHA2	X	-.004	5
12	MP ALPHA2	X	-.004	5
13	MP ALPHA4	X	-.004	5
14	MP ALPHA4	X	-.003	5

Member Point Loads (BLC 19 : Maintanence (120))

	Member Label	Direction	Magnitude[k,k-ft]	Location[ft,%]
1	MP ALPHA1	Y	.002	7.083
2	MP ALPHA1	Y	.002	2.917
3	MP ALPHA1	X	-.004	7.083
4	MP ALPHA1	X	-.004	2.917
5	MP ALPHA2	Y	.006	7.917
6	MP ALPHA2	Y	.006	2.083
7	MP ALPHA2	X	-.011	7.917
8	MP ALPHA2	X	-.011	2.083
9	MP ALPHA3	Y	.007	7.917
10	MP ALPHA3	Y	.007	2.083
11	MP ALPHA3	X	-.012	7.917
12	MP ALPHA3	X	-.012	2.083
13	MP ALPHA4	Y	.007	7.917
14	MP ALPHA4	Y	.007	2.083
15	MP ALPHA4	X	-.012	7.917
16	MP ALPHA4	X	-.012	2.083
17	MP ALPHA1	Y	.002	5
18	MP ALPHA1	X	-.003	5
19	MP ALPHA1	Y	.00053	5
20	MP ALPHA1	X	-.000918	5
21	MP ALPHA2	Y	.002	5
22	MP ALPHA2	X	-.004	5
23	MP ALPHA2	Y	.002	5
24	MP ALPHA2	X	-.004	5
25	MP ALPHA4	Y	.002	5
26	MP ALPHA4	X	-.003	5
27	MP ALPHA4	Y	.002	5
28	MP ALPHA4	X	-.003	5

Member Point Loads (BLC 20 : Maintanence (150))

	Member Label	Direction	Magnitude[k,k-ft]	Location[ft,%]
1	MP ALPHA1	Y	.005	7.083
2	MP ALPHA1	Y	.005	2.917
3	MP ALPHA1	X	-.003	7.083
4	MP ALPHA1	X	-.003	2.917
5	MP ALPHA2	Y	.013	7.917
6	MP ALPHA2	Y	.013	2.083
7	MP ALPHA2	X	-.008	7.917
8	MP ALPHA2	X	-.008	2.083
9	MP ALPHA3	Y	.017	7.917
10	MP ALPHA3	Y	.017	2.083
11	MP ALPHA3	X	-.01	7.917

Member Point Loads (BLC 20 : Maintanence (150)) (Continued)

	Member Label	Direction	Magnitude[k,k-ft]	Location[ft,%]
12	MP ALPHA3	X	-.01	2.083
13	MP ALPHA4	Y	.017	7.917
14	MP ALPHA4	Y	.017	2.083
15	MP ALPHA4	X	-.01	7.917
16	MP ALPHA4	X	-.01	2.083
17	MP ALPHA1	Y	.006	5
18	MP ALPHA1	X	-.003	5
19	MP ALPHA1	Y	.00094	5
20	MP ALPHA1	X	-.000543	5
21	MP ALPHA2	Y	.005	5
22	MP ALPHA2	X	-.003	5
23	MP ALPHA2	Y	.005	5
24	MP ALPHA2	X	-.003	5
25	MP ALPHA4	Y	.004	5
26	MP ALPHA4	X	-.002	5
27	MP ALPHA4	Y	.004	5
28	MP ALPHA4	X	-.002	5

Member Point Loads (BLC 21 : Maintanence (180))

	Member Label	Direction	Magnitude[k,k-ft]	Location[ft,%]
1	MP ALPHA1	Y	.007	7.083
2	MP ALPHA1	Y	.007	2.917
3	MP ALPHA2	Y	.017	7.917
4	MP ALPHA2	Y	.017	2.083
5	MP ALPHA3	Y	.023	7.917
6	MP ALPHA3	Y	.023	2.083
7	MP ALPHA4	Y	.023	7.917
8	MP ALPHA4	Y	.023	2.083
9	MP ALPHA1	Y	.008	5
10	MP ALPHA1	Y	.001	5
11	MP ALPHA2	Y	.007	5
12	MP ALPHA2	Y	.007	5
13	MP ALPHA4	Y	.005	5
14	MP ALPHA4	Y	.005	5

Member Point Loads (BLC 22 : Maintanence (210))

	Member Label	Direction	Magnitude[k,k-ft]	Location[ft,%]
1	MP ALPHA1	Y	.005	7.083
2	MP ALPHA1	Y	.005	2.917
3	MP ALPHA1	X	.003	7.083
4	MP ALPHA1	X	.003	2.917
5	MP ALPHA2	Y	.013	7.917
6	MP ALPHA2	Y	.013	2.083
7	MP ALPHA2	X	.008	7.917
8	MP ALPHA2	X	.008	2.083
9	MP ALPHA3	Y	.017	7.917
10	MP ALPHA3	Y	.017	2.083
11	MP ALPHA3	X	.01	7.917
12	MP ALPHA3	X	.01	2.083
13	MP ALPHA4	Y	.017	7.917
14	MP ALPHA4	Y	.017	2.083
15	MP ALPHA4	X	.01	7.917
16	MP ALPHA4	X	.01	2.083
17	MP ALPHA1	Y	.006	5
18	MP ALPHA1	X	.003	5
19	MP ALPHA1	Y	.00094	5

Member Point Loads (BLC 22 : Maintanence (210)) (Continued)

	Member Label	Direction	Magnitude[k,k-ft]	Location[ft,%]
20	MP ALPHA1	X	.000543	5
21	MP ALPHA2	Y	.005	5
22	MP ALPHA2	X	.003	5
23	MP ALPHA2	Y	.005	5
24	MP ALPHA2	X	.003	5
25	MP ALPHA4	Y	.004	5
26	MP ALPHA4	X	.002	5
27	MP ALPHA4	Y	.004	5
28	MP ALPHA4	X	.002	5

Member Point Loads (BLC 23 : Maintanence (240))

	Member Label	Direction	Magnitude[k,k-ft]	Location[ft,%]
1	MP ALPHA1	Y	.002	7.083
2	MP ALPHA1	Y	.002	2.917
3	MP ALPHA1	X	.004	7.083
4	MP ALPHA1	X	.004	2.917
5	MP ALPHA2	Y	.006	7.917
6	MP ALPHA2	Y	.006	2.083
7	MP ALPHA2	X	.011	7.917
8	MP ALPHA2	X	.011	2.083
9	MP ALPHA3	Y	.007	7.917
10	MP ALPHA3	Y	.007	2.083
11	MP ALPHA3	X	.012	7.917
12	MP ALPHA3	X	.012	2.083
13	MP ALPHA4	Y	.007	7.917
14	MP ALPHA4	Y	.007	2.083
15	MP ALPHA4	X	.012	7.917
16	MP ALPHA4	X	.012	2.083
17	MP ALPHA1	Y	.002	5
18	MP ALPHA1	X	.003	5
19	MP ALPHA1	Y	.00053	5
20	MP ALPHA1	X	.000918	5
21	MP ALPHA2	Y	.002	5
22	MP ALPHA2	X	.004	5
23	MP ALPHA2	Y	.002	5
24	MP ALPHA2	X	.004	5
25	MP ALPHA4	Y	.002	5
26	MP ALPHA4	X	.003	5
27	MP ALPHA4	Y	.002	5
28	MP ALPHA4	X	.003	5

Member Point Loads (BLC 24 : Maintanence (270))

	Member Label	Direction	Magnitude[k,k-ft]	Location[ft,%]
1	MP ALPHA1	X	.004	7.083
2	MP ALPHA1	X	.004	2.917
3	MP ALPHA2	X	.011	7.917
4	MP ALPHA2	X	.011	2.083
5	MP ALPHA3	X	.01	7.917
6	MP ALPHA3	X	.01	2.083
7	MP ALPHA4	X	.01	7.917
8	MP ALPHA4	X	.01	2.083
9	MP ALPHA1	X	.002	5
10	MP ALPHA1	X	.001	5
11	MP ALPHA2	X	.004	5
12	MP ALPHA2	X	.004	5
13	MP ALPHA4	X	.004	5

Member Point Loads (BLC 24 : Maintanence (270)) (Continued)

	Member Label	Direction	Magnitude[k,k-ft]	Location[ft,%]
14	MP ALPHA4	X	.003	5

Member Point Loads (BLC 25 : Maintanence (300))

	Member Label	Direction	Magnitude[k,k-ft]	Location[ft,%]
1	MP ALPHA1	Y	-.002	7.083
2	MP ALPHA1	Y	-.002	2.917
3	MP ALPHA1	X	.004	7.083
4	MP ALPHA1	X	.004	2.917
5	MP ALPHA2	Y	-.006	7.917
6	MP ALPHA2	Y	-.006	2.083
7	MP ALPHA2	X	.011	7.917
8	MP ALPHA2	X	.011	2.083
9	MP ALPHA3	Y	-.007	7.917
10	MP ALPHA3	Y	-.007	2.083
11	MP ALPHA3	X	.012	7.917
12	MP ALPHA3	X	.012	2.083
13	MP ALPHA4	Y	-.007	7.917
14	MP ALPHA4	Y	-.007	2.083
15	MP ALPHA4	X	.012	7.917
16	MP ALPHA4	X	.012	2.083
17	MP ALPHA1	Y	-.002	5
18	MP ALPHA1	X	.003	5
19	MP ALPHA1	Y	-.00053	5
20	MP ALPHA1	X	.000918	5
21	MP ALPHA2	Y	-.002	5
22	MP ALPHA2	X	.004	5
23	MP ALPHA2	Y	-.002	5
24	MP ALPHA2	X	.004	5
25	MP ALPHA4	Y	-.002	5
26	MP ALPHA4	X	.003	5
27	MP ALPHA4	Y	-.002	5
28	MP ALPHA4	X	.003	5

Member Point Loads (BLC 26 : Maintanence (330))

	Member Label	Direction	Magnitude[k,k-ft]	Location[ft,%]
1	MP ALPHA1	Y	-.005	7.083
2	MP ALPHA1	Y	-.005	2.917
3	MP ALPHA1	X	.003	7.083
4	MP ALPHA1	X	.003	2.917
5	MP ALPHA2	Y	-.013	7.917
6	MP ALPHA2	Y	-.013	2.083
7	MP ALPHA2	X	.008	7.917
8	MP ALPHA2	X	.008	2.083
9	MP ALPHA3	Y	-.017	7.917
10	MP ALPHA3	Y	-.017	2.083
11	MP ALPHA3	X	.01	7.917
12	MP ALPHA3	X	.01	2.083
13	MP ALPHA4	Y	-.017	7.917
14	MP ALPHA4	Y	-.017	2.083
15	MP ALPHA4	X	.01	7.917
16	MP ALPHA4	X	.01	2.083
17	MP ALPHA1	Y	-.006	5
18	MP ALPHA1	X	.003	5
19	MP ALPHA1	Y	-.00094	5
20	MP ALPHA1	X	.000543	5
21	MP ALPHA2	Y	-.005	5

Member Point Loads (BLC 26 : Maintanence (330)) (Continued)

	Member Label	Direction	Magnitude[k,k-ft]	Location[ft,%]
22	MP ALPHA2	X	.003	5
23	MP ALPHA2	Y	-.005	5
24	MP ALPHA2	X	.003	5
25	MP ALPHA4	Y	-.004	5
26	MP ALPHA4	X	.002	5
27	MP ALPHA4	Y	-.004	5
28	MP ALPHA4	X	.002	5

Member Point Loads (BLC 27 : Ice Dead Load)

	Member Label	Direction	Magnitude[k,k-ft]	Location[ft,%]
1	MP ALPHA1	Z	-.045	7.083
2	MP ALPHA1	Z	-.045	2.917
3	MP ALPHA2	Z	-.105	7.917
4	MP ALPHA2	Z	-.105	2.083
5	MP ALPHA3	Z	-.13	7.917
6	MP ALPHA3	Z	-.13	2.083
7	MP ALPHA4	Z	-.128	7.917
8	MP ALPHA4	Z	-.128	2.083
9	MP ALPHA1	Z	-.062	5
10	MP ALPHA1	Z	-.016	5
11	MP ALPHA2	Z	-.058	5
12	MP ALPHA2	Z	-.058	5
13	MP ALPHA4	Z	-.051	5
14	MP ALPHA4	Z	-.044	5

Member Point Loads (BLC 28 : Ice Wind Load (0))

	Member Label	Direction	Magnitude[k,k-ft]	Location[ft,%]
1	MP ALPHA1	Y	-.024	7.083
2	MP ALPHA1	Y	-.024	2.917
3	MP ALPHA2	Y	-.055	7.917
4	MP ALPHA2	Y	-.055	2.083
5	MP ALPHA3	Y	-.072	7.917
6	MP ALPHA3	Y	-.072	2.083
7	MP ALPHA4	Y	-.071	7.917
8	MP ALPHA4	Y	-.071	2.083
9	MP ALPHA1	Y	-.032	5
10	MP ALPHA1	Y	-.006	5
11	MP ALPHA2	Y	-.025	5
12	MP ALPHA2	Y	-.025	5
13	MP ALPHA4	Y	-.019	5
14	MP ALPHA4	Y	-.018	5

Member Point Loads (BLC 29 : Ice Wind Load (30))

	Member Label	Direction	Magnitude[k,k-ft]	Location[ft,%]
1	MP ALPHA1	Y	-.019	7.083
2	MP ALPHA1	Y	-.019	2.917
3	MP ALPHA1	X	-.011	7.083
4	MP ALPHA1	X	-.011	2.917
5	MP ALPHA2	Y	-.044	7.917
6	MP ALPHA2	Y	-.044	2.083
7	MP ALPHA2	X	-.025	7.917
8	MP ALPHA2	X	-.025	2.083
9	MP ALPHA3	Y	-.055	7.917
10	MP ALPHA3	Y	-.055	2.083
11	MP ALPHA3	X	-.032	7.917

Member Point Loads (BLC 29 : Ice Wind Load (30)) (Continued)

	Member Label	Direction	Magnitude[k,k-ft]	Location[ft,%]
12	MP ALPHA3	X	-.032	2.083
13	MP ALPHA4	Y	-.054	7.917
14	MP ALPHA4	Y	-.054	2.083
15	MP ALPHA4	X	-.031	7.917
16	MP ALPHA4	X	-.031	2.083
17	MP ALPHA1	Y	-.024	5
18	MP ALPHA1	X	-.014	5
19	MP ALPHA1	Y	-.005	5
20	MP ALPHA1	X	-.003	5
21	MP ALPHA2	Y	-.02	5
22	MP ALPHA2	X	-.012	5
23	MP ALPHA2	Y	-.02	5
24	MP ALPHA2	X	-.012	5
25	MP ALPHA4	Y	-.015	5
26	MP ALPHA4	X	-.009	5
27	MP ALPHA4	Y	-.014	5
28	MP ALPHA4	X	-.008	5

Member Point Loads (BLC 30 : Ice Wind Load (60))

	Member Label	Direction	Magnitude[k,k-ft]	Location[ft,%]
1	MP ALPHA1	Y	-.009	7.083
2	MP ALPHA1	Y	-.009	2.917
3	MP ALPHA1	X	-.015	7.083
4	MP ALPHA1	X	-.015	2.917
5	MP ALPHA2	Y	-.021	7.917
6	MP ALPHA2	Y	-.021	2.083
7	MP ALPHA2	X	-.037	7.917
8	MP ALPHA2	X	-.037	2.083
9	MP ALPHA3	Y	-.023	7.917
10	MP ALPHA3	Y	-.023	2.083
11	MP ALPHA3	X	-.039	7.917
12	MP ALPHA3	X	-.039	2.083
13	MP ALPHA4	Y	-.023	7.917
14	MP ALPHA4	Y	-.023	2.083
15	MP ALPHA4	X	-.039	7.917
16	MP ALPHA4	X	-.039	2.083
17	MP ALPHA1	Y	-.009	5
18	MP ALPHA1	X	-.015	5
19	MP ALPHA1	Y	-.003	5
20	MP ALPHA1	X	-.005	5
21	MP ALPHA2	Y	-.009	5
22	MP ALPHA2	X	-.016	5
23	MP ALPHA2	Y	-.009	5
24	MP ALPHA2	X	-.016	5
25	MP ALPHA4	Y	-.008	5
26	MP ALPHA4	X	-.013	5
27	MP ALPHA4	Y	-.006	5
28	MP ALPHA4	X	-.011	5

Member Point Loads (BLC 31 : Ice Wind Load (90))

	Member Label	Direction	Magnitude[k,k-ft]	Location[ft,%]
1	MP ALPHA1	X	-.015	7.083
2	MP ALPHA1	X	-.015	2.917
3	MP ALPHA2	X	-.039	7.917
4	MP ALPHA2	X	-.039	2.083
5	MP ALPHA3	X	-.037	7.917

Member Point Loads (BLC 31 : Ice Wind Load (90)) (Continued)

	Member Label	Direction	Magnitude[k,k-ft]	Location[ft,%]
6	MP ALPHA3	X	-.037	2.083
7	MP ALPHA4	X	-.036	7.917
8	MP ALPHA4	X	-.036	2.083
9	MP ALPHA1	X	-.012	5
10	MP ALPHA1	X	-.005	5
11	MP ALPHA2	X	-.017	5
12	MP ALPHA2	X	-.017	5
13	MP ALPHA4	X	-.014	5
14	MP ALPHA4	X	-.011	5

Member Point Loads (BLC 32 : Ice Wind Load (120))

	Member Label	Direction	Magnitude[k,k-ft]	Location[ft,%]
1	MP ALPHA1	Y	.009	7.083
2	MP ALPHA1	Y	.009	2.917
3	MP ALPHA1	X	-.015	7.083
4	MP ALPHA1	X	-.015	2.917
5	MP ALPHA2	Y	.021	7.917
6	MP ALPHA2	Y	.021	2.083
7	MP ALPHA2	X	-.037	7.917
8	MP ALPHA2	X	-.037	2.083
9	MP ALPHA3	Y	.023	7.917
10	MP ALPHA3	Y	.023	2.083
11	MP ALPHA3	X	-.039	7.917
12	MP ALPHA3	X	-.039	2.083
13	MP ALPHA4	Y	.023	7.917
14	MP ALPHA4	Y	.023	2.083
15	MP ALPHA4	X	-.039	7.917
16	MP ALPHA4	X	-.039	2.083
17	MP ALPHA1	Y	.009	5
18	MP ALPHA1	X	-.015	5
19	MP ALPHA1	Y	.003	5
20	MP ALPHA1	X	-.005	5
21	MP ALPHA2	Y	.009	5
22	MP ALPHA2	X	-.016	5
23	MP ALPHA2	Y	.009	5
24	MP ALPHA2	X	-.016	5
25	MP ALPHA4	Y	.008	5
26	MP ALPHA4	X	-.013	5
27	MP ALPHA4	Y	.006	5
28	MP ALPHA4	X	-.011	5

Member Point Loads (BLC 33 : Ice Wind Load (150))

	Member Label	Direction	Magnitude[k,k-ft]	Location[ft,%]
1	MP ALPHA1	Y	.019	7.083
2	MP ALPHA1	Y	.019	2.917
3	MP ALPHA1	X	-.011	7.083
4	MP ALPHA1	X	-.011	2.917
5	MP ALPHA2	Y	.044	7.917
6	MP ALPHA2	Y	.044	2.083
7	MP ALPHA2	X	-.025	7.917
8	MP ALPHA2	X	-.025	2.083
9	MP ALPHA3	Y	.055	7.917
10	MP ALPHA3	Y	.055	2.083
11	MP ALPHA3	X	-.032	7.917
12	MP ALPHA3	X	-.032	2.083
13	MP ALPHA4	Y	.054	7.917

Member Point Loads (BLC 33 : Ice Wind Load (150)) (Continued)

	Member Label	Direction	Magnitude[k,k-ft]	Location[ft,%]
14	MP ALPHA4	Y	.054	2.083
15	MP ALPHA4	X	-.031	7.917
16	MP ALPHA4	X	-.031	2.083
17	MP ALPHA1	Y	.024	5
18	MP ALPHA1	X	-.014	5
19	MP ALPHA1	Y	.005	5
20	MP ALPHA1	X	-.003	5
21	MP ALPHA2	Y	.02	5
22	MP ALPHA2	X	-.012	5
23	MP ALPHA2	Y	.02	5
24	MP ALPHA2	X	-.012	5
25	MP ALPHA4	Y	.015	5
26	MP ALPHA4	X	-.009	5
27	MP ALPHA4	Y	.014	5
28	MP ALPHA4	X	-.008	5

Member Point Loads (BLC 34 : Ice Wind Load (180))

	Member Label	Direction	Magnitude[k,k-ft]	Location[ft,%]
1	MP ALPHA1	Y	.024	7.083
2	MP ALPHA1	Y	.024	2.917
3	MP ALPHA2	Y	.055	7.917
4	MP ALPHA2	Y	.055	2.083
5	MP ALPHA3	Y	.072	7.917
6	MP ALPHA3	Y	.072	2.083
7	MP ALPHA4	Y	.071	7.917
8	MP ALPHA4	Y	.071	2.083
9	MP ALPHA1	Y	.032	5
10	MP ALPHA1	Y	.006	5
11	MP ALPHA2	Y	.025	5
12	MP ALPHA2	Y	.025	5
13	MP ALPHA4	Y	.019	5
14	MP ALPHA4	Y	.018	5

Member Point Loads (BLC 35 : Ice Wind Load (210))

	Member Label	Direction	Magnitude[k,k-ft]	Location[ft,%]
1	MP ALPHA1	Y	.019	7.083
2	MP ALPHA1	Y	.019	2.917
3	MP ALPHA1	X	.011	7.083
4	MP ALPHA1	X	.011	2.917
5	MP ALPHA2	Y	.044	7.917
6	MP ALPHA2	Y	.044	2.083
7	MP ALPHA2	X	.025	7.917
8	MP ALPHA2	X	.025	2.083
9	MP ALPHA3	Y	.055	7.917
10	MP ALPHA3	Y	.055	2.083
11	MP ALPHA3	X	.032	7.917
12	MP ALPHA3	X	.032	2.083
13	MP ALPHA4	Y	.054	7.917
14	MP ALPHA4	Y	.054	2.083
15	MP ALPHA4	X	.031	7.917
16	MP ALPHA4	X	.031	2.083
17	MP ALPHA1	Y	.024	5
18	MP ALPHA1	X	.014	5
19	MP ALPHA1	Y	.005	5
20	MP ALPHA1	X	.003	5
21	MP ALPHA2	Y	.02	5

Member Point Loads (BLC 35 : Ice Wind Load (210)) (Continued)

	Member Label	Direction	Magnitude[k,k-ft]	Location[ft,%]
22	MP ALPHA2	X	.012	5
23	MP ALPHA2	Y	.02	5
24	MP ALPHA2	X	.012	5
25	MP ALPHA4	Y	.015	5
26	MP ALPHA4	X	.009	5
27	MP ALPHA4	Y	.014	5
28	MP ALPHA4	X	.008	5

Member Point Loads (BLC 36 : Ice Wind Load (240))

	Member Label	Direction	Magnitude[k,k-ft]	Location[ft,%]
1	MP ALPHA1	Y	.009	7.083
2	MP ALPHA1	Y	.009	2.917
3	MP ALPHA1	X	.015	7.083
4	MP ALPHA1	X	.015	2.917
5	MP ALPHA2	Y	.021	7.917
6	MP ALPHA2	Y	.021	2.083
7	MP ALPHA2	X	.037	7.917
8	MP ALPHA2	X	.037	2.083
9	MP ALPHA3	Y	.023	7.917
10	MP ALPHA3	Y	.023	2.083
11	MP ALPHA3	X	.039	7.917
12	MP ALPHA3	X	.039	2.083
13	MP ALPHA4	Y	.023	7.917
14	MP ALPHA4	Y	.023	2.083
15	MP ALPHA4	X	.039	7.917
16	MP ALPHA4	X	.039	2.083
17	MP ALPHA1	Y	.009	5
18	MP ALPHA1	X	.015	5
19	MP ALPHA1	Y	.003	5
20	MP ALPHA1	X	.005	5
21	MP ALPHA2	Y	.009	5
22	MP ALPHA2	X	.016	5
23	MP ALPHA2	Y	.009	5
24	MP ALPHA2	X	.016	5
25	MP ALPHA4	Y	.008	5
26	MP ALPHA4	X	.013	5
27	MP ALPHA4	Y	.006	5
28	MP ALPHA4	X	.011	5

Member Point Loads (BLC 37 : Ice Wind Load (270))

	Member Label	Direction	Magnitude[k,k-ft]	Location[ft,%]
1	MP ALPHA1	X	.015	7.083
2	MP ALPHA1	X	.015	2.917
3	MP ALPHA2	X	.039	7.917
4	MP ALPHA2	X	.039	2.083
5	MP ALPHA3	X	.037	7.917
6	MP ALPHA3	X	.037	2.083
7	MP ALPHA4	X	.036	7.917
8	MP ALPHA4	X	.036	2.083
9	MP ALPHA1	X	.012	5
10	MP ALPHA1	X	.005	5
11	MP ALPHA2	X	.017	5
12	MP ALPHA2	X	.017	5
13	MP ALPHA4	X	.014	5
14	MP ALPHA4	X	.011	5

Member Point Loads (BLC 38 : Ice Wind Load (300))

	Member Label	Direction	Magnitude[k,k-ft]	Location[ft,%]
1	MP ALPHA1	Y	-.009	7.083
2	MP ALPHA1	Y	-.009	2.917
3	MP ALPHA1	X	.015	7.083
4	MP ALPHA1	X	.015	2.917
5	MP ALPHA2	Y	-.021	7.917
6	MP ALPHA2	Y	-.021	2.083
7	MP ALPHA2	X	.037	7.917
8	MP ALPHA2	X	.037	2.083
9	MP ALPHA3	Y	-.023	7.917
10	MP ALPHA3	Y	-.023	2.083
11	MP ALPHA3	X	.039	7.917
12	MP ALPHA3	X	.039	2.083
13	MP ALPHA4	Y	-.023	7.917
14	MP ALPHA4	Y	-.023	2.083
15	MP ALPHA4	X	.039	7.917
16	MP ALPHA4	X	.039	2.083
17	MP ALPHA1	Y	-.009	5
18	MP ALPHA1	X	.015	5
19	MP ALPHA1	Y	-.003	5
20	MP ALPHA1	X	.005	5
21	MP ALPHA2	Y	-.009	5
22	MP ALPHA2	X	.016	5
23	MP ALPHA2	Y	-.009	5
24	MP ALPHA2	X	.016	5
25	MP ALPHA4	Y	-.008	5
26	MP ALPHA4	X	.013	5
27	MP ALPHA4	Y	-.006	5
28	MP ALPHA4	X	.011	5

Member Point Loads (BLC 39 : Ice Wind Load (330))

	Member Label	Direction	Magnitude[k,k-ft]	Location[ft,%]
1	MP ALPHA1	Y	-.019	7.083
2	MP ALPHA1	Y	-.019	2.917
3	MP ALPHA1	X	.011	7.083
4	MP ALPHA1	X	.011	2.917
5	MP ALPHA2	Y	-.044	7.917
6	MP ALPHA2	Y	-.044	2.083
7	MP ALPHA2	X	.025	7.917
8	MP ALPHA2	X	.025	2.083
9	MP ALPHA3	Y	-.055	7.917
10	MP ALPHA3	Y	-.055	2.083
11	MP ALPHA3	X	.032	7.917
12	MP ALPHA3	X	.032	2.083
13	MP ALPHA4	Y	-.054	7.917
14	MP ALPHA4	Y	-.054	2.083
15	MP ALPHA4	X	.031	7.917
16	MP ALPHA4	X	.031	2.083
17	MP ALPHA1	Y	-.024	5
18	MP ALPHA1	X	.014	5
19	MP ALPHA1	Y	-.005	5
20	MP ALPHA1	X	.003	5
21	MP ALPHA2	Y	-.02	5
22	MP ALPHA2	X	.012	5
23	MP ALPHA2	Y	-.02	5
24	MP ALPHA2	X	.012	5
25	MP ALPHA4	Y	-.015	5

Member Point Loads (BLC 39 : Ice Wind Load (330)) (Continued)

	Member Label	Direction	Magnitude[k,k-ft]	Location[ft,%]
26	MP ALPHA4	X	.009	5
27	MP ALPHA4	Y	-.014	5
28	MP ALPHA4	X	.008	5

Member Point Loads (BLC 40 : Earthquake (x-direction))

	Member Label	Direction	Magnitude[k,k-ft]	Location[ft,%]
1	MP ALPHA1	X	-.002	7.083
2	MP ALPHA1	X	-.002	2.917
3	MP ALPHA2	X	-.005	7.917
4	MP ALPHA2	X	-.005	2.083
5	MP ALPHA3	X	-.004	7.917
6	MP ALPHA3	X	-.004	2.083
7	MP ALPHA4	X	-.006	7.917
8	MP ALPHA4	X	-.006	2.083
9	MP ALPHA1	X	-.007	5
10	MP ALPHA1	X	-.003	5
11	MP ALPHA2	X	-.006	5
12	MP ALPHA2	X	-.006	5
13	MP ALPHA4	X	-.008	5
14	MP ALPHA4	X	-.007	5

Member Point Loads (BLC 41 : Earthquake (y-direction))

	Member Label	Direction	Magnitude[k,k-ft]	Location[ft,%]
1	MP ALPHA1	Y	-.002	7.083
2	MP ALPHA1	Y	-.002	2.917
3	MP ALPHA2	Y	-.005	7.917
4	MP ALPHA2	Y	-.005	2.083
5	MP ALPHA3	Y	-.004	7.917
6	MP ALPHA3	Y	-.004	2.083
7	MP ALPHA4	Y	-.006	7.917
8	MP ALPHA4	Y	-.006	2.083
9	MP ALPHA1	Y	-.007	5
10	MP ALPHA1	Y	-.003	5
11	MP ALPHA2	Y	-.006	5
12	MP ALPHA2	Y	-.006	5
13	MP ALPHA4	Y	-.008	5
14	MP ALPHA4	Y	-.007	5

Member Point Loads (BLC 42 : Earthquake (z-direction))

	Member Label	Direction	Magnitude[k,k-ft]	Location[ft,%]
1	MP ALPHA1	Z	-.000795	7.083
2	MP ALPHA1	Z	-.000795	2.917
3	MP ALPHA2	Z	-.002	7.917
4	MP ALPHA2	Z	-.002	2.083
5	MP ALPHA3	Z	-.002	7.917
6	MP ALPHA3	Z	-.002	2.083
7	MP ALPHA4	Z	-.002	7.917
8	MP ALPHA4	Z	-.002	2.083
9	MP ALPHA1	Z	-.003	5
10	MP ALPHA1	Z	-.001	5
11	MP ALPHA2	Z	-.002	5
12	MP ALPHA2	Z	-.002	5
13	MP ALPHA4	Z	-.003	5
14	MP ALPHA4	Z	-.003	5

Member Distributed Loads (BLC 2 : Wind Load (0))

	Member Label	Direction	Start Magnitude[k/ft,F,ksf]	End Magnitude[k/ft...	Start Location[ft,%]	End Location[ft,%]
1	BACK PL1	PY	-.002	-.002	0	0
2	BACK PL2	PY	-.002	-.002	0	0
3	BACK PL3	PY	-.002	-.002	0	0
4	BACK PL4	PY	-.002	-.002	0	0
5	CHANNEL1	PY	-.012	-.012	0	0
6	CHANNEL2	PY	-.012	-.012	0	0
7	DIAG1	PY	-.000944	-.000944	0	0
8	DIAG2	PY	-.000944	-.000944	0	0
9	FACE1	PY	-.007	-.007	0	0
10	FACE2	PY	-.007	-.007	0	0
11	KICKER1	PY	-.003	-.003	0	0
12	KICKER2	PY	-.003	-.003	0	0
13	KICKER3	PY	-.003	-.003	0	0
14	KICKER4	PY	-.003	-.003	0	0
15	MP ALPHA1	PY	-.01	-.01	0	0
16	MP ALPHA2	PY	-.01	-.01	0	0
17	MP ALPHA3	PY	-.01	-.01	0	0
18	MP ALPHA4	PY	-.01	-.01	0	0
19	PL1	PY	-.002	-.002	0	0
20	PL2	PY	-.002	-.002	0	0
21	PL3	PY	-.002	-.002	0	0
22	PL4	PY	-.002	-.002	0	0
23	PL5	PY	-.002	-.002	0	0
24	PL6	PY	-.002	-.002	0	0
25	PL7	PY	-.002	-.002	0	0
26	PL8	PY	-.002	-.002	0	0
27	SUPP PIPE	PY	-.004	-.004	0	0
28	TIEBACK2	PY	-.003	-.003	0	0
29	VERT1	PY	-.000944	-.000944	0	0
30	VERT4	PY	-.000944	-.000944	0	0
31	TIEBACK1	PY	-.003	-.003	0	0

Member Distributed Loads (BLC 4 : Wind Load (30))

	Member Label	Direction	Start Magnitude[k/ft,F,ksf]	End Magnitude[k/ft...	Start Location[ft,%]	End Location[ft,%]
1	BACK PL1	PY	-.002	-.002	0	0
2	BACK PL2	PY	-.002	-.002	0	0
3	BACK PL3	PY	-.002	-.002	0	0
4	BACK PL4	PY	-.002	-.002	0	0
5	CHANNEL1	PY	-.01	-.01	0	0
6	CHANNEL2	PY	-.01	-.01	0	0
7	DIAG1	PY	-.000817	-.000817	0	0
8	DIAG2	PY	-.000817	-.000817	0	0
9	FACE1	PY	-.006	-.006	0	0
10	FACE2	PY	-.006	-.006	0	0
11	KICKER1	PY	-.003	-.003	0	0
12	KICKER2	PY	-.003	-.003	0	0
13	KICKER3	PY	-.003	-.003	0	0
14	KICKER4	PY	-.003	-.003	0	0
15	MP ALPHA1	PY	-.008	-.008	0	0
16	MP ALPHA2	PY	-.008	-.008	0	0
17	MP ALPHA3	PY	-.008	-.008	0	0
18	MP ALPHA4	PY	-.008	-.008	0	0
19	PL1	PY	-.001	-.001	0	0
20	PL2	PY	-.001	-.001	0	0
21	PL3	PY	-.001	-.001	0	0

Member Distributed Loads (BLC 4 : Wind Load (30)) (Continued)

	Member Label	Direction	Start Magnitude[k/ft,F,ksf]	End Magnitude[k/ft...	Start Location[ft,%]	End Location[ft,%]
22	PL4	PY	-.001	-.001	0	0
23	PL5	PY	-.001	-.001	0	0
24	PL6	PY	-.001	-.001	0	0
25	PL7	PY	-.001	-.001	0	0
26	PL8	PY	-.001	-.001	0	0
27	SUPP PIPE	PY	-.004	-.004	0	0
28	TIEBACK2	PY	-.003	-.003	0	0
29	VERT1	PY	-.000817	-.000817	0	0
30	VERT4	PY	-.000817	-.000817	0	0
31	TIEBACK1	PY	-.003	-.003	0	0
32	BACK PL1	PX	-.001	-.001	0	0
33	BACK PL2	PX	-.001	-.001	0	0
34	BACK PL3	PX	-.001	-.001	0	0
35	BACK PL4	PX	-.001	-.001	0	0
36	CHANNEL1	PX	-.006	-.006	0	0
37	CHANNEL2	PX	-.006	-.006	0	0
38	DIAG1	PX	-.000472	-.000472	0	0
39	DIAG2	PX	-.000472	-.000472	0	0
40	FACE1	PX	-.004	-.004	0	0
41	FACE2	PX	-.004	-.004	0	0
42	KICKER1	PX	-.001	-.001	0	0
43	KICKER2	PX	-.001	-.001	0	0
44	KICKER3	PX	-.001	-.001	0	0
45	KICKER4	PX	-.001	-.001	0	0
46	MP ALPHA1	PX	-.005	-.005	0	0
47	MP ALPHA2	PX	-.005	-.005	0	0
48	MP ALPHA3	PX	-.005	-.005	0	0
49	MP ALPHA4	PX	-.005	-.005	0	0
50	PL1	PX	-.000858	-.000858	0	0
51	PL2	PX	-.000858	-.000858	0	0
52	PL3	PX	-.000858	-.000858	0	0
53	PL4	PX	-.000858	-.000858	0	0
54	PL5	PX	-.000858	-.000858	0	0
55	PL6	PX	-.000858	-.000858	0	0
56	PL7	PX	-.000858	-.000858	0	0
57	PL8	PX	-.000858	-.000858	0	0
58	SUPP PIPE	PX	-.002	-.002	0	0
59	TIEBACK2	PX	-.001	-.001	0	0
60	VERT1	PX	-.000472	-.000472	0	0
61	VERT4	PX	-.000472	-.000472	0	0
62	TIEBACK1	PX	-.001	-.001	0	0

Member Distributed Loads (BLC 5 : Wind Load (60))

	Member Label	Direction	Start Magnitude[k/ft,F,ksf]	End Magnitude[k/ft...	Start Location[ft,%]	End Location[ft,%]
1	BACK PL1	PY	-.001	-.001	0	0
2	BACK PL2	PY	-.001	-.001	0	0
3	BACK PL3	PY	-.001	-.001	0	0
4	BACK PL4	PY	-.001	-.001	0	0
5	CHANNEL1	PY	-.006	-.006	0	0
6	CHANNEL2	PY	-.006	-.006	0	0
7	DIAG1	PY	-.000472	-.000472	0	0
8	DIAG2	PY	-.000472	-.000472	0	0
9	FACE1	PY	-.004	-.004	0	0
10	FACE2	PY	-.004	-.004	0	0
11	KICKER1	PY	-.001	-.001	0	0
12	KICKER2	PY	-.001	-.001	0	0

Member Distributed Loads (BLC 5 : Wind Load (60)) (Continued)

	Member Label	Direction	Start Magnitude[k/ft,F,ksf]	End Magnitude[k/ft...	Start Location[ft,%]	End Location[ft,%]
13	KICKER3	PY	-.001	-.001	0	0
14	KICKER4	PY	-.001	-.001	0	0
15	MP ALPHA1	PY	-.005	-.005	0	0
16	MP ALPHA2	PY	-.005	-.005	0	0
17	MP ALPHA3	PY	-.005	-.005	0	0
18	MP ALPHA4	PY	-.005	-.005	0	0
19	PL1	PY	-.000858	-.000858	0	0
20	PL2	PY	-.000858	-.000858	0	0
21	PL3	PY	-.000858	-.000858	0	0
22	PL4	PY	-.000858	-.000858	0	0
23	PL5	PY	-.000858	-.000858	0	0
24	PL6	PY	-.000858	-.000858	0	0
25	PL7	PY	-.000858	-.000858	0	0
26	PL8	PY	-.000858	-.000858	0	0
27	SUPP PIPE	PY	-.002	-.002	0	0
28	TIEBACK2	PY	-.001	-.001	0	0
29	VERT1	PY	-.000472	-.000472	0	0
30	VERT4	PY	-.000472	-.000472	0	0
31	TIEBACK1	PY	-.001	-.001	0	0
32	BACK PL1	PX	-.002	-.002	0	0
33	BACK PL2	PX	-.002	-.002	0	0
34	BACK PL3	PX	-.002	-.002	0	0
35	BACK PL4	PX	-.002	-.002	0	0
36	CHANNEL1	PX	-.01	-.01	0	0
37	CHANNEL2	PX	-.01	-.01	0	0
38	DIAG1	PX	-.000817	-.000817	0	0
39	DIAG2	PX	-.000817	-.000817	0	0
40	FACE1	PX	-.006	-.006	0	0
41	FACE2	PX	-.006	-.006	0	0
42	KICKER1	PX	-.003	-.003	0	0
43	KICKER2	PX	-.003	-.003	0	0
44	KICKER3	PX	-.003	-.003	0	0
45	KICKER4	PX	-.003	-.003	0	0
46	MP ALPHA1	PX	-.008	-.008	0	0
47	MP ALPHA2	PX	-.008	-.008	0	0
48	MP ALPHA3	PX	-.008	-.008	0	0
49	MP ALPHA4	PX	-.008	-.008	0	0
50	PL1	PX	-.001	-.001	0	0
51	PL2	PX	-.001	-.001	0	0
52	PL3	PX	-.001	-.001	0	0
53	PL4	PX	-.001	-.001	0	0
54	PL5	PX	-.001	-.001	0	0
55	PL6	PX	-.001	-.001	0	0
56	PL7	PX	-.001	-.001	0	0
57	PL8	PX	-.001	-.001	0	0
58	SUPP PIPE	PX	-.004	-.004	0	0
59	TIEBACK2	PX	-.003	-.003	0	0
60	VERT1	PX	-.000817	-.000817	0	0
61	VERT4	PX	-.000817	-.000817	0	0
62	TIEBACK1	PX	-.003	-.003	0	0

Member Distributed Loads (BLC 6 : Wind Load (90))

	Member Label	Direction	Start Magnitude[k/ft,F,ksf]	End Magnitude[k/ft...	Start Location[ft,%]	End Location[ft,%]
1	BACK PL1	PX	-.002	-.002	0	0
2	BACK PL2	PX	-.002	-.002	0	0
3	BACK PL3	PX	-.002	-.002	0	0

Member Distributed Loads (BLC 6 : Wind Load (90)) (Continued)

	Member Label	Direction	Start Magnitude[k/ft,F,ksf]	End Magnitude[k/ft...	Start Location[ft,%]	End Location[ft,%]
4	BACK PL4	PX	-.002	-.002	0	0
5	CHANNEL1	PX	-.012	-.012	0	0
6	CHANNEL2	PX	-.012	-.012	0	0
7	DIAG1	PX	-.002	-.002	0	0
8	DIAG2	PX	-.002	-.002	0	0
9	FACE1	PX	-.004	-.004	0	0
10	FACE2	PX	-.004	-.004	0	0
11	KICKER1	PX	-.007	-.007	0	0
12	KICKER2	PX	-.007	-.007	0	0
13	KICKER3	PX	-.007	-.007	0	0
14	KICKER4	PX	-.007	-.007	0	0
15	MP ALPHA1	PX	-.01	-.01	0	0
16	MP ALPHA2	PX	-.01	-.01	0	0
17	MP ALPHA3	PX	-.01	-.01	0	0
18	MP ALPHA4	PX	-.01	-.01	0	0
19	PL1	PX	-.002	-.002	0	0
20	PL2	PX	-.002	-.002	0	0
21	PL3	PX	-.002	-.002	0	0
22	PL4	PX	-.002	-.002	0	0
23	PL5	PX	-.002	-.002	0	0
24	PL6	PX	-.002	-.002	0	0
25	PL7	PX	-.002	-.002	0	0
26	PL8	PX	-.002	-.002	0	0
27	SUPP PIPE	PX	-.005	-.005	0	0
28	TIEBACK2	PX	-.003	-.003	0	0
29	VERT1	PX	-.002	-.002	0	0
30	VERT4	PX	-.002	-.002	0	0
31	TIEBACK1	PX	-.003	-.003	0	0

Member Distributed Loads (BLC 7 : Wind Load (120))

	Member Label	Direction	Start Magnitude[k/ft,F,ksf]	End Magnitude[k/ft...	Start Location[ft,%]	End Location[ft,%]
1	BACK PL1	PY	.001	.001	0	0
2	BACK PL2	PY	.001	.001	0	0
3	BACK PL3	PY	.001	.001	0	0
4	BACK PL4	PY	.001	.001	0	0
5	CHANNEL1	PY	.006	.006	0	0
6	CHANNEL2	PY	.006	.006	0	0
7	DIAG1	PY	.000472	.000472	0	0
8	DIAG2	PY	.000472	.000472	0	0
9	FACE1	PY	.004	.004	0	0
10	FACE2	PY	.004	.004	0	0
11	KICKER1	PY	.001	.001	0	0
12	KICKER2	PY	.001	.001	0	0
13	KICKER3	PY	.001	.001	0	0
14	KICKER4	PY	.001	.001	0	0
15	MP ALPHA1	PY	.005	.005	0	0
16	MP ALPHA2	PY	.005	.005	0	0
17	MP ALPHA3	PY	.005	.005	0	0
18	MP ALPHA4	PY	.005	.005	0	0
19	PL1	PY	.000858	.000858	0	0
20	PL2	PY	.000858	.000858	0	0
21	PL3	PY	.000858	.000858	0	0
22	PL4	PY	.000858	.000858	0	0
23	PL5	PY	.000858	.000858	0	0
24	PL6	PY	.000858	.000858	0	0
25	PL7	PY	.000858	.000858	0	0

Member Distributed Loads (BLC 7 : Wind Load (120)) (Continued)

	Member Label	Direction	Start Magnitude[k/ft,F,ksf]	End Magnitude[k/ft...	Start Location[ft,%]	End Location[ft,%]
26	PL8	PY	.000858	.000858	0	0
27	SUPP PIPE	PY	.002	.002	0	0
28	TIEBACK2	PY	.001	.001	0	0
29	VERT1	PY	.000472	.000472	0	0
30	VERT4	PY	.000472	.000472	0	0
31	TIEBACK1	PY	.001	.001	0	0
32	BACK PL1	PX	-.002	-.002	0	0
33	BACK PL2	PX	-.002	-.002	0	0
34	BACK PL3	PX	-.002	-.002	0	0
35	BACK PL4	PX	-.002	-.002	0	0
36	CHANNEL1	PX	-.01	-.01	0	0
37	CHANNEL2	PX	-.01	-.01	0	0
38	DIAG1	PX	-.000817	-.000817	0	0
39	DIAG2	PX	-.000817	-.000817	0	0
40	FACE1	PX	-.006	-.006	0	0
41	FACE2	PX	-.006	-.006	0	0
42	KICKER1	PX	-.003	-.003	0	0
43	KICKER2	PX	-.003	-.003	0	0
44	KICKER3	PX	-.003	-.003	0	0
45	KICKER4	PX	-.003	-.003	0	0
46	MP ALPHA1	PX	-.008	-.008	0	0
47	MP ALPHA2	PX	-.008	-.008	0	0
48	MP ALPHA3	PX	-.008	-.008	0	0
49	MP ALPHA4	PX	-.008	-.008	0	0
50	PL1	PX	-.001	-.001	0	0
51	PL2	PX	-.001	-.001	0	0
52	PL3	PX	-.001	-.001	0	0
53	PL4	PX	-.001	-.001	0	0
54	PL5	PX	-.001	-.001	0	0
55	PL6	PX	-.001	-.001	0	0
56	PL7	PX	-.001	-.001	0	0
57	PL8	PX	-.001	-.001	0	0
58	SUPP PIPE	PX	-.004	-.004	0	0
59	TIEBACK2	PX	-.003	-.003	0	0
60	VERT1	PX	-.000817	-.000817	0	0
61	VERT4	PX	-.000817	-.000817	0	0
62	TIEBACK1	PX	-.003	-.003	0	0

Member Distributed Loads (BLC 8 : Wind Load (150))

	Member Label	Direction	Start Magnitude[k/ft,F,ksf]	End Magnitude[k/ft...	Start Location[ft,%]	End Location[ft,%]
1	BACK PL1	PY	.002	.002	0	0
2	BACK PL2	PY	.002	.002	0	0
3	BACK PL3	PY	.002	.002	0	0
4	BACK PL4	PY	.002	.002	0	0
5	CHANNEL1	PY	.01	.01	0	0
6	CHANNEL2	PY	.01	.01	0	0
7	DIAG1	PY	.000817	.000817	0	0
8	DIAG2	PY	.000817	.000817	0	0
9	FACE1	PY	.006	.006	0	0
10	FACE2	PY	.006	.006	0	0
11	KICKER1	PY	.003	.003	0	0
12	KICKER2	PY	.003	.003	0	0
13	KICKER3	PY	.003	.003	0	0
14	KICKER4	PY	.003	.003	0	0
15	MP ALPHA1	PY	.008	.008	0	0
16	MP ALPHA2	PY	.008	.008	0	0

Member Distributed Loads (BLC 8 : Wind Load (150)) (Continued)

	Member Label	Direction	Start Magnitude[k/ft,F,ksf]	End Magnitude[k/ft...	Start Location[ft,%]	End Location[ft,%]
17	MP ALPHA3	PY	.008	.008	0	0
18	MP ALPHA4	PY	.008	.008	0	0
19	PL1	PY	.001	.001	0	0
20	PL2	PY	.001	.001	0	0
21	PL3	PY	.001	.001	0	0
22	PL4	PY	.001	.001	0	0
23	PL5	PY	.001	.001	0	0
24	PL6	PY	.001	.001	0	0
25	PL7	PY	.001	.001	0	0
26	PL8	PY	.001	.001	0	0
27	SUPP PIPE	PY	.004	.004	0	0
28	TIEBACK2	PY	.003	.003	0	0
29	VERT1	PY	.000817	.000817	0	0
30	VERT4	PY	.000817	.000817	0	0
31	TIEBACK1	PY	.003	.003	0	0
32	BACK PL1	PX	-.001	-.001	0	0
33	BACK PL2	PX	-.001	-.001	0	0
34	BACK PL3	PX	-.001	-.001	0	0
35	BACK PL4	PX	-.001	-.001	0	0
36	CHANNEL1	PX	-.006	-.006	0	0
37	CHANNEL2	PX	-.006	-.006	0	0
38	DIAG1	PX	-.000472	-.000472	0	0
39	DIAG2	PX	-.000472	-.000472	0	0
40	FACE1	PX	-.004	-.004	0	0
41	FACE2	PX	-.004	-.004	0	0
42	KICKER1	PX	-.001	-.001	0	0
43	KICKER2	PX	-.001	-.001	0	0
44	KICKER3	PX	-.001	-.001	0	0
45	KICKER4	PX	-.001	-.001	0	0
46	MP ALPHA1	PX	-.005	-.005	0	0
47	MP ALPHA2	PX	-.005	-.005	0	0
48	MP ALPHA3	PX	-.005	-.005	0	0
49	MP ALPHA4	PX	-.005	-.005	0	0
50	PL1	PX	-.000858	-.000858	0	0
51	PL2	PX	-.000858	-.000858	0	0
52	PL3	PX	-.000858	-.000858	0	0
53	PL4	PX	-.000858	-.000858	0	0
54	PL5	PX	-.000858	-.000858	0	0
55	PL6	PX	-.000858	-.000858	0	0
56	PL7	PX	-.000858	-.000858	0	0
57	PL8	PX	-.000858	-.000858	0	0
58	SUPP PIPE	PX	-.002	-.002	0	0
59	TIEBACK2	PX	-.001	-.001	0	0
60	VERT1	PX	-.000472	-.000472	0	0
61	VERT4	PX	-.000472	-.000472	0	0
62	TIEBACK1	PX	-.001	-.001	0	0

Member Distributed Loads (BLC 9 : Wind Load (180))

	Member Label	Direction	Start Magnitude[k/ft,F,ksf]	End Magnitude[k/ft...	Start Location[ft,%]	End Location[ft,%]
1	BACK PL1	PY	.002	.002	0	0
2	BACK PL2	PY	.002	.002	0	0
3	BACK PL3	PY	.002	.002	0	0
4	BACK PL4	PY	.002	.002	0	0
5	CHANNEL1	PY	.012	.012	0	0
6	CHANNEL2	PY	.012	.012	0	0
7	DIAG1	PY	.000944	.000944	0	0

Member Distributed Loads (BLC 9 : Wind Load (180)) (Continued)

	Member Label	Direction	Start Magnitude[k/ft,F,ksf]	End Magnitude[k/ft...	Start Location[ft,%]	End Location[ft,%]
8	DIAG2	PY	.000944	.000944	0	0
9	FACE1	PY	.007	.007	0	0
10	FACE2	PY	.007	.007	0	0
11	KICKER1	PY	.003	.003	0	0
12	KICKER2	PY	.003	.003	0	0
13	KICKER3	PY	.003	.003	0	0
14	KICKER4	PY	.003	.003	0	0
15	MP ALPHA1	PY	.01	.01	0	0
16	MP ALPHA2	PY	.01	.01	0	0
17	MP ALPHA3	PY	.01	.01	0	0
18	MP ALPHA4	PY	.01	.01	0	0
19	PL1	PY	.002	.002	0	0
20	PL2	PY	.002	.002	0	0
21	PL3	PY	.002	.002	0	0
22	PL4	PY	.002	.002	0	0
23	PL5	PY	.002	.002	0	0
24	PL6	PY	.002	.002	0	0
25	PL7	PY	.002	.002	0	0
26	PL8	PY	.002	.002	0	0
27	SUPP PIPE	PY	.004	.004	0	0
28	TIEBACK2	PY	.003	.003	0	0
29	VERT1	PY	.000944	.000944	0	0
30	VERT4	PY	.000944	.000944	0	0
31	TIEBACK1	PY	.003	.003	0	0

Member Distributed Loads (BLC 10 : Wind Load (210))

	Member Label	Direction	Start Magnitude[k/ft,F,ksf]	End Magnitude[k/ft...	Start Location[ft,%]	End Location[ft,%]
1	BACK PL1	PY	.002	.002	0	0
2	BACK PL2	PY	.002	.002	0	0
3	BACK PL3	PY	.002	.002	0	0
4	BACK PL4	PY	.002	.002	0	0
5	CHANNEL1	PY	.01	.01	0	0
6	CHANNEL2	PY	.01	.01	0	0
7	DIAG1	PY	.000817	.000817	0	0
8	DIAG2	PY	.000817	.000817	0	0
9	FACE1	PY	.006	.006	0	0
10	FACE2	PY	.006	.006	0	0
11	KICKER1	PY	.003	.003	0	0
12	KICKER2	PY	.003	.003	0	0
13	KICKER3	PY	.003	.003	0	0
14	KICKER4	PY	.003	.003	0	0
15	MP ALPHA1	PY	.008	.008	0	0
16	MP ALPHA2	PY	.008	.008	0	0
17	MP ALPHA3	PY	.008	.008	0	0
18	MP ALPHA4	PY	.008	.008	0	0
19	PL1	PY	.001	.001	0	0
20	PL2	PY	.001	.001	0	0
21	PL3	PY	.001	.001	0	0
22	PL4	PY	.001	.001	0	0
23	PL5	PY	.001	.001	0	0
24	PL6	PY	.001	.001	0	0
25	PL7	PY	.001	.001	0	0
26	PL8	PY	.001	.001	0	0
27	SUPP PIPE	PY	.004	.004	0	0
28	TIEBACK2	PY	.003	.003	0	0
29	VERT1	PY	.000817	.000817	0	0

Member Distributed Loads (BLC 10 : Wind Load (210)) (Continued)

	Member Label	Direction	Start Magnitude[k/ft,F,ksf]	End Magnitude[k/ft...	Start Location[ft,%]	End Location[ft,%]
30	VERT4	PY	.000817	.000817	0	0
31	TIEBACK1	PY	.003	.003	0	0
32	BACK PL1	PX	.001	.001	0	0
33	BACK PL2	PX	.001	.001	0	0
34	BACK PL3	PX	.001	.001	0	0
35	BACK PL4	PX	.001	.001	0	0
36	CHANNEL1	PX	.006	.006	0	0
37	CHANNEL2	PX	.006	.006	0	0
38	DIAG1	PX	.000472	.000472	0	0
39	DIAG2	PX	.000472	.000472	0	0
40	FACE1	PX	.004	.004	0	0
41	FACE2	PX	.004	.004	0	0
42	KICKER1	PX	.001	.001	0	0
43	KICKER2	PX	.001	.001	0	0
44	KICKER3	PX	.001	.001	0	0
45	KICKER4	PX	.001	.001	0	0
46	MP ALPHA1	PX	.005	.005	0	0
47	MP ALPHA2	PX	.005	.005	0	0
48	MP ALPHA3	PX	.005	.005	0	0
49	MP ALPHA4	PX	.005	.005	0	0
50	PL1	PX	.000858	.000858	0	0
51	PL2	PX	.000858	.000858	0	0
52	PL3	PX	.000858	.000858	0	0
53	PL4	PX	.000858	.000858	0	0
54	PL5	PX	.000858	.000858	0	0
55	PL6	PX	.000858	.000858	0	0
56	PL7	PX	.000858	.000858	0	0
57	PL8	PX	.000858	.000858	0	0
58	SUPP PIPE	PX	.002	.002	0	0
59	TIEBACK2	PX	.001	.001	0	0
60	VERT1	PX	.000472	.000472	0	0
61	VERT4	PX	.000472	.000472	0	0
62	TIEBACK1	PX	.001	.001	0	0

Member Distributed Loads (BLC 11 : Wind Load (240))

	Member Label	Direction	Start Magnitude[k/ft,F,ksf]	End Magnitude[k/ft...	Start Location[ft,%]	End Location[ft,%]
1	BACK PL1	PY	.001	.001	0	0
2	BACK PL2	PY	.001	.001	0	0
3	BACK PL3	PY	.001	.001	0	0
4	BACK PL4	PY	.001	.001	0	0
5	CHANNEL1	PY	.006	.006	0	0
6	CHANNEL2	PY	.006	.006	0	0
7	DIAG1	PY	.000472	.000472	0	0
8	DIAG2	PY	.000472	.000472	0	0
9	FACE1	PY	.004	.004	0	0
10	FACE2	PY	.004	.004	0	0
11	KICKER1	PY	.001	.001	0	0
12	KICKER2	PY	.001	.001	0	0
13	KICKER3	PY	.001	.001	0	0
14	KICKER4	PY	.001	.001	0	0
15	MP ALPHA1	PY	.005	.005	0	0
16	MP ALPHA2	PY	.005	.005	0	0
17	MP ALPHA3	PY	.005	.005	0	0
18	MP ALPHA4	PY	.005	.005	0	0
19	PL1	PY	.000858	.000858	0	0
20	PL2	PY	.000858	.000858	0	0

Member Distributed Loads (BLC 11 : Wind Load (240)) (Continued)

	Member Label	Direction	Start Magnitude[k/ft,F,ksf]	End Magnitude[k/ft...	Start Location[ft,%]	End Location[ft,%]
21	PL3	PY	.000858	.000858	0	0
22	PL4	PY	.000858	.000858	0	0
23	PL5	PY	.000858	.000858	0	0
24	PL6	PY	.000858	.000858	0	0
25	PL7	PY	.000858	.000858	0	0
26	PL8	PY	.000858	.000858	0	0
27	SUPP PIPE	PY	.002	.002	0	0
28	TIEBACK2	PY	.001	.001	0	0
29	VERT1	PY	.000472	.000472	0	0
30	VERT4	PY	.000472	.000472	0	0
31	TIEBACK1	PY	.001	.001	0	0
32	BACK PL1	PX	.002	.002	0	0
33	BACK PL2	PX	.002	.002	0	0
34	BACK PL3	PX	.002	.002	0	0
35	BACK PL4	PX	.002	.002	0	0
36	CHANNEL1	PX	.01	.01	0	0
37	CHANNEL2	PX	.01	.01	0	0
38	DIAG1	PX	.000817	.000817	0	0
39	DIAG2	PX	.000817	.000817	0	0
40	FACE1	PX	.006	.006	0	0
41	FACE2	PX	.006	.006	0	0
42	KICKER1	PX	.003	.003	0	0
43	KICKER2	PX	.003	.003	0	0
44	KICKER3	PX	.003	.003	0	0
45	KICKER4	PX	.003	.003	0	0
46	MP ALPHA1	PX	.008	.008	0	0
47	MP ALPHA2	PX	.008	.008	0	0
48	MP ALPHA3	PX	.008	.008	0	0
49	MP ALPHA4	PX	.008	.008	0	0
50	PL1	PX	.001	.001	0	0
51	PL2	PX	.001	.001	0	0
52	PL3	PX	.001	.001	0	0
53	PL4	PX	.001	.001	0	0
54	PL5	PX	.001	.001	0	0
55	PL6	PX	.001	.001	0	0
56	PL7	PX	.001	.001	0	0
57	PL8	PX	.001	.001	0	0
58	SUPP PIPE	PX	.004	.004	0	0
59	TIEBACK2	PX	.003	.003	0	0
60	VERT1	PX	.000817	.000817	0	0
61	VERT4	PX	.000817	.000817	0	0
62	TIEBACK1	PX	.003	.003	0	0

Member Distributed Loads (BLC 12 : Wind Load (270))

	Member Label	Direction	Start Magnitude[k/ft,F,ksf]	End Magnitude[k/ft...	Start Location[ft,%]	End Location[ft,%]
1	BACK PL1	PX	.002	.002	0	0
2	BACK PL2	PX	.002	.002	0	0
3	BACK PL3	PX	.002	.002	0	0
4	BACK PL4	PX	.002	.002	0	0
5	CHANNEL1	PX	.012	.012	0	0
6	CHANNEL2	PX	.012	.012	0	0
7	DIAG1	PX	.002	.002	0	0
8	DIAG2	PX	.002	.002	0	0
9	FACE1	PX	.004	.004	0	0
10	FACE2	PX	.004	.004	0	0
11	KICKER1	PX	.007	.007	0	0

Member Distributed Loads (BLC 12 : Wind Load (270)) (Continued)

	Member Label	Direction	Start Magnitude[k/ft,F,ksf]	End Magnitude[k/ft...	Start Location[ft,%]	End Location[ft,%]
12	KICKER2	PX	.007	.007	0	0
13	KICKER3	PX	.007	.007	0	0
14	KICKER4	PX	.007	.007	0	0
15	MP ALPHA1	PX	.01	.01	0	0
16	MP ALPHA2	PX	.01	.01	0	0
17	MP ALPHA3	PX	.01	.01	0	0
18	MP ALPHA4	PX	.01	.01	0	0
19	PL1	PX	.002	.002	0	0
20	PL2	PX	.002	.002	0	0
21	PL3	PX	.002	.002	0	0
22	PL4	PX	.002	.002	0	0
23	PL5	PX	.002	.002	0	0
24	PL6	PX	.002	.002	0	0
25	PL7	PX	.002	.002	0	0
26	PL8	PX	.002	.002	0	0
27	SUPP PIPE	PX	.005	.005	0	0
28	TIEBACK2	PX	.003	.003	0	0
29	VERT1	PX	.002	.002	0	0
30	VERT4	PX	.002	.002	0	0
31	TIEBACK1	PX	.003	.003	0	0

Member Distributed Loads (BLC 13 : Wind Load (300))

	Member Label	Direction	Start Magnitude[k/ft,F,ksf]	End Magnitude[k/ft...	Start Location[ft,%]	End Location[ft,%]
1	BACK PL1	PY	-.001	-.001	0	0
2	BACK PL2	PY	-.001	-.001	0	0
3	BACK PL3	PY	-.001	-.001	0	0
4	BACK PL4	PY	-.001	-.001	0	0
5	CHANNEL1	PY	-.006	-.006	0	0
6	CHANNEL2	PY	-.006	-.006	0	0
7	DIAG1	PY	-.000472	-.000472	0	0
8	DIAG2	PY	-.000472	-.000472	0	0
9	FACE1	PY	-.004	-.004	0	0
10	FACE2	PY	-.004	-.004	0	0
11	KICKER1	PY	-.001	-.001	0	0
12	KICKER2	PY	-.001	-.001	0	0
13	KICKER3	PY	-.001	-.001	0	0
14	KICKER4	PY	-.001	-.001	0	0
15	MP ALPHA1	PY	-.005	-.005	0	0
16	MP ALPHA2	PY	-.005	-.005	0	0
17	MP ALPHA3	PY	-.005	-.005	0	0
18	MP ALPHA4	PY	-.005	-.005	0	0
19	PL1	PY	-.000858	-.000858	0	0
20	PL2	PY	-.000858	-.000858	0	0
21	PL3	PY	-.000858	-.000858	0	0
22	PL4	PY	-.000858	-.000858	0	0
23	PL5	PY	-.000858	-.000858	0	0
24	PL6	PY	-.000858	-.000858	0	0
25	PL7	PY	-.000858	-.000858	0	0
26	PL8	PY	-.000858	-.000858	0	0
27	SUPP PIPE	PY	-.002	-.002	0	0
28	TIEBACK2	PY	-.001	-.001	0	0
29	VERT1	PY	-.000472	-.000472	0	0
30	VERT4	PY	-.000472	-.000472	0	0
31	TIEBACK1	PY	-.001	-.001	0	0
32	BACK PL1	PX	.002	.002	0	0
33	BACK PL2	PX	.002	.002	0	0

Member Distributed Loads (BLC 13 : Wind Load (300)) (Continued)

	Member Label	Direction	Start Magnitude[k/ft,F,ksf]	End Magnitude[k/ft...	Start Location[ft,%]	End Location[ft,%]
34	BACK PL3	PX	.002	.002	0	0
35	BACK PL4	PX	.002	.002	0	0
36	CHANNEL1	PX	.01	.01	0	0
37	CHANNEL2	PX	.01	.01	0	0
38	DIAG1	PX	.000817	.000817	0	0
39	DIAG2	PX	.000817	.000817	0	0
40	FACE1	PX	.006	.006	0	0
41	FACE2	PX	.006	.006	0	0
42	KICKER1	PX	.003	.003	0	0
43	KICKER2	PX	.003	.003	0	0
44	KICKER3	PX	.003	.003	0	0
45	KICKER4	PX	.003	.003	0	0
46	MP ALPHA1	PX	.008	.008	0	0
47	MP ALPHA2	PX	.008	.008	0	0
48	MP ALPHA3	PX	.008	.008	0	0
49	MP ALPHA4	PX	.008	.008	0	0
50	PL1	PX	.001	.001	0	0
51	PL2	PX	.001	.001	0	0
52	PL3	PX	.001	.001	0	0
53	PL4	PX	.001	.001	0	0
54	PL5	PX	.001	.001	0	0
55	PL6	PX	.001	.001	0	0
56	PL7	PX	.001	.001	0	0
57	PL8	PX	.001	.001	0	0
58	SUPP PIPE	PX	.004	.004	0	0
59	TIEBACK2	PX	.003	.003	0	0
60	VERT1	PX	.000817	.000817	0	0
61	VERT4	PX	.000817	.000817	0	0
62	TIEBACK1	PX	.003	.003	0	0

Member Distributed Loads (BLC 14 : Wind Load (330))

	Member Label	Direction	Start Magnitude[k/ft,F,ksf]	End Magnitude[k/ft...	Start Location[ft,%]	End Location[ft,%]
1	BACK PL1	PY	-.002	-.002	0	0
2	BACK PL2	PY	-.002	-.002	0	0
3	BACK PL3	PY	-.002	-.002	0	0
4	BACK PL4	PY	-.002	-.002	0	0
5	CHANNEL1	PY	-.01	-.01	0	0
6	CHANNEL2	PY	-.01	-.01	0	0
7	DIAG1	PY	-.000817	-.000817	0	0
8	DIAG2	PY	-.000817	-.000817	0	0
9	FACE1	PY	-.006	-.006	0	0
10	FACE2	PY	-.006	-.006	0	0
11	KICKER1	PY	-.003	-.003	0	0
12	KICKER2	PY	-.003	-.003	0	0
13	KICKER3	PY	-.003	-.003	0	0
14	KICKER4	PY	-.003	-.003	0	0
15	MP ALPHA1	PY	-.008	-.008	0	0
16	MP ALPHA2	PY	-.008	-.008	0	0
17	MP ALPHA3	PY	-.008	-.008	0	0
18	MP ALPHA4	PY	-.008	-.008	0	0
19	PL1	PY	-.001	-.001	0	0
20	PL2	PY	-.001	-.001	0	0
21	PL3	PY	-.001	-.001	0	0
22	PL4	PY	-.001	-.001	0	0
23	PL5	PY	-.001	-.001	0	0
24	PL6	PY	-.001	-.001	0	0

Member Distributed Loads (BLC 14 : Wind Load (330)) (Continued)

	Member Label	Direction	Start Magnitude[k/ft,F,ksf]	End Magnitude[k/ft...	Start Location[ft,%]	End Location[ft,%]
25	PL7	PY	-.001	-.001	0	0
26	PL8	PY	-.001	-.001	0	0
27	SUPP PIPE	PY	-.004	-.004	0	0
28	TIEBACK2	PY	-.003	-.003	0	0
29	VERT1	PY	-.000817	-.000817	0	0
30	VERT4	PY	-.000817	-.000817	0	0
31	TIEBACK1	PY	-.003	-.003	0	0
32	BACK PL1	PX	.001	.001	0	0
33	BACK PL2	PX	.001	.001	0	0
34	BACK PL3	PX	.001	.001	0	0
35	BACK PL4	PX	.001	.001	0	0
36	CHANNEL1	PX	.006	.006	0	0
37	CHANNEL2	PX	.006	.006	0	0
38	DIAG1	PX	.000472	.000472	0	0
39	DIAG2	PX	.000472	.000472	0	0
40	FACE1	PX	.004	.004	0	0
41	FACE2	PX	.004	.004	0	0
42	KICKER1	PX	.001	.001	0	0
43	KICKER2	PX	.001	.001	0	0
44	KICKER3	PX	.001	.001	0	0
45	KICKER4	PX	.001	.001	0	0
46	MP ALPHA1	PX	.005	.005	0	0
47	MP ALPHA2	PX	.005	.005	0	0
48	MP ALPHA3	PX	.005	.005	0	0
49	MP ALPHA4	PX	.005	.005	0	0
50	PL1	PX	.000858	.000858	0	0
51	PL2	PX	.000858	.000858	0	0
52	PL3	PX	.000858	.000858	0	0
53	PL4	PX	.000858	.000858	0	0
54	PL5	PX	.000858	.000858	0	0
55	PL6	PX	.000858	.000858	0	0
56	PL7	PX	.000858	.000858	0	0
57	PL8	PX	.000858	.000858	0	0
58	SUPP PIPE	PX	.002	.002	0	0
59	TIEBACK2	PX	.001	.001	0	0
60	VERT1	PX	.000472	.000472	0	0
61	VERT4	PX	.000472	.000472	0	0
62	TIEBACK1	PX	.001	.001	0	0

Member Distributed Loads (BLC 15 : Maintanence (0))

	Member Label	Direction	Start Magnitude[k/ft,F,ksf]	End Magnitude[k/ft...	Start Location[ft,%]	End Location[ft,%]
1	BACK PL1	PY	-.000132	-.000132	0	0
2	BACK PL2	PY	-.000132	-.000132	0	0
3	BACK PL3	PY	-.000132	-.000132	0	0
4	BACK PL4	PY	-.000132	-.000132	0	0
5	CHANNEL1	PY	-.000738	-.000738	0	0
6	CHANNEL2	PY	-.000738	-.000738	0	0
7	DIAG1	PY	-5.8e-5	-5.8e-5	0	0
8	DIAG2	PY	-5.8e-5	-5.8e-5	0	0
9	FACE1	PY	-.000445	-.000445	0	0
10	FACE2	PY	-.000445	-.000445	0	0
11	KICKER1	PY	-.000184	-.000184	0	0
12	KICKER2	PY	-.000184	-.000184	0	0
13	KICKER3	PY	-.000184	-.000184	0	0
14	KICKER4	PY	-.000184	-.000184	0	0
15	MP ALPHA1	PY	-.000601	-.000601	0	0

Member Distributed Loads (BLC 15 : Maintanence (0)) (Continued)

	Member Label	Direction	Start Magnitude[k/ft,F,ksf]	End Magnitude[k/ft...	Start Location[ft,%]	End Location[ft,%]
16	MP ALPHA2	PY	-.000601	-.000601	0	0
17	MP ALPHA3	PY	-.000601	-.000601	0	0
18	MP ALPHA4	PY	-.000601	-.000601	0	0
19	PL1	PY	-.000105	-.000105	0	0
20	PL2	PY	-.000105	-.000105	0	0
21	PL3	PY	-.000105	-.000105	0	0
22	PL4	PY	-.000105	-.000105	0	0
23	PL5	PY	-.000105	-.000105	0	0
24	PL6	PY	-.000105	-.000105	0	0
25	PL7	PY	-.000105	-.000105	0	0
26	PL8	PY	-.000105	-.000105	0	0
27	SUPP PIPE	PY	-.000271	-.000271	0	0
28	TIEBACK2	PY	-.000184	-.000184	0	0
29	VERT1	PY	-5.8e-5	-5.8e-5	0	0
30	VERT4	PY	-5.8e-5	-5.8e-5	0	0
31	TIEBACK1	PY	-.000184	-.000184	0	0

Member Distributed Loads (BLC 16 : Maintanence (30))

	Member Label	Direction	Start Magnitude[k/ft,F,ksf]	End Magnitude[k/ft...	Start Location[ft,%]	End Location[ft,%]
1	BACK PL1	PY	-.000114	-.000114	0	0
2	BACK PL2	PY	-.000114	-.000114	0	0
3	BACK PL3	PY	-.000114	-.000114	0	0
4	BACK PL4	PY	-.000114	-.000114	0	0
5	CHANNEL1	PY	-.000639	-.000639	0	0
6	CHANNEL2	PY	-.000639	-.000639	0	0
7	DIAG1	PY	-5e-5	-5e-5	0	0
8	DIAG2	PY	-5e-5	-5e-5	0	0
9	FACE1	PY	-.000385	-.000385	0	0
10	FACE2	PY	-.000385	-.000385	0	0
11	KICKER1	PY	-.000159	-.000159	0	0
12	KICKER2	PY	-.000159	-.000159	0	0
13	KICKER3	PY	-.000159	-.000159	0	0
14	KICKER4	PY	-.000159	-.000159	0	0
15	MP ALPHA1	PY	-.000521	-.000521	0	0
16	MP ALPHA2	PY	-.000521	-.000521	0	0
17	MP ALPHA3	PY	-.000521	-.000521	0	0
18	MP ALPHA4	PY	-.000521	-.000521	0	0
19	PL1	PY	-9.1e-5	-9.1e-5	0	0
20	PL2	PY	-9.1e-5	-9.1e-5	0	0
21	PL3	PY	-9.1e-5	-9.1e-5	0	0
22	PL4	PY	-9.1e-5	-9.1e-5	0	0
23	PL5	PY	-9.1e-5	-9.1e-5	0	0
24	PL6	PY	-9.1e-5	-9.1e-5	0	0
25	PL7	PY	-9.1e-5	-9.1e-5	0	0
26	PL8	PY	-9.1e-5	-9.1e-5	0	0
27	SUPP PIPE	PY	-.000234	-.000234	0	0
28	TIEBACK2	PY	-.000159	-.000159	0	0
29	VERT1	PY	-5e-5	-5e-5	0	0
30	VERT4	PY	-5e-5	-5e-5	0	0
31	TIEBACK1	PY	-.000159	-.000159	0	0
32	BACK PL1	PX	-6.6e-5	-6.6e-5	0	0
33	BACK PL2	PX	-6.6e-5	-6.6e-5	0	0
34	BACK PL3	PX	-6.6e-5	-6.6e-5	0	0
35	BACK PL4	PX	-6.6e-5	-6.6e-5	0	0
36	CHANNEL1	PX	-.000369	-.000369	0	0
37	CHANNEL2	PX	-.000369	-.000369	0	0

Member Distributed Loads (BLC 16 : Maintanence (30)) (Continued)

	Member Label	Direction	Start Magnitude[k/ft,F,ksf]	End Magnitude[k/ft...	Start Location[ft,%]	End Location[ft,%]
38	DIAG1	PX	-2.9e-5	-2.9e-5	0	0
39	DIAG2	PX	-2.9e-5	-2.9e-5	0	0
40	FACE1	PX	-.000222	-.000222	0	0
41	FACE2	PX	-.000222	-.000222	0	0
42	KICKER1	PX	-9.2e-5	-9.2e-5	0	0
43	KICKER2	PX	-9.2e-5	-9.2e-5	0	0
44	KICKER3	PX	-9.2e-5	-9.2e-5	0	0
45	KICKER4	PX	-9.2e-5	-9.2e-5	0	0
46	MP ALPHA1	PX	-.000301	-.000301	0	0
47	MP ALPHA2	PX	-.000301	-.000301	0	0
48	MP ALPHA3	PX	-.000301	-.000301	0	0
49	MP ALPHA4	PX	-.000301	-.000301	0	0
50	PL1	PX	-5.3e-5	-5.3e-5	0	0
51	PL2	PX	-5.3e-5	-5.3e-5	0	0
52	PL3	PX	-5.3e-5	-5.3e-5	0	0
53	PL4	PX	-5.3e-5	-5.3e-5	0	0
54	PL5	PX	-5.3e-5	-5.3e-5	0	0
55	PL6	PX	-5.3e-5	-5.3e-5	0	0
56	PL7	PX	-5.3e-5	-5.3e-5	0	0
57	PL8	PX	-5.3e-5	-5.3e-5	0	0
58	SUPP PIPE	PX	-.000135	-.000135	0	0
59	TIEBACK2	PX	-9.2e-5	-9.2e-5	0	0
60	VERT1	PX	-2.9e-5	-2.9e-5	0	0
61	VERT4	PX	-2.9e-5	-2.9e-5	0	0
62	TIEBACK1	PX	-9.2e-5	-9.2e-5	0	0

Member Distributed Loads (BLC 17 : Maintanence (60))

	Member Label	Direction	Start Magnitude[k/ft,F,ksf]	End Magnitude[k/ft...	Start Location[ft,%]	End Location[ft,%]
1	BACK PL1	PY	-6.6e-5	-6.6e-5	0	0
2	BACK PL2	PY	-6.6e-5	-6.6e-5	0	0
3	BACK PL3	PY	-6.6e-5	-6.6e-5	0	0
4	BACK PL4	PY	-6.6e-5	-6.6e-5	0	0
5	CHANNEL1	PY	-.000369	-.000369	0	0
6	CHANNEL2	PY	-.000369	-.000369	0	0
7	DIAG1	PY	-2.9e-5	-2.9e-5	0	0
8	DIAG2	PY	-2.9e-5	-2.9e-5	0	0
9	FACE1	PY	-.000222	-.000222	0	0
10	FACE2	PY	-.000222	-.000222	0	0
11	KICKER1	PY	-9.2e-5	-9.2e-5	0	0
12	KICKER2	PY	-9.2e-5	-9.2e-5	0	0
13	KICKER3	PY	-9.2e-5	-9.2e-5	0	0
14	KICKER4	PY	-9.2e-5	-9.2e-5	0	0
15	MP ALPHA1	PY	-.000301	-.000301	0	0
16	MP ALPHA2	PY	-.000301	-.000301	0	0
17	MP ALPHA3	PY	-.000301	-.000301	0	0
18	MP ALPHA4	PY	-.000301	-.000301	0	0
19	PL1	PY	-5.3e-5	-5.3e-5	0	0
20	PL2	PY	-5.3e-5	-5.3e-5	0	0
21	PL3	PY	-5.3e-5	-5.3e-5	0	0
22	PL4	PY	-5.3e-5	-5.3e-5	0	0
23	PL5	PY	-5.3e-5	-5.3e-5	0	0
24	PL6	PY	-5.3e-5	-5.3e-5	0	0
25	PL7	PY	-5.3e-5	-5.3e-5	0	0
26	PL8	PY	-5.3e-5	-5.3e-5	0	0
27	SUPP PIPE	PY	-.000135	-.000135	0	0
28	TIEBACK2	PY	-9.2e-5	-9.2e-5	0	0

Member Distributed Loads (BLC 17 : Maintanence (60)) (Continued)

	Member Label	Direction	Start Magnitude[k/ft,F,ksf]	End Magnitude[k/ft...	Start Location[ft,%]	End Location[ft,%]
29	VERT1	PY	-2.9e-5	-2.9e-5	0	0
30	VERT4	PY	-2.9e-5	-2.9e-5	0	0
31	TIEBACK1	PY	-9.2e-5	-9.2e-5	0	0
32	BACK PL1	PX	-.000114	-.000114	0	0
33	BACK PL2	PX	-.000114	-.000114	0	0
34	BACK PL3	PX	-.000114	-.000114	0	0
35	BACK PL4	PX	-.000114	-.000114	0	0
36	CHANNEL1	PX	-.000639	-.000639	0	0
37	CHANNEL2	PX	-.000639	-.000639	0	0
38	DIAG1	PX	-5e-5	-5e-5	0	0
39	DIAG2	PX	-5e-5	-5e-5	0	0
40	FACE1	PX	-.000385	-.000385	0	0
41	FACE2	PX	-.000385	-.000385	0	0
42	KICKER1	PX	-.000159	-.000159	0	0
43	KICKER2	PX	-.000159	-.000159	0	0
44	KICKER3	PX	-.000159	-.000159	0	0
45	KICKER4	PX	-.000159	-.000159	0	0
46	MP ALPHA1	PX	-.000521	-.000521	0	0
47	MP ALPHA2	PX	-.000521	-.000521	0	0
48	MP ALPHA3	PX	-.000521	-.000521	0	0
49	MP ALPHA4	PX	-.000521	-.000521	0	0
50	PL1	PX	-9.1e-5	-9.1e-5	0	0
51	PL2	PX	-9.1e-5	-9.1e-5	0	0
52	PL3	PX	-9.1e-5	-9.1e-5	0	0
53	PL4	PX	-9.1e-5	-9.1e-5	0	0
54	PL5	PX	-9.1e-5	-9.1e-5	0	0
55	PL6	PX	-9.1e-5	-9.1e-5	0	0
56	PL7	PX	-9.1e-5	-9.1e-5	0	0
57	PL8	PX	-9.1e-5	-9.1e-5	0	0
58	SUPP PIPE	PX	-.000234	-.000234	0	0
59	TIEBACK2	PX	-.000159	-.000159	0	0
60	VERT1	PX	-5e-5	-5e-5	0	0
61	VERT4	PX	-5e-5	-5e-5	0	0
62	TIEBACK1	PX	-.000159	-.000159	0	0

Member Distributed Loads (BLC 18 : Maintanence (90))

	Member Label	Direction	Start Magnitude[k/ft,F,ksf]	End Magnitude[k/ft...	Start Location[ft,%]	End Location[ft,%]
1	BACK PL1	PX	-.000132	-.000132	0	0
2	BACK PL2	PX	-.000132	-.000132	0	0
3	BACK PL3	PX	-.000132	-.000132	0	0
4	BACK PL4	PX	-.000132	-.000132	0	0
5	CHANNEL1	PX	-.000738	-.000738	0	0
6	CHANNEL2	PX	-.000738	-.000738	0	0
7	DIAG1	PX	-.000131	-.000131	0	0
8	DIAG2	PX	-.000131	-.000131	0	0
9	FACE1	PX	-.00025	-.00025	0	0
10	FACE2	PX	-.00025	-.00025	0	0
11	KICKER1	PX	-.000414	-.000414	0	0
12	KICKER2	PX	-.000414	-.000414	0	0
13	KICKER3	PX	-.000414	-.000414	0	0
14	KICKER4	PX	-.000414	-.000414	0	0
15	MP ALPHA1	PX	-.000601	-.000601	0	0
16	MP ALPHA2	PX	-.000601	-.000601	0	0
17	MP ALPHA3	PX	-.000601	-.000601	0	0
18	MP ALPHA4	PX	-.000601	-.000601	0	0
19	PL1	PX	-.000105	-.000105	0	0

Member Distributed Loads (BLC 18 : Maintanence (90)) (Continued)

	Member Label	Direction	Start Magnitude[k/ft,F,ksf]	End Magnitude[k/ft...	Start Location[ft,%]	End Location[ft,%]
20	PL2	PX	-.000105	-.000105	0	0
21	PL3	PX	-.000105	-.000105	0	0
22	PL4	PX	-.000105	-.000105	0	0
23	PL5	PX	-.000105	-.000105	0	0
24	PL6	PX	-.000105	-.000105	0	0
25	PL7	PX	-.000105	-.000105	0	0
26	PL8	PX	-.000105	-.000105	0	0
27	SUPP PIPE	PX	-.000305	-.000305	0	0
28	TIEBACK2	PX	-.000207	-.000207	0	0
29	VERT1	PX	-.000131	-.000131	0	0
30	VERT4	PX	-.000131	-.000131	0	0
31	TIEBACK1	PX	-.000207	-.000207	0	0

Member Distributed Loads (BLC 19 : Maintanence (120))

	Member Label	Direction	Start Magnitude[k/ft,F,ksf]	End Magnitude[k/ft...	Start Location[ft,%]	End Location[ft,%]
1	BACK PL1	PY	6.6e-5	6.6e-5	0	0
2	BACK PL2	PY	6.6e-5	6.6e-5	0	0
3	BACK PL3	PY	6.6e-5	6.6e-5	0	0
4	BACK PL4	PY	6.6e-5	6.6e-5	0	0
5	CHANNEL1	PY	.000369	.000369	0	0
6	CHANNEL2	PY	.000369	.000369	0	0
7	DIAG1	PY	2.9e-5	2.9e-5	0	0
8	DIAG2	PY	2.9e-5	2.9e-5	0	0
9	FACE1	PY	.000222	.000222	0	0
10	FACE2	PY	.000222	.000222	0	0
11	KICKER1	PY	9.2e-5	9.2e-5	0	0
12	KICKER2	PY	9.2e-5	9.2e-5	0	0
13	KICKER3	PY	9.2e-5	9.2e-5	0	0
14	KICKER4	PY	9.2e-5	9.2e-5	0	0
15	MP ALPHA1	PY	.000301	.000301	0	0
16	MP ALPHA2	PY	.000301	.000301	0	0
17	MP ALPHA3	PY	.000301	.000301	0	0
18	MP ALPHA4	PY	.000301	.000301	0	0
19	PL1	PY	5.3e-5	5.3e-5	0	0
20	PL2	PY	5.3e-5	5.3e-5	0	0
21	PL3	PY	5.3e-5	5.3e-5	0	0
22	PL4	PY	5.3e-5	5.3e-5	0	0
23	PL5	PY	5.3e-5	5.3e-5	0	0
24	PL6	PY	5.3e-5	5.3e-5	0	0
25	PL7	PY	5.3e-5	5.3e-5	0	0
26	PL8	PY	5.3e-5	5.3e-5	0	0
27	SUPP PIPE	PY	.000135	.000135	0	0
28	TIEBACK2	PY	9.2e-5	9.2e-5	0	0
29	VERT1	PY	2.9e-5	2.9e-5	0	0
30	VERT4	PY	2.9e-5	2.9e-5	0	0
31	TIEBACK1	PY	9.2e-5	9.2e-5	0	0
32	BACK PL1	PX	-.000114	-.000114	0	0
33	BACK PL2	PX	-.000114	-.000114	0	0
34	BACK PL3	PX	-.000114	-.000114	0	0
35	BACK PL4	PX	-.000114	-.000114	0	0
36	CHANNEL1	PX	-.000639	-.000639	0	0
37	CHANNEL2	PX	-.000639	-.000639	0	0
38	DIAG1	PX	-5e-5	-5e-5	0	0
39	DIAG2	PX	-5e-5	-5e-5	0	0
40	FACE1	PX	-.000385	-.000385	0	0
41	FACE2	PX	-.000385	-.000385	0	0

Member Distributed Loads (BLC 19 : Maintanence (120)) (Continued)

	Member Label	Direction	Start Magnitude[k/ft,F,ksf]	End Magnitude[k/ft...	Start Location[ft,%]	End Location[ft,%]
42	KICKER1	PX	-.000159	-.000159	0	0
43	KICKER2	PX	-.000159	-.000159	0	0
44	KICKER3	PX	-.000159	-.000159	0	0
45	KICKER4	PX	-.000159	-.000159	0	0
46	MP ALPHA1	PX	-.000521	-.000521	0	0
47	MP ALPHA2	PX	-.000521	-.000521	0	0
48	MP ALPHA3	PX	-.000521	-.000521	0	0
49	MP ALPHA4	PX	-.000521	-.000521	0	0
50	PL1	PX	-9.1e-5	-9.1e-5	0	0
51	PL2	PX	-9.1e-5	-9.1e-5	0	0
52	PL3	PX	-9.1e-5	-9.1e-5	0	0
53	PL4	PX	-9.1e-5	-9.1e-5	0	0
54	PL5	PX	-9.1e-5	-9.1e-5	0	0
55	PL6	PX	-9.1e-5	-9.1e-5	0	0
56	PL7	PX	-9.1e-5	-9.1e-5	0	0
57	PL8	PX	-9.1e-5	-9.1e-5	0	0
58	SUPP PIPE	PX	-.000234	-.000234	0	0
59	TIEBACK2	PX	-.000159	-.000159	0	0
60	VERT1	PX	-5e-5	-5e-5	0	0
61	VERT4	PX	-5e-5	-5e-5	0	0
62	TIEBACK1	PX	-.000159	-.000159	0	0

Member Distributed Loads (BLC 20 : Maintanence (150))

	Member Label	Direction	Start Magnitude[k/ft,F,ksf]	End Magnitude[k/ft...	Start Location[ft,%]	End Location[ft,%]
1	BACK PL1	PY	.000114	.000114	0	0
2	BACK PL2	PY	.000114	.000114	0	0
3	BACK PL3	PY	.000114	.000114	0	0
4	BACK PL4	PY	.000114	.000114	0	0
5	CHANNEL1	PY	.000639	.000639	0	0
6	CHANNEL2	PY	.000639	.000639	0	0
7	DIAG1	PY	5e-5	5e-5	0	0
8	DIAG2	PY	5e-5	5e-5	0	0
9	FACE1	PY	.000385	.000385	0	0
10	FACE2	PY	.000385	.000385	0	0
11	KICKER1	PY	.000159	.000159	0	0
12	KICKER2	PY	.000159	.000159	0	0
13	KICKER3	PY	.000159	.000159	0	0
14	KICKER4	PY	.000159	.000159	0	0
15	MP ALPHA1	PY	.000521	.000521	0	0
16	MP ALPHA2	PY	.000521	.000521	0	0
17	MP ALPHA3	PY	.000521	.000521	0	0
18	MP ALPHA4	PY	.000521	.000521	0	0
19	PL1	PY	9.1e-5	9.1e-5	0	0
20	PL2	PY	9.1e-5	9.1e-5	0	0
21	PL3	PY	9.1e-5	9.1e-5	0	0
22	PL4	PY	9.1e-5	9.1e-5	0	0
23	PL5	PY	9.1e-5	9.1e-5	0	0
24	PL6	PY	9.1e-5	9.1e-5	0	0
25	PL7	PY	9.1e-5	9.1e-5	0	0
26	PL8	PY	9.1e-5	9.1e-5	0	0
27	SUPP PIPE	PY	.000234	.000234	0	0
28	TIEBACK2	PY	.000159	.000159	0	0
29	VERT1	PY	5e-5	5e-5	0	0
30	VERT4	PY	5e-5	5e-5	0	0
31	TIEBACK1	PY	.000159	.000159	0	0
32	BACK PL1	PX	-6.6e-5	-6.6e-5	0	0

Member Distributed Loads (BLC 20 : Maintanence (150)) (Continued)

	Member Label	Direction	Start Magnitude[k/ft,F,ksf]	End Magnitude[k/ft...	Start Location[ft,%]	End Location[ft,%]
33	BACK PL2	PX	-6.6e-5	-6.6e-5	0	0
34	BACK PL3	PX	-6.6e-5	-6.6e-5	0	0
35	BACK PL4	PX	-6.6e-5	-6.6e-5	0	0
36	CHANNEL1	PX	-.000369	-.000369	0	0
37	CHANNEL2	PX	-.000369	-.000369	0	0
38	DIAG1	PX	-2.9e-5	-2.9e-5	0	0
39	DIAG2	PX	-2.9e-5	-2.9e-5	0	0
40	FACE1	PX	-.000222	-.000222	0	0
41	FACE2	PX	-.000222	-.000222	0	0
42	KICKER1	PX	-9.2e-5	-9.2e-5	0	0
43	KICKER2	PX	-9.2e-5	-9.2e-5	0	0
44	KICKER3	PX	-9.2e-5	-9.2e-5	0	0
45	KICKER4	PX	-9.2e-5	-9.2e-5	0	0
46	MP ALPHA1	PX	-.000301	-.000301	0	0
47	MP ALPHA2	PX	-.000301	-.000301	0	0
48	MP ALPHA3	PX	-.000301	-.000301	0	0
49	MP ALPHA4	PX	-.000301	-.000301	0	0
50	PL1	PX	-5.3e-5	-5.3e-5	0	0
51	PL2	PX	-5.3e-5	-5.3e-5	0	0
52	PL3	PX	-5.3e-5	-5.3e-5	0	0
53	PL4	PX	-5.3e-5	-5.3e-5	0	0
54	PL5	PX	-5.3e-5	-5.3e-5	0	0
55	PL6	PX	-5.3e-5	-5.3e-5	0	0
56	PL7	PX	-5.3e-5	-5.3e-5	0	0
57	PL8	PX	-5.3e-5	-5.3e-5	0	0
58	SUPP PIPE	PX	-.000135	-.000135	0	0
59	TIEBACK2	PX	-9.2e-5	-9.2e-5	0	0
60	VERT1	PX	-2.9e-5	-2.9e-5	0	0
61	VERT4	PX	-2.9e-5	-2.9e-5	0	0
62	TIEBACK1	PX	-9.2e-5	-9.2e-5	0	0

Member Distributed Loads (BLC 21 : Maintanence (180))

	Member Label	Direction	Start Magnitude[k/ft,F,ksf]	End Magnitude[k/ft...	Start Location[ft,%]	End Location[ft,%]
1	BACK PL1	PY	.000132	.000132	0	0
2	BACK PL2	PY	.000132	.000132	0	0
3	BACK PL3	PY	.000132	.000132	0	0
4	BACK PL4	PY	.000132	.000132	0	0
5	CHANNEL1	PY	.000738	.000738	0	0
6	CHANNEL2	PY	.000738	.000738	0	0
7	DIAG1	PY	5.8e-5	5.8e-5	0	0
8	DIAG2	PY	5.8e-5	5.8e-5	0	0
9	FACE1	PY	.000445	.000445	0	0
10	FACE2	PY	.000445	.000445	0	0
11	KICKER1	PY	.000184	.000184	0	0
12	KICKER2	PY	.000184	.000184	0	0
13	KICKER3	PY	.000184	.000184	0	0
14	KICKER4	PY	.000184	.000184	0	0
15	MP ALPHA1	PY	.000601	.000601	0	0
16	MP ALPHA2	PY	.000601	.000601	0	0
17	MP ALPHA3	PY	.000601	.000601	0	0
18	MP ALPHA4	PY	.000601	.000601	0	0
19	PL1	PY	.000105	.000105	0	0
20	PL2	PY	.000105	.000105	0	0
21	PL3	PY	.000105	.000105	0	0
22	PL4	PY	.000105	.000105	0	0
23	PL5	PY	.000105	.000105	0	0

Member Distributed Loads (BLC 21 : Maintanence (180)) (Continued)

	Member Label	Direction	Start Magnitude[k/ft,F,ksf]	End Magnitude[k/ft...	Start Location[ft,%]	End Location[ft,%]
24	PL6	PY	.000105	.000105	0	0
25	PL7	PY	.000105	.000105	0	0
26	PL8	PY	.000105	.000105	0	0
27	SUPP PIPE	PY	.000271	.000271	0	0
28	TIEBACK2	PY	.000184	.000184	0	0
29	VERT1	PY	5.8e-5	5.8e-5	0	0
30	VERT4	PY	5.8e-5	5.8e-5	0	0
31	TIEBACK1	PY	.000184	.000184	0	0

Member Distributed Loads (BLC 22 : Maintanence (210))

	Member Label	Direction	Start Magnitude[k/ft,F,ksf]	End Magnitude[k/ft...	Start Location[ft,%]	End Location[ft,%]
1	BACK PL1	PY	.000114	.000114	0	0
2	BACK PL2	PY	.000114	.000114	0	0
3	BACK PL3	PY	.000114	.000114	0	0
4	BACK PL4	PY	.000114	.000114	0	0
5	CHANNEL1	PY	.000639	.000639	0	0
6	CHANNEL2	PY	.000639	.000639	0	0
7	DIAG1	PY	5e-5	5e-5	0	0
8	DIAG2	PY	5e-5	5e-5	0	0
9	FACE1	PY	.000385	.000385	0	0
10	FACE2	PY	.000385	.000385	0	0
11	KICKER1	PY	.000159	.000159	0	0
12	KICKER2	PY	.000159	.000159	0	0
13	KICKER3	PY	.000159	.000159	0	0
14	KICKER4	PY	.000159	.000159	0	0
15	MP ALPHA1	PY	.000521	.000521	0	0
16	MP ALPHA2	PY	.000521	.000521	0	0
17	MP ALPHA3	PY	.000521	.000521	0	0
18	MP ALPHA4	PY	.000521	.000521	0	0
19	PL1	PY	9.1e-5	9.1e-5	0	0
20	PL2	PY	9.1e-5	9.1e-5	0	0
21	PL3	PY	9.1e-5	9.1e-5	0	0
22	PL4	PY	9.1e-5	9.1e-5	0	0
23	PL5	PY	9.1e-5	9.1e-5	0	0
24	PL6	PY	9.1e-5	9.1e-5	0	0
25	PL7	PY	9.1e-5	9.1e-5	0	0
26	PL8	PY	9.1e-5	9.1e-5	0	0
27	SUPP PIPE	PY	.000234	.000234	0	0
28	TIEBACK2	PY	.000159	.000159	0	0
29	VERT1	PY	5e-5	5e-5	0	0
30	VERT4	PY	5e-5	5e-5	0	0
31	TIEBACK1	PY	.000159	.000159	0	0
32	BACK PL1	PX	6.6e-5	6.6e-5	0	0
33	BACK PL2	PX	6.6e-5	6.6e-5	0	0
34	BACK PL3	PX	6.6e-5	6.6e-5	0	0
35	BACK PL4	PX	6.6e-5	6.6e-5	0	0
36	CHANNEL1	PX	.000369	.000369	0	0
37	CHANNEL2	PX	.000369	.000369	0	0
38	DIAG1	PX	2.9e-5	2.9e-5	0	0
39	DIAG2	PX	2.9e-5	2.9e-5	0	0
40	FACE1	PX	.000222	.000222	0	0
41	FACE2	PX	.000222	.000222	0	0
42	KICKER1	PX	9.2e-5	9.2e-5	0	0
43	KICKER2	PX	9.2e-5	9.2e-5	0	0
44	KICKER3	PX	9.2e-5	9.2e-5	0	0
45	KICKER4	PX	9.2e-5	9.2e-5	0	0

Member Distributed Loads (BLC 22 : Maintanence (210)) (Continued)

	Member Label	Direction	Start Magnitude[k/ft,F,ksf]	End Magnitude[k/ft...	Start Location[ft,%]	End Location[ft,%]
46	MP ALPHA1	PX	.000301	.000301	0	0
47	MP ALPHA2	PX	.000301	.000301	0	0
48	MP ALPHA3	PX	.000301	.000301	0	0
49	MP ALPHA4	PX	.000301	.000301	0	0
50	PL1	PX	5.3e-5	5.3e-5	0	0
51	PL2	PX	5.3e-5	5.3e-5	0	0
52	PL3	PX	5.3e-5	5.3e-5	0	0
53	PL4	PX	5.3e-5	5.3e-5	0	0
54	PL5	PX	5.3e-5	5.3e-5	0	0
55	PL6	PX	5.3e-5	5.3e-5	0	0
56	PL7	PX	5.3e-5	5.3e-5	0	0
57	PL8	PX	5.3e-5	5.3e-5	0	0
58	SUPP PIPE	PX	.000135	.000135	0	0
59	TIEBACK2	PX	9.2e-5	9.2e-5	0	0
60	VERT1	PX	2.9e-5	2.9e-5	0	0
61	VERT4	PX	2.9e-5	2.9e-5	0	0
62	TIEBACK1	PX	9.2e-5	9.2e-5	0	0

Member Distributed Loads (BLC 23 : Maintanence (240))

	Member Label	Direction	Start Magnitude[k/ft,F,ksf]	End Magnitude[k/ft...	Start Location[ft,%]	End Location[ft,%]
1	BACK PL1	PY	6.6e-5	6.6e-5	0	0
2	BACK PL2	PY	6.6e-5	6.6e-5	0	0
3	BACK PL3	PY	6.6e-5	6.6e-5	0	0
4	BACK PL4	PY	6.6e-5	6.6e-5	0	0
5	CHANNEL1	PY	.000369	.000369	0	0
6	CHANNEL2	PY	.000369	.000369	0	0
7	DIAG1	PY	2.9e-5	2.9e-5	0	0
8	DIAG2	PY	2.9e-5	2.9e-5	0	0
9	FACE1	PY	.000222	.000222	0	0
10	FACE2	PY	.000222	.000222	0	0
11	KICKER1	PY	9.2e-5	9.2e-5	0	0
12	KICKER2	PY	9.2e-5	9.2e-5	0	0
13	KICKER3	PY	9.2e-5	9.2e-5	0	0
14	KICKER4	PY	9.2e-5	9.2e-5	0	0
15	MP ALPHA1	PY	.000301	.000301	0	0
16	MP ALPHA2	PY	.000301	.000301	0	0
17	MP ALPHA3	PY	.000301	.000301	0	0
18	MP ALPHA4	PY	.000301	.000301	0	0
19	PL1	PY	5.3e-5	5.3e-5	0	0
20	PL2	PY	5.3e-5	5.3e-5	0	0
21	PL3	PY	5.3e-5	5.3e-5	0	0
22	PL4	PY	5.3e-5	5.3e-5	0	0
23	PL5	PY	5.3e-5	5.3e-5	0	0
24	PL6	PY	5.3e-5	5.3e-5	0	0
25	PL7	PY	5.3e-5	5.3e-5	0	0
26	PL8	PY	5.3e-5	5.3e-5	0	0
27	SUPP PIPE	PY	.000135	.000135	0	0
28	TIEBACK2	PY	9.2e-5	9.2e-5	0	0
29	VERT1	PY	2.9e-5	2.9e-5	0	0
30	VERT4	PY	2.9e-5	2.9e-5	0	0
31	TIEBACK1	PY	9.2e-5	9.2e-5	0	0
32	BACK PL1	PX	.000114	.000114	0	0
33	BACK PL2	PX	.000114	.000114	0	0
34	BACK PL3	PX	.000114	.000114	0	0
35	BACK PL4	PX	.000114	.000114	0	0
36	CHANNEL1	PX	.000639	.000639	0	0

Member Distributed Loads (BLC 23 : Maintanence (240)) (Continued)

	Member Label	Direction	Start Magnitude[k/ft,F,ksf]	End Magnitude[k/ft...	Start Location[ft,%]	End Location[ft,%]
37	CHANNEL2	PX	.000639	.000639	0	0
38	DIAG1	PX	5e-5	5e-5	0	0
39	DIAG2	PX	5e-5	5e-5	0	0
40	FACE1	PX	.000385	.000385	0	0
41	FACE2	PX	.000385	.000385	0	0
42	KICKER1	PX	.000159	.000159	0	0
43	KICKER2	PX	.000159	.000159	0	0
44	KICKER3	PX	.000159	.000159	0	0
45	KICKER4	PX	.000159	.000159	0	0
46	MP ALPHA1	PX	.000521	.000521	0	0
47	MP ALPHA2	PX	.000521	.000521	0	0
48	MP ALPHA3	PX	.000521	.000521	0	0
49	MP ALPHA4	PX	.000521	.000521	0	0
50	PL1	PX	9.1e-5	9.1e-5	0	0
51	PL2	PX	9.1e-5	9.1e-5	0	0
52	PL3	PX	9.1e-5	9.1e-5	0	0
53	PL4	PX	9.1e-5	9.1e-5	0	0
54	PL5	PX	9.1e-5	9.1e-5	0	0
55	PL6	PX	9.1e-5	9.1e-5	0	0
56	PL7	PX	9.1e-5	9.1e-5	0	0
57	PL8	PX	9.1e-5	9.1e-5	0	0
58	SUPP PIPE	PX	.000234	.000234	0	0
59	TIEBACK2	PX	.000159	.000159	0	0
60	VERT1	PX	5e-5	5e-5	0	0
61	VERT4	PX	5e-5	5e-5	0	0
62	TIEBACK1	PX	.000159	.000159	0	0

Member Distributed Loads (BLC 24 : Maintanence (270))

	Member Label	Direction	Start Magnitude[k/ft,F,ksf]	End Magnitude[k/ft...	Start Location[ft,%]	End Location[ft,%]
1	BACK PL1	PX	.000132	.000132	0	0
2	BACK PL2	PX	.000132	.000132	0	0
3	BACK PL3	PX	.000132	.000132	0	0
4	BACK PL4	PX	.000132	.000132	0	0
5	CHANNEL1	PX	.000738	.000738	0	0
6	CHANNEL2	PX	.000738	.000738	0	0
7	DIAG1	PX	.000131	.000131	0	0
8	DIAG2	PX	.000131	.000131	0	0
9	FACE1	PX	.00025	.00025	0	0
10	FACE2	PX	.00025	.00025	0	0
11	KICKER1	PX	.000414	.000414	0	0
12	KICKER2	PX	.000414	.000414	0	0
13	KICKER3	PX	.000414	.000414	0	0
14	KICKER4	PX	.000414	.000414	0	0
15	MP ALPHA1	PX	.000601	.000601	0	0
16	MP ALPHA2	PX	.000601	.000601	0	0
17	MP ALPHA3	PX	.000601	.000601	0	0
18	MP ALPHA4	PX	.000601	.000601	0	0
19	PL1	PX	.000105	.000105	0	0
20	PL2	PX	.000105	.000105	0	0
21	PL3	PX	.000105	.000105	0	0
22	PL4	PX	.000105	.000105	0	0
23	PL5	PX	.000105	.000105	0	0
24	PL6	PX	.000105	.000105	0	0
25	PL7	PX	.000105	.000105	0	0
26	PL8	PX	.000105	.000105	0	0
27	SUPP PIPE	PX	.000305	.000305	0	0

Member Distributed Loads (BLC 24 : Maintanence (270)) (Continued)

	Member Label	Direction	Start Magnitude[k/ft,F,ksf]	End Magnitude[k/ft...	Start Location[ft,%]	End Location[ft,%]
28	TIEBACK2	PX	.000207	.000207	0	0
29	VERT1	PX	.000131	.000131	0	0
30	VERT4	PX	.000131	.000131	0	0
31	TIEBACK1	PX	.000207	.000207	0	0

Member Distributed Loads (BLC 25 : Maintanence (300))

	Member Label	Direction	Start Magnitude[k/ft,F,ksf]	End Magnitude[k/ft...	Start Location[ft,%]	End Location[ft,%]
1	BACK PL1	PY	-6.6e-5	-6.6e-5	0	0
2	BACK PL2	PY	-6.6e-5	-6.6e-5	0	0
3	BACK PL3	PY	-6.6e-5	-6.6e-5	0	0
4	BACK PL4	PY	-6.6e-5	-6.6e-5	0	0
5	CHANNEL1	PY	-.000369	-.000369	0	0
6	CHANNEL2	PY	-.000369	-.000369	0	0
7	DIAG1	PY	-2.9e-5	-2.9e-5	0	0
8	DIAG2	PY	-2.9e-5	-2.9e-5	0	0
9	FACE1	PY	-.000222	-.000222	0	0
10	FACE2	PY	-.000222	-.000222	0	0
11	KICKER1	PY	-9.2e-5	-9.2e-5	0	0
12	KICKER2	PY	-9.2e-5	-9.2e-5	0	0
13	KICKER3	PY	-9.2e-5	-9.2e-5	0	0
14	KICKER4	PY	-9.2e-5	-9.2e-5	0	0
15	MP ALPHA1	PY	-.000301	-.000301	0	0
16	MP ALPHA2	PY	-.000301	-.000301	0	0
17	MP ALPHA3	PY	-.000301	-.000301	0	0
18	MP ALPHA4	PY	-.000301	-.000301	0	0
19	PL1	PY	-5.3e-5	-5.3e-5	0	0
20	PL2	PY	-5.3e-5	-5.3e-5	0	0
21	PL3	PY	-5.3e-5	-5.3e-5	0	0
22	PL4	PY	-5.3e-5	-5.3e-5	0	0
23	PL5	PY	-5.3e-5	-5.3e-5	0	0
24	PL6	PY	-5.3e-5	-5.3e-5	0	0
25	PL7	PY	-5.3e-5	-5.3e-5	0	0
26	PL8	PY	-5.3e-5	-5.3e-5	0	0
27	SUPP PIPE	PY	-.000135	-.000135	0	0
28	TIEBACK2	PY	-9.2e-5	-9.2e-5	0	0
29	VERT1	PY	-2.9e-5	-2.9e-5	0	0
30	VERT4	PY	-2.9e-5	-2.9e-5	0	0
31	TIEBACK1	PY	-9.2e-5	-9.2e-5	0	0
32	BACK PL1	PX	.000114	.000114	0	0
33	BACK PL2	PX	.000114	.000114	0	0
34	BACK PL3	PX	.000114	.000114	0	0
35	BACK PL4	PX	.000114	.000114	0	0
36	CHANNEL1	PX	.000639	.000639	0	0
37	CHANNEL2	PX	.000639	.000639	0	0
38	DIAG1	PX	5e-5	5e-5	0	0
39	DIAG2	PX	5e-5	5e-5	0	0
40	FACE1	PX	.000385	.000385	0	0
41	FACE2	PX	.000385	.000385	0	0
42	KICKER1	PX	.000159	.000159	0	0
43	KICKER2	PX	.000159	.000159	0	0
44	KICKER3	PX	.000159	.000159	0	0
45	KICKER4	PX	.000159	.000159	0	0
46	MP ALPHA1	PX	.000521	.000521	0	0
47	MP ALPHA2	PX	.000521	.000521	0	0
48	MP ALPHA3	PX	.000521	.000521	0	0
49	MP ALPHA4	PX	.000521	.000521	0	0

Member Distributed Loads (BLC 25 : Maintanence (300)) (Continued)

	Member Label	Direction	Start Magnitude[k/ft,F,ksf]	End Magnitude[k/ft...	Start Location[ft,%]	End Location[ft,%]
50	PL1	PX	9.1e-5	9.1e-5	0	0
51	PL2	PX	9.1e-5	9.1e-5	0	0
52	PL3	PX	9.1e-5	9.1e-5	0	0
53	PL4	PX	9.1e-5	9.1e-5	0	0
54	PL5	PX	9.1e-5	9.1e-5	0	0
55	PL6	PX	9.1e-5	9.1e-5	0	0
56	PL7	PX	9.1e-5	9.1e-5	0	0
57	PL8	PX	9.1e-5	9.1e-5	0	0
58	SUPP PIPE	PX	.000234	.000234	0	0
59	TIEBACK2	PX	.000159	.000159	0	0
60	VERT1	PX	5e-5	5e-5	0	0
61	VERT4	PX	5e-5	5e-5	0	0
62	TIEBACK1	PX	.000159	.000159	0	0

Member Distributed Loads (BLC 26 : Maintanence (330))

	Member Label	Direction	Start Magnitude[k/ft,F,ksf]	End Magnitude[k/ft...	Start Location[ft,%]	End Location[ft,%]
1	BACK PL1	PY	-.000114	-.000114	0	0
2	BACK PL2	PY	-.000114	-.000114	0	0
3	BACK PL3	PY	-.000114	-.000114	0	0
4	BACK PL4	PY	-.000114	-.000114	0	0
5	CHANNEL1	PY	-.000639	-.000639	0	0
6	CHANNEL2	PY	-.000639	-.000639	0	0
7	DIAG1	PY	-5e-5	-5e-5	0	0
8	DIAG2	PY	-5e-5	-5e-5	0	0
9	FACE1	PY	-.000385	-.000385	0	0
10	FACE2	PY	-.000385	-.000385	0	0
11	KICKER1	PY	-.000159	-.000159	0	0
12	KICKER2	PY	-.000159	-.000159	0	0
13	KICKER3	PY	-.000159	-.000159	0	0
14	KICKER4	PY	-.000159	-.000159	0	0
15	MP ALPHA1	PY	-.000521	-.000521	0	0
16	MP ALPHA2	PY	-.000521	-.000521	0	0
17	MP ALPHA3	PY	-.000521	-.000521	0	0
18	MP ALPHA4	PY	-.000521	-.000521	0	0
19	PL1	PY	-9.1e-5	-9.1e-5	0	0
20	PL2	PY	-9.1e-5	-9.1e-5	0	0
21	PL3	PY	-9.1e-5	-9.1e-5	0	0
22	PL4	PY	-9.1e-5	-9.1e-5	0	0
23	PL5	PY	-9.1e-5	-9.1e-5	0	0
24	PL6	PY	-9.1e-5	-9.1e-5	0	0
25	PL7	PY	-9.1e-5	-9.1e-5	0	0
26	PL8	PY	-9.1e-5	-9.1e-5	0	0
27	SUPP PIPE	PY	-.000234	-.000234	0	0
28	TIEBACK2	PY	-.000159	-.000159	0	0
29	VERT1	PY	-5e-5	-5e-5	0	0
30	VERT4	PY	-5e-5	-5e-5	0	0
31	TIEBACK1	PY	-.000159	-.000159	0	0
32	BACK PL1	PX	6.6e-5	6.6e-5	0	0
33	BACK PL2	PX	6.6e-5	6.6e-5	0	0
34	BACK PL3	PX	6.6e-5	6.6e-5	0	0
35	BACK PL4	PX	6.6e-5	6.6e-5	0	0
36	CHANNEL1	PX	.000369	.000369	0	0
37	CHANNEL2	PX	.000369	.000369	0	0
38	DIAG1	PX	2.9e-5	2.9e-5	0	0
39	DIAG2	PX	2.9e-5	2.9e-5	0	0
40	FACE1	PX	.000222	.000222	0	0

Member Distributed Loads (BLC 26 : Maintanence (330)) (Continued)

	Member Label	Direction	Start Magnitude[k/ft,F,ksf]	End Magnitude[k/ft...	Start Location[ft,%]	End Location[ft,%]
41	FACE2	PX	.000222	.000222	0	0
42	KICKER1	PX	9.2e-5	9.2e-5	0	0
43	KICKER2	PX	9.2e-5	9.2e-5	0	0
44	KICKER3	PX	9.2e-5	9.2e-5	0	0
45	KICKER4	PX	9.2e-5	9.2e-5	0	0
46	MP ALPHA1	PX	.000301	.000301	0	0
47	MP ALPHA2	PX	.000301	.000301	0	0
48	MP ALPHA3	PX	.000301	.000301	0	0
49	MP ALPHA4	PX	.000301	.000301	0	0
50	PL1	PX	5.3e-5	5.3e-5	0	0
51	PL2	PX	5.3e-5	5.3e-5	0	0
52	PL3	PX	5.3e-5	5.3e-5	0	0
53	PL4	PX	5.3e-5	5.3e-5	0	0
54	PL5	PX	5.3e-5	5.3e-5	0	0
55	PL6	PX	5.3e-5	5.3e-5	0	0
56	PL7	PX	5.3e-5	5.3e-5	0	0
57	PL8	PX	5.3e-5	5.3e-5	0	0
58	SUPP PIPE	PX	.000135	.000135	0	0
59	TIEBACK2	PX	9.2e-5	9.2e-5	0	0
60	VERT1	PX	2.9e-5	2.9e-5	0	0
61	VERT4	PX	2.9e-5	2.9e-5	0	0
62	TIEBACK1	PX	9.2e-5	9.2e-5	0	0

Member Distributed Loads (BLC 27 : Ice Dead Load)

	Member Label	Direction	Start Magnitude[k/ft,F,ksf]	End Magnitude[k/ft...	Start Location[ft,%]	End Location[ft,%]
1	BACK PL1	Z	-.011	-.011	0	0
2	BACK PL2	Z	-.011	-.011	0	0
3	BACK PL3	Z	-.011	-.011	0	0
4	BACK PL4	Z	-.011	-.011	0	0
5	CHANNEL1	Z	-.013	-.013	0	0
6	CHANNEL2	Z	-.013	-.013	0	0
7	DIAG1	Z	-.003	-.003	0	0
8	DIAG2	Z	-.003	-.003	0	0
9	FACE1	Z	-.006	-.006	0	0
10	FACE2	Z	-.006	-.006	0	0
11	KICKER1	Z	-.005	-.005	0	0
12	KICKER2	Z	-.005	-.005	0	0
13	KICKER3	Z	-.005	-.005	0	0
14	KICKER4	Z	-.005	-.005	0	0
15	MP ALPHA1	Z	-.005	-.005	0	0
16	MP ALPHA2	Z	-.005	-.005	0	0
17	MP ALPHA3	Z	-.005	-.005	0	0
18	MP ALPHA4	Z	-.005	-.005	0	0
19	PL1	Z	-.007	-.007	0	0
20	PL2	Z	-.007	-.007	0	0
21	PL3	Z	-.007	-.007	0	0
22	PL4	Z	-.007	-.007	0	0
23	PL5	Z	-.007	-.007	0	0
24	PL6	Z	-.007	-.007	0	0
25	PL7	Z	-.007	-.007	0	0
26	PL8	Z	-.007	-.007	0	0
27	SUPP PIPE	Z	-.007	-.007	0	0
28	TIEBACK2	Z	-.005	-.005	0	0
29	VERT1	Z	-.003	-.003	0	0
30	VERT4	Z	-.003	-.003	0	0
31	TIEBACK1	Z	-.005	-.005	0	0

Member Distributed Loads (BLC 28 : Ice Wind Load (0))

	Member Label	Direction	Start Magnitude[k/ft,F,ksf]	End Magnitude[k/ft...	Start Location[ft,%]	End Location[ft,%]
1	BACK PL1	PY	-.001	-.001	0	0
2	BACK PL2	PY	-.001	-.001	0	0
3	BACK PL3	PY	-.001	-.001	0	0
4	BACK PL4	PY	-.001	-.001	0	0
5	CHANNEL1	PY	-.002	-.002	0	0
6	CHANNEL2	PY	-.002	-.002	0	0
7	DIAG1	PY	-.000716	-.000716	0	0
8	DIAG2	PY	-.000716	-.000716	0	0
9	FACE1	PY	-.002	-.002	0	0
10	FACE2	PY	-.002	-.002	0	0
11	KICKER1	PY	-.001	-.001	0	0
12	KICKER2	PY	-.001	-.001	0	0
13	KICKER3	PY	-.001	-.001	0	0
14	KICKER4	PY	-.001	-.001	0	0
15	MP ALPHA1	PY	-.003	-.003	0	0
16	MP ALPHA2	PY	-.003	-.003	0	0
17	MP ALPHA3	PY	-.003	-.003	0	0
18	MP ALPHA4	PY	-.003	-.003	0	0
19	PL1	PY	-.001	-.001	0	0
20	PL2	PY	-.001	-.001	0	0
21	PL3	PY	-.001	-.001	0	0
22	PL4	PY	-.001	-.001	0	0
23	PL5	PY	-.001	-.001	0	0
24	PL6	PY	-.001	-.001	0	0
25	PL7	PY	-.001	-.001	0	0
26	PL8	PY	-.001	-.001	0	0
27	SUPP PIPE	PY	-.001	-.001	0	0
28	TIEBACK2	PY	-.001	-.001	0	0
29	VERT1	PY	-.000716	-.000716	0	0
30	VERT4	PY	-.000716	-.000716	0	0
31	TIEBACK1	PY	-.001	-.001	0	0

Member Distributed Loads (BLC 29 : Ice Wind Load (30))

	Member Label	Direction	Start Magnitude[k/ft,F,ksf]	End Magnitude[k/ft...	Start Location[ft,%]	End Location[ft,%]
1	BACK PL1	PY	-.000994	-.000994	0	0
2	BACK PL2	PY	-.000994	-.000994	0	0
3	BACK PL3	PY	-.000994	-.000994	0	0
4	BACK PL4	PY	-.000994	-.000994	0	0
5	CHANNEL1	PY	-.002	-.002	0	0
6	CHANNEL2	PY	-.002	-.002	0	0
7	DIAG1	PY	-.00062	-.00062	0	0
8	DIAG2	PY	-.00062	-.00062	0	0
9	FACE1	PY	-.002	-.002	0	0
10	FACE2	PY	-.002	-.002	0	0
11	KICKER1	PY	-.000933	-.000933	0	0
12	KICKER2	PY	-.000933	-.000933	0	0
13	KICKER3	PY	-.000933	-.000933	0	0
14	KICKER4	PY	-.000933	-.000933	0	0
15	MP ALPHA1	PY	-.003	-.003	0	0
16	MP ALPHA2	PY	-.003	-.003	0	0
17	MP ALPHA3	PY	-.003	-.003	0	0
18	MP ALPHA4	PY	-.003	-.003	0	0
19	PL1	PY	-.000953	-.000953	0	0
20	PL2	PY	-.000953	-.000953	0	0
21	PL3	PY	-.000953	-.000953	0	0
22	PL4	PY	-.000953	-.000953	0	0

Member Distributed Loads (BLC 29 : Ice Wind Load (30)) (Continued)

	Member Label	Direction	Start Magnitude[k/ft,F,ksf]	End Magnitude[k/ft...	Start Location[ft,%]	End Location[ft,%]
23	PL5	PY	-.000953	-.000953	0	0
24	PL6	PY	-.000953	-.000953	0	0
25	PL7	PY	-.000953	-.000953	0	0
26	PL8	PY	-.000953	-.000953	0	0
27	SUPP PIPE	PY	-.001	-.001	0	0
28	TIEBACK2	PY	-.000933	-.000933	0	0
29	VERT1	PY	-.00062	-.00062	0	0
30	VERT4	PY	-.00062	-.00062	0	0
31	TIEBACK1	PY	-.000933	-.000933	0	0
32	BACK PL1	PX	-.000574	-.000574	0	0
33	BACK PL2	PX	-.000574	-.000574	0	0
34	BACK PL3	PX	-.000574	-.000574	0	0
35	BACK PL4	PX	-.000574	-.000574	0	0
36	CHANNEL1	PX	-.001	-.001	0	0
37	CHANNEL2	PX	-.001	-.001	0	0
38	DIAG1	PX	-.000358	-.000358	0	0
39	DIAG2	PX	-.000358	-.000358	0	0
40	FACE1	PX	-.001	-.001	0	0
41	FACE2	PX	-.001	-.001	0	0
42	KICKER1	PX	-.000539	-.000539	0	0
43	KICKER2	PX	-.000539	-.000539	0	0
44	KICKER3	PX	-.000539	-.000539	0	0
45	KICKER4	PX	-.000539	-.000539	0	0
46	MP ALPHA1	PX	-.002	-.002	0	0
47	MP ALPHA2	PX	-.002	-.002	0	0
48	MP ALPHA3	PX	-.002	-.002	0	0
49	MP ALPHA4	PX	-.002	-.002	0	0
50	PL1	PX	-.00055	-.00055	0	0
51	PL2	PX	-.00055	-.00055	0	0
52	PL3	PX	-.00055	-.00055	0	0
53	PL4	PX	-.00055	-.00055	0	0
54	PL5	PX	-.00055	-.00055	0	0
55	PL6	PX	-.00055	-.00055	0	0
56	PL7	PX	-.00055	-.00055	0	0
57	PL8	PX	-.00055	-.00055	0	0
58	SUPP PIPE	PX	-.000664	-.000664	0	0
59	TIEBACK2	PX	-.000539	-.000539	0	0
60	VERT1	PX	-.000358	-.000358	0	0
61	VERT4	PX	-.000358	-.000358	0	0
62	TIEBACK1	PX	-.000539	-.000539	0	0

Member Distributed Loads (BLC 30 : Ice Wind Load (60))

	Member Label	Direction	Start Magnitude[k/ft,F,ksf]	End Magnitude[k/ft...	Start Location[ft,%]	End Location[ft,%]
1	BACK PL1	PY	-.000574	-.000574	0	0
2	BACK PL2	PY	-.000574	-.000574	0	0
3	BACK PL3	PY	-.000574	-.000574	0	0
4	BACK PL4	PY	-.000574	-.000574	0	0
5	CHANNEL1	PY	-.001	-.001	0	0
6	CHANNEL2	PY	-.001	-.001	0	0
7	DIAG1	PY	-.000358	-.000358	0	0
8	DIAG2	PY	-.000358	-.000358	0	0
9	FACE1	PY	-.001	-.001	0	0
10	FACE2	PY	-.001	-.001	0	0
11	KICKER1	PY	-.000539	-.000539	0	0
12	KICKER2	PY	-.000539	-.000539	0	0
13	KICKER3	PY	-.000539	-.000539	0	0

Member Distributed Loads (BLC 30 : Ice Wind Load (60)) (Continued)

	Member Label	Direction	Start Magnitude[k/ft,F,ksf]	End Magnitude[k/ft...	Start Location[ft,%]	End Location[ft,%]
14	KICKER4	PY	-.000539	-.000539	0	0
15	MP ALPHA1	PY	-.002	-.002	0	0
16	MP ALPHA2	PY	-.002	-.002	0	0
17	MP ALPHA3	PY	-.002	-.002	0	0
18	MP ALPHA4	PY	-.002	-.002	0	0
19	PL1	PY	-.00055	-.00055	0	0
20	PL2	PY	-.00055	-.00055	0	0
21	PL3	PY	-.00055	-.00055	0	0
22	PL4	PY	-.00055	-.00055	0	0
23	PL5	PY	-.00055	-.00055	0	0
24	PL6	PY	-.00055	-.00055	0	0
25	PL7	PY	-.00055	-.00055	0	0
26	PL8	PY	-.00055	-.00055	0	0
27	SUPP PIPE	PY	-.000664	-.000664	0	0
28	TIEBACK2	PY	-.000539	-.000539	0	0
29	VERT1	PY	-.000358	-.000358	0	0
30	VERT4	PY	-.000358	-.000358	0	0
31	TIEBACK1	PY	-.000539	-.000539	0	0
32	BACK PL1	PX	-.000994	-.000994	0	0
33	BACK PL2	PX	-.000994	-.000994	0	0
34	BACK PL3	PX	-.000994	-.000994	0	0
35	BACK PL4	PX	-.000994	-.000994	0	0
36	CHANNEL1	PX	-.002	-.002	0	0
37	CHANNEL2	PX	-.002	-.002	0	0
38	DIAG1	PX	-.00062	-.00062	0	0
39	DIAG2	PX	-.00062	-.00062	0	0
40	FACE1	PX	-.002	-.002	0	0
41	FACE2	PX	-.002	-.002	0	0
42	KICKER1	PX	-.000933	-.000933	0	0
43	KICKER2	PX	-.000933	-.000933	0	0
44	KICKER3	PX	-.000933	-.000933	0	0
45	KICKER4	PX	-.000933	-.000933	0	0
46	MP ALPHA1	PX	-.003	-.003	0	0
47	MP ALPHA2	PX	-.003	-.003	0	0
48	MP ALPHA3	PX	-.003	-.003	0	0
49	MP ALPHA4	PX	-.003	-.003	0	0
50	PL1	PX	-.000953	-.000953	0	0
51	PL2	PX	-.000953	-.000953	0	0
52	PL3	PX	-.000953	-.000953	0	0
53	PL4	PX	-.000953	-.000953	0	0
54	PL5	PX	-.000953	-.000953	0	0
55	PL6	PX	-.000953	-.000953	0	0
56	PL7	PX	-.000953	-.000953	0	0
57	PL8	PX	-.000953	-.000953	0	0
58	SUPP PIPE	PX	-.001	-.001	0	0
59	TIEBACK2	PX	-.000933	-.000933	0	0
60	VERT1	PX	-.00062	-.00062	0	0
61	VERT4	PX	-.00062	-.00062	0	0
62	TIEBACK1	PX	-.000933	-.000933	0	0

Member Distributed Loads (BLC 31 : Ice Wind Load (90))

	Member Label	Direction	Start Magnitude[k/ft,F,ksf]	End Magnitude[k/ft...	Start Location[ft,%]	End Location[ft,%]
1	BACK PL1	PX	-.002	-.002	0	0
2	BACK PL2	PX	-.002	-.002	0	0
3	BACK PL3	PX	-.002	-.002	0	0
4	BACK PL4	PX	-.002	-.002	0	0

Member Distributed Loads (BLC 31 : Ice Wind Load (90)) (Continued)

	Member Label	Direction	Start Magnitude[k/ft,F,ksf]	End Magnitude[k/ft...	Start Location[ft,%]	End Location[ft,%]
5	CHANNEL1	PX	-.004	-.004	0	0
6	CHANNEL2	PX	-.004	-.004	0	0
7	DIAG1	PX	-.002	-.002	0	0
8	DIAG2	PX	-.002	-.002	0	0
9	FACE1	PX	-.002	-.002	0	0
10	FACE2	PX	-.002	-.002	0	0
11	KICKER1	PX	-.004	-.004	0	0
12	KICKER2	PX	-.004	-.004	0	0
13	KICKER3	PX	-.004	-.004	0	0
14	KICKER4	PX	-.004	-.004	0	0
15	MP ALPHA1	PX	-.003	-.003	0	0
16	MP ALPHA2	PX	-.003	-.003	0	0
17	MP ALPHA3	PX	-.003	-.003	0	0
18	MP ALPHA4	PX	-.003	-.003	0	0
19	PL1	PX	-.002	-.002	0	0
20	PL2	PX	-.002	-.002	0	0
21	PL3	PX	-.002	-.002	0	0
22	PL4	PX	-.002	-.002	0	0
23	PL5	PX	-.002	-.002	0	0
24	PL6	PX	-.002	-.002	0	0
25	PL7	PX	-.002	-.002	0	0
26	PL8	PX	-.002	-.002	0	0
27	SUPP PIPE	PX	-.002	-.002	0	0
28	TIEBACK2	PX	-.002	-.002	0	0
29	VERT1	PX	-.002	-.002	0	0
30	VERT4	PX	-.002	-.002	0	0
31	TIEBACK1	PX	-.002	-.002	0	0

Member Distributed Loads (BLC 32 : Ice Wind Load (120))

	Member Label	Direction	Start Magnitude[k/ft,F,ksf]	End Magnitude[k/ft...	Start Location[ft,%]	End Location[ft,%]
1	BACK PL1	PY	.000574	.000574	0	0
2	BACK PL2	PY	.000574	.000574	0	0
3	BACK PL3	PY	.000574	.000574	0	0
4	BACK PL4	PY	.000574	.000574	0	0
5	CHANNEL1	PY	.001	.001	0	0
6	CHANNEL2	PY	.001	.001	0	0
7	DIAG1	PY	.000358	.000358	0	0
8	DIAG2	PY	.000358	.000358	0	0
9	FACE1	PY	.001	.001	0	0
10	FACE2	PY	.001	.001	0	0
11	KICKER1	PY	.000539	.000539	0	0
12	KICKER2	PY	.000539	.000539	0	0
13	KICKER3	PY	.000539	.000539	0	0
14	KICKER4	PY	.000539	.000539	0	0
15	MP ALPHA1	PY	.002	.002	0	0
16	MP ALPHA2	PY	.002	.002	0	0
17	MP ALPHA3	PY	.002	.002	0	0
18	MP ALPHA4	PY	.002	.002	0	0
19	PL1	PY	.00055	.00055	0	0
20	PL2	PY	.00055	.00055	0	0
21	PL3	PY	.00055	.00055	0	0
22	PL4	PY	.00055	.00055	0	0
23	PL5	PY	.00055	.00055	0	0
24	PL6	PY	.00055	.00055	0	0
25	PL7	PY	.00055	.00055	0	0
26	PL8	PY	.00055	.00055	0	0

Member Distributed Loads (BLC 32 : Ice Wind Load (120)) (Continued)

	Member Label	Direction	Start Magnitude[k/ft,F,ksf]	End Magnitude[k/ft...	Start Location[ft,%]	End Location[ft,%]
27	SUPP PIPE	PY	.000664	.000664	0	0
28	TIEBACK2	PY	.000539	.000539	0	0
29	VERT1	PY	.000358	.000358	0	0
30	VERT4	PY	.000358	.000358	0	0
31	TIEBACK1	PY	.000539	.000539	0	0
32	BACK PL1	PX	-.000994	-.000994	0	0
33	BACK PL2	PX	-.000994	-.000994	0	0
34	BACK PL3	PX	-.000994	-.000994	0	0
35	BACK PL4	PX	-.000994	-.000994	0	0
36	CHANNEL1	PX	-.002	-.002	0	0
37	CHANNEL2	PX	-.002	-.002	0	0
38	DIAG1	PX	-.00062	-.00062	0	0
39	DIAG2	PX	-.00062	-.00062	0	0
40	FACE1	PX	-.002	-.002	0	0
41	FACE2	PX	-.002	-.002	0	0
42	KICKER1	PX	-.000933	-.000933	0	0
43	KICKER2	PX	-.000933	-.000933	0	0
44	KICKER3	PX	-.000933	-.000933	0	0
45	KICKER4	PX	-.000933	-.000933	0	0
46	MP ALPHA1	PX	-.003	-.003	0	0
47	MP ALPHA2	PX	-.003	-.003	0	0
48	MP ALPHA3	PX	-.003	-.003	0	0
49	MP ALPHA4	PX	-.003	-.003	0	0
50	PL1	PX	-.000953	-.000953	0	0
51	PL2	PX	-.000953	-.000953	0	0
52	PL3	PX	-.000953	-.000953	0	0
53	PL4	PX	-.000953	-.000953	0	0
54	PL5	PX	-.000953	-.000953	0	0
55	PL6	PX	-.000953	-.000953	0	0
56	PL7	PX	-.000953	-.000953	0	0
57	PL8	PX	-.000953	-.000953	0	0
58	SUPP PIPE	PX	-.001	-.001	0	0
59	TIEBACK2	PX	-.000933	-.000933	0	0
60	VERT1	PX	-.00062	-.00062	0	0
61	VERT4	PX	-.00062	-.00062	0	0
62	TIEBACK1	PX	-.000933	-.000933	0	0

Member Distributed Loads (BLC 33 : Ice Wind Load (150))

	Member Label	Direction	Start Magnitude[k/ft,F,ksf]	End Magnitude[k/ft...	Start Location[ft,%]	End Location[ft,%]
1	BACK PL1	PY	.000994	.000994	0	0
2	BACK PL2	PY	.000994	.000994	0	0
3	BACK PL3	PY	.000994	.000994	0	0
4	BACK PL4	PY	.000994	.000994	0	0
5	CHANNEL1	PY	.002	.002	0	0
6	CHANNEL2	PY	.002	.002	0	0
7	DIAG1	PY	.00062	.00062	0	0
8	DIAG2	PY	.00062	.00062	0	0
9	FACE1	PY	.002	.002	0	0
10	FACE2	PY	.002	.002	0	0
11	KICKER1	PY	.000933	.000933	0	0
12	KICKER2	PY	.000933	.000933	0	0
13	KICKER3	PY	.000933	.000933	0	0
14	KICKER4	PY	.000933	.000933	0	0
15	MP ALPHA1	PY	.003	.003	0	0
16	MP ALPHA2	PY	.003	.003	0	0
17	MP ALPHA3	PY	.003	.003	0	0

Member Distributed Loads (BLC 33 : Ice Wind Load (150)) (Continued)

	Member Label	Direction	Start Magnitude[k/ft,F,ksf]	End Magnitude[k/ft...	Start Location[ft,%]	End Location[ft,%]
18	MP ALPHA4	PY	.003	.003	0	0
19	PL1	PY	.000953	.000953	0	0
20	PL2	PY	.000953	.000953	0	0
21	PL3	PY	.000953	.000953	0	0
22	PL4	PY	.000953	.000953	0	0
23	PL5	PY	.000953	.000953	0	0
24	PL6	PY	.000953	.000953	0	0
25	PL7	PY	.000953	.000953	0	0
26	PL8	PY	.000953	.000953	0	0
27	SUPP PIPE	PY	.001	.001	0	0
28	TIEBACK2	PY	.000933	.000933	0	0
29	VERT1	PY	.00062	.00062	0	0
30	VERT4	PY	.00062	.00062	0	0
31	TIEBACK1	PY	.000933	.000933	0	0
32	BACK PL1	PX	-.000574	-.000574	0	0
33	BACK PL2	PX	-.000574	-.000574	0	0
34	BACK PL3	PX	-.000574	-.000574	0	0
35	BACK PL4	PX	-.000574	-.000574	0	0
36	CHANNEL1	PX	-.001	-.001	0	0
37	CHANNEL2	PX	-.001	-.001	0	0
38	DIAG1	PX	-.000358	-.000358	0	0
39	DIAG2	PX	-.000358	-.000358	0	0
40	FACE1	PX	-.001	-.001	0	0
41	FACE2	PX	-.001	-.001	0	0
42	KICKER1	PX	-.000539	-.000539	0	0
43	KICKER2	PX	-.000539	-.000539	0	0
44	KICKER3	PX	-.000539	-.000539	0	0
45	KICKER4	PX	-.000539	-.000539	0	0
46	MP ALPHA1	PX	-.002	-.002	0	0
47	MP ALPHA2	PX	-.002	-.002	0	0
48	MP ALPHA3	PX	-.002	-.002	0	0
49	MP ALPHA4	PX	-.002	-.002	0	0
50	PL1	PX	-.00055	-.00055	0	0
51	PL2	PX	-.00055	-.00055	0	0
52	PL3	PX	-.00055	-.00055	0	0
53	PL4	PX	-.00055	-.00055	0	0
54	PL5	PX	-.00055	-.00055	0	0
55	PL6	PX	-.00055	-.00055	0	0
56	PL7	PX	-.00055	-.00055	0	0
57	PL8	PX	-.00055	-.00055	0	0
58	SUPP PIPE	PX	-.000664	-.000664	0	0
59	TIEBACK2	PX	-.000539	-.000539	0	0
60	VERT1	PX	-.000358	-.000358	0	0
61	VERT4	PX	-.000358	-.000358	0	0
62	TIEBACK1	PX	-.000539	-.000539	0	0

Member Distributed Loads (BLC 34 : Ice Wind Load (180))

	Member Label	Direction	Start Magnitude[k/ft,F,ksf]	End Magnitude[k/ft...	Start Location[ft,%]	End Location[ft,%]
1	BACK PL1	PY	.001	.001	0	0
2	BACK PL2	PY	.001	.001	0	0
3	BACK PL3	PY	.001	.001	0	0
4	BACK PL4	PY	.001	.001	0	0
5	CHANNEL1	PY	.002	.002	0	0
6	CHANNEL2	PY	.002	.002	0	0
7	DIAG1	PY	.000716	.000716	0	0
8	DIAG2	PY	.000716	.000716	0	0

Member Distributed Loads (BLC 34 : Ice Wind Load (180)) (Continued)

	Member Label	Direction	Start Magnitude[k/ft,F,ksf]	End Magnitude[k/ft...	Start Location[ft,%]	End Location[ft,%]
9	FACE1	PY	.002	.002	0	0
10	FACE2	PY	.002	.002	0	0
11	KICKER1	PY	.001	.001	0	0
12	KICKER2	PY	.001	.001	0	0
13	KICKER3	PY	.001	.001	0	0
14	KICKER4	PY	.001	.001	0	0
15	MP ALPHA1	PY	.003	.003	0	0
16	MP ALPHA2	PY	.003	.003	0	0
17	MP ALPHA3	PY	.003	.003	0	0
18	MP ALPHA4	PY	.003	.003	0	0
19	PL1	PY	.001	.001	0	0
20	PL2	PY	.001	.001	0	0
21	PL3	PY	.001	.001	0	0
22	PL4	PY	.001	.001	0	0
23	PL5	PY	.001	.001	0	0
24	PL6	PY	.001	.001	0	0
25	PL7	PY	.001	.001	0	0
26	PL8	PY	.001	.001	0	0
27	SUPP PIPE	PY	.001	.001	0	0
28	TIEBACK2	PY	.001	.001	0	0
29	VERT1	PY	.000716	.000716	0	0
30	VERT4	PY	.000716	.000716	0	0
31	TIEBACK1	PY	.001	.001	0	0

Member Distributed Loads (BLC 35 : Ice Wind Load (210))

	Member Label	Direction	Start Magnitude[k/ft,F,ksf]	End Magnitude[k/ft...	Start Location[ft,%]	End Location[ft,%]
1	BACK PL1	PY	.000994	.000994	0	0
2	BACK PL2	PY	.000994	.000994	0	0
3	BACK PL3	PY	.000994	.000994	0	0
4	BACK PL4	PY	.000994	.000994	0	0
5	CHANNEL1	PY	.002	.002	0	0
6	CHANNEL2	PY	.002	.002	0	0
7	DIAG1	PY	.00062	.00062	0	0
8	DIAG2	PY	.00062	.00062	0	0
9	FACE1	PY	.002	.002	0	0
10	FACE2	PY	.002	.002	0	0
11	KICKER1	PY	.000933	.000933	0	0
12	KICKER2	PY	.000933	.000933	0	0
13	KICKER3	PY	.000933	.000933	0	0
14	KICKER4	PY	.000933	.000933	0	0
15	MP ALPHA1	PY	.003	.003	0	0
16	MP ALPHA2	PY	.003	.003	0	0
17	MP ALPHA3	PY	.003	.003	0	0
18	MP ALPHA4	PY	.003	.003	0	0
19	PL1	PY	.000953	.000953	0	0
20	PL2	PY	.000953	.000953	0	0
21	PL3	PY	.000953	.000953	0	0
22	PL4	PY	.000953	.000953	0	0
23	PL5	PY	.000953	.000953	0	0
24	PL6	PY	.000953	.000953	0	0
25	PL7	PY	.000953	.000953	0	0
26	PL8	PY	.000953	.000953	0	0
27	SUPP PIPE	PY	.001	.001	0	0
28	TIEBACK2	PY	.000933	.000933	0	0
29	VERT1	PY	.00062	.00062	0	0
30	VERT4	PY	.00062	.00062	0	0

Member Distributed Loads (BLC 35 : Ice Wind Load (210)) (Continued)

	Member Label	Direction	Start Magnitude[k/ft,F,ksf]	End Magnitude[k/ft...	Start Location[ft,%]	End Location[ft,%]
31	TIEBACK1	PY	.000933	.000933	0	0
32	BACK PL1	PX	.000574	.000574	0	0
33	BACK PL2	PX	.000574	.000574	0	0
34	BACK PL3	PX	.000574	.000574	0	0
35	BACK PL4	PX	.000574	.000574	0	0
36	CHANNEL1	PX	.001	.001	0	0
37	CHANNEL2	PX	.001	.001	0	0
38	DIAG1	PX	.000358	.000358	0	0
39	DIAG2	PX	.000358	.000358	0	0
40	FACE1	PX	.001	.001	0	0
41	FACE2	PX	.001	.001	0	0
42	KICKER1	PX	.000539	.000539	0	0
43	KICKER2	PX	.000539	.000539	0	0
44	KICKER3	PX	.000539	.000539	0	0
45	KICKER4	PX	.000539	.000539	0	0
46	MP ALPHA1	PX	.002	.002	0	0
47	MP ALPHA2	PX	.002	.002	0	0
48	MP ALPHA3	PX	.002	.002	0	0
49	MP ALPHA4	PX	.002	.002	0	0
50	PL1	PX	.00055	.00055	0	0
51	PL2	PX	.00055	.00055	0	0
52	PL3	PX	.00055	.00055	0	0
53	PL4	PX	.00055	.00055	0	0
54	PL5	PX	.00055	.00055	0	0
55	PL6	PX	.00055	.00055	0	0
56	PL7	PX	.00055	.00055	0	0
57	PL8	PX	.00055	.00055	0	0
58	SUPP PIPE	PX	.000664	.000664	0	0
59	TIEBACK2	PX	.000539	.000539	0	0
60	VERT1	PX	.000358	.000358	0	0
61	VERT4	PX	.000358	.000358	0	0
62	TIEBACK1	PX	.000539	.000539	0	0

Member Distributed Loads (BLC 36 : Ice Wind Load (240))

	Member Label	Direction	Start Magnitude[k/ft,F,ksf]	End Magnitude[k/ft...	Start Location[ft,%]	End Location[ft,%]
1	BACK PL1	PY	.000574	.000574	0	0
2	BACK PL2	PY	.000574	.000574	0	0
3	BACK PL3	PY	.000574	.000574	0	0
4	BACK PL4	PY	.000574	.000574	0	0
5	CHANNEL1	PY	.001	.001	0	0
6	CHANNEL2	PY	.001	.001	0	0
7	DIAG1	PY	.000358	.000358	0	0
8	DIAG2	PY	.000358	.000358	0	0
9	FACE1	PY	.001	.001	0	0
10	FACE2	PY	.001	.001	0	0
11	KICKER1	PY	.000539	.000539	0	0
12	KICKER2	PY	.000539	.000539	0	0
13	KICKER3	PY	.000539	.000539	0	0
14	KICKER4	PY	.000539	.000539	0	0
15	MP ALPHA1	PY	.002	.002	0	0
16	MP ALPHA2	PY	.002	.002	0	0
17	MP ALPHA3	PY	.002	.002	0	0
18	MP ALPHA4	PY	.002	.002	0	0
19	PL1	PY	.00055	.00055	0	0
20	PL2	PY	.00055	.00055	0	0
21	PL3	PY	.00055	.00055	0	0

Member Distributed Loads (BLC 36 : Ice Wind Load (240)) (Continued)

	Member Label	Direction	Start Magnitude[k/ft,F,ksf]	End Magnitude[k/ft...	Start Location[ft,%]	End Location[ft,%]
22	PL4	PY	.00055	.00055	0	0
23	PL5	PY	.00055	.00055	0	0
24	PL6	PY	.00055	.00055	0	0
25	PL7	PY	.00055	.00055	0	0
26	PL8	PY	.00055	.00055	0	0
27	SUPP PIPE	PY	.000664	.000664	0	0
28	TIEBACK2	PY	.000539	.000539	0	0
29	VERT1	PY	.000358	.000358	0	0
30	VERT4	PY	.000358	.000358	0	0
31	TIEBACK1	PY	.000539	.000539	0	0
32	BACK PL1	PX	.000994	.000994	0	0
33	BACK PL2	PX	.000994	.000994	0	0
34	BACK PL3	PX	.000994	.000994	0	0
35	BACK PL4	PX	.000994	.000994	0	0
36	CHANNEL1	PX	.002	.002	0	0
37	CHANNEL2	PX	.002	.002	0	0
38	DIAG1	PX	.00062	.00062	0	0
39	DIAG2	PX	.00062	.00062	0	0
40	FACE1	PX	.002	.002	0	0
41	FACE2	PX	.002	.002	0	0
42	KICKER1	PX	.000933	.000933	0	0
43	KICKER2	PX	.000933	.000933	0	0
44	KICKER3	PX	.000933	.000933	0	0
45	KICKER4	PX	.000933	.000933	0	0
46	MP ALPHA1	PX	.003	.003	0	0
47	MP ALPHA2	PX	.003	.003	0	0
48	MP ALPHA3	PX	.003	.003	0	0
49	MP ALPHA4	PX	.003	.003	0	0
50	PL1	PX	.000953	.000953	0	0
51	PL2	PX	.000953	.000953	0	0
52	PL3	PX	.000953	.000953	0	0
53	PL4	PX	.000953	.000953	0	0
54	PL5	PX	.000953	.000953	0	0
55	PL6	PX	.000953	.000953	0	0
56	PL7	PX	.000953	.000953	0	0
57	PL8	PX	.000953	.000953	0	0
58	SUPP PIPE	PX	.001	.001	0	0
59	TIEBACK2	PX	.000933	.000933	0	0
60	VERT1	PX	.00062	.00062	0	0
61	VERT4	PX	.00062	.00062	0	0
62	TIEBACK1	PX	.000933	.000933	0	0

Member Distributed Loads (BLC 37 : Ice Wind Load (270))

	Member Label	Direction	Start Magnitude[k/ft,F,ksf]	End Magnitude[k/ft...	Start Location[ft,%]	End Location[ft,%]
1	BACK PL1	PX	.002	.002	0	0
2	BACK PL2	PX	.002	.002	0	0
3	BACK PL3	PX	.002	.002	0	0
4	BACK PL4	PX	.002	.002	0	0
5	CHANNEL1	PX	.004	.004	0	0
6	CHANNEL2	PX	.004	.004	0	0
7	DIAG1	PX	.002	.002	0	0
8	DIAG2	PX	.002	.002	0	0
9	FACE1	PX	.002	.002	0	0
10	FACE2	PX	.002	.002	0	0
11	KICKER1	PX	.004	.004	0	0
12	KICKER2	PX	.004	.004	0	0

Member Distributed Loads (BLC 37 : Ice Wind Load (270)) (Continued)

	Member Label	Direction	Start Magnitude[k/ft,F,ksf]	End Magnitude[k/ft...	Start Location[ft,%]	End Location[ft,%]
13	KICKER3	PX	.004	.004	0	0
14	KICKER4	PX	.004	.004	0	0
15	MP ALPHA1	PX	.003	.003	0	0
16	MP ALPHA2	PX	.003	.003	0	0
17	MP ALPHA3	PX	.003	.003	0	0
18	MP ALPHA4	PX	.003	.003	0	0
19	PL1	PX	.002	.002	0	0
20	PL2	PX	.002	.002	0	0
21	PL3	PX	.002	.002	0	0
22	PL4	PX	.002	.002	0	0
23	PL5	PX	.002	.002	0	0
24	PL6	PX	.002	.002	0	0
25	PL7	PX	.002	.002	0	0
26	PL8	PX	.002	.002	0	0
27	SUPP PIPE	PX	.002	.002	0	0
28	TIEBACK2	PX	.002	.002	0	0
29	VERT1	PX	.002	.002	0	0
30	VERT4	PX	.002	.002	0	0
31	TIEBACK1	PX	.002	.002	0	0

Member Distributed Loads (BLC 38 : Ice Wind Load (300))

	Member Label	Direction	Start Magnitude[k/ft,F,ksf]	End Magnitude[k/ft...	Start Location[ft,%]	End Location[ft,%]
1	BACK PL1	PY	-.000574	-.000574	0	0
2	BACK PL2	PY	-.000574	-.000574	0	0
3	BACK PL3	PY	-.000574	-.000574	0	0
4	BACK PL4	PY	-.000574	-.000574	0	0
5	CHANNEL1	PY	-.001	-.001	0	0
6	CHANNEL2	PY	-.001	-.001	0	0
7	DIAG1	PY	-.000358	-.000358	0	0
8	DIAG2	PY	-.000358	-.000358	0	0
9	FACE1	PY	-.001	-.001	0	0
10	FACE2	PY	-.001	-.001	0	0
11	KICKER1	PY	-.000539	-.000539	0	0
12	KICKER2	PY	-.000539	-.000539	0	0
13	KICKER3	PY	-.000539	-.000539	0	0
14	KICKER4	PY	-.000539	-.000539	0	0
15	MP ALPHA1	PY	-.002	-.002	0	0
16	MP ALPHA2	PY	-.002	-.002	0	0
17	MP ALPHA3	PY	-.002	-.002	0	0
18	MP ALPHA4	PY	-.002	-.002	0	0
19	PL1	PY	-.00055	-.00055	0	0
20	PL2	PY	-.00055	-.00055	0	0
21	PL3	PY	-.00055	-.00055	0	0
22	PL4	PY	-.00055	-.00055	0	0
23	PL5	PY	-.00055	-.00055	0	0
24	PL6	PY	-.00055	-.00055	0	0
25	PL7	PY	-.00055	-.00055	0	0
26	PL8	PY	-.00055	-.00055	0	0
27	SUPP PIPE	PY	-.000664	-.000664	0	0
28	TIEBACK2	PY	-.000539	-.000539	0	0
29	VERT1	PY	-.000358	-.000358	0	0
30	VERT4	PY	-.000358	-.000358	0	0
31	TIEBACK1	PY	-.000539	-.000539	0	0
32	BACK PL1	PX	.000994	.000994	0	0
33	BACK PL2	PX	.000994	.000994	0	0
34	BACK PL3	PX	.000994	.000994	0	0

Member Distributed Loads (BLC 38 : Ice Wind Load (300)) (Continued)

	Member Label	Direction	Start Magnitude[k/ft,F,ksf]	End Magnitude[k/ft...	Start Location[ft,%]	End Location[ft,%]
35	BACK PL4	PX	.000994	.000994	0	0
36	CHANNEL1	PX	.002	.002	0	0
37	CHANNEL2	PX	.002	.002	0	0
38	DIAG1	PX	.00062	.00062	0	0
39	DIAG2	PX	.00062	.00062	0	0
40	FACE1	PX	.002	.002	0	0
41	FACE2	PX	.002	.002	0	0
42	KICKER1	PX	.000933	.000933	0	0
43	KICKER2	PX	.000933	.000933	0	0
44	KICKER3	PX	.000933	.000933	0	0
45	KICKER4	PX	.000933	.000933	0	0
46	MP ALPHA1	PX	.003	.003	0	0
47	MP ALPHA2	PX	.003	.003	0	0
48	MP ALPHA3	PX	.003	.003	0	0
49	MP ALPHA4	PX	.003	.003	0	0
50	PL1	PX	.000953	.000953	0	0
51	PL2	PX	.000953	.000953	0	0
52	PL3	PX	.000953	.000953	0	0
53	PL4	PX	.000953	.000953	0	0
54	PL5	PX	.000953	.000953	0	0
55	PL6	PX	.000953	.000953	0	0
56	PL7	PX	.000953	.000953	0	0
57	PL8	PX	.000953	.000953	0	0
58	SUPP PIPE	PX	.001	.001	0	0
59	TIEBACK2	PX	.000933	.000933	0	0
60	VERT1	PX	.00062	.00062	0	0
61	VERT4	PX	.00062	.00062	0	0
62	TIEBACK1	PX	.000933	.000933	0	0

Member Distributed Loads (BLC 39 : Ice Wind Load (330))

	Member Label	Direction	Start Magnitude[k/ft,F,ksf]	End Magnitude[k/ft...	Start Location[ft,%]	End Location[ft,%]
1	BACK PL1	PY	-.000994	-.000994	0	0
2	BACK PL2	PY	-.000994	-.000994	0	0
3	BACK PL3	PY	-.000994	-.000994	0	0
4	BACK PL4	PY	-.000994	-.000994	0	0
5	CHANNEL1	PY	-.002	-.002	0	0
6	CHANNEL2	PY	-.002	-.002	0	0
7	DIAG1	PY	-.00062	-.00062	0	0
8	DIAG2	PY	-.00062	-.00062	0	0
9	FACE1	PY	-.002	-.002	0	0
10	FACE2	PY	-.002	-.002	0	0
11	KICKER1	PY	-.000933	-.000933	0	0
12	KICKER2	PY	-.000933	-.000933	0	0
13	KICKER3	PY	-.000933	-.000933	0	0
14	KICKER4	PY	-.000933	-.000933	0	0
15	MP ALPHA1	PY	-.003	-.003	0	0
16	MP ALPHA2	PY	-.003	-.003	0	0
17	MP ALPHA3	PY	-.003	-.003	0	0
18	MP ALPHA4	PY	-.003	-.003	0	0
19	PL1	PY	-.000953	-.000953	0	0
20	PL2	PY	-.000953	-.000953	0	0
21	PL3	PY	-.000953	-.000953	0	0
22	PL4	PY	-.000953	-.000953	0	0
23	PL5	PY	-.000953	-.000953	0	0
24	PL6	PY	-.000953	-.000953	0	0
25	PL7	PY	-.000953	-.000953	0	0

Member Distributed Loads (BLC 39 : Ice Wind Load (330)) (Continued)

	Member Label	Direction	Start Magnitude[k/ft,F,ksf]	End Magnitude[k/ft...	Start Location[ft,%]	End Location[ft,%]
26	PL8	PY	-.000953	-.000953	0	0
27	SUPP PIPE	PY	-.001	-.001	0	0
28	TIEBACK2	PY	-.000933	-.000933	0	0
29	VERT1	PY	-.00062	-.00062	0	0
30	VERT4	PY	-.00062	-.00062	0	0
31	TIEBACK1	PY	-.000933	-.000933	0	0
32	BACK PL1	PX	.000574	.000574	0	0
33	BACK PL2	PX	.000574	.000574	0	0
34	BACK PL3	PX	.000574	.000574	0	0
35	BACK PL4	PX	.000574	.000574	0	0
36	CHANNEL1	PX	.001	.001	0	0
37	CHANNEL2	PX	.001	.001	0	0
38	DIAG1	PX	.000358	.000358	0	0
39	DIAG2	PX	.000358	.000358	0	0
40	FACE1	PX	.001	.001	0	0
41	FACE2	PX	.001	.001	0	0
42	KICKER1	PX	.000539	.000539	0	0
43	KICKER2	PX	.000539	.000539	0	0
44	KICKER3	PX	.000539	.000539	0	0
45	KICKER4	PX	.000539	.000539	0	0
46	MP ALPHA1	PX	.002	.002	0	0
47	MP ALPHA2	PX	.002	.002	0	0
48	MP ALPHA3	PX	.002	.002	0	0
49	MP ALPHA4	PX	.002	.002	0	0
50	PL1	PX	.00055	.00055	0	0
51	PL2	PX	.00055	.00055	0	0
52	PL3	PX	.00055	.00055	0	0
53	PL4	PX	.00055	.00055	0	0
54	PL5	PX	.00055	.00055	0	0
55	PL6	PX	.00055	.00055	0	0
56	PL7	PX	.00055	.00055	0	0
57	PL8	PX	.00055	.00055	0	0
58	SUPP PIPE	PX	.000664	.000664	0	0
59	TIEBACK2	PX	.000539	.000539	0	0
60	VERT1	PX	.000358	.000358	0	0
61	VERT4	PX	.000358	.000358	0	0
62	TIEBACK1	PX	.000539	.000539	0	0

Basic Load Cases

	BLC Description	Category	X Gravity	Y Gravity	Z Gravity	Joint	Point	Distribut...	Area(Me...	Surface(...
1	Live Load	DL					1			
2	Wind Load (0)	DL					14	31		
3	Dead Load	DL			-1.1		14			
4	Wind Load (30)	DL					28	62		
5	Wind Load (60)	DL					28	62		
6	Wind Load (90)	DL					14	31		
7	Wind Load (120)	DL					28	62		
8	Wind Load (150)	DL					28	62		
9	Wind Load (180)	DL					14	31		
10	Wind Load (210)	DL					28	62		
11	Wind Load (240)	DL					28	62		
12	Wind Load (270)	DL					14	31		
13	Wind Load (300)	DL					28	62		
14	Wind Load (330)	DL					28	62		
15	Maintanence (0)	DL					14	31		

Basic Load Cases (Continued)

	BLC Description	Category	X Gravity	Y Gravity	Z Gravity	Joint	Point	Distribut...	Area(Me...	Surface(...
16	Maintanence (30)	DL					28	62		
17	Maintanence (60)	DL					28	62		
18	Maintanence (90)	DL					14	31		
19	Maintanence (120)	DL					28	62		
20	Maintanence (150)	DL					28	62		
21	Maintanence (180)	DL					14	31		
22	Maintanence (210)	DL					28	62		
23	Maintanence (240)	DL					28	62		
24	Maintanence (270)	DL					14	31		
25	Maintanence (300)	DL					28	62		
26	Maintanence (330)	DL					28	62		
27	Ice Dead Load	DL					14	31		
28	Ice Wind Load (0)	DL					14	31		
29	Ice Wind Load (30)	DL					28	62		
30	Ice Wind Load (60)	DL					28	62		
31	Ice Wind Load (90)	DL					14	31		
32	Ice Wind Load (120)	DL					28	62		
33	Ice Wind Load (150)	DL					28	62		
34	Ice Wind Load (180)	DL					14	31		
35	Ice Wind Load (210)	DL					28	62		
36	Ice Wind Load (240)	DL					28	62		
37	Ice Wind Load (270)	DL					14	31		
38	Ice Wind Load (300)	DL					28	62		
39	Ice Wind Load (330)	DL					28	62		
40	Earthquake (x-direction)	DL	-.125				14			
41	Earthquake (y-direction)	DL		-.125			14			
42	Earthquake (z-direction)	DL			-.05		14			

Load Combinations

	Description	S...	PDelta	SRSS	B...	Fa...	B...	Fa...	B...	Fa...	B...	Fa...	B...	Fa...	B...	Fa...	B...	Fa...	B...	Fa...	B...	Fa...	B...	Fa...
1	1.4D	Y...	Y		3	1.4																		
2	1.2D + 1.0W(0)	Y...	Y		3	1.2	2	1																
3	1.2D + 1.0Di + 1.0Wi(0)	Y...	Y		3	1.2	27	1	28	1														
4	1.2D + 1.5L + 1.0Wl(0)	Y...	Y		3	1.2	1	1.5	15	1														
5	1.2D + 1.0W(30)	Y...	Y		3	1.2	4	1																
6	1.2D + 1.0Di + 1.0Wi(30)	Y...	Y		3	1.2	27	1	29	1														
7	1.2D + 1.5L + 1.0Wl(30)	Y...	Y		3	1.2	1	1.5	16	1														
8	1.2D + 1.0W(60)	Y...	Y		3	1.2	5	1																
9	1.2D + 1.0Di + 1.0Wi(60)	Y...	Y		3	1.2	27	1	30	1														
10	1.2D + 1.5L + 1.0Wl(60)	Y...	Y		3	1.2	1	1.5	17	1														
11	1.2D + 1.0W(90)	Y...	Y		3	1.2	6	1																
12	1.2D + 1.0Di + 1.0Wi(90)	Y...	Y		3	1.2	27	1	31	1														
13	1.2D + 1.5L + 1.0Wl(90)	Y...	Y		3	1.2	1	1.5	18	1														
14	1.2D + 1.0W(120)	Y...	Y		3	1.2	7	1																
15	1.2D + 1.0Di + 1.0Wi(120)	Y...	Y		3	1.2	27	1	32	1														
16	1.2D + 1.5L + 1.0Wl(120)	Y...	Y		3	1.2	1	1.5	19	1														
17	1.2D + 1.0W(150)	Y...	Y		3	1.2	8	1																
18	1.2D + 1.0Di + 1.0Wi(150)	Y...	Y		3	1.2	27	1	33	1														
19	1.2D + 1.5L + 1.0Wl(150)	Y...	Y		3	1.2	1	1.5	20	1														
20	1.2D + 1.0W(180)	Y...	Y		3	1.2	9	1																
21	1.2D + 1.0Di + 1.0Wi(180)	Y...	Y		3	1.2	27	1	34	1														
22	1.2D + 1.5L + 1.0Wl(180)	Y...	Y		3	1.2	1	1.5	21	1														
23	1.2D + 1.0W(210)	Y...	Y		3	1.2	10	1																
24	1.2D + 1.0Di + 1.0Wi(210)	Y...	Y		3	1.2	27	1	35	1														
25	1.2D + 1.5L + 1.0Wl(210)	Y...	Y		3	1.2	1	1.5	22	1														

Load Combinations (Continued)

	Description	S...	PDelta	SRSS	B...	Fa...	B...	Fa...	B...	Fa...	B...	Fa...	B...	Fa...	B...	Fa...	B...	Fa...	B...	Fa...	B...	Fa...	B...	Fa...
26	1.2D + 1.0W(240)	Y...	Y		3	1.2	11	1																
27	1.2D + 1.0Di + 1.0Wi(240)	Y...	Y		3	1.2	27	1	36	1														
28	1.2D + 1.5L + 1.0Wl(240)	Y...	Y		3	1.2	1	1.5	23	1														
29	1.2D + 1.0W(270)	Y...	Y		3	1.2	12	1																
30	1.2D + 1.0Di + 1.0Wi(270)	Y...	Y		3	1.2	27	1	37	1														
31	1.2D + 1.5L + 1.0Wl(270)	Y...	Y		3	1.2	1	1.5	24	1														
32	1.2D + 1.0W(300)	Y...	Y		3	1.2	13	1																
33	1.2D + 1.0Di + 1.0Wi(300)	Y...	Y		3	1.2	27	1	38	1														
34	1.2D + 1.5L + 1.0Wl(300)	Y...	Y		3	1.2	1	1.5	25	1														
35	1.2D + 1.0W(330)	Y...	Y		3	1.2	14	1																
36	1.2D + 1.0Di + 1.0Wi(330)	Y...	Y		3	1.2	27	1	39	1														
37	1.2D + 1.5L + 1.0Wl(330)	Y...	Y		3	1.2	1	1.5	26	1														
38	1.2D + 1.0E(x) + 1.0E(z) ...	Y...	Y		3	1.2	40	1	42	1	1	1												
39	1.2D + 1.0E(y) + 1.0E(z) ...	Y...	Y		3	1.2	41	1	42	1	1	1												
40	1.2D - 1.0E(x) + 1.0E(z) +...	Y...	Y		3	1.2	40	-1	42	1	1	1												
41	1.2D - 1.0E(y) + 1.0E(z) +...	Y...	Y		3	1.2	41	-1	42	1	1	1												

Envelope Joint Reactions

	Joint		X [k]	LC	Y [k]	LC	Z [k]	LC	MX [k-ft]	LC	MY [k-ft]	LC	MZ [k-ft]	LC
1	N93A	max	2.075	16	4.386	15	.642	35	-.174	14	1.025	16	0	41
2		min	-1.476	32	.15	35	-1.217	17	-.691	33	-.346	32	0	1
3	N92A	max	1.061	8	.125	35	4.205	15	-.566	35	.304	8	0	41
4		min	-2.051	28	-4.742	15	.973	35	-1.338	12	-.363	26	0	1
5	N110	max	.437	23	2.125	5	.053	9	0	41	0	41	0	41
6		min	-.46	5	-2.002	23	.029	23	0	1	0	1	0	1
7	N107A	max	.616	35	2.833	35	.054	36	0	41	0	41	0	41
8		min	-.592	17	-2.696	17	.027	17	0	1	0	1	0	1
9	Totals:	max	2.017	11	3.496	2	3.47	27						
10		min	-2.017	29	-3.496	20	1.678	8						

Envelope AISC 15th(360-16): LRFD Steel Code Checks

	Member	Shape	Code Check	Loc[ft]	LC	She...	Lo...	...	...	phi*P...	phi*P...	phi*...	phi*...	...	Eqn
1	PL2	4X0.5	.550	.194	10	.298	.194	y	...	63.921	64.8	.675	5.4	...	H1-...
2	BACK PL1	8x.625	.473	.319	12	.312	0	y	4	217....	225	2.93	37.5	...	H1-...
3	PL6	4X0.5	.417	.194	18	.285	0	y	...	63.921	64.8	.675	5.4	...	H1-...
4	FACE1	PIPE_2.5X	.361	3.474	2	.237	3....		...	13.655	79.38	5.576	5.576	...	H1-...
5	PL3	4X0.5	.351	0	2	.144	0	y	...	63.921	64.8	.675	5.4	...	H1-...
6	DIAG1	SR 3/4	.339	4.347	3	.033	4....		...	2.711	14.321	.184	.184	...	H1-...
7	KICKER1	PIPE_2.0	.335	3.5	14	.239	3....		3	31.955	38.556	2.246	2.246	...	H1-...
8	FACE2	PIPE_2.5X	.332	4.229	2	.141	10...		8	13.655	79.38	5.576	5.576	...	H1-...
9	VERT1	SR 3/4	.316	0	22	.030	0		...	6.395	14.321	.184	.184	...	H1-...
10	BACK PL4	8x.625	.305	.319	18	.109	0	y	...	217....	225	2.93	37.5	...	H1-...
11	MP ALPHA4	PIPE_2.5	.300	6.458	19	.063	3....		...	22.748	60.858	4.316	4.316	...	H1-...
12	KICKER4	PIPE_2.0	.287	3.613	8	.065	.113		6	31.955	38.556	2.246	2.246	...	H1-...
13	KICKER3	PIPE_2.0	.286	3.5	14	.190	3....		...	31.955	38.556	2.246	2.246	...	H1-...
14	SUPP PIPE	PIPE_3.0	.282	.5	25	.414	.5		...	70.603	78.246	6.899	6.899	...	H3-6
15	PL1	4X0.5	.277	.194	19	.273	0	y	...	63.921	64.8	.675	5.4	...	H1-...
16	KICKER2	PIPE_2.0	.271	3.613	26	.110	.113		2	31.955	38.556	2.246	2.246	...	H1-...
17	CHANNEL1	C3.5X4	.245	.097	15	.190	.58	z	...	88.246	93.87	8.362	11.033	...	H1-...
18	PL4	4X0.5	.245	0	25	.147	.194	y	4	63.921	64.8	.675	5.4	...	H1-...
19	CHANNEL2	C3.5X4	.237	.097	18	.143	.58	z	...	88.246	93.87	7.885	11.033	...	H1-...
20	PL8	4X0.5	.235	0	14	.120	0	y	4	63.921	64.8	.675	5.4	...	H1-...
21	MP ALPHA3	PIPE_2.5	.231	3.542	20	.088	3....		...	22.748	60.858	4.316	4.316	...	H1-...
22	PL7	4X0.5	.205	0	5	.092	.194	y	...	63.921	64.8	.675	5.4	...	H1-...

Envelope AISC 15th(360-16): LRFD Steel Code Checks (Continued)

	Member	Shape	Code Check	Loc[ft]	LC	She...	Lo...	...	...	phi*P...	phi*P...	phi*...	phi*...	...	Eqn
23	PL5	4X0.5	.203	0	20	.265	.194	y	...	63.921	64.8	.675	5.4	...	H1-...
24	MP ALPHA2	PIPE_2.5	.202	3.542	2	.079	3....		5	22.748	60.858	4.316	4.316	...	H1-...
25	DIAG2	SR 3/4	.187	4.347	18	.043	4....		8	2.711	14.321	.184	.184	...	H1-...
26	VERT4	SR 3/4	.176	0	20	.031	0		2	6.395	14.321	.184	.184	...	H1-...
27	BACK PL2	8x.625	.135	.319	14	.250	0	y	...	217....	225	2.93	37.5	...	H1-...
28	MP ALPHA1	PIPE_2.5	.129	6.458	33	.029	3....		5	22.748	60.858	4.316	4.316	...	H1-...
29	TIEBACK1	PIPE_2.5	.083	7.817	17	.003	7....		...	33.396	60.858	4.316	4.316	...	H1-...
30	BACK PL3	8x.625	.067	0	8	.055	.319	y	5	217....	225	2.93	37.5	...	H1-...
31	TIEBACK2	PIPE_2.5	.061	7.817	23	.003	7....		...	33.396	60.858	4.316	4.316	...	H1-...

POD
POWER OF DESIGN

POD Job #	**21-101296**
Site Number	**88013**
Site Name	**KILLINGWORTH**

Connection Type	Single Shear	
RISA 3D Forces		
Axial (Bolts)	1.949	kips
Shear (Bolts)	3.703	kips
Axial Force (Member)	3.703	kips
Bolt/Member Information		
Member Label	PL2	
# of Bolts	2	
Diameter	0.5	inches
Bolt Grade	A325	
Member Grade	A36	
Threads Included?	Yes	
L_b	0.5	inches
L_c	1.5	inches
t	0.5	inches

Shear Capacity	**21.0%**
Axial Capacity	**7.6%**
Bearing Capacity	**6.7%**
Combined Capacity	**19.9%**

Ver 1.0 - 2/28/2020

EXHIBIT 5

NIER Study Report

SITE NAME:

88013 Killingworth

LOCATION:

Killingworth, Connecticut

COMPANY:

American Tower
Woburn, Massachusetts

July 4th, 2021

Contents

DISCLAIMER NOTICE 2
INTRODUCTION 3
SITE AND FACILITY CONSIDERATIONS 3
POWER DENSITY CALCULATIONS 4
APPENDIX 1 TOPOGRAPHIC MAP 5
APPENDIX 2 SATELLITE PHOTO. 6
APPENDIX 3 FCC OET-65 MPE LIMIT STUDY 7
APPENDIX 4 TOWER RADIATION PATTERNS 8
APPENDIX 5 CHANNEL TABLE 9
APPENDIX 6 INFORMATION PERTAINING TO MPE STUDIES 10
APPENDIX 7 MPE STANDARDS METHODOLOGY 12

Disclaimer Notice

This work is based upon our best interpretation of available information. However, these data and their interpretation are constantly changing. Therefore, we do not warrant that any undertaking based on this report will be successful, or that others will not require further research or actions in support of this proposal or future undertaking. In the event of errors, our liability is strictly limited to replacement of this document with a corrected one. Liability for consequential damages is specifically disclaimed. Any use of this document constitutes an agreement to hold Tower Engineering Professionals and its employees harmless and indemnify it for all liability, claims, demands, and litigation expenses and attorney's fees arising out of such use.

Work product documents released prior to account settlement remain the sole property of Tower Engineering Professionals and must be returned on demand. Underlying work notes and data relating to this document remain the property of Tower Engineering Professionals. This document shall not be reproduced in whole or part without permission of Tower Engineering Professionals. Any dispute hereunder shall be adjudicated in North Carolina. Any use or retention of this document constitutes acceptance of these terms, the entire work product, and all charges associated therewith.

COPYRIGHT © 2021 BY
TOWER ENGINEERING PROFESSIONALS
KINSTON, NORTH CAROLINA

NIER STUDY REPORT

88013 Killingworth

Killingworth, CT

INTRODUCTION

Tower Engineering Professionals (TEP) has been retained by American Tower (ATC) of Woburn, Massachusetts to evaluate the RF emissions of an existing tower at this location.

SITE AND FACILITY CONSIDERATIONS

Site Killingworth is located at 131 Little City Rd in Killingworth, CT at coordinates 41.428778, -72.603806. The support structure is a 321' self-support tower. The installation consists of two antenna levels with radiation centers of 272', & 171' above ground level. All antennae will have a radiation center as described above. All data used in this study was provided by one or more of the following sources:

1. ATC furnished data
2. Compiled from carrier and manufacturer standard configurations
3. Empirical data collected by TEP

A topographic map of the study area is located in Appendix 1. A satellite view of the study area is located in Appendix 2.

POWER DENSITY CALCULATIONS

Graphs of the power density at different distances from the transmitter, compared to FCC MPE general population and occupational limits, may be seen in Appendix 3. These limits are based upon the Information Relating to MPE Standards found in Appendix 6. Study methodology may be seen in Appendix 7, which describes the Non-Ionizing Radiation Prediction Models. Approximate radiation patterns may be found in Appendix 4. Radio channels used at this site are listed in Appendix 5. This site ***IS*** in compliance with FCC OET-65 MPE limits.

July 4th, 2021

Michael W. Hayden NCE CPBE CBNT AMD CPI
Director, RF Design & Services
Tower Engineering Professionals

APPENDIX 1 Topographic Map

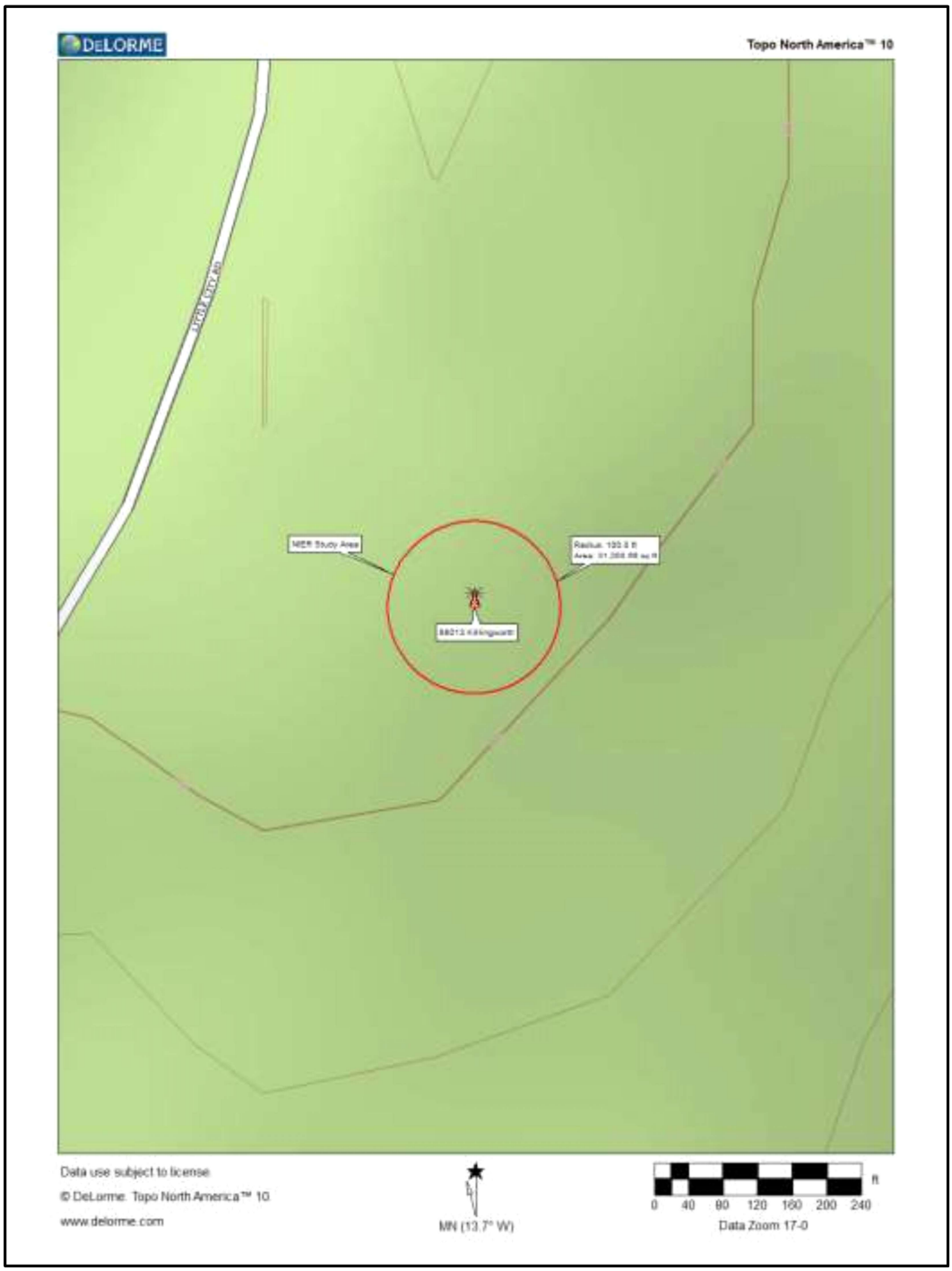

APPENDIX 2 Satellite Photo

APPENDIX 3 FCC OET-65 MPE Limit Study

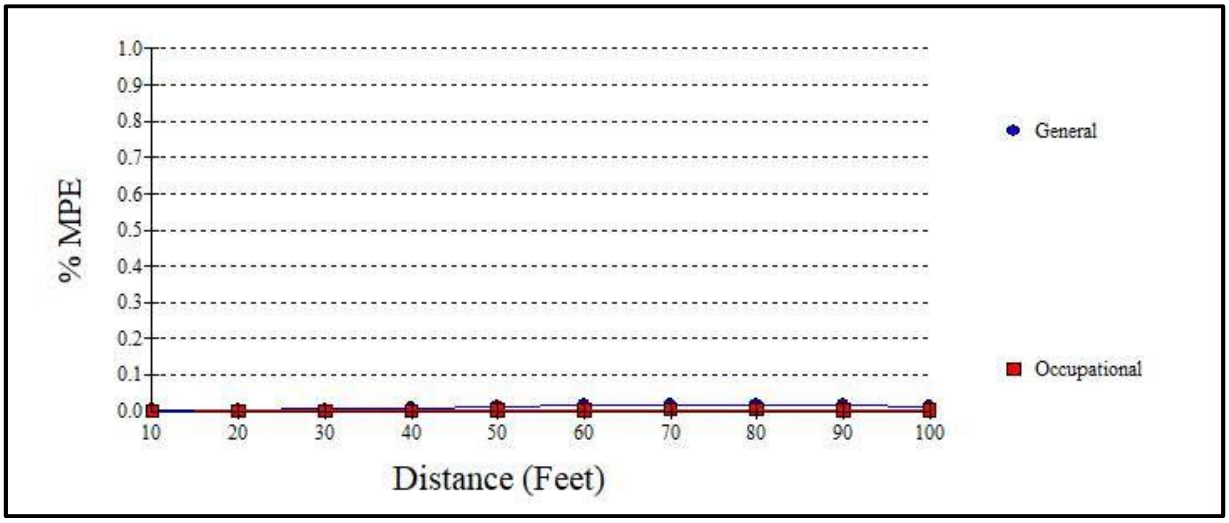

Maximum Power Density (@50'):	0.0001 mW/cm²
General Population MPE (@50'):	0.0114%
Occupational MPE (@50'):	0.0023%

APPENDIX 4 Tower Radiation Patterns

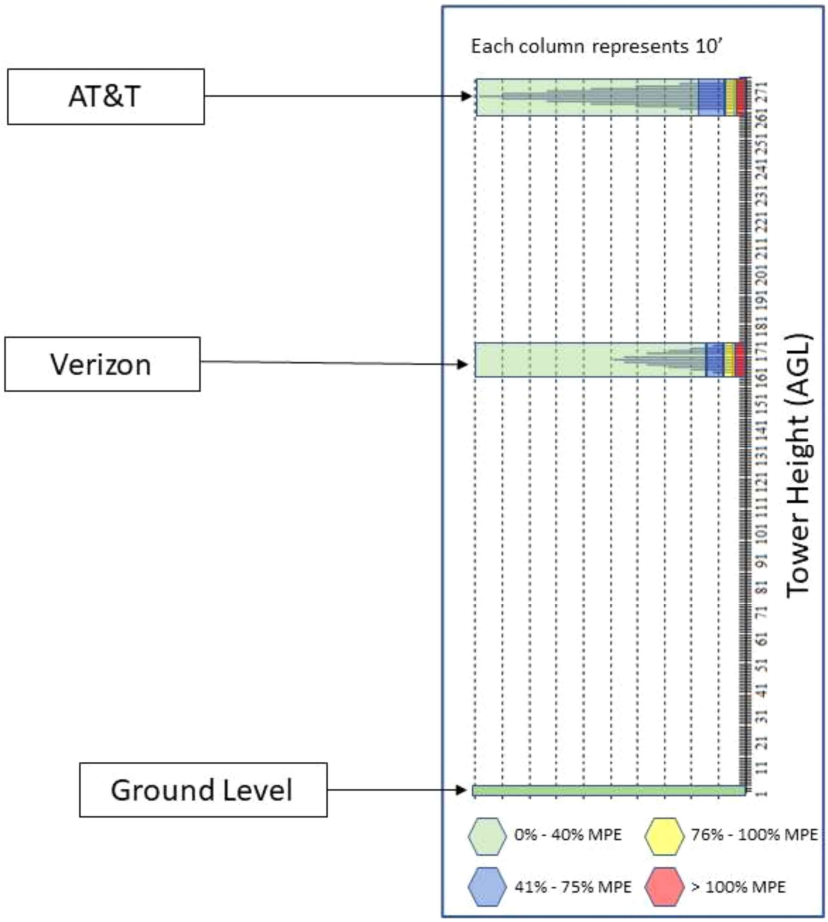

APPENDIX 5 Channel Table

EUTRA OPERATING BAND	EARFCNDL	EARFCNUL	Download Channel Bandwidth (MHz)	Upload Channel Bandwidth (MHz)
PCS MHz A3+A4 (10Mhz) E-UTRA Band 2	650	18650	10	10
PCS MHz E (5Mhz) E-UTRA Band 2	975	18975	5	5
850 MHz B-2586 (5MHz) E-UTRA Band 5	2586	20586	5	5
850 MHz B-2586 (5MHz) E-UTRA Band 5	4437	4212	5	5
700 MHz OFFSET LOWER_B+C (10 MHz) E-UTRA BAND 17	5780	23780	10	10
WCS MHz A+B (10 MHz) E-UTRA Band 30	9820	27710	10	10
AWS-3 MHz J (10 MHz) E-UTRA Band 66	67086	132622	10	10

APPENDIX 6 Information Pertaining to MPE Studies

In 1985, the FCC first adopted guidelines to be used for evaluating human exposure to RF emissions. The FCC revised and updated these guidelines on August 1, 1996, as a result of a rule-making proceeding initiated in 1993. The new guidelines incorporate limits for Maximum Permissible Exposure (MPE) in terms of electric and magnetic field strength and power density for transmitters operating at frequencies between 300 kHz and 100 GHz.

The FCC's MPE limits are based on exposure limits recommended by the National Council on Radiation Protection and Measurements (NCRP) and, over a wide range of frequencies, the exposure limits were developed by the Institute of Electrical and Electronics Engineers, Inc., (IEEE) and adopted by the American National Standards Institute (ANSI) to replace the 1982 ANSI guidelines. Limits for localized absorption are based on recommendations of both ANSI/IEEE and NCRP.

The FCC's limits, and the NCRP and ANSI/IEEE limits on which they are based, are derived from exposure criteria quantified in terms of specific absorption rate (SAR). The basis for these limits is a whole-body averaged SAR threshold level of 4 watts per kilogram (4 W/kg), as averaged over the entire mass of the body, above which expert organizations have determined that potentially hazardous exposures may occur. The MPE limits are derived by incorporating safety factors that lead, in some cases, to limits that are more conservative than the limits originally adopted by the FCC in 1985. Where more conservative limits exist, they do not arise from a fundamental change in the RF safety criteria for whole-body averaged SAR, but from a precautionary desire to protect subgroups of the general population who, potentially, may be more at risk.

The FCC exposure limits are also based on data showing that the human body absorbs RF energy at some frequencies more efficiently than at others. The most restrictive limits occur in the frequency range of 30-300 MHz where whole-body absorption of RF energy by human beings is most efficient. At other frequencies, whole-body absorption is less efficient, and consequently, the MPE limits are less restrictive.

MPE limits are defined in terms of power density (units of milliwatts per centimeter squared: mW/cm^2), electric field strength (units of volts per meter: V/m) and magnetic field strength (units of amperes per meter: A/m). The far-field of a transmitting antenna is where the electric field vector (E), the magnetic field vector (H), and the direction of propagation can be considered to be all mutually orthogonal ("plane-wave" conditions).

Occupational/controlled exposure limits apply to situations in which persons are exposed as a consequence of their employment and in which those persons who are exposed have been made fully aware of the potential for exposure and can exercise control over their exposure. Occupational/controlled exposure limits also apply where exposure is of a transient nature as a result of incidental passage through a location where exposure levels may be above general population/uncontrolled limits (see below), as long as the exposed person has been made fully aware of the potential for exposure and can exercise control over his or her exposure by leaving the area or by some other appropriate means.

General population/uncontrolled exposure limits apply to situations in which the general public may be exposed or in which persons who are exposed as a consequence of their employment may not be made fully aware of the potential for exposure or cannot exercise control over their exposure. Therefore, members of the general public would always be considered under this category when exposure is not employment-related, for example, in the case of a telecommunications tower that exposes persons in a nearby residential area. Additional details can be found in FCC OET 65.

APPENDIX 7 MPE Standards Methodology

This study predicts RF field strength and power density levels that emanate from communications system antennae. It considers all transmitter power levels (less filter and line losses) delivered to each active transmitting antenna at the communications site. Calculations are performed to determine power density and MPE levels for each antenna as well as composite levels from all antennas. The calculated levels are based on where a human (Observer) would be standing at various locations at the site. The point of interest where the MPE level is predicted is based on the height of the Observer.

Compliance with the FCC limits on RF emissions are determined by spatially averaging a person's exposure over the projected area of an adult human body, that is approximately six-feet or two-meters, as defined in the ANSI/IEEE C95.1 standard. The MPE limits are specified as time-averaged exposure limits. This means that exposure is averaged over an identifiable time interval. It is 30 minutes for the general population/uncontrolled RF environment and 6 minutes for the occupational/controlled RF environment. However, in the case of the general public, time averaging should not be applied because the general public is typically not aware of RF exposure and they do not have control of their exposure time. Therefore, it should be assumed that any RF exposure to the general public will be continuous.

The FCC's limits for exposure at different frequencies are shown in the following Tables.

Limits for Occupational/Controlled Exposure				
Frequency Range (MHz)	**Electric Field Strength (E) (V/m)**	**Magnetic Field Strength (H) (A/m)**	**Power Density (S) (mW/cm²)**	**Averaging Time $\|E\|^2$, $\|H\|^2$ or S (minutes)**
0.3 - 3.0	614	1.63	100*	6
3.0 - 30	1842/f	4.89/f	$900/F^2$	6
30 - 300	61.4	0.163	1.0	6
300 - 1500	--	--	f/300	6
1500 - 100,000	--	--	5	6

f = frequency

* = Plane-wave equivalent power density

Occupational/controlled limits apply in situations in which persons are exposed as a consequence of their employment provided those persons are fully aware of the potential for exposure and can exercise control over their exposure. Limits for occupational/controlled exposure also apply in situations when an individual is transient through a location where occupational/controlled limits apply provided he or she is made aware of the potential for exposure.

Limits for General Population/Uncontrolled Exposure				
Frequency Range (MHz)	**Electric Field Strength (E) (V/m)**	**Magnetic Field Strength (H) (A/m)**	**Power Density (S) (mW/cm^2)**	**Averaging Time $\|E\|^2$, $\|H\|^2$ or S (minutes)**
0.3 - 1.34	614	1.63	100*	30
1.34 - 30	824/f	2.19/f	$180/F^2$	30
30 -300	27.5	0.073	0.2	30
300 -1500	--	--	f/1500	30
1500 -100,000	--	--	1.0	30

f = frequency
* = Plane-wave equivalent power density

General population/uncontrolled exposures apply in situations in which the general public may be exposed or in which persons that are exposed as a consequence of their employment may not be fully aware of the potential for exposure or cannot exercise control over their exposure.

It is important to understand that these limits apply cumulatively to all sources of RF emissions affecting a given area. For example, if several different communications system antennas occupy a shared facility such as a tower or rooftop, then the total exposure from all systems at the facility must be within compliance of the FCC guidelines.

The field strength emanating from an antenna can be estimated based on the characteristics of an antenna radiating in free space. There are basically two field areas associated with a radiating antenna. When close to the antenna, the region is known as the Near Field. Within this region, the characteristics of the RF fields are very complex and the wave front is extremely curved. As you move further from the antenna, the wave front has less curvature and becomes planar. The wave front still

has a curvature but it appears to occupy a flat plane in space (plane-wave radiation). This region is known as the Far Field.

Two models are utilized to predict Near and Far field power densities. They are based on the formulae in FCC OET 65. As this study is concerned only with Near Field calculations, we will only describe the model used for this study. For additional details, refer to FCC OET Bulletin 65.

Cylindrical Model (Near Field Predictions)

Spatially averaged plane-wave equivalent power densities parallel to the antenna may be estimated by dividing the antenna input power by the surface area of an imaginary cylinder surrounding the length of the radiating antenna. While the actual power density will vary along the height of the antenna, the average value along its length will closely follow the relation given by the following equation:

$$S = P \div 2\pi RL$$

Where:
S = Power Density
P = Total Power into antenna
R = Distance from the antenna
L = Antenna aperture length

For directional-type antennas, power densities can be estimated by dividing the input power by that portion of a cylindrical surface area corresponding to the angular beam width of the antenna. For example, for the case of a 120-degree azimuthal beam width, the surface area should correspond to 1/3 that of a full cylinder. This would increase the power density near the antenna by a factor of three over that for a purely omni-directional antenna. Mathematically, this can be represented by the following formula:

$$S = (180 / \theta_{BW}) P \div \pi RL$$

Where:
S = Power Density
θ_{BW} = Beam width of antenna in degrees (3 dB half-power point)
P = Total Power into antenna
R = Distance from the antenna
L = Antenna aperture length

If the antenna is a 360-degree omni-directional antenna, this formula would be equivalent to the previous formula.

Spherical Model (Far Field Predictions)

Spatially averaged plane-wave power densities in the Far Field of an antenna may be estimated by considering the additional factors of antenna gain and reflective waves that would contribute to exposure.

The radiation pattern of an antenna has developed in the Far Field region and the power gain needs to be considered in exposure predictions. Also, if the vertical radiation pattern of the antenna is considered, the exposure predictions would most likely be reduced significantly at ground level, resulting in a more realistic estimate of the actual exposure levels.

Additionally, to model a truly "worst case" prediction of exposure levels at or near a surface, such as at ground-level or on a rooftop, reflection off the surface of antenna radiation power can be assumed, resulting in a potential four-fold increase in power density.

These additional factors are considered and the Far Field prediction model is determined by the following equation:

$$S = EIRP \times Rc \div 4\pi R^2$$

Where:
S = Power Density
EIRP = Effective Radiated Power from antenna
Rc = Reflection Coefficient (2.56)
R = Distance from the antenna

The EIRP includes the antenna gain. If the antenna pattern is considered, the antenna gain is relative based on the horizontal and vertical pattern gain values at that particular location in space, on a rooftop or on the ground. However, it is recommended that the antenna radiation pattern characteristics not be considered to provide a conservative "worst case" prediction. This is the equation is utilized for the Far Field exposure predictions herein.

EXHIBIT 6

23 Broadview Estates
Bristol, VT 05443
jsmith@clinellc.com
774.409.5807

July 30, 2021

Memo: No Initial Zoning Decision Found

Upon research on prior notices, decisions, applications and approvals associated with the referenced tower on the Killingsworth and Connecticut Siting Council websites, no initial zoning decision for this tower could be found.

Jennille Smith

Jennille Smith
Site Acquisition Consultant – Agent for AT&T
Centerline Communications LLC

EXHIBIT 7

JENNILLE SMITH
774-409-5807
CENTERLINE COMMUNICATIONS, LLC
750 WEST CENTER STREET
WEST BRIDGEWATER MA 02379

1.0 LBS LTR **1 OF 1**

SHIP TO:
CATHERINE IINO
774-409-5807
TOWN OF KILLINGWORTH
FIRST SELECTWOMAN
323 RTE 81
KILLINGWORTH CT 06419-1218

CT 063 5-02

UPS 2ND DAY AIR **2**

TRACKING #: 1Z 9Y4 503 02 0114 3583

BILLING: P/P

Reference # 1: ATC 88013

CS 22.0.18. WNTNV50 31.0A 07/2021*

TM

JENNILLE SMITH
7744095807
CENTERLINE COMMUNICATIONS, LLC
750 WEST CENTER STREET
WEST BRIDGEWATER MA 02379

1.0 LBS LTR **1 OF 1**

SHIP TO:
THOMAS LENTZ
7744095807
TOWN OF KILLINGWORTH
PLANNING ZONNING COMMN CHAIR
323 RTE 81
KILLINGWORTH CT 06419-1218

CT 063 5-02

UPS 2ND DAY AIR **2**

TRACKING #: 1Z 9Y4 503 02 0238 3607

BILLING: P/P

Reference # 1: ATC 88013

CS 22.0.18. WNTNV50 31.0A 07/2021*

TM

CENTERLINE COMMUNICATIONS, LLC
7744095807
750 WEST CENTER STREET
WEST BRIDGEWATER MA 02379

1.0 LBS LTR

1 OF 1

SHIP TO:
AMERICAN TOWER CORPORATION
10 PRESIDENTIAL WAY
WOBURN MA 01801-1053

MA 018 9-04

UPS 2ND DAY AIR

TRACKING #: 1Z 9Y4 503 02 1910 6616

2

BILLING: P/P

Reference # 1: ATC 88013

CS 22.0.18. WNTNV50 31.0A 07/2021*