NORTHEAST SITE SOLUTIONS
Turnkey Wireless Development

Northeast Site Solutions
Denise Sabo
4 Angela's Way, Burlington CT 06013
203-435-3640
denise@northeastsitesolutions.com

April 4, 2022

Members of the Siting Council
Connecticut Siting Council
Ten Franklin Square
New Britain, CT 06051

RE: Exempt Modification Application
280 Ross Road, Killingly, CT 06239
Latitude: 41.771527
Longitude: -71.855722
Site #: 857013_Crown_VZW

Dear Ms. Bachman:

Verizon Wireless is requesting to file an exempt modification for an existing tower located at 280 Ross Road, Killingly, CT 06239. Verizon Wireless currently maintains twelve (12) antennas at the 100-foot level of the existing 119-foot tower. The property is owned by Snake Meadow Club Inc. and the tower is owned by Crown Castle. Verizon now intends to replace six (6) antennas and add three (3) antennas. The new antennas would be installed at the 100-foot level of the tower. This modification includes B2, B5 hardware that is both 4G (LTE), and 5G capable. Antenna mount modifications will be completed as per the attached Maser mount analysis dated November 23, 2021.

Verizon Planned Modifications:

Remove:
(6) 1-5/8" Coax
(1) Hybrid Line

Remove and Replace:
(6) ANDREW Antennas (REMOVE) – (6) JAHH-65B-R3B Antennas (REPLACE)
(3) NOKIA B4 RRH (REMOVE) (REMOVE) - (3) Samsung RF4439D-25A RRH (REPLACE)
(3) NOKIA B13 RRH (REMOVE) (REMOVE) - (3) Samsung RF4440D-13A RRH (REPLACE)

Install New:
(3) Samsung MT6407-77A Antennas
(3) Commscope Diplexers
(2) Hybrid Lines (1-1/4")
(1) Raycap RXXDC-3315-PF-48 OVP

Existing to Remain:
(6) ANTEL Antennas
(12) 1-5/8" Coax
(1) Raycap OVP

NORTHEAST SITE SOLUTIONS

Turnkey Wireless Development

The facility was approved by the Siting Council, Docket No.283 on June 23, 2004. Please see attached.

Please accept this letter as notification pursuant to Regulations of Connecticut State Agencies§ 16- SOj-73, for construction that constitutes an exempt modification pursuant to R.C.S.A. § 16-50j-72(b)(2). In accordance with R.C.SA. § 16-SOj-73, a copy of this letter is being sent to Jason Anderson, Town Council Chair and Ann-Marie Aubrey, Director of Planning & Development for the Town of Killingly. A copy is also being sent to the tower owner and property owner.

The planned modifications to the facility fall squarely within those activities explicitly provided for in R.C.S.A. § 16-50j-72(b)(2).

1. The proposed modifications will not result in an increase in the height of the existing structure.

2. The proposed modifications will not require the extension of the site boundary.

3. The proposed modifications will not increase noise levels at the facility by six decibels or more, or to levels that exceed state and local criteria.

4. The operation of the replacement antennas will not increase radio frequency emissions at the facility to a level at or above the Federal Communications Commission safety standard.

5. The proposed modifications will not cause a change or alteration in the physical or environmental characteristics of the site.

6. The existing structure and its foundation can support the proposed loading.

For the foregoing reasons, Verizon Wireless respectfully submits that the proposed modifications to the above referenced telecommunications facility constitute an exempt modification under R.C.S.A. § 16-50j-72(b)(2).

Sincerely,

Denise Sabo
Mobile: 203-435-3640
Fax: 413-521-0558
Office: 4 Angela's Way, Burlington CT 06013
E-mail: denise@northeastsitesolutions.com

NORTHEAST SITE SOLUTIONS
Turnkey Wireless Development

Attachments

Cc: Jason Anderson, Town Council Chair
Town of Killingly
172 Main Street
Killingly, CT 06239

Ann-Marie Aubrey, Director of Planning & Development
Town of Killingly
172 Main Street
Killingly, CT 06239

Snake Meadow Club Inc., Property Owner
PO Box 236
Central Village, CT 06332-0236

Crown Castle, Tower Owner

Exhibit A

Original Facility Approval

Connecticut Siting Council(/CSC)

DOCKET NO. 283 – New Cingular Wireless PCS,LLC Certificate of Environmental Compatibility and Public need for the construction, maintenance and operation of a wireless telecommunications facility at 280 Ross Road in Killingly, Connecticut.	}	Connecticut
	}	Siting
	}	Council
		June 23, 2004

Decision and Order

Pursuant to the foregoing Findings of Fact and Opinion, the Connecticut Siting Council (Council) finds that the effects associated with the construction, operation, and maintenance of a telecommunications facility including effects on the natural environment; ecological integrity and balance; public health and safety; scenic, historic, and recreational values; forests and parks; air and water purity; and fish and wildlife are not disproportionate either alone or cumulatively with other effects when compared to need, are not in conflict with the policies of the State concerning such effects, and are not sufficient reason to deny the application and therefore directs that a Certificate of Environmental Compatibility and Public Need, as provided by General Statutes § 16-50k, be issued to AT&T Wireless PCS, LLC d/b/a AT&T Wireless for the construction, maintenance and operation of a wireless telecommunications facility at Site C, located at 280 Ross Road, Killingly, Connecticut. The Council denies certification of Site A and Site B located at 25 Klocek Road, Killingly, Connecticut.

The facility shall be constructed, operated, and maintained substantially as specified in the Council's record in this matter, and subject to the following conditions:

1. The tower shall be constructed as a monopole, no taller than necessary to provide the proposed telecommunications services, sufficient to accommodate the antennas of AT&T Wireless and other entities, both public and private, but such tower shall not exceed a height of 120 feet above ground level. The height at the top of the antennas shall not exceed 123 feet above ground level.

2. The Certificate Holder shall prepare a Development and Management (D&M) Plan for this site in compliance with Sections 16-50j-75 through 16-50j-77 of the Regulations of Connecticut State Agencies. The D&M Plan shall be served on the Town of Killingly, and all parties and intervenors as listed in the service list, and submitted to and approved by the Council prior to the commencement of facility construction and shall include:

a. comments from the Town of Killingly regarding the type of tower to be constructed;
b. a final site plan(s) of site development to include specifications for the tower, tower foundation, antennas, equipment building, access road, utility line, and landscaping; and
c. construction plans for site clearing, water drainage, and erosion and sedimentation control consistent with the 2002 Connecticut Guidelines for Soil Erosion and Sediment Control, as amended.

3. The Certificate Holder shall, prior to the commencement of operation, provide the Council worst-case

   modeling of electromagnetic radio frequency power density of all proposed entities' antennas at the closest point of uncontrolled access to the tower base, consistent with Federal Communications Commission, Office of Engineering and Technology, Bulletin No. 65, August 1997. The Certificate Holder shall ensure a recalculated report of electromagnetic radio frequency power density is submitted to the Council if and when circumstances in operation cause a change in power density above the levels calculated and provided pursuant to this Decision and Order.

4. Upon the establishment of any new State or federal radio frequency standards applicable to frequencies of this facility, the facility granted herein shall be brought into compliance with such standards.
5. The Certificate Holder shall permit public or private entities to share space on the proposed tower for fair consideration, or shall provide any requesting entity with specific legal, technical, environmental, or economic reasons precluding such tower sharing.

6. The Certificate Holder shall provide reasonable space on the tower for no compensation for any municipal antennas, provided such antennas are compatible with the structural integrity of the tower.
7. If the facility does not initially provide wireless services within one year of completion of construction or ceases to provide wireless services for a period of one year, this Decision and Order shall be void, and the Certificate Holder shall dismantle the tower and remove all associated equipment or reapply for any continued or new use to the Council before any such use is made.
8. Any antenna that becomes obsolete and ceases to function shall be removed within 60 days after such antennas become obsolete and cease to function.
9. Unless otherwise approved by the Council, this Decision and Order shall be void if the facility authorized herein is not operational within one year of the effective date of this Decision and Order or within one year after all appeals to this Decision and Order have been resolved. Any request for extension of this period shall be filed with the Council not later than sixty days prior to expiration date of this Certificate and shall be served on all parties and intervenors, as listed in the service list. Any proposed modifications to this Decision and Order shall likewise be so served.

Pursuant to General Statutes § 16-50p, we hereby direct that a copy of the Findings of Fact, Opinion, and Decision and Order be served on each person listed below, and notice of issuance shall be published in the Norwich Bulletin.

By this Decision and Order, the Council disposes of the legal rights, duties, and privileges of each party named or admitted to the proceeding in accordance with Section 16-50j-17 of the Regulations of Connecticut State Agencies.

The parties and intervenors to this proceeding are:

Applicant	**Its Representative**
AT&T Wireless PCS, LLC d/b/a AT&T Wireless	Christopher B. Fisher, Esq. Lucia Chiocchio, Esq. Cuddy & Feder LLP

Exhibit B

Property Card

tyler clt division

RESIDENTIAL PROPERTY RECORD CARD 2020

TOWN OF KILLINGLY

Situs : 280 ROSS RD | **Map ID: 001365** | **Class: PA 490 FOREST** | Card: 1 of 1 | Printed: June 4, 2020

CURRENT OWNER

SNAKE MEADOW CLUB INC
% PAUL CHASE
PO BOX 236
CENTRAL VILLAGE CT 06332-0236

GENERAL INFORMATION

Living Units	
Neighborhood	113
Alternate Id	256-2
Vol / Pg	625/206
District	7
Zoning	RURAL DEVELOPMENT
Class	600

Property Notes

MONOPOLE & TELECOM FACILTY

Land Information

Type		Size	Influence Factors	Influence %	Value
Primary	AC	0.5000			44,000
Excess	AC	7.3000			12,780

Total Acres: 7.8
Spot: Location:

Assessment Information

	Assessed	Appraised	Cost	Income	
Land	32,030	56,800	56,800	0	56,800
Building	108,150	154,500	154,500	0	154,500
Total	140,180	211,300	211,300	0	211,300

Manual Override Reason
Base Date of Value 10/01/2019
Value Flag COST APPROACH **Effective Date of Value** 10/01/2020
MONOPOLE BLDG 154500

Entrance Information

Date	ID	Entry Code	Source
07/27/07	AD	Complete	Other

Permit Information

Date Issued	Number	Price	Purpose		% Complete
11/30/18	26488	12,500	31 ELEC	Install Dc Generator On Existing Co	997
10/06/17	25597	6,500	81 CELE	Cellular Facility Cabinet - 100 Amp	997
08/18/17	25494	31,000	97 BPP	Install 2 High Capacity Sector Mou	995
09/27/16	24777	15,000	73 CREP	Verizon Wireless To Repl All 12 A	995
07/14/15	23754	15,000	97 BPP	Install 3 New Antennaes, 3 New B	995

Sales/Ownership History

Transfer Date	Price	Type	Validity	Deed Reference	Deed Type	Grantee
04/01/95	40,000	Land Only				

tyler
clt division

RESIDENTIAL PROPERTY RECORD CARD 2020

TOWN OF KILLINGLY

Situs : 280 ROSS RD	Parcel Id: 001365	Class: PA 490 FOREST	Card: 1 of 1	Printed: June 4, 2020

Dwelling Information

Style		Year Built	
Story height		Eff Year Built	
Attic		Year Remodeled	
Exterior Walls		Amenities	
Masonry Trim	x		
Color		In-law Apt	No

Basement

Basement		# Car Bsmt Gar	
FBLA Size	x	FBLA Type	
Rec Rm Size	x	Rec Rm Type	

Heating & Cooling / Fireplaces

Heat Type		Stacks	
Fuel Type		Openings	
System Type		Pre-Fab	

Room Detail

Bedrooms		Full Baths	
Family Rooms		Half Baths	
Kitchens		Extra Fixtures	
Total Rooms			
Kitchen Type		Bath Type	
Kitchen Remod		Bath Remod	

Adjustments

Int vs Ext		Unfinished Area	
Cathedral Ceiling	x	Unheated Area	

Grade & Depreciation

Grade		Market Adj	
Condition		Functional	
CDU		Economic	
Cost & Design	0	% Good Ovr	
% Complete			

Dwelling Computations

Base Price		% Good	
Plumbing		% Good Override	
Basement		Functional	
Heating		Economic	
Attic		% Complete	
Other Features	0	C&D Factor	
		Adj Factor	
Subtotal		Additions	
Ground Floor Area			
Total Living Area		Dwelling Value	

Building Notes

Outbuilding Data

Type	Size 1	Size 2	Area	Qty	Yr Blt	Grade	Condition	Value

Condominium / Mobile Home Information

Complex Name			
Condo Model			
Unit Number			
Unit Level		Unit Location	
Unit Parking		Unit View	
Model (MH)		Model Make (MH)	

Addition Details

Line #	Low	1st	2nd	3rd	Value

280 ROSS RD

Killingly, CT

1 inch = 280 Feet

January 13, 2022

www.cai-tech.com

0 280 561 842

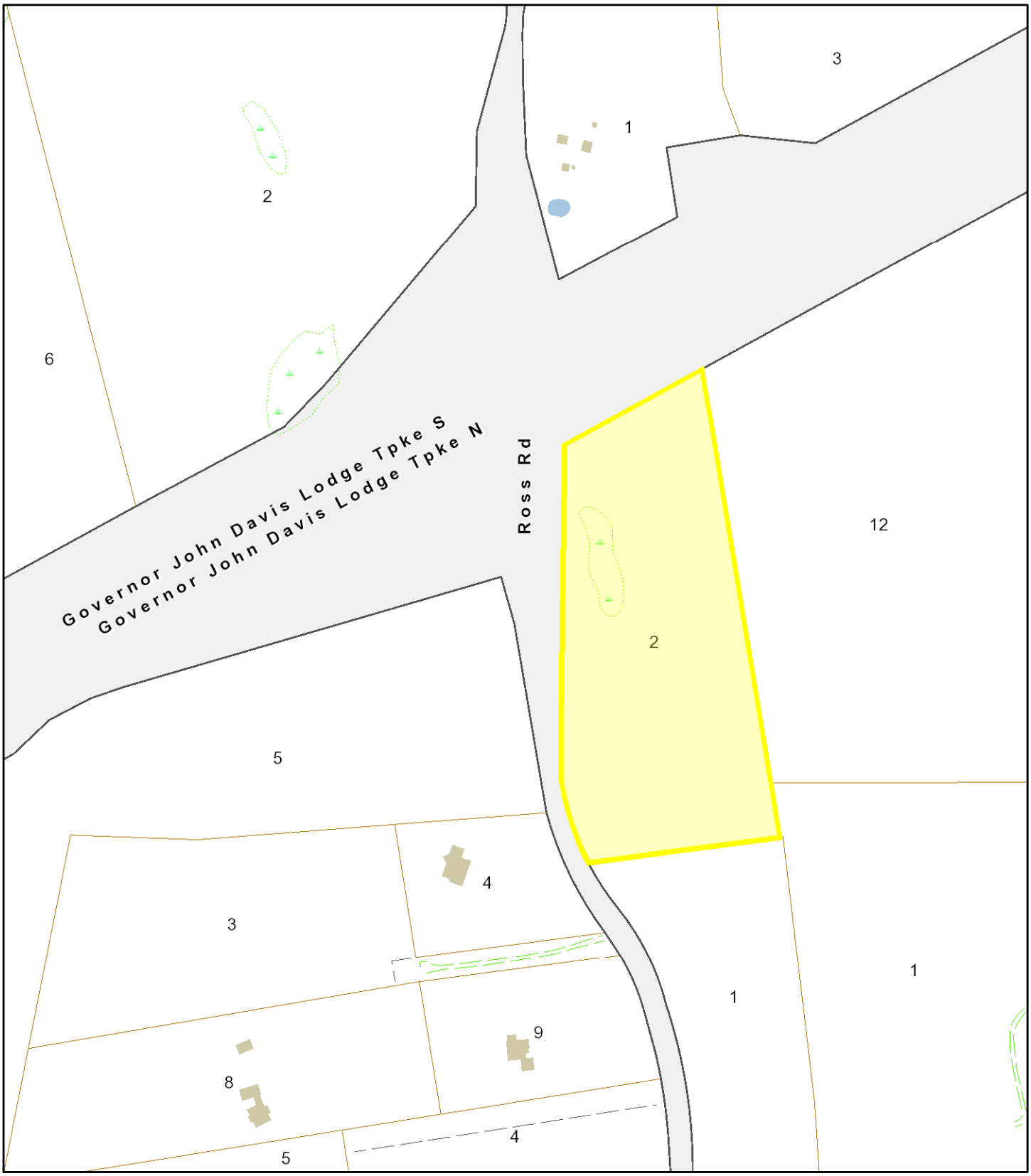

Data shown on this map is provided for planning and informational purposes only. The municipality and CAI Technologies are not responsible for any use for other purposes or misuse or misrepresentation of this map.

Exhibit C

Construction Drawings

verizon

VERIZON SITE NUMBER: 535822
VERIZON SITE NAME: DANIELSON SOUTH CT
VERIZON FUZE ID: 16272076
SITE TYPE: MONOPOLE
TOWER HEIGHT: 119'-0"

BUSINESS UNIT #: 857013
SITE ADDRESS: 280 ROSS RD
KILLINGLY, CT 06239
COUNTY: WINDHAM
JURISDICTION: CONNECTICUT SITING COUNCIL

VERIZON MODIFICATION;5G_L-SUB6-PREP,5G_RADIO SWAP

SITE INFORMATION

CROWN CASTLE USA INC. SITE NAME:	KILLINGLY ROSS ROAD
SITE ADDRESS:	280 ROSS RD KILLINGLY, CT 06239
COUNTY:	WINDHAM
MAP/PARCEL #:	255-012-000
AREA OF CONSTRUCTION:	EXISTING
LATITUDE:	41° 46' 17.59"
LONGITUDE:	71° 51' 20.39"
LAT/LONG TYPE:	NAD83
GROUND ELEVATION:	+/-462'
CURRENT ZONING:	RD
JURISDICTION:	CONNECTICUT SITING COUNCIL
OCCUPANCY CLASSIFICATION:	U
TYPE OF CONSTRUCTION:	IIB
A.D.A. COMPLIANCE:	FACILITY IS UNMANNED AND NOT FOR HUMAN HABITATION
PROPERTY OWNER:	SNAKE MEADOW CLUB INC PO BOX 236 CENTRAL VILLAGE, CT 06332
TOWER OWNER:	CROWN CASTLE 2000 CORPORATE DRIVE CANONSBURG, PA 15317
CARRIER/APPLICANT:	VERIZON WIRELESS 180 WASHINGTON VALLEY ROAD BEDMINSTER, NJ 07921
ELECTRIC PROVIDER:	NORTHEAST UTILITIES (800) 286-2000
TELCO PROVIDER:	AT&T (800) 288-2020

PROJECT TEAM

A&E FIRM:	TOWER ENGINEERING PROFESSIONALS 326 TRYON ROAD RALEIGH, NC 27603 (919) 661-6351 JOSEPH T. CRESS - PROJECT MANAGER SCOTT C. BRANTLEY- CIVIL ENGINEER
CROWN CASTLE USA INC. DISTRICT CONTACTS:	6325 ARDREY KELL ROAD, SUITE 600 CHARLOTTE, NC 28277 SARA REA LOADHOLDT - A&E SPECIALIST (704) 405-6548

DRAWING INDEX

SHEET #	SHEET DESCRIPTION
T-1	TITLE SHEET
T-2	GENERAL NOTES
C-1	SITE PLAN
C-2	TOWER ELEVATION & ANTENNA PLANS
C-3	EQUIPMENT SCHEDULES
C-4	EQUIPMENT DETAILS
C-5	EQUIPMENT DETAILS
C-6	COLOR CODE MATRIX
C-7	PLUMBING DIAGRAM
G-1	GROUNDING DETAILS
G-2	GROUNDING DETAILS

ALL DRAWINGS CONTAINED HEREIN ARE FORMATTED FOR FULL SIZE. CONTRACTOR SHALL VERIFY ALL PLANS AND EXISTING DIMENSIONS AND CONDITIONS ON THE JOB SITE AND SHALL IMMEDIATELY NOTIFY THE ENGINEER IN WRITING OF ANY DISCREPANCIES BEFORE PROCEEDING WITH THE WORK OR BE RESPONSIBLE FOR SAME.

APPROVALS

SIGNATURE	DATE

CONTRACTOR PMI REQUIREMENTS

PMI ACCESSED AT	https://pmi.vxwsmart.com
SMART TOOL VENDOR PROJECT NUMBER	**10117167**
VzW LOCATION CODE (PSLC)	**535822**

*** PMI AND REQUIREMENTS ALSO EMBEDDED IN MOUNT ANALYSIS REPORT

MOUNT MODIFICATION REQUIRED	N

VzW APPROVED SMART KIT VENDORS

REFER TO MOUNT MODIFICATION DRAWINGS PAGE FOR VzW SMART KIT APPROVED VENDORS

LOCATION MAP

DRIVING DIRECTIONS FROM VERIZON LOCAL OFFICE (180 WASHINGTON VALLEY RD, BEDMINSTER, NJ 07921)
TAKE SCHLEY MOUNTAIN RD TO I-287 N. HEAD WEST. SLIGHT LEFT. TURN RIGHT ONTO US-202 N/US-206 N. TURN RIGHT ONTO SCHLEY MOUNTAIN RD. FOLLOW I-287 N, I-95 N AND I-395 N TO CONNECTICUT TURNPIKE/GOVERNOR JOHN DAVIS LODGE TURNPIKE IN KILLINGLY. MERGE WITH I-287 N. TAKE THE I-87 S/NEW YORK STATE THRUWAY/I-287 EXIT TOWARD GOV MARIO M. CUOMO BR/NEW YORK CITY. MERGE WITH I-287 E/I-87 S. KEEP LEFT AT THE Y JUNCTION TO CONTINUE ON I-287 E, FOLLOW SIGNS FOR WHITE PLAINS/RYE. MERGE WITH I-95 N. KEEP LEFT AT THE Y JUNCTION TO CONTINUE ON I-395 N, FOLLOW SIGNS FOR INTERSTATE 395 N/NORWICH/PLAINFIELD. TAKE EXIT 35 TOWARD US-6 E/PROVIDENCE. CONTINUE ONTO CONNECTICUT TURNPIKE/GOVERNOR JOHN DAVIS LODGE TURNPIKE.

APPLICABLE CODES/REFERENCE DOCUMENTS

ALL WORK SHALL BE PERFORMED AND MATERIALS INSTALLED IN ACCORDANCE WITH THE CURRENT EDITIONS OF THE FOLLOWING CODES AS ADOPTED BY THE LOCAL GOVERNING AUTHORITIES. NOTHING IN THESE PLANS IS TO BE CONSTRUED TO PERMIT WORK NOT CONFORMING TO THESE CODES:

CODE TYPE	CODE
BUILDING	2015 IBC
MECHANICAL	2015 IMC
ELECTRICAL	2017 NEC

REFERENCE DOCUMENTS:

STRUCTURAL ANALYSIS:	MORRISON HERSHFIELD
DATED:	08/26/21
MOUNT ANALYSIS:	MASER CONSULTING CONNECTICUT
DATED:	11/23/21
RFDS REVISION:	0
DATED:	07/28/21
ORDER ID:	583758
REVISION:	0

CALL CONNECTICUT ONE CALL
(800) 922-4455 CBYD.COM
CALL 2 WORKING DAYS
BEFORE YOU DIG!

PROJECT DESCRIPTION

THE PURPOSE OF THIS PROJECT IS TO ENHANCE BROADBAND CONNECTIVITY AND CAPACITY TO THE EXISTING ELIGIBLE WIRELESS FACILITY.

TOWER SCOPE OF WORK:
- REMOVE (6) ANTENNAS
- REMOVE (6) COAX
- REMOVE (1) HYBRID CABLE
- REMOVE (6) RRHs
- INSTALL (9) ANTENNAS
- INSTALL (2) HYBRID CABLES
- INSTALL (6) RRHs
- INSTALL (1) OVP
- INSTALL (3) DIPLEXER
- INSTALL (3) SIDE-BY-SIDE ANTENNA MOUNTING BRACKETS

NOTE:
PRIOR TO ACCESSING/ENTERING THE SITE YOU MUST CONTACT THE CROWN NOC AT (800) 788-7011 & CROWN CONSTRUCTION MANAGER

verizon
180 WASHINGTON VALLEY ROAD
BEDMINSTER, NJ 07921

CROWN CASTLE
1200 MACARTHUR BLVD, SUITE 200
MAHWAH, NJ 07430

TOWER ENGINEERING PROFESSIONALS
326 TRYON RD
RALEIGH, NC 27603
(919) 661-6351
TEP JOB #: 217497.631057

VERIZON SITE NUMBER:
535822

BU #: **857013**
KILLINGLY ROSS ROAD

280 ROSS RD
KILLINGLY, CT 06239

EXISTING 119'-0" MONOPOLE

ISSUED FOR:

REV	DATE	DRWN	DESCRIPTION	DES./QA
0	12/16/21	KCA	CONSTRUCTION	RST
1	01/05/22	KCA	CONSTRUCTION	RST

STATE OF CONNECTICUT
SCOTT C. BRANTLEY
LICENSED
PROFESSIONAL ENGINEER

01/05/22

IT IS A VIOLATION OF LAW FOR ANY PERSON, UNLESS THEY ARE ACTING UNDER THE DIRECTION OF A LICENSED PROFESSIONAL ENGINEER, TO ALTER THIS DOCUMENT.

SHEET NUMBER:	REVISION:
T-1	0

CROWN CASTLE USA INC. SITE ACTIVITY REQUIREMENTS:

1. NOTICE TO PROCEED– NO WORK SHALL COMMENCE PRIOR TO CROWN CASTLE USA INC. WRITTEN NOTICE TO PROCEED (NTP) AND THE ISSUANCE OF A PURCHASE ORDER. PRIOR TO ACCESSING/ENTERING THE SITE YOU MUST CONTACT THE CROWN CASTLE USA INC. NOC AT 800–788–7011 & THE CROWN CASTLE USA INC. CONSTRUCTION MANAGER.
2. "LOOK UP" – CROWN CASTLE USA INC. SAFETY CLIMB REQUIREMENT:
   THE INTEGRITY OF THE SAFETY CLIMB AND ALL COMPONENTS OF THE CLIMBING FACILITY SHALL BE CONSIDERED DURING ALL STAGES OF DESIGN, INSTALLATION, AND INSPECTION. TOWER MODIFICATION, MOUNT REINFORCEMENTS, AND/OR EQUIPMENT INSTALLATIONS SHALL NOT COMPROMISE THE INTEGRITY OR FUNCTIONAL USE OF THE SAFETY CLIMB OR ANY COMPONENTS OF THE CLIMBING FACILITY ON THE STRUCTURE. THIS SHALL INCLUDE, BUT NOT BE LIMITED TO: PINCHING OF THE WIRE ROPE, BENDING OF THE WIRE ROPE FROM ITS SUPPORTS, DIRECT CONTACT OR CLOSE PROXIMITY TO THE WIRE ROPE WHICH MAY CAUSE FRICTIONAL WEAR, IMPACT TO THE ANCHORAGE POINTS IN ANY WAY, OR TO IMPEDE/BLOCK ITS INTENDED USE. ANY COMPROMISED SAFETY CLIMB, INCLUDING EXISTING CONDITIONS MUST BE TAGGED OUT AND REPORTED TO YOUR CROWN CASTLE USA INC. POC OR CALL THE NOC TO GENERATE A SAFETY CLIMB MAINTENANCE AND CONTRACTOR NOTICE TICKET.
3. PRIOR TO THE START OF CONSTRUCTION, ALL REQUIRED JURISDICTIONAL PERMITS SHALL BE OBTAINED. THIS INCLUDES, BUT IS NOT LIMITED TO, BUILDING, ELECTRICAL, MECHANICAL, FIRE, FLOOD ZONE, ENVIRONMENTAL, AND ZONING. AFTER ONSITE ACTIVITIES AND CONSTRUCTION ARE COMPLETED, ALL REQUIRED PERMITS SHALL BE SATISFIED AND CLOSED OUT ACCORDING TO LOCAL JURISDICTIONAL REQUIREMENTS.
4. ALL CONSTRUCTION MEANS AND METHODS; INCLUDING BUT NOT LIMITED TO, ERECTION PLANS, RIGGING PLANS, CLIMBING PLANS, AND RESCUE PLANS SHALL BE THE RESPONSIBILITY OF THE GENERAL CONTRACTOR RESPONSIBLE FOR THE EXECUTION OF THE WORK CONTAINED HEREIN, AND SHALL MEET ANSI/ASSE A10.48 (LATEST EDITION); FEDERAL, STATE, AND LOCAL REGULATIONS; AND ANY APPLICABLE INDUSTRY CONSENSUS STANDARDS RELATED TO THE CONSTRUCTION ACTIVITIES BEING PERFORMED. ALL RIGGING PLANS SHALL ADHERE TO ANSI/ASSE A10.48 (LATEST EDITION) AND CROWN CASTLE USA INC. STANDARD CED–STD–10253, INCLUDING THE REQUIRED INVOLVEMENT OF A QUALIFIED ENGINEER FOR CLASS IV CONSTRUCTION, TO CERTIFY THE SUPPORTING STRUCTURE(S) IN ACCORDANCE WITH ANSI/TIA–322 (LATEST EDITION).
5. ALL SITE WORK TO COMPLY WITH QAS–STD–10068 "INSTALLATION STANDARDS FOR CONSTRUCTION ACTIVITIES ON CROWN CASTLE USA INC. TOWER SITE," CED–STD–10294 "STANDARD FOR INSTALLATION OF MOUNTS AND APPURTENANCES," AND LATEST VERSION OF ANSI/TIA–1019–A–2012 "STANDARD FOR INSTALLATION, ALTERATION, AND MAINTENANCE OF ANTENNA SUPPORTING STRUCTURES AND ANTENNAS."
6. IF THE SPECIFIED EQUIPMENT CAN NOT BE INSTALLED AS SHOWN ON THESE DRAWINGS, THE CONTRACTOR SHALL PROPOSE AN ALTERNATIVE INSTALLATION FOR APPROVAL BY CROWN CASTLE USA INC. PRIOR TO PROCEEDING WITH ANY SUCH CHANGE OF INSTALLATION.
7. ALL MATERIALS FURNISHED AND INSTALLED SHALL BE IN STRICT ACCORDANCE WITH ALL APPLICABLE CODES, REGULATIONS AND ORDINANCES. CONTRACTOR SHALL ISSUE ALL APPROPRIATE NOTICES AND COMPLY WITH ALL LAWS, ORDINANCES, RULES, REGULATIONS AND LAWFUL ORDERS OF ANY PUBLIC AUTHORITY REGARDING THE PERFORMANCE OF THE WORK. ALL WORK CARRIED OUT SHALL COMPLY WITH ALL APPLICABLE MUNICIPAL AND UTILITY COMPANY SPECIFICATIONS AND LOCAL JURISDICTIONAL CODES, ORDINANCES AND APPLICABLE REGULATIONS.
8. THE CONTRACTOR SHALL INSTALL ALL EQUIPMENT AND MATERIALS IN ACCORDANCE WITH MANUFACTURER'S RECOMMENDATIONS UNLESS SPECIFICALLY STATED OTHERWISE.
9. THE CONTRACTOR SHALL CONTACT UTILITY LOCATING SERVICES PRIOR TO THE START OF CONSTRUCTION.
10. ALL EXISTING ACTIVE SEWER, WATER, GAS, ELECTRIC AND OTHER UTILITIES WHERE ENCOUNTERED IN THE WORK, SHALL BE PROTECTED AT ALL TIMES AND WHERE REQUIRED FOR THE PROPER EXECUTION OF THE WORK, SHALL BE RELOCATED AS DIRECTED BY CONTRACTOR. EXTREME CAUTION SHOULD BE USED BY THE CONTRACTOR WHEN EXCAVATING OR DRILLING PIERS AROUND OR NEAR UTILITIES. CONTRACTOR SHALL PROVIDE SAFETY TRAINING FOR THE WORKING CREW. THIS WILL INCLUDE BUT NOT BE LIMITED TO A) FALL PROTECTION B) CONFINED SPACE C) ELECTRICAL SAFETY D) TRENCHING AND EXCAVATION E) CONSTRUCTION SAFETY PROCEDURES.
11. ALL SITE WORK SHALL BE AS INDICATED ON THE STAMPED CONSTRUCTION DRAWINGS AND PROJECT SPECIFICATIONS, LATEST APPROVED REVISION.
12. CONTRACTOR SHALL KEEP THE SITE FREE FROM ACCUMULATING WASTE MATERIAL, DEBRIS, AND TRASH AT THE COMPLETION OF THE WORK. IF NECESSARY, RUBBISH, STUMPS, DEBRIS, STICKS, STONES AND OTHER REFUSE SHALL BE REMOVED FROM THE SITE AND DISPOSED OF LEGALLY.
13. ALL EXISTING INACTIVE SEWER, WATER, GAS, ELECTRIC AND OTHER UTILITIES, WHICH INTERFERE WITH THE EXECUTION OF THE WORK, SHALL BE REMOVED AND/OR CAPPED, PLUGGED OR OTHERWISE DISCONTINUED AT POINTS WHICH WILL NOT INTERFERE WITH THE EXECUTION OF THE WORK, SUBJECT TO THE APPROVAL OF CONTRACTOR, TOWER OWNER, CROWN CASTLE USA INC., AND/OR LOCAL UTILITIES.
14. THE CONTRACTOR SHALL PROVIDE SITE SIGNAGE IN ACCORDANCE WITH THE TECHNICAL SPECIFICATION FOR SITE SIGNAGE REQUIRED BY LOCAL JURISDICTION AND SIGNAGE REQUIRED ON INDIVIDUAL PIECES OF EQUIPMENT, ROOMS, AND SHELTERS.
15. THE SITE SHALL BE GRADED TO CAUSE SURFACE WATER TO FLOW AWAY FROM THE CARRIER'S EQUIPMENT AND TOWER AREAS.
16. THE SUB GRADE SHALL BE COMPACTED AND BROUGHT TO A SMOOTH UNIFORM GRADE PRIOR TO FINISHED SURFACE APPLICATION.
17. THE AREAS OF THE OWNERS PROPERTY DISTURBED BY THE WORK AND NOT COVERED BY THE TOWER, EQUIPMENT OR DRIVEWAY, SHALL BE GRADED TO A UNIFORM SLOPE, AND STABILIZED TO PREVENT EROSION AS SPECIFIED ON THE CONSTRUCTION DRAWINGS AND/OR PROJECT SPECIFICATIONS.
18. CONTRACTOR SHALL MINIMIZE DISTURBANCE TO EXISTING SITE DURING CONSTRUCTION. EROSION CONTROL MEASURES, IF REQUIRED DURING CONSTRUCTION, SHALL BE IN CONFORMANCE WITH THE LOCAL GUIDELINES FOR EROSION AND SEDIMENT CONTROL.
19. THE CONTRACTOR SHALL PROTECT EXISTING IMPROVEMENTS, PAVEMENTS, CURBS, LANDSCAPING AND STRUCTURES. ANY DAMAGED PART SHALL BE REPAIRED AT CONTRACTOR'S EXPENSE TO THE SATISFACTION OF OWNER.
20. CONTRACTOR SHALL LEGALLY AND PROPERLY DISPOSE OF ALL SCRAP MATERIALS SUCH AS COAXIAL CABLES AND OTHER ITEMS REMOVED FROM THE EXISTING FACILITY. ANTENNAS REMOVED SHALL BE RETURNED TO THE OWNER'S DESIGNATED LOCATION.
21. CONTRACTOR SHALL LEAVE PREMISES IN CLEAN CONDITION. TRASH AND DEBRIS SHOULD BE REMOVED FROM SITE ON A DAILY BASIS.
22. NO FILL OR EMBANKMENT MATERIAL SHALL BE PLACED ON FROZEN GROUND. FROZEN MATERIALS, SNOW OR ICE SHALL NOT BE PLACED IN ANY FILL OR EMBANKMENT.

GENERAL NOTES:

1. FOR THE PURPOSE OF CONSTRUCTION DRAWING, THE FOLLOWING DEFINITIONS SHALL APPLY:
   CONTRACTOR: GENERAL CONTRACTOR RESPONSIBLE FOR CONSTRUCTION
   CARRIER: VERIZON
   TOWER OWNER: CROWN CASTLE USA INC.
2. THESE DRAWINGS HAVE BEEN PREPARED USING STANDARDS OF PROFESSIONAL CARE AND COMPLETENESS NORMALLY EXERCISED UNDER SIMILAR CIRCUMSTANCES BY REPUTABLE ENGINEERS IN THIS OR SIMILAR LOCALITIES. IT IS ASSUMED THAT THE WORK DEPICTED WILL BE PERFORMED BY AN EXPERIENCED CONTRACTOR AND/OR WORKPEOPLE WHO HAVE A WORKING KNOWLEDGE OF THE APPLICABLE CODE STANDARDS AND REQUIREMENTS AND OF INDUSTRY ACCEPTED STANDARD GOOD PRACTICE. AS NOT EVERY CONDITION OR ELEMENT IS (OR CAN BE) EXPLICITLY SHOWN ON THESE DRAWINGS, THE CONTRACTOR SHALL USE INDUSTRY ACCEPTED STANDARD GOOD PRACTICE FOR MISCELLANEOUS WORK NOT EXPLICITLY SHOWN.
3. THESE DRAWINGS REPRESENT THE FINISHED STRUCTURE. THEY DO NOT INDICATE THE MEANS OR METHODS OF CONSTRUCTION. THE CONTRACTOR SHALL BE SOLELY RESPONSIBLE FOR THE CONSTRUCTION MEANS, METHODS, TECHNIQUES, SEQUENCES, AND PROCEDURES. THE CONTRACTOR SHALL PROVIDE ALL MEASURES NECESSARY FOR PROTECTION OF LIFE AND PROPERTY DURING CONSTRUCTION. SUCH MEASURES SHALL INCLUDE, BUT NOT BE LIMITED TO, BRACING, FORMWORK, SHORING, ETC. SITE VISITS BY THE ENGINEER OR HIS REPRESENTATIVE WILL NOT INCLUDE INSPECTION OF THESE ITEMS AND IS FOR STRUCTURAL OBSERVATION OF THE FINISHED STRUCTURE ONLY.
4. NOTES AND DETAILS IN THE CONSTRUCTION DRAWINGS SHALL TAKE PRECEDENCE OVER GENERAL NOTES AND TYPICAL DETAILS. WHERE NO DETAILS ARE SHOWN, CONSTRUCTION SHALL CONFORM TO SIMILAR WORK ON THE PROJECT, AND/OR AS PROVIDED FOR IN THE CONTRACT DOCUMENTS. WHERE DISCREPANCIES OCCUR BETWEEN PLANS, DETAILS, GENERAL NOTES, AND SPECIFICATIONS, THE GREATER, MORE STRICT REQUIREMENTS, SHALL GOVERN. IF FURTHER CLARIFICATION IS REQUIRED CONTACT THE ENGINEER OF RECORD.
5. SUBSTANTIAL EFFORT HAS BEEN MADE TO PROVIDE ACCURATE DIMENSIONS AND MEASUREMENTS ON THE DRAWINGS TO ASSIST IN THE FABRICATION AND/OR PLACEMENT OF CONSTRUCTION ELEMENTS BUT IT IS THE SOLE RESPONSIBILITY OF THE CONTRACTOR TO FIELD VERIFY THE DIMENSIONS, MEASUREMENTS, AND/OR CLEARANCES SHOWN IN THE CONSTRUCTION DRAWINGS PRIOR TO FABRICATION OR CUTTING OF ANY NEW OR EXISTING CONSTRUCTION ELEMENTS. IF IT IS DETERMINED THAT THERE ARE DISCREPANCIES AND/OR CONFLICTS WITH THE CONSTRUCTION DRAWINGS THE ENGINEER OF RECORD IS TO BE NOTIFIED AS SOON AS POSSIBLE.
6. PRIOR TO THE SUBMISSION OF BIDS, THE BIDDING CONTRACTOR SHALL VISIT THE CELL SITE TO FAMILIARIZE WITH THE EXISTING CONDITIONS AND TO CONFIRM THAT THE WORK CAN BE ACCOMPLISHED AS SHOWN ON THE CONSTRUCTION DRAWINGS. ANY DISCREPANCY FOUND SHALL BE BROUGHT TO THE ATTENTION OF CROWN CASTLE.
7. ALL MATERIALS FURNISHED AND INSTALLED SHALL BE IN STRICT ACCORDANCE WITH ALL APPLICABLE CODES, REGULATIONS AND ORDINANCES. CONTRACTOR SHALL ISSUE ALL APPROPRIATE NOTICES AND COMPLY WITH ALL LAWS, ORDINANCES, RULES, REGULATIONS AND LAWFUL ORDERS OF ANY PUBLIC AUTHORITY REGARDING THE PERFORMANCE OF THE WORK. ALL WORK CARRIED OUT SHALL COMPLY WITH ALL APPLICABLE MUNICIPAL AND UTILITY COMPANY SPECIFICATIONS AND LOCAL JURISDICTIONAL CODES, ORDINANCES AND APPLICABLE REGULATIONS.
8. UNLESS NOTED OTHERWISE, THE WORK SHALL INCLUDE FURNISHING MATERIALS, EQUIPMENT, APPURTENANCES AND LABOR NECESSARY TO COMPLETE ALL INSTALLATIONS AS INDICATED ON THE DRAWINGS.
9. THE CONTRACTOR SHALL INSTALL ALL EQUIPMENT AND MATERIALS IN ACCORDANCE WITH MANUFACTURER'S RECOMMENDATIONS UNLESS SPECIFICALLY STATED OTHERWISE.
10. IF THE SPECIFIED EQUIPMENT CAN NOT BE INSTALLED AS SHOWN ON THESE DRAWINGS, THE CONTRACTOR SHALL PROPOSE AN ALTERNATIVE INSTALLATION FOR APPROVAL BY THE CARRIER AND CROWN CASTLE PRIOR TO PROCEEDING WITH ANY SUCH CHANGE OF INSTALLATION.
11. CONTRACTOR IS TO PERFORM A SITE INVESTIGATION AND IS TO DETERMINE THE BEST ROUTING OF ALL CONDUITS FOR POWER, AND TELCO AND FOR GROUNDING CABLES AS SHOWN IN THE POWER, TELCO, AND GROUNDING PLAN DRAWINGS.
12. THE CONTRACTOR SHALL PROTECT EXISTING IMPROVEMENTS, PAVEMENTS, CURBS, LANDSCAPING AND STRUCTURES. ANY DAMAGED PART SHALL BE REPAIRED AT CONTRACTOR'S EXPENSE TO THE SATISFACTION OF CROWN CASTLE USA INC.
13. CONTRACTOR SHALL LEGALLY AND PROPERLY DISPOSE OF ALL SCRAP MATERIALS SUCH AS COAXIAL CABLES AND OTHER ITEMS REMOVED FROM THE EXISTING FACILITY. ANTENNAS REMOVED SHALL BE RETURNED TO THE OWNER'S DESIGNATED LOCATION.
14. CONTRACTOR SHALL LEAVE PREMISES IN CLEAN CONDITION. TRASH AND DEBRIS SHOULD BE REMOVED FROM SITE ON A DAILY BASIS.

CONCRETE, FOUNDATIONS, AND REINFORCING STEEL:

1. ALL CONCRETE WORK SHALL BE IN ACCORDANCE WITH THE ACI 301, ACI 318, ACI 336, ASTM A184, ASTM A185 AND THE DESIGN AND CONSTRUCTION SPECIFICATION FOR CAST–IN–PLACE CONCRETE.
2. UNLESS NOTED OTHERWISE, SOIL BEARING PRESSURE USED FOR DESIGN OF SLABS AND FOUNDATIONS IS ASSUMED TO BE 1000 psf.
3. ALL CONCRETE SHALL HAVE A MINIMUM COMPRESSIVE STRENGTH (f'c) OF 3000 psi AT 28 DAYS, UNLESS NOTED OTHERWISE. NO MORE THAN 90 MINUTES SHALL ELAPSE FROM BATCH TIME TO TIME OF PLACEMENT UNLESS APPROVED BY THE ENGINEER OF RECORD. TEMPERATURE OF CONCRETE SHALL NOT EXCEED 90°f AT TIME OF PLACEMENT.
4. CONCRETE EXPOSED TO FREEZE–THAW CYCLES SHALL CONTAIN AIR ENTRAINING ADMIXTURES. AMOUNT OF AIR ENTRAINMENT TO BE BASED ON SIZE OF AGGREGATE AND F3 CLASS EXPOSURE (VERY SEVERE). CEMENT USED TO BE TYPE II PORTLAND CEMENT WITH A MAXIMUM WATER–TO–CEMENT RATIO (W/C) OF 0.45.
5. ALL STEEL REINFORCING SHALL CONFORM TO ASTM A615. ALL WELDED WIRE FABRIC (WWF) SHALL CONFORM TO ASTM A185. ALL SPLICES SHALL BE CLASS "B" TENSION SPLICES, UNLESS NOTED OTHERWISE. ALL HOOKS SHALL BE STANDARD 90 DEGREE HOOKS, UNLESS NOTED OTHERWISE. YIELD STRENGTH (Fy) OF STANDARD DEFORMED BARS ARE AS FOLLOWS:
   #4 BARS AND SMALLER..40 ksi
   #5 BARS AND LARGER..60 ksi
6. THE FOLLOWING MINIMUM CONCRETE COVER SHALL BE PROVIDED FOR REINFORCING STEEL UNLESS SHOWN OTHERWISE ON DRAWINGS:
   CONCRETE CAST AGAINST AND PERMANENTLY EXPOSED TO EARTH..........3"
   CONCRETE EXPOSED TO EARTH OR WEATHER:
   #6 BARS AND LARGER..2"
   #5 BARS AND SMALLER..1–1/2"
   CONCRETE NOT EXPOSED TO EARTH OR WEATHER:
   SLAB AND WALLS..3/4"
   BEAMS AND COLUMNS..1–1/2"
7. A TOOLED EDGE OR A 3/4" CHAMFER SHALL BE PROVIDED AT ALL EXPOSED EDGES OF CONCRETE, UNLESS NOTED OTHERWISE, IN ACCORDANCE WITH ACI 301 SECTION 4.2.4.

GREENFIELD GROUNDING NOTES:

1. ALL GROUND ELECTRODE SYSTEMS (INCLUDING TELECOMMUNICATION, RADIO, LIGHTNING PROTECTION AND AC POWER GES'S) SHALL BE BONDED TOGETHER AT OR BELOW GRADE, BY TWO OR MORE COPPER BONDING CONDUCTORS IN ACCORDANCE WITH THE NEC.
2. THE CONTRACTOR SHALL PERFORM IEEE FALL–OF–POTENTAL RESISTANCE TO EARTH TESTING (PER IEEE 1100 AND 81) FOR GROUND ELECTRODE SYSTEMS, THE CONTRACTOR SHALL FURNISH AND INSTALL SUPPLEMENTAL GROUND ELECTRODES AS NEEDED TO ACHIEVE A TEST RESULT OF 5 OHMS OR LESS.
3. THE CONTRACTOR IS RESPONSIBLE FOR PROPERLY SEQUENCING GROUNDING AND UNDERGROUND CONDUIT INSTALLATION AS TO PREVENT ANY LOSS OF CONTINUITY IN THE GROUNDING SYSTEM OR DAMAGE TO THE CONDUIT AND PROVIDE TESTING RESULTS.
4. METAL CONDUIT AND TRAY SHALL BE GROUNDED AND MADE ELECTRICALLY CONTINUOUS WITH LISTED BONDING FITTINGS OR BY BONDING ACROSS THE DISCONTINUITY WITH #6 COPPER WIRE UL APPROVED GROUNDING TYPE CONDUIT CLAMPS.
5. METAL RACEWAY SHALL NOT BE USED AS THE NEC REQUIRED EQUIPMENT GROUND CONDUCTOR. STRANDED COPPER CONDUCTORS WITH GREEN INSULATION, SIZED IN ACCORDANCE WITH THE NEC, SHALL BE FURNISHED AND INSTALLED WITH THE POWER CIRCUITS TO BTS EQUIPMENT.
6. EACH CABINET FRAME SHALL BE DIRECTLY CONNECTED TO THE MASTER GROUND BAR WITH GREEN INSULATED SUPPLEMENTAL EQUIPMENT GROUND WIRES, #6 STRANDED COPPER OR LARGER FOR INDOOR BTS; #2 BARE SOLID TINNED COPPER FOR OUTDOOR BTS.
7. CONNECTIONS TO THE GROUND BUS SHALL NOT BE DOUBLED UP OR STACKED BACK TO BACK CONNECTIONS ON OPPOSITE SIDE OF THE GROUND BUS ARE PERMITTED.
8. ALL EXTERIOR GROUND CONDUCTORS BETWEEN EQUIPMENT/GROUND BARS AND THE GROUND RING SHALL BE #2 SOLID TINNED COPPER UNLESS OTHERWISE INDICATED.
9. ALUMINUM CONDUCTOR OR COPPER CLAD STEEL CONDUCTOR SHALL NOT BE USED FOR GROUNDING CONNECTIONS.
10. USE OF 90° BENDS IN THE PROTECTION GROUNDING CONDUCTORS SHALL BE AVOIDED WHEN 45° BENDS CAN BE ADEQUATELY SUPPORTED.
11. EXOTHERMIC WELDS SHALL BE USED FOR ALL GROUNDING CONNECTIONS BELOW GRADE.
12. ALL GROUND CONNECTIONS ABOVE GRADE (INTERIOR AND EXTERIOR) SHALL BE FORMED USING HIGH PRESS CRIMPS.
13. COMPRESSION GROUND CONNECTIONS MAY BE REPLACED BY EXOTHERMIC WELD CONNECTIONS.
14. ICE BRIDGE BONDING CONDUCTORS SHALL BE EXOTHERMICALLY BONDED OR BOLTED TO THE BRIDGE AND THE TOWER GROUND BAR.
15. APPROVED ANTIOXIDANT COATINGS (i.e. CONDUCTIVE GEL OR PASTE) SHALL BE USED ON ALL COMPRESSION AND BOLTED GROUND CONNECTIONS.
16. ALL EXTERIOR GROUND CONNECTIONS SHALL BE COATED WITH A CORROSION RESISTANT MATERIAL.
17. MISCELLANEOUS ELECTRICAL AND NON–ELECTRICAL METAL BOXES, FRAMES AND SUPPORTS SHALL BE BONDED TO THE GROUND RING, IN ACCORDANCE WITH THE NEC.
18. BOND ALL METALLIC OBJECTS WITHIN 6 ft OF MAIN GROUND RING WITH (1) #2 BARE SOLID TINNED COPPER GROUND CONDUCTOR.
19. GROUND CONDUCTORS USED FOR THE FACILITY GROUNDING AND LIGHTNING PROTECTION SYSTEMS SHALL NOT BE ROUTED THROUGH METALLIC OBJECTS THAT FORM A RING AROUND THE CONDUCTOR, SUCH AS METALLIC CONDUITS, METAL SUPPORT CLIPS OR SLEEVES THROUGH WALLS OR FLOORS. WHEN IT IS REQUIRED TO BE HOUSED IN CONDUIT TO MEET CODE REQUIREMENTS OR LOCAL CONDITIONS, NON–METALLIC MATERIAL SUCH AS PVC CONDUIT SHALL BE USED. WHERE USE OF METAL CONDUIT IS UNAVOIDABLE (i.e., NONMETALLIC CONDUIT PROHIBITED BY LOCAL CODE) THE GROUND CONDUCTOR SHALL BE BONDED TO EACH END OF THE METAL CONDUIT.
20. ALL GROUNDS THAT TRANSITION FROM BELOW GRADE TO ABOVE GRADE MUST BE #2 BARE SOLID TINNED COPPER IN 3/4" NON–METALLIC, FLEXIBLE CONDUIT FROM 24" BELOW GRADE TO WITHIN 3" TO 6" OF CAD–WELD TERMINATION POINT. THE EXPOSED END OF THE CONDUIT MUST BE SEALED WITH SILICONE CAULK. (ADD TRANSITIONING GROUND STANDARD DETAIL AS WELL).
21. BUILDINGS WHERE THE MAIN GROUNDING CONDUCTORS ARE REQUIRED TO BE ROUTED TO GRADE, THE CONTRACTOR SHALL ROUTE TWO GROUNDING CONDUCTORS FROM THE ROOFTOP, TOWERS, AND WATER TOWERS GROUNDING RING, TO THE EXISTING GROUNDING SYSTEM, THE GROUNDING CONDUCTORS SHALL NOT BE SMALLER THAN 2/0 COPPER. ROOFTOP GROUNDING RING SHALL BE BONDED TO THE EXISTING GROUNDING SYSTEM, THE BUILDING STEEL COLUMNS, LIGHTNING PROTECTION SYSTEM, AND BUILDING MAIN WATER LINE (FERROUS OR NONFERROUS METAL PIPING ONLY).

ELECTRICAL INSTALLATION NOTES:

1. ALL ELECTRICAL WORK SHALL BE PERFORMED IN ACCORDANCE WITH THE PROJECT SPECIFICATIONS, NEC AND ALL APPLICABLE FEDERAL, STATE, AND LOCAL CODES/ORDINANCES.
2. CONDUIT ROUTINGS ARE SCHEMATIC. CONTRACTOR SHALL INSTALL CONDUITS SO THAT ACCESS TO EQUIPMENT IS NOT BLOCKED AND TRIP HAZARDS ARE ELIMINATED.
3. WIRING, RACEWAY AND SUPPORT METHODS AND MATERIALS SHALL COMPLY WITH THE REQUIREMENTS OF THE NEC.
4. ALL CIRCUITS SHALL BE SEGREGATED AND MAINTAIN MINIMUM CABLE SEPARATION AS REQUIRED BY THE NEC.
   4.1. ALL EQUIPMENT SHALL BEAR THE UNDERWRITERS LABORATORIES LABEL OF APPROVAL, AND SHALL CONFORM TO REQUIREMENT OF THE NATIONAL ELECTRICAL CODE.
   4.2. ALL OVERCURRENT DEVICES SHALL HAVE AN INTERRUPTING CURRENT RATING THAT SHALL BE GREATER THAN THE SHORT CIRCUIT CURRENT TO WHICH THEY ARE SUBJECTED, 22,000 AIC MINIMUM. VERYIFY AVAILABLE SHORT CIRCUIT CURRENT DOES NOT EXCEED THE RATING OF ELECTRICAL EQUIPMENT IN ACCORDANCE WITH ARTICLE 110.24 NEC OR THE MOST CURRENT ADOPTED CODE PRE THE GOVERNING JURISDICTION.
5. EACH END OF EVERY POWER PHASE CONDUCTOR, GROUNDING CONDUCTOR, AND TELCO CONDUCTOR OR CABLE SHALL BE LABELED WITH COLOR–CODED INSULATION OR ELECTRICAL TAPE (3M BRAND, 1/2" PLASTIC ELECTRICAL TAPE WITH UV PROTECTION, OR EQUAL). THE IDENTIFICATION METHOD SHALL CONFORM WITH NEC AND OSHA.
6. ALL ELECTRICAL COMPONENTS SHALL BE CLEARLY LABELED WITH LAMICOID TAGS SHOWING THEIR RATED VOLTAGE, PHASE CONFIGURATION, WIRE CONFIGURATION, POWER OR AMPACITY RATING AND BRANCH CIRCUIT ID NUMBERS (i.e. PANEL BOARD AND CIRCUIT ID'S).
7. PANEL BOARDS (ID NUMBERS) SHALL BE CLEARLY LABELED WITH PLASTIC LABELS.
8. ALL TIE WRAPS SHALL BE CUT FLUSH WITH APPROVED CUTTING TOOL TO REMOVE SHARP EDGES.
9. ALL POWER AND EQUIPMENT GROUND WIRING IN TUBING OR CONDUIT SHALL BE SINGLE COPPER CONDUCTOR (#14 OR LARGER) WITH TYPE THHW, THWN, THWN–2, XHHW, XHHW–2, THW, THW–2, RHW, OR RHW–2 INSULATION UNLESS OTHERWISE SPECIFIED.
10. SUPPLEMENTAL EQUIPMENT GROUND WIRING LOCATED INDOORS SHALL BE SINGLE COPPER CONDUCTOR (#6 OR LARGER) WITH TYPE THHW, THWN, THWN–2, XHHW, XHHW–2, THW, THW–2, RHW, OR RHW–2 INSULATION UNLESS OTHERWISE SPECIFIED.
11. POWER AND CONTROL WIRING IN FLEXIBLE CORD SHALL BE MULTI–CONDUCTOR, TYPE SOOW CORD (#14 OR LARGER) UNLESS OTHERWISE SPECIFIED.
12. POWER AND CONTROL WIRING FOR USE IN CABLE TRAY SHALL BE MULTI–CONDUCTOR, TYPE TC CABLE (#14 OR LARGER), WITH TYPE THHW, THWN, THWN–2, XHHW, XHHW–2, THW, THW–2, RHW, OR RHW–2 INSULATION UNLESS OTHERWISE SPECIFIED.
13. ALL POWER AND GROUNDING CONNECTIONS SHALL BE CRIMP–STYLE, COMPRESSION WIRE LUGS AND WIRE NUTS BY THOMAS AND BETTS (OR EQUAL). LUGS AND WIRE NUTS SHALL BE RATED FOR OPERATION NOT LESS THAN 75° C (90° C IF AVAILABLE).
14. RACEWAY AND CABLE TRAY SHALL BE LISTED OR LABELED FOR ELECTRICAL USE IN ACCORDANCE WITH NEMA, UL, ANSI/IEEE AND NEC.
15. ELECTRICAL METALLIC TUBING (EMT), INTERMEDIATE METAL CONDUIT (IMC), OR RIGID METAL CONDUIT (RMC) SHALL BE USED FOR EXPOSED INDOOR LOCATIONS.
16. ELECTRICAL METALLIC TUBING (EMT) OR METAL–CLAD CABLE (MC) SHALL BE USED FOR CONCEALED INDOOR LOCATIONS.
17. SCHEDULE 40 PVC UNDERGROUND ON STRAIGHTS AND SCHEDULE 80 PVC FOR ALL ELBOWS/90s AND ALL APPROVED ABOVE GRADE PVC CONDUIT.
18. LIQUID–TIGHT FLEXIBLE METALLIC CONDUIT (LIQUID–TITE FLEX) SHALL BE USED INDOORS AND OUTDOORS, WHERE VIBRATION OCCURS OR FLEXIBILITY IS NEEDED.
19. CONDUIT AND TUBING FITTINGS SHALL BE THREADED OR COMPRESSION–TYPE AND APPROVED FOR THE LOCATION USED. SET SCREW FITTINGS ARE NOT ACCEPTABLE.
20. CABINETS, BOXES AND WIRE WAYS SHALL BE LABELED FOR ELECTRICAL USE IN ACCORDANCE WITH NEMA, UL, ANSI/IEEE AND THE NEC.
21. WIREWAYS SHALL BE METAL WITH AN ENAMEL FINISH AND INCLUDE A HINGED COVER, DESIGNED TO SWING OPEN DOWNWARDS (WIREMOLD SPECMATE WIREWAY).
22. SLOTTED WIRING DUCT SHALL BE PVC AND INCLUDE COVER (PANDUIT TYPE E OR EQUAL).
23. CONDUITS SHALL BE FASTENED SECURELY IN PLACE WITH APPROVED NON–PERFORATED STRAPS AND HANGERS. EXPLOSIVE DEVICES (i.e. POWDER–ACTUATED) FOR ATTACHING HANGERS TO STRUCTURE WILL NOT BE PERMITTED. CLOSELY FOLLOW THE LINES OF THE STRUCTURE, MAINTAIN CLOSE PROXIMITY TO THE STRUCTURE AND KEEP CONDUITS IN TIGHT ENVELOPES. CHANGES IN DIRECTION TO ROUTE AROUND OBSTACLES SHALL BE MADE WITH CONDUIT OUTLET BODIES. CONDUIT SHALL BE INSTALLED IN A NEAT AND WORKMANLIKE MANNER. PARALLEL AND PERPENDICULAR TO STRUCTURE WALL AND CEILING LINES. ALL CONDUIT SHALL BE FISHED TO CLEAR OBSTRUCTIONS. ENDS OF CONDUITS SHALL BE TEMPORARILY CAPPED FLUSH TO FINISH GRADE TO PREVENT CONCRETE, PLASTER OR DIRT FROM ENTERING. CONDUITS SHALL BE RIGIDLY CLAMPED TO BOXES BY GALVANIZED MALLEABLE IRON BUSHING ON INSIDE AND GALVANIZED MALLEABLE IRON LOCKNUT ON OUTSIDE AND INSIDE.
24. EQUIPMENT CABINETS, TERMINAL BOXES, JUNCTION BOXES AND PULL BOXES SHALL BE GALVANIZED OR EPOXY–COATED SHEET STEEL. SHALL MEET OR EXCEED UL 50 AND BE RATED NEMA 1 (OR BETTER) FOR INTERIOR LOCATIONS AND NEMA 3R (OR BETTER) FOR EXTERIOR LOCATIONS.
25. METAL RECEPTACLE, SWITCH AND DEVICE BOXES SHALL BE GALVANIZED, EPOXY–COATED OR NON–CORRODING; SHALL MEET OR EXCEED UL 514A AND NEMA OS 1 AND BE RATED NEMA 1 (OR BETTER) FOR INTERIOR LOCATIONS AND WEATHER PROTECTED (WP OR BETTER) FOR EXTERIOR LOCATIONS.
26. NONMETALLIC RECEPTACLE, SWITCH AND DEVICE BOXES SHALL MEET OR EXCEED NEMA OS 2 (NEWEST REVISION) AND BE RATED NEMA 1 (OR BETTER) FOR INTERIOR LOCATIONS AND WEATHER PROTECTED (WP OR BETTER) FOR EXTERIOR LOCATIONS.
27. THE CONTRACTOR SHALL NOTIFY AND OBTAIN NECESSARY AUTHORIZATION FROM THE CARRIER AND/OR CROWN CASTLE USA INC. BEFORE COMMENCING WORK ON THE AC POWER DISTRIBUTION PANELS.
28. THE CONTRACTOR SHALL PROVIDE NECESSARY TAGGING ON THE BREAKERS, CABLES AND DISTRIBUTION PANELS IN ACCORDANCE WITH THE APPLICABLE CODES AND STANDARDS TO SAFEGUARD LIFE AND PROPERTY.
29. INSTALL LAMICOID LABEL ON THE METER CENTER TO SHOW "VERIZON".
30. ALL EMPTY/SPARE CONDUITS THAT ARE INSTALLED ARE TO HAVE A METERED MULE TAPE PULL CORD INSTALLED.

CONDUCTOR COLOR CODE		
SYSTEM	CONDUCTOR	COLOR
120/240V, 1Ø	A PHASE	BLACK
	B PHASE	RED
	NEUTRAL	WHITE
	GROUND	GREEN
120/208V, 3Ø	A PHASE	BLACK
	B PHASE	RED
	C PHASE	BLUE
	NEUTRAL	WHITE
	GROUND	GREEN
277/480V, 3Ø	A PHASE	BROWN
	B PHASE	ORANGE OR PURPLE
	C PHASE	YELLOW
	NEUTRAL	GREY
	GROUND	GREEN
DC VOLTAGE	POS (+)	RED**
	NEG (–)	BLACK**

* SEE NEC 210.5(C)(1) AND (2)
** POLARITY MARKED AT TERMINATION

APWA UNIFORM COLOR CODE:

WHITE	PROPOSED EXCAVATION
PINK	TEMPORARY SURVEY MARKINGS
RED	ELECTRIC POWER LINES, CABLES, CONDUIT, AND LIGHTING CABLES
YELLOW	GAS, OIL, STEAM, PETROLEUM, OR GASEOUS MATERIALS
ORANGE	COMMUNICATION, ALARM OR SIGNAL LINES, CABLES, OR CONDUIT AND TRAFFIC LOOPS
BLUE	POTABLE WATER
PURPLE	RECLAIMED WATER, IRRIGATION, AND SLURRY LINES
GREEN	SEWERS AND DRAIN LINES

ABBREVIATIONS:

ANT	ANTENNA
(E)	EXISTING
FIF	FACILITY INTERFACE FRAME
GEN	GENERATOR
GPS	GLOBAL POSITIONING SYSTEM
GSM	GLOBAL SYSTEM FOR MOBILE
LTE	LONG TERM EVOLUTION
MGB	MASTER GROUND BAR
MW	MICROWAVE
(N)	NEW
NEC	NATIONAL ELECTRIC CODE
(P)	PROPOSED
PP	POWER PLANT
QTY	QUANTITY
RECT	RECTIFIER
RBS	RADIO BASE STATION
RET	REMOTE ELECTRIC TILT
RFDS	RADIO FREQUENCY DATA SHEET
RRH	REMOTE RADIO HEAD
RRU	REMOTE RADIO UNIT
SIAD	SMART INTEGRATED DEVICE
TMA	TOWER MOUNTED AMPLIFIER
TYP	TYPICAL
UMTS	UNIVERSAL MOBILE TELECOMMUNICATIONS SYSTEM
W.P.	WORK POINT

verizon
180 WASHINGTON VALLEY ROAD
BEDMINSTER, NJ 07921

CROWN CASTLE
1200 MACARTHUR BLVD, SUITE 200
MAHWAH, NJ 07430

TOWER ENGINEERING PROFESSIONALS
326 TRYON RD
RALEIGH, NC 27603
(919) 661-6351
TEP JOB #: 217497.631057

VERIZON SITE NUMBER:
535822

BU #: **857013**
KILLINGLY ROSS ROAD

280 ROSS RD
KILLINGLY, CT 06239

EXISTING 119'-0" MONOPOLE

ISSUED FOR:

REV	DATE	DRWN	DESCRIPTION	DES./QA
0	12/16/21	KCA	CONSTRUCTION	RST

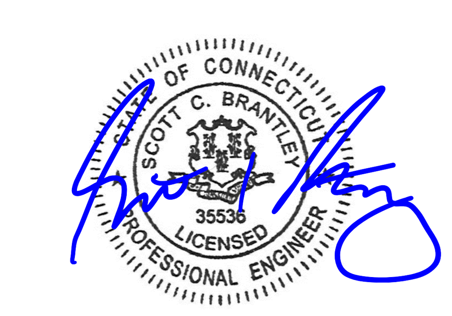

12/16/21

IT IS A VIOLATION OF LAW FOR ANY PERSON, UNLESS THEY ARE ACTING UNDER THE DIRECTION OF A LICENSED PROFESSIONAL ENGINEER, TO ALTER THIS DOCUMENT.

SHEET NUMBER: **T-2**
REVISION: **0**

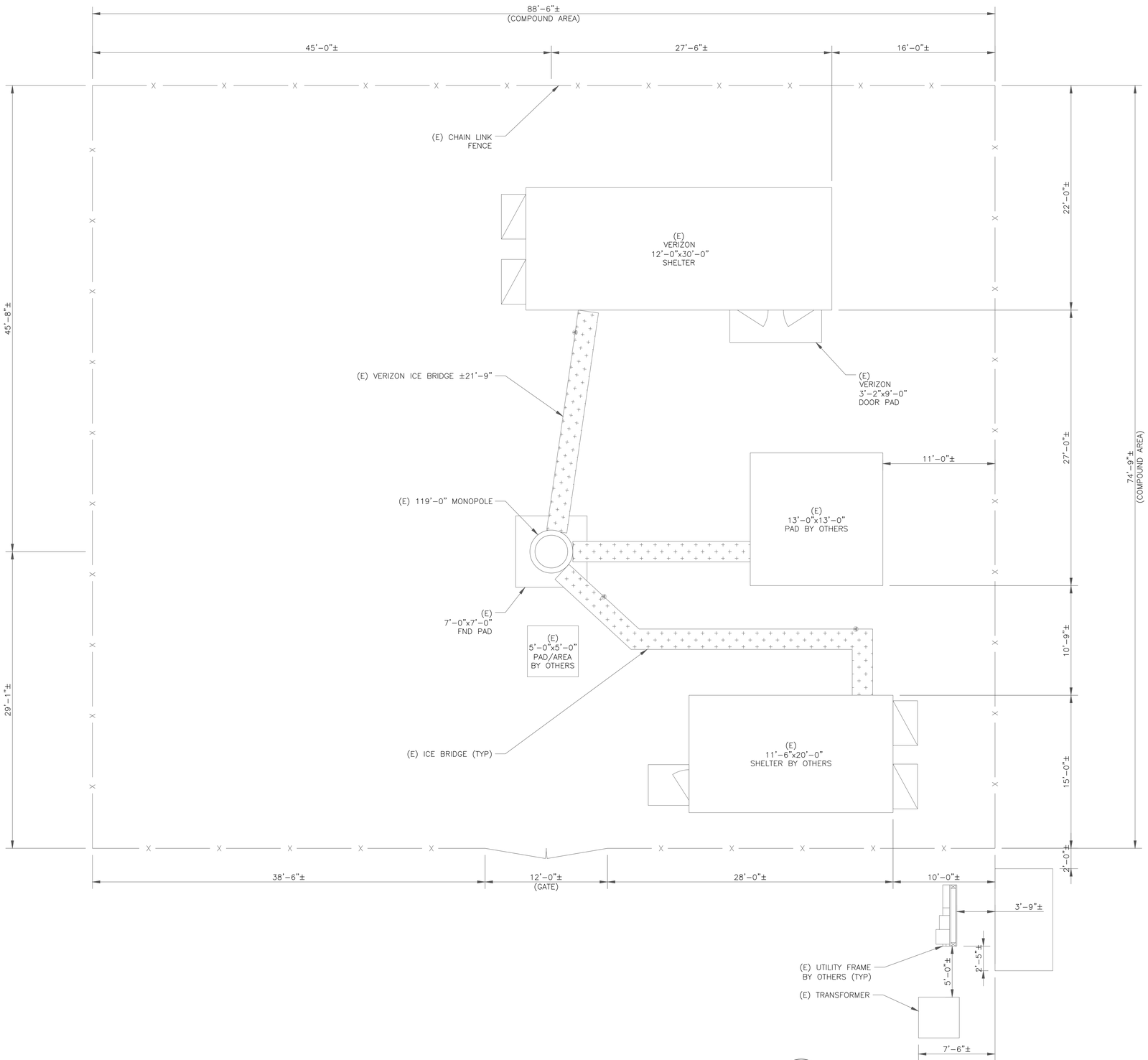

1 SITE PLAN

SCALE: 2' 1' 0 2' 3/8"=1'-0" (FULL SIZE) 3/16"=1'-0" (11x17)

verizon

180 WASHINGTON VALLEY ROAD
BEDMINSTER, NJ 07921

CROWN CASTLE

1200 MACARTHUR BLVD, SUITE 200
MAHWAH, NJ 07430

TOWER ENGINEERING PROFESSIONALS

326 TRYON RD
RALEIGH, NC 27603
(919) 661-6351

TEP JOB #: 217497.631057

VERIZON SITE NUMBER:
535822

BU #: **857013**
KILLINGLY ROSS ROAD

280 ROSS RD
KILLINGLY, CT 06239

EXISTING 119'-0" MONOPOLE

ISSUED FOR:

REV	DATE	DRWN	DESCRIPTION	DES./QA
0	12/16/21	KCA	CONSTRUCTION	RST

STATE OF CONNECTICUT
SCOTT C. BRANTLEY
38534
LICENSED
PROFESSIONAL ENGINEER

12/16/21

IT IS A VIOLATION OF LAW FOR ANY PERSON, UNLESS THEY ARE ACTING UNDER THE DIRECTION OF A LICENSED PROFESSIONAL ENGINEER, TO ALTER THIS DOCUMENT.

SHEET NUMBER: C-1

REVISION: 0

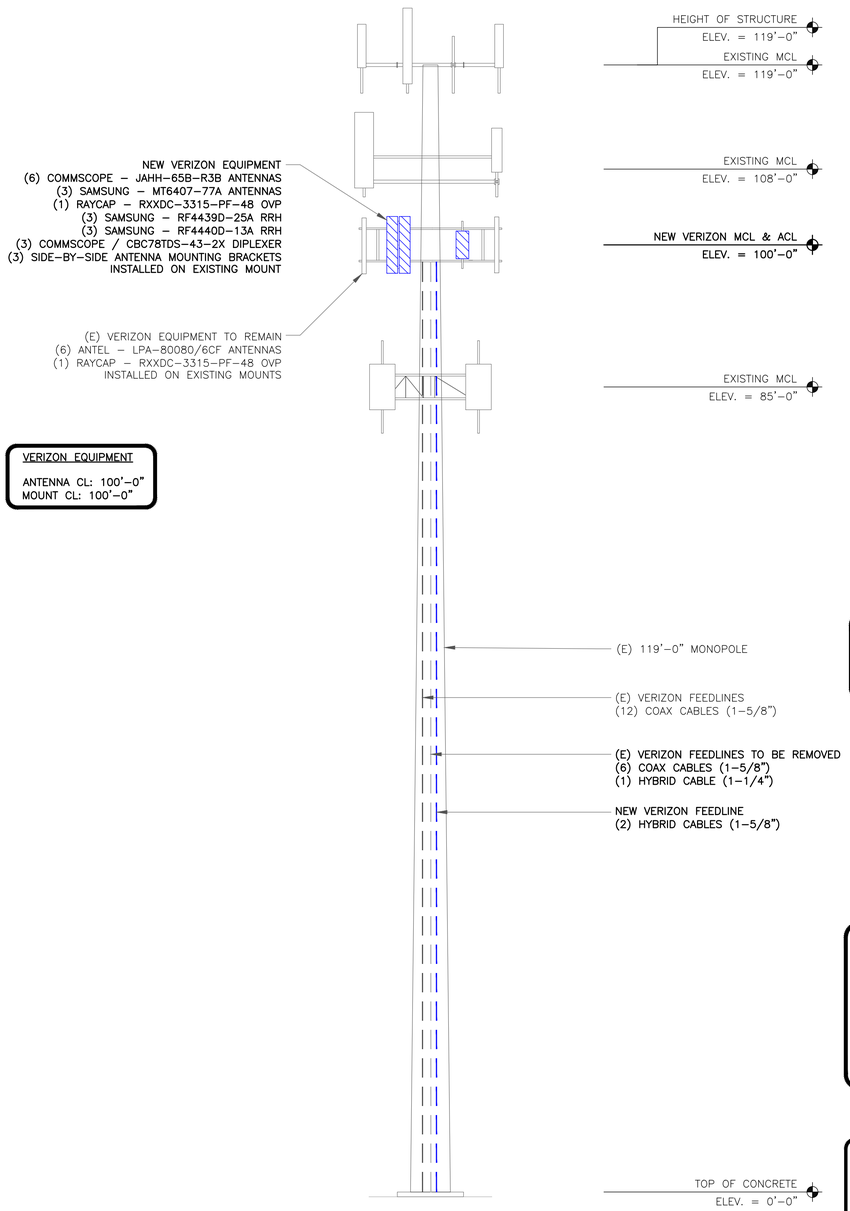

1 TOWER ELEVATION
SCALE: NOT TO SCALE

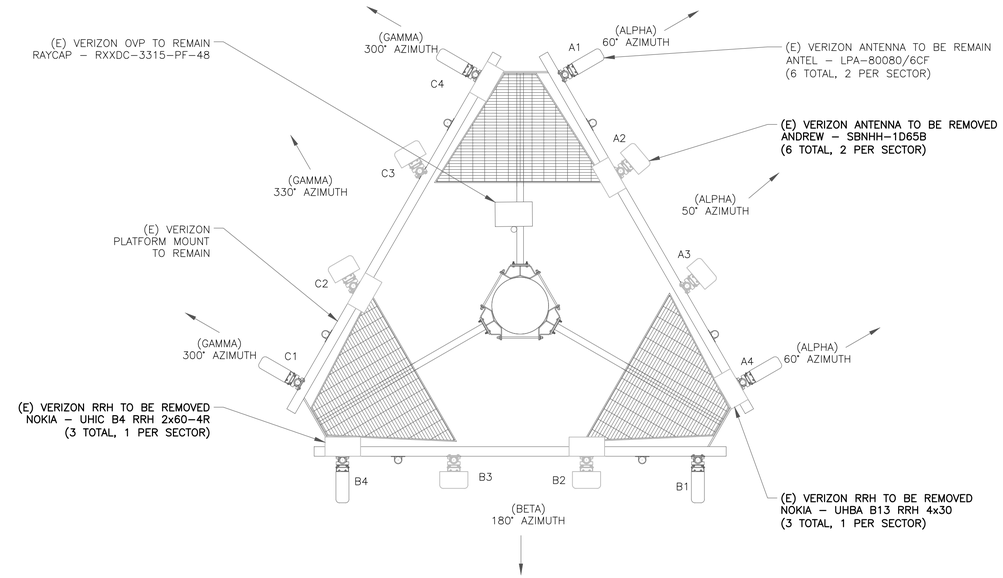

2 EXISTING ANTENNA PLAN
SCALE: NOT TO SCALE

INSTALLER NOTE:

EXISTING AND PROPOSED ANTENNA/ EQUIPMENT POSITIONING SHOWN PER RFDS. FIELD CONDITIONS MAY VARY.

TOWER ANALYSIS NOTES:

1. THE DESIGN DEPICTED IN THESE DRAWINGS IS VALID WHEN ACCOMPANIED BY A CORRESPONDING PASSING TOWER ANALYSIS.
2. CONSTRUCTION MANAGER / GENERAL CONTRACTOR SHALL REVIEW THE TOWER ANALYSIS FOR ANY CONDITIONS PRIOR TO INSTALLATION.
3. ANY REQUIRED TOWER MODIFICATION DESIGN OR TOWER REPLACEMENT SHALL BE APPROVED BY EOR.

MOUNT ANALYSIS NOTES:

1. THE DESIGN DEPICTED IN THESE DRAWINGS IS VALID WHEN ACCOMPANIED BY A CORRESPONDING PASSING MOUNT ANALYSIS.
2. CONSTRUCTION MANAGER / GENERAL CONTRACTOR SHALL REVIEW THE MOUNT ANALYSIS FOR ANY CONDITIONS PRIOR TO INSTALLATION.
3. ANY REQUIRED MOUNT MODIFICATION DESIGN OR MOUNT REPLACEMENT SHALL BE APPROVED BY EOR.

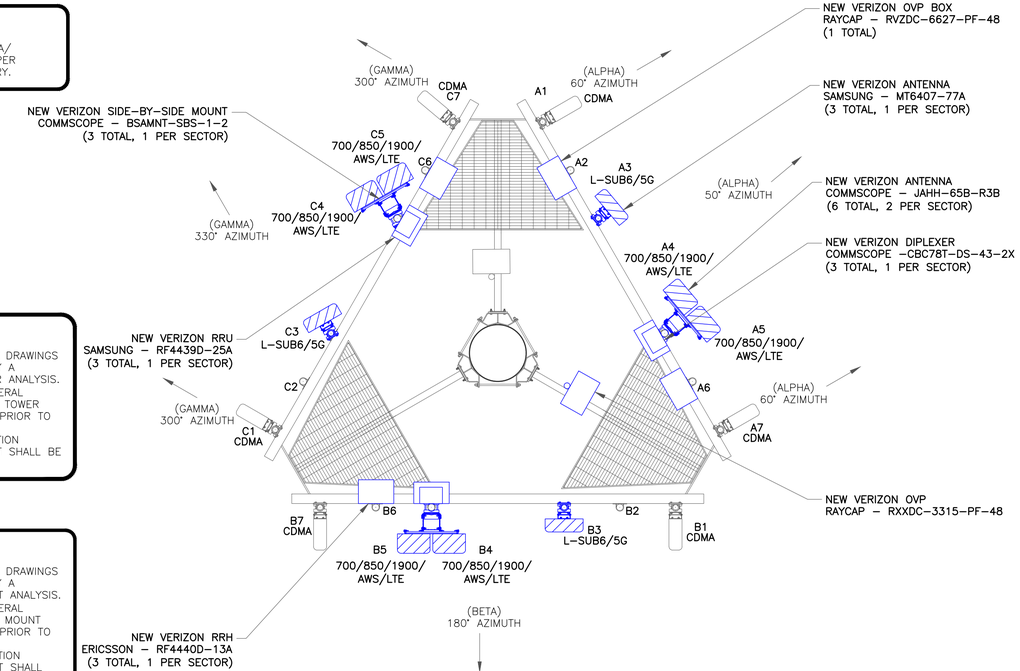

3 NEW ANTENNA PLAN
SCALE: NOT TO SCALE

verizon
180 WASHINGTON VALLEY ROAD
BEDMINSTER, NJ 07921

CROWN CASTLE
1200 MACARTHUR BLVD, SUITE 200
MAHWAH, NJ 07430

TOWER ENGINEERING PROFESSIONALS
326 TRYON RD
RALEIGH, NC 27603
(919) 661-6351
TEP JOB #: 217497.631057

VERIZON SITE NUMBER:
535822

BU #: **857013**
KILLINGLY ROSS ROAD

280 ROSS RD
KILLINGLY, CT 06239

EXISTING 119'-0" MONOPOLE

ISSUED FOR:

REV	DATE	DRWN	DESCRIPTION	DES./QA
0	12/16/21	KCA	CONSTRUCTION	RST
1	01/05/22	KCA	CONSTRUCTION	RST

STATE OF CONNECTICUT
SCOTT C. BRANTLEY
35536
LICENSED
PROFESSIONAL ENGINEER

01/05/22

IT IS A VIOLATION OF LAW FOR ANY PERSON, UNLESS THEY ARE ACTING UNDER THE DIRECTION OF A LICENSED PROFESSIONAL ENGINEER, TO ALTER THIS DOCUMENT.

SHEET NUMBER: C-2
REVISION: 0

ANTENNA/RRH SCHEDULE

SECTOR	STATUS	ANTENNA MANUFACTURER	ANTENNA MODEL	ANTENNA CENTERLINE	AZIMUTH	MECHANICAL DOWNTILTS	ELECTRICAL DOWNTILTS	TOWER EQUIPMENT MANUFACTURER	TOWER EQUIPMENT QTY/MODEL
A1	EXISTING	ANTEL	LPA-80080/6CF	100'-0"	60°	*	*	–	–
A2	–	–	–	–	–	–	–	RAYCAP	(1) RXXDC-3315-PF-48 OVP
A3	**NEW**	**SAMSUNG**	**MT6407-77A**	100'-0"	50°	*	*	–	–
A4	**NEW**	**COMMSCOPE**	**JAHH-65B-R3B**	100'-0"	50°	*	*	**SAMSUNG**	**(1) RF4439D-25A RRH**
A5	**NEW**	**COMMSCOPE**	**JAHH-65B-R3B**	100'-0"	50°	*	*	**COMMSCOPE**	**(1) CBC78T-DS-43-2X DIPLEXER**
A6	–	–	–	–	–	–	–	**SAMSUNG**	**(1) RF4440D-13A RRH**
A7	EXISTING	ANTEL	LPA-80080/6CF	100'-0"	60°	*	*	–	–
B1	EXISTING	ANTEL	LPA-80080/6CF	100'-0"	180°	*	*	–	–
B2	–	–	–	–	–	–	–	**RAYCAP**	**(1) RXXDC-3315-PF-48 OVP**
B3	**NEW**	**SAMSUNG**	**MT6407-77A**	100'-0"	180°	*	*	–	–
B4	**NEW**	**COMMSCOPE**	**JAHH-65B-R3B**	100'-0"	180°	*	*	**SAMSUNG**	**(1) RF4439D-25A RRH**
B5	**NEW**	**COMMSCOPE**	**JAHH-65B-R3B**	100'-0"	180°	*	*	**COMMSCOPE**	**(1) CBC78T-DS-43-2X DIPLEXER**
B6	–	–	–	–	–	–	–	**SAMSUNG**	**(1) RF4440D-13A RRH**
B7	EXISTING	ANTEL	LPA-80080/6CF	100'-0"	180°	*	*	–	–
C1	EXISTING	ANTEL	LPA-80080/6CF	100'-0"	300°	*	*	–	–
C2	–	–	–	100'-0"	–	–	–	–	–
C3	**NEW**	**SAMSUNG**	**MT6407-77A**	100'-0"	330°	*	*	–	–
C4	**NEW**	**COMMSCOPE**	**JAHH-65B-R3B**	100'-0"	330°	*	*	**SAMSUNG**	**(1) RF4439D-25A RRH**
C5	**NEW**	**COMMSCOPE**	**JAHH-65B-R3B**	100'-0"	330°	*	*	**COMMSCOPE**	**(1) CBC78T-DS-43-2X DIPLEXER**
C6	–	–	–	–	–	–	–	**SAMSUNG**	**(1) RF4440D-13A RRH**
C7	EXISTING	ANTEL	LPA-80080/6CF	100'-0"	300°	*	*	–	–

NOTE – NEW ANTENNA/EQUIPMENT SHOWN IN BOLD

* – CONTRACTOR TO REFERENCE MOST RECENT RFDS FOR MECHANICAL AND ELECTRICAL DOWNTILTS

1 VERIZON TOWER EQUIPMENT SCHEDULE
SCALE: NOT TO SCALE

CABLE SCHEDULE

STATUS	CABLE TYPE	MANUFACTURER (MODEL #)	SIZE	LENGTH	QTY
EXISTING	COAX	ANDREW (AVA7-50)	1-5/8"	150'-0"±	6
EXISTING	COAX	ANDREW (AVA7-50) (SPARE)	1-5/8"	150'-0"±	6
NEW	**HYBRID**	**RFS/CELWAVE (HB158-1-08U8-S8J18)**	**1-5/8"**	**150'-0"±**	**2**
				TOTAL CABLE QTY:	**14**

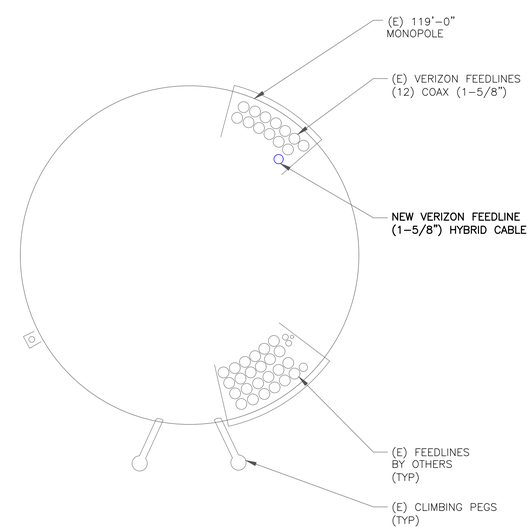

2 BASE LEVEL DETAIL
SCALE: NOT TO SCALE

N

verizon
180 WASHINGTON VALLEY ROAD
BEDMINSTER, NJ 07921

CROWN CASTLE
1200 MACARTHUR BLVD, SUITE 200
MAHWAH, NJ 07430

TOWER ENGINEERING PROFESSIONALS
326 TRYON RD
RALEIGH, NC 27603
(919) 661-6351
TEP JOB #: 217497.631057

VERIZON SITE NUMBER:
535822

BU #: **857013**
KILLINGLY ROSS ROAD

280 ROSS RD
KILLINGLY, CT 06239

EXISTING 119'-0" MONOPOLE

ISSUED FOR:

REV	DATE	DRWN	DESCRIPTION	DES./QA
0	12/16/21	KCA	CONSTRUCTION	RST
1	01/05/22	KCA	CONSTRUCTION	RST

01/05/22

IT IS A VIOLATION OF LAW FOR ANY PERSON, UNLESS THEY ARE ACTING UNDER THE DIRECTION OF A LICENSED PROFESSIONAL ENGINEER, TO ALTER THIS DOCUMENT.

SHEET NUMBER: C-3

REVISION: 0

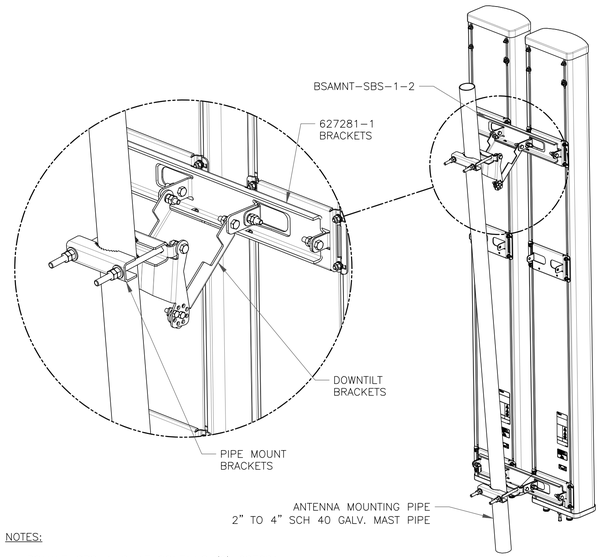

NOTES:

- BSAMNT-SBS-1-2 KIT CONTAINS (2) 627281 MOUNTING BRACKETS.
- TORQUE THE M10 BOLT ASSEMBLY TO 37 N.m. PER MANUFACTURE'S RECOMMENDATIONS.

1 COMMSCOPE – BSAMNT-SBS-1-2
SCALE: NOT TO SCALE

2 NOT USED
SCALE: NOT TO SCALE

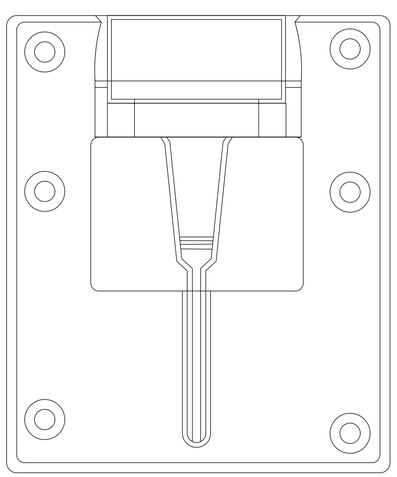

3 SAMSUNG – EP97-01585A BRACKET DETAIL
SCALE: NOT TO SCALE

INSTALLER NOTES:

ALL PIPES BRACKETS AND MISCELLANEOUS HARDWARE TO BE GALVANIZED UNLESS NOTED OTHERWISE.

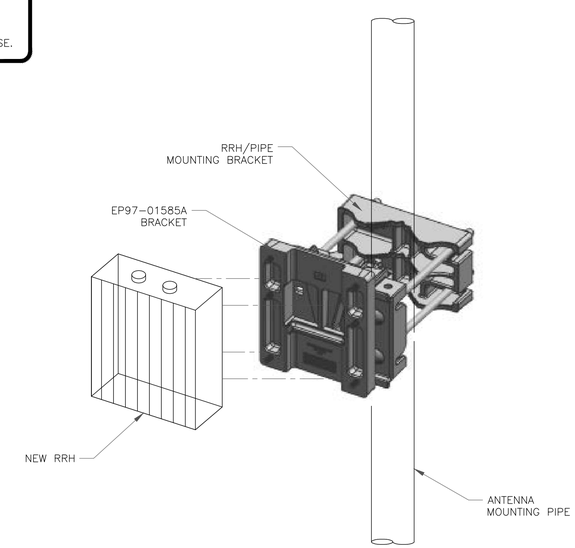

4 ANTENNA & RRH MOUNTING DETAIL
SCALE: NOT TO SCALE

verizon
180 WASHINGTON VALLEY ROAD
BEDMINSTER, NJ 07921

CROWN CASTLE
1200 MACARTHUR BLVD, SUITE 200
MAHWAH, NJ 07430

TOWER ENGINEERING PROFESSIONALS
326 TRYON RD
RALEIGH, NC 27603
(919) 661-6351
TEP JOB #: 217497.631057

VERIZON SITE NUMBER:
535822

BU #: **857013**
KILLINGLY ROSS ROAD

280 ROSS RD
KILLINGLY, CT 06239

EXISTING 119'-0" MONOPOLE

ISSUED FOR:

REV	DATE	DRWN	DESCRIPTION	DES./QA
0	12/16/21	KCA	CONSTRUCTION	RST

12/16/21

IT IS A VIOLATION OF LAW FOR ANY PERSON, UNLESS THEY ARE ACTING UNDER THE DIRECTION OF A LICENSED PROFESSIONAL ENGINEER, TO ALTER THIS DOCUMENT.

SHEET NUMBER: C-4

REVISION: 0

COMMSCOPE – JAHH-65B-R3B
WEIGHT: 63.38 LBS
SIZE (HxWxD): 72.00x13.08x8.20 IN.

1 COMMSCOPE – JAHH-65B-R3B
SCALE: NOT TO SCALE

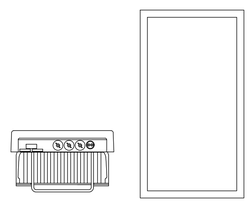

SAMSUNG TELECOMMUNICATIONS – MT6407-77A ANTENNA
WEIGHT: 81.57 LBS
SIZE (HxWxD): 35.06x16.06x5.51 IN.

2 SAMSUNG – MT6407-77A ANTENNA
SCALE: NOT TO SCALE

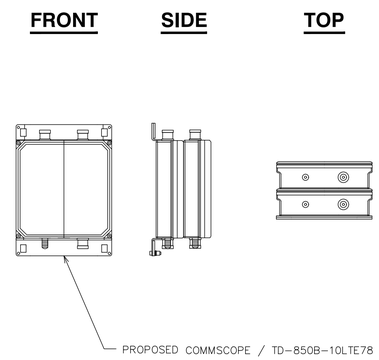

COMMSCOPE / TD-850B-10LTE78
SIZE (HxWxD): 15.43x15.24x6.38 IN.

3 COMMSCOPE – TD-850B-10LTE78
SCALE: NOT TO SCALE

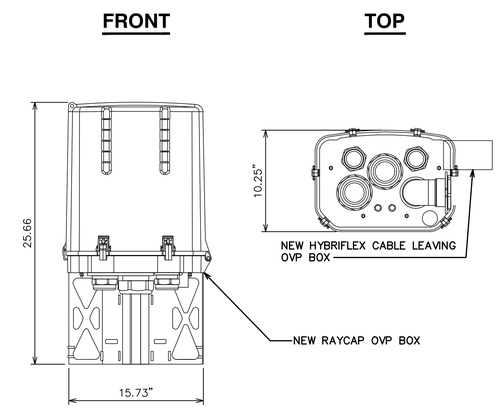

RAYCAP – RRFDC-3315-PF-48
WEIGHT: 32.00 LBS
SIZE (HxWxD): 25.66x15.73x10.25 IN.

4 RAYCAP RRFDC-3315-PF-48
SCALE: NOT TO SCALE

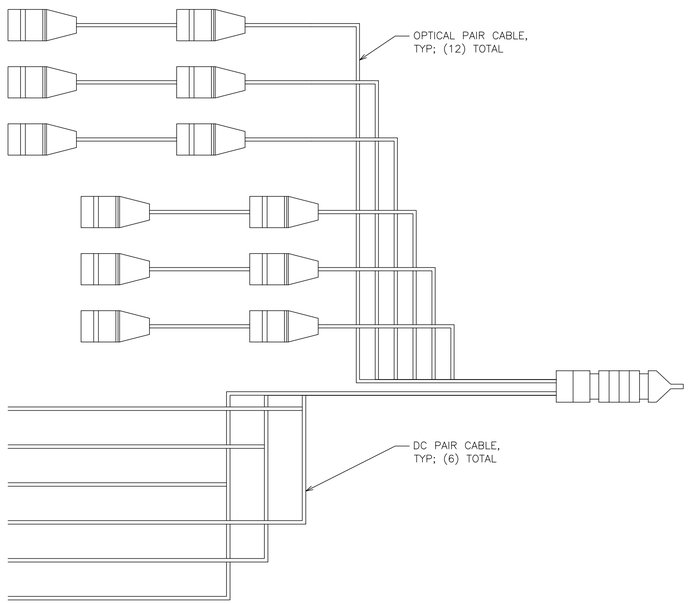

RFS/CELWAVE – (HB158-1-08U8-S8J18)
WEIGHT: 1.7 LBS/FT
DIAMETER: 1.99" (±.1")
COAX EQUIVALENT: 1⅝"

5 HCS DETAIL
SCALE: NOT TO SCALE

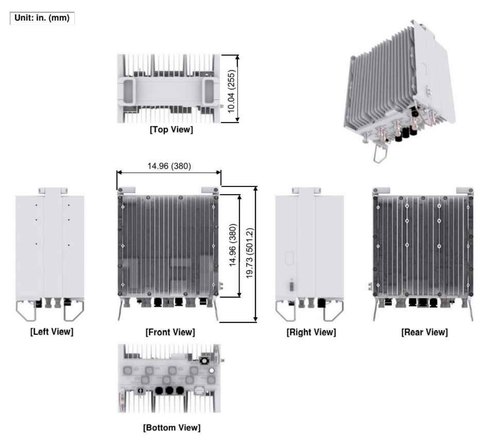

SAMSUNG – RF4439D-25A RRH
WEIGHT (WITHOUT MOUNTING HARDWARE): 74.70 LBS
SIZE (HxWxD): 14.96x14.96x10.04 IN

6 SAMSUNG – RF4439D-25A
SCALE: NOT TO SCALE

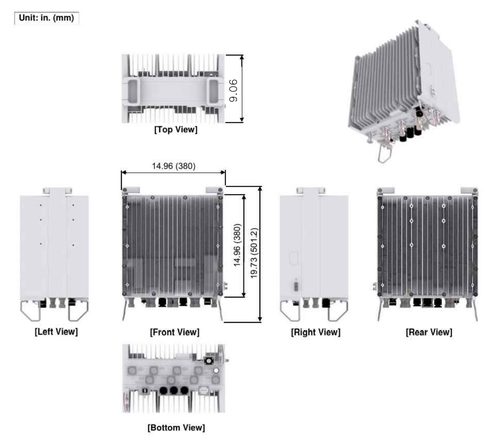

SAMSUNG – RF4440D-13A RRH
WEIGHT (WITHOUT MOUNTING HARDWARE): 72.50 LBS
SIZE (HxWxD): 14.96x14.96x9.06 IN

7 SAMSUNG – RF4440D-13A
SCALE: NOT TO SCALE

verizon
180 WASHINGTON VALLEY ROAD
BEDMINSTER, NJ 07921

CROWN CASTLE
1200 MACARTHUR BLVD, SUITE 200
MAHWAH, NJ 07430

TOWER ENGINEERING PROFESSIONALS
326 TRYON RD
RALEIGH, NC 27603
(919) 661-6351
TEP JOB #: 217497.631057

VERIZON SITE NUMBER:
535822

BU #: **857013**
KILLINGLY ROSS ROAD

280 ROSS RD
KILLINGLY, CT 06239

EXISTING 119'-0" MONOPOLE

ISSUED FOR:

REV	DATE	DRWN	DESCRIPTION	DES./QA
0	12/16/21	KCA	CONSTRUCTION	RST
1	01/05/22	KCA	CONSTRUCTION	RST

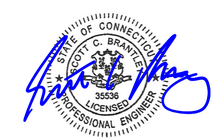

01/05/22

IT IS A VIOLATION OF LAW FOR ANY PERSON, UNLESS THEY ARE ACTING UNDER THE DIRECTION OF A LICENSED PROFESSIONAL ENGINEER, TO ALTER THIS DOCUMENT.

SHEET NUMBER: C-5

REVISION: 0

COLOR CODE MATRIX

Azimuth (1) Alpha					
Cell (850 CDMA)	Red				
PCS2 (1900 LTE)	Pink	Red	Pink		
700 LTE	Lt. Green	Red	Lt. Green		
850 LTE	Purple	Red	Purple		
2100 LTE	Orange	Red	Orange		
High Band Dual Band (Shared Lines)	Orange	Pink	Red	Pink	Orange
Low Band Dual Band (Shared Lines)	Purple	Lt. Green	Red	Lt. Green	Purple
5G	Brown	Red	Brown		
LAA	Gray	Red	Gray		
CBRS	White	Red	White		

Azimuth (2) Beta					
Cell (850 CDMA)	Blue				
PCS2 (1900 LTE)	Pink	Blue	Pink		
700 LTE	Lt. Green	Blue	Lt. Green		
850 LTE	Purple	Blue	Purple		
2100 LTE	Orange	Blue	Orange		
High Band Dual Band (Shared Lines)	Orange	Pink	Blue	Pink	Orange
Low Band Dual Band (Shared Lines)	Purple	Lt. Green	Blue	Lt. Green	Purple
5G	Brown	Blue	Brown		
LAA	Gray	Blue	Gray		
CBRS	White	Blue	White		

Azimuth (3) Gamma					
Cell (850 CDMA)	Yellow				
PCS2 (1900 LTE)	Pink	Yellow	Pink		
700 LTE	Lt. Green	Yellow	Lt. Green		
850 LTE	Purple	Yellow	Purple		
2100 LTE	Orange	Yellow	Orange		
High Band Dual Band (Shared Lines)	Orange	Pink	Yellow	Pink	Orange
Low Band Dual Band (Shared Lines)	Purple	Lt. Green	Yellow	Lt. Green	Purple
5G	Brown	Yellow	Brown		
LAA	Gray	Yellow	Gray		
CBRS	White	Yellow	White		

COLOR CODE MATRIX

Azimuth (4) Delta					
Cell (850 CDMA)	Orange				
PCS2 (1900 LTE)	Pink	Orange	Pink		
700 LTE	Lt. Green	Orange	Lt. Green		
850 LTE	Purple	Orange	Purple		
2100 LTE	Orange	Orange	Orange		
High Band Dual Band (Shared Lines)	Orange	Pink	Orange	Pink	Orange
Low Band Dual Band (Shared Lines)	Purple	Lt. Green	Orange	Lt. Green	Purple
5G	Brown	Orange	Brown		
LAA	Gray	Orange	Gray		
CBRS	White	Orange	White		

Azimuth (5) Epsilon					
Cell (850 CDMA)	White				
PCS2 (1900 LTE)	Pink	White	Pink		
700 LTE	Lt. Green	White	Lt. Green		
850 LTE	Purple	White	Purple		
2100 LTE	Orange	White	Orange		
High Band Dual Band (Shared Lines)	Orange	Pink	White	Pink	Orange
Low Band Dual Band (Shared Lines)	Purple	Lt. Green	White	Lt. Green	Purple
5G	Brown	White	Brown		
LAA	Gray	White	Gray		
CBRS	White	White	White		

Azimuth (6) Zeta					
Cell (850 CDMA)	Gray				
PCS2 (1900 LTE)	Pink	Gray	Pink		
700 LTE	Lt. Green	Gray	Lt. Green		
850 LTE	Purple	Gray	Purple		
2100 LTE	Orange	Gray	Orange		
High Band Dual Band (Shared Lines)	Orange	Pink	Gray	Pink	Orange
Low Band Dual Band (Shared Lines)	Purple	Lt. Green	Gray	Lt. Green	Purple
5G	Brown	Gray	Brown		
LAA	Gray	Gray	Gray		
CBRS	White	Gray	White		

1 COLOR CODE MATRIX
SCALE: NOT TO SCALE

verizon
180 WASHINGTON VALLEY ROAD
BEDMINSTER, NJ 07921

CROWN CASTLE
1200 MACARTHUR BLVD, SUITE 200
MAHWAH, NJ 07430

TOWER ENGINEERING PROFESSIONALS
326 TRYON RD
RALEIGH, NC 27603
(919) 661-6351
TEP JOB #: 217497.631057

VERIZON SITE NUMBER:
535822

BU #: **857013**
KILLINGLY ROSS ROAD

280 ROSS RD
KILLINGLY, CT 06239

EXISTING 119'-0" MONOPOLE

ISSUED FOR:

REV	DATE	DRWN	DESCRIPTION	DES./QA
0	12/16/21	KCA	CONSTRUCTION	RST

12/16/21

IT IS A VIOLATION OF LAW FOR ANY PERSON, UNLESS THEY ARE ACTING UNDER THE DIRECTION OF A LICENSED PROFESSIONAL ENGINEER, TO ALTER THIS DOCUMENT.

SHEET NUMBER: C-6

REVISION: 0

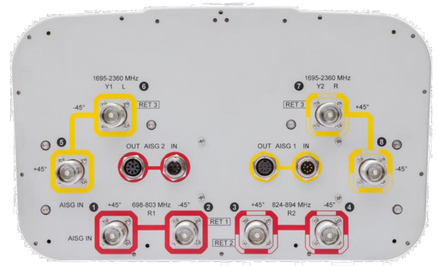

BSAMNT-SBS-2-2

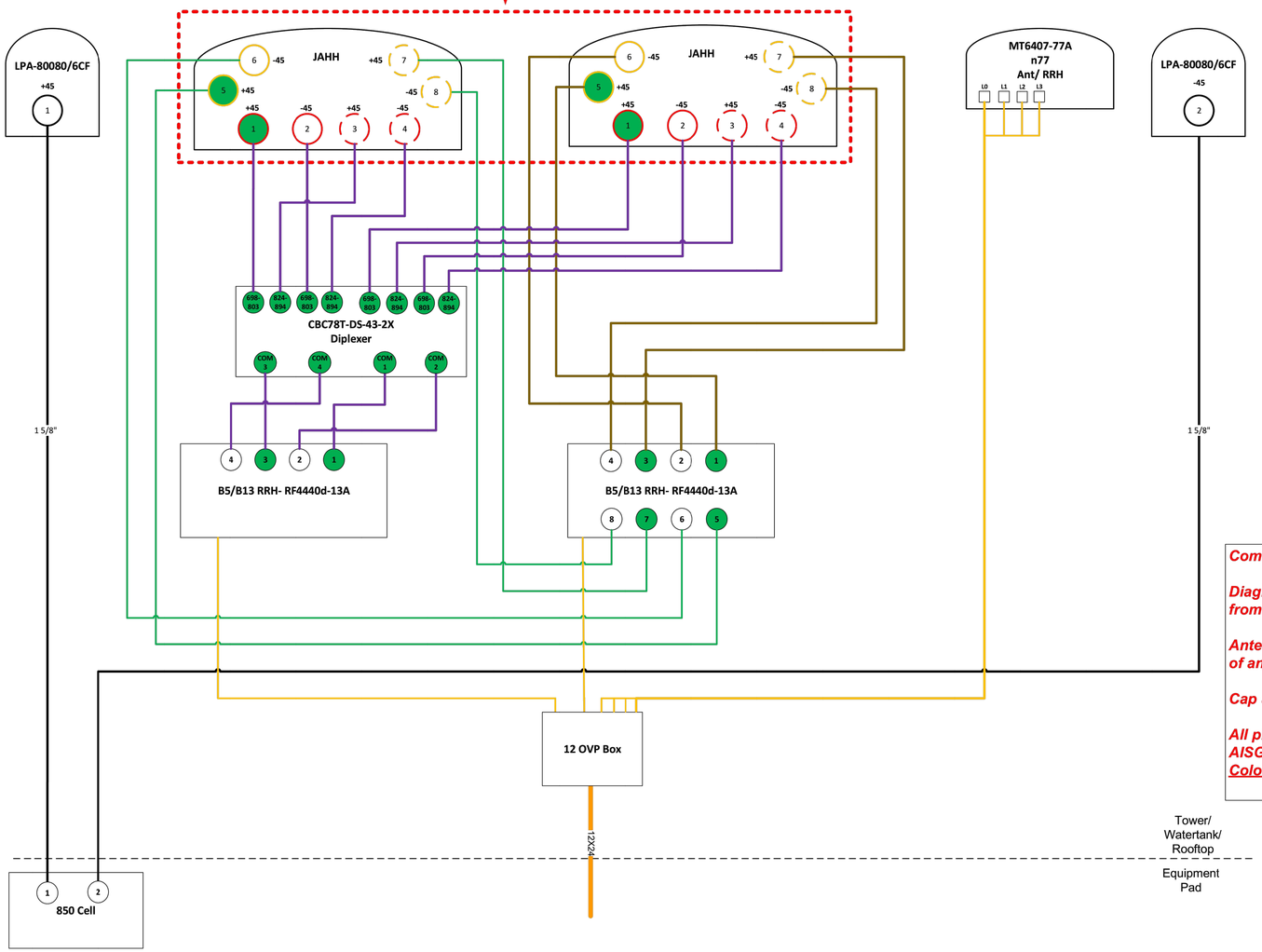

- Port 1 & 2 are for low band (698-896 MHz).
- Port 3,4,5, & 6 are for high band (1695-2360 MHz).
- Smart Bias Tee (SBT) is through port 1 & 3 for low band and port 1 for high band.
- AISG cable is only needed when drawn in the diagrams below, if it is not drawn then SBT is enough to control all RET motors.
- Not all SBT ports are needed to control RET, only green port connection to green port will control RET.

RET DC signal pass for RET
(Port that will control RET)

DC signal capable Port

AISG Cable

RET DC signal pass for RET
(Port that will control RET)

Hybriflex cables

Comments:

Diagram shows antenna port configuration as viewed from below antennas.

Antenna positions are indicated as viewed from IN FRONT of antennas.

Cap and weatherproof unused antenna ports.

All plumbing diagram colors are irrelevant except for AISG & Hybriflex cable. (For the coax colors follow Coax Colors guide above)

1 PLUMBING DIAGRAM
SCALE: NOT TO SCALE

verizon
180 WASHINGTON VALLEY ROAD
BEDMINSTER, NJ 07921

CROWN CASTLE
1200 MACARTHUR BLVD, SUITE 200
MAHWAH, NJ 07430

TOWER ENGINEERING PROFESSIONALS
326 TRYON RD
RALEIGH, NC 27603
(919) 661-6351
TEP JOB #: 217497.631057

VERIZON SITE NUMBER:
535822

BU #: **857013**
KILLINGLY ROSS ROAD

280 ROSS RD
KILLINGLY, CT 06239

EXISTING 119'-0" MONOPOLE

ISSUED FOR:

REV	DATE	DRWN	DESCRIPTION	DES./QA
0	12/16/21	KCA	CONSTRUCTION	RST

12/16/21

IT IS A VIOLATION OF LAW FOR ANY PERSON, UNLESS THEY ARE ACTING UNDER THE DIRECTION OF A LICENSED PROFESSIONAL ENGINEER, TO ALTER THIS DOCUMENT.

SHEET NUMBER: C-7

REVISION: 0

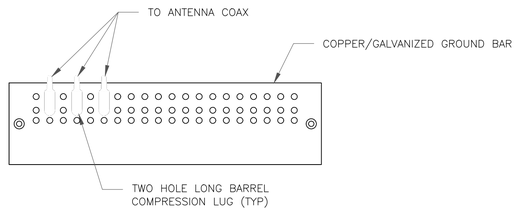

NOTES:

1. DOUBLING UP "OR STACKING" OF CONNECTIONS IS NOT PERMITTED.
2. EXTERIOR ANTIOXIDANT JOINT COMPOUND TO BE USED ON ALL EXTERIOR CONNECTIONS.
3. GROUND BAR SHALL NOT BE ISOLATED FROM TOWER. MOUNT DIRECTLY TO ANTENNA MOUNT STEEL.

1 ANTENNA SECTOR GROUND BAR DETAIL
SCALE: NOT TO SCALE

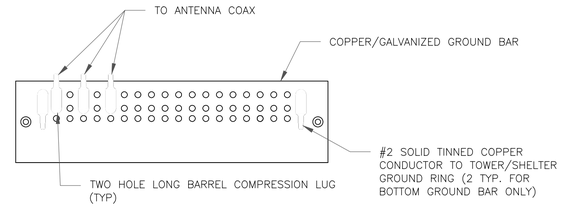

NOTES:

1. EXTERIOR ANTIOXIDANT JOINT COMPOUND TO BE USED ON ALL EXTERIOR CONNECTIONS.
2. GROUND BAR SHALL NOT BE ISOLATED FROM TOWER. MOUNT DIRECTLY TO TOWER STEEL (TOWER ONLY).
3. GROUND BAR SHALL BE ISOLATED FROM BUILDING OR SHELTER.

2 TOWER/SHELTER GROUND BAR DETAIL
SCALE: NOT TO SCALE

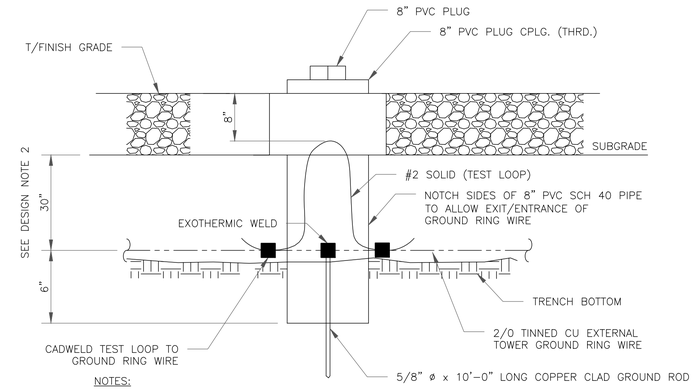

NOTES:

1. GROUND ROD SHALL BE DRIVEN VERTICALLY, NOT TO EXCEED 45 DEGREES FROM THE VERTICAL
2. GROUND WIRE SHALL BE MIN. 30" BELOW GRADE OR 6" BELOW FROST LINE. (WHICH EVER IS GREATER) AS PER N.E.C. ARTICLE 250-50(D)

3 INSPECTION WELL DETAIL
SCALE: NOT TO SCALE

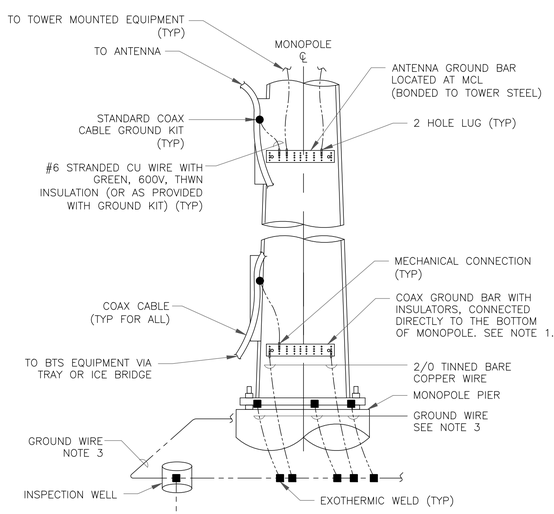

NOTES:

1. NUMBER OF GROUNDING BARS MAY VARY DEPENDING ON THE TYPE OF TOWER, ANTENNA LOCATIONS AND CONNECTION ORIENTATION. COAXIAL CABLES EXCEEDING 200 FEET ON THE TOWER SHALL HAVE GROUND KITS AT THE MIDPOINT. PROVIDE AS REQUIRED.
2. ONLY MECHANICAL CONNECTIONS ARE ALLOWED TO BE MADE TO CROWN CASTLE USA INC. TOWERS. ALL MECHANICAL CONNECTIONS SHALL BE TREATED WITH AN ANTI-OXIDANT COATING.
3. ALL TOWER GROUNDING SYSTEMS SHALL COMPLY WITH THE REQUIREMENTS OF THE RECOGNIZED EDITION OF ANSI/TIA 222 AND NFPA 780.

4 TYPICAL ANTENNA CABLE GROUNDING
SCALE: NOT TO SCALE

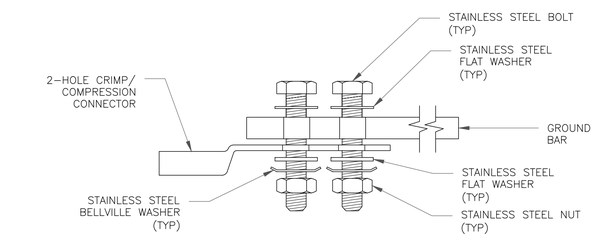

SINGLE CONNECTOR AT GROUND BARS

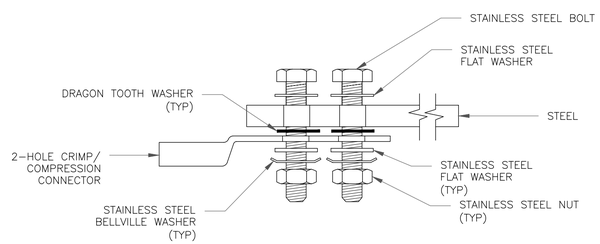

SINGLE CONNECTOR AT STEEL OBJECTS

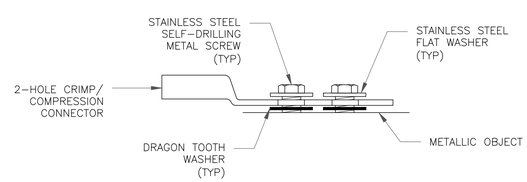

SINGLE CONNECTOR AT METALLIC/STEEL OBJECTS

5 HARDWARE DETAIL FOR EXTERIOR CONNECTIONS
SCALE: NOT TO SCALE

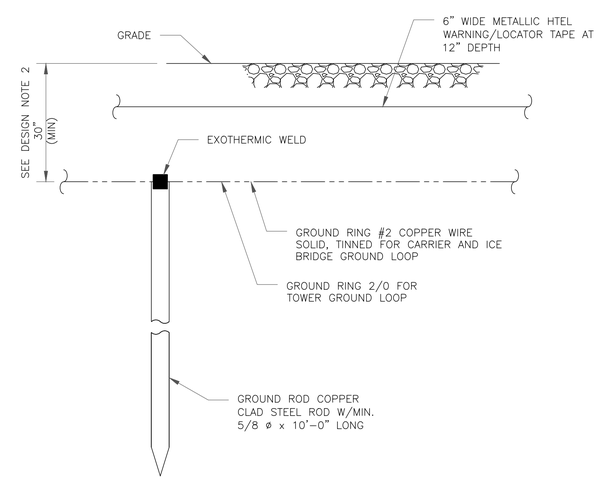

NOTES:

1. GROUND ROD SHALL BE DRIVEN VERTICALLY, NOT TO EXCEED 45 DEGREES FROM THE VERTICAL
2. GROUND WIRE SHALL BE MIN. 30" BELOW GRADE OR 6" BELOW FROST LINE. (WHICH EVER IS GREATER) AS PER N.E.C. ARTICLE 250-50(D)

6 GROUND ROD DETAIL
SCALE: NOT TO SCALE

verizon
180 WASHINGTON VALLEY ROAD
BEDMINSTER, NJ 07921

CROWN CASTLE
1200 MACARTHUR BLVD, SUITE 200
MAHWAH, NJ 07430

TOWER ENGINEERING PROFESSIONALS
326 TRYON RD
RALEIGH, NC 27603
(919) 661-6351
TEP JOB #: 217497.631057

VERIZON SITE NUMBER:
535822

BU #: **857013**
KILLINGLY ROSS ROAD

280 ROSS RD
KILLINGLY, CT 06239

EXISTING 119'-0" MONOPOLE

ISSUED FOR:

REV	DATE	DRWN	DESCRIPTION	DES./QA
0	12/16/21	KCA	CONSTRUCTION	RST

12/16/21

IT IS A VIOLATION OF LAW FOR ANY PERSON, UNLESS THEY ARE ACTING UNDER THE DIRECTION OF A LICENSED PROFESSIONAL ENGINEER, TO ALTER THIS DOCUMENT.

SHEET NUMBER: G-1
REVISION: 0

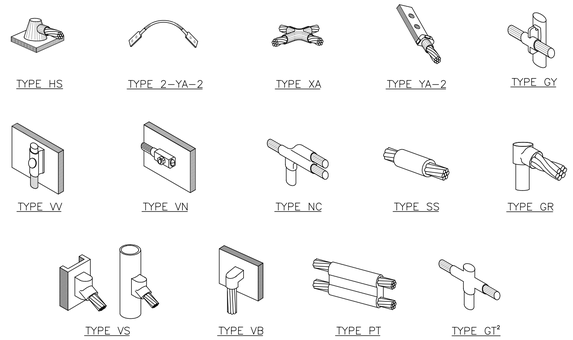

NOTE:

1. ERICO EXOTHERMIC "MOLD TYPES" SHOWN HERE ARE EXAMPLES. CONSULT WITH CONSTRUCTION MANAGER FOR SPECIFIC MOLDS TO BE USED FOR THIS PROJECT.
2. MOLD TYPE ONLY TO BE USED BELOW GRADE WHEN CONNECTING GROUND RING TO GROUND ROD.

1 CADWELD GROUNDING CONNECTIONS
SCALE: NOT TO SCALE

WIRE SIZE	BURNDY LUG	BOLT SIZE
#6 AWG GREEN INSULATED	YA6C-2TC38	3/8" - 16 NC S 2 BOLT
#2 AWG SOLID TINNED	YA3C-2TC38	3/8" - 16 NC S 2 BOLT
#2 AWG STRANDED	YA2C-2TC38	3/8" - 16 NC S 2 BOLT
#2/0 AWG STRANDED	YA26-2TC38	3/8" - 16 NC S 2 BOLT
#4/0 AWG STRANDED	YA28-2N	1/2" - 16 NC S 2 BOLT

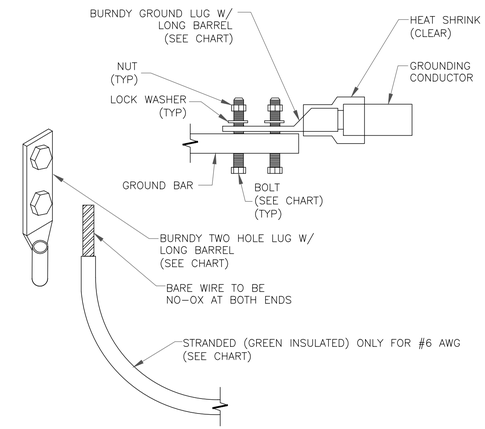

NOTES:

1. ALL GROUNDING LUGS ARE TO BE INSTALLED PER MANUFACTURER'S SPECIFICATIONS. ALL HARDWARE BOLTS, NUTS, LOCK WASHERS SHALL BE STAINLESS STEEL. ALL HARDWARE ARE TO BE AS FOLLOWS: BOLT, FLAT WASHER,GROUND BAR, GROUND LUG, FLAT WASHER AND NUT.

2 MECHANICAL LUG CONNECTION
SCALE: NOT TO SCALE

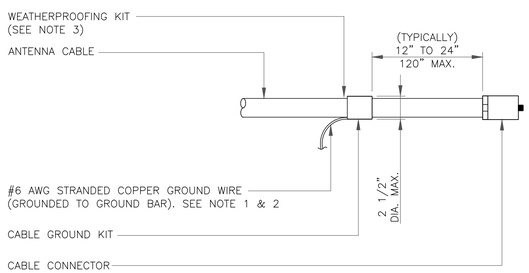

NOTES:

1. DO NOT INSTALL CABLE GROUND KIT AT A BEND AND ALWAYS DIRECT GROUND WIRE DOWN TO GROUND BAR.
2. GROUNDING KIT SHALL BE TYPE AND PART NUMBER AS SUPPLIED OR RECOMMENDED BY CABLE MANUFACTURER.
3. WEATHER PROOFING SHALL BE TWO-PART TAPE KIT, COLD SHRINK SHALL NOT BE USED.

3 CABLE GROUND KIT CONNECTION
SCALE: NOT TO SCALE

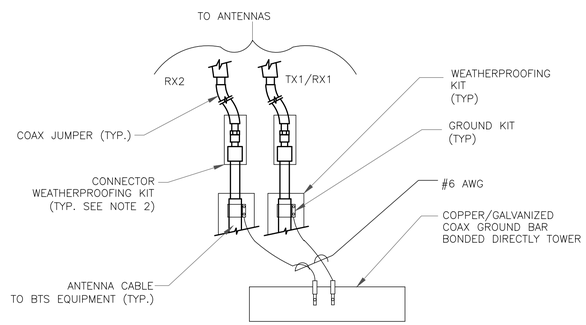

NOTES:

1. DO NOT INSTALL CABLE GROUND KIT AT A BEND AND ALWAYS DIRECT GROUND WIRE DOWN TO ANTENNA GROUND BAR.
2. WEATHER PROOFING SHALL BE TWO-PART TAPE KIT. COLD SHRINK SHALL NOT BE USED.

4 GROUND CABLE CONNECTION
SCALE: NOT TO SCALE

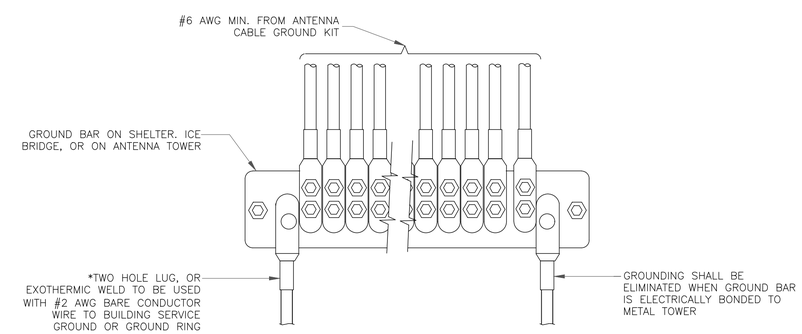

5 GROUNDWIRE INSTALLATION
SCALE: NOT TO SCALE

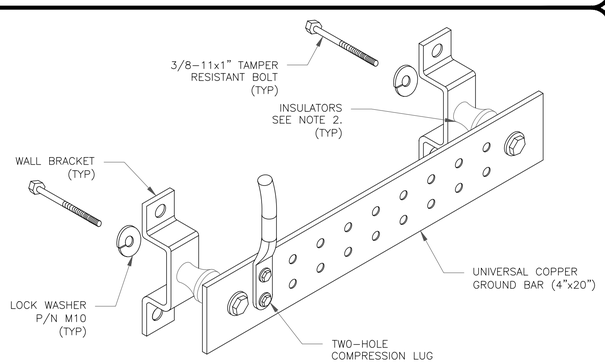

NOTES:

1. DOWN LEAD (HOME RUN) CONDUCTORS ARE NOT TO BE INSTALLED ON CROWN CASTLE USA INC. TOWER, PER THE GROUNDING DOWN CONDUCTOR POLICY QAS-STD-10091. NO MODIFICATION OR DRILLING TO TOWER STEEL IS ALLOWED IN ANY FORM OR FASHION, CAD-WELDING ON THE TOWER AND/OR IN THE AIR ARE NOT PERMITTED.
2. OMIT INSULATOR WHEN MOUNTING TO TOWER STEEL OR PLATFORM STEEL USE INSULATORS WHEN ATTACHING TO BUILDING OR SHELTERS.

6 GROUND BAR DETAIL
SCALE: NOT TO SCALE

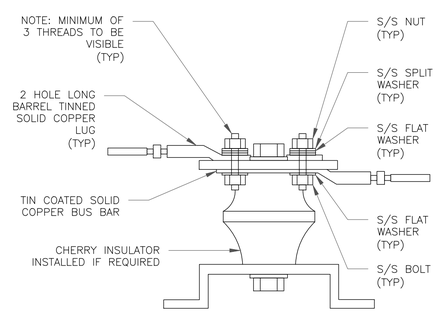

7 LUG DETAIL
SCALE: NOT TO SCALE

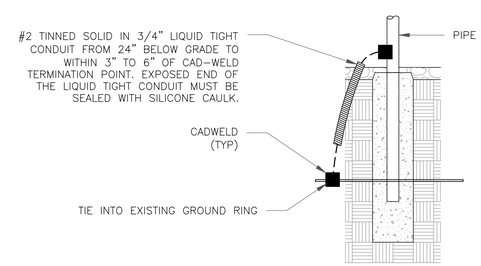

8 TRANSITIONING GROUND DETAIL
SCALE: NOT TO SCALE

verizon
180 WASHINGTON VALLEY ROAD
BEDMINSTER, NJ 07921

CROWN CASTLE
1200 MACARTHUR BLVD, SUITE 200
MAHWAH, NJ 07430

TOWER ENGINEERING PROFESSIONALS
326 TRYON RD
RALEIGH, NC 27603
(919) 661-6351
TEP JOB #: 217497.631057

VERIZON SITE NUMBER:
535822

BU #: **857013**
KILLINGLY ROSS ROAD

280 ROSS RD
KILLINGLY, CT 06239

EXISTING 119'-0" MONOPOLE

ISSUED FOR:

REV	DATE	DRWN	DESCRIPTION	DES./QA
0	12/16/21	KCA	CONSTRUCTION	RST

12/16/21

IT IS A VIOLATION OF LAW FOR ANY PERSON, UNLESS THEY ARE ACTING UNDER THE DIRECTION OF A LICENSED PROFESSIONAL ENGINEER, TO ALTER THIS DOCUMENT.

SHEET NUMBER: G-2
REVISION: 0

Exhibit D

Structural Analysis Report

Date: **February 18, 2022**

Morrison Hershfield
1455 Lincoln Parkway, Suite 500
Atlanta, GA 30346
(770) 379-8500

Subject:	**Structural Analysis Report**	
Carrier Designation:	***Verizon Wireless* Co-Locate**	
	Site Number:	535822
	Site Name:	Danielson South CT
Crown Castle Designation:	**BU Number:**	857013
	Site Name:	Killingly Ross Road
	JDE Job Number:	706841
	Work Order Number:	2080779
	Order Number:	605540 Rev. 0
Engineering Firm Designation:	**Morrison Hershfield Project Number:** CN6-958R4 / 2200039	
Site Data:	**280 Ross Road, Killingly, Windham County, CT 06239**	
	Latitude *41° 46' 17.59"*, Longitude *-71° 51' 20.39"*	
	119 Foot - Monopole Tower	

Morrison Hershfield is pleased to submit this **"Structural Analysis Report"** to determine the structural integrity of the above-mentioned tower.

The purpose of the analysis is to determine acceptability of the tower stress level. Based on our analysis we have determined the tower stress level for the structure and foundation, under the following load case, to be:

LC7: Proposed Equipment Configuration **Sufficient Capacity – 61.2%**

This analysis utilizes an ultimate 3-second gust wind speed of 123 mph as required by the 2018 Connecticut State Building Code. Applicable Standard references and design criteria are listed in Section 2 - Analysis Criteria.

Respectfully submitted by:

G. Lance Cooke, P.E. (CT License No. PEN.0028133)
Senior Engineer

STATE OF CONNECTICUT
G. LANCE COOKE
No. 28133
LICENSED
PROFESSIONAL ENGINEER

Digitally signed by G. Lance Cooke
Date: 2022.02.18 09:04:50-08'00'

TABLE OF CONTENTS

1) INTRODUCTION

2) ANALYSIS CRITERIA
Table 1 - Proposed Equipment Configuration
Table 2 - Other Considered Equipment

3) ANALYSIS PROCEDURE
Table 3 - Documents Provided
3.1) Analysis Method
3.2) Assumptions

4) ANALYSIS RESULTS
Table 4 - Section Capacity (Summary)
Table 5 - Tower Component Stresses vs. Capacity – LC7
4.1) Recommendations

5) APPENDIX A
tnxTower Output

6) APPENDIX B
Base Level Drawing

7) APPENDIX C
Additional Calculations

1) INTRODUCTION

This tower is a 119 ft monopole tower and the original drawings are not available. A tower mapping was performed by GPD Associates in January of 2009. The tower geometry and member sizes have been obtained from the above mentioned report and are considered to be accurate.

2) ANALYSIS CRITERIA

TIA-222 Revision:	TIA-222-H
Risk Category:	II
Wind Speed:	123 mph
Exposure Category:	B
Topographic Factor:	1
Ice Thickness:	1.0 in
Wind Speed with Ice:	50 mph
Service Wind Speed:	60 mph

Table 1 - Proposed Equipment Configuration

Mounting Level (ft)	Center Line Elevation (ft)	Number of Antennas	Antenna Manufacturer	Antenna Model	Number of Feed Lines	Feed Line Size (in)
100.0	100.0	6	antel	LPA-80080/6CF w/ Mount Pipe	13	1-5/8
		3	samsung telecommunications	MT6407-77A w/ Mount Pipe		
		6	commscope	JAHH-65B-R3B		
		3	commscope	CBC78T-DS-43-2X		
		3	samsung telecommunications	RF4439D-25A		
		3	samsung telecommunications	RF4440D-13A		
		2	raycap	RXXDC-3315-PF-48		
		3	-	Dual Antenna Mounting kit		
		1	-	Platform Mount [LP 303-1_KCKR-HR-1]		

Table 2 - Other Considered Equipment

Mounting Level (ft)	Center Line Elevation (ft)	Number of Antennas	Antenna Manufacturer	Antenna Model	Number of Feed Lines	Feed Line Size (in)
119.0	121.0	3	kmw communications	AM-X-CD-17-65-00T-RET w/ Mount Pipe	12 2 1	1-5/8 7/8 1/2
		6	powerwave technologies	7770.00 w/ Mount Pipe		
		6	ericsson	RRUS 11 B12		
		6	powerwave technologies	LGP21401		
		6	powerwave technologies	LGP21901		
		1	raycap	DC6-48-60-18-8F		
	119.0	1	-	Platform Mount [LP 1202-1]		

Mounting Level (ft)	Center Line Elevation (ft)	Number of Antennas	Antenna Manufacturer	Antenna Model	Number of Feed Lines	Feed Line Size (in)
108.0	110.0	3	rfs/celwave	APX16DWV-16DWV-S-E-A20 w/ Mount Pipe	12 1	1-5/8 1-1/4
		3	rfs/celwave	APXVAARR24_43-U-NA20 w/ Mount Pipe		
		3	ericsson	KRY 112 489/2		
		3	ericsson	RADIO 4449 B12/B71		
	108.0	1	tower mounts	Platform Mount [LP 304-1_HR-1]		
85.0	85.0	6	cci antennas	BFA8F-A5A W/RRH w/ Mount Pipe	1	7/8
		1	raycap	RHCDC-1390-PF-48		
		6	raycap	RHCDC-3441-P-48-NA		
		1	-	Pipe Mount [PM 601-3]		
		2	-	Sector Mount [SM 502-1]		
75.0	75.0	3	jma wireless	MX08FRO665-21 w/ Mount Pipe	1	1-3/8
		3	fujitsu	TA08025-B605		
		3	fujitsu	TA08025-B604		
		1	raycap	RDIDC-9181-PF-48		
		1	tower mounts	Commscope MC-PK8-DSH		

3) ANALYSIS PROCEDURE

Table 3 - Documents Provided

Document	Reference	Source
4-GEOTECHNICAL REPORTS	4908007	CCISITES
4-TOWER FOUNDATION DRAWINGS/DESIGN/SPECS	4908012	CCISITES
4-TOWER MANUFACTURER DRAWINGS	4908008	CCISITES

3.1) Analysis Method

tnxTower (version 8.1.1.0), a commercially available analysis software package, was used to create a three-dimensional model of the tower and calculate member stresses for various loading cases. Selected output from the analysis is included in Appendix A. When applicable, Crown Castle has calculated and provided the effective area for panel antennas using approved methods following the intent of the TIA-222 standard.

3.2) Assumptions

1) Tower and structures were maintained in accordance with the TIA-222 Standard.
2) The configuration of antennas, transmission cables, mounts and other appurtenances are as specified in Tables 1 and 2 and the referenced drawings.

This analysis may be affected if any assumptions are not valid or have been made in error. Morrison Hershfield should be notified to determine the effect on the structural integrity of the tower.

4) ANALYSIS RESULTS

Table 4 - Section Capacity (Summary)

Section No.	Elevation (ft)	Component Type	Size	Critical Element	P (K)	SF*P_allow (K)	% Capacity	Pass / Fail
L1	119 - 84.33	Pole	TP29.03x19.0986x0.5	1	-18.46	2061.37	19.5	Pass
L2	84.33 - 45.5	Pole	TP39.15x26.9902x0.625	2	-36.50	3479.77	31.8	Pass
L3	45.5 - 0	Pole	TP50.9295x36.4996x0.6875	3	-59.81	5180.22	34.2	Pass
							Summary	
						Pole (L3)	34.2	Pass
						Rating =	34.2	Pass

Table 5 - Tower Component Stresses vs. Capacity – LC7

Notes	Component	Elevation (ft)	% Capacity	Pass / Fail
1	Anchor Rods	0	42.9	Pass
1	Base Plate		61.2	Pass
1	Base Foundation (Structure)	0	39.0	Pass
1	Base Foundation (Soil Interaction)		32.3	Pass

Structure Rating (max from all components) =	61.2%*

Notes:
1) See additional documentation in "Appendix C – Additional Calculations" for calculations supporting the % capacity consumed.
2) *Rating per TIA-222-H, Section 15.5.

4.1) Recommendations

The tower and its foundation have sufficient capacity to carry the proposed load configuration. No modifications are required at this time.

APPENDIX A

TNXTOWER OUTPUT

Section	Length (ft)	Number of Sides	Thickness (in)	Socket Length (ft)	Top Dia (in)	Bot Dia (in)	Grade	Weight (K)
1	34.67	18	0.5000	3.63	19.0986	29.0300	A572-50	4.4
2	42.46	18	0.6250	4.89	26.9902	39.1500		9.3
3	50.39	18	0.6875		36.4996	50.9295		16.1
								29.8

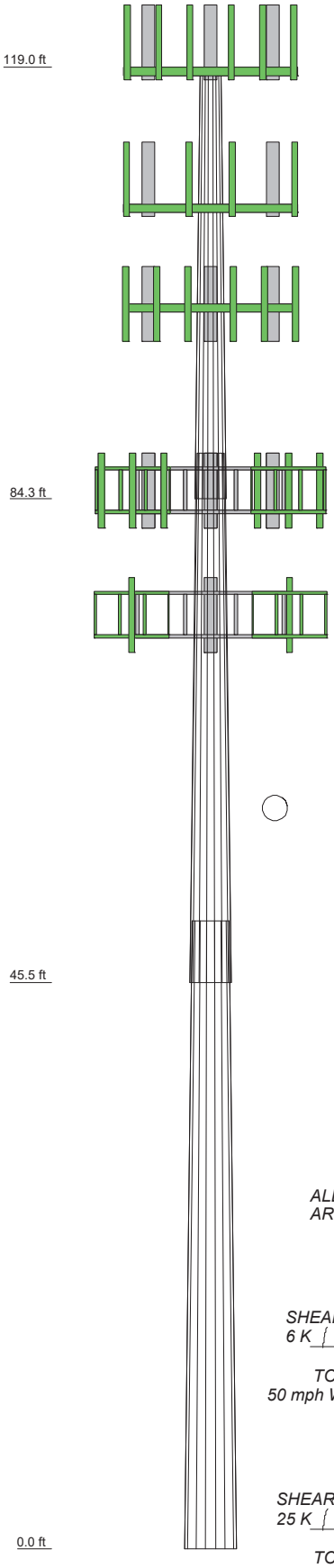

MATERIAL STRENGTH

GRADE	Fy	Fu	GRADE	Fy	Fu
A572-50	50 ksi	65 ksi			

TOWER DESIGN NOTES

1. Tower is located in Windham County, Connecticut.
2. Tower designed for Exposure B to the TIA-222-H Standard.
3. Tower designed for a 123 mph basic wind in accordance with the TIA-222-H Standard.
4. Tower is also designed for a 50 mph basic wind with 1.00 in ice. Ice is considered to increase in thickness with height.
5. Deflections are based upon a 60 mph wind.
6. Tower Risk Category II.
7. Topographic Category 1 with Crest Height of 0.00 ft
8. TOWER RATING: 34.2%

ALL REACTIONS ARE FACTORED

AXIAL 78 K

SHEAR 6 K *MOMENT 542 kip-ft*

TORQUE 1 kip-ft
50 mph WIND - 1.0000 in ICE

AXIAL 60 K

SHEAR 25 K *MOMENT 2234 kip-ft*

TORQUE 5 kip-ft
REACTIONS - 123 mph WIND

Morrison Hershfield
Consulting Engineers
1455 Lincoln Parkway, Suite 500
Atlanta, GA 30346
Phone: (770) 379-8500
FAX: (770) 379-8501

Job: **CN6-958R4 / 2200039**			
Project: **857013 / Killingly Ross Road**			
Client: Crown Castle USA	Drawn by: BH	App'd:	
Code: TIA-222-H	Date: 02/18/22	Scale: NTS	
Path: C:\Users\HBodal\OneDrive - MORRISON HERSHFIELD\Desktop\CN6-958\CN6-958R4 SA\Analysis\CN6-958R4 BU_857013 WO_2080779.eri		Dwg No. E-1	

Tower Input Data

The tower is a monopole.
This tower is designed using the TIA-222-H standard.
The following design criteria apply:

Tower is located in Windham County, Connecticut.
Tower base elevation above sea level: 453.00 ft.
Basic wind speed of 123 mph.
Risk Category II.
Exposure Category B.
Simplified Topographic Factor Procedure for wind speed-up calculations is used.
Topographic Category: 1.
Crest Height: 0.00 ft.
Nominal ice thickness of 1.0000 in.
Ice thickness is considered to increase with height.
Ice density of 56 pcf.
A wind speed of 50 mph is used in combination with ice.
Temperature drop of 50 °F.
Deflections calculated using a wind speed of 60 mph.
A non-linear (P-delta) analysis was used.
Pressures are calculated at each section.
Stress ratio used in pole design is 1.
Tower analysis based on target reliabilities in accordance with Annex S.
Load Modification Factors used: $K_{es}(F_w) = 0.95$, $K_{es}(t_i) = 0.85$.
Maximum demand-capacity ratio is: 1.05.
Local bending stresses due to climbing loads, feed line supports, and appurtenance mounts are not considered.

Options

Consider Moments - Legs	Distribute Leg Loads As Uniform	Use ASCE 10 X-Brace Ly Rules
Consider Moments - Horizontals	Assume Legs Pinned	Calculate Redundant Bracing Forces
Consider Moments - Diagonals	√ Assume Rigid Index Plate	Ignore Redundant Members in FEA
Use Moment Magnification	√ Use Clear Spans For Wind Area	SR Leg Bolts Resist Compression
√ Use Code Stress Ratios	Use Clear Spans For KL/r	All Leg Panels Have Same Allowable
√ Use Code Safety Factors - Guys	Retension Guys To Initial Tension	Offset Girt At Foundation
Escalate Ice	√ Bypass Mast Stability Checks	√ Consider Feed Line Torque
Always Use Max Kz	√ Use Azimuth Dish Coefficients	Include Angle Block Shear Check
Use Special Wind Profile	√ Project Wind Area of Appurt.	Use TIA-222-H Bracing Resist. Exemption
Include Bolts In Member Capacity	Autocalc Torque Arm Areas	Use TIA-222-H Tension Splice Exemption
Leg Bolts Are At Top Of Section	Add IBC .6D+W Combination	**Poles**
Secondary Horizontal Braces Leg	Sort Capacity Reports By Component	√ Include Shear-Torsion Interaction
Use Diamond Inner Bracing (4 Sided)	Triangulate Diamond Inner Bracing	Always Use Sub-Critical Flow
SR Members Have Cut Ends	Treat Feed Line Bundles As Cylinder	Use Top Mounted Sockets
SR Members Are Concentric	Ignore KL/ry For 60 Deg. Angle Legs	Pole Without Linear Attachments
		Pole With Shroud Or No Appurtenances
		Outside and Inside Corner Radii Are Known

Tapered Pole Section Geometry

Section	Elevation ft	Section Length ft	Splice Length ft	Number of Sides	Top Diameter in	Bottom Diameter in	Wall Thickness in	Bend Radius in	Pole Grade

Section	Elevation ft	Section Length ft	Splice Length ft	Number of Sides	Top Diameter in	Bottom Diameter in	Wall Thickness in	Bend Radius in	Pole Grade
L1	119.00-84.33	34.67	3.63	18	19.0986	29.0300	0.5000	2.0000	A572-50 (50 ksi)
L2	84.33-45.50	42.46	4.89	18	26.9902	39.1500	0.6250	2.5000	A572-50 (50 ksi)
L3	45.50-0.00	50.39		18	36.4996	50.9295	0.6875	2.7500	A572-50 (50 ksi)

Tapered Pole Properties

Section	Tip Dia. in	Area in^2	I in^4	r in	C in	I/C in^3	J in^4	It/Q in^2	w in	w/t
L1	19.3161	29.5160	1289.8952	6.6025	9.7021	132.9503	2581.4878	14.7608	2.4814	4.963
	29.4007	45.2771	4656.0720	10.1282	14.7472	315.7250	9318.2707	22.6429	4.2293	8.459
L2	28.3657	52.3019	4593.2065	9.3596	13.7110	335.0014	9192.4568	26.1559	3.6503	5.84
	39.6575	76.4240	14330.2027	13.6764	19.8882	720.5379	28679.2614	38.2192	5.7904	9.265
L3	38.3785	78.1464	12662.1056	12.7133	18.5418	682.8955	25340.8723	39.0806	5.2139	7.584
	51.6091	109.6343	34963.7360	17.8359	25.8722	1351.4025	69973.4782	54.8276	7.7536	11.278

Tower Elevation ft	Gusset Area (per face) ft^2	Gusset Thickness in	Gusset Grade	Adjust. Factor A_f	Adjust. Factor A_r	Weight Mult.	Double Angle Stitch Bolt Spacing Diagonals in	Double Angle Stitch Bolt Spacing Horizontals in	Double Angle Stitch Bolt Spacing Redundants in
L1 119.00-84.33				1	1	1			
L2 84.33-45.50				1	1	1			
L3 45.50-0.00				1	1	1			

Feed Line/Linear Appurtenances - Entered As Round Or Flat

Description	Sector	Exclude From Torque Calculation	Component Type	Placement ft	Total Number	Number Per Row	Start/End Position	Width or Diameter in	Perimeter in	Weight plf
******										
Safety Line 3/8"	C	No	Surface Ar (CaAa)	119.00 - 12.50	1	1	0.000 0.000	0.3750		0.22
Step Pegs	C	No	Surface Ar (CaAa)	119.00 - 12.50	1	1	-0.050 0.050	0.7050		1.80
******										
EUCAHYBRID 78-12C6-24MM5(7/8)	A	No	Surface Ar (CaAa)	85.00 - 5.00	1	1	-0.400 -0.400	1.1000		0.73
******										

Feed Line/Linear Appurtenances - Entered As Area

Description	Face or Leg	Allow Shield	Exclude From Torque Calculation	Component Type	Placement ft	Total Number		C_AA_A ft^2/ft	Weight plf
******									
LDF4-50A(1/2)	C	No	No	Inside Pole	119.00 - 3.00	1	No Ice 1/2" Ice	0.00 0.00	0.15 0.15

Description	Face or Leg	Allow Shield	Exclude From Torque Calculation	Component Type	Placement ft	Total Number		C_AA_A ft^2/ft	Weight plf
							1" Ice	0.00	0.15
LDF5-50A(7/8)	C	No	No	Inside Pole	119.00 - 3.00	2	No Ice	0.00	0.33
							1/2" Ice	0.00	0.33
							1" Ice	0.00	0.33
LDF7-50A(1-5/8)	C	No	No	Inside Pole	119.00 - 3.00	12	No Ice	0.00	0.82
							1/2" Ice	0.00	0.82
							1" Ice	0.00	0.82
******									
AVA7-50(1-5/8)	C	No	No	Inside Pole	108.00 - 7.00	6	No Ice	0.00	0.70
							1/2" Ice	0.00	0.70
							1" Ice	0.00	0.70
LDF7-50A(1-5/8)	C	No	No	Inside Pole	108.00 - 7.00	6	No Ice	0.00	0.82
							1/2" Ice	0.00	0.82
							1" Ice	0.00	0.82
HB114-U6S12-XXX-LI(1-1/4)	C	No	No	Inside Pole	108.00 - 7.00	1	No Ice	0.00	1.70
							1/2" Ice	0.00	1.70
							1" Ice	0.00	1.70
******									
HJ7-50A(1-5/8)	B	No	No	Inside Pole	100.00 - 7.00	12	No Ice	0.00	1.04
							1/2" Ice	0.00	1.04
							1" Ice	0.00	1.04
HB158-1-08U8-S8J18(1-5/8)	B	No	No	Inside Pole	100.00 - 7.00	1	No Ice	0.00	1.30
							1/2" Ice	0.00	1.30
							1" Ice	0.00	1.30
*****									
CU12PSM9P8XXX (1-3/8)	A	No	No	Inside Pole	75.00 - 0.00	1	No Ice	0.00	1.66
							1/2" Ice	0.00	1.66
							1" Ice	0.00	1.66
******									

Feed Line/Linear Appurtenances Section Areas

Tower Section	Tower Elevation ft	Face	A_R ft^2	A_F ft^2	C_AA_A In Face ft^2	C_AA_A Out Face ft^2	Weight K
L1	119.00-84.33	A	0.000	0.000	0.074	0.000	0.00
		B	0.000	0.000	0.000	0.000	0.22
		C	0.000	0.000	3.744	0.000	0.70
L2	84.33-45.50	A	0.000	0.000	4.271	0.000	0.08
		B	0.000	0.000	0.000	0.000	0.54
		C	0.000	0.000	4.194	0.000	0.91
L3	45.50-0.00	A	0.000	0.000	4.455	0.000	0.11
		B	0.000	0.000	0.000	0.000	0.53
		C	0.000	0.000	3.564	0.000	0.94

Feed Line/Linear Appurtenances Section Areas - With Ice

Tower Section	Tower Elevation ft	Face or Leg	Ice Thickness in	A_R ft^2	A_F ft^2	C_AA_A In Face ft^2	C_AA_A Out Face ft^2	Weight K
L1	119.00-84.33	A	0.950	0.000	0.000	0.201	0.000	0.00
		B		0.000	0.000	0.000	0.000	0.22
		C		0.000	0.000	16.923	0.000	0.82
L2	84.33-45.50	A	0.909	0.000	0.000	11.651	0.000	0.17
		B		0.000	0.000	0.000	0.000	0.54
		C		0.000	0.000	18.954	0.000	1.05
L3	45.50-0.00	A	0.816	0.000	0.000	11.814	0.000	0.20
		B		0.000	0.000	0.000	0.000	0.53
		C		0.000	0.000	15.557	0.000	1.04

Feed Line Center of Pressure

Section	Elevation ft	CP_X in	CP_Z in	CP_X Ice in	CP_Z Ice in
L1	119.00-84.33	-0.0191	0.8425	-0.0265	1.9343
L2	84.33-45.50	-0.7934	1.0648	-1.1324	2.2742
L3	45.50-0.00	-0.7160	0.8136	-1.0508	1.7436

Note: For pole sections, center of pressure calculations do not consider feed line shielding.

Shielding Factor Ka

Tower Section	Feed Line Record No.	Description	Feed Line Segment Elev.	K_a No Ice	K_a Ice
L1	2	Safety Line 3/8"	84.33 - 119.00	1.0000	1.0000
L1	3	Step Pegs	84.33 - 119.00	1.0000	1.0000
L1	17	EUCAHYBRID 78-12C6-24MM5(7/8)	84.33 - 85.00	1.0000	1.0000
L2	2	Safety Line 3/8"	45.50 - 84.33	1.0000	1.0000
L2	3	Step Pegs	45.50 - 84.33	1.0000	1.0000
L2	17	EUCAHYBRID 78-12C6-24MM5(7/8)	45.50 - 84.33	1.0000	1.0000
L3	2	Safety Line 3/8"	12.50 - 45.50	1.0000	1.0000
L3	3	Step Pegs	12.50 - 45.50	1.0000	1.0000
L3	17	EUCAHYBRID 78-12C6-24MM5(7/8)	5.00 - 45.50	1.0000	1.0000

Discrete Tower Loads

Description	Face or Leg	Offset Type	Offsets: Horz Lateral Vert ft ft ft	Azimuth Adjustment ° °	Placement ft		C_AA_A Front ft^2	C_AA_A Side ft^2	Weight K
******									
(2) 7770.00 w/ Mount Pipe	A	From Leg	4.00 0.00 2.00	0.0000	119.00	No Ice 1/2" Ice 1" Ice	5.75 6.18 6.61	4.25 5.01 5.71	0.06 0.10 0.16
(2) 7770.00 w/ Mount Pipe	B	From Leg	4.00 0.00 2.00	0.0000	119.00	No Ice 1/2" Ice 1" Ice	5.75 6.18 6.61	4.25 5.01 5.71	0.06 0.10 0.16
(2) 7770.00 w/ Mount Pipe	C	From Leg	4.00	0.0000	119.00	No Ice	5.75	4.25	0.06

Description	Face or Leg	Offset Type	Offsets: Horz Lateral Vert ft ft ft	Azimuth Adjustment °	Placement ft		C_AA_A Front ft^2	C_AA_A Side ft^2	Weight K
			0.00			1/2"	6.18	5.01	0.10
			2.00			Ice	6.61	5.71	0.16
						1" Ice			
AM-X-CD-17-65-00T-RET	A	From Leg	4.00	0.0000	119.00	No Ice	6.09	4.31	0.09
w/ Mount Pipe			0.00			1/2"	6.66	4.86	0.17
			2.00			Ice	7.24	5.42	0.26
						1" Ice			
AM-X-CD-17-65-00T-RET	B	From Leg	4.00	0.0000	119.00	No Ice	6.09	4.31	0.09
w/ Mount Pipe			0.00			1/2"	6.66	4.86	0.17
			2.00			Ice	7.24	5.42	0.26
						1" Ice			
AM-X-CD-17-65-00T-RET	C	From Leg	4.00	0.0000	119.00	No Ice	6.09	4.31	0.09
w/ Mount Pipe			0.00			1/2"	6.66	4.86	0.17
			2.00			Ice	7.24	5.42	0.26
						1" Ice			
(2) LGP21401	A	From Leg	4.00	0.0000	119.00	No Ice	1.10	0.21	0.01
			0.00			1/2"	1.24	0.27	0.02
			2.00			Ice	1.38	0.35	0.03
						1" Ice			
(2) LGP21401	B	From Leg	4.00	0.0000	119.00	No Ice	1.10	0.21	0.01
			0.00			1/2"	1.24	0.27	0.02
			2.00			Ice	1.38	0.35	0.03
						1" Ice			
(2) LGP21401	C	From Leg	4.00	0.0000	119.00	No Ice	1.10	0.21	0.01
			0.00			1/2"	1.24	0.27	0.02
			2.00			Ice	1.38	0.35	0.03
						1" Ice			
(2) RRUS 11 B12	A	From Leg	4.00	0.0000	119.00	No Ice	2.83	1.18	0.05
			0.00			1/2"	3.04	1.33	0.07
			2.00			Ice	3.26	1.48	0.10
						1" Ice			
(2) RRUS 11 B12	B	From Leg	4.00	0.0000	119.00	No Ice	2.83	1.18	0.05
			0.00			1/2"	3.04	1.33	0.07
			2.00			Ice	3.26	1.48	0.10
						1" Ice			
(2) RRUS 11 B12	C	From Leg	4.00	0.0000	119.00	No Ice	2.83	1.18	0.05
			0.00			1/2"	3.04	1.33	0.07
			2.00			Ice	3.26	1.48	0.10
						1" Ice			
(2) LGP21901	A	From Leg	4.00	0.0000	119.00	No Ice	0.23	0.16	0.01
			0.00			1/2"	0.29	0.21	0.01
			2.00			Ice	0.36	0.28	0.01
						1" Ice			
(2) LGP21901	B	From Leg	4.00	0.0000	119.00	No Ice	0.23	0.16	0.01
			0.00			1/2"	0.29	0.21	0.01
			2.00			Ice	0.36	0.28	0.01
						1" Ice			
(2) LGP21901	C	From Leg	4.00	0.0000	119.00	No Ice	0.23	0.16	0.01
			0.00			1/2"	0.29	0.21	0.01
			2.00			Ice	0.36	0.28	0.01
						1" Ice			
DC6-48-60-18-8F	C	From Leg	4.00	0.0000	119.00	No Ice	0.92	0.92	0.02
			0.00			1/2"	1.46	1.46	0.04
			2.00			Ice	1.64	1.64	0.06
						1" Ice			
5' x 2" Pipe Mount	A	From Leg	4.00	0.0000	119.00	No Ice	1.19	1.19	0.02
			0.00			1/2"	1.50	1.50	0.03
			0.00			Ice	1.81	1.81	0.04
						1" Ice			
5' x 2" Pipe Mount	B	From Leg	4.00	0.0000	119.00	No Ice	1.19	1.19	0.02
			0.00			1/2"	1.50	1.50	0.03
			0.00			Ice	1.81	1.81	0.04
						1" Ice			
5' x 2" Pipe Mount	C	From Leg	4.00	0.0000	119.00	No Ice	1.19	1.19	0.02
			0.00			1/2"	1.50	1.50	0.03

Description	Face or Leg	Offset Type	Offsets: Horz Lateral Vert ft ft ft	Azimuth Adjustment °	Placement ft		C_AA_A Front ft^2	C_AA_A Side ft^2	Weight K
			0.00			Ice	1.81	1.81	0.04
						1" Ice			
Platform Mount [LP 1202-1]	C	None		0.0000	119.00	No Ice	23.61	23.61	3.40
						1/2" Ice	28.39	28.39	4.08
						1" Ice	33.20	33.20	4.83
******									
APX16DWV-16DWV-S-E-A20 w/ Mount Pipe	A	From Leg	4.00	0.0000	108.00	No Ice	6.29	2.76	0.06
			0.00			1/2" Ice	6.86	3.27	0.11
			2.00			1" Ice	7.45	3.79	0.16
APX16DWV-16DWV-S-E-A20 w/ Mount Pipe	B	From Leg	4.00	0.0000	108.00	No Ice	6.29	2.76	0.06
			0.00			1/2" Ice	6.86	3.27	0.11
			2.00			1" Ice	7.45	3.79	0.16
APX16DWV-16DWV-S-E-A20 w/ Mount Pipe	C	From Leg	4.00	0.0000	108.00	No Ice	6.29	2.76	0.06
			0.00			1/2" Ice	6.86	3.27	0.11
			2.00			1" Ice	7.45	3.79	0.16
APXVAARR24_43-U-NA20 w/ Mount Pipe	A	From Leg	4.00	0.0000	108.00	No Ice	14.69	6.87	0.19
			0.00			1/2" Ice	15.46	7.55	0.31
			2.00			1" Ice	16.23	8.25	0.46
APXVAARR24_43-U-NA20 w/ Mount Pipe	B	From Leg	4.00	0.0000	108.00	No Ice	14.69	6.87	0.19
			0.00			1/2" Ice	15.46	7.55	0.31
			2.00			1" Ice	16.23	8.25	0.46
APXVAARR24_43-U-NA20 w/ Mount Pipe	C	From Leg	4.00	0.0000	108.00	No Ice	14.69	6.87	0.19
			0.00			1/2" Ice	15.46	7.55	0.31
			2.00			1" Ice	16.23	8.25	0.46
KRY 112 489/2	A	From Leg	4.00	0.0000	108.00	No Ice	0.56	0.37	0.02
			0.00			1/2" Ice	0.66	0.45	0.02
			2.00			1" Ice	0.76	0.54	0.03
KRY 112 489/2	B	From Leg	4.00	0.0000	108.00	No Ice	0.56	0.37	0.02
			0.00			1/2" Ice	0.66	0.45	0.02
			2.00			1" Ice	0.76	0.54	0.03
KRY 112 489/2	C	From Leg	4.00	0.0000	108.00	No Ice	0.56	0.37	0.02
			0.00			1/2" Ice	0.66	0.45	0.02
			2.00			1" Ice	0.76	0.54	0.03
RADIO 4449 B12/B71	A	From Leg	4.00	0.0000	108.00	No Ice	1.65	1.16	0.07
			0.00			1/2" Ice	1.81	1.30	0.09
			2.00			1" Ice	1.98	1.45	0.11
RADIO 4449 B12/B71	B	From Leg	4.00	0.0000	108.00	No Ice	1.65	1.16	0.07
			0.00			1/2" Ice	1.81	1.30	0.09
			2.00			1" Ice	1.98	1.45	0.11
RADIO 4449 B12/B71	C	From Leg	4.00	0.0000	108.00	No Ice	1.65	1.16	0.07
			0.00			1/2" Ice	1.81	1.30	0.09
			2.00			1" Ice	1.98	1.45	0.11
Platform Mount [LP 304-1_HR-1]	C	None		0.0000	108.00	No Ice	21.41	21.41	1.60
						1/2" Ice	26.62	26.62	2.06
						1" Ice	31.66	31.66	2.60
******									
(2) LPA-80080/6CF w/ Mount Pipe	A	From Leg	4.00	0.0000	100.00	No Ice	4.56	10.26	0.05
			0.00			1/2" Ice	5.11	11.43	0.11
			0.00			1" Ice	5.61	12.31	0.19
(2) LPA-80080/6CF w/	B	From Leg	4.00	0.0000	100.00	No Ice	4.56	10.26	0.05

Description	Face or Leg	Offset Type	Offsets: Horz Lateral Vert ft ft ft	Azimuth Adjustment °	Placement ft		C_AA_A Front ft^2	C_AA_A Side ft^2	Weight K
Mount Pipe			0.00			1/2"	5.11	11.43	0.11
			0.00			Ice	5.61	12.31	0.19
						1" Ice			
(2) LPA-80080/6CF w/ Mount Pipe	C	From Leg	4.00	0.0000	100.00	No Ice	4.56	10.26	0.05
			0.00			1/2"	5.11	11.43	0.11
			0.00			Ice	5.61	12.31	0.19
						1" Ice			
RXXDC-3315-PF-48	B	From Leg	4.00	0.0000	100.00	No Ice	3.71	2.19	0.02
			0.00			1/2"	3.95	2.39	0.05
			0.00			Ice	4.20	2.61	0.09
						1" Ice			
***									
MT6407-77A w/ Mount Pipe	A	From Leg	4.00	0.0000	100.00	No Ice	4.91	2.68	0.10
			0.00			1/2"	5.26	3.14	0.14
			0.00			Ice	5.61	3.62	0.18
						1" Ice			
MT6407-77A w/ Mount Pipe	B	From Leg	4.00	0.0000	100.00	No Ice	4.91	2.68	0.10
			0.00			1/2"	5.26	3.14	0.14
			0.00			Ice	5.61	3.62	0.18
						1" Ice			
MT6407-77A w/ Mount Pipe	C	From Leg	4.00	0.0000	100.00	No Ice	4.91	2.68	0.10
			0.00			1/2"	5.26	3.14	0.14
			0.00			Ice	5.61	3.62	0.18
						1" Ice			
(2) JAHH-65B-R3B	A	From Leg	4.00	0.0000	100.00	No Ice	5.29	3.05	0.06
			0.00			1/2"	5.75	3.48	0.12
			0.00			Ice	6.22	3.93	0.19
						1" Ice			
(2) JAHH-65B-R3B	B	From Leg	4.00	0.0000	100.00	No Ice	5.29	3.05	0.06
			0.00			1/2"	5.75	3.48	0.12
			0.00			Ice	6.22	3.93	0.19
						1" Ice			
(2) JAHH-65B-R3B	C	From Leg	4.00	0.0000	100.00	No Ice	5.29	3.05	0.06
			0.00			1/2"	5.75	3.48	0.12
			0.00			Ice	6.22	3.93	0.19
						1" Ice			
RF4439D-25A	A	From Leg	4.00	0.0000	100.00	No Ice	1.87	1.25	0.07
			0.00			1/2"	2.03	1.39	0.09
			0.00			Ice	2.21	1.54	0.11
						1" Ice			
(2) RF4439D-25A	B	From Leg	4.00	0.0000	100.00	No Ice	1.87	1.25	0.07
			0.00			1/2"	2.03	1.39	0.09
			0.00			Ice	2.21	1.54	0.11
						1" Ice			
CBC78T-DS-43-2X	A	From Leg	4.00	0.0000	100.00	No Ice	0.37	0.51	0.02
			0.00			1/2"	0.45	0.60	0.03
			0.00			Ice	0.53	0.70	0.04
						1" Ice			
CBC78T-DS-43-2X	B	From Leg	4.00	0.0000	100.00	No Ice	0.37	0.51	0.02
			0.00			1/2"	0.45	0.60	0.03
			0.00			Ice	0.53	0.70	0.04
						1" Ice			
CBC78T-DS-43-2X	C	From Leg	4.00	0.0000	100.00	No Ice	0.37	0.51	0.02
			0.00			1/2"	0.45	0.60	0.03
			0.00			Ice	0.53	0.70	0.04
						1" Ice			
(2) RF4440D-13A	A	From Leg	4.00	0.0000	100.00	No Ice	1.87	1.13	0.07
			0.00			1/2"	2.03	1.27	0.09
			0.00			Ice	2.21	1.41	0.11
						1" Ice			
RF4440D-13A	C	From Leg	4.00	0.0000	100.00	No Ice	1.87	1.13	0.07
			0.00			1/2"	2.03	1.27	0.09
			0.00			Ice	2.21	1.41	0.11
						1" Ice			
RXXDC-3315-PF-48	A	From Leg	4.00	0.0000	100.00	No Ice	3.71	2.19	0.02

Description	Face or Leg	Offset Type	Offsets: Horz Lateral Vert ft ft ft	Azimuth Adjustment °	Placement ft		C_AA_A Front ft^2	C_AA_A Side ft^2	Weight K
			0.00			1/2"	3.95	2.39	0.05
			0.00			Ice	4.20	2.61	0.09
						1" Ice			
(2) 8' x 2" Mount Pipe	A	From Leg	4.00	0.0000	100.00	No Ice	1.90	1.90	0.03
			0.00			1/2"	2.73	2.73	0.04
			0.00			Ice	3.40	3.40	0.06
						1" Ice			
(2) 8' x 2" Mount Pipe	B	From Leg	4.00	0.0000	100.00	No Ice	1.90	1.90	0.03
			0.00			1/2"	2.73	2.73	0.04
			0.00			Ice	3.40	3.40	0.06
						1" Ice			
(2) 8' x 2" Mount Pipe	C	From Leg	4.00	0.0000	100.00	No Ice	1.90	1.90	0.03
			0.00			1/2"	2.73	2.73	0.04
			0.00			Ice	3.40	3.40	0.06
						1" Ice			
Dual Antenna Mounting Kit	A	From Leg	4.00	0.0000	100.00	No Ice	1.32	1.32	0.07
			0.00			1/2"	1.58	1.58	0.08
			0.00			Ice	1.84	1.84	0.09
						1" Ice			
Dual Antenna Mounting Kit	B	From Leg	4.00	0.0000	100.00	No Ice	1.32	1.32	0.07
			0.00			1/2"	1.58	1.58	0.08
			0.00			Ice	1.84	1.84	0.09
						1" Ice			
Dual Antenna Mounting Kit	C	From Leg	4.00	0.0000	100.00	No Ice	1.32	1.32	0.07
			0.00			1/2"	1.58	1.58	0.08
			0.00			Ice	1.84	1.84	0.09
						1" Ice			
Platform Mount [LP 303-1_KCKR-HR-1]	C	None		0.0000	100.00	No Ice	28.31	28.31	1.77
						1/2"	35.69	35.69	2.30
						Ice	43.11	43.11	2.94
						1" Ice			
Mount Reinforcement Specifications	C	None		0.0000	100.00	No Ice	28.63	28.63	0.28
						1/2"	37.31	37.31	0.67
						Ice	45.80	45.80	0.94
						1" Ice			
******									
(3) BFA8F-A5A W/RRH w/ Mount Pipe	A	From Leg	4.00	0.0000	85.00	No Ice	15.85	5.69	0.16
			0.00			1/2"	16.62	6.28	0.27
			0.00			Ice	17.40	6.88	0.39
						1" Ice			
(3) BFA8F-A5A W/RRH w/ Mount Pipe	B	From Leg	4.00	0.0000	85.00	No Ice	15.85	5.69	0.16
			0.00			1/2"	16.62	6.28	0.27
			0.00			Ice	17.40	6.88	0.39
						1" Ice			
(3) RHCDC-3441-P-48-NA	A	From Leg	4.00	0.0000	85.00	No Ice	0.49	0.19	0.00
			0.00			1/2"	0.57	0.25	0.01
			0.00			Ice	0.67	0.33	0.01
						1" Ice			
(3) RHCDC-3441-P-48-NA	B	From Leg	4.00	0.0000	85.00	No Ice	0.49	0.19	0.00
			0.00			1/2"	0.57	0.25	0.01
			0.00			Ice	0.67	0.33	0.01
						1" Ice			
RHCDC-1390-PF-48	A	From Leg	4.00	0.0000	85.00	No Ice	3.18	1.20	0.02
			0.00			1/2"	3.41	1.35	0.04
			0.00			Ice	3.63	1.50	0.07
						1" Ice			
Sector Mount [SM 502-1]	A	From Leg	2.00	0.0000	85.00	No Ice	15.40	11.11	0.56
			0.00			1/2"	21.17	16.35	0.76
			0.00			Ice	26.86	21.52	1.02
						1" Ice			
Sector Mount [SM 502-1]	B	From Leg	2.00	0.0000	85.00	No Ice	15.40	11.11	0.56
			0.00			1/2"	21.17	16.35	0.76
			0.00			Ice	26.86	21.52	1.02
						1" Ice			
Pipe Mount [PM 601-3]	C	None		0.0000	85.00	No Ice	3.17	3.17	0.20

Description	Face or Leg	Offset Type	Offsets: Horz Lateral Vert ft ft ft	Azimuth Adjustment °	Placement ft		C_AA_A Front ft^2	C_AA_A Side ft^2	Weight K
						1/2" Ice	3.79	3.79	0.23
						1" Ice	4.42	4.42	0.28
******									
MX08FRO665-21 w/ Mount Pipe	A	From Leg	4.00 0.00 0.00	0.0000	75.00	No Ice	8.01	4.23	0.11
						1/2" Ice	8.52	4.69	0.19
						1" Ice	9.04	5.16	0.29
MX08FRO665-21 w/ Mount Pipe	B	From Leg	4.00 0.00 0.00	0.0000	75.00	No Ice	8.01	4.23	0.11
						1/2" Ice	8.52	4.69	0.19
						1" Ice	9.04	5.16	0.29
MX08FRO665-21 w/ Mount Pipe	C	From Leg	4.00 0.00 0.00	0.0000	75.00	No Ice	8.01	4.23	0.11
						1/2" Ice	8.52	4.69	0.19
						1" Ice	9.04	5.16	0.29
TA08025-B604	A	From Leg	4.00 0.00 0.00	0.0000	75.00	No Ice	1.96	0.98	0.06
						1/2" Ice	2.14	1.11	0.08
						1" Ice	2.32	1.25	0.10
TA08025-B604	B	From Leg	4.00 0.00 0.00	0.0000	75.00	No Ice	1.96	0.98	0.06
						1/2" Ice	2.14	1.11	0.08
						1" Ice	2.32	1.25	0.10
TA08025-B604	C	From Leg	4.00 0.00 0.00	0.0000	75.00	No Ice	1.96	0.98	0.06
						1/2" Ice	2.14	1.11	0.08
						1" Ice	2.32	1.25	0.10
TA08025-B605	A	From Leg	4.00 0.00 0.00	0.0000	75.00	No Ice	1.96	1.13	0.08
						1/2" Ice	2.14	1.27	0.09
						1" Ice	2.32	1.41	0.11
TA08025-B605	B	From Leg	4.00 0.00 0.00	0.0000	75.00	No Ice	1.96	1.13	0.08
						1/2" Ice	2.14	1.27	0.09
						1" Ice	2.32	1.41	0.11
TA08025-B605	C	From Leg	4.00 0.00 0.00	0.0000	75.00	No Ice	1.96	1.13	0.08
						1/2" Ice	2.14	1.27	0.09
						1" Ice	2.32	1.41	0.11
RDIDC-9181-PF-48	A	From Leg	4.00 0.00 0.00	0.0000	75.00	No Ice	2.01	1.17	0.02
						1/2" Ice	2.19	1.31	0.04
						1" Ice	2.37	1.46	0.06
(2) 8' x 2" Mount Pipe	A	From Leg	4.00 0.00 0.00	0.0000	75.00	No Ice	1.90	1.90	0.03
						1/2" Ice	2.73	2.73	0.04
						1" Ice	3.40	3.40	0.06
(2) 8' x 2" Mount Pipe	B	From Leg	4.00 0.00 0.00	0.0000	75.00	No Ice	1.90	1.90	0.03
						1/2" Ice	2.73	2.73	0.04
						1" Ice	3.40	3.40	0.06
(2) 8' x 2" Mount Pipe	C	From Leg	4.00 0.00 0.00	0.0000	75.00	No Ice	1.90	1.90	0.03
						1/2" Ice	2.73	2.73	0.04
						1" Ice	3.40	3.40	0.06
Commscope MC-PK8-DSH	C	None		0.0000	75.00	No Ice	34.24	34.24	1.75
						1/2" Ice	62.95	62.95	2.10
						1" Ice	91.66	91.66	2.45
******									

Load Combinations

Comb. No.	Description
1	Dead Only
2	1.2 Dead+1.0 Wind 0 deg - No Ice
3	0.9 Dead+1.0 Wind 0 deg - No Ice
4	1.2 Dead+1.0 Wind 30 deg - No Ice
5	0.9 Dead+1.0 Wind 30 deg - No Ice
6	1.2 Dead+1.0 Wind 60 deg - No Ice
7	0.9 Dead+1.0 Wind 60 deg - No Ice
8	1.2 Dead+1.0 Wind 90 deg - No Ice
9	0.9 Dead+1.0 Wind 90 deg - No Ice
10	1.2 Dead+1.0 Wind 120 deg - No Ice
11	0.9 Dead+1.0 Wind 120 deg - No Ice
12	1.2 Dead+1.0 Wind 150 deg - No Ice
13	0.9 Dead+1.0 Wind 150 deg - No Ice
14	1.2 Dead+1.0 Wind 180 deg - No Ice
15	0.9 Dead+1.0 Wind 180 deg - No Ice
16	1.2 Dead+1.0 Wind 210 deg - No Ice
17	0.9 Dead+1.0 Wind 210 deg - No Ice
18	1.2 Dead+1.0 Wind 240 deg - No Ice
19	0.9 Dead+1.0 Wind 240 deg - No Ice
20	1.2 Dead+1.0 Wind 270 deg - No Ice
21	0.9 Dead+1.0 Wind 270 deg - No Ice
22	1.2 Dead+1.0 Wind 300 deg - No Ice
23	0.9 Dead+1.0 Wind 300 deg - No Ice
24	1.2 Dead+1.0 Wind 330 deg - No Ice
25	0.9 Dead+1.0 Wind 330 deg - No Ice
26	1.2 Dead+1.0 Ice+1.0 Temp
27	1.2 Dead+1.0 Wind 0 deg+1.0 Ice+1.0 Temp
28	1.2 Dead+1.0 Wind 30 deg+1.0 Ice+1.0 Temp
29	1.2 Dead+1.0 Wind 60 deg+1.0 Ice+1.0 Temp
30	1.2 Dead+1.0 Wind 90 deg+1.0 Ice+1.0 Temp
31	1.2 Dead+1.0 Wind 120 deg+1.0 Ice+1.0 Temp
32	1.2 Dead+1.0 Wind 150 deg+1.0 Ice+1.0 Temp
33	1.2 Dead+1.0 Wind 180 deg+1.0 Ice+1.0 Temp
34	1.2 Dead+1.0 Wind 210 deg+1.0 Ice+1.0 Temp
35	1.2 Dead+1.0 Wind 240 deg+1.0 Ice+1.0 Temp
36	1.2 Dead+1.0 Wind 270 deg+1.0 Ice+1.0 Temp
37	1.2 Dead+1.0 Wind 300 deg+1.0 Ice+1.0 Temp
38	1.2 Dead+1.0 Wind 330 deg+1.0 Ice+1.0 Temp
39	Dead+Wind 0 deg - Service
40	Dead+Wind 30 deg - Service
41	Dead+Wind 60 deg - Service
42	Dead+Wind 90 deg - Service
43	Dead+Wind 120 deg - Service
44	Dead+Wind 150 deg - Service
45	Dead+Wind 180 deg - Service
46	Dead+Wind 210 deg - Service
47	Dead+Wind 240 deg - Service
48	Dead+Wind 270 deg - Service
49	Dead+Wind 300 deg - Service
50	Dead+Wind 330 deg - Service

Maximum Member Forces

Section No.	Elevation ft	Component Type	Condition	Gov. Load Comb.	Axial K	Major Axis Moment kip-ft	Minor Axis Moment kip-ft
L1	119 - 84.33	Pole	Max Tension	1	0.00	0.00	0.00
			Max. Compression	26	-29.08	-0.88	0.93
			Max. Mx	8	-18.47	-270.45	0.11
			Max. My	2	-18.46	0.05	271.56
			Max. Vy	8	13.70	-270.45	0.11
			Max. Vx	2	-13.77	0.05	271.56
			Max. Torque	24			-4.02

Section No.	Elevation ft	Component Type	Condition	Gov. Load Comb.	Axial K	Major Axis Moment kip-ft	Minor Axis Moment kip-ft
L2	84.33 - 45.5	Pole	Max Tension	1	0.00	0.00	0.00
			Max. Compression	26	-52.78	-9.76	6.63
			Max. Mx	8	-36.53	-994.67	-15.76
			Max. My	2	-36.51	14.21	1019.40
			Max. Vy	8	21.41	-994.67	-15.76
			Max. Vx	2	-22.14	14.21	1019.40
			Max. Torque	13			4.71
L3	45.5 - 0	Pole	Max Tension	1	0.00	0.00	0.00
			Max. Compression	26	-78.42	-9.59	6.41
			Max. Mx	8	-59.81	-2151.29	-42.54
			Max. My	2	-59.81	40.90	2212.52
			Max. Vy	8	24.52	-2151.29	-42.54
			Max. Vx	2	-25.23	40.90	2212.52
			Max. Torque	13			4.71

Maximum Reactions

Location	Condition	Gov. Load Comb.	Vertical K	Horizontal, X K	Horizontal, Z K
Pole	Max. Vert	26	78.42	-0.00	0.00
	Max. H_x	20	59.82	24.50	0.52
	Max. H_z	2	59.82	0.52	25.21
	Max. M_x	2	2212.52	0.52	25.21
	Max. M_z	8	2151.29	-24.50	-0.52
	Max. Torsion	13	4.71	-12.70	-22.09
	Min. Vert	19	44.87	20.95	-12.15
	Min. H_x	8	59.82	-24.50	-0.52
	Min. H_z	14	59.82	-0.52	-25.21
	Min. M_x	14	-2205.92	-0.52	-25.21
	Min. M_z	20	-2141.42	24.50	0.52
	Min. Torsion	25	-4.71	12.70	22.09

Tower Mast Reaction Summary

Load Combination	Vertical K	$Shear_x$ K	$Shear_z$ K	Overturning Moment, M_x kip-ft	Overturning Moment, M_z kip-ft	Torque kip-ft
Dead Only	49.85	0.00	0.00	-2.68	-4.01	0.00
1.2 Dead+1.0 Wind 0 deg - No Ice	59.82	-0.52	-25.21	-2212.52	40.90	3.85
0.9 Dead+1.0 Wind 0 deg - No Ice	44.87	-0.52	-25.21	-2196.80	41.89	3.85
1.2 Dead+1.0 Wind 30 deg - No Ice	59.82	11.80	-21.57	-1893.64	-1038.42	1.96
0.9 Dead+1.0 Wind 30 deg - No Ice	44.87	11.80	-21.57	-1880.05	-1030.15	1.96
1.2 Dead+1.0 Wind 60 deg - No Ice	59.82	20.95	-12.15	-1068.23	-1840.82	-0.45
0.9 Dead+1.0 Wind 60 deg - No Ice	44.87	20.95	-12.15	-1060.19	-1827.15	-0.45
1.2 Dead+1.0 Wind 90 deg - No Ice	59.82	24.50	0.52	42.54	-2151.29	-2.74
0.9 Dead+1.0 Wind 90 deg - No Ice	44.87	24.50	0.52	43.11	-2135.53	-2.74
1.2 Dead+1.0 Wind 120 deg - No Ice	59.82	21.48	13.06	1141.01	-1886.63	-4.30
0.9 Dead+1.0 Wind 120 deg - No Ice	44.87	21.48	13.06	1134.18	-1872.67	-4.30
1.2 Dead+1.0 Wind 150 deg - No Ice	59.82	12.70	22.09	1932.86	-1117.78	-4.71

Load Combination	Vertical K	$Shear_x$ K	$Shear_z$ K	Overturning Moment, M_x kip-ft	Overturning Moment, M_z kip-ft	Torque kip-ft
0.9 Dead+1.0 Wind 150 deg - No Ice	44.87	12.70	22.09	1920.69	-1109.02	-4.71
1.2 Dead+1.0 Wind 180 deg - No Ice	59.82	0.52	25.21	2205.92	-50.76	-3.85
0.9 Dead+1.0 Wind 180 deg - No Ice	44.87	0.52	25.21	2191.91	-49.20	-3.85
1.2 Dead+1.0 Wind 210 deg - No Ice	59.82	-11.80	21.57	1887.04	1028.55	-1.97
0.9 Dead+1.0 Wind 210 deg - No Ice	44.87	-11.80	21.57	1875.17	1022.83	-1.97
1.2 Dead+1.0 Wind 240 deg - No Ice	59.82	-20.95	12.15	1061.64	1830.95	0.45
0.9 Dead+1.0 Wind 240 deg - No Ice	44.87	-20.95	12.15	1055.30	1819.83	0.45
1.2 Dead+1.0 Wind 270 deg - No Ice	59.82	-24.50	-0.52	-49.12	2141.42	2.74
0.9 Dead+1.0 Wind 270 deg - No Ice	44.87	-24.50	-0.52	-47.99	2128.22	2.74
1.2 Dead+1.0 Wind 300 deg - No Ice	59.82	-21.48	-13.06	-1147.59	1876.76	4.30
0.9 Dead+1.0 Wind 300 deg - No Ice	44.87	-21.48	-13.06	-1139.06	1865.36	4.30
1.2 Dead+1.0 Wind 330 deg - No Ice	59.82	-12.70	-22.09	-1939.44	1107.92	4.71
0.9 Dead+1.0 Wind 330 deg - No Ice	44.87	-12.70	-22.09	-1925.57	1101.71	4.71
1.2 Dead+1.0 Ice+1.0 Temp	78.42	0.00	-0.00	-6.41	-9.59	0.00
1.2 Dead+1.0 Wind 0 deg+1.0 Ice+1.0 Temp	78.42	-0.09	-6.26	-542.40	-1.56	0.86
1.2 Dead+1.0 Wind 30 deg+1.0 Ice+1.0 Temp	78.42	2.99	-5.37	-466.54	-265.03	0.45
1.2 Dead+1.0 Wind 60 deg+1.0 Ice+1.0 Temp	78.42	5.26	-3.05	-267.41	-460.07	-0.09
1.2 Dead+1.0 Wind 90 deg+1.0 Ice+1.0 Temp	78.42	6.13	0.09	1.64	-534.44	-0.61
1.2 Dead+1.0 Wind 120 deg+1.0 Ice+1.0 Temp	78.42	5.35	3.21	268.51	-468.19	-0.96
1.2 Dead+1.0 Wind 150 deg+1.0 Ice+1.0 Temp	78.42	3.14	5.46	461.70	-279.09	-1.05
1.2 Dead+1.0 Wind 180 deg+1.0 Ice+1.0 Temp	78.42	0.09	6.26	529.44	-17.80	-0.86
1.2 Dead+1.0 Wind 210 deg+1.0 Ice+1.0 Temp	78.42	-2.99	5.37	453.58	245.66	-0.45
1.2 Dead+1.0 Wind 240 deg+1.0 Ice+1.0 Temp	78.42	-5.26	3.05	254.45	440.71	0.09
1.2 Dead+1.0 Wind 270 deg+1.0 Ice+1.0 Temp	78.42	-6.13	-0.09	-14.60	515.07	0.61
1.2 Dead+1.0 Wind 300 deg+1.0 Ice+1.0 Temp	78.42	-5.35	-3.21	-281.47	448.83	0.96
1.2 Dead+1.0 Wind 330 deg+1.0 Ice+1.0 Temp	78.42	-3.14	-5.46	-474.66	259.72	1.05
Dead+Wind 0 deg - Service	49.85	-0.12	-5.65	-495.87	6.15	0.86
Dead+Wind 30 deg - Service	49.85	2.64	-4.84	-424.69	-234.78	0.44
Dead+Wind 60 deg - Service	49.85	4.70	-2.72	-240.44	-413.89	-0.10
Dead+Wind 90 deg - Service	49.85	5.49	0.12	7.50	-483.19	-0.61
Dead+Wind 120 deg - Service	49.85	4.81	2.93	252.70	-424.12	-0.96
Dead+Wind 150 deg - Service	49.85	2.85	4.95	429.46	-252.50	-1.05
Dead+Wind 180 deg - Service	49.85	0.12	5.65	490.42	-14.31	-0.86
Dead+Wind 210 deg - Service	49.85	-2.64	4.84	419.23	226.61	-0.44
Dead+Wind 240 deg - Service	49.85	-4.70	2.72	234.98	405.72	0.10
Dead+Wind 270 deg - Service	49.85	-5.49	-0.12	-12.96	475.02	0.61
Dead+Wind 300 deg - Service	49.85	-4.81	-2.93	-258.16	415.95	0.96

Load Combination	Vertical K	$Shear_x$ K	$Shear_z$ K	Overturning Moment, M_x kip-ft	Overturning Moment, M_z kip-ft	Torque kip-ft
Dead+Wind 330 deg - Service	49.85	-2.85	-4.95	-434.92	244.33	1.05

Solution Summary

	Sum of Applied Forces			Sum of Reactions			
Load Comb.	PX K	PY K	PZ K	PX K	PY K	PZ K	% Error
1	0.00	-49.85	0.00	0.00	49.85	0.00	0.000%
2	-0.52	-59.82	-25.21	0.52	59.82	25.21	0.000%
3	-0.52	-44.87	-25.21	0.52	44.87	25.21	0.000%
4	11.80	-59.82	-21.57	-11.80	59.82	21.57	0.000%
5	11.80	-44.87	-21.57	-11.80	44.87	21.57	0.000%
6	20.95	-59.82	-12.15	-20.95	59.82	12.15	0.000%
7	20.95	-44.87	-12.15	-20.95	44.87	12.15	0.000%
8	24.50	-59.82	0.52	-24.50	59.82	-0.52	0.000%
9	24.50	-44.87	0.52	-24.50	44.87	-0.52	0.000%
10	21.48	-59.82	13.06	-21.48	59.82	-13.06	0.000%
11	21.48	-44.87	13.06	-21.48	44.87	-13.06	0.000%
12	12.70	-59.82	22.09	-12.70	59.82	-22.09	0.000%
13	12.70	-44.87	22.09	-12.70	44.87	-22.09	0.000%
14	0.52	-59.82	25.21	-0.52	59.82	-25.21	0.000%
15	0.52	-44.87	25.21	-0.52	44.87	-25.21	0.000%
16	-11.80	-59.82	21.57	11.80	59.82	-21.57	0.000%
17	-11.80	-44.87	21.57	11.80	44.87	-21.57	0.000%
18	-20.95	-59.82	12.15	20.95	59.82	-12.15	0.000%
19	-20.95	-44.87	12.15	20.95	44.87	-12.15	0.000%
20	-24.50	-59.82	-0.52	24.50	59.82	0.52	0.000%
21	-24.50	-44.87	-0.52	24.50	44.87	0.52	0.000%
22	-21.48	-59.82	-13.06	21.48	59.82	13.06	0.000%
23	-21.48	-44.87	-13.06	21.48	44.87	13.06	0.000%
24	-12.70	-59.82	-22.09	12.70	59.82	22.09	0.000%
25	-12.70	-44.87	-22.09	12.70	44.87	22.09	0.000%
26	0.00	-78.42	0.00	-0.00	78.42	0.00	0.000%
27	-0.09	-78.42	-6.26	0.09	78.42	6.26	0.000%
28	2.99	-78.42	-5.37	-2.99	78.42	5.37	0.000%
29	5.26	-78.42	-3.05	-5.26	78.42	3.05	0.000%
30	6.13	-78.42	0.09	-6.13	78.42	-0.09	0.000%
31	5.35	-78.42	3.21	-5.35	78.42	-3.21	0.000%
32	3.14	-78.42	5.46	-3.14	78.42	-5.46	0.000%
33	0.09	-78.42	6.26	-0.09	78.42	-6.26	0.000%
34	-2.99	-78.42	5.37	2.99	78.42	-5.37	0.000%
35	-5.26	-78.42	3.05	5.26	78.42	-3.05	0.000%
36	-6.13	-78.42	-0.09	6.13	78.42	0.09	0.000%
37	-5.35	-78.42	-3.21	5.35	78.42	3.21	0.000%
38	-3.14	-78.42	-5.46	3.14	78.42	5.46	0.000%
39	-0.12	-49.85	-5.65	0.12	49.85	5.65	0.000%
40	2.64	-49.85	-4.84	-2.64	49.85	4.84	0.000%
41	4.70	-49.85	-2.72	-4.70	49.85	2.72	0.000%
42	5.49	-49.85	0.12	-5.49	49.85	-0.12	0.000%
43	4.81	-49.85	2.93	-4.81	49.85	-2.93	0.000%
44	2.85	-49.85	4.95	-2.85	49.85	-4.95	0.000%
45	0.12	-49.85	5.65	-0.12	49.85	-5.65	0.000%
46	-2.64	-49.85	4.84	2.64	49.85	-4.84	0.000%
47	-4.70	-49.85	2.72	4.70	49.85	-2.72	0.000%
48	-5.49	-49.85	-0.12	5.49	49.85	0.12	0.000%
49	-4.81	-49.85	-2.93	4.81	49.85	2.93	0.000%
50	-2.85	-49.85	-4.95	2.85	49.85	4.95	0.000%

Non-Linear Convergence Results

Load Combination	Converged?	Number of Cycles	Displacement Tolerance	Force Tolerance
1	Yes	4	0.00000001	0.00000001
2	Yes	4	0.00000001	0.00028857
3	Yes	4	0.00000001	0.00019899
4	Yes	4	0.00000001	0.00090486
5	Yes	4	0.00000001	0.00061386
6	Yes	4	0.00000001	0.00082499
7	Yes	4	0.00000001	0.00055867
8	Yes	4	0.00000001	0.00019251
9	Yes	4	0.00000001	0.00013303
10	Yes	4	0.00000001	0.00078229
11	Yes	4	0.00000001	0.00052846
12	Yes	5	0.00000001	0.00003904
13	Yes	4	0.00000001	0.00077121
14	Yes	4	0.00000001	0.00036332
15	Yes	4	0.00000001	0.00025042
16	Yes	4	0.00000001	0.00071359
17	Yes	4	0.00000001	0.00048495
18	Yes	4	0.00000001	0.00076289
19	Yes	4	0.00000001	0.00052018
20	Yes	4	0.00000001	0.00026390
21	Yes	4	0.00000001	0.00018246
22	Yes	5	0.00000001	0.00003743
23	Yes	4	0.00000001	0.00074101
24	Yes	4	0.00000001	0.00076597
25	Yes	4	0.00000001	0.00051750
26	Yes	4	0.00000001	0.00001873
27	Yes	4	0.00000001	0.00039787
28	Yes	4	0.00000001	0.00041361
29	Yes	4	0.00000001	0.00041082
30	Yes	4	0.00000001	0.00039440
31	Yes	4	0.00000001	0.00040958
32	Yes	4	0.00000001	0.00040852
33	Yes	4	0.00000001	0.00037948
34	Yes	4	0.00000001	0.00037773
35	Yes	4	0.00000001	0.00037276
36	Yes	4	0.00000001	0.00036691
37	Yes	4	0.00000001	0.00039777
38	Yes	4	0.00000001	0.00040645
39	Yes	4	0.00000001	0.00001603
40	Yes	4	0.00000001	0.00001709
41	Yes	4	0.00000001	0.00001336
42	Yes	4	0.00000001	0.00001163
43	Yes	4	0.00000001	0.00001745
44	Yes	4	0.00000001	0.00002632
45	Yes	4	0.00000001	0.00001646
46	Yes	4	0.00000001	0.00001114
47	Yes	4	0.00000001	0.00001100
48	Yes	4	0.00000001	0.00001196
49	Yes	4	0.00000001	0.00002418
50	Yes	4	0.00000001	0.00001832

Maximum Tower Deflections - Service Wind

Section No.	Elevation ft	Horz. Deflection in	Gov. Load Comb.	Tilt °	Twist °
L1	119 - 84.33	6.486	50	0.4620	0.0025
L2	87.96 - 45.5	3.647	50	0.3927	0.0025
L3	50.39 - 0	1.178	50	0.2213	0.0009

Critical Deflections and Radius of Curvature - Service Wind

Elevation ft	Appurtenance	Gov. Load Comb.	Deflection in	Tilt °	Twist °	Radius of Curvature ft
119.00	(2) 7770.00 w/ Mount Pipe	50	6.486	0.4620	0.0025	94038
108.00	APX16DWV-16DWV-S-E-A20 w/ Mount Pipe	50	5.441	0.4430	0.0026	42744
100.00	(2) LPA-80080/6CF w/ Mount Pipe	50	4.701	0.4264	0.0026	24747
85.00	(3) BFA8F-A5A W/RRH w/ Mount Pipe	50	3.404	0.3822	0.0024	14500
75.00	MX08FRO665-21 w/ Mount Pipe	50	2.636	0.3409	0.0020	12557

Maximum Tower Deflections - Design Wind

Section No.	Elevation ft	Horz. Deflection in	Gov. Load Comb.	Tilt °	Twist °
L1	119 - 84.33	29.048	24	2.0653	0.0112
L2	87.96 - 45.5	16.338	24	1.7552	0.0113
L3	50.39 - 0	5.278	24	0.9916	0.0039

Critical Deflections and Radius of Curvature - Design Wind

Elevation ft	Appurtenance	Gov. Load Comb.	Deflection in	Tilt °	Twist °	Radius of Curvature ft
119.00	(2) 7770.00 w/ Mount Pipe	24	29.048	2.0653	0.0112	21471
108.00	APX16DWV-16DWV-S-E-A20 w/ Mount Pipe	24	24.371	1.9796	0.0117	9759
100.00	(2) LPA-80080/6CF w/ Mount Pipe	24	21.055	1.9054	0.0119	5649
85.00	(3) BFA8F-A5A W/RRH w/ Mount Pipe	24	15.247	1.7087	0.0109	3295
75.00	MX08FRO665-21 w/ Mount Pipe	24	11.808	1.5256	0.0092	2830

Compression Checks

Pole Design Data

Section No.	Elevation ft	Size	L ft	L_u ft	Kl/r	A in^2	P_u K	ϕP_n K	Ratio $\frac{P_u}{\phi P_n}$
L1	119 - 84.33 (1)	TP29.03x19.0986x0.5	34.67	0.00	0.0	43.6269	-18.46	1963.21	0.009
L2	84.33 - 45.5 (2)	TP39.15x26.9902x0.625	42.46	0.00	0.0	73.6459	-36.50	3314.07	0.011
L3	45.5 - 0 (3)	TP50.9295x36.4996x0.6875	50.39	0.00	0.0	109.6340	-59.81	4933.54	0.012

Pole Bending Design Data

Section No.	Elevation ft	Size	M_{ux} kip-ft	ϕM_{nx} kip-ft	Ratio $\frac{M_{ux}}{\phi M_{nx}}$	M_{uy} kip-ft	ϕM_{ny} kip-ft	Ratio $\frac{M_{uy}}{\phi M_{ny}}$
L1	119 - 84.33 (1)	TP29.03x19.0986x0.5	271.56	1395.13	0.195	0.00	1395.13	0.000
L2	84.33 - 45.5 (2)	TP39.15x26.9902x0.625	1026.50	3184.70	0.322	0.00	3184.70	0.000
L3	45.5 - 0 (3)	TP50.9295x36.4996x0.6875	2233.59	6436.05	0.347	0.00	6436.05	0.000

Pole Shear Design Data

Section No.	Elevation ft	Size	Actual V_u K	ϕV_n K	Ratio $\frac{V_u}{\phi V_n}$	Actual T_u kip-ft	ϕT_n kip-ft	Ratio $\frac{T_u}{\phi T_n}$
L1	119 - 84.33 (1)	TP29.03x19.0986x0.5	13.77	588.96	0.023	0.31	1417.90	0.000
L2	84.33 - 45.5 (2)	TP39.15x26.9902x0.625	22.42	994.22	0.023	4.71	3232.39	0.001
L3	45.5 - 0 (3)	TP50.9295x36.4996x0.6875	25.51	1480.06	0.017	4.71	6512.19	0.001

Pole Interaction Design Data

Section No.	Elevation ft	Ratio $\frac{P_u}{\phi P_n}$	Ratio $\frac{M_{ux}}{\phi M_{nx}}$	Ratio $\frac{M_{uy}}{\phi M_{ny}}$	Ratio $\frac{V_u}{\phi V_n}$	Ratio $\frac{T_u}{\phi T_n}$	Comb. Stress Ratio	Allow. Stress Ratio	Criteria
L1	119 - 84.33 (1)	0.009	0.195	0.000	0.023	0.000	0.205	1.050	4.8.2
L2	84.33 - 45.5 (2)	0.011	0.322	0.000	0.023	0.001	0.334	1.050	4.8.2
L3	45.5 - 0 (3)	0.012	0.347	0.000	0.017	0.001	0.359	1.050	4.8.2

Section Capacity Table

Section No.	Elevation ft	Component Type	Size	Critical Element	P K	ϕP_{allow} K	% Capacity	Pass Fail
L1	119 - 84.33	Pole	TP29.03x19.0986x0.5	1	-18.46	2061.37	19.5	Pass
L2	84.33 - 45.5	Pole	TP39.15x26.9902x0.625	2	-36.50	3479.77	31.8	Pass
L3	45.5 - 0	Pole	TP50.9295x36.4996x0.6875	3	-59.81	5180.22	34.2	Pass
							Summary	
						Pole (L3)	34.2	Pass
						RATING =	**34.2**	**Pass**

APPENDIX B

BASE LEVEL DRAWING

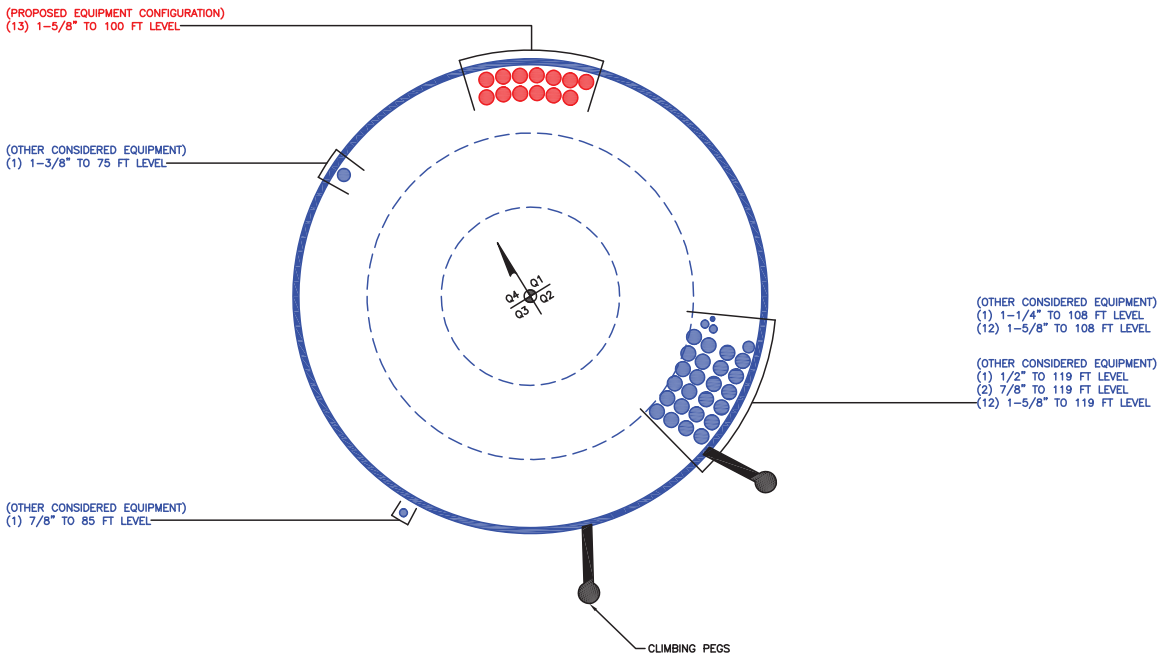

BUSINESS UNIT: 857013 TOWER ID: C_BASELEVEL

APPENDIX C

ADDITIONAL CALCULATIONS

Monopole Base Plate Connection

Site Info	
BU #	857013
Site Name	Killingly Ross Road
Order #	605540 Rev. 0

Analysis Considerations	
TIA-222 Revision	H
Grout Considered:	No
l_{ar} (in)	1

Applied Loads	
Moment (kip-ft)	2233.59
Axial Force (kips)	59.81
Shear Force (kips)	25.51

**TIA-222-H Section 15.5 Applied*

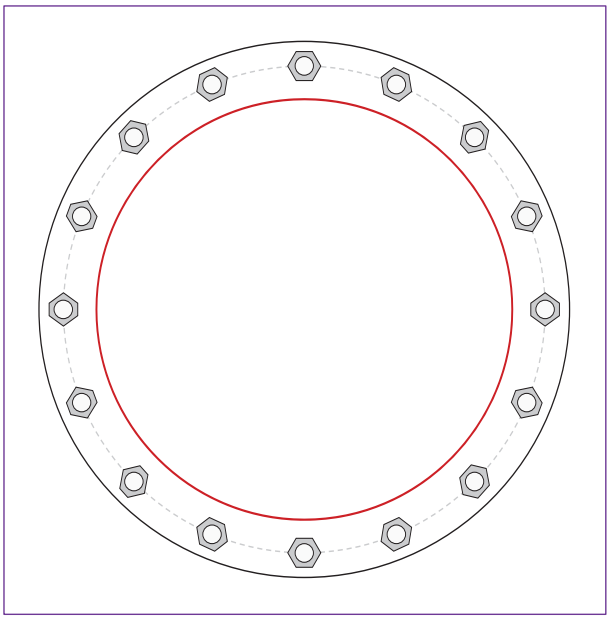

Connection Properties

Anchor Rod Data

(16) 2-1/4" ø bolts (A615-75 N; Fy=75 ksi, Fu=100 ksi) on 59" BC

Base Plate Data

65" OD x 2" Plate (A572-50; Fy=50 ksi, Fu=65 ksi)

Stiffener Data

N/A

Pole Data

50.9295" x 0.6875" 18-sided pole (A572-50; Fy=50 ksi, Fu=65 ksi)

Analysis Results

Anchor Rod Summary *(units of kips, kip-in)*

Pu_t = 109.77	ϕPn_t = 243.75	**Stress Rating**
Vu = 1.59	ϕVn = 149.1	**42.9%**
Mu = n/a	ϕMn = n/a	**Pass**

Base Plate Summary

Max Stress (ksi):	28.93	(Flexural)
Allowable Stress (ksi):	45	
Stress Rating:	**61.2%**	**Pass**

Pier and Pad Foundation

BU # :	857013
Site Name:	Killingly Ross Road
App. Number:	605540 Rev. 0

TIA-222 Revision:	H
Tower Type:	Monopole

Top & Bot. Pad Rein. Different?:	☐
Block Foundation?:	☐
Rectangular Pad?:	☐

Superstructure Analysis Reactions

Compression, P_{comp}:	59.82	kips
Base Shear, Vu_comp:	25.48	kips
Moment, M_u:	2233.59	ft-kips
Tower Height, **H**:	119	ft
BP Dist. Above Fdn, bp_{dist}:	3.25	in

Foundation Analysis Checks

	Capacity	Demand	Rating*	Check
Lateral (Sliding) (kips)	363.06	25.48	**6.7%**	**Pass**
Bearing Pressure (ksf)	11.25	1.92	**16.3%**	**Pass**
*Overturning (kip*ft)*	7525.21	2431.59	**32.3%**	**Pass**
*Pier Flexure (Comp.) (kip*ft)*	7576.59	2348.25	**29.5%**	**Pass**
Pier Compression (kip)	18370.97	90.99	**0.5%**	**Pass**
*Pad Flexure (kip*ft)*	2730.73	827.01	**28.8%**	**Pass**
Pad Shear - 1-way (kips)	776.40	127.95	**15.7%**	**Pass**
Pad Shear - 2-way (Comp) (ksi)	0.164	0.027	**15.7%**	**Pass**
*Flexural 2-way (Comp) (kip*ft)*	3437.16	1408.95	**39.0%**	**Pass**

**Rating per TIA-222-H Section 15.5*

Structural Rating*:	**39.0%**
Soil Rating*:	**32.3%**

Pier Properties

Pier Shape:	Circular	
Pier Diameter, **dpier**:	7	ft
Ext. Above Grade, **E**:	0.5	ft
Pier Rebar Size, **Sc**:	10	
Pier Rebar Quantity, **mc**:	39	
Pier Tie/Spiral Size, **St**:	3	
Pier Tie/Spiral Quantity, **mt**:	4	
Pier Reinforcement Type:	Tie	
Pier Clear Cover, cc_{pier}:	3	in

Pad Properties

Depth, **D**:	7	ft
Pad Width, W_1:	25	ft
Pad Thickness, **T**:	3	ft
Pad Rebar Size (Bottom dir. 2), Sp_2:	8	
Pad Rebar Quantity (Bottom dir. 2), mp_2:	25	
Pad Clear Cover, cc_{pad}:	3	in

Material Properties

Rebar Grade, **Fy**:	60	ksi
Concrete Compressive Strength, **F'c**:	3	ksi
Dry Concrete Density, δ**c**:	150	pcf

Soil Properties

Total Soil Unit Weight, γ:	130	pcf
Ultimate Gross Bearing, Qult:	15.000	ksf
Cohesion, **Cu**:	0.000	ksf
Friction Angle, φ:	38	degrees
SPT Blow Count, N_{blows}:		
Base Friction, μ:	0.45	
Neglected Depth, **N**:	4.17	ft
Foundation Bearing on Rock?	No	
Groundwater Depth, **gw**:	N/A	ft

<--Toggle between Gross and Net

ASCE 7 Hazards Report

Address:
No Address at This Location

Standard: ASCE/SEI 7-16
Risk Category: II
Soil Class: D - Stiff Soil

Elevation: 452.89 ft (NAVD 88)
Latitude: 41.771553
Longitude: -71.855664

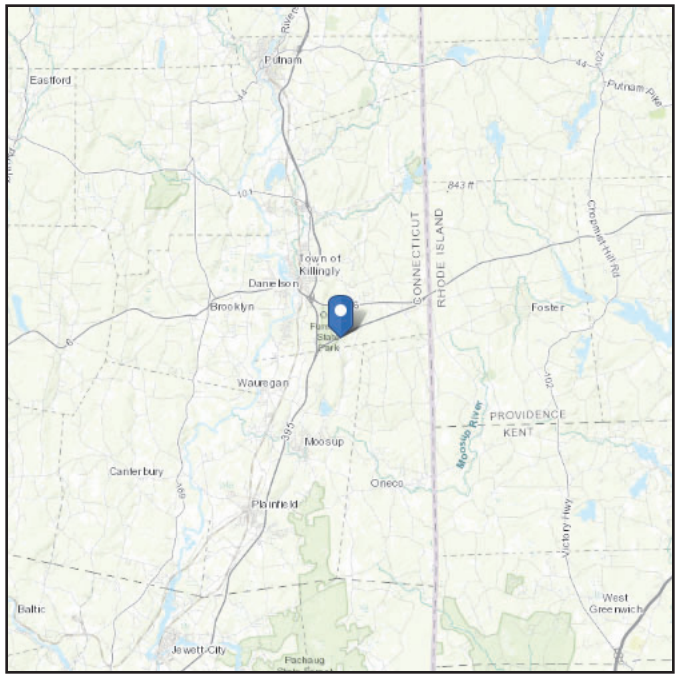

Wind

Results:

Wind Speed	123 Vmph
10-year MRI	75 Vmph
25-year MRI	85 Vmph
50-year MRI	95 Vmph
100-year MRI	100 Vmph

Data Source:	ASCE/SEI 7-16, Fig. 26.5-1B and Figs. CC.2-1–CC.2-4, and Section 26.5.2
Date Accessed:	Fri Feb 18 2022

Value provided is 3-second gust wind speeds at 33 ft above ground for Exposure C Category, based on linear interpolation between contours. Wind speeds are interpolated in accordance with the 7-16 Standard. Wind speeds correspond to approximately a 7% probability of exceedance in 50 years (annual exceedance probability = 0.00143, MRI = 700 years).

Site is in a hurricane-prone region as defined in ASCE/SEI 7-16 Section 26.2. Glazed openings need not be protected against wind-borne debris.

Seismic

Site Soil Class: D - Stiff Soil

Results:

S_S :	0.186	S_{D1} :	0.087
S_1 :	0.054	T_L :	6
F_a :	1.6	PGA :	0.101
F_v :	2.4	PGA_M :	0.161
S_{MS} :	0.297	F_{PGA} :	1.599
S_{M1} :	0.13	I_e :	1
S_{DS} :	0.198	C_v :	0.7

Seismic Design Category B

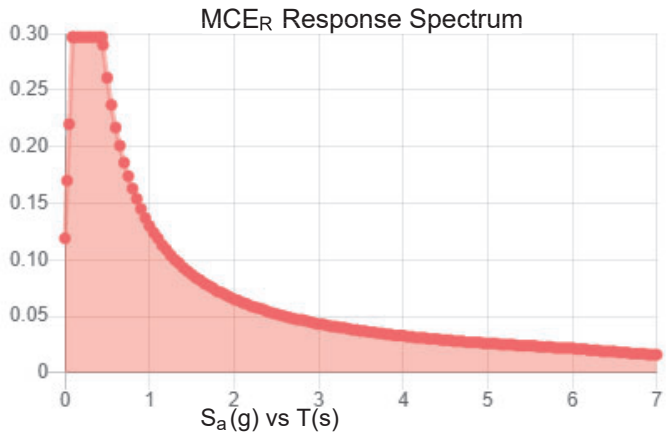

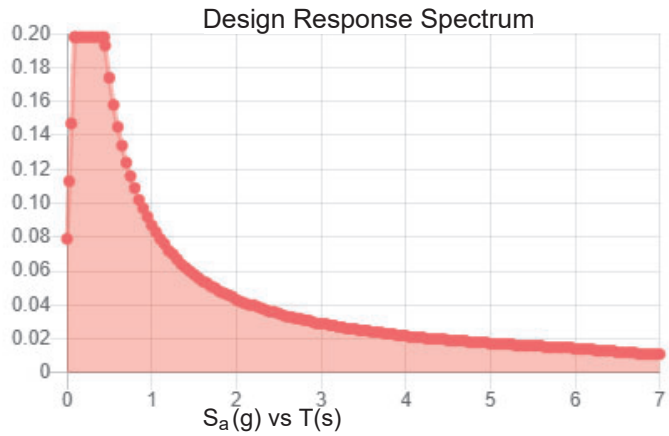

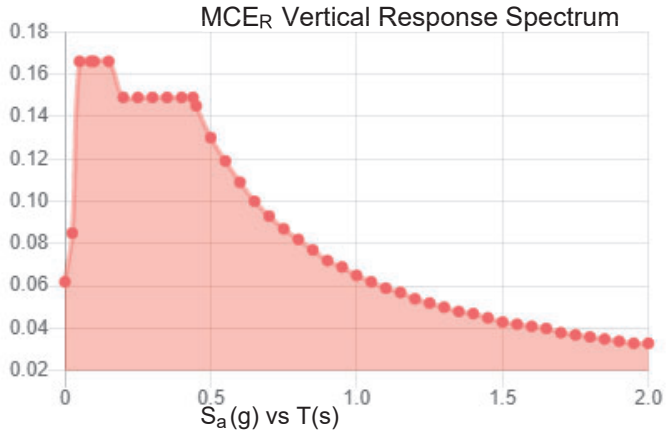

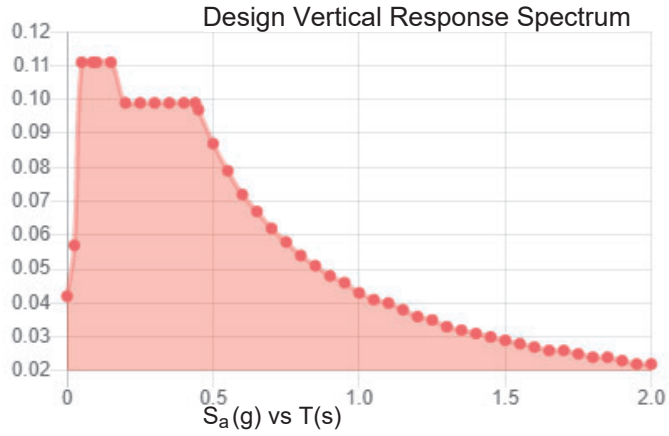

Data Accessed: **Fri Feb 18 2022**

Date Source:

USGS Seismic Design Maps based on ASCE/SEI 7-16 and ASCE/SEI 7-16 Table 1.5-2. Additional data for site-specific ground motion procedures in accordance with ASCE/SEI 7-16 Ch. 21 are available from USGS.

Ice

Results:

Ice Thickness:	1.00 in.
Concurrent Temperature:	15 F
Gust Speed	50 mph
Data Source:	Standard ASCE/SEI 7-16, Figs. 10-2 through 10-8
Date Accessed:	Fri Feb 18 2022

Ice thicknesses on structures in exposed locations at elevations higher than the surrounding terrain and in valleys and gorges may exceed the mapped values.

Values provided are equivalent radial ice thicknesses due to freezing rain with concurrent 3-second gust speeds, for a 500-year mean recurrence interval, and temperatures concurrent with ice thicknesses due to freezing rain. Thicknesses for ice accretions caused by other sources shall be obtained from local meteorological studies. Ice thicknesses in exposed locations at elevations higher than the surrounding terrain and in valleys and gorges may exceed the mapped values.

The ASCE 7 Hazard Tool is provided for your convenience, for informational purposes only, and is provided “as is” and without warranties of any kind. The location data included herein has been obtained from information developed, produced, and maintained by third party providers; or has been extrapolated from maps incorporated in the ASCE 7 standard. While ASCE has made every effort to use data obtained from reliable sources or methodologies, ASCE does not make any representations or warranties as to the accuracy, completeness, reliability, currency, or quality of any data provided herein. Any third-party links provided by this Tool should not be construed as an endorsement, affiliation, relationship, or sponsorship of such third-party content by or from ASCE.

ASCE does not intend, nor should anyone interpret, the results provided by this Tool to replace the sound judgment of a competent professional, having knowledge and experience in the appropriate field(s) of practice, nor to substitute for the standard of care required of such professionals in interpreting and applying the contents of this Tool or the ASCE 7 standard.

In using this Tool, you expressly assume all risks associated with your use. Under no circumstances shall ASCE or its officers, directors, employees, members, affiliates, or agents be liable to you or any other person for any direct, indirect, special, incidental, or consequential damages arising from or related to your use of, or reliance on, the Tool or any information obtained therein. To the fullest extent permitted by law, you agree to release and hold harmless ASCE from any and all liability of any nature arising out of or resulting from any use of data provided by the ASCE 7 Hazard Tool.

Exhibit E

Mount Analysis

Maser Consulting Connecticut
1055 Washington Boulevard
Stamford, CT 06901
215.962.5934
peter.albano@colliersengineering.com

Post-Modification Antenna Mount Analysis Report and PMI Requirements

Mount Fix

SMART Tool Project #: 10117167
Maser Consulting Connecticut Project #: 21777993A

November 23, 2021

Site Information	*Site ID:*	*535822-VZW / DANIELSON SOUTH CT*
	Site Name:	*DANIELSON SOUTH CT*
	Carrier Name:	*Verizon Wireless*
	Address:	*280 Ross Rd* *Killingly, Connecticut 06439* *Windham County*
	Latitude:	*41.771544°*
	Longitude:	*-71.855658°*
Structure Information	*Tower Type:*	*120-Ft Monopole*
	Mount Type:	*12.50-Ft Platform*

FUZE ID # 16272076

Analysis Results

Platform: **56.9% Pass**

******Contractor PMI Requirements*:**
Included at the end of this MA report
Available & Submitted via portal at https://pmi.vzwsmart.com
Contractor - Please Review Specific Site PMI Requirements Upon Award
Requirements also Noted on Mount Modification Drawings
Requirements may also be Noted on A & E drawings
For additional questions and support, please reach out to:
pmisupport@colliersengineering.com

11/23/21

STATE OF CONNECTICUT
DEREK R HARTZELL
32710
LICENSED
PROFESSIONAL ENGINEER

Report Prepared By: Selene Chen

Executive Summary:

The objective of this report is to summarize the analysis results of the antenna support mount including the proposed modifications at the subject facility for the final wireless telecommunications configuration, per the applicable codes and standards.

This analysis is inclusive of the mount structure only and does not address the structural capacity of the supporting structure. This mounting frame was not analyzed as an anchor attachment point for fall protection. All climbing activities are required to have a fall protection plan completed by a competent person.

Sources of Information:

Document Type	Remarks
Radio Frequency Data Sheet (RFDS)	*Verizon RFDS Site ID: 478413, Dated October 11, 2021*
Mount Mapping Report	*Hudson Design Group, LLC, Site ID #: 535822 dated November 2, 2021*
Mount Analysis Report	*Maser Consulting, Project #: 21777993A, dated November 15, 2021*
Mount Modification Drawings	*Maser Consulting, Project #: 21777993A, dated November 23, 2021*

Analysis Criteria:

Codes and Standards:	ANSI/TIA-222-H	
Wind Parameters:	Basic Wind Speed (Ultimate 3-sec. Gust), V_{ULT}:	123 mph
	Ice Wind Speed (3-sec. Gust):	50 mph
	Design Ice Thickness:	1.00 in
	Risk Category:	II
	Exposure Category:	B
	Topographic Category:	1
	Topographic Feature Considered:	N/A
	Topographic Method:	N/A
	Ground Elevation Factor, K_e:	0.984
Seismic Parameters:	S_S:	0.186 g
	S_1:	0.054 g
Maintenance Parameters:	Wind Speed (3-sec. Gust):	30 mph
	Maintenance Live Load, Lv:	250 lbs.
	Maintenance Live Load, Lm:	500 lbs.
Analysis Software:	RISA-3D (V17)	

Final Loading Configuration:

The following equipment has been considered for the analysis of the mount:

Mount Elevation (ft)	Equipment Elevation (ft)	Quantity	Manufacturer	Model	Status
98.00	100.00	6	Antel	LPA-80080/6CF	Retained
		1	Raycap	OVP 6	
		6	Commscope	JAHH-65B-R3B	Added
		3	Samsung	MT6407-77A	
		3	Commscope	CBC78T-DS-43-2X	
		1	Raycap	DB-B1-6C-12AB-0Z	
		3	Samsung	RF4439d-25A	
		3	Samsung	RF4440d-13A	

It is acceptable to install up to any three (3) of the OVP model numbers listed below as required at any location other than the mount face without affecting the structural capacity of the mount. If OVP units are installed on the mount face, a mount re-analysis may be required unless replacing an existing OVP.

Model Number	Ports	AKA
DB-B1-6C-12AB-0Z	6	OVP-6
RVZDC-6627-PF-48	12	OVP-12

Standard Conditions:

1. All engineering services are performed on the basis that the information provided to Maser Consulting and used in this analysis is current and correct. The existing equipment loading has been applied at locations determined from the supplied documentation. Any deviation from the loading locations specified in this report shall be communicated to Maser Consulting to verify deviation will not adversely impact the analysis.

2. Mounts are assumed to have been properly fabricated, installed and maintained in good condition, twist free and plumb in accordance with its original design and manufacturer's specifications.

   Obvious safety and structural issues/deficiencies noticed at the time of the mount mapping and reported in the Mount Mapping Report are assumed to be corrected and documented as part of the PMI process and are not considered in the mount analysis.

   The mount analysis and the mount mapping are not a condition assessment of the mount. Proper maintenance and condition assessments are still required post analysis.

3. For mount analyses completed from other data sources (including new replacement mounts) and not specifically mapped in accordance with the NSTD-446 Standard, the mounts are assumed to have been properly fabricated, installed and maintained in good condition, twist free and plumb in accordance with its original design and manufacturer's specifications.

4. All member connections are assumed to have been designed to meet or exceed the load carrying capacity of the connected member unless otherwise specified in this report.

5. The mount was checked up to, and including, the bolts that fasten it to the mount collar/attachment and threaded rod connections in collar members if applicable. Local deformation and interaction between the mount collar/attachment and the supporting tower structure are outside the scope of this analysis.

6. All services are performed, results obtained, and recommendations made in accordance with generally accepted engineering principles and practices. Maser Consulting is not responsible for the conclusion, opinions, and recommendations made by others based on the information supplied.

7. Structural Steel Grades have been assumed as follows, if applicable, unless otherwise noted in this analysis:
   - Channel, Solid Round, Angle, Plate — ASTM A36 (Gr. 36)
   - HSS (Rectangular) — ASTM 500 (Gr. B-46)
   - Pipe — ASTM A53 (Gr. B-35)
   - Threaded Rod — F1554 (Gr. 36)
   - Bolts — ASTM A325

8. Any mount modifications listed under Sources of Information are assumed to have been installed per the design specifications.

Discrepancies between in-field conditions and the assumptions listed above may render this analysis invalid unless explicitly approved by Maser Consulting Connecticut.

Analysis Results:

Component	Utilization %	Pass/Fail
Face Horizontal	*7.4 %*	*Pass*
Standoff Horizontal	*27.2 %*	*Pass*
Platform Crossmember	*54.2 %*	*Pass*
Mount Pipe	*25.2 %*	*Pass*
Corner Plate	*31.5 %*	*Pass*
Grating Support	*40.3 %*	*Pass*
Cross Arm Plate	*19.9 %*	*Pass*
Support Rail	*23.6 %*	*Pass*
Support Rail Angle	*30.1 %*	*Pass*
Support Bracing Kit	*6.7 %*	*Pass*
Connection Check	*56.9 %*	*Pass*

Structure Rating – *(Controlling Utilization of all Components)*	**56.9%**

Recommendation:

The existing mount will be **SUFFICIENT** for the final loading after the proposed modifications are successfully completed.

ANSI/ASSP rigging plan review services compliant with the requirements of ANSI/TIA 322 are available for a Construction Class IV site or other, if required. Separate review fees will apply.

Attachments:

1. Mount Photos
2. Mount Mapping Report (for reference only)
3. Analysis Calculations
4. **Contractor Required PMI Report Deliverables**
5. Antenna Placement Diagrams
6. TIA Adoption and Wind Speed Usage Letter

V4.0 Updated on 3-31-2021

Antenna Mount Mapping Form (PATENT PENDING)

			FCC #
Tower Owner:	CROWN	**Mapping Date:**	11/2/2021
Site Name:	DANIELSON SOUTH CT	**Tower Type:**	Monopole
Site Number or ID:	535822	**Tower Height (Ft.):**	120
Mapping Contractor:	HUDSON DESIGN GROUP, LLC.	**Mount Elevation (Ft.):**	98.41

This antenna mapping form is the property of TES and under PATENT PENDING. The formation contained herein is considered confidential in nature and is to be used only for the specific customer it was intended for. Reproduction, transmission, publication, modification or disclosure by any method is prohibited except by express written permission of TES. All means and methods are the responsibility of the contractor and the work shall be compliant with ANSI/ASSE A 10.48, OSHA, FCC, FAA and other safety requirements that may apply. TES is not warrantying the usability of the safety climb as it must be assessed prior to each use in compliance with OSHA requirements.

Please insert the sketches of the antenna mount from the "Sketches" tab with dimensions and members here.

Mount Pipe Configuration and Geometries [Unit = Inches]

Sector / Position	Mount Pipe Size & Length	Vertical Offset Dimension "u"	Horizontal Offset "C1, C2, C3, etc."	Sector / Position	Mount Pipe Size & Length	Vertical Offset Dimension "u"	Horizontal Offset "C1, C2, C3, etc."
A1	2.375"Ø X .188" WALL X 72" LON	42.00	17.00	C1	2.375"Ø X .188" WALL X 72" LONG	42.00	17.00
A2	2.375"Ø X .188" WALL X 72" LON	42.00	32.00	C2	2.375"Ø X .188" WALL X 72" LONG	42.00	32.00
A3	2.375"Ø X .125" WALL X 85.5" LO	47.00	49.00	C3	2.375"Ø X .125" WALL X 85.5" LONG	47.00	49.00
A4	2.375"Ø X .125" WALL X 85.5" LO	47.00	97.00	C4	2.375"Ø X .125" WALL X 85.5" LONG	47.00	97.00
A5	2.375"Ø X .188" WALL X 72" LON	42.00	114.00	C5	2.375"Ø X .188" WALL X 72" LONG	42.00	114.00
A6	2.375"Ø X .188" WALL X 72" LON	42.00	131.00	C6	2.375"Ø X .188" WALL X 72" LONG	42.00	131.00
B1	2.375"Ø X .188" WALL X 72" LON	42.00	17.00	D1			
B2	2.375"Ø X .188" WALL X 72" LON	42.00	32.00	D2			
B3	2.375"Ø X .125" WALL X 85.5" LO	47.00	49.00	D3			
B4	2.375"Ø X .125" WALL X 85.5" LO	47.00	97.00	D4			
B5	2.375"Ø X .188" WALL X 72" LON	42.00	114.00	D5			
B6	2.375"Ø X .188" WALL X 72" LON	42.00	131.00	D6			

Distance between bottom rail and mount CL elevation (dim d). Unit is inches. See 'Mount Elev Ref' tab for details. :	
Distance from top of bottom support rail to lowest tip of ant./eqpt. of Carrier above. (N/A if > 10 ft.) :	5.83
Distance from top of bottom support rail to highest tip of ant./eqpt. of Carrier below. (N/A if > 10 ft.) :	

Please enter additional infomation or comments below.

POS. 6 MAST WILL BE LISTED ON THE "ANT ON STANDOFF" LINE

Tower Face Width at Mount Elev. (ft.):		Tower Leg Size or Pole Shaft Diameter at Mount Elev. (in.):	25.75
For T-Arms/Platforms on monopoles, report the weld size from the main standoff to the plate bolting into the collar mount.			0.375

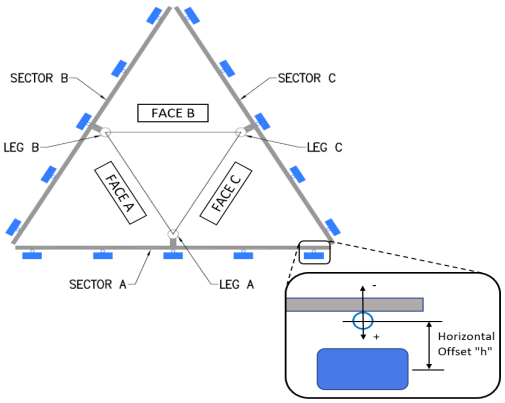

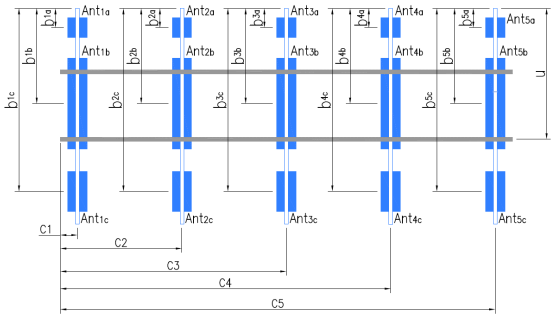

Antenna Layout (Looking Out From Tower)

Ants. Items	Enter antenna model. If not labeled, enter "Unknown". Antenna Models if Known	Width (in.)	Depth (in.)	Height (in.)	Coax Size and Qty	Antenna Center-line (Ft.)	Mounting Locations [Units are inches and degrees] Vertical Distances"b_{1a}, b_{2a}, b_{3a}, b_{1b}...." (Inches)	Horiz. Offset "h" (Use "-" if Ant. is behind)	Antenna Azimuth (Degrees)	Photos of antennas Photo Numbers
Sector A										
Ant_{1a}										
Ant_{1b}	LPA-80080/6CF	6.00	14.00	71.00		98.91	36.00	14.00	60.00	23,44,54
Ant_{1c}										
Ant_{2a}	G-1900 RRU	12.00	7.00	25.50		100.41	18.00	-7.00		23,48,54
Ant_{2b}										
Ant_{2c}										
Ant_{3a}										
Ant_{3b}	SBHNN-1D65B	12.00	7.50	73.00		98.5767	45.00	9.00	60.00	23,45,54
Ant_{3c}										
Ant_{4a}										
Ant_{4b}	SBHNN-1D65B	12.00	7.50	73.00		98.5767	45.00	9.00	60.00	24,46,56
Ant_{4c}										
Ant_{5a}	B13 RRH4X30	12.00	7.50	20.50		100.41	18.00	-7.00		24,49,56
Ant_{5b}										
Ant_{5c}										
Ant on Standoff	LPA-80080/6CF	6.00	14.00	71.00		98.91	36.00	14.00	60.00	24,47,56
Ant on Standoff										
Ant on Tower										
Ant on Tower										

Mount Azimuth (Degree) for Each Sector			Tower Leg Azimuth (Degree) for Each Sector	
Sector A:	60.00	Deg	Leg A:	Deg
Sector B:	180.00	Deg	Leg B:	Deg
Sector C:	300.00	Deg	Leg C:	Deg
Sector D:		Deg	Leg D:	Deg

Climbing Facility Information			
Location:	188.00	Deg	N/A
Climbing Facility	Corrosion Type:		N/A
	Access:		Climbing path was unobstructed.
	Condition:		Good condition.

Please insert a photo of the mount centerline measurement here.

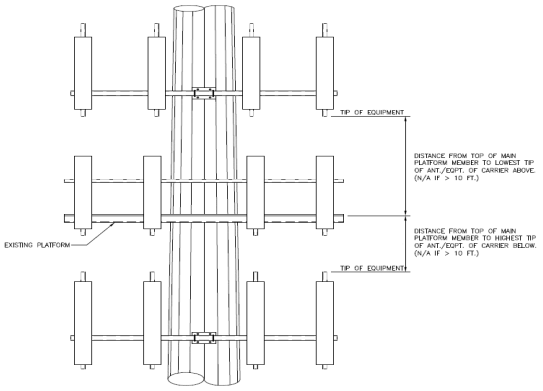

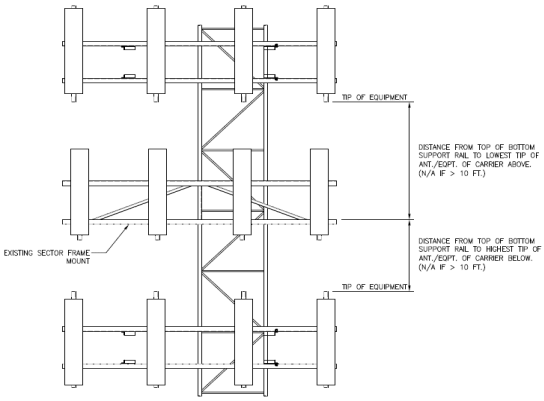

For T-Arms/Platforms on monopoles, record the weld size from the main standoff member to the plate bolting into the collar. See below for reference.

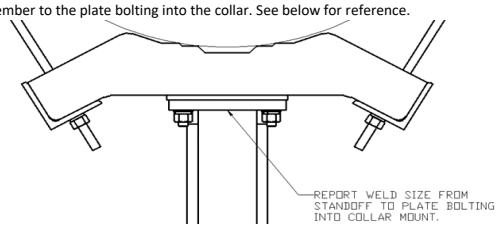

Sector B										
Ant_{1a}										
Ant_{1b}	LPA-80080/6CF	6.00	14.00	71.00		98.91	36.00	14.00	180.00	30,44,58
Ant_{1c}										
Ant_{2a}	G-1900 RRU	12.00	7.00	25.50		100.41	18.00	-7.00		30,48,58
Ant_{2b}										
Ant_{2c}										
Ant_{3a}										
Ant_{3b}	SBHNN-1D65B	12.00	7.50	73.00		98.5767	45.00	9.00	180.00	30,45,58
Ant_{3c}										
Ant_{4a}										
Ant_{4b}	SBHNN-1D65B	12.00	7.50	73.00		98.5767	45.00	9.00	180.00	31,46,60
Ant_{4c}										
Ant_{5a}	B13 RRH4X30	12.00	7.50	20.50		100.41	18.00	-7.00		32,49,60
Ant_{5b}										
Ant_{5c}										
Ant on Standoff	LPA-80080/6CF	6.00	14.00	71.00		98.91	36.00	14.00	180.00	32,47,60
Ant on Standoff										
Ant on Tower										
Ant on Tower										
Sector C										
Ant_{1a}										
Ant_{1b}	LPA-80080/6CF	6.00	14.00	71.00		98.91	36.00	14.00	320.00	38,44,62
Ant_{1c}										
Ant_{2a}	G-1900 RRU	12.00	7.00	25.50		100.41	18.00	-7.00		38,48,62
Ant_{2b}										
Ant_{2c}										
Ant_{3a}										
Ant_{3b}	SBHNN-1D65B	12.00	7.50	73.00		98.5767	45.00	9.00	345.00	38,45,62
Ant_{3c}										
Ant_{4a}										
Ant_{4b}	SBHNN-1D65B	12.00	7.50	73.00		98.5767	45.00	9.00	345.00	40,46,64
Ant_{4c}										
Ant_{5a}	B13 RRH4X30	12.00	7.50	20.50		100.41	18.00	-7.00		40,49,64
Ant_{5b}										
Ant_{5c}										
Ant on Standoff	LPA-80080/6CF	6.00	14.00	71.00		98.91	36.00	14.00	320.00	40,47,64
Ant on Standoff										
Ant on Tower										
Ant on Tower										
Sector D										
Ant_{1a}										
Ant_{1b}										
Ant_{1c}										
Ant_{2a}										
Ant_{2b}										
Ant_{2c}										
Ant_{3a}										
Ant_{3b}										
Ant_{3c}										
Ant_{4a}										
Ant_{4b}										
Ant_{4c}										
Ant_{5a}										
Ant_{5b}										
Ant_{5c}										
Ant on Standoff										
Ant on Standoff										
Ant on Tower										
Ant on Tower										

Observed Safety and Structural Issues During the Mount Mapping		
Issue #	Description of Issue	Photo #
1	NO CLIMB SAFETY CABLE INSTALLED, REPLACED WITH STEP BOLT ANCHOR BRACKETS	16-18
2		
3		
4		
5		
6		
7		
8		

Observed Obstructions to Tower Lighting System				
If the tower lighting system is being obstructed by the carrier's equipment (for example: a light nested by the antennas), please provide photos and fill in the information below.				Photo #
Description of Obstruction:				
Type of Light:		Photo #		Additional Comments:
Lighting Technology:		Photo #		
Elevation (AGL) at base of light (Ft.):		Photo #		
Is a service loop available?		Photo #		
Is beacon installed on an extension?		Photo #		

Mapping Notes
1. Please report any visible structural or safety issues observed on the antenna mounts (Damaged members, loose connections, tilting mounts, safety climb issues, etc.)
2. If the thickness of the existing pipes or tubing can't be obtained from a general tool (such as Caliper), please use an ultrasonic measurement tool (thickness gauge) to measure the thickness.
3. Please create all required detail sketches of the mounts and insert them into the "Sketches" tab.
4. Please measure and enter the bolt sizes and types under the Members Box in the spreadsheet of the mount type.
5. Take and label the photos of the tower, mounts, connections, antennas and all measurements. Minimum 50 photos are required.
6. Please measure and report the size and length of all existing antenna mounting pipes.
7. Please measure and report the antenna information for all sectors.
8. Don't delete or rearrange any sheet or contents of any sheet from this mapping form.

Standard Conditions
1. Obvious safety and structural issues/deficiencies noticed at the time of the mount mapping are to be reported in this mapping. However, this mount mapping is not a condition assessment of the mount.

V4.0 Updated on 3-31-2021

Antenna Mount Mapping Form (PATENT PENDING)

FCC #

Tower Owner:	CROWN	**Mapping Date:**	11/2/2021
Site Name:	DANIELSON SOUTH CT	**Tower Type:**	Monopole
Site Number or ID:	535822	**Tower Height (Ft.):**	120
Mapping Contractor:	HUDSON DESIGN GROUP, LLC.	**Mount Elevation (Ft.):**	98.41

This antenna mapping form is the property of TES and under PATENT PENDING. The formation contained herein is considered confidential in nature and is to be used only for the specific customer it was intended for. Reproduction, transmission, publication, modification or disclosure by any method is prohibited except by express written permission of TES. All means and methods are the responsibility of the contractor and the work shall be compliant with ANSI/ASSE A 10.48, OSHA, FCC, FAA and other safety requirements that may apply. TES is not warrantying the usability of the safety climb as it must be assessed prior to each use in compliance with OSHA requirements.

Please Insert Sketches of the Antenna Mount

MOUNT MAPPING CHECKLIST

CARRIER:	COLLIER	SITE #:	Danielson South CT	SITE NAME:	
DATE:	11/2/2021	MAPPED BY:	JC	SITE OWNER:	CROWN CASTLE

DESCRIPTION	STATUS	Value
A: FACE PIPE CONFIG.	☐	ROUND MAST
SIZE		3-1/2"
LENGTH		
B: STAND OFF SIZE	☐	4"x 4"
C: ANTENNA PIPE MAST	☐	1/8"
DIA.		2-3/8"
LENGTH		72"
D: MONOPOLE DIA.	☐	25.75"
E: RINGMOUNT	☐	10-13/16" x 3/8"
F: TOWER TO FACE	☐	37"
G: TOWER TO APEX	☐	68.5"
H: HARDWARE	☐	5/8"Ø
I: U-BOLTS	☐	1/2"Ø
J: A PLATE	☐	6"x 13"x 5.5"x 3/8"
K: B PLATE	☐	6"x 5"x 3.5"x 3/8"
L: ANGLE	☐	2"X2"X3/16"
M: MOUNTING PLATE	☐	10"x 10"x 1/2"
N: ALPHA POS 1	☐	LPA-80080/6CF
ALPHA POS 2	☐	SBNHH-1D65B
ALPHA POS 3	☐	SBNHH-1D65B
ALPHA POS 4	☐	LPA-80080/6CF
ALPHA POS 5		
O: BETA POS 1	☐	
BETA POS 2	☐	
BETA POS 3	☐	
BETA POS 4	☐	
BETA POS 5		
P: GAMMA POS 1	☐	
GAMMA POS 2	☐	
GAMMA POS 3	☐	
GAMMA POS 4	☐	
GAMMA POS 5		
Q: TMA	☐	0
R: RADIOS	☐	6
S: SURGE	☐	1
T: SECOND MOUNT	☐	
COMMENTS:		

Legend

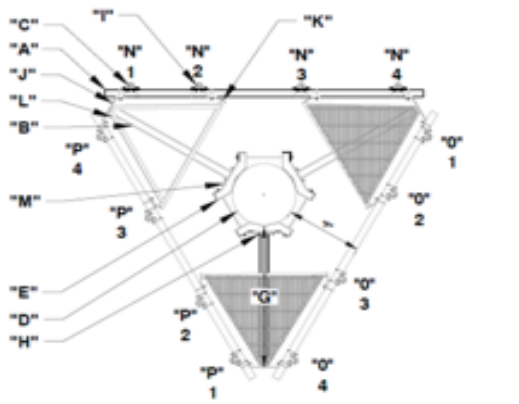

PLAN

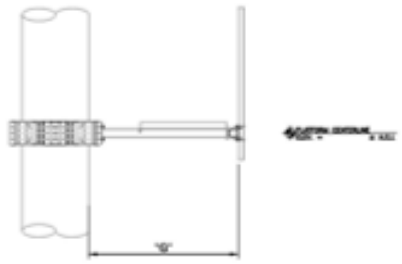

ELEVATION

FACE SKETCH

Please Insert Sketches of the Antenna Mount, cont'd

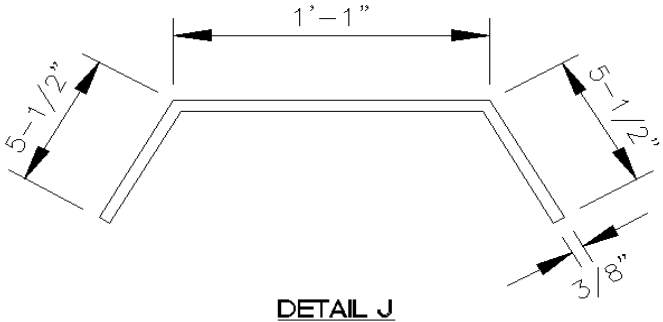

DETAIL J

APEX "A" PLATE DETAIL

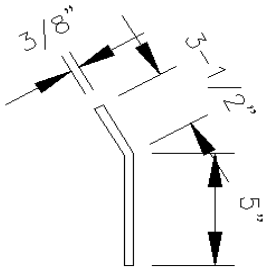

DETAIL K

"B" PLATE DETAIL

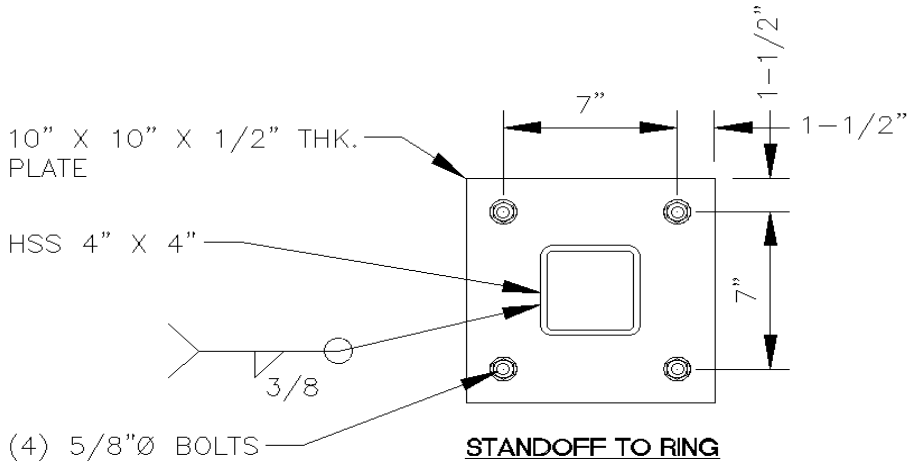

STANDOFF TO RING MOUNT CONNECTION

DETAIL M

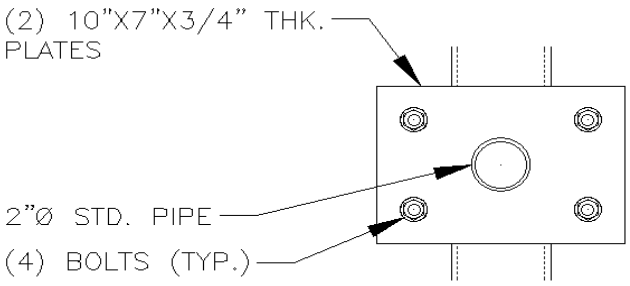

S.O. MOUNT DETAIL

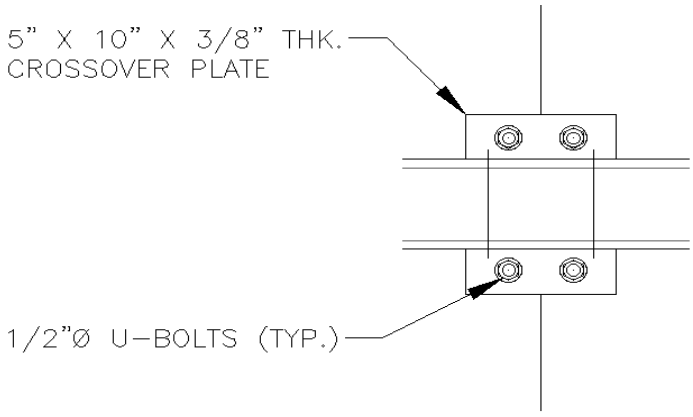

CROSSOVER PLATE DETAIL

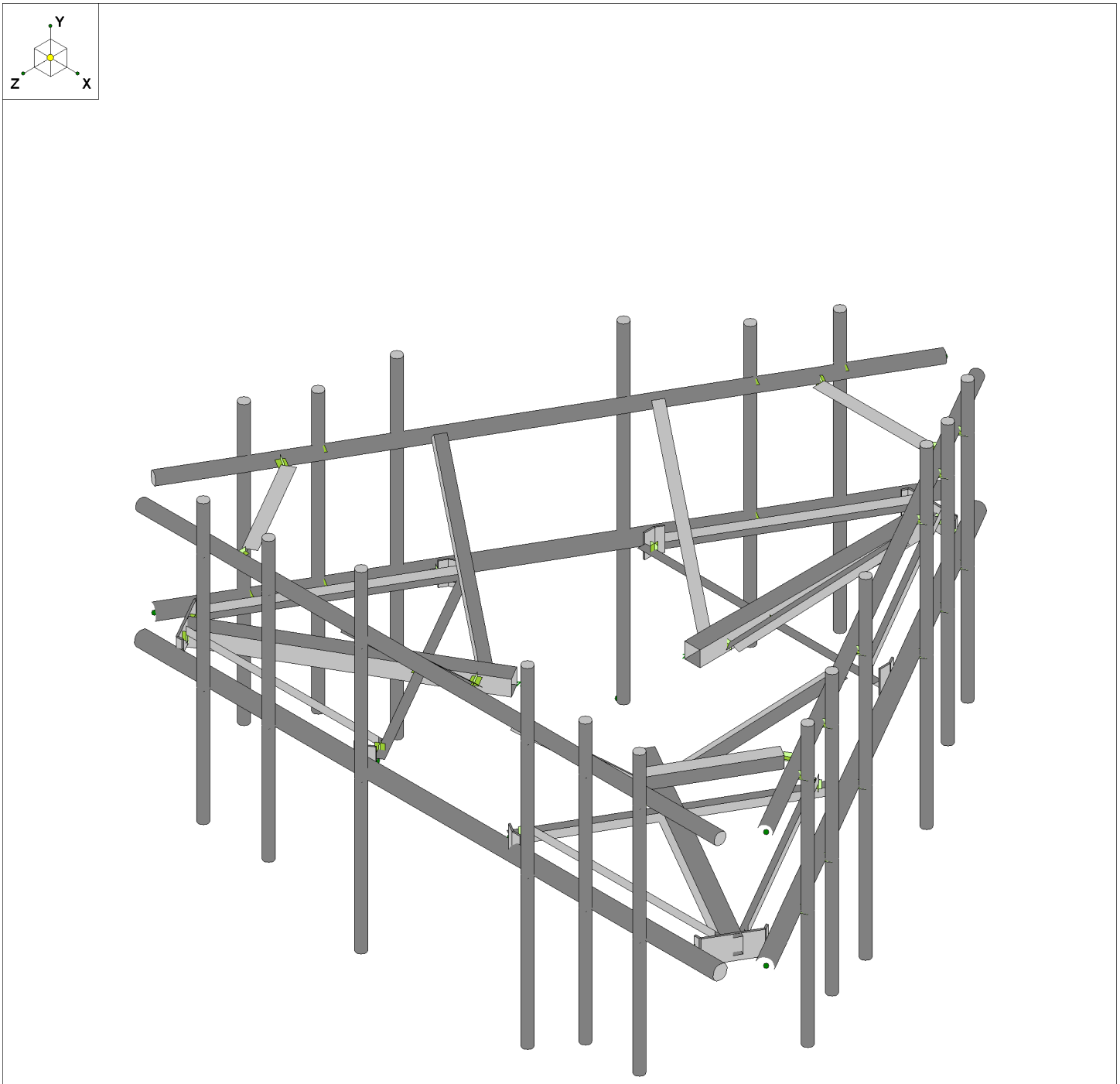

Envelope Only Solution

		SK - 1
		Nov 23, 2021 at 9:40 AM
		UPDATED_535822-VZW_MT_LO_...

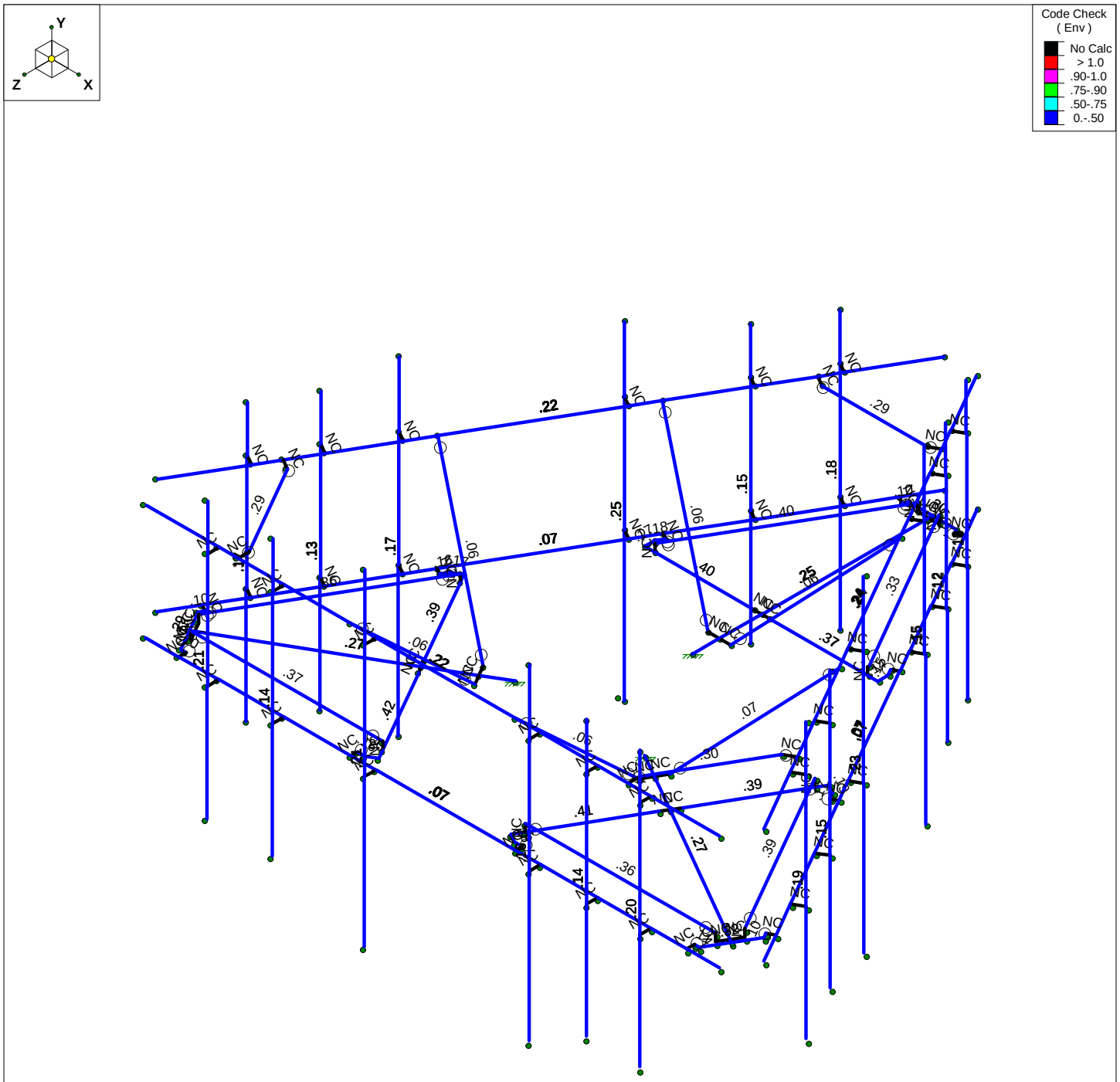

Member Code Checks Displayed (Enveloped)
Envelope Only Solution

		SK - 2
		Nov 23, 2021 at 9:40 AM
		UPDATED_535822-VZW_MT_LO_...

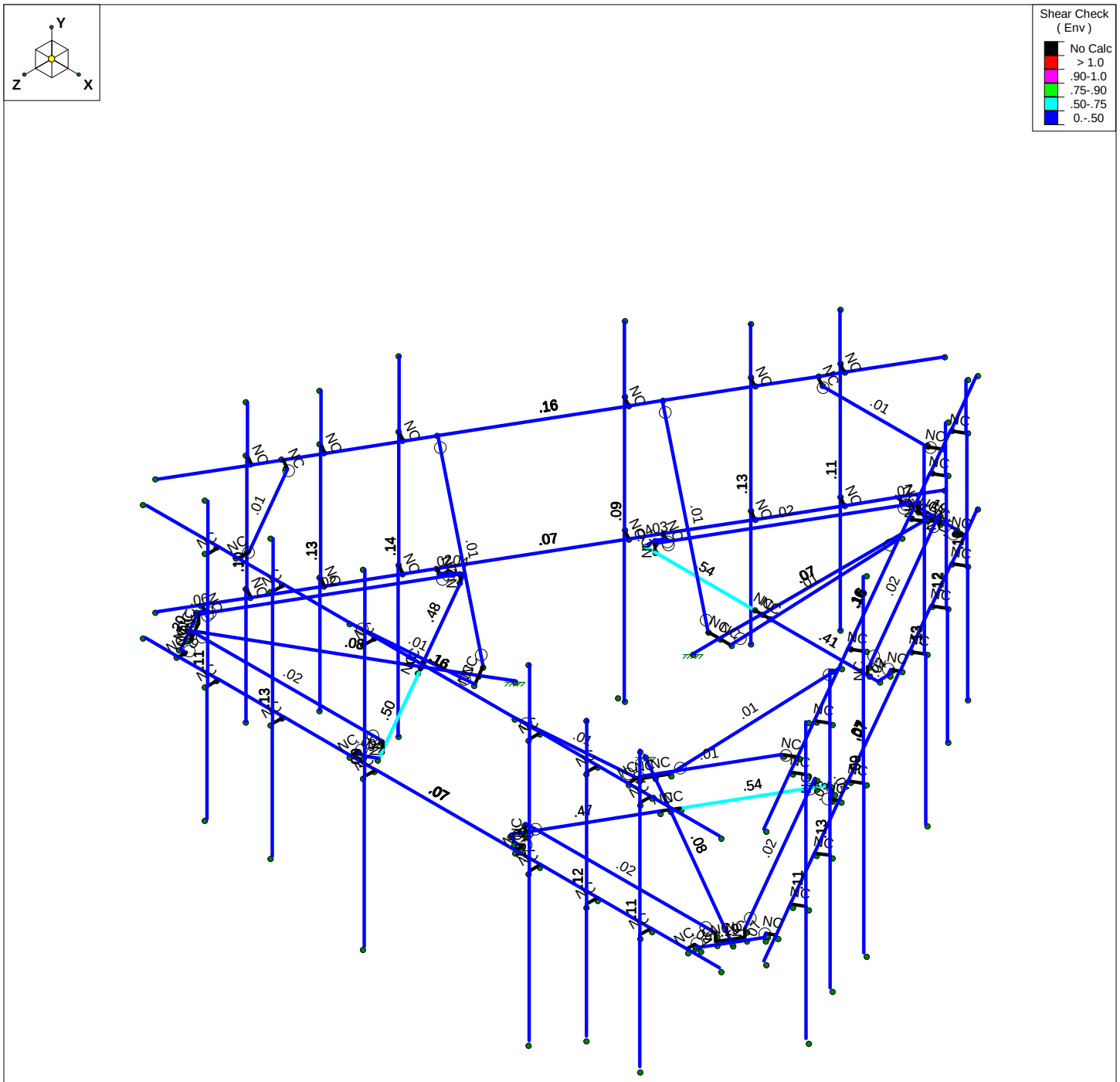

Member Shear Checks Displayed (Enveloped)
Envelope Only Solution

		SK - 3
		Nov 23, 2021 at 9:40 AM
		UPDATED_535822-VZW_MT_LO_...

Basic Load Cases

	BLC Description	Category	X Gravity	Y Gravity	Z Gravity	Joint	Point	Distributed	Area(Me...	Surface(P...
1	Antenna D	None					123			
2	Antenna Di	None					123			
3	Antenna Wo (0 Deg)	None					123			
4	Antenna Wo (30 Deg)	None					123			
5	Antenna Wo (60 Deg)	None					123			
6	Antenna Wo (90 Deg)	None					123			
7	Antenna Wo (120 Deg)	None					123			
8	Antenna Wo (150 Deg)	None					123			
9	Antenna Wo (180 Deg)	None					123			
10	Antenna Wo (210 Deg)	None					123			
11	Antenna Wo (240 Deg)	None					123			
12	Antenna Wo (270 Deg)	None					123			
13	Antenna Wo (300 Deg)	None					123			
14	Antenna Wo (330 Deg)	None					123			
15	Antenna Wi (0 Deg)	None					123			
16	Antenna Wi (30 Deg)	None					123			
17	Antenna Wi (60 Deg)	None					123			
18	Antenna Wi (90 Deg)	None					123			
19	Antenna Wi (120 Deg)	None					123			
20	Antenna Wi (150 Deg)	None					123			
21	Antenna Wi (180 Deg)	None					123			
22	Antenna Wi (210 Deg)	None					123			
23	Antenna Wi (240 Deg)	None					123			
24	Antenna Wi (270 Deg)	None					123			
25	Antenna Wi (300 Deg)	None					123			
26	Antenna Wi (330 Deg)	None					123			
27	Antenna Wm (0 Deg)	None					123			
28	Antenna Wm (30 Deg)	None					123			
29	Antenna Wm (60 Deg)	None					123			
30	Antenna Wm (90 Deg)	None					123			
31	Antenna Wm (120 De...	None					123			
32	Antenna Wm (150 De...	None					123			
33	Antenna Wm (180 De...	None					123			
34	Antenna Wm (210 De...	None					123			
35	Antenna Wm (240 De...	None					123			
36	Antenna Wm (270 De...	None					123			
37	Antenna Wm (300 De...	None					123			
38	Antenna Wm (330 De...	None					123			
39	Structure D	None		-1					3	
40	Structure Di	None						69	3	
41	Structure Wo (0 Deg)	None						138		
42	Structure Wo (30 Deg)	None						138		
43	Structure Wo (60 Deg)	None						138		
44	Structure Wo (90 Deg)	None						138		
45	Structure Wo (120 D...	None						138		
46	Structure Wo (150 D...	None						138		
47	Structure Wo (180 D...	None						138		
48	Structure Wo (210 D...	None						138		
49	Structure Wo (240 D...	None						138		
50	Structure Wo (270 D...	None						138		
51	Structure Wo (300 D...	None						138		

Basic Load Cases (Continued)

	BLC Description	Category	X Gravity	Y Gravity	Z Gravity	Joint	Point	Distributed	Area(Me...	Surface(P...
52	Structure Wo (330 D...	None						138		
53	Structure Wi (0 Deg)	None						138		
54	Structure Wi (30 Deg)	None						138		
55	Structure Wi (60 Deg)	None						138		
56	Structure Wi (90 Deg)	None						138		
57	Structure Wi (120 De...	None						138		
58	Structure Wi (150 De...	None						138		
59	Structure Wi (180 De...	None						138		
60	Structure Wi (210 De...	None						138		
61	Structure Wi (240 De...	None						138		
62	Structure Wi (270 De...	None						138		
63	Structure Wi (300 De...	None						138		
64	Structure Wi (330 De...	None						138		
65	Structure Wm (0 Deg)	None						138		
66	Structure Wm (30 D...	None						138		
67	Structure Wm (60 D...	None						138		
68	Structure Wm (90 D...	None						138		
69	Structure Wm (120 ...	None						138		
70	Structure Wm (150 ...	None						138		
71	Structure Wm (180 ...	None						138		
72	Structure Wm (210 ...	None						138		
73	Structure Wm (240 ...	None						138		
74	Structure Wm (270 ...	None						138		
75	Structure Wm (300 ...	None						138		
76	Structure Wm (330 ...	None						138		
77	Lm1	None					1			
78	Lm2	None					1			
79	Lv1	None					1			
80	Lv2	None					1			
81	Antenna Ev	None					123			
82	Antenna Eh (0 Deg)	None					82			
83	Antenna Eh (90 Deg)	None					82			
84	Structure Ev	ELY		-.022					1	
85	Structure Eh (0 Deg)	ELZ	-.056							
86	Structure Eh (90 Deg)	ELX			.056					
87	BLC 39 Transient Are...	None						30		
88	BLC 40 Transient Are...	None						30		

Load Combinations

	Description	Solve	PDelta	S...	BLC	Fac...	BLC	Fac...	BLC	Fac...	BLC	Fac...	BLC	Fac...	BLC	Fac...	BLC	Fac...	BLC	Fac...	BLC	Fac...	BLC	Fac...
1	1.2D+1.0Wo (0...	Yes	Y		1	1.2	39	1.2	3	1	41	1												
2	1.2D+1.0Wo (3...	Yes	Y		1	1.2	39	1.2	4	1	42	1												
3	1.2D+1.0Wo (6...	Yes	Y		1	1.2	39	1.2	5	1	43	1												
4	1.2D+1.0Wo (9...	Yes	Y		1	1.2	39	1.2	6	1	44	1												
5	1.2D+1.0Wo (1...	Yes	Y		1	1.2	39	1.2	7	1	45	1												
6	1.2D+1.0Wo (1...	Yes	Y		1	1.2	39	1.2	8	1	46	1												
7	1.2D+1.0Wo (1...	Yes	Y		1	1.2	39	1.2	9	1	47	1												
8	1.2D+1.0Wo (2...	Yes	Y		1	1.2	39	1.2	10	1	48	1												
9	1.2D+1.0Wo (2...	Yes	Y		1	1.2	39	1.2	11	1	49	1												
10	1.2D+1.0Wo (2...	Yes	Y		1	1.2	39	1.2	12	1	50	1												

Load Combinations (Continued)

	Description	Solve	PDelta	S...	BLC	Fac...	BLC	Fac...	BLC	Fac...	BLC	Fac...	BLC	Fac...	BLC	Fac...	BLC	Fac...	BLC	Fac...	BLC	Fac...	BLC	Fac...
11	1.2D+1.0Wo (3...	Yes	Y		1	1.2	39	1.2	13	1	51	1												
12	1.2D+1.0Wo (3...	Yes	Y		1	1.2	39	1.2	14	1	52	1												
13	1.2D + 1.0Di + ...	Yes	Y		1	1.2	39	1.2	2	1	40	1	15	1	53	1								
14	1.2D + 1.0Di + ...	Yes	Y		1	1.2	39	1.2	2	1	40	1	16	1	54	1								
15	1.2D + 1.0Di + ...	Yes	Y		1	1.2	39	1.2	2	1	40	1	17	1	55	1								
16	1.2D + 1.0Di + ...	Yes	Y		1	1.2	39	1.2	2	1	40	1	18	1	56	1								
17	1.2D + 1.0Di + ...	Yes	Y		1	1.2	39	1.2	2	1	40	1	19	1	57	1								
18	1.2D + 1.0Di + ...	Yes	Y		1	1.2	39	1.2	2	1	40	1	20	1	58	1								
19	1.2D + 1.0Di + ...	Yes	Y		1	1.2	39	1.2	2	1	40	1	21	1	59	1								
20	1.2D + 1.0Di + ...	Yes	Y		1	1.2	39	1.2	2	1	40	1	22	1	60	1								
21	1.2D + 1.0Di + ...	Yes	Y		1	1.2	39	1.2	2	1	40	1	23	1	61	1								
22	1.2D + 1.0Di + ...	Yes	Y		1	1.2	39	1.2	2	1	40	1	24	1	62	1								
23	1.2D + 1.0Di + ...	Yes	Y		1	1.2	39	1.2	2	1	40	1	25	1	63	1								
24	1.2D + 1.0Di + ...	Yes	Y		1	1.2	39	1.2	2	1	40	1	26	1	64	1								
25	1.2D + 1.5Lm1 ...	Yes	Y		1	1.2	39	1.2	77	1.5	27	1	65	1										
26	1.2D + 1.5Lm1 ...	Yes	Y		1	1.2	39	1.2	77	1.5	28	1	66	1										
27	1.2D + 1.5Lm1 ...	Yes	Y		1	1.2	39	1.2	77	1.5	29	1	67	1										
28	1.2D + 1.5Lm1 ...	Yes	Y		1	1.2	39	1.2	77	1.5	30	1	68	1										
29	1.2D + 1.5Lm1 ...	Yes	Y		1	1.2	39	1.2	77	1.5	31	1	69	1										
30	1.2D + 1.5Lm1 ...	Yes	Y		1	1.2	39	1.2	77	1.5	32	1	70	1										
31	1.2D + 1.5Lm1 ...	Yes	Y		1	1.2	39	1.2	77	1.5	33	1	71	1										
32	1.2D + 1.5Lm1 ...	Yes	Y		1	1.2	39	1.2	77	1.5	34	1	72	1										
33	1.2D + 1.5Lm1 ...	Yes	Y		1	1.2	39	1.2	77	1.5	35	1	73	1										
34	1.2D + 1.5Lm1 ...	Yes	Y		1	1.2	39	1.2	77	1.5	36	1	74	1										
35	1.2D + 1.5Lm1 ...	Yes	Y		1	1.2	39	1.2	77	1.5	37	1	75	1										
36	1.2D + 1.5Lm1 ...	Yes	Y		1	1.2	39	1.2	77	1.5	38	1	76	1										
37	1.2D + 1.5Lm2 ...	Yes	Y		1	1.2	39	1.2	78	1.5	27	1	65	1										
38	1.2D + 1.5Lm2 ...	Yes	Y		1	1.2	39	1.2	78	1.5	28	1	66	1										
39	1.2D + 1.5Lm2 ...	Yes	Y		1	1.2	39	1.2	78	1.5	29	1	67	1										
40	1.2D + 1.5Lm2 ...	Yes	Y		1	1.2	39	1.2	78	1.5	30	1	68	1										
41	1.2D + 1.5Lm2 ...	Yes	Y		1	1.2	39	1.2	78	1.5	31	1	69	1										
42	1.2D + 1.5Lm2 ...	Yes	Y		1	1.2	39	1.2	78	1.5	32	1	70	1										
43	1.2D + 1.5Lm2 ...	Yes	Y		1	1.2	39	1.2	78	1.5	33	1	71	1										
44	1.2D + 1.5Lm2 ...	Yes	Y		1	1.2	39	1.2	78	1.5	34	1	72	1										
45	1.2D + 1.5Lm2 ...	Yes	Y		1	1.2	39	1.2	78	1.5	35	1	73	1										
46	1.2D + 1.5Lm2 ...	Yes	Y		1	1.2	39	1.2	78	1.5	36	1	74	1										
47	1.2D + 1.5Lm2 ...	Yes	Y		1	1.2	39	1.2	78	1.5	37	1	75	1										
48	1.2D + 1.5Lm2 ...	Yes	Y		1	1.2	39	1.2	78	1.5	38	1	76	1										
49	1.2D + 1.5Lv1	Yes	Y		1	1.2	39	1.2	79	1.5														
50	1.2D + 1.5Lv2	Yes	Y		1	1.2	39	1.2	80	1.5														
51	1.4D	Yes	Y		1	1.4	39	1.4																
52	1.2D + 1.0Ev + ...		Y		1	1.2	39	1.2	81	1	ELY	1	82	1	83		ELZ	1	ELX					
53	1.2D + 1.0Ev + ...		Y		1	1.2	39	1.2	81	1	ELY	1	82	.866	83	.5	ELZ	.866	ELX	.5				
54	1.2D + 1.0Ev + ...		Y		1	1.2	39	1.2	81	1	ELY	1	82	.5	83	.866	ELZ	.5	ELX	.866				
55	1.2D + 1.0Ev + ...		Y		1	1.2	39	1.2	81	1	ELY	1	82		83	1	ELZ		ELX	1				
56	1.2D + 1.0Ev + ...		Y		1	1.2	39	1.2	81	1	ELY	1	82	-.5	83	.866	ELZ	-.5	ELX	.866				
57	1.2D + 1.0Ev + ...		Y		1	1.2	39	1.2	81	1	ELY	1	82	-.866	83	.5	ELZ	-.866	ELX	.5				
58	1.2D + 1.0Ev + ...		Y		1	1.2	39	1.2	81	1	ELY	1	82	-1	83		ELZ	-1	ELX					
59	1.2D + 1.0Ev + ...		Y		1	1.2	39	1.2	81	1	ELY	1	82	-.866	83	-.5	ELZ	-.866	ELX	-.5				
60	1.2D + 1.0Ev + ...		Y		1	1.2	39	1.2	81	1	ELY	1	82	-.5	83	-.866	ELZ	-.5	ELX	-.866				
61	1.2D + 1.0Ev + ...		Y		1	1.2	39	1.2	81	1	ELY	1	82		83	-1	ELZ		ELX	-1				
62	1.2D + 1.0Ev + ...		Y		1	1.2	39	1.2	81	1	ELY	1	82	.5	83	-.866	ELZ	.5	ELX	-.866				

Load Combinations (Continued)

	Description	Solve	PDelta	S...	BLC	Fac...	BLC	Fac...	BLC	Fac...	BLC	Fac...	BLC	Fac...	BLC	Fac...	BLC	Fac...	BLC	Fac...	BLC	Fac...	BLC	Fac...
63	1.2D + 1.0Ev + ...		Y		1	1.2	39	1.2	81	1	ELY	1	82	.866	83	-.5	ELZ	.866	ELX	-.5				
64	0.9D - 1.0Ev + ...		Y		1	.9	39	.9	81	-1	ELY	-1	82	1	83		ELZ	1	ELX					
65	0.9D - 1.0Ev + ...		Y		1	.9	39	.9	81	-1	ELY	-1	82	.866	83	.5	ELZ	.866	ELX	.5				
66	0.9D - 1.0Ev + ...		Y		1	.9	39	.9	81	-1	ELY	-1	82	.5	83	.866	ELZ	.5	ELX	.866				
67	0.9D - 1.0Ev + ...		Y		1	.9	39	.9	81	-1	ELY	-1	82		83	1	ELZ		ELX	1				
68	0.9D - 1.0Ev + ...		Y		1	.9	39	.9	81	-1	ELY	-1	82	-.5	83	.866	ELZ	-.5	ELX	.866				
69	0.9D - 1.0Ev + ...		Y		1	.9	39	.9	81	-1	ELY	-1	82	-.866	83	.5	ELZ	-.866	ELX	.5				
70	0.9D - 1.0Ev + ...		Y		1	.9	39	.9	81	-1	ELY	-1	82	-1	83		ELZ	-1	ELX					
71	0.9D - 1.0Ev + ...		Y		1	.9	39	.9	81	-1	ELY	-1	82	-.866	83	-.5	ELZ	-.866	ELX	-.5				
72	0.9D - 1.0Ev + ...		Y		1	.9	39	.9	81	-1	ELY	-1	82	-.5	83	-.866	ELZ	-.5	ELX	-.866				
73	0.9D - 1.0Ev + ...		Y		1	.9	39	.9	81	-1	ELY	-1	82		83	-1	ELZ		ELX	-1				
74	0.9D - 1.0Ev + ...		Y		1	.9	39	.9	81	-1	ELY	-1	82	.5	83	-.866	ELZ	.5	ELX	-.866				
75	0.9D - 1.0Ev + ...		Y		1	.9	39	.9	81	-1	ELY	-1	82	.866	83	-.5	ELZ	.866	ELX	-.5				

Joint Coordinates and Temperatures

	Label	X [ft]	Y [ft]	Z [ft]	Temp [F]	Detach From Diap...
1	N1	6.25	0	4.018857	0	
2	N2	-6.25	0	4.018857	0	
3	N3	-0.	0	-1.625	0	
4	N5	-2.541667	0	-3.125	0	
5	N6	2.315104	0.166667	-3.125	0	
6	N7	-2.315104	0.166667	-3.125	0	
7	N8	4.75	0	4.018857	0	
8	N9	4.75	0	4.268857	0	
9	N10	-4.666667	0	4.018857	0	
10	N11	-4.666667	0	4.268857	0	
11	N12	3.583333	0	4.018857	0	
12	N13	3.583333	0	4.268857	0	
13	N14	-1.25	0	4.018857	0	
14	N15	-1.25	0	4.268857	0	
15	N16	-1.25	-3.208333	4.268857	0	
16	N17	-1.25	3.916667	4.268857	0	
17	N18	-4.666667	-2.5	4.268857	0	
18	N19	-4.666667	3.5	4.268857	0	
19	N20	3.583333	-2.5	4.268857	0	
20	N21	3.583333	3.5	4.268857	0	
21	N22	4.75	-2.5	4.268857	0	
22	N23	4.75	3.5	4.268857	0	
23	N24	-0.	0	-3.125	0	
24	N27	-0.	0	-6.8125	0	
25	CP	0	0	0	0	
26	N29	2.315104	0	-3.125	0	
27	N30	-2.315104	0	-3.125	0	
28	N101	2.541667	0	-3.125	0	
29	N102	-0.166667	0	-3.125	0	
30	N103A	0.166667	0	-3.125	0	
31	N104A	-2.541667	0	-3.34375	0	
32	N105	2.541667	0	-3.34375	0	
33	N131	2.458333	0	-3.488088	0	
34	N135	0.571615	0	-6.715523	0	

Joint Coordinates and Temperatures (Continued)

	Label	X [ft]	Y [ft]	Z [ft]	Temp [F]	Detach From Diap...
35	N144	-2.458333	0	-3.488088	0	
36	N148	-0.571615	0	-6.715523	0	
37	N86A	2.584629	0	-3.561004	0	
38	N86B	-2.584629	0	-3.561004	0	
39	N86C	-0.515625	0	-6.8125	0	
40	N87A	0.515625	0	-6.8125	0	
41	N86D	0.715429	0	-6.798554	0	
42	N86E	-0.715429	0	-6.798554	0	
43	N88A	-0.	0	-6.729167	0	
44	N87C	0.234238	0.166667	-6.729167	0	
45	N86G	0.234238	0	-6.729167	0	
46	N87B	-0.234238	0.166667	-6.729167	0	
47	N88C	-0.234238	0	-6.729167	0	
48	N52	-1.407291	0	0.8125	0	
49	N53	-1.435496	0	3.763648	0	
50	N54	-3.863881	0.166667	-0.442439	0	
51	N55	-1.548777	0.166667	3.567439	0	
52	N56	-2.706329	0	1.5625	0	
53	N57	-5.899798	0	3.40625	0	
54	N59	-3.863881	0	-0.442439	0	
55	N60	-1.548777	0	3.567439	0	
56	N61	-3.977163	0	-0.638648	0	
57	N62	-2.622996	0	1.706838	0	
58	N63	-2.789663	0	1.418162	0	
59	N64	-1.624939	0	3.873023	0	
60	N65	-4.166606	0	-0.529273	0	
61	N66	-4.249939	0	-0.384935	0	
62	N67	-6.101621	0	2.862729	0	
63	N68	-1.791606	0	3.873023	0	
64	N69	-5.530006	0	3.852794	0	
65	N70	-4.376235	0	-0.457852	0	
66	N71	-1.791606	0	4.018857	0	
67	N72	-5.641986	0	3.852794	0	
68	N73	-6.157611	0	2.959706	0	
69	N74	-6.245435	0	2.779698	0	
70	N75	-5.530006	0	4.018857	0	
71	N76	-5.827629	0	3.364583	0	
72	N77	-5.944748	0.166667	3.161728	0	
73	N78	-5.944748	0	3.161728	0	
74	N79	-5.71051	0.166667	3.567439	0	
75	N80	-5.71051	0	3.567439	0	
76	N81	1.407291	0	0.8125	0	
77	N82	3.977163	0	-0.638648	0	
78	N83	1.548777	0.166667	3.567439	0	
79	N84	3.863881	0.166667	-0.442439	0	
80	N85	2.706329	0	1.5625	0	
81	N86	5.899798	0	3.40625	0	
82	N88	1.548777	0	3.567439	0	
83	N89	3.863881	0	-0.442439	0	
84	N90	1.435496	0	3.763648	0	
85	N91	2.789663	0	1.418162	0	
86	N92	2.622996	0	1.706838	0	

Joint Coordinates and Temperatures (Continued)

	Label	X [ft]	Y [ft]	Z [ft]	Temp [F]	Detach From Diap...
87	N93	4.166606	0	-0.529273	0	
88	N94	1.624939	0	3.873023	0	
89	N95	1.791606	0	3.873023	0	
90	N96	5.530006	0	3.852794	0	
91	N97	4.249939	0	-0.384935	0	
92	N98	6.101621	0	2.862729	0	
93	N99	1.791606	0	4.018857	0	
94	N100	4.376235	0	-0.457852	0	
95	N101A	6.157611	0	2.959706	0	
96	N102A	5.641986	0	3.852794	0	
97	N103	5.530006	0	4.018857	0	
98	N104	6.245435	0	2.779698	0	
99	N105A	5.827629	0	3.364583	0	
100	N106	5.71051	0.166667	3.567439	0	
101	N107	5.71051	0	3.567439	0	
102	N108	5.944748	0.166667	3.161728	0	
103	N109	5.944748	0	3.161728	0	
104	N108A	0.355432	0	-7.422087	0	
105	N109A	6.605432	0	3.40323	0	
106	N111	-6.605432	0	3.40323	0	
107	N112	-0.355432	0	-7.422087	0	
108	N109B	2.333333	0	4.018857	0	
109	N110	2.333333	0	4.268857	0	
110	N111A	2.333333	-3.208333	4.268857	0	
111	N112A	2.333333	3.916667	4.268857	0	
112	N113	-3.25	0	4.018857	0	
113	N114	-3.25	0	4.268857	0	
114	N115	-3.25	-2.5	4.268857	0	
115	N116	-3.25	3.5	4.268857	0	
116	N117	1.105432	0	-6.123049	0	
117	N118	1.321938	0	-6.248049	0	
118	N119	5.813765	0	2.032024	0	
119	N120	6.030272	0	1.907024	0	
120	N121	1.688765	0	-5.112686	0	
121	N122	1.905272	0	-5.237686	0	
122	N123	4.105432	0	-0.926897	0	
123	N124	4.321938	0	-1.051897	0	
124	N125	4.321938	-3.208333	-1.051897	0	
125	N126	4.321938	3.916667	-1.051897	0	
126	N127	6.030272	-2.5	1.907024	0	
127	N128	6.030272	3.5	1.907024	0	
128	N129	1.905272	-2.5	-5.237686	0	
129	N130	1.905272	3.5	-5.237686	0	
130	N131A	1.321938	-2.5	-6.248049	0	
131	N132	1.321938	3.5	-6.248049	0	
132	N134	2.313765	0	-4.030154	0	
133	N135A	2.530272	0	-4.155154	0	
134	N136	2.530272	-3.208333	-4.155154	0	
135	N137	2.530272	3.916667	-4.155154	0	
136	N138	5.105432	0	0.805154	0	
137	N139	5.321938	0	0.680154	0	
138	N140	5.321938	-2.5	0.680154	0	

Joint Coordinates and Temperatures (Continued)

	Label	X [ft]	Y [ft]	Z [ft]	Temp [F]	Detach From Diap...
139	N141	5.321938	3.5	0.680154	0	
140	N142	-5.855432	0	2.104192	0	
141	N143	-6.071938	0	1.979192	0	
142	N144A	-1.147099	0	-6.05088	0	
143	N145	-1.363605	0	-6.17588	0	
144	N146	-5.272099	0	1.093829	0	
145	N147	-5.488605	0	0.968829	0	
146	N148A	-2.855432	0	-3.09196	0	
147	N149	-3.071938	0	-3.21696	0	
148	N150	-3.071938	-3.208333	-3.21696	0	
149	N151	-3.071938	3.916667	-3.21696	0	
150	N152	-1.363605	-2.5	-6.17588	0	
151	N153	-1.363605	3.5	-6.17588	0	
152	N154	-5.488605	-2.5	0.968829	0	
153	N155	-5.488605	3.5	0.968829	0	
154	N156	-6.071938	-2.5	1.979192	0	
155	N157	-6.071938	3.5	1.979192	0	
156	N159	-4.647099	0	0.011298	0	
157	N160	-4.863605	0	-0.113702	0	
158	N161	-4.863605	-3.208333	-0.113702	0	
159	N162	-4.863605	3.916667	-0.113702	0	
160	N163	-1.855432	0	-4.824011	0	
161	N164	-2.071938	0	-4.949011	0	
162	N165	-2.071938	-2.5	-4.949011	0	
163	N166	-2.071938	3.5	-4.949011	0	
164	N171	6.25	2.5	4.018857	0	
165	N172A	-6.25	2.5	4.018857	0	
166	N173A	4.75	2.5	4.018857	0	
167	N174A	4.75	2.5	4.268857	0	
168	N175A	-4.666667	2.5	4.018857	0	
169	N176	-4.666667	2.5	4.268857	0	
170	N177	3.583333	2.5	4.018857	0	
171	N178	3.583333	2.5	4.268857	0	
172	N179	-1.25	2.5	4.018857	0	
173	N180	-1.25	2.5	4.268857	0	
174	N181	0.355432	2.5	-7.422087	0	
175	N182	6.605432	2.5	3.40323	0	
176	N183	-6.605432	2.5	3.40323	0	
177	N184	-0.355432	2.5	-7.422087	0	
178	N185	2.333333	2.5	4.018857	0	
179	N186	2.333333	2.5	4.268857	0	
180	N187	-3.25	2.5	4.018857	0	
181	N188	-3.25	2.5	4.268857	0	
182	N189	1.105432	2.5	-6.123049	0	
183	N190	1.321938	2.5	-6.248049	0	
184	N191	5.813765	2.5	2.032024	0	
185	N192	6.030272	2.5	1.907024	0	
186	N193	1.688765	2.5	-5.112686	0	
187	N194	1.905272	2.5	-5.237686	0	
188	N195	4.105432	2.5	-0.926897	0	
189	N196	4.321938	2.5	-1.051897	0	
190	N197	2.313765	2.5	-4.030154	0	

Joint Coordinates and Temperatures (Continued)

	Label	X [ft]	Y [ft]	Z [ft]	Temp [F]	Detach From Diap...
191	N198	2.530272	2.5	-4.155154	0	
192	N199	5.105432	2.5	0.805154	0	
193	N200	5.321938	2.5	0.680154	0	
194	N201	-5.855432	2.5	2.104192	0	
195	N202	-6.071938	2.5	1.979192	0	
196	N203	-1.147099	2.5	-6.05088	0	
197	N204	-1.363605	2.5	-6.17588	0	
198	N205	-5.272099	2.5	1.093829	0	
199	N206	-5.488605	2.5	0.968829	0	
200	N207	-2.855432	2.5	-3.09196	0	
201	N208	-3.071938	2.5	-3.21696	0	
202	N209	-4.647099	2.5	0.011298	0	
203	N210	-4.863605	2.5	-0.113702	0	
204	N211	-1.855432	2.5	-4.824011	0	
205	N212	-2.071938	2.5	-4.949011	0	
206	N213	-4.25	2.5	4.018857	0	
207	N214	4.25	2.5	4.018857	0	
208	N215	-4.25	2.5	3.768857	0	
209	N216	4.25	2.5	3.768857	0	
210	N218	5.605432	2.5	1.67118	0	
211	N219	1.355432	2.5	-5.690036	0	
212	N220	5.388926	2.5	1.79618	0	
213	N221	1.138926	2.5	-5.565036	0	
214	N223	-1.355432	2.5	-5.690036	0	
215	N224	-5.605432	2.5	1.67118	0	
216	N225	-1.138926	2.5	-5.565036	0	
217	N226	-5.388926	2.5	1.79618	0	
218	N225A	-0.	0	-2.208333	0	
219	N226A	.25	0	-2.208333	0	
220	N227	-.25	0	-2.208333	0	
221	N231	-1.912473	0	1.104167	0	
222	N232	-2.037473	0	0.88766	0	
223	N233	-1.787473	0	1.320673	0	
224	N237	1.912473	0	1.104167	0	
225	N238	1.787473	0	1.320673	0	
226	N239	2.037473	0	0.88766	0	
227	N236	-1.787473	2.5	4.018857	0	
228	N237A	1.787473	2.5	4.018857	0	
229	N239A	4.374168	2.5	-0.461431	0	
230	N240	2.586696	2.5	-3.557425	0	
231	N244	-2.586696	2.5	-3.557425	0	
232	N245	-4.374168	2.5	-0.461431	0	

Hot Rolled Steel Section Sets

	Label	Shape	Type	Design List	Material	Design R...	A [in2]	Iyy [in4]	Izz [in4]	J [in4]
1	Face Horizontal	PIPE 3.0	Beam	Pipe	A53 Gr.B	Typical	2.07	2.85	2.85	5.69
2	Standoff Horizontal	HSS4X4X4	Beam	SquareTube	A500 Gr.B R...	Typical	3.37	7.8	7.8	12.8
3	Corner Plate	PL1/2X6	Beam	BAR	A36 Gr.36	Typical	3	.063	9	.237
4	Platform Crossme...	L2x2x3	Beam	Single Angle	A36 Gr.36	Typical	.722	.271	.271	.009
5	Grating Support	L2x2x3	Beam	Single Angle	A36 Gr.36	Typical	.722	.271	.271	.009

Hot Rolled Steel Section Sets (Continued)

	Label	Shape	Type	Design List	Material	Design R...	A [in2]	Iyy [in4]	Izz [in4]	J [in4]
6	Mount Pipe	PIPE_2.0	Column	Pipe	A53 Gr.B	Typical	1.02	.627	.627	1.25
7	Cross Arm Plate	PL3/8x6	Column	RECT	A36 Gr.36	Typical	2.25	.026	6.75	.101
8	OVP Pipe	PIPE_2.0	Column	Pipe	A53 Gr.B	Typical	1.02	.627	.627	1.25
9	Support Rail	PIPE_2.5	Beam	Pipe	A53 Gr.B	Typical	1.61	1.45	1.45	2.89
10	Support Rail Angle	L3X3X4	Column	Single Angle	A36 Gr.36	Typical	1.44	1.23	1.23	.031
11	Support Bracing Kit	L2.5x2.5x4	Column	Single Angle	A36 Gr.36	Typical	1.19	.692	.692	.026

Hot Rolled Steel Properties

	Label	E [ksi]	G [ksi]	Nu	Therm (/1E...	Density[k/ft...	Yield[ksi]	Ry	Fu[ksi]	Rt
1	A992	29000	11154	.3	.65	.49	50	1.1	65	1.1
2	A36 Gr.36	29000	11154	.3	.65	.49	36	1.5	58	1.2
3	A572 Gr.50	29000	11154	.3	.65	.49	50	1.1	65	1.1
4	A500 Gr.B RND	29000	11154	.3	.65	.527	42	1.4	58	1.3
5	A500 Gr.B Rect	29000	11154	.3	.65	.527	46	1.4	58	1.3
6	A53 Gr.B	29000	11154	.3	.65	.49	35	1.6	60	1.2
7	A1085	29000	11154	.3	.65	.49	50	1.4	65	1.3
8	Q235	29000	11154	.3	.65	.49	35	1.5	58	1.2

Member Primary Data

	Label	I Joint	J Joint	K Joint	Rotate(deg)	Section/Shape	Type	Design List	Material	Design Rules
1	M1	N1	N2			Face Horizontal	Beam	Pipe	A53 Gr.B	Typical
2	M4	N3	N27			Standoff Horiz...	Beam	SquareTube	A500 Gr.B...	Typical
3	M10	N101	N103A		180	Platform Cross...	Beam	Single Angle	A36 Gr.36	Typical
4	M19	N8	N9			RIGID	None	None	RIGID	Typical
5	M20	N10	N11			RIGID	None	None	RIGID	Typical
6	M21	N12	N13			RIGID	None	None	RIGID	Typical
7	M22	N14	N15			RIGID	None	None	RIGID	Typical
8	MP4A	N17	N16			Mount Pipe	Column	Pipe	A53 Gr.B	Typical
9	M150	N19	N18			Mount Pipe	Column	Pipe	A53 Gr.B	Typical
10	MP2A	N21	N20			Mount Pipe	Column	Pipe	A53 Gr.B	Typical
11	MP1A	N23	N22			Mount Pipe	Column	Pipe	A53 Gr.B	Typical
12	M43	N102	N5		180	Platform Cross...	Beam	Single Angle	A36 Gr.36	Typical
13	M46	N86C	N87A			Corner Plate	Beam	BAR	A36 Gr.36	Typical
14	M35A	N7	N30			RIGID	None	None	RIGID	Typical
15	M36A	N6	N29			RIGID	None	None	RIGID	Typical
16	M51B	N87C	N6			Grating Support	Beam	Single Angle	A36 Gr.36	Typical
17	M52B	N7	N87B			Grating Support	Beam	Single Angle	A36 Gr.36	Typical
18	M52	N87B	N88C			RIGID	None	None	RIGID	Typical
19	M58	N102	N24			RIGID	None	None	RIGID	Typical
20	M59	N24	N103A			RIGID	None	None	RIGID	Typical
21	M76	N101	N105			Cross Arm Plate	Column	RECT	A36 Gr.36	Typical
22	M77	N105	N131			Cross Arm Plate	Column	RECT	A36 Gr.36	Typical
23	M79	N131	N86A			RIGID	None	None	RIGID	Typical
24	M80	N87A	N135			Corner Plate	Beam	BAR	A36 Gr.36	Typical
25	M83	N135	N86D			RIGID	None	None	RIGID	Typical
26	M84	N5	N104A			Cross Arm Plate	Column	RECT	A36 Gr.36	Typical
27	M85	N104A	N144			Cross Arm Plate	Column	RECT	A36 Gr.36	Typical
28	M88	N144	N86B			RIGID	None	None	RIGID	Typical
29	M91	N86C	N148			Corner Plate	Beam	BAR	A36 Gr.36	Typical

Member Primary Data (Continued)

	Label	I Joint	J Joint	K Joint	Rotate(deg)	Section/Shape	Type	Design List	Material	Design Rules
30	M92	N148	N86E			RIGID	None	None	RIGID	Typical
31	M50	N88C	N88A			RIGID	None	None	RIGID	Typical
32	M51	N88A	N86G			RIGID	None	None	RIGID	Typical
33	M51A	N87C	N86G			RIGID	None	None	RIGID	Typical
34	M34	N52	N57			Standoff Horiz...	Beam	SquareTube	A500 Gr.B...	Typical
35	M35	N61	N63		180	Platform Cross...	Beam	Single Angle	A36 Gr.36	Typical
36	M36	N62	N53		180	Platform Cross...	Beam	Single Angle	A36 Gr.36	Typical
37	M37	N72	N73			Corner Plate	Beam	BAR	A36 Gr.36	Typical
38	M38	N55	N60		240	RIGID	None	None	RIGID	Typical
39	M39	N54	N59		240	RIGID	None	None	RIGID	Typical
40	M40	N77	N54			Grating Support	Beam	Single Angle	A36 Gr.36	Typical
41	M41	N55	N79			Grating Support	Beam	Single Angle	A36 Gr.36	Typical
42	M42	N79	N80		240	RIGID	None	None	RIGID	Typical
43	M43A	N62	N56			RIGID	None	None	RIGID	Typical
44	M44	N56	N63			RIGID	None	None	RIGID	Typical
45	M45	N61	N65			Cross Arm Plate	Column	RECT	A36 Gr.36	Typical
46	M46A	N65	N66			Cross Arm Plate	Column	RECT	A36 Gr.36	Typical
47	M47	N66	N70			RIGID	None	None	RIGID	Typical
48	M48	N73	N67			Corner Plate	Beam	BAR	A36 Gr.36	Typical
49	M49	N67	N74			RIGID	None	None	RIGID	Typical
50	M50A	N53	N64			Cross Arm Plate	Column	RECT	A36 Gr.36	Typical
51	M51C	N64	N68			Cross Arm Plate	Column	RECT	A36 Gr.36	Typical
52	M52A	N68	N71			RIGID	None	None	RIGID	Typical
53	M53	N72	N69			Corner Plate	Beam	BAR	A36 Gr.36	Typical
54	M54	N69	N75			RIGID	None	None	RIGID	Typical
55	M55	N80	N76			RIGID	None	None	RIGID	Typical
56	M56	N76	N78			RIGID	None	None	RIGID	Typical
57	M57	N77	N78		240	RIGID	None	None	RIGID	Typical
58	M58A	N81	N86			Standoff Horiz...	Beam	SquareTube	A500 Gr.B...	Typical
59	M59A	N90	N92		180	Platform Cross...	Beam	Single Angle	A36 Gr.36	Typical
60	M60	N91	N82		180	Platform Cross...	Beam	Single Angle	A36 Gr.36	Typical
61	M61	N101A	N102A			Corner Plate	Beam	BAR	A36 Gr.36	Typical
62	M62	N84	N89		120	RIGID	None	None	RIGID	Typical
63	M63	N83	N88		120	RIGID	None	None	RIGID	Typical
64	M64	N106	N83			Grating Support	Beam	Single Angle	A36 Gr.36	Typical
65	M65	N84	N108			Grating Support	Beam	Single Angle	A36 Gr.36	Typical
66	M66	N108	N109		120	RIGID	None	None	RIGID	Typical
67	M67	N91	N85			RIGID	None	None	RIGID	Typical
68	M68	N85	N92			RIGID	None	None	RIGID	Typical
69	M69	N90	N94			Cross Arm Plate	Column	RECT	A36 Gr.36	Typical
70	M70	N94	N95			Cross Arm Plate	Column	RECT	A36 Gr.36	Typical
71	M71	N95	N99			RIGID	None	None	RIGID	Typical
72	M72	N102A	N96			Corner Plate	Beam	BAR	A36 Gr.36	Typical
73	M73	N96	N103			RIGID	None	None	RIGID	Typical
74	M74	N82	N93			Cross Arm Plate	Column	RECT	A36 Gr.36	Typical
75	M75	N93	N97			Cross Arm Plate	Column	RECT	A36 Gr.36	Typical
76	M76A	N97	N100			RIGID	None	None	RIGID	Typical
77	M77A	N101A	N98			Corner Plate	Beam	BAR	A36 Gr.36	Typical
78	M78	N98	N104			RIGID	None	None	RIGID	Typical
79	M79A	N109	N105A			RIGID	None	None	RIGID	Typical
80	M80A	N105A	N107			RIGID	None	None	RIGID	Typical
81	M81	N106	N107		120	RIGID	None	None	RIGID	Typical

Member Primary Data (Continued)

	Label	I Joint	J Joint	K Joint	Rotate(deg)	Section/Shape	Type	Design List	Material	Design Rules
82	M82	N108A	N109A			Face Horizontal	Beam	Pipe	A53 Gr.B	Typical
83	M83A	N111	N112			Face Horizontal	Beam	Pipe	A53 Gr.B	Typical
84	M84A	N109B	N110			RIGID	None	None	RIGID	Typical
85	MP3A	N112A	N111A			Mount Pipe	Column	Pipe	A53 Gr.B	Typical
86	M86	N113	N114			RIGID	None	None	RIGID	Typical
87	MP5A	N116	N115			Mount Pipe	Column	Pipe	A53 Gr.B	Typical
88	M88A	N117	N118			RIGID	None	None	RIGID	Typical
89	M89	N119	N120			RIGID	None	None	RIGID	Typical
90	M90	N121	N122			RIGID	None	None	RIGID	Typical
91	M91A	N123	N124			RIGID	None	None	RIGID	Typical
92	MP4C	N126	N125		240	Mount Pipe	Column	Pipe	A53 Gr.B	Typical
93	M93	N128	N127		240	Mount Pipe	Column	Pipe	A53 Gr.B	Typical
94	MP2C	N130	N129		240	Mount Pipe	Column	Pipe	A53 Gr.B	Typical
95	MP1C	N132	N131A		240	Mount Pipe	Column	Pipe	A53 Gr.B	Typical
96	M96	N134	N135A			RIGID	None	None	RIGID	Typical
97	MP3C	N137	N136		240	Mount Pipe	Column	Pipe	A53 Gr.B	Typical
98	M98	N138	N139			RIGID	None	None	RIGID	Typical
99	MP5C	N141	N140		240	Mount Pipe	Column	Pipe	A53 Gr.B	Typical
100	M100	N142	N143			RIGID	None	None	RIGID	Typical
101	M101	N144A	N145			RIGID	None	None	RIGID	Typical
102	M102	N146	N147			RIGID	None	None	RIGID	Typical
103	M103	N148A	N149			RIGID	None	None	RIGID	Typical
104	MP4B	N151	N150		120	Mount Pipe	Column	Pipe	A53 Gr.B	Typical
105	M105	N153	N152		120	Mount Pipe	Column	Pipe	A53 Gr.B	Typical
106	MP2B	N155	N154		120	Mount Pipe	Column	Pipe	A53 Gr.B	Typical
107	MP1B	N157	N156		120	Mount Pipe	Column	Pipe	A53 Gr.B	Typical
108	M108	N159	N160			RIGID	None	None	RIGID	Typical
109	MP3B	N162	N161		120	Mount Pipe	Column	Pipe	A53 Gr.B	Typical
110	M110	N163	N164			RIGID	None	None	RIGID	Typical
111	MP5B	N166	N165		120	Mount Pipe	Column	Pipe	A53 Gr.B	Typical
112	M116A	N171	N172A			Support Rail	Beam	Pipe	A53 Gr.B	Typical
113	M117A	N173A	N174A			RIGID	None	None	RIGID	Typical
114	M118	N175A	N176			RIGID	None	None	RIGID	Typical
115	M119	N177	N178			RIGID	None	None	RIGID	Typical
116	M120	N179	N180			RIGID	None	None	RIGID	Typical
117	M121	N181	N182			Support Rail	Beam	Pipe	A53 Gr.B	Typical
118	M122	N183	N184			Support Rail	Beam	Pipe	A53 Gr.B	Typical
119	M123	N185	N186			RIGID	None	None	RIGID	Typical
120	M124	N187	N188			RIGID	None	None	RIGID	Typical
121	M125	N189	N190			RIGID	None	None	RIGID	Typical
122	M126	N191	N192			RIGID	None	None	RIGID	Typical
123	M127	N193	N194			RIGID	None	None	RIGID	Typical
124	M128	N195	N196			RIGID	None	None	RIGID	Typical
125	M129	N197	N198			RIGID	None	None	RIGID	Typical
126	M130	N199	N200			RIGID	None	None	RIGID	Typical
127	M131	N201	N202			RIGID	None	None	RIGID	Typical
128	M132	N203	N204			RIGID	None	None	RIGID	Typical
129	M133	N205	N206			RIGID	None	None	RIGID	Typical
130	M134	N207	N208			RIGID	None	None	RIGID	Typical
131	M135	N209	N210			RIGID	None	None	RIGID	Typical
132	M136	N211	N212			RIGID	None	None	RIGID	Typical
133	M137	N213	N215			RIGID	None	None	RIGID	Typical

Member Primary Data (Continued)

	Label	I Joint	J Joint	K Joint	Rotate(deg)	Section/Shape	Type	Design List	Material	Design Rules
134	M138	N214	N216			RIGID	None	None	RIGID	Typical
135	M139	N218	N220			RIGID	None	None	RIGID	Typical
136	M140	N219	N221			RIGID	None	None	RIGID	Typical
137	M141	N223	N225			RIGID	None	None	RIGID	Typical
138	M142	N224	N226			RIGID	None	None	RIGID	Typical
139	M143	N215	N226		90	Support Rail A...	Column	Single Angle	A36 Gr.36	Typical
140	M144	N220	N216		90	Support Rail A...	Column	Single Angle	A36 Gr.36	Typical
141	M145	N225	N221		90	Support Rail A...	Column	Single Angle	A36 Gr.36	Typical
142	M146	N225A	N227			RIGID	None	None	RIGID	Typical
143	M147	N225A	N226A			RIGID	None	None	RIGID	Typical
144	M150A	N231	N233			RIGID	None	None	RIGID	Typical
145	M151	N231	N232			RIGID	None	None	RIGID	Typical
146	M154	N237	N239			RIGID	None	None	RIGID	Typical
147	M155	N237	N238			RIGID	None	None	RIGID	Typical
148	M152	N236	N233		90	Support Bracin...	Column	Single Angle	A36 Gr.36	Typical
149	M153	N237A	N238		180	Support Bracin...	Column	Single Angle	A36 Gr.36	Typical
150	M154A	N239A	N239		90	Support Bracin...	Column	Single Angle	A36 Gr.36	Typical
151	M155A	N240	N226A		180	Support Bracin...	Column	Single Angle	A36 Gr.36	Typical
152	M156	N244	N227		90	Support Bracin...	Column	Single Angle	A36 Gr.36	Typical
153	M157	N245	N232		180	Support Bracin...	Column	Single Angle	A36 Gr.36	Typical

Hot Rolled Steel Design Parameters

	Label	Shape	Length[ft]	Lbyy[ft]	Lbzz[ft]	Lcomp top[ft]	Lcomp bot[ft]	L-torqu...	Kyy	Kzz	Cb	Function
1	M1	Face Horizo...	12.5			Lbyy						Lateral
2	M4	Standoff Ho...	5.188			Lbyy						Lateral
3	M10	Platform Cr...	2.375			Lbyy						Lateral
4	MP4A	Mount Pipe	7.125			Lbyy						Lateral
5	M150	Mount Pipe	6			Lbyy						Lateral
6	MP2A	Mount Pipe	6			Lbyy						Lateral
7	MP1A	Mount Pipe	6			Lbyy						Lateral
8	M43	Platform Cr...	2.375			Lbyy						Lateral
9	M46	Corner Plate	1.031			Lbyy						Lateral
10	M51B	Grating Sup...	4.162			Lbyy						Lateral
11	M52B	Grating Sup...	4.162			Lbyy						Lateral
12	M76	Cross Arm ...	.219									Lateral
13	M77	Cross Arm ...	.167									Lateral
14	M80	Corner Plate	.112			Lbyy						Lateral
15	M84	Cross Arm ...	.219									Lateral
16	M85	Cross Arm ...	.167									Lateral
17	M91	Corner Plate	.112			Lbyy						Lateral
18	M34	Standoff Ho...	5.188			Lbyy						Lateral
19	M35	Platform Cr...	2.375			Lbyy						Lateral
20	M36	Platform Cr...	2.375			Lbyy						Lateral
21	M37	Corner Plate	1.031			Lbyy						Lateral
22	M40	Grating Sup...	4.162			Lbyy						Lateral
23	M41	Grating Sup...	4.162			Lbyy						Lateral
24	M45	Cross Arm ...	.219									Lateral
25	M46A	Cross Arm ...	.167									Lateral
26	M48	Corner Plate	.112			Lbyy						Lateral
27	M50A	Cross Arm ...	.219									Lateral

Hot Rolled Steel Design Parameters (Continued)

	Label	Shape	Length[ft]	Lbyy[ft]	Lbzz[ft]	Lcomp top[ft]	Lcomp bot[ft]	L-torqu...	Kyy	Kzz	Cb	Function
28	M51C	Cross Arm ...	.167									Lateral
29	M53	Corner Plate	.112			Lbyy						Lateral
30	M58A	Standoff Ho...	5.188			Lbyy						Lateral
31	M59A	Platform Cr...	2.375			Lbyy						Lateral
32	M60	Platform Cr...	2.375			Lbyy						Lateral
33	M61	Corner Plate	1.031			Lbyy						Lateral
34	M64	Grating Sup...	4.162			Lbyy						Lateral
35	M65	Grating Sup...	4.162			Lbyy						Lateral
36	M69	Cross Arm ...	.219									Lateral
37	M70	Cross Arm ...	.167									Lateral
38	M72	Corner Plate	.112			Lbyy						Lateral
39	M74	Cross Arm ...	.219									Lateral
40	M75	Cross Arm ...	.167									Lateral
41	M77A	Corner Plate	.112			Lbyy						Lateral
42	M82	Face Horizo...	12.5			Lbyy						Lateral
43	M83A	Face Horizo...	12.5			Lbyy						Lateral
44	MP3A	Mount Pipe	7.125			Lbyy						Lateral
45	MP5A	Mount Pipe	6			Lbyy						Lateral
46	MP4C	Mount Pipe	7.125			Lbyy						Lateral
47	M93	Mount Pipe	6			Lbyy						Lateral
48	MP2C	Mount Pipe	6			Lbyy						Lateral
49	MP1C	Mount Pipe	6			Lbyy						Lateral
50	MP3C	Mount Pipe	7.125			Lbyy						Lateral
51	MP5C	Mount Pipe	6			Lbyy						Lateral
52	MP4B	Mount Pipe	7.125			Lbyy						Lateral
53	M105	Mount Pipe	6			Lbyy						Lateral
54	MP2B	Mount Pipe	6			Lbyy						Lateral
55	MP1B	Mount Pipe	6			Lbyy						Lateral
56	MP3B	Mount Pipe	7.125			Lbyy						Lateral
57	MP5B	Mount Pipe	6			Lbyy						Lateral
58	M116A	Support Rail	12.5			Lbyy						Lateral
59	M121	Support Rail	12.5			Lbyy						Lateral
60	M122	Support Rail	12.5			Lbyy						Lateral
61	M143	Support Rail...	2.278									Lateral
62	M144	Support Rail...	2.278									Lateral
63	M145	Support Rail...	2.278									Lateral
64	M152	Support Bra...	3.678									Lateral
65	M153	Support Bra...	3.678									Lateral
66	M154A	Support Bra...	3.678									Lateral
67	M155A	Support Bra...	3.678									Lateral
68	M156	Support Bra...	3.678									Lateral
69	M157	Support Bra...	3.678									Lateral

Member Point Loads (BLC 1 : Antenna D)

	Member Label	Direction	Magnitude[lb,k-ft]	Location[ft,%]
1	MP2B	Y	-32	2
2	MP2B	My	-.008	2
3	MP2B	Mz	.014	2
4	MP1A	Y	-10.5	1
5	MP1A	My	-.005	1

Member Point Loads (BLC 1 : Antenna D) (Continued)

	Member Label	Direction	Magnitude[lb,k-ft]	Location[ft,%]
6	MP1A	Mz	-.000912	1
7	MP1A	Y	-10.5	5
8	MP1A	My	-.005	5
9	MP1A	Mz	-.000912	5
10	MP1B	Y	-10.5	1
11	MP1B	My	.003	1
12	MP1B	Mz	-.004	1
13	MP1B	Y	-10.5	5
14	MP1B	My	.003	5
15	MP1B	Mz	-.004	5
16	MP1C	Y	-10.5	1
17	MP1C	My	.002	1
18	MP1C	Mz	.005	1
19	MP1C	Y	-10.5	5
20	MP1C	My	.002	5
21	MP1C	Mz	.005	5
22	M150	Y	-10.5	1
23	M150	My	-.005	1
24	M150	Mz	-.000912	1
25	M150	Y	-10.5	5
26	M150	My	-.005	5
27	M150	Mz	-.000912	5
28	M105	Y	-10.5	1
29	M105	My	.002	1
30	M105	Mz	.005	1
31	M105	Y	-10.5	5
32	M105	My	.002	5
33	M105	Mz	.005	5
34	M93	Y	-10.5	1
35	M93	My	.003	1
36	M93	Mz	-.004	1
37	M93	Y	-10.5	5
38	M93	My	.003	5
39	M93	Mz	-.004	5
40	MP4A	Y	-31.65	1
41	MP4A	My	-.016	1
42	MP4A	Mz	-.02	1
43	MP4A	Y	-31.65	5
44	MP4A	My	-.016	5
45	MP4A	Mz	-.02	5
46	MP4B	Y	-31.65	1
47	MP4B	My	.025	1
48	MP4B	Mz	.000592	1
49	MP4B	Y	-31.65	5
50	MP4B	My	.025	5
51	MP4B	Mz	.000592	5
52	MP4C	Y	-31.65	1
53	MP4C	My	-.022	1
54	MP4C	Mz	.012	1
55	MP4C	Y	-31.65	5
56	MP4C	My	-.022	5
57	MP4C	Mz	.012	5

Member Point Loads (BLC 1 : Antenna D) (Continued)

	Member Label	Direction	Magnitude[lb,k-ft]	Location[ft,%]
58	MP4A	Y	-31.65	1
59	MP4A	My	-.016	1
60	MP4A	Mz	.02	1
61	MP4A	Y	-31.65	5
62	MP4A	My	-.016	5
63	MP4A	Mz	.02	5
64	MP4B	Y	-31.65	1
65	MP4B	My	-.005	1
66	MP4B	Mz	-.025	1
67	MP4B	Y	-31.65	5
68	MP4B	My	-.005	5
69	MP4B	Mz	-.025	5
70	MP4C	Y	-31.65	1
71	MP4C	My	.017	1
72	MP4C	Mz	.019	1
73	MP4C	Y	-31.65	5
74	MP4C	My	.017	5
75	MP4C	Mz	.019	5
76	MP3A	Y	-43.55	2
77	MP3A	My	-.022	2
78	MP3A	Mz	0	2
79	MP3A	Y	-43.55	4
80	MP3A	My	-.022	4
81	MP3A	Mz	0	4
82	MP3B	Y	-43.55	2
83	MP3B	My	.014	2
84	MP3B	Mz	-.017	2
85	MP3B	Y	-43.55	4
86	MP3B	My	.014	4
87	MP3B	Mz	-.017	4
88	MP3C	Y	-43.55	2
89	MP3C	My	-.004	2
90	MP3C	Mz	.021	2
91	MP3C	Y	-43.55	4
92	MP3C	My	-.004	4
93	MP3C	Mz	.021	4
94	MP4A	Y	-10.4	1
95	MP4A	My	.005	1
96	MP4A	Mz	0	1
97	MP4B	Y	-10.4	1
98	MP4B	My	-.003	1
99	MP4B	Mz	.004	1
100	MP4C	Y	-10.4	1
101	MP4C	My	.000903	1
102	MP4C	Mz	-.005	1
103	MP2A	Y	-32	2
104	MP2A	My	.016	2
105	MP2A	Mz	0	2
106	MP4A	Y	-74.7	2.5
107	MP4A	My	.037	2.5
108	MP4A	Mz	0	2.5
109	MP4B	Y	-74.7	2.5

Member Point Loads (BLC 1 : Antenna D) (Continued)

	Member Label	Direction	Magnitude[lb,k-ft]	Location[ft,%]
110	MP4B	My	-.024	2.5
111	MP4B	Mz	.029	2.5
112	MP4C	Y	-74.7	2.5
113	MP4C	My	.006	2.5
114	MP4C	Mz	-.037	2.5
115	MP5A	Y	-70.3	2.5
116	MP5A	My	.035	2.5
117	MP5A	Mz	0	2.5
118	MP5B	Y	-70.3	2.5
119	MP5B	My	-.023	2.5
120	MP5B	Mz	.027	2.5
121	MP5C	Y	-70.3	2.5
122	MP5C	My	.006	2.5
123	MP5C	Mz	-.035	2.5

Member Point Loads (BLC 2 : Antenna Di)

	Member Label	Direction	Magnitude[lb,k-ft]	Location[ft,%]
1	MP2B	Y	-84.668	2
2	MP2B	My	-.021	2
3	MP2B	Mz	.037	2
4	MP1A	Y	-56.295	1
5	MP1A	My	-.028	1
6	MP1A	Mz	-.005	1
7	MP1A	Y	-56.295	5
8	MP1A	My	-.028	5
9	MP1A	Mz	-.005	5
10	MP1B	Y	-56.295	1
11	MP1B	My	.018	1
12	MP1B	Mz	-.022	1
13	MP1B	Y	-56.295	5
14	MP1B	My	.018	5
15	MP1B	Mz	-.022	5
16	MP1C	Y	-56.295	1
17	MP1C	My	.01	1
18	MP1C	Mz	.026	1
19	MP1C	Y	-56.295	5
20	MP1C	My	.01	5
21	MP1C	Mz	.026	5
22	M150	Y	-56.295	1
23	M150	My	-.028	1
24	M150	Mz	-.005	1
25	M150	Y	-56.295	5
26	M150	My	-.028	5
27	M150	Mz	-.005	5
28	M105	Y	-56.295	1
29	M105	My	.01	1
30	M105	Mz	.026	1
31	M105	Y	-56.295	5
32	M105	My	.01	5
33	M105	Mz	.026	5
34	M93	Y	-56.295	1

Member Point Loads (BLC 2 : Antenna Di) (Continued)

	Member Label	Direction	Magnitude[lb,k-ft]	Location[ft,%]
35	M93	My	.018	1
36	M93	Mz	-.022	1
37	M93	Y	-56.295	5
38	M93	My	.018	5
39	M93	Mz	-.022	5
40	MP4A	Y	-67.368	1
41	MP4A	My	-.034	1
42	MP4A	Mz	-.042	1
43	MP4A	Y	-67.368	5
44	MP4A	My	-.034	5
45	MP4A	Mz	-.042	5
46	MP4B	Y	-67.368	1
47	MP4B	My	.054	1
48	MP4B	Mz	.001	1
49	MP4B	Y	-67.368	5
50	MP4B	My	.054	5
51	MP4B	Mz	.001	5
52	MP4C	Y	-67.368	1
53	MP4C	My	-.047	1
54	MP4C	Mz	.026	1
55	MP4C	Y	-67.368	5
56	MP4C	My	-.047	5
57	MP4C	Mz	.026	5
58	MP4A	Y	-67.368	1
59	MP4A	My	-.034	1
60	MP4A	Mz	.042	1
61	MP4A	Y	-67.368	5
62	MP4A	My	-.034	5
63	MP4A	Mz	.042	5
64	MP4B	Y	-67.368	1
65	MP4B	My	-.011	1
66	MP4B	Mz	-.053	1
67	MP4B	Y	-67.368	5
68	MP4B	My	-.011	5
69	MP4B	Mz	-.053	5
70	MP4C	Y	-67.368	1
71	MP4C	My	.036	1
72	MP4C	Mz	.04	1
73	MP4C	Y	-67.368	5
74	MP4C	My	.036	5
75	MP4C	Mz	.04	5
76	MP3A	Y	-34.277	2
77	MP3A	My	-.017	2
78	MP3A	Mz	0	2
79	MP3A	Y	-34.277	4
80	MP3A	My	-.017	4
81	MP3A	Mz	0	4
82	MP3B	Y	-34.277	2
83	MP3B	My	.011	2
84	MP3B	Mz	-.013	2
85	MP3B	Y	-34.277	4
86	MP3B	My	.011	4

Member Point Loads (BLC 2 : Antenna Di) (Continued)

	Member Label	Direction	Magnitude[lb,k-ft]	Location[ft,%]
87	MP3B	Mz	-.013	4
88	MP3C	Y	-34.277	2
89	MP3C	My	-.003	2
90	MP3C	Mz	.017	2
91	MP3C	Y	-34.277	4
92	MP3C	My	-.003	4
93	MP3C	Mz	.017	4
94	MP4A	Y	-10.284	1
95	MP4A	My	.005	1
96	MP4A	Mz	0	1
97	MP4B	Y	-10.284	1
98	MP4B	My	-.003	1
99	MP4B	Mz	.004	1
100	MP4C	Y	-10.284	1
101	MP4C	My	.000893	1
102	MP4C	Mz	-.005	1
103	MP2A	Y	-84.668	2
104	MP2A	My	.042	2
105	MP2A	Mz	0	2
106	MP4A	Y	-43.192	2.5
107	MP4A	My	.022	2.5
108	MP4A	Mz	0	2.5
109	MP4B	Y	-43.192	2.5
110	MP4B	My	-.014	2.5
111	MP4B	Mz	.017	2.5
112	MP4C	Y	-43.192	2.5
113	MP4C	My	.004	2.5
114	MP4C	Mz	-.021	2.5
115	MP5A	Y	-41.127	2.5
116	MP5A	My	.021	2.5
117	MP5A	Mz	0	2.5
118	MP5B	Y	-41.127	2.5
119	MP5B	My	-.013	2.5
120	MP5B	Mz	.016	2.5
121	MP5C	Y	-41.127	2.5
122	MP5C	My	.004	2.5
123	MP5C	Mz	-.02	2.5

Member Point Loads (BLC 3 : Antenna Wo (0 Deg))

	Member Label	Direction	Magnitude[lb,k-ft]	Location[ft,%]
1	MP2B	X	0	2
2	MP2B	Z	-106.844	2
3	MP2B	Mx	-.046	2
4	MP1A	X	0	1
5	MP1A	Z	-71.37	1
6	MP1A	Mx	.006	1
7	MP1A	X	0	5
8	MP1A	Z	-71.37	5
9	MP1A	Mx	.006	5
10	MP1B	X	0	1
11	MP1B	Z	-109.663	1

Member Point Loads (BLC 3 : Antenna Wo (0 Deg)) (Continued)

	Member Label	Direction	Magnitude[lb,k-ft]	Location[ft,%]
12	MP1B	Mx	.042	1
13	MP1B	X	0	5
14	MP1B	Z	-109.663	5
15	MP1B	Mx	.042	5
16	MP1C	X	0	1
17	MP1C	Z	-130.038	1
18	MP1C	Mx	-.061	1
19	MP1C	X	0	5
20	MP1C	Z	-130.038	5
21	MP1C	Mx	-.061	5
22	M150	X	0	1
23	M150	Z	-71.37	1
24	M150	Mx	.006	1
25	M150	X	0	5
26	M150	Z	-71.37	5
27	M150	Mx	.006	5
28	M105	X	0	1
29	M105	Z	-130.038	1
30	M105	Mx	-.061	1
31	M105	X	0	5
32	M105	Z	-130.038	5
33	M105	Mx	-.061	5
34	M93	X	0	1
35	M93	Z	-109.663	1
36	M93	Mx	.042	1
37	M93	X	0	5
38	M93	Z	-109.663	5
39	M93	Mx	.042	5
40	MP4A	X	0	1
41	MP4A	Z	-145.793	1
42	MP4A	Mx	.091	1
43	MP4A	X	0	5
44	MP4A	Z	-145.793	5
45	MP4A	Mx	.091	5
46	MP4B	X	0	1
47	MP4B	Z	-116.429	1
48	MP4B	Mx	-.002	1
49	MP4B	X	0	5
50	MP4B	Z	-116.429	5
51	MP4B	Mx	-.002	5
52	MP4C	X	0	1
53	MP4C	Z	-97.264	1
54	MP4C	Mx	-.037	1
55	MP4C	X	0	5
56	MP4C	Z	-97.264	5
57	MP4C	Mx	-.037	5
58	MP4A	X	0	1
59	MP4A	Z	-145.793	1
60	MP4A	Mx	-.091	1
61	MP4A	X	0	5
62	MP4A	Z	-145.793	5
63	MP4A	Mx	-.091	5

Member Point Loads (BLC 3 : Antenna Wo (0 Deg)) (Continued)

	Member Label	Direction	Magnitude[lb,k-ft]	Location[ft,%]
64	MP4B	X	0	1
65	MP4B	Z	-116.429	1
66	MP4B	Mx	.091	1
67	MP4B	X	0	5
68	MP4B	Z	-116.429	5
69	MP4B	Mx	.091	5
70	MP4C	X	0	1
71	MP4C	Z	-97.264	1
72	MP4C	Mx	-.058	1
73	MP4C	X	0	5
74	MP4C	Z	-97.264	5
75	MP4C	Mx	-.058	5
76	MP3A	X	0	2
77	MP3A	Z	-75.217	2
78	MP3A	Mx	0	2
79	MP3A	X	0	4
80	MP3A	Z	-75.217	4
81	MP3A	Mx	0	4
82	MP3B	X	0	2
83	MP3B	Z	-48.358	2
84	MP3B	Mx	.019	2
85	MP3B	X	0	4
86	MP3B	Z	-48.358	4
87	MP3B	Mx	.019	4
88	MP3C	X	0	2
89	MP3C	Z	-30.827	2
90	MP3C	Mx	-.015	2
91	MP3C	X	0	4
92	MP3C	Z	-30.827	4
93	MP3C	Mx	-.015	4
94	MP4A	X	0	1
95	MP4A	Z	-11.843	1
96	MP4A	Mx	0	1
97	MP4B	X	0	1
98	MP4B	Z	-9.701	1
99	MP4B	Mx	-.004	1
100	MP4C	X	0	1
101	MP4C	Z	-8.304	1
102	MP4C	Mx	.004	1
103	MP2A	X	0	2
104	MP2A	Z	-129.949	2
105	MP2A	Mx	0	2
106	MP4A	X	0	2.5
107	MP4A	Z	-59.853	2.5
108	MP4A	Mx	0	2.5
109	MP4B	X	0	2.5
110	MP4B	Z	-48.208	2.5
111	MP4B	Mx	-.018	2.5
112	MP4C	X	0	2.5
113	MP4C	Z	-40.607	2.5
114	MP4C	Mx	.02	2.5
115	MP5A	X	0	2.5

Member Point Loads (BLC 3 : Antenna Wo (0 Deg)) (Continued)

	Member Label	Direction	Magnitude[lb,k-ft]	Location[ft,%]
116	MP5A	Z	-59.853	2.5
117	MP5A	Mx	0	2.5
118	MP5B	X	0	2.5
119	MP5B	Z	-46.095	2.5
120	MP5B	Mx	-.018	2.5
121	MP5C	X	0	2.5
122	MP5C	Z	-37.115	2.5
123	MP5C	Mx	.018	2.5

Member Point Loads (BLC 4 : Antenna Wo (30 Deg))

	Member Label	Direction	Magnitude[lb,k-ft]	Location[ft,%]
1	MP2B	X	49.571	2
2	MP2B	Z	-85.86	2
3	MP2B	Mx	-.05	2
4	MP1A	X	38.671	1
5	MP1A	Z	-66.981	1
6	MP1A	Mx	-.013	1
7	MP1A	X	38.671	5
8	MP1A	Z	-66.981	5
9	MP1A	Mx	-.013	5
10	MP1B	X	68.005	1
11	MP1B	Z	-117.789	1
12	MP1B	Mx	.067	1
13	MP1B	X	68.005	5
14	MP1B	Z	-117.789	5
15	MP1B	Mx	.067	5
16	MP1C	X	48.859	1
17	MP1C	Z	-84.626	1
18	MP1C	Mx	-.031	1
19	MP1C	X	48.859	5
20	MP1C	Z	-84.626	5
21	MP1C	Mx	-.031	5
22	M150	X	38.671	1
23	M150	Z	-66.981	1
24	M150	Mx	-.013	1
25	M150	X	38.671	5
26	M150	Z	-66.981	5
27	M150	Mx	-.013	5
28	M105	X	48.859	1
29	M105	Z	-84.626	1
30	M105	Mx	-.031	1
31	M105	X	48.859	5
32	M105	Z	-84.626	5
33	M105	Mx	-.031	5
34	M93	X	68.005	1
35	M93	Z	-117.789	1
36	M93	Mx	.067	1
37	M93	X	68.005	5
38	M93	Z	-117.789	5
39	M93	Mx	.067	5
40	MP4A	X	66.642	1

Member Point Loads (BLC 4 : Antenna Wo (30 Deg)) (Continued)

	Member Label	Direction	Magnitude[lb,k-ft]	Location[ft,%]
41	MP4A	Z	-115.427	1
42	MP4A	Mx	.039	1
43	MP4A	X	66.642	5
44	MP4A	Z	-115.427	5
45	MP4A	Mx	.039	5
46	MP4B	X	48.632	1
47	MP4B	Z	-84.233	1
48	MP4B	Mx	.037	1
49	MP4B	X	48.632	5
50	MP4B	Z	-84.233	5
51	MP4B	Mx	.037	5
52	MP4C	X	50.804	1
53	MP4C	Z	-87.995	1
54	MP4C	Mx	-.069	1
55	MP4C	X	50.804	5
56	MP4C	Z	-87.995	5
57	MP4C	Mx	-.069	5
58	MP4A	X	66.642	1
59	MP4A	Z	-115.427	1
60	MP4A	Mx	-.105	1
61	MP4A	X	66.642	5
62	MP4A	Z	-115.427	5
63	MP4A	Mx	-.105	5
64	MP4B	X	48.632	1
65	MP4B	Z	-84.233	1
66	MP4B	Mx	.058	1
67	MP4B	X	48.632	5
68	MP4B	Z	-84.233	5
69	MP4B	Mx	.058	5
70	MP4C	X	50.804	1
71	MP4C	Z	-87.995	1
72	MP4C	Mx	-.026	1
73	MP4C	X	50.804	5
74	MP4C	Z	-87.995	5
75	MP4C	Mx	-.026	5
76	MP3A	X	31.887	2
77	MP3A	Z	-55.23	2
78	MP3A	Mx	-.016	2
79	MP3A	X	31.887	4
80	MP3A	Z	-55.23	4
81	MP3A	Mx	-.016	4
82	MP3B	X	15.414	2
83	MP3B	Z	-26.697	2
84	MP3B	Mx	.015	2
85	MP3B	X	15.414	4
86	MP3B	Z	-26.697	4
87	MP3B	Mx	.015	4
88	MP3C	X	17.401	2
89	MP3C	Z	-30.139	2
90	MP3C	Mx	-.016	2
91	MP3C	X	17.401	4
92	MP3C	Z	-30.139	4

Member Point Loads (BLC 4 : Antenna Wo (30 Deg)) (Continued)

	Member Label	Direction	Magnitude[lb,k-ft]	Location[ft,%]
93	MP3C	Mx	-.016	4
94	MP4A	X	5.465	1
95	MP4A	Z	-9.466	1
96	MP4A	Mx	.003	1
97	MP4B	X	4.152	1
98	MP4B	Z	-7.191	1
99	MP4B	Mx	-.004	1
100	MP4C	X	4.31	1
101	MP4C	Z	-7.466	1
102	MP4C	Mx	.004	1
103	MP2A	X	61.124	2
104	MP2A	Z	-105.87	2
105	MP2A	Mx	.031	2
106	MP4A	X	27.446	2.5
107	MP4A	Z	-47.538	2.5
108	MP4A	Mx	.014	2.5
109	MP4B	X	20.304	2.5
110	MP4B	Z	-35.167	2.5
111	MP4B	Mx	-.02	2.5
112	MP4C	X	21.165	2.5
113	MP4C	Z	-36.659	2.5
114	MP4C	Mx	.02	2.5
115	MP5A	X	26.996	2.5
116	MP5A	Z	-46.759	2.5
117	MP5A	Mx	.013	2.5
118	MP5B	X	18.558	2.5
119	MP5B	Z	-32.143	2.5
120	MP5B	Mx	-.018	2.5
121	MP5C	X	19.575	2.5
122	MP5C	Z	-33.906	2.5
123	MP5C	Mx	.018	2.5

Member Point Loads (BLC 5 : Antenna Wo (60 Deg))

	Member Label	Direction	Magnitude[lb,k-ft]	Location[ft,%]
1	MP2B	X	92.53	2
2	MP2B	Z	-53.422	2
3	MP2B	Mx	-.046	2
4	MP1A	X	94.971	1
5	MP1A	Z	-54.831	1
6	MP1A	Mx	-.042	1
7	MP1A	X	94.971	5
8	MP1A	Z	-54.831	5
9	MP1A	Mx	-.042	5
10	MP1B	X	112.616	1
11	MP1B	Z	-65.019	1
12	MP1B	Mx	.061	1
13	MP1B	X	112.616	5
14	MP1B	Z	-65.019	5
15	MP1B	Mx	.061	5
16	MP1C	X	61.808	1
17	MP1C	Z	-35.685	1

Member Point Loads (BLC 5 : Antenna Wo (60 Deg)) (Continued)

	Member Label	Direction	Magnitude[lb,k-ft]	Location[ft,%]
18	MP1C	Mx	-.006	1
19	MP1C	X	61.808	5
20	MP1C	Z	-35.685	5
21	MP1C	Mx	-.006	5
22	M150	X	94.971	1
23	M150	Z	-54.831	1
24	M150	Mx	-.042	1
25	M150	X	94.971	5
26	M150	Z	-54.831	5
27	M150	Mx	-.042	5
28	M105	X	61.808	1
29	M105	Z	-35.685	1
30	M105	Mx	-.006	1
31	M105	X	61.808	5
32	M105	Z	-35.685	5
33	M105	Mx	-.006	5
34	M93	X	112.616	1
35	M93	Z	-65.019	1
36	M93	Mx	.061	1
37	M93	X	112.616	5
38	M93	Z	-65.019	5
39	M93	Mx	.061	5
40	MP4A	X	93.76	1
41	MP4A	Z	-54.132	1
42	MP4A	Mx	-.013	1
43	MP4A	X	93.76	5
44	MP4A	Z	-54.132	5
45	MP4A	Mx	-.013	5
46	MP4B	X	87.995	1
47	MP4B	Z	-50.804	1
48	MP4B	Mx	.069	1
49	MP4B	X	87.995	5
50	MP4B	Z	-50.804	5
51	MP4B	Mx	.069	5
52	MP4C	X	108.356	1
53	MP4C	Z	-62.559	1
54	MP4C	Mx	-.1	1
55	MP4C	X	108.356	5
56	MP4C	Z	-62.559	5
57	MP4C	Mx	-.1	5
58	MP4A	X	93.76	1
59	MP4A	Z	-54.132	1
60	MP4A	Mx	-.081	1
61	MP4A	X	93.76	5
62	MP4A	Z	-54.132	5
63	MP4A	Mx	-.081	5
64	MP4B	X	87.995	1
65	MP4B	Z	-50.804	1
66	MP4B	Mx	.026	1
67	MP4B	X	87.995	5
68	MP4B	Z	-50.804	5
69	MP4B	Mx	.026	5

Member Point Loads (BLC 5 : Antenna Wo (60 Deg)) (Continued)

	Member Label	Direction	Magnitude[lb,k-ft]	Location[ft,%]
70	MP4C	X	108.356	1
71	MP4C	Z	-62.559	1
72	MP4C	Mx	.02	1
73	MP4C	X	108.356	5
74	MP4C	Z	-62.559	5
75	MP4C	Mx	.02	5
76	MP3A	X	35.412	2
77	MP3A	Z	-20.445	2
78	MP3A	Mx	-.018	2
79	MP3A	X	35.412	4
80	MP3A	Z	-20.445	4
81	MP3A	Mx	-.018	4
82	MP3B	X	30.139	2
83	MP3B	Z	-17.401	2
84	MP3B	Mx	.016	2
85	MP3B	X	30.139	4
86	MP3B	Z	-17.401	4
87	MP3B	Mx	.016	4
88	MP3C	X	48.762	2
89	MP3C	Z	-28.153	2
90	MP3C	Mx	-.018	2
91	MP3C	X	48.762	4
92	MP3C	Z	-28.153	4
93	MP3C	Mx	-.018	4
94	MP4A	X	7.886	1
95	MP4A	Z	-4.553	1
96	MP4A	Mx	.004	1
97	MP4B	X	7.466	1
98	MP4B	Z	-4.31	1
99	MP4B	Mx	-.004	1
100	MP4C	X	8.95	1
101	MP4C	Z	-5.168	1
102	MP4C	Mx	.003	1
103	MP2A	X	92.53	2
104	MP2A	Z	-53.422	2
105	MP2A	Mx	.046	2
106	MP4A	X	38.945	2.5
107	MP4A	Z	-22.485	2.5
108	MP4A	Mx	.019	2.5
109	MP4B	X	36.659	2.5
110	MP4B	Z	-21.165	2.5
111	MP4B	Mx	-.02	2.5
112	MP4C	X	44.734	2.5
113	MP4C	Z	-25.827	2.5
114	MP4C	Mx	.017	2.5
115	MP5A	X	36.606	2.5
116	MP5A	Z	-21.135	2.5
117	MP5A	Mx	.018	2.5
118	MP5B	X	33.906	2.5
119	MP5B	Z	-19.575	2.5
120	MP5B	Mx	-.018	2.5
121	MP5C	X	43.445	2.5

Member Point Loads (BLC 5 : Antenna Wo (60 Deg)) (Continued)

	Member Label	Direction	Magnitude[lb,k-ft]	Location[ft,%]
122	MP5C	Z	-25.083	2.5
123	MP5C	Mx	.016	2.5

Member Point Loads (BLC 6 : Antenna Wo (90 Deg))

	Member Label	Direction	Magnitude[lb,k-ft]	Location[ft,%]
1	MP2B	X	122.248	2
2	MP2B	Z	0	2
3	MP2B	Mx	-.031	2
4	MP1A	X	136.011	1
5	MP1A	Z	0	1
6	MP1A	Mx	-.067	1
7	MP1A	X	136.011	5
8	MP1A	Z	0	5
9	MP1A	Mx	-.067	5
10	MP1B	X	97.718	1
11	MP1B	Z	0	1
12	MP1B	Mx	.031	1
13	MP1B	X	97.718	5
14	MP1B	Z	0	5
15	MP1B	Mx	.031	5
16	MP1C	X	77.342	1
17	MP1C	Z	0	1
18	MP1C	Mx	.013	1
19	MP1C	X	77.342	5
20	MP1C	Z	0	5
21	MP1C	Mx	.013	5
22	M150	X	136.011	1
23	M150	Z	0	1
24	M150	Mx	-.067	1
25	M150	X	136.011	5
26	M150	Z	0	5
27	M150	Mx	-.067	5
28	M105	X	77.342	1
29	M105	Z	0	1
30	M105	Mx	.013	1
31	M105	X	77.342	5
32	M105	Z	0	5
33	M105	Mx	.013	5
34	M93	X	97.718	1
35	M93	Z	0	1
36	M93	Mx	.031	1
37	M93	X	97.718	5
38	M93	Z	0	5
39	M93	Mx	.031	5
40	MP4A	X	95.755	1
41	MP4A	Z	0	1
42	MP4A	Mx	-.048	1
43	MP4A	X	95.755	5
44	MP4A	Z	0	5
45	MP4A	Mx	-.048	5
46	MP4B	X	125.118	1

Member Point Loads (BLC 6 : Antenna Wo (90 Deg)) (Continued)

	Member Label	Direction	Magnitude[lb,k-ft]	Location[ft,%]
47	MP4B	Z	0	1
48	MP4B	Mx	.1	1
49	MP4B	X	125.118	5
50	MP4B	Z	0	5
51	MP4B	Mx	.1	5
52	MP4C	X	144.284	1
53	MP4C	Z	0	1
54	MP4C	Mx	-.101	1
55	MP4C	X	144.284	5
56	MP4C	Z	0	5
57	MP4C	Mx	-.101	5
58	MP4A	X	95.755	1
59	MP4A	Z	0	1
60	MP4A	Mx	-.048	1
61	MP4A	X	95.755	5
62	MP4A	Z	0	5
63	MP4A	Mx	-.048	5
64	MP4B	X	125.118	1
65	MP4B	Z	0	1
66	MP4B	Mx	-.02	1
67	MP4B	X	125.118	5
68	MP4B	Z	0	5
69	MP4B	Mx	-.02	5
70	MP4C	X	144.284	1
71	MP4C	Z	0	1
72	MP4C	Mx	.076	1
73	MP4C	X	144.284	5
74	MP4C	Z	0	5
75	MP4C	Mx	.076	5
76	MP3A	X	29.447	2
77	MP3A	Z	0	2
78	MP3A	Mx	-.015	2
79	MP3A	X	29.447	4
80	MP3A	Z	0	4
81	MP3A	Mx	-.015	4
82	MP3B	X	56.306	2
83	MP3B	Z	0	2
84	MP3B	Mx	.018	2
85	MP3B	X	56.306	4
86	MP3B	Z	0	4
87	MP3B	Mx	.018	4
88	MP3C	X	73.837	2
89	MP3C	Z	0	2
90	MP3C	Mx	-.006	2
91	MP3C	X	73.837	4
92	MP3C	Z	0	4
93	MP3C	Mx	-.006	4
94	MP4A	X	8.194	1
95	MP4A	Z	0	1
96	MP4A	Mx	.004	1
97	MP4B	X	10.335	1
98	MP4B	Z	0	1

Member Point Loads (BLC 6 : Antenna Wo (90 Deg)) (Continued)

	Member Label	Direction	Magnitude[lb,k-ft]	Location[ft,%]
99	MP4B	Mx	-.003	1
100	MP4C	X	11.733	1
101	MP4C	Z	0	1
102	MP4C	Mx	.001	1
103	MP2A	X	99.142	2
104	MP2A	Z	0	2
105	MP2A	Mx	.05	2
106	MP4A	X	40.009	2.5
107	MP4A	Z	0	2.5
108	MP4A	Mx	.02	2.5
109	MP4B	X	51.654	2.5
110	MP4B	Z	0	2.5
111	MP4B	Mx	-.017	2.5
112	MP4C	X	59.255	2.5
113	MP4C	Z	0	2.5
114	MP4C	Mx	.005	2.5
115	MP5A	X	36.408	2.5
116	MP5A	Z	0	2.5
117	MP5A	Mx	.018	2.5
118	MP5B	X	50.166	2.5
119	MP5B	Z	0	2.5
120	MP5B	Mx	-.016	2.5
121	MP5C	X	59.147	2.5
122	MP5C	Z	0	2.5
123	MP5C	Mx	.005	2.5

Member Point Loads (BLC 7 : Antenna Wo (120 Deg))

	Member Label	Direction	Magnitude[lb,k-ft]	Location[ft,%]
1	MP2B	X	112.539	2
2	MP2B	Z	64.975	2
3	MP2B	Mx	0	2
4	MP1A	X	112.616	1
5	MP1A	Z	65.019	1
6	MP1A	Mx	-.061	1
7	MP1A	X	112.616	5
8	MP1A	Z	65.019	5
9	MP1A	Mx	-.061	5
10	MP1B	X	61.808	1
11	MP1B	Z	35.685	1
12	MP1B	Mx	.006	1
13	MP1B	X	61.808	5
14	MP1B	Z	35.685	5
15	MP1B	Mx	.006	5
16	MP1C	X	94.971	1
17	MP1C	Z	54.831	1
18	MP1C	Mx	.042	1
19	MP1C	X	94.971	5
20	MP1C	Z	54.831	5
21	MP1C	Mx	.042	5
22	M150	X	112.616	1
23	M150	Z	65.019	1

Member Point Loads (BLC 7 : Antenna Wo (120 Deg)) (Continued)

	Member Label	Direction	Magnitude[lb,k-ft]	Location[ft,%]
24	M150	Mx	-.061	1
25	M150	X	112.616	5
26	M150	Z	65.019	5
27	M150	Mx	-.061	5
28	M105	X	94.971	1
29	M105	Z	54.831	1
30	M105	Mx	.042	1
31	M105	X	94.971	5
32	M105	Z	54.831	5
33	M105	Mx	.042	5
34	M93	X	61.808	1
35	M93	Z	35.685	1
36	M93	Mx	.006	1
37	M93	X	61.808	5
38	M93	Z	35.685	5
39	M93	Mx	.006	5
40	MP4A	X	93.76	1
41	MP4A	Z	54.132	1
42	MP4A	Mx	-.081	1
43	MP4A	X	93.76	5
44	MP4A	Z	54.132	5
45	MP4A	Mx	-.081	5
46	MP4B	X	124.954	1
47	MP4B	Z	72.142	1
48	MP4B	Mx	.101	1
49	MP4B	X	124.954	5
50	MP4B	Z	72.142	5
51	MP4B	Mx	.101	5
52	MP4C	X	121.191	1
53	MP4C	Z	69.97	1
54	MP4C	Mx	-.058	1
55	MP4C	X	121.191	5
56	MP4C	Z	69.97	5
57	MP4C	Mx	-.058	5
58	MP4A	X	93.76	1
59	MP4A	Z	54.132	1
60	MP4A	Mx	-.013	1
61	MP4A	X	93.76	5
62	MP4A	Z	54.132	5
63	MP4A	Mx	-.013	5
64	MP4B	X	124.954	1
65	MP4B	Z	72.142	1
66	MP4B	Mx	-.076	1
67	MP4B	X	124.954	5
68	MP4B	Z	72.142	5
69	MP4B	Mx	-.076	5
70	MP4C	X	121.191	1
71	MP4C	Z	69.97	1
72	MP4C	Mx	.106	1
73	MP4C	X	121.191	5
74	MP4C	Z	69.97	5
75	MP4C	Mx	.106	5

Member Point Loads (BLC 7 : Antenna Wo (120 Deg)) (Continued)

	Member Label	Direction	Magnitude[lb,k-ft]	Location[ft,%]
76	MP3A	X	35.412	2
77	MP3A	Z	20.445	2
78	MP3A	Mx	-.018	2
79	MP3A	X	35.412	4
80	MP3A	Z	20.445	4
81	MP3A	Mx	-.018	4
82	MP3B	X	63.945	2
83	MP3B	Z	36.918	2
84	MP3B	Mx	.006	2
85	MP3B	X	63.945	4
86	MP3B	Z	36.918	4
87	MP3B	Mx	.006	4
88	MP3C	X	60.503	2
89	MP3C	Z	34.931	2
90	MP3C	Mx	.012	2
91	MP3C	X	60.503	4
92	MP3C	Z	34.931	4
93	MP3C	Mx	.012	4
94	MP4A	X	7.886	1
95	MP4A	Z	4.553	1
96	MP4A	Mx	.004	1
97	MP4B	X	10.161	1
98	MP4B	Z	5.866	1
99	MP4B	Mx	-.001	1
100	MP4C	X	9.886	1
101	MP4C	Z	5.708	1
102	MP4C	Mx	-.002	1
103	MP2A	X	92.53	2
104	MP2A	Z	53.422	2
105	MP2A	Mx	.046	2
106	MP4A	X	38.945	2.5
107	MP4A	Z	22.485	2.5
108	MP4A	Mx	.019	2.5
109	MP4B	X	51.316	2.5
110	MP4B	Z	29.628	2.5
111	MP4B	Mx	-.005	2.5
112	MP4C	X	49.824	2.5
113	MP4C	Z	28.766	2.5
114	MP4C	Mx	-.01	2.5
115	MP5A	X	36.606	2.5
116	MP5A	Z	21.135	2.5
117	MP5A	Mx	.018	2.5
118	MP5B	X	51.222	2.5
119	MP5B	Z	29.573	2.5
120	MP5B	Mx	-.005	2.5
121	MP5C	X	49.46	2.5
122	MP5C	Z	28.555	2.5
123	MP5C	Mx	-.01	2.5

Member Point Loads (BLC 8 : Antenna Wo (150 Deg))

Member Label	Direction	Magnitude[lb,k-ft]	Location[ft,%]

Member Point Loads (BLC 8 : Antenna Wo (150 Deg)) (Continued)

	Member Label	Direction	Magnitude[lb,k-ft]	Location[ft,%]
1	MP2B	X	61.124	2
2	MP2B	Z	105.87	2
3	MP2B	Mx	.031	2
4	MP1A	X	48.859	1
5	MP1A	Z	84.626	1
6	MP1A	Mx	-.031	1
7	MP1A	X	48.859	5
8	MP1A	Z	84.626	5
9	MP1A	Mx	-.031	5
10	MP1B	X	38.671	1
11	MP1B	Z	66.981	1
12	MP1B	Mx	-.013	1
13	MP1B	X	38.671	5
14	MP1B	Z	66.981	5
15	MP1B	Mx	-.013	5
16	MP1C	X	68.005	1
17	MP1C	Z	117.789	1
18	MP1C	Mx	.067	1
19	MP1C	X	68.005	5
20	MP1C	Z	117.789	5
21	MP1C	Mx	.067	5
22	M150	X	48.859	1
23	M150	Z	84.626	1
24	M150	Mx	-.031	1
25	M150	X	48.859	5
26	M150	Z	84.626	5
27	M150	Mx	-.031	5
28	M105	X	68.005	1
29	M105	Z	117.789	1
30	M105	Mx	.067	1
31	M105	X	68.005	5
32	M105	Z	117.789	5
33	M105	Mx	.067	5
34	M93	X	38.671	1
35	M93	Z	66.981	1
36	M93	Mx	-.013	1
37	M93	X	38.671	5
38	M93	Z	66.981	5
39	M93	Mx	-.013	5
40	MP4A	X	66.642	1
41	MP4A	Z	115.427	1
42	MP4A	Mx	-.105	1
43	MP4A	X	66.642	5
44	MP4A	Z	115.427	5
45	MP4A	Mx	-.105	5
46	MP4B	X	69.97	1
47	MP4B	Z	121.191	1
48	MP4B	Mx	.058	1
49	MP4B	X	69.97	5
50	MP4B	Z	121.191	5
51	MP4B	Mx	.058	5
52	MP4C	X	58.215	1

Member Point Loads (BLC 8 : Antenna Wo (150 Deg)) (Continued)

	Member Label	Direction	Magnitude[lb,k-ft]	Location[ft,%]
53	MP4C	Z	100.831	1
54	MP4C	Mx	-.002	1
55	MP4C	X	58.215	5
56	MP4C	Z	100.831	5
57	MP4C	Mx	-.002	5
58	MP4A	X	66.642	1
59	MP4A	Z	115.427	1
60	MP4A	Mx	.039	1
61	MP4A	X	66.642	5
62	MP4A	Z	115.427	5
63	MP4A	Mx	.039	5
64	MP4B	X	69.97	1
65	MP4B	Z	121.191	1
66	MP4B	Mx	-.106	1
67	MP4B	X	69.97	5
68	MP4B	Z	121.191	5
69	MP4B	Mx	-.106	5
70	MP4C	X	58.215	1
71	MP4C	Z	100.831	1
72	MP4C	Mx	.091	1
73	MP4C	X	58.215	5
74	MP4C	Z	100.831	5
75	MP4C	Mx	.091	5
76	MP3A	X	31.887	2
77	MP3A	Z	55.23	2
78	MP3A	Mx	-.016	2
79	MP3A	X	31.887	4
80	MP3A	Z	55.23	4
81	MP3A	Mx	-.016	4
82	MP3B	X	34.931	2
83	MP3B	Z	60.503	2
84	MP3B	Mx	-.012	2
85	MP3B	X	34.931	4
86	MP3B	Z	60.503	4
87	MP3B	Mx	-.012	4
88	MP3C	X	24.179	2
89	MP3C	Z	41.879	2
90	MP3C	Mx	.019	2
91	MP3C	X	24.179	4
92	MP3C	Z	41.879	4
93	MP3C	Mx	.019	4
94	MP4A	X	5.465	1
95	MP4A	Z	9.466	1
96	MP4A	Mx	.003	1
97	MP4B	X	5.708	1
98	MP4B	Z	9.886	1
99	MP4B	Mx	.002	1
100	MP4C	X	4.851	1
101	MP4C	Z	8.402	1
102	MP4C	Mx	-.004	1
103	MP2A	X	61.124	2
104	MP2A	Z	105.87	2

Member Point Loads (BLC 8 : Antenna Wo (150 Deg)) (Continued)

	Member Label	Direction	Magnitude[lb,k-ft]	Location[ft,%]
105	MP2A	Mx	.031	2
106	MP4A	X	27.446	2.5
107	MP4A	Z	47.538	2.5
108	MP4A	Mx	.014	2.5
109	MP4B	X	28.766	2.5
110	MP4B	Z	49.824	2.5
111	MP4B	Mx	.01	2.5
112	MP4C	X	24.104	2.5
113	MP4C	Z	41.75	2.5
114	MP4C	Mx	-.018	2.5
115	MP5A	X	26.996	2.5
116	MP5A	Z	46.759	2.5
117	MP5A	Mx	.013	2.5
118	MP5B	X	28.555	2.5
119	MP5B	Z	49.46	2.5
120	MP5B	Mx	.01	2.5
121	MP5C	X	23.048	2.5
122	MP5C	Z	39.92	2.5
123	MP5C	Mx	-.018	2.5

Member Point Loads (BLC 9 : Antenna Wo (180 Deg))

	Member Label	Direction	Magnitude[lb,k-ft]	Location[ft,%]
1	MP2B	X	0	2
2	MP2B	Z	106.844	2
3	MP2B	Mx	.046	2
4	MP1A	X	0	1
5	MP1A	Z	71.37	1
6	MP1A	Mx	-.006	1
7	MP1A	X	0	5
8	MP1A	Z	71.37	5
9	MP1A	Mx	-.006	5
10	MP1B	X	0	1
11	MP1B	Z	109.663	1
12	MP1B	Mx	-.042	1
13	MP1B	X	0	5
14	MP1B	Z	109.663	5
15	MP1B	Mx	-.042	5
16	MP1C	X	0	1
17	MP1C	Z	130.038	1
18	MP1C	Mx	.061	1
19	MP1C	X	0	5
20	MP1C	Z	130.038	5
21	MP1C	Mx	.061	5
22	M150	X	0	1
23	M150	Z	71.37	1
24	M150	Mx	-.006	1
25	M150	X	0	5
26	M150	Z	71.37	5
27	M150	Mx	-.006	5
28	M105	X	0	1
29	M105	Z	130.038	1

Member Point Loads (BLC 9 : Antenna Wo (180 Deg)) (Continued)

	Member Label	Direction	Magnitude[lb,k-ft]	Location[ft,%]
30	M105	Mx	.061	1
31	M105	X	0	5
32	M105	Z	130.038	5
33	M105	Mx	.061	5
34	M93	X	0	1
35	M93	Z	109.663	1
36	M93	Mx	-.042	1
37	M93	X	0	5
38	M93	Z	109.663	5
39	M93	Mx	-.042	5
40	MP4A	X	0	1
41	MP4A	Z	145.793	1
42	MP4A	Mx	-.091	1
43	MP4A	X	0	5
44	MP4A	Z	145.793	5
45	MP4A	Mx	-.091	5
46	MP4B	X	0	1
47	MP4B	Z	116.429	1
48	MP4B	Mx	.002	1
49	MP4B	X	0	5
50	MP4B	Z	116.429	5
51	MP4B	Mx	.002	5
52	MP4C	X	0	1
53	MP4C	Z	97.264	1
54	MP4C	Mx	.037	1
55	MP4C	X	0	5
56	MP4C	Z	97.264	5
57	MP4C	Mx	.037	5
58	MP4A	X	0	1
59	MP4A	Z	145.793	1
60	MP4A	Mx	.091	1
61	MP4A	X	0	5
62	MP4A	Z	145.793	5
63	MP4A	Mx	.091	5
64	MP4B	X	0	1
65	MP4B	Z	116.429	1
66	MP4B	Mx	-.091	1
67	MP4B	X	0	5
68	MP4B	Z	116.429	5
69	MP4B	Mx	-.091	5
70	MP4C	X	0	1
71	MP4C	Z	97.264	1
72	MP4C	Mx	.058	1
73	MP4C	X	0	5
74	MP4C	Z	97.264	5
75	MP4C	Mx	.058	5
76	MP3A	X	0	2
77	MP3A	Z	75.217	2
78	MP3A	Mx	0	2
79	MP3A	X	0	4
80	MP3A	Z	75.217	4
81	MP3A	Mx	0	4

Member Point Loads (BLC 9 : Antenna Wo (180 Deg)) (Continued)

	Member Label	Direction	Magnitude[lb,k-ft]	Location[ft,%]
82	MP3B	X	0	2
83	MP3B	Z	48.358	2
84	MP3B	Mx	-.019	2
85	MP3B	X	0	4
86	MP3B	Z	48.358	4
87	MP3B	Mx	-.019	4
88	MP3C	X	0	2
89	MP3C	Z	30.827	2
90	MP3C	Mx	.015	2
91	MP3C	X	0	4
92	MP3C	Z	30.827	4
93	MP3C	Mx	.015	4
94	MP4A	X	0	1
95	MP4A	Z	11.843	1
96	MP4A	Mx	0	1
97	MP4B	X	0	1
98	MP4B	Z	9.701	1
99	MP4B	Mx	.004	1
100	MP4C	X	0	1
101	MP4C	Z	8.304	1
102	MP4C	Mx	-.004	1
103	MP2A	X	0	2
104	MP2A	Z	129.949	2
105	MP2A	Mx	0	2
106	MP4A	X	0	2.5
107	MP4A	Z	59.853	2.5
108	MP4A	Mx	0	2.5
109	MP4B	X	0	2.5
110	MP4B	Z	48.208	2.5
111	MP4B	Mx	.018	2.5
112	MP4C	X	0	2.5
113	MP4C	Z	40.607	2.5
114	MP4C	Mx	-.02	2.5
115	MP5A	X	0	2.5
116	MP5A	Z	59.853	2.5
117	MP5A	Mx	0	2.5
118	MP5B	X	0	2.5
119	MP5B	Z	46.095	2.5
120	MP5B	Mx	.018	2.5
121	MP5C	X	0	2.5
122	MP5C	Z	37.115	2.5
123	MP5C	Mx	-.018	2.5

Member Point Loads (BLC 10 : Antenna Wo (210 Deg))

	Member Label	Direction	Magnitude[lb,k-ft]	Location[ft,%]
1	MP2B	X	-49.571	2
2	MP2B	Z	85.86	2
3	MP2B	Mx	.05	2
4	MP1A	X	-38.671	1
5	MP1A	Z	66.981	1
6	MP1A	Mx	.013	1

Member Point Loads (BLC 10 : Antenna Wo (210 Deg)) (Continued)

	Member Label	Direction	Magnitude[lb,k-ft]	Location[ft,%]
7	MP1A	X	-38.671	5
8	MP1A	Z	66.981	5
9	MP1A	Mx	.013	5
10	MP1B	X	-68.005	1
11	MP1B	Z	117.789	1
12	MP1B	Mx	-.067	1
13	MP1B	X	-68.005	5
14	MP1B	Z	117.789	5
15	MP1B	Mx	-.067	5
16	MP1C	X	-48.859	1
17	MP1C	Z	84.626	1
18	MP1C	Mx	.031	1
19	MP1C	X	-48.859	5
20	MP1C	Z	84.626	5
21	MP1C	Mx	.031	5
22	M150	X	-38.671	1
23	M150	Z	66.981	1
24	M150	Mx	.013	1
25	M150	X	-38.671	5
26	M150	Z	66.981	5
27	M150	Mx	.013	5
28	M105	X	-48.859	1
29	M105	Z	84.626	1
30	M105	Mx	.031	1
31	M105	X	-48.859	5
32	M105	Z	84.626	5
33	M105	Mx	.031	5
34	M93	X	-68.005	1
35	M93	Z	117.789	1
36	M93	Mx	-.067	1
37	M93	X	-68.005	5
38	M93	Z	117.789	5
39	M93	Mx	-.067	5
40	MP4A	X	-66.642	1
41	MP4A	Z	115.427	1
42	MP4A	Mx	-.039	1
43	MP4A	X	-66.642	5
44	MP4A	Z	115.427	5
45	MP4A	Mx	-.039	5
46	MP4B	X	-48.632	1
47	MP4B	Z	84.233	1
48	MP4B	Mx	-.037	1
49	MP4B	X	-48.632	5
50	MP4B	Z	84.233	5
51	MP4B	Mx	-.037	5
52	MP4C	X	-50.804	1
53	MP4C	Z	87.995	1
54	MP4C	Mx	.069	1
55	MP4C	X	-50.804	5
56	MP4C	Z	87.995	5
57	MP4C	Mx	.069	5
58	MP4A	X	-66.642	1

Member Point Loads (BLC 10 : Antenna Wo (210 Deg)) (Continued)

	Member Label	Direction	Magnitude[lb,k-ft]	Location[ft,%]
59	MP4A	Z	115.427	1
60	MP4A	Mx	.105	1
61	MP4A	X	-66.642	5
62	MP4A	Z	115.427	5
63	MP4A	Mx	.105	5
64	MP4B	X	-48.632	1
65	MP4B	Z	84.233	1
66	MP4B	Mx	-.058	1
67	MP4B	X	-48.632	5
68	MP4B	Z	84.233	5
69	MP4B	Mx	-.058	5
70	MP4C	X	-50.804	1
71	MP4C	Z	87.995	1
72	MP4C	Mx	.026	1
73	MP4C	X	-50.804	5
74	MP4C	Z	87.995	5
75	MP4C	Mx	.026	5
76	MP3A	X	-31.887	2
77	MP3A	Z	55.23	2
78	MP3A	Mx	.016	2
79	MP3A	X	-31.887	4
80	MP3A	Z	55.23	4
81	MP3A	Mx	.016	4
82	MP3B	X	-15.414	2
83	MP3B	Z	26.697	2
84	MP3B	Mx	-.015	2
85	MP3B	X	-15.414	4
86	MP3B	Z	26.697	4
87	MP3B	Mx	-.015	4
88	MP3C	X	-17.401	2
89	MP3C	Z	30.139	2
90	MP3C	Mx	.016	2
91	MP3C	X	-17.401	4
92	MP3C	Z	30.139	4
93	MP3C	Mx	.016	4
94	MP4A	X	-5.465	1
95	MP4A	Z	9.466	1
96	MP4A	Mx	-.003	1
97	MP4B	X	-4.152	1
98	MP4B	Z	7.191	1
99	MP4B	Mx	.004	1
100	MP4C	X	-4.31	1
101	MP4C	Z	7.466	1
102	MP4C	Mx	-.004	1
103	MP2A	X	-61.124	2
104	MP2A	Z	105.87	2
105	MP2A	Mx	-.031	2
106	MP4A	X	-27.446	2.5
107	MP4A	Z	47.538	2.5
108	MP4A	Mx	-.014	2.5
109	MP4B	X	-20.304	2.5
110	MP4B	Z	35.167	2.5

Member Point Loads (BLC 10 : Antenna Wo (210 Deg)) (Continued)

	Member Label	Direction	Magnitude[lb,k-ft]	Location[ft,%]
111	MP4B	Mx	.02	2.5
112	MP4C	X	-21.165	2.5
113	MP4C	Z	36.659	2.5
114	MP4C	Mx	-.02	2.5
115	MP5A	X	-26.996	2.5
116	MP5A	Z	46.759	2.5
117	MP5A	Mx	-.013	2.5
118	MP5B	X	-18.558	2.5
119	MP5B	Z	32.143	2.5
120	MP5B	Mx	.018	2.5
121	MP5C	X	-19.575	2.5
122	MP5C	Z	33.906	2.5
123	MP5C	Mx	-.018	2.5

Member Point Loads (BLC 11 : Antenna Wo (240 Deg))

	Member Label	Direction	Magnitude[lb,k-ft]	Location[ft,%]
1	MP2B	X	-92.53	2
2	MP2B	Z	53.422	2
3	MP2B	Mx	.046	2
4	MP1A	X	-94.971	1
5	MP1A	Z	54.831	1
6	MP1A	Mx	.042	1
7	MP1A	X	-94.971	5
8	MP1A	Z	54.831	5
9	MP1A	Mx	.042	5
10	MP1B	X	-112.616	1
11	MP1B	Z	65.019	1
12	MP1B	Mx	-.061	1
13	MP1B	X	-112.616	5
14	MP1B	Z	65.019	5
15	MP1B	Mx	-.061	5
16	MP1C	X	-61.808	1
17	MP1C	Z	35.685	1
18	MP1C	Mx	.006	1
19	MP1C	X	-61.808	5
20	MP1C	Z	35.685	5
21	MP1C	Mx	.006	5
22	M150	X	-94.971	1
23	M150	Z	54.831	1
24	M150	Mx	.042	1
25	M150	X	-94.971	5
26	M150	Z	54.831	5
27	M150	Mx	.042	5
28	M105	X	-61.808	1
29	M105	Z	35.685	1
30	M105	Mx	.006	1
31	M105	X	-61.808	5
32	M105	Z	35.685	5
33	M105	Mx	.006	5
34	M93	X	-112.616	1
35	M93	Z	65.019	1

Member Point Loads (BLC 11 : Antenna Wo (240 Deg)) (Continued)

	Member Label	Direction	Magnitude[lb,k-ft]	Location[ft,%]
36	M93	Mx	-.061	1
37	M93	X	-112.616	5
38	M93	Z	65.019	5
39	M93	Mx	-.061	5
40	MP4A	X	-93.76	1
41	MP4A	Z	54.132	1
42	MP4A	Mx	.013	1
43	MP4A	X	-93.76	5
44	MP4A	Z	54.132	5
45	MP4A	Mx	.013	5
46	MP4B	X	-87.995	1
47	MP4B	Z	50.804	1
48	MP4B	Mx	-.069	1
49	MP4B	X	-87.995	5
50	MP4B	Z	50.804	5
51	MP4B	Mx	-.069	5
52	MP4C	X	-108.356	1
53	MP4C	Z	62.559	1
54	MP4C	Mx	.1	1
55	MP4C	X	-108.356	5
56	MP4C	Z	62.559	5
57	MP4C	Mx	.1	5
58	MP4A	X	-93.76	1
59	MP4A	Z	54.132	1
60	MP4A	Mx	.081	1
61	MP4A	X	-93.76	5
62	MP4A	Z	54.132	5
63	MP4A	Mx	.081	5
64	MP4B	X	-87.995	1
65	MP4B	Z	50.804	1
66	MP4B	Mx	-.026	1
67	MP4B	X	-87.995	5
68	MP4B	Z	50.804	5
69	MP4B	Mx	-.026	5
70	MP4C	X	-108.356	1
71	MP4C	Z	62.559	1
72	MP4C	Mx	-.02	1
73	MP4C	X	-108.356	5
74	MP4C	Z	62.559	5
75	MP4C	Mx	-.02	5
76	MP3A	X	-35.412	2
77	MP3A	Z	20.445	2
78	MP3A	Mx	.018	2
79	MP3A	X	-35.412	4
80	MP3A	Z	20.445	4
81	MP3A	Mx	.018	4
82	MP3B	X	-30.139	2
83	MP3B	Z	17.401	2
84	MP3B	Mx	-.016	2
85	MP3B	X	-30.139	4
86	MP3B	Z	17.401	4
87	MP3B	Mx	-.016	4

Member Point Loads (BLC 11 : Antenna Wo (240 Deg)) (Continued)

	Member Label	Direction	Magnitude[lb,k-ft]	Location[ft,%]
88	MP3C	X	-48.762	2
89	MP3C	Z	28.153	2
90	MP3C	Mx	.018	2
91	MP3C	X	-48.762	4
92	MP3C	Z	28.153	4
93	MP3C	Mx	.018	4
94	MP4A	X	-7.886	1
95	MP4A	Z	4.553	1
96	MP4A	Mx	-.004	1
97	MP4B	X	-7.466	1
98	MP4B	Z	4.31	1
99	MP4B	Mx	.004	1
100	MP4C	X	-8.95	1
101	MP4C	Z	5.168	1
102	MP4C	Mx	-.003	1
103	MP2A	X	-92.53	2
104	MP2A	Z	53.422	2
105	MP2A	Mx	-.046	2
106	MP4A	X	-38.945	2.5
107	MP4A	Z	22.485	2.5
108	MP4A	Mx	-.019	2.5
109	MP4B	X	-36.659	2.5
110	MP4B	Z	21.165	2.5
111	MP4B	Mx	.02	2.5
112	MP4C	X	-44.734	2.5
113	MP4C	Z	25.827	2.5
114	MP4C	Mx	-.017	2.5
115	MP5A	X	-36.606	2.5
116	MP5A	Z	21.135	2.5
117	MP5A	Mx	-.018	2.5
118	MP5B	X	-33.906	2.5
119	MP5B	Z	19.575	2.5
120	MP5B	Mx	.018	2.5
121	MP5C	X	-43.445	2.5
122	MP5C	Z	25.083	2.5
123	MP5C	Mx	-.016	2.5

Member Point Loads (BLC 12 : Antenna Wo (270 Deg))

	Member Label	Direction	Magnitude[lb,k-ft]	Location[ft,%]
1	MP2B	X	-122.248	2
2	MP2B	Z	0	2
3	MP2B	Mx	.031	2
4	MP1A	X	-136.011	1
5	MP1A	Z	0	1
6	MP1A	Mx	.067	1
7	MP1A	X	-136.011	5
8	MP1A	Z	0	5
9	MP1A	Mx	.067	5
10	MP1B	X	-97.718	1
11	MP1B	Z	0	1
12	MP1B	Mx	-.031	1

Member Point Loads (BLC 12 : Antenna Wo (270 Deg)) (Continued)

	Member Label	Direction	Magnitude[lb,k-ft]	Location[ft,%]
13	MP1B	X	-97.718	5
14	MP1B	Z	0	5
15	MP1B	Mx	-.031	5
16	MP1C	X	-77.342	1
17	MP1C	Z	0	1
18	MP1C	Mx	-.013	1
19	MP1C	X	-77.342	5
20	MP1C	Z	0	5
21	MP1C	Mx	-.013	5
22	M150	X	-136.011	1
23	M150	Z	0	1
24	M150	Mx	.067	1
25	M150	X	-136.011	5
26	M150	Z	0	5
27	M150	Mx	.067	5
28	M105	X	-77.342	1
29	M105	Z	0	1
30	M105	Mx	-.013	1
31	M105	X	-77.342	5
32	M105	Z	0	5
33	M105	Mx	-.013	5
34	M93	X	-97.718	1
35	M93	Z	0	1
36	M93	Mx	-.031	1
37	M93	X	-97.718	5
38	M93	Z	0	5
39	M93	Mx	-.031	5
40	MP4A	X	-95.755	1
41	MP4A	Z	0	1
42	MP4A	Mx	.048	1
43	MP4A	X	-95.755	5
44	MP4A	Z	0	5
45	MP4A	Mx	.048	5
46	MP4B	X	-125.118	1
47	MP4B	Z	0	1
48	MP4B	Mx	-.1	1
49	MP4B	X	-125.118	5
50	MP4B	Z	0	5
51	MP4B	Mx	-.1	5
52	MP4C	X	-144.284	1
53	MP4C	Z	0	1
54	MP4C	Mx	.101	1
55	MP4C	X	-144.284	5
56	MP4C	Z	0	5
57	MP4C	Mx	.101	5
58	MP4A	X	-95.755	1
59	MP4A	Z	0	1
60	MP4A	Mx	.048	1
61	MP4A	X	-95.755	5
62	MP4A	Z	0	5
63	MP4A	Mx	.048	5
64	MP4B	X	-125.118	1

Member Point Loads (BLC 12 : Antenna Wo (270 Deg)) (Continued)

	Member Label	Direction	Magnitude[lb,k-ft]	Location[ft,%]
65	MP4B	Z	0	1
66	MP4B	Mx	.02	1
67	MP4B	X	-125.118	5
68	MP4B	Z	0	5
69	MP4B	Mx	.02	5
70	MP4C	X	-144.284	1
71	MP4C	Z	0	1
72	MP4C	Mx	-.076	1
73	MP4C	X	-144.284	5
74	MP4C	Z	0	5
75	MP4C	Mx	-.076	5
76	MP3A	X	-29.447	2
77	MP3A	Z	0	2
78	MP3A	Mx	.015	2
79	MP3A	X	-29.447	4
80	MP3A	Z	0	4
81	MP3A	Mx	.015	4
82	MP3B	X	-56.306	2
83	MP3B	Z	0	2
84	MP3B	Mx	-.018	2
85	MP3B	X	-56.306	4
86	MP3B	Z	0	4
87	MP3B	Mx	-.018	4
88	MP3C	X	-73.837	2
89	MP3C	Z	0	2
90	MP3C	Mx	.006	2
91	MP3C	X	-73.837	4
92	MP3C	Z	0	4
93	MP3C	Mx	.006	4
94	MP4A	X	-8.194	1
95	MP4A	Z	0	1
96	MP4A	Mx	-.004	1
97	MP4B	X	-10.335	1
98	MP4B	Z	0	1
99	MP4B	Mx	.003	1
100	MP4C	X	-11.733	1
101	MP4C	Z	0	1
102	MP4C	Mx	-.001	1
103	MP2A	X	-99.142	2
104	MP2A	Z	0	2
105	MP2A	Mx	-.05	2
106	MP4A	X	-40.009	2.5
107	MP4A	Z	0	2.5
108	MP4A	Mx	-.02	2.5
109	MP4B	X	-51.654	2.5
110	MP4B	Z	0	2.5
111	MP4B	Mx	.017	2.5
112	MP4C	X	-59.255	2.5
113	MP4C	Z	0	2.5
114	MP4C	Mx	-.005	2.5
115	MP5A	X	-36.408	2.5
116	MP5A	Z	0	2.5

Member Point Loads (BLC 12 : Antenna Wo (270 Deg)) (Continued)

	Member Label	Direction	Magnitude[lb,k-ft]	Location[ft,%]
117	MP5A	Mx	-.018	2.5
118	MP5B	X	-50.166	2.5
119	MP5B	Z	0	2.5
120	MP5B	Mx	.016	2.5
121	MP5C	X	-59.147	2.5
122	MP5C	Z	0	2.5
123	MP5C	Mx	-.005	2.5

Member Point Loads (BLC 13 : Antenna Wo (300 Deg))

	Member Label	Direction	Magnitude[lb,k-ft]	Location[ft,%]
1	MP2B	X	-112.539	2
2	MP2B	Z	-64.975	2
3	MP2B	Mx	0	2
4	MP1A	X	-112.616	1
5	MP1A	Z	-65.019	1
6	MP1A	Mx	.061	1
7	MP1A	X	-112.616	5
8	MP1A	Z	-65.019	5
9	MP1A	Mx	.061	5
10	MP1B	X	-61.808	1
11	MP1B	Z	-35.685	1
12	MP1B	Mx	-.006	1
13	MP1B	X	-61.808	5
14	MP1B	Z	-35.685	5
15	MP1B	Mx	-.006	5
16	MP1C	X	-94.971	1
17	MP1C	Z	-54.831	1
18	MP1C	Mx	-.042	1
19	MP1C	X	-94.971	5
20	MP1C	Z	-54.831	5
21	MP1C	Mx	-.042	5
22	M150	X	-112.616	1
23	M150	Z	-65.019	1
24	M150	Mx	.061	1
25	M150	X	-112.616	5
26	M150	Z	-65.019	5
27	M150	Mx	.061	5
28	M105	X	-94.971	1
29	M105	Z	-54.831	1
30	M105	Mx	-.042	1
31	M105	X	-94.971	5
32	M105	Z	-54.831	5
33	M105	Mx	-.042	5
34	M93	X	-61.808	1
35	M93	Z	-35.685	1
36	M93	Mx	-.006	1
37	M93	X	-61.808	5
38	M93	Z	-35.685	5
39	M93	Mx	-.006	5
40	MP4A	X	-93.76	1
41	MP4A	Z	-54.132	1

Member Point Loads (BLC 13 : Antenna Wo (300 Deg)) (Continued)

	Member Label	Direction	Magnitude[lb,k-ft]	Location[ft,%]
42	MP4A	Mx	.081	1
43	MP4A	X	-93.76	5
44	MP4A	Z	-54.132	5
45	MP4A	Mx	.081	5
46	MP4B	X	-124.954	1
47	MP4B	Z	-72.142	1
48	MP4B	Mx	-.101	1
49	MP4B	X	-124.954	5
50	MP4B	Z	-72.142	5
51	MP4B	Mx	-.101	5
52	MP4C	X	-121.191	1
53	MP4C	Z	-69.97	1
54	MP4C	Mx	.058	1
55	MP4C	X	-121.191	5
56	MP4C	Z	-69.97	5
57	MP4C	Mx	.058	5
58	MP4A	X	-93.76	1
59	MP4A	Z	-54.132	1
60	MP4A	Mx	.013	1
61	MP4A	X	-93.76	5
62	MP4A	Z	-54.132	5
63	MP4A	Mx	.013	5
64	MP4B	X	-124.954	1
65	MP4B	Z	-72.142	1
66	MP4B	Mx	.076	1
67	MP4B	X	-124.954	5
68	MP4B	Z	-72.142	5
69	MP4B	Mx	.076	5
70	MP4C	X	-121.191	1
71	MP4C	Z	-69.97	1
72	MP4C	Mx	-.106	1
73	MP4C	X	-121.191	5
74	MP4C	Z	-69.97	5
75	MP4C	Mx	-.106	5
76	MP3A	X	-35.412	2
77	MP3A	Z	-20.445	2
78	MP3A	Mx	.018	2
79	MP3A	X	-35.412	4
80	MP3A	Z	-20.445	4
81	MP3A	Mx	.018	4
82	MP3B	X	-63.945	2
83	MP3B	Z	-36.918	2
84	MP3B	Mx	-.006	2
85	MP3B	X	-63.945	4
86	MP3B	Z	-36.918	4
87	MP3B	Mx	-.006	4
88	MP3C	X	-60.503	2
89	MP3C	Z	-34.931	2
90	MP3C	Mx	-.012	2
91	MP3C	X	-60.503	4
92	MP3C	Z	-34.931	4
93	MP3C	Mx	-.012	4

Member Point Loads (BLC 13 : Antenna Wo (300 Deg)) (Continued)

	Member Label	Direction	Magnitude[lb,k-ft]	Location[ft,%]
94	MP4A	X	-7.886	1
95	MP4A	Z	-4.553	1
96	MP4A	Mx	-.004	1
97	MP4B	X	-10.161	1
98	MP4B	Z	-5.866	1
99	MP4B	Mx	.001	1
100	MP4C	X	-9.886	1
101	MP4C	Z	-5.708	1
102	MP4C	Mx	.002	1
103	MP2A	X	-92.53	2
104	MP2A	Z	-53.422	2
105	MP2A	Mx	-.046	2
106	MP4A	X	-38.945	2.5
107	MP4A	Z	-22.485	2.5
108	MP4A	Mx	-.019	2.5
109	MP4B	X	-51.316	2.5
110	MP4B	Z	-29.628	2.5
111	MP4B	Mx	.005	2.5
112	MP4C	X	-49.824	2.5
113	MP4C	Z	-28.766	2.5
114	MP4C	Mx	.01	2.5
115	MP5A	X	-36.606	2.5
116	MP5A	Z	-21.135	2.5
117	MP5A	Mx	-.018	2.5
118	MP5B	X	-51.222	2.5
119	MP5B	Z	-29.573	2.5
120	MP5B	Mx	.005	2.5
121	MP5C	X	-49.46	2.5
122	MP5C	Z	-28.555	2.5
123	MP5C	Mx	.01	2.5

Member Point Loads (BLC 14 : Antenna Wo (330 Deg))

	Member Label	Direction	Magnitude[lb,k-ft]	Location[ft,%]
1	MP2B	X	-61.124	2
2	MP2B	Z	-105.87	2
3	MP2B	Mx	-.031	2
4	MP1A	X	-48.859	1
5	MP1A	Z	-84.626	1
6	MP1A	Mx	.031	1
7	MP1A	X	-48.859	5
8	MP1A	Z	-84.626	5
9	MP1A	Mx	.031	5
10	MP1B	X	-38.671	1
11	MP1B	Z	-66.981	1
12	MP1B	Mx	.013	1
13	MP1B	X	-38.671	5
14	MP1B	Z	-66.981	5
15	MP1B	Mx	.013	5
16	MP1C	X	-68.005	1
17	MP1C	Z	-117.789	1
18	MP1C	Mx	-.067	1

Member Point Loads (BLC 14 : Antenna Wo (330 Deg)) (Continued)

	Member Label	Direction	Magnitude[lb,k-ft]	Location[ft,%]
19	MP1C	X	-68.005	5
20	MP1C	Z	-117.789	5
21	MP1C	Mx	-.067	5
22	M150	X	-48.859	1
23	M150	Z	-84.626	1
24	M150	Mx	.031	1
25	M150	X	-48.859	5
26	M150	Z	-84.626	5
27	M150	Mx	.031	5
28	M105	X	-68.005	1
29	M105	Z	-117.789	1
30	M105	Mx	-.067	1
31	M105	X	-68.005	5
32	M105	Z	-117.789	5
33	M105	Mx	-.067	5
34	M93	X	-38.671	1
35	M93	Z	-66.981	1
36	M93	Mx	.013	1
37	M93	X	-38.671	5
38	M93	Z	-66.981	5
39	M93	Mx	.013	5
40	MP4A	X	-66.642	1
41	MP4A	Z	-115.427	1
42	MP4A	Mx	.105	1
43	MP4A	X	-66.642	5
44	MP4A	Z	-115.427	5
45	MP4A	Mx	.105	5
46	MP4B	X	-69.97	1
47	MP4B	Z	-121.191	1
48	MP4B	Mx	-.058	1
49	MP4B	X	-69.97	5
50	MP4B	Z	-121.191	5
51	MP4B	Mx	-.058	5
52	MP4C	X	-58.215	1
53	MP4C	Z	-100.831	1
54	MP4C	Mx	.002	1
55	MP4C	X	-58.215	5
56	MP4C	Z	-100.831	5
57	MP4C	Mx	.002	5
58	MP4A	X	-66.642	1
59	MP4A	Z	-115.427	1
60	MP4A	Mx	-.039	1
61	MP4A	X	-66.642	5
62	MP4A	Z	-115.427	5
63	MP4A	Mx	-.039	5
64	MP4B	X	-69.97	1
65	MP4B	Z	-121.191	1
66	MP4B	Mx	.106	1
67	MP4B	X	-69.97	5
68	MP4B	Z	-121.191	5
69	MP4B	Mx	.106	5
70	MP4C	X	-58.215	1

Member Point Loads (BLC 14 : Antenna Wo (330 Deg)) (Continued)

	Member Label	Direction	Magnitude[lb,k-ft]	Location[ft,%]
71	MP4C	Z	-100.831	1
72	MP4C	Mx	-.091	1
73	MP4C	X	-58.215	5
74	MP4C	Z	-100.831	5
75	MP4C	Mx	-.091	5
76	MP3A	X	-31.887	2
77	MP3A	Z	-55.23	2
78	MP3A	Mx	.016	2
79	MP3A	X	-31.887	4
80	MP3A	Z	-55.23	4
81	MP3A	Mx	.016	4
82	MP3B	X	-34.931	2
83	MP3B	Z	-60.503	2
84	MP3B	Mx	.012	2
85	MP3B	X	-34.931	4
86	MP3B	Z	-60.503	4
87	MP3B	Mx	.012	4
88	MP3C	X	-24.179	2
89	MP3C	Z	-41.879	2
90	MP3C	Mx	-.019	2
91	MP3C	X	-24.179	4
92	MP3C	Z	-41.879	4
93	MP3C	Mx	-.019	4
94	MP4A	X	-5.465	1
95	MP4A	Z	-9.466	1
96	MP4A	Mx	-.003	1
97	MP4B	X	-5.708	1
98	MP4B	Z	-9.886	1
99	MP4B	Mx	-.002	1
100	MP4C	X	-4.851	1
101	MP4C	Z	-8.402	1
102	MP4C	Mx	.004	1
103	MP2A	X	-61.124	2
104	MP2A	Z	-105.87	2
105	MP2A	Mx	-.031	2
106	MP4A	X	-27.446	2.5
107	MP4A	Z	-47.538	2.5
108	MP4A	Mx	-.014	2.5
109	MP4B	X	-28.766	2.5
110	MP4B	Z	-49.824	2.5
111	MP4B	Mx	-.01	2.5
112	MP4C	X	-24.104	2.5
113	MP4C	Z	-41.75	2.5
114	MP4C	Mx	.018	2.5
115	MP5A	X	-26.996	2.5
116	MP5A	Z	-46.759	2.5
117	MP5A	Mx	-.013	2.5
118	MP5B	X	-28.555	2.5
119	MP5B	Z	-49.46	2.5
120	MP5B	Mx	-.01	2.5
121	MP5C	X	-23.048	2.5
122	MP5C	Z	-39.92	2.5

Member Point Loads (BLC 14 : Antenna Wo (330 Deg)) (Continued)

	Member Label	Direction	Magnitude[lb,k-ft]	Location[ft,%]
123	MP5C	Mx	.018	2.5

Member Point Loads (BLC 15 : Antenna Wi (0 Deg))

	Member Label	Direction	Magnitude[lb,k-ft]	Location[ft,%]
1	MP2B	X	0	2
2	MP2B	Z	-20.248	2
3	MP2B	Mx	-.009	2
4	MP1A	X	0	1
5	MP1A	Z	-13.716	1
6	MP1A	Mx	.001	1
7	MP1A	X	0	5
8	MP1A	Z	-13.716	5
9	MP1A	Mx	.001	5
10	MP1B	X	0	1
11	MP1B	Z	-20.185	1
12	MP1B	Mx	.008	1
13	MP1B	X	0	5
14	MP1B	Z	-20.185	5
15	MP1B	Mx	.008	5
16	MP1C	X	0	1
17	MP1C	Z	-23.627	1
18	MP1C	Mx	-.011	1
19	MP1C	X	0	5
20	MP1C	Z	-23.627	5
21	MP1C	Mx	-.011	5
22	M150	X	0	1
23	M150	Z	-13.716	1
24	M150	Mx	.001	1
25	M150	X	0	5
26	M150	Z	-13.716	5
27	M150	Mx	.001	5
28	M105	X	0	1
29	M105	Z	-23.627	1
30	M105	Mx	-.011	1
31	M105	X	0	5
32	M105	Z	-23.627	5
33	M105	Mx	-.011	5
34	M93	X	0	1
35	M93	Z	-20.185	1
36	M93	Mx	.008	1
37	M93	X	0	5
38	M93	Z	-20.185	5
39	M93	Mx	.008	5
40	MP4A	X	0	1
41	MP4A	Z	-26.319	1
42	MP4A	Mx	.016	1
43	MP4A	X	0	5
44	MP4A	Z	-26.319	5
45	MP4A	Mx	.016	5
46	MP4B	X	0	1
47	MP4B	Z	-21.397	1

Member Point Loads (BLC 15 : Antenna Wi (0 Deg)) (Continued)

	Member Label	Direction	Magnitude[lb,k-ft]	Location[ft,%]
48	MP4B	Mx	-.000401	1
49	MP4B	X	0	5
50	MP4B	Z	-21.397	5
51	MP4B	Mx	-.000401	5
52	MP4C	X	0	1
53	MP4C	Z	-18.184	1
54	MP4C	Mx	-.007	1
55	MP4C	X	0	5
56	MP4C	Z	-18.184	5
57	MP4C	Mx	-.007	5
58	MP4A	X	0	1
59	MP4A	Z	-26.319	1
60	MP4A	Mx	-.016	1
61	MP4A	X	0	5
62	MP4A	Z	-26.319	5
63	MP4A	Mx	-.016	5
64	MP4B	X	0	1
65	MP4B	Z	-21.397	1
66	MP4B	Mx	.017	1
67	MP4B	X	0	5
68	MP4B	Z	-21.397	5
69	MP4B	Mx	.017	5
70	MP4C	X	0	1
71	MP4C	Z	-18.184	1
72	MP4C	Mx	-.011	1
73	MP4C	X	0	5
74	MP4C	Z	-18.184	5
75	MP4C	Mx	-.011	5
76	MP3A	X	0	2
77	MP3A	Z	-13.985	2
78	MP3A	Mx	0	2
79	MP3A	X	0	4
80	MP3A	Z	-13.985	4
81	MP3A	Mx	0	4
82	MP3B	X	0	2
83	MP3B	Z	-9.264	2
84	MP3B	Mx	.004	2
85	MP3B	X	0	4
86	MP3B	Z	-9.264	4
87	MP3B	Mx	.004	4
88	MP3C	X	0	2
89	MP3C	Z	-6.183	2
90	MP3C	Mx	-.003	2
91	MP3C	X	0	4
92	MP3C	Z	-6.183	4
93	MP3C	Mx	-.003	4
94	MP4A	X	0	1
95	MP4A	Z	-2.837	1
96	MP4A	Mx	0	1
97	MP4B	X	0	1
98	MP4B	Z	-2.418	1
99	MP4B	Mx	-.000926	1

Member Point Loads (BLC 15 : Antenna Wi (0 Deg)) (Continued)

	Member Label	Direction	Magnitude[lb,k-ft]	Location[ft,%]
100	MP4C	X	0	1
101	MP4C	Z	-2.145	1
102	MP4C	Mx	.001	1
103	MP2A	X	0	2
104	MP2A	Z	-24.219	2
105	MP2A	Mx	0	2
106	MP4A	X	0	2.5
107	MP4A	Z	-11.765	2.5
108	MP4A	Mx	0	2.5
109	MP4B	X	0	2.5
110	MP4B	Z	-9.657	2.5
111	MP4B	Mx	-.004	2.5
112	MP4C	X	0	2.5
113	MP4C	Z	-8.281	2.5
114	MP4C	Mx	.004	2.5
115	MP5A	X	0	2.5
116	MP5A	Z	-11.765	2.5
117	MP5A	Mx	0	2.5
118	MP5B	X	0	2.5
119	MP5B	Z	-9.277	2.5
120	MP5B	Mx	-.004	2.5
121	MP5C	X	0	2.5
122	MP5C	Z	-7.654	2.5
123	MP5C	Mx	.004	2.5

Member Point Loads (BLC 16 : Antenna Wi (30 Deg))

	Member Label	Direction	Magnitude[lb,k-ft]	Location[ft,%]
1	MP2B	X	9.462	2
2	MP2B	Z	-16.389	2
3	MP2B	Mx	-.009	2
4	MP1A	X	7.362	1
5	MP1A	Z	-12.752	1
6	MP1A	Mx	-.003	1
7	MP1A	X	7.362	5
8	MP1A	Z	-12.752	5
9	MP1A	Mx	-.003	5
10	MP1B	X	12.318	1
11	MP1B	Z	-21.335	1
12	MP1B	Mx	.012	1
13	MP1B	X	12.318	5
14	MP1B	Z	-21.335	5
15	MP1B	Mx	.012	5
16	MP1C	X	9.083	1
17	MP1C	Z	-15.733	1
18	MP1C	Mx	-.006	1
19	MP1C	X	9.083	5
20	MP1C	Z	-15.733	5
21	MP1C	Mx	-.006	5
22	M150	X	7.362	1
23	M150	Z	-12.752	1
24	M150	Mx	-.003	1

Member Point Loads (BLC 16 : Antenna Wi (30 Deg)) (Continued)

	Member Label	Direction	Magnitude[lb,k-ft]	Location[ft,%]
25	M150	X	7.362	5
26	M150	Z	-12.752	5
27	M150	Mx	-.003	5
28	M105	X	9.083	1
29	M105	Z	-15.733	1
30	M105	Mx	-.006	1
31	M105	X	9.083	5
32	M105	Z	-15.733	5
33	M105	Mx	-.006	5
34	M93	X	12.318	1
35	M93	Z	-21.335	1
36	M93	Mx	.012	1
37	M93	X	12.318	5
38	M93	Z	-21.335	5
39	M93	Mx	.012	5
40	MP4A	X	12.111	1
41	MP4A	Z	-20.977	1
42	MP4A	Mx	.007	1
43	MP4A	X	12.111	5
44	MP4A	Z	-20.977	5
45	MP4A	Mx	.007	5
46	MP4B	X	9.092	1
47	MP4B	Z	-15.748	1
48	MP4B	Mx	.007	1
49	MP4B	X	9.092	5
50	MP4B	Z	-15.748	5
51	MP4B	Mx	.007	5
52	MP4C	X	9.456	1
53	MP4C	Z	-16.379	1
54	MP4C	Mx	-.013	1
55	MP4C	X	9.456	5
56	MP4C	Z	-16.379	5
57	MP4C	Mx	-.013	5
58	MP4A	X	12.111	1
59	MP4A	Z	-20.977	1
60	MP4A	Mx	-.019	1
61	MP4A	X	12.111	5
62	MP4A	Z	-20.977	5
63	MP4A	Mx	-.019	5
64	MP4B	X	9.092	1
65	MP4B	Z	-15.748	1
66	MP4B	Mx	.011	1
67	MP4B	X	9.092	5
68	MP4B	Z	-15.748	5
69	MP4B	Mx	.011	5
70	MP4C	X	9.456	1
71	MP4C	Z	-16.379	1
72	MP4C	Mx	-.005	1
73	MP4C	X	9.456	5
74	MP4C	Z	-16.379	5
75	MP4C	Mx	-.005	5
76	MP3A	X	5.987	2

Member Point Loads (BLC 16 : Antenna Wi (30 Deg)) (Continued)

	Member Label	Direction	Magnitude[lb,k-ft]	Location[ft,%]
77	MP3A	Z	-10.37	2
78	MP3A	Mx	-.003	2
79	MP3A	X	5.987	4
80	MP3A	Z	-10.37	4
81	MP3A	Mx	-.003	4
82	MP3B	X	3.091	2
83	MP3B	Z	-5.354	2
84	MP3B	Mx	.003	2
85	MP3B	X	3.091	4
86	MP3B	Z	-5.354	4
87	MP3B	Mx	.003	4
88	MP3C	X	3.441	2
89	MP3C	Z	-5.959	2
90	MP3C	Mx	-.003	2
91	MP3C	X	3.441	4
92	MP3C	Z	-5.959	4
93	MP3C	Mx	-.003	4
94	MP4A	X	1.329	1
95	MP4A	Z	-2.302	1
96	MP4A	Mx	.000664	1
97	MP4B	X	1.073	1
98	MP4B	Z	-1.858	1
99	MP4B	Mx	-.001	1
100	MP4C	X	1.104	1
101	MP4C	Z	-1.912	1
102	MP4C	Mx	.001	1
103	MP2A	X	11.448	2
104	MP2A	Z	-19.828	2
105	MP2A	Mx	.006	2
106	MP4A	X	5.433	2.5
107	MP4A	Z	-9.411	2.5
108	MP4A	Mx	.003	2.5
109	MP4B	X	4.14	2.5
110	MP4B	Z	-7.171	2.5
111	MP4B	Mx	-.004	2.5
112	MP4C	X	4.296	2.5
113	MP4C	Z	-7.442	2.5
114	MP4C	Mx	.004	2.5
115	MP5A	X	5.353	2.5
116	MP5A	Z	-9.271	2.5
117	MP5A	Mx	.003	2.5
118	MP5B	X	3.827	2.5
119	MP5B	Z	-6.628	2.5
120	MP5B	Mx	-.004	2.5
121	MP5C	X	4.011	2.5
122	MP5C	Z	-6.947	2.5
123	MP5C	Mx	.004	2.5

Member Point Loads (BLC 17 : Antenna Wi (60 Deg))

	Member Label	Direction	Magnitude[lb,k-ft]	Location[ft,%]
1	MP2B	X	17.535	2

Member Point Loads (BLC 17 : Antenna Wi (60 Deg)) (Continued)

	Member Label	Direction	Magnitude[lb,k-ft]	Location[ft,%]
2	MP2B	Z	-10.124	2
3	MP2B	Mx	-.009	2
4	MP1A	X	17.48	1
5	MP1A	Z	-10.092	1
6	MP1A	Mx	-.008	1
7	MP1A	X	17.48	5
8	MP1A	Z	-10.092	5
9	MP1A	Mx	-.008	5
10	MP1B	X	20.461	1
11	MP1B	Z	-11.813	1
12	MP1B	Mx	.011	1
13	MP1B	X	20.461	5
14	MP1B	Z	-11.813	5
15	MP1B	Mx	.011	5
16	MP1C	X	11.878	1
17	MP1C	Z	-6.858	1
18	MP1C	Mx	-.001	1
19	MP1C	X	11.878	5
20	MP1C	Z	-6.858	5
21	MP1C	Mx	-.001	5
22	M150	X	17.48	1
23	M150	Z	-10.092	1
24	M150	Mx	-.008	1
25	M150	X	17.48	5
26	M150	Z	-10.092	5
27	M150	Mx	-.008	5
28	M105	X	11.878	1
29	M105	Z	-6.858	1
30	M105	Mx	-.001	1
31	M105	X	11.878	5
32	M105	Z	-6.858	5
33	M105	Mx	-.001	5
34	M93	X	20.461	1
35	M93	Z	-11.813	1
36	M93	Mx	.011	1
37	M93	X	20.461	5
38	M93	Z	-11.813	5
39	M93	Mx	.011	5
40	MP4A	X	17.345	1
41	MP4A	Z	-10.014	1
42	MP4A	Mx	-.002	1
43	MP4A	X	17.345	5
44	MP4A	Z	-10.014	5
45	MP4A	Mx	-.002	5
46	MP4B	X	16.379	1
47	MP4B	Z	-9.456	1
48	MP4B	Mx	.013	1
49	MP4B	X	16.379	5
50	MP4B	Z	-9.456	5
51	MP4B	Mx	.013	5
52	MP4C	X	19.792	1
53	MP4C	Z	-11.427	1

Member Point Loads (BLC 17 : Antenna Wi (60 Deg)) (Continued)

	Member Label	Direction	Magnitude[lb,k-ft]	Location[ft,%]
54	MP4C	Mx	-.018	1
55	MP4C	X	19.792	5
56	MP4C	Z	-11.427	5
57	MP4C	Mx	-.018	5
58	MP4A	X	17.345	1
59	MP4A	Z	-10.014	1
60	MP4A	Mx	-.015	1
61	MP4A	X	17.345	5
62	MP4A	Z	-10.014	5
63	MP4A	Mx	-.015	5
64	MP4B	X	16.379	1
65	MP4B	Z	-9.456	1
66	MP4B	Mx	.005	1
67	MP4B	X	16.379	5
68	MP4B	Z	-9.456	5
69	MP4B	Mx	.005	5
70	MP4C	X	19.792	1
71	MP4C	Z	-11.427	1
72	MP4C	Mx	.004	1
73	MP4C	X	19.792	5
74	MP4C	Z	-11.427	5
75	MP4C	Mx	.004	5
76	MP3A	X	6.886	2
77	MP3A	Z	-3.976	2
78	MP3A	Mx	-.003	2
79	MP3A	X	6.886	4
80	MP3A	Z	-3.976	4
81	MP3A	Mx	-.003	4
82	MP3B	X	5.959	2
83	MP3B	Z	-3.441	2
84	MP3B	Mx	.003	2
85	MP3B	X	5.959	4
86	MP3B	Z	-3.441	4
87	MP3B	Mx	.003	4
88	MP3C	X	9.233	2
89	MP3C	Z	-5.331	2
90	MP3C	Mx	-.003	2
91	MP3C	X	9.233	4
92	MP3C	Z	-5.331	4
93	MP3C	Mx	-.003	4
94	MP4A	X	1.994	1
95	MP4A	Z	-1.151	1
96	MP4A	Mx	.000997	1
97	MP4B	X	1.912	1
98	MP4B	Z	-1.104	1
99	MP4B	Mx	-.001	1
100	MP4C	X	2.202	1
101	MP4C	Z	-1.271	1
102	MP4C	Mx	.000817	1
103	MP2A	X	17.535	2
104	MP2A	Z	-10.124	2
105	MP2A	Mx	.009	2

Member Point Loads (BLC 17 : Antenna Wi (60 Deg)) (Continued)

	Member Label	Direction	Magnitude[lb,k-ft]	Location[ft,%]
106	MP4A	X	7.855	2.5
107	MP4A	Z	-4.535	2.5
108	MP4A	Mx	.004	2.5
109	MP4B	X	7.442	2.5
110	MP4B	Z	-4.296	2.5
111	MP4B	Mx	-.004	2.5
112	MP4C	X	8.903	2.5
113	MP4C	Z	-5.14	2.5
114	MP4C	Mx	.003	2.5
115	MP5A	X	7.435	2.5
116	MP5A	Z	-4.293	2.5
117	MP5A	Mx	.004	2.5
118	MP5B	X	6.947	2.5
119	MP5B	Z	-4.011	2.5
120	MP5B	Mx	-.004	2.5
121	MP5C	X	8.672	2.5
122	MP5C	Z	-5.007	2.5
123	MP5C	Mx	.003	2.5

Member Point Loads (BLC 18 : Antenna Wi (90 Deg))

	Member Label	Direction	Magnitude[lb,k-ft]	Location[ft,%]
1	MP2B	X	22.895	2
2	MP2B	Z	0	2
3	MP2B	Mx	-.006	2
4	MP1A	X	24.636	1
5	MP1A	Z	0	1
6	MP1A	Mx	-.012	1
7	MP1A	X	24.636	5
8	MP1A	Z	0	5
9	MP1A	Mx	-.012	5
10	MP1B	X	18.167	1
11	MP1B	Z	0	1
12	MP1B	Mx	.006	1
13	MP1B	X	18.167	5
14	MP1B	Z	0	5
15	MP1B	Mx	.006	5
16	MP1C	X	14.725	1
17	MP1C	Z	0	1
18	MP1C	Mx	.003	1
19	MP1C	X	14.725	5
20	MP1C	Z	0	5
21	MP1C	Mx	.003	5
22	M150	X	24.636	1
23	M150	Z	0	1
24	M150	Mx	-.012	1
25	M150	X	24.636	5
26	M150	Z	0	5
27	M150	Mx	-.012	5
28	M105	X	14.725	1
29	M105	Z	0	1
30	M105	Mx	.003	1

Member Point Loads (BLC 18 : Antenna Wi (90 Deg)) (Continued)

	Member Label	Direction	Magnitude[lb,k-ft]	Location[ft,%]
31	M105	X	14.725	5
32	M105	Z	0	5
33	M105	Mx	.003	5
34	M93	X	18.167	1
35	M93	Z	0	1
36	M93	Mx	.006	1
37	M93	X	18.167	5
38	M93	Z	0	5
39	M93	Mx	.006	5
40	MP4A	X	17.931	1
41	MP4A	Z	0	1
42	MP4A	Mx	-.009	1
43	MP4A	X	17.931	5
44	MP4A	Z	0	5
45	MP4A	Mx	-.009	5
46	MP4B	X	22.853	1
47	MP4B	Z	0	1
48	MP4B	Mx	.018	1
49	MP4B	X	22.853	5
50	MP4B	Z	0	5
51	MP4B	Mx	.018	5
52	MP4C	X	26.066	1
53	MP4C	Z	0	1
54	MP4C	Mx	-.018	1
55	MP4C	X	26.066	5
56	MP4C	Z	0	5
57	MP4C	Mx	-.018	5
58	MP4A	X	17.931	1
59	MP4A	Z	0	1
60	MP4A	Mx	-.009	1
61	MP4A	X	17.931	5
62	MP4A	Z	0	5
63	MP4A	Mx	-.009	5
64	MP4B	X	22.853	1
65	MP4B	Z	0	1
66	MP4B	Mx	-.004	1
67	MP4B	X	22.853	5
68	MP4B	Z	0	5
69	MP4B	Mx	-.004	5
70	MP4C	X	26.066	1
71	MP4C	Z	0	1
72	MP4C	Mx	.014	1
73	MP4C	X	26.066	5
74	MP4C	Z	0	5
75	MP4C	Mx	.014	5
76	MP3A	X	5.94	2
77	MP3A	Z	0	2
78	MP3A	Mx	-.003	2
79	MP3A	X	5.94	4
80	MP3A	Z	0	4
81	MP3A	Mx	-.003	4
82	MP3B	X	10.661	2

Member Point Loads (BLC 18 : Antenna Wi (90 Deg)) (Continued)

	Member Label	Direction	Magnitude[lb,k-ft]	Location[ft,%]
83	MP3B	Z	0	2
84	MP3B	Mx	.003	2
85	MP3B	X	10.661	4
86	MP3B	Z	0	4
87	MP3B	Mx	.003	4
88	MP3C	X	13.743	2
89	MP3C	Z	0	2
90	MP3C	Mx	-.001	2
91	MP3C	X	13.743	4
92	MP3C	Z	0	4
93	MP3C	Mx	-.001	4
94	MP4A	X	2.124	1
95	MP4A	Z	0	1
96	MP4A	Mx	.001	1
97	MP4B	X	2.542	1
98	MP4B	Z	0	1
99	MP4B	Mx	-.000817	1
100	MP4C	X	2.815	1
101	MP4C	Z	0	1
102	MP4C	Mx	.000244	1
103	MP2A	X	18.924	2
104	MP2A	Z	0	2
105	MP2A	Mx	.009	2
106	MP4A	X	8.173	2.5
107	MP4A	Z	0	2.5
108	MP4A	Mx	.004	2.5
109	MP4B	X	10.281	2.5
110	MP4B	Z	0	2.5
111	MP4B	Mx	-.003	2.5
112	MP4C	X	11.657	2.5
113	MP4C	Z	0	2.5
114	MP4C	Mx	.001	2.5
115	MP5A	X	7.526	2.5
116	MP5A	Z	0	2.5
117	MP5A	Mx	.004	2.5
118	MP5B	X	10.013	2.5
119	MP5B	Z	0	2.5
120	MP5B	Mx	-.003	2.5
121	MP5C	X	11.637	2.5
122	MP5C	Z	0	2.5
123	MP5C	Mx	.001	2.5

Member Point Loads (BLC 19 : Antenna Wi (120 Deg))

	Member Label	Direction	Magnitude[lb,k-ft]	Location[ft,%]
1	MP2B	X	20.974	2
2	MP2B	Z	12.109	2
3	MP2B	Mx	0	2
4	MP1A	X	20.461	1
5	MP1A	Z	11.813	1
6	MP1A	Mx	-.011	1
7	MP1A	X	20.461	5

Member Point Loads (BLC 19 : Antenna Wi (120 Deg)) (Continued)

	Member Label	Direction	Magnitude[lb,k-ft]	Location[ft,%]
8	MP1A	Z	11.813	5
9	MP1A	Mx	-.011	5
10	MP1B	X	11.878	1
11	MP1B	Z	6.858	1
12	MP1B	Mx	.001	1
13	MP1B	X	11.878	5
14	MP1B	Z	6.858	5
15	MP1B	Mx	.001	5
16	MP1C	X	17.48	1
17	MP1C	Z	10.092	1
18	MP1C	Mx	.008	1
19	MP1C	X	17.48	5
20	MP1C	Z	10.092	5
21	MP1C	Mx	.008	5
22	M150	X	20.461	1
23	M150	Z	11.813	1
24	M150	Mx	-.011	1
25	M150	X	20.461	5
26	M150	Z	11.813	5
27	M150	Mx	-.011	5
28	M105	X	17.48	1
29	M105	Z	10.092	1
30	M105	Mx	.008	1
31	M105	X	17.48	5
32	M105	Z	10.092	5
33	M105	Mx	.008	5
34	M93	X	11.878	1
35	M93	Z	6.858	1
36	M93	Mx	.001	1
37	M93	X	11.878	5
38	M93	Z	6.858	5
39	M93	Mx	.001	5
40	MP4A	X	17.345	1
41	MP4A	Z	10.014	1
42	MP4A	Mx	-.015	1
43	MP4A	X	17.345	5
44	MP4A	Z	10.014	5
45	MP4A	Mx	-.015	5
46	MP4B	X	22.574	1
47	MP4B	Z	13.033	1
48	MP4B	Mx	.018	1
49	MP4B	X	22.574	5
50	MP4B	Z	13.033	5
51	MP4B	Mx	.018	5
52	MP4C	X	21.943	1
53	MP4C	Z	12.669	1
54	MP4C	Mx	-.011	1
55	MP4C	X	21.943	5
56	MP4C	Z	12.669	5
57	MP4C	Mx	-.011	5
58	MP4A	X	17.345	1
59	MP4A	Z	10.014	1

Member Point Loads (BLC 19 : Antenna Wi (120 Deg)) (Continued)

	Member Label	Direction	Magnitude[lb,k-ft]	Location[ft,%]
60	MP4A	Mx	-.002	1
61	MP4A	X	17.345	5
62	MP4A	Z	10.014	5
63	MP4A	Mx	-.002	5
64	MP4B	X	22.574	1
65	MP4B	Z	13.033	1
66	MP4B	Mx	-.014	1
67	MP4B	X	22.574	5
68	MP4B	Z	13.033	5
69	MP4B	Mx	-.014	5
70	MP4C	X	21.943	1
71	MP4C	Z	12.669	1
72	MP4C	Mx	.019	1
73	MP4C	X	21.943	5
74	MP4C	Z	12.669	5
75	MP4C	Mx	.019	5
76	MP3A	X	6.886	2
77	MP3A	Z	3.976	2
78	MP3A	Mx	-.003	2
79	MP3A	X	6.886	4
80	MP3A	Z	3.976	4
81	MP3A	Mx	-.003	4
82	MP3B	X	11.902	2
83	MP3B	Z	6.871	2
84	MP3B	Mx	.001	2
85	MP3B	X	11.902	4
86	MP3B	Z	6.871	4
87	MP3B	Mx	.001	4
88	MP3C	X	11.297	2
89	MP3C	Z	6.522	2
90	MP3C	Mx	.002	2
91	MP3C	X	11.297	4
92	MP3C	Z	6.522	4
93	MP3C	Mx	.002	4
94	MP4A	X	1.994	1
95	MP4A	Z	1.151	1
96	MP4A	Mx	.000997	1
97	MP4B	X	2.438	1
98	MP4B	Z	1.408	1
99	MP4B	Mx	-.000244	1
100	MP4C	X	2.385	1
101	MP4C	Z	1.377	1
102	MP4C	Mx	-.000471	1
103	MP2A	X	17.535	2
104	MP2A	Z	10.124	2
105	MP2A	Mx	.009	2
106	MP4A	X	7.855	2.5
107	MP4A	Z	4.535	2.5
108	MP4A	Mx	.004	2.5
109	MP4B	X	10.095	2.5
110	MP4B	Z	5.828	2.5
111	MP4B	Mx	-.001	2.5

Member Point Loads (BLC 19 : Antenna Wi (120 Deg)) (Continued)

	Member Label	Direction	Magnitude[lb,k-ft]	Location[ft,%]
112	MP4C	X	9.825	2.5
113	MP4C	Z	5.672	2.5
114	MP4C	Mx	-.002	2.5
115	MP5A	X	7.435	2.5
116	MP5A	Z	4.293	2.5
117	MP5A	Mx	.004	2.5
118	MP5B	X	10.078	2.5
119	MP5B	Z	5.819	2.5
120	MP5B	Mx	-.001	2.5
121	MP5C	X	9.759	2.5
122	MP5C	Z	5.634	2.5
123	MP5C	Mx	-.002	2.5

Member Point Loads (BLC 20 : Antenna Wi (150 Deg))

	Member Label	Direction	Magnitude[lb,k-ft]	Location[ft,%]
1	MP2B	X	11.448	2
2	MP2B	Z	19.828	2
3	MP2B	Mx	.006	2
4	MP1A	X	9.083	1
5	MP1A	Z	15.733	1
6	MP1A	Mx	-.006	1
7	MP1A	X	9.083	5
8	MP1A	Z	15.733	5
9	MP1A	Mx	-.006	5
10	MP1B	X	7.362	1
11	MP1B	Z	12.752	1
12	MP1B	Mx	-.003	1
13	MP1B	X	7.362	5
14	MP1B	Z	12.752	5
15	MP1B	Mx	-.003	5
16	MP1C	X	12.318	1
17	MP1C	Z	21.335	1
18	MP1C	Mx	.012	1
19	MP1C	X	12.318	5
20	MP1C	Z	21.335	5
21	MP1C	Mx	.012	5
22	M150	X	9.083	1
23	M150	Z	15.733	1
24	M150	Mx	-.006	1
25	M150	X	9.083	5
26	M150	Z	15.733	5
27	M150	Mx	-.006	5
28	M105	X	12.318	1
29	M105	Z	21.335	1
30	M105	Mx	.012	1
31	M105	X	12.318	5
32	M105	Z	21.335	5
33	M105	Mx	.012	5
34	M93	X	7.362	1
35	M93	Z	12.752	1
36	M93	Mx	-.003	1

Member Point Loads (BLC 20 : Antenna Wi (150 Deg)) (Continued)

	Member Label	Direction	Magnitude[lb,k-ft]	Location[ft,%]
37	M93	X	7.362	5
38	M93	Z	12.752	5
39	M93	Mx	-.003	5
40	MP4A	X	12.111	1
41	MP4A	Z	20.977	1
42	MP4A	Mx	-.019	1
43	MP4A	X	12.111	5
44	MP4A	Z	20.977	5
45	MP4A	Mx	-.019	5
46	MP4B	X	12.669	1
47	MP4B	Z	21.943	1
48	MP4B	Mx	.011	1
49	MP4B	X	12.669	5
50	MP4B	Z	21.943	5
51	MP4B	Mx	.011	5
52	MP4C	X	10.698	1
53	MP4C	Z	18.53	1
54	MP4C	Mx	-.0004	1
55	MP4C	X	10.698	5
56	MP4C	Z	18.53	5
57	MP4C	Mx	-.0004	5
58	MP4A	X	12.111	1
59	MP4A	Z	20.977	1
60	MP4A	Mx	.007	1
61	MP4A	X	12.111	5
62	MP4A	Z	20.977	5
63	MP4A	Mx	.007	5
64	MP4B	X	12.669	1
65	MP4B	Z	21.943	1
66	MP4B	Mx	-.019	1
67	MP4B	X	12.669	5
68	MP4B	Z	21.943	5
69	MP4B	Mx	-.019	5
70	MP4C	X	10.698	1
71	MP4C	Z	18.53	1
72	MP4C	Mx	.017	1
73	MP4C	X	10.698	5
74	MP4C	Z	18.53	5
75	MP4C	Mx	.017	5
76	MP3A	X	5.987	2
77	MP3A	Z	10.37	2
78	MP3A	Mx	-.003	2
79	MP3A	X	5.987	4
80	MP3A	Z	10.37	4
81	MP3A	Mx	-.003	4
82	MP3B	X	6.522	2
83	MP3B	Z	11.297	2
84	MP3B	Mx	-.002	2
85	MP3B	X	6.522	4
86	MP3B	Z	11.297	4
87	MP3B	Mx	-.002	4
88	MP3C	X	4.632	2

Member Point Loads (BLC 20 : Antenna Wi (150 Deg)) (Continued)

	Member Label	Direction	Magnitude[lb,k-ft]	Location[ft,%]
89	MP3C	Z	8.023	2
90	MP3C	Mx	.004	2
91	MP3C	X	4.632	4
92	MP3C	Z	8.023	4
93	MP3C	Mx	.004	4
94	MP4A	X	1.329	1
95	MP4A	Z	2.302	1
96	MP4A	Mx	.000664	1
97	MP4B	X	1.377	1
98	MP4B	Z	2.385	1
99	MP4B	Mx	.000471	1
100	MP4C	X	1.209	1
101	MP4C	Z	2.094	1
102	MP4C	Mx	-.000926	1
103	MP2A	X	11.448	2
104	MP2A	Z	19.828	2
105	MP2A	Mx	.006	2
106	MP4A	X	5.433	2.5
107	MP4A	Z	9.411	2.5
108	MP4A	Mx	.003	2.5
109	MP4B	X	5.672	2.5
110	MP4B	Z	9.825	2.5
111	MP4B	Mx	.002	2.5
112	MP4C	X	4.828	2.5
113	MP4C	Z	8.363	2.5
114	MP4C	Mx	-.004	2.5
115	MP5A	X	5.353	2.5
116	MP5A	Z	9.271	2.5
117	MP5A	Mx	.003	2.5
118	MP5B	X	5.634	2.5
119	MP5B	Z	9.759	2.5
120	MP5B	Mx	.002	2.5
121	MP5C	X	4.639	2.5
122	MP5C	Z	8.034	2.5
123	MP5C	Mx	-.004	2.5

Member Point Loads (BLC 21 : Antenna Wi (180 Deg))

	Member Label	Direction	Magnitude[lb,k-ft]	Location[ft,%]
1	MP2B	X	0	2
2	MP2B	Z	20.248	2
3	MP2B	Mx	.009	2
4	MP1A	X	0	1
5	MP1A	Z	13.716	1
6	MP1A	Mx	-.001	1
7	MP1A	X	0	5
8	MP1A	Z	13.716	5
9	MP1A	Mx	-.001	5
10	MP1B	X	0	1
11	MP1B	Z	20.185	1
12	MP1B	Mx	-.008	1
13	MP1B	X	0	5

Member Point Loads (BLC 21 : Antenna Wi (180 Deg)) (Continued)

	Member Label	Direction	Magnitude[lb,k-ft]	Location[ft,%]
14	MP1B	Z	20.185	5
15	MP1B	Mx	-.008	5
16	MP1C	X	0	1
17	MP1C	Z	23.627	1
18	MP1C	Mx	.011	1
19	MP1C	X	0	5
20	MP1C	Z	23.627	5
21	MP1C	Mx	.011	5
22	M150	X	0	1
23	M150	Z	13.716	1
24	M150	Mx	-.001	1
25	M150	X	0	5
26	M150	Z	13.716	5
27	M150	Mx	-.001	5
28	M105	X	0	1
29	M105	Z	23.627	1
30	M105	Mx	.011	1
31	M105	X	0	5
32	M105	Z	23.627	5
33	M105	Mx	.011	5
34	M93	X	0	1
35	M93	Z	20.185	1
36	M93	Mx	-.008	1
37	M93	X	0	5
38	M93	Z	20.185	5
39	M93	Mx	-.008	5
40	MP4A	X	0	1
41	MP4A	Z	26.319	1
42	MP4A	Mx	-.016	1
43	MP4A	X	0	5
44	MP4A	Z	26.319	5
45	MP4A	Mx	-.016	5
46	MP4B	X	0	1
47	MP4B	Z	21.397	1
48	MP4B	Mx	.000401	1
49	MP4B	X	0	5
50	MP4B	Z	21.397	5
51	MP4B	Mx	.000401	5
52	MP4C	X	0	1
53	MP4C	Z	18.184	1
54	MP4C	Mx	.007	1
55	MP4C	X	0	5
56	MP4C	Z	18.184	5
57	MP4C	Mx	.007	5
58	MP4A	X	0	1
59	MP4A	Z	26.319	1
60	MP4A	Mx	.016	1
61	MP4A	X	0	5
62	MP4A	Z	26.319	5
63	MP4A	Mx	.016	5
64	MP4B	X	0	1
65	MP4B	Z	21.397	1

Member Point Loads (BLC 21 : Antenna Wi (180 Deg)) (Continued)

	Member Label	Direction	Magnitude[lb,k-ft]	Location[ft,%]
66	MP4B	Mx	-.017	1
67	MP4B	X	0	5
68	MP4B	Z	21.397	5
69	MP4B	Mx	-.017	5
70	MP4C	X	0	1
71	MP4C	Z	18.184	1
72	MP4C	Mx	.011	1
73	MP4C	X	0	5
74	MP4C	Z	18.184	5
75	MP4C	Mx	.011	5
76	MP3A	X	0	2
77	MP3A	Z	13.985	2
78	MP3A	Mx	0	2
79	MP3A	X	0	4
80	MP3A	Z	13.985	4
81	MP3A	Mx	0	4
82	MP3B	X	0	2
83	MP3B	Z	9.264	2
84	MP3B	Mx	-.004	2
85	MP3B	X	0	4
86	MP3B	Z	9.264	4
87	MP3B	Mx	-.004	4
88	MP3C	X	0	2
89	MP3C	Z	6.183	2
90	MP3C	Mx	.003	2
91	MP3C	X	0	4
92	MP3C	Z	6.183	4
93	MP3C	Mx	.003	4
94	MP4A	X	0	1
95	MP4A	Z	2.837	1
96	MP4A	Mx	0	1
97	MP4B	X	0	1
98	MP4B	Z	2.418	1
99	MP4B	Mx	.000926	1
100	MP4C	X	0	1
101	MP4C	Z	2.145	1
102	MP4C	Mx	-.001	1
103	MP2A	X	0	2
104	MP2A	Z	24.219	2
105	MP2A	Mx	0	2
106	MP4A	X	0	2.5
107	MP4A	Z	11.765	2.5
108	MP4A	Mx	0	2.5
109	MP4B	X	0	2.5
110	MP4B	Z	9.657	2.5
111	MP4B	Mx	.004	2.5
112	MP4C	X	0	2.5
113	MP4C	Z	8.281	2.5
114	MP4C	Mx	-.004	2.5
115	MP5A	X	0	2.5
116	MP5A	Z	11.765	2.5
117	MP5A	Mx	0	2.5

Member Point Loads (BLC 21 : Antenna Wi (180 Deg)) (Continued)

	Member Label	Direction	Magnitude[lb,k-ft]	Location[ft,%]
118	MP5B	X	0	2.5
119	MP5B	Z	9.277	2.5
120	MP5B	Mx	.004	2.5
121	MP5C	X	0	2.5
122	MP5C	Z	7.654	2.5
123	MP5C	Mx	-.004	2.5

Member Point Loads (BLC 22 : Antenna Wi (210 Deg))

	Member Label	Direction	Magnitude[lb,k-ft]	Location[ft,%]
1	MP2B	X	-9.462	2
2	MP2B	Z	16.389	2
3	MP2B	Mx	.009	2
4	MP1A	X	-7.362	1
5	MP1A	Z	12.752	1
6	MP1A	Mx	.003	1
7	MP1A	X	-7.362	5
8	MP1A	Z	12.752	5
9	MP1A	Mx	.003	5
10	MP1B	X	-12.318	1
11	MP1B	Z	21.335	1
12	MP1B	Mx	-.012	1
13	MP1B	X	-12.318	5
14	MP1B	Z	21.335	5
15	MP1B	Mx	-.012	5
16	MP1C	X	-9.083	1
17	MP1C	Z	15.733	1
18	MP1C	Mx	.006	1
19	MP1C	X	-9.083	5
20	MP1C	Z	15.733	5
21	MP1C	Mx	.006	5
22	M150	X	-7.362	1
23	M150	Z	12.752	1
24	M150	Mx	.003	1
25	M150	X	-7.362	5
26	M150	Z	12.752	5
27	M150	Mx	.003	5
28	M105	X	-9.083	1
29	M105	Z	15.733	1
30	M105	Mx	.006	1
31	M105	X	-9.083	5
32	M105	Z	15.733	5
33	M105	Mx	.006	5
34	M93	X	-12.318	1
35	M93	Z	21.335	1
36	M93	Mx	-.012	1
37	M93	X	-12.318	5
38	M93	Z	21.335	5
39	M93	Mx	-.012	5
40	MP4A	X	-12.111	1
41	MP4A	Z	20.977	1
42	MP4A	Mx	-.007	1

Member Point Loads (BLC 22 : Antenna Wi (210 Deg)) (Continued)

	Member Label	Direction	Magnitude[lb,k-ft]	Location[ft,%]
43	MP4A	X	-12.111	5
44	MP4A	Z	20.977	5
45	MP4A	Mx	-.007	5
46	MP4B	X	-9.092	1
47	MP4B	Z	15.748	1
48	MP4B	Mx	-.007	1
49	MP4B	X	-9.092	5
50	MP4B	Z	15.748	5
51	MP4B	Mx	-.007	5
52	MP4C	X	-9.456	1
53	MP4C	Z	16.379	1
54	MP4C	Mx	.013	1
55	MP4C	X	-9.456	5
56	MP4C	Z	16.379	5
57	MP4C	Mx	.013	5
58	MP4A	X	-12.111	1
59	MP4A	Z	20.977	1
60	MP4A	Mx	.019	1
61	MP4A	X	-12.111	5
62	MP4A	Z	20.977	5
63	MP4A	Mx	.019	5
64	MP4B	X	-9.092	1
65	MP4B	Z	15.748	1
66	MP4B	Mx	-.011	1
67	MP4B	X	-9.092	5
68	MP4B	Z	15.748	5
69	MP4B	Mx	-.011	5
70	MP4C	X	-9.456	1
71	MP4C	Z	16.379	1
72	MP4C	Mx	.005	1
73	MP4C	X	-9.456	5
74	MP4C	Z	16.379	5
75	MP4C	Mx	.005	5
76	MP3A	X	-5.987	2
77	MP3A	Z	10.37	2
78	MP3A	Mx	.003	2
79	MP3A	X	-5.987	4
80	MP3A	Z	10.37	4
81	MP3A	Mx	.003	4
82	MP3B	X	-3.091	2
83	MP3B	Z	5.354	2
84	MP3B	Mx	-.003	2
85	MP3B	X	-3.091	4
86	MP3B	Z	5.354	4
87	MP3B	Mx	-.003	4
88	MP3C	X	-3.441	2
89	MP3C	Z	5.959	2
90	MP3C	Mx	.003	2
91	MP3C	X	-3.441	4
92	MP3C	Z	5.959	4
93	MP3C	Mx	.003	4
94	MP4A	X	-1.329	1

Member Point Loads (BLC 22 : Antenna Wi (210 Deg)) (Continued)

	Member Label	Direction	Magnitude[lb,k-ft]	Location[ft,%]
95	MP4A	Z	2.302	1
96	MP4A	Mx	-.000664	1
97	MP4B	X	-1.073	1
98	MP4B	Z	1.858	1
99	MP4B	Mx	.001	1
100	MP4C	X	-1.104	1
101	MP4C	Z	1.912	1
102	MP4C	Mx	-.001	1
103	MP2A	X	-11.448	2
104	MP2A	Z	19.828	2
105	MP2A	Mx	-.006	2
106	MP4A	X	-5.433	2.5
107	MP4A	Z	9.411	2.5
108	MP4A	Mx	-.003	2.5
109	MP4B	X	-4.14	2.5
110	MP4B	Z	7.171	2.5
111	MP4B	Mx	.004	2.5
112	MP4C	X	-4.296	2.5
113	MP4C	Z	7.442	2.5
114	MP4C	Mx	-.004	2.5
115	MP5A	X	-5.353	2.5
116	MP5A	Z	9.271	2.5
117	MP5A	Mx	-.003	2.5
118	MP5B	X	-3.827	2.5
119	MP5B	Z	6.628	2.5
120	MP5B	Mx	.004	2.5
121	MP5C	X	-4.011	2.5
122	MP5C	Z	6.947	2.5
123	MP5C	Mx	-.004	2.5

Member Point Loads (BLC 23 : Antenna Wi (240 Deg))

	Member Label	Direction	Magnitude[lb,k-ft]	Location[ft,%]
1	MP2B	X	-17.535	2
2	MP2B	Z	10.124	2
3	MP2B	Mx	.009	2
4	MP1A	X	-17.48	1
5	MP1A	Z	10.092	1
6	MP1A	Mx	.008	1
7	MP1A	X	-17.48	5
8	MP1A	Z	10.092	5
9	MP1A	Mx	.008	5
10	MP1B	X	-20.461	1
11	MP1B	Z	11.813	1
12	MP1B	Mx	-.011	1
13	MP1B	X	-20.461	5
14	MP1B	Z	11.813	5
15	MP1B	Mx	-.011	5
16	MP1C	X	-11.878	1
17	MP1C	Z	6.858	1
18	MP1C	Mx	.001	1
19	MP1C	X	-11.878	5

Member Point Loads (BLC 23 : Antenna Wi (240 Deg)) (Continued)

	Member Label	Direction	Magnitude[lb,k-ft]	Location[ft,%]
20	MP1C	Z	6.858	5
21	MP1C	Mx	.001	5
22	M150	X	-17.48	1
23	M150	Z	10.092	1
24	M150	Mx	.008	1
25	M150	X	-17.48	5
26	M150	Z	10.092	5
27	M150	Mx	.008	5
28	M105	X	-11.878	1
29	M105	Z	6.858	1
30	M105	Mx	.001	1
31	M105	X	-11.878	5
32	M105	Z	6.858	5
33	M105	Mx	.001	5
34	M93	X	-20.461	1
35	M93	Z	11.813	1
36	M93	Mx	-.011	1
37	M93	X	-20.461	5
38	M93	Z	11.813	5
39	M93	Mx	-.011	5
40	MP4A	X	-17.345	1
41	MP4A	Z	10.014	1
42	MP4A	Mx	.002	1
43	MP4A	X	-17.345	5
44	MP4A	Z	10.014	5
45	MP4A	Mx	.002	5
46	MP4B	X	-16.379	1
47	MP4B	Z	9.456	1
48	MP4B	Mx	-.013	1
49	MP4B	X	-16.379	5
50	MP4B	Z	9.456	5
51	MP4B	Mx	-.013	5
52	MP4C	X	-19.792	1
53	MP4C	Z	11.427	1
54	MP4C	Mx	.018	1
55	MP4C	X	-19.792	5
56	MP4C	Z	11.427	5
57	MP4C	Mx	.018	5
58	MP4A	X	-17.345	1
59	MP4A	Z	10.014	1
60	MP4A	Mx	.015	1
61	MP4A	X	-17.345	5
62	MP4A	Z	10.014	5
63	MP4A	Mx	.015	5
64	MP4B	X	-16.379	1
65	MP4B	Z	9.456	1
66	MP4B	Mx	-.005	1
67	MP4B	X	-16.379	5
68	MP4B	Z	9.456	5
69	MP4B	Mx	-.005	5
70	MP4C	X	-19.792	1
71	MP4C	Z	11.427	1

Member Point Loads (BLC 23 : Antenna Wi (240 Deg)) (Continued)

	Member Label	Direction	Magnitude[lb,k-ft]	Location[ft,%]
72	MP4C	Mx	-.004	1
73	MP4C	X	-19.792	5
74	MP4C	Z	11.427	5
75	MP4C	Mx	-.004	5
76	MP3A	X	-6.886	2
77	MP3A	Z	3.976	2
78	MP3A	Mx	.003	2
79	MP3A	X	-6.886	4
80	MP3A	Z	3.976	4
81	MP3A	Mx	.003	4
82	MP3B	X	-5.959	2
83	MP3B	Z	3.441	2
84	MP3B	Mx	-.003	2
85	MP3B	X	-5.959	4
86	MP3B	Z	3.441	4
87	MP3B	Mx	-.003	4
88	MP3C	X	-9.233	2
89	MP3C	Z	5.331	2
90	MP3C	Mx	.003	2
91	MP3C	X	-9.233	4
92	MP3C	Z	5.331	4
93	MP3C	Mx	.003	4
94	MP4A	X	-1.994	1
95	MP4A	Z	1.151	1
96	MP4A	Mx	-.000997	1
97	MP4B	X	-1.912	1
98	MP4B	Z	1.104	1
99	MP4B	Mx	.001	1
100	MP4C	X	-2.202	1
101	MP4C	Z	1.271	1
102	MP4C	Mx	-.000817	1
103	MP2A	X	-17.535	2
104	MP2A	Z	10.124	2
105	MP2A	Mx	-.009	2
106	MP4A	X	-7.855	2.5
107	MP4A	Z	4.535	2.5
108	MP4A	Mx	-.004	2.5
109	MP4B	X	-7.442	2.5
110	MP4B	Z	4.296	2.5
111	MP4B	Mx	.004	2.5
112	MP4C	X	-8.903	2.5
113	MP4C	Z	5.14	2.5
114	MP4C	Mx	-.003	2.5
115	MP5A	X	-7.435	2.5
116	MP5A	Z	4.293	2.5
117	MP5A	Mx	-.004	2.5
118	MP5B	X	-6.947	2.5
119	MP5B	Z	4.011	2.5
120	MP5B	Mx	.004	2.5
121	MP5C	X	-8.672	2.5
122	MP5C	Z	5.007	2.5
123	MP5C	Mx	-.003	2.5

Member Point Loads (BLC 24 : Antenna Wi (270 Deg))

	Member Label	Direction	Magnitude[lb,k-ft]	Location[ft,%]
1	MP2B	X	-22.895	2
2	MP2B	Z	0	2
3	MP2B	Mx	.006	2
4	MP1A	X	-24.636	1
5	MP1A	Z	0	1
6	MP1A	Mx	.012	1
7	MP1A	X	-24.636	5
8	MP1A	Z	0	5
9	MP1A	Mx	.012	5
10	MP1B	X	-18.167	1
11	MP1B	Z	0	1
12	MP1B	Mx	-.006	1
13	MP1B	X	-18.167	5
14	MP1B	Z	0	5
15	MP1B	Mx	-.006	5
16	MP1C	X	-14.725	1
17	MP1C	Z	0	1
18	MP1C	Mx	-.003	1
19	MP1C	X	-14.725	5
20	MP1C	Z	0	5
21	MP1C	Mx	-.003	5
22	M150	X	-24.636	1
23	M150	Z	0	1
24	M150	Mx	.012	1
25	M150	X	-24.636	5
26	M150	Z	0	5
27	M150	Mx	.012	5
28	M105	X	-14.725	1
29	M105	Z	0	1
30	M105	Mx	-.003	1
31	M105	X	-14.725	5
32	M105	Z	0	5
33	M105	Mx	-.003	5
34	M93	X	-18.167	1
35	M93	Z	0	1
36	M93	Mx	-.006	1
37	M93	X	-18.167	5
38	M93	Z	0	5
39	M93	Mx	-.006	5
40	MP4A	X	-17.931	1
41	MP4A	Z	0	1
42	MP4A	Mx	.009	1
43	MP4A	X	-17.931	5
44	MP4A	Z	0	5
45	MP4A	Mx	.009	5
46	MP4B	X	-22.853	1
47	MP4B	Z	0	1
48	MP4B	Mx	-.018	1
49	MP4B	X	-22.853	5
50	MP4B	Z	0	5
51	MP4B	Mx	-.018	5
52	MP4C	X	-26.066	1

Member Point Loads (BLC 24 : Antenna Wi (270 Deg)) (Continued)

	Member Label	Direction	Magnitude[lb,k-ft]	Location[ft,%]
53	MP4C	Z	0	1
54	MP4C	Mx	.018	1
55	MP4C	X	-26.066	5
56	MP4C	Z	0	5
57	MP4C	Mx	.018	5
58	MP4A	X	-17.931	1
59	MP4A	Z	0	1
60	MP4A	Mx	.009	1
61	MP4A	X	-17.931	5
62	MP4A	Z	0	5
63	MP4A	Mx	.009	5
64	MP4B	X	-22.853	1
65	MP4B	Z	0	1
66	MP4B	Mx	.004	1
67	MP4B	X	-22.853	5
68	MP4B	Z	0	5
69	MP4B	Mx	.004	5
70	MP4C	X	-26.066	1
71	MP4C	Z	0	1
72	MP4C	Mx	-.014	1
73	MP4C	X	-26.066	5
74	MP4C	Z	0	5
75	MP4C	Mx	-.014	5
76	MP3A	X	-5.94	2
77	MP3A	Z	0	2
78	MP3A	Mx	.003	2
79	MP3A	X	-5.94	4
80	MP3A	Z	0	4
81	MP3A	Mx	.003	4
82	MP3B	X	-10.661	2
83	MP3B	Z	0	2
84	MP3B	Mx	-.003	2
85	MP3B	X	-10.661	4
86	MP3B	Z	0	4
87	MP3B	Mx	-.003	4
88	MP3C	X	-13.743	2
89	MP3C	Z	0	2
90	MP3C	Mx	.001	2
91	MP3C	X	-13.743	4
92	MP3C	Z	0	4
93	MP3C	Mx	.001	4
94	MP4A	X	-2.124	1
95	MP4A	Z	0	1
96	MP4A	Mx	-.001	1
97	MP4B	X	-2.542	1
98	MP4B	Z	0	1
99	MP4B	Mx	.000817	1
100	MP4C	X	-2.815	1
101	MP4C	Z	0	1
102	MP4C	Mx	-.000244	1
103	MP2A	X	-18.924	2
104	MP2A	Z	0	2

Member Point Loads (BLC 24 : Antenna Wi (270 Deg)) (Continued)

	Member Label	Direction	Magnitude[lb,k-ft]	Location[ft,%]
105	MP2A	Mx	-.009	2
106	MP4A	X	-8.173	2.5
107	MP4A	Z	0	2.5
108	MP4A	Mx	-.004	2.5
109	MP4B	X	-10.281	2.5
110	MP4B	Z	0	2.5
111	MP4B	Mx	.003	2.5
112	MP4C	X	-11.657	2.5
113	MP4C	Z	0	2.5
114	MP4C	Mx	-.001	2.5
115	MP5A	X	-7.526	2.5
116	MP5A	Z	0	2.5
117	MP5A	Mx	-.004	2.5
118	MP5B	X	-10.013	2.5
119	MP5B	Z	0	2.5
120	MP5B	Mx	.003	2.5
121	MP5C	X	-11.637	2.5
122	MP5C	Z	0	2.5
123	MP5C	Mx	-.001	2.5

Member Point Loads (BLC 25 : Antenna Wi (300 Deg))

	Member Label	Direction	Magnitude[lb,k-ft]	Location[ft,%]
1	MP2B	X	-20.974	2
2	MP2B	Z	-12.109	2
3	MP2B	Mx	0	2
4	MP1A	X	-20.461	1
5	MP1A	Z	-11.813	1
6	MP1A	Mx	.011	1
7	MP1A	X	-20.461	5
8	MP1A	Z	-11.813	5
9	MP1A	Mx	.011	5
10	MP1B	X	-11.878	1
11	MP1B	Z	-6.858	1
12	MP1B	Mx	-.001	1
13	MP1B	X	-11.878	5
14	MP1B	Z	-6.858	5
15	MP1B	Mx	-.001	5
16	MP1C	X	-17.48	1
17	MP1C	Z	-10.092	1
18	MP1C	Mx	-.008	1
19	MP1C	X	-17.48	5
20	MP1C	Z	-10.092	5
21	MP1C	Mx	-.008	5
22	M150	X	-20.461	1
23	M150	Z	-11.813	1
24	M150	Mx	.011	1
25	M150	X	-20.461	5
26	M150	Z	-11.813	5
27	M150	Mx	.011	5
28	M105	X	-17.48	1
29	M105	Z	-10.092	1

Member Point Loads (BLC 25 : Antenna Wi (300 Deg)) (Continued)

	Member Label	Direction	Magnitude[lb,k-ft]	Location[ft,%]
30	M105	Mx	-.008	1
31	M105	X	-17.48	5
32	M105	Z	-10.092	5
33	M105	Mx	-.008	5
34	M93	X	-11.878	1
35	M93	Z	-6.858	1
36	M93	Mx	-.001	1
37	M93	X	-11.878	5
38	M93	Z	-6.858	5
39	M93	Mx	-.001	5
40	MP4A	X	-17.345	1
41	MP4A	Z	-10.014	1
42	MP4A	Mx	.015	1
43	MP4A	X	-17.345	5
44	MP4A	Z	-10.014	5
45	MP4A	Mx	.015	5
46	MP4B	X	-22.574	1
47	MP4B	Z	-13.033	1
48	MP4B	Mx	-.018	1
49	MP4B	X	-22.574	5
50	MP4B	Z	-13.033	5
51	MP4B	Mx	-.018	5
52	MP4C	X	-21.943	1
53	MP4C	Z	-12.669	1
54	MP4C	Mx	.011	1
55	MP4C	X	-21.943	5
56	MP4C	Z	-12.669	5
57	MP4C	Mx	.011	5
58	MP4A	X	-17.345	1
59	MP4A	Z	-10.014	1
60	MP4A	Mx	.002	1
61	MP4A	X	-17.345	5
62	MP4A	Z	-10.014	5
63	MP4A	Mx	.002	5
64	MP4B	X	-22.574	1
65	MP4B	Z	-13.033	1
66	MP4B	Mx	.014	1
67	MP4B	X	-22.574	5
68	MP4B	Z	-13.033	5
69	MP4B	Mx	.014	5
70	MP4C	X	-21.943	1
71	MP4C	Z	-12.669	1
72	MP4C	Mx	-.019	1
73	MP4C	X	-21.943	5
74	MP4C	Z	-12.669	5
75	MP4C	Mx	-.019	5
76	MP3A	X	-6.886	2
77	MP3A	Z	-3.976	2
78	MP3A	Mx	.003	2
79	MP3A	X	-6.886	4
80	MP3A	Z	-3.976	4
81	MP3A	Mx	.003	4

Member Point Loads (BLC 25 : Antenna Wi (300 Deg)) (Continued)

	Member Label	Direction	Magnitude[lb,k-ft]	Location[ft,%]
82	MP3B	X	-11.902	2
83	MP3B	Z	-6.871	2
84	MP3B	Mx	-.001	2
85	MP3B	X	-11.902	4
86	MP3B	Z	-6.871	4
87	MP3B	Mx	-.001	4
88	MP3C	X	-11.297	2
89	MP3C	Z	-6.522	2
90	MP3C	Mx	-.002	2
91	MP3C	X	-11.297	4
92	MP3C	Z	-6.522	4
93	MP3C	Mx	-.002	4
94	MP4A	X	-1.994	1
95	MP4A	Z	-1.151	1
96	MP4A	Mx	-.000997	1
97	MP4B	X	-2.438	1
98	MP4B	Z	-1.408	1
99	MP4B	Mx	.000244	1
100	MP4C	X	-2.385	1
101	MP4C	Z	-1.377	1
102	MP4C	Mx	.000471	1
103	MP2A	X	-17.535	2
104	MP2A	Z	-10.124	2
105	MP2A	Mx	-.009	2
106	MP4A	X	-7.855	2.5
107	MP4A	Z	-4.535	2.5
108	MP4A	Mx	-.004	2.5
109	MP4B	X	-10.095	2.5
110	MP4B	Z	-5.828	2.5
111	MP4B	Mx	.001	2.5
112	MP4C	X	-9.825	2.5
113	MP4C	Z	-5.672	2.5
114	MP4C	Mx	.002	2.5
115	MP5A	X	-7.435	2.5
116	MP5A	Z	-4.293	2.5
117	MP5A	Mx	-.004	2.5
118	MP5B	X	-10.078	2.5
119	MP5B	Z	-5.819	2.5
120	MP5B	Mx	.001	2.5
121	MP5C	X	-9.759	2.5
122	MP5C	Z	-5.634	2.5
123	MP5C	Mx	.002	2.5

Member Point Loads (BLC 26 : Antenna Wi (330 Deg))

	Member Label	Direction	Magnitude[lb,k-ft]	Location[ft,%]
1	MP2B	X	-11.448	2
2	MP2B	Z	-19.828	2
3	MP2B	Mx	-.006	2
4	MP1A	X	-9.083	1
5	MP1A	Z	-15.733	1
6	MP1A	Mx	.006	1

Member Point Loads (BLC 26 : Antenna Wi (330 Deg)) (Continued)

	Member Label	Direction	Magnitude[lb,k-ft]	Location[ft,%]
7	MP1A	X	-9.083	5
8	MP1A	Z	-15.733	5
9	MP1A	Mx	.006	5
10	MP1B	X	-7.362	1
11	MP1B	Z	-12.752	1
12	MP1B	Mx	.003	1
13	MP1B	X	-7.362	5
14	MP1B	Z	-12.752	5
15	MP1B	Mx	.003	5
16	MP1C	X	-12.318	1
17	MP1C	Z	-21.335	1
18	MP1C	Mx	-.012	1
19	MP1C	X	-12.318	5
20	MP1C	Z	-21.335	5
21	MP1C	Mx	-.012	5
22	M150	X	-9.083	1
23	M150	Z	-15.733	1
24	M150	Mx	.006	1
25	M150	X	-9.083	5
26	M150	Z	-15.733	5
27	M150	Mx	.006	5
28	M105	X	-12.318	1
29	M105	Z	-21.335	1
30	M105	Mx	-.012	1
31	M105	X	-12.318	5
32	M105	Z	-21.335	5
33	M105	Mx	-.012	5
34	M93	X	-7.362	1
35	M93	Z	-12.752	1
36	M93	Mx	.003	1
37	M93	X	-7.362	5
38	M93	Z	-12.752	5
39	M93	Mx	.003	5
40	MP4A	X	-12.111	1
41	MP4A	Z	-20.977	1
42	MP4A	Mx	.019	1
43	MP4A	X	-12.111	5
44	MP4A	Z	-20.977	5
45	MP4A	Mx	.019	5
46	MP4B	X	-12.669	1
47	MP4B	Z	-21.943	1
48	MP4B	Mx	-.011	1
49	MP4B	X	-12.669	5
50	MP4B	Z	-21.943	5
51	MP4B	Mx	-.011	5
52	MP4C	X	-10.698	1
53	MP4C	Z	-18.53	1
54	MP4C	Mx	.0004	1
55	MP4C	X	-10.698	5
56	MP4C	Z	-18.53	5
57	MP4C	Mx	.0004	5
58	MP4A	X	-12.111	1

Member Point Loads (BLC 26 : Antenna Wi (330 Deg)) (Continued)

	Member Label	Direction	Magnitude[lb,k-ft]	Location[ft,%]
59	MP4A	Z	-20.977	1
60	MP4A	Mx	-.007	1
61	MP4A	X	-12.111	5
62	MP4A	Z	-20.977	5
63	MP4A	Mx	-.007	5
64	MP4B	X	-12.669	1
65	MP4B	Z	-21.943	1
66	MP4B	Mx	.019	1
67	MP4B	X	-12.669	5
68	MP4B	Z	-21.943	5
69	MP4B	Mx	.019	5
70	MP4C	X	-10.698	1
71	MP4C	Z	-18.53	1
72	MP4C	Mx	-.017	1
73	MP4C	X	-10.698	5
74	MP4C	Z	-18.53	5
75	MP4C	Mx	-.017	5
76	MP3A	X	-5.987	2
77	MP3A	Z	-10.37	2
78	MP3A	Mx	.003	2
79	MP3A	X	-5.987	4
80	MP3A	Z	-10.37	4
81	MP3A	Mx	.003	4
82	MP3B	X	-6.522	2
83	MP3B	Z	-11.297	2
84	MP3B	Mx	.002	2
85	MP3B	X	-6.522	4
86	MP3B	Z	-11.297	4
87	MP3B	Mx	.002	4
88	MP3C	X	-4.632	2
89	MP3C	Z	-8.023	2
90	MP3C	Mx	-.004	2
91	MP3C	X	-4.632	4
92	MP3C	Z	-8.023	4
93	MP3C	Mx	-.004	4
94	MP4A	X	-1.329	1
95	MP4A	Z	-2.302	1
96	MP4A	Mx	-.000664	1
97	MP4B	X	-1.377	1
98	MP4B	Z	-2.385	1
99	MP4B	Mx	-.000471	1
100	MP4C	X	-1.209	1
101	MP4C	Z	-2.094	1
102	MP4C	Mx	.000926	1
103	MP2A	X	-11.448	2
104	MP2A	Z	-19.828	2
105	MP2A	Mx	-.006	2
106	MP4A	X	-5.433	2.5
107	MP4A	Z	-9.411	2.5
108	MP4A	Mx	-.003	2.5
109	MP4B	X	-5.672	2.5
110	MP4B	Z	-9.825	2.5

Member Point Loads (BLC 26 : Antenna Wi (330 Deg)) (Continued)

	Member Label	Direction	Magnitude[lb,k-ft]	Location[ft,%]
111	MP4B	Mx	-.002	2.5
112	MP4C	X	-4.828	2.5
113	MP4C	Z	-8.363	2.5
114	MP4C	Mx	.004	2.5
115	MP5A	X	-5.353	2.5
116	MP5A	Z	-9.271	2.5
117	MP5A	Mx	-.003	2.5
118	MP5B	X	-5.634	2.5
119	MP5B	Z	-9.759	2.5
120	MP5B	Mx	-.002	2.5
121	MP5C	X	-4.639	2.5
122	MP5C	Z	-8.034	2.5
123	MP5C	Mx	.004	2.5

Member Point Loads (BLC 27 : Antenna Wm (0 Deg))

	Member Label	Direction	Magnitude[lb,k-ft]	Location[ft,%]
1	MP2B	X	0	2
2	MP2B	Z	-6.356	2
3	MP2B	Mx	-.003	2
4	MP1A	X	0	1
5	MP1A	Z	-4.246	1
6	MP1A	Mx	.000369	1
7	MP1A	X	0	5
8	MP1A	Z	-4.246	5
9	MP1A	Mx	.000369	5
10	MP1B	X	0	1
11	MP1B	Z	-6.524	1
12	MP1B	Mx	.002	1
13	MP1B	X	0	5
14	MP1B	Z	-6.524	5
15	MP1B	Mx	.002	5
16	MP1C	X	0	1
17	MP1C	Z	-7.736	1
18	MP1C	Mx	-.004	1
19	MP1C	X	0	5
20	MP1C	Z	-7.736	5
21	MP1C	Mx	-.004	5
22	M150	X	0	1
23	M150	Z	-4.246	1
24	M150	Mx	.000369	1
25	M150	X	0	5
26	M150	Z	-4.246	5
27	M150	Mx	.000369	5
28	M105	X	0	1
29	M105	Z	-7.736	1
30	M105	Mx	-.004	1
31	M105	X	0	5
32	M105	Z	-7.736	5
33	M105	Mx	-.004	5
34	M93	X	0	1
35	M93	Z	-6.524	1

Member Point Loads (BLC 27 : Antenna Wm (0 Deg)) (Continued)

	Member Label	Direction	Magnitude[lb,k-ft]	Location[ft,%]
36	M93	Mx	.002	1
37	M93	X	0	5
38	M93	Z	-6.524	5
39	M93	Mx	.002	5
40	MP4A	X	0	1
41	MP4A	Z	-8.673	1
42	MP4A	Mx	.005	1
43	MP4A	X	0	5
44	MP4A	Z	-8.673	5
45	MP4A	Mx	.005	5
46	MP4B	X	0	1
47	MP4B	Z	-6.926	1
48	MP4B	Mx	-.00013	1
49	MP4B	X	0	5
50	MP4B	Z	-6.926	5
51	MP4B	Mx	-.00013	5
52	MP4C	X	0	1
53	MP4C	Z	-5.786	1
54	MP4C	Mx	-.002	1
55	MP4C	X	0	5
56	MP4C	Z	-5.786	5
57	MP4C	Mx	-.002	5
58	MP4A	X	0	1
59	MP4A	Z	-8.673	1
60	MP4A	Mx	-.005	1
61	MP4A	X	0	5
62	MP4A	Z	-8.673	5
63	MP4A	Mx	-.005	5
64	MP4B	X	0	1
65	MP4B	Z	-6.926	1
66	MP4B	Mx	.005	1
67	MP4B	X	0	5
68	MP4B	Z	-6.926	5
69	MP4B	Mx	.005	5
70	MP4C	X	0	1
71	MP4C	Z	-5.786	1
72	MP4C	Mx	-.003	1
73	MP4C	X	0	5
74	MP4C	Z	-5.786	5
75	MP4C	Mx	-.003	5
76	MP3A	X	0	2
77	MP3A	Z	-4.475	2
78	MP3A	Mx	0	2
79	MP3A	X	0	4
80	MP3A	Z	-4.475	4
81	MP3A	Mx	0	4
82	MP3B	X	0	2
83	MP3B	Z	-2.877	2
84	MP3B	Mx	.001	2
85	MP3B	X	0	4
86	MP3B	Z	-2.877	4
87	MP3B	Mx	.001	4

Member Point Loads (BLC 27 : Antenna Wm (0 Deg)) (Continued)

	Member Label	Direction	Magnitude[lb,k-ft]	Location[ft,%]
88	MP3C	X	0	2
89	MP3C	Z	-1.834	2
90	MP3C	Mx	-.000903	2
91	MP3C	X	0	4
92	MP3C	Z	-1.834	4
93	MP3C	Mx	-.000903	4
94	MP4A	X	0	1
95	MP4A	Z	-.705	1
96	MP4A	Mx	0	1
97	MP4B	X	0	1
98	MP4B	Z	-.577	1
99	MP4B	Mx	-.000221	1
100	MP4C	X	0	1
101	MP4C	Z	-.494	1
102	MP4C	Mx	.000243	1
103	MP2A	X	0	2
104	MP2A	Z	-7.73	2
105	MP2A	Mx	0	2
106	MP4A	X	0	2.5
107	MP4A	Z	-3.561	2.5
108	MP4A	Mx	0	2.5
109	MP4B	X	0	2.5
110	MP4B	Z	-2.868	2.5
111	MP4B	Mx	-.001	2.5
112	MP4C	X	0	2.5
113	MP4C	Z	-2.416	2.5
114	MP4C	Mx	.001	2.5
115	MP5A	X	0	2.5
116	MP5A	Z	-3.561	2.5
117	MP5A	Mx	0	2.5
118	MP5B	X	0	2.5
119	MP5B	Z	-2.742	2.5
120	MP5B	Mx	-.001	2.5
121	MP5C	X	0	2.5
122	MP5C	Z	-2.208	2.5
123	MP5C	Mx	.001	2.5

Member Point Loads (BLC 28 : Antenna Wm (30 Deg))

	Member Label	Direction	Magnitude[lb,k-ft]	Location[ft,%]
1	MP2B	X	2.949	2
2	MP2B	Z	-5.108	2
3	MP2B	Mx	-.003	2
4	MP1A	X	2.3	1
5	MP1A	Z	-3.985	1
6	MP1A	Mx	-.000787	1
7	MP1A	X	2.3	5
8	MP1A	Z	-3.985	5
9	MP1A	Mx	-.000787	5
10	MP1B	X	4.046	1
11	MP1B	Z	-7.007	1
12	MP1B	Mx	.004	1

Member Point Loads (BLC 28 : Antenna Wm (30 Deg)) (Continued)

	Member Label	Direction	Magnitude[lb,k-ft]	Location[ft,%]
13	MP1B	X	4.046	5
14	MP1B	Z	-7.007	5
15	MP1B	Mx	.004	5
16	MP1C	X	2.907	1
17	MP1C	Z	-5.034	1
18	MP1C	Mx	-.002	1
19	MP1C	X	2.907	5
20	MP1C	Z	-5.034	5
21	MP1C	Mx	-.002	5
22	M150	X	2.3	1
23	M150	Z	-3.985	1
24	M150	Mx	-.000787	1
25	M150	X	2.3	5
26	M150	Z	-3.985	5
27	M150	Mx	-.000787	5
28	M105	X	2.907	1
29	M105	Z	-5.034	1
30	M105	Mx	-.002	1
31	M105	X	2.907	5
32	M105	Z	-5.034	5
33	M105	Mx	-.002	5
34	M93	X	4.046	1
35	M93	Z	-7.007	1
36	M93	Mx	.004	1
37	M93	X	4.046	5
38	M93	Z	-7.007	5
39	M93	Mx	.004	5
40	MP4A	X	3.964	1
41	MP4A	Z	-6.867	1
42	MP4A	Mx	.002	1
43	MP4A	X	3.964	5
44	MP4A	Z	-6.867	5
45	MP4A	Mx	.002	5
46	MP4B	X	2.893	1
47	MP4B	Z	-5.011	1
48	MP4B	Mx	.002	1
49	MP4B	X	2.893	5
50	MP4B	Z	-5.011	5
51	MP4B	Mx	.002	5
52	MP4C	X	3.022	1
53	MP4C	Z	-5.235	1
54	MP4C	Mx	-.004	1
55	MP4C	X	3.022	5
56	MP4C	Z	-5.235	5
57	MP4C	Mx	-.004	5
58	MP4A	X	3.964	1
59	MP4A	Z	-6.867	1
60	MP4A	Mx	-.006	1
61	MP4A	X	3.964	5
62	MP4A	Z	-6.867	5
63	MP4A	Mx	-.006	5
64	MP4B	X	2.893	1

Member Point Loads (BLC 28 : Antenna Wm (30 Deg)) (Continued)

	Member Label	Direction	Magnitude[lb,k-ft]	Location[ft,%]
65	MP4B	Z	-5.011	1
66	MP4B	Mx	.003	1
67	MP4B	X	2.893	5
68	MP4B	Z	-5.011	5
69	MP4B	Mx	.003	5
70	MP4C	X	3.022	1
71	MP4C	Z	-5.235	1
72	MP4C	Mx	-.002	1
73	MP4C	X	3.022	5
74	MP4C	Z	-5.235	5
75	MP4C	Mx	-.002	5
76	MP3A	X	1.897	2
77	MP3A	Z	-3.286	2
78	MP3A	Mx	-.000948	2
79	MP3A	X	1.897	4
80	MP3A	Z	-3.286	4
81	MP3A	Mx	-.000948	4
82	MP3B	X	.917	2
83	MP3B	Z	-1.588	2
84	MP3B	Mx	.000903	2
85	MP3B	X	.917	4
86	MP3B	Z	-1.588	4
87	MP3B	Mx	.000903	4
88	MP3C	X	1.035	2
89	MP3C	Z	-1.793	2
90	MP3C	Mx	-.000973	2
91	MP3C	X	1.035	4
92	MP3C	Z	-1.793	4
93	MP3C	Mx	-.000973	4
94	MP4A	X	.325	1
95	MP4A	Z	-.563	1
96	MP4A	Mx	.000163	1
97	MP4B	X	.247	1
98	MP4B	Z	-.428	1
99	MP4B	Mx	-.000243	1
100	MP4C	X	.256	1
101	MP4C	Z	-.444	1
102	MP4C	Mx	.000241	1
103	MP2A	X	3.636	2
104	MP2A	Z	-6.298	2
105	MP2A	Mx	.002	2
106	MP4A	X	1.633	2.5
107	MP4A	Z	-2.828	2.5
108	MP4A	Mx	.000816	2.5
109	MP4B	X	1.208	2.5
110	MP4B	Z	-2.092	2.5
111	MP4B	Mx	-.001	2.5
112	MP4C	X	1.259	2.5
113	MP4C	Z	-2.181	2.5
114	MP4C	Mx	.001	2.5
115	MP5A	X	1.606	2.5
116	MP5A	Z	-2.782	2.5

Member Point Loads (BLC 28 : Antenna Wm (30 Deg)) (Continued)

	Member Label	Direction	Magnitude[lb,k-ft]	Location[ft,%]
117	MP5A	Mx	.000803	2.5
118	MP5B	X	1.104	2.5
119	MP5B	Z	-1.912	2.5
120	MP5B	Mx	-.001	2.5
121	MP5C	X	1.165	2.5
122	MP5C	Z	-2.017	2.5
123	MP5C	Mx	.001	2.5

Member Point Loads (BLC 29 : Antenna Wm (60 Deg))

	Member Label	Direction	Magnitude[lb,k-ft]	Location[ft,%]
1	MP2B	X	5.504	2
2	MP2B	Z	-3.178	2
3	MP2B	Mx	-.003	2
4	MP1A	X	5.65	1
5	MP1A	Z	-3.262	1
6	MP1A	Mx	-.002	1
7	MP1A	X	5.65	5
8	MP1A	Z	-3.262	5
9	MP1A	Mx	-.002	5
10	MP1B	X	6.699	1
11	MP1B	Z	-3.868	1
12	MP1B	Mx	.004	1
13	MP1B	X	6.699	5
14	MP1B	Z	-3.868	5
15	MP1B	Mx	.004	5
16	MP1C	X	3.677	1
17	MP1C	Z	-2.123	1
18	MP1C	Mx	-.000369	1
19	MP1C	X	3.677	5
20	MP1C	Z	-2.123	5
21	MP1C	Mx	-.000369	5
22	M150	X	5.65	1
23	M150	Z	-3.262	1
24	M150	Mx	-.002	1
25	M150	X	5.65	5
26	M150	Z	-3.262	5
27	M150	Mx	-.002	5
28	M105	X	3.677	1
29	M105	Z	-2.123	1
30	M105	Mx	-.000369	1
31	M105	X	3.677	5
32	M105	Z	-2.123	5
33	M105	Mx	-.000369	5
34	M93	X	6.699	1
35	M93	Z	-3.868	1
36	M93	Mx	.004	1
37	M93	X	6.699	5
38	M93	Z	-3.868	5
39	M93	Mx	.004	5
40	MP4A	X	5.578	1
41	MP4A	Z	-3.22	1

Member Point Loads (BLC 29 : Antenna Wm (60 Deg)) (Continued)

	Member Label	Direction	Magnitude[lb,k-ft]	Location[ft,%]
42	MP4A	Mx	-.000777	1
43	MP4A	X	5.578	5
44	MP4A	Z	-3.22	5
45	MP4A	Mx	-.000777	5
46	MP4B	X	5.235	1
47	MP4B	Z	-3.022	1
48	MP4B	Mx	.004	1
49	MP4B	X	5.235	5
50	MP4B	Z	-3.022	5
51	MP4B	Mx	.004	5
52	MP4C	X	6.446	1
53	MP4C	Z	-3.722	1
54	MP4C	Mx	-.006	1
55	MP4C	X	6.446	5
56	MP4C	Z	-3.722	5
57	MP4C	Mx	-.006	5
58	MP4A	X	5.578	1
59	MP4A	Z	-3.22	1
60	MP4A	Mx	-.005	1
61	MP4A	X	5.578	5
62	MP4A	Z	-3.22	5
63	MP4A	Mx	-.005	5
64	MP4B	X	5.235	1
65	MP4B	Z	-3.022	1
66	MP4B	Mx	.002	1
67	MP4B	X	5.235	5
68	MP4B	Z	-3.022	5
69	MP4B	Mx	.002	5
70	MP4C	X	6.446	1
71	MP4C	Z	-3.722	1
72	MP4C	Mx	.001	1
73	MP4C	X	6.446	5
74	MP4C	Z	-3.722	5
75	MP4C	Mx	.001	5
76	MP3A	X	2.107	2
77	MP3A	Z	-1.216	2
78	MP3A	Mx	-.001	2
79	MP3A	X	2.107	4
80	MP3A	Z	-1.216	4
81	MP3A	Mx	-.001	4
82	MP3B	X	1.793	2
83	MP3B	Z	-1.035	2
84	MP3B	Mx	.000973	2
85	MP3B	X	1.793	4
86	MP3B	Z	-1.035	4
87	MP3B	Mx	.000973	4
88	MP3C	X	2.901	2
89	MP3C	Z	-1.675	2
90	MP3C	Mx	-.001	2
91	MP3C	X	2.901	4
92	MP3C	Z	-1.675	4
93	MP3C	Mx	-.001	4

Member Point Loads (BLC 29 : Antenna Wm (60 Deg)) (Continued)

	Member Label	Direction	Magnitude[lb,k-ft]	Location[ft,%]
94	MP4A	X	.469	1
95	MP4A	Z	-.271	1
96	MP4A	Mx	.000234	1
97	MP4B	X	.444	1
98	MP4B	Z	-.256	1
99	MP4B	Mx	-.000241	1
100	MP4C	X	.532	1
101	MP4C	Z	-.307	1
102	MP4C	Mx	.000197	1
103	MP2A	X	5.504	2
104	MP2A	Z	-3.178	2
105	MP2A	Mx	.003	2
106	MP4A	X	2.317	2.5
107	MP4A	Z	-1.338	2.5
108	MP4A	Mx	.001	2.5
109	MP4B	X	2.181	2.5
110	MP4B	Z	-1.259	2.5
111	MP4B	Mx	-.001	2.5
112	MP4C	X	2.661	2.5
113	MP4C	Z	-1.536	2.5
114	MP4C	Mx	.000987	2.5
115	MP5A	X	2.178	2.5
116	MP5A	Z	-1.257	2.5
117	MP5A	Mx	.001	2.5
118	MP5B	X	2.017	2.5
119	MP5B	Z	-1.165	2.5
120	MP5B	Mx	-.001	2.5
121	MP5C	X	2.584	2.5
122	MP5C	Z	-1.492	2.5
123	MP5C	Mx	.000959	2.5

Member Point Loads (BLC 30 : Antenna Wm (90 Deg))

	Member Label	Direction	Magnitude[lb,k-ft]	Location[ft,%]
1	MP2B	X	7.272	2
2	MP2B	Z	0	2
3	MP2B	Mx	-.002	2
4	MP1A	X	8.091	1
5	MP1A	Z	0	1
6	MP1A	Mx	-.004	1
7	MP1A	X	8.091	5
8	MP1A	Z	0	5
9	MP1A	Mx	-.004	5
10	MP1B	X	5.813	1
11	MP1B	Z	0	1
12	MP1B	Mx	.002	1
13	MP1B	X	5.813	5
14	MP1B	Z	0	5
15	MP1B	Mx	.002	5
16	MP1C	X	4.601	1
17	MP1C	Z	0	1
18	MP1C	Mx	.000787	1

Member Point Loads (BLC 30 : Antenna Wm (90 Deg)) (Continued)

	Member Label	Direction	Magnitude[lb,k-ft]	Location[ft,%]
19	MP1C	X	4.601	5
20	MP1C	Z	0	5
21	MP1C	Mx	.000787	5
22	M150	X	8.091	1
23	M150	Z	0	1
24	M150	Mx	-.004	1
25	M150	X	8.091	5
26	M150	Z	0	5
27	M150	Mx	-.004	5
28	M105	X	4.601	1
29	M105	Z	0	1
30	M105	Mx	.000787	1
31	M105	X	4.601	5
32	M105	Z	0	5
33	M105	Mx	.000787	5
34	M93	X	5.813	1
35	M93	Z	0	1
36	M93	Mx	.002	1
37	M93	X	5.813	5
38	M93	Z	0	5
39	M93	Mx	.002	5
40	MP4A	X	5.696	1
41	MP4A	Z	0	1
42	MP4A	Mx	-.003	1
43	MP4A	X	5.696	5
44	MP4A	Z	0	5
45	MP4A	Mx	-.003	5
46	MP4B	X	7.443	1
47	MP4B	Z	0	1
48	MP4B	Mx	.006	1
49	MP4B	X	7.443	5
50	MP4B	Z	0	5
51	MP4B	Mx	.006	5
52	MP4C	X	8.583	1
53	MP4C	Z	0	1
54	MP4C	Mx	-.006	1
55	MP4C	X	8.583	5
56	MP4C	Z	0	5
57	MP4C	Mx	-.006	5
58	MP4A	X	5.696	1
59	MP4A	Z	0	1
60	MP4A	Mx	-.003	1
61	MP4A	X	5.696	5
62	MP4A	Z	0	5
63	MP4A	Mx	-.003	5
64	MP4B	X	7.443	1
65	MP4B	Z	0	1
66	MP4B	Mx	-.001	1
67	MP4B	X	7.443	5
68	MP4B	Z	0	5
69	MP4B	Mx	-.001	5
70	MP4C	X	8.583	1

Member Point Loads (BLC 30 : Antenna Wm (90 Deg)) (Continued)

	Member Label	Direction	Magnitude[lb,k-ft]	Location[ft,%]
71	MP4C	Z	0	1
72	MP4C	Mx	.005	1
73	MP4C	X	8.583	5
74	MP4C	Z	0	5
75	MP4C	Mx	.005	5
76	MP3A	X	1.752	2
77	MP3A	Z	0	2
78	MP3A	Mx	-.000876	2
79	MP3A	X	1.752	4
80	MP3A	Z	0	4
81	MP3A	Mx	-.000876	4
82	MP3B	X	3.35	2
83	MP3B	Z	0	2
84	MP3B	Mx	.001	2
85	MP3B	X	3.35	4
86	MP3B	Z	0	4
87	MP3B	Mx	.001	4
88	MP3C	X	4.392	2
89	MP3C	Z	0	2
90	MP3C	Mx	-.000381	2
91	MP3C	X	4.392	4
92	MP3C	Z	0	4
93	MP3C	Mx	-.000381	4
94	MP4A	X	.487	1
95	MP4A	Z	0	1
96	MP4A	Mx	.000243	1
97	MP4B	X	.615	1
98	MP4B	Z	0	1
99	MP4B	Mx	-.000198	1
100	MP4C	X	.698	1
101	MP4C	Z	0	1
102	MP4C	Mx	6.1e-5	1
103	MP2A	X	5.898	2
104	MP2A	Z	0	2
105	MP2A	Mx	.003	2
106	MP4A	X	2.38	2.5
107	MP4A	Z	0	2.5
108	MP4A	Mx	.001	2.5
109	MP4B	X	3.073	2.5
110	MP4B	Z	0	2.5
111	MP4B	Mx	-.000988	2.5
112	MP4C	X	3.525	2.5
113	MP4C	Z	0	2.5
114	MP4C	Mx	.000306	2.5
115	MP5A	X	2.166	2.5
116	MP5A	Z	0	2.5
117	MP5A	Mx	.001	2.5
118	MP5B	X	2.984	2.5
119	MP5B	Z	0	2.5
120	MP5B	Mx	-.000959	2.5
121	MP5C	X	3.519	2.5
122	MP5C	Z	0	2.5

Member Point Loads (BLC 30 : Antenna Wm (90 Deg)) (Continued)

	Member Label	Direction	Magnitude[lb,k-ft]	Location[ft,%]
123	MP5C	Mx	.000306	2.5

Member Point Loads (BLC 31 : Antenna Wm (120 Deg))

	Member Label	Direction	Magnitude[lb,k-ft]	Location[ft,%]
1	MP2B	X	6.695	2
2	MP2B	Z	3.865	2
3	MP2B	Mx	0	2
4	MP1A	X	6.699	1
5	MP1A	Z	3.868	1
6	MP1A	Mx	-.004	1
7	MP1A	X	6.699	5
8	MP1A	Z	3.868	5
9	MP1A	Mx	-.004	5
10	MP1B	X	3.677	1
11	MP1B	Z	2.123	1
12	MP1B	Mx	.000369	1
13	MP1B	X	3.677	5
14	MP1B	Z	2.123	5
15	MP1B	Mx	.000369	5
16	MP1C	X	5.65	1
17	MP1C	Z	3.262	1
18	MP1C	Mx	.002	1
19	MP1C	X	5.65	5
20	MP1C	Z	3.262	5
21	MP1C	Mx	.002	5
22	M150	X	6.699	1
23	M150	Z	3.868	1
24	M150	Mx	-.004	1
25	M150	X	6.699	5
26	M150	Z	3.868	5
27	M150	Mx	-.004	5
28	M105	X	5.65	1
29	M105	Z	3.262	1
30	M105	Mx	.002	1
31	M105	X	5.65	5
32	M105	Z	3.262	5
33	M105	Mx	.002	5
34	M93	X	3.677	1
35	M93	Z	2.123	1
36	M93	Mx	.000369	1
37	M93	X	3.677	5
38	M93	Z	2.123	5
39	M93	Mx	.000369	5
40	MP4A	X	5.578	1
41	MP4A	Z	3.22	1
42	MP4A	Mx	-.005	1
43	MP4A	X	5.578	5
44	MP4A	Z	3.22	5
45	MP4A	Mx	-.005	5
46	MP4B	X	7.433	1
47	MP4B	Z	4.292	1

Member Point Loads (BLC 31 : Antenna Wm (120 Deg)) (Continued)

	Member Label	Direction	Magnitude[lb,k-ft]	Location[ft,%]
48	MP4B	Mx	.006	1
49	MP4B	X	7.433	5
50	MP4B	Z	4.292	5
51	MP4B	Mx	.006	5
52	MP4C	X	7.209	1
53	MP4C	Z	4.162	1
54	MP4C	Mx	-.003	1
55	MP4C	X	7.209	5
56	MP4C	Z	4.162	5
57	MP4C	Mx	-.003	5
58	MP4A	X	5.578	1
59	MP4A	Z	3.22	1
60	MP4A	Mx	-.000777	1
61	MP4A	X	5.578	5
62	MP4A	Z	3.22	5
63	MP4A	Mx	-.000777	5
64	MP4B	X	7.433	1
65	MP4B	Z	4.292	1
66	MP4B	Mx	-.005	1
67	MP4B	X	7.433	5
68	MP4B	Z	4.292	5
69	MP4B	Mx	-.005	5
70	MP4C	X	7.209	1
71	MP4C	Z	4.162	1
72	MP4C	Mx	.006	1
73	MP4C	X	7.209	5
74	MP4C	Z	4.162	5
75	MP4C	Mx	.006	5
76	MP3A	X	2.107	2
77	MP3A	Z	1.216	2
78	MP3A	Mx	-.001	2
79	MP3A	X	2.107	4
80	MP3A	Z	1.216	4
81	MP3A	Mx	-.001	4
82	MP3B	X	3.804	2
83	MP3B	Z	2.196	2
84	MP3B	Mx	.000381	2
85	MP3B	X	3.804	4
86	MP3B	Z	2.196	4
87	MP3B	Mx	.000381	4
88	MP3C	X	3.599	2
89	MP3C	Z	2.078	2
90	MP3C	Mx	.000711	2
91	MP3C	X	3.599	4
92	MP3C	Z	2.078	4
93	MP3C	Mx	.000711	4
94	MP4A	X	.469	1
95	MP4A	Z	.271	1
96	MP4A	Mx	.000234	1
97	MP4B	X	.604	1
98	MP4B	Z	.349	1
99	MP4B	Mx	-6e-5	1

Member Point Loads (BLC 31 : Antenna Wm (120 Deg)) (Continued)

	Member Label	Direction	Magnitude[lb,k-ft]	Location[ft,%]
100	MP4C	X	.588	1
101	MP4C	Z	.34	1
102	MP4C	Mx	-.000116	1
103	MP2A	X	5.504	2
104	MP2A	Z	3.178	2
105	MP2A	Mx	.003	2
106	MP4A	X	2.317	2.5
107	MP4A	Z	1.338	2.5
108	MP4A	Mx	.001	2.5
109	MP4B	X	3.053	2.5
110	MP4B	Z	1.762	2.5
111	MP4B	Mx	-.000306	2.5
112	MP4C	X	2.964	2.5
113	MP4C	Z	1.711	2.5
114	MP4C	Mx	-.000585	2.5
115	MP5A	X	2.178	2.5
116	MP5A	Z	1.257	2.5
117	MP5A	Mx	.001	2.5
118	MP5B	X	3.047	2.5
119	MP5B	Z	1.759	2.5
120	MP5B	Mx	-.000306	2.5
121	MP5C	X	2.942	2.5
122	MP5C	Z	1.699	2.5
123	MP5C	Mx	-.000581	2.5

Member Point Loads (BLC 32 : Antenna Wm (150 Deg))

	Member Label	Direction	Magnitude[lb,k-ft]	Location[ft,%]
1	MP2B	X	3.636	2
2	MP2B	Z	6.298	2
3	MP2B	Mx	.002	2
4	MP1A	X	2.907	1
5	MP1A	Z	5.034	1
6	MP1A	Mx	-.002	1
7	MP1A	X	2.907	5
8	MP1A	Z	5.034	5
9	MP1A	Mx	-.002	5
10	MP1B	X	2.3	1
11	MP1B	Z	3.985	1
12	MP1B	Mx	-.000787	1
13	MP1B	X	2.3	5
14	MP1B	Z	3.985	5
15	MP1B	Mx	-.000787	5
16	MP1C	X	4.046	1
17	MP1C	Z	7.007	1
18	MP1C	Mx	.004	1
19	MP1C	X	4.046	5
20	MP1C	Z	7.007	5
21	MP1C	Mx	.004	5
22	M150	X	2.907	1
23	M150	Z	5.034	1
24	M150	Mx	-.002	1

Member Point Loads (BLC 32 : Antenna Wm (150 Deg)) (Continued)

	Member Label	Direction	Magnitude[lb,k-ft]	Location[ft,%]
25	M150	X	2.907	5
26	M150	Z	5.034	5
27	M150	Mx	-.002	5
28	M105	X	4.046	1
29	M105	Z	7.007	1
30	M105	Mx	.004	1
31	M105	X	4.046	5
32	M105	Z	7.007	5
33	M105	Mx	.004	5
34	M93	X	2.3	1
35	M93	Z	3.985	1
36	M93	Mx	-.000787	1
37	M93	X	2.3	5
38	M93	Z	3.985	5
39	M93	Mx	-.000787	5
40	MP4A	X	3.964	1
41	MP4A	Z	6.867	1
42	MP4A	Mx	-.006	1
43	MP4A	X	3.964	5
44	MP4A	Z	6.867	5
45	MP4A	Mx	-.006	5
46	MP4B	X	4.162	1
47	MP4B	Z	7.209	1
48	MP4B	Mx	.003	1
49	MP4B	X	4.162	5
50	MP4B	Z	7.209	5
51	MP4B	Mx	.003	5
52	MP4C	X	3.463	1
53	MP4C	Z	5.998	1
54	MP4C	Mx	-.00013	1
55	MP4C	X	3.463	5
56	MP4C	Z	5.998	5
57	MP4C	Mx	-.00013	5
58	MP4A	X	3.964	1
59	MP4A	Z	6.867	1
60	MP4A	Mx	.002	1
61	MP4A	X	3.964	5
62	MP4A	Z	6.867	5
63	MP4A	Mx	.002	5
64	MP4B	X	4.162	1
65	MP4B	Z	7.209	1
66	MP4B	Mx	-.006	1
67	MP4B	X	4.162	5
68	MP4B	Z	7.209	5
69	MP4B	Mx	-.006	5
70	MP4C	X	3.463	1
71	MP4C	Z	5.998	1
72	MP4C	Mx	.005	1
73	MP4C	X	3.463	5
74	MP4C	Z	5.998	5
75	MP4C	Mx	.005	5
76	MP3A	X	1.897	2

Member Point Loads (BLC 32 : Antenna Wm (150 Deg)) (Continued)

	Member Label	Direction	Magnitude[lb,k-ft]	Location[ft,%]
77	MP3A	Z	3.286	2
78	MP3A	Mx	-.000948	2
79	MP3A	X	1.897	4
80	MP3A	Z	3.286	4
81	MP3A	Mx	-.000948	4
82	MP3B	X	2.078	2
83	MP3B	Z	3.599	2
84	MP3B	Mx	-.000711	2
85	MP3B	X	2.078	4
86	MP3B	Z	3.599	4
87	MP3B	Mx	-.000711	4
88	MP3C	X	1.438	2
89	MP3C	Z	2.491	2
90	MP3C	Mx	.001	2
91	MP3C	X	1.438	4
92	MP3C	Z	2.491	4
93	MP3C	Mx	.001	4
94	MP4A	X	.325	1
95	MP4A	Z	.563	1
96	MP4A	Mx	.000163	1
97	MP4B	X	.34	1
98	MP4B	Z	.588	1
99	MP4B	Mx	.000116	1
100	MP4C	X	.289	1
101	MP4C	Z	.5	1
102	MP4C	Mx	-.000221	1
103	MP2A	X	3.636	2
104	MP2A	Z	6.298	2
105	MP2A	Mx	.002	2
106	MP4A	X	1.633	2.5
107	MP4A	Z	2.828	2.5
108	MP4A	Mx	.000816	2.5
109	MP4B	X	1.711	2.5
110	MP4B	Z	2.964	2.5
111	MP4B	Mx	.000585	2.5
112	MP4C	X	1.434	2.5
113	MP4C	Z	2.484	2.5
114	MP4C	Mx	-.001	2.5
115	MP5A	X	1.606	2.5
116	MP5A	Z	2.782	2.5
117	MP5A	Mx	.000803	2.5
118	MP5B	X	1.699	2.5
119	MP5B	Z	2.942	2.5
120	MP5B	Mx	.000581	2.5
121	MP5C	X	1.371	2.5
122	MP5C	Z	2.375	2.5
123	MP5C	Mx	-.001	2.5

Member Point Loads (BLC 33 : Antenna Wm (180 Deg))

	Member Label	Direction	Magnitude[lb,k-ft]	Location[ft,%]
1	MP2B	X	0	2

Member Point Loads (BLC 33 : Antenna Wm (180 Deg)) (Continued)

	Member Label	Direction	Magnitude[lb,k-ft]	Location[ft,%]
2	MP2B	Z	6.356	2
3	MP2B	Mx	.003	2
4	MP1A	X	0	1
5	MP1A	Z	4.246	1
6	MP1A	Mx	-.000369	1
7	MP1A	X	0	5
8	MP1A	Z	4.246	5
9	MP1A	Mx	-.000369	5
10	MP1B	X	0	1
11	MP1B	Z	6.524	1
12	MP1B	Mx	-.002	1
13	MP1B	X	0	5
14	MP1B	Z	6.524	5
15	MP1B	Mx	-.002	5
16	MP1C	X	0	1
17	MP1C	Z	7.736	1
18	MP1C	Mx	.004	1
19	MP1C	X	0	5
20	MP1C	Z	7.736	5
21	MP1C	Mx	.004	5
22	M150	X	0	1
23	M150	Z	4.246	1
24	M150	Mx	-.000369	1
25	M150	X	0	5
26	M150	Z	4.246	5
27	M150	Mx	-.000369	5
28	M105	X	0	1
29	M105	Z	7.736	1
30	M105	Mx	.004	1
31	M105	X	0	5
32	M105	Z	7.736	5
33	M105	Mx	.004	5
34	M93	X	0	1
35	M93	Z	6.524	1
36	M93	Mx	-.002	1
37	M93	X	0	5
38	M93	Z	6.524	5
39	M93	Mx	-.002	5
40	MP4A	X	0	1
41	MP4A	Z	8.673	1
42	MP4A	Mx	-.005	1
43	MP4A	X	0	5
44	MP4A	Z	8.673	5
45	MP4A	Mx	-.005	5
46	MP4B	X	0	1
47	MP4B	Z	6.926	1
48	MP4B	Mx	.00013	1
49	MP4B	X	0	5
50	MP4B	Z	6.926	5
51	MP4B	Mx	.00013	5
52	MP4C	X	0	1
53	MP4C	Z	5.786	1

Member Point Loads (BLC 33 : Antenna Wm (180 Deg)) (Continued)

	Member Label	Direction	Magnitude[lb,k-ft]	Location[ft,%]
54	MP4C	Mx	.002	1
55	MP4C	X	0	5
56	MP4C	Z	5.786	5
57	MP4C	Mx	.002	5
58	MP4A	X	0	1
59	MP4A	Z	8.673	1
60	MP4A	Mx	.005	1
61	MP4A	X	0	5
62	MP4A	Z	8.673	5
63	MP4A	Mx	.005	5
64	MP4B	X	0	1
65	MP4B	Z	6.926	1
66	MP4B	Mx	-.005	1
67	MP4B	X	0	5
68	MP4B	Z	6.926	5
69	MP4B	Mx	-.005	5
70	MP4C	X	0	1
71	MP4C	Z	5.786	1
72	MP4C	Mx	.003	1
73	MP4C	X	0	5
74	MP4C	Z	5.786	5
75	MP4C	Mx	.003	5
76	MP3A	X	0	2
77	MP3A	Z	4.475	2
78	MP3A	Mx	0	2
79	MP3A	X	0	4
80	MP3A	Z	4.475	4
81	MP3A	Mx	0	4
82	MP3B	X	0	2
83	MP3B	Z	2.877	2
84	MP3B	Mx	-.001	2
85	MP3B	X	0	4
86	MP3B	Z	2.877	4
87	MP3B	Mx	-.001	4
88	MP3C	X	0	2
89	MP3C	Z	1.834	2
90	MP3C	Mx	.000903	2
91	MP3C	X	0	4
92	MP3C	Z	1.834	4
93	MP3C	Mx	.000903	4
94	MP4A	X	0	1
95	MP4A	Z	.705	1
96	MP4A	Mx	0	1
97	MP4B	X	0	1
98	MP4B	Z	.577	1
99	MP4B	Mx	.000221	1
100	MP4C	X	0	1
101	MP4C	Z	.494	1
102	MP4C	Mx	-.000243	1
103	MP2A	X	0	2
104	MP2A	Z	7.73	2
105	MP2A	Mx	0	2

Member Point Loads (BLC 33 : Antenna Wm (180 Deg)) (Continued)

	Member Label	Direction	Magnitude[lb,k-ft]	Location[ft,%]
106	MP4A	X	0	2.5
107	MP4A	Z	3.561	2.5
108	MP4A	Mx	0	2.5
109	MP4B	X	0	2.5
110	MP4B	Z	2.868	2.5
111	MP4B	Mx	.001	2.5
112	MP4C	X	0	2.5
113	MP4C	Z	2.416	2.5
114	MP4C	Mx	-.001	2.5
115	MP5A	X	0	2.5
116	MP5A	Z	3.561	2.5
117	MP5A	Mx	0	2.5
118	MP5B	X	0	2.5
119	MP5B	Z	2.742	2.5
120	MP5B	Mx	.001	2.5
121	MP5C	X	0	2.5
122	MP5C	Z	2.208	2.5
123	MP5C	Mx	-.001	2.5

Member Point Loads (BLC 34 : Antenna Wm (210 Deg))

	Member Label	Direction	Magnitude[lb,k-ft]	Location[ft,%]
1	MP2B	X	-2.949	2
2	MP2B	Z	5.108	2
3	MP2B	Mx	.003	2
4	MP1A	X	-2.3	1
5	MP1A	Z	3.985	1
6	MP1A	Mx	.000787	1
7	MP1A	X	-2.3	5
8	MP1A	Z	3.985	5
9	MP1A	Mx	.000787	5
10	MP1B	X	-4.046	1
11	MP1B	Z	7.007	1
12	MP1B	Mx	-.004	1
13	MP1B	X	-4.046	5
14	MP1B	Z	7.007	5
15	MP1B	Mx	-.004	5
16	MP1C	X	-2.907	1
17	MP1C	Z	5.034	1
18	MP1C	Mx	.002	1
19	MP1C	X	-2.907	5
20	MP1C	Z	5.034	5
21	MP1C	Mx	.002	5
22	M150	X	-2.3	1
23	M150	Z	3.985	1
24	M150	Mx	.000787	1
25	M150	X	-2.3	5
26	M150	Z	3.985	5
27	M150	Mx	.000787	5
28	M105	X	-2.907	1
29	M105	Z	5.034	1
30	M105	Mx	.002	1

Member Point Loads (BLC 34 : Antenna Wm (210 Deg)) (Continued)

	Member Label	Direction	Magnitude[lb,k-ft]	Location[ft,%]
31	M105	X	-2.907	5
32	M105	Z	5.034	5
33	M105	Mx	.002	5
34	M93	X	-4.046	1
35	M93	Z	7.007	1
36	M93	Mx	-.004	1
37	M93	X	-4.046	5
38	M93	Z	7.007	5
39	M93	Mx	-.004	5
40	MP4A	X	-3.964	1
41	MP4A	Z	6.867	1
42	MP4A	Mx	-.002	1
43	MP4A	X	-3.964	5
44	MP4A	Z	6.867	5
45	MP4A	Mx	-.002	5
46	MP4B	X	-2.893	1
47	MP4B	Z	5.011	1
48	MP4B	Mx	-.002	1
49	MP4B	X	-2.893	5
50	MP4B	Z	5.011	5
51	MP4B	Mx	-.002	5
52	MP4C	X	-3.022	1
53	MP4C	Z	5.235	1
54	MP4C	Mx	.004	1
55	MP4C	X	-3.022	5
56	MP4C	Z	5.235	5
57	MP4C	Mx	.004	5
58	MP4A	X	-3.964	1
59	MP4A	Z	6.867	1
60	MP4A	Mx	.006	1
61	MP4A	X	-3.964	5
62	MP4A	Z	6.867	5
63	MP4A	Mx	.006	5
64	MP4B	X	-2.893	1
65	MP4B	Z	5.011	1
66	MP4B	Mx	-.003	1
67	MP4B	X	-2.893	5
68	MP4B	Z	5.011	5
69	MP4B	Mx	-.003	5
70	MP4C	X	-3.022	1
71	MP4C	Z	5.235	1
72	MP4C	Mx	.002	1
73	MP4C	X	-3.022	5
74	MP4C	Z	5.235	5
75	MP4C	Mx	.002	5
76	MP3A	X	-1.897	2
77	MP3A	Z	3.286	2
78	MP3A	Mx	.000948	2
79	MP3A	X	-1.897	4
80	MP3A	Z	3.286	4
81	MP3A	Mx	.000948	4
82	MP3B	X	-.917	2

Member Point Loads (BLC 34 : Antenna Wm (210 Deg)) (Continued)

	Member Label	Direction	Magnitude[lb,k-ft]	Location[ft,%]
83	MP3B	Z	1.588	2
84	MP3B	Mx	-.000903	2
85	MP3B	X	-.917	4
86	MP3B	Z	1.588	4
87	MP3B	Mx	-.000903	4
88	MP3C	X	-1.035	2
89	MP3C	Z	1.793	2
90	MP3C	Mx	.000973	2
91	MP3C	X	-1.035	4
92	MP3C	Z	1.793	4
93	MP3C	Mx	.000973	4
94	MP4A	X	-.325	1
95	MP4A	Z	.563	1
96	MP4A	Mx	-.000163	1
97	MP4B	X	-.247	1
98	MP4B	Z	.428	1
99	MP4B	Mx	.000243	1
100	MP4C	X	-.256	1
101	MP4C	Z	.444	1
102	MP4C	Mx	-.000241	1
103	MP2A	X	-3.636	2
104	MP2A	Z	6.298	2
105	MP2A	Mx	-.002	2
106	MP4A	X	-1.633	2.5
107	MP4A	Z	2.828	2.5
108	MP4A	Mx	-.000816	2.5
109	MP4B	X	-1.208	2.5
110	MP4B	Z	2.092	2.5
111	MP4B	Mx	.001	2.5
112	MP4C	X	-1.259	2.5
113	MP4C	Z	2.181	2.5
114	MP4C	Mx	-.001	2.5
115	MP5A	X	-1.606	2.5
116	MP5A	Z	2.782	2.5
117	MP5A	Mx	-.000803	2.5
118	MP5B	X	-1.104	2.5
119	MP5B	Z	1.912	2.5
120	MP5B	Mx	.001	2.5
121	MP5C	X	-1.165	2.5
122	MP5C	Z	2.017	2.5
123	MP5C	Mx	-.001	2.5

Member Point Loads (BLC 35 : Antenna Wm (240 Deg))

	Member Label	Direction	Magnitude[lb,k-ft]	Location[ft,%]
1	MP2B	X	-5.504	2
2	MP2B	Z	3.178	2
3	MP2B	Mx	.003	2
4	MP1A	X	-5.65	1
5	MP1A	Z	3.262	1
6	MP1A	Mx	.002	1
7	MP1A	X	-5.65	5

Member Point Loads (BLC 35 : Antenna Wm (240 Deg)) (Continued)

	Member Label	Direction	Magnitude[lb,k-ft]	Location[ft,%]
8	MP1A	Z	3.262	5
9	MP1A	Mx	.002	5
10	MP1B	X	-6.699	1
11	MP1B	Z	3.868	1
12	MP1B	Mx	-.004	1
13	MP1B	X	-6.699	5
14	MP1B	Z	3.868	5
15	MP1B	Mx	-.004	5
16	MP1C	X	-3.677	1
17	MP1C	Z	2.123	1
18	MP1C	Mx	.000369	1
19	MP1C	X	-3.677	5
20	MP1C	Z	2.123	5
21	MP1C	Mx	.000369	5
22	M150	X	-5.65	1
23	M150	Z	3.262	1
24	M150	Mx	.002	1
25	M150	X	-5.65	5
26	M150	Z	3.262	5
27	M150	Mx	.002	5
28	M105	X	-3.677	1
29	M105	Z	2.123	1
30	M105	Mx	.000369	1
31	M105	X	-3.677	5
32	M105	Z	2.123	5
33	M105	Mx	.000369	5
34	M93	X	-6.699	1
35	M93	Z	3.868	1
36	M93	Mx	-.004	1
37	M93	X	-6.699	5
38	M93	Z	3.868	5
39	M93	Mx	-.004	5
40	MP4A	X	-5.578	1
41	MP4A	Z	3.22	1
42	MP4A	Mx	.000777	1
43	MP4A	X	-5.578	5
44	MP4A	Z	3.22	5
45	MP4A	Mx	.000777	5
46	MP4B	X	-5.235	1
47	MP4B	Z	3.022	1
48	MP4B	Mx	-.004	1
49	MP4B	X	-5.235	5
50	MP4B	Z	3.022	5
51	MP4B	Mx	-.004	5
52	MP4C	X	-6.446	1
53	MP4C	Z	3.722	1
54	MP4C	Mx	.006	1
55	MP4C	X	-6.446	5
56	MP4C	Z	3.722	5
57	MP4C	Mx	.006	5
58	MP4A	X	-5.578	1
59	MP4A	Z	3.22	1

Member Point Loads (BLC 35 : Antenna Wm (240 Deg)) (Continued)

	Member Label	Direction	Magnitude[lb,k-ft]	Location[ft,%]
60	MP4A	Mx	.005	1
61	MP4A	X	-5.578	5
62	MP4A	Z	3.22	5
63	MP4A	Mx	.005	5
64	MP4B	X	-5.235	1
65	MP4B	Z	3.022	1
66	MP4B	Mx	-.002	1
67	MP4B	X	-5.235	5
68	MP4B	Z	3.022	5
69	MP4B	Mx	-.002	5
70	MP4C	X	-6.446	1
71	MP4C	Z	3.722	1
72	MP4C	Mx	-.001	1
73	MP4C	X	-6.446	5
74	MP4C	Z	3.722	5
75	MP4C	Mx	-.001	5
76	MP3A	X	-2.107	2
77	MP3A	Z	1.216	2
78	MP3A	Mx	.001	2
79	MP3A	X	-2.107	4
80	MP3A	Z	1.216	4
81	MP3A	Mx	.001	4
82	MP3B	X	-1.793	2
83	MP3B	Z	1.035	2
84	MP3B	Mx	-.000973	2
85	MP3B	X	-1.793	4
86	MP3B	Z	1.035	4
87	MP3B	Mx	-.000973	4
88	MP3C	X	-2.901	2
89	MP3C	Z	1.675	2
90	MP3C	Mx	.001	2
91	MP3C	X	-2.901	4
92	MP3C	Z	1.675	4
93	MP3C	Mx	.001	4
94	MP4A	X	-.469	1
95	MP4A	Z	.271	1
96	MP4A	Mx	-.000234	1
97	MP4B	X	-.444	1
98	MP4B	Z	.256	1
99	MP4B	Mx	.000241	1
100	MP4C	X	-.532	1
101	MP4C	Z	.307	1
102	MP4C	Mx	-.000197	1
103	MP2A	X	-5.504	2
104	MP2A	Z	3.178	2
105	MP2A	Mx	-.003	2
106	MP4A	X	-2.317	2.5
107	MP4A	Z	1.338	2.5
108	MP4A	Mx	-.001	2.5
109	MP4B	X	-2.181	2.5
110	MP4B	Z	1.259	2.5
111	MP4B	Mx	.001	2.5

Member Point Loads (BLC 35 : Antenna Wm (240 Deg)) (Continued)

	Member Label	Direction	Magnitude[lb,k-ft]	Location[ft,%]
112	MP4C	X	-2.661	2.5
113	MP4C	Z	1.536	2.5
114	MP4C	Mx	-.000987	2.5
115	MP5A	X	-2.178	2.5
116	MP5A	Z	1.257	2.5
117	MP5A	Mx	-.001	2.5
118	MP5B	X	-2.017	2.5
119	MP5B	Z	1.165	2.5
120	MP5B	Mx	.001	2.5
121	MP5C	X	-2.584	2.5
122	MP5C	Z	1.492	2.5
123	MP5C	Mx	-.000959	2.5

Member Point Loads (BLC 36 : Antenna Wm (270 Deg))

	Member Label	Direction	Magnitude[lb,k-ft]	Location[ft,%]
1	MP2B	X	-7.272	2
2	MP2B	Z	0	2
3	MP2B	Mx	.002	2
4	MP1A	X	-8.091	1
5	MP1A	Z	0	1
6	MP1A	Mx	.004	1
7	MP1A	X	-8.091	5
8	MP1A	Z	0	5
9	MP1A	Mx	.004	5
10	MP1B	X	-5.813	1
11	MP1B	Z	0	1
12	MP1B	Mx	-.002	1
13	MP1B	X	-5.813	5
14	MP1B	Z	0	5
15	MP1B	Mx	-.002	5
16	MP1C	X	-4.601	1
17	MP1C	Z	0	1
18	MP1C	Mx	-.000787	1
19	MP1C	X	-4.601	5
20	MP1C	Z	0	5
21	MP1C	Mx	-.000787	5
22	M150	X	-8.091	1
23	M150	Z	0	1
24	M150	Mx	.004	1
25	M150	X	-8.091	5
26	M150	Z	0	5
27	M150	Mx	.004	5
28	M105	X	-4.601	1
29	M105	Z	0	1
30	M105	Mx	-.000787	1
31	M105	X	-4.601	5
32	M105	Z	0	5
33	M105	Mx	-.000787	5
34	M93	X	-5.813	1
35	M93	Z	0	1
36	M93	Mx	-.002	1

Member Point Loads (BLC 36 : Antenna Wm (270 Deg)) (Continued)

	Member Label	Direction	Magnitude[lb,k-ft]	Location[ft,%]
37	M93	X	-5.813	5
38	M93	Z	0	5
39	M93	Mx	-.002	5
40	MP4A	X	-5.696	1
41	MP4A	Z	0	1
42	MP4A	Mx	.003	1
43	MP4A	X	-5.696	5
44	MP4A	Z	0	5
45	MP4A	Mx	.003	5
46	MP4B	X	-7.443	1
47	MP4B	Z	0	1
48	MP4B	Mx	-.006	1
49	MP4B	X	-7.443	5
50	MP4B	Z	0	5
51	MP4B	Mx	-.006	5
52	MP4C	X	-8.583	1
53	MP4C	Z	0	1
54	MP4C	Mx	.006	1
55	MP4C	X	-8.583	5
56	MP4C	Z	0	5
57	MP4C	Mx	.006	5
58	MP4A	X	-5.696	1
59	MP4A	Z	0	1
60	MP4A	Mx	.003	1
61	MP4A	X	-5.696	5
62	MP4A	Z	0	5
63	MP4A	Mx	.003	5
64	MP4B	X	-7.443	1
65	MP4B	Z	0	1
66	MP4B	Mx	.001	1
67	MP4B	X	-7.443	5
68	MP4B	Z	0	5
69	MP4B	Mx	.001	5
70	MP4C	X	-8.583	1
71	MP4C	Z	0	1
72	MP4C	Mx	-.005	1
73	MP4C	X	-8.583	5
74	MP4C	Z	0	5
75	MP4C	Mx	-.005	5
76	MP3A	X	-1.752	2
77	MP3A	Z	0	2
78	MP3A	Mx	.000876	2
79	MP3A	X	-1.752	4
80	MP3A	Z	0	4
81	MP3A	Mx	.000876	4
82	MP3B	X	-3.35	2
83	MP3B	Z	0	2
84	MP3B	Mx	-.001	2
85	MP3B	X	-3.35	4
86	MP3B	Z	0	4
87	MP3B	Mx	-.001	4
88	MP3C	X	-4.392	2

Member Point Loads (BLC 36 : Antenna Wm (270 Deg)) (Continued)

	Member Label	Direction	Magnitude[lb,k-ft]	Location[ft,%]
89	MP3C	Z	0	2
90	MP3C	Mx	.000381	2
91	MP3C	X	-4.392	4
92	MP3C	Z	0	4
93	MP3C	Mx	.000381	4
94	MP4A	X	-.487	1
95	MP4A	Z	0	1
96	MP4A	Mx	-.000243	1
97	MP4B	X	-.615	1
98	MP4B	Z	0	1
99	MP4B	Mx	.000198	1
100	MP4C	X	-.698	1
101	MP4C	Z	0	1
102	MP4C	Mx	-6.1e-5	1
103	MP2A	X	-5.898	2
104	MP2A	Z	0	2
105	MP2A	Mx	-.003	2
106	MP4A	X	-2.38	2.5
107	MP4A	Z	0	2.5
108	MP4A	Mx	-.001	2.5
109	MP4B	X	-3.073	2.5
110	MP4B	Z	0	2.5
111	MP4B	Mx	.000988	2.5
112	MP4C	X	-3.525	2.5
113	MP4C	Z	0	2.5
114	MP4C	Mx	-.000306	2.5
115	MP5A	X	-2.166	2.5
116	MP5A	Z	0	2.5
117	MP5A	Mx	-.001	2.5
118	MP5B	X	-2.984	2.5
119	MP5B	Z	0	2.5
120	MP5B	Mx	.000959	2.5
121	MP5C	X	-3.519	2.5
122	MP5C	Z	0	2.5
123	MP5C	Mx	-.000306	2.5

Member Point Loads (BLC 37 : Antenna Wm (300 Deg))

	Member Label	Direction	Magnitude[lb,k-ft]	Location[ft,%]
1	MP2B	X	-6.695	2
2	MP2B	Z	-3.865	2
3	MP2B	Mx	0	2
4	MP1A	X	-6.699	1
5	MP1A	Z	-3.868	1
6	MP1A	Mx	.004	1
7	MP1A	X	-6.699	5
8	MP1A	Z	-3.868	5
9	MP1A	Mx	.004	5
10	MP1B	X	-3.677	1
11	MP1B	Z	-2.123	1
12	MP1B	Mx	-.000369	1
13	MP1B	X	-3.677	5

Member Point Loads (BLC 37 : Antenna Wm (300 Deg)) (Continued)

	Member Label	Direction	Magnitude[lb,k-ft]	Location[ft,%]
14	MP1B	Z	-2.123	5
15	MP1B	Mx	-.000369	5
16	MP1C	X	-5.65	1
17	MP1C	Z	-3.262	1
18	MP1C	Mx	-.002	1
19	MP1C	X	-5.65	5
20	MP1C	Z	-3.262	5
21	MP1C	Mx	-.002	5
22	M150	X	-6.699	1
23	M150	Z	-3.868	1
24	M150	Mx	.004	1
25	M150	X	-6.699	5
26	M150	Z	-3.868	5
27	M150	Mx	.004	5
28	M105	X	-5.65	1
29	M105	Z	-3.262	1
30	M105	Mx	-.002	1
31	M105	X	-5.65	5
32	M105	Z	-3.262	5
33	M105	Mx	-.002	5
34	M93	X	-3.677	1
35	M93	Z	-2.123	1
36	M93	Mx	-.000369	1
37	M93	X	-3.677	5
38	M93	Z	-2.123	5
39	M93	Mx	-.000369	5
40	MP4A	X	-5.578	1
41	MP4A	Z	-3.22	1
42	MP4A	Mx	.005	1
43	MP4A	X	-5.578	5
44	MP4A	Z	-3.22	5
45	MP4A	Mx	.005	5
46	MP4B	X	-7.433	1
47	MP4B	Z	-4.292	1
48	MP4B	Mx	-.006	1
49	MP4B	X	-7.433	5
50	MP4B	Z	-4.292	5
51	MP4B	Mx	-.006	5
52	MP4C	X	-7.209	1
53	MP4C	Z	-4.162	1
54	MP4C	Mx	.003	1
55	MP4C	X	-7.209	5
56	MP4C	Z	-4.162	5
57	MP4C	Mx	.003	5
58	MP4A	X	-5.578	1
59	MP4A	Z	-3.22	1
60	MP4A	Mx	.000777	1
61	MP4A	X	-5.578	5
62	MP4A	Z	-3.22	5
63	MP4A	Mx	.000777	5
64	MP4B	X	-7.433	1
65	MP4B	Z	-4.292	1

Member Point Loads (BLC 37 : Antenna Wm (300 Deg)) (Continued)

	Member Label	Direction	Magnitude[lb,k-ft]	Location[ft,%]
66	MP4B	Mx	.005	1
67	MP4B	X	-7.433	5
68	MP4B	Z	-4.292	5
69	MP4B	Mx	.005	5
70	MP4C	X	-7.209	1
71	MP4C	Z	-4.162	1
72	MP4C	Mx	-.006	1
73	MP4C	X	-7.209	5
74	MP4C	Z	-4.162	5
75	MP4C	Mx	-.006	5
76	MP3A	X	-2.107	2
77	MP3A	Z	-1.216	2
78	MP3A	Mx	.001	2
79	MP3A	X	-2.107	4
80	MP3A	Z	-1.216	4
81	MP3A	Mx	.001	4
82	MP3B	X	-3.804	2
83	MP3B	Z	-2.196	2
84	MP3B	Mx	-.000381	2
85	MP3B	X	-3.804	4
86	MP3B	Z	-2.196	4
87	MP3B	Mx	-.000381	4
88	MP3C	X	-3.599	2
89	MP3C	Z	-2.078	2
90	MP3C	Mx	-.000711	2
91	MP3C	X	-3.599	4
92	MP3C	Z	-2.078	4
93	MP3C	Mx	-.000711	4
94	MP4A	X	-.469	1
95	MP4A	Z	-.271	1
96	MP4A	Mx	-.000234	1
97	MP4B	X	-.604	1
98	MP4B	Z	-.349	1
99	MP4B	Mx	6e-5	1
100	MP4C	X	-.588	1
101	MP4C	Z	-.34	1
102	MP4C	Mx	.000116	1
103	MP2A	X	-5.504	2
104	MP2A	Z	-3.178	2
105	MP2A	Mx	-.003	2
106	MP4A	X	-2.317	2.5
107	MP4A	Z	-1.338	2.5
108	MP4A	Mx	-.001	2.5
109	MP4B	X	-3.053	2.5
110	MP4B	Z	-1.762	2.5
111	MP4B	Mx	.000306	2.5
112	MP4C	X	-2.964	2.5
113	MP4C	Z	-1.711	2.5
114	MP4C	Mx	.000585	2.5
115	MP5A	X	-2.178	2.5
116	MP5A	Z	-1.257	2.5
117	MP5A	Mx	-.001	2.5

Member Point Loads (BLC 37 : Antenna Wm (300 Deg)) (Continued)

	Member Label	Direction	Magnitude[lb,k-ft]	Location[ft,%]
118	MP5B	X	-3.047	2.5
119	MP5B	Z	-1.759	2.5
120	MP5B	Mx	.000306	2.5
121	MP5C	X	-2.942	2.5
122	MP5C	Z	-1.699	2.5
123	MP5C	Mx	.000581	2.5

Member Point Loads (BLC 38 : Antenna Wm (330 Deg))

	Member Label	Direction	Magnitude[lb,k-ft]	Location[ft,%]
1	MP2B	X	-3.636	2
2	MP2B	Z	-6.298	2
3	MP2B	Mx	-.002	2
4	MP1A	X	-2.907	1
5	MP1A	Z	-5.034	1
6	MP1A	Mx	.002	1
7	MP1A	X	-2.907	5
8	MP1A	Z	-5.034	5
9	MP1A	Mx	.002	5
10	MP1B	X	-2.3	1
11	MP1B	Z	-3.985	1
12	MP1B	Mx	.000787	1
13	MP1B	X	-2.3	5
14	MP1B	Z	-3.985	5
15	MP1B	Mx	.000787	5
16	MP1C	X	-4.046	1
17	MP1C	Z	-7.007	1
18	MP1C	Mx	-.004	1
19	MP1C	X	-4.046	5
20	MP1C	Z	-7.007	5
21	MP1C	Mx	-.004	5
22	M150	X	-2.907	1
23	M150	Z	-5.034	1
24	M150	Mx	.002	1
25	M150	X	-2.907	5
26	M150	Z	-5.034	5
27	M150	Mx	.002	5
28	M105	X	-4.046	1
29	M105	Z	-7.007	1
30	M105	Mx	-.004	1
31	M105	X	-4.046	5
32	M105	Z	-7.007	5
33	M105	Mx	-.004	5
34	M93	X	-2.3	1
35	M93	Z	-3.985	1
36	M93	Mx	.000787	1
37	M93	X	-2.3	5
38	M93	Z	-3.985	5
39	M93	Mx	.000787	5
40	MP4A	X	-3.964	1
41	MP4A	Z	-6.867	1
42	MP4A	Mx	.006	1

Member Point Loads (BLC 38 : Antenna Wm (330 Deg)) (Continued)

	Member Label	Direction	Magnitude[lb,k-ft]	Location[ft,%]
43	MP4A	X	-3.964	5
44	MP4A	Z	-6.867	5
45	MP4A	Mx	.006	5
46	MP4B	X	-4.162	1
47	MP4B	Z	-7.209	1
48	MP4B	Mx	-.003	1
49	MP4B	X	-4.162	5
50	MP4B	Z	-7.209	5
51	MP4B	Mx	-.003	5
52	MP4C	X	-3.463	1
53	MP4C	Z	-5.998	1
54	MP4C	Mx	.00013	1
55	MP4C	X	-3.463	5
56	MP4C	Z	-5.998	5
57	MP4C	Mx	.00013	5
58	MP4A	X	-3.964	1
59	MP4A	Z	-6.867	1
60	MP4A	Mx	-.002	1
61	MP4A	X	-3.964	5
62	MP4A	Z	-6.867	5
63	MP4A	Mx	-.002	5
64	MP4B	X	-4.162	1
65	MP4B	Z	-7.209	1
66	MP4B	Mx	.006	1
67	MP4B	X	-4.162	5
68	MP4B	Z	-7.209	5
69	MP4B	Mx	.006	5
70	MP4C	X	-3.463	1
71	MP4C	Z	-5.998	1
72	MP4C	Mx	-.005	1
73	MP4C	X	-3.463	5
74	MP4C	Z	-5.998	5
75	MP4C	Mx	-.005	5
76	MP3A	X	-1.897	2
77	MP3A	Z	-3.286	2
78	MP3A	Mx	.000948	2
79	MP3A	X	-1.897	4
80	MP3A	Z	-3.286	4
81	MP3A	Mx	.000948	4
82	MP3B	X	-2.078	2
83	MP3B	Z	-3.599	2
84	MP3B	Mx	.000711	2
85	MP3B	X	-2.078	4
86	MP3B	Z	-3.599	4
87	MP3B	Mx	.000711	4
88	MP3C	X	-1.438	2
89	MP3C	Z	-2.491	2
90	MP3C	Mx	-.001	2
91	MP3C	X	-1.438	4
92	MP3C	Z	-2.491	4
93	MP3C	Mx	-.001	4
94	MP4A	X	-.325	1

Member Point Loads (BLC 38 : Antenna Wm (330 Deg)) (Continued)

	Member Label	Direction	Magnitude[lb,k-ft]	Location[ft,%]
95	MP4A	Z	-.563	1
96	MP4A	Mx	-.000163	1
97	MP4B	X	-.34	1
98	MP4B	Z	-.588	1
99	MP4B	Mx	-.000116	1
100	MP4C	X	-.289	1
101	MP4C	Z	-.5	1
102	MP4C	Mx	.000221	1
103	MP2A	X	-3.636	2
104	MP2A	Z	-6.298	2
105	MP2A	Mx	-.002	2
106	MP4A	X	-1.633	2.5
107	MP4A	Z	-2.828	2.5
108	MP4A	Mx	-.000816	2.5
109	MP4B	X	-1.711	2.5
110	MP4B	Z	-2.964	2.5
111	MP4B	Mx	-.000585	2.5
112	MP4C	X	-1.434	2.5
113	MP4C	Z	-2.484	2.5
114	MP4C	Mx	.001	2.5
115	MP5A	X	-1.606	2.5
116	MP5A	Z	-2.782	2.5
117	MP5A	Mx	-.000803	2.5
118	MP5B	X	-1.699	2.5
119	MP5B	Z	-2.942	2.5
120	MP5B	Mx	-.000581	2.5
121	MP5C	X	-1.371	2.5
122	MP5C	Z	-2.375	2.5
123	MP5C	Mx	.001	2.5

Member Point Loads (BLC 77 : Lm1)

	Member Label	Direction	Magnitude[lb,k-ft]	Location[ft,%]
1	M84A	Y	-500	0

Member Point Loads (BLC 78 : Lm2)

	Member Label	Direction	Magnitude[lb,k-ft]	Location[ft,%]
1	M22	Y	-500	0

Member Point Loads (BLC 79 : Lv1)

	Member Label	Direction	Magnitude[lb,k-ft]	Location[ft,%]
1	M1	Y	-250	%50

Member Point Loads (BLC 80 : Lv2)

	Member Label	Direction	Magnitude[lb,k-ft]	Location[ft,%]
1	M1	Y	-250	%100

Member Point Loads (BLC 81 : Antenna Ev)

	Member Label	Direction	Magnitude[lb,k-ft]	Location[ft,%]
1	MP2B	Y	-.714	2

Member Point Loads (BLC 81 : Antenna Ev) (Continued)

	Member Label	Direction	Magnitude[lb,k-ft]	Location[ft,%]
2	MP2B	My	-.000179	2
3	MP2B	Mz	.000309	2
4	MP1A	Y	-.234	1
5	MP1A	My	-.000115	1
6	MP1A	Mz	-2e-5	1
7	MP1A	Y	-.234	5
8	MP1A	My	-.000115	5
9	MP1A	Mz	-2e-5	5
10	MP1B	Y	-.234	1
11	MP1B	My	7.5e-5	1
12	MP1B	Mz	-9e-5	1
13	MP1B	Y	-.234	5
14	MP1B	My	7.5e-5	5
15	MP1B	Mz	-9e-5	5
16	MP1C	Y	-.234	1
17	MP1C	My	4e-5	1
18	MP1C	Mz	.00011	1
19	MP1C	Y	-.234	5
20	MP1C	My	4e-5	5
21	MP1C	Mz	.00011	5
22	M150	Y	-.234	1
23	M150	My	-.000115	1
24	M150	Mz	-2e-5	1
25	M150	Y	-.234	5
26	M150	My	-.000115	5
27	M150	Mz	-2e-5	5
28	M105	Y	-.234	1
29	M105	My	4e-5	1
30	M105	Mz	.00011	1
31	M105	Y	-.234	5
32	M105	My	4e-5	5
33	M105	Mz	.00011	5
34	M93	Y	-.234	1
35	M93	My	7.5e-5	1
36	M93	Mz	-9e-5	1
37	M93	Y	-.234	5
38	M93	My	7.5e-5	5
39	M93	Mz	-9e-5	5
40	MP4A	Y	-.706	1
41	MP4A	My	-.000353	1
42	MP4A	Mz	-.000442	1
43	MP4A	Y	-.706	5
44	MP4A	My	-.000353	5
45	MP4A	Mz	-.000442	5
46	MP4B	Y	-.706	1
47	MP4B	My	.000565	1
48	MP4B	Mz	1.3e-5	1
49	MP4B	Y	-.706	5
50	MP4B	My	.000565	5
51	MP4B	Mz	1.3e-5	5
52	MP4C	Y	-.706	1
53	MP4C	My	-.000496	1

Member Point Loads (BLC 81 : Antenna Ev) (Continued)

	Member Label	Direction	Magnitude[lb,k-ft]	Location[ft,%]
54	MP4C	Mz	.000271	1
55	MP4C	Y	-.706	5
56	MP4C	My	-.000496	5
57	MP4C	Mz	.000271	5
58	MP4A	Y	-.706	1
59	MP4A	My	-.000353	1
60	MP4A	Mz	.000442	1
61	MP4A	Y	-.706	5
62	MP4A	My	-.000353	5
63	MP4A	Mz	.000442	5
64	MP4B	Y	-.706	1
65	MP4B	My	-.000111	1
66	MP4B	Mz	-.000554	1
67	MP4B	Y	-.706	5
68	MP4B	My	-.000111	5
69	MP4B	Mz	-.000554	5
70	MP4C	Y	-.706	1
71	MP4C	My	.000373	1
72	MP4C	Mz	.000425	1
73	MP4C	Y	-.706	5
74	MP4C	My	.000373	5
75	MP4C	Mz	.000425	5
76	MP3A	Y	-.972	2
77	MP3A	My	-.000486	2
78	MP3A	Mz	0	2
79	MP3A	Y	-.972	4
80	MP3A	My	-.000486	4
81	MP3A	Mz	0	4
82	MP3B	Y	-.972	2
83	MP3B	My	.000312	2
84	MP3B	Mz	-.000372	2
85	MP3B	Y	-.972	4
86	MP3B	My	.000312	4
87	MP3B	Mz	-.000372	4
88	MP3C	Y	-.972	2
89	MP3C	My	-8.4e-5	2
90	MP3C	Mz	.000479	2
91	MP3C	Y	-.972	4
92	MP3C	My	-8.4e-5	4
93	MP3C	Mz	.000479	4
94	MP4A	Y	-.232	1
95	MP4A	My	.000116	1
96	MP4A	Mz	0	1
97	MP4B	Y	-.232	1
98	MP4B	My	-7.5e-5	1
99	MP4B	Mz	8.9e-5	1
100	MP4C	Y	-.232	1
101	MP4C	My	2e-5	1
102	MP4C	Mz	-.000114	1
103	MP2A	Y	-.714	2
104	MP2A	My	.000357	2
105	MP2A	Mz	0	2

Member Point Loads (BLC 81 : Antenna Ev) (Continued)

	Member Label	Direction	Magnitude[lb,k-ft]	Location[ft,%]
106	MP4A	Y	-1.667	2.5
107	MP4A	My	.000834	2.5
108	MP4A	Mz	0	2.5
109	MP4B	Y	-1.667	2.5
110	MP4B	My	-.000536	2.5
111	MP4B	Mz	.000639	2.5
112	MP4C	Y	-1.667	2.5
113	MP4C	My	.000145	2.5
114	MP4C	Mz	-.000821	2.5
115	MP5A	Y	-1.569	2.5
116	MP5A	My	.000785	2.5
117	MP5A	Mz	0	2.5
118	MP5B	Y	-1.569	2.5
119	MP5B	My	-.000504	2.5
120	MP5B	Mz	.000601	2.5
121	MP5C	Y	-1.569	2.5
122	MP5C	My	.000136	2.5
123	MP5C	Mz	-.000773	2.5

Member Point Loads (BLC 82 : Antenna Eh (0 Deg))

	Member Label	Direction	Magnitude[lb,k-ft]	Location[ft,%]
1	MP2B	Z	-1.786	2
2	MP2B	Mx	-.000773	2
3	MP1A	Z	-.586	1
4	MP1A	Mx	5.1e-5	1
5	MP1A	Z	-.586	5
6	MP1A	Mx	5.1e-5	5
7	MP1B	Z	-.586	1
8	MP1B	Mx	.000224	1
9	MP1B	Z	-.586	5
10	MP1B	Mx	.000224	5
11	MP1C	Z	-.586	1
12	MP1C	Mx	-.000275	1
13	MP1C	Z	-.586	5
14	MP1C	Mx	-.000275	5
15	M150	Z	-.586	1
16	M150	Mx	5.1e-5	1
17	M150	Z	-.586	5
18	M150	Mx	5.1e-5	5
19	M105	Z	-.586	1
20	M105	Mx	-.000275	1
21	M105	Z	-.586	5
22	M105	Mx	-.000275	5
23	M93	Z	-.586	1
24	M93	Mx	.000224	1
25	M93	Z	-.586	5
26	M93	Mx	.000224	5
27	MP4A	Z	-1.766	1
28	MP4A	Mx	.001	1
29	MP4A	Z	-1.766	5
30	MP4A	Mx	.001	5

Member Point Loads (BLC 82 : Antenna Eh (0 Deg)) (Continued)

	Member Label	Direction	Magnitude[lb,k-ft]	Location[ft,%]
31	MP4B	Z	-1.766	1
32	MP4B	Mx	-3.3e-5	1
33	MP4B	Z	-1.766	5
34	MP4B	Mx	-3.3e-5	5
35	MP4C	Z	-1.766	1
36	MP4C	Mx	-.000678	1
37	MP4C	Z	-1.766	5
38	MP4C	Mx	-.000678	5
39	MP4A	Z	-1.766	1
40	MP4A	Mx	-.001	1
41	MP4A	Z	-1.766	5
42	MP4A	Mx	-.001	5
43	MP4B	Z	-1.766	1
44	MP4B	Mx	.001	1
45	MP4B	Z	-1.766	5
46	MP4B	Mx	.001	5
47	MP4C	Z	-1.766	1
48	MP4C	Mx	-.001	1
49	MP4C	Z	-1.766	5
50	MP4C	Mx	-.001	5
51	MP3A	Z	-2.43	2
52	MP3A	Mx	0	2
53	MP3A	Z	-2.43	4
54	MP3A	Mx	0	4
55	MP3B	Z	-2.43	2
56	MP3B	Mx	.000931	2
57	MP3B	Z	-2.43	4
58	MP3B	Mx	.000931	4
59	MP3C	Z	-2.43	2
60	MP3C	Mx	-.001	2
61	MP3C	Z	-2.43	4
62	MP3C	Mx	-.001	4
63	MP4A	Z	-.58	1
64	MP4A	Mx	0	1
65	MP4B	Z	-.58	1
66	MP4B	Mx	-.000222	1
67	MP4C	Z	-.58	1
68	MP4C	Mx	.000286	1
69	MP2A	Z	-1.786	2
70	MP2A	Mx	0	2
71	MP4A	Z	-4.168	2.5
72	MP4A	Mx	0	2.5
73	MP4B	Z	-4.168	2.5
74	MP4B	Mx	-.002	2.5
75	MP4C	Z	-4.168	2.5
76	MP4C	Mx	.002	2.5
77	MP5A	Z	-3.923	2.5
78	MP5A	Mx	0	2.5
79	MP5B	Z	-3.923	2.5
80	MP5B	Mx	-.002	2.5
81	MP5C	Z	-3.923	2.5
82	MP5C	Mx	.002	2.5

Member Point Loads (BLC 83 : Antenna Eh (90 Deg))

	Member Label	Direction	Magnitude[lb,k-ft]	Location[ft,%]
1	MP2B	X	1.786	2
2	MP2B	Mx	-.000446	2
3	MP1A	X	.586	1
4	MP1A	Mx	-.000288	1
5	MP1A	X	.586	5
6	MP1A	Mx	-.000288	5
7	MP1B	X	.586	1
8	MP1B	Mx	.000188	1
9	MP1B	X	.586	5
10	MP1B	Mx	.000188	5
11	MP1C	X	.586	1
12	MP1C	Mx	.0001	1
13	MP1C	X	.586	5
14	MP1C	Mx	.0001	5
15	M150	X	.586	1
16	M150	Mx	-.000288	1
17	M150	X	.586	5
18	M150	Mx	-.000288	5
19	M105	X	.586	1
20	M105	Mx	.0001	1
21	M105	X	.586	5
22	M105	Mx	.0001	5
23	M93	X	.586	1
24	M93	Mx	.000188	1
25	M93	X	.586	5
26	M93	Mx	.000188	5
27	MP4A	X	1.766	1
28	MP4A	Mx	-.000883	1
29	MP4A	X	1.766	5
30	MP4A	Mx	-.000883	5
31	MP4B	X	1.766	1
32	MP4B	Mx	.001	1
33	MP4B	X	1.766	5
34	MP4B	Mx	.001	5
35	MP4C	X	1.766	1
36	MP4C	Mx	-.001	1
37	MP4C	X	1.766	5
38	MP4C	Mx	-.001	5
39	MP4A	X	1.766	1
40	MP4A	Mx	-.000883	1
41	MP4A	X	1.766	5
42	MP4A	Mx	-.000883	5
43	MP4B	X	1.766	1
44	MP4B	Mx	-.000278	1
45	MP4B	X	1.766	5
46	MP4B	Mx	-.000278	5
47	MP4C	X	1.766	1
48	MP4C	Mx	.000934	1
49	MP4C	X	1.766	5
50	MP4C	Mx	.000934	5
51	MP3A	X	2.43	2
52	MP3A	Mx	-.001	2

Member Point Loads (BLC 83 : Antenna Eh (90 Deg)) (Continued)

	Member Label	Direction	Magnitude[lb,k-ft]	Location[ft,%]
53	MP3A	X	2.43	4
54	MP3A	Mx	-.001	4
55	MP3B	X	2.43	2
56	MP3B	Mx	.000781	2
57	MP3B	X	2.43	4
58	MP3B	Mx	.000781	4
59	MP3C	X	2.43	2
60	MP3C	Mx	-.000211	2
61	MP3C	X	2.43	4
62	MP3C	Mx	-.000211	4
63	MP4A	X	.58	1
64	MP4A	Mx	.00029	1
65	MP4B	X	.58	1
66	MP4B	Mx	-.000187	1
67	MP4C	X	.58	1
68	MP4C	Mx	5e-5	1
69	MP2A	X	1.786	2
70	MP2A	Mx	.000893	2
71	MP4A	X	4.168	2.5
72	MP4A	Mx	.002	2.5
73	MP4B	X	4.168	2.5
74	MP4B	Mx	-.001	2.5
75	MP4C	X	4.168	2.5
76	MP4C	Mx	.000362	2.5
77	MP5A	X	3.923	2.5
78	MP5A	Mx	.002	2.5
79	MP5B	X	3.923	2.5
80	MP5B	Mx	-.001	2.5
81	MP5C	X	3.923	2.5
82	MP5C	Mx	.000341	2.5

Member Distributed Loads (BLC 40 : Structure Di)

	Member Label	Direction	Start Magnitude[lb/ft,...	End Magnitude[lb/ft,F...	Start Location[ft,%]	End Location[ft,%]
1	M1	Y	-6.287	-6.287	0	%100
2	M4	Y	-9.225	-9.225	0	%100
3	M10	Y	-5.372	-5.372	0	%100
4	MP4A	Y	-4.754	-4.754	0	%100
5	M150	Y	-4.754	-4.754	0	%100
6	MP2A	Y	-4.754	-4.754	0	%100
7	MP1A	Y	-4.754	-4.754	0	%100
8	M43	Y	-5.372	-5.372	0	%100
9	M46	Y	-9.72	-9.72	0	%100
10	M51B	Y	-5.372	-5.372	0	%100
11	M52B	Y	-5.372	-5.372	0	%100
12	M76	Y	-9.708	-9.708	0	%100
13	M77	Y	-9.708	-9.708	0	%100
14	M80	Y	-9.72	-9.72	0	%100
15	M84	Y	-9.708	-9.708	0	%100
16	M85	Y	-9.708	-9.708	0	%100
17	M91	Y	-9.72	-9.72	0	%100

Member Distributed Loads (BLC 40 : Structure Di) (Continued)

	Member Label	Direction	Start Magnitude[lb/ft,...	End Magnitude[lb/ft,F...	Start Location[ft,%]	End Location[ft,%]
18	M34	Y	-9.225	-9.225	0	%100
19	M35	Y	-5.372	-5.372	0	%100
20	M36	Y	-5.372	-5.372	0	%100
21	M37	Y	-9.72	-9.72	0	%100
22	M40	Y	-5.372	-5.372	0	%100
23	M41	Y	-5.372	-5.372	0	%100
24	M45	Y	-9.708	-9.708	0	%100
25	M46A	Y	-9.708	-9.708	0	%100
26	M48	Y	-9.72	-9.72	0	%100
27	M50A	Y	-9.708	-9.708	0	%100
28	M51C	Y	-9.708	-9.708	0	%100
29	M53	Y	-9.72	-9.72	0	%100
30	M58A	Y	-9.225	-9.225	0	%100
31	M59A	Y	-5.372	-5.372	0	%100
32	M60	Y	-5.372	-5.372	0	%100
33	M61	Y	-9.72	-9.72	0	%100
34	M64	Y	-5.372	-5.372	0	%100
35	M65	Y	-5.372	-5.372	0	%100
36	M69	Y	-9.708	-9.708	0	%100
37	M70	Y	-9.708	-9.708	0	%100
38	M72	Y	-9.72	-9.72	0	%100
39	M74	Y	-9.708	-9.708	0	%100
40	M75	Y	-9.708	-9.708	0	%100
41	M77A	Y	-9.72	-9.72	0	%100
42	M82	Y	-6.287	-6.287	0	%100
43	M83A	Y	-6.287	-6.287	0	%100
44	MP3A	Y	-4.754	-4.754	0	%100
45	MP5A	Y	-4.754	-4.754	0	%100
46	MP4C	Y	-4.754	-4.754	0	%100
47	M93	Y	-4.754	-4.754	0	%100
48	MP2C	Y	-4.754	-4.754	0	%100
49	MP1C	Y	-4.754	-4.754	0	%100
50	MP3C	Y	-4.754	-4.754	0	%100
51	MP5C	Y	-4.754	-4.754	0	%100
52	MP4B	Y	-4.754	-4.754	0	%100
53	M105	Y	-4.754	-4.754	0	%100
54	MP2B	Y	-4.754	-4.754	0	%100
55	MP1B	Y	-4.754	-4.754	0	%100
56	MP3B	Y	-4.754	-4.754	0	%100
57	MP5B	Y	-4.754	-4.754	0	%100
58	M116A	Y	-5.435	-5.435	0	%100
59	M121	Y	-5.435	-5.435	0	%100
60	M122	Y	-5.435	-5.435	0	%100
61	M143	Y	-7.298	-7.298	0	%100
62	M144	Y	-7.298	-7.298	0	%100
63	M145	Y	-7.298	-7.298	0	%100
64	M152	Y	-6.335	-6.335	0	%100
65	M153	Y	-6.335	-6.335	0	%100
66	M154A	Y	-6.335	-6.335	0	%100
67	M155A	Y	-6.335	-6.335	0	%100
68	M156	Y	-6.335	-6.335	0	%100
69	M157	Y	-6.335	-6.335	0	%100

Member Distributed Loads (BLC 41 : Structure Wo (0 Deg))

	Member Label	Direction	Start Magnitude[lb/ft,...	End Magnitude[lb/ft,F...	Start Location[ft,%]	End Location[ft,%]
1	M1	X	0	0	0	%100
2	M1	Z	-11.203	-11.203	0	%100
3	M4	X	0	0	0	%100
4	M4	Z	0	0	0	%100
5	M10	X	0	0	0	%100
6	M10	Z	-8.758	-8.758	0	%100
7	MP4A	X	0	0	0	%100
8	MP4A	Z	-7.602	-7.602	0	%100
9	M150	X	0	0	0	%100
10	M150	Z	-7.602	-7.602	0	%100
11	MP2A	X	0	0	0	%100
12	MP2A	Z	-7.602	-7.602	0	%100
13	MP1A	X	0	0	0	%100
14	MP1A	Z	-7.602	-7.602	0	%100
15	M43	X	0	0	0	%100
16	M43	Z	-8.758	-8.758	0	%100
17	M46	X	0	0	0	%100
18	M46	Z	-19.204	-19.204	0	%100
19	M51B	X	0	0	0	%100
20	M51B	Z	-2.666	-2.666	0	%100
21	M52B	X	0	0	0	%100
22	M52B	Z	-2.666	-2.666	0	%100
23	M76	X	0	0	0	%100
24	M76	Z	0	0	0	%100
25	M77	X	0	0	0	%100
26	M77	Z	-4.89	-4.89	0	%100
27	M80	X	0	0	0	%100
28	M80	Z	-5.151	-5.151	0	%100
29	M84	X	0	0	0	%100
30	M84	Z	0	0	0	%100
31	M85	X	0	0	0	%100
32	M85	Z	-4.89	-4.89	0	%100
33	M91	X	0	0	0	%100
34	M91	Z	-5.151	-5.151	0	%100
35	M34	X	0	0	0	%100
36	M34	Z	-8.534	-8.534	0	%100
37	M35	X	0	0	0	%100
38	M35	Z	-2.189	-2.189	0	%100
39	M36	X	0	0	0	%100
40	M36	Z	-2.189	-2.189	0	%100
41	M37	X	0	0	0	%100
42	M37	Z	-4.801	-4.801	0	%100
43	M40	X	0	0	0	%100
44	M40	Z	-2.666	-2.666	0	%100
45	M41	X	0	0	0	%100
46	M41	Z	-10.664	-10.664	0	%100
47	M45	X	0	0	0	%100
48	M45	Z	-14.403	-14.403	0	%100
49	M46A	X	0	0	0	%100
50	M46A	Z	-4.89	-4.89	0	%100
51	M48	X	0	0	0	%100
52	M48	Z	-5.151	-5.151	0	%100

Member Distributed Loads (BLC 41 : Structure Wo (0 Deg)) (Continued)

	Member Label	Direction	Start Magnitude[lb/ft,...	End Magnitude[lb/ft,F...	Start Location[ft,%]	End Location[ft,%]
53	M50A	X	0	0	0	%100
54	M50A	Z	-14.403	-14.403	0	%100
55	M51C	X	0	0	0	%100
56	M51C	Z	-19.56	-19.56	0	%100
57	M53	X	0	0	0	%100
58	M53	Z	-20.602	-20.602	0	%100
59	M58A	X	0	0	0	%100
60	M58A	Z	-8.534	-8.534	0	%100
61	M59A	X	0	0	0	%100
62	M59A	Z	-2.189	-2.189	0	%100
63	M60	X	0	0	0	%100
64	M60	Z	-2.189	-2.189	0	%100
65	M61	X	0	0	0	%100
66	M61	Z	-4.801	-4.801	0	%100
67	M64	X	0	0	0	%100
68	M64	Z	-10.664	-10.664	0	%100
69	M65	X	0	0	0	%100
70	M65	Z	-2.666	-2.666	0	%100
71	M69	X	0	0	0	%100
72	M69	Z	-14.403	-14.403	0	%100
73	M70	X	0	0	0	%100
74	M70	Z	-19.56	-19.56	0	%100
75	M72	X	0	0	0	%100
76	M72	Z	-20.602	-20.602	0	%100
77	M74	X	0	0	0	%100
78	M74	Z	-14.403	-14.403	0	%100
79	M75	X	0	0	0	%100
80	M75	Z	-4.89	-4.89	0	%100
81	M77A	X	0	0	0	%100
82	M77A	Z	-5.151	-5.151	0	%100
83	M82	X	0	0	0	%100
84	M82	Z	-2.801	-2.801	0	%100
85	M83A	X	0	0	0	%100
86	M83A	Z	-2.801	-2.801	0	%100
87	MP3A	X	0	0	0	%100
88	MP3A	Z	-7.602	-7.602	0	%100
89	MP5A	X	0	0	0	%100
90	MP5A	Z	-7.602	-7.602	0	%100
91	MP4C	X	0	0	0	%100
92	MP4C	Z	-7.602	-7.602	0	%100
93	M93	X	0	0	0	%100
94	M93	Z	-7.602	-7.602	0	%100
95	MP2C	X	0	0	0	%100
96	MP2C	Z	-7.602	-7.602	0	%100
97	MP1C	X	0	0	0	%100
98	MP1C	Z	-7.602	-7.602	0	%100
99	MP3C	X	0	0	0	%100
100	MP3C	Z	-7.602	-7.602	0	%100
101	MP5C	X	0	0	0	%100
102	MP5C	Z	-7.602	-7.602	0	%100
103	MP4B	X	0	0	0	%100
104	MP4B	Z	-7.602	-7.602	0	%100

Member Distributed Loads (BLC 41 : Structure Wo (0 Deg)) (Continued)

	Member Label	Direction	Start Magnitude[lb/ft,...	End Magnitude[lb/ft,F...	Start Location[ft,%]	End Location[ft,%]
105	M105	X	0	0	0	%100
106	M105	Z	-7.602	-7.602	0	%100
107	MP2B	X	0	0	0	%100
108	MP2B	Z	-7.602	-7.602	0	%100
109	MP1B	X	0	0	0	%100
110	MP1B	Z	-7.602	-7.602	0	%100
111	MP3B	X	0	0	0	%100
112	MP3B	Z	-7.602	-7.602	0	%100
113	MP5B	X	0	0	0	%100
114	MP5B	Z	-7.602	-7.602	0	%100
115	M116A	X	0	0	0	%100
116	M116A	Z	-9.202	-9.202	0	%100
117	M121	X	0	0	0	%100
118	M121	Z	-2.301	-2.301	0	%100
119	M122	X	0	0	0	%100
120	M122	Z	-2.301	-2.301	0	%100
121	M143	X	0	0	0	%100
122	M143	Z	-2.941	-2.941	0	%100
123	M144	X	0	0	0	%100
124	M144	Z	-2.941	-2.941	0	%100
125	M145	X	0	0	0	%100
126	M145	Z	-11.766	-11.766	0	%100
127	M152	X	0	0	0	%100
128	M152	Z	-5.406	-5.406	0	%100
129	M153	X	0	0	0	%100
130	M153	Z	-5.406	-5.406	0	%100
131	M154A	X	0	0	0	%100
132	M154A	Z	-10.13	-10.13	0	%100
133	M155A	X	0	0	0	%100
134	M155A	Z	-10.13	-10.13	0	%100
135	M156	X	0	0	0	%100
136	M156	Z	-10.13	-10.13	0	%100
137	M157	X	0	0	0	%100
138	M157	Z	-10.13	-10.13	0	%100

Member Distributed Loads (BLC 42 : Structure Wo (30 Deg))

	Member Label	Direction	Start Magnitude[lb/ft,...	End Magnitude[lb/ft,F...	Start Location[ft,%]	End Location[ft,%]
1	M1	X	4.201	4.201	0	%100
2	M1	Z	-7.276	-7.276	0	%100
3	M4	X	1.422	1.422	0	%100
4	M4	Z	-2.464	-2.464	0	%100
5	M10	X	3.284	3.284	0	%100
6	M10	Z	-5.688	-5.688	0	%100
7	MP4A	X	3.801	3.801	0	%100
8	MP4A	Z	-6.583	-6.583	0	%100
9	M150	X	3.801	3.801	0	%100
10	M150	Z	-6.583	-6.583	0	%100
11	MP2A	X	3.801	3.801	0	%100
12	MP2A	Z	-6.583	-6.583	0	%100
13	MP1A	X	3.801	3.801	0	%100
14	MP1A	Z	-6.583	-6.583	0	%100

Member Distributed Loads (BLC 42 : Structure Wo (30 Deg)) (Continued)

	Member Label	Direction	Start Magnitude[lb/ft,...	End Magnitude[lb/ft,F...	Start Location[ft,%]	End Location[ft,%]
15	M43	X	3.284	3.284	0	%100
16	M43	Z	-5.688	-5.688	0	%100
17	M46	X	7.202	7.202	0	%100
18	M46	Z	-12.474	-12.474	0	%100
19	M51B	X	3.999	3.999	0	%100
20	M51B	Z	-6.926	-6.926	0	%100
21	M52B	X	0	0	0	%100
22	M52B	Z	0	0	0	%100
23	M76	X	2.401	2.401	0	%100
24	M76	Z	-4.158	-4.158	0	%100
25	M77	X	7.335	7.335	0	%100
26	M77	Z	-12.705	-12.705	0	%100
27	M80	X	7.726	7.726	0	%100
28	M80	Z	-13.381	-13.381	0	%100
29	M84	X	2.401	2.401	0	%100
30	M84	Z	-4.158	-4.158	0	%100
31	M85	X	0	0	0	%100
32	M85	Z	0	0	0	%100
33	M91	X	0	0	0	%100
34	M91	Z	0	0	0	%100
35	M34	X	1.422	1.422	0	%100
36	M34	Z	-2.464	-2.464	0	%100
37	M35	X	3.284	3.284	0	%100
38	M35	Z	-5.688	-5.688	0	%100
39	M36	X	3.284	3.284	0	%100
40	M36	Z	-5.688	-5.688	0	%100
41	M37	X	7.202	7.202	0	%100
42	M37	Z	-12.474	-12.474	0	%100
43	M40	X	0	0	0	%100
44	M40	Z	0	0	0	%100
45	M41	X	3.999	3.999	0	%100
46	M41	Z	-6.926	-6.926	0	%100
47	M45	X	2.401	2.401	0	%100
48	M45	Z	-4.158	-4.158	0	%100
49	M46A	X	0	0	0	%100
50	M46A	Z	0	0	0	%100
51	M48	X	0	0	0	%100
52	M48	Z	0	0	0	%100
53	M50A	X	2.401	2.401	0	%100
54	M50A	Z	-4.158	-4.158	0	%100
55	M51C	X	7.335	7.335	0	%100
56	M51C	Z	-12.705	-12.705	0	%100
57	M53	X	7.726	7.726	0	%100
58	M53	Z	-13.381	-13.381	0	%100
59	M58A	X	5.689	5.689	0	%100
60	M58A	Z	-9.854	-9.854	0	%100
61	M59A	X	0	0	0	%100
62	M59A	Z	0	0	0	%100
63	M60	X	0	0	0	%100
64	M60	Z	0	0	0	%100
65	M61	X	0	0	0	%100
66	M61	Z	0	0	0	%100

Member Distributed Loads (BLC 42 : Structure Wo (30 Deg)) (Continued)

	Member Label	Direction	Start Magnitude[lb/ft,...	End Magnitude[lb/ft,F...	Start Location[ft,%]	End Location[ft,%]
67	M64	X	3.999	3.999	0	%100
68	M64	Z	-6.926	-6.926	0	%100
69	M65	X	3.999	3.999	0	%100
70	M65	Z	-6.926	-6.926	0	%100
71	M69	X	9.602	9.602	0	%100
72	M69	Z	-16.631	-16.631	0	%100
73	M70	X	7.335	7.335	0	%100
74	M70	Z	-12.705	-12.705	0	%100
75	M72	X	7.726	7.726	0	%100
76	M72	Z	-13.381	-13.381	0	%100
77	M74	X	9.602	9.602	0	%100
78	M74	Z	-16.631	-16.631	0	%100
79	M75	X	7.335	7.335	0	%100
80	M75	Z	-12.705	-12.705	0	%100
81	M77A	X	7.726	7.726	0	%100
82	M77A	Z	-13.381	-13.381	0	%100
83	M82	X	4.201	4.201	0	%100
84	M82	Z	-7.276	-7.276	0	%100
85	M83A	X	0	0	0	%100
86	M83A	Z	0	0	0	%100
87	MP3A	X	3.801	3.801	0	%100
88	MP3A	Z	-6.583	-6.583	0	%100
89	MP5A	X	3.801	3.801	0	%100
90	MP5A	Z	-6.583	-6.583	0	%100
91	MP4C	X	3.801	3.801	0	%100
92	MP4C	Z	-6.583	-6.583	0	%100
93	M93	X	3.801	3.801	0	%100
94	M93	Z	-6.583	-6.583	0	%100
95	MP2C	X	3.801	3.801	0	%100
96	MP2C	Z	-6.583	-6.583	0	%100
97	MP1C	X	3.801	3.801	0	%100
98	MP1C	Z	-6.583	-6.583	0	%100
99	MP3C	X	3.801	3.801	0	%100
100	MP3C	Z	-6.583	-6.583	0	%100
101	MP5C	X	3.801	3.801	0	%100
102	MP5C	Z	-6.583	-6.583	0	%100
103	MP4B	X	3.801	3.801	0	%100
104	MP4B	Z	-6.583	-6.583	0	%100
105	M105	X	3.801	3.801	0	%100
106	M105	Z	-6.583	-6.583	0	%100
107	MP2B	X	3.801	3.801	0	%100
108	MP2B	Z	-6.583	-6.583	0	%100
109	MP1B	X	3.801	3.801	0	%100
110	MP1B	Z	-6.583	-6.583	0	%100
111	MP3B	X	3.801	3.801	0	%100
112	MP3B	Z	-6.583	-6.583	0	%100
113	MP5B	X	3.801	3.801	0	%100
114	MP5B	Z	-6.583	-6.583	0	%100
115	M116A	X	3.451	3.451	0	%100
116	M116A	Z	-5.977	-5.977	0	%100
117	M121	X	3.451	3.451	0	%100
118	M121	Z	-5.977	-5.977	0	%100

Member Distributed Loads (BLC 42 : Structure Wo (30 Deg)) (Continued)

	Member Label	Direction	Start Magnitude[lb/ft,...	End Magnitude[lb/ft,F...	Start Location[ft,%]	End Location[ft,%]
119	M122	X	0	0	0	%100
120	M122	Z	0	0	0	%100
121	M143	X	4.412	4.412	0	%100
122	M143	Z	-7.642	-7.642	0	%100
123	M144	X	0	0	0	%100
124	M144	Z	0	0	0	%100
125	M145	X	4.412	4.412	0	%100
126	M145	Z	-7.642	-7.642	0	%100
127	M152	X	3.49	3.49	0	%100
128	M152	Z	-6.046	-6.046	0	%100
129	M153	X	3.49	3.49	0	%100
130	M153	Z	-6.046	-6.046	0	%100
131	M154A	X	3.49	3.49	0	%100
132	M154A	Z	-6.046	-6.046	0	%100
133	M155A	X	3.49	3.49	0	%100
134	M155A	Z	-6.046	-6.046	0	%100
135	M156	X	5.852	5.852	0	%100
136	M156	Z	-10.136	-10.136	0	%100
137	M157	X	5.852	5.852	0	%100
138	M157	Z	-10.136	-10.136	0	%100

Member Distributed Loads (BLC 43 : Structure Wo (60 Deg))

	Member Label	Direction	Start Magnitude[lb/ft,...	End Magnitude[lb/ft,F...	Start Location[ft,%]	End Location[ft,%]
1	M1	X	2.425	2.425	0	%100
2	M1	Z	-1.4	-1.4	0	%100
3	M4	X	7.391	7.391	0	%100
4	M4	Z	-4.267	-4.267	0	%100
5	M10	X	1.896	1.896	0	%100
6	M10	Z	-1.095	-1.095	0	%100
7	MP4A	X	6.583	6.583	0	%100
8	MP4A	Z	-3.801	-3.801	0	%100
9	M150	X	6.583	6.583	0	%100
10	M150	Z	-3.801	-3.801	0	%100
11	MP2A	X	6.583	6.583	0	%100
12	MP2A	Z	-3.801	-3.801	0	%100
13	MP1A	X	6.583	6.583	0	%100
14	MP1A	Z	-3.801	-3.801	0	%100
15	M43	X	1.896	1.896	0	%100
16	M43	Z	-1.095	-1.095	0	%100
17	M46	X	4.158	4.158	0	%100
18	M46	Z	-2.401	-2.401	0	%100
19	M51B	X	9.235	9.235	0	%100
20	M51B	Z	-5.332	-5.332	0	%100
21	M52B	X	2.309	2.309	0	%100
22	M52B	Z	-1.333	-1.333	0	%100
23	M76	X	12.474	12.474	0	%100
24	M76	Z	-7.202	-7.202	0	%100
25	M77	X	16.939	16.939	0	%100
26	M77	Z	-9.78	-9.78	0	%100
27	M80	X	17.842	17.842	0	%100
28	M80	Z	-10.301	-10.301	0	%100

Member Distributed Loads (BLC 43 : Structure Wo (60 Deg)) (Continued)

	Member Label	Direction	Start Magnitude[lb/ft,...	End Magnitude[lb/ft,F...	Start Location[ft,%]	End Location[ft,%]
29	M84	X	12.474	12.474	0	%100
30	M84	Z	-7.202	-7.202	0	%100
31	M85	X	4.235	4.235	0	%100
32	M85	Z	-2.445	-2.445	0	%100
33	M91	X	4.46	4.46	0	%100
34	M91	Z	-2.575	-2.575	0	%100
35	M34	X	0	0	0	%100
36	M34	Z	0	0	0	%100
37	M35	X	7.584	7.584	0	%100
38	M35	Z	-4.379	-4.379	0	%100
39	M36	X	7.584	7.584	0	%100
40	M36	Z	-4.379	-4.379	0	%100
41	M37	X	16.631	16.631	0	%100
42	M37	Z	-9.602	-9.602	0	%100
43	M40	X	2.309	2.309	0	%100
44	M40	Z	-1.333	-1.333	0	%100
45	M41	X	2.309	2.309	0	%100
46	M41	Z	-1.333	-1.333	0	%100
47	M45	X	0	0	0	%100
48	M45	Z	0	0	0	%100
49	M46A	X	4.235	4.235	0	%100
50	M46A	Z	-2.445	-2.445	0	%100
51	M48	X	4.46	4.46	0	%100
52	M48	Z	-2.575	-2.575	0	%100
53	M50A	X	0	0	0	%100
54	M50A	Z	0	0	0	%100
55	M51C	X	4.235	4.235	0	%100
56	M51C	Z	-2.445	-2.445	0	%100
57	M53	X	4.46	4.46	0	%100
58	M53	Z	-2.575	-2.575	0	%100
59	M58A	X	7.391	7.391	0	%100
60	M58A	Z	-4.267	-4.267	0	%100
61	M59A	X	1.896	1.896	0	%100
62	M59A	Z	-1.095	-1.095	0	%100
63	M60	X	1.896	1.896	0	%100
64	M60	Z	-1.095	-1.095	0	%100
65	M61	X	4.158	4.158	0	%100
66	M61	Z	-2.401	-2.401	0	%100
67	M64	X	2.309	2.309	0	%100
68	M64	Z	-1.333	-1.333	0	%100
69	M65	X	9.235	9.235	0	%100
70	M65	Z	-5.332	-5.332	0	%100
71	M69	X	12.474	12.474	0	%100
72	M69	Z	-7.202	-7.202	0	%100
73	M70	X	4.235	4.235	0	%100
74	M70	Z	-2.445	-2.445	0	%100
75	M72	X	4.46	4.46	0	%100
76	M72	Z	-2.575	-2.575	0	%100
77	M74	X	12.474	12.474	0	%100
78	M74	Z	-7.202	-7.202	0	%100
79	M75	X	16.939	16.939	0	%100
80	M75	Z	-9.78	-9.78	0	%100

Member Distributed Loads (BLC 43 : Structure Wo (60 Deg)) (Continued)

	Member Label	Direction	Start Magnitude[lb/ft,...	End Magnitude[lb/ft,F...	Start Location[ft,%]	End Location[ft,%]
81	M77A	X	17.842	17.842	0	%100
82	M77A	Z	-10.301	-10.301	0	%100
83	M82	X	9.702	9.702	0	%100
84	M82	Z	-5.601	-5.601	0	%100
85	M83A	X	2.425	2.425	0	%100
86	M83A	Z	-1.4	-1.4	0	%100
87	MP3A	X	6.583	6.583	0	%100
88	MP3A	Z	-3.801	-3.801	0	%100
89	MP5A	X	6.583	6.583	0	%100
90	MP5A	Z	-3.801	-3.801	0	%100
91	MP4C	X	6.583	6.583	0	%100
92	MP4C	Z	-3.801	-3.801	0	%100
93	M93	X	6.583	6.583	0	%100
94	M93	Z	-3.801	-3.801	0	%100
95	MP2C	X	6.583	6.583	0	%100
96	MP2C	Z	-3.801	-3.801	0	%100
97	MP1C	X	6.583	6.583	0	%100
98	MP1C	Z	-3.801	-3.801	0	%100
99	MP3C	X	6.583	6.583	0	%100
100	MP3C	Z	-3.801	-3.801	0	%100
101	MP5C	X	6.583	6.583	0	%100
102	MP5C	Z	-3.801	-3.801	0	%100
103	MP4B	X	6.583	6.583	0	%100
104	MP4B	Z	-3.801	-3.801	0	%100
105	M105	X	6.583	6.583	0	%100
106	M105	Z	-3.801	-3.801	0	%100
107	MP2B	X	6.583	6.583	0	%100
108	MP2B	Z	-3.801	-3.801	0	%100
109	MP1B	X	6.583	6.583	0	%100
110	MP1B	Z	-3.801	-3.801	0	%100
111	MP3B	X	6.583	6.583	0	%100
112	MP3B	Z	-3.801	-3.801	0	%100
113	MP5B	X	6.583	6.583	0	%100
114	MP5B	Z	-3.801	-3.801	0	%100
115	M116A	X	1.992	1.992	0	%100
116	M116A	Z	-1.15	-1.15	0	%100
117	M121	X	7.969	7.969	0	%100
118	M121	Z	-4.601	-4.601	0	%100
119	M122	X	1.992	1.992	0	%100
120	M122	Z	-1.15	-1.15	0	%100
121	M143	X	10.189	10.189	0	%100
122	M143	Z	-5.883	-5.883	0	%100
123	M144	X	2.547	2.547	0	%100
124	M144	Z	-1.471	-1.471	0	%100
125	M145	X	2.547	2.547	0	%100
126	M145	Z	-1.471	-1.471	0	%100
127	M152	X	8.772	8.772	0	%100
128	M152	Z	-5.065	-5.065	0	%100
129	M153	X	8.772	8.772	0	%100
130	M153	Z	-5.065	-5.065	0	%100
131	M154A	X	4.682	4.682	0	%100
132	M154A	Z	-2.703	-2.703	0	%100

Member Distributed Loads (BLC 43 : Structure Wo (60 Deg)) (Continued)

	Member Label	Direction	Start Magnitude[lb/ft,...	End Magnitude[lb/ft,F...	Start Location[ft,%]	End Location[ft,%]
133	M155A	X	4.682	4.682	0	%100
134	M155A	Z	-2.703	-2.703	0	%100
135	M156	X	8.772	8.772	0	%100
136	M156	Z	-5.065	-5.065	0	%100
137	M157	X	8.772	8.772	0	%100
138	M157	Z	-5.065	-5.065	0	%100

Member Distributed Loads (BLC 44 : Structure Wo (90 Deg))

	Member Label	Direction	Start Magnitude[lb/ft,...	End Magnitude[lb/ft,F...	Start Location[ft,%]	End Location[ft,%]
1	M1	X	0	0	0	%100
2	M1	Z	0	0	0	%100
3	M4	X	11.378	11.378	0	%100
4	M4	Z	0	0	0	%100
5	M10	X	0	0	0	%100
6	M10	Z	0	0	0	%100
7	MP4A	X	7.602	7.602	0	%100
8	MP4A	Z	0	0	0	%100
9	M150	X	7.602	7.602	0	%100
10	M150	Z	0	0	0	%100
11	MP2A	X	7.602	7.602	0	%100
12	MP2A	Z	0	0	0	%100
13	MP1A	X	7.602	7.602	0	%100
14	MP1A	Z	0	0	0	%100
15	M43	X	0	0	0	%100
16	M43	Z	0	0	0	%100
17	M46	X	0	0	0	%100
18	M46	Z	0	0	0	%100
19	M51B	X	7.998	7.998	0	%100
20	M51B	Z	0	0	0	%100
21	M52B	X	7.998	7.998	0	%100
22	M52B	Z	0	0	0	%100
23	M76	X	19.204	19.204	0	%100
24	M76	Z	0	0	0	%100
25	M77	X	14.67	14.67	0	%100
26	M77	Z	0	0	0	%100
27	M80	X	15.452	15.452	0	%100
28	M80	Z	0	0	0	%100
29	M84	X	19.204	19.204	0	%100
30	M84	Z	0	0	0	%100
31	M85	X	14.67	14.67	0	%100
32	M85	Z	0	0	0	%100
33	M91	X	15.452	15.452	0	%100
34	M91	Z	0	0	0	%100
35	M34	X	2.845	2.845	0	%100
36	M34	Z	0	0	0	%100
37	M35	X	6.568	6.568	0	%100
38	M35	Z	0	0	0	%100
39	M36	X	6.568	6.568	0	%100
40	M36	Z	0	0	0	%100
41	M37	X	14.403	14.403	0	%100
42	M37	Z	0	0	0	%100

Member Distributed Loads (BLC 44 : Structure Wo (90 Deg)) (Continued)

	Member Label	Direction	Start Magnitude[lb/ft,...	End Magnitude[lb/ft,F...	Start Location[ft,%]	End Location[ft,%]
43	M40	X	7.998	7.998	0	%100
44	M40	Z	0	0	0	%100
45	M41	X	0	0	0	%100
46	M41	Z	0	0	0	%100
47	M45	X	4.801	4.801	0	%100
48	M45	Z	0	0	0	%100
49	M46A	X	14.67	14.67	0	%100
50	M46A	Z	0	0	0	%100
51	M48	X	15.452	15.452	0	%100
52	M48	Z	0	0	0	%100
53	M50A	X	4.801	4.801	0	%100
54	M50A	Z	0	0	0	%100
55	M51C	X	0	0	0	%100
56	M51C	Z	0	0	0	%100
57	M53	X	0	0	0	%100
58	M53	Z	0	0	0	%100
59	M58A	X	2.845	2.845	0	%100
60	M58A	Z	0	0	0	%100
61	M59A	X	6.568	6.568	0	%100
62	M59A	Z	0	0	0	%100
63	M60	X	6.568	6.568	0	%100
64	M60	Z	0	0	0	%100
65	M61	X	14.403	14.403	0	%100
66	M61	Z	0	0	0	%100
67	M64	X	0	0	0	%100
68	M64	Z	0	0	0	%100
69	M65	X	7.998	7.998	0	%100
70	M65	Z	0	0	0	%100
71	M69	X	4.801	4.801	0	%100
72	M69	Z	0	0	0	%100
73	M70	X	0	0	0	%100
74	M70	Z	0	0	0	%100
75	M72	X	0	0	0	%100
76	M72	Z	0	0	0	%100
77	M74	X	4.801	4.801	0	%100
78	M74	Z	0	0	0	%100
79	M75	X	14.67	14.67	0	%100
80	M75	Z	0	0	0	%100
81	M77A	X	15.452	15.452	0	%100
82	M77A	Z	0	0	0	%100
83	M82	X	8.402	8.402	0	%100
84	M82	Z	0	0	0	%100
85	M83A	X	8.402	8.402	0	%100
86	M83A	Z	0	0	0	%100
87	MP3A	X	7.602	7.602	0	%100
88	MP3A	Z	0	0	0	%100
89	MP5A	X	7.602	7.602	0	%100
90	MP5A	Z	0	0	0	%100
91	MP4C	X	7.602	7.602	0	%100
92	MP4C	Z	0	0	0	%100
93	M93	X	7.602	7.602	0	%100
94	M93	Z	0	0	0	%100

Member Distributed Loads (BLC 44 : Structure Wo (90 Deg)) (Continued)

	Member Label	Direction	Start Magnitude[lb/ft,...	End Magnitude[lb/ft,F...	Start Location[ft,%]	End Location[ft,%]
95	MP2C	X	7.602	7.602	0	%100
96	MP2C	Z	0	0	0	%100
97	MP1C	X	7.602	7.602	0	%100
98	MP1C	Z	0	0	0	%100
99	MP3C	X	7.602	7.602	0	%100
100	MP3C	Z	0	0	0	%100
101	MP5C	X	7.602	7.602	0	%100
102	MP5C	Z	0	0	0	%100
103	MP4B	X	7.602	7.602	0	%100
104	MP4B	Z	0	0	0	%100
105	M105	X	7.602	7.602	0	%100
106	M105	Z	0	0	0	%100
107	MP2B	X	7.602	7.602	0	%100
108	MP2B	Z	0	0	0	%100
109	MP1B	X	7.602	7.602	0	%100
110	MP1B	Z	0	0	0	%100
111	MP3B	X	7.602	7.602	0	%100
112	MP3B	Z	0	0	0	%100
113	MP5B	X	7.602	7.602	0	%100
114	MP5B	Z	0	0	0	%100
115	M116A	X	0	0	0	%100
116	M116A	Z	0	0	0	%100
117	M121	X	6.902	6.902	0	%100
118	M121	Z	0	0	0	%100
119	M122	X	6.902	6.902	0	%100
120	M122	Z	0	0	0	%100
121	M143	X	8.824	8.824	0	%100
122	M143	Z	0	0	0	%100
123	M144	X	8.824	8.824	0	%100
124	M144	Z	0	0	0	%100
125	M145	X	0	0	0	%100
126	M145	Z	0	0	0	%100
127	M152	X	11.704	11.704	0	%100
128	M152	Z	0	0	0	%100
129	M153	X	11.704	11.704	0	%100
130	M153	Z	0	0	0	%100
131	M154A	X	6.981	6.981	0	%100
132	M154A	Z	0	0	0	%100
133	M155A	X	6.981	6.981	0	%100
134	M155A	Z	0	0	0	%100
135	M156	X	6.981	6.981	0	%100
136	M156	Z	0	0	0	%100
137	M157	X	6.981	6.981	0	%100
138	M157	Z	0	0	0	%100

Member Distributed Loads (BLC 45 : Structure Wo (120 Deg))

	Member Label	Direction	Start Magnitude[lb/ft,...	End Magnitude[lb/ft,F...	Start Location[ft,%]	End Location[ft,%]
1	M1	X	2.425	2.425	0	%100
2	M1	Z	1.4	1.4	0	%100
3	M4	X	7.391	7.391	0	%100
4	M4	Z	4.267	4.267	0	%100

Member Distributed Loads (BLC 45 : Structure Wo (120 Deg)) (Continued)

	Member Label	Direction	Start Magnitude[lb/ft,...	End Magnitude[lb/ft,F...	Start Location[ft,%]	End Location[ft,%]
5	M10	X	1.896	1.896	0	%100
6	M10	Z	1.095	1.095	0	%100
7	MP4A	X	6.583	6.583	0	%100
8	MP4A	Z	3.801	3.801	0	%100
9	M150	X	6.583	6.583	0	%100
10	M150	Z	3.801	3.801	0	%100
11	MP2A	X	6.583	6.583	0	%100
12	MP2A	Z	3.801	3.801	0	%100
13	MP1A	X	6.583	6.583	0	%100
14	MP1A	Z	3.801	3.801	0	%100
15	M43	X	1.896	1.896	0	%100
16	M43	Z	1.095	1.095	0	%100
17	M46	X	4.158	4.158	0	%100
18	M46	Z	2.401	2.401	0	%100
19	M51B	X	2.309	2.309	0	%100
20	M51B	Z	1.333	1.333	0	%100
21	M52B	X	9.235	9.235	0	%100
22	M52B	Z	5.332	5.332	0	%100
23	M76	X	12.474	12.474	0	%100
24	M76	Z	7.202	7.202	0	%100
25	M77	X	4.235	4.235	0	%100
26	M77	Z	2.445	2.445	0	%100
27	M80	X	4.46	4.46	0	%100
28	M80	Z	2.575	2.575	0	%100
29	M84	X	12.474	12.474	0	%100
30	M84	Z	7.202	7.202	0	%100
31	M85	X	16.939	16.939	0	%100
32	M85	Z	9.78	9.78	0	%100
33	M91	X	17.842	17.842	0	%100
34	M91	Z	10.301	10.301	0	%100
35	M34	X	7.391	7.391	0	%100
36	M34	Z	4.267	4.267	0	%100
37	M35	X	1.896	1.896	0	%100
38	M35	Z	1.095	1.095	0	%100
39	M36	X	1.896	1.896	0	%100
40	M36	Z	1.095	1.095	0	%100
41	M37	X	4.158	4.158	0	%100
42	M37	Z	2.401	2.401	0	%100
43	M40	X	9.235	9.235	0	%100
44	M40	Z	5.332	5.332	0	%100
45	M41	X	2.309	2.309	0	%100
46	M41	Z	1.333	1.333	0	%100
47	M45	X	12.474	12.474	0	%100
48	M45	Z	7.202	7.202	0	%100
49	M46A	X	16.939	16.939	0	%100
50	M46A	Z	9.78	9.78	0	%100
51	M48	X	17.842	17.842	0	%100
52	M48	Z	10.301	10.301	0	%100
53	M50A	X	12.474	12.474	0	%100
54	M50A	Z	7.202	7.202	0	%100
55	M51C	X	4.235	4.235	0	%100
56	M51C	Z	2.445	2.445	0	%100

Member Distributed Loads (BLC 45 : Structure Wo (120 Deg)) (Continued)

	Member Label	Direction	Start Magnitude[lb/ft,...	End Magnitude[lb/ft,F...	Start Location[ft,%]	End Location[ft,%]
57	M53	X	4.46	4.46	0	%100
58	M53	Z	2.575	2.575	0	%100
59	M58A	X	0	0	0	%100
60	M58A	Z	0	0	0	%100
61	M59A	X	7.584	7.584	0	%100
62	M59A	Z	4.379	4.379	0	%100
63	M60	X	7.584	7.584	0	%100
64	M60	Z	4.379	4.379	0	%100
65	M61	X	16.631	16.631	0	%100
66	M61	Z	9.602	9.602	0	%100
67	M64	X	2.309	2.309	0	%100
68	M64	Z	1.333	1.333	0	%100
69	M65	X	2.309	2.309	0	%100
70	M65	Z	1.333	1.333	0	%100
71	M69	X	0	0	0	%100
72	M69	Z	0	0	0	%100
73	M70	X	4.235	4.235	0	%100
74	M70	Z	2.445	2.445	0	%100
75	M72	X	4.46	4.46	0	%100
76	M72	Z	2.575	2.575	0	%100
77	M74	X	0	0	0	%100
78	M74	Z	0	0	0	%100
79	M75	X	4.235	4.235	0	%100
80	M75	Z	2.445	2.445	0	%100
81	M77A	X	4.46	4.46	0	%100
82	M77A	Z	2.575	2.575	0	%100
83	M82	X	2.425	2.425	0	%100
84	M82	Z	1.4	1.4	0	%100
85	M83A	X	9.702	9.702	0	%100
86	M83A	Z	5.601	5.601	0	%100
87	MP3A	X	6.583	6.583	0	%100
88	MP3A	Z	3.801	3.801	0	%100
89	MP5A	X	6.583	6.583	0	%100
90	MP5A	Z	3.801	3.801	0	%100
91	MP4C	X	6.583	6.583	0	%100
92	MP4C	Z	3.801	3.801	0	%100
93	M93	X	6.583	6.583	0	%100
94	M93	Z	3.801	3.801	0	%100
95	MP2C	X	6.583	6.583	0	%100
96	MP2C	Z	3.801	3.801	0	%100
97	MP1C	X	6.583	6.583	0	%100
98	MP1C	Z	3.801	3.801	0	%100
99	MP3C	X	6.583	6.583	0	%100
100	MP3C	Z	3.801	3.801	0	%100
101	MP5C	X	6.583	6.583	0	%100
102	MP5C	Z	3.801	3.801	0	%100
103	MP4B	X	6.583	6.583	0	%100
104	MP4B	Z	3.801	3.801	0	%100
105	M105	X	6.583	6.583	0	%100
106	M105	Z	3.801	3.801	0	%100
107	MP2B	X	6.583	6.583	0	%100
108	MP2B	Z	3.801	3.801	0	%100

Member Distributed Loads (BLC 45 : Structure Wo (120 Deg)) (Continued)

	Member Label	Direction	Start Magnitude[lb/ft,...	End Magnitude[lb/ft,F...	Start Location[ft,%]	End Location[ft,%]
109	MP1B	X	6.583	6.583	0	%100
110	MP1B	Z	3.801	3.801	0	%100
111	MP3B	X	6.583	6.583	0	%100
112	MP3B	Z	3.801	3.801	0	%100
113	MP5B	X	6.583	6.583	0	%100
114	MP5B	Z	3.801	3.801	0	%100
115	M116A	X	1.992	1.992	0	%100
116	M116A	Z	1.15	1.15	0	%100
117	M121	X	1.992	1.992	0	%100
118	M121	Z	1.15	1.15	0	%100
119	M122	X	7.969	7.969	0	%100
120	M122	Z	4.601	4.601	0	%100
121	M143	X	2.547	2.547	0	%100
122	M143	Z	1.471	1.471	0	%100
123	M144	X	10.189	10.189	0	%100
124	M144	Z	5.883	5.883	0	%100
125	M145	X	2.547	2.547	0	%100
126	M145	Z	1.471	1.471	0	%100
127	M152	X	8.772	8.772	0	%100
128	M152	Z	5.065	5.065	0	%100
129	M153	X	8.772	8.772	0	%100
130	M153	Z	5.065	5.065	0	%100
131	M154A	X	8.772	8.772	0	%100
132	M154A	Z	5.065	5.065	0	%100
133	M155A	X	8.772	8.772	0	%100
134	M155A	Z	5.065	5.065	0	%100
135	M156	X	4.682	4.682	0	%100
136	M156	Z	2.703	2.703	0	%100
137	M157	X	4.682	4.682	0	%100
138	M157	Z	2.703	2.703	0	%100

Member Distributed Loads (BLC 46 : Structure Wo (150 Deg))

	Member Label	Direction	Start Magnitude[lb/ft,...	End Magnitude[lb/ft,F...	Start Location[ft,%]	End Location[ft,%]
1	M1	X	4.201	4.201	0	%100
2	M1	Z	7.276	7.276	0	%100
3	M4	X	1.422	1.422	0	%100
4	M4	Z	2.464	2.464	0	%100
5	M10	X	3.284	3.284	0	%100
6	M10	Z	5.688	5.688	0	%100
7	MP4A	X	3.801	3.801	0	%100
8	MP4A	Z	6.583	6.583	0	%100
9	M150	X	3.801	3.801	0	%100
10	M150	Z	6.583	6.583	0	%100
11	MP2A	X	3.801	3.801	0	%100
12	MP2A	Z	6.583	6.583	0	%100
13	MP1A	X	3.801	3.801	0	%100
14	MP1A	Z	6.583	6.583	0	%100
15	M43	X	3.284	3.284	0	%100
16	M43	Z	5.688	5.688	0	%100
17	M46	X	7.202	7.202	0	%100
18	M46	Z	12.474	12.474	0	%100

Member Distributed Loads (BLC 46 : Structure Wo (150 Deg)) (Continued)

	Member Label	Direction	Start Magnitude[lb/ft,...	End Magnitude[lb/ft,F...	Start Location[ft,%]	End Location[ft,%]
19	M51B	X	0	0	0	%100
20	M51B	Z	0	0	0	%100
21	M52B	X	3.999	3.999	0	%100
22	M52B	Z	6.926	6.926	0	%100
23	M76	X	2.401	2.401	0	%100
24	M76	Z	4.158	4.158	0	%100
25	M77	X	0	0	0	%100
26	M77	Z	0	0	0	%100
27	M80	X	0	0	0	%100
28	M80	Z	0	0	0	%100
29	M84	X	2.401	2.401	0	%100
30	M84	Z	4.158	4.158	0	%100
31	M85	X	7.335	7.335	0	%100
32	M85	Z	12.705	12.705	0	%100
33	M91	X	7.726	7.726	0	%100
34	M91	Z	13.381	13.381	0	%100
35	M34	X	5.689	5.689	0	%100
36	M34	Z	9.854	9.854	0	%100
37	M35	X	0	0	0	%100
38	M35	Z	0	0	0	%100
39	M36	X	0	0	0	%100
40	M36	Z	0	0	0	%100
41	M37	X	0	0	0	%100
42	M37	Z	0	0	0	%100
43	M40	X	3.999	3.999	0	%100
44	M40	Z	6.926	6.926	0	%100
45	M41	X	3.999	3.999	0	%100
46	M41	Z	6.926	6.926	0	%100
47	M45	X	9.602	9.602	0	%100
48	M45	Z	16.631	16.631	0	%100
49	M46A	X	7.335	7.335	0	%100
50	M46A	Z	12.705	12.705	0	%100
51	M48	X	7.726	7.726	0	%100
52	M48	Z	13.381	13.381	0	%100
53	M50A	X	9.602	9.602	0	%100
54	M50A	Z	16.631	16.631	0	%100
55	M51C	X	7.335	7.335	0	%100
56	M51C	Z	12.705	12.705	0	%100
57	M53	X	7.726	7.726	0	%100
58	M53	Z	13.381	13.381	0	%100
59	M58A	X	1.422	1.422	0	%100
60	M58A	Z	2.464	2.464	0	%100
61	M59A	X	3.284	3.284	0	%100
62	M59A	Z	5.688	5.688	0	%100
63	M60	X	3.284	3.284	0	%100
64	M60	Z	5.688	5.688	0	%100
65	M61	X	7.202	7.202	0	%100
66	M61	Z	12.474	12.474	0	%100
67	M64	X	3.999	3.999	0	%100
68	M64	Z	6.926	6.926	0	%100
69	M65	X	0	0	0	%100
70	M65	Z	0	0	0	%100

Member Distributed Loads (BLC 46 : Structure Wo (150 Deg)) (Continued)

	Member Label	Direction	Start Magnitude[lb/ft,...	End Magnitude[lb/ft,F...	Start Location[ft,%]	End Location[ft,%]
71	M69	X	2.401	2.401	0	%100
72	M69	Z	4.158	4.158	0	%100
73	M70	X	7.335	7.335	0	%100
74	M70	Z	12.705	12.705	0	%100
75	M72	X	7.726	7.726	0	%100
76	M72	Z	13.381	13.381	0	%100
77	M74	X	2.401	2.401	0	%100
78	M74	Z	4.158	4.158	0	%100
79	M75	X	0	0	0	%100
80	M75	Z	0	0	0	%100
81	M77A	X	0	0	0	%100
82	M77A	Z	0	0	0	%100
83	M82	X	0	0	0	%100
84	M82	Z	0	0	0	%100
85	M83A	X	4.201	4.201	0	%100
86	M83A	Z	7.276	7.276	0	%100
87	MP3A	X	3.801	3.801	0	%100
88	MP3A	Z	6.583	6.583	0	%100
89	MP5A	X	3.801	3.801	0	%100
90	MP5A	Z	6.583	6.583	0	%100
91	MP4C	X	3.801	3.801	0	%100
92	MP4C	Z	6.583	6.583	0	%100
93	M93	X	3.801	3.801	0	%100
94	M93	Z	6.583	6.583	0	%100
95	MP2C	X	3.801	3.801	0	%100
96	MP2C	Z	6.583	6.583	0	%100
97	MP1C	X	3.801	3.801	0	%100
98	MP1C	Z	6.583	6.583	0	%100
99	MP3C	X	3.801	3.801	0	%100
100	MP3C	Z	6.583	6.583	0	%100
101	MP5C	X	3.801	3.801	0	%100
102	MP5C	Z	6.583	6.583	0	%100
103	MP4B	X	3.801	3.801	0	%100
104	MP4B	Z	6.583	6.583	0	%100
105	M105	X	3.801	3.801	0	%100
106	M105	Z	6.583	6.583	0	%100
107	MP2B	X	3.801	3.801	0	%100
108	MP2B	Z	6.583	6.583	0	%100
109	MP1B	X	3.801	3.801	0	%100
110	MP1B	Z	6.583	6.583	0	%100
111	MP3B	X	3.801	3.801	0	%100
112	MP3B	Z	6.583	6.583	0	%100
113	MP5B	X	3.801	3.801	0	%100
114	MP5B	Z	6.583	6.583	0	%100
115	M116A	X	3.451	3.451	0	%100
116	M116A	Z	5.977	5.977	0	%100
117	M121	X	0	0	0	%100
118	M121	Z	0	0	0	%100
119	M122	X	3.451	3.451	0	%100
120	M122	Z	5.977	5.977	0	%100
121	M143	X	0	0	0	%100
122	M143	Z	0	0	0	%100

Member Distributed Loads (BLC 46 : Structure Wo (150 Deg)) (Continued)

	Member Label	Direction	Start Magnitude[lb/ft,...	End Magnitude[lb/ft,F...	Start Location[ft,%]	End Location[ft,%]
123	M144	X	4.412	4.412	0	%100
124	M144	Z	7.642	7.642	0	%100
125	M145	X	4.412	4.412	0	%100
126	M145	Z	7.642	7.642	0	%100
127	M152	X	3.49	3.49	0	%100
128	M152	Z	6.046	6.046	0	%100
129	M153	X	3.49	3.49	0	%100
130	M153	Z	6.046	6.046	0	%100
131	M154A	X	5.852	5.852	0	%100
132	M154A	Z	10.136	10.136	0	%100
133	M155A	X	5.852	5.852	0	%100
134	M155A	Z	10.136	10.136	0	%100
135	M156	X	3.49	3.49	0	%100
136	M156	Z	6.046	6.046	0	%100
137	M157	X	3.49	3.49	0	%100
138	M157	Z	6.046	6.046	0	%100

Member Distributed Loads (BLC 47 : Structure Wo (180 Deg))

	Member Label	Direction	Start Magnitude[lb/ft,...	End Magnitude[lb/ft,F...	Start Location[ft,%]	End Location[ft,%]
1	M1	X	0	0	0	%100
2	M1	Z	11.203	11.203	0	%100
3	M4	X	0	0	0	%100
4	M4	Z	0	0	0	%100
5	M10	X	0	0	0	%100
6	M10	Z	8.758	8.758	0	%100
7	MP4A	X	0	0	0	%100
8	MP4A	Z	7.602	7.602	0	%100
9	M150	X	0	0	0	%100
10	M150	Z	7.602	7.602	0	%100
11	MP2A	X	0	0	0	%100
12	MP2A	Z	7.602	7.602	0	%100
13	MP1A	X	0	0	0	%100
14	MP1A	Z	7.602	7.602	0	%100
15	M43	X	0	0	0	%100
16	M43	Z	8.758	8.758	0	%100
17	M46	X	0	0	0	%100
18	M46	Z	19.204	19.204	0	%100
19	M51B	X	0	0	0	%100
20	M51B	Z	2.666	2.666	0	%100
21	M52B	X	0	0	0	%100
22	M52B	Z	2.666	2.666	0	%100
23	M76	X	0	0	0	%100
24	M76	Z	0	0	0	%100
25	M77	X	0	0	0	%100
26	M77	Z	4.89	4.89	0	%100
27	M80	X	0	0	0	%100
28	M80	Z	5.151	5.151	0	%100
29	M84	X	0	0	0	%100
30	M84	Z	0	0	0	%100
31	M85	X	0	0	0	%100
32	M85	Z	4.89	4.89	0	%100

Member Distributed Loads (BLC 47 : Structure Wo (180 Deg)) (Continued)

	Member Label	Direction	Start Magnitude[lb/ft,...	End Magnitude[lb/ft,F...	Start Location[ft,%]	End Location[ft,%]
33	M91	X	0	0	0	%100
34	M91	Z	5.151	5.151	0	%100
35	M34	X	0	0	0	%100
36	M34	Z	8.534	8.534	0	%100
37	M35	X	0	0	0	%100
38	M35	Z	2.189	2.189	0	%100
39	M36	X	0	0	0	%100
40	M36	Z	2.189	2.189	0	%100
41	M37	X	0	0	0	%100
42	M37	Z	4.801	4.801	0	%100
43	M40	X	0	0	0	%100
44	M40	Z	2.666	2.666	0	%100
45	M41	X	0	0	0	%100
46	M41	Z	10.664	10.664	0	%100
47	M45	X	0	0	0	%100
48	M45	Z	14.403	14.403	0	%100
49	M46A	X	0	0	0	%100
50	M46A	Z	4.89	4.89	0	%100
51	M48	X	0	0	0	%100
52	M48	Z	5.151	5.151	0	%100
53	M50A	X	0	0	0	%100
54	M50A	Z	14.403	14.403	0	%100
55	M51C	X	0	0	0	%100
56	M51C	Z	19.56	19.56	0	%100
57	M53	X	0	0	0	%100
58	M53	Z	20.602	20.602	0	%100
59	M58A	X	0	0	0	%100
60	M58A	Z	8.534	8.534	0	%100
61	M59A	X	0	0	0	%100
62	M59A	Z	2.189	2.189	0	%100
63	M60	X	0	0	0	%100
64	M60	Z	2.189	2.189	0	%100
65	M61	X	0	0	0	%100
66	M61	Z	4.801	4.801	0	%100
67	M64	X	0	0	0	%100
68	M64	Z	10.664	10.664	0	%100
69	M65	X	0	0	0	%100
70	M65	Z	2.666	2.666	0	%100
71	M69	X	0	0	0	%100
72	M69	Z	14.403	14.403	0	%100
73	M70	X	0	0	0	%100
74	M70	Z	19.56	19.56	0	%100
75	M72	X	0	0	0	%100
76	M72	Z	20.602	20.602	0	%100
77	M74	X	0	0	0	%100
78	M74	Z	14.403	14.403	0	%100
79	M75	X	0	0	0	%100
80	M75	Z	4.89	4.89	0	%100
81	M77A	X	0	0	0	%100
82	M77A	Z	5.151	5.151	0	%100
83	M82	X	0	0	0	%100
84	M82	Z	2.801	2.801	0	%100

Member Distributed Loads (BLC 47 : Structure Wo (180 Deg)) (Continued)

	Member Label	Direction	Start Magnitude[lb/ft,...	End Magnitude[lb/ft,F...	Start Location[ft,%]	End Location[ft,%]
85	M83A	X	0	0	0	%100
86	M83A	Z	2.801	2.801	0	%100
87	MP3A	X	0	0	0	%100
88	MP3A	Z	7.602	7.602	0	%100
89	MP5A	X	0	0	0	%100
90	MP5A	Z	7.602	7.602	0	%100
91	MP4C	X	0	0	0	%100
92	MP4C	Z	7.602	7.602	0	%100
93	M93	X	0	0	0	%100
94	M93	Z	7.602	7.602	0	%100
95	MP2C	X	0	0	0	%100
96	MP2C	Z	7.602	7.602	0	%100
97	MP1C	X	0	0	0	%100
98	MP1C	Z	7.602	7.602	0	%100
99	MP3C	X	0	0	0	%100
100	MP3C	Z	7.602	7.602	0	%100
101	MP5C	X	0	0	0	%100
102	MP5C	Z	7.602	7.602	0	%100
103	MP4B	X	0	0	0	%100
104	MP4B	Z	7.602	7.602	0	%100
105	M105	X	0	0	0	%100
106	M105	Z	7.602	7.602	0	%100
107	MP2B	X	0	0	0	%100
108	MP2B	Z	7.602	7.602	0	%100
109	MP1B	X	0	0	0	%100
110	MP1B	Z	7.602	7.602	0	%100
111	MP3B	X	0	0	0	%100
112	MP3B	Z	7.602	7.602	0	%100
113	MP5B	X	0	0	0	%100
114	MP5B	Z	7.602	7.602	0	%100
115	M116A	X	0	0	0	%100
116	M116A	Z	9.202	9.202	0	%100
117	M121	X	0	0	0	%100
118	M121	Z	2.301	2.301	0	%100
119	M122	X	0	0	0	%100
120	M122	Z	2.301	2.301	0	%100
121	M143	X	0	0	0	%100
122	M143	Z	2.941	2.941	0	%100
123	M144	X	0	0	0	%100
124	M144	Z	2.941	2.941	0	%100
125	M145	X	0	0	0	%100
126	M145	Z	11.766	11.766	0	%100
127	M152	X	0	0	0	%100
128	M152	Z	5.406	5.406	0	%100
129	M153	X	0	0	0	%100
130	M153	Z	5.406	5.406	0	%100
131	M154A	X	0	0	0	%100
132	M154A	Z	10.13	10.13	0	%100
133	M155A	X	0	0	0	%100
134	M155A	Z	10.13	10.13	0	%100
135	M156	X	0	0	0	%100
136	M156	Z	10.13	10.13	0	%100

Member Distributed Loads (BLC 47 : Structure Wo (180 Deg)) (Continued)

	Member Label	Direction	Start Magnitude[lb/ft,...	End Magnitude[lb/ft,F...	Start Location[ft,%]	End Location[ft,%]
137	M157	X	0	0	0	%100
138	M157	Z	10.13	10.13	0	%100

Member Distributed Loads (BLC 48 : Structure Wo (210 Deg))

	Member Label	Direction	Start Magnitude[lb/ft,...	End Magnitude[lb/ft,F...	Start Location[ft,%]	End Location[ft,%]
1	M1	X	-4.201	-4.201	0	%100
2	M1	Z	7.276	7.276	0	%100
3	M4	X	-1.422	-1.422	0	%100
4	M4	Z	2.464	2.464	0	%100
5	M10	X	-3.284	-3.284	0	%100
6	M10	Z	5.688	5.688	0	%100
7	MP4A	X	-3.801	-3.801	0	%100
8	MP4A	Z	6.583	6.583	0	%100
9	M150	X	-3.801	-3.801	0	%100
10	M150	Z	6.583	6.583	0	%100
11	MP2A	X	-3.801	-3.801	0	%100
12	MP2A	Z	6.583	6.583	0	%100
13	MP1A	X	-3.801	-3.801	0	%100
14	MP1A	Z	6.583	6.583	0	%100
15	M43	X	-3.284	-3.284	0	%100
16	M43	Z	5.688	5.688	0	%100
17	M46	X	-7.202	-7.202	0	%100
18	M46	Z	12.474	12.474	0	%100
19	M51B	X	-3.999	-3.999	0	%100
20	M51B	Z	6.926	6.926	0	%100
21	M52B	X	0	0	0	%100
22	M52B	Z	0	0	0	%100
23	M76	X	-2.401	-2.401	0	%100
24	M76	Z	4.158	4.158	0	%100
25	M77	X	-7.335	-7.335	0	%100
26	M77	Z	12.705	12.705	0	%100
27	M80	X	-7.726	-7.726	0	%100
28	M80	Z	13.381	13.381	0	%100
29	M84	X	-2.401	-2.401	0	%100
30	M84	Z	4.158	4.158	0	%100
31	M85	X	0	0	0	%100
32	M85	Z	0	0	0	%100
33	M91	X	0	0	0	%100
34	M91	Z	0	0	0	%100
35	M34	X	-1.422	-1.422	0	%100
36	M34	Z	2.464	2.464	0	%100
37	M35	X	-3.284	-3.284	0	%100
38	M35	Z	5.688	5.688	0	%100
39	M36	X	-3.284	-3.284	0	%100
40	M36	Z	5.688	5.688	0	%100
41	M37	X	-7.202	-7.202	0	%100
42	M37	Z	12.474	12.474	0	%100
43	M40	X	0	0	0	%100
44	M40	Z	0	0	0	%100
45	M41	X	-3.999	-3.999	0	%100
46	M41	Z	6.926	6.926	0	%100

Member Distributed Loads (BLC 48 : Structure Wo (210 Deg)) (Continued)

	Member Label	Direction	Start Magnitude[lb/ft,...	End Magnitude[lb/ft,F...	Start Location[ft,%]	End Location[ft,%]
47	M45	X	-2.401	-2.401	0	%100
48	M45	Z	4.158	4.158	0	%100
49	M46A	X	0	0	0	%100
50	M46A	Z	0	0	0	%100
51	M48	X	0	0	0	%100
52	M48	Z	0	0	0	%100
53	M50A	X	-2.401	-2.401	0	%100
54	M50A	Z	4.158	4.158	0	%100
55	M51C	X	-7.335	-7.335	0	%100
56	M51C	Z	12.705	12.705	0	%100
57	M53	X	-7.726	-7.726	0	%100
58	M53	Z	13.381	13.381	0	%100
59	M58A	X	-5.689	-5.689	0	%100
60	M58A	Z	9.854	9.854	0	%100
61	M59A	X	0	0	0	%100
62	M59A	Z	0	0	0	%100
63	M60	X	0	0	0	%100
64	M60	Z	0	0	0	%100
65	M61	X	0	0	0	%100
66	M61	Z	0	0	0	%100
67	M64	X	-3.999	-3.999	0	%100
68	M64	Z	6.926	6.926	0	%100
69	M65	X	-3.999	-3.999	0	%100
70	M65	Z	6.926	6.926	0	%100
71	M69	X	-9.602	-9.602	0	%100
72	M69	Z	16.631	16.631	0	%100
73	M70	X	-7.335	-7.335	0	%100
74	M70	Z	12.705	12.705	0	%100
75	M72	X	-7.726	-7.726	0	%100
76	M72	Z	13.381	13.381	0	%100
77	M74	X	-9.602	-9.602	0	%100
78	M74	Z	16.631	16.631	0	%100
79	M75	X	-7.335	-7.335	0	%100
80	M75	Z	12.705	12.705	0	%100
81	M77A	X	-7.726	-7.726	0	%100
82	M77A	Z	13.381	13.381	0	%100
83	M82	X	-4.201	-4.201	0	%100
84	M82	Z	7.276	7.276	0	%100
85	M83A	X	0	0	0	%100
86	M83A	Z	0	0	0	%100
87	MP3A	X	-3.801	-3.801	0	%100
88	MP3A	Z	6.583	6.583	0	%100
89	MP5A	X	-3.801	-3.801	0	%100
90	MP5A	Z	6.583	6.583	0	%100
91	MP4C	X	-3.801	-3.801	0	%100
92	MP4C	Z	6.583	6.583	0	%100
93	M93	X	-3.801	-3.801	0	%100
94	M93	Z	6.583	6.583	0	%100
95	MP2C	X	-3.801	-3.801	0	%100
96	MP2C	Z	6.583	6.583	0	%100
97	MP1C	X	-3.801	-3.801	0	%100
98	MP1C	Z	6.583	6.583	0	%100

Member Distributed Loads (BLC 48 : Structure Wo (210 Deg)) (Continued)

	Member Label	Direction	Start Magnitude[lb/ft,...	End Magnitude[lb/ft,F...	Start Location[ft,%]	End Location[ft,%]
99	MP3C	X	-3.801	-3.801	0	%100
100	MP3C	Z	6.583	6.583	0	%100
101	MP5C	X	-3.801	-3.801	0	%100
102	MP5C	Z	6.583	6.583	0	%100
103	MP4B	X	-3.801	-3.801	0	%100
104	MP4B	Z	6.583	6.583	0	%100
105	M105	X	-3.801	-3.801	0	%100
106	M105	Z	6.583	6.583	0	%100
107	MP2B	X	-3.801	-3.801	0	%100
108	MP2B	Z	6.583	6.583	0	%100
109	MP1B	X	-3.801	-3.801	0	%100
110	MP1B	Z	6.583	6.583	0	%100
111	MP3B	X	-3.801	-3.801	0	%100
112	MP3B	Z	6.583	6.583	0	%100
113	MP5B	X	-3.801	-3.801	0	%100
114	MP5B	Z	6.583	6.583	0	%100
115	M116A	X	-3.451	-3.451	0	%100
116	M116A	Z	5.977	5.977	0	%100
117	M121	X	-3.451	-3.451	0	%100
118	M121	Z	5.977	5.977	0	%100
119	M122	X	0	0	0	%100
120	M122	Z	0	0	0	%100
121	M143	X	-4.412	-4.412	0	%100
122	M143	Z	7.642	7.642	0	%100
123	M144	X	0	0	0	%100
124	M144	Z	0	0	0	%100
125	M145	X	-4.412	-4.412	0	%100
126	M145	Z	7.642	7.642	0	%100
127	M152	X	-3.49	-3.49	0	%100
128	M152	Z	6.046	6.046	0	%100
129	M153	X	-3.49	-3.49	0	%100
130	M153	Z	6.046	6.046	0	%100
131	M154A	X	-3.49	-3.49	0	%100
132	M154A	Z	6.046	6.046	0	%100
133	M155A	X	-3.49	-3.49	0	%100
134	M155A	Z	6.046	6.046	0	%100
135	M156	X	-5.852	-5.852	0	%100
136	M156	Z	10.136	10.136	0	%100
137	M157	X	-5.852	-5.852	0	%100
138	M157	Z	10.136	10.136	0	%100

Member Distributed Loads (BLC 49 : Structure Wo (240 Deg))

	Member Label	Direction	Start Magnitude[lb/ft,...	End Magnitude[lb/ft,F...	Start Location[ft,%]	End Location[ft,%]
1	M1	X	-2.425	-2.425	0	%100
2	M1	Z	1.4	1.4	0	%100
3	M4	X	-7.391	-7.391	0	%100
4	M4	Z	4.267	4.267	0	%100
5	M10	X	-1.896	-1.896	0	%100
6	M10	Z	1.095	1.095	0	%100
7	MP4A	X	-6.583	-6.583	0	%100
8	MP4A	Z	3.801	3.801	0	%100

Member Distributed Loads (BLC 49 : Structure Wo (240 Deg)) (Continued)

	Member Label	Direction	Start Magnitude[lb/ft,...	End Magnitude[lb/ft,F...	Start Location[ft,%]	End Location[ft,%]
9	M150	X	-6.583	-6.583	0	%100
10	M150	Z	3.801	3.801	0	%100
11	MP2A	X	-6.583	-6.583	0	%100
12	MP2A	Z	3.801	3.801	0	%100
13	MP1A	X	-6.583	-6.583	0	%100
14	MP1A	Z	3.801	3.801	0	%100
15	M43	X	-1.896	-1.896	0	%100
16	M43	Z	1.095	1.095	0	%100
17	M46	X	-4.158	-4.158	0	%100
18	M46	Z	2.401	2.401	0	%100
19	M51B	X	-9.235	-9.235	0	%100
20	M51B	Z	5.332	5.332	0	%100
21	M52B	X	-2.309	-2.309	0	%100
22	M52B	Z	1.333	1.333	0	%100
23	M76	X	-12.474	-12.474	0	%100
24	M76	Z	7.202	7.202	0	%100
25	M77	X	-16.939	-16.939	0	%100
26	M77	Z	9.78	9.78	0	%100
27	M80	X	-17.842	-17.842	0	%100
28	M80	Z	10.301	10.301	0	%100
29	M84	X	-12.474	-12.474	0	%100
30	M84	Z	7.202	7.202	0	%100
31	M85	X	-4.235	-4.235	0	%100
32	M85	Z	2.445	2.445	0	%100
33	M91	X	-4.46	-4.46	0	%100
34	M91	Z	2.575	2.575	0	%100
35	M34	X	0	0	0	%100
36	M34	Z	0	0	0	%100
37	M35	X	-7.584	-7.584	0	%100
38	M35	Z	4.379	4.379	0	%100
39	M36	X	-7.584	-7.584	0	%100
40	M36	Z	4.379	4.379	0	%100
41	M37	X	-16.631	-16.631	0	%100
42	M37	Z	9.602	9.602	0	%100
43	M40	X	-2.309	-2.309	0	%100
44	M40	Z	1.333	1.333	0	%100
45	M41	X	-2.309	-2.309	0	%100
46	M41	Z	1.333	1.333	0	%100
47	M45	X	0	0	0	%100
48	M45	Z	0	0	0	%100
49	M46A	X	-4.235	-4.235	0	%100
50	M46A	Z	2.445	2.445	0	%100
51	M48	X	-4.46	-4.46	0	%100
52	M48	Z	2.575	2.575	0	%100
53	M50A	X	0	0	0	%100
54	M50A	Z	0	0	0	%100
55	M51C	X	-4.235	-4.235	0	%100
56	M51C	Z	2.445	2.445	0	%100
57	M53	X	-4.46	-4.46	0	%100
58	M53	Z	2.575	2.575	0	%100
59	M58A	X	-7.391	-7.391	0	%100
60	M58A	Z	4.267	4.267	0	%100

Member Distributed Loads (BLC 49 : Structure Wo (240 Deg)) (Continued)

	Member Label	Direction	Start Magnitude[lb/ft,...	End Magnitude[lb/ft,F...	Start Location[ft,%]	End Location[ft,%]
61	M59A	X	-1.896	-1.896	0	%100
62	M59A	Z	1.095	1.095	0	%100
63	M60	X	-1.896	-1.896	0	%100
64	M60	Z	1.095	1.095	0	%100
65	M61	X	-4.158	-4.158	0	%100
66	M61	Z	2.401	2.401	0	%100
67	M64	X	-2.309	-2.309	0	%100
68	M64	Z	1.333	1.333	0	%100
69	M65	X	-9.235	-9.235	0	%100
70	M65	Z	5.332	5.332	0	%100
71	M69	X	-12.474	-12.474	0	%100
72	M69	Z	7.202	7.202	0	%100
73	M70	X	-4.235	-4.235	0	%100
74	M70	Z	2.445	2.445	0	%100
75	M72	X	-4.46	-4.46	0	%100
76	M72	Z	2.575	2.575	0	%100
77	M74	X	-12.474	-12.474	0	%100
78	M74	Z	7.202	7.202	0	%100
79	M75	X	-16.939	-16.939	0	%100
80	M75	Z	9.78	9.78	0	%100
81	M77A	X	-17.842	-17.842	0	%100
82	M77A	Z	10.301	10.301	0	%100
83	M82	X	-9.702	-9.702	0	%100
84	M82	Z	5.601	5.601	0	%100
85	M83A	X	-2.425	-2.425	0	%100
86	M83A	Z	1.4	1.4	0	%100
87	MP3A	X	-6.583	-6.583	0	%100
88	MP3A	Z	3.801	3.801	0	%100
89	MP5A	X	-6.583	-6.583	0	%100
90	MP5A	Z	3.801	3.801	0	%100
91	MP4C	X	-6.583	-6.583	0	%100
92	MP4C	Z	3.801	3.801	0	%100
93	M93	X	-6.583	-6.583	0	%100
94	M93	Z	3.801	3.801	0	%100
95	MP2C	X	-6.583	-6.583	0	%100
96	MP2C	Z	3.801	3.801	0	%100
97	MP1C	X	-6.583	-6.583	0	%100
98	MP1C	Z	3.801	3.801	0	%100
99	MP3C	X	-6.583	-6.583	0	%100
100	MP3C	Z	3.801	3.801	0	%100
101	MP5C	X	-6.583	-6.583	0	%100
102	MP5C	Z	3.801	3.801	0	%100
103	MP4B	X	-6.583	-6.583	0	%100
104	MP4B	Z	3.801	3.801	0	%100
105	M105	X	-6.583	-6.583	0	%100
106	M105	Z	3.801	3.801	0	%100
107	MP2B	X	-6.583	-6.583	0	%100
108	MP2B	Z	3.801	3.801	0	%100
109	MP1B	X	-6.583	-6.583	0	%100
110	MP1B	Z	3.801	3.801	0	%100
111	MP3B	X	-6.583	-6.583	0	%100
112	MP3B	Z	3.801	3.801	0	%100

Member Distributed Loads (BLC 49 : Structure Wo (240 Deg)) (Continued)

	Member Label	Direction	Start Magnitude[lb/ft,...	End Magnitude[lb/ft,F...	Start Location[ft,%]	End Location[ft,%]
113	MP5B	X	-6.583	-6.583	0	%100
114	MP5B	Z	3.801	3.801	0	%100
115	M116A	X	-1.992	-1.992	0	%100
116	M116A	Z	1.15	1.15	0	%100
117	M121	X	-7.969	-7.969	0	%100
118	M121	Z	4.601	4.601	0	%100
119	M122	X	-1.992	-1.992	0	%100
120	M122	Z	1.15	1.15	0	%100
121	M143	X	-10.189	-10.189	0	%100
122	M143	Z	5.883	5.883	0	%100
123	M144	X	-2.547	-2.547	0	%100
124	M144	Z	1.471	1.471	0	%100
125	M145	X	-2.547	-2.547	0	%100
126	M145	Z	1.471	1.471	0	%100
127	M152	X	-8.772	-8.772	0	%100
128	M152	Z	5.065	5.065	0	%100
129	M153	X	-8.772	-8.772	0	%100
130	M153	Z	5.065	5.065	0	%100
131	M154A	X	-4.682	-4.682	0	%100
132	M154A	Z	2.703	2.703	0	%100
133	M155A	X	-4.682	-4.682	0	%100
134	M155A	Z	2.703	2.703	0	%100
135	M156	X	-8.772	-8.772	0	%100
136	M156	Z	5.065	5.065	0	%100
137	M157	X	-8.772	-8.772	0	%100
138	M157	Z	5.065	5.065	0	%100

Member Distributed Loads (BLC 50 : Structure Wo (270 Deg))

	Member Label	Direction	Start Magnitude[lb/ft,...	End Magnitude[lb/ft,F...	Start Location[ft,%]	End Location[ft,%]
1	M1	X	0	0	0	%100
2	M1	Z	0	0	0	%100
3	M4	X	-11.378	-11.378	0	%100
4	M4	Z	0	0	0	%100
5	M10	X	0	0	0	%100
6	M10	Z	0	0	0	%100
7	MP4A	X	-7.602	-7.602	0	%100
8	MP4A	Z	0	0	0	%100
9	M150	X	-7.602	-7.602	0	%100
10	M150	Z	0	0	0	%100
11	MP2A	X	-7.602	-7.602	0	%100
12	MP2A	Z	0	0	0	%100
13	MP1A	X	-7.602	-7.602	0	%100
14	MP1A	Z	0	0	0	%100
15	M43	X	0	0	0	%100
16	M43	Z	0	0	0	%100
17	M46	X	0	0	0	%100
18	M46	Z	0	0	0	%100
19	M51B	X	-7.998	-7.998	0	%100
20	M51B	Z	0	0	0	%100
21	M52B	X	-7.998	-7.998	0	%100
22	M52B	Z	0	0	0	%100

Member Distributed Loads (BLC 50 : Structure Wo (270 Deg)) (Continued)

	Member Label	Direction	Start Magnitude[lb/ft,...	End Magnitude[lb/ft,F...	Start Location[ft,%]	End Location[ft,%]
23	M76	X	-19.204	-19.204	0	%100
24	M76	Z	0	0	0	%100
25	M77	X	-14.67	-14.67	0	%100
26	M77	Z	0	0	0	%100
27	M80	X	-15.452	-15.452	0	%100
28	M80	Z	0	0	0	%100
29	M84	X	-19.204	-19.204	0	%100
30	M84	Z	0	0	0	%100
31	M85	X	-14.67	-14.67	0	%100
32	M85	Z	0	0	0	%100
33	M91	X	-15.452	-15.452	0	%100
34	M91	Z	0	0	0	%100
35	M34	X	-2.845	-2.845	0	%100
36	M34	Z	0	0	0	%100
37	M35	X	-6.568	-6.568	0	%100
38	M35	Z	0	0	0	%100
39	M36	X	-6.568	-6.568	0	%100
40	M36	Z	0	0	0	%100
41	M37	X	-14.403	-14.403	0	%100
42	M37	Z	0	0	0	%100
43	M40	X	-7.998	-7.998	0	%100
44	M40	Z	0	0	0	%100
45	M41	X	0	0	0	%100
46	M41	Z	0	0	0	%100
47	M45	X	-4.801	-4.801	0	%100
48	M45	Z	0	0	0	%100
49	M46A	X	-14.67	-14.67	0	%100
50	M46A	Z	0	0	0	%100
51	M48	X	-15.452	-15.452	0	%100
52	M48	Z	0	0	0	%100
53	M50A	X	-4.801	-4.801	0	%100
54	M50A	Z	0	0	0	%100
55	M51C	X	0	0	0	%100
56	M51C	Z	0	0	0	%100
57	M53	X	0	0	0	%100
58	M53	Z	0	0	0	%100
59	M58A	X	-2.845	-2.845	0	%100
60	M58A	Z	0	0	0	%100
61	M59A	X	-6.568	-6.568	0	%100
62	M59A	Z	0	0	0	%100
63	M60	X	-6.568	-6.568	0	%100
64	M60	Z	0	0	0	%100
65	M61	X	-14.403	-14.403	0	%100
66	M61	Z	0	0	0	%100
67	M64	X	0	0	0	%100
68	M64	Z	0	0	0	%100
69	M65	X	-7.998	-7.998	0	%100
70	M65	Z	0	0	0	%100
71	M69	X	-4.801	-4.801	0	%100
72	M69	Z	0	0	0	%100
73	M70	X	0	0	0	%100
74	M70	Z	0	0	0	%100

Member Distributed Loads (BLC 50 : Structure Wo (270 Deg)) (Continued)

	Member Label	Direction	Start Magnitude[lb/ft,...	End Magnitude[lb/ft,F...	Start Location[ft,%]	End Location[ft,%]
75	M72	X	0	0	0	%100
76	M72	Z	0	0	0	%100
77	M74	X	-4.801	-4.801	0	%100
78	M74	Z	0	0	0	%100
79	M75	X	-14.67	-14.67	0	%100
80	M75	Z	0	0	0	%100
81	M77A	X	-15.452	-15.452	0	%100
82	M77A	Z	0	0	0	%100
83	M82	X	-8.402	-8.402	0	%100
84	M82	Z	0	0	0	%100
85	M83A	X	-8.402	-8.402	0	%100
86	M83A	Z	0	0	0	%100
87	MP3A	X	-7.602	-7.602	0	%100
88	MP3A	Z	0	0	0	%100
89	MP5A	X	-7.602	-7.602	0	%100
90	MP5A	Z	0	0	0	%100
91	MP4C	X	-7.602	-7.602	0	%100
92	MP4C	Z	0	0	0	%100
93	M93	X	-7.602	-7.602	0	%100
94	M93	Z	0	0	0	%100
95	MP2C	X	-7.602	-7.602	0	%100
96	MP2C	Z	0	0	0	%100
97	MP1C	X	-7.602	-7.602	0	%100
98	MP1C	Z	0	0	0	%100
99	MP3C	X	-7.602	-7.602	0	%100
100	MP3C	Z	0	0	0	%100
101	MP5C	X	-7.602	-7.602	0	%100
102	MP5C	Z	0	0	0	%100
103	MP4B	X	-7.602	-7.602	0	%100
104	MP4B	Z	0	0	0	%100
105	M105	X	-7.602	-7.602	0	%100
106	M105	Z	0	0	0	%100
107	MP2B	X	-7.602	-7.602	0	%100
108	MP2B	Z	0	0	0	%100
109	MP1B	X	-7.602	-7.602	0	%100
110	MP1B	Z	0	0	0	%100
111	MP3B	X	-7.602	-7.602	0	%100
112	MP3B	Z	0	0	0	%100
113	MP5B	X	-7.602	-7.602	0	%100
114	MP5B	Z	0	0	0	%100
115	M116A	X	0	0	0	%100
116	M116A	Z	0	0	0	%100
117	M121	X	-6.902	-6.902	0	%100
118	M121	Z	0	0	0	%100
119	M122	X	-6.902	-6.902	0	%100
120	M122	Z	0	0	0	%100
121	M143	X	-8.824	-8.824	0	%100
122	M143	Z	0	0	0	%100
123	M144	X	-8.824	-8.824	0	%100
124	M144	Z	0	0	0	%100
125	M145	X	0	0	0	%100
126	M145	Z	0	0	0	%100

Member Distributed Loads (BLC 50 : Structure Wo (270 Deg)) (Continued)

	Member Label	Direction	Start Magnitude[lb/ft,...	End Magnitude[lb/ft,F...	Start Location[ft,%]	End Location[ft,%]
127	M152	X	-11.704	-11.704	0	%100
128	M152	Z	0	0	0	%100
129	M153	X	-11.704	-11.704	0	%100
130	M153	Z	0	0	0	%100
131	M154A	X	-6.981	-6.981	0	%100
132	M154A	Z	0	0	0	%100
133	M155A	X	-6.981	-6.981	0	%100
134	M155A	Z	0	0	0	%100
135	M156	X	-6.981	-6.981	0	%100
136	M156	Z	0	0	0	%100
137	M157	X	-6.981	-6.981	0	%100
138	M157	Z	0	0	0	%100

Member Distributed Loads (BLC 51 : Structure Wo (300 Deg))

	Member Label	Direction	Start Magnitude[lb/ft,...	End Magnitude[lb/ft,F...	Start Location[ft,%]	End Location[ft,%]
1	M1	X	-2.425	-2.425	0	%100
2	M1	Z	-1.4	-1.4	0	%100
3	M4	X	-7.391	-7.391	0	%100
4	M4	Z	-4.267	-4.267	0	%100
5	M10	X	-1.896	-1.896	0	%100
6	M10	Z	-1.095	-1.095	0	%100
7	MP4A	X	-6.583	-6.583	0	%100
8	MP4A	Z	-3.801	-3.801	0	%100
9	M150	X	-6.583	-6.583	0	%100
10	M150	Z	-3.801	-3.801	0	%100
11	MP2A	X	-6.583	-6.583	0	%100
12	MP2A	Z	-3.801	-3.801	0	%100
13	MP1A	X	-6.583	-6.583	0	%100
14	MP1A	Z	-3.801	-3.801	0	%100
15	M43	X	-1.896	-1.896	0	%100
16	M43	Z	-1.095	-1.095	0	%100
17	M46	X	-4.158	-4.158	0	%100
18	M46	Z	-2.401	-2.401	0	%100
19	M51B	X	-2.309	-2.309	0	%100
20	M51B	Z	-1.333	-1.333	0	%100
21	M52B	X	-9.235	-9.235	0	%100
22	M52B	Z	-5.332	-5.332	0	%100
23	M76	X	-12.474	-12.474	0	%100
24	M76	Z	-7.202	-7.202	0	%100
25	M77	X	-4.235	-4.235	0	%100
26	M77	Z	-2.445	-2.445	0	%100
27	M80	X	-4.46	-4.46	0	%100
28	M80	Z	-2.575	-2.575	0	%100
29	M84	X	-12.474	-12.474	0	%100
30	M84	Z	-7.202	-7.202	0	%100
31	M85	X	-16.939	-16.939	0	%100
32	M85	Z	-9.78	-9.78	0	%100
33	M91	X	-17.842	-17.842	0	%100
34	M91	Z	-10.301	-10.301	0	%100
35	M34	X	-7.391	-7.391	0	%100
36	M34	Z	-4.267	-4.267	0	%100

Member Distributed Loads (BLC 51 : Structure Wo (300 Deg)) (Continued)

	Member Label	Direction	Start Magnitude[lb/ft,...	End Magnitude[lb/ft,F...	Start Location[ft,%]	End Location[ft,%]
37	M35	X	-1.896	-1.896	0	%100
38	M35	Z	-1.095	-1.095	0	%100
39	M36	X	-1.896	-1.896	0	%100
40	M36	Z	-1.095	-1.095	0	%100
41	M37	X	-4.158	-4.158	0	%100
42	M37	Z	-2.401	-2.401	0	%100
43	M40	X	-9.235	-9.235	0	%100
44	M40	Z	-5.332	-5.332	0	%100
45	M41	X	-2.309	-2.309	0	%100
46	M41	Z	-1.333	-1.333	0	%100
47	M45	X	-12.474	-12.474	0	%100
48	M45	Z	-7.202	-7.202	0	%100
49	M46A	X	-16.939	-16.939	0	%100
50	M46A	Z	-9.78	-9.78	0	%100
51	M48	X	-17.842	-17.842	0	%100
52	M48	Z	-10.301	-10.301	0	%100
53	M50A	X	-12.474	-12.474	0	%100
54	M50A	Z	-7.202	-7.202	0	%100
55	M51C	X	-4.235	-4.235	0	%100
56	M51C	Z	-2.445	-2.445	0	%100
57	M53	X	-4.46	-4.46	0	%100
58	M53	Z	-2.575	-2.575	0	%100
59	M58A	X	0	0	0	%100
60	M58A	Z	0	0	0	%100
61	M59A	X	-7.584	-7.584	0	%100
62	M59A	Z	-4.379	-4.379	0	%100
63	M60	X	-7.584	-7.584	0	%100
64	M60	Z	-4.379	-4.379	0	%100
65	M61	X	-16.631	-16.631	0	%100
66	M61	Z	-9.602	-9.602	0	%100
67	M64	X	-2.309	-2.309	0	%100
68	M64	Z	-1.333	-1.333	0	%100
69	M65	X	-2.309	-2.309	0	%100
70	M65	Z	-1.333	-1.333	0	%100
71	M69	X	0	0	0	%100
72	M69	Z	0	0	0	%100
73	M70	X	-4.235	-4.235	0	%100
74	M70	Z	-2.445	-2.445	0	%100
75	M72	X	-4.46	-4.46	0	%100
76	M72	Z	-2.575	-2.575	0	%100
77	M74	X	0	0	0	%100
78	M74	Z	0	0	0	%100
79	M75	X	-4.235	-4.235	0	%100
80	M75	Z	-2.445	-2.445	0	%100
81	M77A	X	-4.46	-4.46	0	%100
82	M77A	Z	-2.575	-2.575	0	%100
83	M82	X	-2.425	-2.425	0	%100
84	M82	Z	-1.4	-1.4	0	%100
85	M83A	X	-9.702	-9.702	0	%100
86	M83A	Z	-5.601	-5.601	0	%100
87	MP3A	X	-6.583	-6.583	0	%100
88	MP3A	Z	-3.801	-3.801	0	%100

Member Distributed Loads (BLC 51 : Structure Wo (300 Deg)) (Continued)

	Member Label	Direction	Start Magnitude[lb/ft,...	End Magnitude[lb/ft,F...	Start Location[ft,%]	End Location[ft,%]
89	MP5A	X	-6.583	-6.583	0	%100
90	MP5A	Z	-3.801	-3.801	0	%100
91	MP4C	X	-6.583	-6.583	0	%100
92	MP4C	Z	-3.801	-3.801	0	%100
93	M93	X	-6.583	-6.583	0	%100
94	M93	Z	-3.801	-3.801	0	%100
95	MP2C	X	-6.583	-6.583	0	%100
96	MP2C	Z	-3.801	-3.801	0	%100
97	MP1C	X	-6.583	-6.583	0	%100
98	MP1C	Z	-3.801	-3.801	0	%100
99	MP3C	X	-6.583	-6.583	0	%100
100	MP3C	Z	-3.801	-3.801	0	%100
101	MP5C	X	-6.583	-6.583	0	%100
102	MP5C	Z	-3.801	-3.801	0	%100
103	MP4B	X	-6.583	-6.583	0	%100
104	MP4B	Z	-3.801	-3.801	0	%100
105	M105	X	-6.583	-6.583	0	%100
106	M105	Z	-3.801	-3.801	0	%100
107	MP2B	X	-6.583	-6.583	0	%100
108	MP2B	Z	-3.801	-3.801	0	%100
109	MP1B	X	-6.583	-6.583	0	%100
110	MP1B	Z	-3.801	-3.801	0	%100
111	MP3B	X	-6.583	-6.583	0	%100
112	MP3B	Z	-3.801	-3.801	0	%100
113	MP5B	X	-6.583	-6.583	0	%100
114	MP5B	Z	-3.801	-3.801	0	%100
115	M116A	X	-1.992	-1.992	0	%100
116	M116A	Z	-1.15	-1.15	0	%100
117	M121	X	-1.992	-1.992	0	%100
118	M121	Z	-1.15	-1.15	0	%100
119	M122	X	-7.969	-7.969	0	%100
120	M122	Z	-4.601	-4.601	0	%100
121	M143	X	-2.547	-2.547	0	%100
122	M143	Z	-1.471	-1.471	0	%100
123	M144	X	-10.189	-10.189	0	%100
124	M144	Z	-5.883	-5.883	0	%100
125	M145	X	-2.547	-2.547	0	%100
126	M145	Z	-1.471	-1.471	0	%100
127	M152	X	-8.772	-8.772	0	%100
128	M152	Z	-5.065	-5.065	0	%100
129	M153	X	-8.772	-8.772	0	%100
130	M153	Z	-5.065	-5.065	0	%100
131	M154A	X	-8.772	-8.772	0	%100
132	M154A	Z	-5.065	-5.065	0	%100
133	M155A	X	-8.772	-8.772	0	%100
134	M155A	Z	-5.065	-5.065	0	%100
135	M156	X	-4.682	-4.682	0	%100
136	M156	Z	-2.703	-2.703	0	%100
137	M157	X	-4.682	-4.682	0	%100
138	M157	Z	-2.703	-2.703	0	%100

Member Distributed Loads (BLC 52 : Structure Wo (330 Deg))

	Member Label	Direction	Start Magnitude[lb/ft,...	End Magnitude[lb/ft,F...	Start Location[ft,%]	End Location[ft,%]
1	M1	X	-4.201	-4.201	0	%100
2	M1	Z	-7.276	-7.276	0	%100
3	M4	X	-1.422	-1.422	0	%100
4	M4	Z	-2.464	-2.464	0	%100
5	M10	X	-3.284	-3.284	0	%100
6	M10	Z	-5.688	-5.688	0	%100
7	MP4A	X	-3.801	-3.801	0	%100
8	MP4A	Z	-6.583	-6.583	0	%100
9	M150	X	-3.801	-3.801	0	%100
10	M150	Z	-6.583	-6.583	0	%100
11	MP2A	X	-3.801	-3.801	0	%100
12	MP2A	Z	-6.583	-6.583	0	%100
13	MP1A	X	-3.801	-3.801	0	%100
14	MP1A	Z	-6.583	-6.583	0	%100
15	M43	X	-3.284	-3.284	0	%100
16	M43	Z	-5.688	-5.688	0	%100
17	M46	X	-7.202	-7.202	0	%100
18	M46	Z	-12.474	-12.474	0	%100
19	M51B	X	0	0	0	%100
20	M51B	Z	0	0	0	%100
21	M52B	X	-3.999	-3.999	0	%100
22	M52B	Z	-6.926	-6.926	0	%100
23	M76	X	-2.401	-2.401	0	%100
24	M76	Z	-4.158	-4.158	0	%100
25	M77	X	0	0	0	%100
26	M77	Z	0	0	0	%100
27	M80	X	0	0	0	%100
28	M80	Z	0	0	0	%100
29	M84	X	-2.401	-2.401	0	%100
30	M84	Z	-4.158	-4.158	0	%100
31	M85	X	-7.335	-7.335	0	%100
32	M85	Z	-12.705	-12.705	0	%100
33	M91	X	-7.726	-7.726	0	%100
34	M91	Z	-13.381	-13.381	0	%100
35	M34	X	-5.689	-5.689	0	%100
36	M34	Z	-9.854	-9.854	0	%100
37	M35	X	0	0	0	%100
38	M35	Z	0	0	0	%100
39	M36	X	0	0	0	%100
40	M36	Z	0	0	0	%100
41	M37	X	0	0	0	%100
42	M37	Z	0	0	0	%100
43	M40	X	-3.999	-3.999	0	%100
44	M40	Z	-6.926	-6.926	0	%100
45	M41	X	-3.999	-3.999	0	%100
46	M41	Z	-6.926	-6.926	0	%100
47	M45	X	-9.602	-9.602	0	%100
48	M45	Z	-16.631	-16.631	0	%100
49	M46A	X	-7.335	-7.335	0	%100
50	M46A	Z	-12.705	-12.705	0	%100
51	M48	X	-7.726	-7.726	0	%100
52	M48	Z	-13.381	-13.381	0	%100

Member Distributed Loads (BLC 52 : Structure Wo (330 Deg)) (Continued)

	Member Label	Direction	Start Magnitude[lb/ft,...	End Magnitude[lb/ft,F...	Start Location[ft,%]	End Location[ft,%]
53	M50A	X	-9.602	-9.602	0	%100
54	M50A	Z	-16.631	-16.631	0	%100
55	M51C	X	-7.335	-7.335	0	%100
56	M51C	Z	-12.705	-12.705	0	%100
57	M53	X	-7.726	-7.726	0	%100
58	M53	Z	-13.381	-13.381	0	%100
59	M58A	X	-1.422	-1.422	0	%100
60	M58A	Z	-2.464	-2.464	0	%100
61	M59A	X	-3.284	-3.284	0	%100
62	M59A	Z	-5.688	-5.688	0	%100
63	M60	X	-3.284	-3.284	0	%100
64	M60	Z	-5.688	-5.688	0	%100
65	M61	X	-7.202	-7.202	0	%100
66	M61	Z	-12.474	-12.474	0	%100
67	M64	X	-3.999	-3.999	0	%100
68	M64	Z	-6.926	-6.926	0	%100
69	M65	X	0	0	0	%100
70	M65	Z	0	0	0	%100
71	M69	X	-2.401	-2.401	0	%100
72	M69	Z	-4.158	-4.158	0	%100
73	M70	X	-7.335	-7.335	0	%100
74	M70	Z	-12.705	-12.705	0	%100
75	M72	X	-7.726	-7.726	0	%100
76	M72	Z	-13.381	-13.381	0	%100
77	M74	X	-2.401	-2.401	0	%100
78	M74	Z	-4.158	-4.158	0	%100
79	M75	X	0	0	0	%100
80	M75	Z	0	0	0	%100
81	M77A	X	0	0	0	%100
82	M77A	Z	0	0	0	%100
83	M82	X	0	0	0	%100
84	M82	Z	0	0	0	%100
85	M83A	X	-4.201	-4.201	0	%100
86	M83A	Z	-7.276	-7.276	0	%100
87	MP3A	X	-3.801	-3.801	0	%100
88	MP3A	Z	-6.583	-6.583	0	%100
89	MP5A	X	-3.801	-3.801	0	%100
90	MP5A	Z	-6.583	-6.583	0	%100
91	MP4C	X	-3.801	-3.801	0	%100
92	MP4C	Z	-6.583	-6.583	0	%100
93	M93	X	-3.801	-3.801	0	%100
94	M93	Z	-6.583	-6.583	0	%100
95	MP2C	X	-3.801	-3.801	0	%100
96	MP2C	Z	-6.583	-6.583	0	%100
97	MP1C	X	-3.801	-3.801	0	%100
98	MP1C	Z	-6.583	-6.583	0	%100
99	MP3C	X	-3.801	-3.801	0	%100
100	MP3C	Z	-6.583	-6.583	0	%100
101	MP5C	X	-3.801	-3.801	0	%100
102	MP5C	Z	-6.583	-6.583	0	%100
103	MP4B	X	-3.801	-3.801	0	%100
104	MP4B	Z	-6.583	-6.583	0	%100

Member Distributed Loads (BLC 52 : Structure Wo (330 Deg)) (Continued)

	Member Label	Direction	Start Magnitude[lb/ft,...	End Magnitude[lb/ft,F...	Start Location[ft,%]	End Location[ft,%]
105	M105	X	-3.801	-3.801	0	%100
106	M105	Z	-6.583	-6.583	0	%100
107	MP2B	X	-3.801	-3.801	0	%100
108	MP2B	Z	-6.583	-6.583	0	%100
109	MP1B	X	-3.801	-3.801	0	%100
110	MP1B	Z	-6.583	-6.583	0	%100
111	MP3B	X	-3.801	-3.801	0	%100
112	MP3B	Z	-6.583	-6.583	0	%100
113	MP5B	X	-3.801	-3.801	0	%100
114	MP5B	Z	-6.583	-6.583	0	%100
115	M116A	X	-3.451	-3.451	0	%100
116	M116A	Z	-5.977	-5.977	0	%100
117	M121	X	0	0	0	%100
118	M121	Z	0	0	0	%100
119	M122	X	-3.451	-3.451	0	%100
120	M122	Z	-5.977	-5.977	0	%100
121	M143	X	0	0	0	%100
122	M143	Z	0	0	0	%100
123	M144	X	-4.412	-4.412	0	%100
124	M144	Z	-7.642	-7.642	0	%100
125	M145	X	-4.412	-4.412	0	%100
126	M145	Z	-7.642	-7.642	0	%100
127	M152	X	-3.49	-3.49	0	%100
128	M152	Z	-6.046	-6.046	0	%100
129	M153	X	-3.49	-3.49	0	%100
130	M153	Z	-6.046	-6.046	0	%100
131	M154A	X	-5.852	-5.852	0	%100
132	M154A	Z	-10.136	-10.136	0	%100
133	M155A	X	-5.852	-5.852	0	%100
134	M155A	Z	-10.136	-10.136	0	%100
135	M156	X	-3.49	-3.49	0	%100
136	M156	Z	-6.046	-6.046	0	%100
137	M157	X	-3.49	-3.49	0	%100
138	M157	Z	-6.046	-6.046	0	%100

Member Distributed Loads (BLC 53 : Structure Wi (0 Deg))

	Member Label	Direction	Start Magnitude[lb/ft,...	End Magnitude[lb/ft,F...	Start Location[ft,%]	End Location[ft,%]
1	M1	X	0	0	0	%100
2	M1	Z	-3.031	-3.031	0	%100
3	M4	X	0	0	0	%100
4	M4	Z	0	0	0	%100
5	M10	X	0	0	0	%100
6	M10	Z	-2.36	-2.36	0	%100
7	MP4A	X	0	0	0	%100
8	MP4A	Z	-2.436	-2.436	0	%100
9	M150	X	0	0	0	%100
10	M150	Z	-2.436	-2.436	0	%100
11	MP2A	X	0	0	0	%100
12	MP2A	Z	-2.436	-2.436	0	%100
13	MP1A	X	0	0	0	%100
14	MP1A	Z	-2.436	-2.436	0	%100

Member Distributed Loads (BLC 53 : Structure Wi (0 Deg)) (Continued)

	Member Label	Direction	Start Magnitude[lb/ft,...	End Magnitude[lb/ft,F...	Start Location[ft,%]	End Location[ft,%]
15	M43	X	0	0	0	%100
16	M43	Z	-2.36	-2.36	0	%100
17	M46	X	0	0	0	%100
18	M46	Z	-3.928	-3.928	0	%100
19	M51B	X	0	0	0	%100
20	M51B	Z	-.721	-.721	0	%100
21	M52B	X	0	0	0	%100
22	M52B	Z	-.721	-.721	0	%100
23	M76	X	0	0	0	%100
24	M76	Z	0	0	0	%100
25	M77	X	0	0	0	%100
26	M77	Z	-.98	-.98	0	%100
27	M80	X	0	0	0	%100
28	M80	Z	-1.023	-1.023	0	%100
29	M84	X	0	0	0	%100
30	M84	Z	0	0	0	%100
31	M85	X	0	0	0	%100
32	M85	Z	-.98	-.98	0	%100
33	M91	X	0	0	0	%100
34	M91	Z	-1.023	-1.023	0	%100
35	M34	X	0	0	0	%100
36	M34	Z	-2.295	-2.295	0	%100
37	M35	X	0	0	0	%100
38	M35	Z	-.59	-.59	0	%100
39	M36	X	0	0	0	%100
40	M36	Z	-.59	-.59	0	%100
41	M37	X	0	0	0	%100
42	M37	Z	-.982	-.982	0	%100
43	M40	X	0	0	0	%100
44	M40	Z	-.721	-.721	0	%100
45	M41	X	0	0	0	%100
46	M41	Z	-2.885	-2.885	0	%100
47	M45	X	0	0	0	%100
48	M45	Z	-2.896	-2.896	0	%100
49	M46A	X	0	0	0	%100
50	M46A	Z	-.98	-.98	0	%100
51	M48	X	0	0	0	%100
52	M48	Z	-1.023	-1.023	0	%100
53	M50A	X	0	0	0	%100
54	M50A	Z	-2.896	-2.896	0	%100
55	M51C	X	0	0	0	%100
56	M51C	Z	-3.92	-3.92	0	%100
57	M53	X	0	0	0	%100
58	M53	Z	-4.092	-4.092	0	%100
59	M58A	X	0	0	0	%100
60	M58A	Z	-2.295	-2.295	0	%100
61	M59A	X	0	0	0	%100
62	M59A	Z	-.59	-.59	0	%100
63	M60	X	0	0	0	%100
64	M60	Z	-.59	-.59	0	%100
65	M61	X	0	0	0	%100
66	M61	Z	-.982	-.982	0	%100

Member Distributed Loads (BLC 53 : Structure Wi (0 Deg)) (Continued)

	Member Label	Direction	Start Magnitude[lb/ft,...	End Magnitude[lb/ft,F...	Start Location[ft,%]	End Location[ft,%]
67	M64	X	0	0	0	%100
68	M64	Z	-2.885	-2.885	0	%100
69	M65	X	0	0	0	%100
70	M65	Z	-.721	-.721	0	%100
71	M69	X	0	0	0	%100
72	M69	Z	-2.896	-2.896	0	%100
73	M70	X	0	0	0	%100
74	M70	Z	-3.92	-3.92	0	%100
75	M72	X	0	0	0	%100
76	M72	Z	-4.092	-4.092	0	%100
77	M74	X	0	0	0	%100
78	M74	Z	-2.896	-2.896	0	%100
79	M75	X	0	0	0	%100
80	M75	Z	-.98	-.98	0	%100
81	M77A	X	0	0	0	%100
82	M77A	Z	-1.023	-1.023	0	%100
83	M82	X	0	0	0	%100
84	M82	Z	-.758	-.758	0	%100
85	M83A	X	0	0	0	%100
86	M83A	Z	-.758	-.758	0	%100
87	MP3A	X	0	0	0	%100
88	MP3A	Z	-2.436	-2.436	0	%100
89	MP5A	X	0	0	0	%100
90	MP5A	Z	-2.436	-2.436	0	%100
91	MP4C	X	0	0	0	%100
92	MP4C	Z	-2.436	-2.436	0	%100
93	M93	X	0	0	0	%100
94	M93	Z	-2.436	-2.436	0	%100
95	MP2C	X	0	0	0	%100
96	MP2C	Z	-2.436	-2.436	0	%100
97	MP1C	X	0	0	0	%100
98	MP1C	Z	-2.436	-2.436	0	%100
99	MP3C	X	0	0	0	%100
100	MP3C	Z	-2.436	-2.436	0	%100
101	MP5C	X	0	0	0	%100
102	MP5C	Z	-2.436	-2.436	0	%100
103	MP4B	X	0	0	0	%100
104	MP4B	Z	-2.436	-2.436	0	%100
105	M105	X	0	0	0	%100
106	M105	Z	-2.436	-2.436	0	%100
107	MP2B	X	0	0	0	%100
108	MP2B	Z	-2.436	-2.436	0	%100
109	MP1B	X	0	0	0	%100
110	MP1B	Z	-2.436	-2.436	0	%100
111	MP3B	X	0	0	0	%100
112	MP3B	Z	-2.436	-2.436	0	%100
113	MP5B	X	0	0	0	%100
114	MP5B	Z	-2.436	-2.436	0	%100
115	M116A	X	0	0	0	%100
116	M116A	Z	-2.7	-2.7	0	%100
117	M121	X	0	0	0	%100
118	M121	Z	-.675	-.675	0	%100

Member Distributed Loads (BLC 53 : Structure Wi (0 Deg)) (Continued)

	Member Label	Direction	Start Magnitude[lb/ft,...	End Magnitude[lb/ft,F...	Start Location[ft,%]	End Location[ft,%]
119	M122	X	0	0	0	%100
120	M122	Z	-.675	-.675	0	%100
121	M143	X	0	0	0	%100
122	M143	Z	-.711	-.711	0	%100
123	M144	X	0	0	0	%100
124	M144	Z	-.711	-.711	0	%100
125	M145	X	0	0	0	%100
126	M145	Z	-2.845	-2.845	0	%100
127	M152	X	0	0	0	%100
128	M152	Z	-1.386	-1.386	0	%100
129	M153	X	0	0	0	%100
130	M153	Z	-1.386	-1.386	0	%100
131	M154A	X	0	0	0	%100
132	M154A	Z	-2.596	-2.596	0	%100
133	M155A	X	0	0	0	%100
134	M155A	Z	-2.596	-2.596	0	%100
135	M156	X	0	0	0	%100
136	M156	Z	-2.596	-2.596	0	%100
137	M157	X	0	0	0	%100
138	M157	Z	-2.596	-2.596	0	%100

Member Distributed Loads (BLC 54 : Structure Wi (30 Deg))

	Member Label	Direction	Start Magnitude[lb/ft,...	End Magnitude[lb/ft,F...	Start Location[ft,%]	End Location[ft,%]
1	M1	X	1.136	1.136	0	%100
2	M1	Z	-1.968	-1.968	0	%100
3	M4	X	.382	.382	0	%100
4	M4	Z	-.662	-.662	0	%100
5	M10	X	.885	.885	0	%100
6	M10	Z	-1.533	-1.533	0	%100
7	MP4A	X	1.218	1.218	0	%100
8	MP4A	Z	-2.109	-2.109	0	%100
9	M150	X	1.218	1.218	0	%100
10	M150	Z	-2.109	-2.109	0	%100
11	MP2A	X	1.218	1.218	0	%100
12	MP2A	Z	-2.109	-2.109	0	%100
13	MP1A	X	1.218	1.218	0	%100
14	MP1A	Z	-2.109	-2.109	0	%100
15	M43	X	.885	.885	0	%100
16	M43	Z	-1.533	-1.533	0	%100
17	M46	X	1.473	1.473	0	%100
18	M46	Z	-2.551	-2.551	0	%100
19	M51B	X	1.082	1.082	0	%100
20	M51B	Z	-1.874	-1.874	0	%100
21	M52B	X	0	0	0	%100
22	M52B	Z	0	0	0	%100
23	M76	X	.483	.483	0	%100
24	M76	Z	-.836	-.836	0	%100
25	M77	X	1.47	1.47	0	%100
26	M77	Z	-2.546	-2.546	0	%100
27	M80	X	1.535	1.535	0	%100
28	M80	Z	-2.658	-2.658	0	%100

Member Distributed Loads (BLC 54 : Structure Wi (30 Deg)) (Continued)

	Member Label	Direction	Start Magnitude[lb/ft,...	End Magnitude[lb/ft,F...	Start Location[ft,%]	End Location[ft,%]
29	M84	X	.483	.483	0	%100
30	M84	Z	-.836	-.836	0	%100
31	M85	X	0	0	0	%100
32	M85	Z	0	0	0	%100
33	M91	X	0	0	0	%100
34	M91	Z	0	0	0	%100
35	M34	X	.382	.382	0	%100
36	M34	Z	-.662	-.662	0	%100
37	M35	X	.885	.885	0	%100
38	M35	Z	-1.533	-1.533	0	%100
39	M36	X	.885	.885	0	%100
40	M36	Z	-1.533	-1.533	0	%100
41	M37	X	1.473	1.473	0	%100
42	M37	Z	-2.551	-2.551	0	%100
43	M40	X	0	0	0	%100
44	M40	Z	0	0	0	%100
45	M41	X	1.082	1.082	0	%100
46	M41	Z	-1.874	-1.874	0	%100
47	M45	X	.483	.483	0	%100
48	M45	Z	-.836	-.836	0	%100
49	M46A	X	0	0	0	%100
50	M46A	Z	0	0	0	%100
51	M48	X	0	0	0	%100
52	M48	Z	0	0	0	%100
53	M50A	X	.483	.483	0	%100
54	M50A	Z	-.836	-.836	0	%100
55	M51C	X	1.47	1.47	0	%100
56	M51C	Z	-2.546	-2.546	0	%100
57	M53	X	1.535	1.535	0	%100
58	M53	Z	-2.658	-2.658	0	%100
59	M58A	X	1.53	1.53	0	%100
60	M58A	Z	-2.65	-2.65	0	%100
61	M59A	X	0	0	0	%100
62	M59A	Z	0	0	0	%100
63	M60	X	0	0	0	%100
64	M60	Z	0	0	0	%100
65	M61	X	0	0	0	%100
66	M61	Z	0	0	0	%100
67	M64	X	1.082	1.082	0	%100
68	M64	Z	-1.874	-1.874	0	%100
69	M65	X	1.082	1.082	0	%100
70	M65	Z	-1.874	-1.874	0	%100
71	M69	X	1.931	1.931	0	%100
72	M69	Z	-3.344	-3.344	0	%100
73	M70	X	1.47	1.47	0	%100
74	M70	Z	-2.546	-2.546	0	%100
75	M72	X	1.535	1.535	0	%100
76	M72	Z	-2.658	-2.658	0	%100
77	M74	X	1.931	1.931	0	%100
78	M74	Z	-3.344	-3.344	0	%100
79	M75	X	1.47	1.47	0	%100
80	M75	Z	-2.546	-2.546	0	%100

Member Distributed Loads (BLC 54 : Structure Wi (30 Deg)) (Continued)

	Member Label	Direction	Start Magnitude[lb/ft,...	End Magnitude[lb/ft,F...	Start Location[ft,%]	End Location[ft,%]
81	M77A	X	1.535	1.535	0	%100
82	M77A	Z	-2.658	-2.658	0	%100
83	M82	X	1.136	1.136	0	%100
84	M82	Z	-1.968	-1.968	0	%100
85	M83A	X	0	0	0	%100
86	M83A	Z	0	0	0	%100
87	MP3A	X	1.218	1.218	0	%100
88	MP3A	Z	-2.109	-2.109	0	%100
89	MP5A	X	1.218	1.218	0	%100
90	MP5A	Z	-2.109	-2.109	0	%100
91	MP4C	X	1.218	1.218	0	%100
92	MP4C	Z	-2.109	-2.109	0	%100
93	M93	X	1.218	1.218	0	%100
94	M93	Z	-2.109	-2.109	0	%100
95	MP2C	X	1.218	1.218	0	%100
96	MP2C	Z	-2.109	-2.109	0	%100
97	MP1C	X	1.218	1.218	0	%100
98	MP1C	Z	-2.109	-2.109	0	%100
99	MP3C	X	1.218	1.218	0	%100
100	MP3C	Z	-2.109	-2.109	0	%100
101	MP5C	X	1.218	1.218	0	%100
102	MP5C	Z	-2.109	-2.109	0	%100
103	MP4B	X	1.218	1.218	0	%100
104	MP4B	Z	-2.109	-2.109	0	%100
105	M105	X	1.218	1.218	0	%100
106	M105	Z	-2.109	-2.109	0	%100
107	MP2B	X	1.218	1.218	0	%100
108	MP2B	Z	-2.109	-2.109	0	%100
109	MP1B	X	1.218	1.218	0	%100
110	MP1B	Z	-2.109	-2.109	0	%100
111	MP3B	X	1.218	1.218	0	%100
112	MP3B	Z	-2.109	-2.109	0	%100
113	MP5B	X	1.218	1.218	0	%100
114	MP5B	Z	-2.109	-2.109	0	%100
115	M116A	X	1.013	1.013	0	%100
116	M116A	Z	-1.754	-1.754	0	%100
117	M121	X	1.013	1.013	0	%100
118	M121	Z	-1.754	-1.754	0	%100
119	M122	X	0	0	0	%100
120	M122	Z	0	0	0	%100
121	M143	X	1.067	1.067	0	%100
122	M143	Z	-1.848	-1.848	0	%100
123	M144	X	0	0	0	%100
124	M144	Z	0	0	0	%100
125	M145	X	1.067	1.067	0	%100
126	M145	Z	-1.848	-1.848	0	%100
127	M152	X	.895	.895	0	%100
128	M152	Z	-1.549	-1.549	0	%100
129	M153	X	.895	.895	0	%100
130	M153	Z	-1.549	-1.549	0	%100
131	M154A	X	.895	.895	0	%100
132	M154A	Z	-1.549	-1.549	0	%100

Member Distributed Loads (BLC 54 : Structure Wi (30 Deg)) (Continued)

	Member Label	Direction	Start Magnitude[lb/ft,...	End Magnitude[lb/ft,F...	Start Location[ft,%]	End Location[ft,%]
133	M155A	X	.895	.895	0	%100
134	M155A	Z	-1.549	-1.549	0	%100
135	M156	X	1.5	1.5	0	%100
136	M156	Z	-2.598	-2.598	0	%100
137	M157	X	1.5	1.5	0	%100
138	M157	Z	-2.598	-2.598	0	%100

Member Distributed Loads (BLC 55 : Structure Wi (60 Deg))

	Member Label	Direction	Start Magnitude[lb/ft,...	End Magnitude[lb/ft,F...	Start Location[ft,%]	End Location[ft,%]
1	M1	X	.656	.656	0	%100
2	M1	Z	-.379	-.379	0	%100
3	M4	X	1.987	1.987	0	%100
4	M4	Z	-1.147	-1.147	0	%100
5	M10	X	.511	.511	0	%100
6	M10	Z	-.295	-.295	0	%100
7	MP4A	X	2.109	2.109	0	%100
8	MP4A	Z	-1.218	-1.218	0	%100
9	M150	X	2.109	2.109	0	%100
10	M150	Z	-1.218	-1.218	0	%100
11	MP2A	X	2.109	2.109	0	%100
12	MP2A	Z	-1.218	-1.218	0	%100
13	MP1A	X	2.109	2.109	0	%100
14	MP1A	Z	-1.218	-1.218	0	%100
15	M43	X	.511	.511	0	%100
16	M43	Z	-.295	-.295	0	%100
17	M46	X	.85	.85	0	%100
18	M46	Z	-.491	-.491	0	%100
19	M51B	X	2.498	2.498	0	%100
20	M51B	Z	-1.442	-1.442	0	%100
21	M52B	X	.625	.625	0	%100
22	M52B	Z	-.361	-.361	0	%100
23	M76	X	2.508	2.508	0	%100
24	M76	Z	-1.448	-1.448	0	%100
25	M77	X	3.395	3.395	0	%100
26	M77	Z	-1.96	-1.96	0	%100
27	M80	X	3.544	3.544	0	%100
28	M80	Z	-2.046	-2.046	0	%100
29	M84	X	2.508	2.508	0	%100
30	M84	Z	-1.448	-1.448	0	%100
31	M85	X	.849	.849	0	%100
32	M85	Z	-.49	-.49	0	%100
33	M91	X	.886	.886	0	%100
34	M91	Z	-.512	-.512	0	%100
35	M34	X	0	0	0	%100
36	M34	Z	0	0	0	%100
37	M35	X	2.044	2.044	0	%100
38	M35	Z	-1.18	-1.18	0	%100
39	M36	X	2.044	2.044	0	%100
40	M36	Z	-1.18	-1.18	0	%100
41	M37	X	3.402	3.402	0	%100
42	M37	Z	-1.964	-1.964	0	%100

Member Distributed Loads (BLC 55 : Structure Wi (60 Deg)) (Continued)

	Member Label	Direction	Start Magnitude[lb/ft,...	End Magnitude[lb/ft,F...	Start Location[ft,%]	End Location[ft,%]
43	M40	X	.625	.625	0	%100
44	M40	Z	-.361	-.361	0	%100
45	M41	X	.625	.625	0	%100
46	M41	Z	-.361	-.361	0	%100
47	M45	X	0	0	0	%100
48	M45	Z	0	0	0	%100
49	M46A	X	.849	.849	0	%100
50	M46A	Z	-.49	-.49	0	%100
51	M48	X	.886	.886	0	%100
52	M48	Z	-.512	-.512	0	%100
53	M50A	X	0	0	0	%100
54	M50A	Z	0	0	0	%100
55	M51C	X	.849	.849	0	%100
56	M51C	Z	-.49	-.49	0	%100
57	M53	X	.886	.886	0	%100
58	M53	Z	-.512	-.512	0	%100
59	M58A	X	1.987	1.987	0	%100
60	M58A	Z	-1.147	-1.147	0	%100
61	M59A	X	.511	.511	0	%100
62	M59A	Z	-.295	-.295	0	%100
63	M60	X	.511	.511	0	%100
64	M60	Z	-.295	-.295	0	%100
65	M61	X	.85	.85	0	%100
66	M61	Z	-.491	-.491	0	%100
67	M64	X	.625	.625	0	%100
68	M64	Z	-.361	-.361	0	%100
69	M65	X	2.498	2.498	0	%100
70	M65	Z	-1.442	-1.442	0	%100
71	M69	X	2.508	2.508	0	%100
72	M69	Z	-1.448	-1.448	0	%100
73	M70	X	.849	.849	0	%100
74	M70	Z	-.49	-.49	0	%100
75	M72	X	.886	.886	0	%100
76	M72	Z	-.512	-.512	0	%100
77	M74	X	2.508	2.508	0	%100
78	M74	Z	-1.448	-1.448	0	%100
79	M75	X	3.395	3.395	0	%100
80	M75	Z	-1.96	-1.96	0	%100
81	M77A	X	3.544	3.544	0	%100
82	M77A	Z	-2.046	-2.046	0	%100
83	M82	X	2.625	2.625	0	%100
84	M82	Z	-1.515	-1.515	0	%100
85	M83A	X	.656	.656	0	%100
86	M83A	Z	-.379	-.379	0	%100
87	MP3A	X	2.109	2.109	0	%100
88	MP3A	Z	-1.218	-1.218	0	%100
89	MP5A	X	2.109	2.109	0	%100
90	MP5A	Z	-1.218	-1.218	0	%100
91	MP4C	X	2.109	2.109	0	%100
92	MP4C	Z	-1.218	-1.218	0	%100
93	M93	X	2.109	2.109	0	%100
94	M93	Z	-1.218	-1.218	0	%100

Member Distributed Loads (BLC 55 : Structure Wi (60 Deg)) (Continued)

	Member Label	Direction	Start Magnitude[lb/ft,...	End Magnitude[lb/ft,F...	Start Location[ft,%]	End Location[ft,%]
95	MP2C	X	2.109	2.109	0	%100
96	MP2C	Z	-1.218	-1.218	0	%100
97	MP1C	X	2.109	2.109	0	%100
98	MP1C	Z	-1.218	-1.218	0	%100
99	MP3C	X	2.109	2.109	0	%100
100	MP3C	Z	-1.218	-1.218	0	%100
101	MP5C	X	2.109	2.109	0	%100
102	MP5C	Z	-1.218	-1.218	0	%100
103	MP4B	X	2.109	2.109	0	%100
104	MP4B	Z	-1.218	-1.218	0	%100
105	M105	X	2.109	2.109	0	%100
106	M105	Z	-1.218	-1.218	0	%100
107	MP2B	X	2.109	2.109	0	%100
108	MP2B	Z	-1.218	-1.218	0	%100
109	MP1B	X	2.109	2.109	0	%100
110	MP1B	Z	-1.218	-1.218	0	%100
111	MP3B	X	2.109	2.109	0	%100
112	MP3B	Z	-1.218	-1.218	0	%100
113	MP5B	X	2.109	2.109	0	%100
114	MP5B	Z	-1.218	-1.218	0	%100
115	M116A	X	.585	.585	0	%100
116	M116A	Z	-.338	-.338	0	%100
117	M121	X	2.338	2.338	0	%100
118	M121	Z	-1.35	-1.35	0	%100
119	M122	X	.585	.585	0	%100
120	M122	Z	-.338	-.338	0	%100
121	M143	X	2.464	2.464	0	%100
122	M143	Z	-1.423	-1.423	0	%100
123	M144	X	.616	.616	0	%100
124	M144	Z	-.356	-.356	0	%100
125	M145	X	.616	.616	0	%100
126	M145	Z	-.356	-.356	0	%100
127	M152	X	2.248	2.248	0	%100
128	M152	Z	-1.298	-1.298	0	%100
129	M153	X	2.248	2.248	0	%100
130	M153	Z	-1.298	-1.298	0	%100
131	M154A	X	1.2	1.2	0	%100
132	M154A	Z	-.693	-.693	0	%100
133	M155A	X	1.2	1.2	0	%100
134	M155A	Z	-.693	-.693	0	%100
135	M156	X	2.248	2.248	0	%100
136	M156	Z	-1.298	-1.298	0	%100
137	M157	X	2.248	2.248	0	%100
138	M157	Z	-1.298	-1.298	0	%100

Member Distributed Loads (BLC 56 : Structure Wi (90 Deg))

	Member Label	Direction	Start Magnitude[lb/ft,...	End Magnitude[lb/ft,F...	Start Location[ft,%]	End Location[ft,%]
1	M1	X	0	0	0	%100
2	M1	Z	0	0	0	%100
3	M4	X	3.06	3.06	0	%100
4	M4	Z	0	0	0	%100

Member Distributed Loads (BLC 56 : Structure Wi (90 Deg)) (Continued)

	Member Label	Direction	Start Magnitude[lb/ft,...	End Magnitude[lb/ft,F...	Start Location[ft,%]	End Location[ft,%]
5	M10	X	0	0	0	%100
6	M10	Z	0	0	0	%100
7	MP4A	X	2.436	2.436	0	%100
8	MP4A	Z	0	0	0	%100
9	M150	X	2.436	2.436	0	%100
10	M150	Z	0	0	0	%100
11	MP2A	X	2.436	2.436	0	%100
12	MP2A	Z	0	0	0	%100
13	MP1A	X	2.436	2.436	0	%100
14	MP1A	Z	0	0	0	%100
15	M43	X	0	0	0	%100
16	M43	Z	0	0	0	%100
17	M46	X	0	0	0	%100
18	M46	Z	0	0	0	%100
19	M51B	X	2.164	2.164	0	%100
20	M51B	Z	0	0	0	%100
21	M52B	X	2.164	2.164	0	%100
22	M52B	Z	0	0	0	%100
23	M76	X	3.861	3.861	0	%100
24	M76	Z	0	0	0	%100
25	M77	X	2.94	2.94	0	%100
26	M77	Z	0	0	0	%100
27	M80	X	3.069	3.069	0	%100
28	M80	Z	0	0	0	%100
29	M84	X	3.861	3.861	0	%100
30	M84	Z	0	0	0	%100
31	M85	X	2.94	2.94	0	%100
32	M85	Z	0	0	0	%100
33	M91	X	3.069	3.069	0	%100
34	M91	Z	0	0	0	%100
35	M34	X	.765	.765	0	%100
36	M34	Z	0	0	0	%100
37	M35	X	1.77	1.77	0	%100
38	M35	Z	0	0	0	%100
39	M36	X	1.77	1.77	0	%100
40	M36	Z	0	0	0	%100
41	M37	X	2.946	2.946	0	%100
42	M37	Z	0	0	0	%100
43	M40	X	2.164	2.164	0	%100
44	M40	Z	0	0	0	%100
45	M41	X	0	0	0	%100
46	M41	Z	0	0	0	%100
47	M45	X	.965	.965	0	%100
48	M45	Z	0	0	0	%100
49	M46A	X	2.94	2.94	0	%100
50	M46A	Z	0	0	0	%100
51	M48	X	3.069	3.069	0	%100
52	M48	Z	0	0	0	%100
53	M50A	X	.965	.965	0	%100
54	M50A	Z	0	0	0	%100
55	M51C	X	0	0	0	%100
56	M51C	Z	0	0	0	%100

Member Distributed Loads (BLC 56 : Structure Wi (90 Deg)) (Continued)

	Member Label	Direction	Start Magnitude[lb/ft,...	End Magnitude[lb/ft,F...	Start Location[ft,%]	End Location[ft,%]
57	M53	X	0	0	0	%100
58	M53	Z	0	0	0	%100
59	M58A	X	.765	.765	0	%100
60	M58A	Z	0	0	0	%100
61	M59A	X	1.77	1.77	0	%100
62	M59A	Z	0	0	0	%100
63	M60	X	1.77	1.77	0	%100
64	M60	Z	0	0	0	%100
65	M61	X	2.946	2.946	0	%100
66	M61	Z	0	0	0	%100
67	M64	X	0	0	0	%100
68	M64	Z	0	0	0	%100
69	M65	X	2.164	2.164	0	%100
70	M65	Z	0	0	0	%100
71	M69	X	.965	.965	0	%100
72	M69	Z	0	0	0	%100
73	M70	X	0	0	0	%100
74	M70	Z	0	0	0	%100
75	M72	X	0	0	0	%100
76	M72	Z	0	0	0	%100
77	M74	X	.965	.965	0	%100
78	M74	Z	0	0	0	%100
79	M75	X	2.94	2.94	0	%100
80	M75	Z	0	0	0	%100
81	M77A	X	3.069	3.069	0	%100
82	M77A	Z	0	0	0	%100
83	M82	X	2.273	2.273	0	%100
84	M82	Z	0	0	0	%100
85	M83A	X	2.273	2.273	0	%100
86	M83A	Z	0	0	0	%100
87	MP3A	X	2.436	2.436	0	%100
88	MP3A	Z	0	0	0	%100
89	MP5A	X	2.436	2.436	0	%100
90	MP5A	Z	0	0	0	%100
91	MP4C	X	2.436	2.436	0	%100
92	MP4C	Z	0	0	0	%100
93	M93	X	2.436	2.436	0	%100
94	M93	Z	0	0	0	%100
95	MP2C	X	2.436	2.436	0	%100
96	MP2C	Z	0	0	0	%100
97	MP1C	X	2.436	2.436	0	%100
98	MP1C	Z	0	0	0	%100
99	MP3C	X	2.436	2.436	0	%100
100	MP3C	Z	0	0	0	%100
101	MP5C	X	2.436	2.436	0	%100
102	MP5C	Z	0	0	0	%100
103	MP4B	X	2.436	2.436	0	%100
104	MP4B	Z	0	0	0	%100
105	M105	X	2.436	2.436	0	%100
106	M105	Z	0	0	0	%100
107	MP2B	X	2.436	2.436	0	%100
108	MP2B	Z	0	0	0	%100

Member Distributed Loads (BLC 56 : Structure Wi (90 Deg)) (Continued)

	Member Label	Direction	Start Magnitude[lb/ft,...	End Magnitude[lb/ft,F...	Start Location[ft,%]	End Location[ft,%]
109	MP1B	X	2.436	2.436	0	%100
110	MP1B	Z	0	0	0	%100
111	MP3B	X	2.436	2.436	0	%100
112	MP3B	Z	0	0	0	%100
113	MP5B	X	2.436	2.436	0	%100
114	MP5B	Z	0	0	0	%100
115	M116A	X	0	0	0	%100
116	M116A	Z	0	0	0	%100
117	M121	X	2.025	2.025	0	%100
118	M121	Z	0	0	0	%100
119	M122	X	2.025	2.025	0	%100
120	M122	Z	0	0	0	%100
121	M143	X	2.134	2.134	0	%100
122	M143	Z	0	0	0	%100
123	M144	X	2.134	2.134	0	%100
124	M144	Z	0	0	0	%100
125	M145	X	0	0	0	%100
126	M145	Z	0	0	0	%100
127	M152	X	3	3	0	%100
128	M152	Z	0	0	0	%100
129	M153	X	3	3	0	%100
130	M153	Z	0	0	0	%100
131	M154A	X	1.789	1.789	0	%100
132	M154A	Z	0	0	0	%100
133	M155A	X	1.789	1.789	0	%100
134	M155A	Z	0	0	0	%100
135	M156	X	1.789	1.789	0	%100
136	M156	Z	0	0	0	%100
137	M157	X	1.789	1.789	0	%100
138	M157	Z	0	0	0	%100

Member Distributed Loads (BLC 57 : Structure Wi (120 Deg))

	Member Label	Direction	Start Magnitude[lb/ft,...	End Magnitude[lb/ft,F...	Start Location[ft,%]	End Location[ft,%]
1	M1	X	.656	.656	0	%100
2	M1	Z	.379	.379	0	%100
3	M4	X	1.987	1.987	0	%100
4	M4	Z	1.147	1.147	0	%100
5	M10	X	.511	.511	0	%100
6	M10	Z	.295	.295	0	%100
7	MP4A	X	2.109	2.109	0	%100
8	MP4A	Z	1.218	1.218	0	%100
9	M150	X	2.109	2.109	0	%100
10	M150	Z	1.218	1.218	0	%100
11	MP2A	X	2.109	2.109	0	%100
12	MP2A	Z	1.218	1.218	0	%100
13	MP1A	X	2.109	2.109	0	%100
14	MP1A	Z	1.218	1.218	0	%100
15	M43	X	.511	.511	0	%100
16	M43	Z	.295	.295	0	%100
17	M46	X	.85	.85	0	%100
18	M46	Z	.491	.491	0	%100

Member Distributed Loads (BLC 57 : Structure Wi (120 Deg)) (Continued)

	Member Label	Direction	Start Magnitude[lb/ft,...	End Magnitude[lb/ft,F...	Start Location[ft,%]	End Location[ft,%]
19	M51B	X	.625	.625	0	%100
20	M51B	Z	.361	.361	0	%100
21	M52B	X	2.498	2.498	0	%100
22	M52B	Z	1.442	1.442	0	%100
23	M76	X	2.508	2.508	0	%100
24	M76	Z	1.448	1.448	0	%100
25	M77	X	.849	.849	0	%100
26	M77	Z	.49	.49	0	%100
27	M80	X	.886	.886	0	%100
28	M80	Z	.512	.512	0	%100
29	M84	X	2.508	2.508	0	%100
30	M84	Z	1.448	1.448	0	%100
31	M85	X	3.395	3.395	0	%100
32	M85	Z	1.96	1.96	0	%100
33	M91	X	3.544	3.544	0	%100
34	M91	Z	2.046	2.046	0	%100
35	M34	X	1.987	1.987	0	%100
36	M34	Z	1.147	1.147	0	%100
37	M35	X	.511	.511	0	%100
38	M35	Z	.295	.295	0	%100
39	M36	X	.511	.511	0	%100
40	M36	Z	.295	.295	0	%100
41	M37	X	.85	.85	0	%100
42	M37	Z	.491	.491	0	%100
43	M40	X	2.498	2.498	0	%100
44	M40	Z	1.442	1.442	0	%100
45	M41	X	.625	.625	0	%100
46	M41	Z	.361	.361	0	%100
47	M45	X	2.508	2.508	0	%100
48	M45	Z	1.448	1.448	0	%100
49	M46A	X	3.395	3.395	0	%100
50	M46A	Z	1.96	1.96	0	%100
51	M48	X	3.544	3.544	0	%100
52	M48	Z	2.046	2.046	0	%100
53	M50A	X	2.508	2.508	0	%100
54	M50A	Z	1.448	1.448	0	%100
55	M51C	X	.849	.849	0	%100
56	M51C	Z	.49	.49	0	%100
57	M53	X	.886	.886	0	%100
58	M53	Z	.512	.512	0	%100
59	M58A	X	0	0	0	%100
60	M58A	Z	0	0	0	%100
61	M59A	X	2.044	2.044	0	%100
62	M59A	Z	1.18	1.18	0	%100
63	M60	X	2.044	2.044	0	%100
64	M60	Z	1.18	1.18	0	%100
65	M61	X	3.402	3.402	0	%100
66	M61	Z	1.964	1.964	0	%100
67	M64	X	.625	.625	0	%100
68	M64	Z	.361	.361	0	%100
69	M65	X	.625	.625	0	%100
70	M65	Z	.361	.361	0	%100

Member Distributed Loads (BLC 57 : Structure Wi (120 Deg)) (Continued)

	Member Label	Direction	Start Magnitude[lb/ft,...	End Magnitude[lb/ft,F...	Start Location[ft,%]	End Location[ft,%]
71	M69	X	0	0	0	%100
72	M69	Z	0	0	0	%100
73	M70	X	.849	.849	0	%100
74	M70	Z	.49	.49	0	%100
75	M72	X	.886	.886	0	%100
76	M72	Z	.512	.512	0	%100
77	M74	X	0	0	0	%100
78	M74	Z	0	0	0	%100
79	M75	X	.849	.849	0	%100
80	M75	Z	.49	.49	0	%100
81	M77A	X	.886	.886	0	%100
82	M77A	Z	.512	.512	0	%100
83	M82	X	.656	.656	0	%100
84	M82	Z	.379	.379	0	%100
85	M83A	X	2.625	2.625	0	%100
86	M83A	Z	1.515	1.515	0	%100
87	MP3A	X	2.109	2.109	0	%100
88	MP3A	Z	1.218	1.218	0	%100
89	MP5A	X	2.109	2.109	0	%100
90	MP5A	Z	1.218	1.218	0	%100
91	MP4C	X	2.109	2.109	0	%100
92	MP4C	Z	1.218	1.218	0	%100
93	M93	X	2.109	2.109	0	%100
94	M93	Z	1.218	1.218	0	%100
95	MP2C	X	2.109	2.109	0	%100
96	MP2C	Z	1.218	1.218	0	%100
97	MP1C	X	2.109	2.109	0	%100
98	MP1C	Z	1.218	1.218	0	%100
99	MP3C	X	2.109	2.109	0	%100
100	MP3C	Z	1.218	1.218	0	%100
101	MP5C	X	2.109	2.109	0	%100
102	MP5C	Z	1.218	1.218	0	%100
103	MP4B	X	2.109	2.109	0	%100
104	MP4B	Z	1.218	1.218	0	%100
105	M105	X	2.109	2.109	0	%100
106	M105	Z	1.218	1.218	0	%100
107	MP2B	X	2.109	2.109	0	%100
108	MP2B	Z	1.218	1.218	0	%100
109	MP1B	X	2.109	2.109	0	%100
110	MP1B	Z	1.218	1.218	0	%100
111	MP3B	X	2.109	2.109	0	%100
112	MP3B	Z	1.218	1.218	0	%100
113	MP5B	X	2.109	2.109	0	%100
114	MP5B	Z	1.218	1.218	0	%100
115	M116A	X	.585	.585	0	%100
116	M116A	Z	.338	.338	0	%100
117	M121	X	.585	.585	0	%100
118	M121	Z	.338	.338	0	%100
119	M122	X	2.338	2.338	0	%100
120	M122	Z	1.35	1.35	0	%100
121	M143	X	.616	.616	0	%100
122	M143	Z	.356	.356	0	%100

Member Distributed Loads (BLC 57 : Structure Wi (120 Deg)) (Continued)

	Member Label	Direction	Start Magnitude[lb/ft,...	End Magnitude[lb/ft,F...	Start Location[ft,%]	End Location[ft,%]
123	M144	X	2.464	2.464	0	%100
124	M144	Z	1.423	1.423	0	%100
125	M145	X	.616	.616	0	%100
126	M145	Z	.356	.356	0	%100
127	M152	X	2.248	2.248	0	%100
128	M152	Z	1.298	1.298	0	%100
129	M153	X	2.248	2.248	0	%100
130	M153	Z	1.298	1.298	0	%100
131	M154A	X	2.248	2.248	0	%100
132	M154A	Z	1.298	1.298	0	%100
133	M155A	X	2.248	2.248	0	%100
134	M155A	Z	1.298	1.298	0	%100
135	M156	X	1.2	1.2	0	%100
136	M156	Z	.693	.693	0	%100
137	M157	X	1.2	1.2	0	%100
138	M157	Z	.693	.693	0	%100

Member Distributed Loads (BLC 58 : Structure Wi (150 Deg))

	Member Label	Direction	Start Magnitude[lb/ft,...	End Magnitude[lb/ft,F...	Start Location[ft,%]	End Location[ft,%]
1	M1	X	1.136	1.136	0	%100
2	M1	Z	1.968	1.968	0	%100
3	M4	X	.382	.382	0	%100
4	M4	Z	.662	.662	0	%100
5	M10	X	.885	.885	0	%100
6	M10	Z	1.533	1.533	0	%100
7	MP4A	X	1.218	1.218	0	%100
8	MP4A	Z	2.109	2.109	0	%100
9	M150	X	1.218	1.218	0	%100
10	M150	Z	2.109	2.109	0	%100
11	MP2A	X	1.218	1.218	0	%100
12	MP2A	Z	2.109	2.109	0	%100
13	MP1A	X	1.218	1.218	0	%100
14	MP1A	Z	2.109	2.109	0	%100
15	M43	X	.885	.885	0	%100
16	M43	Z	1.533	1.533	0	%100
17	M46	X	1.473	1.473	0	%100
18	M46	Z	2.551	2.551	0	%100
19	M51B	X	0	0	0	%100
20	M51B	Z	0	0	0	%100
21	M52B	X	1.082	1.082	0	%100
22	M52B	Z	1.874	1.874	0	%100
23	M76	X	.483	.483	0	%100
24	M76	Z	.836	.836	0	%100
25	M77	X	0	0	0	%100
26	M77	Z	0	0	0	%100
27	M80	X	0	0	0	%100
28	M80	Z	0	0	0	%100
29	M84	X	.483	.483	0	%100
30	M84	Z	.836	.836	0	%100
31	M85	X	1.47	1.47	0	%100
32	M85	Z	2.546	2.546	0	%100

Member Distributed Loads (BLC 58 : Structure Wi (150 Deg)) (Continued)

	Member Label	Direction	Start Magnitude[lb/ft,...	End Magnitude[lb/ft,F...	Start Location[ft,%]	End Location[ft,%]
33	M91	X	1.535	1.535	0	%100
34	M91	Z	2.658	2.658	0	%100
35	M34	X	1.53	1.53	0	%100
36	M34	Z	2.65	2.65	0	%100
37	M35	X	0	0	0	%100
38	M35	Z	0	0	0	%100
39	M36	X	0	0	0	%100
40	M36	Z	0	0	0	%100
41	M37	X	0	0	0	%100
42	M37	Z	0	0	0	%100
43	M40	X	1.082	1.082	0	%100
44	M40	Z	1.874	1.874	0	%100
45	M41	X	1.082	1.082	0	%100
46	M41	Z	1.874	1.874	0	%100
47	M45	X	1.931	1.931	0	%100
48	M45	Z	3.344	3.344	0	%100
49	M46A	X	1.47	1.47	0	%100
50	M46A	Z	2.546	2.546	0	%100
51	M48	X	1.535	1.535	0	%100
52	M48	Z	2.658	2.658	0	%100
53	M50A	X	1.931	1.931	0	%100
54	M50A	Z	3.344	3.344	0	%100
55	M51C	X	1.47	1.47	0	%100
56	M51C	Z	2.546	2.546	0	%100
57	M53	X	1.535	1.535	0	%100
58	M53	Z	2.658	2.658	0	%100
59	M58A	X	.382	.382	0	%100
60	M58A	Z	.662	.662	0	%100
61	M59A	X	.885	.885	0	%100
62	M59A	Z	1.533	1.533	0	%100
63	M60	X	.885	.885	0	%100
64	M60	Z	1.533	1.533	0	%100
65	M61	X	1.473	1.473	0	%100
66	M61	Z	2.551	2.551	0	%100
67	M64	X	1.082	1.082	0	%100
68	M64	Z	1.874	1.874	0	%100
69	M65	X	0	0	0	%100
70	M65	Z	0	0	0	%100
71	M69	X	.483	.483	0	%100
72	M69	Z	.836	.836	0	%100
73	M70	X	1.47	1.47	0	%100
74	M70	Z	2.546	2.546	0	%100
75	M72	X	1.535	1.535	0	%100
76	M72	Z	2.658	2.658	0	%100
77	M74	X	.483	.483	0	%100
78	M74	Z	.836	.836	0	%100
79	M75	X	0	0	0	%100
80	M75	Z	0	0	0	%100
81	M77A	X	0	0	0	%100
82	M77A	Z	0	0	0	%100
83	M82	X	0	0	0	%100
84	M82	Z	0	0	0	%100

Member Distributed Loads (BLC 58 : Structure Wi (150 Deg)) (Continued)

	Member Label	Direction	Start Magnitude[lb/ft,...	End Magnitude[lb/ft,F...	Start Location[ft,%]	End Location[ft,%]
85	M83A	X	1.136	1.136	0	%100
86	M83A	Z	1.968	1.968	0	%100
87	MP3A	X	1.218	1.218	0	%100
88	MP3A	Z	2.109	2.109	0	%100
89	MP5A	X	1.218	1.218	0	%100
90	MP5A	Z	2.109	2.109	0	%100
91	MP4C	X	1.218	1.218	0	%100
92	MP4C	Z	2.109	2.109	0	%100
93	M93	X	1.218	1.218	0	%100
94	M93	Z	2.109	2.109	0	%100
95	MP2C	X	1.218	1.218	0	%100
96	MP2C	Z	2.109	2.109	0	%100
97	MP1C	X	1.218	1.218	0	%100
98	MP1C	Z	2.109	2.109	0	%100
99	MP3C	X	1.218	1.218	0	%100
100	MP3C	Z	2.109	2.109	0	%100
101	MP5C	X	1.218	1.218	0	%100
102	MP5C	Z	2.109	2.109	0	%100
103	MP4B	X	1.218	1.218	0	%100
104	MP4B	Z	2.109	2.109	0	%100
105	M105	X	1.218	1.218	0	%100
106	M105	Z	2.109	2.109	0	%100
107	MP2B	X	1.218	1.218	0	%100
108	MP2B	Z	2.109	2.109	0	%100
109	MP1B	X	1.218	1.218	0	%100
110	MP1B	Z	2.109	2.109	0	%100
111	MP3B	X	1.218	1.218	0	%100
112	MP3B	Z	2.109	2.109	0	%100
113	MP5B	X	1.218	1.218	0	%100
114	MP5B	Z	2.109	2.109	0	%100
115	M116A	X	1.013	1.013	0	%100
116	M116A	Z	1.754	1.754	0	%100
117	M121	X	0	0	0	%100
118	M121	Z	0	0	0	%100
119	M122	X	1.013	1.013	0	%100
120	M122	Z	1.754	1.754	0	%100
121	M143	X	0	0	0	%100
122	M143	Z	0	0	0	%100
123	M144	X	1.067	1.067	0	%100
124	M144	Z	1.848	1.848	0	%100
125	M145	X	1.067	1.067	0	%100
126	M145	Z	1.848	1.848	0	%100
127	M152	X	.895	.895	0	%100
128	M152	Z	1.549	1.549	0	%100
129	M153	X	.895	.895	0	%100
130	M153	Z	1.549	1.549	0	%100
131	M154A	X	1.5	1.5	0	%100
132	M154A	Z	2.598	2.598	0	%100
133	M155A	X	1.5	1.5	0	%100
134	M155A	Z	2.598	2.598	0	%100
135	M156	X	.895	.895	0	%100
136	M156	Z	1.549	1.549	0	%100

Member Distributed Loads (BLC 58 : Structure Wi (150 Deg)) (Continued)

	Member Label	Direction	Start Magnitude[lb/ft,...	End Magnitude[lb/ft,F...	Start Location[ft,%]	End Location[ft,%]
137	M157	X	.895	.895	0	%100
138	M157	Z	1.549	1.549	0	%100

Member Distributed Loads (BLC 59 : Structure Wi (180 Deg))

	Member Label	Direction	Start Magnitude[lb/ft,...	End Magnitude[lb/ft,F...	Start Location[ft,%]	End Location[ft,%]
1	M1	X	0	0	0	%100
2	M1	Z	3.031	3.031	0	%100
3	M4	X	0	0	0	%100
4	M4	Z	0	0	0	%100
5	M10	X	0	0	0	%100
6	M10	Z	2.36	2.36	0	%100
7	MP4A	X	0	0	0	%100
8	MP4A	Z	2.436	2.436	0	%100
9	M150	X	0	0	0	%100
10	M150	Z	2.436	2.436	0	%100
11	MP2A	X	0	0	0	%100
12	MP2A	Z	2.436	2.436	0	%100
13	MP1A	X	0	0	0	%100
14	MP1A	Z	2.436	2.436	0	%100
15	M43	X	0	0	0	%100
16	M43	Z	2.36	2.36	0	%100
17	M46	X	0	0	0	%100
18	M46	Z	3.928	3.928	0	%100
19	M51B	X	0	0	0	%100
20	M51B	Z	.721	.721	0	%100
21	M52B	X	0	0	0	%100
22	M52B	Z	.721	.721	0	%100
23	M76	X	0	0	0	%100
24	M76	Z	0	0	0	%100
25	M77	X	0	0	0	%100
26	M77	Z	.98	.98	0	%100
27	M80	X	0	0	0	%100
28	M80	Z	1.023	1.023	0	%100
29	M84	X	0	0	0	%100
30	M84	Z	0	0	0	%100
31	M85	X	0	0	0	%100
32	M85	Z	.98	.98	0	%100
33	M91	X	0	0	0	%100
34	M91	Z	1.023	1.023	0	%100
35	M34	X	0	0	0	%100
36	M34	Z	2.295	2.295	0	%100
37	M35	X	0	0	0	%100
38	M35	Z	.59	.59	0	%100
39	M36	X	0	0	0	%100
40	M36	Z	.59	.59	0	%100
41	M37	X	0	0	0	%100
42	M37	Z	.982	.982	0	%100
43	M40	X	0	0	0	%100
44	M40	Z	.721	.721	0	%100
45	M41	X	0	0	0	%100
46	M41	Z	2.885	2.885	0	%100

Member Distributed Loads (BLC 59 : Structure Wi (180 Deg)) (Continued)

	Member Label	Direction	Start Magnitude[lb/ft,...	End Magnitude[lb/ft,F...	Start Location[ft,%]	End Location[ft,%]
47	M45	X	0	0	0	%100
48	M45	Z	2.896	2.896	0	%100
49	M46A	X	0	0	0	%100
50	M46A	Z	.98	.98	0	%100
51	M48	X	0	0	0	%100
52	M48	Z	1.023	1.023	0	%100
53	M50A	X	0	0	0	%100
54	M50A	Z	2.896	2.896	0	%100
55	M51C	X	0	0	0	%100
56	M51C	Z	3.92	3.92	0	%100
57	M53	X	0	0	0	%100
58	M53	Z	4.092	4.092	0	%100
59	M58A	X	0	0	0	%100
60	M58A	Z	2.295	2.295	0	%100
61	M59A	X	0	0	0	%100
62	M59A	Z	.59	.59	0	%100
63	M60	X	0	0	0	%100
64	M60	Z	.59	.59	0	%100
65	M61	X	0	0	0	%100
66	M61	Z	.982	.982	0	%100
67	M64	X	0	0	0	%100
68	M64	Z	2.885	2.885	0	%100
69	M65	X	0	0	0	%100
70	M65	Z	.721	.721	0	%100
71	M69	X	0	0	0	%100
72	M69	Z	2.896	2.896	0	%100
73	M70	X	0	0	0	%100
74	M70	Z	3.92	3.92	0	%100
75	M72	X	0	0	0	%100
76	M72	Z	4.092	4.092	0	%100
77	M74	X	0	0	0	%100
78	M74	Z	2.896	2.896	0	%100
79	M75	X	0	0	0	%100
80	M75	Z	.98	.98	0	%100
81	M77A	X	0	0	0	%100
82	M77A	Z	1.023	1.023	0	%100
83	M82	X	0	0	0	%100
84	M82	Z	.758	.758	0	%100
85	M83A	X	0	0	0	%100
86	M83A	Z	.758	.758	0	%100
87	MP3A	X	0	0	0	%100
88	MP3A	Z	2.436	2.436	0	%100
89	MP5A	X	0	0	0	%100
90	MP5A	Z	2.436	2.436	0	%100
91	MP4C	X	0	0	0	%100
92	MP4C	Z	2.436	2.436	0	%100
93	M93	X	0	0	0	%100
94	M93	Z	2.436	2.436	0	%100
95	MP2C	X	0	0	0	%100
96	MP2C	Z	2.436	2.436	0	%100
97	MP1C	X	0	0	0	%100
98	MP1C	Z	2.436	2.436	0	%100

Member Distributed Loads (BLC 59 : Structure Wi (180 Deg)) (Continued)

	Member Label	Direction	Start Magnitude[lb/ft,...	End Magnitude[lb/ft,F...	Start Location[ft,%]	End Location[ft,%]
99	MP3C	X	0	0	0	%100
100	MP3C	Z	2.436	2.436	0	%100
101	MP5C	X	0	0	0	%100
102	MP5C	Z	2.436	2.436	0	%100
103	MP4B	X	0	0	0	%100
104	MP4B	Z	2.436	2.436	0	%100
105	M105	X	0	0	0	%100
106	M105	Z	2.436	2.436	0	%100
107	MP2B	X	0	0	0	%100
108	MP2B	Z	2.436	2.436	0	%100
109	MP1B	X	0	0	0	%100
110	MP1B	Z	2.436	2.436	0	%100
111	MP3B	X	0	0	0	%100
112	MP3B	Z	2.436	2.436	0	%100
113	MP5B	X	0	0	0	%100
114	MP5B	Z	2.436	2.436	0	%100
115	M116A	X	0	0	0	%100
116	M116A	Z	2.7	2.7	0	%100
117	M121	X	0	0	0	%100
118	M121	Z	.675	.675	0	%100
119	M122	X	0	0	0	%100
120	M122	Z	.675	.675	0	%100
121	M143	X	0	0	0	%100
122	M143	Z	.711	.711	0	%100
123	M144	X	0	0	0	%100
124	M144	Z	.711	.711	0	%100
125	M145	X	0	0	0	%100
126	M145	Z	2.845	2.845	0	%100
127	M152	X	0	0	0	%100
128	M152	Z	1.386	1.386	0	%100
129	M153	X	0	0	0	%100
130	M153	Z	1.386	1.386	0	%100
131	M154A	X	0	0	0	%100
132	M154A	Z	2.596	2.596	0	%100
133	M155A	X	0	0	0	%100
134	M155A	Z	2.596	2.596	0	%100
135	M156	X	0	0	0	%100
136	M156	Z	2.596	2.596	0	%100
137	M157	X	0	0	0	%100
138	M157	Z	2.596	2.596	0	%100

Member Distributed Loads (BLC 60 : Structure Wi (210 Deg))

	Member Label	Direction	Start Magnitude[lb/ft,...	End Magnitude[lb/ft,F...	Start Location[ft,%]	End Location[ft,%]
1	M1	X	-1.136	-1.136	0	%100
2	M1	Z	1.968	1.968	0	%100
3	M4	X	-.382	-.382	0	%100
4	M4	Z	.662	.662	0	%100
5	M10	X	-.885	-.885	0	%100
6	M10	Z	1.533	1.533	0	%100
7	MP4A	X	-1.218	-1.218	0	%100
8	MP4A	Z	2.109	2.109	0	%100

Member Distributed Loads (BLC 60 : Structure Wi (210 Deg)) (Continued)

	Member Label	Direction	Start Magnitude[lb/ft,...	End Magnitude[lb/ft,F...	Start Location[ft,%]	End Location[ft,%]
9	M150	X	-1.218	-1.218	0	%100
10	M150	Z	2.109	2.109	0	%100
11	MP2A	X	-1.218	-1.218	0	%100
12	MP2A	Z	2.109	2.109	0	%100
13	MP1A	X	-1.218	-1.218	0	%100
14	MP1A	Z	2.109	2.109	0	%100
15	M43	X	-.885	-.885	0	%100
16	M43	Z	1.533	1.533	0	%100
17	M46	X	-1.473	-1.473	0	%100
18	M46	Z	2.551	2.551	0	%100
19	M51B	X	-1.082	-1.082	0	%100
20	M51B	Z	1.874	1.874	0	%100
21	M52B	X	0	0	0	%100
22	M52B	Z	0	0	0	%100
23	M76	X	-.483	-.483	0	%100
24	M76	Z	.836	.836	0	%100
25	M77	X	-1.47	-1.47	0	%100
26	M77	Z	2.546	2.546	0	%100
27	M80	X	-1.535	-1.535	0	%100
28	M80	Z	2.658	2.658	0	%100
29	M84	X	-.483	-.483	0	%100
30	M84	Z	.836	.836	0	%100
31	M85	X	0	0	0	%100
32	M85	Z	0	0	0	%100
33	M91	X	0	0	0	%100
34	M91	Z	0	0	0	%100
35	M34	X	-.382	-.382	0	%100
36	M34	Z	.662	.662	0	%100
37	M35	X	-.885	-.885	0	%100
38	M35	Z	1.533	1.533	0	%100
39	M36	X	-.885	-.885	0	%100
40	M36	Z	1.533	1.533	0	%100
41	M37	X	-1.473	-1.473	0	%100
42	M37	Z	2.551	2.551	0	%100
43	M40	X	0	0	0	%100
44	M40	Z	0	0	0	%100
45	M41	X	-1.082	-1.082	0	%100
46	M41	Z	1.874	1.874	0	%100
47	M45	X	-.483	-.483	0	%100
48	M45	Z	.836	.836	0	%100
49	M46A	X	0	0	0	%100
50	M46A	Z	0	0	0	%100
51	M48	X	0	0	0	%100
52	M48	Z	0	0	0	%100
53	M50A	X	-.483	-.483	0	%100
54	M50A	Z	.836	.836	0	%100
55	M51C	X	-1.47	-1.47	0	%100
56	M51C	Z	2.546	2.546	0	%100
57	M53	X	-1.535	-1.535	0	%100
58	M53	Z	2.658	2.658	0	%100
59	M58A	X	-1.53	-1.53	0	%100
60	M58A	Z	2.65	2.65	0	%100

Member Distributed Loads (BLC 60 : Structure Wi (210 Deg)) (Continued)

	Member Label	Direction	Start Magnitude[lb/ft,...	End Magnitude[lb/ft,F...	Start Location[ft,%]	End Location[ft,%]
61	M59A	X	0	0	0	%100
62	M59A	Z	0	0	0	%100
63	M60	X	0	0	0	%100
64	M60	Z	0	0	0	%100
65	M61	X	0	0	0	%100
66	M61	Z	0	0	0	%100
67	M64	X	-1.082	-1.082	0	%100
68	M64	Z	1.874	1.874	0	%100
69	M65	X	-1.082	-1.082	0	%100
70	M65	Z	1.874	1.874	0	%100
71	M69	X	-1.931	-1.931	0	%100
72	M69	Z	3.344	3.344	0	%100
73	M70	X	-1.47	-1.47	0	%100
74	M70	Z	2.546	2.546	0	%100
75	M72	X	-1.535	-1.535	0	%100
76	M72	Z	2.658	2.658	0	%100
77	M74	X	-1.931	-1.931	0	%100
78	M74	Z	3.344	3.344	0	%100
79	M75	X	-1.47	-1.47	0	%100
80	M75	Z	2.546	2.546	0	%100
81	M77A	X	-1.535	-1.535	0	%100
82	M77A	Z	2.658	2.658	0	%100
83	M82	X	-1.136	-1.136	0	%100
84	M82	Z	1.968	1.968	0	%100
85	M83A	X	0	0	0	%100
86	M83A	Z	0	0	0	%100
87	MP3A	X	-1.218	-1.218	0	%100
88	MP3A	Z	2.109	2.109	0	%100
89	MP5A	X	-1.218	-1.218	0	%100
90	MP5A	Z	2.109	2.109	0	%100
91	MP4C	X	-1.218	-1.218	0	%100
92	MP4C	Z	2.109	2.109	0	%100
93	M93	X	-1.218	-1.218	0	%100
94	M93	Z	2.109	2.109	0	%100
95	MP2C	X	-1.218	-1.218	0	%100
96	MP2C	Z	2.109	2.109	0	%100
97	MP1C	X	-1.218	-1.218	0	%100
98	MP1C	Z	2.109	2.109	0	%100
99	MP3C	X	-1.218	-1.218	0	%100
100	MP3C	Z	2.109	2.109	0	%100
101	MP5C	X	-1.218	-1.218	0	%100
102	MP5C	Z	2.109	2.109	0	%100
103	MP4B	X	-1.218	-1.218	0	%100
104	MP4B	Z	2.109	2.109	0	%100
105	M105	X	-1.218	-1.218	0	%100
106	M105	Z	2.109	2.109	0	%100
107	MP2B	X	-1.218	-1.218	0	%100
108	MP2B	Z	2.109	2.109	0	%100
109	MP1B	X	-1.218	-1.218	0	%100
110	MP1B	Z	2.109	2.109	0	%100
111	MP3B	X	-1.218	-1.218	0	%100
112	MP3B	Z	2.109	2.109	0	%100

Member Distributed Loads (BLC 60 : Structure Wi (210 Deg)) (Continued)

	Member Label	Direction	Start Magnitude[lb/ft,...	End Magnitude[lb/ft,F...	Start Location[ft,%]	End Location[ft,%]
113	MP5B	X	-1.218	-1.218	0	%100
114	MP5B	Z	2.109	2.109	0	%100
115	M116A	X	-1.013	-1.013	0	%100
116	M116A	Z	1.754	1.754	0	%100
117	M121	X	-1.013	-1.013	0	%100
118	M121	Z	1.754	1.754	0	%100
119	M122	X	0	0	0	%100
120	M122	Z	0	0	0	%100
121	M143	X	-1.067	-1.067	0	%100
122	M143	Z	1.848	1.848	0	%100
123	M144	X	0	0	0	%100
124	M144	Z	0	0	0	%100
125	M145	X	-1.067	-1.067	0	%100
126	M145	Z	1.848	1.848	0	%100
127	M152	X	-.895	-.895	0	%100
128	M152	Z	1.549	1.549	0	%100
129	M153	X	-.895	-.895	0	%100
130	M153	Z	1.549	1.549	0	%100
131	M154A	X	-.895	-.895	0	%100
132	M154A	Z	1.549	1.549	0	%100
133	M155A	X	-.895	-.895	0	%100
134	M155A	Z	1.549	1.549	0	%100
135	M156	X	-1.5	-1.5	0	%100
136	M156	Z	2.598	2.598	0	%100
137	M157	X	-1.5	-1.5	0	%100
138	M157	Z	2.598	2.598	0	%100

Member Distributed Loads (BLC 61 : Structure Wi (240 Deg))

	Member Label	Direction	Start Magnitude[lb/ft,...	End Magnitude[lb/ft,F...	Start Location[ft,%]	End Location[ft,%]
1	M1	X	-.656	-.656	0	%100
2	M1	Z	.379	.379	0	%100
3	M4	X	-1.987	-1.987	0	%100
4	M4	Z	1.147	1.147	0	%100
5	M10	X	-.511	-.511	0	%100
6	M10	Z	.295	.295	0	%100
7	MP4A	X	-2.109	-2.109	0	%100
8	MP4A	Z	1.218	1.218	0	%100
9	M150	X	-2.109	-2.109	0	%100
10	M150	Z	1.218	1.218	0	%100
11	MP2A	X	-2.109	-2.109	0	%100
12	MP2A	Z	1.218	1.218	0	%100
13	MP1A	X	-2.109	-2.109	0	%100
14	MP1A	Z	1.218	1.218	0	%100
15	M43	X	-.511	-.511	0	%100
16	M43	Z	.295	.295	0	%100
17	M46	X	-.85	-.85	0	%100
18	M46	Z	.491	.491	0	%100
19	M51B	X	-2.498	-2.498	0	%100
20	M51B	Z	1.442	1.442	0	%100
21	M52B	X	-.625	-.625	0	%100
22	M52B	Z	.361	.361	0	%100

Member Distributed Loads (BLC 61 : Structure Wi (240 Deg)) (Continued)

	Member Label	Direction	Start Magnitude[lb/ft,...	End Magnitude[lb/ft,F...	Start Location[ft,%]	End Location[ft,%]
23	M76	X	-2.508	-2.508	0	%100
24	M76	Z	1.448	1.448	0	%100
25	M77	X	-3.395	-3.395	0	%100
26	M77	Z	1.96	1.96	0	%100
27	M80	X	-3.544	-3.544	0	%100
28	M80	Z	2.046	2.046	0	%100
29	M84	X	-2.508	-2.508	0	%100
30	M84	Z	1.448	1.448	0	%100
31	M85	X	-.849	-.849	0	%100
32	M85	Z	.49	.49	0	%100
33	M91	X	-.886	-.886	0	%100
34	M91	Z	.512	.512	0	%100
35	M34	X	0	0	0	%100
36	M34	Z	0	0	0	%100
37	M35	X	-2.044	-2.044	0	%100
38	M35	Z	1.18	1.18	0	%100
39	M36	X	-2.044	-2.044	0	%100
40	M36	Z	1.18	1.18	0	%100
41	M37	X	-3.402	-3.402	0	%100
42	M37	Z	1.964	1.964	0	%100
43	M40	X	-.625	-.625	0	%100
44	M40	Z	.361	.361	0	%100
45	M41	X	-.625	-.625	0	%100
46	M41	Z	.361	.361	0	%100
47	M45	X	0	0	0	%100
48	M45	Z	0	0	0	%100
49	M46A	X	-.849	-.849	0	%100
50	M46A	Z	.49	.49	0	%100
51	M48	X	-.886	-.886	0	%100
52	M48	Z	.512	.512	0	%100
53	M50A	X	0	0	0	%100
54	M50A	Z	0	0	0	%100
55	M51C	X	-.849	-.849	0	%100
56	M51C	Z	.49	.49	0	%100
57	M53	X	-.886	-.886	0	%100
58	M53	Z	.512	.512	0	%100
59	M58A	X	-1.987	-1.987	0	%100
60	M58A	Z	1.147	1.147	0	%100
61	M59A	X	-.511	-.511	0	%100
62	M59A	Z	.295	.295	0	%100
63	M60	X	-.511	-.511	0	%100
64	M60	Z	.295	.295	0	%100
65	M61	X	-.85	-.85	0	%100
66	M61	Z	.491	.491	0	%100
67	M64	X	-.625	-.625	0	%100
68	M64	Z	.361	.361	0	%100
69	M65	X	-2.498	-2.498	0	%100
70	M65	Z	1.442	1.442	0	%100
71	M69	X	-2.508	-2.508	0	%100
72	M69	Z	1.448	1.448	0	%100
73	M70	X	-.849	-.849	0	%100
74	M70	Z	.49	.49	0	%100

Member Distributed Loads (BLC 61 : Structure Wi (240 Deg)) (Continued)

	Member Label	Direction	Start Magnitude[lb/ft,...	End Magnitude[lb/ft,F...	Start Location[ft,%]	End Location[ft,%]
75	M72	X	-.886	-.886	0	%100
76	M72	Z	.512	.512	0	%100
77	M74	X	-2.508	-2.508	0	%100
78	M74	Z	1.448	1.448	0	%100
79	M75	X	-3.395	-3.395	0	%100
80	M75	Z	1.96	1.96	0	%100
81	M77A	X	-3.544	-3.544	0	%100
82	M77A	Z	2.046	2.046	0	%100
83	M82	X	-2.625	-2.625	0	%100
84	M82	Z	1.515	1.515	0	%100
85	M83A	X	-.656	-.656	0	%100
86	M83A	Z	.379	.379	0	%100
87	MP3A	X	-2.109	-2.109	0	%100
88	MP3A	Z	1.218	1.218	0	%100
89	MP5A	X	-2.109	-2.109	0	%100
90	MP5A	Z	1.218	1.218	0	%100
91	MP4C	X	-2.109	-2.109	0	%100
92	MP4C	Z	1.218	1.218	0	%100
93	M93	X	-2.109	-2.109	0	%100
94	M93	Z	1.218	1.218	0	%100
95	MP2C	X	-2.109	-2.109	0	%100
96	MP2C	Z	1.218	1.218	0	%100
97	MP1C	X	-2.109	-2.109	0	%100
98	MP1C	Z	1.218	1.218	0	%100
99	MP3C	X	-2.109	-2.109	0	%100
100	MP3C	Z	1.218	1.218	0	%100
101	MP5C	X	-2.109	-2.109	0	%100
102	MP5C	Z	1.218	1.218	0	%100
103	MP4B	X	-2.109	-2.109	0	%100
104	MP4B	Z	1.218	1.218	0	%100
105	M105	X	-2.109	-2.109	0	%100
106	M105	Z	1.218	1.218	0	%100
107	MP2B	X	-2.109	-2.109	0	%100
108	MP2B	Z	1.218	1.218	0	%100
109	MP1B	X	-2.109	-2.109	0	%100
110	MP1B	Z	1.218	1.218	0	%100
111	MP3B	X	-2.109	-2.109	0	%100
112	MP3B	Z	1.218	1.218	0	%100
113	MP5B	X	-2.109	-2.109	0	%100
114	MP5B	Z	1.218	1.218	0	%100
115	M116A	X	-.585	-.585	0	%100
116	M116A	Z	.338	.338	0	%100
117	M121	X	-2.338	-2.338	0	%100
118	M121	Z	1.35	1.35	0	%100
119	M122	X	-.585	-.585	0	%100
120	M122	Z	.338	.338	0	%100
121	M143	X	-2.464	-2.464	0	%100
122	M143	Z	1.423	1.423	0	%100
123	M144	X	-.616	-.616	0	%100
124	M144	Z	.356	.356	0	%100
125	M145	X	-.616	-.616	0	%100
126	M145	Z	.356	.356	0	%100

Member Distributed Loads (BLC 61 : Structure Wi (240 Deg)) (Continued)

	Member Label	Direction	Start Magnitude[lb/ft,...	End Magnitude[lb/ft,F...	Start Location[ft,%]	End Location[ft,%]
127	M152	X	-2.248	-2.248	0	%100
128	M152	Z	1.298	1.298	0	%100
129	M153	X	-2.248	-2.248	0	%100
130	M153	Z	1.298	1.298	0	%100
131	M154A	X	-1.2	-1.2	0	%100
132	M154A	Z	.693	.693	0	%100
133	M155A	X	-1.2	-1.2	0	%100
134	M155A	Z	.693	.693	0	%100
135	M156	X	-2.248	-2.248	0	%100
136	M156	Z	1.298	1.298	0	%100
137	M157	X	-2.248	-2.248	0	%100
138	M157	Z	1.298	1.298	0	%100

Member Distributed Loads (BLC 62 : Structure Wi (270 Deg))

	Member Label	Direction	Start Magnitude[lb/ft,...	End Magnitude[lb/ft,F...	Start Location[ft,%]	End Location[ft,%]
1	M1	X	0	0	0	%100
2	M1	Z	0	0	0	%100
3	M4	X	-3.06	-3.06	0	%100
4	M4	Z	0	0	0	%100
5	M10	X	0	0	0	%100
6	M10	Z	0	0	0	%100
7	MP4A	X	-2.436	-2.436	0	%100
8	MP4A	Z	0	0	0	%100
9	M150	X	-2.436	-2.436	0	%100
10	M150	Z	0	0	0	%100
11	MP2A	X	-2.436	-2.436	0	%100
12	MP2A	Z	0	0	0	%100
13	MP1A	X	-2.436	-2.436	0	%100
14	MP1A	Z	0	0	0	%100
15	M43	X	0	0	0	%100
16	M43	Z	0	0	0	%100
17	M46	X	0	0	0	%100
18	M46	Z	0	0	0	%100
19	M51B	X	-2.164	-2.164	0	%100
20	M51B	Z	0	0	0	%100
21	M52B	X	-2.164	-2.164	0	%100
22	M52B	Z	0	0	0	%100
23	M76	X	-3.861	-3.861	0	%100
24	M76	Z	0	0	0	%100
25	M77	X	-2.94	-2.94	0	%100
26	M77	Z	0	0	0	%100
27	M80	X	-3.069	-3.069	0	%100
28	M80	Z	0	0	0	%100
29	M84	X	-3.861	-3.861	0	%100
30	M84	Z	0	0	0	%100
31	M85	X	-2.94	-2.94	0	%100
32	M85	Z	0	0	0	%100
33	M91	X	-3.069	-3.069	0	%100
34	M91	Z	0	0	0	%100
35	M34	X	-.765	-.765	0	%100
36	M34	Z	0	0	0	%100

Member Distributed Loads (BLC 62 : Structure Wi (270 Deg)) (Continued)

	Member Label	Direction	Start Magnitude[lb/ft,...	End Magnitude[lb/ft,F...	Start Location[ft,%]	End Location[ft,%]
37	M35	X	-1.77	-1.77	0	%100
38	M35	Z	0	0	0	%100
39	M36	X	-1.77	-1.77	0	%100
40	M36	Z	0	0	0	%100
41	M37	X	-2.946	-2.946	0	%100
42	M37	Z	0	0	0	%100
43	M40	X	-2.164	-2.164	0	%100
44	M40	Z	0	0	0	%100
45	M41	X	0	0	0	%100
46	M41	Z	0	0	0	%100
47	M45	X	-.965	-.965	0	%100
48	M45	Z	0	0	0	%100
49	M46A	X	-2.94	-2.94	0	%100
50	M46A	Z	0	0	0	%100
51	M48	X	-3.069	-3.069	0	%100
52	M48	Z	0	0	0	%100
53	M50A	X	-.965	-.965	0	%100
54	M50A	Z	0	0	0	%100
55	M51C	X	0	0	0	%100
56	M51C	Z	0	0	0	%100
57	M53	X	0	0	0	%100
58	M53	Z	0	0	0	%100
59	M58A	X	-.765	-.765	0	%100
60	M58A	Z	0	0	0	%100
61	M59A	X	-1.77	-1.77	0	%100
62	M59A	Z	0	0	0	%100
63	M60	X	-1.77	-1.77	0	%100
64	M60	Z	0	0	0	%100
65	M61	X	-2.946	-2.946	0	%100
66	M61	Z	0	0	0	%100
67	M64	X	0	0	0	%100
68	M64	Z	0	0	0	%100
69	M65	X	-2.164	-2.164	0	%100
70	M65	Z	0	0	0	%100
71	M69	X	-.965	-.965	0	%100
72	M69	Z	0	0	0	%100
73	M70	X	0	0	0	%100
74	M70	Z	0	0	0	%100
75	M72	X	0	0	0	%100
76	M72	Z	0	0	0	%100
77	M74	X	-.965	-.965	0	%100
78	M74	Z	0	0	0	%100
79	M75	X	-2.94	-2.94	0	%100
80	M75	Z	0	0	0	%100
81	M77A	X	-3.069	-3.069	0	%100
82	M77A	Z	0	0	0	%100
83	M82	X	-2.273	-2.273	0	%100
84	M82	Z	0	0	0	%100
85	M83A	X	-2.273	-2.273	0	%100
86	M83A	Z	0	0	0	%100
87	MP3A	X	-2.436	-2.436	0	%100
88	MP3A	Z	0	0	0	%100

Member Distributed Loads (BLC 62 : Structure Wi (270 Deg)) (Continued)

	Member Label	Direction	Start Magnitude[lb/ft,...	End Magnitude[lb/ft,F...	Start Location[ft,%]	End Location[ft,%]
89	MP5A	X	-2.436	-2.436	0	%100
90	MP5A	Z	0	0	0	%100
91	MP4C	X	-2.436	-2.436	0	%100
92	MP4C	Z	0	0	0	%100
93	M93	X	-2.436	-2.436	0	%100
94	M93	Z	0	0	0	%100
95	MP2C	X	-2.436	-2.436	0	%100
96	MP2C	Z	0	0	0	%100
97	MP1C	X	-2.436	-2.436	0	%100
98	MP1C	Z	0	0	0	%100
99	MP3C	X	-2.436	-2.436	0	%100
100	MP3C	Z	0	0	0	%100
101	MP5C	X	-2.436	-2.436	0	%100
102	MP5C	Z	0	0	0	%100
103	MP4B	X	-2.436	-2.436	0	%100
104	MP4B	Z	0	0	0	%100
105	M105	X	-2.436	-2.436	0	%100
106	M105	Z	0	0	0	%100
107	MP2B	X	-2.436	-2.436	0	%100
108	MP2B	Z	0	0	0	%100
109	MP1B	X	-2.436	-2.436	0	%100
110	MP1B	Z	0	0	0	%100
111	MP3B	X	-2.436	-2.436	0	%100
112	MP3B	Z	0	0	0	%100
113	MP5B	X	-2.436	-2.436	0	%100
114	MP5B	Z	0	0	0	%100
115	M116A	X	0	0	0	%100
116	M116A	Z	0	0	0	%100
117	M121	X	-2.025	-2.025	0	%100
118	M121	Z	0	0	0	%100
119	M122	X	-2.025	-2.025	0	%100
120	M122	Z	0	0	0	%100
121	M143	X	-2.134	-2.134	0	%100
122	M143	Z	0	0	0	%100
123	M144	X	-2.134	-2.134	0	%100
124	M144	Z	0	0	0	%100
125	M145	X	0	0	0	%100
126	M145	Z	0	0	0	%100
127	M152	X	-3	-3	0	%100
128	M152	Z	0	0	0	%100
129	M153	X	-3	-3	0	%100
130	M153	Z	0	0	0	%100
131	M154A	X	-1.789	-1.789	0	%100
132	M154A	Z	0	0	0	%100
133	M155A	X	-1.789	-1.789	0	%100
134	M155A	Z	0	0	0	%100
135	M156	X	-1.789	-1.789	0	%100
136	M156	Z	0	0	0	%100
137	M157	X	-1.789	-1.789	0	%100
138	M157	Z	0	0	0	%100

Member Distributed Loads (BLC 63 : Structure Wi (300 Deg))

	Member Label	Direction	Start Magnitude[lb/ft,...	End Magnitude[lb/ft,F...	Start Location[ft,%]	End Location[ft,%]
1	M1	X	-.656	-.656	0	%100
2	M1	Z	-.379	-.379	0	%100
3	M4	X	-1.987	-1.987	0	%100
4	M4	Z	-1.147	-1.147	0	%100
5	M10	X	-.511	-.511	0	%100
6	M10	Z	-.295	-.295	0	%100
7	MP4A	X	-2.109	-2.109	0	%100
8	MP4A	Z	-1.218	-1.218	0	%100
9	M150	X	-2.109	-2.109	0	%100
10	M150	Z	-1.218	-1.218	0	%100
11	MP2A	X	-2.109	-2.109	0	%100
12	MP2A	Z	-1.218	-1.218	0	%100
13	MP1A	X	-2.109	-2.109	0	%100
14	MP1A	Z	-1.218	-1.218	0	%100
15	M43	X	-.511	-.511	0	%100
16	M43	Z	-.295	-.295	0	%100
17	M46	X	-.85	-.85	0	%100
18	M46	Z	-.491	-.491	0	%100
19	M51B	X	-.625	-.625	0	%100
20	M51B	Z	-.361	-.361	0	%100
21	M52B	X	-2.498	-2.498	0	%100
22	M52B	Z	-1.442	-1.442	0	%100
23	M76	X	-2.508	-2.508	0	%100
24	M76	Z	-1.448	-1.448	0	%100
25	M77	X	-.849	-.849	0	%100
26	M77	Z	-.49	-.49	0	%100
27	M80	X	-.886	-.886	0	%100
28	M80	Z	-.512	-.512	0	%100
29	M84	X	-2.508	-2.508	0	%100
30	M84	Z	-1.448	-1.448	0	%100
31	M85	X	-3.395	-3.395	0	%100
32	M85	Z	-1.96	-1.96	0	%100
33	M91	X	-3.544	-3.544	0	%100
34	M91	Z	-2.046	-2.046	0	%100
35	M34	X	-1.987	-1.987	0	%100
36	M34	Z	-1.147	-1.147	0	%100
37	M35	X	-.511	-.511	0	%100
38	M35	Z	-.295	-.295	0	%100
39	M36	X	-.511	-.511	0	%100
40	M36	Z	-.295	-.295	0	%100
41	M37	X	-.85	-.85	0	%100
42	M37	Z	-.491	-.491	0	%100
43	M40	X	-2.498	-2.498	0	%100
44	M40	Z	-1.442	-1.442	0	%100
45	M41	X	-.625	-.625	0	%100
46	M41	Z	-.361	-.361	0	%100
47	M45	X	-2.508	-2.508	0	%100
48	M45	Z	-1.448	-1.448	0	%100
49	M46A	X	-3.395	-3.395	0	%100
50	M46A	Z	-1.96	-1.96	0	%100
51	M48	X	-3.544	-3.544	0	%100
52	M48	Z	-2.046	-2.046	0	%100

Member Distributed Loads (BLC 63 : Structure Wi (300 Deg)) (Continued)

	Member Label	Direction	Start Magnitude[lb/ft,...	End Magnitude[lb/ft,F...	Start Location[ft,%]	End Location[ft,%]
53	M50A	X	-2.508	-2.508	0	%100
54	M50A	Z	-1.448	-1.448	0	%100
55	M51C	X	-.849	-.849	0	%100
56	M51C	Z	-.49	-.49	0	%100
57	M53	X	-.886	-.886	0	%100
58	M53	Z	-.512	-.512	0	%100
59	M58A	X	0	0	0	%100
60	M58A	Z	0	0	0	%100
61	M59A	X	-2.044	-2.044	0	%100
62	M59A	Z	-1.18	-1.18	0	%100
63	M60	X	-2.044	-2.044	0	%100
64	M60	Z	-1.18	-1.18	0	%100
65	M61	X	-3.402	-3.402	0	%100
66	M61	Z	-1.964	-1.964	0	%100
67	M64	X	-.625	-.625	0	%100
68	M64	Z	-.361	-.361	0	%100
69	M65	X	-.625	-.625	0	%100
70	M65	Z	-.361	-.361	0	%100
71	M69	X	0	0	0	%100
72	M69	Z	0	0	0	%100
73	M70	X	-.849	-.849	0	%100
74	M70	Z	-.49	-.49	0	%100
75	M72	X	-.886	-.886	0	%100
76	M72	Z	-.512	-.512	0	%100
77	M74	X	0	0	0	%100
78	M74	Z	0	0	0	%100
79	M75	X	-.849	-.849	0	%100
80	M75	Z	-.49	-.49	0	%100
81	M77A	X	-.886	-.886	0	%100
82	M77A	Z	-.512	-.512	0	%100
83	M82	X	-.656	-.656	0	%100
84	M82	Z	-.379	-.379	0	%100
85	M83A	X	-2.625	-2.625	0	%100
86	M83A	Z	-1.515	-1.515	0	%100
87	MP3A	X	-2.109	-2.109	0	%100
88	MP3A	Z	-1.218	-1.218	0	%100
89	MP5A	X	-2.109	-2.109	0	%100
90	MP5A	Z	-1.218	-1.218	0	%100
91	MP4C	X	-2.109	-2.109	0	%100
92	MP4C	Z	-1.218	-1.218	0	%100
93	M93	X	-2.109	-2.109	0	%100
94	M93	Z	-1.218	-1.218	0	%100
95	MP2C	X	-2.109	-2.109	0	%100
96	MP2C	Z	-1.218	-1.218	0	%100
97	MP1C	X	-2.109	-2.109	0	%100
98	MP1C	Z	-1.218	-1.218	0	%100
99	MP3C	X	-2.109	-2.109	0	%100
100	MP3C	Z	-1.218	-1.218	0	%100
101	MP5C	X	-2.109	-2.109	0	%100
102	MP5C	Z	-1.218	-1.218	0	%100
103	MP4B	X	-2.109	-2.109	0	%100
104	MP4B	Z	-1.218	-1.218	0	%100

Member Distributed Loads (BLC 63 : Structure Wi (300 Deg)) (Continued)

	Member Label	Direction	Start Magnitude[lb/ft,...	End Magnitude[lb/ft,F...	Start Location[ft,%]	End Location[ft,%]
105	M105	X	-2.109	-2.109	0	%100
106	M105	Z	-1.218	-1.218	0	%100
107	MP2B	X	-2.109	-2.109	0	%100
108	MP2B	Z	-1.218	-1.218	0	%100
109	MP1B	X	-2.109	-2.109	0	%100
110	MP1B	Z	-1.218	-1.218	0	%100
111	MP3B	X	-2.109	-2.109	0	%100
112	MP3B	Z	-1.218	-1.218	0	%100
113	MP5B	X	-2.109	-2.109	0	%100
114	MP5B	Z	-1.218	-1.218	0	%100
115	M116A	X	-.585	-.585	0	%100
116	M116A	Z	-.338	-.338	0	%100
117	M121	X	-.585	-.585	0	%100
118	M121	Z	-.338	-.338	0	%100
119	M122	X	-2.338	-2.338	0	%100
120	M122	Z	-1.35	-1.35	0	%100
121	M143	X	-.616	-.616	0	%100
122	M143	Z	-.356	-.356	0	%100
123	M144	X	-2.464	-2.464	0	%100
124	M144	Z	-1.423	-1.423	0	%100
125	M145	X	-.616	-.616	0	%100
126	M145	Z	-.356	-.356	0	%100
127	M152	X	-2.248	-2.248	0	%100
128	M152	Z	-1.298	-1.298	0	%100
129	M153	X	-2.248	-2.248	0	%100
130	M153	Z	-1.298	-1.298	0	%100
131	M154A	X	-2.248	-2.248	0	%100
132	M154A	Z	-1.298	-1.298	0	%100
133	M155A	X	-2.248	-2.248	0	%100
134	M155A	Z	-1.298	-1.298	0	%100
135	M156	X	-1.2	-1.2	0	%100
136	M156	Z	-.693	-.693	0	%100
137	M157	X	-1.2	-1.2	0	%100
138	M157	Z	-.693	-.693	0	%100

Member Distributed Loads (BLC 64 : Structure Wi (330 Deg))

	Member Label	Direction	Start Magnitude[lb/ft,...	End Magnitude[lb/ft,F...	Start Location[ft,%]	End Location[ft,%]
1	M1	X	-1.136	-1.136	0	%100
2	M1	Z	-1.968	-1.968	0	%100
3	M4	X	-.382	-.382	0	%100
4	M4	Z	-.662	-.662	0	%100
5	M10	X	-.885	-.885	0	%100
6	M10	Z	-1.533	-1.533	0	%100
7	MP4A	X	-1.218	-1.218	0	%100
8	MP4A	Z	-2.109	-2.109	0	%100
9	M150	X	-1.218	-1.218	0	%100
10	M150	Z	-2.109	-2.109	0	%100
11	MP2A	X	-1.218	-1.218	0	%100
12	MP2A	Z	-2.109	-2.109	0	%100
13	MP1A	X	-1.218	-1.218	0	%100
14	MP1A	Z	-2.109	-2.109	0	%100

Member Distributed Loads (BLC 64 : Structure Wi (330 Deg)) (Continued)

	Member Label	Direction	Start Magnitude[lb/ft,...	End Magnitude[lb/ft,F...	Start Location[ft,%]	End Location[ft,%]
15	M43	X	-.885	-.885	0	%100
16	M43	Z	-1.533	-1.533	0	%100
17	M46	X	-1.473	-1.473	0	%100
18	M46	Z	-2.551	-2.551	0	%100
19	M51B	X	0	0	0	%100
20	M51B	Z	0	0	0	%100
21	M52B	X	-1.082	-1.082	0	%100
22	M52B	Z	-1.874	-1.874	0	%100
23	M76	X	-.483	-.483	0	%100
24	M76	Z	-.836	-.836	0	%100
25	M77	X	0	0	0	%100
26	M77	Z	0	0	0	%100
27	M80	X	0	0	0	%100
28	M80	Z	0	0	0	%100
29	M84	X	-.483	-.483	0	%100
30	M84	Z	-.836	-.836	0	%100
31	M85	X	-1.47	-1.47	0	%100
32	M85	Z	-2.546	-2.546	0	%100
33	M91	X	-1.535	-1.535	0	%100
34	M91	Z	-2.658	-2.658	0	%100
35	M34	X	-1.53	-1.53	0	%100
36	M34	Z	-2.65	-2.65	0	%100
37	M35	X	0	0	0	%100
38	M35	Z	0	0	0	%100
39	M36	X	0	0	0	%100
40	M36	Z	0	0	0	%100
41	M37	X	0	0	0	%100
42	M37	Z	0	0	0	%100
43	M40	X	-1.082	-1.082	0	%100
44	M40	Z	-1.874	-1.874	0	%100
45	M41	X	-1.082	-1.082	0	%100
46	M41	Z	-1.874	-1.874	0	%100
47	M45	X	-1.931	-1.931	0	%100
48	M45	Z	-3.344	-3.344	0	%100
49	M46A	X	-1.47	-1.47	0	%100
50	M46A	Z	-2.546	-2.546	0	%100
51	M48	X	-1.535	-1.535	0	%100
52	M48	Z	-2.658	-2.658	0	%100
53	M50A	X	-1.931	-1.931	0	%100
54	M50A	Z	-3.344	-3.344	0	%100
55	M51C	X	-1.47	-1.47	0	%100
56	M51C	Z	-2.546	-2.546	0	%100
57	M53	X	-1.535	-1.535	0	%100
58	M53	Z	-2.658	-2.658	0	%100
59	M58A	X	-.382	-.382	0	%100
60	M58A	Z	-.662	-.662	0	%100
61	M59A	X	-.885	-.885	0	%100
62	M59A	Z	-1.533	-1.533	0	%100
63	M60	X	-.885	-.885	0	%100
64	M60	Z	-1.533	-1.533	0	%100
65	M61	X	-1.473	-1.473	0	%100
66	M61	Z	-2.551	-2.551	0	%100

Member Distributed Loads (BLC 64 : Structure Wi (330 Deg)) (Continued)

	Member Label	Direction	Start Magnitude[lb/ft,...	End Magnitude[lb/ft,F...	Start Location[ft,%]	End Location[ft,%]
67	M64	X	-1.082	-1.082	0	%100
68	M64	Z	-1.874	-1.874	0	%100
69	M65	X	0	0	0	%100
70	M65	Z	0	0	0	%100
71	M69	X	-.483	-.483	0	%100
72	M69	Z	-.836	-.836	0	%100
73	M70	X	-1.47	-1.47	0	%100
74	M70	Z	-2.546	-2.546	0	%100
75	M72	X	-1.535	-1.535	0	%100
76	M72	Z	-2.658	-2.658	0	%100
77	M74	X	-.483	-.483	0	%100
78	M74	Z	-.836	-.836	0	%100
79	M75	X	0	0	0	%100
80	M75	Z	0	0	0	%100
81	M77A	X	0	0	0	%100
82	M77A	Z	0	0	0	%100
83	M82	X	0	0	0	%100
84	M82	Z	0	0	0	%100
85	M83A	X	-1.136	-1.136	0	%100
86	M83A	Z	-1.968	-1.968	0	%100
87	MP3A	X	-1.218	-1.218	0	%100
88	MP3A	Z	-2.109	-2.109	0	%100
89	MP5A	X	-1.218	-1.218	0	%100
90	MP5A	Z	-2.109	-2.109	0	%100
91	MP4C	X	-1.218	-1.218	0	%100
92	MP4C	Z	-2.109	-2.109	0	%100
93	M93	X	-1.218	-1.218	0	%100
94	M93	Z	-2.109	-2.109	0	%100
95	MP2C	X	-1.218	-1.218	0	%100
96	MP2C	Z	-2.109	-2.109	0	%100
97	MP1C	X	-1.218	-1.218	0	%100
98	MP1C	Z	-2.109	-2.109	0	%100
99	MP3C	X	-1.218	-1.218	0	%100
100	MP3C	Z	-2.109	-2.109	0	%100
101	MP5C	X	-1.218	-1.218	0	%100
102	MP5C	Z	-2.109	-2.109	0	%100
103	MP4B	X	-1.218	-1.218	0	%100
104	MP4B	Z	-2.109	-2.109	0	%100
105	M105	X	-1.218	-1.218	0	%100
106	M105	Z	-2.109	-2.109	0	%100
107	MP2B	X	-1.218	-1.218	0	%100
108	MP2B	Z	-2.109	-2.109	0	%100
109	MP1B	X	-1.218	-1.218	0	%100
110	MP1B	Z	-2.109	-2.109	0	%100
111	MP3B	X	-1.218	-1.218	0	%100
112	MP3B	Z	-2.109	-2.109	0	%100
113	MP5B	X	-1.218	-1.218	0	%100
114	MP5B	Z	-2.109	-2.109	0	%100
115	M116A	X	-1.013	-1.013	0	%100
116	M116A	Z	-1.754	-1.754	0	%100
117	M121	X	0	0	0	%100
118	M121	Z	0	0	0	%100

Member Distributed Loads (BLC 64 : Structure Wi (330 Deg)) (Continued)

	Member Label	Direction	Start Magnitude[lb/ft,...	End Magnitude[lb/ft,F...	Start Location[ft,%]	End Location[ft,%]
119	M122	X	-1.013	-1.013	0	%100
120	M122	Z	-1.754	-1.754	0	%100
121	M143	X	0	0	0	%100
122	M143	Z	0	0	0	%100
123	M144	X	-1.067	-1.067	0	%100
124	M144	Z	-1.848	-1.848	0	%100
125	M145	X	-1.067	-1.067	0	%100
126	M145	Z	-1.848	-1.848	0	%100
127	M152	X	-.895	-.895	0	%100
128	M152	Z	-1.549	-1.549	0	%100
129	M153	X	-.895	-.895	0	%100
130	M153	Z	-1.549	-1.549	0	%100
131	M154A	X	-1.5	-1.5	0	%100
132	M154A	Z	-2.598	-2.598	0	%100
133	M155A	X	-1.5	-1.5	0	%100
134	M155A	Z	-2.598	-2.598	0	%100
135	M156	X	-.895	-.895	0	%100
136	M156	Z	-1.549	-1.549	0	%100
137	M157	X	-.895	-.895	0	%100
138	M157	Z	-1.549	-1.549	0	%100

Member Distributed Loads (BLC 65 : Structure Wm (0 Deg))

	Member Label	Direction	Start Magnitude[lb/ft,...	End Magnitude[lb/ft,F...	Start Location[ft,%]	End Location[ft,%]
1	M1	X	0	0	0	%100
2	M1	Z	-.666	-.666	0	%100
3	M4	X	0	0	0	%100
4	M4	Z	0	0	0	%100
5	M10	X	0	0	0	%100
6	M10	Z	-.521	-.521	0	%100
7	MP4A	X	0	0	0	%100
8	MP4A	Z	-.452	-.452	0	%100
9	M150	X	0	0	0	%100
10	M150	Z	-.452	-.452	0	%100
11	MP2A	X	0	0	0	%100
12	MP2A	Z	-.452	-.452	0	%100
13	MP1A	X	0	0	0	%100
14	MP1A	Z	-.452	-.452	0	%100
15	M43	X	0	0	0	%100
16	M43	Z	-.521	-.521	0	%100
17	M46	X	0	0	0	%100
18	M46	Z	-1.142	-1.142	0	%100
19	M51B	X	0	0	0	%100
20	M51B	Z	-.159	-.159	0	%100
21	M52B	X	0	0	0	%100
22	M52B	Z	-.159	-.159	0	%100
23	M76	X	0	0	0	%100
24	M76	Z	0	0	0	%100
25	M77	X	0	0	0	%100
26	M77	Z	-.291	-.291	0	%100
27	M80	X	0	0	0	%100
28	M80	Z	-.306	-.306	0	%100

Member Distributed Loads (BLC 65 : Structure Wm (0 Deg)) (Continued)

	Member Label	Direction	Start Magnitude[lb/ft,...	End Magnitude[lb/ft,F...	Start Location[ft,%]	End Location[ft,%]
29	M84	X	0	0	0	%100
30	M84	Z	0	0	0	%100
31	M85	X	0	0	0	%100
32	M85	Z	-.291	-.291	0	%100
33	M91	X	0	0	0	%100
34	M91	Z	-.306	-.306	0	%100
35	M34	X	0	0	0	%100
36	M34	Z	-.508	-.508	0	%100
37	M35	X	0	0	0	%100
38	M35	Z	-.13	-.13	0	%100
39	M36	X	0	0	0	%100
40	M36	Z	-.13	-.13	0	%100
41	M37	X	0	0	0	%100
42	M37	Z	-.286	-.286	0	%100
43	M40	X	0	0	0	%100
44	M40	Z	-.159	-.159	0	%100
45	M41	X	0	0	0	%100
46	M41	Z	-.634	-.634	0	%100
47	M45	X	0	0	0	%100
48	M45	Z	-.857	-.857	0	%100
49	M46A	X	0	0	0	%100
50	M46A	Z	-.291	-.291	0	%100
51	M48	X	0	0	0	%100
52	M48	Z	-.306	-.306	0	%100
53	M50A	X	0	0	0	%100
54	M50A	Z	-.857	-.857	0	%100
55	M51C	X	0	0	0	%100
56	M51C	Z	-1.164	-1.164	0	%100
57	M53	X	0	0	0	%100
58	M53	Z	-1.226	-1.226	0	%100
59	M58A	X	0	0	0	%100
60	M58A	Z	-.508	-.508	0	%100
61	M59A	X	0	0	0	%100
62	M59A	Z	-.13	-.13	0	%100
63	M60	X	0	0	0	%100
64	M60	Z	-.13	-.13	0	%100
65	M61	X	0	0	0	%100
66	M61	Z	-.286	-.286	0	%100
67	M64	X	0	0	0	%100
68	M64	Z	-.634	-.634	0	%100
69	M65	X	0	0	0	%100
70	M65	Z	-.159	-.159	0	%100
71	M69	X	0	0	0	%100
72	M69	Z	-.857	-.857	0	%100
73	M70	X	0	0	0	%100
74	M70	Z	-1.164	-1.164	0	%100
75	M72	X	0	0	0	%100
76	M72	Z	-1.226	-1.226	0	%100
77	M74	X	0	0	0	%100
78	M74	Z	-.857	-.857	0	%100
79	M75	X	0	0	0	%100
80	M75	Z	-.291	-.291	0	%100

Member Distributed Loads (BLC 65 : Structure Wm (0 Deg)) (Continued)

	Member Label	Direction	Start Magnitude[lb/ft,...	End Magnitude[lb/ft,F...	Start Location[ft,%]	End Location[ft,%]
81	M77A	X	0	0	0	%100
82	M77A	Z	-.306	-.306	0	%100
83	M82	X	0	0	0	%100
84	M82	Z	-.167	-.167	0	%100
85	M83A	X	0	0	0	%100
86	M83A	Z	-.167	-.167	0	%100
87	MP3A	X	0	0	0	%100
88	MP3A	Z	-.452	-.452	0	%100
89	MP5A	X	0	0	0	%100
90	MP5A	Z	-.452	-.452	0	%100
91	MP4C	X	0	0	0	%100
92	MP4C	Z	-.452	-.452	0	%100
93	M93	X	0	0	0	%100
94	M93	Z	-.452	-.452	0	%100
95	MP2C	X	0	0	0	%100
96	MP2C	Z	-.452	-.452	0	%100
97	MP1C	X	0	0	0	%100
98	MP1C	Z	-.452	-.452	0	%100
99	MP3C	X	0	0	0	%100
100	MP3C	Z	-.452	-.452	0	%100
101	MP5C	X	0	0	0	%100
102	MP5C	Z	-.452	-.452	0	%100
103	MP4B	X	0	0	0	%100
104	MP4B	Z	-.452	-.452	0	%100
105	M105	X	0	0	0	%100
106	M105	Z	-.452	-.452	0	%100
107	MP2B	X	0	0	0	%100
108	MP2B	Z	-.452	-.452	0	%100
109	MP1B	X	0	0	0	%100
110	MP1B	Z	-.452	-.452	0	%100
111	MP3B	X	0	0	0	%100
112	MP3B	Z	-.452	-.452	0	%100
113	MP5B	X	0	0	0	%100
114	MP5B	Z	-.452	-.452	0	%100
115	M116A	X	0	0	0	%100
116	M116A	Z	-.547	-.547	0	%100
117	M121	X	0	0	0	%100
118	M121	Z	-.137	-.137	0	%100
119	M122	X	0	0	0	%100
120	M122	Z	-.137	-.137	0	%100
121	M143	X	0	0	0	%100
122	M143	Z	-.175	-.175	0	%100
123	M144	X	0	0	0	%100
124	M144	Z	-.175	-.175	0	%100
125	M145	X	0	0	0	%100
126	M145	Z	-.7	-.7	0	%100
127	M152	X	0	0	0	%100
128	M152	Z	-.322	-.322	0	%100
129	M153	X	0	0	0	%100
130	M153	Z	-.322	-.322	0	%100
131	M154A	X	0	0	0	%100
132	M154A	Z	-.603	-.603	0	%100

Member Distributed Loads (BLC 65 : Structure Wm (0 Deg)) (Continued)

	Member Label	Direction	Start Magnitude[lb/ft,...	End Magnitude[lb/ft,F...	Start Location[ft,%]	End Location[ft,%]
133	M155A	X	0	0	0	%100
134	M155A	Z	-.603	-.603	0	%100
135	M156	X	0	0	0	%100
136	M156	Z	-.603	-.603	0	%100
137	M157	X	0	0	0	%100
138	M157	Z	-.603	-.603	0	%100

Member Distributed Loads (BLC 66 : Structure Wm (30 Deg))

	Member Label	Direction	Start Magnitude[lb/ft,...	End Magnitude[lb/ft,F...	Start Location[ft,%]	End Location[ft,%]
1	M1	X	.25	.25	0	%100
2	M1	Z	-.433	-.433	0	%100
3	M4	X	.085	.085	0	%100
4	M4	Z	-.147	-.147	0	%100
5	M10	X	.195	.195	0	%100
6	M10	Z	-.338	-.338	0	%100
7	MP4A	X	.226	.226	0	%100
8	MP4A	Z	-.392	-.392	0	%100
9	M150	X	.226	.226	0	%100
10	M150	Z	-.392	-.392	0	%100
11	MP2A	X	.226	.226	0	%100
12	MP2A	Z	-.392	-.392	0	%100
13	MP1A	X	.226	.226	0	%100
14	MP1A	Z	-.392	-.392	0	%100
15	M43	X	.195	.195	0	%100
16	M43	Z	-.338	-.338	0	%100
17	M46	X	.428	.428	0	%100
18	M46	Z	-.742	-.742	0	%100
19	M51B	X	.238	.238	0	%100
20	M51B	Z	-.412	-.412	0	%100
21	M52B	X	0	0	0	%100
22	M52B	Z	0	0	0	%100
23	M76	X	.143	.143	0	%100
24	M76	Z	-.247	-.247	0	%100
25	M77	X	.436	.436	0	%100
26	M77	Z	-.756	-.756	0	%100
27	M80	X	.46	.46	0	%100
28	M80	Z	-.796	-.796	0	%100
29	M84	X	.143	.143	0	%100
30	M84	Z	-.247	-.247	0	%100
31	M85	X	0	0	0	%100
32	M85	Z	0	0	0	%100
33	M91	X	0	0	0	%100
34	M91	Z	0	0	0	%100
35	M34	X	.085	.085	0	%100
36	M34	Z	-.147	-.147	0	%100
37	M35	X	.195	.195	0	%100
38	M35	Z	-.338	-.338	0	%100
39	M36	X	.195	.195	0	%100
40	M36	Z	-.338	-.338	0	%100
41	M37	X	.428	.428	0	%100
42	M37	Z	-.742	-.742	0	%100

Member Distributed Loads (BLC 66 : Structure Wm (30 Deg)) (Continued)

	Member Label	Direction	Start Magnitude[lb/ft,...	End Magnitude[lb/ft,F...	Start Location[ft,%]	End Location[ft,%]
43	M40	X	0	0	0	%100
44	M40	Z	0	0	0	%100
45	M41	X	.238	.238	0	%100
46	M41	Z	-.412	-.412	0	%100
47	M45	X	.143	.143	0	%100
48	M45	Z	-.247	-.247	0	%100
49	M46A	X	0	0	0	%100
50	M46A	Z	0	0	0	%100
51	M48	X	0	0	0	%100
52	M48	Z	0	0	0	%100
53	M50A	X	.143	.143	0	%100
54	M50A	Z	-.247	-.247	0	%100
55	M51C	X	.436	.436	0	%100
56	M51C	Z	-.756	-.756	0	%100
57	M53	X	.46	.46	0	%100
58	M53	Z	-.796	-.796	0	%100
59	M58A	X	.338	.338	0	%100
60	M58A	Z	-.586	-.586	0	%100
61	M59A	X	0	0	0	%100
62	M59A	Z	0	0	0	%100
63	M60	X	0	0	0	%100
64	M60	Z	0	0	0	%100
65	M61	X	0	0	0	%100
66	M61	Z	0	0	0	%100
67	M64	X	.238	.238	0	%100
68	M64	Z	-.412	-.412	0	%100
69	M65	X	.238	.238	0	%100
70	M65	Z	-.412	-.412	0	%100
71	M69	X	.571	.571	0	%100
72	M69	Z	-.989	-.989	0	%100
73	M70	X	.436	.436	0	%100
74	M70	Z	-.756	-.756	0	%100
75	M72	X	.46	.46	0	%100
76	M72	Z	-.796	-.796	0	%100
77	M74	X	.571	.571	0	%100
78	M74	Z	-.989	-.989	0	%100
79	M75	X	.436	.436	0	%100
80	M75	Z	-.756	-.756	0	%100
81	M77A	X	.46	.46	0	%100
82	M77A	Z	-.796	-.796	0	%100
83	M82	X	.25	.25	0	%100
84	M82	Z	-.433	-.433	0	%100
85	M83A	X	0	0	0	%100
86	M83A	Z	0	0	0	%100
87	MP3A	X	.226	.226	0	%100
88	MP3A	Z	-.392	-.392	0	%100
89	MP5A	X	.226	.226	0	%100
90	MP5A	Z	-.392	-.392	0	%100
91	MP4C	X	.226	.226	0	%100
92	MP4C	Z	-.392	-.392	0	%100
93	M93	X	.226	.226	0	%100
94	M93	Z	-.392	-.392	0	%100

Member Distributed Loads (BLC 66 : Structure Wm (30 Deg)) (Continued)

	Member Label	Direction	Start Magnitude[lb/ft,...	End Magnitude[lb/ft,F...	Start Location[ft,%]	End Location[ft,%]
95	MP2C	X	.226	.226	0	%100
96	MP2C	Z	-.392	-.392	0	%100
97	MP1C	X	.226	.226	0	%100
98	MP1C	Z	-.392	-.392	0	%100
99	MP3C	X	.226	.226	0	%100
100	MP3C	Z	-.392	-.392	0	%100
101	MP5C	X	.226	.226	0	%100
102	MP5C	Z	-.392	-.392	0	%100
103	MP4B	X	.226	.226	0	%100
104	MP4B	Z	-.392	-.392	0	%100
105	M105	X	.226	.226	0	%100
106	M105	Z	-.392	-.392	0	%100
107	MP2B	X	.226	.226	0	%100
108	MP2B	Z	-.392	-.392	0	%100
109	MP1B	X	.226	.226	0	%100
110	MP1B	Z	-.392	-.392	0	%100
111	MP3B	X	.226	.226	0	%100
112	MP3B	Z	-.392	-.392	0	%100
113	MP5B	X	.226	.226	0	%100
114	MP5B	Z	-.392	-.392	0	%100
115	M116A	X	.205	.205	0	%100
116	M116A	Z	-.356	-.356	0	%100
117	M121	X	.205	.205	0	%100
118	M121	Z	-.356	-.356	0	%100
119	M122	X	0	0	0	%100
120	M122	Z	0	0	0	%100
121	M143	X	.262	.262	0	%100
122	M143	Z	-.455	-.455	0	%100
123	M144	X	0	0	0	%100
124	M144	Z	0	0	0	%100
125	M145	X	.262	.262	0	%100
126	M145	Z	-.455	-.455	0	%100
127	M152	X	.208	.208	0	%100
128	M152	Z	-.36	-.36	0	%100
129	M153	X	.208	.208	0	%100
130	M153	Z	-.36	-.36	0	%100
131	M154A	X	.208	.208	0	%100
132	M154A	Z	-.36	-.36	0	%100
133	M155A	X	.208	.208	0	%100
134	M155A	Z	-.36	-.36	0	%100
135	M156	X	.348	.348	0	%100
136	M156	Z	-.603	-.603	0	%100
137	M157	X	.348	.348	0	%100
138	M157	Z	-.603	-.603	0	%100

Member Distributed Loads (BLC 67 : Structure Wm (60 Deg))

	Member Label	Direction	Start Magnitude[lb/ft,...	End Magnitude[lb/ft,F...	Start Location[ft,%]	End Location[ft,%]
1	M1	X	.144	.144	0	%100
2	M1	Z	-.083	-.083	0	%100
3	M4	X	.44	.44	0	%100
4	M4	Z	-.254	-.254	0	%100

Member Distributed Loads (BLC 67 : Structure Wm (60 Deg)) (Continued)

	Member Label	Direction	Start Magnitude[lb/ft,...	End Magnitude[lb/ft,F...	Start Location[ft,%]	End Location[ft,%]
5	M10	X	.113	.113	0	%100
6	M10	Z	-.065	-.065	0	%100
7	MP4A	X	.392	.392	0	%100
8	MP4A	Z	-.226	-.226	0	%100
9	M150	X	.392	.392	0	%100
10	M150	Z	-.226	-.226	0	%100
11	MP2A	X	.392	.392	0	%100
12	MP2A	Z	-.226	-.226	0	%100
13	MP1A	X	.392	.392	0	%100
14	MP1A	Z	-.226	-.226	0	%100
15	M43	X	.113	.113	0	%100
16	M43	Z	-.065	-.065	0	%100
17	M46	X	.247	.247	0	%100
18	M46	Z	-.143	-.143	0	%100
19	M51B	X	.549	.549	0	%100
20	M51B	Z	-.317	-.317	0	%100
21	M52B	X	.137	.137	0	%100
22	M52B	Z	-.079	-.079	0	%100
23	M76	X	.742	.742	0	%100
24	M76	Z	-.428	-.428	0	%100
25	M77	X	1.008	1.008	0	%100
26	M77	Z	-.582	-.582	0	%100
27	M80	X	1.061	1.061	0	%100
28	M80	Z	-.613	-.613	0	%100
29	M84	X	.742	.742	0	%100
30	M84	Z	-.428	-.428	0	%100
31	M85	X	.252	.252	0	%100
32	M85	Z	-.145	-.145	0	%100
33	M91	X	.265	.265	0	%100
34	M91	Z	-.153	-.153	0	%100
35	M34	X	0	0	0	%100
36	M34	Z	0	0	0	%100
37	M35	X	.451	.451	0	%100
38	M35	Z	-.26	-.26	0	%100
39	M36	X	.451	.451	0	%100
40	M36	Z	-.26	-.26	0	%100
41	M37	X	.989	.989	0	%100
42	M37	Z	-.571	-.571	0	%100
43	M40	X	.137	.137	0	%100
44	M40	Z	-.079	-.079	0	%100
45	M41	X	.137	.137	0	%100
46	M41	Z	-.079	-.079	0	%100
47	M45	X	0	0	0	%100
48	M45	Z	0	0	0	%100
49	M46A	X	.252	.252	0	%100
50	M46A	Z	-.145	-.145	0	%100
51	M48	X	.265	.265	0	%100
52	M48	Z	-.153	-.153	0	%100
53	M50A	X	0	0	0	%100
54	M50A	Z	0	0	0	%100
55	M51C	X	.252	.252	0	%100
56	M51C	Z	-.145	-.145	0	%100

Member Distributed Loads (BLC 67 : Structure Wm (60 Deg)) (Continued)

	Member Label	Direction	Start Magnitude[lb/ft,...	End Magnitude[lb/ft,F...	Start Location[ft,%]	End Location[ft,%]
57	M53	X	.265	.265	0	%100
58	M53	Z	-.153	-.153	0	%100
59	M58A	X	.44	.44	0	%100
60	M58A	Z	-.254	-.254	0	%100
61	M59A	X	.113	.113	0	%100
62	M59A	Z	-.065	-.065	0	%100
63	M60	X	.113	.113	0	%100
64	M60	Z	-.065	-.065	0	%100
65	M61	X	.247	.247	0	%100
66	M61	Z	-.143	-.143	0	%100
67	M64	X	.137	.137	0	%100
68	M64	Z	-.079	-.079	0	%100
69	M65	X	.549	.549	0	%100
70	M65	Z	-.317	-.317	0	%100
71	M69	X	.742	.742	0	%100
72	M69	Z	-.428	-.428	0	%100
73	M70	X	.252	.252	0	%100
74	M70	Z	-.145	-.145	0	%100
75	M72	X	.265	.265	0	%100
76	M72	Z	-.153	-.153	0	%100
77	M74	X	.742	.742	0	%100
78	M74	Z	-.428	-.428	0	%100
79	M75	X	1.008	1.008	0	%100
80	M75	Z	-.582	-.582	0	%100
81	M77A	X	1.061	1.061	0	%100
82	M77A	Z	-.613	-.613	0	%100
83	M82	X	.577	.577	0	%100
84	M82	Z	-.333	-.333	0	%100
85	M83A	X	.144	.144	0	%100
86	M83A	Z	-.083	-.083	0	%100
87	MP3A	X	.392	.392	0	%100
88	MP3A	Z	-.226	-.226	0	%100
89	MP5A	X	.392	.392	0	%100
90	MP5A	Z	-.226	-.226	0	%100
91	MP4C	X	.392	.392	0	%100
92	MP4C	Z	-.226	-.226	0	%100
93	M93	X	.392	.392	0	%100
94	M93	Z	-.226	-.226	0	%100
95	MP2C	X	.392	.392	0	%100
96	MP2C	Z	-.226	-.226	0	%100
97	MP1C	X	.392	.392	0	%100
98	MP1C	Z	-.226	-.226	0	%100
99	MP3C	X	.392	.392	0	%100
100	MP3C	Z	-.226	-.226	0	%100
101	MP5C	X	.392	.392	0	%100
102	MP5C	Z	-.226	-.226	0	%100
103	MP4B	X	.392	.392	0	%100
104	MP4B	Z	-.226	-.226	0	%100
105	M105	X	.392	.392	0	%100
106	M105	Z	-.226	-.226	0	%100
107	MP2B	X	.392	.392	0	%100
108	MP2B	Z	-.226	-.226	0	%100

Member Distributed Loads (BLC 67 : Structure Wm (60 Deg)) (Continued)

	Member Label	Direction	Start Magnitude[lb/ft,...	End Magnitude[lb/ft,F...	Start Location[ft,%]	End Location[ft,%]
109	MP1B	X	.392	.392	0	%100
110	MP1B	Z	-.226	-.226	0	%100
111	MP3B	X	.392	.392	0	%100
112	MP3B	Z	-.226	-.226	0	%100
113	MP5B	X	.392	.392	0	%100
114	MP5B	Z	-.226	-.226	0	%100
115	M116A	X	.119	.119	0	%100
116	M116A	Z	-.068	-.068	0	%100
117	M121	X	.474	.474	0	%100
118	M121	Z	-.274	-.274	0	%100
119	M122	X	.119	.119	0	%100
120	M122	Z	-.068	-.068	0	%100
121	M143	X	.606	.606	0	%100
122	M143	Z	-.35	-.35	0	%100
123	M144	X	.152	.152	0	%100
124	M144	Z	-.087	-.087	0	%100
125	M145	X	.152	.152	0	%100
126	M145	Z	-.087	-.087	0	%100
127	M152	X	.522	.522	0	%100
128	M152	Z	-.301	-.301	0	%100
129	M153	X	.522	.522	0	%100
130	M153	Z	-.301	-.301	0	%100
131	M154A	X	.279	.279	0	%100
132	M154A	Z	-.161	-.161	0	%100
133	M155A	X	.279	.279	0	%100
134	M155A	Z	-.161	-.161	0	%100
135	M156	X	.522	.522	0	%100
136	M156	Z	-.301	-.301	0	%100
137	M157	X	.522	.522	0	%100
138	M157	Z	-.301	-.301	0	%100

Member Distributed Loads (BLC 68 : Structure Wm (90 Deg))

	Member Label	Direction	Start Magnitude[lb/ft,...	End Magnitude[lb/ft,F...	Start Location[ft,%]	End Location[ft,%]
1	M1	X	0	0	0	%100
2	M1	Z	0	0	0	%100
3	M4	X	.677	.677	0	%100
4	M4	Z	0	0	0	%100
5	M10	X	0	0	0	%100
6	M10	Z	0	0	0	%100
7	MP4A	X	.452	.452	0	%100
8	MP4A	Z	0	0	0	%100
9	M150	X	.452	.452	0	%100
10	M150	Z	0	0	0	%100
11	MP2A	X	.452	.452	0	%100
12	MP2A	Z	0	0	0	%100
13	MP1A	X	.452	.452	0	%100
14	MP1A	Z	0	0	0	%100
15	M43	X	0	0	0	%100
16	M43	Z	0	0	0	%100
17	M46	X	0	0	0	%100
18	M46	Z	0	0	0	%100

Member Distributed Loads (BLC 68 : Structure Wm (90 Deg)) (Continued)

	Member Label	Direction	Start Magnitude[lb/ft,...	End Magnitude[lb/ft,F...	Start Location[ft,%]	End Location[ft,%]
19	M51B	X	.476	.476	0	%100
20	M51B	Z	0	0	0	%100
21	M52B	X	.476	.476	0	%100
22	M52B	Z	0	0	0	%100
23	M76	X	1.142	1.142	0	%100
24	M76	Z	0	0	0	%100
25	M77	X	.873	.873	0	%100
26	M77	Z	0	0	0	%100
27	M80	X	.919	.919	0	%100
28	M80	Z	0	0	0	%100
29	M84	X	1.142	1.142	0	%100
30	M84	Z	0	0	0	%100
31	M85	X	.873	.873	0	%100
32	M85	Z	0	0	0	%100
33	M91	X	.919	.919	0	%100
34	M91	Z	0	0	0	%100
35	M34	X	.169	.169	0	%100
36	M34	Z	0	0	0	%100
37	M35	X	.391	.391	0	%100
38	M35	Z	0	0	0	%100
39	M36	X	.391	.391	0	%100
40	M36	Z	0	0	0	%100
41	M37	X	.857	.857	0	%100
42	M37	Z	0	0	0	%100
43	M40	X	.476	.476	0	%100
44	M40	Z	0	0	0	%100
45	M41	X	0	0	0	%100
46	M41	Z	0	0	0	%100
47	M45	X	.286	.286	0	%100
48	M45	Z	0	0	0	%100
49	M46A	X	.873	.873	0	%100
50	M46A	Z	0	0	0	%100
51	M48	X	.919	.919	0	%100
52	M48	Z	0	0	0	%100
53	M50A	X	.286	.286	0	%100
54	M50A	Z	0	0	0	%100
55	M51C	X	0	0	0	%100
56	M51C	Z	0	0	0	%100
57	M53	X	0	0	0	%100
58	M53	Z	0	0	0	%100
59	M58A	X	.169	.169	0	%100
60	M58A	Z	0	0	0	%100
61	M59A	X	.391	.391	0	%100
62	M59A	Z	0	0	0	%100
63	M60	X	.391	.391	0	%100
64	M60	Z	0	0	0	%100
65	M61	X	.857	.857	0	%100
66	M61	Z	0	0	0	%100
67	M64	X	0	0	0	%100
68	M64	Z	0	0	0	%100
69	M65	X	.476	.476	0	%100
70	M65	Z	0	0	0	%100

Member Distributed Loads (BLC 68 : Structure Wm (90 Deg)) (Continued)

	Member Label	Direction	Start Magnitude[lb/ft,...	End Magnitude[lb/ft,F...	Start Location[ft,%]	End Location[ft,%]
71	M69	X	.286	.286	0	%100
72	M69	Z	0	0	0	%100
73	M70	X	0	0	0	%100
74	M70	Z	0	0	0	%100
75	M72	X	0	0	0	%100
76	M72	Z	0	0	0	%100
77	M74	X	.286	.286	0	%100
78	M74	Z	0	0	0	%100
79	M75	X	.873	.873	0	%100
80	M75	Z	0	0	0	%100
81	M77A	X	.919	.919	0	%100
82	M77A	Z	0	0	0	%100
83	M82	X	.5	.5	0	%100
84	M82	Z	0	0	0	%100
85	M83A	X	.5	.5	0	%100
86	M83A	Z	0	0	0	%100
87	MP3A	X	.452	.452	0	%100
88	MP3A	Z	0	0	0	%100
89	MP5A	X	.452	.452	0	%100
90	MP5A	Z	0	0	0	%100
91	MP4C	X	.452	.452	0	%100
92	MP4C	Z	0	0	0	%100
93	M93	X	.452	.452	0	%100
94	M93	Z	0	0	0	%100
95	MP2C	X	.452	.452	0	%100
96	MP2C	Z	0	0	0	%100
97	MP1C	X	.452	.452	0	%100
98	MP1C	Z	0	0	0	%100
99	MP3C	X	.452	.452	0	%100
100	MP3C	Z	0	0	0	%100
101	MP5C	X	.452	.452	0	%100
102	MP5C	Z	0	0	0	%100
103	MP4B	X	.452	.452	0	%100
104	MP4B	Z	0	0	0	%100
105	M105	X	.452	.452	0	%100
106	M105	Z	0	0	0	%100
107	MP2B	X	.452	.452	0	%100
108	MP2B	Z	0	0	0	%100
109	MP1B	X	.452	.452	0	%100
110	MP1B	Z	0	0	0	%100
111	MP3B	X	.452	.452	0	%100
112	MP3B	Z	0	0	0	%100
113	MP5B	X	.452	.452	0	%100
114	MP5B	Z	0	0	0	%100
115	M116A	X	0	0	0	%100
116	M116A	Z	0	0	0	%100
117	M121	X	.411	.411	0	%100
118	M121	Z	0	0	0	%100
119	M122	X	.411	.411	0	%100
120	M122	Z	0	0	0	%100
121	M143	X	.525	.525	0	%100
122	M143	Z	0	0	0	%100

Member Distributed Loads (BLC 68 : Structure Wm (90 Deg)) (Continued)

	Member Label	Direction	Start Magnitude[lb/ft,...	End Magnitude[lb/ft,F...	Start Location[ft,%]	End Location[ft,%]
123	M144	X	.525	.525	0	%100
124	M144	Z	0	0	0	%100
125	M145	X	0	0	0	%100
126	M145	Z	0	0	0	%100
127	M152	X	.696	.696	0	%100
128	M152	Z	0	0	0	%100
129	M153	X	.696	.696	0	%100
130	M153	Z	0	0	0	%100
131	M154A	X	.415	.415	0	%100
132	M154A	Z	0	0	0	%100
133	M155A	X	.415	.415	0	%100
134	M155A	Z	0	0	0	%100
135	M156	X	.415	.415	0	%100
136	M156	Z	0	0	0	%100
137	M157	X	.415	.415	0	%100
138	M157	Z	0	0	0	%100

Member Distributed Loads (BLC 69 : Structure Wm (120 Deg))

	Member Label	Direction	Start Magnitude[lb/ft,...	End Magnitude[lb/ft,F...	Start Location[ft,%]	End Location[ft,%]
1	M1	X	.144	.144	0	%100
2	M1	Z	.083	.083	0	%100
3	M4	X	.44	.44	0	%100
4	M4	Z	.254	.254	0	%100
5	M10	X	.113	.113	0	%100
6	M10	Z	.065	.065	0	%100
7	MP4A	X	.392	.392	0	%100
8	MP4A	Z	.226	.226	0	%100
9	M150	X	.392	.392	0	%100
10	M150	Z	.226	.226	0	%100
11	MP2A	X	.392	.392	0	%100
12	MP2A	Z	.226	.226	0	%100
13	MP1A	X	.392	.392	0	%100
14	MP1A	Z	.226	.226	0	%100
15	M43	X	.113	.113	0	%100
16	M43	Z	.065	.065	0	%100
17	M46	X	.247	.247	0	%100
18	M46	Z	.143	.143	0	%100
19	M51B	X	.137	.137	0	%100
20	M51B	Z	.079	.079	0	%100
21	M52B	X	.549	.549	0	%100
22	M52B	Z	.317	.317	0	%100
23	M76	X	.742	.742	0	%100
24	M76	Z	.428	.428	0	%100
25	M77	X	.252	.252	0	%100
26	M77	Z	.145	.145	0	%100
27	M80	X	.265	.265	0	%100
28	M80	Z	.153	.153	0	%100
29	M84	X	.742	.742	0	%100
30	M84	Z	.428	.428	0	%100
31	M85	X	1.008	1.008	0	%100
32	M85	Z	.582	.582	0	%100

Member Distributed Loads (BLC 69 : Structure Wm (120 Deg)) (Continued)

	Member Label	Direction	Start Magnitude[lb/ft,...	End Magnitude[lb/ft,F...	Start Location[ft,%]	End Location[ft,%]
33	M91	X	1.061	1.061	0	%100
34	M91	Z	.613	.613	0	%100
35	M34	X	.44	.44	0	%100
36	M34	Z	.254	.254	0	%100
37	M35	X	.113	.113	0	%100
38	M35	Z	.065	.065	0	%100
39	M36	X	.113	.113	0	%100
40	M36	Z	.065	.065	0	%100
41	M37	X	.247	.247	0	%100
42	M37	Z	.143	.143	0	%100
43	M40	X	.549	.549	0	%100
44	M40	Z	.317	.317	0	%100
45	M41	X	.137	.137	0	%100
46	M41	Z	.079	.079	0	%100
47	M45	X	.742	.742	0	%100
48	M45	Z	.428	.428	0	%100
49	M46A	X	1.008	1.008	0	%100
50	M46A	Z	.582	.582	0	%100
51	M48	X	1.061	1.061	0	%100
52	M48	Z	.613	.613	0	%100
53	M50A	X	.742	.742	0	%100
54	M50A	Z	.428	.428	0	%100
55	M51C	X	.252	.252	0	%100
56	M51C	Z	.145	.145	0	%100
57	M53	X	.265	.265	0	%100
58	M53	Z	.153	.153	0	%100
59	M58A	X	0	0	0	%100
60	M58A	Z	0	0	0	%100
61	M59A	X	.451	.451	0	%100
62	M59A	Z	.26	.26	0	%100
63	M60	X	.451	.451	0	%100
64	M60	Z	.26	.26	0	%100
65	M61	X	.989	.989	0	%100
66	M61	Z	.571	.571	0	%100
67	M64	X	.137	.137	0	%100
68	M64	Z	.079	.079	0	%100
69	M65	X	.137	.137	0	%100
70	M65	Z	.079	.079	0	%100
71	M69	X	0	0	0	%100
72	M69	Z	0	0	0	%100
73	M70	X	.252	.252	0	%100
74	M70	Z	.145	.145	0	%100
75	M72	X	.265	.265	0	%100
76	M72	Z	.153	.153	0	%100
77	M74	X	0	0	0	%100
78	M74	Z	0	0	0	%100
79	M75	X	.252	.252	0	%100
80	M75	Z	.145	.145	0	%100
81	M77A	X	.265	.265	0	%100
82	M77A	Z	.153	.153	0	%100
83	M82	X	.144	.144	0	%100
84	M82	Z	.083	.083	0	%100

Member Distributed Loads (BLC 69 : Structure Wm (120 Deg)) (Continued)

	Member Label	Direction	Start Magnitude[lb/ft,...	End Magnitude[lb/ft,F...	Start Location[ft,%]	End Location[ft,%]
85	M83A	X	.577	.577	0	%100
86	M83A	Z	.333	.333	0	%100
87	MP3A	X	.392	.392	0	%100
88	MP3A	Z	.226	.226	0	%100
89	MP5A	X	.392	.392	0	%100
90	MP5A	Z	.226	.226	0	%100
91	MP4C	X	.392	.392	0	%100
92	MP4C	Z	.226	.226	0	%100
93	M93	X	.392	.392	0	%100
94	M93	Z	.226	.226	0	%100
95	MP2C	X	.392	.392	0	%100
96	MP2C	Z	.226	.226	0	%100
97	MP1C	X	.392	.392	0	%100
98	MP1C	Z	.226	.226	0	%100
99	MP3C	X	.392	.392	0	%100
100	MP3C	Z	.226	.226	0	%100
101	MP5C	X	.392	.392	0	%100
102	MP5C	Z	.226	.226	0	%100
103	MP4B	X	.392	.392	0	%100
104	MP4B	Z	.226	.226	0	%100
105	M105	X	.392	.392	0	%100
106	M105	Z	.226	.226	0	%100
107	MP2B	X	.392	.392	0	%100
108	MP2B	Z	.226	.226	0	%100
109	MP1B	X	.392	.392	0	%100
110	MP1B	Z	.226	.226	0	%100
111	MP3B	X	.392	.392	0	%100
112	MP3B	Z	.226	.226	0	%100
113	MP5B	X	.392	.392	0	%100
114	MP5B	Z	.226	.226	0	%100
115	M116A	X	.119	.119	0	%100
116	M116A	Z	.068	.068	0	%100
117	M121	X	.119	.119	0	%100
118	M121	Z	.068	.068	0	%100
119	M122	X	.474	.474	0	%100
120	M122	Z	.274	.274	0	%100
121	M143	X	.152	.152	0	%100
122	M143	Z	.087	.087	0	%100
123	M144	X	.606	.606	0	%100
124	M144	Z	.35	.35	0	%100
125	M145	X	.152	.152	0	%100
126	M145	Z	.087	.087	0	%100
127	M152	X	.522	.522	0	%100
128	M152	Z	.301	.301	0	%100
129	M153	X	.522	.522	0	%100
130	M153	Z	.301	.301	0	%100
131	M154A	X	.522	.522	0	%100
132	M154A	Z	.301	.301	0	%100
133	M155A	X	.522	.522	0	%100
134	M155A	Z	.301	.301	0	%100
135	M156	X	.279	.279	0	%100
136	M156	Z	.161	.161	0	%100

Member Distributed Loads (BLC 69 : Structure Wm (120 Deg)) (Continued)

	Member Label	Direction	Start Magnitude[lb/ft,...	End Magnitude[lb/ft,F...	Start Location[ft,%]	End Location[ft,%]
137	M157	X	.279	.279	0	%100
138	M157	Z	.161	.161	0	%100

Member Distributed Loads (BLC 70 : Structure Wm (150 Deg))

	Member Label	Direction	Start Magnitude[lb/ft,...	End Magnitude[lb/ft,F...	Start Location[ft,%]	End Location[ft,%]
1	M1	X	.25	.25	0	%100
2	M1	Z	.433	.433	0	%100
3	M4	X	.085	.085	0	%100
4	M4	Z	.147	.147	0	%100
5	M10	X	.195	.195	0	%100
6	M10	Z	.338	.338	0	%100
7	MP4A	X	.226	.226	0	%100
8	MP4A	Z	.392	.392	0	%100
9	M150	X	.226	.226	0	%100
10	M150	Z	.392	.392	0	%100
11	MP2A	X	.226	.226	0	%100
12	MP2A	Z	.392	.392	0	%100
13	MP1A	X	.226	.226	0	%100
14	MP1A	Z	.392	.392	0	%100
15	M43	X	.195	.195	0	%100
16	M43	Z	.338	.338	0	%100
17	M46	X	.428	.428	0	%100
18	M46	Z	.742	.742	0	%100
19	M51B	X	0	0	0	%100
20	M51B	Z	0	0	0	%100
21	M52B	X	.238	.238	0	%100
22	M52B	Z	.412	.412	0	%100
23	M76	X	.143	.143	0	%100
24	M76	Z	.247	.247	0	%100
25	M77	X	0	0	0	%100
26	M77	Z	0	0	0	%100
27	M80	X	0	0	0	%100
28	M80	Z	0	0	0	%100
29	M84	X	.143	.143	0	%100
30	M84	Z	.247	.247	0	%100
31	M85	X	.436	.436	0	%100
32	M85	Z	.756	.756	0	%100
33	M91	X	.46	.46	0	%100
34	M91	Z	.796	.796	0	%100
35	M34	X	.338	.338	0	%100
36	M34	Z	.586	.586	0	%100
37	M35	X	0	0	0	%100
38	M35	Z	0	0	0	%100
39	M36	X	0	0	0	%100
40	M36	Z	0	0	0	%100
41	M37	X	0	0	0	%100
42	M37	Z	0	0	0	%100
43	M40	X	.238	.238	0	%100
44	M40	Z	.412	.412	0	%100
45	M41	X	.238	.238	0	%100
46	M41	Z	.412	.412	0	%100

Member Distributed Loads (BLC 70 : Structure Wm (150 Deg)) (Continued)

	Member Label	Direction	Start Magnitude[lb/ft,...	End Magnitude[lb/ft,F...	Start Location[ft,%]	End Location[ft,%]
47	M45	X	.571	.571	0	%100
48	M45	Z	.989	.989	0	%100
49	M46A	X	.436	.436	0	%100
50	M46A	Z	.756	.756	0	%100
51	M48	X	.46	.46	0	%100
52	M48	Z	.796	.796	0	%100
53	M50A	X	.571	.571	0	%100
54	M50A	Z	.989	.989	0	%100
55	M51C	X	.436	.436	0	%100
56	M51C	Z	.756	.756	0	%100
57	M53	X	.46	.46	0	%100
58	M53	Z	.796	.796	0	%100
59	M58A	X	.085	.085	0	%100
60	M58A	Z	.147	.147	0	%100
61	M59A	X	.195	.195	0	%100
62	M59A	Z	.338	.338	0	%100
63	M60	X	.195	.195	0	%100
64	M60	Z	.338	.338	0	%100
65	M61	X	.428	.428	0	%100
66	M61	Z	.742	.742	0	%100
67	M64	X	.238	.238	0	%100
68	M64	Z	.412	.412	0	%100
69	M65	X	0	0	0	%100
70	M65	Z	0	0	0	%100
71	M69	X	.143	.143	0	%100
72	M69	Z	.247	.247	0	%100
73	M70	X	.436	.436	0	%100
74	M70	Z	.756	.756	0	%100
75	M72	X	.46	.46	0	%100
76	M72	Z	.796	.796	0	%100
77	M74	X	.143	.143	0	%100
78	M74	Z	.247	.247	0	%100
79	M75	X	0	0	0	%100
80	M75	Z	0	0	0	%100
81	M77A	X	0	0	0	%100
82	M77A	Z	0	0	0	%100
83	M82	X	0	0	0	%100
84	M82	Z	0	0	0	%100
85	M83A	X	.25	.25	0	%100
86	M83A	Z	.433	.433	0	%100
87	MP3A	X	.226	.226	0	%100
88	MP3A	Z	.392	.392	0	%100
89	MP5A	X	.226	.226	0	%100
90	MP5A	Z	.392	.392	0	%100
91	MP4C	X	.226	.226	0	%100
92	MP4C	Z	.392	.392	0	%100
93	M93	X	.226	.226	0	%100
94	M93	Z	.392	.392	0	%100
95	MP2C	X	.226	.226	0	%100
96	MP2C	Z	.392	.392	0	%100
97	MP1C	X	.226	.226	0	%100
98	MP1C	Z	.392	.392	0	%100

Member Distributed Loads (BLC 70 : Structure Wm (150 Deg)) (Continued)

	Member Label	Direction	Start Magnitude[lb/ft,...	End Magnitude[lb/ft,F...	Start Location[ft,%]	End Location[ft,%]
99	MP3C	X	.226	.226	0	%100
100	MP3C	Z	.392	.392	0	%100
101	MP5C	X	.226	.226	0	%100
102	MP5C	Z	.392	.392	0	%100
103	MP4B	X	.226	.226	0	%100
104	MP4B	Z	.392	.392	0	%100
105	M105	X	.226	.226	0	%100
106	M105	Z	.392	.392	0	%100
107	MP2B	X	.226	.226	0	%100
108	MP2B	Z	.392	.392	0	%100
109	MP1B	X	.226	.226	0	%100
110	MP1B	Z	.392	.392	0	%100
111	MP3B	X	.226	.226	0	%100
112	MP3B	Z	.392	.392	0	%100
113	MP5B	X	.226	.226	0	%100
114	MP5B	Z	.392	.392	0	%100
115	M116A	X	.205	.205	0	%100
116	M116A	Z	.356	.356	0	%100
117	M121	X	0	0	0	%100
118	M121	Z	0	0	0	%100
119	M122	X	.205	.205	0	%100
120	M122	Z	.356	.356	0	%100
121	M143	X	0	0	0	%100
122	M143	Z	0	0	0	%100
123	M144	X	.262	.262	0	%100
124	M144	Z	.455	.455	0	%100
125	M145	X	.262	.262	0	%100
126	M145	Z	.455	.455	0	%100
127	M152	X	.208	.208	0	%100
128	M152	Z	.36	.36	0	%100
129	M153	X	.208	.208	0	%100
130	M153	Z	.36	.36	0	%100
131	M154A	X	.348	.348	0	%100
132	M154A	Z	.603	.603	0	%100
133	M155A	X	.348	.348	0	%100
134	M155A	Z	.603	.603	0	%100
135	M156	X	.208	.208	0	%100
136	M156	Z	.36	.36	0	%100
137	M157	X	.208	.208	0	%100
138	M157	Z	.36	.36	0	%100

Member Distributed Loads (BLC 71 : Structure Wm (180 Deg))

	Member Label	Direction	Start Magnitude[lb/ft,...	End Magnitude[lb/ft,F...	Start Location[ft,%]	End Location[ft,%]
1	M1	X	0	0	0	%100
2	M1	Z	.666	.666	0	%100
3	M4	X	0	0	0	%100
4	M4	Z	0	0	0	%100
5	M10	X	0	0	0	%100
6	M10	Z	.521	.521	0	%100
7	MP4A	X	0	0	0	%100
8	MP4A	Z	.452	.452	0	%100

Member Distributed Loads (BLC 71 : Structure Wm (180 Deg)) (Continued)

	Member Label	Direction	Start Magnitude[lb/ft,...	End Magnitude[lb/ft,F...	Start Location[ft,%]	End Location[ft,%]
9	M150	X	0	0	0	%100
10	M150	Z	.452	.452	0	%100
11	MP2A	X	0	0	0	%100
12	MP2A	Z	.452	.452	0	%100
13	MP1A	X	0	0	0	%100
14	MP1A	Z	.452	.452	0	%100
15	M43	X	0	0	0	%100
16	M43	Z	.521	.521	0	%100
17	M46	X	0	0	0	%100
18	M46	Z	1.142	1.142	0	%100
19	M51B	X	0	0	0	%100
20	M51B	Z	.159	.159	0	%100
21	M52B	X	0	0	0	%100
22	M52B	Z	.159	.159	0	%100
23	M76	X	0	0	0	%100
24	M76	Z	0	0	0	%100
25	M77	X	0	0	0	%100
26	M77	Z	.291	.291	0	%100
27	M80	X	0	0	0	%100
28	M80	Z	.306	.306	0	%100
29	M84	X	0	0	0	%100
30	M84	Z	0	0	0	%100
31	M85	X	0	0	0	%100
32	M85	Z	.291	.291	0	%100
33	M91	X	0	0	0	%100
34	M91	Z	.306	.306	0	%100
35	M34	X	0	0	0	%100
36	M34	Z	.508	.508	0	%100
37	M35	X	0	0	0	%100
38	M35	Z	.13	.13	0	%100
39	M36	X	0	0	0	%100
40	M36	Z	.13	.13	0	%100
41	M37	X	0	0	0	%100
42	M37	Z	.286	.286	0	%100
43	M40	X	0	0	0	%100
44	M40	Z	.159	.159	0	%100
45	M41	X	0	0	0	%100
46	M41	Z	.634	.634	0	%100
47	M45	X	0	0	0	%100
48	M45	Z	.857	.857	0	%100
49	M46A	X	0	0	0	%100
50	M46A	Z	.291	.291	0	%100
51	M48	X	0	0	0	%100
52	M48	Z	.306	.306	0	%100
53	M50A	X	0	0	0	%100
54	M50A	Z	.857	.857	0	%100
55	M51C	X	0	0	0	%100
56	M51C	Z	1.164	1.164	0	%100
57	M53	X	0	0	0	%100
58	M53	Z	1.226	1.226	0	%100
59	M58A	X	0	0	0	%100
60	M58A	Z	.508	.508	0	%100

Member Distributed Loads (BLC 71 : Structure Wm (180 Deg)) (Continued)

	Member Label	Direction	Start Magnitude[lb/ft,...	End Magnitude[lb/ft,F...	Start Location[ft,%]	End Location[ft,%]
61	M59A	X	0	0	0	%100
62	M59A	Z	.13	.13	0	%100
63	M60	X	0	0	0	%100
64	M60	Z	.13	.13	0	%100
65	M61	X	0	0	0	%100
66	M61	Z	.286	.286	0	%100
67	M64	X	0	0	0	%100
68	M64	Z	.634	.634	0	%100
69	M65	X	0	0	0	%100
70	M65	Z	.159	.159	0	%100
71	M69	X	0	0	0	%100
72	M69	Z	.857	.857	0	%100
73	M70	X	0	0	0	%100
74	M70	Z	1.164	1.164	0	%100
75	M72	X	0	0	0	%100
76	M72	Z	1.226	1.226	0	%100
77	M74	X	0	0	0	%100
78	M74	Z	.857	.857	0	%100
79	M75	X	0	0	0	%100
80	M75	Z	.291	.291	0	%100
81	M77A	X	0	0	0	%100
82	M77A	Z	.306	.306	0	%100
83	M82	X	0	0	0	%100
84	M82	Z	.167	.167	0	%100
85	M83A	X	0	0	0	%100
86	M83A	Z	.167	.167	0	%100
87	MP3A	X	0	0	0	%100
88	MP3A	Z	.452	.452	0	%100
89	MP5A	X	0	0	0	%100
90	MP5A	Z	.452	.452	0	%100
91	MP4C	X	0	0	0	%100
92	MP4C	Z	.452	.452	0	%100
93	M93	X	0	0	0	%100
94	M93	Z	.452	.452	0	%100
95	MP2C	X	0	0	0	%100
96	MP2C	Z	.452	.452	0	%100
97	MP1C	X	0	0	0	%100
98	MP1C	Z	.452	.452	0	%100
99	MP3C	X	0	0	0	%100
100	MP3C	Z	.452	.452	0	%100
101	MP5C	X	0	0	0	%100
102	MP5C	Z	.452	.452	0	%100
103	MP4B	X	0	0	0	%100
104	MP4B	Z	.452	.452	0	%100
105	M105	X	0	0	0	%100
106	M105	Z	.452	.452	0	%100
107	MP2B	X	0	0	0	%100
108	MP2B	Z	.452	.452	0	%100
109	MP1B	X	0	0	0	%100
110	MP1B	Z	.452	.452	0	%100
111	MP3B	X	0	0	0	%100
112	MP3B	Z	.452	.452	0	%100

Member Distributed Loads (BLC 71 : Structure Wm (180 Deg)) (Continued)

	Member Label	Direction	Start Magnitude[lb/ft,...	End Magnitude[lb/ft,F...	Start Location[ft,%]	End Location[ft,%]
113	MP5B	X	0	0	0	%100
114	MP5B	Z	.452	.452	0	%100
115	M116A	X	0	0	0	%100
116	M116A	Z	.547	.547	0	%100
117	M121	X	0	0	0	%100
118	M121	Z	.137	.137	0	%100
119	M122	X	0	0	0	%100
120	M122	Z	.137	.137	0	%100
121	M143	X	0	0	0	%100
122	M143	Z	.175	.175	0	%100
123	M144	X	0	0	0	%100
124	M144	Z	.175	.175	0	%100
125	M145	X	0	0	0	%100
126	M145	Z	.7	.7	0	%100
127	M152	X	0	0	0	%100
128	M152	Z	.322	.322	0	%100
129	M153	X	0	0	0	%100
130	M153	Z	.322	.322	0	%100
131	M154A	X	0	0	0	%100
132	M154A	Z	.603	.603	0	%100
133	M155A	X	0	0	0	%100
134	M155A	Z	.603	.603	0	%100
135	M156	X	0	0	0	%100
136	M156	Z	.603	.603	0	%100
137	M157	X	0	0	0	%100
138	M157	Z	.603	.603	0	%100

Member Distributed Loads (BLC 72 : Structure Wm (210 Deg))

	Member Label	Direction	Start Magnitude[lb/ft,...	End Magnitude[lb/ft,F...	Start Location[ft,%]	End Location[ft,%]
1	M1	X	-.25	-.25	0	%100
2	M1	Z	.433	.433	0	%100
3	M4	X	-.085	-.085	0	%100
4	M4	Z	.147	.147	0	%100
5	M10	X	-.195	-.195	0	%100
6	M10	Z	.338	.338	0	%100
7	MP4A	X	-.226	-.226	0	%100
8	MP4A	Z	.392	.392	0	%100
9	M150	X	-.226	-.226	0	%100
10	M150	Z	.392	.392	0	%100
11	MP2A	X	-.226	-.226	0	%100
12	MP2A	Z	.392	.392	0	%100
13	MP1A	X	-.226	-.226	0	%100
14	MP1A	Z	.392	.392	0	%100
15	M43	X	-.195	-.195	0	%100
16	M43	Z	.338	.338	0	%100
17	M46	X	-.428	-.428	0	%100
18	M46	Z	.742	.742	0	%100
19	M51B	X	-.238	-.238	0	%100
20	M51B	Z	.412	.412	0	%100
21	M52B	X	0	0	0	%100
22	M52B	Z	0	0	0	%100

Member Distributed Loads (BLC 72 : Structure Wm (210 Deg)) (Continued)

	Member Label	Direction	Start Magnitude[lb/ft,...	End Magnitude[lb/ft,F...	Start Location[ft,%]	End Location[ft,%]
23	M76	X	-.143	-.143	0	%100
24	M76	Z	.247	.247	0	%100
25	M77	X	-.436	-.436	0	%100
26	M77	Z	.756	.756	0	%100
27	M80	X	-.46	-.46	0	%100
28	M80	Z	.796	.796	0	%100
29	M84	X	-.143	-.143	0	%100
30	M84	Z	.247	.247	0	%100
31	M85	X	0	0	0	%100
32	M85	Z	0	0	0	%100
33	M91	X	0	0	0	%100
34	M91	Z	0	0	0	%100
35	M34	X	-.085	-.085	0	%100
36	M34	Z	.147	.147	0	%100
37	M35	X	-.195	-.195	0	%100
38	M35	Z	.338	.338	0	%100
39	M36	X	-.195	-.195	0	%100
40	M36	Z	.338	.338	0	%100
41	M37	X	-.428	-.428	0	%100
42	M37	Z	.742	.742	0	%100
43	M40	X	0	0	0	%100
44	M40	Z	0	0	0	%100
45	M41	X	-.238	-.238	0	%100
46	M41	Z	.412	.412	0	%100
47	M45	X	-.143	-.143	0	%100
48	M45	Z	.247	.247	0	%100
49	M46A	X	0	0	0	%100
50	M46A	Z	0	0	0	%100
51	M48	X	0	0	0	%100
52	M48	Z	0	0	0	%100
53	M50A	X	-.143	-.143	0	%100
54	M50A	Z	.247	.247	0	%100
55	M51C	X	-.436	-.436	0	%100
56	M51C	Z	.756	.756	0	%100
57	M53	X	-.46	-.46	0	%100
58	M53	Z	.796	.796	0	%100
59	M58A	X	-.338	-.338	0	%100
60	M58A	Z	.586	.586	0	%100
61	M59A	X	0	0	0	%100
62	M59A	Z	0	0	0	%100
63	M60	X	0	0	0	%100
64	M60	Z	0	0	0	%100
65	M61	X	0	0	0	%100
66	M61	Z	0	0	0	%100
67	M64	X	-.238	-.238	0	%100
68	M64	Z	.412	.412	0	%100
69	M65	X	-.238	-.238	0	%100
70	M65	Z	.412	.412	0	%100
71	M69	X	-.571	-.571	0	%100
72	M69	Z	.989	.989	0	%100
73	M70	X	-.436	-.436	0	%100
74	M70	Z	.756	.756	0	%100

Member Distributed Loads (BLC 72 : Structure Wm (210 Deg)) (Continued)

	Member Label	Direction	Start Magnitude[lb/ft,...	End Magnitude[lb/ft,F...	Start Location[ft,%]	End Location[ft,%]
75	M72	X	-.46	-.46	0	%100
76	M72	Z	.796	.796	0	%100
77	M74	X	-.571	-.571	0	%100
78	M74	Z	.989	.989	0	%100
79	M75	X	-.436	-.436	0	%100
80	M75	Z	.756	.756	0	%100
81	M77A	X	-.46	-.46	0	%100
82	M77A	Z	.796	.796	0	%100
83	M82	X	-.25	-.25	0	%100
84	M82	Z	.433	.433	0	%100
85	M83A	X	0	0	0	%100
86	M83A	Z	0	0	0	%100
87	MP3A	X	-.226	-.226	0	%100
88	MP3A	Z	.392	.392	0	%100
89	MP5A	X	-.226	-.226	0	%100
90	MP5A	Z	.392	.392	0	%100
91	MP4C	X	-.226	-.226	0	%100
92	MP4C	Z	.392	.392	0	%100
93	M93	X	-.226	-.226	0	%100
94	M93	Z	.392	.392	0	%100
95	MP2C	X	-.226	-.226	0	%100
96	MP2C	Z	.392	.392	0	%100
97	MP1C	X	-.226	-.226	0	%100
98	MP1C	Z	.392	.392	0	%100
99	MP3C	X	-.226	-.226	0	%100
100	MP3C	Z	.392	.392	0	%100
101	MP5C	X	-.226	-.226	0	%100
102	MP5C	Z	.392	.392	0	%100
103	MP4B	X	-.226	-.226	0	%100
104	MP4B	Z	.392	.392	0	%100
105	M105	X	-.226	-.226	0	%100
106	M105	Z	.392	.392	0	%100
107	MP2B	X	-.226	-.226	0	%100
108	MP2B	Z	.392	.392	0	%100
109	MP1B	X	-.226	-.226	0	%100
110	MP1B	Z	.392	.392	0	%100
111	MP3B	X	-.226	-.226	0	%100
112	MP3B	Z	.392	.392	0	%100
113	MP5B	X	-.226	-.226	0	%100
114	MP5B	Z	.392	.392	0	%100
115	M116A	X	-.205	-.205	0	%100
116	M116A	Z	.356	.356	0	%100
117	M121	X	-.205	-.205	0	%100
118	M121	Z	.356	.356	0	%100
119	M122	X	0	0	0	%100
120	M122	Z	0	0	0	%100
121	M143	X	-.262	-.262	0	%100
122	M143	Z	.455	.455	0	%100
123	M144	X	0	0	0	%100
124	M144	Z	0	0	0	%100
125	M145	X	-.262	-.262	0	%100
126	M145	Z	.455	.455	0	%100

Member Distributed Loads (BLC 72 : Structure Wm (210 Deg)) (Continued)

	Member Label	Direction	Start Magnitude[lb/ft,...	End Magnitude[lb/ft,F...	Start Location[ft,%]	End Location[ft,%]
127	M152	X	-.208	-.208	0	%100
128	M152	Z	.36	.36	0	%100
129	M153	X	-.208	-.208	0	%100
130	M153	Z	.36	.36	0	%100
131	M154A	X	-.208	-.208	0	%100
132	M154A	Z	.36	.36	0	%100
133	M155A	X	-.208	-.208	0	%100
134	M155A	Z	.36	.36	0	%100
135	M156	X	-.348	-.348	0	%100
136	M156	Z	.603	.603	0	%100
137	M157	X	-.348	-.348	0	%100
138	M157	Z	.603	.603	0	%100

Member Distributed Loads (BLC 73 : Structure Wm (240 Deg))

	Member Label	Direction	Start Magnitude[lb/ft,...	End Magnitude[lb/ft,F...	Start Location[ft,%]	End Location[ft,%]
1	M1	X	-.144	-.144	0	%100
2	M1	Z	.083	.083	0	%100
3	M4	X	-.44	-.44	0	%100
4	M4	Z	.254	.254	0	%100
5	M10	X	-.113	-.113	0	%100
6	M10	Z	.065	.065	0	%100
7	MP4A	X	-.392	-.392	0	%100
8	MP4A	Z	.226	.226	0	%100
9	M150	X	-.392	-.392	0	%100
10	M150	Z	.226	.226	0	%100
11	MP2A	X	-.392	-.392	0	%100
12	MP2A	Z	.226	.226	0	%100
13	MP1A	X	-.392	-.392	0	%100
14	MP1A	Z	.226	.226	0	%100
15	M43	X	-.113	-.113	0	%100
16	M43	Z	.065	.065	0	%100
17	M46	X	-.247	-.247	0	%100
18	M46	Z	.143	.143	0	%100
19	M51B	X	-.549	-.549	0	%100
20	M51B	Z	.317	.317	0	%100
21	M52B	X	-.137	-.137	0	%100
22	M52B	Z	.079	.079	0	%100
23	M76	X	-.742	-.742	0	%100
24	M76	Z	.428	.428	0	%100
25	M77	X	-1.008	-1.008	0	%100
26	M77	Z	.582	.582	0	%100
27	M80	X	-1.061	-1.061	0	%100
28	M80	Z	.613	.613	0	%100
29	M84	X	-.742	-.742	0	%100
30	M84	Z	.428	.428	0	%100
31	M85	X	-.252	-.252	0	%100
32	M85	Z	.145	.145	0	%100
33	M91	X	-.265	-.265	0	%100
34	M91	Z	.153	.153	0	%100
35	M34	X	0	0	0	%100
36	M34	Z	0	0	0	%100

Member Distributed Loads (BLC 73 : Structure Wm (240 Deg)) (Continued)

	Member Label	Direction	Start Magnitude[lb/ft,...	End Magnitude[lb/ft,F...	Start Location[ft,%]	End Location[ft,%]
37	M35	X	-.451	-.451	0	%100
38	M35	Z	.26	.26	0	%100
39	M36	X	-.451	-.451	0	%100
40	M36	Z	.26	.26	0	%100
41	M37	X	-.989	-.989	0	%100
42	M37	Z	.571	.571	0	%100
43	M40	X	-.137	-.137	0	%100
44	M40	Z	.079	.079	0	%100
45	M41	X	-.137	-.137	0	%100
46	M41	Z	.079	.079	0	%100
47	M45	X	0	0	0	%100
48	M45	Z	0	0	0	%100
49	M46A	X	-.252	-.252	0	%100
50	M46A	Z	.145	.145	0	%100
51	M48	X	-.265	-.265	0	%100
52	M48	Z	.153	.153	0	%100
53	M50A	X	0	0	0	%100
54	M50A	Z	0	0	0	%100
55	M51C	X	-.252	-.252	0	%100
56	M51C	Z	.145	.145	0	%100
57	M53	X	-.265	-.265	0	%100
58	M53	Z	.153	.153	0	%100
59	M58A	X	-.44	-.44	0	%100
60	M58A	Z	.254	.254	0	%100
61	M59A	X	-.113	-.113	0	%100
62	M59A	Z	.065	.065	0	%100
63	M60	X	-.113	-.113	0	%100
64	M60	Z	.065	.065	0	%100
65	M61	X	-.247	-.247	0	%100
66	M61	Z	.143	.143	0	%100
67	M64	X	-.137	-.137	0	%100
68	M64	Z	.079	.079	0	%100
69	M65	X	-.549	-.549	0	%100
70	M65	Z	.317	.317	0	%100
71	M69	X	-.742	-.742	0	%100
72	M69	Z	.428	.428	0	%100
73	M70	X	-.252	-.252	0	%100
74	M70	Z	.145	.145	0	%100
75	M72	X	-.265	-.265	0	%100
76	M72	Z	.153	.153	0	%100
77	M74	X	-.742	-.742	0	%100
78	M74	Z	.428	.428	0	%100
79	M75	X	-1.008	-1.008	0	%100
80	M75	Z	.582	.582	0	%100
81	M77A	X	-1.061	-1.061	0	%100
82	M77A	Z	.613	.613	0	%100
83	M82	X	-.577	-.577	0	%100
84	M82	Z	.333	.333	0	%100
85	M83A	X	-.144	-.144	0	%100
86	M83A	Z	.083	.083	0	%100
87	MP3A	X	-.392	-.392	0	%100
88	MP3A	Z	.226	.226	0	%100

Member Distributed Loads (BLC 73 : Structure Wm (240 Deg)) (Continued)

	Member Label	Direction	Start Magnitude[lb/ft,...	End Magnitude[lb/ft,F...	Start Location[ft,%]	End Location[ft,%]
89	MP5A	X	-.392	-.392	0	%100
90	MP5A	Z	.226	.226	0	%100
91	MP4C	X	-.392	-.392	0	%100
92	MP4C	Z	.226	.226	0	%100
93	M93	X	-.392	-.392	0	%100
94	M93	Z	.226	.226	0	%100
95	MP2C	X	-.392	-.392	0	%100
96	MP2C	Z	.226	.226	0	%100
97	MP1C	X	-.392	-.392	0	%100
98	MP1C	Z	.226	.226	0	%100
99	MP3C	X	-.392	-.392	0	%100
100	MP3C	Z	.226	.226	0	%100
101	MP5C	X	-.392	-.392	0	%100
102	MP5C	Z	.226	.226	0	%100
103	MP4B	X	-.392	-.392	0	%100
104	MP4B	Z	.226	.226	0	%100
105	M105	X	-.392	-.392	0	%100
106	M105	Z	.226	.226	0	%100
107	MP2B	X	-.392	-.392	0	%100
108	MP2B	Z	.226	.226	0	%100
109	MP1B	X	-.392	-.392	0	%100
110	MP1B	Z	.226	.226	0	%100
111	MP3B	X	-.392	-.392	0	%100
112	MP3B	Z	.226	.226	0	%100
113	MP5B	X	-.392	-.392	0	%100
114	MP5B	Z	.226	.226	0	%100
115	M116A	X	-.119	-.119	0	%100
116	M116A	Z	.068	.068	0	%100
117	M121	X	-.474	-.474	0	%100
118	M121	Z	.274	.274	0	%100
119	M122	X	-.119	-.119	0	%100
120	M122	Z	.068	.068	0	%100
121	M143	X	-.606	-.606	0	%100
122	M143	Z	.35	.35	0	%100
123	M144	X	-.152	-.152	0	%100
124	M144	Z	.087	.087	0	%100
125	M145	X	-.152	-.152	0	%100
126	M145	Z	.087	.087	0	%100
127	M152	X	-.522	-.522	0	%100
128	M152	Z	.301	.301	0	%100
129	M153	X	-.522	-.522	0	%100
130	M153	Z	.301	.301	0	%100
131	M154A	X	-.279	-.279	0	%100
132	M154A	Z	.161	.161	0	%100
133	M155A	X	-.279	-.279	0	%100
134	M155A	Z	.161	.161	0	%100
135	M156	X	-.522	-.522	0	%100
136	M156	Z	.301	.301	0	%100
137	M157	X	-.522	-.522	0	%100
138	M157	Z	.301	.301	0	%100

Member Distributed Loads (BLC 74 : Structure Wm (270 Deg))

	Member Label	Direction	Start Magnitude[lb/ft,...	End Magnitude[lb/ft,F...	Start Location[ft,%]	End Location[ft,%]
1	M1	X	0	0	0	%100
2	M1	Z	0	0	0	%100
3	M4	X	-.677	-.677	0	%100
4	M4	Z	0	0	0	%100
5	M10	X	0	0	0	%100
6	M10	Z	0	0	0	%100
7	MP4A	X	-.452	-.452	0	%100
8	MP4A	Z	0	0	0	%100
9	M150	X	-.452	-.452	0	%100
10	M150	Z	0	0	0	%100
11	MP2A	X	-.452	-.452	0	%100
12	MP2A	Z	0	0	0	%100
13	MP1A	X	-.452	-.452	0	%100
14	MP1A	Z	0	0	0	%100
15	M43	X	0	0	0	%100
16	M43	Z	0	0	0	%100
17	M46	X	0	0	0	%100
18	M46	Z	0	0	0	%100
19	M51B	X	-.476	-.476	0	%100
20	M51B	Z	0	0	0	%100
21	M52B	X	-.476	-.476	0	%100
22	M52B	Z	0	0	0	%100
23	M76	X	-1.142	-1.142	0	%100
24	M76	Z	0	0	0	%100
25	M77	X	-.873	-.873	0	%100
26	M77	Z	0	0	0	%100
27	M80	X	-.919	-.919	0	%100
28	M80	Z	0	0	0	%100
29	M84	X	-1.142	-1.142	0	%100
30	M84	Z	0	0	0	%100
31	M85	X	-.873	-.873	0	%100
32	M85	Z	0	0	0	%100
33	M91	X	-.919	-.919	0	%100
34	M91	Z	0	0	0	%100
35	M34	X	-.169	-.169	0	%100
36	M34	Z	0	0	0	%100
37	M35	X	-.391	-.391	0	%100
38	M35	Z	0	0	0	%100
39	M36	X	-.391	-.391	0	%100
40	M36	Z	0	0	0	%100
41	M37	X	-.857	-.857	0	%100
42	M37	Z	0	0	0	%100
43	M40	X	-.476	-.476	0	%100
44	M40	Z	0	0	0	%100
45	M41	X	0	0	0	%100
46	M41	Z	0	0	0	%100
47	M45	X	-.286	-.286	0	%100
48	M45	Z	0	0	0	%100
49	M46A	X	-.873	-.873	0	%100
50	M46A	Z	0	0	0	%100
51	M48	X	-.919	-.919	0	%100
52	M48	Z	0	0	0	%100

Member Distributed Loads (BLC 74 : Structure Wm (270 Deg)) (Continued)

	Member Label	Direction	Start Magnitude[lb/ft,...	End Magnitude[lb/ft,F...	Start Location[ft,%]	End Location[ft,%]
53	M50A	X	-.286	-.286	0	%100
54	M50A	Z	0	0	0	%100
55	M51C	X	0	0	0	%100
56	M51C	Z	0	0	0	%100
57	M53	X	0	0	0	%100
58	M53	Z	0	0	0	%100
59	M58A	X	-.169	-.169	0	%100
60	M58A	Z	0	0	0	%100
61	M59A	X	-.391	-.391	0	%100
62	M59A	Z	0	0	0	%100
63	M60	X	-.391	-.391	0	%100
64	M60	Z	0	0	0	%100
65	M61	X	-.857	-.857	0	%100
66	M61	Z	0	0	0	%100
67	M64	X	0	0	0	%100
68	M64	Z	0	0	0	%100
69	M65	X	-.476	-.476	0	%100
70	M65	Z	0	0	0	%100
71	M69	X	-.286	-.286	0	%100
72	M69	Z	0	0	0	%100
73	M70	X	0	0	0	%100
74	M70	Z	0	0	0	%100
75	M72	X	0	0	0	%100
76	M72	Z	0	0	0	%100
77	M74	X	-.286	-.286	0	%100
78	M74	Z	0	0	0	%100
79	M75	X	-.873	-.873	0	%100
80	M75	Z	0	0	0	%100
81	M77A	X	-.919	-.919	0	%100
82	M77A	Z	0	0	0	%100
83	M82	X	-.5	-.5	0	%100
84	M82	Z	0	0	0	%100
85	M83A	X	-.5	-.5	0	%100
86	M83A	Z	0	0	0	%100
87	MP3A	X	-.452	-.452	0	%100
88	MP3A	Z	0	0	0	%100
89	MP5A	X	-.452	-.452	0	%100
90	MP5A	Z	0	0	0	%100
91	MP4C	X	-.452	-.452	0	%100
92	MP4C	Z	0	0	0	%100
93	M93	X	-.452	-.452	0	%100
94	M93	Z	0	0	0	%100
95	MP2C	X	-.452	-.452	0	%100
96	MP2C	Z	0	0	0	%100
97	MP1C	X	-.452	-.452	0	%100
98	MP1C	Z	0	0	0	%100
99	MP3C	X	-.452	-.452	0	%100
100	MP3C	Z	0	0	0	%100
101	MP5C	X	-.452	-.452	0	%100
102	MP5C	Z	0	0	0	%100
103	MP4B	X	-.452	-.452	0	%100
104	MP4B	Z	0	0	0	%100

Member Distributed Loads (BLC 74 : Structure Wm (270 Deg)) (Continued)

	Member Label	Direction	Start Magnitude[lb/ft,...	End Magnitude[lb/ft,F...	Start Location[ft,%]	End Location[ft,%]
105	M105	X	-.452	-.452	0	%100
106	M105	Z	0	0	0	%100
107	MP2B	X	-.452	-.452	0	%100
108	MP2B	Z	0	0	0	%100
109	MP1B	X	-.452	-.452	0	%100
110	MP1B	Z	0	0	0	%100
111	MP3B	X	-.452	-.452	0	%100
112	MP3B	Z	0	0	0	%100
113	MP5B	X	-.452	-.452	0	%100
114	MP5B	Z	0	0	0	%100
115	M116A	X	0	0	0	%100
116	M116A	Z	0	0	0	%100
117	M121	X	-.411	-.411	0	%100
118	M121	Z	0	0	0	%100
119	M122	X	-.411	-.411	0	%100
120	M122	Z	0	0	0	%100
121	M143	X	-.525	-.525	0	%100
122	M143	Z	0	0	0	%100
123	M144	X	-.525	-.525	0	%100
124	M144	Z	0	0	0	%100
125	M145	X	0	0	0	%100
126	M145	Z	0	0	0	%100
127	M152	X	-.696	-.696	0	%100
128	M152	Z	0	0	0	%100
129	M153	X	-.696	-.696	0	%100
130	M153	Z	0	0	0	%100
131	M154A	X	-.415	-.415	0	%100
132	M154A	Z	0	0	0	%100
133	M155A	X	-.415	-.415	0	%100
134	M155A	Z	0	0	0	%100
135	M156	X	-.415	-.415	0	%100
136	M156	Z	0	0	0	%100
137	M157	X	-.415	-.415	0	%100
138	M157	Z	0	0	0	%100

Member Distributed Loads (BLC 75 : Structure Wm (300 Deg))

	Member Label	Direction	Start Magnitude[lb/ft,...	End Magnitude[lb/ft,F...	Start Location[ft,%]	End Location[ft,%]
1	M1	X	-.144	-.144	0	%100
2	M1	Z	-.083	-.083	0	%100
3	M4	X	-.44	-.44	0	%100
4	M4	Z	-.254	-.254	0	%100
5	M10	X	-.113	-.113	0	%100
6	M10	Z	-.065	-.065	0	%100
7	MP4A	X	-.392	-.392	0	%100
8	MP4A	Z	-.226	-.226	0	%100
9	M150	X	-.392	-.392	0	%100
10	M150	Z	-.226	-.226	0	%100
11	MP2A	X	-.392	-.392	0	%100
12	MP2A	Z	-.226	-.226	0	%100
13	MP1A	X	-.392	-.392	0	%100
14	MP1A	Z	-.226	-.226	0	%100

Member Distributed Loads (BLC 75 : Structure Wm (300 Deg)) (Continued)

	Member Label	Direction	Start Magnitude[lb/ft,...	End Magnitude[lb/ft,F...	Start Location[ft,%]	End Location[ft,%]
15	M43	X	-.113	-.113	0	%100
16	M43	Z	-.065	-.065	0	%100
17	M46	X	-.247	-.247	0	%100
18	M46	Z	-.143	-.143	0	%100
19	M51B	X	-.137	-.137	0	%100
20	M51B	Z	-.079	-.079	0	%100
21	M52B	X	-.549	-.549	0	%100
22	M52B	Z	-.317	-.317	0	%100
23	M76	X	-.742	-.742	0	%100
24	M76	Z	-.428	-.428	0	%100
25	M77	X	-.252	-.252	0	%100
26	M77	Z	-.145	-.145	0	%100
27	M80	X	-.265	-.265	0	%100
28	M80	Z	-.153	-.153	0	%100
29	M84	X	-.742	-.742	0	%100
30	M84	Z	-.428	-.428	0	%100
31	M85	X	-1.008	-1.008	0	%100
32	M85	Z	-.582	-.582	0	%100
33	M91	X	-1.061	-1.061	0	%100
34	M91	Z	-.613	-.613	0	%100
35	M34	X	-.44	-.44	0	%100
36	M34	Z	-.254	-.254	0	%100
37	M35	X	-.113	-.113	0	%100
38	M35	Z	-.065	-.065	0	%100
39	M36	X	-.113	-.113	0	%100
40	M36	Z	-.065	-.065	0	%100
41	M37	X	-.247	-.247	0	%100
42	M37	Z	-.143	-.143	0	%100
43	M40	X	-.549	-.549	0	%100
44	M40	Z	-.317	-.317	0	%100
45	M41	X	-.137	-.137	0	%100
46	M41	Z	-.079	-.079	0	%100
47	M45	X	-.742	-.742	0	%100
48	M45	Z	-.428	-.428	0	%100
49	M46A	X	-1.008	-1.008	0	%100
50	M46A	Z	-.582	-.582	0	%100
51	M48	X	-1.061	-1.061	0	%100
52	M48	Z	-.613	-.613	0	%100
53	M50A	X	-.742	-.742	0	%100
54	M50A	Z	-.428	-.428	0	%100
55	M51C	X	-.252	-.252	0	%100
56	M51C	Z	-.145	-.145	0	%100
57	M53	X	-.265	-.265	0	%100
58	M53	Z	-.153	-.153	0	%100
59	M58A	X	0	0	0	%100
60	M58A	Z	0	0	0	%100
61	M59A	X	-.451	-.451	0	%100
62	M59A	Z	-.26	-.26	0	%100
63	M60	X	-.451	-.451	0	%100
64	M60	Z	-.26	-.26	0	%100
65	M61	X	-.989	-.989	0	%100
66	M61	Z	-.571	-.571	0	%100

Member Distributed Loads (BLC 75 : Structure Wm (300 Deg)) (Continued)

	Member Label	Direction	Start Magnitude[lb/ft,...	End Magnitude[lb/ft,F...	Start Location[ft,%]	End Location[ft,%]
67	M64	X	-.137	-.137	0	%100
68	M64	Z	-.079	-.079	0	%100
69	M65	X	-.137	-.137	0	%100
70	M65	Z	-.079	-.079	0	%100
71	M69	X	0	0	0	%100
72	M69	Z	0	0	0	%100
73	M70	X	-.252	-.252	0	%100
74	M70	Z	-.145	-.145	0	%100
75	M72	X	-.265	-.265	0	%100
76	M72	Z	-.153	-.153	0	%100
77	M74	X	0	0	0	%100
78	M74	Z	0	0	0	%100
79	M75	X	-.252	-.252	0	%100
80	M75	Z	-.145	-.145	0	%100
81	M77A	X	-.265	-.265	0	%100
82	M77A	Z	-.153	-.153	0	%100
83	M82	X	-.144	-.144	0	%100
84	M82	Z	-.083	-.083	0	%100
85	M83A	X	-.577	-.577	0	%100
86	M83A	Z	-.333	-.333	0	%100
87	MP3A	X	-.392	-.392	0	%100
88	MP3A	Z	-.226	-.226	0	%100
89	MP5A	X	-.392	-.392	0	%100
90	MP5A	Z	-.226	-.226	0	%100
91	MP4C	X	-.392	-.392	0	%100
92	MP4C	Z	-.226	-.226	0	%100
93	M93	X	-.392	-.392	0	%100
94	M93	Z	-.226	-.226	0	%100
95	MP2C	X	-.392	-.392	0	%100
96	MP2C	Z	-.226	-.226	0	%100
97	MP1C	X	-.392	-.392	0	%100
98	MP1C	Z	-.226	-.226	0	%100
99	MP3C	X	-.392	-.392	0	%100
100	MP3C	Z	-.226	-.226	0	%100
101	MP5C	X	-.392	-.392	0	%100
102	MP5C	Z	-.226	-.226	0	%100
103	MP4B	X	-.392	-.392	0	%100
104	MP4B	Z	-.226	-.226	0	%100
105	M105	X	-.392	-.392	0	%100
106	M105	Z	-.226	-.226	0	%100
107	MP2B	X	-.392	-.392	0	%100
108	MP2B	Z	-.226	-.226	0	%100
109	MP1B	X	-.392	-.392	0	%100
110	MP1B	Z	-.226	-.226	0	%100
111	MP3B	X	-.392	-.392	0	%100
112	MP3B	Z	-.226	-.226	0	%100
113	MP5B	X	-.392	-.392	0	%100
114	MP5B	Z	-.226	-.226	0	%100
115	M116A	X	-.119	-.119	0	%100
116	M116A	Z	-.068	-.068	0	%100
117	M121	X	-.119	-.119	0	%100
118	M121	Z	-.068	-.068	0	%100

Member Distributed Loads (BLC 75 : Structure Wm (300 Deg)) (Continued)

	Member Label	Direction	Start Magnitude[lb/ft,...	End Magnitude[lb/ft,F...	Start Location[ft,%]	End Location[ft,%]
119	M122	X	-.474	-.474	0	%100
120	M122	Z	-.274	-.274	0	%100
121	M143	X	-.152	-.152	0	%100
122	M143	Z	-.087	-.087	0	%100
123	M144	X	-.606	-.606	0	%100
124	M144	Z	-.35	-.35	0	%100
125	M145	X	-.152	-.152	0	%100
126	M145	Z	-.087	-.087	0	%100
127	M152	X	-.522	-.522	0	%100
128	M152	Z	-.301	-.301	0	%100
129	M153	X	-.522	-.522	0	%100
130	M153	Z	-.301	-.301	0	%100
131	M154A	X	-.522	-.522	0	%100
132	M154A	Z	-.301	-.301	0	%100
133	M155A	X	-.522	-.522	0	%100
134	M155A	Z	-.301	-.301	0	%100
135	M156	X	-.279	-.279	0	%100
136	M156	Z	-.161	-.161	0	%100
137	M157	X	-.279	-.279	0	%100
138	M157	Z	-.161	-.161	0	%100

Member Distributed Loads (BLC 76 : Structure Wm (330 Deg))

	Member Label	Direction	Start Magnitude[lb/ft,...	End Magnitude[lb/ft,F...	Start Location[ft,%]	End Location[ft,%]
1	M1	X	-.25	-.25	0	%100
2	M1	Z	-.433	-.433	0	%100
3	M4	X	-.085	-.085	0	%100
4	M4	Z	-.147	-.147	0	%100
5	M10	X	-.195	-.195	0	%100
6	M10	Z	-.338	-.338	0	%100
7	MP4A	X	-.226	-.226	0	%100
8	MP4A	Z	-.392	-.392	0	%100
9	M150	X	-.226	-.226	0	%100
10	M150	Z	-.392	-.392	0	%100
11	MP2A	X	-.226	-.226	0	%100
12	MP2A	Z	-.392	-.392	0	%100
13	MP1A	X	-.226	-.226	0	%100
14	MP1A	Z	-.392	-.392	0	%100
15	M43	X	-.195	-.195	0	%100
16	M43	Z	-.338	-.338	0	%100
17	M46	X	-.428	-.428	0	%100
18	M46	Z	-.742	-.742	0	%100
19	M51B	X	0	0	0	%100
20	M51B	Z	0	0	0	%100
21	M52B	X	-.238	-.238	0	%100
22	M52B	Z	-.412	-.412	0	%100
23	M76	X	-.143	-.143	0	%100
24	M76	Z	-.247	-.247	0	%100
25	M77	X	0	0	0	%100
26	M77	Z	0	0	0	%100
27	M80	X	0	0	0	%100
28	M80	Z	0	0	0	%100

Member Distributed Loads (BLC 76 : Structure Wm (330 Deg)) (Continued)

	Member Label	Direction	Start Magnitude[lb/ft,...	End Magnitude[lb/ft,F...	Start Location[ft,%]	End Location[ft,%]
29	M84	X	-.143	-.143	0	%100
30	M84	Z	-.247	-.247	0	%100
31	M85	X	-.436	-.436	0	%100
32	M85	Z	-.756	-.756	0	%100
33	M91	X	-.46	-.46	0	%100
34	M91	Z	-.796	-.796	0	%100
35	M34	X	-.338	-.338	0	%100
36	M34	Z	-.586	-.586	0	%100
37	M35	X	0	0	0	%100
38	M35	Z	0	0	0	%100
39	M36	X	0	0	0	%100
40	M36	Z	0	0	0	%100
41	M37	X	0	0	0	%100
42	M37	Z	0	0	0	%100
43	M40	X	-.238	-.238	0	%100
44	M40	Z	-.412	-.412	0	%100
45	M41	X	-.238	-.238	0	%100
46	M41	Z	-.412	-.412	0	%100
47	M45	X	-.571	-.571	0	%100
48	M45	Z	-.989	-.989	0	%100
49	M46A	X	-.436	-.436	0	%100
50	M46A	Z	-.756	-.756	0	%100
51	M48	X	-.46	-.46	0	%100
52	M48	Z	-.796	-.796	0	%100
53	M50A	X	-.571	-.571	0	%100
54	M50A	Z	-.989	-.989	0	%100
55	M51C	X	-.436	-.436	0	%100
56	M51C	Z	-.756	-.756	0	%100
57	M53	X	-.46	-.46	0	%100
58	M53	Z	-.796	-.796	0	%100
59	M58A	X	-.085	-.085	0	%100
60	M58A	Z	-.147	-.147	0	%100
61	M59A	X	-.195	-.195	0	%100
62	M59A	Z	-.338	-.338	0	%100
63	M60	X	-.195	-.195	0	%100
64	M60	Z	-.338	-.338	0	%100
65	M61	X	-.428	-.428	0	%100
66	M61	Z	-.742	-.742	0	%100
67	M64	X	-.238	-.238	0	%100
68	M64	Z	-.412	-.412	0	%100
69	M65	X	0	0	0	%100
70	M65	Z	0	0	0	%100
71	M69	X	-.143	-.143	0	%100
72	M69	Z	-.247	-.247	0	%100
73	M70	X	-.436	-.436	0	%100
74	M70	Z	-.756	-.756	0	%100
75	M72	X	-.46	-.46	0	%100
76	M72	Z	-.796	-.796	0	%100
77	M74	X	-.143	-.143	0	%100
78	M74	Z	-.247	-.247	0	%100
79	M75	X	0	0	0	%100
80	M75	Z	0	0	0	%100

Member Distributed Loads (BLC 76 : Structure Wm (330 Deg)) (Continued)

	Member Label	Direction	Start Magnitude[lb/ft,...	End Magnitude[lb/ft,F...	Start Location[ft,%]	End Location[ft,%]
81	M77A	X	0	0	0	%100
82	M77A	Z	0	0	0	%100
83	M82	X	0	0	0	%100
84	M82	Z	0	0	0	%100
85	M83A	X	-.25	-.25	0	%100
86	M83A	Z	-.433	-.433	0	%100
87	MP3A	X	-.226	-.226	0	%100
88	MP3A	Z	-.392	-.392	0	%100
89	MP5A	X	-.226	-.226	0	%100
90	MP5A	Z	-.392	-.392	0	%100
91	MP4C	X	-.226	-.226	0	%100
92	MP4C	Z	-.392	-.392	0	%100
93	M93	X	-.226	-.226	0	%100
94	M93	Z	-.392	-.392	0	%100
95	MP2C	X	-.226	-.226	0	%100
96	MP2C	Z	-.392	-.392	0	%100
97	MP1C	X	-.226	-.226	0	%100
98	MP1C	Z	-.392	-.392	0	%100
99	MP3C	X	-.226	-.226	0	%100
100	MP3C	Z	-.392	-.392	0	%100
101	MP5C	X	-.226	-.226	0	%100
102	MP5C	Z	-.392	-.392	0	%100
103	MP4B	X	-.226	-.226	0	%100
104	MP4B	Z	-.392	-.392	0	%100
105	M105	X	-.226	-.226	0	%100
106	M105	Z	-.392	-.392	0	%100
107	MP2B	X	-.226	-.226	0	%100
108	MP2B	Z	-.392	-.392	0	%100
109	MP1B	X	-.226	-.226	0	%100
110	MP1B	Z	-.392	-.392	0	%100
111	MP3B	X	-.226	-.226	0	%100
112	MP3B	Z	-.392	-.392	0	%100
113	MP5B	X	-.226	-.226	0	%100
114	MP5B	Z	-.392	-.392	0	%100
115	M116A	X	-.205	-.205	0	%100
116	M116A	Z	-.356	-.356	0	%100
117	M121	X	0	0	0	%100
118	M121	Z	0	0	0	%100
119	M122	X	-.205	-.205	0	%100
120	M122	Z	-.356	-.356	0	%100
121	M143	X	0	0	0	%100
122	M143	Z	0	0	0	%100
123	M144	X	-.262	-.262	0	%100
124	M144	Z	-.455	-.455	0	%100
125	M145	X	-.262	-.262	0	%100
126	M145	Z	-.455	-.455	0	%100
127	M152	X	-.208	-.208	0	%100
128	M152	Z	-.36	-.36	0	%100
129	M153	X	-.208	-.208	0	%100
130	M153	Z	-.36	-.36	0	%100
131	M154A	X	-.348	-.348	0	%100
132	M154A	Z	-.603	-.603	0	%100

Member Distributed Loads (BLC 76 : Structure Wm (330 Deg)) (Continued)

	Member Label	Direction	Start Magnitude[lb/ft,...	End Magnitude[lb/ft,F...	Start Location[ft,%]	End Location[ft,%]
133	M155A	X	-.348	-.348	0	%100
134	M155A	Z	-.603	-.603	0	%100
135	M156	X	-.208	-.208	0	%100
136	M156	Z	-.36	-.36	0	%100
137	M157	X	-.208	-.208	0	%100
138	M157	Z	-.36	-.36	0	%100

Member Distributed Loads (BLC 87 : BLC 39 Transient Area Loads)

	Member Label	Direction	Start Magnitude[lb/ft,...	End Magnitude[lb/ft,F...	Start Location[ft,%]	End Location[ft,%]
1	M40	Y	-1.597	-4.066	0	.832
2	M40	Y	-4.066	-6.636	.832	1.665
3	M40	Y	-6.636	-7.874	1.665	2.497
4	M40	Y	-7.874	-6.293	2.497	3.329
5	M40	Y	-6.293	-3.33	3.329	4.162
6	M41	Y	-3.329	-6.32	0	.832
7	M41	Y	-6.32	-7.943	.832	1.665
8	M41	Y	-7.943	-6.773	1.665	2.497
9	M41	Y	-6.773	-4.256	2.497	3.329
10	M41	Y	-4.256	-1.812	3.329	4.162
11	M64	Y	-1.807	-4.258	0	.832
12	M64	Y	-4.258	-6.771	.832	1.665
13	M64	Y	-6.771	-7.939	1.665	2.497
14	M64	Y	-7.939	-6.325	2.497	3.329
15	M64	Y	-6.325	-3.336	3.329	4.162
16	M65	Y	-3.33	-6.293	0	.832
17	M65	Y	-6.293	-7.874	.832	1.665
18	M65	Y	-7.874	-6.634	1.665	2.497
19	M65	Y	-6.634	-4.064	2.497	3.329
20	M65	Y	-4.064	-1.601	3.329	4.162
21	M51B	Y	-1.601	-4.064	0	.832
22	M51B	Y	-4.064	-6.634	.832	1.665
23	M51B	Y	-6.634	-7.874	1.665	2.497
24	M51B	Y	-7.874	-6.293	2.497	3.329
25	M51B	Y	-6.293	-3.33	3.329	4.162
26	M52B	Y	-3.336	-6.325	0	.832
27	M52B	Y	-6.325	-7.939	.832	1.665
28	M52B	Y	-7.939	-6.771	1.665	2.497
29	M52B	Y	-6.771	-4.258	2.497	3.329
30	M52B	Y	-4.258	-1.807	3.329	4.162

Member Distributed Loads (BLC 88 : BLC 40 Transient Area Loads)

	Member Label	Direction	Start Magnitude[lb/ft,...	End Magnitude[lb/ft,F...	Start Location[ft,%]	End Location[ft,%]
1	M40	Y	-3.323	-8.457	0	.832
2	M40	Y	-8.457	-13.804	.832	1.665
3	M40	Y	-13.804	-16.377	1.665	2.497
4	M40	Y	-16.377	-13.089	2.497	3.329
5	M40	Y	-13.089	-6.926	3.329	4.162
6	M41	Y	-6.923	-13.146	0	.832
7	M41	Y	-13.146	-16.521	.832	1.665
8	M41	Y	-16.521	-14.089	1.665	2.497
9	M41	Y	-14.089	-8.852	2.497	3.329

Member Distributed Loads (BLC 88 : BLC 40 Transient Area Loads) (Continued)

	Member Label	Direction	Start Magnitude[lb/ft,...	End Magnitude[lb/ft,F...	Start Location[ft,%]	End Location[ft,%]
10	M41	Y	-8.852	-3.769	3.329	4.162
11	M64	Y	-3.759	-8.856	0	.832
12	M64	Y	-8.856	-14.083	.832	1.665
13	M64	Y	-14.083	-16.513	1.665	2.497
14	M64	Y	-16.513	-13.156	2.497	3.329
15	M64	Y	-13.156	-6.94	3.329	4.162
16	M65	Y	-6.926	-13.089	0	.832
17	M65	Y	-13.089	-16.377	.832	1.665
18	M65	Y	-16.377	-13.8	1.665	2.497
19	M65	Y	-13.8	-8.454	2.497	3.329
20	M65	Y	-8.454	-3.331	3.329	4.162
21	M51B	Y	-3.331	-8.454	0	.832
22	M51B	Y	-8.454	-13.8	.832	1.665
23	M51B	Y	-13.8	-16.377	1.665	2.497
24	M51B	Y	-16.377	-13.089	2.497	3.329
25	M51B	Y	-13.089	-6.926	3.329	4.162
26	M52B	Y	-6.94	-13.156	0	.832
27	M52B	Y	-13.156	-16.513	.832	1.665
28	M52B	Y	-16.513	-14.083	1.665	2.497
29	M52B	Y	-14.083	-8.856	2.497	3.329
30	M52B	Y	-8.856	-3.759	3.329	4.162

Member Area Loads (BLC 39 : Structure D)

	Joint A	Joint B	Joint C	Joint D	Direction	Distribution	Magnitude[ksf]
1	N79	N77	N54	N55	Y	Two Way	-.005
2	N83	N84	N108	N106	Y	Two Way	-.005
3	N6	N87C	N87B	N7	Y	Two Way	-.005

Member Area Loads (BLC 40 : Structure Di)

	Joint A	Joint B	Joint C	Joint D	Direction	Distribution	Magnitude[ksf]
1	N79	N77	N54	N55	Y	Two Way	-.01
2	N83	N84	N108	N106	Y	Two Way	-.01
3	N6	N87C	N87B	N7	Y	Two Way	-.01

Member Area Loads (BLC 84 : Structure Ev)

	Joint A	Joint B	Joint C	Joint D	Direction	Distribution	Magnitude[ksf]
1	N6	N87C	N87B	N7	Y	Two Way	-.01

Envelope Joint Reactions

	Joint		X [lb]	LC	Y [lb]	LC	Z [lb]	LC	MX [k-ft]	LC	MY [k-ft]	LC	MZ [k-ft]	LC
1	N3	max	1343.914	10	2447.171	13	1826.374	1	3.765	13	1.465	4	.18	4
2		min	-1364.576	4	528.256	7	-2341.291	7	-.057	7	-1.487	10	-.267	10
3	N52	max	1689.783	10	2649.201	21	1908.731	1	-.048	2	1.765	12	-.081	3
4		min	-2138.897	4	621.45	3	-1634.104	7	-2.174	20	-1.788	6	-3.619	21
5	N81	max	2365.692	10	2596.071	17	1641.233	1	.049	11	1.668	8	3.592	17
6		min	-1895.923	4	550.506	11	-1400.958	7	-2.095	17	-1.727	2	-.074	11
7	Totals:	max	5399.39	10	7341.673	13	5376.338	1						
8		min	-5399.396	4	3324.217	7	-5376.352	7						

Envelope AISC 15th(360-16): LRFD Steel Code Checks

	Member	Shape	Code C...	Loc[ft]	LC	Shear ...	Loc[ft]	Dir	LC	phi*Pnc [lb]	phi*Pnt [lb]	phi*Mn y-...	phi*Mn z-...	Cb	Eqn
1	M1	PIPE_3.0	.072	4.036	4	.074	3.906		24	28250.554	65205	5.749	5.749	2....	H1-1b
2	M4	HSS4X4X4	.245	0	11	.072	0	y	24	124657.7...	139518	16.181	16.181	2....	H1-1b
3	M10	L2x2x3	.370	2.375	14	.409	.223	z	1	17634.325	23392.8	.558	1.239	1....	H2-1
4	MP4A	PIPE_2.0	.211	3.859	9	.085	3.859		16	17481.074	32130	1.872	1.872	1....	H1-1b
5	M150	PIPE_2.0	.208	3.5	24	.113	3.5		24	20866.733	32130	1.872	1.872	1....	H1-1b
6	MP2A	PIPE_2.0	.139	3.5	11	.123	1		15	20866.733	32130	1.872	1.872	1....	H1-1b
7	MP1A	PIPE_2.0	.195	3.5	24	.107	3.5		14	20866.733	32130	1.872	1.872	1....	H1-1b
8	M43	L2x2x3	.402	0	12	.541	2.152	z	12	17634.325	23392.8	.558	1.239	1....	H2-1
9	M46	PL1/2X6	.300	.516	1	.188	.516	y	24	66009.234	97200	1.012	12.15	1....	H1-1b
10	M51B	L2x2x3	.325	4.162	2	.019	0	y	19	9823.122	23392.8	.558	1.084	1....	H2-1
11	M52B	L2x2x3	.403	0	12	.019	4.162	y	19	9823.122	23392.8	.558	1.084	1....	H2-1
12	M76	PL3/8x6	.142	0	4	.038	0	y	6	70677.939	72900	.57	9.113	1....	H1-1b
13	M77	PL3/8x6	.147	.167	1	.021	0	z	3	71601.728	72900	.57	9.113	1....	H1-1b
14	M80	PL1/2X6	.096	.112	1	.045	0	y	2	96757.507	97200	1.012	12.15	1....	H1-1b
15	M84	PL3/8x6	.174	0	10	.039	0	y	7	70677.939	72900	.57	9.113	1....	H1-1b
16	M85	PL3/8x6	.181	.167	12	.027	0	z	11	71601.728	72900	.57	9.113	1....	H1-1b
17	M91	PL1/2X6	.097	.112	1	.070	0	y	11	96757.507	97200	1.012	12.15	1....	H1-1b
18	M34	HSS4X4X4	.272	0	19	.076	0	y	43	124657.7...	139518	16.181	16.181	2....	H1-1b
19	M35	L2x2x3	.392	2.375	22	.475	.223	z	10	17634.325	23392.8	.558	1.239	1....	H2-1
20	M36	L2x2x3	.424	0	20	.501	2.152	z	8	17634.325	23392.8	.558	1.239	1....	H2-1
21	M37	PL1/2X6	.289	.516	9	.202	.516	y	19	66009.234	97200	1.012	12.15	1....	H1-1b
22	M40	L2x2x3	.364	4.162	10	.019	0	y	15	9823.122	23392.8	.558	1.084	1....	H2-1
23	M41	L2x2x3	.371	0	8	.020	4.162	y	15	9823.122	23392.8	.558	1.084	1....	H2-1
24	M45	PL3/8x6	.169	0	12	.040	0	y	3	70677.939	72900	.57	9.113	1....	H1-1b
25	M46A	PL3/8x6	.162	.167	10	.024	0	z	11	71601.728	72900	.57	9.113	1....	H1-1b
26	M48	PL1/2X6	.095	.112	9	.056	0	y	11	96757.507	97200	1.012	12.15	1....	H1-1b
27	M50A	PL3/8x6	.199	0	6	.040	0	y	4	70677.939	72900	.57	9.113	1....	H1-1b
28	M51C	PL3/8x6	.164	.167	8	.027	0	z	7	71601.728	72900	.57	9.113	1....	H1-1b
29	M53	PL1/2X6	.098	.112	9	.093	0	y	50	96757.507	97200	1.012	12.15	1....	H1-1b
30	M58A	HSS4X4X4	.272	0	15	.079	0	y	30	124657.7...	139518	16.181	16.181	2....	H1-1b
31	M59A	L2x2x3	.414	2.375	18	.467	.223	z	6	17634.325	23392.8	.558	1.239	1....	H2-1
32	M60	L2x2x3	.391	0	16	.542	2.152	z	4	17634.325	23392.8	.558	1.239	1....	H2-1
33	M61	PL1/2X6	.315	.516	5	.195	.516	y	18	66009.234	97200	1.012	12.15	1....	H1-1b
34	M64	L2x2x3	.364	4.162	6	.021	0	y	23	9823.122	23392.8	.558	1.084	1....	H2-1
35	M65	L2x2x3	.394	0	4	.019	4.162	y	11	9823.122	23392.8	.558	1.084	1....	H2-1
36	M69	PL3/8x6	.159	0	8	.042	0	y	11	70677.939	72900	.57	9.113	1....	H1-1b
37	M70	PL3/8x6	.164	.167	6	.024	0	z	7	71601.728	72900	.57	9.113	1....	H1-1b
38	M72	PL1/2X6	.106	.112	5	.091	0	y	30	96757.507	97200	1.012	12.15	1....	H1-1b
39	M74	PL3/8x6	.193	0	3	.040	0	y	11	70677.939	72900	.57	9.113	1....	H1-1b
40	M75	PL3/8x6	.174	.167	4	.026	0	z	4	71601.728	72900	.57	9.113	1....	H1-1b
41	M77A	PL1/2X6	.102	.112	5	.070	0	y	4	96757.507	97200	1.012	12.15	1....	H1-1b
42	M82	PIPE_3.0	.074	4.036	12	.073	3.906		19	28250.554	65205	5.749	5.749	2....	H1-1b
43	M83A	PIPE_3.0	.073	4.036	7	.073	3.906		17	28250.554	65205	5.749	5.749	2....	H1-1b
44	MP3A	PIPE_2.0	.163	3.859	5	.129	1.93		23	17481.074	32130	1.872	1.872	1....	H1-1b
45	MP5A	PIPE_2.0	.143	3.5	3	.129	3.5		15	20866.733	32130	1.872	1.872	1....	H1-1b
46	MP4C	PIPE_2.0	.234	3.859	16	.086	3.859		24	17481.074	32130	1.872	1.872	3....	H1-1b
47	M93	PIPE_2.0	.188	3.5	21	.109	3.5		20	20866.733	32130	1.872	1.872	1....	H1-1b
48	MP2C	PIPE_2.0	.124	3.5	7	.121	3.5		19	20866.733	32130	1.872	1.872	1....	H1-1b
49	MP1C	PIPE_2.0	.180	3.5	20	.104	3.5		22	20866.733	32130	1.872	1.872	1....	H1-1b
50	MP3C	PIPE_2.0	.155	3.859	1	.133	1.93		19	17481.074	32130	1.872	1.872	1....	H1-1b
51	MP5C	PIPE_2.0	.149	3.5	11	.134	3.5		23	20866.733	32130	1.872	1.872	1....	H1-1b

Envelope AISC 15th(360-16): LRFD Steel Code Checks (Continued)

	Member	Shape	Code C...	Loc[ft]	LC	Shear ...	Loc[ft]	Dir	LC	phi*Pnc [lb]	phi*Pnt [lb]	phi*Mn y-...	phi*Mn z-...	Cb	Eqn
52	MP4B	PIPE_2.0	.252	3.859	23	.089	3.859		20	17481.074	32130	1.872	1.872	1....	H1-1b
53	M105	PIPE_2.0	.177	3.5	18	.106	3.5		16	20866.733	32130	1.872	1.872	1....	H1-1b
54	MP2B	PIPE_2.0	.130	3.5	3	.129	1		19	20866.733	32130	1.872	1.872	1....	H1-1b
55	MP1B	PIPE_2.0	.167	3.5	16	.104	3.5		18	20866.733	32130	1.872	1.872	1....	H1-1b
56	MP3B	PIPE_2.0	.168	3.859	9	.137	3.859		22	17481.074	32130	1.872	1.872	1....	H1-1b
57	MP5B	PIPE_2.0	.147	3.5	7	.127	3.5		19	20866.733	32130	1.872	1.872	1....	H1-1b
58	M116A	PIPE_2.5	.224	8.073	24	.161	3.906		15	14558.792	50715	3.596	3.596	2....	H1-1b
59	M121	PIPE_2.5	.236	8.073	20	.158	3.906		23	14558.792	50715	3.596	3.596	3....	H1-1b
60	M122	PIPE_2.5	.225	4.557	19	.164	3.906		19	14558.792	50715	3.596	3.596	2....	H1-1b
61	M143	L3X3X4	.295	2.278	16	.008	0	y	11	41590.265	46656	1.688	3.756	1....	H2-1
62	M144	L3X3X4	.301	0	22	.007	0	y	7	41590.265	46656	1.688	3.756	1....	H2-1
63	M145	L3X3X4	.291	0	18	.008	2.278	y	6	41590.265	46656	1.688	3.756	1....	H2-1
64	M152	L2.5x2.5x4	.064	1.877	24	.011	3.678	z	17	24794.395	38556	1.114	2.391	1....	H2-1
65	M153	L2.5x2.5x4	.059	1.877	14	.011	3.678	y	21	24794.395	38556	1.114	2.391	1....	H2-1
66	M154A	L2.5x2.5x4	.067	1.877	20	.011	3.678	z	13	24794.395	38556	1.114	2.391	1....	H2-1
67	M155A	L2.5x2.5x4	.058	1.877	13	.012	3.678	y	17	24794.395	38556	1.114	2.391	1....	H2-1
68	M156	L2.5x2.5x4	.063	1.877	16	.011	3.678	z	21	24794.395	38556	1.114	2.391	1....	H2-1
69	M157	L2.5x2.5x4	.064	1.877	18	.011	0	y	13	24794.395	38556	1.114	2.391	1....	H2-1

Client:	Verizon Wireless	Date:	11/23/2021
Site Name:	DANIELSON SOUTH CT		
Project No.	21777993A		
Title:	Connection Check	Page:	1

Version 3.1

I. Mount-to-Tower Connection Check

RISA Model Data

Nodes *(labeled per RISA)*	Orientation *(per graphic of typical platform)*
N52	30
N81	150
N3	270

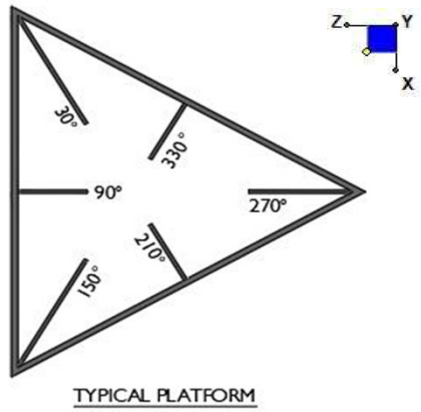

Tower Connection Bolt Checks

Any moment resistance?:	yes
Bolt Quantity per Reaction:	4
d_x (in) *(Delta X of typ. bolt config. sketch)* :	7
d_y (in) *(Delta Y of typ. bolt config. sketch)* :	7
Bolt Type:	A325N
Bolt Diameter (in):	0.625
Required Tensile Strength (kips):	17.1
Required Shear Strength (kips):	7.7
Tensile Strength / bolt (kips):	20.7
Shear Strength / bolt (kips):	12.4
Tensile Capacity Overall:	**20.7%***
Shear Capacity Overall:	**15.5%**

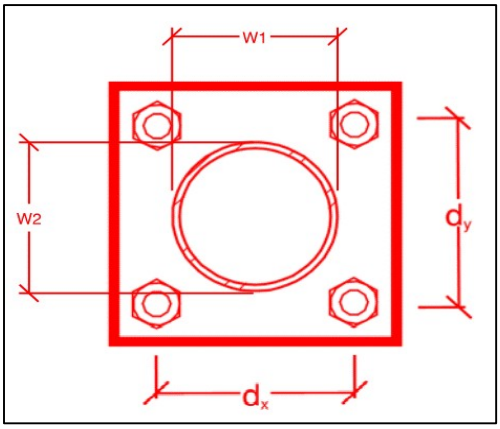

**Note: Tension reduction not required if tension or shear capacity < 30%*

Tower Connection Plate and Weld Check

Connecting Standoff Member Shape:	Rect
Plate Width (in):	10
Plate Height (in):	10
W1 (in):	4
W2 (in):	4
Fy (ksi, plate):	36
t_{Plate} (in):	0.5
Weld Size (1/16 in):	6
Phi*Rn (kip/in):	8.35
Required Weld Strength (kip/in):	2.39
Plate Bending Capacity:	**56.9%**
Weld Capacity:	**28.6%**

Max Plate Bending Strengths

Mu_{xx} *(kip-in)* :	10.7
$Phi*Mn_{xx}$ *(kip-in)* :	20.3
Mu_{yy} *(kip-in)* :	0.8
$Phi*Mn_{yy}$ *(kip-in)* :	20.3

Mount Desktop – Post Modification Inspection (PMI) Report Requirements

Documents & Photos Required from Contractor – Mount Modification

Electronic pdf version of this can be downloaded at https://pmi.vzwsmart.com
For additional questions and support, please reach out to pmisupport@colliersengineering.com

---

Purpose – to upload the proper documentation to the SMART Tool in order to allow the SMART Tool engineering vendor to complete the required Mount Desktop review of the Post Modification Inspection Report.

- Contractor is responsible for making certain the photos provided as noted below provide confirmation that the modification was completed in accordance with the modification drawings.
- Contractor shall relay any data that can impact the performance of the mount or the mount modification, this includes safety issues.

Base Requirements:

- If installation of the modification will cause damage to the structure, the climbing facility, or safety climb if present or any installed system, SMART Tool vendor to be notified prior to install. Any special photos outside of the standard requirements will be indicated on the drawings.
- Provide "as built drawings" showing contractor's name, preparer's signature, and date. Any deviations from the drawings (proposed modification) shall be shown. NOTE: If loading is different than what is conveyed in the post-modification passing mount analysis (MA) contact the SMART Tool vendor immediately.
- Each photo shall be time and date stamped.
- Photos should be high resolution.
- Contractor shall ensure that the safety climb wire rope is not adversely impacted by the install of the modification components. This may involve the install of wire rope guides, or other items to protect the wire rope. If there is conflict, contact the SMART Tool engineer for recommendations.
- The PMI can be accessed at the following portal: **https://pmi.vzwsmart.com**

Photo Requirements:

- *Photos taken at ground level*
  - Photo of Gate Signs showing the tower owner, site name, and number.
  - Overall tower structure after installation of the modifications.
  - Photos of the mount after installation of the modifications; if the mounts are at different rad elevations, pictures must be provided for all elevations that the modifications were installed

- *Photos taken at Mount Elevation*
  - Photos showing the safety climb wire rope above and below the mount prior to modification.
  - Photos showing the climbing facility and safety climb if present.
  - Photos showing each individual sector after installation of modifications. Each entire sector must be in one photo to show the interconnection of members.

        - These photos shall also certify that the placement and geometry of the equipment on the mount is as depicted in the antenna placement diagram in this form.
    - Photos that show the model number of each antenna and piece of equipment installed per sector.
    - Photos of each installed modification per the modification drawings; pictures shall also include connection hardware (U-bolts, bolts, nuts, all-threaded rods, etc.)
    - Photos showing the distances (relative distance between collars) of the installed modifications from the appropriate reference locations shown in the modification drawings.
    - Photos showing the installed modifications onto the tower (i.e. ring/collar mounts, tie-backs, V-bracing kits, etc.); if the existing mount elevation needs to be changed according to the modification drawings, an elevation measurement shall be provided before the elevation change.

<u>Material Certification:</u>

- Materials utilized must be as per specification on the drawings or the equivalent as validated by the SMART Tool vendor.
    - If the materials are as specified on the drawings
        - The contractor shall provide the packing list, or the materials certifications for the materials utilized to perform the mount modification
        - Commscope, Metrosite, Perfect Vision, Sabre, and Site Pro have all agreed to support Verizon vendors with the necessary material certifications
    - If seeking permission to use an equivalent
        - It is required that the SMART Tool engineering vendor approval of such is included in the contractor submission package. There may be an additional charge for approval if the equivalent submission doesn't meet specifications as prescribed in the drawings.

☐ All hardware has been properly installed, and the existing hardware was inspected.

☐ The material utilized was as specified on the SMART Tool engineering vendor Mount Modification Drawings and included in the material certification folder is a packing list or invoice for these materials.

OR

☐ The material utilized was approved by a SMART Tool as an "equivalent" and this approval is included as part of the contractor submission.

<u>Antenna & equipment placement and Geometry Confirmation:</u>

☐ The contractor certifies that the photos support and the equipment on the mount is as depicted on the sketch and table included in this form and with the mount analysis provided.

OR

☐ The contractor notes that the equipment on the mount is not in accordance with the sketch and has noted the differences below and provided photo documentation of any alterations.

Comments:

Certifying Individual:

Company:	
Employee Name:	
Contact Phone:	
Email:	
Date:	

Was the mount modification completed in conjunction with the equipment change / installation?

☐ Yes ☐ No

Special Instructions / Validation as required from the MA or Mod Drawings:

Issue:

Response:

Contractor certifies that the climbing facility / safety climb was not damaged or obstructed prior to starting work:

☐ Yes ☐ No

Contractor certifies no new damage/obstructions created during the current installation:

☐ Yes ☐ No

Contractor to certify the condition of the safety climb and verify no obstructions when leaving the site:

☐ Safety climb in good condition with no obstructions ☐ Safety Climb Damaged
☐ Safety Climb Obstructed

Structure: 535822-VZW - DANIELSON SOUTH CT

Sector: **A** 11/23/2021

Structure Type: Monopole 10117167

Mount Elev: 98.00 Page: 1

Plan View

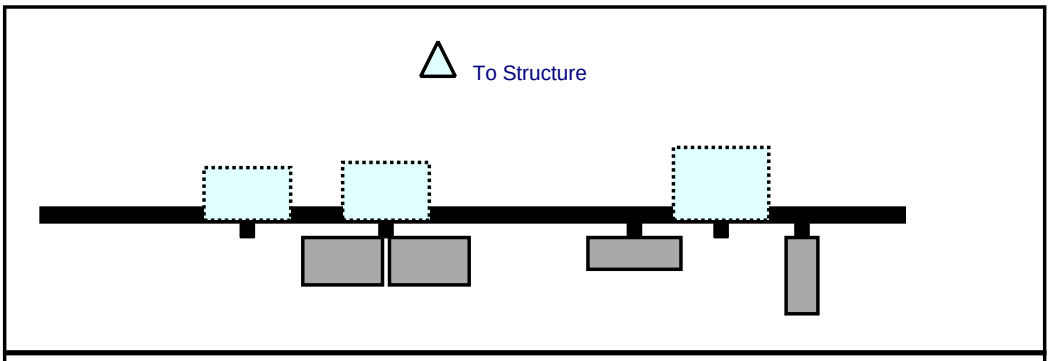

Front View
Looking at Structure

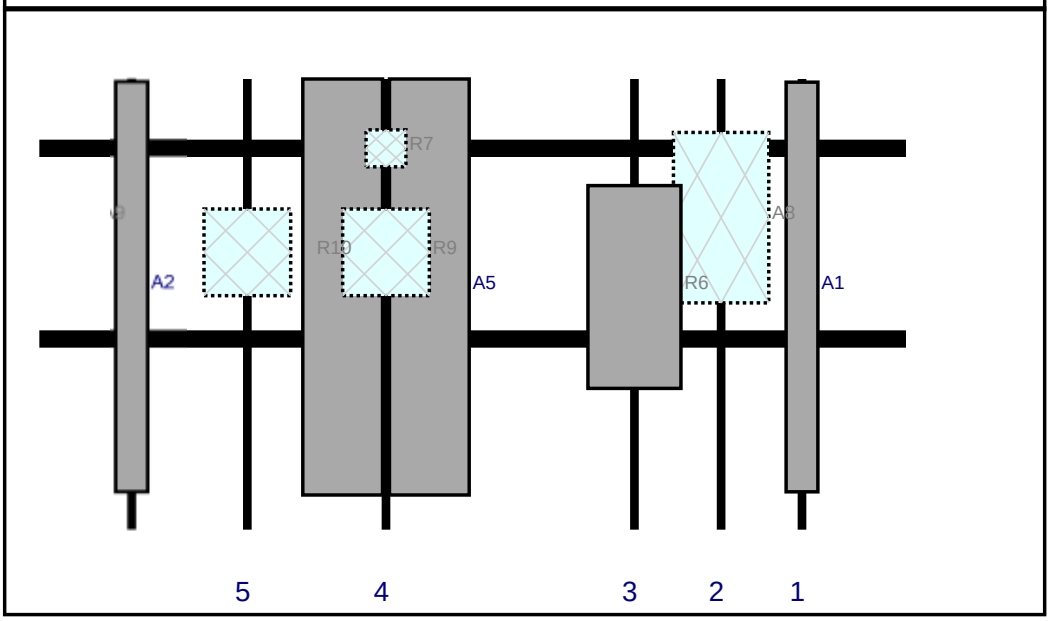

Ref#	Model	Height (in)	Width (in)	H Dist Frm L.	Pipe #	Pipe Pos V	Ant Pos	C. Ant Frm T.	Ant H Off	Status	Validation
A1	LPA-80080/6CF	70.9	5.5	132	1	a	Front	36	0	Retained	11/02/2021
A8	OVP 6	29.5	16.5	118	2	a	Behind	24	0	Retained	11/02/2021
R6	MT6407-77A	35.1	16.1	103	3	a	Front	36	0	Added	
A5	JAHH-65B-R3B	72	13.8	60	4	a	Front	36	-7.5	Added	
A5	JAHH-65B-R3B	72	13.8	60	4	b	Front	36	7.5	Added	
R7	CBC78T-DS-43-2X	6.4	6.9	60	4	a	Behind	12	0	Added	
R9	RF4439d-25A	15	15	60	4	a	Behind	30	0	Added	
R10	RF4440d-13A	15	15	36	5	a	Behind	30	0	Added	

Copyright 2019 by Tower Engineering Solutions, LLC. All Rights Reserved

Sector: **B** 11/23/2021

Structure Type: Monopole 10117167

Mount Elev: 98.00 Page: 2

Plan View

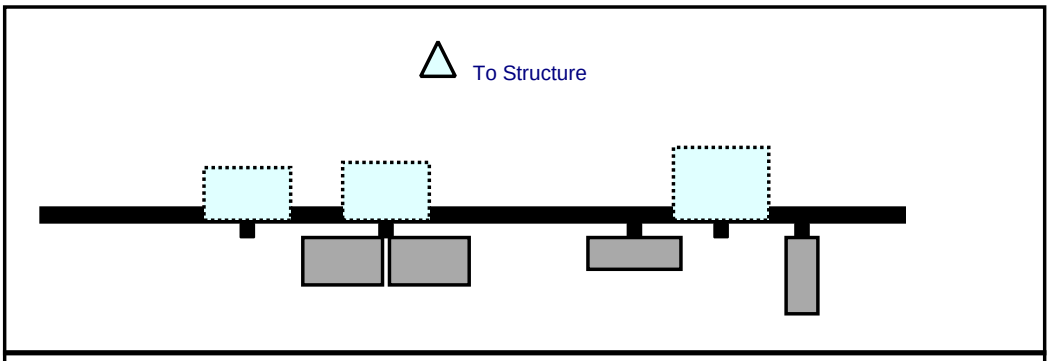

Front View
Looking at Structure

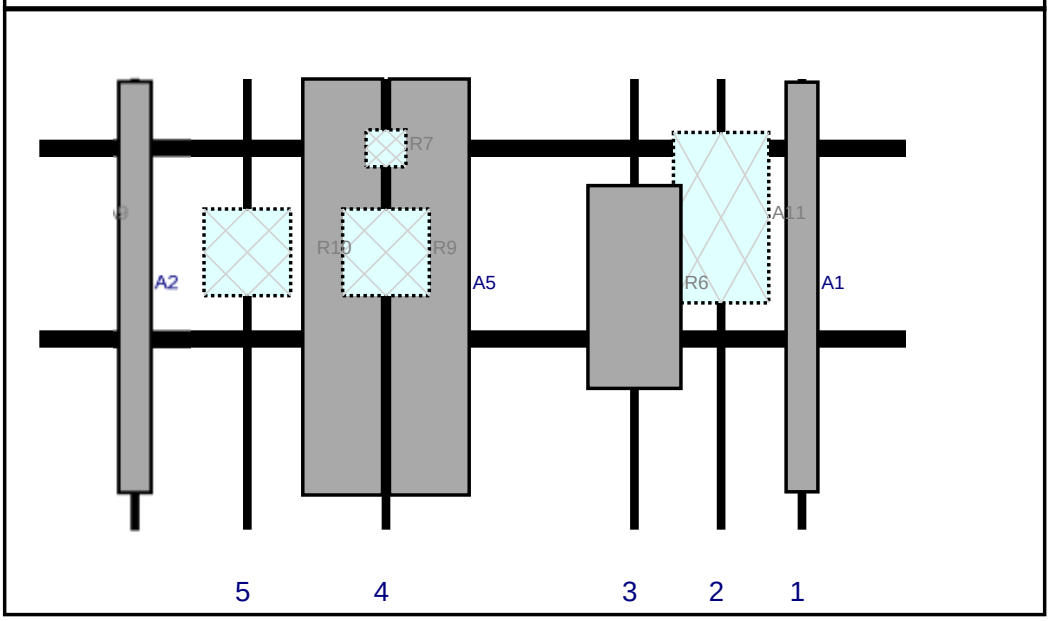

Ref#	Model	Height (in)	Width (in)	H Dist Frm L.	Pipe #	Pipe Pos V	Ant Pos	C. Ant Frm T.	Ant H Off	Status	Validation
A1	LPA-80080/6CF	70.9	5.5	132	1	a	Front	36	0	Retained	11/02/2021
A11	DB-B1-6C-12AB-0Z	29.5	16.5	118	2	a	Behind	24	0	Added	
R6	MT6407-77A	35.1	16.1	103	3	a	Front	36	0	Added	
A5	JAHH-65B-R3B	72	13.8	60	4	a	Front	36	-7.5	Added	
A5	JAHH-65B-R3B	72	13.8	60	4	b	Front	36	7.5	Added	
R7	CBC78T-DS-43-2X	6.4	6.9	60	4	a	Behind	12	0	Added	
R9	RF4439d-25A	15	15	60	4	a	Behind	30	0	Added	
R10	RF4440d-13A	15	15	36	5	a	Behind	30	0	Added	

Copyright 2019 by Tower Engineering Solutions, LLC. All Rights Reserved

Sector: **C** 11/23/2021

Structure Type: Monopole 10117167

Mount Elev: 98.00 Page: 3

Plan View

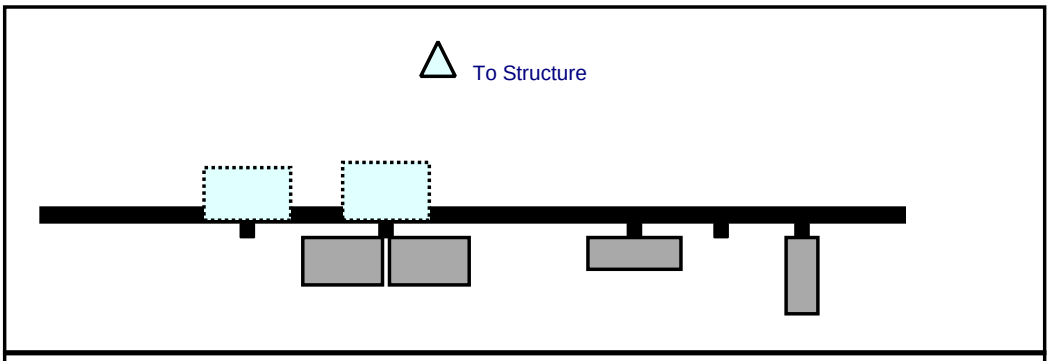

Front View
Looking at Structure

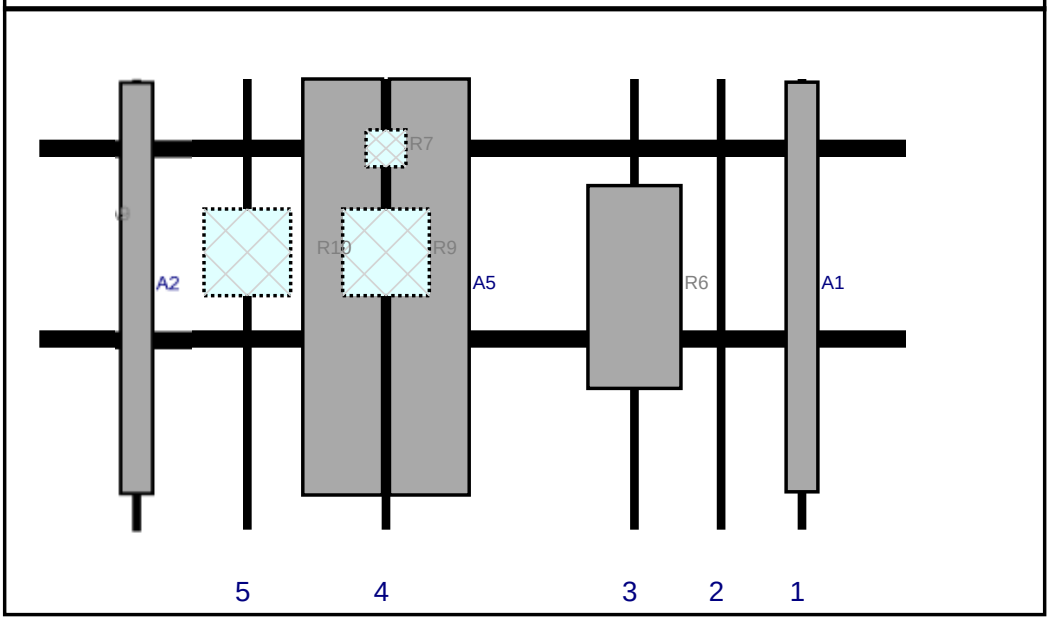

Ref#	Model	Height (in)	Width (in)	H Dist Frm L.	Pipe #	Pipe Pos V	Ant Pos	C. Ant Frm T.	Ant H Off	Status	Validation
A5	JAHH-65B-R3B	72	13.8	60	4	a	Front	36	-7.5	Added	
A5	JAHH-65B-R3B	72	13.8	60	4	b	Front	36	7.5	Added	
R7	CBC78T-DS-43-2X	6.4	6.9	60	4	a	Behind	12	0	Added	
R9	RF4439d-25A	15	15	60	4	a	Behind	30	0	Added	
R10	RF4440d-13A	15	15	36	5	a	Behind	30	0	Added	
A1	LPA-80080/6CF	70.9	5.5	132	1	a	Front	36	0	Retained	11/02/2021
R6	MT6407-77A	35.1	16.1	103	3	a	Front	36	0	Added	

Copyright 2019 by Tower Engineering Solutions, LLC. All Rights Reserved

Maser Consulting Connecticut

Subject	TIA-222-H Adoption and Wind Speed Usage	
Site Information	*Site ID:*	535822-VZW / DANIELSON SOUTH CT
	Site Name:	DANIELSON SOUTH CT
	Carrier Name:	Verizon Wireless
	Address:	280 Ross Rd Killingly, Connecticut 06439 Windham County
	Latitude:	41.771544°
	Longitude:	-71.855658°
Structure Information	*Tower Type:*	120-Ft Monopole
	Mount Type:	12.50-Ft Platform

To Whom It May Concern,

We respectfully submit the above referenced Antenna Mount Structural Analysis report in conformance with ANSI/TIA-222-H, Structural Standard for Antenna Supporting Structures and Antennas and Small Wind Turbine Support Structures.

The 2015 International Building Code states that, in Section 3108, telecommunication towers shall be designed and constructed in accordance with the provisions of TIA-222. The TIA-222-H is the latest revision of the TIA-222 Standard, effective as of January 01, 2018.

As with all ANSI standards and engineering best practice is to apply the most current revision of the standard. This ensures the engineer is applying all updates. As an example, the TIA-222-H standard includes updates to bring it in line with the latest AISC and ACI standards and it also incorporates the latest wind speed maps by ASCE 7 based on updated studies of the wind data.

The TIA-222-H standard clarifies these specific requirements for the antenna mount analysis such as modeling methods, seismic analysis, 30-degree increment wind directions and maintenance loading. Therefore, it is our opinion that TIA-222-H is the most appropriate standard for antenna mount structural analysis and is acceptable for use at this site to ensure the engineer is taking into account the most current engineering standard available.

Sincerely,

Derek Hartzell, PE
Technical Specialist

Exhibit F

Power Density/RF Emissions Report

Site Name: ***DANIELSON SOUTH CT***
Cumulative Power Density

Operator	Operating Frequency	Number of Trans.	ERP Per Trans.	Total ERP	Distance to Target	Calculated Power Density	Maximum Permissible Exposure*	Fraction of MPE
	(MHz)		(watts)	(watts)	(feet)	(mW/cm^2)	(mW/cm^2)	(%)
VZW 700	751	4	634	2534	100	0.0091	0.5007	1.82%
VZW CDMA	878.49	2	483	966	100	0.0035	0.5857	0.59%
VZW Cellular	874	4	38	152	100	0.0005	0.5827	0.09%
VZW PCS	1977.5	4	1525	6100	100	0.0219	1.0000	2.19%
VZW AWS	2120	4	1493	5973	100	0.0215	1.0000	2.15%
VZW CBAND	3730.08	4	6531	26125	100	0.0940	1.0000	9.40%
Total Percentage of Maximum Permissible Exposure								16.24%

*Guidelines adopted by the FCC on August 1, 1996, 47 CFR Part 1 based on NCRP Report 86, 1986 and generally on ANSI/IEEE C95.1-1992
**Calculation includes a -10 dB Off Beam Antenna Pattern Adjustment pursuant to Attachments B and C of the Siting Council's November 10, 2015 Memorandum for Exempt Modification filings

MHz = Megahertz
mW/cm^2 = milliwatts per square centimeter
ERP = Effective Radiated Power

Absolute worst case maximum values used.

Exhibit G

Recipient Mailings

UNITED STATES POSTAL SERVICE®

Click-N-Ship®

usps.com
$8.95
US POSTAGE
Flat Rate Env

9405 5036 9930 0223 1878 15 0089 5000 0010 6239

U.S. POSTAGE PAID
Click-N-Ship®

04/14/2022

Mailed from 01566

PRIORITY MAIL 2-DAY™

DEBORAH CHASE
NORTHEAST SITE SOLUTIONS
420 MAIN ST
STE 1
STURBRIDGE MA 01566-1359

Expected Delivery Date: 04/18/22
Ref#: CR-857013
0006

C005

SHIP
TO: JASON ANDERSON
TOWN COUNCIL CHAIR
172 MAIN ST
KILLINGLY CT 06239-2822

USPS TRACKING #

9405 5036 9930 0223 1878 15

Electronic Rate Approved #038555749

Cut on dotted line.

Instructions

1. **Each Click-N-Ship® label is unique. Labels are to be used as printed and used only once. DO NOT PHOTO COPY OR ALTER LABEL.**
2. **Place your label so it does not wrap around the edge of the package.**
3. **Adhere your label to the package. A self-adhesive label is recommended. If tape or glue is used, DO NOT TAPE OVER BARCODE. Be sure all edges are secure.**
4. **To mail your package with PC Postage®, you may schedule a Package Pickup online, hand to your letter carrier, take to a Post Office™, or drop in a USPS collection box.**
5. **Mail your package on the "Ship Date" you selected when creating this label.**

Click-N-Ship® Label Record

USPS TRACKING # :
9405 5036 9930 0223 1878 15

Trans. #:	561334975	Priority Mail® Postage:	**$8.95**
Print Date:	04/14/2022	Total:	**$8.95**
Ship Date:	04/14/2022		
Expected Delivery Date:	04/18/2022		

From: DEBORAH CHASE
NORTHEAST SITE SOLUTIONS
420 MAIN ST
STE 1
STURBRIDGE MA 01566-1359

Ref#: CR-857013

To: JASON ANDERSON
TOWN COUNCIL CHAIR
172 MAIN ST
KILLINGLY CT 06239-2822

* Retail Pricing Priority Mail rates apply. There is no fee for USPS Tracking® service on Priority Mail service with use of this electronic rate shipping label. Refunds for unused postage paid labels can be requested online 30 days from the print date.

UNITED STATES POSTAL SERVICE® *Thank you for shipping with the United States Postal Service!*
Check the status of your shipment on the USPS Tracking® page at usps.com

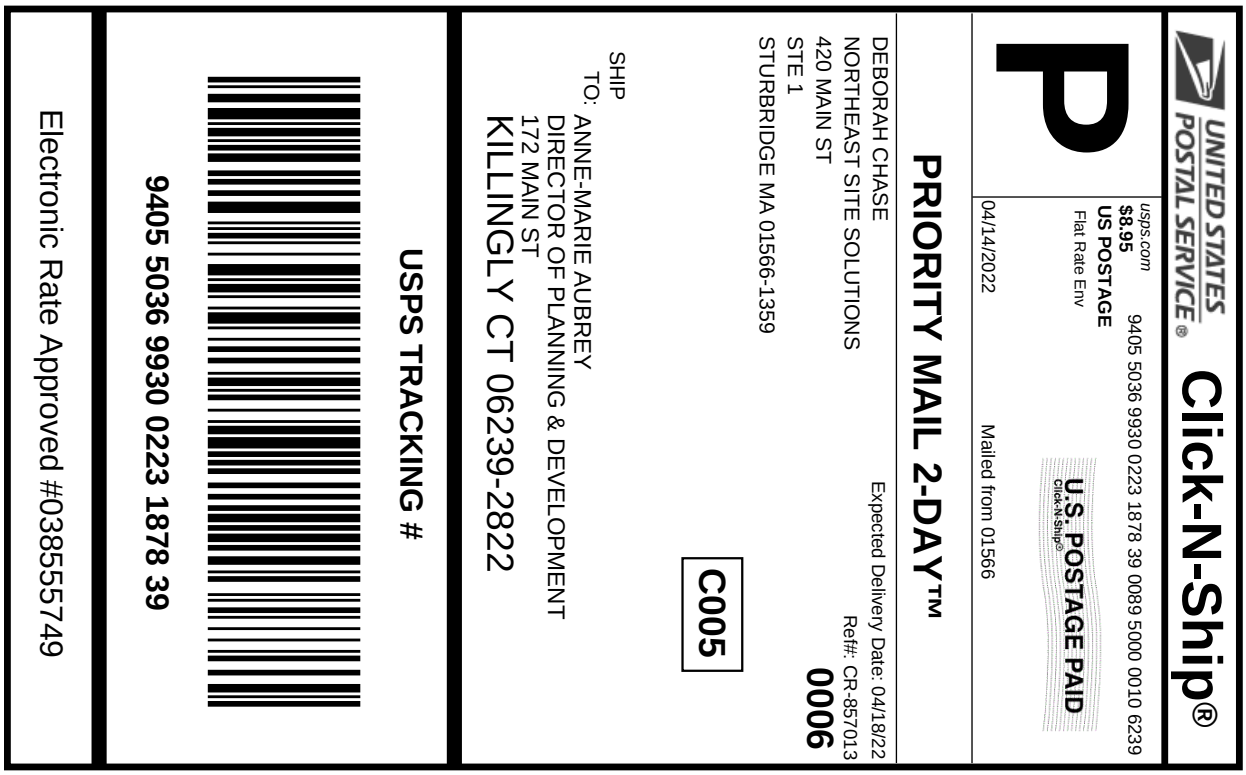

Cut on dotted line.

Instructions

1. **Each Click-N-Ship® label is unique. Labels are to be used as printed and used only once. DO NOT PHOTO COPY OR ALTER LABEL.**
2. **Place your label so it does not wrap around the edge of the package.**
3. **Adhere your label to the package. A self-adhesive label is recommended. If tape or glue is used, DO NOT TAPE OVER BARCODE. Be sure all edges are secure.**
4. **To mail your package with PC Postage®, you may schedule a Package Pickup online, hand to your letter carrier, take to a Post Office™, or drop in a USPS collection box.**
5. **Mail your package on the "Ship Date" you selected when creating this label.**

Click-N-Ship® Label Record

USPS TRACKING # :
9405 5036 9930 0223 1878 39

Trans. #:	561334975	Priority Mail® Postage:	**$8.95**
Print Date:	04/14/2022	Total:	**$8.95**
Ship Date:	04/14/2022		
Expected Delivery Date:	04/18/2022		

From: DEBORAH CHASE
NORTHEAST SITE SOLUTIONS
420 MAIN ST
STE 1
STURBRIDGE MA 01566-1359

Ref#: CR-857013

To: ANNE-MARIE AUBREY
DIRECTOR OF PLANNING & DEVELOPMENT
172 MAIN ST
KILLINGLY CT 06239-2822

* Retail Pricing Priority Mail rates apply. There is no fee for USPS Tracking® service on Priority Mail service with use of this electronic rate shipping label. Refunds for unused postage paid labels can be requested online 30 days from the print date.

Thank you for shipping with the United States Postal Service!
Check the status of your shipment on the USPS Tracking® page at usps.com

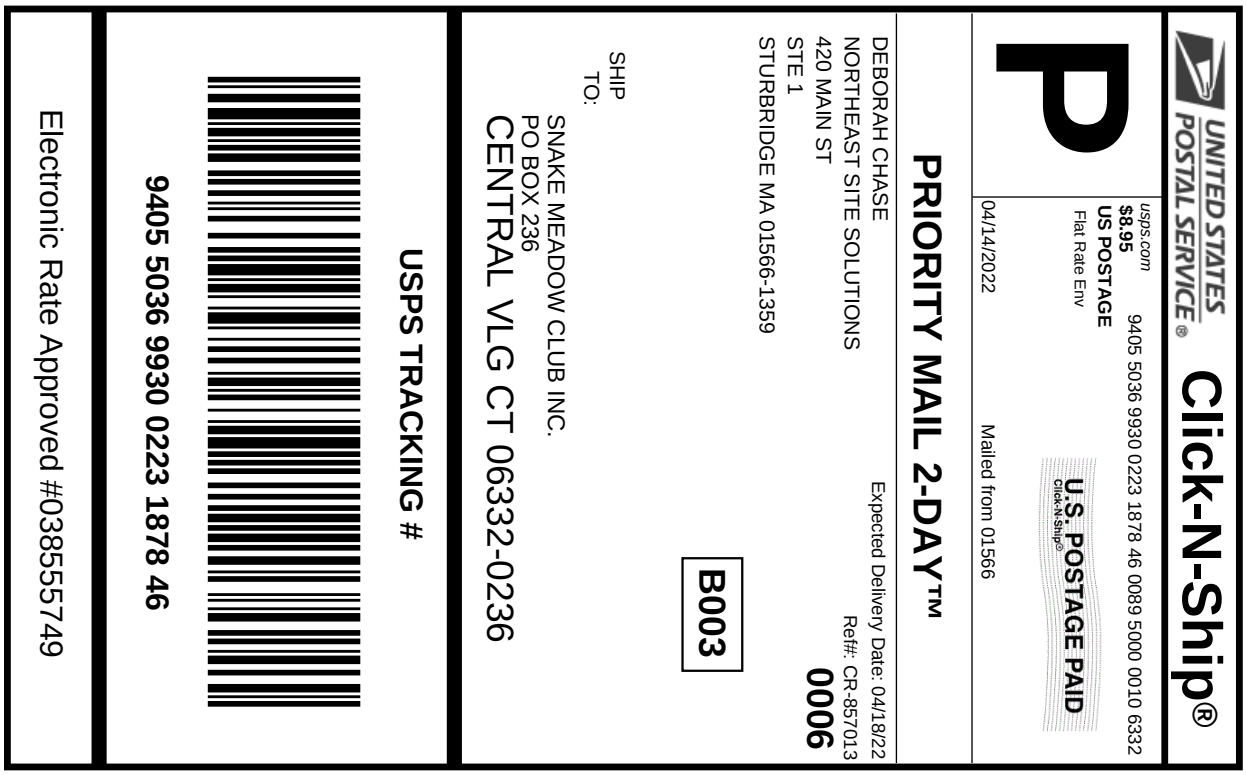

Cut on dotted line.

Instructions

1. **Each Click-N-Ship® label is unique. Labels are to be used as printed and used only once. DO NOT PHOTO COPY OR ALTER LABEL.**
2. **Place your label so it does not wrap around the edge of the package.**
3. **Adhere your label to the package. A self-adhesive label is recommended. If tape or glue is used, DO NOT TAPE OVER BARCODE. Be sure all edges are secure.**
4. **To mail your package with PC Postage®, you may schedule a Package Pickup online, hand to your letter carrier, take to a Post Office™, or drop in a USPS collection box.**
5. **Mail your package on the "Ship Date" you selected when creating this label.**

Click-N-Ship® Label Record

USPS TRACKING # :
9405 5036 9930 0223 1878 46

Trans. #:	561334975	Priority Mail® Postage:	**$8.95**
Print Date:	04/14/2022	Total:	**$8.95**
Ship Date:	04/14/2022		
Expected Delivery Date:	04/18/2022		

From: DEBORAH CHASE
NORTHEAST SITE SOLUTIONS
420 MAIN ST
STE 1
STURBRIDGE MA 01566-1359

Ref#: CR-857013

To: SNAKE MEADOW CLUB INC.
PO BOX 236
CENTRAL VLG CT 06332-0236

* Retail Pricing Priority Mail rates apply. There is no fee for USPS Tracking® service on Priority Mail service with use of this electronic rate shipping label. Refunds for unused postage paid labels can be requested online 30 days from the print date.

Thank you for shipping with the United States Postal Service!
Check the status of your shipment on the USPS Tracking® page at usps.com

UNITED STATES POSTAL SERVICE®

Click-N-Ship®

usps.com
$8.95
US POSTAGE
Flat Rate Env

9405 5036 9930 0223 2604 71 0089 5000 0010 1581

U.S. POSTAGE PAID
Click-N-Ship®

04/14/2022

Mailed from 01566

P

PRIORITY MAIL 1-DAY™

DEBORAH CHASE
NORTHEAST SITE SOLUTIONS
420 MAIN ST
STE 1
STURBRIDGE MA 01566-1359

Expected Delivery Date: 04/15/22
Ref#: CR-857013
0006

C006

SHIP
TO: SARAH SNELL
CROWN CASTLE
1800 W PARK DR
WESTBOROUGH MA 01581-3926

USPS TRACKING #

9405 5036 9930 0223 2604 71

Electronic Rate Approved #038555749

Cut on dotted line.

Instructions

1. **Each Click-N-Ship® label is unique. Labels are to be used as printed and used only once. DO NOT PHOTO COPY OR ALTER LABEL.**
2. **Place your label so it does not wrap around the edge of the package.**
3. **Adhere your label to the package. A self-adhesive label is recommended. If tape or glue is used, DO NOT TAPE OVER BARCODE. Be sure all edges are secure.**
4. **To mail your package with PC Postage®, you may schedule a Package Pickup online, hand to your letter carrier, take to a Post Office™, or drop in a USPS collection box.**
5. **Mail your package on the "Ship Date" you selected when creating this label.**

Click-N-Ship® Label Record

USPS TRACKING # :
9405 5036 9930 0223 2604 71

Trans. #:	561340132	Priority Mail® Postage:	**$8.95**
Print Date:	04/14/2022	Total:	**$8.95**
Ship Date:	04/14/2022		
Expected Delivery Date:	04/15/2022		

From: DEBORAH CHASE
NORTHEAST SITE SOLUTIONS
420 MAIN ST
STE 1
STURBRIDGE MA 01566-1359

Ref#: CR-857013

To: SARAH SNELL
CROWN CASTLE
1800 W PARK DR
WESTBOROUGH MA 01581-3926

* Retail Pricing Priority Mail rates apply. There is no fee for USPS Tracking® service on Priority Mail service with use of this electronic rate shipping label. Refunds for unused postage paid labels can be requested online 30 days from the print date.

UNITED STATES POSTAL SERVICE® *Thank you for shipping with the United States Postal Service!*
Check the status of your shipment on the USPS Tracking® page at usps.com

857013 Crown VZW

UNITED STATES POSTAL SERVICE.

FARMINGTON
210 MAIN ST
FARMINGTON, CT 06032-9998
(800)275-8777

04/14/2022 04:04 PM

Product	Qty	Unit Price	Price
Prepaid Mail Westborough, MA 01581 Weight: 0 lb 2.00 oz Acceptance Date: Thu 04/14/2022 Tracking #: 9405 5036 9930 0223 2604 71	1		$0.00
Prepaid Mail Central Village, CT 06332 Weight: 0 lb 6.60 oz Acceptance Date: Thu 04/14/2022 Tracking #: 9405 5036 9930 0223 1878 46	1		$0.00
Prepaid Mail Danielson, CT 06239 Weight: 0 lb 6.70 oz Acceptance Date: Thu 04/14/2022 Tracking #: 9405 5036 9930 0223 1878 15	1		$0.00
Prepaid Mail Danielson, CT 06239 Weight: 0 lb 6.60 oz Acceptance Date: Thu 04/14/2022 Tracking #: 9405 5036 9930 0223 1878 39	1		$0.00

Grand Total: $0.00