T-MOBILE NORTHEAST LLC

CTNH517A
ATC HARWINTON MONOPOLE

175 WEINGART RD.
HARWINTON, CT 06791

(705A-V2 CONFIGURATION)

VICINITY MAP

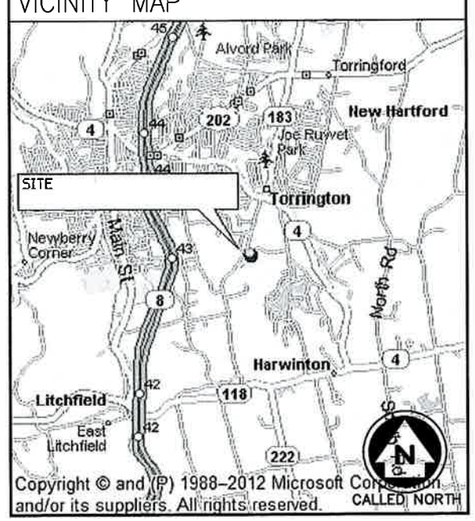

DO NOT SCALE DRAWINGS

CONTRACTOR SHALL VERIFY PLANS AND EXISTING DIMENSIONS AND CONDITIONS ON THE JOB SITE AND SHALL IMMEDIATELY NOTIFY THE ARCHITECT IN WRITING OF ANY DISCREPANCIES BEFORE PROCEEDING WITH THE WORK OR BE RESPONSIBLE FOR SAME.

CALL:

'CALL BEFORE YOU DIG'
WWW.CBYD.COM
CALL 811, OR 1-800-922-4455

CALL THREE WORKING DAYS PRIOR TO DIGGING

SAFETY PRECAUTIONS SHALL BE IMPLEMENTED BY CONTRACTOR(S) AT ALL TRENCHING IN ACCORDANCE WITH CURRENT OSHA STANDARDS.

COLOR CODE FOR UTILITY LOCATIONS

ELECTRIC	– RED	SEWER	– GREEN
GAS/OIL	– YELLOW	SURVEY	– PINK
TEL/CATV	– ORANGE	PROPOSED EXCAVATION	– WHITE
WATER	– BLUE	RECLAIMED WATER	– PURPLE

GENERAL NOTES

1. THE CONTRACTOR SHALL GIVE ALL NOTICES AND COMPLY WITH ALL LAWS, ORDINANCES. RULES, REGULATIONS AND LAWFUL ORDERS OF ANY PUBLIC AUTHORITY, MUNICIPAL AND UTILITY COMPANY SPECIFICATIONS, AND LOCAL AND STATE JURISDICTIONAL CODES BEARING ON THE PERFORMANCE OF THE WORK. THE WORK PERFORMED ON THE PROJECT AND THE MATERIALS INSTALLED SHALL BE IN STRICT ACCORDANCE WITH ALL APPLICABLE CODES, REGULATIONS AND ORDINANCES.
2. THE ARCHITECT/ENGINEER HAVE MADE EVERY EFFORT TO SET FORTH IN THE CONSTRUCTION AND CONSTRUCT DOCUMENTS THE COMPLETE SCOPE OF WORK. THE CONTRACTOR BIDDING THE JOB IS NEVERTHELESS CAUTIONED THAT MINOR OMISSIONS OR ERRORS IN THE DRAWINGS AND OR SPECIFICATIONS SHALL NOT EXCUSE SAID CONTRACTOR FROM COMPLETING THE PROJECT AND IMPROVEMENTS IN ACCORDANCE WITH THE INTENT OF THESE DOCUMENTS.
3. THE CONTRACTOR OR BIDDER SHALL BEAR THE RESPONSIBILITY OF NOTIFYING (IN WRITING) THE T–MOBILE REPRESENTATIVE OF ANY CONFLICTS, ERRORS, OR OMISSIONS PRIOR TO THE SUBMISSION OF THE CONTRACTOR'S PROPOSAL OR PERFORMANCE OF WORK. IN THE EVENT OF DISCREPANCIES, THE CONTRACTOR SHALL PRICE THE MORE COSTLY OR EXPENSIVE WORK, UNLESS DIRECTED IN WRITING OTHERWISE.
4. THE SCOPE OF WORK SHALL INCLUDE FURNISHING OF ALL MATERIALS, EQUIPMENT, LABOR AND ALL OTHER MATERIALS AND LABOR DEEMED NECESSARY TO COMPLETE THE WORK/PROJECT AS DESCRIBED HEREIN.
5. THE CONTRACTOR SHALL VISIT THE JOB SITE PRIOR TO THE SUBMISSION OF BIDS OR PERFORMING WORK TO FAMILIARIZE HIMSELF WITH THE FIELD CONDITIONS AND TO VERIFY THAT THE PROJECT CAN BE CONSTRUCTED IN ACCORDANCE WITH THE CONTRACT DOCUMENTS.
6. THE CONTRACTOR SHALL OBTAIN AUTHORIZATION TO PROCEED WITH CONSTRUCTION PRIOR TO STARTING WORK ON ANY ITEM NOT CLEARLY DEFINED BY THE CONSTRUCTION DRAWINGS/CONTRACT DOCUMENTS.
7. THE CONTRACTOR SHALL INSTALL ALL EQUIPMENT AND MATERIALS ACCORDING TO THE MANUFACTURER'S/VENDOR'S SPECIFICATIONS UNLESS NOTED OTHERWISE OR WHERE LOCAL CODES OR ORDINANCES TAKE PRECEDENCE.
8. THE CONTRACTOR SHALL PROVIDE A FULL SET OF CONSTRUCTION DOCUMENTS AT THE SITE UPDATED WITH THE LATEST REVISIONS AND ADDENDUM OR CLARIFICATIONS AVAILABLE FOR THE USE BY ALL PERSONNEL INVOLVED WITH THE PROJECT.
9. THE CONTRACTOR SHALL SUPERVISE AND DIRECT THE PROJECT DESCRIBED HEREIN. THE CONTRACTOR SHALL BE SOLELY RESPONSIBLE FOR ALL CONSTRUCTION MEANS, METHODS, TECHNIQUES, SEQUENCES, AND PROCEDURES AND FOR COORDINATING ALL PORTIONS OF THE WORK UNDER CONTRACT.
10. THE CONTRACTOR SHALL BE RESPONSIBLE FOR OBTAINING ANY PERMITS AND INSPECTIONS WHICH ARE REQUIRED FOR THE WORK BY THE ARCHITECT/ENGINEER, THE STATE, COUNTY, OR LOCAL GOVERNMENT AUTHORITY.
11. THE CONTRACTOR SHALL MAKE NECESSARY PROVISIONS TO PROTECT EXISTING IMPROVEMENTS, EASEMENTS, PAVING, CURBING, ETC., DURING CONSTRUCTION. UPON COMPLETION OF WORK, THE CONTRACTOR SHALL REPAIR ANY DAMAGE THAT MAY HAVE OCCURRED DUE TO CONSTRUCTION ON OR ABOUT THE PROPERTY.
12. THE CONTRACTOR SHALL KEEP THE GENERAL WORK AREA CLEAN AND HAZARD FREE DURING CONSTRUCTION AND DISPOSE OF ALL DIRT, DEBRIS, RUBBISH AND REMOVE EQUIPMENT NOT SPECIFIED AS REMAINING ON PROPERTY. PREMISES SHALL BE LEFT IN CLEAN CONDITION AND FREE FROM PAINT SPOTS, DUST, OR SMUDGES OF ANY NATURE.
13. THE CONTRACTOR SHALL COMPLY WITH ALL OSHA REQUIREMENTS, AS WELL AS THE LATEST EDITIONS OF ANY PERTINENT STATE SAFETY REGULATIONS.
14. THE CONTRACTOR SHALL NOTIFY THE T–MOBILE REPRESENTATIVE WHERE A CONFLICT OCCURS ON ANY OF THE CONTRACT DOCUMENTS. THE CONTRACTOR IS NOT TO ORDER MATERIAL OR CONSTRUCT ANY PORTION OF THE WORK THAT IS IN CONFLICT UNTIL CONFLICT IS RESOLVED BY THE T–MOBILE REPRESENTATIVE.
15. THE CONTRACTOR SHALL VERIFY ALL DIMENSIONS, ELEVATIONS, PROPERTY LINES, ETC., ON THE JOB.
16. THE CONTRACTOR SHALL RETURN ALL DISTURBED AREAS TO THEIR ORIGINAL CONDITION AT THE COMPLETION OF WORK.

PROJECT SUMMARY

SITE NUMBER:	CTNH517A	APPLICANT:	T–MOBILE NORTHEAST LLC 35 GRIFFIN RD SOUTH BLOOMFIELD, CT 06002
SITE NAME:	ATC HARWINTON MONOPOLE		
SITE ADDRESS:	175 WEINGART RD. HARWINTON, CT 06791	PROJECT MANAGER:	AMERICAN TOWER CORPORATION 319 QUARRY ROAD SPRING CITY, PA 19475
PROPERTY OWNER:	AMERICAN TOWER CORPORATION		
PARCEL:	TBD		
CURRENT ZONING:	TBD	CONTACT:	BRIAN MUCK (717) 496–3169
JURISDICTION:	TBD		
ATC SITE NUMBER:	302502	ARCHITECT/ENGINEER:	INFINIGY ENGINEERING 1033 WATERVLIET SHAKER ROAD ALBANY, NY 12205
LAT./LONG.:	N 41.78780000° / W –73.09250000°		
		CONTACT:	ALEX WELLER 518–690–0790

PROJECT DESCRIPTION

- [x] EXISTING MONOPOLE
- [ ] EXISTING LATTICE TOWER
- [ ] EXISTING TRANSMISSION TOWER
- [ ] EXISTING WATER TANK
- [ ] EXISTING BUILDING
- [ ] EXISTING FLAGPOLE
- [ ] EXISTING FORT WORTH
- [x] EXISTING CABINET(S)
- [ ] EXISTING RBS 2106
- [x] EXISTING RBS 6201
- [ ] EXISTNG S12000
- [ ] SITE SUPPORT KIT
- [ ] SITE SUPPORT CABINET
- [x] GPS
- [x] OUTDOOR
- [ ] INDOOR
- [x] EXISTING CONCRETE PAD
- [ ] EXISTING STEEL PLATFORM
- [x] EXISTING PPC
- [ ] PANELBOARD

T–MOBILE NORTHEAST LLC PROPOSES THE MODIFICATION OF AN UNMANNED WIRELESS BROADBAND FACILITY. ADDITION OF PROPOSED LTE 700 PANEL ANTENNAS. REUSE EXISTING HYBRID CABLE, GPS ANTENNA AND EXISTING EQUIPMENT CABINETS.

2005 CONNECTICUT BUILDING CODE WITH 2013 AMENDMENT
2011 NATIONAL ELECTRIC CODE
2009 INTERNATIONAL RESIDENTIAL CODE

SHEET INDEX

SHEET	DESCRIPTION	REVISION
T–1	TITLE SHEET	0
C–1	SITE PLAN	0
C–2	COMPOUND PLAN & ELEVATION	0
C–3	ANTENNA DETAIL & RF SCHEDULE	0
C–4	EQUIPMENT SPECIFICATIONS	0
E–1	GROUNDING AND POWER DIAGRAMS	0
E–2	COAX/FIBER PLUMBING DIAGRAM	0
N–1	GENERAL AND ELECTRICAL NOTES	0

T-Mobile
T-MOBILE NORTHEAST LLC
35 GRIFFIN RD SOUTH
BLOOMFIELD, CT 06002

INFINIGY
1033 Watervliet Shaker Rd
Albany, NY 12205
Office # (518) 690-0790
Fax # (518) 690-0793

SUBMITTALS

DATE	DESCRIPTION	REVISION
1/13/17	FOR PERMIT	0

DEPT.	DATE	APP'D	REVISIONS
RFE			
RF MAN.			
ZONING			
OPS			
CONSTR.			
SITE AC.			

PROJECT NO:	317-000
DRAWN BY:	ASW
CHECKED BY:	ASW

STATE OF CONNECTICUT
JOHN S. STEVENS
No. 24705
LICENSED
PROFESSIONAL ENGINEER
PROFESSIONAL SEAL

THIS DOCUMENT IS THE CREATION, DESIGN, PROPERTY AND COPYRIGHTED WORK OF T-MOBILE. ANY DUPLICATION OR USE WITHOUT EXPRESS WRITTEN CONSENT IS STRICTLY PROHIBITED.

NOTE: IF DRAWINGS ARE 22"x34", USE GRAPHICAL SCALE AND/OR 1/2 TIMES OF THE NOTED SCALE.

SITE NUMBER:
CTNH517A

SITE NAME:
ATC HARWINTON MONOPOLE

175 WEINGART RD.
HARWINTON, CT 06791

SHEET TITLE

TITLE SHEET

SHEET NUMBER

T-1

SHEET 1 OF 8 SHEETS

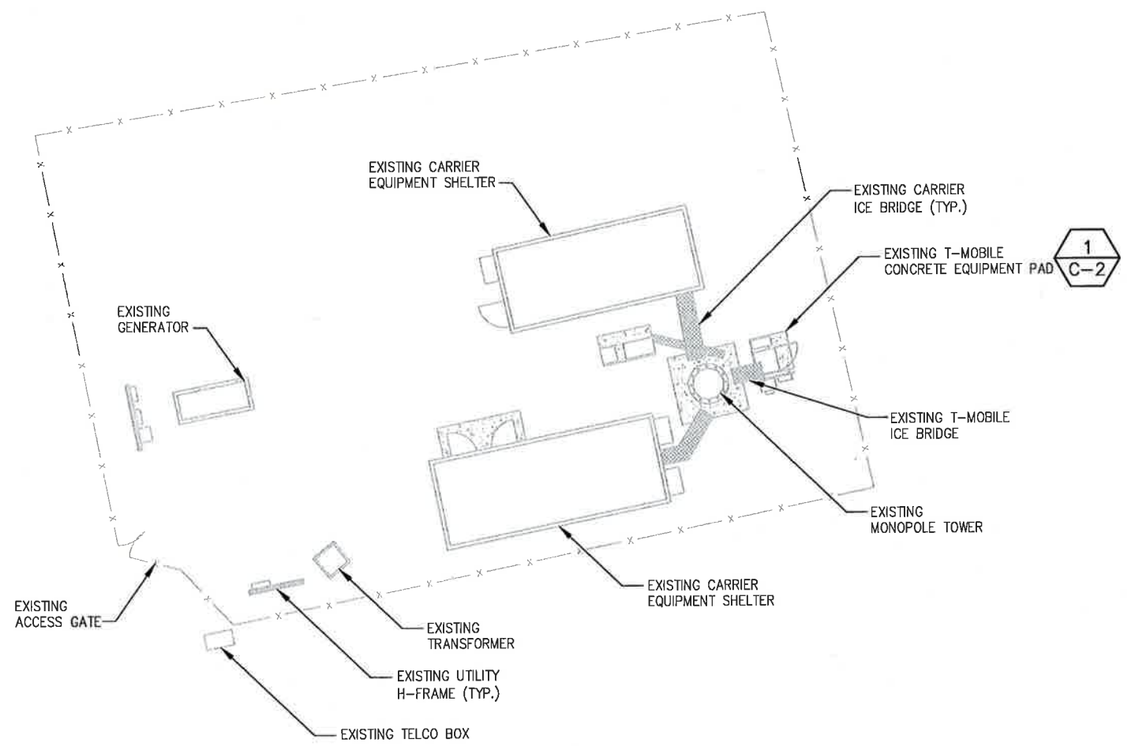

CALLED NORTH

1 COMPOUND PLAN
SCALE: AS NOTED

GENERAL SITE NOTES:

1. A COMPLETE BOUNDARY SURVEY OF THE HOST PARCEL HAS NOT BEEN PERFORMED BY INFINIGY. BOUNDARY INFORMATION IF SHOWN WAS OBTAINED FROM INFORMATION PROVIDED BY OTHERS. PROPERTY IS SUBJECT TO ALL EASEMENTS AND RESTRICTIONS OF RECORD.
2. BASEMAPPING INFORMATION BASED ON PROVIDED INFORMATION.
3. CONTRACTOR TO FIELD VERIFY DIMENSIONS AS NECESSARY BEFORE CONSTRUCTION.
4. THE PROPOSED DEVELOPMENT DOES NOT INCLUDE SIGNS OF ADVERTISING.
5. THE PROPOSED DEVELOPMENT IS UNMANNED AND THEREFORE DOES NOT REQUIRE A MEANS OF WATER SUPPLY OR SEWAGE DISPOSAL.
6. NO LANDSCAPING WORK IS PROPOSED IN CONJUNCTION WITH THIS DEVELOPMENT OTHER THAN THAT WHICH IS SHOWN.
7. THE PROPOSED DEVELOPMENT DOES NOT INCLUDE OUTDOOR STORAGE OR ANY SOLID WASTE RECEPTACLES.
8. UTILITIES SHOWN ON PLAN ARE TAKEN FROM OWNERS RECORDS AND FIELD LOCATION OF VISIBLE SURFACE FEATURES. THE EXISTENCE, EXTENT AND EXACT HORIZONTAL AND VERTICAL LOCATIONS OF UTILITIES HAS NOT BEEN VERIFIED. ANY CONTRACTOR PERFORMING WORK ON THIS SITE MUST CONTACT MISS UTILITY AT LEAST 48 HOURS PRIOR TO COMMENCING WORK.
9. ALL OBSOLETE OR UNUSED FACILITIES SHALL BE REMOVED WITHIN 12 MONTHS OF CESSATION OF OPERATIONS.

SITE LEGEND

— — —	SITE PROPERTY LINE
———	STREET OR ROAD
— x — x —	CHAIN LINK FENCE
—o—o—	OPAQUE WOODEN FENCE
	TREES/SHRUBS
	TREE LINE
	UTILITY POLE
(E)	EXISTING
(N)	NEW
(P)	PROPOSED
(F)	FUTURE

GRAPHIC SCALE

10' 5' 0 5' 10'

SCALE (11x17): 1" = 10'-0"
SCALE (22x34): 1" = 5'-0"

T-Mobile
T-MOBILE NORTHEAST LLC
35 GRIFFIN RD SOUTH
BLOOMFIELD, CT 06002

INFINIGY
1033 Watervliet Shaker Rd
Albany, NY 12205
Office # (518) 690-0790
Fax # (518) 690-0793

SUBMITTALS

DATE	DESCRIPTION	REVISION
1/13/17	FOR PERMIT	0

DEPT.	DATE	APP'D	REVISIONS
RFE			
RF MAN.			
ZONING			
OPS			
CONSTR.			
SITE AC.			

PROJECT NO:	317-000
DRAWN BY:	ASW
CHECKED BY:	ASW

STATE OF CONNECTICUT
JOHN S. STEVENS
No. 24705
LICENSED
PROFESSIONAL ENGINEER
PROFESSIONAL SEAL

THIS DOCUMENT IS THE CREATION, DESIGN, PROPERTY AND COPYRIGHTED WORK OF T-MOBILE. ANY DUPLICATION OR USE WITHOUT EXPRESS WRITTEN CONSENT IS STRICTLY PROHIBITED.

NOTE: IF DRAWINGS ARE 22"x34", USE GRAPHICAL SCALE AND/OR 1/2 TIMES OF THE NOTED SCALE.

SITE NUMBER:
CTNH517A

SITE NAME:
ATC HARWINTON MONOPOLE

175 WEINGART RD.
HARWINTON, CT 06791

SHEET TITLE

SITE PLAN

SHEET NUMBER

C-1

SHEET 2 OF **8** SHEETS

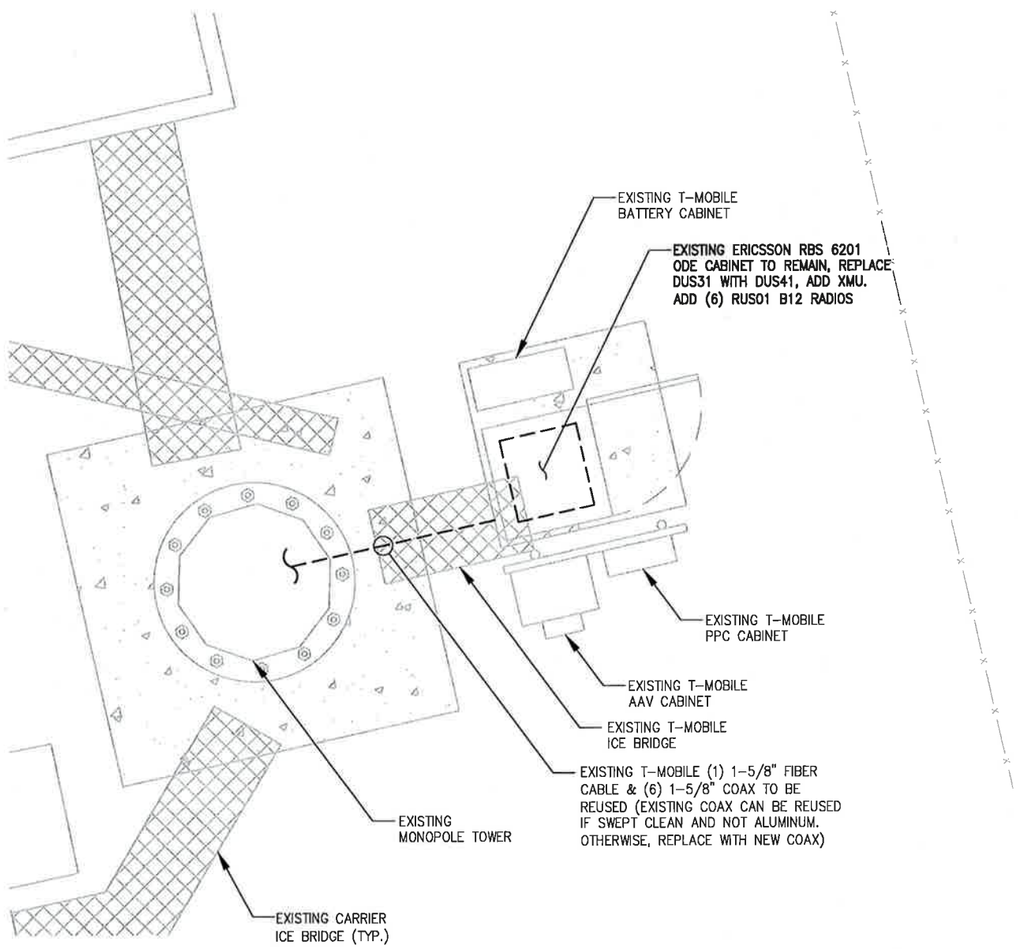

CALLED NORTH

1 / -- COMPOUND PLAN
SCALE: AS NOTED

GRAPHIC SCALE

4' 2' 0 2' 4'

SCALE (11x17): 1" = 4'-0"
SCALE (22x34): 1" = 2'-0"

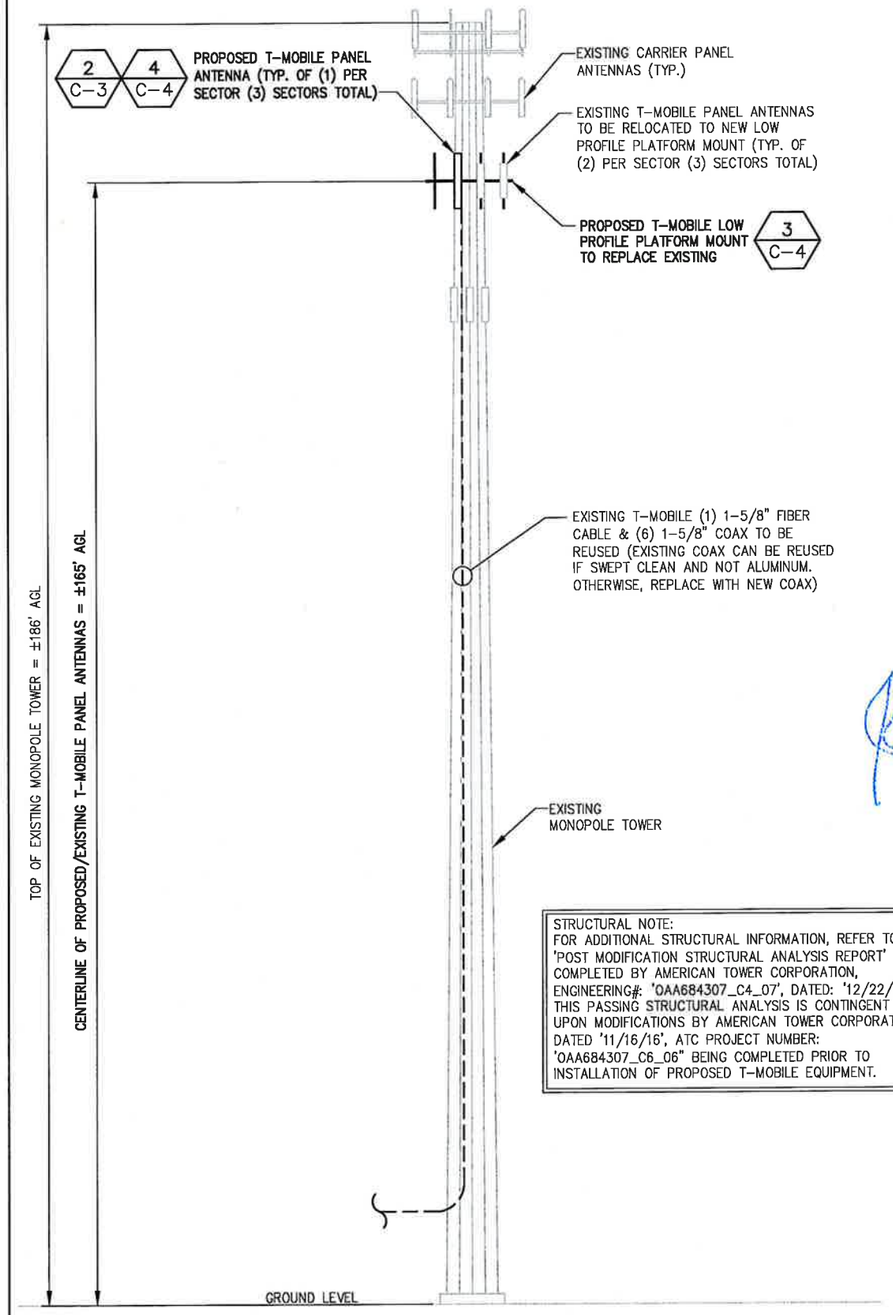

STRUCTURAL NOTE:
FOR ADDITIONAL STRUCTURAL INFORMATION, REFER TO 'POST MODIFICATION STRUCTURAL ANALYSIS REPORT' COMPLETED BY AMERICAN TOWER CORPORATION, ENGINEERING#: '0AA684307_C4_07', DATED: '12/22/16'. THIS PASSING STRUCTURAL ANALYSIS IS CONTINGENT UPON MODIFICATIONS BY AMERICAN TOWER CORPORATION DATED '11/16/16', ATC PROJECT NUMBER: '0AA684307_C6_06" BEING COMPLETED PRIOR TO INSTALLATION OF PROPOSED T-MOBILE EQUIPMENT.

2 / -- TOWER ELEVATION
NOT TO SCALE

T-Mobile

T-MOBILE NORTHEAST LLC
35 GRIFFIN RD SOUTH
BLOOMFIELD, CT 06002

INFINIGY8
1033 Watervliet Shaker Rd
Albany, NY 12205
Office # (518) 690-0790
Fax # (518) 690-0793

SUBMITTALS

DATE	DESCRIPTION	REVISION
1/13/17	FOR PERMIT	0

DEPT.	DATE	APP'D	REVISIONS
RFE			
RF MAN.			
ZONING			
OPS			
CONSTR.			
SITE AC.			

PROJECT NO:	317-000
DRAWN BY:	ASW
CHECKED BY:	ASW

STATE OF CONNECTICUT
JOHN S. STEVENS
No. 24705
LICENSED PROFESSIONAL ENGINEER

PROFESSIONAL SEAL

THIS DOCUMENT IS THE CREATION, DESIGN, PROPERTY AND COPYRIGHTED WORK OF T-MOBILE. ANY DUPLICATION OR USE WITHOUT EXPRESS WRITTEN CONSENT IS STRICTLY PROHIBITED.

NOTE: IF DRAWINGS ARE 22"x34", USE GRAPHICAL SCALE AND/OR 1/2 TIMES OF THE NOTED SCALE.

SITE NUMBER:
CTNH517A

SITE NAME:
ATC HARWINTON MONOPOLE

175 WEINGART RD.
HARWINTON, CT 06791

SHEET TITLE

COMPOUND PLAN & ELEVATION

SHEET NUMBER

C-2

SHEET 3 OF 8 SHEETS

RF SYSTEM SCHEDULE (705A–V2 CONFIGURATION)

SECTOR	TECHNOLOGY	ANTENNA PORT	BAND	ANTENNA MODEL #	VENDOR	QTY (REMOVED)	QTY (NEW)	AZIMUTH	M–TILT	E–TILT	ANTENNA CENTERLINE	TMA MODEL #	VENDOR	RRU MODEL #	VENDOR	CABLE LENGTH	CABLE DIAMETER	CABLE TYPE	CABLE MODEL #	VENDOR	CABLE TAGGING	COLOR CODING	JUMPER TYPE	JUMPER TAGGING	COLOR CODING
A	U1900	P1	B4P	AIR21 B2A/B4P	ERICSSON	0	0	30°	0°	2°	165'–0"	–	–	–	–	EXISTING	1–5/8"	FIBER	EXISTING	EXISTING	EXISTING	EXISTING	FIBER	–	–
	L2100	P3	B4A	AIR21 B4A/B2P	ERICSSON	0	0	30°	0°	2°	165'–0"	–	–	–	–	(ANTENNA CONNECTED VIA EXISTING HYBRID CABLE.)						EXISTING	FIBER	–	–
	LTE 700	**P5**	**B12P**	**LNX–6515DS–VTM**	**COMMSCOPE**	**0**	**1**	**30°**	**0°**	**2°**	**165'–0"**	–	–	–	–	(2) EXISTING	1–5/8"	COAX	EXISTING	EXISTING	EXISTING	EXISTING	EXISTING	**LTE 700 COAX**	–
B	U1900	P1	B4P	AIR21 B2A/B4P	ERICSSON	0	0	150°	0°	2°	165'–0"	–	–	–	–	(ANTENNA CONNECTED VIA EXISTING HYBRID CABLE.)						EXISTING	FIBER	–	–
	L2100	P3	B4A	AIR21 B4A/B2P	ERICSSON	0	0	150°	0°	2°	165'–0"	–	–	–	–	(ANTENNA CONNECTED VIA EXISTING HYBRID CABLE.)						EXISTING	FIBER	–	–
	LTE 700	**P5**	**B12P**	**LNX–6515DS–VTM**	**COMMSCOPE**	**0**	**1**	**150°**	**0°**	**2°**	**165'–0"**	–	–	–	–	(2) EXISTING	1–5/8"	COAX	EXISTING	EXISTING	EXISTING	EXISTING	EXISTING	**LTE 700 COAX**	–
C	U1900	P1	B4P	AIR21 B2A/B4P	ERICSSON	0	0	270°	0°	2°	165'–0"	–	–	–	–	(ANTENNA CONNECTED VIA EXISTING HYBRID CABLE.)						EXISTING	FIBER	–	–
	L2100	P3	B4A	AIR21 B4A/B2P	ERICSSON	0	0	270°	0°	2°	165'–0"	–	–	–	–	(ANTENNA CONNECTED VIA EXISTING HYBRID CABLE.)						EXISTING	FIBER	–	–
	LTE 700	**P5**	**B12P**	**LNX–6515DS–VTM**	**COMMSCOPE**	**0**	**1**	**270°**	**0°**	**2°**	**165'–0"**	–	–	–	–	(2) EXISTING	1–5/8"	COAX	EXISTING	EXISTING	EXISTING	EXISTING	EXISTING	**LTE 700 COAX**	–

KEY

EXISTING	R – RED – GSM
PROPOSED	G – GREEN – UMTS 1900
FIBER CONNECTION	B – BLUE – UMTS AWS
	Y – YELLOW – LTE
	O – ORANGE – FIBER CABLE

1 RF SCHEDULE
NOT TO SCALE

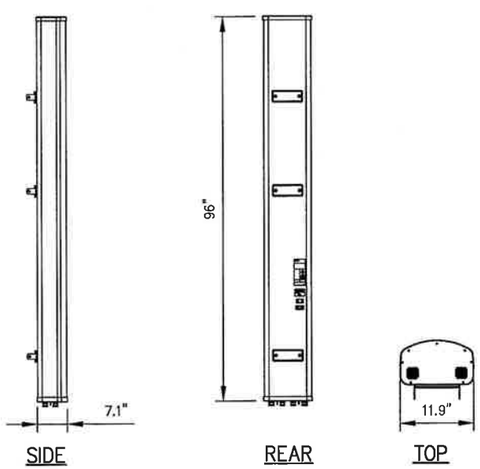

COMMSCOPE MODEL NO.:	LNX–6515DS–A1M
RADOME MATERIAL:	FIBERGLASS, UV RESISTANT
RADOME COLOR:	LIGHT GRAY
DIMENSIONS, HxWxD:	96"x11.9"x7.1" (2438 x 301 x 181 mm)
WEIGHT, W/ PRE–MOUNTED BRACKETS:	43.7 LBS (19.8 kg)
CONNECTOR:	7–16 DIN FEMALE

2 ANTENNA DETAIL
NOT TO SCALE

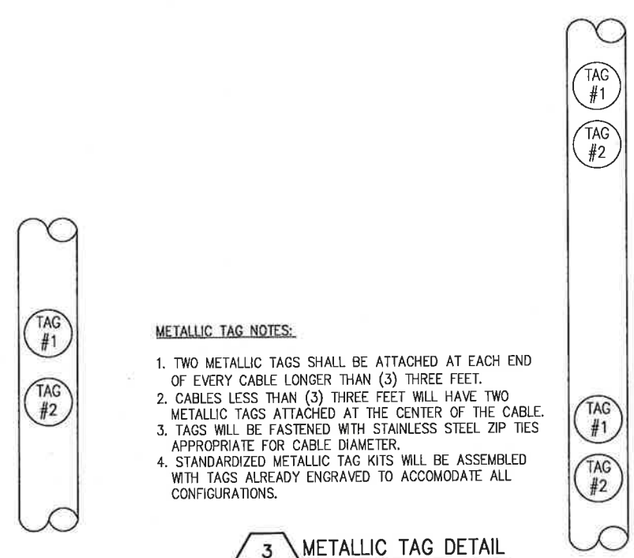

METALLIC TAG NOTES:

1. TWO METALLIC TAGS SHALL BE ATTACHED AT EACH END OF EVERY CABLE LONGER THAN (3) THREE FEET.
2. CABLES LESS THAN (3) THREE FEET WILL HAVE TWO METALLIC TAGS ATTACHED AT THE CENTER OF THE CABLE.
3. TAGS WILL BE FASTENED WITH STAINLESS STEEL ZIP TIES APPROPRIATE FOR CABLE DIAMETER.
4. STANDARDIZED METALLIC TAG KITS WILL BE ASSEMBLED WITH TAGS ALREADY ENGRAVED TO ACCOMODATE ALL CONFIGURATIONS.

3 METALLIC TAG DETAIL
NOT TO SCALE

T-Mobile
T-MOBILE NORTHEAST LLC
35 GRIFFIN RD SOUTH
BLOOMFIELD, CT 06002

INFINIGY
1033 Watervliet Shaker Rd
Albany, NY 12205
Office # (518) 690-0790
Fax # (518) 690-0793

SUBMITTALS

DATE	DESCRIPTION	REVISION
1/13/17	FOR PERMIT	0

DEPT.	DATE	APP'D	REVISIONS
RFE			
RF MAN.			
ZONING			
OPS			
CONSTR.			
SITE AC.			

PROJECT NO:	317-000
DRAWN BY:	ASW
CHECKED BY:	ASW

STATE OF CONNECTICUT
JOHN S. STEVENS
No. 24705
LICENSED
PROFESSIONAL ENGINEER
PROFESSIONAL SEAL

THIS DOCUMENT IS THE CREATION, DESIGN, PROPERTY AND COPYRIGHTED WORK OF T-MOBILE. ANY DUPLICATION OR USE WITHOUT EXPRESS WRITTEN CONSENT IS STRICTLY PROHIBITED.

NOTE: IF DRAWINGS ARE 22"x34", USE GRAPHICAL SCALE AND/OR 1/2 TIMES OF THE NOTED SCALE.

SITE NUMBER:
CTNH517A

SITE NAME:
ATC HARWINTON MONOPOLE

175 WEINGART RD.
HARWINTON, CT 06791

SHEET TITLE

ANTENNA DETAIL & RF SCHEDULE

SHEET NUMBER

C-3

SHEET 4 OF 8 SHEETS

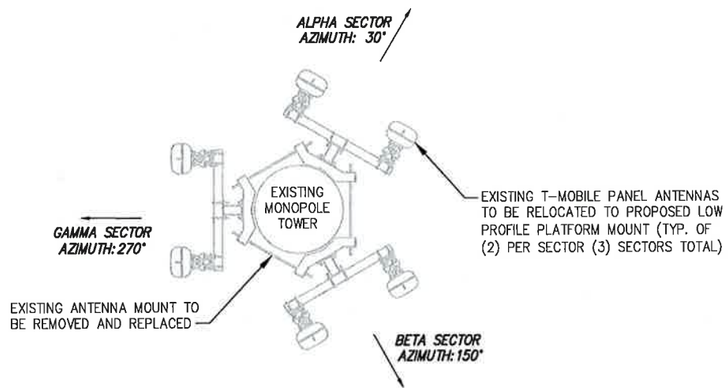

CALLED NORTH

1 EXISTING ANTENNA ORIENTATION PLAN
NOT TO SCALE

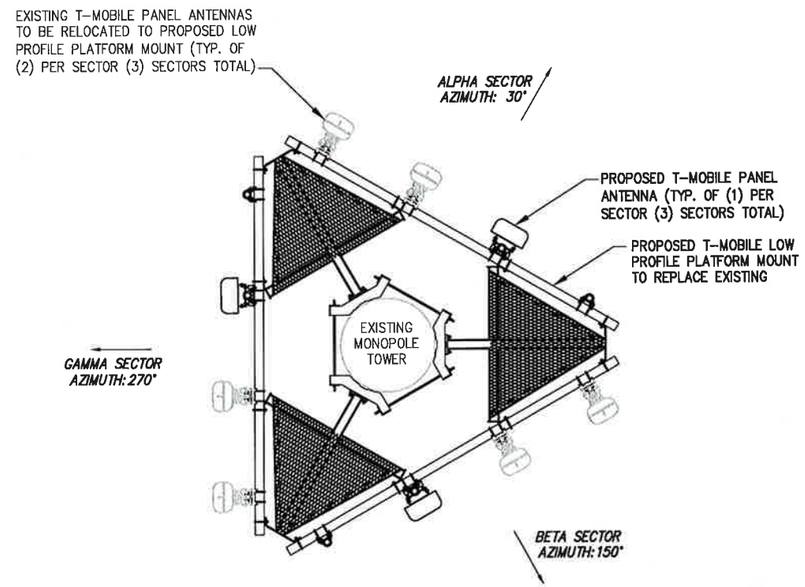

CALLED NORTH

2 PROPOSED ANTENNA ORIENTATION PLAN
NOT TO SCALE

STRUCTURAL NOTES:

1. SPECIFICATIONS / CODES:
   - CONCRETE WORK SHALL BE PERFORMED IN ACCORDANCE WITH LATEST EDITION OF THE ACI CODE.
   - STEEL WORK SHALL BE PERFORMED IN ACCORDANCE WITH AISC STEEL CONSTRUCTION MANUAL, 9tH EDITION.
   - WELDING SHALL BE PERFORMED IN ACCORDANCE WITH AMERICAN WELDING SOCIETY (AWS) D1.1-92 "STRUCTURAL WELDING" CODE-STEEL.
   - REINFORCING STEEL SHALL BE PLACED IN ACCORDANCE WITH THE CONCRETE REINFORCING STEEL INSTITUTE (CRSI), "MANUAL OF STANDARD PRACTICE."
2. MATERIALS:
   - CONCRETE: fc' - 3000psi. (MIN. U.N.O.)
   - REINFORCING STEEL: ASTM A615, GRADE 60.
   - WIRE MESH: ASTM A185.
   - STRUCTURAL STEEL: ASTM A36.
   - ELECTRODES FOR WELDING: E 70xx.
   - GALVANIZING: ASTM A153 (BOLTS) OR ASTM A123 (SHAPES, PLATES).
   - EXPANSION BOLTS: HILTI KWIK BOLT II, STAINLESS STEEL, 3/4"øx43/4" EMBEDMENT OR AN APPROVED EQUAL.

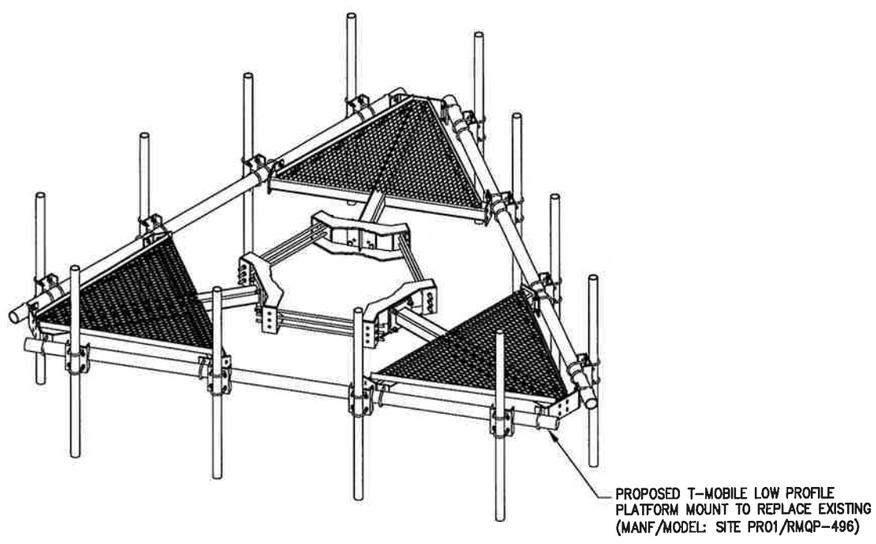

3 LOW PROFILE PLATFORM MOUNT
NOT TO SCALE

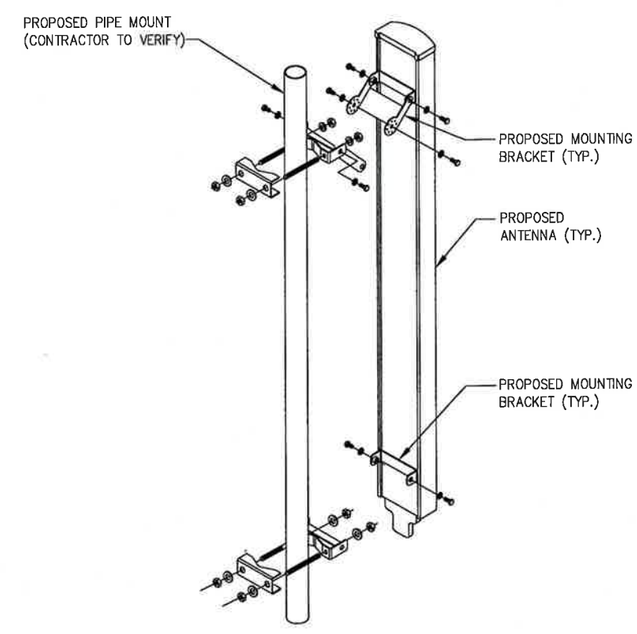

4 MOUNTING DETAIL
NOT TO SCALE

T-Mobile
T-MOBILE NORTHEAST LLC
35 GRIFFIN RD SOUTH
BLOOMFIELD, CT 06002

INFINIGY
1033 Watervliet Shaker Rd
Albany, NY 12205
Office # (518) 690-0792
Fax # (518) 690-0793

SUBMITTALS

DATE	DESCRIPTION	REVISION
1/13/17	FOR PERMIT	0

DEPT.	DATE	APP'D	REVISIONS
RFE			
RF MAN.			
ZONING			
OPS			
CONSTR.			
SITE AC.			

PROJECT NO:	317-000
DRAWN BY:	ASW
CHECKED BY:	ASW

STATE OF CONNECTICUT
JOHN S. STEVENS
No. 24705
LICENSED PROFESSIONAL ENGINEER

PROFESSIONAL SEAL

THIS DOCUMENT IS THE CREATION, DESIGN, PROPERTY AND COPYRIGHTED WORK OF T-MOBILE. ANY DUPLICATION OR USE WITHOUT EXPRESS WRITTEN CONSENT IS STRICTLY PROHIBITED.

NOTE: IF DRAWINGS ARE 22"x34", USE GRAPHICAL SCALE AND/OR 1/2 TIMES OF THE NOTED SCALE.

SITE NUMBER:
CTNH517A

SITE NAME:
ATC HARWINTON MONOPOLE

175 WEINGART RD.
HARWINTON, CT 06791

SHEET TITLE

EQUIPMENT SPECIFICATIONS

SHEET NUMBER

C-4

SHEET 5 OF 8 SHEETS

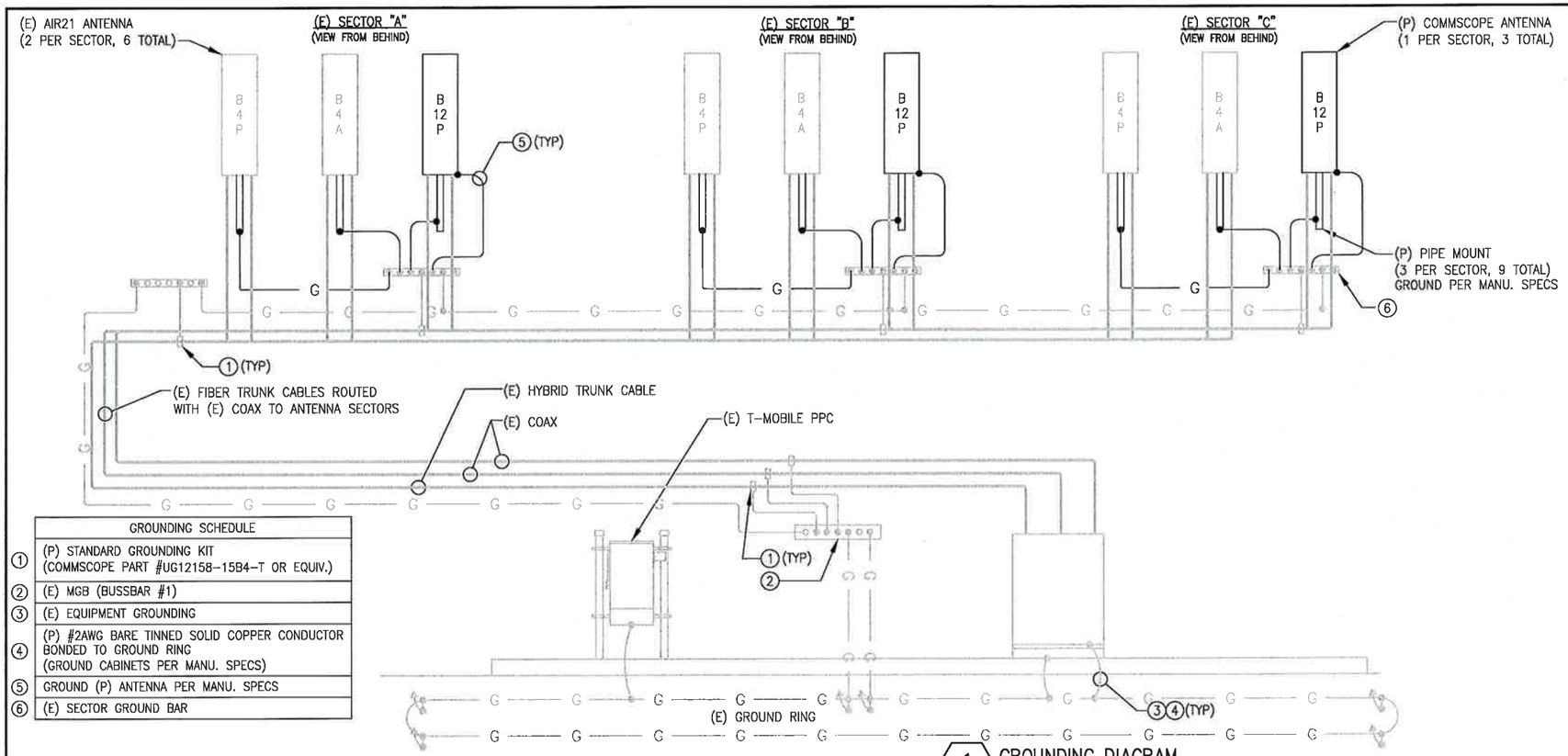

GROUNDING SCHEDULE	
①	(P) STANDARD GROUNDING KIT (COMMSCOPE PART #UG12158-15B4-T OR EQUIV.)
②	(E) MGB (BUSSBAR #1)
③	(E) EQUIPMENT GROUNDING
④	(P) #2AWG BARE TINNED SOLID COPPER CONDUCTOR BONDED TO GROUND RING (GROUND CABINETS PER MANU. SPECS)
⑤	GROUND (P) ANTENNA PER MANU. SPECS
⑥	(E) SECTOR GROUND BAR

1 GROUNDING DIAGRAM
SCALE: NOT TO SCALE

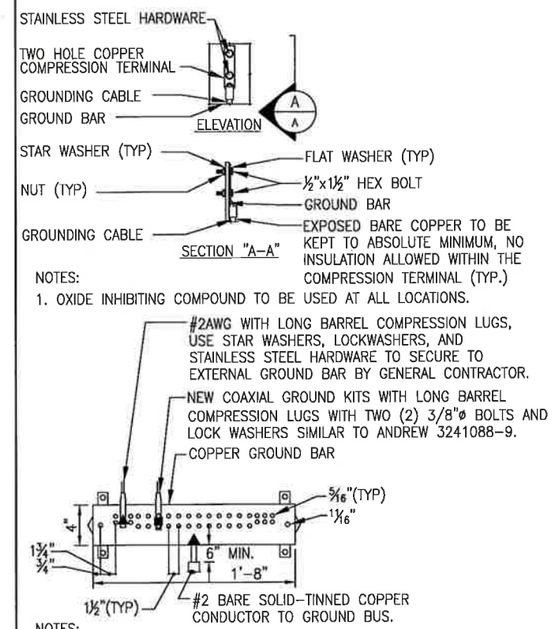

NOTES:
1. OXIDE INHIBITING COMPOUND TO BE USED AT ALL LOCATIONS.

NOTES:
1. ALL HARDWARE STAINLESS STEEL COAT ALL SURFACES WITH KOPR-SHIELD BEFORE MATING.
2. FOR GROUND BOND TO STEEL ONLY: INSERT A TOOTH WASHER BETWEEN LUG AND STEEL, COAT ALL SURFACES WITH KOPR-SHIELD.
3. ALL HOLES ARE COUNTERSUNK 1/16".

2 GROUND BAR CONNECTION DETAILS
SCALE: NOT TO SCALE

CONDUIT SCHEDULE	
①	(E) WIRE AND CONDUIT UPGRADE FOR POWER
②	(E) BREAKER

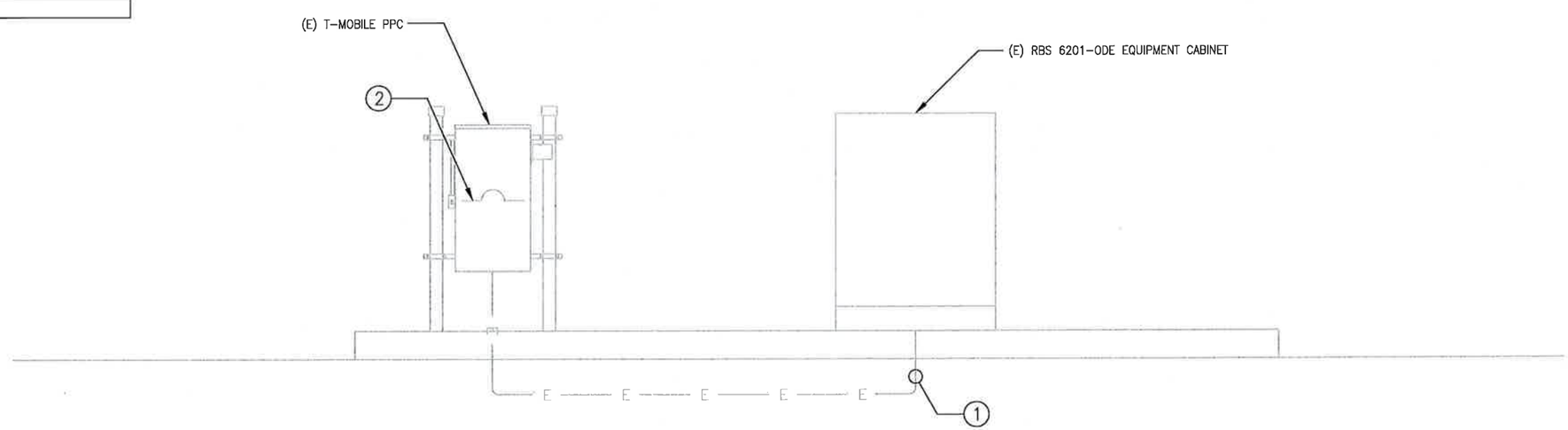

3 POWER DIAGRAM
SCALE: NOT TO SCALE

T-Mobile
T-MOBILE NORTHEAST LLC
35 GRIFFIN RD SOUTH
BLOOMFIELD, CT 06002

INFINIGY8
1033 Watervliet Shaker Rd
Albany, NY 12205
Office # (518) 690-0790
Fax # (518) 690-0793

SUBMITTALS		
DATE	DESCRIPTION	REVISION
1/13/17	FOR PERMIT	0

DEPT.	DATE	APP'D	REVISIONS
RFE			
RF MAN.			
ZONING			
OPS			
CONSTR.			
SITE AC.			

PROJECT NO:	317-000
DRAWN BY:	ASW
CHECKED BY:	ASW

STATE OF CONNECTICUT
JOHN S. STEVENS
No. 24705
LICENSED PROFESSIONAL ENGINEER
PROFESSIONAL SEAL

THIS DOCUMENT IS THE CREATION, DESIGN, PROPERTY AND COPYRIGHTED WORK OF T-MOBILE. ANY DUPLICATION OR USE WITHOUT EXPRESS WRITTEN CONSENT IS STRICTLY PROHIBITED.

NOTE: IF DRAWINGS ARE 22"x34", USE GRAPHICAL SCALE AND/OR 1/2 TIMES OF THE NOTED SCALE.

SITE NUMBER:
CTNH517A

SITE NAME:
ATC HARWINTON MONOPOLE

175 WEINGART RD.
HARWINTON, CT 06791

SHEET TITLE
GROUNDING & POWER DIAGRAMS

SHEET NUMBER
E-1

SHEET 6 OF 8 SHEETS

NOTES:

1. TAG ALL EXISTING AND PROPOSED CABLES/JUMPERS PER T-MOBILE SPECIFICATIONS (SEE RF SCHEDULE/C-3)
2. SEE RF SCHEDULE/C-3 FOR CABLE AND JUMPER LENGTHS.
3. IF NEW GPS ADDED TO SITE, CAP AND WEATHERPROOF ANY UNUSED COAX FOR FUTURE USE.
4. TRIM POWER JUMPERS PER MANU. SPECS TO CORRECT LENGTH FOR CONNECTION.
5. COIL EXCESS FIBER IN CABINET BASE.

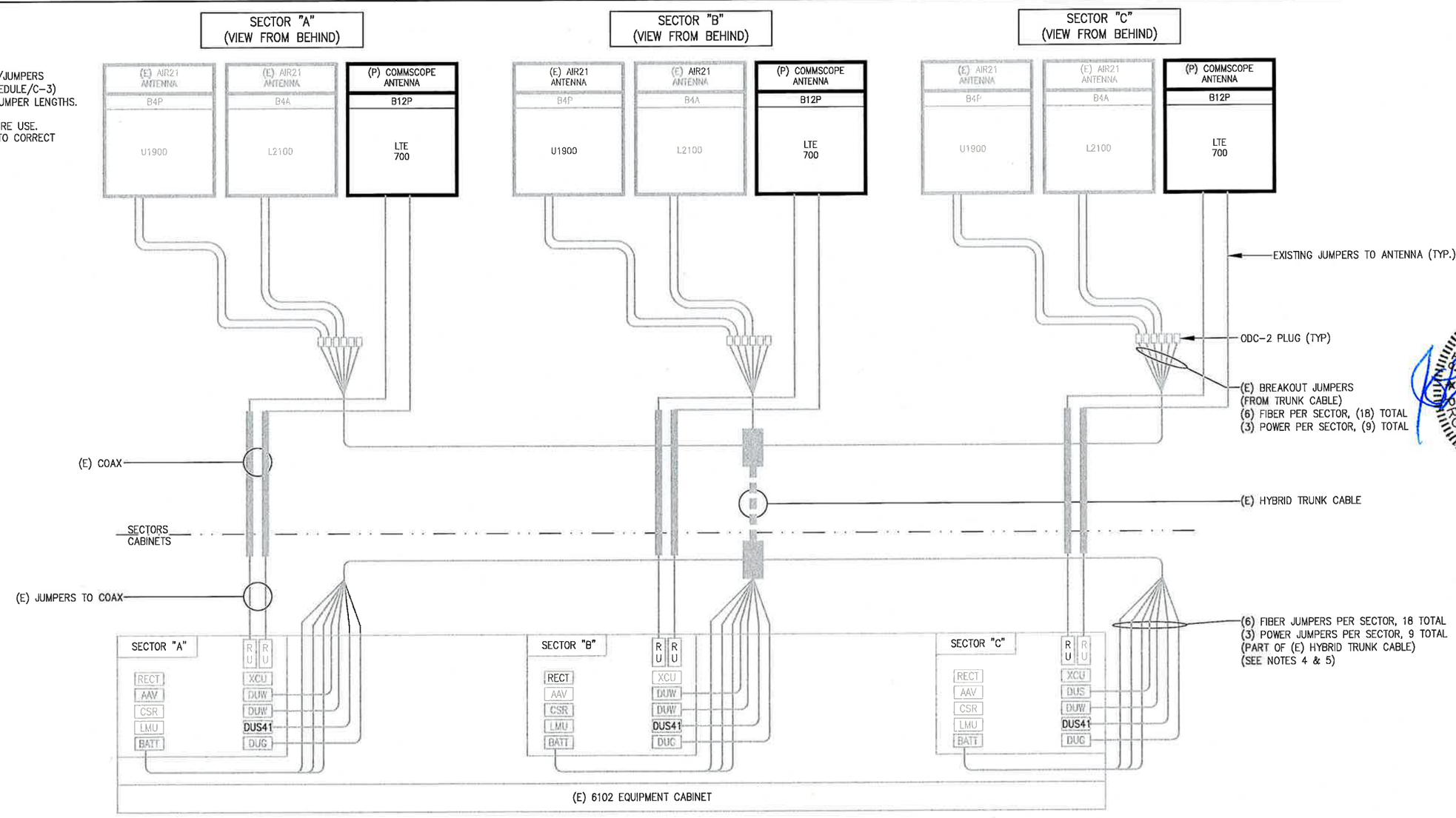

PROPOSED FIBER/POWER JUMPER

PROPOSED FIBER/POWER HYBRID CABLE

EXISTING FIBER/POWER HYBRID CABLE

EXISTING COAX CABLE

EXISTING COAX JUMPER

1 705A-V2 CONFIGURATION COAX/FIBER PLUMBING DIAGRAM
NOT TO SCALE

T-Mobile

T-MOBILE NORTHEAST LLC
35 GRIFFIN RD SOUTH
BLOOMFIELD, CT 06002

INFINIGY
1033 Watervliet Shaker Rd
Albany, NY 12205
Office # (518) 690-0790
Fax # (518) 690-0793

SUBMITTALS

DATE	DESCRIPTION	REVISION
1/13/17	FOR PERMIT	0

DEPT.	DATE	APP'D	REVISIONS
RFE			
RF MAN.			
ZONING			
OPS			
CONSTR.			
SITE AC.			

PROJECT NO:	317-000
DRAWN BY:	ASW
CHECKED BY:	ASW

STATE OF CONNECTICUT
JOHN S. STEVENS
No. 24705
LICENSED PROFESSIONAL ENGINEER

PROFESSIONAL SEAL

THIS DOCUMENT IS THE CREATION, DESIGN, PROPERTY AND COPYRIGHTED WORK OF T-MOBILE. ANY DUPLICATION OR USE WITHOUT EXPRESS WRITTEN CONSENT IS STRICTLY PROHIBITED.

NOTE: IF DRAWINGS ARE 22"x34", USE GRAPHICAL SCALE AND/OR 1/2 TIMES OF THE NOTED SCALE.

SITE NUMBER:
CTNH517A

SITE NAME:
ATC HARWINTON MONOPOLE

175 WEINGART RD.
HARWINTON, CT 06791

SHEET TITLE

COAX/FIBER PLUMBING DIAGRAM

SHEET NUMBER

E-2

SHEET 7 OF 8 SHEETS

ELECTRICAL NOTES:

WORK INCLUDED

1. INCLUDE ALL LABOR, MATERIALS, EQUIPMENT, PLANT SERVICES AND ADMINISTRATIVE TASKS REQUIRED TO COMPLETE AND MAKE OPERABLE THE ELECTRICAL WORK SHOWN ON THE DRAWINGS AND SPECIFIED HEREIN, INCLUDING BUT NOT LIMITED TO THE FOLLOWING:
   - A. PREPARE AND SUBMIT SHOP DRAWINGS, DIAGRAMS AND ILLUSTRATIONS.
   - B. PROCURE ALL NECESSARY PERMITS AND APPROVALS AND PAY ALL REQUIRED FEES AND CHARGES IN CONNECTION WITH THE WORK OF THIS CONTRACT.
   - C. SUBMIT AS-BUILT DRAWINGS, OPERATING AND MAINTENANCE INSTRUCTIONS AND MANUALS.
   - D. EXECUTE ALL CUTTING, DRILLING, ROUGH AND FINISH PATCHING OF EXISTING OR NEWLY INSTALLED CONSTRUCTION REQUIRED FOR THE WORK OF THIS CONTRACT. FOR SLAB PENETRATIONS THROUGH POST TENSION SLABS, X-RAY EXACT AREA OF PENETRATION PRIOR TO PERFORMING WORK. COORDINATE ALL X-RAY WORK WITH BUILDING ENGINEER.
   - E. PROVIDE HANGERS, SUPPORTS, FOUNDATIONS, STRUCTURAL FRAMING SUPPORTS, AND BASES FOR CONDUIT AND EQUIPMENT PROVIDED OR INSTALLED UNDER THE WORK OF HIS CONTRACT. PROVIDE COUNTER FLASHING, SLEEVES AND SEALS FOR FLOOR AND WALL PENETRATIONS.
   - F. MAINTAIN ALL EXISTING ELECTRICAL SERVICES IN THE BUILDING AREAS NOT AFFECTED BY THE ALTERATION DURING THE PROGRESS OF THE WORK INCLUDING PROVIDING ALL TEMPORARY JUMPERS, CONDUITS, CAPS, PROTECTIVE DEVICES, CONNECTIONS AND EQUIPMENT REQUIRED. PROVIDE TEMPORARY LIGHT AND POWER FOR CONSTRUCTION PURPOSES.
2. IT IS THE INTENT OF THESE DRAWINGS AND SPECIFICATIONS TO CALL FOR AN INSTALLATION THAT IS COMPLETE IN EVERY RESPECT. IT IS NOT THE INTENT TO GIVE EVERY DETAIL ON THE DRAWINGS AND IN THE SPECIFICATIONS. IF AN ITEM OF WORK IS INDICATED IN THE DRAWINGS, IT IS CONSIDERED SUFFICIENT FOR INCLUSION IN THE CONTRACT. FURNISH AND INSTALL ALL MATERIAL AND EQUIPMENT USUALLY FURNISHED OR NEEDED TO MAKE A COMPLETE INSTALLATION WHETHER OR NOT SPECIFICALLY MENTIONED IN THE CONTRACT DOCUMENTS.

GENERAL REQUIREMENTS

1. PROVIDE ALL WORK IN ACCORDANCE WITH THE NATIONAL ELECTRICAL CODE (NEC) AND LOCAL AND STATE ELECTRICAL CODES.
2. THE ELECTRICAL PLANS ARE DIAGRAMMATIC ONLY. REFER TO THE ARCHITECTURAL PLANS FOR THE EXACT DIMENSIONS OF THE BUILDING.
3. LOAD CALCULATIONS ARE BASED ON EXISTING BUILDING INFORMATION/DRAWINGS PROVIDED TO ENGINEERING. CONTRACTOR IS TO VERIFY ALL EXISTING RATINGS AND LOADS PRIOR TO PURCHASING OF SPECIFIED EQUIPMENT FOR COMPLIANCE TO NEC. CONTRACTOR TO NOTIFY ENGINEER OF ANY DISCREPANCIES AND REQUEST FURTHER DIRECTION BY ENGINEER.
4. EXISTING BUILDING EQUIPMENT IS NOTED ON THE DRAWINGS. NEW OR RELOCATED EQUIPMENT IS SHOWN WITH SOLID LINES. FUTURE EQUIPMENT (NOT IN THIS CONTRACT) IS DEPICTED WITH SHADED LINES. REQUEST CLARIFICATION OF DRAWINGS OR OF SPECIFICATIONS PRIOR TO PRICING OR INSTALLATION.
5. GENERAL
   - A. AFTER CAREFULLY STUDYING THE DRAWINGS AND SPECIFICATIONS, AND BEFORE SUBMITTING THE PROPOSAL, MAKE A MANDATORY SITE VISIT TO ASCERTAIN CONDITIONS OF THE SITE, AND THE NATURE AND EXACT QUANTITY OF WORK TO BE PERFORMED. NO EXTRA COMPENSATION WILL BE ALLOWED FOR FAILURE TO NOTIFY THE OWNER, IN WRITING, OF ANY DISCREPANCIES THAT MAY HAVE BEEN NOTED BETWEEN THE EXISTING CONDITIONS AND THE DRAWINGS AND SPECIFICATIONS.
   - B. VERIFY ALL MEASUREMENTS AT THE SITE AND BE RESPONSIBLE FOR CORRECTNESS OF SAME.
6. QUALITY, WORKMANSHIP, MATERIALS AND SAFETY
   - A. PROVIDE NEW MATERIALS AND EQUIPMENT OF A DOMESTIC MANUFACTURER BY THOSE REGULARLY ENGAGED IN THE PRODUCTION AND MANUFACTURE OF SPECIFIED MATERIALS AND EQUIPMENT. WHERE UL, OR OTHER AGENCY, HAS ESTABLISHED STANDARDS FOR MATERIALS, PROVIDE MATERIALS WHICH ARE LISTED AND LABELED ACCORDINGLY. THE COMMERCIALLY STANDARD ITEMS OF EQUIPMENT AND THE SPECIFIC NAMES MENTIONED HEREIN ARE INTENDED FOR THE PROPER FUNCTIONING OF THE WORK.
   - B. WORK SHALL BE PERFORMED BY WORKMEN SKILLED IN THE TRADE REQUIRED FOR THE WORK. INSTALL MATERIALS AND EQUIPMENT TO PRESENT A NEAT APPEARANCE WHEN COMPLETED AND IN ACCORDANCE WITH THE APPROVED RECOMMENDATIONS OF THE MANUFACTURER AND IN ACCORDANCE WITH CONTRACT DOCUMENTS.
   - C. PROVIDE LABOR, MATERIALS, APPARATUS AND APPLIANCES ESSENTIAL TO THE FUNCTIONING OF THE SYSTEMS DESCRIBED OR INDICATED HEREIN, OR WHICH MAY BE REASONABLY IMPLIED AS ESSENTIAL WHENEVER MENTIONED IN THE CONTRACT DOCUMENT OR NOT.
   - D. MAKE WRITTEN REQUESTS FOR SUPPLEMENTARY INSTRUCTIONS TO ARCHITECT/ENGINEER IN CASE OF DOUBT AS TO WORK INTENDED OR IN EVENT OF NEED FOR EXPLANATION THEREOF.
   - E. PERFORMANCE AND MATERIAL REQUIREMENTS SCHEDULED OR SPECIFIED ARE MINIMUM STANDARD ACCEPTABLE. THE RIGHT TO JUDGE THE QUALITY OF EQUIPMENT THAT DEVIATES FROM THE CONTRACT DOCUMENT REMAINS SOLELY WITH ARCHITECT/ENGINEER. CONTRACT DOCUMENT OR NOT.

GUARANTEE

1. GUARANTEE MATERIALS, PARTS AND LABOR FOR WORK FOR ONE YEAR FROM THE DATE OF ISSUANCE OF OCCUPANCY PERMIT. DURING THAT PERIOD, MAKE GOOD FAULTS OR IMPERFECTIONS THAT MAY ARISE DUE TO DEFECTS OR OMISSIONS IN MATERIALS OR WORKMANSHIP WITH NO ADDITIONAL COMPENSATION AND AS DIRECTED BY ARCHITECT.

CLEANING

1. REMOVE ALL CONSTRUCTION DEBRIS RESULTING FROM THE WORK.
2. CLEAN EQUIPMENT AND SYSTEMS FOLLOWING THE COMPLETION OF THE PROJECT TO THE SATISFACTION OF THE ENGINEER.

COORDINATION AND SUPERVISION

1. CAREFULLY LAY OUT ALL WORK IN ADVANCE TO AVOID UNNECESSARY CUTTING, CHANNELING, CHASING OR DRILLING OF FLOORS, WALLS, PARTITIONS, CEILINGS OR OTHER SURFACES. WHERE SUCH WORK IS NECESSARY, HOWEVER, PATCH AND REPAIR THE WORK IN AN APPROVED MANNER BY SKILLED MECHANICS AT NO ADDITIONAL COST TO THE OWNER. RENDER FULL COOPERATION TO OTHER TRADES WHERE WORK WILL BE INSTALLED IN CLOSE PROXIMITY TO WORK OF OTHER TRADES. ASSIST IN WORKING OUT SPACE CONDITIONS. IF WORK IS INSTALLED BEFORE COORDINATION WITH OTHER TRADES, OR CAUSES INTERFERENCE, MAKE CHANGES NECESSARY TO CORRECT CONDITIONS WITHOUT EXTRA CHARGE.

SUBMITTALS

1. AS-BUILT DRAWINGS:
   - A. UPON COMPLETION OF THE WORK, FURNISH TO THE OWNER "AS-BUILT" DRAWINGS.
2. SERVICE MANUALS:
   - A. UPON COMPLETION OF THE WORK, FULLY INSTRUCT T-MOBILE AS TO THE OPERATION AND MAINTENANCE OF ALL MATERIAL, EQUIPMENT AND SYSTEMS.
   - B. PROVIDE 3 COMPLETE BOUND SETS OF INSTRUCTIONS FOR OPERATING AND MAINTAINING ALL SYSTEMS AND EQUIPMENT.

CUTTING AND PATCHING

1. PROVIDE ALL CUTTING, DRILLING, ROUGH AND FINISH PATCHING REQUIRED TO COMPLETE THE WORK.
2. OBTAIN OWNER APPROVAL PRIOR TO CUTTING THROUGH FLOORS OR WALLS FOR PIPING OR CONDUIT.

TESTS, INSPECTION AND APPROVAL

1. BEFORE ENERGIZING ANY ELECTRICAL INSTALLATION, INSPECT EACH UNIT IN DETAIL. TIGHTEN ALL BOLTS AND CONNECTIONS (TORQUE-TIGHTEN WHERE REQUIRED) AND DETERMINE THAT ALL COMPONENTS ARE ALIGNED, AND THE EQUIPMENT IS IN SAFE, OPERATIONAL CONDITION.
2. PROVIDE THE COMPLETE ELECTRICAL SYSTEM FREE OF GROUND FAULTS AND SHORT CIRCUITS SUCH THAT THE SYSTEM WILL OPERATE SATISFACTORILY UNDER FULL LOAD CONDITIONS, WITHOUT EXCESSIVE HEATING AT ANY POINT IN THE SYSTEM.

SPECIAL REQUIREMENTS

1. DO NOT LEAVE ANY WORK INCOMPLETE NOR ANY HAZARDOUS SITUATIONS CREATED WHICH WILL AFFECT THE LIFE OR SAFETY OF THE PUBLIC AND/OR BUILDING OCCUPANTS. DO NOT INTERFERE WITH OR CUTOFF ANY OF THE EXISTING SERVICES WITHOUT THE OWNER'S WRITTEN PERMISSION.
2. WHEN NECESSARY TO TEMPORARILY DISCONNECT ANY EXISTING BUILDING UTILITIES AND SERVICE SYSTEMS, INCLUDING FEEDER OR BRANCH CIRCUITING SUPPLYING EXISTING FACILITIES, CONFER WITH THE OWNER AND ARRANGE THE PERIOD OF INTERRUPTION FOR A TIME MUTUALLY AGREED UPON.
   SHUTDOWN NOTE: SCHEDULE AND NOTIFY OWNER 48 HOURS PRIOR TO SHUTDOWN. ALL SHUTDOWN WORK TO BE SCHEDULED AT A TIME CONVENIENT TO OWNER.

GROUNDING

1. ROUTE ALL GROUNDING CONDUCTORS AS SHOWN ON CONDUIT/GROUNDING RISER.
2. ROUTE 500 KCMIL CU. THHN CONDUCTOR FROM THE MGB LOCATION TO BUILDING STEEL. VERIFY BUILDING STEEL IS EFFECTIVELY GROUNDED PER NEC TO THE MAIN SERVICE GROUNDING ELECTRODE CONDUCTOR (GEC).
3. MAKE ALL GROUND CONNECTIONS FROM MGB TO ELECTRICAL EQUIPMENT WITH 2 HOLE, CRIMP TYPE, BURNDY COMPRESSION TERMINATIONS, SIZED AS REQUIRED.
4. USE 1 HOLE, CRIMP TYPE, BURNDY COMPRESSIONS TERMINATIONS, SIZED AS REQUIRED, AT EQUIPMENT GROUND CONNECTIONS.
5. HIRE AN INDEPENDENT LAB TO PERFORM THE SPECIFIED OHMS TESTING. PROVIDE 4 SETS OF THE CERTIFIED DOCUMENTS TO THE OWNER FOR VERIFICATION PRIOR TO THE PROJECT COMPLETION.

RACEWAYS

1. ALL WIRING TO BE INSTALLED IN CONDUIT SYSTEMS IN ACCORDANCE WITH THE FOLLOWING:
   - A. EXTERIOR FEEDERS AND CONTROL, WHERE UNDERGROUND, TO BE IN SCH 40 PVC.
   - B. EXTERIOR, ABOVE GROUND POWER CONDUITS TO BE GALVANIZED RIGID STEEL (RGS).
   - C. ALL TELECOMMUNICATION CONDUITS, INTERIOR/EXTERIOR, TO BE EMT.
   - D. INSTALL PULL ROPES IN ALL NEW EMPTY CONDUITS INSTALLED ON THIS PROJECT.
   - E. ALL TELECOM CONDUITS AND PULL BOXES INSTALLED ON THIS PROJECT TO BE LABELED "T-MOBILE". OWNER WILL PROVIDE LABELS FOR CONTRACTOR TO INSTALL.
   - F. INTERIOR FEEDERS TO BE INSTALLED IN E.M.T. WITH STEEL COMPRESSION FITTINGS.
   - G. MINIMUM SIZE CONDUIT TO BE ¾" TRADE SIZE UNLESS OTHERWISE INDICATED ON THE DRAWINGS.
   - H. FINAL CONNECTIONS TO MOTORS AND VIBRATING EQUIPMENT TO BE INSTALLED IN LIQUID-TIGHT FLEXIBLE METAL CONDUIT.
   - I. CONDUIT TO BE RUN CONCEALED IN CEILINGS, FINISHED AREAS OR DRYWALL PARTITIONS, UNLESS OTHERWISE NOTED.
   - J. THE ROUTING OF CONDUITS INDICATED ON THE DRAWINGS IS DIAGRAMMATIC. BEFORE INSTALLING ANY WORK, EXAMINE THE WORKING LAYOUTS AND SHOP DRAWINGS OF THE OTHER TRADES TO DETERMINE THE EXACT LOCATIONS AND CLEARANCES.
   - K. ALL EXTERIOR MOUNTING HARDWARE TO BE GALVANIZED STEEL. COORDINATE WITH BUILDING ENGINEER PRIOR TO ATTACHING TO BUILDING STRUCTURE.

RACEWAYS CONT'D

   - L. PENETRATIONS OF WALLS, FLOORS AND ROOFS, FOR THE PASSAGE OF ELECTRICAL RACEWAYS, TO BE PROPERLY SEALED AFTER INSTALLATION OF RACEWAYS SO AS TO MAINTAIN THE STRUCTURAL OR WATERPROOF INTEGRITY OF THE WALL, FLOOR OR ROOF SYSTEM TO BE PENETRATED. SEAL ALL CONDUIT PENETRATIONS THROUGH FIRE OR SMOKE RATED WALLS, CEILINGS OR SMOKE TIGHT CORRIDOR PARTITIONS TO MAINTAIN PROPER RATING OF WALL OR CEILING.
   - M. PROVIDE ALL CONDUIT ENDS WITH INSULATED METALLIC GROUNDING BUSHINGS.
   - N. CONDUIT TO BE SUPPORTED AT MAXIMUM DISTANCE OF 8'-0", OR AS REQUIRED BY NEC, IN HORIZONTAL AND VERTICAL DIRECTIONS.
   - O. PROVIDE STAINLESS STEEL BLANK COVER PLATES FOR ALL JUNCTION BOXES AND/OR OUTLET BOXES NOT USED IN EXPOSED AREAS. PROVIDE ALL OTHER UNUSED BOXES WITH STANDARD STEEL COVER PLATES.
   - P. WHERE APPLICABLE, PROVIDE ROOFTOP CONDUIT SUPPORT SYSTEM, CONFORMING TO ROOFTOP WARRANTY REQUIREMENTS, PER BUILDING.

WIRES AND CABLES

1. CONTRACTOR TO COORDINATE WITH EQUIPMENT SUPPLIER AND VENDOR FOR EXACT EQUIPMENT OVER-CURRENT PROTECTION VOLTAGE, WIRE SIZE AND PLUG CONFIGURATION, IF APPLICABLE, PRIOR TO BID.
2. ALL EQUIPMENT/DEVICES TO BE PROVIDED WITH INSULATED GROUND CONDUCTOR.
3. ALL WIRE AND CABLE TO BE 600VOLT, COPPER, WITH THWN/THHN INSULATION, EXCEPT AS NOTED.
4. WIRE FOR POWER AND LIGHTING WILL NOT BE LESS THAN NO. 12AWG. ALL WIRE NO. 8 AND LARGER TO BE STRANDED.
5. CONTROL WIRING IS NOT TO BE LESS THAN NO. 14AWG, FLEXIBLE IN SINGLE CONDUCTORS OR MULTI-CONDUCTOR CABLES. CONTROL WIRING WILL CONSIST OF MULTI-CONDUCTOR CABLES WHEREVER POSSIBLE. CABLES TO BE PROVIDED WITH AN OVERALL FLAME-RETARDANT, EXTRUDED JACKET AND RATED FOR PLENUM USE. ALL CONTROL WIRE TO BE 600VOLT RATED.
6. WIRE PREVIOUSLY PULLED INTO CONDUIT IS CONSIDERED USED AND IS NOT TO BE RE-PULLED.
7. HOME RUNS AND BRANCH CIRCUIT WIRING FOR 20A, 120V CIRCUITS:

LENGTH (FT.)	HOME RUN WIRE SIZE
0 TO 50	NO. 12
51 TO 100	NO. 10
101 TO 150	NO. 8

   - B. VOLTAGE DROP IS NOT TO EXCEED 3%.
9. MAKE ALL CONNECTIONS WITH UL APPROVED, SOLDERLESS, PRESSURE TYPE INSULATED CONNECTORS: SCOTCHLOK OR AND APPROVED EQUAL.

WIRING DEVICES

1. ALL RECEPTACLES INSTALLED IN THIS PROJECT TO BE GROUNDING TYPE, WITH GROUNDING PIN SLOT CONNECTED TO DEVICE GROUND SCREW FOR GROUND WIRE CONNECTION.

DISCONNECT SWITCHES AND FUSES

1. DISCONNECT SWITCHES TO BE VOLTAGE-RATED TO SUIT THE CHARACTERISTICS OF THE SYSTEM FROM WHICH THEY ARE SUPPLIED.
2. PROVIDE HEAVY-DUTY, METAL-ENCLOSED, EXTERNALLY-OPERATED DISCONNECT SWITCHES, FUSED OR UNFUSED, OF SUCH TYPE AND SIZE AS REQUIRED TO PROPERLY PROTECT OR DISCONNECT THE LOAD FOR WHICH THEY ARE INTENDED.
3. PROVIDE NEMA 1 DISCONNECT SWITCHES FOR INTERIOR INSTALLATION, NEMA 3R FOR EXTERIOR INSTALLATION.
4. DISCONNECT SWITCHES TO BE MANUFACTURED BY:
   - A. GENERAL ELECTRIC COMPANY
   - B. SQUARE-D
5. PROVIDE RK-1 TYPE FUSES, UNLESS NOTED OTHERWISE.

INSTALLATION

1. INSTALL DISCONNECT SWITCHES WHERE INDICATED ON DRAWINGS.
2. INSTALL FUSES IN FUSIBLE DISCONNECT SWITCHES. FUSES MUST MATCH IN TYPE AND RATING.
3. FUSES TO BE MOUNTED SO THAT THE LABELS SHOWING THEIR RATINGS CAN BE READ WITHOUT REQUIRING FUSE REMOVAL.
4. FURNISH AND DEPOSIT SPARE FUSES AT THE JOB SITE AS FOLLOWS:
   - A. THREE SPARES FOR EACH TYPE AND SIZE, IN EXCESS OF 60A, USED FOR INITIAL FUSING.
   - B. TEN PERCENT SPARES FOR EACH TYPE AND SIZE, UP TO AND INCLUDING 60A, USED FOR INITIAL FUSING. IN NO CASE WILL LESS THAN THREE FUSES OF ONE PARTICULAR TYPE AND SIZE BE FURNISHED.

GENERAL NOTES:

INTENT

1. THESE SPECIFICATIONS AND CONSTRUCTION DRAWINGS ACCOMPANYING THEM DESCRIBE THE WORK TO BE DONE AND THE MATERIALS TO BE FURNISHED FOR CONSTRUCTION.
2. THE DRAWINGS AND SPECIFICATIONS ARE INTENDED TO BE FULLY EXPLANATORY AND SUPPLEMENTARY. HOWEVER, SHOULD ANYTHING BE SHOWN, INDICATED, OR SPECIFIED ON ONE AND NOT THE OTHER, IT SHALL BE DONE THE SAME AS IF SHOWN, INDICATED OR SPECIFIED IN BOTH
3. THE INTENTION OF THE DOCUMENTS IS TO INCLUDE ALL LABOR AND MATERIALS REASONABLY NECESSARY FOR THE PROPER EXECUTION AND COMPLETION OF THE WORK AS STIPULATED IN THE CONTRACT.
4. THE PURPOSE OF THE SPECIFICATIONS IS TO INTERPRET THE INTENT OF THE DRAWINGS AND TO DESIGNATE THE METHOD OF THE PROCEDURE, TYPE AND QUALITY OF MATERIALS REQUIRED TO COMPLETE THE WORK.
5. MINOR DEVIATIONS FROM THE DESIGN LAYOUT ARE ANTICIPATED AND SHALL BE CONSIDERED AS PART OF THE WORK. NO CHANGES THAT ALTER THE CHARACTER OF THE WORK WILL BE MADE OR PERMITTED BY THE OWNER WITHOUT ISSUING A CHANGE ORDER.

CONFLICTS

1. THE CONTRACTOR SHALL BE RESPONSIBLE FOR VERIFICATIONS OF ALL MEASUREMENTS AT THE SITE BEFORE ORDERING ANY MATERIALS OR DOING ANY WORK. NO EXTRA CHARGE OR COMPENSATION SHALL BE ALLOWED DUE TO DIFFERENCE BETWEEN ACTUAL DIMENSIONS AND DIMENSIONS INDICATED ON THE CONSTRUCTION DRAWINGS. ANY SUCH DISCREPANCY IN DIMENSION WHICH MAY BE FOUND SHALL BE SUBMITTED TO THE OWNER FOR CONSIDERATION BEFORE THE CONTRACTOR PROCEEDS WITH THE WORK IN THE AFFECTED AREAS.
2. THE BIDDER, IF AWARDED THE CONTRACT, WILL NOT BE ALLOWED ANY EXTRA COMPENSATION BY REASON OF ANY MATTER OR THING CONCERNING SUCH BIDDER MIGHT HAVE FULLY INFORMED THEMSELVES PRIOR TO THE BIDDING.
3. NO PLEA OF IGNORANCE OF CONDITIONS THAT EXIST, OR OF DIFFICULTIES OR CONDITIONS THAT MAY BE ENCOUNTERED, OR OF ANY OTHER RELEVANT MATTER CONCERNING THE WORK TO BE PERFORMED IN THE EXECUTION OF THE WORK WILL BE ACCEPTED AS AN EXCUSE FOR ANY FAILURE OR OMISSION ON THE PART OF THE CONTRACTOR TO FULFILL EVERY DETAIL OF ALL THE REQUIREMENTS OF THE CONTRACT DOCUMENTS GOVERNING THE WORK.

CONTRACTS AND WARRANTIES

1. CONTRACTOR IS RESPONSIBLE FOR APPLICATION AND PAYMENT OF CONTRACTOR LICENSES AND BONDS.
2. SEE MASTER CONTRACTION SERVICES AGREEMENT FOR ADDITIONAL DETAILS.

STORAGE

1. ALL MATERIALS MUST BE STORED IN A LEVEL AND DRY FASHION AND IN A MANNER THAT DOES NOT NECESSARILY OBSTRUCT THE FLOW OF OTHER WORK. ANY STORAGE METHOD MUST MEET ALL RECOMMENDATIONS OF THE ASSOCIATED MANUFACTURER.

CLEANUP

1. THE CONTRACTORS SHALL, AT ALL TIMES, KEEP THE SITE FREE FROM ACCUMULATION OF WASTE MATERIALS OR RUBBISH CAUSED BY THEIR EMPLOYEES AT WORK AND AT THE COMPLETION OF THE WORK. THEY SHALL REMOVE ALL RUBBISH FROM AND ABOUT THE BUILDING AREA, INCLUDING ALL THEIR TOOLS, SCAFFOLDING AND SURPLUS MATERIALS AND SHALL LEAVE THEIR WORK CLEAN AND READY TO USE.
2. EXTERIOR
   - A. VISUALLY INSPECT EXTERIOR SURFACES AND REMOVE ALL TRACES OF SOIL, WASTE MATERIALS, SMUDGES AND OTHER FOREIGN MATTER.
   - B. REMOVE ALL TRACES OF SPLASHED MATERIALS FROM ADJACENT SURFACES.
   - C. IF NECESSARY, TO ACHIEVE A UNIFORM DEGREE OF CLEANLINESS, HOSE DOWN THE EXTERIOR OF THE STRUCTURE.
3. INTERIOR
   - A. VISUALLY INSPECT INTERIOR SURFACE AND REMOVE ALL TRACES OF SOIL, WASTE MATERIALS, SMUDGES AND OTHER FOREIGN MATTER FROM WALLS, FLOOR, AND CEILING.
   - B. REMOVE ALL TRACES OF SPLASHED MATERIALS FROM ADJACENT SURFACES.
   - C. REMOVE PAINT DROPPINGS, SPOTS, STAINS, AND DIRT FROM FINISHED SURFACES.

CHANGE ORDER PROCEDURE:

1. REFER TO SECTION 17 OF SIGNED MCSA: SEE PROFESSIONAL SERVICE AGREEMENT FOR MCSA.

RELATED DOCUMENTS AND COORDINATION

1. GENERAL CARPENTRY, ELECTRICAL AND ANTENNA DRAWINGS ARE INTERRELATED. IN PERFORMANCE OF THE WORK, THE CONTRACTOR MUST REFER TO ALL DRAWINGS. ALL COORDINATION TO BE THE RESPONSIBILITY OF THE CONTRACTOR.

SHOP DRAWINGS

1. CONTRACTOR SHALL SUBMIT SHOP DRAWINGS AS REQUIRED AND LISTED IN THESE SPECIFICATIONS TO THE OWNER FOR APPROVAL.
2. ALL SHOP DRAWINGS SHALL BE REVIEWED, CHECKED AND CORRECTED BY CONTRACTOR PRIOR TO SUBMITTAL TO THE OWNER.

PRODUCTS AND SUBSTITUTIONS

1. SUBMIT 3 COPIES OF EACH REQUEST FOR SUBSTITUTION. IN EACH REQUEST, IDENTIFY THE PRODUCT OR FABRICATION OR INSTALLATION METHOD TO BE REPLACED BY THE SUBSTITUTION. INCLUDE RELATED SPECIFICATION SECTION AND DRAWING NUMBERS AND COMPLETE DOCUMENTATION SHOWING COMPLIANCE WITH THE REQUIREMENTS FOR SUBSTITUTIONS.
2. SUBMIT ALL NECESSARY PRODUCT DATA AND CUT SHEETS WHICH PROPERLY INDICATE AND DESCRIBE THE ITEMS, PRODUCTS AND MATERIALS BEING INSTALLED. THE CONTRACTOR SHALL, IF DEEMED NECESSARY BY THE OWNER, SUBMIT ACTUAL SAMPLES TO THE OWNER FOR APPROVAL IN LIEU OF CUT SHEETS.

QUALITY ASSURANCE

1. ALL WORK SHALL BE IN ACCORDANCE WITH APPLICABLE LOCAL, STATE AND FEDERAL REGULATIONS. THESE SHALL INCLUDE, BUT NOT BE LIMITED TO THE APPLICABLE CODES SET FORTH BY THE LOCAL GOVERNING BODY. SEE "CODE COMPLIANCE" T-1.

ADMINISTRATION

1. BEFORE THE COMMENCEMENT OF ANY WORK, THE CONTRACTOR WILL ASSIGN A PROJECT MANAGER WHO WILL ACT AS A SINGLE POINT OF CONTACT FOR ALL PERSONNEL INVOLVED IN THIS PROJECT. THIS PROJECT MANAGER WILL DEVELOP A MASTER SCHEDULE FOR THE PROJECT WHICH WILL BE SUBMITTED TO THE OWNER PRIOR TO THE COMMENCEMENT OF ANY WORK.
2. SUBMIT A BAR TYPE PROGRESS CHART, NOT MORE THAN 3 DAYS AFTER THE DATE ESTABLISHED FOR COMMENCEMENT OF THE WORK ON THE SCHEDULE, INDICATING A TIME BAR FOR EACH MAJOR CATEGORY OR UNIT OF WORK TO BE PERFORMED AT THE SITE, PROPERLY SEQUENCED AND COORDINATED WITH OTHER ELEMENTS OF WORK AND SHOWING COMPLETION OF THE WORK SUFFICIENTLY IN ADVANCE OF THE DATE ESTABLISHED FOR SUBSTANTIAL COMPLETION OF THE WORK.
3. PRIOR TO COMMENCING CONSTRUCTION, THE OWNER SHALL SCHEDULE AN ON-SITE MEETING WITH ALL MAJOR PARTIES. THIS WOULD INCLUDE, BUT NOT LIMITED TO, THE OWNER, PROJECT MANAGER, CONTRACTOR, LAND OWNER REPRESENTATIVE, LOCAL TELEPHONE COMPANY, TOWER ERECTION FOREMAN (IF SUBCONTRACTED).
4. CONTRACTOR SHALL BE EQUIPPED WITH SOME MEANS OF CONSTANT COMMUNICATIONS, SUCH AS A MOBILE PHONE OR A BEEPER. THIS EQUIPMENT WILL NOT BE SUPPLIED BY THE OWNER, NOR WILL WIRELESS SERVICE BE ARRANGED.
5. DURING CONSTRUCTION, CONTRACTOR MUST ENSURE THAT EMPLOYEES AND SUBCONTRACTORS WEAR HARD HATS AT ALL TIMES. CONTRACTOR WILL COMPLY WITH ALL WPCS SAFETY REQUIREMENTS IN THEIR AGREEMENT.
6. PROVIDE WRITTEN DAILY UPDATES ON SITE PROGRESS TO THE OWNER.
7. COMPLETE INVENTORY OF CONSTRUCTION MATERIALS AND EQUIPMENT IS REQUIRED PRIOR TO START OF CONSTRUCTION.
8. NOTIFY THE OWNER/PROJECT MANAGER IN WRITING NO LESS THAN 48 HOURS IN ADVANCE OF CONCRETE POURS, TOWER ERECTIONS, AND EQUIPMENT CABINET PLACEMENTS.

INSURANCE AND BONDS

1. CONTRACTOR, AT THEIR OWN EXPENSE, SHALL CARRY AND MAINTAIN, FOR THE DURATION OF THE PROJECT, ALL INSURANCE, AS REQUIRED AND LISTED, AND SHALL NOT COMMENCE WITH THEIR WORK UNTIL THEY HAVE PRESENTED AN ORIGINAL CERTIFICATE OF INSURANCE STATING ALL COVERAGES TO THE OWNER. REFER TO THE MASTER AGREEMENT FOR REQUIRED INSURANCE LIMITS.
2. THE OWNER SHALL BE NAMED AS AN ADDITIONAL INSURED ON ALL POLICIES.
3. CONTRACTOR MUST PROVIDE PROOF OF INSURANCE.

ARCHITECTURAL SYMBOLS

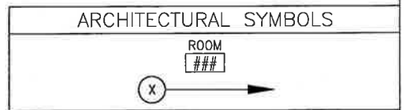

DETAIL REFERENCE KEY

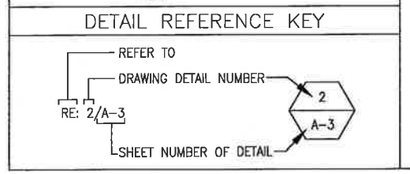

ABBREVIATIONS

ADJ	ADJUSTABLE
AGL	ABOVE GROUND LINE
&	AND
APPROX	APPROXIMATE
@	AT
BTS	BASE TRANSMISSION STATION
CAB	CABINET
CLG	CEILING
CONC	CONCRETE
CONT	CONTINUOUS
DIA OR ø	DIAMETER
DWG	DRAWING
EA	EACH
ELEC	ELECTRICAL
ELEV	ELEVATION
EQ	EQUAL
EQUIP	EQUIPMENT
EGB	EQUIPMENT GROUND BAR
(E)	EXISTING
EXT	EXTERIOR
FF	FINISHED FLOOR
GA	GAUGE
GALV	GALVANIZED
GC	GENERAL CONTRACTOR
GRND	GROUND
LG	LONG
MAX	MAXIMUM
MECH	MECHANICAL
MW	MICROWAVE DISH
MFR	MANUFACTURER
MGB	MASTER GROUND BAR
MIN	MINIMUM
MTL	METAL
(N)	NEW
NIC	NOT IN CONTRACT
NTS	NOT TO SCALE
OC	ON CENTER
OPP	OPPOSITE
(P)	PROPOSED
PCS	PERSONAL COMMUNICATION SYSTEM
PPC	POWER PROTECTION CABINET
SF	SQUARE FOOT
SHT	SHEET
SIM	SIMILAR
SS	STAINLESS STEEL
STL	STEEL
TOC	TOP OF CONCRETE
TOM	TOP OF MASONRY
TYP	TYPICAL
VIF	VERIFY IN FIELD
UON	UNLESS OTHERWISE NOTED
WWF	WELDED WIRE FABRIC
W/	WITH

T-Mobile
T-MOBILE NORTHEAST LLC
35 GRIFFIN RD SOUTH
BLOOMFIELD, CT 06002

INFINIGY
1033 Watervliet Shaker Rd
Albany, NY 12205
Office # (518) 880-0799
Fax # (518) 880-0783

SUBMITTALS

DATE	DESCRIPTION	REVISION
1/13/17	FOR PERMIT	0

DEPT.	DATE	APP'D	REVISIONS
RFE			
RF MAN.			
ZONING			
OPS			
CONSTR.			
SITE AC.			

PROJECT NO:	317-000
DRAWN BY:	ASW
CHECKED BY:	ASW

STATE OF CONNECTICUT
JOHN S. STEVENS
No. 24705
LICENSED PROFESSIONAL ENGINEER

PROFESSIONAL SEAL

THIS DOCUMENT IS THE CREATION, DESIGN, PROPERTY AND COPYRIGHTED WORK OF T-MOBILE. ANY DUPLICATION OR USE WITHOUT EXPRESS WRITTEN CONSENT IS STRICTLY PROHIBITED.

NOTE: IF DRAWINGS ARE 22"x34", USE GRAPHICAL SCALE AND/OR 1/2 TIMES OF THE NOTED SCALE.

SITE NUMBER:
CTNH517A

SITE NAME:
ATC HARWINTON MONOPOLE

175 WEINGART RD.
HARWINTON, CT 06791

SHEET TITLE

GENERAL AND ELECTRICAL NOTES

SHEET NUMBER

N-1

SHEET 8 OF 8 SHEETS